https://truckmanualshub.com/

OPERATOR'S HANDBOOK

Mack® Granite™ Series (GU Series)

Mack® GU Series

OPERATOR'S HANDBOOK

TS92009

© Mack Trucks, Inc. 2009
Printed in U.S.A.

OPERATOR'S HANDBOOK

Mack® Granite™ Series (GU Series)

TS92009
July 2009

https://truckmanualshub.com/

CALIFORNIA PROPOSITION 65 WARNING

Diesel engine exhaust and some of its constituents are known to the State of California to cause cancer, birth defects and other reproductive harm.

CALIFORNIA PROPOSITION 65 WARNING

Battery posts, terminals and other related accessories contain lead and lead compounds, chemicals known to the State of California to cause cancer and other reproductive harm.

Batteries also contain other chemicals known to the State of California to cause cancer.

Wash hands after handling.

IMPORTANT

Your new MACK® truck contains many new technological advancements that may require new servicing techniques and methods. An authorized MACK® truck dealer is in the best position to provide technicians who have the necessary training, experience and tools to properly service your truck.

https://truckmanualshub.com/

MACK® GRANITE™ GU SERIES OPERATOR'S HANDBOOK TS92009

THE INFORMATION CONTAINED IN THIS HANDBOOK IS CURRENT AT TIME OF PUBLICATION.

Mack Trucks, Inc. reserves the right to make changes without prior notification.

© Mack Trucks, Inc. 2009

https://truckmanualshub.com/

NOTES

Contents

INTRODUCTION 1
TO THE OWNER 1
In Appreciation 1
About This Handbook 2
THE VEHICLE 3
Basic Configuration 3
Vehicle Management and Control System (V-MAC®) 3
COMPONENT IDENTIFICATION 4
VIN Locations 4
Engine Identification 5
Engine Information Plate 6
Clean Idle Engines 7
Transmission Identification 8
WARRANTY INFORMATION 11
Air Brake System 11
SERVICE LITERATURE 12
TS576 – MACK Class 8 –Components Service Manual 12
TS473 – Class 8 – Custom Collated Service Manual 12
TS473E – Class 8 – Custom Collated Service Manual on CD 12
CUSTOMER SERVICE 13
Call 1-800-866-1177 for MACK OneCall™ 13
Questions and Complaints 13
Addresses 13
Additional Assistance 14
REPORTING SAFETY DEFECTS 16
United States 16
Canada 16
Mexico 16
EVENT DATA RECORDING DEVICES 17

SAFETY INFORMATION 18
SAFETY STATEMENT 18
CERTIFICATION LABELS 20
Safety Certification Label 20
ADVISORY LABELS 22
Advisory Label Locations (On Vehicle) 23
TRUCK-TRACTOR CONSPICUITY 33

CAB ENTRY/EXIT 34
Three-Limb Contact 34
Driver Side 36
Passenger Side 38
Deck Plate Access 40
SAFETY TIPS FOR COLD WEATHER OPERATION 42
Driver Visibility 42
Cab Door Seals and Key Locks 43
Outside Mirror Heater 43
Air Horn Snow Shield 44
Emergency Reflector Kit 44
Fire Extinguisher (Optional) 44

INSTRUMENTS AND CONTROLS 45
CAB INTERIOR 45
INSTRUMENT PANEL 46
Tell-Tales 46
Panel Arrangement 47
INSTRUMENT PANEL GAUGE LAYOUT 48
Panel A 49
Panel B 50
Panel C 52
Panel D 53
Moving Regeneration 66
Parked Regeneration 68
DPF INHIBIT ROAD SPEED LIMITING (RSL) 70
Function of Optional Switches 75
CAB CLIMATE CONTROL 83
LIGHT CONTROL PANEL 85
LOWER CONSOLE PANEL 86
STEERING COLUMN 87
Combination Starter and Electrical Switch 87
Steering Wheel Adjustment 87
Turn Signal Lever 88
Stalk Switch (If Equipped, Co-Pilot® Only) 89
FLOOR PEDALS 92
MISCELLANEOUS CONTROLS 93
Dome Light 93
Air Horn 94

Fresh Air Vent 94
Microphone 95
Accessory Power Outlets 96

OPERATION 98
PRE-TRIP INSPECTION AND DAILY MAINTENANCE 98
Pre-Trip Inspection Quick List 99
New Vehicle Break-In 111
WINDSHIELD WASHER RESERVOIR 113
HOOD OPERATION 114
Opening the Hood 114
Closing the Hood 116
Locking the Hood 116
Snowplow Hood Option 118
HOSE TENDERS 119
DOORS 120
Power Door Panel (Optional) 120
Opening the Cab Door 121
Locking the Cab Door 121
Power Window Regulators 121
REMOTE KEYLESS ENTRY — (OPTIONAL) 122
Transmitter Operations 122
Battery Replacement 123
SEAT BELTS 127
Seat Belt Operation 127
Fastening Seat Belt 127
Adjustable D-Ring Shoulder Belts (if equipped) 129
Komfort® Latch System 130
SEAT ADJUSTMENT AND RECLINE (IF EQUIPPED) 132
MIRROR BREAKAWAY STRUT 132
MACK ENGINE INFORMATION 134
Precautions and Warnings 134
Engine Model Designations 135
TIRE PRESSURE CONTROL SYSTEM (IF EQUIPPED) 136
Operating the Dana Tire Pressure Control System 137
Tire Changing Procedure 142
CRUISE CONTROL OPERATION 144
Speed Control Switches 144
Setting Cruise Control 144

Disengaging Cruise Control 145
MACK POWERLEASH™ ENGINE BRAKE (IF EQUIPPED) ... 146
Engine Brake Switch 146
How the Engine Brake is Activated 147
Cruise Control with the MACK PowerLeash™ Engine Brake . 148
ON THE ROAD WITH THE MACK POWERLEASH™ ENGINE BRAKE 149
Over Flat Terrain 149
Descending a Grade 150
On Slippery Road Surfaces 152
BRAKE OPERATION 155
Air Brake System 155
Automatic Slack Adjusters 156
Parking Brake System 156
Parking Brake Operation 157
Parking 157
Anti-Lock Brake System (ABS) 157
Automatic Traction Control (ATC) (If Equipped) 162
GOOD DRIVING HABITS 163
Weight Ratings 163
Instruments 163
Shutting Down the Engine 163
General Observation 163
STARTING THE VEHICLE 164
General Information 164
Push Button Starters 164
Air Starters 165
Engine Warm-Up 168
Engine Idling 168
Shutting Down the Engine 169
COLD WEATHER OPERATION 171
Cold Weather Starting Tips 171
Engine Block Heaters 172
Winterfronts 173
COUPLING A TRAILER 176
UNCOUPLING A TRAILER 178
MOVING THE VEHICLE — GENERAL INFORMATION 180
Braking 180
Shifting 180

Engine Temperature 181
Clutch (If Equipped) 181
POWER TAKE-OFF (PTO) OPERATION 186
PTO Precautions 186
PTO Classification 187
Side-Mounted PTO Locations 187
PTO Operating Procedures 187
TRANSMISSION SHIFTING INSTRUCTIONS 188
Shifting Instructions for Allison Automatic Transmissions 188
MACK T306G Shifting Instructions 188
MACK TM308 Shifting Instructions 190
MACK TM308M Shifting Instructions 192
MACK TM309 Shifting Instructions 195
MACK TM309M Shifting Instructions 197
MACK T309, T309L and T309LR Shifting Instructions 200
MACK T310 Shifting Instructions 204
MACK T310M, T310ME and T310MLR Shifting Instructions 207
MACK T313-T313L-T313LR Shifting Instructions 211
MACK T31321, T313L21 and T313LR21 Shifting Instructions 215
MACK T318, T318L and T318LR Shifting Instructions 220
MACK T31821, T318L21 and T318LR21 Shifting Instructions 226
AXLES 232
Rear Axles Other Than MACK 232
MACK Rear Axles 232
Engaging the Power Divider Lockout 233
All-Wheel-Drive in GU Chassis (If Equipped) 234
DIESEL PARTICULATE FILTERS (IF EQUIPPED) 236
DPF Control “Smart Switch” Options 239
Extended Idling and Aftertreatment System Conditioning (Periodic Heat Mode) 245

MAINTENANCE AND LUBRICATION 246
MAINTENANCE INTRODUCTION 246
TURBOCHARGER 247
CLEANING YOUR VEHICLE 248
Exterior Washing 248
Cab and Hood 250

Chassis 251
Cab Interior 251
Waxing 251
Polishing 252
Winter Warnings 252
TOWING 253
ENGINE OIL LEVEL CHECK 255
Chassis Equipped with Snowplow Hood Option 256
Power Steering Reservoir 257
FUEL TANK 258
Fuel Tank Cap 258
FUELING 259
BioDiesel 260
B20 Approval For Mack EPA 07 Certified Products 260
COOLING SYSTEM 261
Coolant Level Check 261
Draining the Cooling System 262
Refilling the Cooling System 262
Protecting the Cooling System 262
Cooling System Maintenance 264
Accessory Drive Belt Routing 264
HEADLIGHTS 266
Bulb Replacement 266
WHEELS 267
Wheel Inspection 267
Tires 268
BATTERY 271
Jump-Starting Engine 271
ELECTRICAL 273
Circuit Breaker and Relay Panels 273
Electrical Grease 275
Circuit Protection Charts 276
Electrical Accessory Connection Points 279

METRIC CONVERSIONS 286
METRIC CONVERSIONS 286

https://truckmanualshub.com/

Safety Information

IMPORTANT: Before driving this vehicle, be certain that you have read and that you fully understand each and every step of the driving and handling information in this manual. Be certain that you fully understand and follow all safety warnings.

IT IS IMPORTANT THAT THE FOLLOWING INFORMATION BE READ, UNDERSTOOD AND ALWAYS FOLLOWED.

The following types of advisories are used throughout this manual:

DANGER

Danger indicates an unsafe practice that could result in serious personal injury or death. A danger advisory banner is in **white** type on a **black** background with a **black** border.

WARNING

Warning indicates an unsafe practice that could result in personal injury. A warning advisory banner is in **black** type on a **gray** background with a **black** border.

CAUTION

Caution indicates an unsafe practice that could result in damage to the product. A caution advisory is in **black** type on a **white** background with a **black** border.

Note: Note indicates a procedure, practice, or condition that must be followed in order for the vehicle or component to function in the manner intended.

https://truckmanualshub.com/

https://truckmanualshub.com/

TO THE OWNER

In Appreciation

Thank you for buying a MACK® vehicle. With proper care and maintenance, your new Mack® Granite™ GU model will help you gain a competitive edge with its fuel-efficient drivetrain combinations, low maintenance, extended service intervals and, eventually, good resale value.

The Mack® Granite™ GU model is available for a wide range of applications. Because of this versatility, drivetrains and components vary and operating instructions may differ from one model to another. While every effort has been made to cover all current arrangements, do not hesitate to consult your MACK distributor if a question arises. Honest, personal service is standard with every MACK sale.

CAUTION

Mack Trucks, Inc. would like to point out the important role that the driver plays in the life of the vehicle. Only trained and informed drivers should operate this vehicle.

We, at Mack Trucks, Inc., hope that you will be happy with your new Mack® Granite™ GU model, and that you see many years of trouble-free driving.

This vehicle was built to conform to all federal standards and regulations applicable at the time of manufacture.

https://truckmanualshub.com/

About This Handbook

This handbook is referred to as the Mack® Granite™ GU Series Operator's Handbook. It covers all Mack® Granite™ GU models. Its identification number is TS920. Keep this handbook with the vehicle at all times to ensure that each owner and/or operator will have access to all pertinent information relating to the operation and handling of this vehicle.

This handbook was prepared to provide the driver with all relevant information concerning the daily operation of this vehicle. Please read it thoroughly; pay particular attention to advisory labels that have been included to draw attention to important issues of operator safety and overall performance.

Information and illustrations in this handbook are based on the latest production usage at the time of printing and are subject to change without prior notice.

Note: Basic maintenance and lubrication procedures are found in this manual beginning with "MAINTENANCE INTRODUCTION" page 246. For further information, refer to the Maintenance and Lubrication Manual (TS494). Other important information can be found in the Emission Control Systems for MACK Diesel Engine Manual (TS505).

THE VEHICLE

Basic Configuration

The Mack® Granite™ GU model features a conventionally styled, aerodynamic cab.

Vehicle Management and Control System (V-MAC®)

The Vehicle Management and Control System (V-MAC) is an electronic control system that manages engine and vehicle functions. In addition, the DataMax™ portion of V-MAC monitors and stores a variety of information (i.e., maintenance schedules, overspeed logs, fault tables, trip summaries).

For a complete description of the V-MAC IV system, refer to the applicable V-MAC® Operator's Guide, which is supplied with the vehicle.

Additional information concerning service, diagnostics, programming and vendor equipment interface application is available from the Mack Trucks, Inc. Service Publications Department. Contact your local MACK dealer for details.

WARNING

Never cut into the V-MAC system wire harness to power additional equipment. If such equipment is to be installed, contact your MACK dealer for assistance.

https://truckmanualshub.com/

COMPONENT IDENTIFICATION

Locate the following serial numbers and write them in the boxes provided next to each illustration.

VIN Locations

The Vehicle Identification Number (VIN) is displayed in two locations (a frame rail stamping and a label). The 17-digit VIN must be identical in both locations.

The **VIN frame stamping** is located on the right outside frame rail and the left inside frame rail.

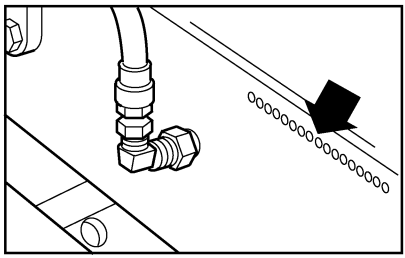

Right Outside Frame Rail Flange

C0029554

VEHICLE IDENTIFICATION NUMBER

The **VIN label** is located on the inside door frame below the driver seat.

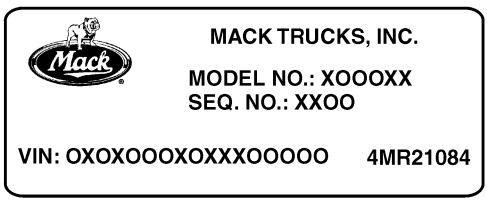

C0028941

Vehicle Identification Number

Engine Identification

On the **MACK MP** engines, the engine serial number is stamped on the left side of the engine block, below the inlet manifold.

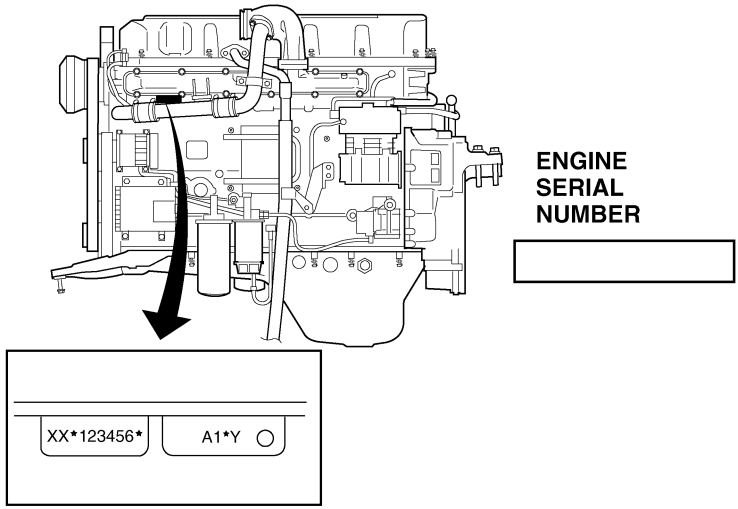

C0028943

https://truckmanualshub.com/

Engine Information Plate

In compliance with Federal and California emission requirements, an engine information label is affixed to all MACK diesel engines. This label, which is located on the cylinder head cover at the front of the engine, gives basic engine identification information (engine model, serial number, etc.), advertised horsepower at rated speed, emissions regulations to which the engine conforms and inlet and exhaust valve lash settings. Examples of the 49 state EPA approved, and 50 state EPA and California approved engine identification labels are given below.

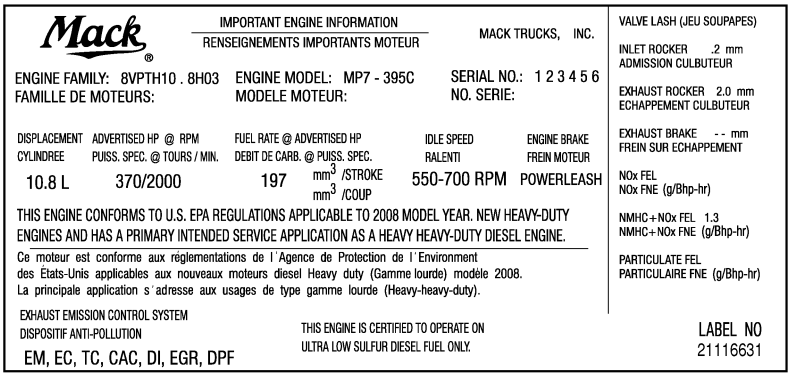

C0028944

Engine Identification Label - 49 State EPA Approved Engine without California "Clean Idle"

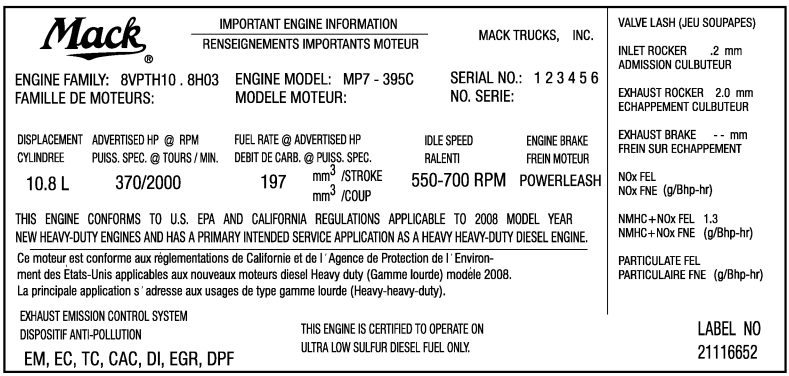

C0028945

Engine Identification Label - 50 State EPA Approved Engine with California "Clean Idle"

Clean Idle Engines

The California Air Resources Board (ARB) requires that 2008 model year vehicles be equipped with engines having tamper-resistant software which limits the time at which the engine can idle at speeds above low idle (550–700 rpm). At speeds above low idle, and without a PTO engaged, idle time will be limited to five minutes, after which the engine will revert back to low idle. Vehicles equipped with a Clean Idle engine are identified by a label which is affixed to the left front corner of the hood on conventional models (CXU, CHU and GU), and the lower portion of the driver's side door on cab-over models (MRU and LEU).

C0028946

Clean Idle Engine Label

https://truckmanualshub.com/

Transmission Identification

The **MACK T300 Series transmission** serial number is located on the rear left side of the main case.

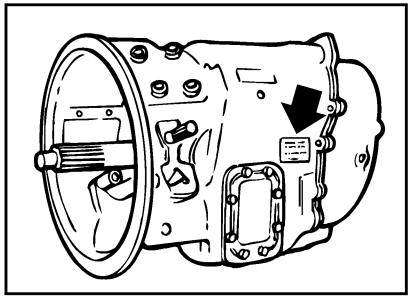

MACK T300 Transmission Serial Number

C0028947

The **Allison RDS, EVS and SP transmission** identification plate is located on the rear right side of the main case, near the lower end.

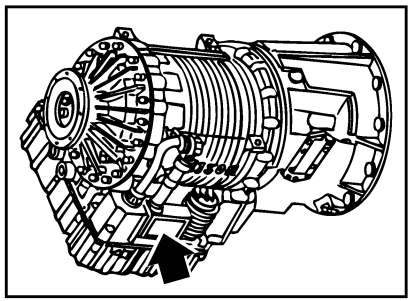

Allison RDS, EVS & SP Transmission Serial Number

C0029891

All **Eaton® Fuller® transmission** identification plates are located on the front left side of the main case.

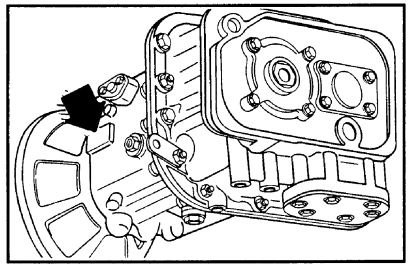

Eaton Fuller Transmission Serial Number

C0028949

The **MACK carrier assembly** serial number is located on the front right side of the housing.

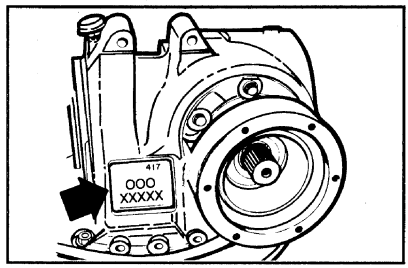

Carrier Assembly Serial Number

C0028950

The **Eaton® Spicer® rear axle** serial number is located on the rear of the axle housing toward the carrier.

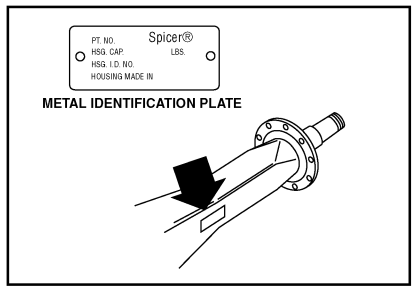

Rear Axle Serial Number

C0028951

https://truckmanualshub.com/

The **Eaton® Spicer® carrier assembly** serial number is located on the left side of the forward carrier, and the top of the rear carrier.

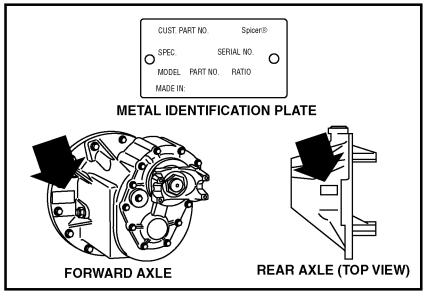

Carrier Serial Number

C0028952

The **MERITOR rear axle** identification tag is located on the left or right rear of the rear axle housing, next to the carrier.

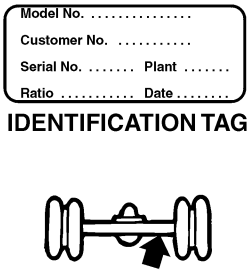

Rear Axle Serial Number

C0028953

The **MERITOR carrier assembly** serial number is located on the left side of the forward carrier, and the top of the rear carrier.

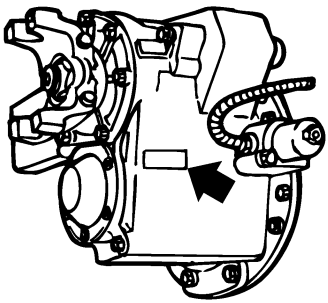

Carrier Serial Number

C0028954

WARRANTY INFORMATION

This chassis is equipped with a US'07 emission compliant engine and an exhaust aftertreatment system (Diesel Particulate Filter). Use of Ultra Low Sulfur Diesel (ULSD) fuel and EO-O Premium Plus (or VDS-4) specification high performance diesel engine oil is required in this vehicle.

Note: Use of improper or unapproved fuel or engine oil will void the engine and aftertreatment system (Diesel Particulate Filter) warranty. 2007 emission engines REQUIRE the use of EO-O Premium Plus (or VDS-4) specification high performance diesel engine oil and Ultra Low Sulfur Diesel (ULSD) fuel.

Air Brake System

The MACK Standard Vehicle Warranty applies to the air brake system, as set forth in the Warranty, but only if the air brake system has not been subjected to unauthorized additions, deletions or modifications. If any such unauthorized additions, deletions or modifications are performed, Mack Trucks, Inc. disclaims any and all liability for any loss or damage arising out of a malfunction of the air brake system.

The air brake system was designed and built to conform to all applicable federal motor vehicle safety standards in effect at the time of manufacture.

Tractor air systems are designed for operation as a tractor only, and truck air systems are designed to be operated as a truck only. If a tractor is going to be converted for operation as a truck, the air brake system must be reconfigured to that of a truck. Conversely, if a truck is going to be converted for operation as a tractor, the air brake system must be reconfigured to that of a tractor. Consult your local MACK distributor for additional information.

If any unauthorized additions, deletions or modifications are made to any portion of the air brake system which is required by Federal Motor Vehicle Safety Standards, Mack Trucks, Inc. makes no representation as to conformity with the Standards.

For complete warranty information, refer to the *Pedigreed Protection Plan (US-TS468, CANADA-TS590)* provided with each vehicle.

https://truckmanualshub.com/

SERVICE LITERATURE

The MACK Service Publications department offers a variety of service literature (including individual service manuals) that can be ordered through any MACK dealer or on the Mack Trucks, Inc. website at www.macktrucks.com.

Note: Mack Trucks, Inc. would like to emphasize the importance of proper service and maintenance procedures. Service, repair and replacements must be performed by certified, licensed mechanics in accordance with MACK standards.

TS576 – MACK Class 8 –Components Service Manual

This multi-binder set contains service information covering all MACK components (i.e., engines, transmissions, front and rear axles, cabs, fuel systems, electrical systems).

Note: If your vehicle contains a number of non-MACK (vendor) components, the *Class 8 – Custom Collated Service Manual (TS473)* might be more appropriate.

TS473 – Class 8 – Custom Collated Service Manual

TS473E – Class 8 – Custom Collated Service Manual on CD

This tailor-made set provides complete service information for all components in the specified vehicle (including both MACK and vendor service manuals). When ordering a *Class 8 – Custom Collated Service Manual (TS473) or Class 8 – Custom Collated Service Manual on CD (TS473E)*, be sure to include the complete Model-Serial number and General Sales Order (GSO) number.

CUSTOMER SERVICE

Call 1-800-866-1177 for MACK OneCall™

The OneCall customer support system is a toll-free nationwide hotline that operates 24 hours a day, seven days a week, including holidays. If you break down on the road, simply call 1-800-866-1177. There is a staff of trained, experienced technicians ready to help. They can help troubleshoot a problem to get you back on the road, arrange to send roadside assistance or arrange for towing to the nearest MACK dealership.

OneCall provides personalized service. The person who initially takes your call will be the same person who sees that your situation is resolved quickly and to your satisfaction. If a follow-up call is necessary, the same familiar voice will be on the other end of the line.

OneCall technicians can also help you plan ahead to keep your operation running efficiently by scheduling routine maintenance and lubrication service, or by locating the nearest MACK dealership.

Questions and Complaints

Your satisfaction is our most important concern.

If questions or complaints arise, first discuss the matter with the service manager at the MACK facility involved. If you are not satisfied with the service manager's response, contact the branch manager, principal or general manager of the distributorship. If assistance is required at a service dealer, contact the owner of the establishment.

If, for any reason, you need further assistance after dealing with the personnel at a MACK subsidiary or distributor, contact the regional service manager at the nearest MACK regional service office. The regional service manager has the responsibility and the authority to recommend action in most cases and (with the aid of relevant district service personnel) will make every effort to conduct a fair review of the situation.

Addresses

The addresses, telephone and fax numbers of the Mack Trucks, Inc. regional offices are:

United States

Northeast Region – 2100 Mack Blvd., Mail: P.O. Box M, Allentown, PA 18105-5000, TEL: (610) 966-8093, FAX: (610) 966-8005

https://truckmanualshub.com/

Southeast Region – 6768 Southlake Parkway, Morrow, GA 30260, TEL: (770) 960-0511, FAX: (770) 960-0593

Central Region –900 S. Frontage Rd., Suite 100, Woodridge, IL 60517, TEL: (630) 910-3330, FAX: (630) 910-3331

Southwestern and Western Regions – 5605 N. MacArthur Blvd., #550, Mail: P.O. Box 165408, Irving, TX 75016-5408, TEL: (972) 518-1614, FAX: (972) 550-0389

Canada

Executive Office – Mack Canada, Inc., 5600A Cancross Court, Mississauga, ON L5R 3E9, TEL: (905) 366-3400, FAX: (905) 366-0165

Australia

Mack Trucks Australia Pty. Ltd., CNR Archerfield and Boundary Roads, Mail: P.O. Box 364, Richlands, QLD 4077, Australia, TEL: 61-7-3853-3333, FAX: 61-7-3853-3392

International

2100 Mack Blvd., Mail: P.O. Box M, Allentown, PA 18105-5000, TEL: (610) 709-3405, FAX: (610) 709-2323

Additional Assistance

If additional assistance is required, Mack Trucks, Inc. maintains a Customer Service Department (staffed by experienced personnel) to aid customers who need information or assistance not provided at the local or regional level.

The Customer Service Department phone number is **(610) 709-3961.**

https://truckmanualshub.com/

When contacting the regional service offices or Customer Service Department, provide the following information:

- Vehicle Identification Number (VIN) — This 17-digit number is typically located on a label on the driver-side door latch post and behind the front axle on the right, front frame rail.
- Model and year of the vehicle
- Date that the vehicle was purchased and put into service
- Date(s) and mileage of repair(s)
- Dealer that sold and/or serviced the vehicle
- Description of unresolved service complaint or inquiry
- Summary of action taken to date (by the dealer and the regional service office)
- Names of individuals (if known) contacted at the dealer and the Mack Trucks, Inc. regional service office.

https://truckmanualshub.com/

REPORTING SAFETY DEFECTS

United States

If you believe that your vehicle has a defect which could cause a crash, injury or death, you should immediately inform the National Highway Traffic Safety Administration (NHTSA), in addition to notifying Mack Trucks, Inc.

If NHTSA receives similar complaints, it may open an investigation and if it finds that a safety defect exists in a group of vehicles, it may order a recall and remedy campaign. However, NHTSA cannot become involved in individual problems between you, your distributor, or Mack Trucks, Inc.

To contact NHTSA, either call the U.S. Government's Vehicle Safety Hotline toll-free at 1-888-327-4236 (TTY: 1-800-424-9153); go to http://www.NHTSA.gov; or write to: Administrator, National Highway Traffic Safety Administration, 400 Seventh Street, S.W., Washington, DC 20590. You can also obtain other information about motor vehicle safety from the Vehicle Safety Hotline.

Canada

Canadian customers who wish to report a safety-related defect to Transport Canada — Defect Investigations and Recalls, may telephone the toll free hotline at 1-800-333-0510, or contact Transport Canada by mail at Transport Canada, ASFAD, Place de Ville Tower C, 330 Sparks Street, Ottawa ON K1A 0N5. For additional road safety information, please visit the Road Safety website at http://www.tc.gc.ca/roadsafety/menu.htm.

Mexico

Volvo Trucks de Mexico, S.A. de C.V. should be informed immediately if you believe the vehicle has a defect that could cause a vehicle accident, injury or death. Contact Volvo Trucks de Mexico by calling 011-52-55-50-81-68-50 or by writing to: Volvo Trucks de Mexico, S.A. de C.V., Prol. Paseo de la Reforma 600, 1er. Piso — 121, Col. Santa Fe Pena Blanca, C.P. 01210, Mexico, D.F. Within Mexico, call 01 (800) 90 94 900.

https://truckmanualshub.com/

EVENT DATA RECORDING DEVICES

Your MACK vehicle is equipped with a device generally referred to as an "event data recorder" or "EDR." Please note that while the term "event data recorder" is typically used throughout the motor vehicle industry, not every EDR is the same; i.e., they do not all record the same data elements. The EDR on your MACK vehicle records vehicle speed, engine rpm, time and date, plus a variety of pedal and switch positions, both before and after an "event." Sudden vehicle deceleration or the occurrence of certain other vehicle operational characteristics will define (trigger) an "event."

Optional equipment available for your MACK vehicle, such as the Eaton® VORAD® Collision Warning System, may also provide event data recording features.

If you have a question about your EDR, please contact your MACK dealer or regional service office.

https://truckmanualshub.com/

SAFETY STATEMENT

Mack Trucks, Inc. cannot anticipate every possible occurrence which may involve a potential hazard. An accident can be avoided by recognizing potentially hazardous situations before a dangerous situation occurs. Correctly performed service procedures are critical for technician safety and safe, reliable operation of the vehicle.

DANGER

Do not operate the engine in an enclosed area. All internal combustion engines give off various fumes and gases while running. Inhalation of exhaust fumes can cause death.

DANGER

Do not sit in a parked vehicle for any extended amount of time with the engine running if there are leaks in the exhaust system. Exhaust fumes could leak into the cab area and death can result. On a regular basis inspect the exhaust system for leaks and repair any leakage.

DANGER

Driver attitude is the most important part of any effective vehicle safety system. Mack Trucks, Inc. strongly encourages all drivers and passengers to use their seat belts, drive defensively, remain alert and respect the speed limits. Many accidents can also be avoided through regular vehicle maintenance.

DANGER

Engine-driven components such as Power Take-Off (PTO) units, fans and fan belts, driveshafts and other related rotating assemblies, can be very dangerous. Do not service engine-driven components unless the engine is shut down. Always keep body parts and loose clothing out of range of these powerful components to prevent serious personal injury. Be aware of PTO engagement or nonengagement status. Always disengage the PTO when not in use.

https://truckmanualshub.com/

WARNING

Certain everyday procedures such as washing the vehicle and cleaning the windshield can also be hazardous because of the vehicle's height. Mack Trucks, Inc. does NOT recommend climbing up on the vehicle to perform these operations. Instead, stand on the ground and use brushes and squeegees mounted on extension poles. When better access is necessary (for instance, when washing the cab roof), use sturdy ladders held in place by someone on the ground.

WARNING

Secure loose objects. Loose objects in the cab or sleeper can be dangerous in a sudden stop or on bad roads. Secure any appliance added to the vehicle, such as a refrigerator or a radio.

WARNING

Keep clear of fan when engine is running. Fan may start to rotate at high speed without warning.

https://truckmanualshub.com/

CERTIFICATION LABELS

Safety Certification Label

National Highway Traffic Safety Administration (NHTSA) regulations require affixing a certification label to all vehicles.

NHTSA regulations also require that the certification label be affixed to either the hinge pillar, door latch post or the door edge that meets the door latch post next to the driver seat. If none of these locations are practical, it may be attached to the left side of the instrument panel or to an inward facing surface of the driver-side door.

In compliance with NHTSA regulations, your Mack® vehicle has a safety certification label affixed in one of the NHTSA locations listed above. This label may be either an Incomplete Vehicle and/or Completed Vehicle label. Both labels are described below.

Incomplete Vehicles

INCOMPLETE VEHICLE MANUFACTURED IN 05/2005 BY MACK TRUCKS, INC.
VEHICLE IDENTIFICATION NUMBER: 1M2AD65CX6M001944 GVWR: 40371 KG (89000 LB)

GAWR — FRONT AXLE:	9072	KG	(20000	LB)
GAWR — 1ST INTERMEDIATE AXLE:	10433	KG	(23000	LB)
GAWR — 2ND INTERMEDIATE AXLE:	10433	KG	(23000	LB)
GAWR — 3RD INTERMEDIATE AXLE:		KG	(	LB)
GAWR — 4TH INTERMEDIATE AXLE:		KG	(	LB)
GAWR — 5TH INTERMEDIATE AXLE:		KG	(	LB)
GAWR — REAR AXLE:	10433	KG	(23000	LB)

INCOMPLETE VEHICLE (VÉHICULE INCOMPLET) MANUFACTURED IN 08/2005 BY MACK TRUCKS, INC.
VEHICLE IDENTIFICATION NUMBER: 1M2AL01C56M001386 GVWR/PNBV: 37194 KG

CANADA NSVAC 975 CMVSS TRANSPORT

GAWR/PNBE — FRONT AXLE:	9072	KG
GAWR/PNBE — 1ST INTERMEDIATE AXLE:	5443	KG
GAWR/PNBE — 2ND INTERMEDIATE AXLE:	5443	KG
GAWR/PNBE — 3RD INTERMEDIATE AXLE:	8618	KG
GAWR/PNBE — 4TH INTERMEDIATE AXLE:		KG
GAWR/PNBE — 5TH INTERMEDIATE AXLE:		KG
GAWR/PNBE — REAR AXLE:	8618	KG

C0028955

A chassis-cab is an incomplete vehicle with a completed occupant compartment that requires the addition of cargo-carrying, work-performing or load-bearing components to perform its intended functions.

The chassis-cab manufacturer must affix a label to the incomplete vehicle in one of the NHTSA locations listed above. This label provides the chassis-cab date of manufacture, VIN and vehicle certification information.

https://truckmanualshub.com/

Completed Vehicles

In addition to the label supplied by Mack Trucks, Inc. as the chassis-cab manufacturer, a Completed Vehicle certification label, supplied by the body manufacturer, is affixed in the same general location. This label provides information pertaining to Gross Vehicle Weight Rating (GVWR), Gross Axle Weight Rating (GAWR), tire and rim information, etc.

On **MACK-completed vehicles**, this label contains the date of manufacture, VIN, GVWR, GAWR, and tire and rim data. It is found in one of the NHTSA locations listed above.

MANUFACTURED BY MACK TRUCKS, INC. IN 11/2005 GVWR 23587 KG (52000 LB)
THIS VEHICLE CONFORMS TO ALL APPLICABLE U.S. FEDERAL MOTOR VEHICLE SAFETY STANDARDS IN EFFECT ON THE DATE OF MANUFACTURE SHOWN ABOVE. VEHICLE IDENTIFICATION NUMBER: 1M1AK06Y76N012587

	GAWR		TIRES	RIMS					
FRONT:	5443 KG	(12000 LB)	WITH 11R22.5 G,	22.5 X 8.25 ,	AT 827 KPA	(100 PSI)	COLD	SINGLE
1ST INT:	9072 KG	(20000 LB)	WITH 11R22.5 G,	22.5 X 8.25 ,	AT 724 KPA	(100 PSI)	COLD	DUAL
2ND INT:	KG	(LB)	WITH		AT KPA	(PSI)	COLD	
3RD INT:	KG	(LB)	WITH		AT KPA	(PSI)	COLD	
REARMOST:	9072 KG	(20000 LB)	WITH 11R22.5 G,	22.5 X 8.25 ,	AT 724 KPA	(100 PSI)	COLD	DUAL

VEHICLE TYPE: TRUCK TRACTOR

MANUFACTURED IN 09/2005 BY MACK TRUCKS, INC.
VEHICLE IDENTIFICATION NUMBER: 1M1AP02Y06N001003

GVWR/PNBV: 29938 KG VEHICLE TYPE: TRUCK-TRACTOR/CAMION TRACTEUR

GAWR/PNBE — FRONT:	9072 KG	WITH 425/65R22.5L TIRES,	22.5 X 12.25	RIMS, 827 KPA	COLD	SINGLE
GAWR/PNBE — 1ST INT:	10433 KG	WITH 11R24.5 G TIRES,	24.5 X 8.25	RIMS, 724 KPA	COLD	DUAL
GAWR/PNBE — 2ND INT:	KG	WITH TIRES,		RIMS, KPA	COLD	
GAWR/PNBE — 3RD INT:	KG	WITH TIRES,		RIMS, KPA	COLD	
GAWR/PNBE — REAR:	10433 KG	WITH 11R24.5 G TIRES,	24.5 X 8.25	RIMS, 724 KPA	COLD	DUAL

CANADA • NSVAC • CMVSS • 975 • TRANSPORT

C0028956

https://truckmanualshub.com/

ADVISORY LABELS

Throughout this book you will find paragraphs labeled *Danger, Warning, Caution, Note and Service Hint. Danger, Caution and Warning* labels are also found in various locations on the vehicle to alert drivers, operators and service technicians to situations which can cause personal injury or equipment damage. The labels shown are applicable to the Mack® Granite™ GU model chassis at the time of publication and are representative of what can be typically found on a Mack® Granite™. (Your vehicle may not contain all of the labels illustrated in this handbook.) These labels are for your benefit. Please look through this section and note the labels, their locations and what they explain. Be sure to replace any label that is damaged.

https://truckmanualshub.com/

Advisory Label Locations (On Vehicle)

Labels Found on Chassis

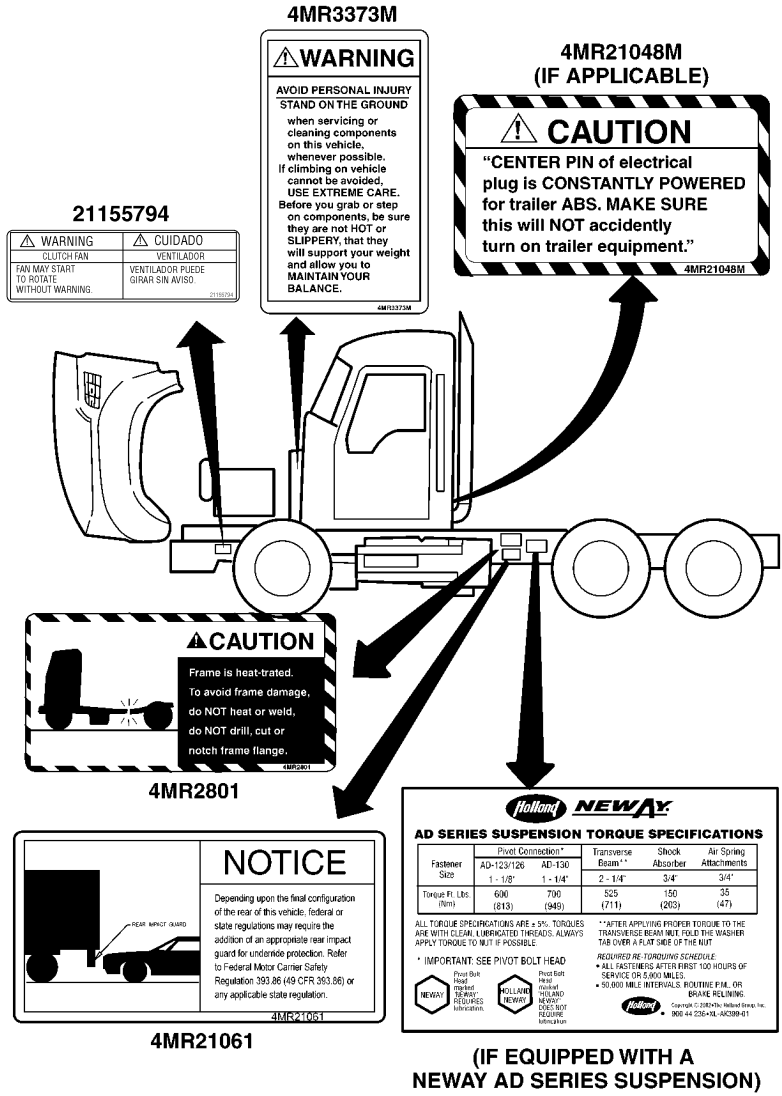

C0029831

https://truckmanualshub.com/

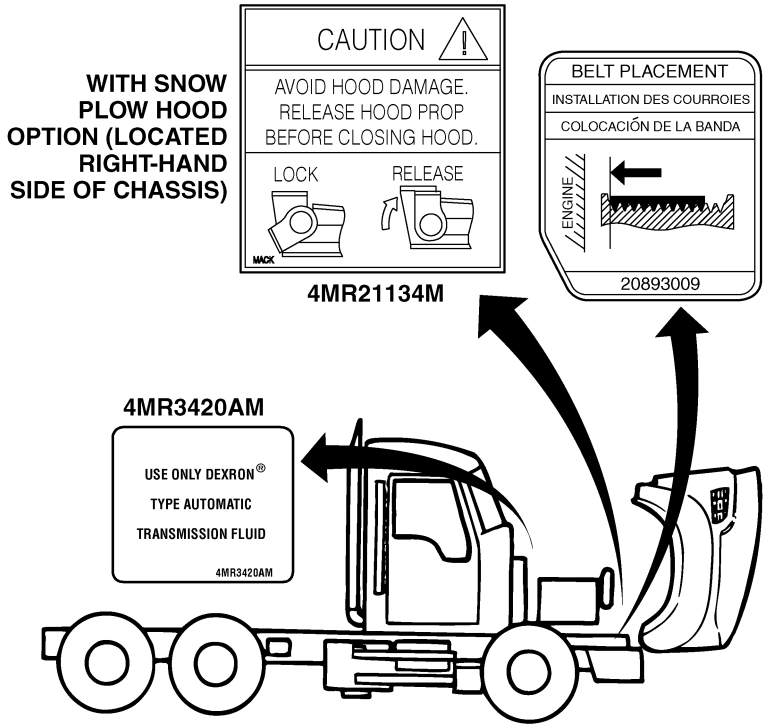

C0028958

https://truckmanualshub.com/

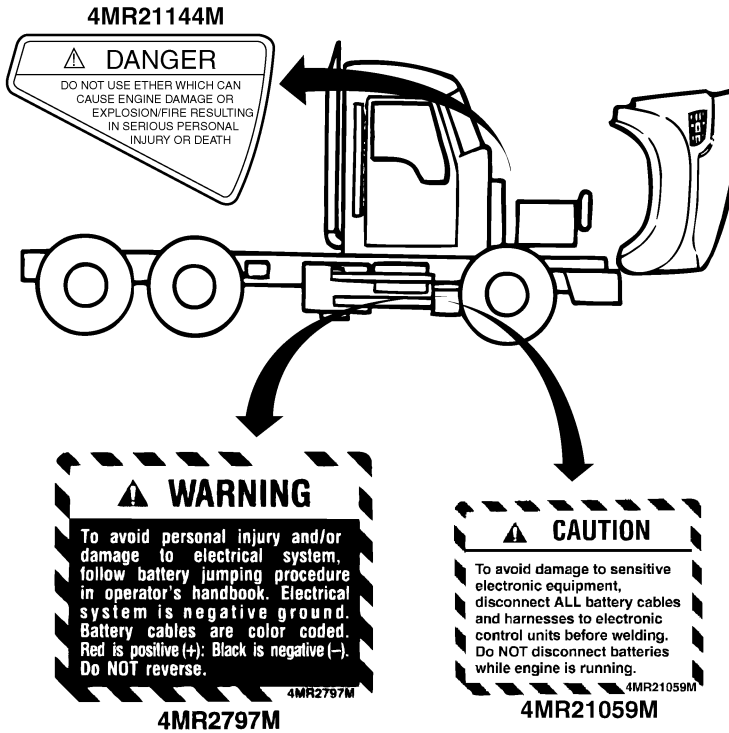

C0028959

https://truckmanualshub.com/

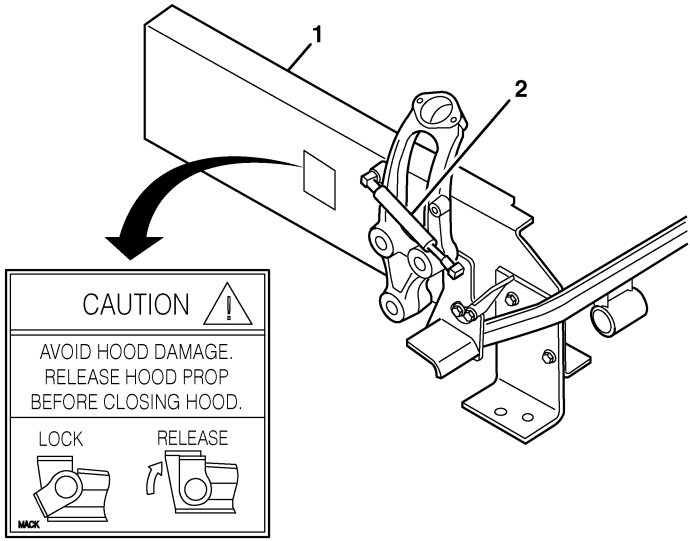

4MR21134M

C0029013

1. Right Side Frame Rail	2. Hood Prop

https://truckmanualshub.com/

C0029014

https://truckmanualshub.com/

Labels Found on Driver-Side Sun Visor

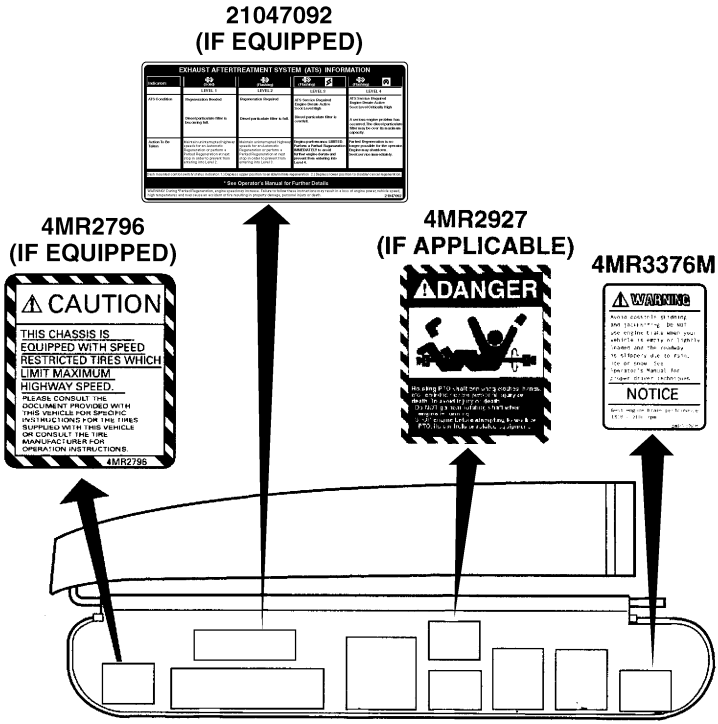

C0029832

https://truckmanualshub.com/

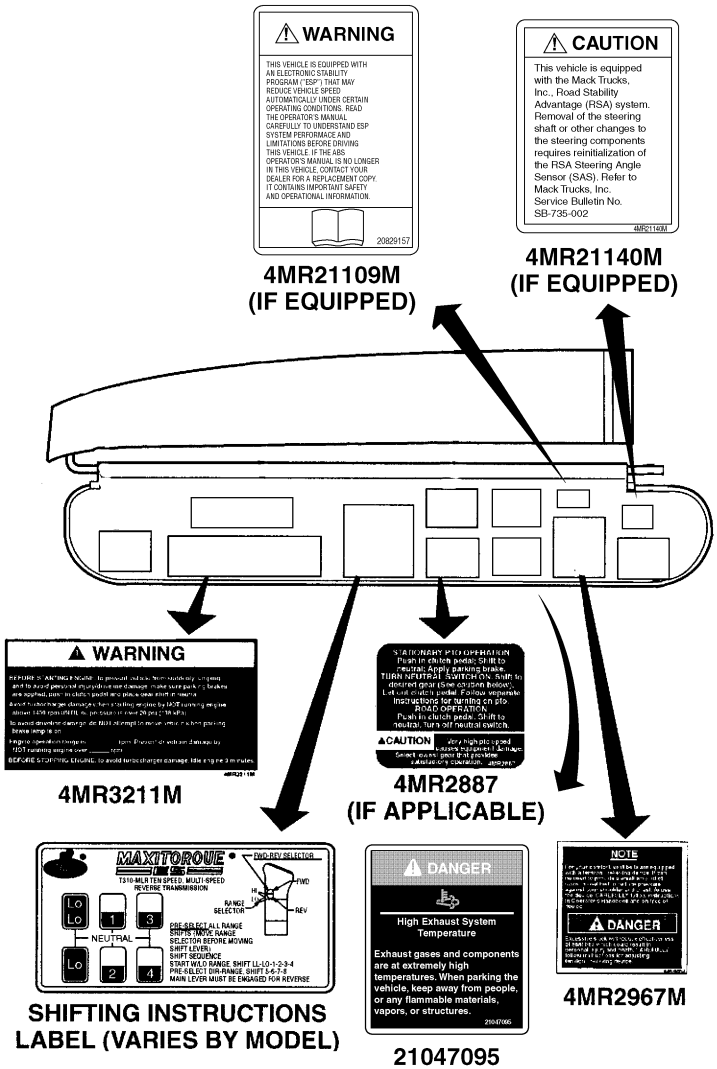

C0029016

https://truckmanualshub.com/

Labels Found on Instrument Panel

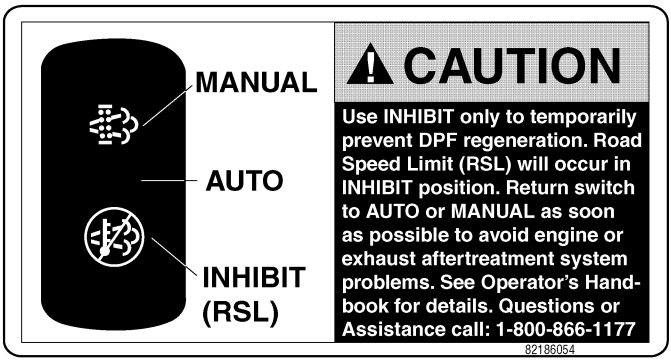

C0029017

Labels Found on Windshield

CAUTION
This tractor has an air brake system designed for TRACTOR OPERATION ONLY. If this tractor is converted for operation as a TRUCK, the air brake system MUST be changed to provide SAFE OPERATION as a TRUCK. Contact your MACK Dealer for instructions.
DO NOT remove until delivered to the ultimate consumer. 4MR21027

CAUTION
This truck has an air brake system designed for TRUCK OPERATION ONLY. If this truck is converted for operation as a TRACTOR the air brake system MUST be changed to provide SAFE OPERATION as a TRACTOR. Contact your MACK Dealer for instructions.
DO NOT remove until delivered to the ultimate consumer. 4MR21031

C0029018

Note: Label to be removed upon delivery to the end user. Refer to "BRAKE OPERATION" page 155 in the *OPERATION* section for additional information.

https://truckmanualshub.com/

R-134a Refrigerant Label

The servicing caution label 4MR3283M is located under the hood attached to the receiver dryer bracket.

C0029019

Eaton Controlled Traction Differential Label

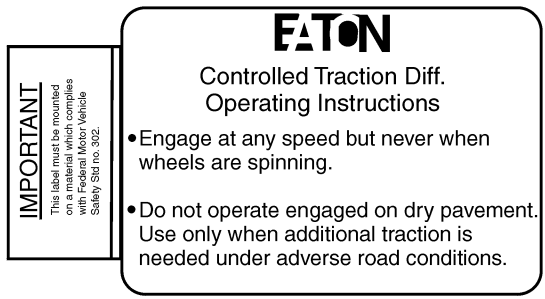

C0029020

https://truckmanualshub.com/

Labels Found on Fuel Tank

C0029021

Back Up Alarm (Optional)

Your chassis may be equipped with an optional back up alarm. If so, the following label will appear inside the cab.

C0029022

https://truckmanualshub.com/

TRUCK-TRACTOR CONSPICUITY

To make the vehicle more conspicuous when approached from the rear (in times when visibility is reduced), all truck/tractors built on or after July 1, 1997 have reflective devices applied on the rear of the cab and on the mudflaps or mudflap hanger brackets if mudflaps or mudflap hanger brackets are supplied from the factory. If mudflaps or mudflap hanger brackets are not supplied from the factory, reflective devices will be applied on the rear, lower portion of the cab. Refer to the illustration. Locations of these reflective devices may vary from this illustration, depending on the cab model and/or equipment added to the rear of the cab.

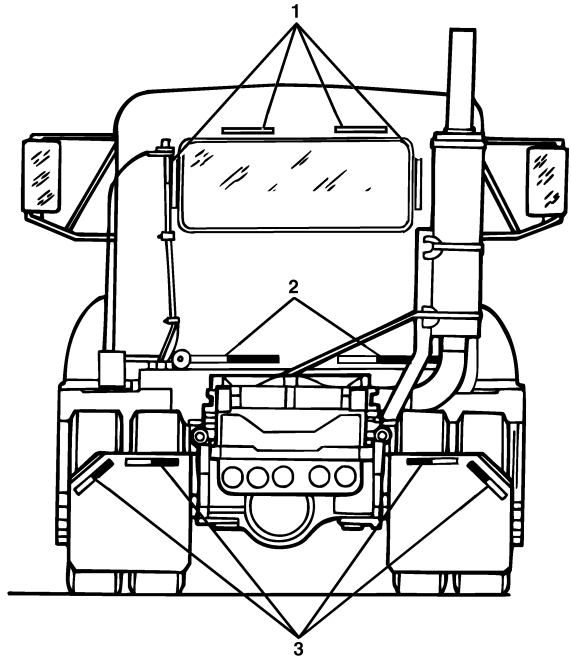

C0029023

1. White Reflective Devices Back of Cab 2. Red and White Reflective Devices (when not equipped with mudflaps and brackets)	3. Red and White Reflective Devices on Mudflaps or Hanger Brackets

Note: The truck-tractor conspicuity standard is intended to make the tractor as visible as the trailer when the truck tractor is being operated in a bobtail condition.

https://truckmanualshub.com/

CAB ENTRY/EXIT

Three-Limb Contact

WARNING

When entering or exiting a cab, the driver and/or passenger must have at least three limbs in contact with the vehicle or ground at all times. This means that a minimum of two hands and one foot, or one hand and two feet must be in FIRM contact with the vehicle or ground.

WARNING

When entering or exiting the cab, be aware of the condition of the steps and handrails. Clean any fuel, oil or grease off of the steps before entering the cab. During cold weather operation, ice and snow may accumulate and should be cleaned off to prevent slipping.

During cold, wet conditions when ice, slush, or snow may accumulate on the cab doorstep and other external surfaces, extra caution must be observed when entering or exiting the cab.

https://truckmanualshub.com/

WARNING

GUIDELINES FOR ENTERING AND EXITING TO AVOID SERIOUS INJURY

- Face the cab when entering AND exiting.
- Place papers, coats, etc., in cab BEFORE entering. Take out AFTER exiting. Keep hands free to grip handholds.
- Keep hands and shoes clean. Check hands and shoes for grease, mud, etc., BEFORE entering or exiting.
- Keep 3 limbs (2 hands and 1 foot or 1 hand and 2 feet) in FIRM contact with steps and handholds at ALL times.
- Be sure of where you step and grab the handholds. Keep the areas clean.
- Be EXTRA careful in rainy, snowy, etc., weather.
- Do NOT jump from vehicle.

Note: The illustrations on the following pages are typical for purposes of emphasizing a safe method for hand/foot placement and movement during cab entry/exit. Your vehicle may not look exactly like the one pictured.

Note: The arrows in the illustrations are intended to show movement. Notice that three-limb contact is maintained even when one foot, or one hand, is moving.

https://truckmanualshub.com/

Driver Side

The following cab entry and exit procedures, along with the safety guidelines outlined in Three-Limb Contact earlier in this section, should be used with this MACK vehicle.

Entry

These entry procedures are illustrated on the following page:

1 With both feet firmly on the ground, grab the outside handhold with both hands or grab the outside handhold with one hand and grab the steering wheel or inside handhold (if equipped) with the other hand. Then raise one foot to the bottom step. (See figure 1.)

2 Maintain a firm grip on the handholds and/or steering wheel and raise your other foot to the top step. (See figure 2.)

3 While still gripping the handholds and/or steering wheel, raise one foot to the cab floor. (See figure 3.)

4 Move one hand at a time to the steering wheel, inside handhold (if equipped) or cab interior. Bring the other foot inside the cab and sit down. (See figure 4.)

Exit

To exit, follow the illustrations in reverse order:

1 With both hands gripping the steering wheel, inside handhold (if equipped) or cab interior, stand up and face the inside of the cab. Move one foot to the top step. (See figure 4.)

2 Move one hand to the outside handhold and grip the steering wheel, inside handhold (if equipped), or cab interior with the other hand. With one foot firmly on the top step, lower the other foot to the bottom step. (See figure 3.)

3 Maintain a firm grip on the handholds and/or steering wheel, and keep one foot firmly on the bottom step. Then lower the other foot to the ground. (See figure 2.)

4 With both hands firmly gripping the handholds and/or steering wheel, lower the other foot to the ground. (See figure 1.)

https://truckmanualshub.com/

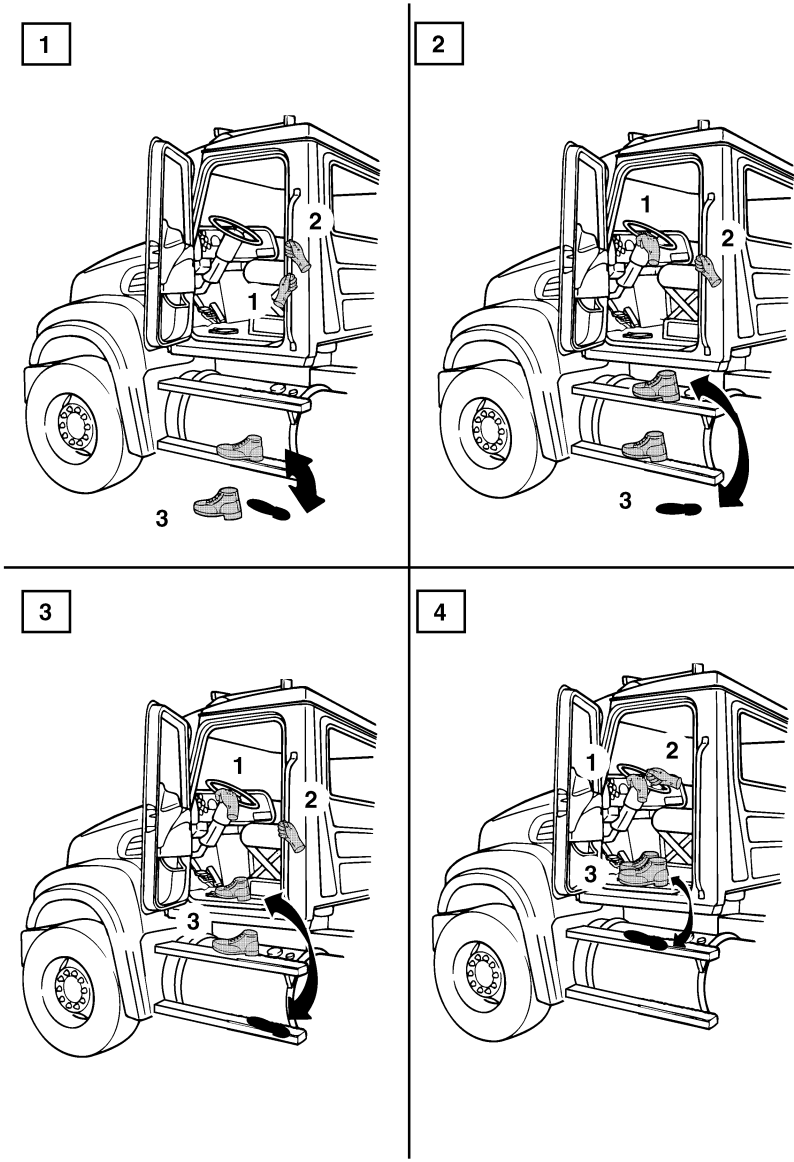

C0029833

https://truckmanualshub.com/

Passenger Side

The following cab entry and exit procedures, along with the safety guidelines outlined in the Three-Limb Contact section, should be used with this MACK vehicle.

Entry

These entry procedures are illustrated on the following page:

1 Facing the cab with both feet firmly on the ground, grab the outside handhold with both hands. Then raise your left foot to the bottom step. (See figure 1.)

2 Maintain a firm grip on the outside handhold with both hands and raise your right foot to the top step. (See figure 2.)

3 With both feet firmly on the steps, transfer your right hand to the inside handhold. Then raise your left foot to the top step. (See figure 3.)

4 Transfer your left hand to the cab interior keeping a firm grip on the inside handhold with the right hand. Bring the left foot to the cab floor. Then bring your right foot inside the cab and sit down. (See figure 4.)

Exit

To exit, follow the illustrations in reverse order:

1 With the left hand gripping the interior and the right hand gripping the inside handhold, stand up and face the inside of the cab. Move your right foot to the top step. Move your left foot to the top step. (See figure 4.)

2 Keep a firm grip with your right hand on the inside handhold and transfer the left hand from the interior to the outside handhold. Then move your left foot to the bottom step. (See figure 3.)

3 Maintaining your grip on the outside handhold with your left hand, move your right hand also to the outside handhold. With your left foot firmly planted on the bottom step, lower your right foot to the ground. (See figure 2.)

4 Continue holding the outside handhold with both hands as you lower your left foot to the ground. (See figure 1.)

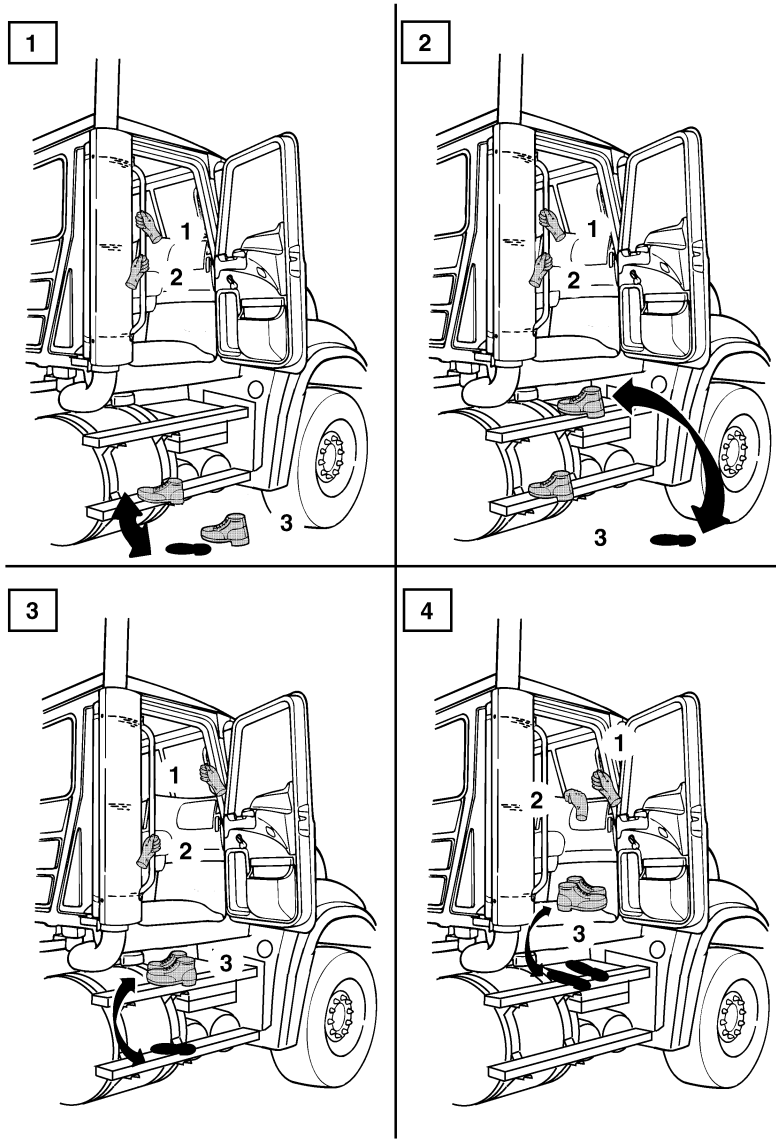

C0029834

https://truckmanualshub.com/

Deck Plate Access

There may be a time when you will need to climb up behind the cab. If your vehicle is equipped with a deck access package, steps and a handhold are provided so you can get to this area safely. Review the rules in the Three-Limb Contact section before climbing behind the cab.

Climbing Up

These procedures are illustrated on the following page:

1 Grab the handhold with both hands. Then move one foot to the bottom step. (See figure 1.)

2 While still gripping the handhold, and with one foot planted firmly on the bottom step, move your other foot to the middle step. (See figure 2.)

3 Then with one foot planted firmly on the middle step, move the other foot to the top step. (See figure 3.)

4 Finally, move your other foot from the middle step onto the deck plate and grab the next available handhold. (See figure 4.)

Climbing Down

To climb down from behind the cab, follow the illustrations in reverse order:

1 Grab the available handholds with both hands and move one foot to the top step. (See figure 4.)

2 While firmly gripping the handhold, and with one foot on the top step, move your other foot to the middle step. (See figure 4.)

3 Then with one foot planted firmly on the middle step, place the other foot on the bottom step. (See figure 3.)

4 With both hands still gripping the handhold, move your other foot from the middle step to the ground. (See figure 2.)

5 Finally, move foot from bottom step to the ground. (See figure 1.)

https://truckmanualshub.com/

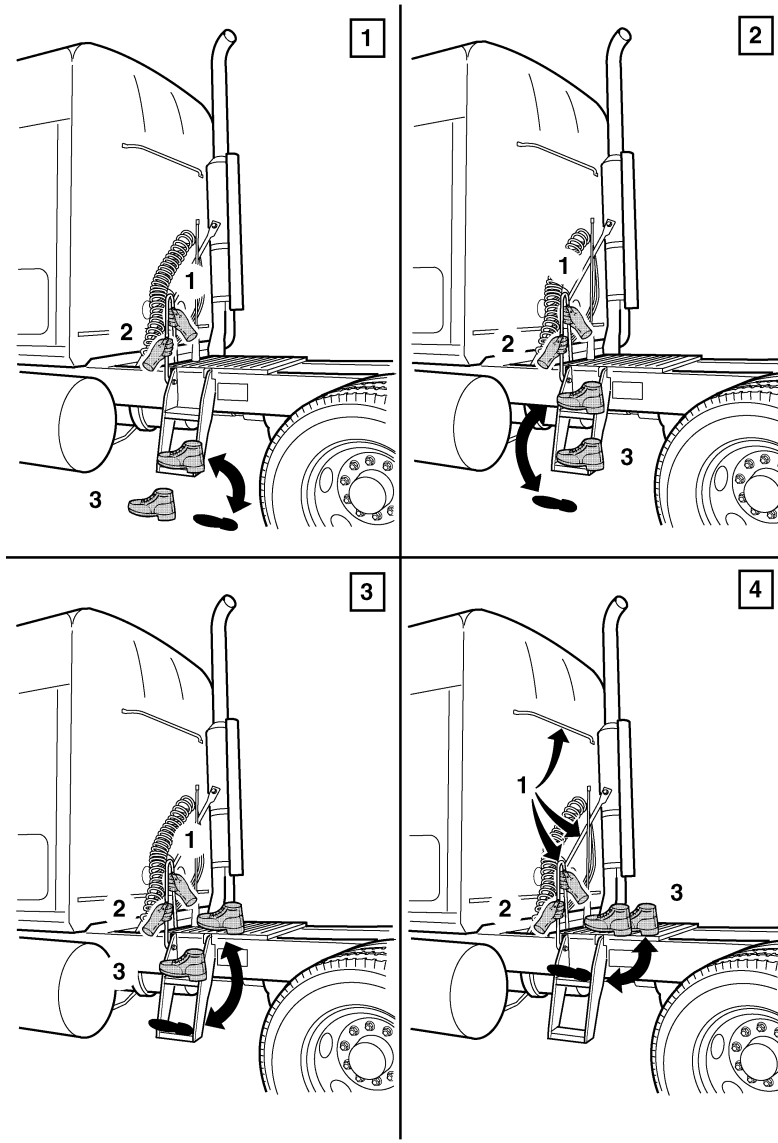

C0029835

https://truckmanualshub.com/

SAFETY TIPS FOR COLD WEATHER OPERATION

Driver Visibility

Poor driver visibility is not only annoying, but extremely unsafe under any circumstance. Without proper maintenance of visibility-related components, adverse weather conditions such as rain, snow and frost can seriously reduce visibility. Take time before winter arrives to check the following:

- Windshield Wipers

  — Check windshield wiper operation and speeds.

  — Inspect condition and travel of blades. Install new refills for any blades that are cracked, brittle, torn, or coated with road oil along the wiping edge.

- Windshield Washers

  — Check operation of windshield washer.

  — Inspect system hoses and replace if brittle or worn.

  — Inspect washer reservoir. Drain and flush if dirt particles are evident in washer solution.

  — Fill reservoir with commercially available non-freezing type washer fluid.

CAUTION

Do NOT fill reservoir with water only. Even though non-freezing type washer fluid is recommended, do not attempt to clear the windshield of ice by activating the windshield washer and wipers. Ice accumulations should be removed manually by using a scraper.

https://truckmanualshub.com/

- Heater/Defroster

  — Check operation and blowers for speed control, noise and temperature.

  — Inspect heater core for signs of corrosion and/or leakage.

  — Check that the defroster blend door is operating correctly and that all ducting is connected properly.

  — Be sure that vents are not obstructed by debris or other objects.

Cab Door Seals and Key Locks

Hollow-core rubber weather seals around some cab doors may lose their resilience in extremely cold temperatures (i.e., –40°C/–40°F and below). Under these conditions, it may be necessary to drill holes to penetrate the hollow core. This allows entrapped air to escape, thereby easing the opening/closing of cab door(s).

Be sure to keep the key locks clean and dry to prevent occasional winter freeze-up. Use of antifreeze lubricants is neither required nor recommended.

Outside Mirror Heater

In areas of frequent snowfall and ice, it may be beneficial to install heated mirrors which will defrost and de-ice cab mirrors. Heated mirrors eliminate the need to pull off the highway and stand on the roadside to scrape ice and snow from the mirrors during winter driving conditions. Heated mirrors are available either cab mounted or fender mounted.

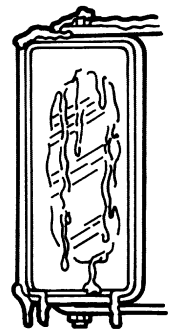

C0029132

https://truckmanualshub.com/

Air Horn Snow Shield

Installation of an air horn snow shield is recommended to prevent snow from clogging the air horn bell (maintaining maximum sound output).

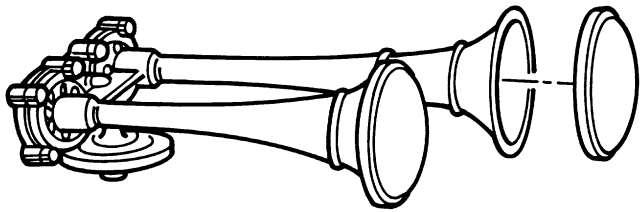

C0029133

Emergency Reflector Kit

Your chassis may be equipped with an emergency reflector kit.

Your kit includes red reflector triangles and can be stored in the following location:

- Inside the extended rider seat

Fire Extinguisher (Optional)

Your vehicle may be equipped with a fire extinguisher which is located inside your cab. Check your fire extinguisher regularly to make sure it is fully charged.

http://mechanicpublish.com/

CAB INTERIOR

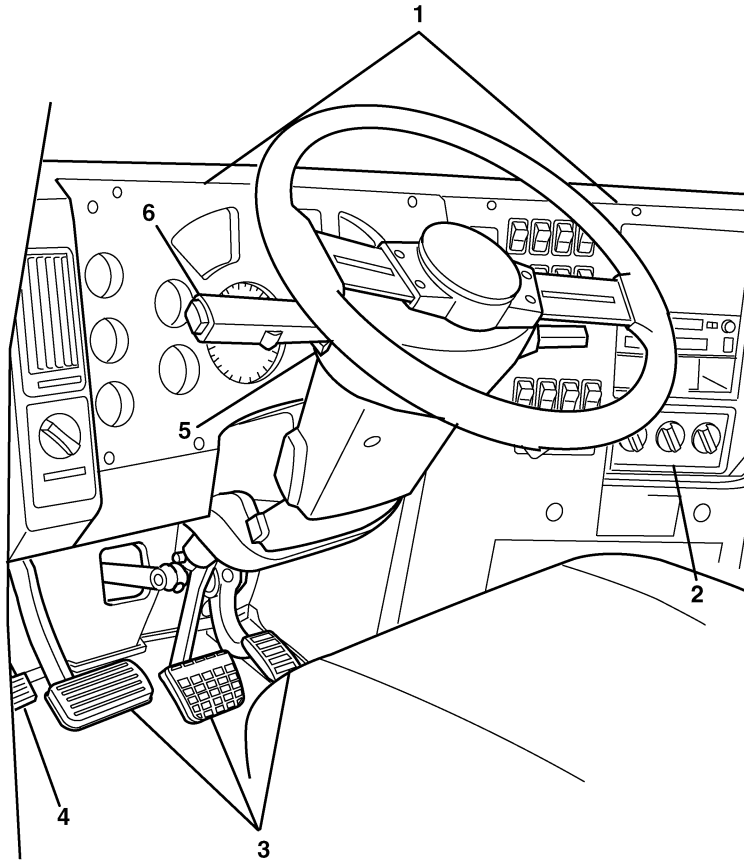

C0029134

1. Instrument Panels 2. Cab Climate Control Panel 3. Foot Pedals 4. Tilt Control Pedal	5. Hazard Switch 6. Turn Signal, Flash, HI/LO Beam, Courtesy Flash and Flash to Pass

https://truckmanualshub.com/

INSTRUMENT PANEL

Tell-Tales

A tell-tale is a display that indicates the actuation of a device, a correct or defective condition, or a failure to function.

The operator should become familiar with these symbols in order to recognize and react (if necessary) to the indicated condition. Tell-tale symbols are shown in the instrument panel illustrations on the following pages.

Colors

To promote visual recognition internationally, specific colors for tell-tales have been established. Unless governmental regulations (in the area where the vehicle is to be used) or engineering directives specify otherwise, the standard colors are:

- **Blue** – high-beam headlights/engine maintenance
- **Flashing Green** – turn signals
- **Flashing Red** – hazard condition involving the safety of personnel
- **Steady Green** – system in operation
- **Steady Red** – warning, immediate action required
- **Amber** – early warning, such as low fuel or Anti-Lock Brake System (ABS) malfunction

https://mechanicpublished.com/

Panel Arrangement

Your view from the driver seat should look something like the illustrations shown. The layout is designed to provide the operator with a good view of the gauges and controls (which are placed so they are within easy reach). The instrument panel, as shown in the following drawing, is broken down into several main sections. For easy identification we refer to them, from left to right, as Panels A, B, C, D, E and F (where necessary).

Note: This section shows the instruments and controls available for this vehicle at the time of publication. However, depending on options, your vehicle may not have all the instruments and controls shown here, and they may not be in the same position.

https://truckmanualshub.com/

INSTRUMENT PANEL GAUGE LAYOUT

The instrument panel features a wrap-around dash with electronically controlled "race type" gauges, meaning their needles point up when the truck is running properly.

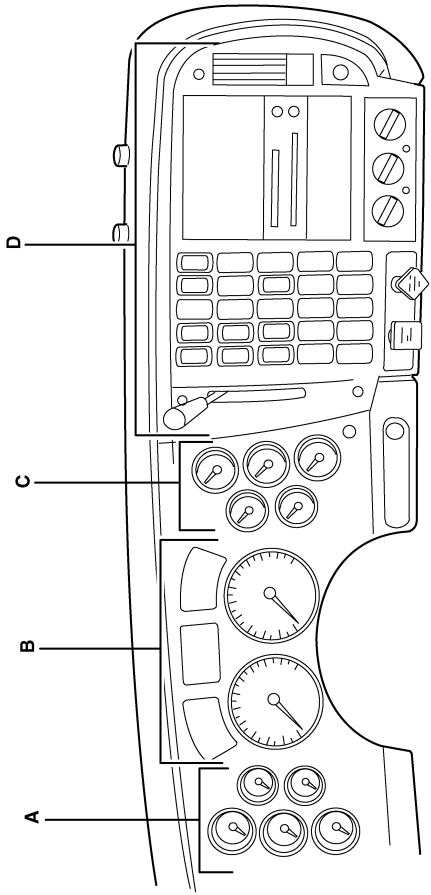

C0029135

http://mackpublished.com/

Panel A

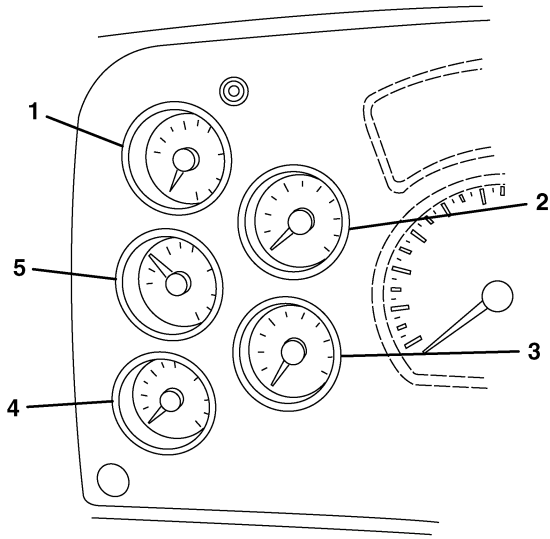

1. Manifold Pressure Gauge (If Equipped) 2. Oil Pressure Gauge 3. Engine Oil Temperature Gauge (Only with MACK Engine) 4. Tilt Control Pedal	4. Exhaust Pyrometer (If Equipped) 5. Transmission Oil Temperature Gauge (If Equipped)

https://truckmanualshop.com/

Panel B

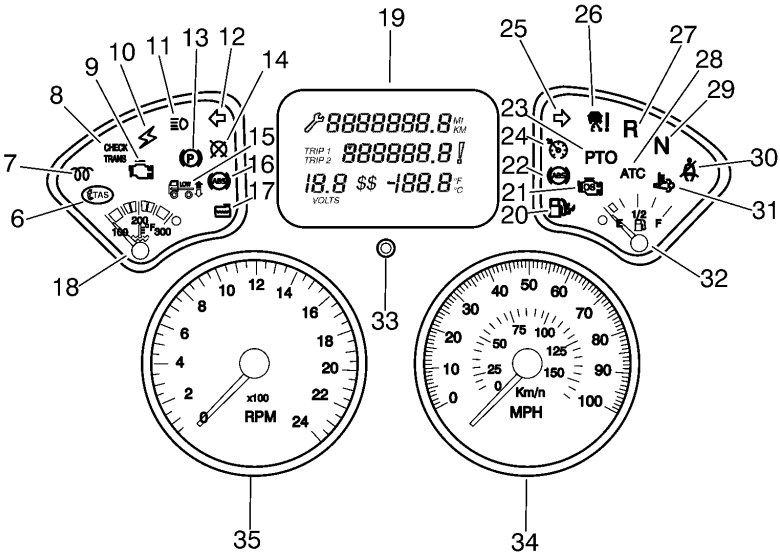

W3030489

https://truckmanualsinfo.com/

6. Integrated Temp-A-Start Indicator (Amber) (If Equipped)	21. Engine Over Speed Indicator (Red)
7. Wait to Start Indicator (Amber) (If Equipped)	22. Trailer Anti-Lock Brake System (ABS) Indicator (Amber)
8. Check Transmission Indicator (Amber)	23. Power Take-Off Operating Indicator (Green)
9.On Board Diagnostics Indicator (Amber)	24. Cruise Control On Indicator (Green)
10. Electronic Malfunction Indicator (Amber)	25. Right Turn Signal Indicator (Green)
11. High Beams Indicator (Blue)	26. Bendix Adaptive Cruise Control (ACC) Indicator (Red)
12. Left Turn Signal Indicator (Green)	27. Reverse Indicator (Amber)
13. Parking Brake Indicator (Red)	28. Automatic Traction Control (ATC) Indicator (Amber)
14. Engine Shutdown Indicator (Red)	29. Neutral Indicator (Amber)
15. Air Suspension Low Indicator (Amber)	30. Fasten Seat Belt Warning Indicator (Red)
16. Anti-Lock Brake System (ABS) Indicator (Amber)	31. HEST Indicator (If Equipped)
17. Low Coolant Level Indicator (Amber)	32. Fuel Gauge
18. Coolant Temperature Gauge	33. Mode Button (Basic Display Only)
19. Basic Display or Co-Pilot® (If Equipped)	34. Speedometer
20. Water in Fuel Indicator (Amber) (If Equipped)	35. Tachometer

https://truckmanualshub.com/

Panel C

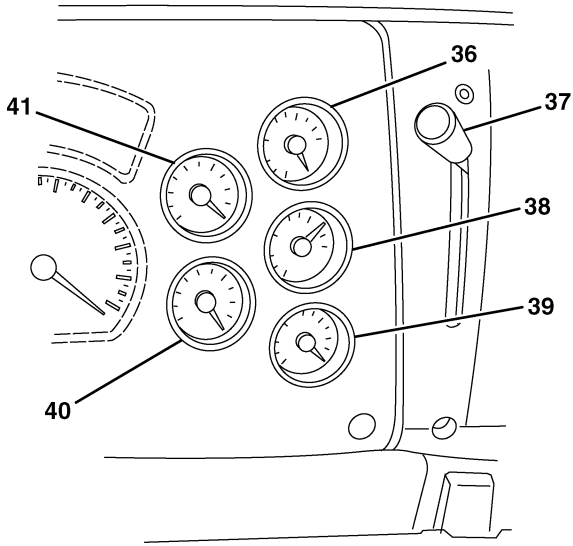

C0029138

36. Air Application or Air Suspension Gauge (If Equipped)	39. Rear Rear Axle Oil Temperature Gauge (If Equipped)
37. Hand-Control Brake Lever	40. Primary Air Pressure Gauge
38. Front Rear Axle Oil Temperature Gauge (If Equipped)	41. Secondary Air Pressure Gauge

https://truckmanualsnb.com/

Panel D

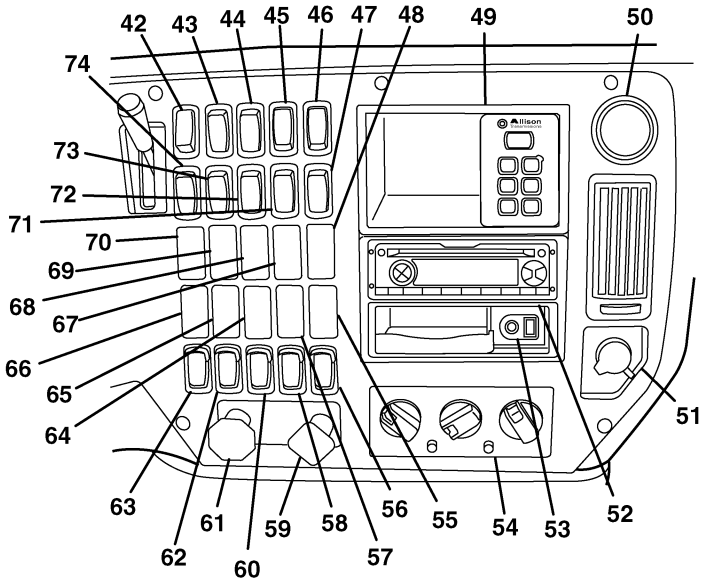

C0029139

42. Wiper Speed/Delay/Wash Master Switch	58. Optional Switch*
43. DPF Smart Switch (If Equipped)	59. Parking Brake Valve
44. Optional Switch*	60. Optional Switch*
45. Optional Switch*	61. Trailer Air Supply Valve
46. Optional Switch*	62. Optional Switch*
47. Optional Switch*	63. Optional Switch*
48. Optional Switch*	64. Optional Switch*
49. Storage Box or Automatic Transmission Selector (If Equipped)	65. Optional Switch*

https://truckmanualshub.com/

50. Air Filter Restriction Indicator (If Equipped)	66. Optional Switch*
51. Accessory Power Outlet	67. Optional Switch*
52. Radio Box	68. Optional Switch*
53. AUX/USB Port	69. Optional Switch*
54. Cab Climate Control	70. Optional Switch*
55. Optional Switch*	71. Optional Switch*
56. Optional Switch*	72. Optional Switch*
57. Optional Switch*	73. Resume/Set Switch
	74. Speed Control Switch

* The switches shown in parentheses are listed in their likely position on the panel; however, they may be at other switch locations depending on the customer's requirements. See "Function of Optional Switches" page 75 for a description of the optional switches, listed in alphabetical order.

http://mackpublished.com/

1. Manifold Pressure Gauge (If Equipped) – Measures the charge air boost pressure in the intake manifold.

2. Oil Pressure Gauge – Indicates engine oil pressure. The normal operating oil pressure for a MACK MP engine (at governed speed) is between 275.8 and 620.5 kPa (40 and 90 psi). At idling speed, the oil pressure should be between 275.8 and 413.9 kPa (40 and 60 psi).

3. Engine Oil Temperature Gauge (Only with MACK Engine) – Indicates the temperature of the engine oil.

Note: At full-load operation, engine oil temperature can be approximately 250°F on a sustained basis, and can intermittently reach temperatures between 250°F to 270°F. Sustained temperatures of 250°F and intermittent temperatures up to 270°F are acceptable. However, if engine oil operation temperatures exceed 250°F more than 20% of the total engine operating time, and the oil has a minimum of 300 hours of service, the oil must be changed. Otherwise, the normal mileage/time oil change interval may be used. For the MACK recommended oil change intervals, refer to the *Maintenance and Lubrication Manual (TS494).*

4. Exhaust Pyrometer (If Equipped) – Indicates the temperature of exhaust gases (about 12 to 16 inches from the diesel particulate filter inlet connections). This helps the operator select the proper gear for load and grade conditions, thereby avoiding excessive exhaust temperatures.

CAUTION

Do NOT exceed the maximum exhaust temperature indicated by the red line on the gauge. To reduce exhaust temperature, downshift or reduce engine power. If operating in cold climates with a winterfront, open the winterfront.

https://truckmanualshub.com/

5. Transmission Oil Temperature Gauge (If Equipped) – Indicates transmission oil temperature.

CAUTION

The maximum safe oil temperature for MACK transmissions is 121° C (250° F) for mineral-based oil, or 148° C (300° F) for synthetic oil. Continued operation with oil above this temperature will cause rapid deterioration of the oil's lubricating properties and is NOT recommended. Consult the vendor manual for non-MACK components.

6. Integrated Temp-A-Start (Amber) (If Equipped) – "Integrated Temp-A-Start" saves fuel by reducing the amount of time spent idling to keep the vehicle's batteries charged, the engine warm, or the cab and sleeper comfortable. Once the optional 'Integrated Temp-A-Start' feature is activated via a dash switch, the system will automatically start and stop the truck engine. Safety overrides prevent the system from activation if the transmission is in gear, the hood is up, or the parking brake is released. Integrated Temp-A-Start voltage and temperature target settings are fully programmable through either VCADS service support software, or, if enabled via the Co-Pilot instrument cluster display.

7. Wait to Start (Amber) (If Equipped) – Indicates that the intake pre-heat is enabled. Wait to start engine until light goes out.

8. Check Transmission Indicator (Amber) –Indicates that the transmission oil temperature is above the warning limit.

9. Transmission Oil Temperature Indicator (Red) – A red tell-tale light that illuminates when transmission oil temperature reaches a pre-determined level (depending on transmission make and model) indicating an overheat condition.

10. Electronic Malfunction Indicator (Amber) – Illuminates when V-MAC® detects an electronic malfunction. Refer to the applicable *V-MAC® Operator's Guide*. The electronic malfunction lamp may turn on when operating the vehicle in a bob-tail mode with the engine brake turned on and cruise control active. Cruise control will become inoperative but can be reset by shutting off, then restarting the engine. This condition can be corrected by resetting the "Service Brake Fault Threshold with Engine Brake" function. Refer to V-MAC® IV Customer Data Programming.

11. High Beam Indicator (Blue) – Indicates that high beams are on.

12. Left Turn Signal Indicator (Green) – Flashes green when the left turn signal is activated.

13. Inter-Axle Power Divider Lockout Indicator (Amber) – Indicates the Inter-Axle Power Divider Lockout is engaged.

https://mackpublished.com/

14. Engine Shutdown Indicator (Red) – Indicates the occurrence of a condition which requires that the engine be shut down (i.e., low water level, low oil pressure or high water temperature). If the engine shutdown feature is enabled, the engine will be forced to idle. Once vehicle is stopped, the engine will shut down. If the engine shutdown feature is disabled, the indicator will function as a warning light but the engine will not shut down.

15. Air Suspension Low Indicator (Amber) (with air suspension only) – Icon illuminated when air suspension lowered to warn driver not to drive in this condition.

16. Anti-Lock Brake System (ABS) Indicator (Amber) – Indicates an ABS malfunction. Also illuminates momentarily as a bulb check when the ignition is turned on. If the light turns on and stays on, a malfunction is indicated. If the light does not turn on when the ignition is turned on, the bulb and the power source may be defective. For additional information on operating an ABS-equipped vehicle, refer to “Anti-Lock Brake System (ABS)” page 157, of the *OPERATION* section.

Note: When an ABS malfunction is detected, anti-lock braking in the affected wheel(s) will be disabled and normal braking will return; the other wheels will retain anti-lock braking. Operate the vehicle normally and have the ABS system serviced to correct the fault.

17. Low Coolant Level Indicator (Amber) – Illuminates when the coolant level in the coolant surge tank is below the specified level. Stop and add coolant. Use typical warnings, etc., for filling coolant.

18. Coolant Temperature Gauge – Indicates the temperature of the engine coolant. The normal operating temperature for MACK engines is between 77°C and 107°C (170°F and 225°F). The driver will receive a warning if coolant temperature reaches 223°F and engine shutdown will occur at 227°F if the engine coolant temperature shut down option is enabled.

CAUTION

Coolant temperature must NOT exceed 107° C (225° F).

https://truckmanualshub.com/

19. Basic Display or Co-Pilot® (If Equipped)

BASIC DISPLAY

The Basic Display is an in-dash computer that allows the vehicle operator to monitor a minimum amount of information supplied by the V-MAC IV electronic control system. The operator presses a push button located directly below the driver information display to retrieve information.

Note: The Basic Display does not use a stalk switch, which is only available with the Co-Pilot® display.

The following information is available in the Basic Display:

- **Current Conditions**

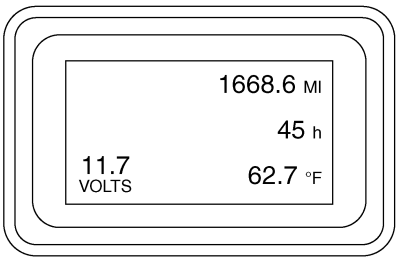

Current Conditions Screen

C0029140

https://tractormanuals.org/

• Trip Information

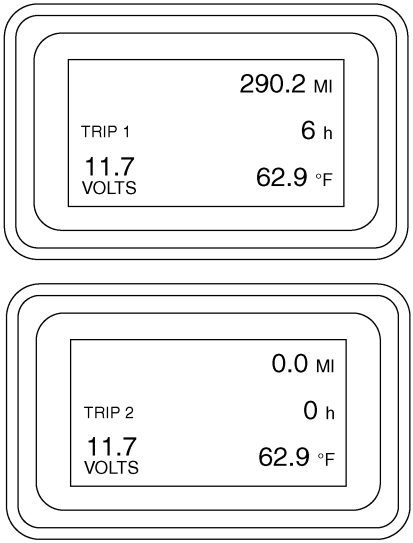

Trip Information Screens

C0029141

https://truckmanualshub.com/

- Diagnostics

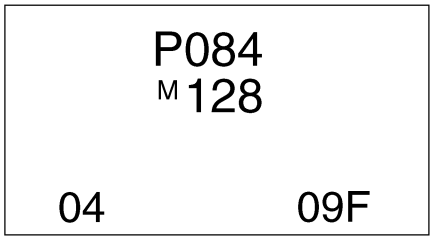

Inactive Fault Code Screen

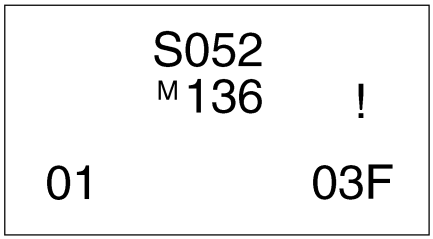

Active Fault Code Screen

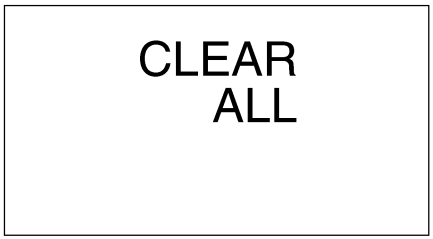

Clear All Inactive Fault Codes Screen

Diagnostic Screens

C0029142

https://truckmanualshub.com/

OR

CO-PILOT® (If Equipped)

Co-Pilot® is an in-dash computer that allows the vehicle operator to monitor information supplied by the V-MAC® electronic control system. The Co-Pilot® enhances the functions of V-MAC® by entering requested information with the stalk switch. The Co-Pilot® is very "user friendly" and prompts the operator with messages on the display screen. For more information on how to use the Co-Pilot®, please consult the *V-MAC® IV Vehicle Management and Control with Co-Pilot® Display Operator's Guide, TS898.*

GuardDog™ (Optional; Must be Enabled)

GuardDog™, an active maintenance monitoring system, uses sensor readings to show the status of routine maintenance requirements. If the vehicle is equipped with the GuardDog™ system, Co-Pilot® will display GuardDog™ related maintenance items under the following conditions:

• When the vehicle is started

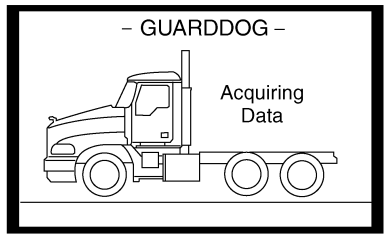

GuardDog™ Acquiring Data Screen

C0029143

• During driving as individual maintenance items become due

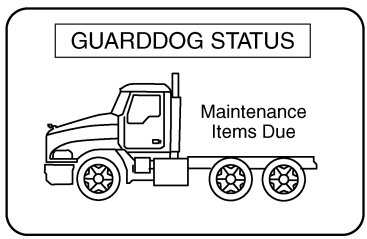

GuardDog™ Maintenance Items Due Screen

C0029144

https://truckmanualshub.com/

• Manually through the GuardDog™ Status screen

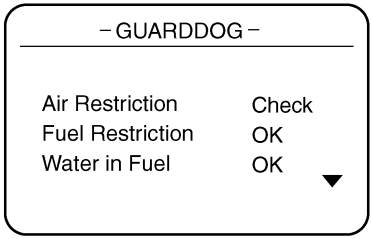

GuardDog™ Status Screen 1

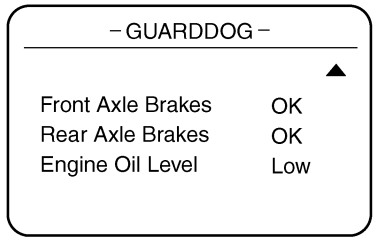

GuardDog™ Status Screen 2

C0029145

For more information on GuardDog™, Co-Pilot® display and Basic Display, please refer to the *V-MAC® IV Operator's Guide, TS898.*

20. Water in Fuel Indicator (Amber) (If Equipped) – Illuminates when water accumulates in the primary fuel filter sediment bowl. Stop the engine and drain the fuel from the sediment bowl.

21. Engine Over Speed Indicator (Red) – Illuminates when maximum engine RPM is exceeded.

22. Trailer Anti-Lock Brake System (ABS) Indicator (Amber) – Indicates an ABS malfunction. If the light turns on and stays on, a malfunction is indicated. For additional information on operating an ABS-equipped vehicle, refer to "Anti-Lock Brake System (ABS)" page 157, of the *OPERATION* section.

Note: When an ABS malfunction is detected, anti-lock braking in the affected wheel(s) will be disabled and normal braking will return; the other wheels will retain anti-lock braking. Operate the vehicle normally and have the ABS system serviced to correct the fault.

23. Power Take-Off Operating Indicator (Green) – Indicates PTO operation.

24. Cruise Control Indicator (Green) – Indicates that cruise control is engaged.

25. Right Turn Signal Indicator (Green) – Flashes green when turn signal is activated.

26. Parking Brake Indicator (Red) – Indicates that the parking brake is engaged.

27. Reverse Indicator (Amber) – Indicates that the transmission is in Reverse.

28. Automatic Traction Control (ATC) Indicator (Amber) – Indicates that ATC is operating and will flash when in deep mud and snow mode.

https://truckmanualsnb.com/

29. Neutral Indicator (Amber) – Indicates that the transmission is in Neutral.

30. Fasten Seat Belt Warning Indicator (If Equipped) (Red)

31.HEST Indicator (Amber) (If Equipped) – The High Exhaust Temperature (HEST) indicator is displayed when the exhaust temperature reaches 300°C (572°F) and the regeneration process begins. When the regeneration process is completed, the engine should be allowed to run until the HEST indicator shuts off.

During an automatic regeneration while the vehicle is moving, the HEST indicator will only illuminate during regeneration when vehicle speed is less than 8 kph (5 mph).

During a parked regeneration, the HEST indicator will turn off when regeneration is complete and the exhaust temperature has returned to a normal temperature.

C0029146

HEST Indicator

32. Fuel Gauge – Registers the fuel level in the supply tank(s).

33. Mode Button (Basic Display Only) – This push button is located directly below the Basic Display. The push button is used to access, navigate, view and change information available in the Basic Display. Simply press and hold the push button in for a moment to navigate through the screens. A long press of the push button is used to clear trip data or inactive fault codes.For more information on this button, please refer to the *V-MAC® IV Operator's Guide, TS898.*

34. Speedometer — Indicates road speed in miles and/or kilometers per hour.

35. Tachometer – Indicates engine speed in revolutions per minute (RPM). Tachometer readings should be used as a guide for shifting, as well as to prevent engine damage due to overspeed.

36. Air Application Gauge (If Equipped) – Indicates the air pressure being delivered to the service brake chambers in the tractor (and trailer, if equipped); OR

Air Suspension Gauge (If Equipped) – Indicates the air pressure being delivered to the air suspension system (100 psi range).

37. Hand-Control Brake Lever – Pull down to activate the trailer brakes, or the rear axle brakes in the case of a platform truck.

https://truckmanualshub.com/

WARNING

The hand-control brake system must NOT be used for parking. Do NOT use to apply service brakes while vehicle is in motion. Do not leave the vehicle while hand-control brake is applied.

38. Front Rear Axle and 39. Rear Rear Axle Oil Temperature Gauges (If Equipped) – Indicate rear axle oil temperature.

CAUTION

The maximum safe oil temperature for MACK rear axles is 121° C (250° F). Continued operation with oil above this temperature will cause rapid deterioration of the oil's lubricating properties and is NOT recommended. Consult the vendor manual for non-MACK components.

40. Primary and 41. Secondary Air Pressure Gauge — Indicates the air pressure in the air brake system(s). The normal operating air pressure is between 759 kPa (110 psi) and 897 kPa (130 psi) in both air brake systems. If pressure drops below 75 psi (± 5 psi) in either system, the warning buzzer and warning light will go on. Determine the cause of failure before proceeding. Primary air pressure is supplied to the rear brakes and is indicated by the green pointer on the gauge. Secondary air pressure is supplied to the steering axle brakes and indicated by the orange pointer.

42. Wiper Speed/Delay/Wash Master Switch

• Depress top of the rocker switch to activate windshield washer

• Toggle switch in top position turns wipers on HIGH

• Toggle switch in second position from top turns wipers on LOW

• Toggle switch in the center position activates intermittent wipers. Pressing the switch down slows the speed of the wipers

• Toggle switch in the lowest position turns wipers OFF

https://mechanicpublish.com/

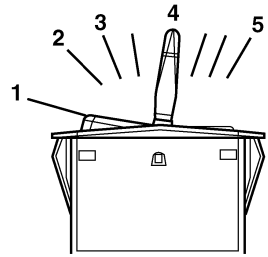

C0029147

Wiper Speed/Delay/Wash Master Switch

1. Press to Wash 2. Hi 3. Lo	4. Intermittent 5. Off

43. DPF Smart Switch (If Equipped) – This is a three-position switch where the middle position is neutral.

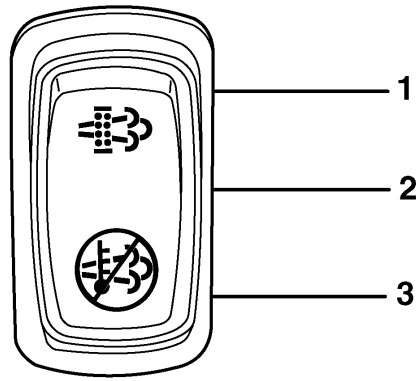

C0029148

Wiper Speed/Delay/Wash Master Switch

1. Upper Position – Regeneration Position 2. Middle Position – Neutral Position	3. Down Position – Inhibit Position

https://truckmanualshub.com/

Moving Regeneration

"Moving" regeneration occurs while the vehicle is being driven and can be automatic (no operator input needed to start regeneration) or manual (operator input needed to start regeneration). The operator is notified that a regeneration is needed when the icons on the DPF Smart switch illuminate (refer to Figure listed below).

Note: The vehicle operator should try to maintain vehicle speed during the regeneration process. If the vehicle must be stopped (at a traffic light for example), allow the vehicle to idle and do not apply the park brake. Applying the park brake will disrupt and end a regeneration that started while the vehicle was being driven.

Please refer to the instructions below on how to use the DPF Smart switch during a regeneration that occurs while the vehicle is being driven.

Moving (Automatic) Regeneration

1 When the icons on the DPF Smart switch light up, maintain vehicle speed if possible.

2 During regeneration, the icons on the switch will shut off.

3 Regeneration will take between 20 and 30 minutes to complete.

4 To stop regeneration, press the switch down to the inhibit position. When the bottom of the switch is illuminated, regeneration is stopped. The switch will remain locked in this position and the light will stay illuminated. The driver has the option of stopping a regeneration if the vehicle is in an area where elevated exhaust temperatures will pose a hazard (i.e., tunnel, under trees, in an area where there is flammable material, etc.).

https://mechanicpublished.com/

Moving (Manual) Regeneration (If Available)

1 When the icons on the DPF Smart switch light up, maintain vehicle speed and press and hold the top part of the switch momentarily.

2 During regeneration, the icons on the switch will shut off.

3 Regeneration will take between 20 and 30 minutes to complete.

4 To stop regeneration, press the switch down to the inhibit position. When the bottom of the switch is illuminated, regeneration is stopped. The switch will remain locked in this position and the light will stay illuminated. The driver has the option of stopping a regeneration if the vehicle is in an area where elevated exhaust temperatures will pose a hazard (i.e., tunnel, under trees, in an area where there is flammable material, etc.).

Depending on the vehicle’s set up, it may be possible to perform a parked regeneration if necessary.

https://truckmanualshub.com/

Parked Regeneration

Parked regeneration allows the operator to start and/or stop the regeneration manually when the vehicle is parked and the engine is idling. The operator is notified that a regeneration is needed when the icons on the DPF Smart switch illuminate. The operator should perform the regeneration as soon as possible.

Please refer to the instructions below on how to use the DPF Smart switch for parked regenerations.

1. Move the vehicle to a safe location, apply the park brake and allow the engine to idle.

WARNING

When a regeneration is in process, the temperature of the exhaust will be elevated. DO NOT park the vehicle with the exhaust outlet under low hanging overhead flammable objects such as trees, awnings, etc., that could be damaged by elevated exhaust temperatures. DO NOT attempt to regenerate inside a garage or enclosed area if the tail pipe is attached to an exhaust ventilation system as the hose material may not be rated for the high temperature.

2. Press and hold the top part of the DPF Smart switch momentarily to initiate the regeneration.

3. During regeneration, the icons on the switch will shut off. The HEST indicator on the instrument cluster will light up to notify of high exhaust temperatures.

4. For catalyzed exhaust aftertreatment systems, the engine speed may ramp as high as 1,100 rpm. For non-catalyzed exhaust aftertreatment systems, the engine will continue to idle during the regeneration.

5. Regeneration will take between 20 and 30 minutes to complete.

6. After regeneration has completed and the exhaust temperature has returned to normal, the HEST indicator will shut off.

7. To stop regeneration, press the switch down to the inhibit position. When the bottom of the switch is illuminated, regeneration is stopped. The switch will remain locked in this position and the light will stay illuminated. The driver has the option of stopping a regeneration if the vehicle is in an area where elevated exhaust temperatures will pose a hazard (i.e., tunnel, under trees, in an area where there is flammable material, etc.).

http://mackpublished.com/

CAUTION

Failure to perform a regeneration in a timely manner after notification may result in engine derate, a clogged diesel particulate filter, damage to the filter and engine shutdown.

DANGER

During the regeneration process (with either system), the temperature of the exhaust gases will be elevated. DO NOT park or stop for an extended period under low hanging overhead flammable objects such as trees, awnings, structures, etc., that could be damaged by elevated exhaust temperatures. Further, if the vehicle is being operated in an area where flammable vapors exist, the regeneration process must be interrupted. Failure to heed these cautions may result in fire or explosion causing serious personal injury or death.

When regeneration is needed, an icon at the top of the DPF Smart switch will illuminate to notify the vehicle operator. The DPF Smart switch allows the vehicle operator to either stop or start regeneration. (Certain conditions must be met, however, before regeneration can be manually started.)

Note: If the vehicle is in a location that may be hazardous when an active regeneration begins (i.e., in close proximity to flammable materials or gases), the regeneration should be stopped by pushing the DPF switch to the "Stop Regeneration" position.
If an active regeneration is stopped by the vehicle operator, it should be initiated at a later time when the vehicle is in a safe location. However, if an active regeneration is stopped too many times, the vehicle must be taken to a MACK service facility. The service facility will use a service tool to manually initiate the regeneration.

https://truckmanualshub.com/

WARNING

The temperature of the exhaust system components during the regeneration process can exceed 500°C (1000°F). Various factors (including ambient temperature and duration of the regeneration process) determine when these components will return to normal operating temperature after regeneration has completed. Be extremely careful around these hot components. Contact with these components can result in serious personal injury.

CAUTION

When the inhibit position is pressed, the switch will remain in a locked position. It is important, therefore, to immediately set the switch back to the neutral position when safe to do so. Failure to set the switch back to the neutral position may result in an engine derate, clogged diesel particulate filter or damage to the filter.

DPF INHIBIT ROAD SPEED LIMITING (RSL)

The DPF Smart Switch can be locked into the DOWN (or Inhibit Regen) position by the driver. If the DPF Smart Switch remains in the locked position, the following vehicle speed limiting will occur:

1 Vehicle Moving. If vehicle is moving with the DPF Smart Switch in the locked (DOWN) position, the vehicle speed will decrease down to 16 kph (10 mph) below the current speed until the driver releases the switch back to the neutral (MIDDLE) position.

2 Vehicle Stationary and then Moving. If the vehicle is stationary with the DPF Smart Switch in the locked (DOWN) position and the driver then begins to move the truck, the vehicle speed will be limited to 16 kph (10 mph) until the driver releases the switch back to the neutral (MIDDLE) position.

https://truckmanualshub.com/

The following label is located on the driver-side sun visor which provides additional instructions on the exhaust aftertreatment system.

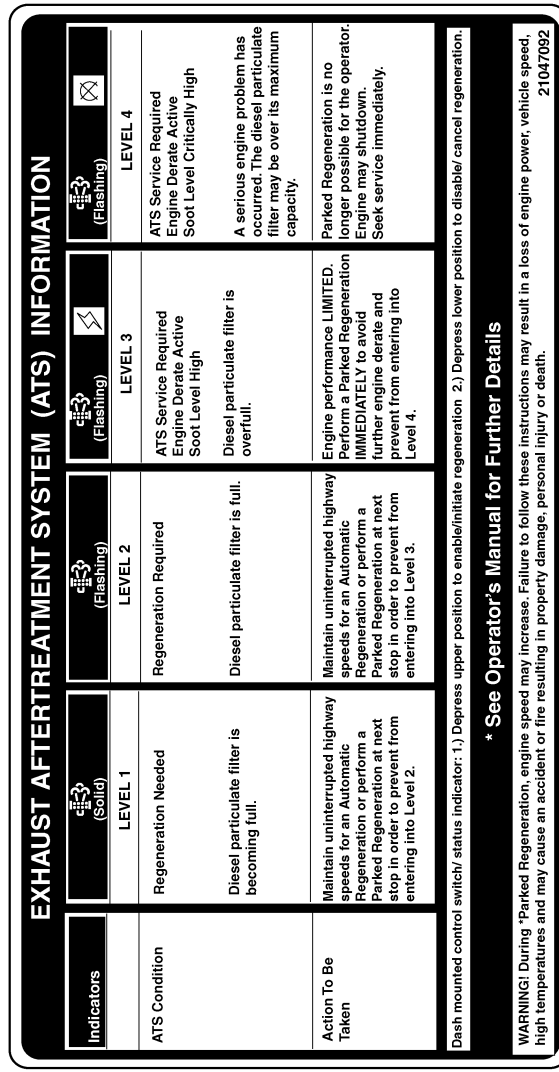

EXHAUST AFTERTREATMENT SYSTEM (ATS) INFORMATION

Indicators	(Solid)	(Flashing)	(Flashing)	(Flashing)
	LEVEL 1	LEVEL 2	LEVEL 3	LEVEL 4
ATS Condition	Regeneration Needed Diesel particulate filter is becoming full.	Regeneration Required Diesel particulate filter is full.	ATS Service Required Engine Derate Active Soot Level High Diesel particulate filter is overfull.	ATS Service Required Engine Derate Active Soot Level Critically High A serious engine problem has occurred. The diesel particulate filter may be over its maximum capacity.
Action To Be Taken	Maintain uninterrupted highway speeds for an Automatic Regeneration or perform a Parked Regeneration at next stop in order to prevent from entering into Level 2.	Maintain uninterrupted highway speeds for an Automatic Regeneration or perform a Parked Regeneration at next stop in order to prevent from entering into Level 3.	Engine performance LIMITED. Perform a Parked Regeneration IMMEDIATELY to avoid further engine derate and prevent from entering into Level 4.	Parked Regeneration is no longer possible for the operator. Engine may shutdown. Seek service immediately.

Dash mounted control switch/ status indicator: 1.) Depress upper position to enable/initiate regeneration 2.) Depress lower position to disable/ cancel regeneration.

* See Operator's Manual for Further Details

WARNING! During *Parked Regeneration, engine speed may increase. Failure to follow these instructions may result in a loss of engine power, vehicle speed, high temperatures and may cause an accident or fire resulting in property damage, personal injury or death.

21047092

C0029149

For more information on the DPF Smart Switch, please refer to the *V-MAC® IV Operator's Guide, TS898.*

https://truckmanualshub.com/

44. Optional Switch – Refer to “Function of Optional Switches” page 75.

45. Optional Switch – Refer to “Function of Optional Switches” page 75.

46. Optional Switch – Refer to “Function of Optional Switches” page 75.

47. Optional Switch – Refer to “Function of Optional Switches” page 75.

48. Optional Switch – Refer to “Function of Optional Switches” page 75.

49. Storage Box or Automatic Transmission Selector (If Equipped) – See your Automatic Transmission Operator’s Manual supplied with this vehicle.

50. Air Filter Restriction Indicator (If Equipped) – Indicates that the element needs servicing or replacement. When the red flag locks into position, service as soon as possible to prevent engine damage; then reset the indicator after the filter change. Check the air filter restriction indicator daily.

51. Accessory Power Outlet – See instructions under Accessory Power Outlets listed in the Instrument and Controls Section of this manual.

52. Radio Box – See separate owner’s manual on radio instruction.

53. AUX/USB Port

• AUX Port – Use this port to have audio from any unit played over the vehicle audio system.

• USB Port – Insert a memory stick, with MP3 music downloaded, and the music will be heard from the vehicle audio system. The music can be controlled with the radio or steering wheel features (if equipped). You can also use this port with the USB style MP3 players.

• AUX and USB together – Use both ports together for IPOD control. A special cable is required for this function. Once the IPOD is connected, it will display a MACK logo on the IPOD screen and will let you know that the IPOD can now be controlled by the radio or steering wheel features (if equipped). At this point, the IPOD can be stored out of sight. This port will also charge the IPOD.

For more information on the AUX/USB port, please refer to the radio manual that is supplied with your vehicle.

54. Cab Climate Control – See instructions under Cab Climate Control listed in the Instrument and Controls Section of this manual.

55. Optional Switch – Refer to “Function of Optional Switches” page 75.

56. Optional Switch – Refer to “Function of Optional Switches” page 75.

57. Optional Switch – Refer to “Function of Optional Switches” page 75.

58. Optional Switch – Refer to “Function of Optional Switches” page 75.

https://mechanicpublish.com/

59. Parking Brake Valve – Yellow diamond-shaped knob. Pull to apply. Push to release. Applies tractor parking brakes and trailer brakes, if equipped.

60. Optional Switch – Refer to " “Function of Optional Switches” page 75.

61. Trailer Air Supply Valve – Red octagonally-shaped knob. Pull to apply trailer emergency brakes. Push to pressurize the trailer air reservoir, releasing the trailer emergency brakes.

Note: The trailer air supply valve should NOT be used for parking.

62. Optional Switch – Refer to “Function of Optional Switches” page 75.

63. Optional Switch – Refer to “Function of Optional Switches” page 75.

64. Optional Switch – Refer to “Function of Optional Switches” page 75.

65. Optional Switch – Refer to “Function of Optional Switches” page 75.

66. Optional Switch – Refer to “Function of Optional Switches” page 75.

67. Optional Switch – Refer to “Function of Optional Switches” page 75.

68. Optional Switch – Refer to “Function of Optional Switches” page 75.

69. Optional Switch – Refer to “Function of Optional Switches” page 75.

70. Optional Switch – Refer to “Function of Optional Switches” page 75.

71. Optional Switch – Refer to “Function of Optional Switches” page 75.

72. Optional Switch – Refer to “Function of Optional Switches” page 75.

73. Resume/Set Switch – This is a V-MAC® switch; refer to the applicable *V-MAC® Operator’s Guide* for more information.

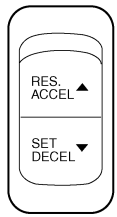

C0029150

https://truckmanualshub.com/

74. Speed Control Switch – This is a V-MAC® switch; refer to the applicable *V-MAC® Operator's Guide* for more information.

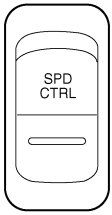

C0029211

http://mechanicpublished.com/

Function of Optional Switches

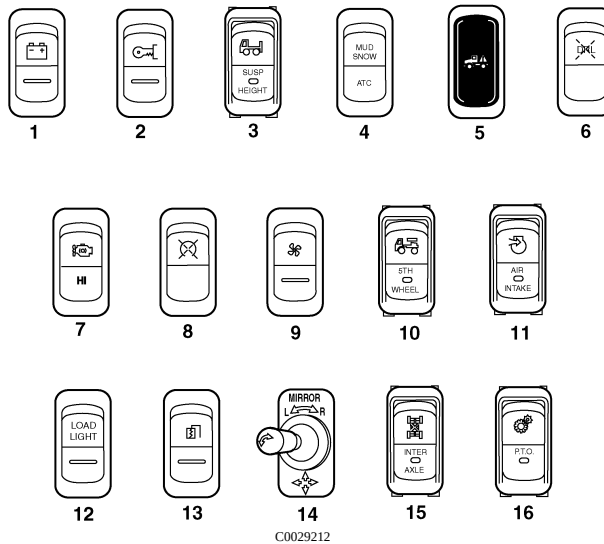

Optional Switches

1. Accessory Battery Power Switch	9. Fan Control Manual Override Switch
2. Accessory Ignition Power Switch	10. 5th Wheel Slide Switch
3. Air Suspension Control Switch	11. Inside/Outside Air Switch
4. Automatic Traction Control Switch	12. Load Light Switch
5. Body Warning Lamp	13. Mirror Defrost Switch
6. Daytime Running Lights Override Switch	14. Motorized-Mirror Joy Stick
7. Engine Brake Switch	15. Power Divider Lockout Switch
8. Shutdown Override Switch	16. Power Take-Off Control Switch

https://truckmanualshub.com/

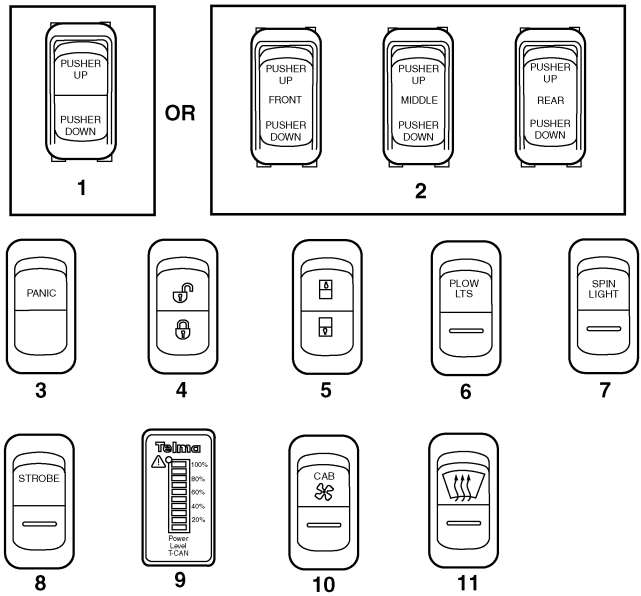

C0029213

Optional Switches

1. Push Axle Up/Down Switch	7. Spin Light Switch
2. Push Axle Up/Down Switches	8. Strobe Switch
3. QUAL COMM Panic Button	9. Telma Retarder Lamp
4. Right-Hand Only Door Lock Switch	10. Vent Fan Switch
5. Right-Hand Only Window Lift Switch	11. Windshield Defrost Switch
6. Snow Plow Lamps Switch	

http://mechanicpublish.com/

The following optional switches, listed in alphabetical order, may appear on *Panel D*, shown on “Panel D” page 53.

• **Accessory Switch (Battery Power)** – This switch may be used to power optional accessory equipment that requires battery voltage, with the key switch turned OFF.

• **Accessory Switch (Ignition Power)** – This switch may be used to power optional accessory equipment that requires ignition voltage, with the key switch turned ON.

• **Air Suspension Control Switch** – This switch exhausts the air from the air bags of the suspension. It may be used when coupling or uncoupling trailers.

CAUTION

When preparing to connect a tractor to a trailer, make sure that the height of the 5th wheel matches the height of the underside of the trailer. Failure to do so will result in the trailer being improperly connected. After the trailer has been coupled and the trailer landing gear has been raised, make sure that the 5th wheel jaws have properly engaged the trailer king pin, and there is no gap between the 5th wheel plate and the bottom of the trailer.

CAUTION

DUMP BODY: Always exhaust the air from the bags before raising the dump body to protect the air bags and improve chassis stability while dumping. If the dump body is raised while the air suspension is pressurized, damage to the air bags may result.

CAUTION

Do not drive the vehicle with the air bags exhausted. Repressurize the air bags before driving the vehicle.

Note: Engine speed and road speed will automatically be limited if the vehicle is moved with the air bags exhausted.

For information concerning trailer coupling and uncoupling, refer to the *OPERATION* section of this manual.

https://truckmanualshub.com/

• **Automatic Traction Control Switch/Heavy Mud/Snow** – Activate for increased traction control in heavy mud or snow. (See “Automatic Traction Control (ATC) (If Equipped)” page 162 in the *OPERATION* section of this manual for more details.) When the operator presses the top of the rocker switch, the heavy mud/snow function ATC indicator lamp blinks continuously. The ATC lamp stops blinking when the ATC mode switch is pressed again or ignition key cycled.

CAUTION

Be sure to deactivate the heavy mud/snow function when no longer needed. Continued operation with the heavy mud/snow function active will result in vehicle damage. If after a reasonable amount of time (no more than five minutes) the vehicle is still not moving, deactivate the ATC and put on chains.

• **Body Warning Lamp** – The Body Lamp illuminates a RED warning icon on the "D" panel to alert the driver of a body function as defined by the bodybuilder. As an example, the body warning lamp will illuminate to alert the driver that the dump body is not fully down.

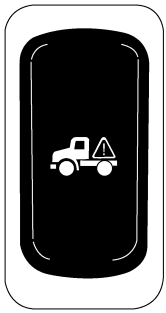

C0029214

• **Daytime Running Lights (DRL) Override Switch** – Daytime Running Lights (DRL) come standard on all MACK vehicles and can be optioned with or without an override switch. When the DRL override switch has been specified, different conditions can be selected that cause the DRL to automatically activate, DRL can be automatically turned on when the parking brake is released, the engine is running or both. Only one of these choices may be selected. Using DRL will illuminate the low beam headlamp bulbs at a slightly reduced intensity. The DRL function will monitor high beams as well. If the high beams are activated, the DRL will be temporarily turned off until high beam use ceases.

http://mackpublished.com/

Daytime running lights offer additional safety when driving in low light conditions when the operator may not normally turn the headlights on. Having headlights on at all times makes the vehicle easier to spot in bad weather, dusk or shade or when there is glare. DRL offers the ability for drivers to give a courtesy flash as a signal when it is safe to merge into another lane on the highway. Turning DRL off temporarily for slowly rolling through weigh stations or when waiting in line to receive bill and weighing tickets is convenient.

When the operator presses the DRL override switch, the headlamps will go out if below the DRL speed threshold and flash if above the DRL speed threshold for a designated period of time (customer programmable in VCADS). It is also possible to toggle the headlamps back on if necessary.

• **Engine Brake Switch** – Used to activate the engine brake. Refer to the *OPERATION* section in this handbook for more information.

• **Fan Control Manual Override Switch** – Allows the operator to manually control the engine cooling fan.

• **5th Wheel Slide Switch** – Locks and releases a sliding 5th wheel using air pressure; this allows the 5th wheel to be properly positioned. The indicator lamp will illuminate when the 5th wheel is unlocked. Prior to model year 2001, it was necessary to use the trailer Hand Brake Control Lever to activate the 5th wheel slide function. This feature has been changed to make the air slide switch independent of the hand brake control, thereby preventing unexpected 5th wheel slide.

• **Inside/Outside Air Switch** – Allows the operator to choose whether outside air or "under the hood" air is fed into the air cleaner.

• **Load Light Switch** – Push top of the switch in to turn light on. Push bottom of switch to turn light off.

• **Mirror Defrost** – Push the top in to activate mirror defrost.

https://truckmanualshop.com/

• **Motorized-Mirror Joy Stick** – This control is designed like a "joy stick." ROTATE the stick to the right to control the right mirror. ROTATE the stick to the left to control the left mirror. PUSH the stick up, down, left or right, as indicated, to correctly position the selected mirror.

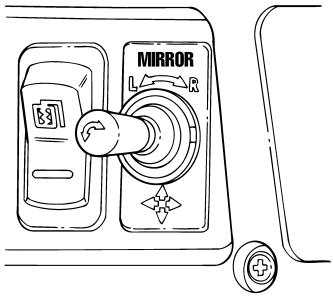

C0029215

• **Power Divider Lockout Switch** – See "Inter-Axle Power Divider Lockout (If Equipped)" in the *OPERATION* section of this manual.

• **Power Take-Off Control Switch** — Push the top in to turn the PTO on. Push the bottom in to turn it off.

• **Push Axle Up/Down Switch** — The operator controls the raise and lower functions with the instrument panel-mounted auxiliary axle switch(es), and axle loading is controlled by the air regulators which are located inside the cab between the driver and the rider seats. There is one regulator for each axle.

Note: To prevent frame damage, the auxiliary axle(s) will automatically raise when the transmission is shifted into reverse.

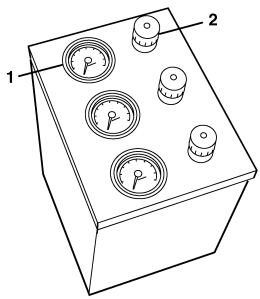

C0029216

1. Air Pressure Gauge	2. Air Pressure Regulator

https://mechanicpublish.com/

• **QUAL COMM Panic Button** — If your vehicle is equipped with this option, refer to the QUAL COMM literature provided with the vehicle.

• **Right-Hand Only Door Lock** — Push the top in to lock the right-hand door.

• **Right-Hand Only Window Lift** — Push top of button to raise right-hand window. Push bottom of button to lower right-hand window.

• **Shutdown Override Switch** — Pressing this switch shortly after the vehicle sounds the engine shutdown alarm, allows 30 additional seconds of operation. The process can be repeated several times to safely park the vehicle.

CAUTION

Continuously overriding the shutdown system may result in severe engine damage.

• **Snow Plow Lamps Switch** — Push the top of the button to turn on the snow plow lamps if equipped.

• **Spin Light Switch** — Push the top of the button to activate rotating beacon light. Push the bottom to turn light off.

• **Strobe Switch** — Push the top of the button to turn the strobe light on. Push the bottom of the button to turn light off.

• **Telma Rear Axle Mounted Retarder Indicator Lamp (If Equipped)** — The Telma does not have a disable switch. It is always on and will operate at four levels depending on application of service brake. The indicator will show you the level you are retarding the vehicle: 20%, 40%, 60%, 80% or 100%.

Note: The Telma retarder is disabled if there is an ABS event.

https://truckmanualshub.com/

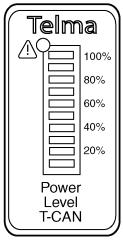

C0029217

• **Vent Fan Switch** — Push button up to turn vent fan on. Push button down to turn vent fan off.

• **Windshield Defrost Switch** — Push button up and release to defrost front windshield.

https://mechanicpublished.com/

CAB CLIMATE CONTROL

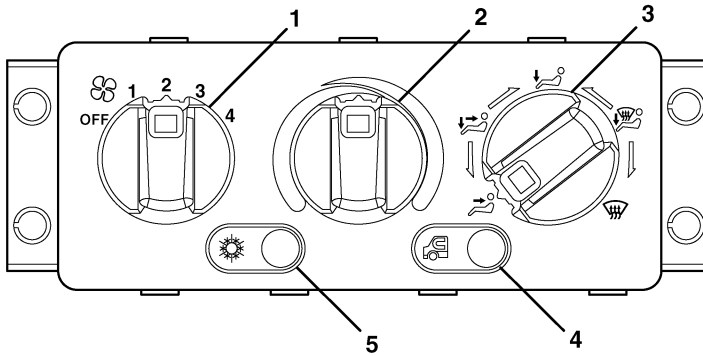

C0029218

1. Blower Control Knob	4. Fresh/Recirculation Button
2. Temperature Control Knob	5. A/C ON/OFF Button
3. Mode Knob	

1. Blower Control Knob — This knob controls fan speed from OFF to 4 (highest speed).

2. Temperature Control Knob — Controls the temperature of the air in the cab from COOL (far left) to HOT (far right).

3. Mode Selection Knob — Controls the direction of air flow around the cab as follows:

https://truckmanualshub.com/

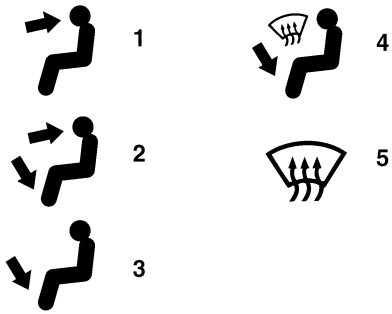

C0029219

1. Directs airflow through the dash panel air vents only. 2. Directs airflow through both the dash panel and floor air vents (bi-level). 3. Directs airflow through the floor vents only.	4. Directs airflow through the floor vents and the windshield for defrosting and/or defogging. 5. Directs airflow only to the windshield for defrosting and/or defogging.

Note: The Mode Selection knob can be rotated to any position (see above). This allows the operator to select the desired amount of blend between the positions.

4. Fresh/Recirculation Switch or Button — Selects the cab intake air between fresh air (from outside the cab) and recirculated air (inside the cab).

Note: For maximum air conditioner performance, select recirculated air.

5. Air Conditioner ON/OFF Switch or Button — Activates the air conditioning system.

Note: When using the sleeper air conditioner, this switch must be turned ON.

http://mechanicpublished.com/

LIGHT CONTROL PANEL

The light control panel is located on the driver side of the dash. This panel controls the parking lights, interior panel lights, headlights and fog lights (if equipped).

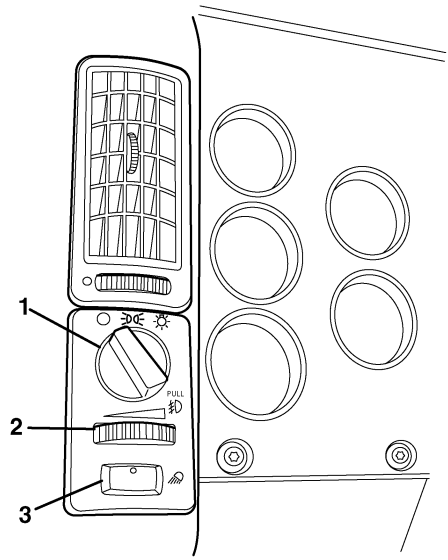

Light Control Panel

1. Light Control Knob/Pull for Fog 2. Panel Dimmer Switch	3. Hook-Up Lamps or Perimeter Lighting (If Equipped)

With the light control knob in the left position, all lights are off. With the knob in the middle position, the parking lights and interior panel lights will illuminate. With the knob in the far right position, the headlights will turn on.

To turn on the fog lights (if equipped), put the knob in the far right position and pull out the fog light button (see Figure above). The fog light symbol will illuminate indicating the lights are on.

To adjust the intensity of the panel light, move the panel dimmer switch back and forth.

To turn on the hook-up lamps or perimeter lighting (if equipped), push the bottom switch to the right.

https://truckmanualshub.com/

LOWER CONSOLE PANEL

The lower console panel is located under the Cab Climate Control area of the middle dash.

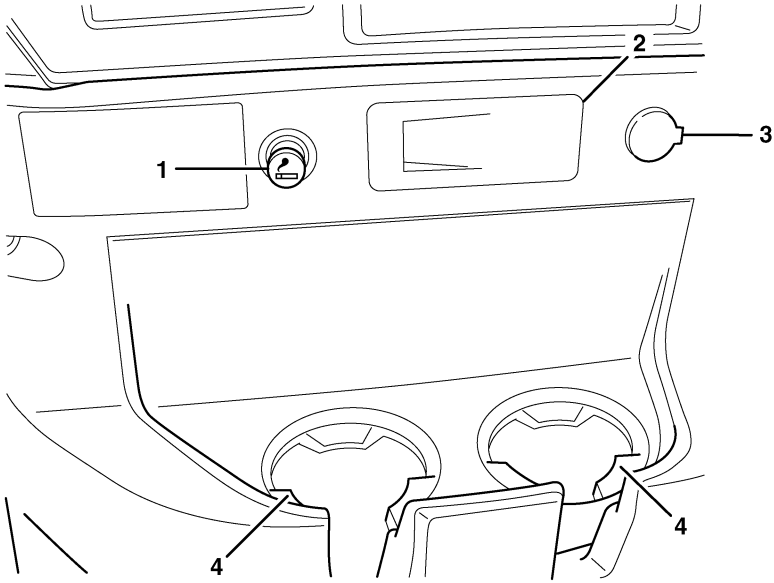

1. Cigar Lighter	3. Accessory Power Outlet
2. Ashtray	4. Cup Holder

https://truckmanualshub.com/

STEERING COLUMN

Combination Starter and Electrical Switch

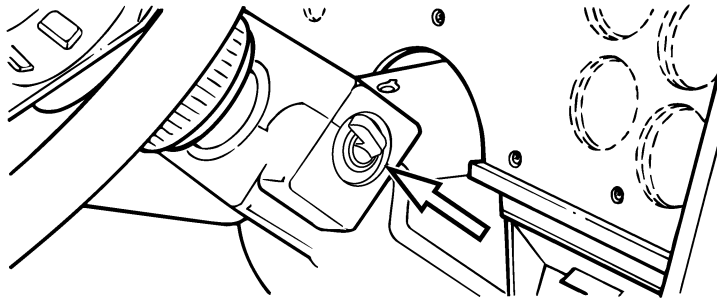

C0029223

This switch starts the engine (turn the switch clockwise) and activates the accessory relay (turn the switch counterclockwise). When the switch is turned ON (in a clockwise direction), a warning buzzer sounds if air system pressure is below 448 ± 34 kPa (65 ± 5 psi) or if there is low oil pressure. The buzzer shuts off as soon as sufficient air/oil pressure is restored.

Steering Wheel Adjustment

WARNING

Adjust the steering wheel position BEFORE attempting to move the vehicle to avoid losing control of the vehicle.

Adjusting (Tilt and Telescope)

Push down on the foot pedal located at the left kick panel to adjust the wheel to any position within a pre-defined range. Note that you must continue to hold the pedal down while adjusting. When the adjustment is complete, release the pedal.

https://truckmanualshub.com/

Turn Signal Lever

Note: The turn signals are not self-cancelling and must be returned to the middle position manually.

The turn signal lever is located on the steering column. It performs a number of functions, including activating the high and low beams, signal switch and the hazard switch. The signal switch can be used for courtesy flashing of marker lights and for the flashing of high beams.

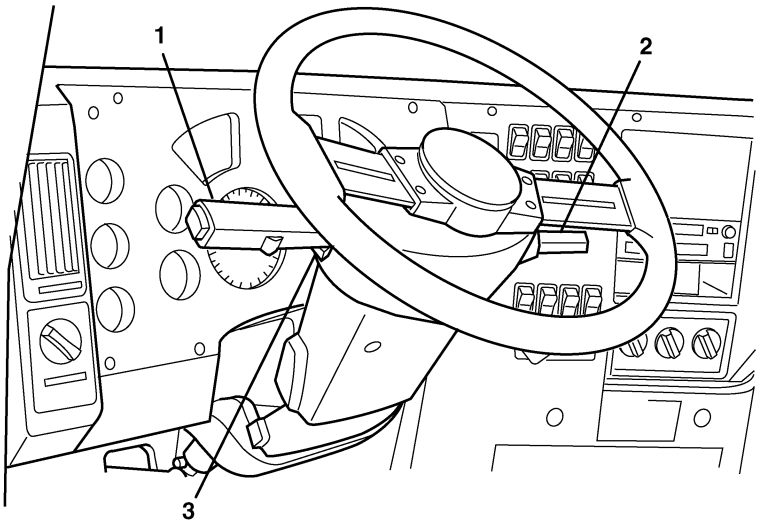

C0029224

1. Turn Signal Lever 2. Stalk Switch	3. Pull for Hazard (Red)

https://mechanicpublished.com/

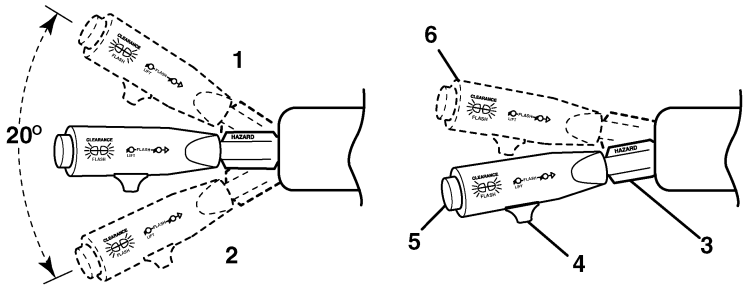

1. Handle in Right Turn Position and Cancel Position of Hazard Warning	4. Push for Courtesy Flashing of High Beams
2. Handle in Left Turn Position and Cancel Position of Hazard Warning	5. Push for Courtesy Flashing of Marker Lights (Daylight or Dark)
3. Pull for Warning Hazard Position	6. Lift Handle for Headlight Dimmer

Stalk Switch (If Equipped, Co-Pilot® Only)

The stalk switch (Co-Pilot® only) is located on the right side of the steering column and contains three depressible buttons: **ESC, Enter** (↵) and **Up & Down**. The stalk switch is used to access, navigate, view and change information available in the driver information display (Co-Pilot® display).

The following illustration shows the stalk switch.

https://truckmanualshub.com/

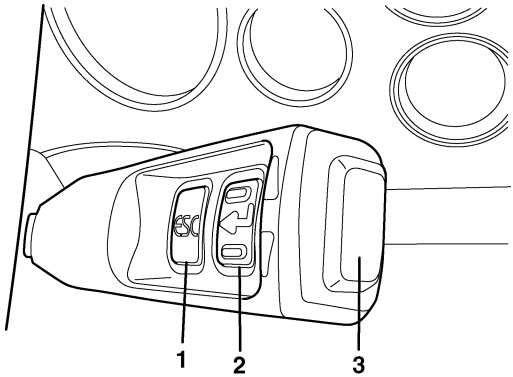

C0029226

1. ESC (Escape) 2. ↵ (Enter)	3. Up & Down

Navigation of Co-Pilot® Menu

ESC BUTTON

The ***ESC*** (Escape) button on the stalk switch takes the Co-Pilot® back to the previous screen or level in the menu.

Note: The ***ESC*** button does not function at Start Up or when the vehicle is moving. The ESC button is used only when the vehicle is stationary.

ENTER (↵) BUTTON

The **Enter** (↵) button on the stalk switch selects the highlighted menu items during menu selection. During Start Up and when moving the vehicle, the **Enter**(↵) button is also used to confirm or acknowledge a pop-up screen. Sometimes, the **Enter**(↵) button takes the Co-Pilot® back to the previous screen.

UP & DOWN BUTTONS

The ***Up & Down*** buttons at the end of the stalk switch allow the user to highlight the various available menu items. Sometimes, these buttons are used to enter information into the displays.

https://pockmanuals.mb.com/

• **Up Button** — Once at the top of the menu items that can be selected, pressing the ***Up*** button will take the display to the last item in the menu.

For more information on Co-Pilot® display, please refer to the V-MAC® IV Operator's Guide, TS898.

https://truckmanualshub.com/

FLOOR PEDALS

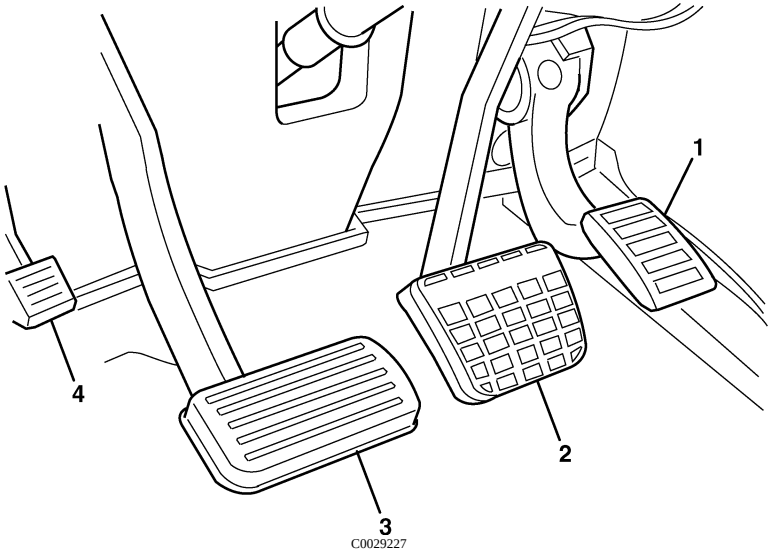

1. Accelerator Pedal — Depress to increase engine/vehicle speed; release to decrease engine/vehicle speed.

2. Brake Treadle Valve — Depress to activate the service brakes.

3. Clutch Pedal — Depress to disengage the clutch. The clutch pedal is only found on trucks equipped with manual transmissions.

4. Steering Wheel Adjustment Pedal — Push down on the foot pedal to tilt the wheel to any position between fully tilted up to fully tilted down. You must hold the pedal down while adjusting. When the adjustment is complete, release the pedal.

https://mechanicpublish.com/

MISCELLANEOUS CONTROLS

Dome Light

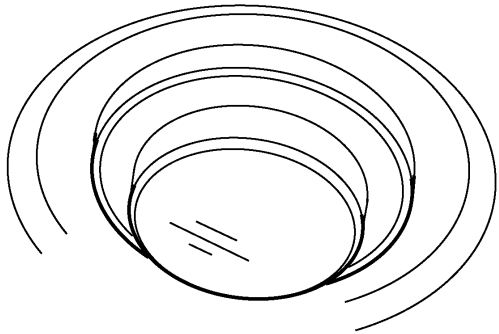

C0029228

Dome Light

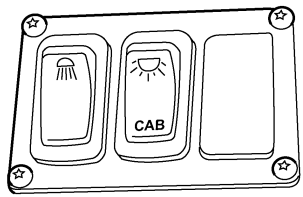

C0029229

Driver Side Switch

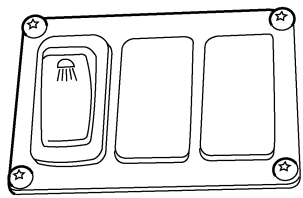

C0029230

Passenger Side Switch

With the switch in the bottom position on the driver side and on the passenger side, the dome light will come on when the cab door is opened and go off when it is closed. Push the switch up to turn the dome light on when the doors are closed for either the driver side or the passenger side. Depress the CAB switch above the driver up when doors are closed to turn both dome lights on.

https://truckmanualshub.com/

Air Horn

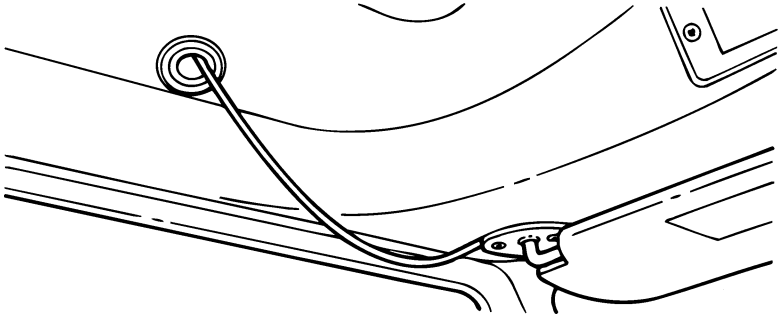

C0029232

The air horn(s), if equipped, is activated by pulling down on the cord that is located above the driver near the overhead console.

Fresh Air Vent

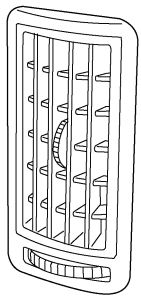

C0029233

An air vent is provided to circulate outside air to the cab interior. Move the vent lever to the left or right to open the vent. Move the lever to the left to close the vent.

http://mckenzieunlimited.com/

Microphone

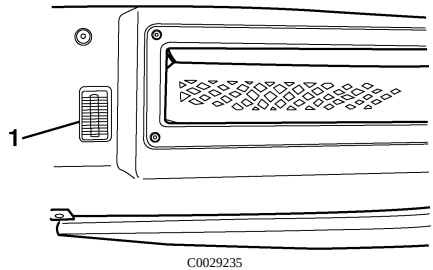

Microphone

The microphone is located above the driver in the headliner. It is available on the Mid-Level radio with Blue Tooth/Hands free option. This is what is used to talk into when the phone is connected to the truck. For more information on the microphone, please refer to the Radio Manual that is supplied with the vehicle.

https://truckmanualshub.com/

Accessory Power Outlets

Additional 12-volt accessory power outlets are located next to the driver on the "E" panel. These cigar light-type outlets supply 12 volts of fused (20A) power when the ignition switch is turned to the ignition or accessory position.

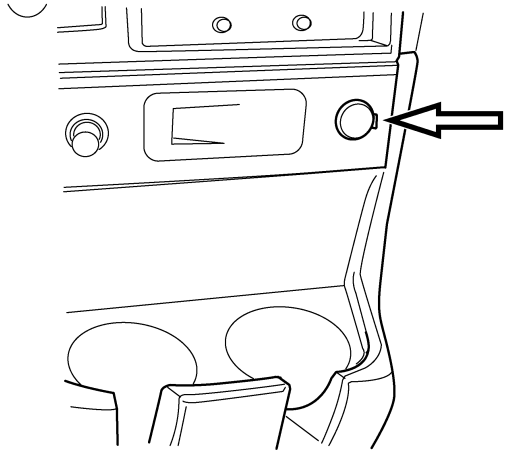

C0029236

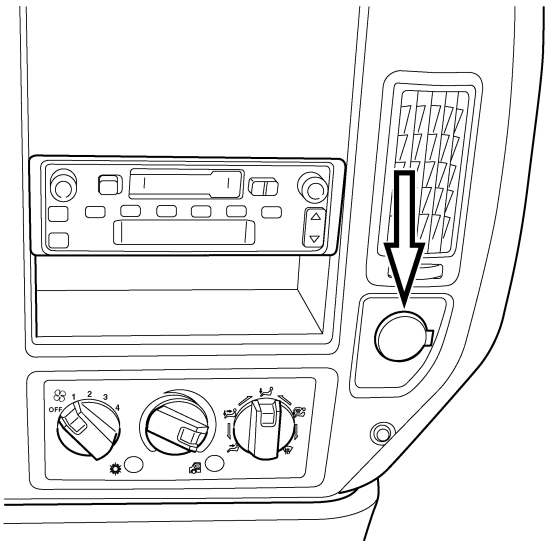

C0029238

http://mechanicpublish.com/

CAUTION

Maximum amperage for all power receptacles in cab is 20 amps. Do NOT exceed maximum amperage as equipment damage may result.

CB Radio Power Jack (+) Located in Headliner on Sleeper Cab; on Dashboard in Day Cab (Red)

This is a 12-volt, switched battery connection. It is used to power the vehicle's CB radio. It is protected by a 15-amp circuit breaker and supplies power when the key is in the ACCESSORY position or ON position.

CB Radio Power Jack (-) Located in Headliner on Sleeper Cab; on Dashboard in Day Cab (Black)

This is a ground connection. It is used as a power return (-) connection for the vehicle's CB radio.

C0029240

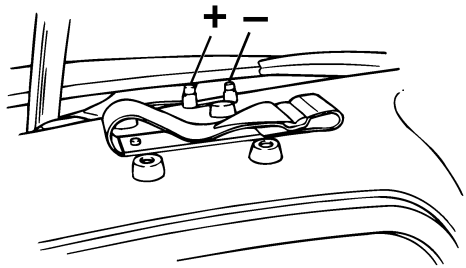

C0029241

 https://truckmanualshub.com/

PRE-TRIP INSPECTION AND DAILY MAINTENANCE

DANGER

Before working on or inspecting a vehicle, set the parking brakes, place the transmission in neutral and block the wheels. Failure to do so can result in unexpected vehicle movement and can cause serious personal injury or death.

Safety is the most important and obvious reason for doing a pre-trip inspection. Federal and state laws require inspection performed by the driver. Federal and state inspectors also inspect commercial vehicles. An unsafe vehicle can be placed "out of service" until the driver or owner corrects the deficiency. Owners and operators should familiarize themselves with sections 49 CFR 396.11 and 396.13 concerning Federal requirements for vehicle inspection. Certain other laws may also apply.

Section 49 CFR 396.13 states that all motor carrier drivers must complete a written report at the end of each work day for each vehicle operated, covering most of what is covered in the pre-trip list. The report should list all defects or deficiencies discovered by the driver. A pre-trip inspection prepares for the end-of-work report.

Starting on the next page are suggested guidelines to be used in performing truck, tractor and trailer pre-trip inspections. Depending on the application of the vehicle being used, these guidelines should be modified to include other necessary inspection points. For example, steps and grab handles should be checked daily on refuse trucks because the operator is getting in and out of the cab more frequently.

If any component or system does not pass this inspection, it must be corrected before operating the vehicle. Whenever equipment requires adjustment, replacement, repair or lubrication, refer to the Service Manuals or contact an authorized Volvo Truck dealer for the correct procedures, specifications and intervals.

Take your time going through the pre-trip inspection. Remember that a careful pre-trip inspection saves time by eliminating unscheduled stops for correcting a faulty item.

The following information has been provided by the American Trucking Association as developed by the D.O.T. Office of Motor Carriers (BMCS).

Pre-Trip Inspection Quick List

Inspect the vehicle in a circular manner.

Approaching the Vehicle

• Check under the vehicle for oil, fuel, coolant leaks or other signs of damage.

• Check body surfaces for signs of breaks or damage.

Preparation

• Open drain cocks on air tanks to let the tanks drain.

• Chock wheels on vehicle and, if hooked up, trailer.

• Close air tank drain cocks.

• Start the engine and let the air pressure build up to normal. Stop engine.

• Switch on parking lights and hazard lights.

• Apply parking brakes.

• Pull the hood release lever, release the hood latches, raise hood.

Step 1: Left Side of the Cab

Left Front Wheel

• Check condition of wheel rim. Especially look for cracks, missing lockrings, bent or broken studs, clamps or lugs.

• Check condition of tire: properly inflated, no serious cuts, bulges, tread wear or any signs of misalignment; valve stem not touching wheel, rim or brake drum; valve cap in place.

• Check wheel bearing and hub: no obvious leaking on outside or inside wheel. Verify correct oil level in hub

Left Front Suspension

• Check condition of spring, spring hangers, shackles, U-bolts: no cracks, breaks or shifting.

• Check shock absorber condition.

 https://truckmanualshub.com/

Left Front Brake

• Condition of brake drum. With brakes released, look for a noticeable gap between lining and drum. (This check cannot be made if dust covers are in place.)

• Condition of brake air hose.

• Check brake chamber mounting bolts and bracket.

• Check slack adjuster and chamber pushrod travel.

Condition of Front Axle and Steering System, Left Side

• No loose, worn, bent, damaged or missing parts.

Under Hood, Left Side

• Check coolant hose condition.

• Check condition of fan drive belts.

• Check engine and surrounding areas for coolant, oil and fuel leaks.

• Check wiring harnesses for signs of damage.

Step 2: Front of Cab Area

Condition of Windshield

• Check for damage and clean if dirty.

• Check windshield wiper arms for proper spring tension.

• Check wiper blades for any damage, "dead" rubber and attachment to arm.

Lights and Reflectors

• Lower hood and inspect parking, clearance and identification lights on hood and cab. They should be clean, operating and of the proper color.

• Reflectors clean and proper color.

• Turn on headlights. High and low beams should be operating and lenses clean. If equipped, check daytime running lights.

• Left and right front turn signal lights clean, operating and proper color. Raise hood.

Grille

• Check that charge air cooler and radiator or bugscreens are clean and undamaged.

Step 3: Right Side of Cab Area

Right Front Wheel

• Check condition of wheel rim. Especially look for cracks, missing lockrings, bent or broken studs, clamps or lugs.

• Check condition of tire: properly inflated, no serious cuts, bulges, tread wear or any signs of misalignment; valve stem not touching wheel, rim or brake drum; valve cap in place.

• Check wheel bearing and hub: no obvious leaking on outside or inside wheel. Verify correct oil level in hub.

Right Front Suspension

• Check condition of spring, spring hangers, shackles, U-bolts: no cracks, breaks or shifting.

• Shock absorber condition.

Right Front Brake

• Condition of brake drum. With brakes released, look for a noticeable gap between lining and drum. (This check cannot be made if dust covers are in place.)

• Condition of brake air hose: check for any chafing.

• Check brake chamber mounting bolts and bracket.

• Check slack adjuster and chamber pushrod travel. With brakes applied or released, look for conspicuously different positions of the slack adjusters.

Condition of Front Axle and Steering System, Right Side

• No loose, worn, bent, damaged or missing parts.

Under Hood, Right Side

• Check condition of coolant and heater hoses.

• Check condition of fan drive belts.

• Check engine and surrounding areas for coolant, oil and fuel leaks.

 https://truckmanualshub.com/

• Check fuel separator sight glass and drain if necessary. Check for leaks.

• Check wiring harnesses for signs of damage.

• Check air filter with brackets and hoses for loose connections or damage. Check filter gauge, if mounted on the filter.

Step 4: Right Saddle Tank Area

Right Fuel Tank(s)

• Securely mounted and not damaged or leaking.

• Fuel lines secure and not leaking. Check that shut-off valves are open.

• Tank(s) full of fuel. Cap on and secure.

Condition of Visible Components

• Rear of engine: not leaking.

• Transmission: not leaking. If equipped with oil cooler, check cooler, hoses and fittings for leaks.

• Check drive shaft.

• Exhaust system: secure, not leaking, not touching wires, fuel or air tubing.

• Frame and cross members: no bends, cracks or breaks.

• Air tubing and electrical wiring: secured against snagging and chafing.

Step 5: Right Rear Vehicle Area

Dual Wheels, One or Two Axles

• Check condition of wheels and rims. Especially look for cracks, missing lockrings, bent or broken spacers, studs, clamps or lugs.

• Check condition of tires: properly inflated, no serious cuts, bulges, tread wear or any signs of misalignment; valve stems not touching wheels, rims or brake drums; valve caps in place and no objects stuck between the wheels.

• Check that both tires are of same type, for example, not mixed radial and bias type and that their circumferences are matched.

• Check wheel bearing and hub: no obvious leaking on outside or inside wheel.

Suspension

• Check condition of springs (leaf or air), spring hangers, shackles and U-bolts.

• Axle alignment.

Brakes

• Condition of brake drums. With brakes released, look for a noticeable gap between lining and drum. (This check cannot be made if dust covers are in place.)

• Condition of brake hoses: check for any chafing.

• Check brake chamber mounting bolts and brackets.

• Check slack adjusters and chamber push rod travel. With brakes applied or released, look for conspicuously different positions of the slack adjusters.

• Check spring brakes.

Step 6: Rear of Vehicle Area

Frame Area

• Frame or cross members not bent, cracked or otherwise damaged or missing.

• Check that air tubing and electrical lines are properly secured to the frame with no damage or chafing.

Lights and Reflectors

• Tail lights, brake lights and turn signal lights: operating, clean and proper color.

Step 7: Coupling System Area

Fifth Wheel

• Securely mounted to the frame.

• No missing or damaged parts.

• Check that trunnion and plate are properly lubricated.

Sliding Fifth Wheel

• Mechanism not worn, bent, damaged or parts missing.

• Properly lubricated.

 https://truckmanualshub.com/

• All locking pins present and locked in place.

• If air operated: no air leaks.

Air Tubing and Electric Lines Visible From This Point

• Should be secure from dangling.

• Both air lines and electric line should be free from damage, oil and grease.

Step 8: Left Saddle Tank and Left Rear Vehicle Wheels Area

Dual Wheels, One or Two Axles

• Check condition of wheels and rims. Especially look for cracks, missing lockrings, bent or broken spacers, studs, clamps or lugs.

• Check condition of tires: properly inflated, no serious cuts, bulges, tread wear or any signs of misalignment; valve stems not touching wheels, rims or brake drums; valve caps in place and no objects stuck between the wheels.

• Check that both tires are of same type, for example, not mixed radial and bias type and that their circumferences are matched.

• Check wheel bearing and hub: no obvious leaking on outside or inside wheel.

Suspension

• Check condition of springs (leaf or air), spring hangers, shackles and U-bolts, no cracks, breaks or shifting.

Brakes

• Condition of brake drums. With brakes released, look for a noticeable gap between lining and drum. (This check cannot be made if dust covers are in place.)

• Condition of brake hoses: check for any chafing.

• Check brake chamber mounting bolts and brackets.

• Check slack adjusters and chamber push rod travel. With brakes applied or released, look for conspicuously different positions of the slack adjusters.

• Check spring brakes.

Condition of Visible Components

• Transmission: not leaking.

• Drive shaft: looks OK.

• Exhaust system: secure, not leaking, not touching wires, fuel or air tubing.

• Frame and cross members: no bends, cracks or breaks.

• Air tubing and electrical wiring: secured against snagging and chafing.

Left Fuel Tank(s)

• Securely mounted and not damaged or leaking.

• Fuel lines secure and not leaking. Check that shut-off valves are open.

• Tank(s) full of fuel. Cap on and secure.

Battery Area

• Open the battery box. Battery box securely mounted to vehicle.

• Batteries secured against movement.

• Battery cases not broken or leaking. Battery cables free from damage.

• Tops of batteries and terminals clean and free from foreign material.

• If equipped, replace battery lid and make sure it is securely fastened.

In the Cab

• Check steps and grab handles for looseness or breakage. Also, clean them if there is any substance that makes them slippery, which makes cab entry/exit hazardous.

• Start the engine. If equipped, check that exhaust rain cap opens when accelerating engine.

• Check gauges and tell-tale light function. See the Instruments and Controls section.

• Check function of low air warning.

• Check clutch function. If equipped, check for clutch brake function.

• Check windshield wipers and washers and horns, including back-up alarm, if equipped.

• Clean inside windshield, door windows and instruments. Clean mirrors.

• Check temperature control and defroster. If equipped, check mirror heater.

 https://truckmanualshub.com/

- Check condition of warning triangles, fire extinguisher and flares.
- Adjust the seat. Check mirror adjustment.
- Check safety belts for function and damage.
- Apply service brakes. After initial drop, pressure should hold steady, or increase slightly, with engine at idle.
- Check steering wheel for excessive free play.
- Check for loose items in the cab. Secure them if necessary.

Hooking Up To Trailer

Hook-Up Preparation

- Check kingpin and mounting plate on trailer, free from wear, bends or damage.
- Chock trailer wheels.

Fifth Wheel or Trailer Hitch

- No visible space between fifth wheel and trailer.
- Locking jaws around the shank and not the head of kingpin.
- Release lever properly seated and safety latch/lock engaged.
- Check all connections to dolly or trailer hitch and safety chains are secured.
- Check function of trailer air supply valve and trailer brakes.

Sliding Fifth Wheel

- Check that fifth wheel is not so far forward that the tractor frame will strike the landing gear during turns.

Note: Refer to the trailer manufacturer's manual for specific information on the trailer checks.

Step 9: Trailer Front Area

Air and Electrical Connections

- Glad hands properly mounted, free from damage and not leaking.

• Trailer cord receptacle properly mounted, free of damage; plug properly seated and safety catch engaged to prevent accidental disconnect.

• Air and electrical lines properly secured against tangling, snagging and chafing with sufficient slack for turns.

Step 10: Right Side of Trailer Area

Landing Gear or Dolly Area

• Fully raised; no missing or damaged parts.

• Crank handle present and secured.

• If power operated, no air/hydraulic leaks.

Spare Wheel(s)

• Carrier or rack not damaged.

• Spare wheel securely mounted in rack.

• Tire and wheel condition adequate for a spare: proper size, properly inflated.

Lights and Reflectors

• Trailer side clearance lights: clean, operating and proper color.

• Reflectors clean and proper color.

Frame and Body

• Frame and crossmembers not bent, cracked, damaged or missing.

• Proper placarding.

• Body parts not damaged or missing.

Step 11: Right Rear Trailer Wheel

Dual Wheels, One or Two Axles

• Check condition of wheels and rims. Especially look for cracks, missing lockrings, bent or broken spacers, studs, clamps or lugs.

 https://truckmanualshub.com/

• Check condition of tires: properly inflated, no serious cuts, bulges, tread wear or any signs of misalignment; valve stems not touching wheels, rims or brake drums; valve caps in place and no objects stuck between the wheels.

• Check that both tires are of same type, for example, not mixed radial and bias type and that their circumferences are matched.

• Check wheel bearing and hub: no obvious leaking on outside or inside wheel.

Suspension

• Condition of springs (leaf or air), spring hangers, shackles and U-bolts.

• Axle alignment.

• Condition of torque rod arms.

• If equipped with sliding axles, check position and alignment. Look for damaged, worn or missing parts, all locks present, fully in place and locked.

• Flexible air tubing not cracked, cut, crimped or otherwise damaged. Secured against tangling, dragging and chafing.

Brakes

• Condition of brake drums. With brakes released, look for a noticeable gap between lining and drum. (This check cannot be made if dust covers are in place.)

• Condition of brake hoses: check for any chafing.

• Check brake chamber mounting bolts and brackets.

• Check slack adjusters and chamber push rod travel. With brakes applied or released, look for conspicuously different positions of the slack adjusters.

• Check spring brakes.

Step 12: Rear of Trailer Area

Lights and Reflectors

• Rear clearance, identification and tail lights clean, operating and proper color.

• Reflectors clean and proper color.

Cargo Securement

• Cargo properly blocked, braced, tied, chained, etc.

• Tailboard up and properly secured. End gates free from damage, properly secured in stake pockets.

• Canvas or tarp (if required) properly latched down to prevent water damage, tearing, billowing or blockage of either mirrors or tail lights.

• Rear doors securely closed, latched or locked; required security seals in place.

• Underside guard in place: not cracked, bent or broken.

Step 13: Left Rear Trailer Wheels Area

Dual Wheels, One or Two Axles

• Check condition of wheels and rims. Especially look for cracks, lockrings missing, bent or broken spacers, studs, clamps or lugs.

• Check condition of tires: properly inflated, no serious cuts, bulges, tread wear or any signs of misalignment; valve stems not touching wheels, rims or brake drums; valve caps in place and no objects stuck between the wheels.

• Check that both tires are of same type, for example, not mixed radial and bias type and that their circumferences are matched.

• Check wheel bearing and hub: no obvious leaking on outside or inside wheel.

Suspension

• Condition of springs (leaf or air), spring hangers, shackles and U-bolts.

• Axle alignment.

• Condition of torque rod arms.

• If equipped with sliding axles, check position and alignment. Look for damaged, worn or missing parts, all locks present, fully in place and locked.

• Flexible air tubing not cracked, cut, crimped or otherwise damaged. It should be secured against tangling, dragging and chafing.

Brakes

• Condition of brake drums. With brakes released, look for a noticeable gap between lining and drum. (This check can not be made if dust covers are in place.)

• Condition of brake hoses: check for any chafing.

• Check brake chamber mounting bolts and brackets.

 https://truckmanualshub.com/

• Check slack adjusters and chamber push rod travel. With brakes applied or released, look for conspicuously different positions of the slack adjusters.

• Check spring brakes.

Step 14: Left Side of Trailer Area

Landing Gear or Dolly Area

• Fully raised; no missing or damaged parts.

• Crank handle present and secured.

• If power operated, no air/hydraulic leaks.

Spare Wheel(s)

• Spare wheel securely mounted in rack with no damage to rack.

• Tire and wheel condition adequate for a spare: proper size, properly inflated.

Lights and Reflectors

• Trailer side clearance lights: clean, operating and proper color.

• Reflectors clean and proper color.

Frame and Body

• Frame and crossmembers not bent, cracked, damaged or missing.

• Proper placarding.

• Body parts not damaged or missing.

Before Leaving the Parking Area

• Remove chocks from the wheels.

• Test trailer hook-up by slowly pulling while applying the trailer brakes with the trailer brake hand control valve.

• Test the service brakes before leaving the parking area.

• Test parking brakes by stopping on a 20% grade and applying the parking brakes. The parking brakes shall hold the combined vehicle and trailer without moving.

New Vehicle Break-In

To ensure many years of reliable, trouble-free operation, the following break-in procedures are recommended:

Note: Oil change, filter change and chassis lubrication are no longer required at the 3,000-mile vehicle break-in interval.

Refer to the preventive maintenance schedules outlined in the *Maintenance and Lubrication Manual (TS494)* for recommended lubrication change intervals for the following items:

• Gear oils (transmission, rear axle carrier[s], front drive axle carrier, transfer case, flywheel PTO)

• Engine oil

• Oil filters

• Fuel filters

• Coolant conditioner

Note: It is important that components be filled with lubricants meeting the specifications as given in the *Maintenance and Lubrication Manual (TS494)*

Note: When checking oil levels, the vehicle must be parked on level ground, and the units at normal operating temperature. Components must be filled to the correct level. DO NOT OVERFILL.

Note: Oil and filter change intervals in this manual pertain to components built by Mack Trucks, Inc. For information concerning oil and oil filter change intervals for vendor components, refer to the specific vendor component service literature.

During the First 5000 Kilometers (3000 Miles)

• After the first 200 km (125 miles), retorque the wheel nuts using an accurately calibrated torque wrench. Recheck this torque again after 800 km (500 miles).

• Check oil and coolant levels frequently.

• Check brake and clutch adjustments per recommended maintenance schedule, and adjust as needed.

 https://truckmanualshub.com/

• Observe the instruments often, and shut down the engine at the first sign of any abnormal readings.

• Report all leaks, loose fasteners, unusual noises, etc., to the service representative at the nearest Mack dealership so they can be checked and corrected.

• Check the spring clip torque (U-bolts). (On REYCO suspensions, also check equalizer nut torque.)

• On chassis equipped with AIRTEK™ front axle air suspensions, retorque the U-bolts.

• Check the U-bolt torque on the MACK air suspension at the end of the first 1600 km (1000 miles).

After the First 5000 Kilometers (3000 Miles) or Before 6400 Kilometers (4000 Miles) or Before 3 to 4 Months

• Retorque the spring clip (U-bolts). (On REYCO suspensions, also retorque the equalizer nut.)

Note: On chassis equipped with AIRTEK™ front axle air suspensions, check the torque of the front axle U-bolts at 24 000 kilometers (15,000 miles).

At the First A Inspection Interval

• Check front and rear axle alignment and adjust if the alignment is out of specifications.

• Check steering knuckle to axle beam clearance.

Although this quality-built vehicle has been inspected, lubricated and adjusted at the MACK Trucks Assembly Plant, an occasional air, oil or coolant leak may develop. Quick action to correct these minor items will prevent a major repair later. Take the vehicle to the nearest MACK service center as soon as any abnormal condition becomes evident.

Initial Valve Adjustment Intervals

Refer to the *Maintenance and Lubrication Manual (TS494)* for detailed information concerning the Initial Valve Adjustment Interval.

WINDSHIELD WASHER RESERVOIR

As shown in the drawing below, the windshield washer reservoir is located under the hood, against the rider-side cab bulkhead.

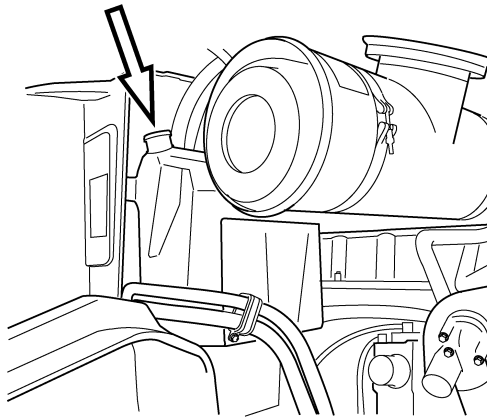

C0029836

On chassis equipped with the snowplow option, the windshield washer reservoir will be located on the back of the cab, driver-side.

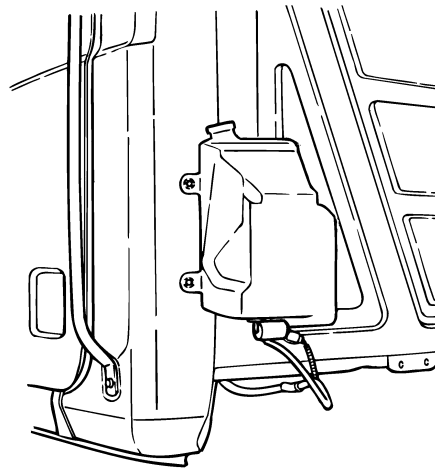

C0029837

 https://truckmanualshub.com/

HOOD OPERATION

Opening the Hood

To open the hood, release the locking tabs on each side of the hood.

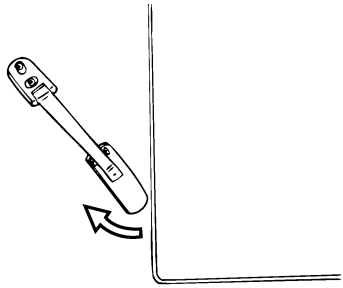

C0029315

1. With the hood in the locked position, pull outward on the plastic handle and disengage the locking tab from the hood latch.
2. Swing the rubber strap up and out of the way.
3. Repeat this procedure on the other side of the hood.

Note: When the hood is opened, the safety latch will drop down into the locked position.

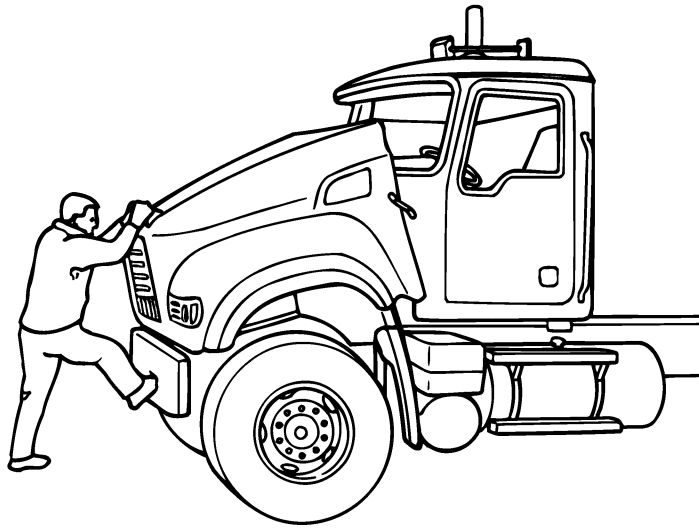

C0029838

4. Using the Bulldog as a handle, pull on the hood to raise it over the engine. You may put one foot on the bumper if necessary.

5. Pull steadily on the hood until it comes over the center and stops fully open.

WARNING

NEVER take both feet off the ground to tilt the hood. Keep at least one foot on the ground to avoid a slip or fall. If it is difficult for you to raise the hood, get the help of someone who can lift from the rear of the hood.

WARNING

Little effort is required to open or close the hood. NEVER take both feet off the ground to tilt the hood. Keep at least one foot on the ground to avoid a slip or fall.

 https://truckmanualshub.com/

Closing the Hood

Note: Remember to remove all tools, rags and test equipment from the engine compartment before closing the hood.

WARNING

Before closing the hood, be sure no one is in the way of the hood's descent.

Note: The safety latch must be released (reset) before the hood will close. (See arrow in illustration.)

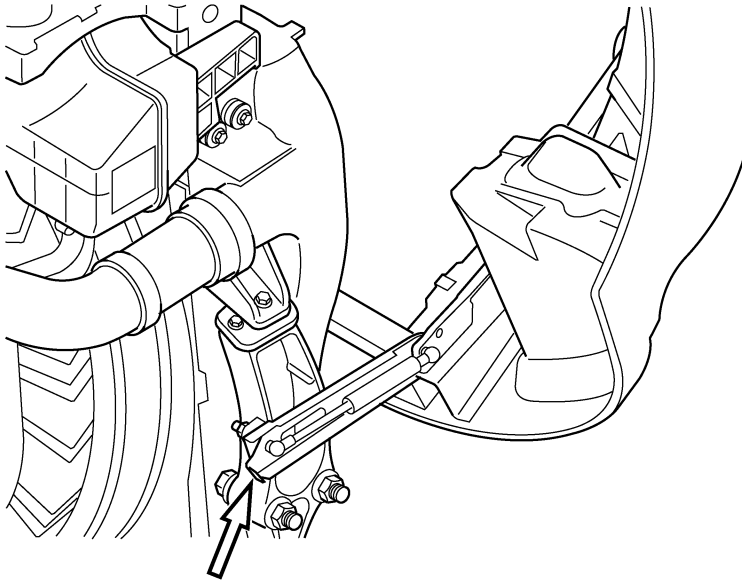

C0029317

Locking the Hood

To lock the hood, secure the rubber hold-down straps on each side of the hood.

1. With the hood down, set the rubber strap in position and force the locking discs into the hood latch.
2. Push inward on the plastic handle to lock the rubber strap in place.

3. Repeat this procedure on the other side of the hood.

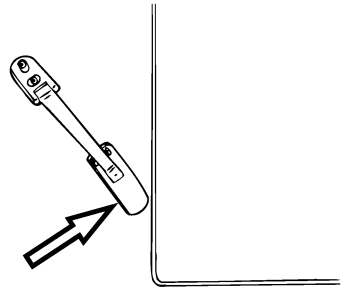

C0029318

CAUTION

Be sure the hood is latched securely. If the latch is not completely engaged, the hood could open during operation and cause vehicle damage.

 https://truckmanualshub.com/

Snowplow Hood Option

An optional hood is available for chassis equipped with a snowplow. This hood has an opening on the driver-side which provides the operator easy access to the engine oil dipstick and the engine oil fill tube without having to raise the entire hood. See illustration below.

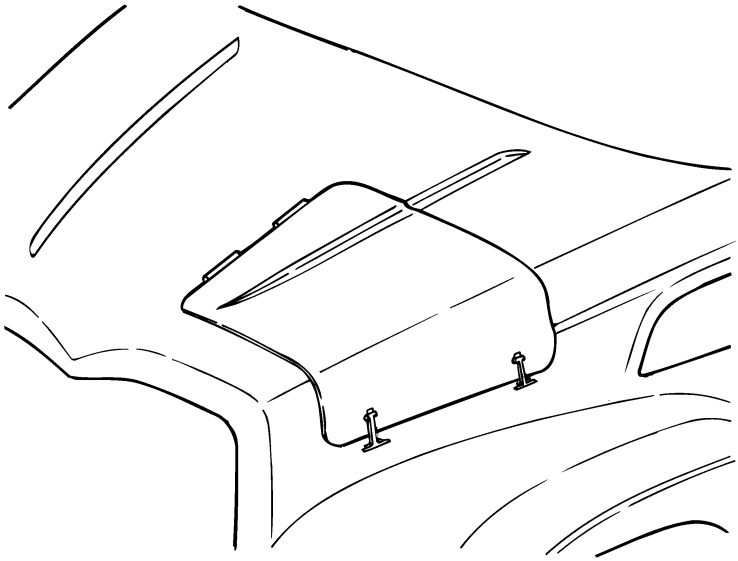

C0029839

HOSE TENDERS

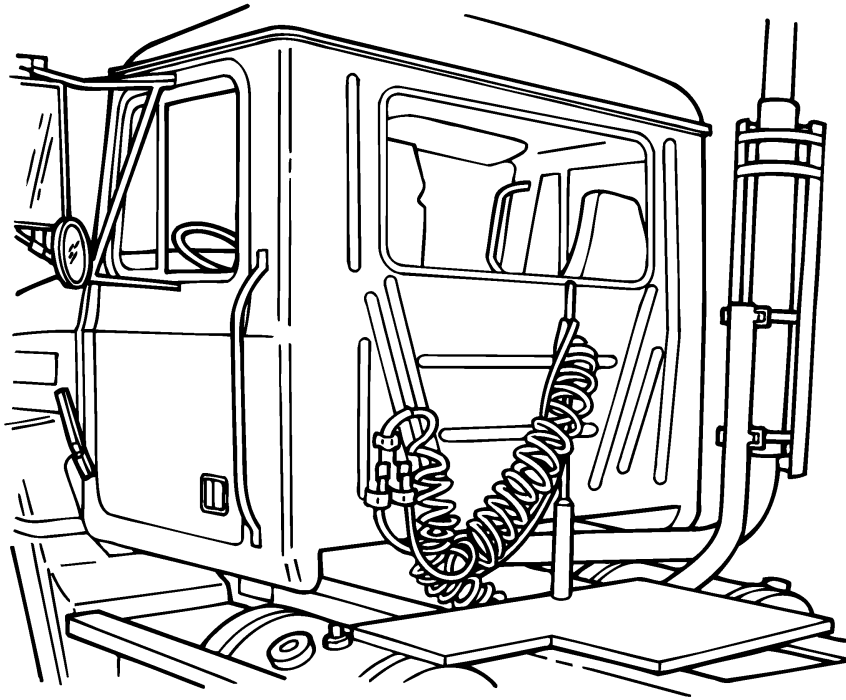

C0029319

CAUTION

Avoid loose hoses. Air lines and tractor-to-trailer electrical connections must be secured to the tractor hose tenders (hose hanger, towel bar, pogo stick, etc.) to prevent them from tangling in the driveline.

 https://truckmanualshub.com/

DOORS

Power Door Panel (Optional)

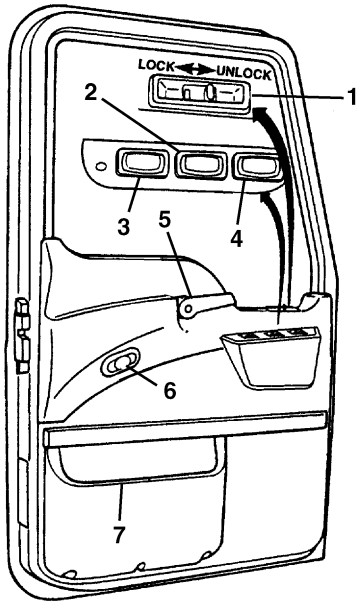

C0029322

Power Locks and Windows — Driver Side (Left) Shown

1. Manual Door Lock	5. Door Handle
2. Left Side Power Window Control	6. Door Light
3. Right Side Power Window Control	7. Storage Pouch
4. Power Door Lock	

1. Manual Door Lock — Push backward to lock. Push forward to unlock. The lock opening appears red when unlocked.

2. Left Side Power Window Control — Push back of button for DOWN, front of button for UP.

3. Right Side Power Window Control — Push back of button for DOWN, front of button for UP.

4. Power Door Lock — Push back of button to lock, front of button to unlock. The power lock controls both doors.

Note: The right side (passenger) door has a power control for the right side window only.

5. **Door Handle —** Lift handle to open.
6. **Door Light —** The door light automatically comes on when the door is opened and goes out when the door is closed.
7. **Storage Pouch —** Large, rigid storage pouch.

Opening the Cab Door

To open the door, grasp the front of the door handle and pull upward.

Locking the Cab Door

The doors can be locked using the manual door lock (item 1 in the illustration) or a power door lock switch (item 4 in the illustration).

Power door lock switches (on both sides of the cab) lock and unlock both cab doors at the same time. To lock the doors, push the rear of the rocker switch. To unlock the doors, push the front of the rocker switch.

To lock with the door open, push the lock lever forward and release. The lock lever will return to the home position and the door will be locked when closed. To unlock, pull the paddle and open the door.

WARNING

Always lock the doors while driving. This will lessen the chance of personal injury. Locking the doors helps prevent the occupants from being ejected from the vehicle in the event of an accident.

Power Window Regulators

To open the windows, push and hold the rear of the rocker switch (item 3 in the illustration). To close the windows, push and hold the front of the rocker switch. Release the rocker switch to stop the window at the desired position.

 https://truckmanualshub.com/

REMOTE KEYLESS ENTRY — (OPTIONAL)

This vehicle is equipped with a Remote Keyless Entry system. This system operates by means of a hand-held remote control that locks and unlocks the cab doors.

The remote control door lock transmitters are supplied in pairs; each one is attached to a key ring.

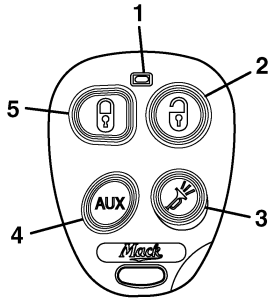

C0029323

1. LED 2. Press once to unlock driver side door. Press twice to unlock both doors. 3. Press and hold for 3 seconds to activate panic mode. Press and hold for 3 seconds again to cancel panic mode.	4. Press and hold for 0.5 second to turn external lights on or off. 5. Press once to lock doors. Press twice for horn confirmation.

Each transmitter is powered by a 3-volt battery and is water resistant. Information concerning battery replacement, troubleshooting and programming the transmitters is provided in this section.

The receiver in the vehicle is capable of recognizing four transmitters. Replacement transmitters are available; however, they must be programmed to match the specific receiver (refer to the "Programming the Transmitter" section).

Transmitter Operations

The door transmitter has four buttons (labeled LOCK, UNLOCK, AUX and HORN) to control operation of the system. When any of the buttons is pressed, a coded Ultra-high frequency (UHF) radio signal is transmitted to the receiver in the vehicle.

The transmitter must be within approximately 10 meters (33 feet) of the vehicle for the receiver to detect the coded signal. The Remote Keyless Entry system has no affect on the normal operation of the power door locks.

When the LOCK button is pressed, the doors will lock and the lights will flash once indicating that the doors are locked. The dome light will be on for 5 seconds upon locking the door by remote. For audible confirmation of the door lock, press the LOCK button a second time and the horn will beep once to confirm the doors are locked.

When the UNLOCK button is pressed once, the drivers door will unlock and the lights will flash twice indicating that the door is unlocked. The dome light will be on for 30 seconds upon unlocking the door by remote. Pushing the UNLOCK button a second time within 3 seconds will unlock both doors.

Note: If AUTO RE-ARM feature is selected, the keyless entry system will automatically re-arm itself 60 seconds after the doors are unlocked with remote transmitter. Automatic re-arm will cancel if any door is opened before the 60 seconds timer has elapsed.

Press and hold the AUX button on the transmitter for 0.5 second to turn perimeter or trailer access lights "On" or "Off" (if equipped).

Press and hold the HORN button on the transmitter for 3 seconds. The horn will immediately sound and running lights will flash. During panic mode, the normal function of this transmitter button will be suspended. LOCK and UNLOCK buttons cannot be used to lock and unlock the doors. To stop the alarm, press and hold the HORN button on the transmitter again for 3 seconds. If the button is not pressed, the alarm will automatically stop after 60 seconds.

Battery Replacement

Under normal use, the transmitter battery should last approximately two years. When battery replacement becomes necessary, use a Panasonic 3 volt, type CR2032, or equivalent. Replace the battery as follows:

1. Open the transmitter by inserting a dime between the two halves of the transmitter case (near the key ring hole) and twisting.

 https://truckmanualshub.com/

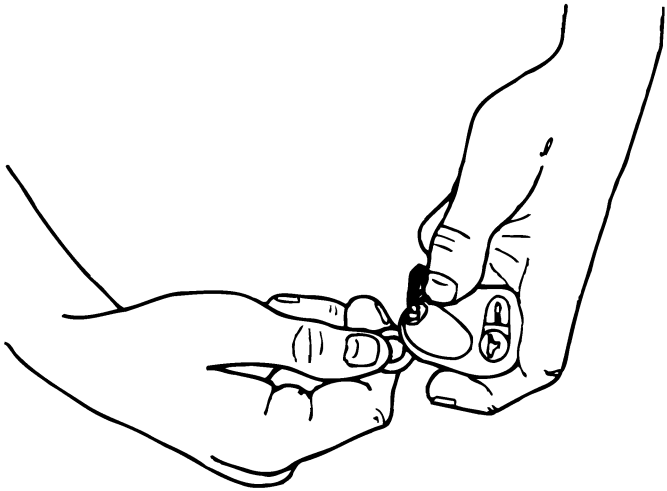

C0029324

2. Remove the battery.
3. Install a new battery with the positive (+) side down.

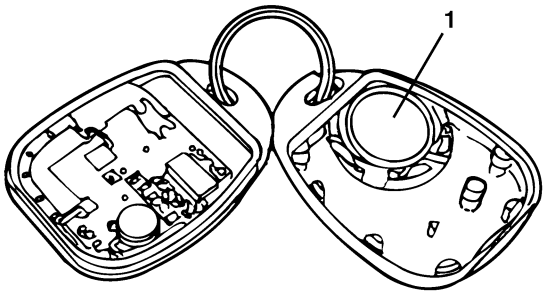

C0029325

1. Battery, positive (+) side down

4. Align the transmitter case halves, then snap the case together.
5. Check the operation of the transmitter.

Troubleshooting

The following checks may be used to diagnose any problems which may arise with Remote Keyless Entry system operation. Remember to check all transmitters.

1. Lower the windows, turn the ignition key to the OFF position and close the doors.

2. Stand near the driver's side door, aim the transmitter at the vehicle and operate both functions of the transmitter. Repeat for all transmitters, if applicable.

• If a single function on one transmitter is inoperative, replace the transmitter.

• If all functions on any of the transmitters are inoperative, reprogram all transmitters and repeat the troubleshooting procedures. Refer to the "Programming the Transmitter" section.

• If one transmitter cannot be programmed, replace the battery in the transmitter. Refer to the "Battery Replacement" section.

3. If all functions on all transmitters operate, stand approximately five feet from the vehicle (at several points around the vehicle), and check the operation of all transmitters at each point.

• If one transmitter does not operate at some point where another transmitter does operate, replace the battery in the transmitter that does not operate.

• If all transmitters operate approximately five feet from the vehicle, the system is operating properly and no repairs should be attempted.

Programming the Transmitter:

1. Turn the ignition switch to the ON position.

2. Access the keyless entry module, located behind the D-Panel.

3. Push the Program switch on the keyless entry module three times. The program LED on the module will be solid, to indicate you are now in the Transmitter Programming Mode.

4. Press any button on one of the transmitters until the horn responds with a chirp and the LED will flash once, to confirm the first transmitter is now programmed.

5. If necessary, repeat Step 3 to program the 2nd, 3rd and 4th transmitters.

Note: If more than four transmitters are programmed, the system will only retain the last four transmitters programmed.

6. To exit Programming Mode, turn the ignition switch to the OFF position, or simply wait 15 seconds. The LED will be off to confirm exit.

 https://truckmanualshub.com/

Feature Programming:

1. Turn the ignition switch to the ON position.

2. Access the keyless entry module, located behind the D-Panel.

3. Push the Program switch on the keyless entry module six times. The horn will chirp six times, and the program LED on the module will be solid, to indicate you are now in the Feature Programming Mode.

4. Press and release the transmitter button corresponding to the feature you want to change.

Note: The horn chirps and LED pulses will indicate the new setting.

5. Press the transmitter button again to change the feature again. Keep pressing the transmitter button until the module advances to your desired setting.

Press Transmitter Button	One Chirp/LED One Pulse **Factory Default Setting**	Two Chirps/LED Two Pulses
	The Remote function can operate with ignition "on"	The Remote function cannot operate with ignition "on"
	Automatic Re-Arm OFF	Automatic Re-Arm ON
AUX	External Light turns on for 3 minutes	External Light turns on for 5 minutes
	Three Chirps/LED Three pulses = External Light turns on for 10 minutes.	
	Four Chirps/LED Four pulses = External Light turns on for 15 minutes.	
	Five Chirps/LED Five pulses = External Light turns on for 20 minutes.	

6. To exit Programming Mode, turn the Ignition to the "Off" position, or simply wait for 15 seconds. The horn will respond with a short + long beep and the LED turns off to confirm exit.

SEAT BELTS

DANGER

Seat belts should always be secured BEFORE the vehicle is set in motion. Failure to use seat belts can result in SEVERE bodily injury or death. Unbelted riders could be thrown into the windshield or other parts of the cab, or thrown out of the cab entirely.

Seat Belt Operation

MACK vehicles manufactured on or after September 1, 1990 must have locking retractable seat belts.

For all seating positions in your MACK vehicle, this type of seat belt is a combination lap and shoulder belt.

This type of belt is designed to lock (prevent belt travel out of the retractor) only during sudden stops or impacts. This feature allows the operator to move freely under normal conditions. Seat belts cannot be locked by jerking on the belt, except during sudden stops or harsh bumps.

Fastening Seat Belt

1. Pull clip so the belt crosses your shoulder and lap and insert it into the buckle until an audible snap is heard.

DANGER

Use the shoulder belt only on the shoulder that is closest to the vehicle door. Never wear the shoulder portion of the belt under your arm or behind your back. Improper use will increase your chances of injury during a collision.

 https://truckmanualshub.com/

DANGER

To prevent possible injury the belt must be positioned low over the pelvis, below the abdomen. If the belt is buckled too high, it will apply force to the abdomen, not the pelvic region, and could cause serious internal injuries during a sudden stop.

DANGER

Do NOT wear seat belt loosely. Do NOT use one belt for more than one person.

2. Make sure the clip is securely fastened into the buckle.

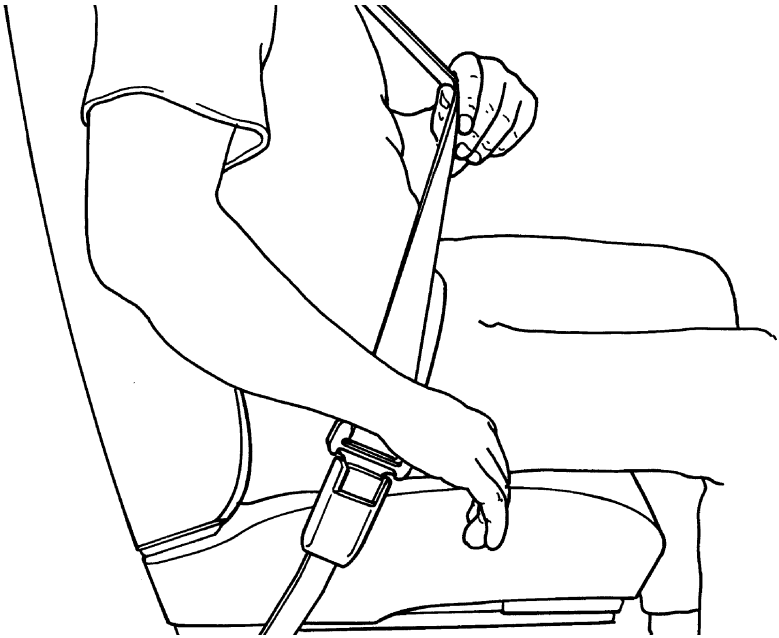

C0029326

3. To tighten the lap portion of the combination belt, pull upward on the shoulder portion until the lap portion fits snugly. The belt should rest as low on your hips as possible.

Unfastening Seat Belt

Push down on the button to release the belt.

Adjustable D-Ring Shoulder Belts (if equipped)

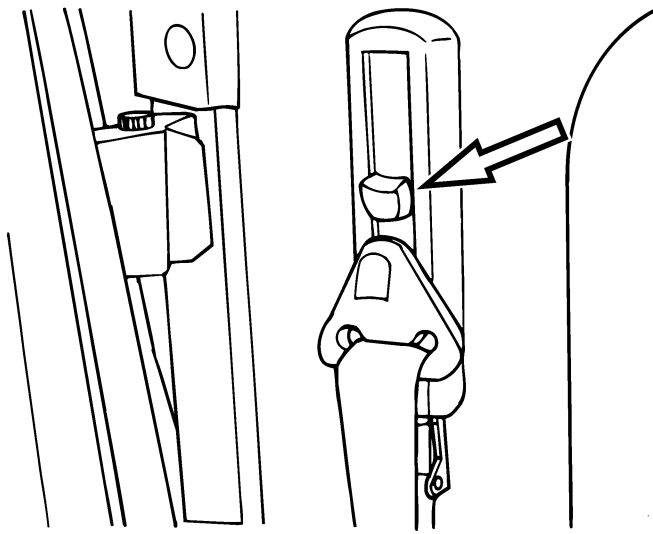

C0029327

The shoulder belt portion of the three-point belt is adjustable so that the belt can be adjusted to lay properly and comfortably across the shoulder. To adjust the belt, squeeze the release lock and move the belt to the desired position. The belt locks into place when the lock is released.

Seat Belt Maintenance

- Keep belt clean and dry.
- Clean with mild soap solution and lukewarm water.

DANGER

Do NOT bleach or dye belt, as this may cause severe loss of strength. Do NOT install belt in a truck with a weakened floor until the floor has been replaced or reinforced.

 https://truckmanualshub.com/

• Periodically inspect the following areas and replace any inadequate parts:

Buckle and Latchplate — The buckle and latchplate should mate easily with a solid click and release easily and quickly with moderate pressure on the release button. All metal seat belt components should be free of signs of damage, corrosion or rust.

Webbing — The webbing should show no signs of wear, fraying or holes, and it should be reasonably free of dirt which could find its way into the retracting mechanism.

Retractors — The retractors should function smoothly and maintain an appropriate amount of tension. Loose webbing is an indicator that maintenance is needed; it's likely that a too-loose belt will fail to tighten properly when necessary.

Seat Belt Mounting Components — The tethering should be free of wear and debris; the webbing should show no signs of wear, fraying or holes; and the metal components should be free of signs of damage, corrosion or rust.

⚠ DANGER

Seat belt assemblies must be replaced after an accident if they have been subjected to loading by occupants (even if no damage is obvious), or if they have been damaged by an accident (bent retractor, torn webbing, etc.). If there is any question regarding belt or retractor condition, replace the appropriate part.

Komfort® Latch System

Seat Belt Assembly

The Track III three-point seat belts installed in this chassis are designed to provide the highest degree of operator safety, comfort and convenience. Additional comfort is provided by the Komfort Latch mechanism, which is incorporated into the seat belt assembly, and may be used to relieve any discomfort caused by the constant pressure of engaged seat belts.

Seat Belt Operation

To buckle the seat belt, grasp the latch portion of the buckle, bring it across your lap (from outboard to inboard) and insert it into the fixed buckle which is mounted to the floor or seat (depending on seat type). With the belt properly latched, the pelvic and upper torso restraints will be in place and automatically adjusted to provide a snug fit.

Komfort Latch Feature

If the constant tension of the buckled seat belt causes any discomfort, engage the Komfort Latch as follows:

DANGER

Do NOT attempt to engage the Komfort Latch feature while the truck is in motion.

Engagement — Pull the webbing of the shoulder belt away from the upper torso, pulling only as much slack as needed while still allowing the belt to exert slight pressure against your chest and shoulder. (Maximum amount of slack should not exceed one inch when measured from the chest to the belt.) While holding the slack, lift the lever located on top of the Komfort Latch mechanism upward to clamp the webbing in place.

Normal Release — To unfasten the seat belt, simply release the buckle and give the shoulder belt a quick tug to release the Komfort Latch mechanism. Allow the belt to retract into the retractor.

Emergency Release — In the event of an emergency, release the seat belt buckle. It is not necessary to release the Komfort Latch in an emergency situation.

Note: If forward movement is required while the Komfort Latch mechanism is latched, the latch automatically releases when you lean against the shoulder portion of the belt. Repeat the above steps to reset the Komfort Latch, if desired, after forward movement is no longer required.

DANGER

Excessive slack will reduce effectiveness of the seat belt, which could result in personal injury and death. CAREFULLY follow the instructions for adjusting the tension-relieving device.

 https://truckmanualshub.com/

SEAT ADJUSTMENT AND RECLINE (IF EQUIPPED)

WARNING

Do not adjust the driver's seat while the vehicle is moving. After adjusting the seat and before driving off, ensure that the seat is firmly latched in position.

WARNING

Do not drive or ride with the seat reclined. In case of a sudden stop, a person in a reclined position may slide under the seat belt.

MIRROR BREAKAWAY STRUT

The mirror breakaway strut steadys the mirror, and is designed to "break-away" should the mirror hit an object. The breakaway strut needs no maintenance, and should never need to be replaced.

To re-attach the strut to the mirror bracket:

1. Push mirror bracket forward, as far as it will go.
2. Align end of strut with slot in receptacle.

3. Pull bracket rearward to snap strut in place. The strut head should be centered fore-aft in the receptacle.

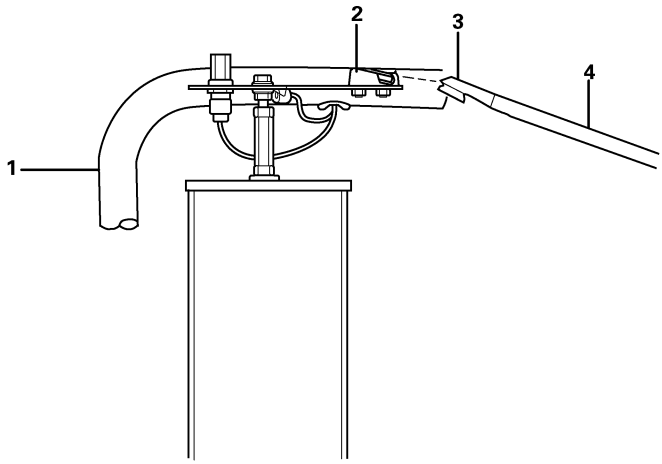

C0029840

1. Mirror Bracket	3. Plastic Strut Head
2. Receptacle	4. Mirror Breakaway Strut

 https://truckmanualshub.com/

MACK ENGINE INFORMATION

For engine starting procedures, refer to “STARTING THE VEHICLE” page 164.

Precautions and Warnings

CAUTION

If a winterfront is needed, use only a winterfront that was designed for this specific chassis. Winterfronts are not recommended, but may be used during very cold weather with sustained temperatures below -25° C (-13° F).

CAUTION

Be sure to avoid high intake/exhaust temperatures when using winterfronts under normal operating conditions (above freezing). The restriction of airflow can cause higher exhaust temperatures, power loss, excessive fan usage and reduced fuel economy.

CAUTION

If a winterfront is used, a MACK-approved exhaust pyrometer must be installed and closely monitored while the engine is in operation. Do NOT exceed the maximum temperature indicated by the red line on the gauge. To reduce exhaust temperature, downshift or reduce engine power and open the winterfront.

CAUTION

Do not permit a heavy load to drive the engine above the governed speed. Operate in a gear low enough to allow the engine to accelerate to (or maintain) governed speed when applying the throttle.

WARNING

Misuse or modification of a turbocharger can result in serious injury and property damage. In addition, extreme care must be taken to avoid foreign material induction, excessive exhaust temperatures and lack of lubrication.

CAUTION

The maximum allowable engine speed is listed on the warning label on the sun visor. DO NOT exceed 2,300 rpm.

Engine Model Designations

The MACK engine model designation system uses letters and numbers to provide a complete unit description.

MP Engine ID Letters and Number

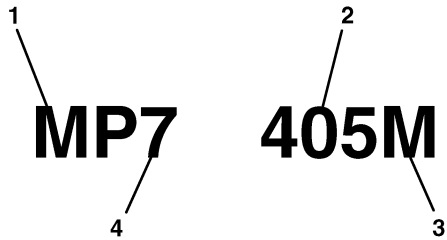

C0029329

MP7 Used as an Example

1. Mack Power	3. Curve Family: Econodyne = E Maxicruise = C Maxidyne = M
2. Peak Horsepower	4. Rounded Cubic Inch Displacement

 https://truckmanualshub.com/

TIRE PRESSURE CONTROL SYSTEM (IF EQUIPPED)

The Dana® Tire Pressure Control System (TPCS) is an incredibly simple system to operate. All commands to adjust tire pressures are controlled by the driver from an easy-to-use operator control panel located in the overhead compartment above the driver. The driver simply selects the desired mode with the touch of a button and the Dana TPCS does the rest, adjusting tire pressures to match the road surface. Indicators on the control panel tell the driver what's happening.

A built-in indicator warns the driver when he is traveling too fast for selected tire pressures, and the system logic automatically selects the appropriate pressure if the speed is not reduced. A warning icon also tells the driver to check his tires if the system senses conditions which may indicate tire damage. A pressure switch acts as an electronic brake priority switch to prevent the Dana TPCS from using air until the brake system is fully charged. Brakes always have priority.

With its two modes of operation (Loaded/Unloaded) and three terrain settings, you get six pressures from which to effectively operate across a wide variety of terrain. "Highway" mode allows for high speed travel on paved surfaces, "Off Highway" permits operation on secondary roads, and "Emergency" provides extremely low tire pressures to help free a stuck vehicle, or take on grades that previously were impossible to negotiate without assistance. Plus, the Dana TPCS has various digital display codes that report when a problem exists, and exactly what the problem is so you know just what to do to correct the situation.

The Dana TPCS requires a constant supply of clean dry air. An adequately sized and maintained air dryer is critical for continued proper operation of the Tire Pressure Control System. Even though the air dryer may be working properly, moisture can accumulate in the wet tank during normal operation due to the increase in air consumption. It is important to drain the wet tank daily. Draining the wet tank completely (to 0 pressure) when the truck is not in use will help keep moisture under control.

Operating the Dana Tire Pressure Control System

The Operator Control Panel (OCP) is the sole interface for display of operator information and for key entry of the system instructions. The following sections explain the purpose and operation of all OCP features.

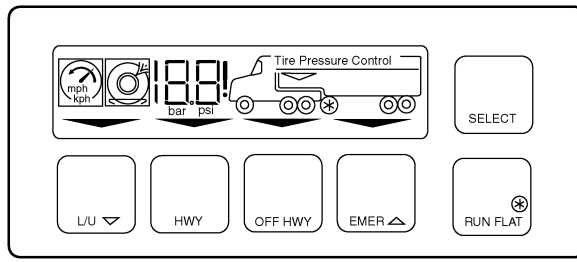

C0029841

WARNING ICONS

Two warning icons report operating problems. You must take immediate action to either reduce vehicle speed or check tire condition whenever these icons activate.

CAUTION

Failure to respond may result in tire overheating and reduced tire life or a tire blowout.

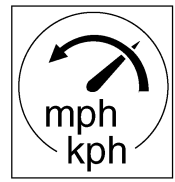

C0029842

Reduce Vehicle Speed — This signal reports that the vehicle speed is too fast for the pressure selected. You must either reduce speed or select a higher pressure by pressing the appropriate key. Continued operation in this mode will result in the system automatically selecting a more appropriate pressure setting.

 https://truckmanualshub.com/

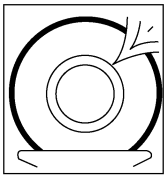

C0029843

Check Tire Condition — This signal reports that one tire is at a significantly lower pressure than the others and could indicate that a tire is not holding pressure. Stop the vehicle immediately and identify the extent of tire damage. The system may be used to re-inflate the low tire if damage is determined to be minimal (e.g., a minor puncture or slow leak) by selecting RUN FLAT. **Do not use the system to inflate tires with substantial damage, such as large cuts, chunk outs, or structural defects.**

DIGITAL DISPLAY

The display shows either tire pressure or service codes for the channel as indicated by the illuminated inner tire rings (see Channel Indicators). When the system is actively changing tire pressure, the indicator arrow above the target mode will flash.

Service Code Indicator — The exclamation point indicates that the value shown in the digital display is not a pressure, but rather a service code. See Service Codes Section.

Metric/English Indicator — This unit of measure indicator tells if the tire pressure is shown in metric (bar) or English (psi) units.

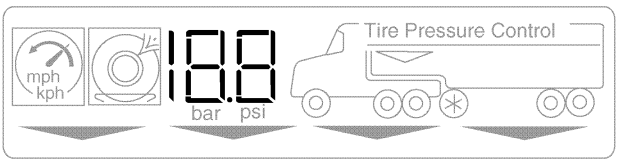

C0029844

MODE KEYS AND ANNUNCIATOR ARROWS

These keys select pressures appropriate for different surface and loading conditions. The annunciator arrow points to the selected key and signals one of two states:

• **If the arrow is flashing**, the system is in the process of checking or changing pressures.

• **If the arrow is lighted steady**, the selected pressure has been achieved and the system is de-pressurized.

L/U Key (Loaded/Unloaded) — This key selects pressures appropriate for either a loaded or unloaded vehicle.

HWY — For high speed travel on paved surfaces.

OFF HWY — For operation on secondary roads.

EMER — For selection of extremely low tire pressures to help free a stuck vehicle.

CAUTION

The EMER feature is for extreme conditions only and should not be used for normal driving.

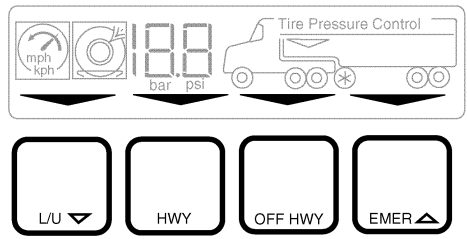

C0029845

LOADED INDICATOR

The small arrow pointing to the drive wheels indicates whether you have selected loaded or unloaded pressures. You must select loaded if your vehicle is carrying any load.

WARNING

Operating a loaded vehicle at unloaded tire pressures may result in tire overheating and reduced tire life or blowout.

 https://truckmanualshub.com/

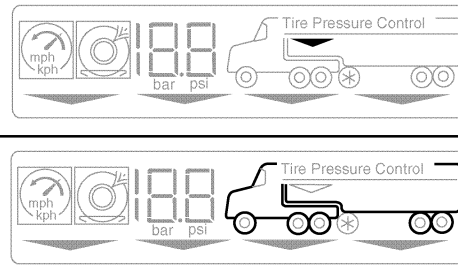

C0029846

CONFIGURATION INDICATORS

The tractor/trailer outline show(s) whether the vehicle is configured with a two channel (tractor or straight truck) or three channel (tractor and trailer) TPCS.

RUN FLAT INDICATOR

This asterisk matches the symbol on the RUN FLAT key and it indicates that the Run Flat feature is selected.

RUN FLAT KEY

This key allows the operator to override the 11P! (tire leak imbalance) fault. This key also instructs the system to check tire pressures at more frequent intervals. The Run Flat feature will automatically de-select after 10 minutes.

CAUTION
Pressing the RUN FLAT key may override Low Tire Detection.

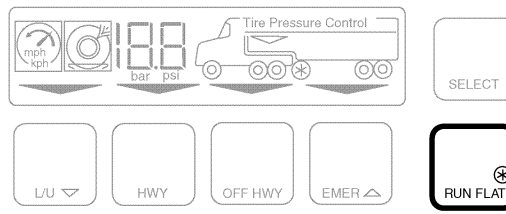

C0029847

SELECT KEY

This key allows the operator to continuously monitor one channel, or scan all of them. On power-up, the Operator Control Panel will not display any pressures ("Quiet Mode"). Pressing the SELECT key once will cause the display to scan the tire pressures (see Channel Indicators). Repeated pressure will lock the display on each individual channel (so that any channel may be monitored continuously) and then return to the no display condition.

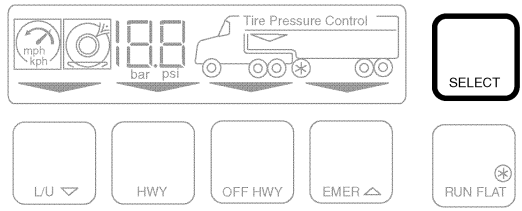

C0029848

TPCS LOGO MARK

Indicates system power ON at vehicle start-up.

Note: All symbols on the display will light momentarily upon start of the vehicle.

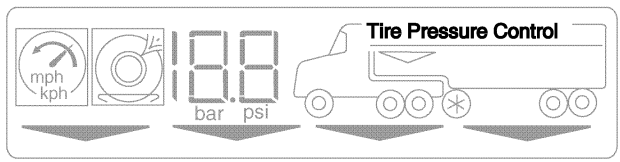

C0029849

CHANNEL INDICATORS

The rings inside the tires of the configuration indicators show which channel (steers, drives or trailers) is being reported by the digital display.

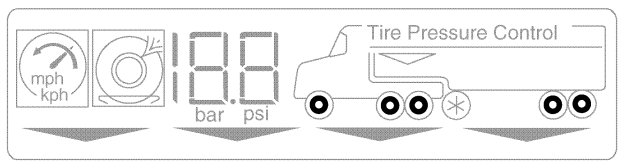

C0029850

 https://truckmanualshub.com/

Tire Changing Procedure

CAUTION

If the tire being removed is not flat, high pressure air will be released when the tire hose is disconnected from the valve stem. To minimize air loss, install the valve stem cap from the wheel valve to the tire stem to stop the flow of air from the tire upon removal of the hose. Use caution and eye protection.

Note: On duals, both tires will go flat should damage occur to either tire. If tire damage is so severe that Run Flat operation cannot maintain sufficient operating pressure, the damaged tire can be disconnected and the air line plugged or capped to allow the good tire to be re-inflated. This should be done in emergency situations only.

Note: Mark the alignment of the tire valve stem to the hub if necessary.

Note: When removing hoses, store in a clean, dry location to prevent contamination and/or damage.

WHEEL REMOVAL — STEER

1. Remove Tire Hose. Disconnect tire hose from valve stem, then disconnect hose from wheel valve.
2. Cap Wheel Valve in the hubcap to prevent wheel valve contamination. Rotate the tire with the hub so that the valve is on the bottom (wheel valve protected).
3. Remove the wheel nuts and wheel/tire assembly.

WHEEL REMOVAL — DUAL

1. Drive axle only. Remove control hose from the hub, then disconnect hose from wheel valve. Plug the air outlet in the hub to prevent contaminants from entering the system.
2. Disconnect the tire hoses from the wheel valve tee and plug or cap the line with the appropriate fitting.
3. Remove the wheel nuts and wheel/tire assembly.

WHEEL INSTALLATION

Note: The tire valve stem core cannot be used on vehicles equipped with the Dana Tire Pressure Control System.

Reverse the above procedure for installation.

 https://truckmanualshub.com/

CRUISE CONTROL OPERATION

Note: Effective August 2008, a change was made to the vehicle software which requires the vehicle operator to press and release the brake pedal after the engine has been started. If the brake pedal is not depressed after starting the engine, cruise control will not function.

Speed Control Switches

Resume/Set Switch — Allows the driver to set and resume cruise control.

Note: In most cases, the Speed Control switch must be in the ON position in order to use the Resume/Set switch. However, when the Initial Set Using Resume Switch feature is enabled, cruise control can be activated using the Resume/Set switch.

The Resume/Set switch also functions as the Accel/Decel switch. Usually the Resume position (press the top) corresponds to an increase in engine speed (Accel) and the Set position (press the bottom) corresponds to a decrease in engine speed (Decel).

Note: Under specific circumstances this switch can also be used to activate cruise control. For details concerning the Initial Set Using Resume Switch feature, refer to the *V-MAC Support Software User's Guide*.

Speed Control Switch — Activates the cruise control system.

Setting Cruise Control

1. Press and release the brake pedal after engine has been started.
2. Engage the clutch (if equipped).
3. Move the Speed Control switch to the ON position.
4. Increase engine speed using the accelerator pedal.
5. At the desired speed, press and release the Resume/Set switch. This speed is now programmed and will be automatically maintained.

Note: To increase the engine speed, press and hold the Accel switch until the desired speed is attained, or press the accelerator pedal until the desired speed is attained and then press and release the Set switch.

Disengaging Cruise Control

To turn off the cruise control system, move the Speed Control switch to the OFF position.

Note: If the Speed Control switch is moved to the OFF position, the process of setting cruise control must be repeated in order to re-activate cruise control (unless the Initial Set Using Resume Switch feature is enabled).

To temporarily disengage cruise control, disengage the clutch or apply the service brakes.

Note: If cruise control is temporarily disengaged using the clutch or service brakes, press the Resume switch to resume the previously programmed speed.

 https://truckmanualshub.com/

MACK POWERLEASH™ ENGINE BRAKE (IF EQUIPPED)

Note: If your vehicle is equipped with a Jacob's engine brake, please refer to the Jacobs Engine Brake Manual supplied with the vehicle for complete operating instructions.

Engines may be equipped to be PowerLeash™ upgradeable. These engines will be equipped with PowerLeash™ camshaft. These engines are identified on the engine information sticker.

If your vehicle is equipped with the MACK PowerLeash™ Engine Brake, it is important that you take the time to become familiar with your engine brake before putting it into operation.

WARNING

Operation of any vehicle on wet or slippery roads requires extreme caution. Because the engine brake converts the engine to a retarding device, it should NOT be used on wet or slippery roads if the vehicle has a single driving axle or if it has tandem driving axles that are lightly loaded. Use of an engine brake under these conditions can cause the vehicle to skid or a combination vehicle to jackknife.

Engine Brake Switch

The Engine Brake switch is located on the dashboard. The Engine Brake switch is a three-position switch located on the instrument panel.

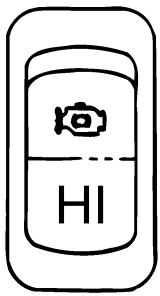

C0029330

Engine Brake Switch

HI	Full Engine Braking Power
LO	Half Engine Braking Power
OFF	No Engine Braking Power

To operate the vehicle without the engine brake active, leave the dash-mounted switch in the OFF position.

CAUTION

The V-MAC® system prevents engine brake activation if the oil temperature is below 55° C (131° F). The driver should be alert to the fact that the engine brake will not function until sufficient warm-up time has elapsed, regardless of the dash switch setting.

How the Engine Brake is Activated

When the engine brake is "enabled" (switch in either LOW or HIGH position), your engine V-MAC® electronic control system commands engine brake power (engine brake "active") only when the following conditions are true:

- The foot-operated engine accelerator pedal is not depressed.
- The clutch pedal is not depressed (manual shift transmissions only).
- The engine speed is at least 900 rpm.
- Vehicle must be in gear.
- Vehicle speed should be greater than 8 km/h.

If the engine brake is active, the engine brake will automatically be deactivated by depressing either the accelerator or the clutch, or if the engine speed drops below 900 rpm. As soon as all of the engine brake "active" conditions are again true (taking your foot off the accelerator, for example), the engine brake will again be activated. In order to disable the engine brake, simply return the dash-mounted control switch to the OFF position.

DANGER

The engine brake should never be considered a substitute for the vehicle service brakes. The service brakes should always be maintained in good working order, and should always be viewed as the primary vehicle slowing system. Service brakes are always used to bring the vehicle to a complete stop.

 https://truckmanualshub.com/

Cruise Control with the MACK PowerLeash™ Engine Brake

When the MACK PowerLeash™ Engine Brake is enabled at the same time your V-MAC® cruise control is in use, the engine brake automatically activates when necessary to slow the vehicle to the cruise set point speed. You can select one of two possible options:

• The engine brake is activated 2 mph above the cruise set point.

• The engine brake is activated as soon as cruise control commands fueling to zero (vehicle has just reached cruise set point and fuel has been turned off).

The first option is the more popular choice for highway use and is the default mode. Consult your V-MAC® IV Operator's Manual for more information about this option. Your local MACK dealer can change the current selection.

The engine brake's ability to control maximum vehicle speed is limited to the selected retarding power of the engine brake. If the engine brake dash-mounted control switch is set to the LOW position, only half of the available braking power is used. If the dash-mounted control switch is set to the HIGH position, the cruise control invokes full engine brake power.

Note: Deactivating the cruise control function does not disable the engine brake.

The MACK PowerLeash™ Engine Brake may be activated or deactivated by other vehicle systems such as ABS and Headway control systems. Refer to the literature concerning these systems for additional information.

ON THE ROAD WITH THE MACK POWERLEASH™ ENGINE BRAKE

If you are not familiar with the use and operation of a heavy-duty diesel engine brake, it is essential that you read the following section carefully. It is very important that you take the time to gain experience with your MACK PowerLeash™ Engine Brake in good driving conditions, before using it in difficult or hazardous driving conditions, such as steep descents or slippery roads. Of course, there is no substitute for driver training by a qualified specialist.

The following information is intended as a guideline to safe and appropriate use of the MACK PowerLeash™ Engine Brake. It is difficult to describe every possible driving condition. Certain circumstances may require a more conservative approach than will be described. When encountering any new driving route or situation, err on the side of caution.

Over Flat Terrain

The LOW power position is likely adequate to control vehicle speed in situations where the roadway is relatively flat or has modestly graded rolling hills, and if total vehicle weight is light.

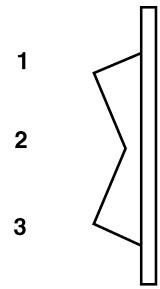

C0029331

1. High 2. Low	3. Off

 https://truckmanualshub.com/

As grades and vehicle weight increase, it will be necessary to use the HIGH position.

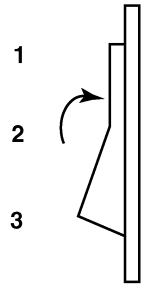

C0029332

1. High 2. Low	3. Off

Descending a Grade

DANGER

The MACK PowerLeash™ Engine Brake assists you in establishing faster downhill descent speeds than in a similarly configured and loaded vehicle without an engine brake; nevertheless, even with an engine brake, there are limits to the maximum vehicle speed at which you can travel on downhill grades and still keep your vehicle safely under control. Always approach these situations with caution, and gain the experience necessary for each grade and driving condition to determine the appropriate downhill descent speed.

For a certain vehicle and load condition, a "control speed" may be established for a given descent. The control speed is the vehicle speed at which the retarding forces of air drag, rolling resistance and engine brake power are equally balanced by the natural force of gravity that causes the vehicle to accelerate down the hill, resulting in a steady, controlled vehicle speed. The additional vehicle slowing power offered by the MACK PowerLeash™ Engine Brake allows the driver to descend the hill in a higher gear than normal (at a faster control speed), without overspeeding the engine.

For example, consider that you are descending a grade with a specific vehicle and an assumed total vehicle weight. You will find that without an engine brake, you must descend this grade in third gear to maintain a steady 10 mph at 2,000 engine rpm, without the need to apply the service brakes.

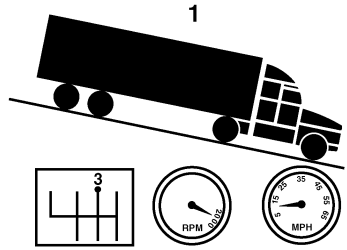

C0029333

1. Descent Speed without MACK Engine Brake

Switch the MACK PowerLeash™ Engine Brake to the HIGH position, and now it is possible to descend the same grade in sixth gear to maintain a steady 35 mph at 2,000 engine rpm.

CAUTION

The maximum allowable engine speed is listed on the warning label on the sun visor. Do NOT exceed 2,300 rpm.

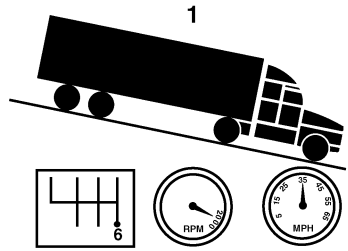

C0029334

1. Descent Speed without MACK Engine Brake

 https://truckmanualshub.com/

In any gear selection higher than sixth gear (in this example), it would be necessary to occasionally apply the service brakes to maintain a safe vehicle speed and to avoid overspeeding the engine.

DANGER

As with any vehicle, regular and excessive application of the service brakes during a downhill descent can lead to a brake lining overheat condition, resulting in a very dangerous loss of service brake retarding capability.

Note: The previous figures apply only to this hypothetical example. Specific vehicle control speeds and engine speeds for a given descent are dependent upon the actual vehicle and engine configurations, the gross weight of the vehicle, and the percent grade of the road.

On Slippery Road Surfaces

As with many aspects of operating a heavy-duty vehicle, special care should be taken when using the MACK PowerLeash™ Engine Brake on slippery road surfaces. The potential for unpredictable loss of vehicle traction is a serious concern; in some situations the engine should not be used at all.

As always, approach untested driving conditions with caution. Avoid use of the MACK PowerLeash™ Engine Brake in these situations until you have gained some experience under normal driving conditions.

As a rule, make sure that the vehicle is demonstrating good tractability with the engine brake off before checking for tractability with the engine brake enabled. Then, provided traffic conditions are safe for "testing" tractability, switch the MACK PowerLeash™ Engine Brake to the LOW position. If the vehicle shows any signs of loss of control (ABS activation or vehicle swerving, for example), immediately switch the engine brake back to the OFF position.

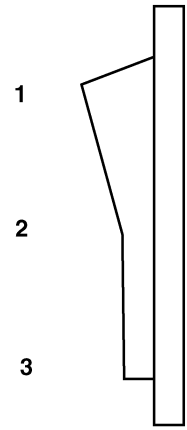

C0029335

1. High 2. Low	3. Off

Only if the vehicle demonstrates good control in the LOW position (again, only in safe driving conditions) should you test in the HIGH position, if desired. Return to the LOW position and proceed with caution if there is any sign of loss vehicle control.

Note: Always monitor vehicle tractability in slippery road conditions, and make adjustments to engine brake switch position and vehicle speed as necessary. Always test the LOW power position setting before moving to the HIGH position.

 https://truckmanualshub.com/

Your MACK PowerLeash™ Engine Brake and ABS control systems are designed to work together for optimized vehicle control. The engine brake function may be modified or interrupted briefly in the event of pending wheel lock.

CAUTION

Do not enable the MACK PowerLeash™ Engine Brake during bobtail operations, or when operating on slippery roads with an empty or lightly loaded trailer.

BRAKE OPERATION

Air Brake System

This chassis features a dual braking system which has two complete air circuits: a primary circuit for rear brakes and a secondary circuit for front brakes. Each circuit receives air from separate reservoirs. Although there are two air circuits, they operate as one brake system through the dual-circuit treadle valve. This provides the driver with easy, graduated control when applying and releasing the brakes.

The air pressure in the two circuits is monitored by gauges on the instrument panel. When air pressure drops below 517 ± 34 kPa (75 ± 5 psi) in either system at any time other than vehicle startup, pull to the side of the road and determine the problem. If air pressure continues to drop below 40 ± 5 psi in BOTH systems, spring brakes will automatically apply. The Low Air Pressure Warning indicator and buzzer will be activated if low air pressure occurs in either circuit.

In tractor applications, the Trailer Supply Valve (red octagonal knob) will immediately pop out in the event of a trailer breakaway or sudden trailer air line failure, which will apply the trailer spring brakes. In the event of a slow leak in the trailer air system, the trailer supply valve will pop out when system Pressure reaches 70 psi. This protects the tractor air system from further pressure loss.

If the Trailer Supply Valve is held in, in an attempt to override application of the trailer spring brakes, the Park Brake Valve (yellow diamond knob) will automatically pop out and apply the parking brakes when system pressure drops to approximately 20–30 psi.

The air brake system consists of three main elements:

- The compressor, governor and reservoirs supply and store the air pressure.
- The brake application valve controls the brake application pressures.
- The brake chambers control the brake mechanism.

Air Brake Operation

CAUTION

Avoid sudden stops. Constant, sudden stops may negatively affect the performance of braking and driving parts.

 https://truckmanualshub.com/

When slowing for a stop, leave the clutch engaged for as long as possible to use the braking effect of the engine. When forward speed has dropped to a little above idling speed, push clutch pedal in and brake to a complete stop.

Automatic Slack Adjusters

Automatic slack adjusters are designed to automatically maintain proper brake chamber pushrod travel and compensate for brake lining wear during normal use. Manual adjustment of an automatic slack adjuster should never be performed except when performing brake or wheel service (such as backing off the brake shoes for wheel removal, brake shoe relining/replacement, brake drum reconditioning, etc.).

When pushrod travel exceeds specifications (as given in the "BRAKE ADJUSTMENT" section of the Maintenance and Lubrication Manual, TS494) on a vehicle equipped with automatic slack adjusters, a mechanical problem with the slack adjuster, brake components or improper installation of the slack adjuster is indicated. If brakes are found to be out of adjustment, the vehicle must be taken to the nearest repair facility to have the problem investigated and corrected.

DANGER

Automatic slack adjusters should not be manually adjusted in an effort to correct excessive pushrod stroke, because this condition indicates that a problem exists with the automatic adjuster, with the installation of the adjuster, or with related foundation brake components, which manual adjustment will not fix. Manual adjustment of automatic slack adjusters is a dangerous practice that could have serious consequences, because it gives the operator a false sense of security about the effectiveness of the brakes, which are likely to go out of adjustment again soon.

Parking Brake System

Spring-type parking brakes are standard on all single and tandem rear axles.

The spring brake system consists of an air cylinder with heavy springs, which is integrated with the spring brake air chamber. When there is no pressure in the air chamber, the springs expand (causing a brake application). When air pressure is applied to the air chamber, the springs are compressed (releasing the brakes).

Parking Brake Operation

The parking brakes can be applied and released from the cab, using the hand-operated push/pull control valve with the yellow diamond knob.

In the event of a significant air pressure loss in both the air brake systems, the spring brake air chambers will be automatically exhausted (applying the brakes). The parking brakes will remain applied until enough pressure is available to recompress the springs.

Parking

WARNING

- **NEVER use the trailer parking brake system alone.**
- **NEVER use the tractor parking brake system alone.**
- **ALWAYS use the tractor and trailer parking brake systems together.**
- **ALWAYS apply the parking brakes when parking and make sure the parking brakes are holding the vehicle from moving before leaving the driver's seat.**
- **When parking on a grade, use wheel chocks under the rear wheels or turn the front wheels to the curb. Do not leave diesel engine vehicles in gear; if the vehicle should move, the engine may start by heat of compression.**
- **Check brake adjustment frequently to be sure that the brakes will lock and hold the vehicle when parked.**
- **Do not use the parking brake to slow or stop the vehicle when in motion, except in an emergency.**
- **Do not use hand control valve for parking.**

Anti-Lock Brake System (ABS)

Note: Anti-lock brake systems became mandatory in the U.S.A. on all tractors beginning March 1, 1997; all trucks beginning March 1, 1998, and all trailers beginning March 1, 2001. Federal regulations require that any tractor/truck with a trailer air connection built beginning March 1, 2001 must have a data communications link with the trailer ABS and an indicator lamp located in the cab to alert the driver if there is a trailer ABS malfunction.

ABS Operation

 https://truckmanualshub.com/

When operating an ABS-equipped vehicle, the following guidelines should be used.

• Apply the brakes as normal. If the anti-lock brake system begins to function, maintain brake pressure. Do NOT release the brakes.

• Avoid rapidly pumping the brakes. The anti-lock brake system automatically applies and releases the brakes up to five times per second.

• When towing a trailer, watch the trailer through the mirrors. Adjust brake application as necessary to keep the combination in a straight line. Make sure the trailer follows the tractor properly.

• An amber trailer ABS lamp on the instrument panel will illuminate for several seconds at start-up during an initial function check. When a trailer ABS fault occurs, the lamp will remain illuminated until the fault is cleared. If there is a loss of communication between the tractor and trailer, the lamp will blink three times. Refer to “Anti-Lock Brake System (ABS)” page 157 for more information.

MACK Road Stability Advantage (If Equipped)

The MACK Road Stability Advantage (RSA) is based on the Bendix® ABS-6 Advanced with ESP® (Electronic Stability Program) System. The RSA system aids the operator in maintaining control of the vehicle in the event of a jackknife or rollover situation by applying select brakes and reducing engine power as required by the specific situation. The RSA system, which is integral with the anti-lock brake system, uses the standard ABS components (such as wheel speed sensors and modulator valves) along with a Steering Angle Sensor (SAS-60™) and a Yaw Rate/Lateral Acceleration Sensor (YAS-60™) package to provide information concerning vehicle movement to the Advanced EC-60™ Electronic Control Unit.

In most cases, vehicle repairs will not affect function of the MACK RSA system. However, the following repairs require recalibration of the SAS-60™ sensor after the repair has been made:

• Removal and reinstallation or replacement of the SAS-60™ sensor

CAUTION

Installation of an aftermarket steering wheel may damage the SAS-60™ sensor. It is therefore recommended that the OEM steering wheel NOT be replaced with an aftermarket wheel.

• Any repairs to the steering system or front suspension such as:

— Replacement of front springs

— Replacement of king pins or bushings

— Replacement of the steering gear

— Replacement of the drag link, cross steering tube or ball sockets

— Replacement of the front spring hangers

— Replacement of the steering column

• Front end alignment

• Disconnecting the steering column from the steering gear, or the steering linkage from the steering gear

WARNING

Failure to recalibrate the steering angle sensor after performing any of the repairs mentioned above, may affect proper function of the RSA system, resulting in a loss of vehicle control due to system intervention at inappropriate times.

Vehicle Modifications

Alterations to the vehicle, such as changes to the wheel base (either lengthening or shortening), the addition of an auxiliary lift axle or removal of a factory-installed auxiliary lift axle, or major body changes, such as conversion of a tractor to a truck or an axle, suspension or steering system component modification, are NOT allowed, as these changes will adversely affect performance of the road stability system. Should such changes be unavoidable, the system must be disabled by having a qualified technician replace the Advanced EC-60™ ECU with a Premium EC-60™ ECU.

WARNING

Failure to disable the RSA system on a vehicle that has been modified will result in serious vehicle braking and performance issues, including unnecessary system interventions. These interventions could lead to a loss of vehicle control.
In addition to disabling the system, any cab labels, such as warning and caution labels relating to the Bendix® ABS-6 Advanced with ESP® system located on the sun visor must be removed, and notations must be made to the operator's manuals so that the vehicle operator has a clear understanding as to which ABS options are installed on the vehicle.

 https://truckmanualshub.com/

Location of the yaw rate/lateral acceleration sensor must not be altered. When servicing is required, the sensors must be replaced with identical components using the original equipment mounting brackets and tightening torque specifications (20 N.m [15 lb-ft]).

The following additional changes MUST NOT be made to an "as-built" vehicle:

• Changes to maximum steering angle (to the left or right)

• Changes to steer axle and/or drive axle track width

• Changing the front and/or rear brake drums to drums having a different flange thickness

Tire Size Calibration

The ECU requires a precise rolling circumference ratio between the front steer axle and the rear drive axles for optimum performance of the system. For this reason, the system continuously calculates the precise ratio and stores the information in the ECU memory.

CAUTION

Effectiveness of the RSA system relies on the accuracy of the reported vehicle speed. If major changes to tire sizes are made, such that changes to the vehicle speedometer/odometer settings are required, the Advanced EC-60™ ECU must be reprogrammed with the new values by a qualified technician.

Enhanced Stability Program

Enhanced Stability Program (ESP) is an optional system that uses existing ABS and ATC components with the addition of electronic sensors and brake valves. The system will automatically apply and release individual brakes to improve vehicle control when extreme conditions are detected. In the event a pending rollover situation is sensed, the system applies all brakes to reduce vehicle speed to lessen the possibility of rollover. Please refer to the applicable vendor manual for more information.

Precautions When Installing Electrical Equipment

Connecting electrically powered or electrically controlled equipment to the vehicle may cause interference with other vehicle components (e.g., the ABS system). The amount of interference will depend on the operating frequency of any new signals and the degree to which transient signals are coupled into the vehicle system.

Note: Whenever new electrical equipment is installed, it is the obligation of the installer to ensure that the new equipment does not interfere with the proper operation of all other electrical systems on the vehicle.

If new electrical equipment is installed, a vehicle checkout procedure should be performed.

1. Perform the checkout procedure under the following conditions:

• Engine running

• Brake system air pressure in operating range

• Vehicle stationary

• Brake pedal fully depressed

2. Operate the new equipment under all starting, running and shutdown conditions.

3. Listen for signs of air exhausting from ABS modulator valves (which is an indication of an interference condition).

4. Correct all interference conditions before operating the vehicle.

Note: The center pin of the standard seven-pin trailer electrical connector has been standardized as the dedicated connection for uninterrupted power for trailer ABS. This pin is always hot when the tractor ignition is turned on.

DANGER

Some trailers manufactured prior to the trailer ABS regulations may use the center pin to power certain trailer auxiliary equipment. The possibility exists that this auxiliary equipment may be unexpectedly activated by the truck or tractor electrical system, resulting in personal injury or damage to equipment. Caution must be used when connecting the trailer electrical connector to ensure that power to the center pin will not unintentionally activate any trailer auxiliary equipment.

 https://truckmanualshub.com/

Automatic Traction Control (ATC) (If Equipped)

Automatic Traction Control (ATC) provides improved traction on slippery surfaces by reducing wheel spin. The system operates automatically as follows:

• If a drive wheel starts to spin, ATC applies air pressure to the brake of the spinning wheel. Doing this transfers engine torque to the wheels that have better traction.

• If all drive wheels are spinning, ATC limits engine torque which, in turn, reduces wheel spin to provide improved traction.

When ATC automatically becomes active, the ATC indicator lamp turns on to alert the operator. The lamp turns off when the wheel(s) stops spinning.

Heavy Mud/Snow Function (If Equipped)

ATC may also include a heavy mud/snow function which allows the operator to activate ATC when additional traction is needed. This function is activated with the ATC mode switch which is located on the dashboard. The heavy mud/snow function increases available traction by increasing permissible wheel spin.

When the operator selects the heavy mud/snow function, the ATC indicator lamp blinks continuously. The ATC lamp stops blinking when the ATC mode switch is turned off.

GOOD DRIVING HABITS

Weight Ratings

Do not overload the vehicle. The gross vehicle weight rating (GVWR) and gross axle weight ratings (GAWR's) for a given model may vary due to the tires, wheels/rims, suspensions, axles and/or frame of a specific vehicle. For safety and durability reasons, do not exceed the GVWR and GAWR's listed on your vehicle's Safety Certification Label.

Instruments

Glance at the instruments frequently. When problems develop, take prompt steps to correct them.

Shutting Down the Engine

After a hard run, allow the engine to idle three minutes before shutdown to stabilize the temperature of all engine parts. Quick shutdowns can cause engine damage and prevent the turbocharger from being properly lubricated. For additional options, see "Shutting Down the Engine" page 169.

General Observation

Make it a habit at stops to walk around your truck and look for fuel, oil and coolant leaks. Also check the condition of tires, wheel nuts, springs and lights. Stop trouble before it stops you!

 https://truckmanualshub.com/

STARTING THE VEHICLE

General Information

Before putting the key in the ignition switch, set the parking (spring) brake, disengage the clutch (if equipped) and put the transmission in NEUTRAL.

CAUTION

Do not engage the starting motor too soon after an incomplete start of the engine, or the starter may be damaged. Wait at least five seconds before attempting to restart the engine.

CAUTION

If the engine does not start immediately, limit cranking periods to 30 seconds to avoid overheating and damaging the starter.

CAUTION

Do not rev the engine at start-up. Turbocharger damage may result because lubricants need time to establish a film between moving parts.

Push Button Starters

Put the key in the ignition switch. Turn the key clockwise to the first "click" (about two o’clock position) to activate the instruments. Depress the starter button and release as soon as the engine starts. Keep the clutch (if equipped) disengaged until the engine runs smoothly.

Air Starters

On chassis equipped with an air starter, make sure that the air pressure gauge reads a maximum of 120 psi before shutting down and parking for the night. This will ensure sufficient air pressure for restarting the engine.

WARNING

Make sure clutch is depressed and transmission is in neutral before engaging the starter! Failure to do so could cause the vehicle to jerk forward unexpectedly causing serious damage or bodily harm.

Starting MP Engines

Use the following procedure:

1. Crank the engine until it starts.

Note: Do NOT apply the throttle pedal during engine cranking.

CAUTION

DO NOT engage the starting motor too soon after an incomplete start of the engine, or the starter may be damaged. Wait at least five seconds before attempting to restart the engine.
If the engine does not start immediately, limit cranking periods to 30 seconds to avoid overheating and damaging the starter.
DO NOT rev the engine at start-up. Turbocharger damage may result. Lubricants need time to establish a film between moving parts.

2. After the engine has started, warm the engine until the coolant temperature reaches normal operating range (77°C to 107°C; 170°F to 225°F). Once the engine reaches this temperature, it can be operated in a normal fashion.

Note: Warm-up time can be reduced by increasing engine idle speed between 1000 and 1200 rpm by either applying the throttle pedal or by using the Electronic Hand Throttle feature (if equipped).

 https://truckmanualshub.com/

Note: For bobtail or unloaded applications, the engine may be warmed up by moving the vehicle with "light" throttle application after only one minute of idle.

Priming the MP Fuel System

DANGER

Before working on or inspecting a vehicle, set the parking brakes, place the transmission in neutral and block the wheels. Failure to do so can result in unexpected vehicle movement and can cause serious personal injury or death.

DANGER

To avoid potential fire hazard, do not service any part of the fuel system while smoking or in the presence of flames, sparks or hot surfaces, or when working on an operating engine. Failure to follow these precautions can result in fire. To guard against burns from direct contact with hot fuel, wear adequate protective clothing (face shield, heavy gloves and apron, etc.) when working on a hot engine.

WARNING

DO NOT work near the fan with the engine running. The engine fan can engage at any time without warning. Anyone near the fan when it turns on could be seriously injured. Before turning on the ignition, be sure that no one is near the fan.

1. Unlock the hand primer pump by pushing the pump handle in and turning it counterclockwise.

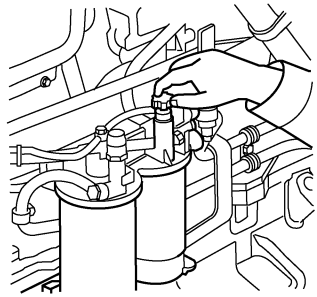

C0029336

2. Pump the hand primer until the force of pumping increases.

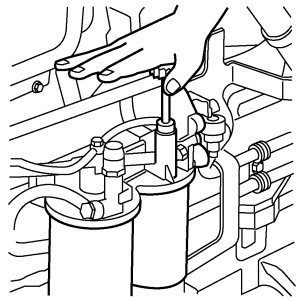

C0029337

Note: When the fuel system is empty, 200 or more pump strokes may be needed to properly prime the system.

Note: There are NO bleed nipples to be opened in order to prime the fuel system.

3. Lock the hand primer pump by retracting it into the housing and turning it clockwise.

4. Start the engine and run it at an increased idle speed for approximately 5 minutes to remove any remaining air in the system.

5. Check the fuel system for leaks.

Note: If the engine does not start following this procedure, contact your local MACK dealer.

 https://truckmanualshub.com/

Engine Warm-Up

CAUTION

Idling the engine unnecessarily for long periods of time wastes fuel and fouls injection nozzles. Unburned fuel causes carbon formation and oil dilution. NEVER race an engine during warm-up.

Engine damage can occur if the engine is not warmed up to a minimum operating temperature of 77°C (170°F) before putting the vehicle into full operation.

Heavy-duty diesel engines are designed to operate at optimum efficiency when they are running loaded at (or very near) normal operating temperature, where efficient combustion takes place. When the engine is operated unloaded, lightly loaded (i.e., stop-and-go operations, PTO operations, or periods of extended engine idling) or in cold weather conditions, normal operating temperature may not be achieved or maintained. As a result, carbon and/or varnish build-up will occur and lubricating oil will become contaminated with combustion by-products.

Cold weather operations place added demands on a diesel engine. When operating in cold climates (particularly in stop-and-go operations, PTO operations or periods of extended engine idling), minimum operating temperature must be maintained to prevent engine damage resulting from valve varnishing and carbon build-up.

Note: Many accessories are available for cold weather operations. Refer to the Maintenance and Lubrication Manual (TS494) for additional information concerning cold weather accessories.

Engine Idling

Idling the engine unnecessarily for long periods of time wastes fuel, fouls injector nozzles and can lead to valve carbon and varnish deposits. Unburned fuel causes carbon formation and oil dilution. Shut the engine down when prolonged loading or unloading of cargo is required.

When starting a cold engine, or if the vehicle has been parked and the engine coolant has fallen well below normal operating temperature, a fast idle speed of approximately 1200 rpm should be maintained to help the engine warm up more quickly.

Shutting Down the Engine

Standard Shutdown

After a hard run, allow the engine to idle three minutes before shutdown in order to stabilize the temperature of all engine parts. Quick shutdowns can cause engine damage and prevent the turbocharger from being properly lubricated.

CAUTION

Operating the engine below normal operating temperature for extended periods of time will allow varnish/carbon deposits to build up on the valve stems and guides. This will cause the valves to stick in the guides after the engine has been shut down and could result in push rod damage when the engine is restarted. If the engine has been operated below normal operating temperature for an extended period of time (and the odor of raw diesel fuel is detected or unburned fuel can be seen at the exhaust stack), the engine should be operated under "load" until normal operating temperature is achieved BEFORE shutting down the engine.

On chassis equipped with an air starter, make sure that the air pressure gauge reads a maximum of 120 psi before shutting down and parking for the night. This will ensure sufficient air pressure for restarting the engine.

V-MAC IV Shutdown Option: Idle Cooldown

This feature provides a means of cooling down the engine and turbocharger. If the idle cooldown option is enabled using VCADS Pro MACK Support Software and the system senses that the turbocharger may be hot, the engine will not shut down when the vehicle stops, the parking brake is set and the key switch is turned to the OFF position. This feature allows the driver to lock the truck and walk away while still providing adequate cooldown. All switched accessories will then turn off once the engine has stopped. If this option is set, the engine can be shut down immediately by cycling the key switch or by pressing the shutdown override switch.

The idle cooldown timer is set to 3.5 minutes as soon as the engine load exceeds 25%, provided that the engine has been running at least 60 seconds. After the load drops below 25%, the timer begins counting down. If the key switch is turned off before the timer expires, the engine will continue to run until the timer reaches zero.

If a pyrometer is installed, the idle cooldown function will use the pyrometer reading, shutting the engine down when the temperature drops below 232°C (450°F), or after 3.5 minutes, whichever comes first.

The default for this option is set at OFF from the factory.

 https://truckmanualshub.com/

Note: The parking brake must be on for the idle cooldown function to work.

Engine Shutdown System (If Enabled)

The engine is protected by a system that prevents engine damage by shutting down the engine whenever a potentially damaging condition (such as loss of oil pressure, loss of coolant or engine overheating) is detected. If the system detects such a condition, a warning indicator light and an alarm will alert the driver before the engine actually shuts down. Pressing the Shutdown Override Switch on the instrument panel shortly after the vehicle sounds the engine shutdown alarm, allows 30 additional seconds of operation. This process can be repeated several times to safely park the vehicle.

CAUTION

Continuously overriding the shutdown system may result in severe engine damage.

Engine Shutdown Indicator — During normal operating conditions, this indicator should illuminate as soon as the key switch is turned on. After the engine is started, it will remain illuminated until engine oil pressure reaches normal idling range. During shutdown, if the system detects a condition that could lead to engine failure, the Engine Shutdown indicator will illuminate prior to engine shutdown.

COLD WEATHER OPERATION

DANGER

Do NOT, under any circumstances, use starting fluid (ether) on engine whether or not equipped with an inlet manifold air heater element. An explosion can occur.

Cold Weather Starting Tips

• Save the batteries. Do not overtax the batteries by cranking the starter for more than 30 seconds without interruption. Allow about two minutes between attempts at starting the vehicle; this allows the starter to cool and the batteries to re-energize.

Note: Always make sure that the battery is fully charged in cold weather.

• Use the correct grade of oil for the prevailing winter temperature.

• Drain the fuel tanks and filters regularly to prevent water accumulation in the fuel system. This accumulation can freeze in fuel tanks, fuel lines and filters.

WARNING

Do NOT — under any circumstances — add gasoline, alcohol, used oil or additives with metallic particles to the fuel.

• If the fuel gels and starts clogging filters and small passages, mix a small percentage of No. 1D fuel (kerosene) with No. 2D (diesel) fuel.

Note: Adding kerosene is NOT recommended for general use because both performance and fuel economy will be reduced.

• Refer to the *Maintenance and Lubrication Manual (TS494)* for additional cold weather operating information.

 https://truckmanualshub.com/

Engine Block Heaters

An engine block heater works by heating the coolant surrounding the combustion chambers. Engine heaters are recommended to help combat the extreme demands of cold weather operating conditions. When the temperature drops, the engine heater can be plugged in overnight. The location of the engine heater power receptacle varies according to vehicle design.

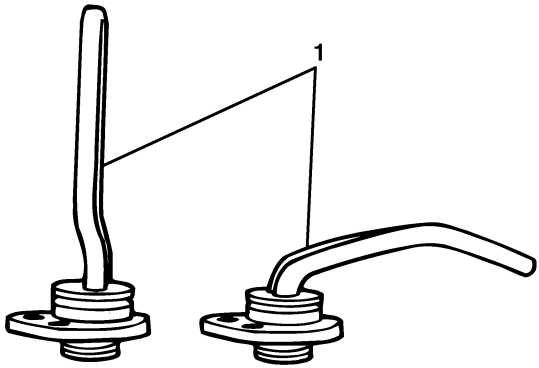

C0029338

1. Engine Block Heaters

Engine Heater Benefits

- Eliminates cold weather starting problems.
- Increases engine life significantly by keeping the engine warm and avoiding costly, excessive idling.
- Prevents external water leaks caused by excessive cold.
- Allows the cab to heat more quickly.
- Reduces the temperature at which ether is required.
- Allows the engine heaters to be activated as soon as the engine is stopped.

Winterfronts

A winterfront, although not recommended, may be used during cold weather, with sustained temperatures below -25°C (-13°F), to aid the engine in reaching and maintaining engine coolant temperatures within the normal operating range.

CAUTION

Use a winterfront designed for the specific chassis. Restricted air flow through the charge air cooler can cause higher exhaust temperatures, power loss, excessive fan usage, reduced fuel economy and possible engine or charge air cooler damage. The use of any other type of device, such as a radiator cover, cardboard or similar material, is not approved by Mack Trucks, Inc.

Note: The minimum operating temperature is 77°C (170°F).

If a winterfront is used, a MACK-approved exhaust pyrometer must also be installed and closely monitored while the engine is in operation.

CAUTION

DO NOT exceed the maximum exhaust temperature listed on the pyrometer decal. To reduce exhaust temperature, open the winterfront, downshift or reduce engine power.

 https://truckmanualshub.com/

Refer to the following chart for suggested temperature ranges concerning the use of various cold-weather accessories.

<table>
<tr><th>Expected Sustained Coldest Ambient Temperature Range</th><th>Winterfronts</th><th>Belly Tarp</th><th>Inside/Outside Air</th></tr>
<tr><td rowspan="5">4°C (40°F)
0°C (32°F)
-7°C (20°F)
-12°C (10°F)
-18°C (0°F)
-23°C (-10°F)
-25°C (-13°F)
-35°C (-30°F)
-40°C (-40°F)</td><td rowspan="3">Prohibited</td><td>Prohibited</td><td>Available</td></tr>
<tr><td>Available</td><td>Suggested</td></tr>
<tr><td>Suggested</td><td rowspan="3">Recommended</td></tr>
<tr><td rowspan="2">Can be Used</td><td rowspan="2">Recommended</td></tr>
<tr></tr>
</table>

CAUTION

Winter treatments are NOT RECOMMENDED for vehicles which only operate intermittently in cold climates. Sustained temperatures must be below -25° C (-13° F).

CAUTION

Never fully close the winterfront if equipped with viscous fan drive.

For more information on winterfronts, please refer to the *Maintenance and Lubrication Manual (TS494)*.

ON-BOARD SCALES (OPTIONAL)

If your chassis is equipped with an optional Tractor Scale System, the following gauge will be located on the D Panel directly above the radio box.

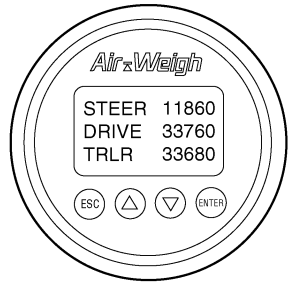

C0029339

Tractor Scale Display

Your chassis may be equipped with an optional Tractor Scale System. The AW5800 on-board scale converts tractor and trailer suspension loads to an accurate on-ground weight. By comparing empty and loaded axle group weights with empty and loaded suspension pressures, the scale can be calibrated to display accurate weights for any air suspension load.

For more information on this optional feature, please refer to the *Air-Weigh Installation, Calibration and Operations Manual, TS947 (901-003-000)*.

 https://truckmanualshub.com/

COUPLING A TRAILER

1. Position the tractor directly in front of the trailer.
2. Back the trailer slowly until the fifth wheel just contacts the trailer plate.
3. Place the transmission in neutral and apply the parking brakes.
4. Connect the trailer glad hands and electrical connector.

CAUTION

Make sure the trailer air lines and the trailer electrical cord are properly supported so they will not be pinched or caught while the tractor is being backed under the trailer.

5. Check that the fifth wheel height matches the height of the underside of the trailer. If the trailer is too high, use the landing gear to lower the trailer until fifth wheel and trailer height match. If the vehicle is equipped with an air suspension and the trailer is too low, use the air suspension control switch to exhaust air from the suspension air bags until fifth wheel and trailer height match.

CAUTION

Failure to match fifth wheel height with trailer height will result in the trailer being improperly connected.

6. Back under the trailer slowly until the trailer king pin engages. Back slowly to avoid hitting the king pin too hard, and stop as soon as the king pin is locked into the fifth wheel.
7. If equipped with an air suspension, use the air suspension control switch to reinflate the suspension air bags.
8. Raise the trailer landing gear slightly off the ground.
9. With the trailer parking brakes applied, pull the tractor ahead slightly to ensure that the trailer is locked onto the tractor.
10. Push the trailer air supply valve (red octagonal knob) in to supply the trailer system with air pressure. With the air system at normal operating pressure, check the trailer air brake system for excessive leakage and proper operation.

11. Inspect the coupling to ensure the trailer is properly connected. Make sure there is no space between the fifth wheel and the trailer plate and that the fifth wheel jaws have closed around the shank of the king pin. Check that the locking lever is in the "lock" position and make sure the safety latch is in position over the locking lever.

12. After ensuring that the trailer is properly connected, raise the landing gear to its maximum height.

13. If wheel chocks were placed at the trailer wheels, remove the chocks and store.

CAUTION

If equipped with an air suspension, do NOT operate the vehicle with the suspension air bags deflated. Always reinflate the suspension air bags after coupling or uncoupling a trailer.

 https://truckmanualshub.com/

UNCOUPLING A TRAILER

1. Park the tractor/trailer combination on a level surface. Make sure the parking surface will support the weight of the trailer, and make sure that the tractor is lined up straight with the trailer. Pulling out from under a trailer at an angle may damage the landing gear.

2. Pull the trailer air supply valve (red octagonal knob) out to apply the trailer parking brakes.

3. Back the tractor slightly to ease pressure on the fifth wheel jaws. Apply the tractor parking brakes while still backing against the king pin so the combination will be held with pressure off the fifth wheel jaws.

4. Block the trailer wheels to prevent the trailer from moving.

5. Lower the trailer landing gear until the gear makes firm contact with the ground.

6. Disconnect the glad hands and the trailer electrical connector. Connect the glad hands to the dummy couplers at the back of the tractor and install the trailer electrical connector into the receptacle provided at the back of the cab.

CAUTION

Make sure the trailer air lines and electrical cord are properly suspended so they will not become tangled or damaged while the tractor is being driven.

WARNING

Keep legs and feet clear of the tractor rear wheels to avoid serious injury should the vehicle move when the fifth wheel is unlocked.

7. Unlock the fifth wheel.

8. Pull the tractor ahead slightly (approximately twelve inches) so that the king pin disengages the fifth wheel jaws.

9. If equipped with an air suspension, use the air control switch to exhaust the air from the suspension air bags.

10. Pull the tractor ahead until the fifth wheel is out from under the trailer. Stop the tractor with frame under the trailer. This prevents the trailer from falling should the landing gear collapse or sink into the ground.

11. Place the transmission in neutral and apply the parking brakes.

12. Inspect the parked trailer to make sure the ground is supporting the trailer and the landing gear is not damaged.

13. If equipped with an air suspension, use the air suspension control switch to reinflate the suspension air bags.

14. Release the parking brakes and drive the tractor forward until the tractor is clear of the trailer.

CAUTION

If equipped with an air suspension, do NOT operate the vehicle with the suspension air bags deflated. Always reinflate the suspension air bags after coupling or uncoupling a trailer.

 https://truckmanualshub.com/

MOVING THE VEHICLE — GENERAL INFORMATION

Braking

Avoid sudden stops. Constant sudden stops may negatively affect braking performance and driving parts. When slowing, leave the clutch (if equipped) engaged as long as possible to use the braking effect of the engine.

CAUTION

When using the braking effect of the engine, final gear selection is critical. If gear selection is too high, the vehicle will buck which could cause loss of control.

Shifting

Operate in a gear low enough to allow the engine to accelerate to (or maintain) governed engine speed when applying full throttle. Allowing the engine to lug causes excessive strain on the engine, which could damage pistons, rings, cylinder walls, or bearings. However, be sure not to overspeed the engine.

DANGER

Always select the proper gear ratio BEFORE descending a grade (to avoid a runaway vehicle and to stay within safe and legal speed limits). Do NOT coast down hills. Gear ratios should be selected to allow the engine to operate between peak torque and rated speed.

CAUTION

Do not permit a load to drive the engine above governed speed. When descending steep grades, use lower gears and watch the tachometer. Overspeeding will cause severe drivetrain damage and eventually destroy the engine.

CAUTION

Running the engine at a speed that is too low for the load (or grade of the road) can cause damage to the drivetrain.

Shifting at the proper time will result in increased fuel efficiency, as well as a decrease in costly repairs. Remember that once the engine falls below peak torque, both torque and horsepower will drop off very rapidly. Before this happens, downshift to the next lower gear.

For vehicles with transmissions that have extreme reduction gearing coupled with high rear-axle loads, a torque-limiting device should be used. This device limits the amount of fuel that can be delivered to the engine and prevents overloading of drivetrain components while in extreme reduction gears.

Always use the same gear going downhill as uphill. This will reduce brake wear and prevent damage to the engine from overspeeding.

Engine Temperature

Before entering high-speed traffic conditions, allow the engine to reach normal operating temperature. A normal operating range is between 77°C and 104°C (170°F and 220°F) for stationary vehicles.

Clutch (If Equipped)

To avoid shock damage, release the clutch pedal smoothly, without shock-loading the driveline (especially on grades while carrying heavy loads). Do not ride the clutch pedal. Premature wear of the clutch facing and release bearing may result.

CAUTION

Always use the lowest drive gear combination to start the vehicle moving to avoid premature clutch failure.

1. To move the vehicle, start the engine and wait until it reaches operating temperature.
2. Disengage the clutch by pushing the pedal to the floor.

 https://truckmanualshub.com/

3. Shift the transmission into first or LO gear (see "Transmission Shifting Instructions" for specific procedures).

4. Release the parking brake.

CAUTION

If the Parking Brake indicator is on, do NOT attempt to move the vehicle because driveline damage may result.

5. Engage the clutch smoothly by allowing the clutch pedal to come up slowly. For comfortable starts, do not apply the accelerator until the clutch begins to engage.

CAUTION

Never allow your foot to ride the clutch pedal when the clutch is engaged. This will cause premature failure and increased clutch wear.

6. As the vehicle gains speed, continue shifting until the transmission is in the highest gear possible (with engine in operating range).

Note: When the vehicle is equipped with a torque-limiting device, the engine must be warmed up to operating temperature before attempting to move in either REVERSE or LO-LO range.

Clutch Brake Operation

The clutch brake is designed to stop the rotation of the transmissions input shaft while the truck is standing still. This makes shifting into first or reverse gears easier.

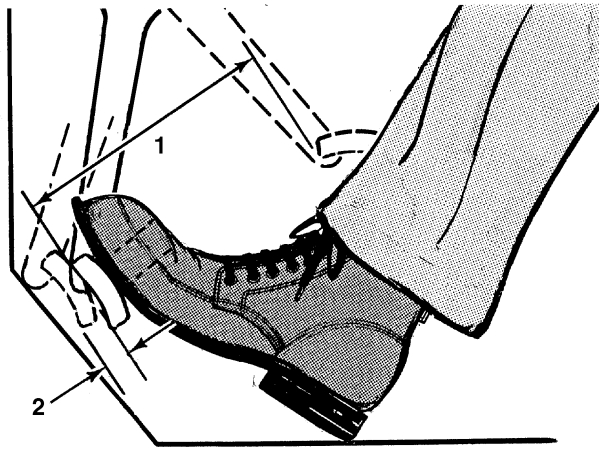

C0029340

1. Normal Clutch Pedal Travel	2. Depress Pedal last 13 mm (1/2 inch) to 25 mm (1 inch) to Engage Clutch Brake (amount of clutch brake travel varies depending on the system and overall tolerances)

 https://truckmanualshub.com/

1. With the vehicle standing still, apply the clutch brake by pushing the clutch pedal all the way to the floor: the clutch brake is applied when the clutch pedal is fully depressed (approximately the last 13 mm (1/2 inch) to 25 mm (1 inch) of pedal travel past normal, of clutch brake pedal travel, varies between the air assist and non assist release systems. The variance includes general tolerances and amount of pedal free-play. Typically about the last 13 mm (1/2" inch) on the air assist and about the last 25 mm (1 inch) on the non assist control systems).

Note: When the clutch is disengaged, a slight but definite resistance to clutch pedal downward travel will be felt in approximately the last 13 mm (1/2 inch) to 25 mm (1 inch).

CAUTION

Vehicles equipped with the air assist clutch control system use less pedal travel. The clutch brake engages sooner in the pedal stroke than conventional non assist systems. To avoid system damage, be careful not to engage the clutch brake during normal shifting.

2. Shift the transmission into first or reverse gear, engage the clutch and accelerate. The clutch brake is only to be used when the vehicle is stopped and is shifted into first or reverse gears. It is not designed to be used as an upshifting aid.

CAUTION

Clutch brake damage may result if used while the vehicle is in motion. The clutch brake must NOT be used when making a downshift or an upshift.

Double-Clutching

Double-clutching is a way to bring the speed of the transmission gears into synchronization so that the shift can be made without a clash. The engine is used to speed up the counter shaft for a downshift and to slow it down for an upshift.

Note: For all non-synchronized transmissions, double-clutching is necessary on downshifts and upshifts. It is advisable to use the torque-limiting clutch brake to engage first and REVERSE gears and to double-clutch for gear ratio changes.

1. Depress the clutch pedal and shift to NEUTRAL.

2. Release the clutch pedal and increase (downshift) or decrease (upshift) engine speed until it roughly corresponds to the road speed of the desired gear.

3. Depress the clutch pedal and complete the shift. Then release the clutch pedal.

 https://truckmanualshub.com/

POWER TAKE-OFF (PTO) OPERATION

If the vehicle is equipped with a Power Take-Off (PTO) unit, be sure to read the following section.

PTO Precautions

DANGER

Power Take-Off (PTO) units and related equipment can be very dangerous. Any PTO installation, repair or replacement should include a warning indicator light which indicates PTO engagement. The light must be located close to the PTO control and clearly visible to the operator.

DANGER

PTO units are driven by engine or drivetrain components (flywheel, crankshaft, transmission). Do not attempt to service the PTO and related units unless the engine is shut down.

DANGER

Always keep body parts and loose-fitting clothing out of the range of drivetrain components, or personal injury may result.

DANGER

Always be aware of the current PTO status (engaged or disengaged) and the position of the vehicle body (dump body controlled by PTO, etc.). Be sure to disengage the PTO when not in use.

DANGER

On an MP7 engine equipped with Front Engine Power Take-Off (FEPTO), the torque limit is 385 N.m (284 lb-ft).

PTO Classification

Rear-mounted PTO units, for MACK transmissions, are categorized according to operation.

Intermittent Service — The PTO unit is operated, under load, for less than seven minutes and then allowed to cool before it is operated again.

Note: If a PTO unit is operated for less than seven minutes but is "not" allowed to cool down before operating again, it is considered in Continuous Service.

Continuous Service — The PTO unit is operated, under load, for seven minutes or more.

Note: Rear-mounted PTO units operating under the Continuous Service guideline must not be run at more than 70% of the PTO output-rated torque/horsepower.

Side-Mounted PTO Locations

The first choice location for Side-Mounted PTOs is either of the PTO openings on the main box.

The second choice, which is the compound PTO opening, is restricted to those applications specifically requiring multi-speed PTOs with reverse capability, such as some mechanical winches or unique speed or multiple PTO requirements. However, a word of caution is in order when using these locations. Operators should be trained to understand and follow the proper operating procedures as described in the cab instructions, and avoid using the neutralizing feature as a power disconnect for vehicle propulsion.

PTO Operating Procedures

Specific PTO operating procedures are described at the end of applicable transmissions in the following section.

 https://truckmanualshub.com/

TRANSMISSION SHIFTING INSTRUCTIONS

CAUTION

The maximum safe operating oil temperature for MACK transmissions is 121° C (250° F) for mineral-based oil, and 148° C (300° F) for synthetic-based oil. Continued operation with oil above this temperature will result in rapid deterioration of the oil's lubricating properties and is NOT recommended.

CAUTION

To avoid transmission damage, the vehicle must be completely stopped before being shifted from REVERSE to any forward speed (and vice versa).

CAUTION

Never coast with the transmission in neutral. Never coast with the clutch depressed.

Shifting Instructions for Allison Automatic Transmissions

Please refer to the applicable Allison automatic transmission operator's manual provided with your vehicle for complete shifting and operating instructions.

MACK T306G Shifting Instructions

The T306G is a six-speed overgear, non-synchronized transmission designed for general highway use. Shifting is accomplished through a single shift lever using the traditional H pattern.

Upshift — Start out in first gear and shift up to second, third, fourth, fifth and sixth gears, double-clutching from one gear to the next.

Downshift — Downshift in reverse order (sixth through first), double-clutching through each gear.

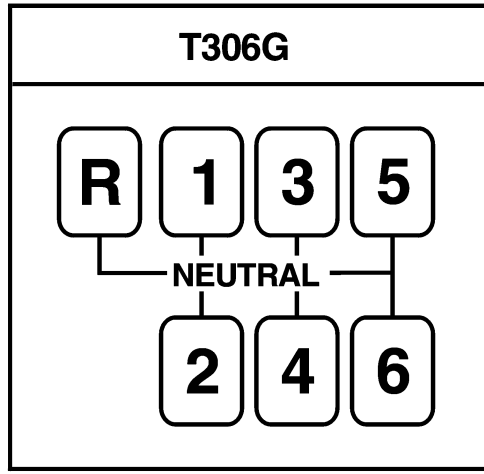

C0029341

T306G TRANSMISSION RATIOS

Gear	Ratio
1	7.50
2	4.08
3	2.41
4	1.50
5	1.00
6	0.71
Reverse	8.84

 https://truckmanualshub.com/

MACK TM308 Shifting Instructions

CAUTION

Make sure air pressure is at least 90 psi and unit is warmed before shifting the transmission. To avoid transmission damage, do NOT change range while moving in REVERSE. Use of the clutch brake is for shifting into first and reverse gears only. Do not use the clutch brake to shift out of gear. Be careful not to overspeed the engine during downshifting. Damage to powertrain components can result.

The TM308 is a non-synchronized transmission having a total of eight speeds (6+2) with a non-synchronized air shifted compound section. This LO and HI auxiliary compound section is controlled by an air-shift range selector valve located on the shift lever. The LO range has two low gear ratios. In HI range there are six forward gears which can be shifted in the normal manner, but remember to double-clutch whether moving up or down through the gears. For normal highway use, start in HI range, first gear and shift through second, third, fourth, fifth and sixth. The ratio step between fifth and sixth is smaller than all the other ratio steps. The two gears in LO range are designed for off-highway use and in slow-moving operations (curb pouring, material spreading, heavy load, steep grade).

Reverse — Reverse can be used in LO or HI range. To make a range shift in reverse, bring the truck to a complete stop. Flip the range selector lever to range desired.

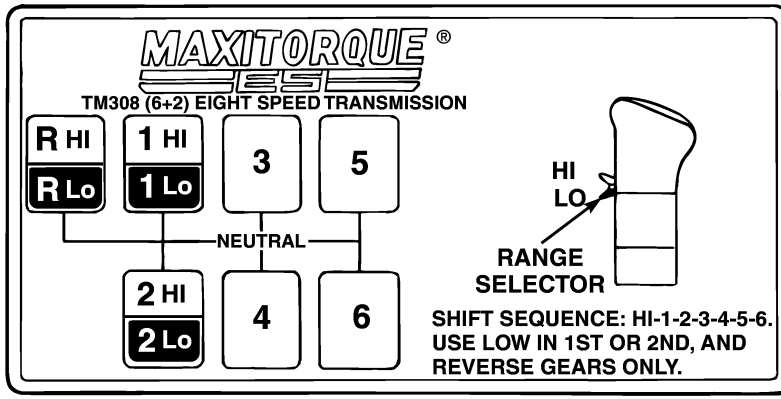

C0029342

TM308 TRANSMISSION RATIOS

Gear (Main Box)	Ratios	
	LO Range	Hi Range
First Lo	17.77	
Second Lo	10.94	
First Hi		6.57
Second Hi		4.05
Third Hi		2.54
Fourth Hi		1.57
Fifth Hi		1.00
Sixth Hi		0.71
Reverse Lo	18.36	
Reverse Hi		6.79

 https://truckmanualshub.com/

MACK TM308M Shifting Instructions

CAUTION

Make sure air pressure is at least 90 psi and unit is warmed before shifting the transmission. Use of the clutch brake is for shifting into first and reverse gears only. Do not use the clutch brake to shift out of gear. Be careful not to overspeed the engine during downshifting. Damage to powertrain components can result.

The TM308M is a non-synchronized transmission having a total of eight speeds (6+2) with a non-synchronized air shifted compound section. This LO and HI auxiliary compound section is controlled by an air-shift range selector valve located on the shift lever. The LO range has two low gear ratios. In HI range there are six forward gears which can be shifted in the normal manner, but remember to double-clutch whether moving up or down through the gears.

For normal highway use, start in HI range, first gear and shift through second, third, fourth, fifth and sixth. The ratio step between fifth and sixth is smaller than all the other ratio steps. The two gears in LO range are designed for off-highway use and in slow-moving operations (curb pouring, material spreading, heavy load, steep grade).

Reverse is used in LO range only. To avoid transmission damage when shifting Forward to Reverse or Reverse to Forward:

- Bring vehicle to a stop.
- Move lever to NEUTRAL.
- Select low range.
- Select F or R as desired.
- Select lowest lever gear position.
- Release and depress clutch pedal.

• Select desired gear.

CAUTION

Vehicle operators must use extreme caution if operating a truck in the higher reverse gears. Higher reverse gears will produce high reverse speeds which may be difficult for drivers to control dependent on terrain or obstacles.

 https://truckmanualshub.com/

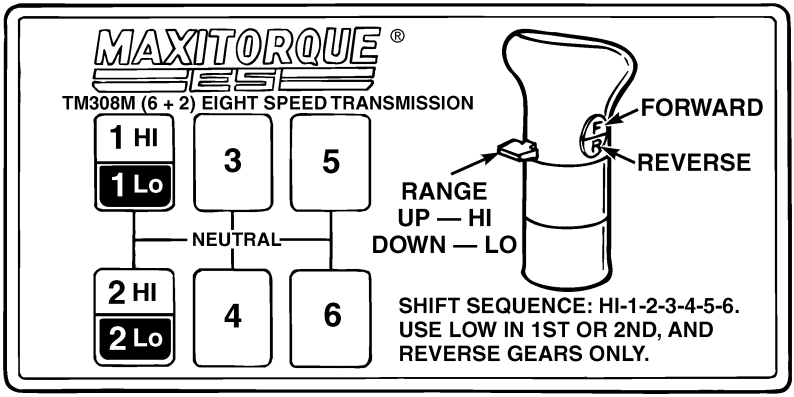

C0029343

TM308M TRANSMISSION RATIOS

Gear (Main Box)	Ratios		
	LO Range	Direct Range	Reverse
First Lo	17.77		15.59
Second Lo	10.94		9.60
Third Lo			6.02
Fourth Lo			3.73
Fifth Lo			2.37
Sixth Lo			1.69
First Hi		6.57	
Second Hi		4.05	
Third Hi		2.54	
Fourth Hi		1.57	
Fifth Hi		1.00	
Sixth Hi		0.71	

MACK TM309 Shifting Instructions

CAUTION

Make sure air pressure is at least 90 psi and unit is warmed before shifting the transmission. To avoid transmission damage, do NOT change range while moving in REVERSE. Use of the clutch brake is for shifting into first and reverse gears only. Do not use the clutch brake to shift out of gear. Be careful not to overspeed the engine during downshifting. Damage to powertrain components can result.

The TM309 is a non-synchronized transmission having a total of nine speeds (6+3) with an air shifted non-synchronized compound section. This LO and HI auxiliary compound section is controlled by an air-shift range selector valve located on the shift lever. The LO range has three low gear ratios. In HI range there are six forward gears which can be shifted in the normal manner, but remember to double-clutch whether moving up or down through the gears. For normal highway use, start in HI range, first gear and shift through second, third, fourth, fifth and sixth. The ratio step between fifth and sixth is smaller than all the other ratio steps. The three gears in LO range are designed for off-highway use and in slow-moving operations (curb pouring, material spreading, heavy load, steep grade). Only start in the lowest gear necessary to move the vehicle. The extreme LO gear (1st low) is intended for vehicular speed control and not for torque multiplication.

Reverse — Reverse can be used in LO or HI range. To make a range shift in reverse, bring the truck to a complete stop. Flip the range selector lever to range desired (preselect). Move the shift lever out of reverse through NEUTRAL and then back into reverse again. As the lever moves through NEUTRAL, the range shift will be completed.

 https://truckmanualshub.com/

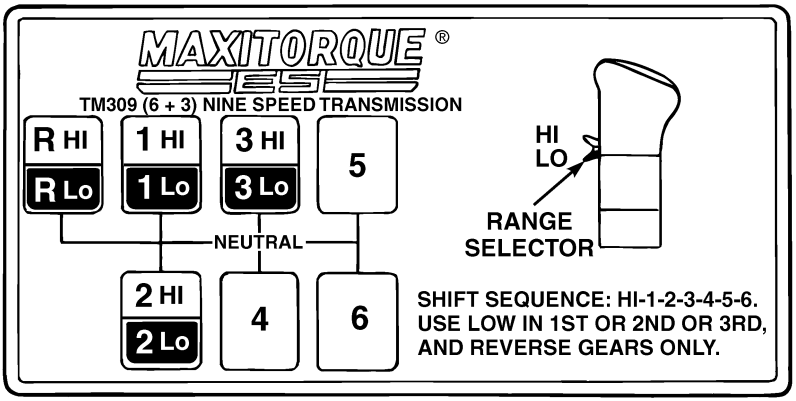

C0029344

TM309 TRANSMISSION RATIOS

Gear (Main Box)	Ratios	
	LO Range	Hi Range
First Lo	25.21	
Second Lo	15.52	
Third Lo	9.73	
First Hi		6.57
Second Hi		4.05
Third Hi		2.54
Fourth Hi		1.57
Fifth Hi		1.00
Sixth Hi		0.71
Reverse Lo	25.67	
Reverse Hi		6.79

MACK TM309M Shifting Instructions

CAUTION

Make sure air pressure is at least 90 psi and unit is warmed before shifting the transmission. Use of the clutch brake is for shifting into first and reverse gears only. Do not use the clutch brake to shift out of gear. Be careful not to overspeed the engine during downshifting. Damage to powertrain components can result.

The TM309M is a non-synchronized transmission having a total of nine speeds (6+3) with an air shifted non-synchronized compound section. This LO and HI auxiliary compound section is controlled by an air-shift range selector valve located on the shift lever. The LO range has three low gear ratios. In HI range there are six forward gears which can be shifted in the normal manner, but remember to double-clutch whether moving up or down through the gears.

For normal highway use, start in HI range, first gear and shift through second, third, fourth, fifth and sixth. The ratio step between fifth and sixth is smaller than all the other ratio steps. The three gears in LO range are designed for off-highway use and in slow-moving operations (curb pouring, material spreading, heavy load, steep grade). Only start in the lowest gear necessary to move the vehicle. The extreme LO gear (1st low) is intended for vehicular speed control and not for torque multiplication.

Reverse is used in LO range only. To avoid transmission damage when shifting Forward to Reverse or Reverse to Forward:

- Bring vehicle to a stop.
- Move lever to NEUTRAL.
- Select low range.
- Select F or R as desired.
- Select lowest lever gear position.
- Release and depress clutch pedal.

 https://truckmanualshub.com/

- Select desired gear.

CAUTION

Vehicle operators must use extreme caution if operating a truck in the higher reverse gears. Higher reverse gears will produce high reverse speeds which may be difficult for drivers to control dependent on terrain or obstacles.

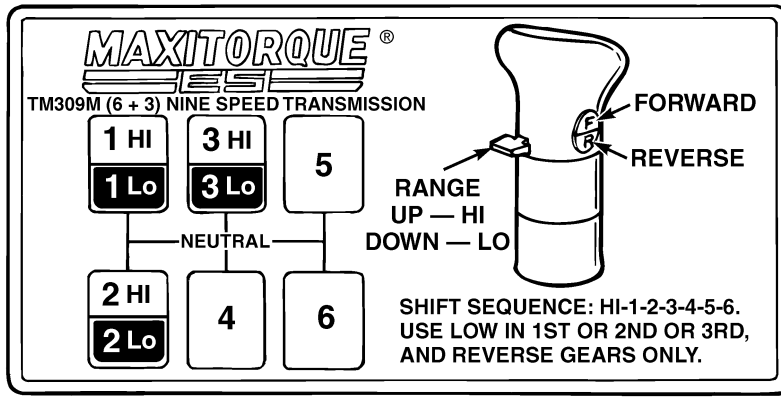

C0029345

TM309M TRANSMISSION RATIOS

Gear (Main Box)	Ratios		
	LO Range	Direct Range	Reverse
First Lo	25.21		22.12
Second Lo	15.52		13.62
Third Lo	9.73		8.54
Fourth Lo			5.30
Fifth Lo			3.37
Sixth Lo			2.40
First Hi		6.57	
Second Hi		4.05	
Third Hi		2.54	
Fourth Hi		1.57	
Fifth Hi		1.00	
Sixth Hi		0.71	

 https://truckmanualshub.com/

MACK T309, T309L and T309LR Shifting Instructions

CAUTION

Make sure air pressure is at least 90 psi and unit is at operating temperature before making range shifts. Always start in LO range. This also applies to dynamometer testing. When the truck is stationary, do NOT shift into HI range and then start moving the truck. Otherwise, damage to the synchronizer may result.

The T309 unit is a range-shifted transmission which has eight forward highway speeds plus an extra LO speed gear in the LO range. This transmission features a LO and HI auxiliary compound section controlled by an air-shift range selector located on the shift lever. The compound section is equipped with a synchronizer to facilitate LO-HI range shifting.

The LO range provides five low ratios. Never attempt to move the vehicle from a stopped position in any gear higher than second gear. Depending on the load, grade or road conditions, it may be necessary to start in LO speed gear or first-second gears. Note that LO speed gear was designed for off-highway use such as paving, material spreading or heavy load/steep grade conditions.

The HI range has four forward gears that can be shifted in the standard manner. Remember, however, to double-clutch when moving up or down through these gears.

REVERSE can be used in LO range only.

Upshift — Under normal highway conditions, with shift lever in NEUTRAL, flip air-shift range selector to LO range, then shift the transmission into first gear (see shift pattern). Shift through second, third and fourth, double-clutching between gears. When maximum RPM is reached in fourth gear, flip air-shift range selector to HI range (preselect) and then move shift lever through NEUTRAL to fifth gear. As the shift lever passes through NEUTRAL, it will put the transmission in HI range. Now continue double-clutching through sixth, seventh and eighth gears.

CAUTION

Do NOT move the air-shift range selector while moving in REVERSE. Also, when the truck is stationary, do NOT shift into HI range and then start moving the truck. Damage to the synchronizer may result.

Downshift — To downshift the T309, shift from eighth to seventh, sixth and fifth (HI range), double-clutching between gears. While still in fifth gear, flip the air-shift range selector to LO range (preselect), then shift through NEUTRAL to fourth gear. As you shift through NEUTRAL, the range shift to LO will be completed. Move the shift lever to third, second and first, double-clutching between gears.

T309 and T309L Reverse — Reverse can be used in LO range only.

T309LR Reverse — Reverse can be used in LO and HI range.

To make a range shift in reverse, bring the truck to a complete stop. Flip the range selector to the range desired (preselect). Move the shift lever out of reverse through NEUTRAL, and then back into reverse again. As the lever moves through NEUTRAL, the range shift will be completed.

CAUTION

To avoid transmission damage, do NOT change range while moving in REVERSE.

T309, T309L AND T309LR

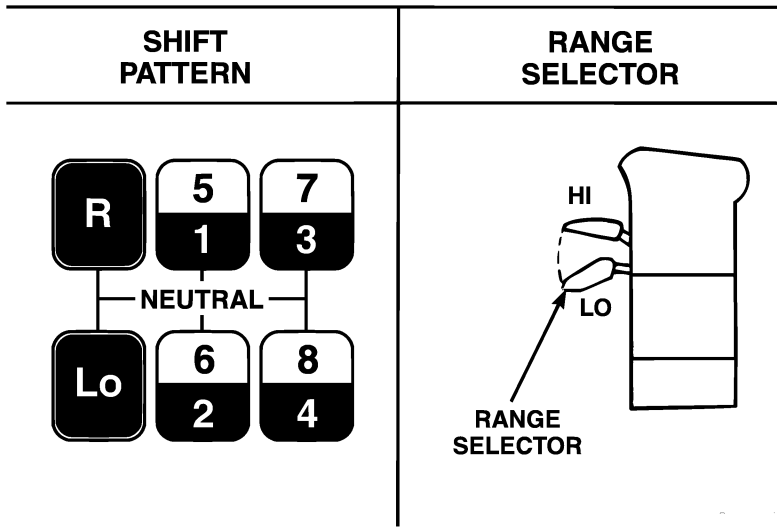

C0029346

T309 TRANSMISSION RATIOS

 https://truckmanualshub.com/

Gear (Main Box)	LO Range	HI Range
LO	11.24	
1/5	7.35	1.94
2/6	5.25	1.39
3/7	3.78	1.00
4/8	2.69	0.71
R	13.31	3.52

T309L TRANSMISSION RATIOS

Gear (Main Box)	LO Range	HI Range
LO	13.74	
1/5	7.35	1.94
2/6	5.25	1.39
3/7	3.78	1.00
4/8	2.69	0.71
R	13.31	3.52

T309LR TRANSMISSION RATIOS

Gear (Main Box)	LO Range	HI Range
LO	13.74	
1/5	7.35	1.94
2/6	5.25	1.39
3/7	3.78	1.00
4/8	2.69	0.71
R	24.24	6.41

Preferred Methods for Engaging T309 "Eighth" Gear (or any Hi-Range Gear) for Output Shaft Driven Power Take-Off (PTO) Operation

Note: OPTIONAL RANGE ENGAGEMENT INDICATOR LAMP — If the vehicle is so equipped, an indicator lamp, located in the cab, will illuminate to indicate that the range shift has occurred.

Method #1 — PTO Operation with Wheels OFF the Ground

1. Position the vehicle for power take-off operation.
2. Stop the vehicle and apply the spring brakes.
3. Raise the vehicle wheels off the ground.
4. Shift the transmission to NEUTRAL.
5. Turn on PTO.
6. Place the range selector to HIGH.
7. Fully depress the clutch pedal and shift the transmission to REVERSE.
8. Slowly release the clutch pedal until the transmission range clutch engagement is heard; or, if so equipped, until the range engagement indicator lamp is lit.
9. Fully depress the clutch pedal.
10. Shift the transmission to EIGHTH gear.
11. Release the clutch pedal to begin PTO operation.

Method #2 — PTO Operation with Wheels ON the Ground

1. Position the vehicle for power take-off operation.
2. Stop the vehicle and apply the spring brakes.
3. Keep the vehicle wheels on the ground.
4. Shift the transmission to NEUTRAL.
5. Place the range selector to HIGH.
6. Fully depress the clutch pedal and shift the transmission to REVERSE.
7. Slowly release the clutch pedal until the transmission range clutch engagement is heard; or, if so equipped, until the range engagement indicator lamp is lit.
8. Fully depress the clutch pedal.

 https://truckmanualshub.com/

9. Turn on PTO.
10. Shift the transmission to EIGHTH gear.
11. Release the clutch pedal to begin PTO operation.

MACK T310 Shifting Instructions

CAUTION

Make sure air pressure is at least 90 psi and unit is warmed before making range shifts. Always start in LO range. This also applies to dynamometer testing. When the truck is stationary, do NOT shift into HI range and then start moving the truck. Otherwise, damage to the synchronizer may result.

The T310 unit is a range-shifted transmission which has 10 forward "highway" speeds. This transmission features a LO and HI auxiliary compound section controlled by an air shift range selector located on the shift lever. The compound section is equipped with a synchronizer to facilitate LO-/HI- range shifting.

The LO range provides five low ratios. Never attempt to move the vehicle from a stopped position in any gear higher than fourth speed gear. Depending on load, grade, or road conditions, it may be necessary to start in first, second, third or fourth speed gears. In HI range there are five forward gears that can be shifted in the standard manner. Always remember, however, to double clutch whether moving up or down through these gears. Reverse gear can be used in LO range only.

Upshift - With the shift lever in NEUTRAL, flip the air shift range selector down to LO range. Then shift the transmission into first gear. Shift up to second, third, fourth and fifth speed gears, double clutching between the gears. When maximum engine RPM has been reached in fifth gear, flip the air shift range selector up to HI range (preselect). Then move the shift lever through NEUTRAL to sixth gear. As the shift lever passes through NEUTRAL, the transmission is placed into Hi range. Continue following the normal sequence (7-8-9-10), being sure to double clutch from one gear to the next.

Downshift — Shift from 10th speed gear down through the HI range (9-8-7-6), double clutching through each gear. While still in sixth speed gear, flip the air shift range selector down to LO range (preselect). Then move the shift lever through NEUTRAL to fifth speed gear. As the shift lever passes through NEUTRAL, the transmission is placed into LO range. Then, shift down to fourth, third, second and first speed gears, double clutching between all gears.

CAUTION

- *Always start in LO range according to shift marker plate instructions. Never start in a gear higher than fourth speed gear, even when dynamometer testing.*
- When the truck is stationary, do not shift into HI range and then start moving the truck. Damage to the synchronizer can result.
- Be careful not to overspeed the engine during downshifting. Damage to powertrain components may result.

Reverse — Reverse can be used in LO only. To make a range shift in reverse, bring the truck to a complete stop. Flip the range selector lever to range desired (preselect). Move the shift lever out of reverse through NEUTRAL and then back into reverse again. As the lever moves through NEUTRAL, the range shift will be completed.

CAUTION

To avoid transmission damage, do NOT change range while moving in REVERSE.

 https://truckmanualshub.com/

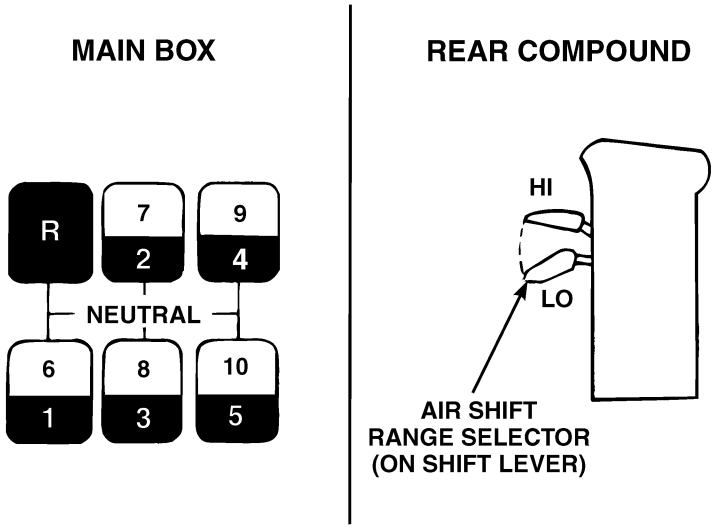

C0029347

Gear (Main Box)	Ratios	
	LO	HI
1/6	13.81	2.67
2/7	10.05	1.94
3/8	7.18	1.39
4/9	5.17	1.00
5/10	3.75	0.73
R/R	14.73	2.85

MACK T310M, T310ME and T310MLR Shifting Instructions

CAUTION

Make sure air pressure is at least 90 psi and unit is at operating temperature before making range shifts. Always start in LO range. This also applies to dynamometer testing. When the truck is stationary, do NOT shift into HI range and then start moving the truck. Otherwise, damage to the synchronizer may result.

The T310M is a range-shifted transmission which has 10 forward speeds. There is a LO and HI auxiliary compound section controlled by an air-shift selector on the shifter. This compound section is equipped with a synchronizer to facilitate LO-HI range shifting. The T310M transmission also provides a multi-speed reverse feature by means of reverse gearing in the compound case which works in conjunction with LO-LO, first and second speed gears in the main box. The air-shift selector must be moved to the R (REVERSE) position in order to utilize the multi-speed reverse feature.

LO range provides six low ratios for six forward gears in the T310M. HI range provides four additional forward gears which can be shifted in the standard manner. Remember, however, to double-clutch when moving up or down through the gears. For normal highway use, start in LO range, first gear and shift through second, third and fourth. The LO-LO and LO positions in LO range for this transmission are designed for use in off-highway and slow-moving operations such as curb pouring, material spreading, heavy load/steep grade. REVERSE is used in LO range for four reverse speeds.

Upshift — Begin in first gear (shown as 1/5 on shift pattern diagram) with air-shift selector in LO range. Upshift to second gear (2/6 on shift pattern diagram) LO range in the normal manner (double-clutching). When ready to upshift again, depress the clutch pedal and release the accelerator pedal in the normal manner. Repeat this shifting pattern through the remaining gears up to fourth speed (4/8 on shift pattern diagram). When maximum engine RPM has been reached in fourth gear, flip the air-shift selector to HI range (preselect), then double-clutch and shift to fifth gear. As the shift lever passes through NEUTRAL, it will put the transmission in HI range. Continue to upshift through normal sixth, seventh and eighth gears, while double-clutching.

 https://truckmanualshub.com/

Downshift — Downshift as normal from eighth to seventh, sixth and fifth in HI range (double-clutching between all gears). The next lower shift will be to fourth gear LO range. While still in fifth gear, flip the air-shift selector to LO range (preselect), then double-clutch and move the shift lever through NEUTRAL to fourth gear. The move through NEUTRAL activates the air-shift mechanism, this time to LO range. The next lower gear is third gear LO range. Double-clutch down through the remaining gears to first gear LO range as needed.

CAUTION

When the truck is stationary, do NOT shift into HI range and then start moving the truck. Damage to the synchronizer may result.

Reverse is used in LO range only. To avoid transmission damage when shifting Forward to Reverse or Reverse to Forward:

- Bring vehicle to a stop.
- Move lever to NEUTRAL.
- Select low range.
- Select F or R as desired.
- Select lowest lever gear position.
- Release and depress clutch pedal.
- Select desired gear.

T310M, T310ME AND T310MLR

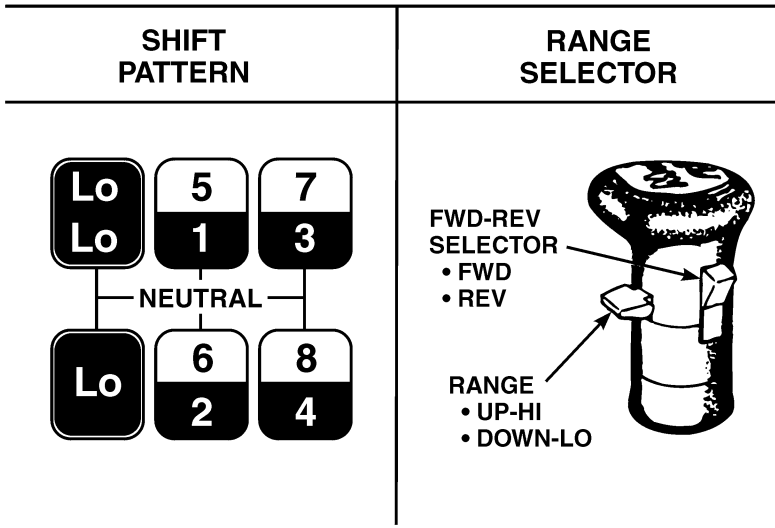

C0029348

T310M AND T310ME TRANSMISSION RATIOS

Gear (Main Box)	LO Range	HI Range	Reverse
LOLO	17.35		15.22
LO	11.40		10.00
1/5	7.45	1.94	6.54
2/6	5.33	1.39	4.67
3/7	3.83	1.00	3.37
4/8	2.78	0.73	2.44

 https://truckmanualshub.com/

T310MLR TRANSMISSION RATIOS

Gear (Main Box)	LO Range	HI Range	Reverse
LOLO	27.30		23.96
LO	13.90		12.22
1/5	7.45	1.94	6.54
2/6	5.33	1.39	4.67
3/7	3.83	1.00	3.37
4/8	2.73	0.71	2.40

Preferred Method for Engaging T310M or T310MLR High Range Gear for Output Shaft Driven Power Take-Off Operation

After positioning the vehicle for power take-off operation:

1. Shift the transmission to NEUTRAL.
2. Engage power take-off drive.
3. Move range selector to HI range.
4. Disengage engine clutch.
5. Select "tenth" gear (8 on the shift marker plate) for T310M or T310MLR.
6. Engage clutch when power take-off operation is desired.

CAUTION

When the truck is stationary, do NOT shift into HI range and then start moving the truck. Damage to the synchronizer may result.

MACK T313-T313L-T313LR Shifting Instructions

CAUTION

Make sure air pressure is at least 90 psi and unit is at operating temperature before making range shifts. Always start in LO range. This also applies to dynamometer testing. When the truck is stationary, do NOT shift into HI range and then start moving the truck. Otherwise, damage to the synchronizer may result.

The T313(L)(LR) is a range-shifted transmission with 12 forward highway speeds and an extra LO gear in the LO range. LO and HI ranges are controlled by an air-shift range selector.

Note: When making a SPLIT SHIFT from gear to gear, the splitter switch must not be actuated, either up or down, until the main box is in NEUTRAL. When making a SPLIT SHIFT in the same gear to a preselected gear, especially under a heavy load, the splitter will not shift until the driveline torque is relieved. This can be done by depressing the clutch pedal and releasing it, or by backing off the throttle and reapplying it. The splitter switch must not be actuated, either up or down, until IMMEDIATELY before the driveline torque is relieved. When making a RANGE SHIFT, it is important to preselect the range shift. This means that the range selector must be moved to its next position (up or down) BEFORE the gearshift lever is moved. Then move the gearshift lever through NEUTRAL to the next desired gear position. As the lever passes through NEUTRAL, the range shift will be completed.

CAUTION

Do not "play" with the splitter and range selector tabs at a stop light, flipping from high to low range or HI-LO split. These controls are not intended for entertainment. Such activity can adversely impact the life of the transmission.

Upshift — For purposes of explaining the shifting procedures through ALL gears, assume that the vehicle has a full load and will climb a slight grade.

Before moving the vehicle, the range selector must be in LO range and the splitter switch in LO-split. With the shift lever in NEUTRAL, move the splitter to LO-split (if needed), then the range to LO range (if needed).

 https://truckmanualshub.com/

Refer to the shift pattern and move the shift lever to LO speed gear (LO range, LO-split). Apply accelerator, engage the clutch, and accelerate to governed speed. Shift up through first, second, third and fourth speed gears, double-clutching between the gears.

To continue while in fourth gear (LO-split), flip the range selector up to HI range (preselect), then move the shift lever through NEUTRAL to fifth gear. As the lever moves through NEUTRAL, the range shift to HI will be completed. You are now in fifth gear LO-split (HI range). Use a combination of the splitter and shift lever to continue shifting to fifth HI-split, sixth LO-split, sixth HI-split and so on, until you reach eighth HI-split. Remember to double-clutch between gears.

To upshift from LO-split to HI-split (in the same gear), accelerate the engine to governed speed, move the splitter switch to HI (preselect), depress the clutch and back off the accelerator pedal. Reapply the accelerator and engage the clutch when the audible shift is heard, or when the engine speed falls by approximately 200 rpm. Depressing the clutch may not be necessary to break the driveline torque, but this will vary with road and load conditions.

To upshift from a HI-split gear to the next higher gears LO-split (in HI range), accelerate the engine to governed speed, then move the splitter switch to LO as you move the shift lever through NEUTRAL to the next higher gear. Note that the splitter switch must not be actuated down to the LO position until the main box is in NEUTRAL.

Downshift — Shift from eighth HI-split to eighth LO-split, then seventh HI-split, seventh LO-split and so on (double-clutching between the gears), until you reach fifth LO-split.

While in fifth gear LO-split, flip the range selector down to LO range (preselect), then move the shift lever through NEUTRAL to fourth gear (double-clutch and use the throttle in the normal manner between gears). As the shift lever moves through NEUTRAL, the range shift to LO will be completed. You are now in fourth gear LO-split (LO range). Continue downshifting, using the shift lever in the normal manner until you reach LO speed gear (LO range, LO-split).

To downshift from HI-split to LO-split (in the same gear) as engine speed falls, move the splitter to LO (preselect), then release and reapply the accelerator pedal. An audible shift completion should be heard.

To downshift from a LO-split gear to the next lower gears HI-split (in HI range) as engine speed falls, move the splitter switch to HI as you move the shift lever through NEUTRAL to the next lower gear. Note that the splitter switch must not be actuated up to the HI position until the main box is in NEUTRAL. Remember to double-clutch between gears.

T313 and T313L Reverse — Reverse can be used in LO range only.

T313LR Reverse — Reverse can be used in LO and HI range.

To make a range shift in reverse, bring the truck to a complete stop. Flip the range selector to the range desired (preselect). Move the shift lever out of reverse through NEUTRAL, and then back into reverse again. As the lever moves through NEUTRAL, the range shift will be completed.

CAUTION

To avoid transmission damage, do NOT change range while moving in REVERSE.

T313, T313L AND T313LR

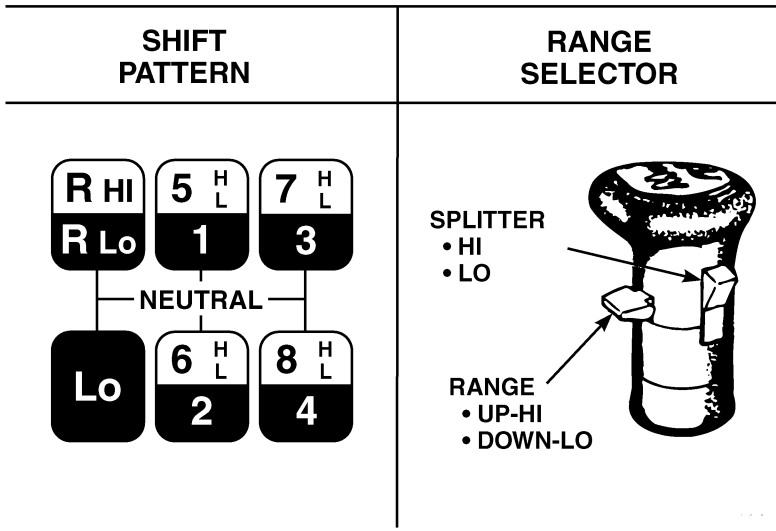

 https://truckmanualshub.com/

T313, T313L AND T313LR TRANSMISSION RATIOS

Gear (Main Box)	Splitter	Range	Ratios		
			T313LR	T313	T313L
LO	LO	LO	16.42	13.44	16.42
1	LO	LO	8.78	8.78	8.78
2	LO	LO	6.28	6.28	6.28
3	LO	LO	4.52	4.52	4.52
4	LO	LO	3.22	3.22	3.22
Range Shift Here					
5	LO	HI	2.29	2.29	2.29
5	HI	HI	1.94	1.94	1.94
6	LO	HI	1.64	1.64	1.64
6	HI	HI	1.39	1.39	1.39
7	LO	HI	1.18	1.18	1.18
7	HI	HI	1.00	1.00	1.00
8	LO	HI	0.84	0.84	0.84
8	HI	HI	0.71	0.71	0.71
R	LO	LO	28.98	15.91	15.91
R	HI	HI	6.41	3.52	3.52

Rear Case, Side-Mounted PTO Operating Procedures (T313, T313L and T313LR)

When engaging the PTO —

1. Select LO-split using the splitter switch and select LO range using the range selector.

Note: The transmission MUST be in LO range and LO-split at all times during PTO operation.

2. Depress the clutch pedal to disengage the clutch.
3. Set the parking brakes.
4. Move the main box shift lever to the NEUTRAL position.
5. Move the dash-mounted compound NEUTRAL control valve to the ON position, which moves the synchro clutch to a NEUTRAL position.
6. Engage the PTO.
7. Move the main box shift lever to the desired ratio.
8. Release the clutch pedal to engage the clutch.
9. Operate the PTO-driven load.

When disengaging the PTO —

1. Depress the clutch pedal to disengage the clutch.
2. Move the main box shift lever to NEUTRAL.
3. Disengage the PTO.
4. Move the dash-mounted compound NEUTRAL control valve to the OFF position, which moves the synchro clutch back to LO range.
5. Move the shift lever to the desired main gear box ratio.
6. Release the parking brakes.
7. Release the clutch pedal to engage the clutch.

MACK T31321, T313L21 and T313LR21 Shifting Instructions

CAUTION

Make sure air pressure is at least 90 psi and unit is at operating temperature before making range shifts. Always start in LO range. This also applies to dynamometer testing. When the truck is stationary, do NOT shift into HI range and then start moving the truck. Otherwise, damage to the synchronizer may result.

The T313(L)(LR)21 is a range-shifted transmission with 12 forward highway speeds and an extra LO gear in the LO range. LO and HI ranges are controlled by an air-shift range selector.

 https://truckmanualshub.com/

Note: When making a SPLIT SHIFT from gear to gear, the splitter switch must not be actuated, either up or down, until the main box is in NEUTRAL. When making a SPLIT SHIFT in the same gear to a preselected gear, especially under a heavy load, the splitter will not shift until the driveline torque is relieved. This can be done by depressing the clutch pedal and releasing it, or by backing off the throttle and reapplying it. The splitter switch must not be actuated, either up or down, until IMMEDIATELY before the driveline torque is relieved. When making a RANGE SHIFT, it is important to preselect the range shift. This means that the range selector must be moved to its next position (up or down) BEFORE the gearshift lever is moved. Then move the gearshift lever through NEUTRAL to the next desired gear position. As the lever passes through NEUTRAL, the range shift will be completed.

Upshift — For purposes of explaining the shifting procedures through ALL gears, assume that the vehicle has a full load and will climb a slight grade.

Before moving the vehicle, the range selector must be in LO range and the splitter switch in LO-split. With the shift lever in NEUTRAL, move the splitter to LO-split (if needed), then the range to LO range (if needed).

Refer to the shift pattern and move the shift lever to LO speed gear (LO range, LO-split). Apply accelerator, engage the clutch, and accelerate to governed speed. Shift up through first, second, third-fourth speed gears, double-clutching between the gears.

To continue while in fourth gear (LO-split), flip the range selector up to HI range (preselect), then move the shift lever through NEUTRAL to fifth gear. As the lever moves through NEUTRAL, the range shift to HI will be completed. You are now in fifth gear LO-split (HI range). Use a combination of the splitter and shift lever to continue shifting to fifth HI-split, sixth LO-split, sixth HI-split and so on, until you reach eighth HI-split. Remember to double-clutch between gears.

To upshift from LO-split to HI-split (in the same gear), accelerate the engine to governed speed, move the splitter switch to HI (preselect), depress the clutch and back off the accelerator pedal. Reapply the accelerator and engage the clutch when the audible shift is heard, or when the engine speed falls by approximately 200 rpm. Depressing the clutch may not be necessary to break the driveline torque, but this will vary with road and load conditions.

To upshift from a HI-split gear to the next higher gear’s LO-split (in HI range), accelerate the engine to governed speed, then move the splitter switch to LO as you move the shift lever through NEUTRAL to the next higher gear. Note that the splitter switch must not be actuated down to the LO position until the main box is in NEUTRAL.

Downshift — Shift from eighth HI-split to eighth LO-split, then seventh HI-split, seventh LO-split and so on (double-clutching between the gears), until you reach fifth LO-split.

While in fifth gear LO-split, flip the range selector down to LO range (preselect), then move the shift lever through NEUTRAL to fourth gear (double-clutch and use the throttle in the normal manner between gears). As the shift lever moves through NEUTRAL, the range shift to LO will be completed. You are now in fourth gear LO-split (LO range). Continue downshifting, using the shift lever in the normal manner until you reach LO speed gear (LO range, LO-split).

To downshift from HI-split to LO-split (in the same gear) as engine speed falls, move the splitter to LO (preselect), then release and reapply the accelerator pedal. An audible shift completion should be heard.

To downshift from a LO-split gear to the next lower gears HI-split (in HI range) as engine speed falls, move the splitter switch to HI as you move the shift lever through NEUTRAL to the next lower gear. Note that the splitter switch must not be actuated up to the HI position until the main box is in NEUTRAL. Remember to double-clutch between gears.

T31321 and T313L21 Reverse — Reverse can be used in LO range only.

T313LR21 Reverse — Reverse can be used in LO and HI range.

To make a range shift in reverse, bring the truck to a complete stop. Flip the range selector to the range desired (preselect). Move the shift lever out of reverse through NEUTRAL, and then back into reverse again. As the lever moves through NEUTRAL, the range shift will be completed.

CAUTION

To avoid transmission damage, do NOT change range while moving in REVERSE.

 https://truckmanualshub.com/

T31321, T313L21 AND T313LR21

SHIFT PATTERN	RANGE SELECTOR

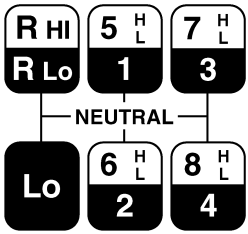

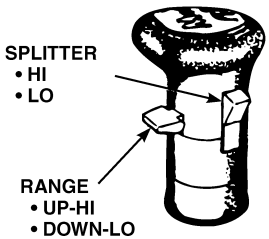

C0029350

T31321, T313L21 AND T313LR21 TRANSMISSION RATIOS

Gear (Main Box)	Splitter	Range	Ratios		
			T31321	T313LR21	T313L21
LO	LO	LO	13.44	16.42	16.42
1	LO	LO	8.78	8.78	8.78
2	LO	LO	6.28	6.28	6.28
3	LO	LO	4.52	4.52	4.52
4	LO	LO	3.22	3.22	3.22
Range Shift Here					
5	LO	HI	2.29	2.29	2.29
5	HI	HI	1.94	1.94	1.94
6	LO	HI	1.64	1.64	1.64
6	HI	HI	1.39	1.39	1.39
7	LO	HI	1.18	1.18	1.18
7	HI	HI	1.00	1.00	1.00
8	LO	HI	0.84	0.84	0.84
8	HI	HI	0.71	0.71	0.71
R	LO	LO	15.91	28.98	15.91
R	HI	HI	3.52	6.41	3.52

 https://truckmanualshub.com/

MACK T318, T318L and T318LR Shifting Instructions

CAUTION

Make sure air pressure is at least 90 psi and unit is at operating temperature before making range shifts. Always start in LO range. This also applies to dynamometer testing. When the truck is stationary, do NOT shift into HI range and then start moving the truck. Otherwise, damage to the synchronizer may result.

Note: When making a SPLIT SHIFT from gear to gear, the splitter switch must not be actuated, either up or down, until the main box is in NEUTRAL. When making a SPLIT SHIFT in the same gear to a preselected gear, especially under a heavy load, the splitter will not shift until the driveline torque is relieved. This can be done by depressing the clutch pedal and releasing it, or by backing off the throttle and reapplying it. The splitter switch must not be actuated, either up or down, until IMMEDIATELY before the driveline torque is relieved. When making a RANGE SHIFT, it is important to preselect the range shift. This means that the range selector must be moved to its next position (up or down) BEFORE the gearshift lever is moved. Then move the gearshift lever through NEUTRAL to the next desired gear position. As the lever passes through NEUTRAL, the range shift will be completed.

Upshift — For purposes of explaining the shifting procedures through ALL gears, assume that the vehicle has a full load and will climb a slight grade.

To prepare for moving the vehicle, position the shift lever in NEUTRAL, select LO-split using the splitter switch, and select LO range using the range selector.

Refer to the shift pattern and move the shift lever to LO speed gear (LO range, LO-split). Apply accelerator and engage the clutch, then accelerate to governed speed. Select HI on the splitter switch (preselect) and release the accelerator pedal long enough for the split shift to complete. Reapply the accelerator. Shift through first LO-split, first HI-split, second LO-split, second HI-split and so on, until you reach fourth HI-split. Remember to double-clutch between gears.

To continue while in fourth gear HI-split, flip the range selector up to HI range (preselect), and as you move the shift lever through NEUTRAL to fifth gear, move the splitter switch from HI to LO. As the lever moves through NEUTRAL, the range shift to HI will be completed. You are now in fifth gear LO-split (HI range). Continue shifting to fifth HI-split, sixth LO-split, sixth HI-split and so on, until you reach eighth HI-split. Remember to double-clutch between gears.

To upshift from LO-split to HI-split (in the same gear), accelerate the engine to governed speed, move the splitter switch to HI (preselect), depress the clutch and back off the accelerator pedal. Reapply the accelerator and engage the clutch when the audible shift is heard, or when the engine speed falls by approximately 200 rpm. Depressing the clutch may not be necessary to break the driveline torque, but this will vary with road and load conditions.

To upshift from a HI-split gear to the next higher gears LO-split (in the same range), accelerate the engine to governed speed, then move the splitter switch to LO as you move the shift lever through NEUTRAL to the next higher gear. Note that the splitter switch must not be actuated down to the LO position until the main box is in NEUTRAL.

Downshift — Shift from eighth HI-split to eighth LO-split, then seventh HI-split, seventh LO-split and so on (double-clutching between the gears), until you reach fifth LO-split.

To continue while in fifth gear LO-split, flip the range selector down to LO range (preselect), and as you move the gearshift lever through NEUTRAL to fourth gear, move the splitter switch from LO to HI. As the shift lever moves through NEUTRAL, the range shift to LO will be completed. You are now in fourth gear HI-split (LO range). Continue downshifting, using the shift lever and splitter in the normal manner, until you reach LO speed gear (LO range, LO-split).

To downshift from HI-split to LO-split (in the same gear) as engine speed falls, move the splitter to LO (preselect), then release and reapply the accelerator pedal. An audible shift completion should be heard.

To downshift from a LO-split gear to the next lower gear's HI-split (in the same range) as engine speed falls, move the splitter switch to HI as you move the shift lever through NEUTRAL to the next lower gear. Note that the splitter switch must not be actuated up to the HI position until the main box is in NEUTRAL. Remember to double-clutch between gears using the accelerator pedal to synchronize the transmission components.

T318 and T318L Reverse — Reverse can be used in LO range only.

T318LR Reverse — Reverse can be used in LO and HI range.

 https://truckmanualshub.com/

To make a range shift in reverse, bring the truck to a complete stop. Flip the range selector to the range desired (preselect). Move the shift lever out of reverse through NEUTRAL, and then back into reverse again. As the lever moves through NEUTRAL, the range shift will be completed.

CAUTION

To avoid transmission damage, do NOT change range while moving in REVERSE.

T318, T318L AND T318LR

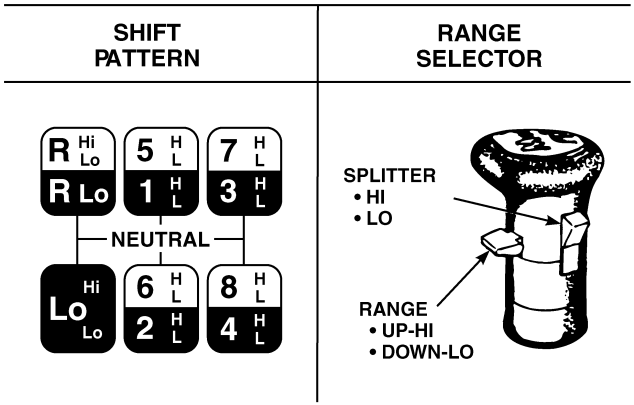

T318, T318L AND T318LR TRANSMISSION RATIOS

Gear (Main Box)	Splitter	Range	Ratios		
			T318	T318LR	T318L
LO	LO	LO	13.44	16.42	16.42
LO	HI	LO	11.40	13.93	13.93
1	LO	LO	8.78	8.78	8.78
1	HI	LO	7.45	7.45	7.45
2	LO	LO	6.28	6.28	6.28
2	HI	LO	5.33	5.33	5.33
3	LO	LO	4.52	4.52	4.52
3	HI	LO	3.83	3.83	3.83
4	LO	LO	3.22	3.22	3.22
4	HI	LO	2.73	2.73	2.73
Range Shift Here					
5	LO	HI	2.29	2.29	2.29
5	HI	HI	1.94	1.94	1.94
6	LO	HI	1.64	1.64	1.64
6	HI	HI	1.39	1.39	1.39
7	LO	HI	1.18	1.18	1.18
7	HI	HI	1.00	1.00	1.00
8	LO	HI	0.84	0.84	0.84
8	HI	HI	0.71	0.71	0.71
R	LO	LO	15.91	28.98	15.91
R	LO	HI	13.49	24.58	13.49
R	HI	HI	3.52	6.41	3.52

 https://truckmanualshub.com/

Rear Case, Side-Mounted PTO Operating Procedures (T318, T318L and T318LR)

When engaging the PTO —

1. Select LO-split using the splitter switch and select LO range using the range selector.

Note: The transmission MUST be in LO range and LO-split at all times during PTO operation.

2. Depress the clutch pedal to disengage the clutch.
3. Set the parking brakes.
4. Move the main box shift lever to the NEUTRAL position.
5. Move the dash-mounted compound NEUTRAL control valve to the ON position, which moves the synchro clutch to a NEUTRAL position.
6. Engage the PTO.
7. Move the main box shift lever to the desired ratio.
8. Release the clutch pedal to engage the clutch.
9. Operate the PTO-driven load.

When disengaging the PTO —

1. Depress the clutch pedal to disengage the clutch.
2. Move the main box shift lever to NEUTRAL.
3. Disengage the PTO.
4. Move the dash-mounted compound NEUTRAL control valve to the OFF position, which moves the synchro clutch back to LO range.
5. Move the shift lever to the desired main gear box ratio.
6. Release the parking brakes.
7. Release the clutch pedal to engage the clutch.

Preferred Methods for Engaging T318(L)(LR) "Eighteenth" Gear (or any HI-range gear) for Output Shaft Driven Power Take-Off Operation

Method #1

After positioning the vehicle for power take-off operation, and with vehicle wheels off the ground:

1. Shift the transmission to NEUTRAL.
2. Engage power take-off drive.
3. Move the range selector to HI range.
4. Disengage the engine clutch and select REVERSE.
5. Feather the clutch until the transmission range clutch engagement is heard.
6. Disengage the engine clutch.
7. Select 18th speed gear for T318LR.
8. Engage the clutch when power take-off operation is desired.

Method #2

After positioning the vehicle for power take-off operation, and with vehicle wheels on the ground:

1. Shift the transmission to NEUTRAL.
2. Move the range selector to HI range.
3. Disengage the engine clutch and select REVERSE.
4. Feather the clutch until the transmission range clutch engagement is heard.
5. Disengage the engine clutch.
6. Engage power take-off drive.
7. Select 18th speed gear for T318LR.
8. Engage the clutch when power take-off operation is desired.

 https://truckmanualshub.com/

MACK T31821, T318L21 and T318LR21 Shifting Instructions

CAUTION

Make sure air pressure is at least 90 psi and unit is at operating temperature before making range shifts. Always start in LO range. This also applies to dynamometer testing. When the truck is stationary, do NOT shift into HI range and then start moving the truck. Otherwise, damage to the synchronizer may result.

Note: When making a SPLIT SHIFT from gear to gear, the splitter switch must not be actuated, either up or down, until the main box is in NEUTRAL. When making a SPLIT SHIFT in the same gear to a preselected gear, especially under a heavy load, the splitter will not shift until the driveline torque is relieved. This can be done by depressing the clutch pedal and releasing it, or by backing off the throttle and reapplying it. The splitter switch must not be actuated, either up or down, until IMMEDIATELY before the driveline torque is relieved. When making a RANGE SHIFT, it is important to preselect the range shift. This means that the range selector must be moved to its next position (up or down) BEFORE the gearshift lever is moved. Then move the gearshift lever through NEUTRAL to the next desired gear position. As the lever passes through NEUTRAL, the range shift will be completed.

Upshift — For purposes of explaining the shifting procedures through ALL gears, assume that the vehicle has a full load and will climb a slight grade.

To prepare for moving the vehicle, position the shift lever in NEUTRAL, select LO-split using the splitter switch, and select LO range using the range selector.

Refer to the shift pattern and move the shift lever to LO speed gear (LO range, LO-split). Apply accelerator and engage the clutch, then accelerate to governed speed. Select HI on the splitter switch (preselect) and release the accelerator pedal long enough for the split shift to complete. Reapply the accelerator. Shift through first LO-split, first HI-split, second LO-split, second HI-split and so on, until you reach fourth HI-split. Remember to double-clutch between gears.

To continue while in fourth gear HI-split, flip the range selector up to HI range (preselect), and as you move the shift lever through NEUTRAL to fifth gear, move the splitter switch from HI to LO. As the lever moves through NEUTRAL, the range shift to HI will be completed. You are now in fifth gear LO-split (HI range). Continue shifting to fifth HI-split, sixth LO-split, sixth HI-split and so on, until you reach eighth HI-split. Remember to double-clutch between gears.

To upshift from LO-split to HI-split (in the same gear), accelerate the engine to governed speed, move the splitter switch to HI (preselect), depress the clutch and back off the accelerator pedal. Reapply the accelerator and engage the clutch when the audible shift is heard, or when the engine speed falls by approximately 200 rpm. Depressing the clutch may not be necessary to break the driveline torque, but this will vary with road and load conditions.

To upshift from a HI-split gear to the next higher gear's LO-split (in the same range), accelerate the engine to governed speed, then move the splitter switch to LO as you move the shift lever through NEUTRAL to the next higher gear. Note that the splitter switch must not be actuated down to the LO position until the main box is in NEUTRAL.

Downshift — Shift from eighth HI-split to eighth LO-split, then seventh HI-split, seventh LO-split and so on (double-clutching between the gears), until you reach fifth LO-split.

To continue while in fifth gear LO-split, flip the range selector down to LO range (preselect), and as you move the gearshift lever through NEUTRAL to fourth gear, move the splitter switch from LO to HI. As the shift lever moves through NEUTRAL, the range shift to LO will be completed. You are now in fourth gear HI-split (LO range). Continue downshifting, using the shift lever and splitter in the normal manner, until you reach LO speed gear (LO range, LO-split).

To downshift from HI-split to LO-split (in the same gear) as engine speed falls, move the splitter to LO (preselect), then release and reapply the accelerator pedal. An audible shift completion should be heard.

To downshift from a LO-split gear to the next lower gear's HI-split (in the same range) as engine speed falls, move the splitter switch to HI as you move the shift lever through NEUTRAL to the next lower gear. Note that the splitter switch must not be actuated up to the HI position until the main box is in NEUTRAL. Remember to double-clutch between gears using the accelerator pedal to synchronize the transmission components.

T31821 and T318L21 Reverse — Reverse can be used in LO range only.

T318LR21 Reverse — Reverse can be used in LO and HI range.

 https://truckmanualshub.com/

To make a range shift in reverse, bring the truck to a complete stop. Flip the range selector to the range desired (preselect). Move the shift lever out of reverse through NEUTRAL, and then back into reverse again. As the lever moves through NEUTRAL, the range shift will be completed.

CAUTION

To avoid transmission damage, do NOT change range while moving in REVERSE.

T31821, T318L21 AND T318LR21

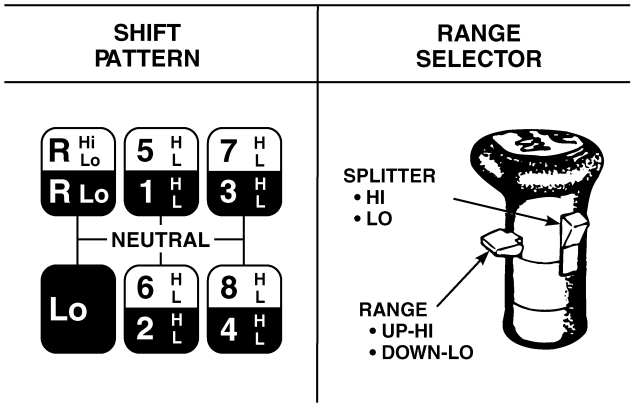

T31821, T318L21 AND T318LR21 TRANSMISSION RATIOS

Gear (Main Box)	Splitter	Range	Ratios		
			T31821	T318LR21	T318L21
LO	LO	LO	13.44	16.42	16.42
LO	HI	LO	11.40	13.93	13.93
1	LO	LO	8.78	8.78	8.78
1	HI	LO	7.45	7.45	7.45
2	LO	LO	6.28	6.28	6.28
2	HI	LO	5.33	5.33	5.33
3	LO	LO	4.52	4.52	4.52
3	HI	LO	3.83	3.83	3.83
4	LO	LO	3.22	3.22	3.22
4	HI	LO	2.73	2.73	2.73
Range Shift Here					
5	LO	HI	2.29	2.29	2.29
5	HI	HI	1.94	1.94	1.94
6	LO	HI	1.64	1.64	1.64
6	HI	HI	1.39	1.39	1.39
7	LO	HI	1.18	1.18	1.18
7	HI	HI	1.00	1.00	1.00
8	LO	HI	0.84	0.84	0.84
8	HI	HI	0.71	0.71	0.71
R	LO	LO	15.91	28.98	15.91
R	LO	HI	13.49	24.58	13.49
R	HI	HI	3.52	6.41	3.52

 https://truckmanualshub.com/

Rear Case, Side-Mounted PTO Operating Procedures (T31821, T318L21 and T318LR21)

When engaging the PTO —

1. Select LO-split using the splitter switch and select LO range using the range selector.

Note: The transmission MUST be in LO range and LO-split at all times during PTO operation.

2. Depress the clutch pedal to disengage the clutch.
3. Set the parking brakes.
4. Move the main box shift lever to the NEUTRAL position.
5. Move the dash-mounted compound NEUTRAL control valve to the ON position, which moves the synchro clutch to a NEUTRAL position.
6. Engage the PTO.
7. Move the main box shift lever to the desired ratio.
8. Release the clutch pedal to engage the clutch.
9. Operate the PTO-driven load.

When disengaging the PTO —

1. Depress the clutch pedal to disengage the clutch.
2. Move the main box shift lever to NEUTRAL.
3. Disengage the PTO.
4. Move the dash-mounted compound NEUTRAL control valve to the OFF position, which moves the synchro clutch back to LO range.
5. Move the shift lever to the desired main gear box ratio.
6. Release the parking brakes.
7. Release the clutch pedal to engage the clutch.

Preferred Methods for Engaging T318(L)(LR)21 "Eighteenth" Gear (or any HI-range gear) for Output Shaft Driven Power Take-Off (PTO) Operation

Method #1

After positioning the vehicle for power take-off operation, and with vehicle wheels off the ground:

1. Shift the transmission to NEUTRAL.
2. Engage power take-off drive.
3. Move the range selector to HI range.
4. Disengage the engine clutch and select REVERSE.
5. Feather the clutch until the transmission range clutch engagement is heard.
6. Disengage the engine clutch.
7. Select 18th speed gear for T318L(R)21.
8. Engage the clutch when power take-off operation is desired.

Method #2

After positioning the vehicle for power take-off operation, and with vehicle wheels on the ground:

1. Shift the transmission to NEUTRAL.
2. Move the range selector to HI range.
3. Disengage the engine clutch and select REVERSE.
4. Feather the clutch until the transmission range clutch engagement is heard.
5. Disengage the engine clutch.
6. Engage power take-off drive.
7. Select 18th speed gear for T318L(R)21.
8. Engage the clutch when power take-off operation is desired.

 https://truckmanualshub.com/

AXLES

Rear Axles Other Than MACK

Please refer to the operator's manual provided with your vehicle for axles other than MACK.

MACK Rear Axles

Mack Trucks, Inc. provides axle housings in three capacity classifications:

- Medium Duty
- Heavy Duty
- Extra-Heavy Duty

To deliver the appropriate amount of torque to the driving wheels, MACK offers dual-reduction carriers in a variety of ratios.

Mack Trucks, Inc. offers a large variety of four-wheel-drive tandem axles with top-mounted, dual-reduction carriers (for straight line through drive). Carriers are also available in a large number of ratios.

All four-wheel-drive tandem carriers are available with the MACK inter-axle power divider third differential (with or without a power divider lockout).

MACK rear axles are designed so the entire load is carried by the axle housing (through the wheel bearings mounted on the housing spindle). The rear axle shafts are either free-splined (both ends) or integral flange type. Both types of axle shafts can be removed without removing or disturbing the rear wheels.

To avoid excessive tire wear, proper maintenance must be practiced and rear axle tires must be matched.

CAUTION

The maximum safe operating oil temperature for a MACK rear axle is 121° C (250° F) for mineral-based oil, and 148° C (300° F) for synthetic-based oil. Continued operation with oil above this temperature will result in rapid deterioration of the oil's lubricating properties and is NOT recommended.

Inter-Axle Power Divider Lockout (If Equipped)

The MACK power divider can be rendered inoperative, during short periods of poor traction, using a power divider lockout. When the power divider lockout is engaged, both axles are locked together (in positive through-drive) for maximum traction with no differential action between axles. It is not necessary to stop the vehicle to engage the power divider lockout. The lockout may be engaged while the vehicle is moving at less than 30 mph, as long as the wheels are not spinning.

CAUTION

Do not engage the power divider lockout if the wheels are spinning.

Note: Even when no traction is available at the spinning wheel, the driver can "feather" the brakes (apply the brakes slightly), creating enough resistance at that wheel to allow power to the axle with traction. Feathering brakes should not be done with power divider lockout engaged.

Note: For vendor axles, see the vendor manual furnished with the vehicle.

Engaging the Power Divider Lockout

Normally, the Power Divider switch is in the OUT (disengaged) position. In poor traction conditions, it may be necessary to provide positive through-drive to both axles by flipping the switch to the locked (engaged) position.

1. Push switch to engage.
2. Momentarily release the accelerator pedal to allow the shift to take place, then drive through the slippery area.

Note: A lockout indicator lamp will remain lit as long as the lockout is engaged. This is to remind the driver to release the lockout as soon as normal traction is regained.

 https://truckmanualshub.com/

3. When driving conditions permit, unlock the power divider by moving the Power Divider switch back to the OUT (disengaged) position. Then release the accelerator pedal momentarily (to shift out of the locked position) and drive as usual.

CAUTION

Do NOT (under any circumstances) engage or disengage the lockout while the drive wheels are actually slipping or spinning; clashing between the lockout sliding clutch and the outer cam may result.

All-Wheel-Drive in GU Chassis (If Equipped)

Transfer Case — The TC15 Series and TC25 Series are two-speed transfer cases designed for all-wheel-drive vehicles. All gears are in constant mesh and are of the helical type (for quiet running). All shafts and the differential are mounted in heavy-duty tapered roller bearings. HI-LO engagement is effected by means of a sliding clutch. A conventional fork spans the sliding clutch and moves in response to movement of the gearshift hand-control lever or air-control valve.

A planetary gear-type center differential is incorporated to provide front-wheel-drive availability at all times (without requiring driver attention). However, for extremely slippery conditions, a power divider lockout is provided.

WARNING

Do NOT attempt to shift between HI and LO range (or engage the transfer case lockout) while the vehicle is in motion; drivetrain component damage could occur.

Note: A transfer case NEUTRAL position is required when a transfer case power take-off (PTO) unit is incorporated.

TC 15 Series SHIFT PATTERN	Model	HI Range	LO Range	Front Drive
	TC(S)15	0.999	2.593	0.965
	TC(S)150	0.768	1.992	0.965
H HI	TC(S)151	0.999	2.593	0.838
	TC(S)1510	0.768	1.992	0.838
N NEUTRAL	TC(S)152	0.999	2.593	1.000
L LO C0029904	TC(S)1520	0.768	1.992	1.000

TC 25 Series SHIFT PATTERN	Model	HI Range	LO Range	Front Drive
	TC(S)25	1.36	2.593	0.965
	TC(S)250	1.045	1.992	0.965
H HI	TC(S)251	1.36	2.593	0.838
	TC(S)2510	1.045	1.992	0.838
N NEUTRAL	TC(S)252	1.36	2.593	1.000
L LO C0029904	TC(S)2520	1.045	1.992	1.000

 https://truckmanualshub.com/

DIESEL PARTICULATE FILTERS (IF EQUIPPED)

Your new MACK chassis is equipped with a 2007 emission compliant engine and an exhaust aftertreatment system which includes a Diesel Particulate Filter (DPF), which reduces soot and particulate emissions into the atmosphere. Vehicles equipped with a Diesel Particulate Filter require the use of EO-O Premium Plus (or VDS-4) specification high performance diesel engine oil and Ultra Low Sulfur Diesel (ULSD) fuel.

CAUTION

Use of diesel fuel other than ULSD and engine oils other than EO-O Premium Plus (or VDS-4), will adversely affect performance, efficiency and durability of the DPF system and the engine, to the point where the engine may not run at all. Manufacturer's warranties will also be rendered void due to usage of improper fuel. Unapproved fuel additives (including engine oil) are NOT permitted.

Mack Trucks, Inc. offers two different types of DPF systems:

- Catalyzed DPF (passive/active regeneration)
- Non-catalyzed DPF (active regeneration)

as well as two different mounting styles:

1. MACK Vertical Back-of-Cab DPF (both catalyzed and non-catalyzed)
2. MACK-Cap DPF, which is a space saving unit that is mounted inside the frame (catalyzed only)

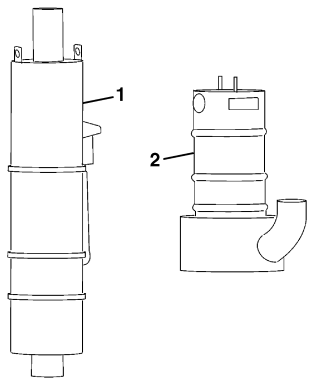

C0029353

A Diesel Particulate Filter (DPF) in the exhaust takes the place of the standard muffler. The DPF is used to meet EPA requirements to help reduce soot and particulate emissions into the atmosphere. The particulates are typically removed by collecting in the DPF unit, where they are eventually oxidized with continuous or periodic regeneration of the filter. The electrical system and exhaust aftertreatment system of the vehicle will determine when regeneration is required. Mack Trucks, Inc., uses two exhaust aftertreatment systems: Catalyzed and Non-Catalyzed.

Catalyzed exhaust aftertreatment systems use passive-active regeneration. The passive-active regeneration process oxidizes the particulates captured in the DPF while the vehicle is in operation. An oxidation catalyst raises the exhaust temperature to approximately 260°C (500°F), the temperature at which a chemical reaction takes place to oxidize the soot (passive regeneration). When soot loading in the DPF reaches a point where it can no longer be oxidized, fuel is injected into the system to raise the temperature inside the filter to approximately 625°C (1157°F), the temperature at which active regeneration takes place.

Non-catalyzed exhaust aftertreatment systems use active regeneration. Regeneration takes place after a certain number of engine operating hours and begins when an air/fuel mixture is injected into the thermal regenerator and raises the temperature inside the unit to the point where the soot oxidation takes place.

Catalyzed exhaust aftertreatment systems are used in highway and certain vocational applications. Non-catalyzed exhaust aftertreatment systems are used mainly in refuse collection applications.

Depending on how the vehicle is set up, regeneration can occur while the vehicle is being driven (referred to as a "moving" regeneration) or when the vehicle is parked and idling (referred to as a "parked" regeneration). Below is a brief description on moving and parked regenerations.

CAUTION

When active regeneration occurs (with either system), the temperature of the exhaust will be elevated. DO NOT park the vehicle with the exhaust outlet under low hanging overhead flammable objects such as trees, awnings, etc., that could be damaged by elevated exhaust temperatures. DO NOT remove the diffuser.

 https://truckmanualshub.com/

CAUTION

If the vehicle is in a location that may be hazardous when an active regeneration begins (i.e., in close proximity to flammable materials or gases), the regeneration should be stopped by pushing the DPF switch to the "Stop Regeneration" position. If an active regeneration is stopped by the vehicle operator, it should be initiated at a later time when the vehicle is in a safe location. However, if an active regeneration is stopped too many times, the vehicle must be taken to a MACK service facility. The service facility will use a service tool to manually initiate the regeneration.

WARNING

For chassis equipped with a heated dump body, be aware that temperature around the area where the exhaust enters the body, as well as the product contained in the body, may be elevated, particularly during DPF regeneration.

DPF Control “Smart Switch” Options

To manually initiate or inhibit a DPF regeneration, all US07 compliant MACK vehicles include a DPF control "Smart Switch". This blue rocker switch is located on the top switch row of panel "D" in Pinnacle (CXU and CU), Granite (GU), and Titan (TD) models, or on the switch panel (panel "E") in TerraPro — (MRU and LEU) vehicles.

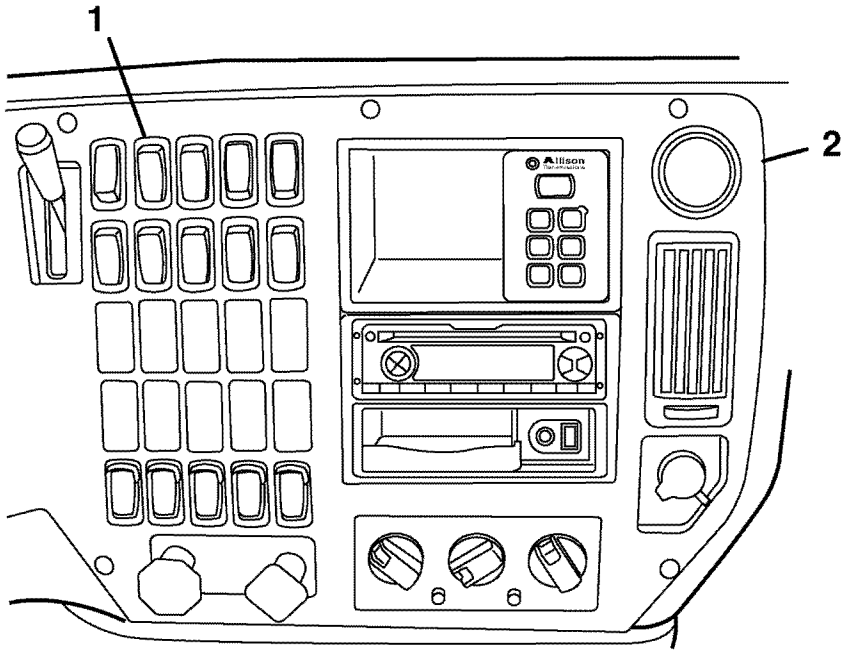

W3030463

1 DPF Smart Switch Location

2 Panel D

 https://truckmanualshub.com/

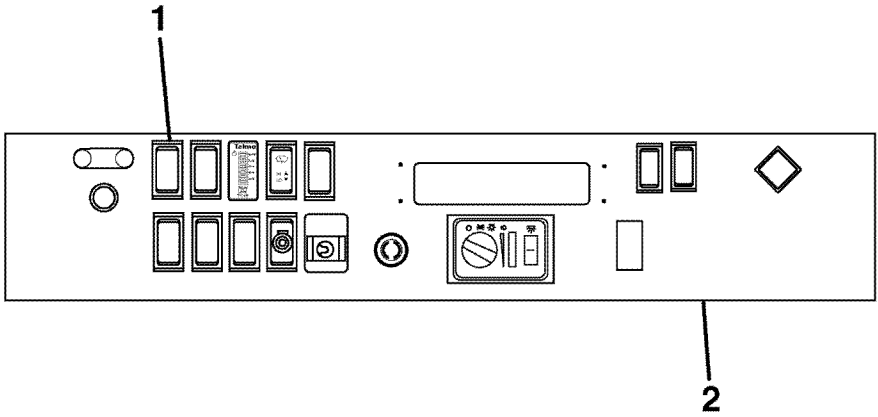

W3030464

1 DPF Smart Switch Location

2 Panel E

SMART SWITCH

The DPF control "Smart Switch" is fully shrouded to indicate its use is required only if circumstances dictate. In all cases the top portion includes a DPF regen initiate button which illuminates when a DPF regeneration is needed, but cannot be performed automatically. Pressing and releasing the top portion of this switch when parked and if illuminated will cause the lamp to go out and initiate a parked DPF regeneration.

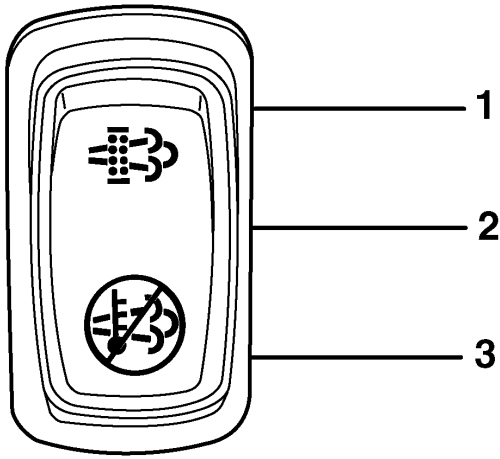

C0029148

1 Upper Portion — Regen Position

2 Middle Position — Neutral Position

3 Lower Portion — Inhibit Position (If Equipped)

 https://truckmanualshub.com/

The lower portion of the DPF switch is used to delay or inhibit a DPF regen. It is available in threeoptions, depending upon vehicle application and specific customer needs:

1 A "No Inhibit" switch has a non-functional lower portion and does not allow a DPF regen to be manually inhibited.

2 A "Temporary Inhibit" switch, when pressed and released, illuminates the “Inhibit” icon and inhibits automatic DPF regens for 2 hours.

3 A "Locking Inhibit" switch lower portion can be latched in to a depressed position, illuminating the “Inhibit” icon and delaying automatic regens indefinitely. In this position a programmable vehicle speed interlock automatically limits top speed. When an inhibit is no longer needed, the operator must press the upper "initiate" portion of the switch, otherwise DPF filter clogging and servicing will be required.

Detailed description of the three individual DPF regen inhibit switches follows:

1 **"No Inhibit" Switch: Optional on Mack Conventionals, N/A on TerraProPart**
Description: "No Inhibit" DPF regeneration switch: Allows the operator to initiate a manualstationary DPF regeneration only. Automatic DPF regens cannot be delayed or inhibited.

- Upper half: Press and release to initiate a regen if Inhibit icon is illuminated.
- Lower half: Non-functional (cannot press); no icon.
  Application: Recommended for normal highway tractor applications where there are no low speed,high exhaust temperature concerns. This solution provides the least opportunity for driver misuse.

2 **"Temporary Inhibit" Switch: Standard on all Mack Conventionals**
Description: "Temporary Inhibit" DPF regeneration switch. Allows the operator to initiate a manual stationary DPF regeneration, or to inhibit automatic DPF regens for 2 hours. When the 2 hour timer expires, the inhibit switch can be depressed again for an additional 2 hours.

- Upper half: Press and release to initiate a regen if the Regen icon is illuminated, or to cancel an inhibit.
- Lower half: Press and release to inhibit automatic regens for 2 hours. The Switch Inhibit icon illuminates.
  Application: Generally recommended for applications where high exhaust gas temperatures cannot be tolerated in a specific area or for a specific period of time.

3. **Locking Inhibit Switch: Available on All Models**
Description: "Locking Inhibit" or "Latching Inhibit" DPF regen switch. Allows the operator to initiatea manual stationary DPF regeneration, or to inhibit regens for an operator defined period of time.

Note: Inhibiting regens over an extended period may result in an electronic fault, power derate, and/or unscheduled filter servicing.

Note: Use of the Locking Inhibit function while driving will result in an immediate reduction in vehicle speed. This feature is programmable using VCADS service support software. Current default settings enable this feature, reduce current vehicle speed by 10 mph, and sets a lower limit of 10 mph (i.e. if the vehicle is moving at only 15 mph and the switch is used, the MPH limit cannot go below 10 mph).

- Upper half: Press and release to initiate a regen if the Regen icon is illuminated, or to cancel an inhibit.

- Lower half: Press and latch switch to inhibit automatic regens Inhibit icon illuminates.

Application: Recommended for applications where DPF regens must be manually controlled bythe driver. An example might include restricted or regulated areas.

 https://truckmanualshub.com/

CO-PILOT MESSAGING

Enhanced Co-Pilot pop-up DPF alert messaging and digital gauges are being introduced at the sametime as the previously described DPF switches. Co-Pilot is a non-standard graphic display option available on Pinnacle, Granite, and Titan vehicles only. Pop-up alert messages are as follows:

Condition	Message	Driver Acknowledge
When a DPF regen has started	DPF REGEN IN PROGRESS	5 second automatic pop-up expiration
5 second automatic pop-up expiration	DPF REGEN DRIVER INHIBITED	Press stalk switch ENTER button to acknowledge;
When a regen is first needed (switch on) but hasn't been initiated	MANUAL REGEN ALLOWED When parked, press Regen switch.	Press stalk switch ENTER button to acknowledge;
When a regen is still needed and theregen icon begins to flash	REGEN REQUIRED Park soon and press Regen switch.	Press stalk switch ENTER button to acknowledge;
When a regen is desperately needed and the fault lamp activates	MANUAL REGEN REQUIRED Park now and press Regen switch.	Press stalk switch ENTER button to acknowledge;
When the particulate filter is clogged and requires servicing	DPF SERVICE REQUIRED	Press stalk switch ENTER button to acknowledge;
When DPF regens are no longer driver-switch inhibited	DPF REGEN IN AUTO MODE	5 sec automatic pop-up expiration
When a DPF regen is complete	DPF REGEN COMPLETE	5 sec automatic pop-up expiration
If a after-treatment system fault prevents a regen from occurring DPF System Service Required	ALERT: DPF SYSTEM FAULT	Press stalk switch ENTER button to acknowledge;
If the DPF switch itself is logging a fault	REGEN SWITCH MALFUNCTION	Press stalk switch ENTER button to acknowledge;

DPF soot and ash load status have been added to the Co-Pilot "Digital Gauges" menu (no illustrations available).
On the Co-Pilot stationary Maintenance Menu screen, the "Inhibit Status" screen has been updated and will show the status of all items (switches, pedals, conditions, etc) impacting automatic regenerations. For example, if the clutch is depressed, an automatic stationary regen cannot be initiated.

Extended Idling and Aftertreatment System Conditioning (Periodic Heat Mode)

Extended idling performed on this vehicle equipped with an exhaust aftertreatment system should be carried out at a low engine idle speed. There is no benefit to using a raised engine idle speed for extended idling. The only exception is for active PTO operation. Utilizing an engine speed above 1300 rpm is recommended for vehicles which perform extended idling with an active PTO.

During periods of extended idling, normally greater than 8hrs, the catalyzed DPF system needs to perform a routine conditioning cycle. The conditioning cycle is controlled by the Engine ECU and will start and stop automatically as needed. The ATS conditioning is required to maintain normal exhaust aftertreatment system function and should not be stopped. ATS conditioning will not occur on non-catalyzed DPF systems.

During these events the engine speed will increase to approximately 1050–1400rpm, for non-PTO operation, in order to complete the exhaust aftertreatment conditioning cycle. Exhaust temperatures will also elevate slightly but remain much lower than those reached during regeneration and present no danger.

If a compatible driver display is available a message will be displayed when the conditioning cycle is in progress. The message indicated in the driver’s display will be "ATS Conditioning in Progress, No Action Required." If no driver display is available there will be no indication of an ATS conditioning event except for the automatic increase in engine speed.

IF ATS conditioning is unsuccessful and extended idling is continued a yellow lamp will be displayed. If this fault occurs extended idling should be stopped and driving resumed as soon as possible. If a yellow lamp is active and idling is continued a red lamp will be displayed and finally an engine shutdown. In the event that a red lamp is reached during extended idling the vheicle should be serviced to diagnose the problem in the aftertreatment system and inspect the DPF system for damage. Aftertreatment system hardware problems, driver intervention, and certain PTO operations could cause an ATS conditioning to fail.

https://truckmanualshub.com/

MAINTENANCE INTRODUCTION

Preventive maintenance is vital to the life of your new vehicle. This section of the Operator's Handbook covers items of importance concerning the proper care of MACK vehicles. A well-run maintenance and lubrication program is the best way to ensure a long life of productive operation.

The operator plays an important role in the proper care of this equipment. By performing daily checks and observing the equipment while in operation, minor defects can be caught and corrected before they become major problems. Make sure any problems are corrected before putting the equipment into operation.

If you have any questions concerning the proper care, maintenance and lubrication of your vehicle, or if you need help in developing a preventive maintenance program, contact the service manager at the local MACK Sales, Parts and Service Center.

Note: This handbook contains basic maintenance information. For complete maintenance and lubrication procedures, refer to the *Maintenance and Lubrication Manual (TS494)*.

http://truckmanualshub.com/

TURBOCHARGER

The engine turbocharger operates at very high speed, temperatures and pressure. Turbo bearing lubrication is critical, particularly for a newly installed turbo or one which has not been operated for a period of time and all oil has drained from the bearing and shaft surfaces. To avoid turbocharger bearing failure, the following instructions are recommended:

• Start the engine at least every 30 days to ensure turbo bearing lubrication. Operate engine at low idle for at least three minutes before increasing RPM or driving the vehicle.

• If the engine has not been run for more than 30 days, turbo pre-lube procedure is necessary:

1. Remove turbo air intake duct and oil line connection at turbo.

2. Fill oil inlet fitting to overflow with clean engine oil.

3. Using fingers at compressor wheel, carefully spin and wiggle the turbo shaft to distribute the oil over all bearing surfaces.

4. Reconnect air intake duct and again fill turbo oil port to overflow, connect oil line and start engine.

5. Operate engine at low idle for at least three minutes before increasing RPM or driving the vehicle.

https://truckmanualshop.com/

CLEANING YOUR VEHICLE

The best protection against environmental influences that can hurt your vehicle's finish is frequent washing and waxing. How often this is required depends on how much the vehicle is used, where it is parked and weather conditions. Frequent washing is required to remove oils, dirt and grime that can stain and oxidize the painted and polished surfaces of your new truck.

Exterior Washing

Recommendations for the first 30 days...

• Only wash the vehicle by hand with cool water, a mild car wash solution and a soft cloth or sponge. Do not use a commercial truck wash.

• Wash the vehicle in the shade, never in direct sunlight.

• Do not dry wipe the finish; always use clean water. Dry wiping could scratch the finish.

• Do not park near factories with heavy smoke fallout for extended periods of time.

• Bird droppings have high acid content and can damage freshly painted surfaces. They should be cleaned off as soon as possible.

• Do not spill gasoline, diesel fuel, oil, antifreeze, transmission fluid or any solvents of the like on the new finish. If you do... IMMEDIATELY rinse off with water. DO NOT WIPE.

• Do not scrape ice or snow from surface. Brush off the loose material with a soft snow brush.

Recommendations for the first 90 days...

• Do not wax or polish the vehicle; this will allow the finish to dry and harden completely. (Do not use waxes or polishes that contain silicone.)

Note: Do not wash the vehicle in direct sunlight.

DANGER

Test the service brakes after washing the vehicle. Moisture and/or ice on the brakes can affect braking efficiency.

Note: When washing the vehicle in cold/freezing weather, avoid direct water spray into the door lock cylinders, as the water may freeze in the lock mechanisms.

https://truckmanualshub.com/

CAUTION

Proper care of the paint finish is an important part of the durability. Chemicals used to wash the paint should be of neutral pH with a range of between 6 and 8. Detergents containing butyl cellosolve or potassium hydroxide should not be used.

Note: Vehicles should be washed only in special wash bays to protect the environment from cleaning agent contamination.

DANGER

Vehicle cleaning products must be handled carefully, as these products may be poisonous. Keep all cleaning products out of the reach of children.

WARNING

Do not clean the underside of the fenders, cab, chassis, etc., without protecting the hands and arms, as injuries may result when scraping against sharp edges.

https://truckmanualshub.com/

CAUTION

For chassis used in concrete operations, do not use muriatic acid or similar types of products to clean concrete from the cab or frame surfaces. Use of these types of products will damage the paint finish and void the vehicle warranty. Mack Trucks, Inc. has approved EL-ReadyMix Truck Wash & Wax for removing concrete from the vehicle surfaces. This product is available on a direct ship basis from EMS®. For additional information, contact EMS® at 800-510-8812, or on their web site at www.enviromfg.com.

Note: Unprotected aluminum surfaces will form an oxide layer if not maintained. This is especially important during cold season when roads are salted or in coastal areas where the salt level in the air is high. Clean with steam or high pressure water. Use a mild detergent if the dirt is heavy. Rinse well. Clean aluminum surfaces with warm water. If the surface has heavy dirt or tar spots, use a tar remover. To prevent spotting, wipe aluminum surfaces dry after washing. The use of an aluminum protective Carnuba-based wax is recommended after washing for longer term protection from road salts and spotting.

Cab and Hood

• Soften the dirt on your cab with plenty of water and rinse.

• Clean truck with a soft sponge/brush starting at the roof and working downward using slight pressure.

• Use mild detergent. Never use strong soaps or chemical detergents. Any commercially available cleaner designed specifically for automotive finishes may be used for cleaning the cab and hood surfaces. The 3M company and Mequiar's® have a complete line of automotive cleaning products available that are approved for use on MACK vehicles.

• Rinse the sponge or brush often to keep it clean.

• If possible, clean wheels and dirtier areas with a separate sponge/brush. This will help avoid scratching body paint with grit from other areas.

http://truckmanualshub.com/

• Rinse truck thoroughly with water and wipe dry with a soft clean chamois or all cotton towels to avoid surface scratches and water spotting.

CAUTION

Do not clean the underside of the fenders, cab, chassis, etc. without protecting your hands and arms. You may injure yourself on sharp-edged parts.

Chassis

• Wash away excess dirt and grime with water from a hose.

• Use a mild detergent/soap and a soft brush to remove road grime and salts that can collect on the frame.

• Rinse thoroughly with a hose.

Note: Cleaning of your chassis on a regular basis will help deter accelerated corrosion and rust on the frame and components. Chemicals used for ice and snow removal and dust control can collect on the frame. If these are not removed in a timely manner, accelerated corrosion can occur on fuel lines, frame, and other components even though they have corrosion protection.

Cab Interior

• For cleaning vinyl upholstery and lining: wipe with a soft cloth, using a good commercial upholstery cleaner. Do not use acetone, lacquer thinner, etc.

• For cleaning fabric upholstery: use an upholstery shampoo specially designed for this purpose. Follow the directions on the manufacturer’s label.

Waxing

• Always use waxes and polishes that are non-abrasive. Do not use waxes or polishes that contain silicone.

• When water does not form small drops and roll off clean paint, apply a coat of good hard wax.

• Even if a liquid wax solution is used on a regular basis, it is advisable to protect the finish with a hard wax at least twice a year.

• Your truck may have a basecoat plus clearcoat. Use a basecoat/clearcoat wax on your paint finish.

https://truckmanualshub.com/

Polishing

Polish your truck only if the paint has lost its shine and the gloss cannot be brought back with wax. It is recommended to have a professional polish your truck to avoid swirl marks or damage to the painted surface. Mequiar's® has a complete line of waxes, polishes and other cleaning and care products that are approved for use on MACK cabs, hoods and sleeper surfaces.

Winter Warnings

• If you rinse your vehicle with a hose, avoid direct water into lock cylinders. You may experience freezing of the lock mechanism.

• Test brakes after each vehicle wash. Moisture and ice on brakes can affect braking efficiency.

A well kept vehicle can look like new after many years of service. Proper care and maintenance can help you keep your vehicle's beauty and value. You can get an assortment of Mack Trucks approved cleaning products from your local Mack dealer.

http://truckmanualshub.com/

TOWING

Tow pins, hooks, eyes, etc., are located in or behind the front bumper. These devices meet the recommendations for towing set forth by the Technology and Maintenance Council (TMC) of the American Trucking Association and can be used for towing a disabled vehicle from the immediate location.

CAUTION

Do NOT lift and tow any vehicle by tow pins, hooks, eyes, etc. If the vehicle is mired in heavy mud, snow, etc., use a suitable sling-type towing arrangement.

Note: Tow pins, hooks, eyes, etc., are NOT intended for use as long-term towing devices.

CAUTION

Failure to disconnect the driveshaft, remove the drive axle shaft(s) or lift the drive wheels off the ground before towing or pushing the vehicle, can cause serious transmission damage.

DANGER

If the drive shaft has been removed for towing, DO NOT reuse bearing retainer bolts or stamped strap bolts, or stamped straps. Reuse of bearing retainer bolts or stamped strap bolts, or stamped straps can cause driveline failure, which can result in separation of the driveline from the vehicle. A separated driveline can result in property damage, serious personal injury or death.

https://truckmanualshub.com/

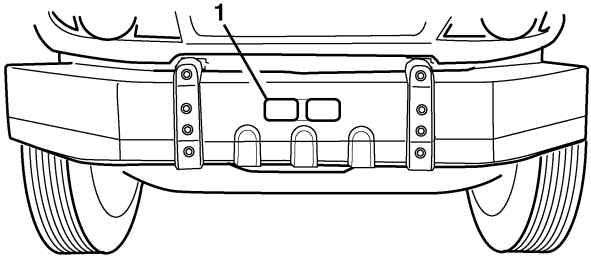

C0029851

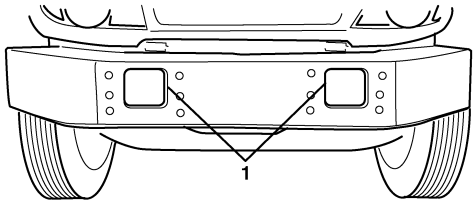

C0029852

1. Towhook Access

https://truckmanualshub.com/

ENGINE OIL LEVEL CHECK

As the operator of this vehicle, it is important for you to perform the daily inspections necessary to keep your truck in good shape. Maintaining the proper oil level in your engine crankcase cannot be overemphasized.

Before checking the oil, remember these important points:

• Measurement of the oil level must be taken on level ground.

• The best time to check oil level is while the engine is COLD (prior to starting at the beginning of the work day, or after the vehicle has sat approximately 2 hours). At normal operating temperature (engine oil temperature above 79.4°C [175°F]), oil level can be checked 15 minutes after shut down.

CAUTION

Failure to wait a sufficient amount of time (2 hours if engine oil temperature is below 79.4°C [175°F]) or 15 minutes if oil temperature is above 79.4°C [175°F]) will result in an inaccurate dipstick reading.

• The level must be close to the FULL line (at least between the ADD and FULL lines) on the dipstick, but must NOT exceed the FULL line (refer to illustration below).

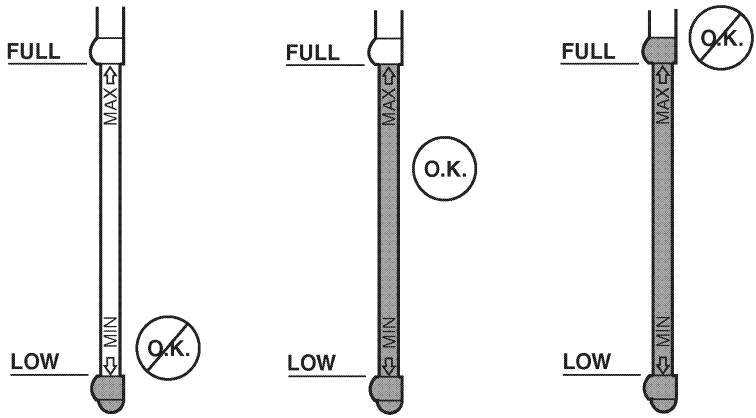

C0029422

https://truckmanualshop.com/

Chassis Equipped with Snowplow Hood Option

An optional hood is available for chassis equipped with a snowplow. This hood has an opening on the driver-side which provides the operator easy access to the engine oil dipstick and the engine oil fill tube without having to raise the entire hood. See illustration below.

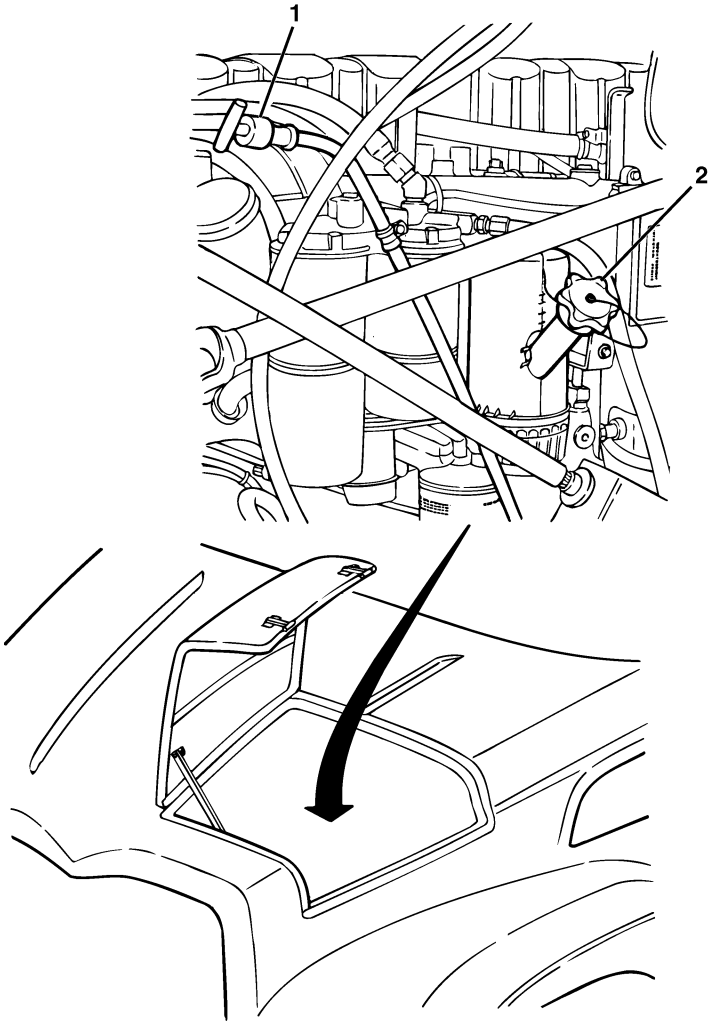

C0029853

https://truckmanualshub.com/

1. Engine Oil Dipstick	2. Engine Oil Fill Tube

Power Steering Reservoir

The Power Steering system uses only DEXRON® type automatic transmission fluid.

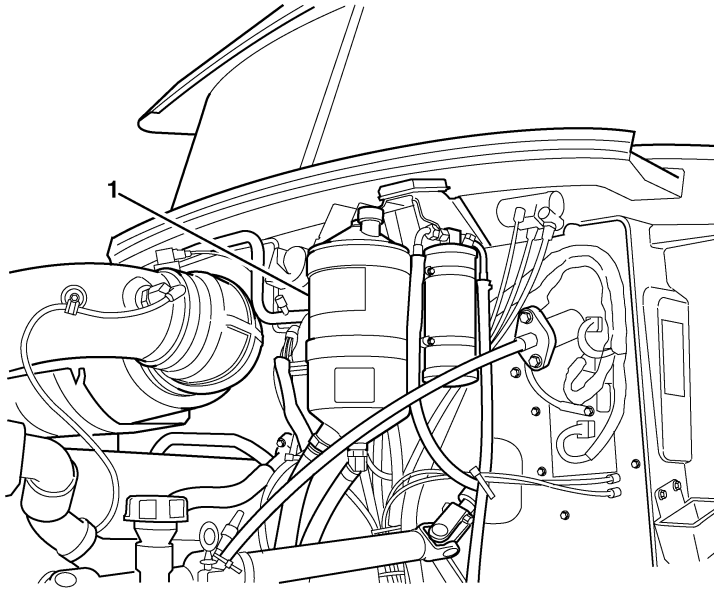

Power Steering Reservoir

1. Power Steering Reservoir

For additional information about power steering, refer to the *Maintenance and Lubrication Manual (TS494).*

https://truckmanualshub.com/

FUEL TANK

Your vehicle may be equipped with an isolated fuel tank. If so equipped, the following label will be affixed to the fuel tank decal.

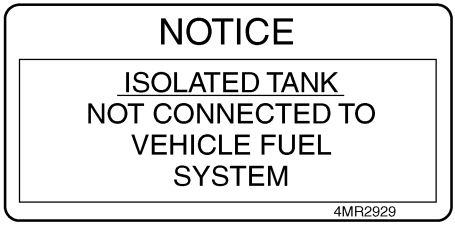

C0029424

Fuel Tank Cap

Use MACK approved non-vented cap only or tank damage and/or poor engine performance may result. DO NOT fill to more than 95% of liquid capacity.

https://truckmanualshub.com/

FUELING

DANGER

DO NOT carry extra fuel containers in the cab. Fuel containers, full or empty, may leak, explode or give added fuel to a fire. Failure to follow this precaution may lead to serious personal injury or death.

DANGER

DO NOT smoke while fueling the vehicle. The glow from the cigar/cigarette can ignite the diesel fuel, causing an explosion resulting in serious personal injury or death.

DANGER

Do not remove the fuel tank cap near an open flame. Diesel fuel vapors are combustible and can cause an explosion or fire, resulting in severe personal injury or death.

CAUTION

Diesel-powered engines for heavy-duty trucks built on or after January 1, 2007 are designed to operate only with Ultra Low Sulfur Diesel (ULSD) fuel. Improper fuel use will reduce the efficiency and durability of engines, permanently damage advanced emissions control systems, reduce fuel economy and possibly prevent the vehicles from running at all. Manufacturer warranties will be voided by improper fuel use. Additionally, burning Low Sulfur Diesel fuel (instead of ULSD fuel) in 2007 and later model year diesel-powered cars, trucks and buses is illegal and punishable with civil penalties.

https://truckmanualshub.com/

CAUTION

Ultra Low Sulfur Diesel (ULSD) fuel with a maximum sulfur content of 15 ppm must be used in order to meet Euro4 engine emission requirements.
Using otherwise approved diesel fuels with a maximum sulfur content greater than 500 ppm may shorten engine life and void the engine warranty.

Air is always present inside the fuel tanks, entering mainly through the tank ventilation. With the air being heated and cooled, condensation is formed and water is mixed in the fuel. To avoid condensation when the vehicle is parked for longer periods, fill the tanks up to 95% of capacity. Do not fill more than that, as the fuel needs to have room for expansion during the heat of the day.

BioDiesel

Soy Methyl Ester (SME or SOME) BioDiesel fuel in blends up to a B5 concentration (5% blend) is approved by Mack Trucks, Inc.

Note: Although higher concentrations are available, concentrations up to B5 (maximum) are the only blends currently approved by Mack Trucks, Inc.

Note: MACK Engines are certified to comply with U.S. EPA and California Air Resources Board (CARB) emissions standards based on the use of reference test fuels commonly available in the United States and specified in this manual. Use of alternative fuels, including BioDiesel, may affect engine emissions. Mack Trucks, Inc. does not warrant, and is not responsible for ensuring that the engines will comply with U.S. EPA and CARB emissions standards.

B20 Approval For Mack EPA 07 Certified Products

Mack engines are certified to comply with U.S. EPA and California emissions standards based upon the use of test fuels with specifications established by these regulatory agencies. Alternative fuels, including biodiesel, that are not substantially similar to the required test fuels may adversely affect engine emissions compliance. As a result, Mack does not warrant the engine will conform to applicable Federal or California emissions limits when operated on biodiesel or other alternative fuels that are not substantially similar to specified test fuels used for certification.
However, the use of biodiesel up to a maximum of 20% (B20) in and of itself, will not affect the manufacturer’s mechanical warranty as to engine and emissions system related components, provided the bio fuel used in the blend conforms to ASTM D6751, B1 to B5 blends conform to ASTM D975, and B6 to B20 blends conform to ASTM D7467.

https://truckmanualshub.com/

COOLING SYSTEM

The cooling system is a pressurized system. The coolant is circulated by a centrifugal pump. It is a typical system in most respects, but there are a few things to keep in mind when checking or working on the cooling system.

WARNING

Keep clear of fan when engine is running. Fan may start to rotate at high speed without warning.

WARNING

Avoid injury when checking coolant in a hot engine. Wait for the engine to cool prior to checking the level whenever possible.

Coolant Level Check

WARNING

Turn the cooling system pressure cap counterclockwise slowly. After the pressure has completely dissipated, continue turning to remove the cap.

Your MACK model chassis has a pressurized plastic coolant expansion tank where quick checks of coolant level can be made and additional coolant can be added to the system. The expansion tank is mounted on the radiator.

https://truckmanualshop.com/

Periodically, the coolant level should be checked by observing the coolant in the expansion tank.

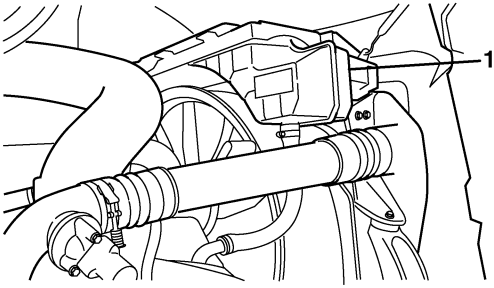

C0029854

1. Expansion Tank

Draining the Cooling System

Whenever repairs are to be made which would require disconnection of coolant hoses, etc., the cooling system should be drained. Carefully remove the filler cap and remove all pipe plugs.

Refilling the Cooling System

Close all drain cocks and fill with the proper coolant mixture. Run engine with the pressure cap removed until operating temperature is reached and the thermostat opens. Recheck level and add coolant if required. Run the engine long enough to be sure the system is free of air and has the correct amount of coolant.

Protecting the Cooling System

CAUTION

The concentration of ethylene glycol or propylene glycol in the cooling system must be checked with a refractometer prior to traveling or operating in areas where subfreezing temperatures may be encountered. When adding antifreeze to the system, run the engine for 20 minutes before checking with a refractometer.

Note: Your chassis is currently supplied from the factory with engine coolant protection to –23°C (–10°F). Optional coolant protection to –40°C (–40°F) is also available.

http://truckmanualshub.com/

Ethylene glycol or propylene glycol-based antifreezes are both approved for all MACK engines. All ethylene glycol and propylene glycol coolants must be low-silicate antifreezes which meet ASTM4985 test (GM6038M SPEC) criteria. These antifreezes are sometimes referred to as heavy-duty diesel coolants. Passenger car coolants do NOT meet this specification.

Be sure to maintain the required level of antifreeze protection for anticipated winter temperatures in your area of operation. A 40% to 60% concentration of antifreeze is required for MP engines, regardless of application, geographic location or ambient air temperature.

CAUTION

Do NOT exceed a 60% concentration of antifreeze to water. A higher percentage of antifreeze will not increase protection. Concentrations over 60% adversely affect freeze protection and heat transfer rates.

Note: Propylene glycol should be checked with a refractometer.

Note: ALWAYS mix the water/antifreeze solution before pouring it into the cooling system.

Note: The piping arrangement may cause capacity variation depending on the type of cooling system and optional external cooling devices which may be attached. Therefore, it is difficult to tell exactly how much coolant it will take to fill any one particular system.

CAUTION

Do NOT use coolant solutions which contain anti-leak additives in trucks equipped with coolant filters or conditioners.

CAUTION

Do NOT use soluble oil-type coolants in any MACK cooling system.

https://truckmanualshub.com/

Cooling System Maintenance

The cooling system must be maintained by performing regularly scheduled maintenance as outlined in the Maintenance and Lubrication Manual (TS494). Cold weather operations, however, place added demands on the cooling system. Prevent potential cold weather problems by performing a quick check of the cooling system as outlined below:

• Make a general check for cooling system leaks.

• Inspect hoses and clamps for leaks and condition. Tighten hose clamps to specifications (as required).

• Check coolant level. Add fresh coolant (in specified concentration) as necessary.

• Check and record degree of antifreeze concentration. Add antifreeze as necessary to obtain required protection level.

For additional information concerning the cooling system, refer to the *Maintenance and Lubrication Manual (TS494)*.

Accessory Drive Belt Routing

The following diagram shows the accessory drive belt and main belt routing with and without air conditioning. This diagram is located in a clear area on the outside of the left frame between the radiator and center line of the front axle.

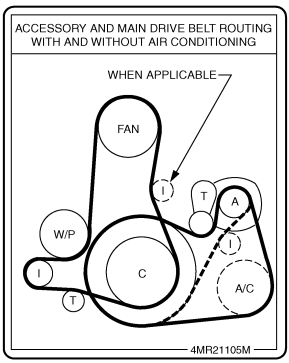

1
C0029647

Accessory and Main Drive Belt Routing

1. Accessory and Main Drive Belt Routing MP7 Engine

https://truckmanualshub.com/

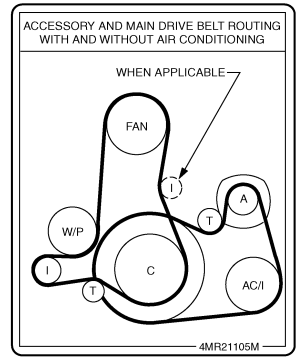

1

C0029426

Accessory and Main Drive Belt Routing

1. Accessory and Main Drive Belt Routing MP8 Engine

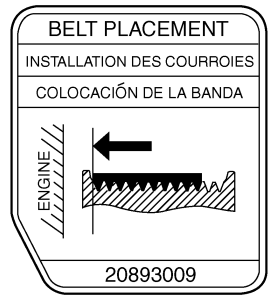

C0029855

Accessory and Main Drive Belt Routing

https://truckmanualshub.com/

HEADLIGHTS

Bulb Replacement

Note: The long-life halogen bulbs can be replaced without tools.

CAUTION

Never touch the glass of a halogen bulb with your bare hands or a dirty rag. Oils and other contaminants can greatly reduce bulb life or cause the bulb to explode.

• Open the hood. To access the headlight area, remove the wing nut on the headlight housing cover and lift the cover.

• Turn the appropriate bulb holder counterclockwise to remove the bulb.

• Reverse this procedure for reinstallation.

http://truckmanualshub.com/

WHEELS

Wheel Inspection

Look at the wheels and cap nuts. Inspect them for evidence of cap nut looseness. Rust streaks from the cap nut ball seat are an indication of looseness. Refer to the Maintenance and Lubrication Manual (TS494) for complete procedures concerning wheel inspection and wheel nut tightening.

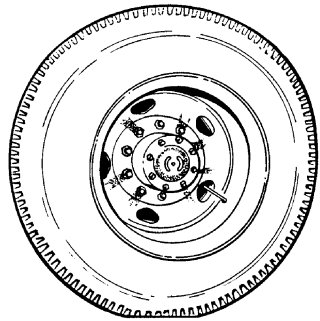

C0029431

Look for cracks around the hand hole, stud hole and wheel. Look for broken studs, wheel damage or improperly seated lock rings.

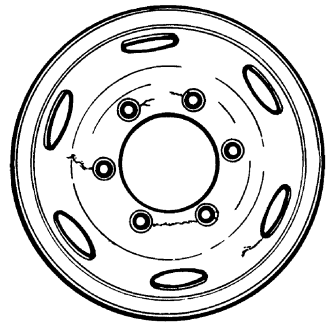

C0029432

https://truckmanualshop.com/

Tires

DANGER

Tires used on multipiece rims must be assembled and inflated only by experienced, qualified personnel. Tires must be inflated in a safety cage whenever possible. If, however, a safety cage is not available, use a portable lock-ring guard. The tire must be deflated prior to removal of the tire-and-rim assembly from the vehicle. Remove the valve core to ensure complete deflation.

DANGER

NEVER position your body in front of the rim during inflation.

CAUTION

NEVER use water-based sealants, puncture proofing, or liquid balance materials containing water in All-Steel Radial Ply truck tires.

Inflation Pressure

To ensure maximum mileage and overall performance from your tires, it is essential that they operate at the correct inflation pressure for the load carried. Inflation pressure should be checked daily while the tires are cold. Always use an accurate tire pressure gauge. NEVER bleed air from a hot tire, as it will then be underinflated. Refer to the specific tire manufacturer's data books, or to the vehicle certification label for a complete listing of tire inflation pressures. For additional information concerning tire care, refer to the *Maintenance and Lubrication Manual (TS494)*.

WARNING

UNDER NO CIRCUMSTANCES should you drive on underinflated or overloaded tires. A tire in this condition builds up excessive heat which can result in sudden tire destruction, property damage and personal injury.

http://truckmanualshub.com/

CAUTION

Never bleed air from your tires in an attempt to gain traction for a vehicle stuck in snow, ice or mud. This practice provides no additional traction and typically results in underinflated tires. Never bleed air from a hot tire since that tire will then be underinflated.

To adjust for pressure fluctuations induced by temperature changes associated with winter weather, it is recommended that tire inflation pressure be checked daily when the tires are cold (i.e., before the vehicle is driven). Always use an accurate tire pressure gauge.

Inspection

Inspect your tires daily. Look for bulges, cracks, cuts, penetrations and/or oil contamination. If any such damage is found, the tire must be thoroughly inspected by a qualified tire inspector and repaired or discarded immediately, at his discretion. Also, check for uneven wear. If found, a thorough inspection of front end parts and alignment should be made by a qualified mechanic. Refer to the Maintenance and Lubrication Manual (TS494) for more information.

Tire Manufacturer's Data Book

Specific and more detailed information can be obtained by referring to the technical data books provided by each tire manufacturer.

Subjects of interest are:

- High-speed or low-speed operation
- Repair, retreading and regrooving
- Use of tire chains
- Mixing radial and bias tires on the same vehicle
- Use of dynamometers
- Tire mounting/dismounting

https://truckmanualshub.com/

CAUTION

For important tire information (i.e., high speed limits, inflation pressures, etc.), consult the product information available through the specific tire manufacturer.

Oil Contamination of Tires

Lubricating oils, fuel oil, gasoline and other petroleum derivatives, if allowed to contact tires, will soften the rubber and destroy the tire. Preventive maintenance is necessary to ensure that oil leakage does not occur. The following areas should be inspected on a regular basis:

- Axle end seals
- Engine seals
- Transmission seals
- Drive axle seals
- Oil filters
- Oil and hydraulic lines (if equipped)
- Refer to the *Maintenance and Lubrication Manual (TS494)*, specific tire manufacturer's books, or to the vehicle certification label, for additional information concerning tires and their care.

https://truckmanualshub.com/

BATTERY

CAUTION

To avoid damage to sensitive electronic equipment, disconnect ALL battery cables and harnesses to electronic control units before welding. Do NOT disconnect batteries while engine is running.

Jump-Starting Engine

If you encounter a situation in which it is necessary to jump-start an engine, use the following procedures.

WARNING

Batteries which are to be linked together must be of the same voltage (12 to 12, 24 to 24). Take care to observe proper polarity when connecting batteries. Batteries produce explosive gases. Keep sparks, flames, cigarettes, etc., away from batteries at all times. Protect your eyes by wearing safety goggles. Be sure vehicles are NOT touching each other.

CAUTION

To avoid damaging any electronic controllers when jump-starting a V-MAC vehicle, always turn the ignition switch OFF before connecting the batteries.

1. Connect the positive (+) cable to positive (+) post of discharged battery or to the positive post of the remote jump-start connector (if equipped).

2. Connect the other end of the same cable to the positive (+) post of the booster battery.

3. Connect the second cable, negative (-) side, to the other post of the booster battery.

4. Make the final connection to the negative (-) battery terminal or the remote jump-start connector (if equipped) of the stalled vehicle, and stand back.

https://truckmanualshub.com/

5. Start the vehicle with the booster batteries and then start the stalled vehicle. Shut down the vehicle with the booster batteries and remove the cables in the reverse order of connection.

WARNING

Do NOT connect the final negative (-) connection to the frame of the stalled vehicle. This would cause all current to flow through the master ground circuit breaker resulting in overload.

https://truckmanualshub.com/

ELECTRICAL

Circuit Breaker and Relay Panels

The electrical equipment cover for this vehicle is located in the middle of the dash under the top cover.

The cover panels are fastened with screws. Most relays and fuses are accessible from under the top cover. Since the function of some fuses or relays may change for the vehicle operation, refer to the list of functions that is attached beneath each panel.

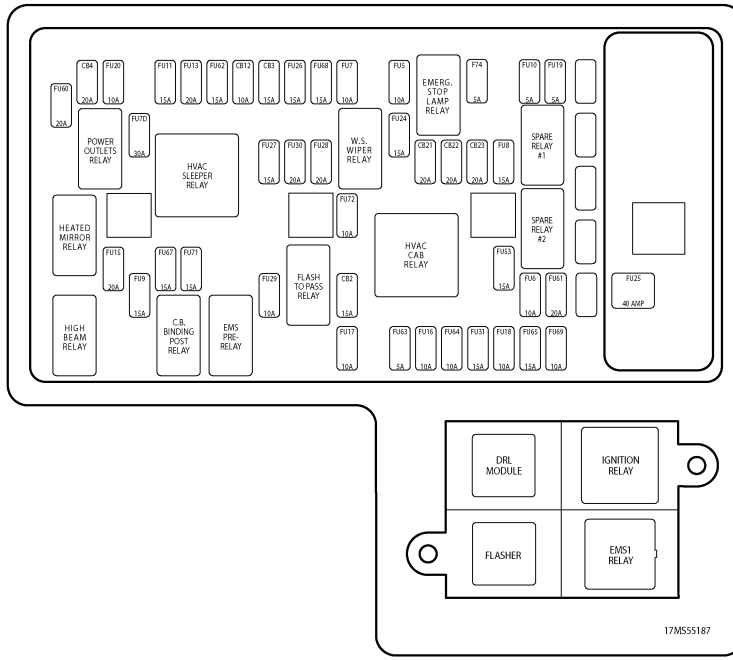

C0029433

https://truckmanualshub.com/

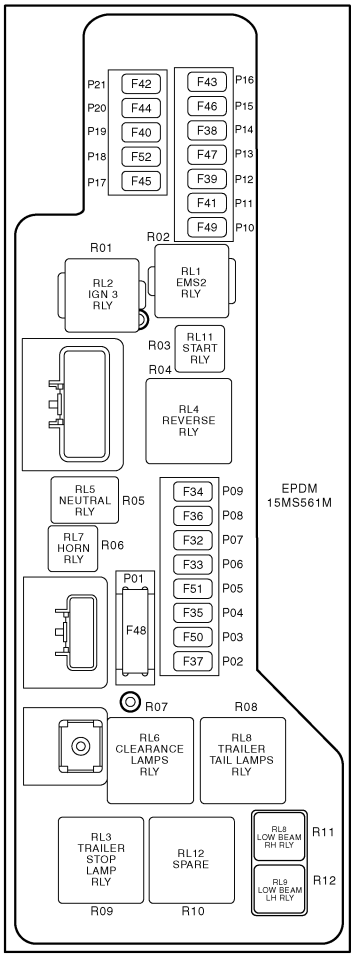

1

P01 F48-SLEEPER/AUX PWR-40A MAX

P02 F37-TRAILER TAIL LAMP-30A

P03 F50-LOW BEAM LH-10A

P04 F35-CLEARANCE LAMP-30A

P05 F51-LOW BEAM RH-10A

P06 F33-STOP LAMP-30A

P07 F32-SPARE BODY BLD-25A MAX

P08 F36-HORN-15A

P09 F34-REV/NEUT. PWR-30A

P10 F49-ABS, IGN-10A

P11 F41-ENGINE COMP. 1-15MAX

P12 F39-TRAILER ABS-30A

P13 F47-TRANS/SPARE-15A MAX

P14 F38-ENGINE ECU-25A

P15 F46-SPARE-20A MAX

P16 F43-ENGINE COMP. 2-10A

P17 F45-FUEL HTR-30A

P18 F52-SPARE/GRD DO6-15A MAX

P19 F40-SPARE-15A MAX

P20 F44-AIR DRY/DRAIN VALVE-25A

P21 F41-SPARE-20A

EPDM DEVICE LAYOUT

2

C0029434

1. Front	2. Back

Note: For circuit breaker designations, refer to the Circuit Protection charts.

http://truckmanualshub.com/

Fuses are standard equipment for all circuits except the headlamps and windshield wipers. Circuit breakers are available as optional equipment.

CAUTION

For proper installation of electrical accessories, all wiring should meet SAE requirements and be routed through the circuit protection panel with proper amperage fuses or Type II circuit breakers. (Headlights and wipers will be on Type I, cycling-type circuit breakers.)

Some vehicles may be equipped with daytime running lights. For the daytime running lights to be operational, a DRL module must be installed in the relay socket marked either DRL MOD or Running Lamps on the electrical equipment panel. Do NOT install a standard relay into the daytime running light relay socket (marked either DRL MOD or Running Lamps) or a short circuit in the headlight high beam circuit will result.

The headlight circuits are protected by SAE Type I (automatic reset-cycling) circuit breakers that automatically interrupt then restore the flow of current through the circuit in the event of an overload. This cycling will continue until the cause of the overload is repaired.

SAE Type II (automatic reset, non-cycling) circuit breakers (if equipped) provide a complete circuit disconnect until the overload is corrected. The power to the affected circuit breaker must be shut off before the circuit breaker will reset itself.

The circuit protection panel also provides access to battery, ignition and ground terminals for non-factory installed electronic equipment. (On V-MAC chassis, there are two serial link terminals for easy local connection of a trip recording device.)

Electrical Grease

To prevent corrosion of the lamp socket terminals, particularly with the clearance and marker lamp, apply a coating of electrical sealing grease, such as Lubriplate DS-ES or TEK-519, to the socket and terminal assemblies.

CAUTION

Do not use electrical grease on any V-MAC connectors.

https://truckmanualshub.com/

Circuit Protection Charts

Cab Circuit Protection			
#1	#2 – 15A	#3 – 15A	#4 – 20A
Open	Headlamps, DRL Module, Fog Lamps	Park & Tail Lps., Marker Lamps	Direct Lps., Flasher
#5 — 10A	#6 — 10A	#7 — 10A	#8 — 15A
Tractor Stop Lps.	Dome Lps., Courtesy Lps.	Ign. Switch	Air Solenoid
#9 — 15A	#10 — 5A	#11 — 15A	#12 – 10A
CB Posts	Communication Connector (DDL), Radio	Battery Stud	Electric Door Locks
#13 – 20A	#14	#15 – 20A	#16 – 10A
ABS	Open	Heated Mirrors	Vehicle Control Unit (VCU)
#17 – 10A		#18 — 10A	#19 — 5A
Clutch Switch, Engine Brake, Cruise On/Off & Set/Resume, Override Switch, Park Brake, PTO w/o T2000, Spare (VCU) Relay Coils		DPF Switch Power/Spare	ABC Cluster
#20 – 10A	#21 — 20A	#22 — 20A	#23 — 20A
Moto Mirrors	Windshield Wiper & Washer	LH Window Lift Motor	RH Window Lift Motor
#24 — 15A	#25 – 40A	#26 — 15A	#27 — 15A
Spare Batt./Ign. Power	Heater/Air Conditioner	Hook-Up Lps.	Ignition Stud

http://truckmanualshub.com/

Cab Circuit Protection			
#28 — 20A	#29 — 10A	#30 — 20A	#31 — 15A
Htd. seats	EMS #1 Relay Coil/Short Range Wireless	Opt. Ign. Power Sw., Spare	Auto shift trans. or spare
#53 — 15A	#60 — 20A	#61 — 20A	#62 — 15A
A/C Comp. Clutch	2-Power Outlet Sockets	Aux. sw's/Spare	Spare/Battery
#63 — 5A	#64 — 10A	#65 — 15A	#67 — 15A
ABC Gauge Cluster	Cold Start	VORAD Module	Spare/Battery
#68 — 15A	#69 — 10A	#70 – 30A	#71 — 15A
Cigar Lighter	Keyless Entry Module	HVAC Sleeper	Transmission
#72 — 10A	#74 — 5A		
HVAC/Control Unit	Illumination		

https://truckmanualshub.com/

Engine Circuit Protection (V-MAC IV)			
#32 — 30A	#33 — 30A	#34 — 30A	#35 — 30A
Spare Body Bld.	Trailer Stop Lps.	Reverse/Neutral Power	Cab & Trailer Clearance Lps.
#36 — 15A	#37 — 30A	#38 — 25A	#39 — 30A
Horn	Trailer Tail Lps.	Engine Control Unit (ign.)	Trailer ABS Power
#40 — 15A	#41 — 15A		#42 — 20A
Spare	Engine Compartment		Back-Up Lps.
#43 — 10A	#44 — 25A	#45 — 30A	#46 — 20A
Engine Compartment	Air Dryer, Htd. Drain Valve	Fuel Heater	NOx Sensor/Spare
#47 — 10A	#48 — 50A	#49 — 10A	#50 — 10A
Meritor Trans. EOA or Spare	Sleeper Box	ABS	Low Beam L.H.
#51 — 10A	#52 — 15A		
Low Beam R.H.	Spare/Guard Dog		

http://truckmanualshub.com/

Electrical Accessory Connection Points

CAUTION

The electrical systems on all MACK chassis include a circuit breaker located in the ground circuit. Any additional electrical components that may be added MUST not be connected directly to the battery or negative connection of the starter. Doing so may defeat the protection provided by this circuit breaker. Components may be ground connected to other locations, such as frame or engine grounding points.

This MACK chassis is ready for convenient installation of electrical accessories. Use only the designated CB jacks on the dashboard, or battery post (12 volts), ignition, ground post, buffered tachometer (RPM) output, and buffered speedometer (MPH) output connections available on the electrical equipment panel. Each connection point is described below.

Battery Post (BATT)

This is a 12-volt, unswitched battery power connection. It can be used to power external devices that require power at all times, even when the key is turned off. This source is protected by a 20-amp circuit breaker.

Ignition Post (IGN)

This is a 12-volt, switched battery power connection. It can be used to power external devices that require power only when the key is turned on. This source is protected by a 15-amp circuit breaker.

Ground Post (GND)

This is a ground connection. It can be used as a power return connection for external devices.

https://truckmanualshub.com/

WARNING

The tachometer output, speedometer output, and serial links A and B are for specific hookups. These terminals should be used only for their specified purposes and connection to these terminals should be done only by a qualified service technician.

Note: The tachometer output and speedometer output are 50% duty cycle, Transistor-Transistor Logic (TTL) compatible, square wave signals that are calibrated to provide a standard pulse rate of 12 pulses per engine revolution for the tachometer output and 30,000 pulses per mile for the speedometer output. TTL compatibility of these outputs may be affected by other devices connected to these outputs.

Tachometer (RPM) Output

This terminal is to be used for devices requiring information for engine speed signals. (See the Warning and Note above.)

Speedometer (MPH) Output

This terminal is to be used for devices requiring information for vehicle speed signals. (See the Warning and Note above.)

SAE/ATA J1708 Posts (Serial Links A and B)

This is a serial communication interface. It conforms to the SAE/ATA J1708 Recommended Practice for Serial Data Communications Between Microcomputer Systems in Heavy-Duty Vehicle Applications. (See the Warning above.)

CB Radio Power Jack

The CB radio power jacks are located on the dashboard of the day cab, and on the headliner of the sleeper.

Power Jack (+) This is a 12-volt, switched battery connection. It is to be used to power the vehicle's CB radio. It is protected by a 15-amp circuit breaker and will supply power when the key is in the ACCESSORY position or ON position.

Power Jack (-) This is a ground connection. It is to be used as a power return connection for the vehicle's CB radio.

http://truckmanualshub.com/

Body Builder Connectors

The Mack® Granite™ GU axle back chassis offers two optional body builder interface connectors located inside the frame rail on the right-hand side of the chassis behind the cab.

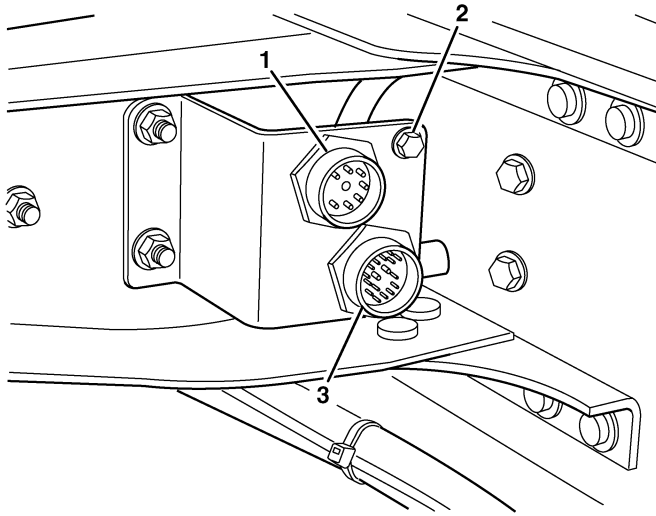

C0029856

Inside the Frame Rail

1. Upper Connector 2. Ground Stud	3. Lower Connector

https://truckmanualshop.com/

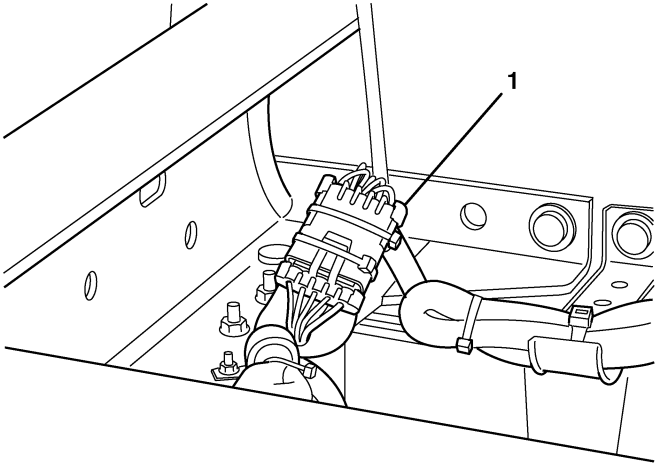

C0029857

Inside the Back of the Frame Rail

1. 5-Way Lighting Connector

http://truckmanualshub.com/

These connectors provide connections to the following circuits:

Upper Connector:

Electrical Connection	Fused amps
• 12V battery feed	30A
• 12V battery feed	30A
• 12V Ignition feed	30A
• 12V Ignition feed	30A
• Reverse Power feed/Neutral Power feed	15A
• Stop Lamp Signal	30A
• Tail Lamp Signal	30A
• Clearance Lamp Signal	30A

https://truckmanualshub.com/

Lower Connector:

Electrical Connection	Fused amps
• Back Up Lamp Signal	15A
• Dash Mounted 12V Battery Switch**	20A
• Dash Mounted 12V Ignition Switch**	20A
• PTO 1 & PTO 2 Signals	
• Speed Control Input	
• Set Speed Input	
• Resume Speed Input	
• Throttle Signal	
• J1587/1708 Diagnostic Bus Connectors (-/+)	
• RH & LH Turn Lamp Signals	
• RH & LH Turn/Stop Lamp Signals	
• Buffered MPH & RPM Output Signals	
• Dash Mounted Body Lamp Signal*	
• Spare: 14 Gauge (5)***	
• Spare: 16 Gauge (1)***	

* An input signal (12V) connection is included in Body Link if the Body Lamp is ordered.

** Output power is included in Body Link II if auxiliary or extra dash mounted battery and ignition power dash rocker switches are ordered.

*** Spare connectors are typically used to wire unique bodybuilder controls into the dash area.

https://truckmanualshub.com/

5-Way Lighting Connector:

- Parking Lamps
- Reverse Lamps
- Left Stop-Turn
- Right Stop-Turn
- Ground Connections

https://truckmanualshub.com/

METRIC CONVERSIONS

Note: Use all tools on the fasteners they were made to be used on. Use metric tools on SI metric units only. Never try to use metric tools on U.S. standard fasteners or U.S. standard tools on SI metric units.

CAUTION

Potential external/internal thread mismatch condition(s) may occur with certain metric thread-inch thread fastener combinations, and with fastener combinations involving incompatible metric fastener systems. A given thread mismatch condition can result in thread stripping and/or assembly weakness leading to potential service failure, thereby rendering a vehicle non-operational and/or unsafe for operation. The specific external/internal thread combinations from which such problems can result are identified and set forth in Maintenance and Lubrication Manual (TS494).

https://truckmanualshub.com/

SI to U.S. Conversions		
25.4 millimeters	=	1 inch
1.61 kilometers	=	1 mile
.473 liter	=	1 pint (U.S. liquid)
.946 liter	=	1 quart (U.S. liquid)
.01639 liter	=	1 cubic inch
1.3558 Newton meters	=	1 pound-foot
.746 kilowatt	=	1 horsepower
6.895 kilopascals	=	1 pound/square inch
(1.8 x degrees Celsius) + 32	=	degrees Fahrenheit
.83267 Imperial gallon	=	1 gallon (U.S. liquid)
U.S. to SI Conversions		
.03937 inch	=	1 millimeter
.6214 mile	=	1 kilometer
2.1134 pints (U.S. liquid)	=	1 liter
1.0567 quarts (U.S. liquid)	=	1 liter
61.024 cubic inches	=	1 liter
.7376 pound-foot	=	1 Newton meter
1.34 horsepower	=	1 kilowatt
.145 pound/square inch	=	1 kilopascal
.556 x (degrees Fahrenheit -32)	=	degrees Celsius
1.2009 gallons (U.S. liquid)	=	1 Imperial gallon

https://truckmanualshub.com/

© 2009 Mack Trucks, Inc. All rights reserved. Mack, Mack and the Bulldog design, V-MAC, Co-Pilot, MAXAIR and Maxitorque are registered trademarks; MACK OneCall, PowerLeash, DataMax, Pinnacle, TerraPro, Granite, and GuardDog are trademarks of Mack Trucks, Inc.

Eaton Fuller, Eaton VORAD Collision Warning System, Road Ranger, Dana Spicer and Eaton Spicer are registered trademarks of Dana Corporation.

Komfort Latch is a registered trademark of IMMI.

Bendix ABS-6 Advanced with ESP System, Steering Angle Sensor (SAS-60), Yaw Rate/Lateral Acceleration Sensor (YAS-60), Advanced EC-60 ECU and Premium EC-60 ECU are registered trademarks of Bendix Commercial Vehicle System, LLC.

Meguiar's is a registered trademark of Meguiar's Inc.

DEXRON is a registered trademark of General Motors Corporation.

TranSynd is a trademark of Castrol Limited.

EMS is a registered trademark of Environmental Manufacturing Solutions, LLC.