K1049154CEF
September 2012

EXCAVATOR

Parts Manual

DX225LCA

Serial Number 5001 and Up

Doosan Infracore
Construction Equipment

Parts Manual
DX225LCA EXCAVATOR

Serial Number 5001 and Up

DOOSAN and the DOOSAN logo are registered trademarks of DOOSAN Corporation in the United States and various other countries around the world.

K1049154CEF

September 2012

Copyright DOOSAN 2012

DX225LCA
Serial Number 5001 and Up
Pub.No. K1049154CEF

Product Label

Instructions

Trim Out The Label Along The Lines And Insert Into Pocket On The Binder Spine

Pub. No. K1049154CEF

CONTENTS

● ENGINE PARTS

Fig.	001	CYLINDER BLOCK	BLOC CYLINDRE	001-1
	002	TIMING GEAR CASE	CARTER DE DISTRIBUTION	002-1
	003	FLYWHEEL HOUSING	CARTER DE VOLANT MOTEUR	003-1
	004	CRANK SHAFT	VILEBREQUIN	004-1
	005	CYLINDER HEAD	CULLASSE	005-1
	006	VALVE MECHANISM	CALAGE D'INJECTION	006-1
	007	BREATHER PIPE	CONDUIT DE VENTILATION	007-1
	008	OIL PUMP	POMPE A HUILE	008-1
	009	OIL FILTER	FILTRE A HUILE	009-1
	010	OIL COOLER	REFROIDISSEMENT DE HUILE	010-1
	011	OIL PAN	CARTER D'HUILE	011-1
	012	THERMOSTAT	THERMOSTAT	012-1
	013	WATER PUMP & COOLING FAN	POMPE A EAU VENTILATEUR	013-1
	014	INTAKE & EXHAUST MANIFOLD	D'ADMISSION ET D'ECHAPPEMENT	014-1
	015	TURBO CHARGER & OIL PIPE	CHARGEUR DE TURBO	015-1
	016	FUEL SYSTEM	INJECTEUR ET POMPE-INJECTEUR	016-1
	017	FUEL FILTER	FILTRE A GAZOLE	017-1
	018	ALTERNATOR MOUNTING	ALTERNATEUR	018-1
	019	STARTER	DEMARREUR	019-1
	020	OVER HAUL GASKET KIT-TOP	PIECES DE RECHANGE	020-1
	021	OVER HAUL GASKET KIT-ALL	PIECES DE RECHANGE	021-1

● BODY PARTS

Fig.	1100	MAIN FRAME	BATI PRINCIPAL	1100-1
	1110	COUNTER WEIGHT - 4.1TON(DX225LCA)	MASSE D'EQUILIBRAGE	1110-1
	1115	COUNTER WEIGHT - 3.8TON(DX220A)	MASSE D'EQUILIBRAGE	1115-1
	1120	ENGINE MOUNTING	MOTEUR	1120-1
	1130	RADIATOR MOUNTING	SUPPORT DE RADIATEUR	1130-1
	1140	RADIATOR	RADIATEUR	1140-1
	1150	MUFFLER	SILENCIEUX	1150-1

1160	CAC PIPING	CHARGEE DE REFROIDISSEUR D'CAIR	1160-1
1170	AIR CLEANER	FILTRE A AIR	1170-1
1180	PUMP MOUNTING	POMPE	1180-1
1190	SWING MOTOR	MOTEUR D'ORIENTATION	1190-1
1200	FUEL TANK	RESERVOIR DE GAZOLE	1200-1
1210	FUEL PIPING	CONDUITES DE GAZOLE	1210-1
1220	OIL TANK	RESERVOIR D'HUILE	1220-1
1230	OIL COOLER PIPING(1)	CONDUITES DE HUILE	1230-1
1240	OIL COOLER PIPING(2)	CONDUITES DE HUILE	1240-1
1250	OIL COOLER PIPING(3)	CONDUITES DE HUILE	1250-1
1260	ENGINE CONTROL	COMMANDE REGIME MOTEUR	1260-1
1270	MAIN PIPING(1) - PUMP	CONDUITES DE BATI PRINCIPAL	1270-1
1271	MAIN PIPING(1) - PUMP	CONDUITES DE BATI PRINCIPAL	1271-1
1280	MAIN PIPING(2) - BOOM	CONDUITES DE BATI PRINCIPAL	1280-1
1290	MAIN PIPING(3) - ARM, BUCKET	CIRCUIT HYDRAULIQUE PRINCIPAL	1290-1
1300	MAIN PIPING(4) - SWING	CONDUITES DE BATI PRINCIPAL	1300-1
1310	MAIN PIPING(5) - CENTER JOINT	CONDUITES DE BATI PRINCIPAL	1310-1
1320	PILOT PIPING(1)	CONDUITES DE PILOTE	1320-1
1330	PILOT PIPING(2)	CONDUITES DE PILOTE	1330-1
1340	PILOT PIPING(3)	CONDUITES DE PILOTE	1340-1
1350	PILOT PIPING(4)	CONDUITES DE PILOTE	1350-1
1360	PILOT PIPING(5)	CONDUITES DE PILOTE	1360-1
1370	PILOT PIPING(6)	CONDUITES DE PILOTE	1370-1
1380	PILOT PIPING(7)	CONDUITES DE PILOTE	1380-1
1390	PILOT PIPING(8)	CONDUITES DE PILOTE	1390-1
1400	CONTROL STAND - L.H.	CONSOLE DE COMMANDE	1400-1
1410	CONTROL STAND - R.H.	CONSOLE DE COMMANDE	1410-1
1420	SEAT SLIDING PLATE	POSEZ GLISSER LE PLAT	1420-1
1430	SEAT PLATE	POSEZ LE PLAT	1430-1
1440	SEAT MOUNTING	SIEGE LE SUPPORT	1440-1
1450	SEAT	SIEGE	1450-1
1460	DUCT COVER	CONDUITES COUVERCLE	1460-1
1470	HEATER COVER	BOITIES DE CHAUFFAGE	1470-1
1480	CABIN MOUNTING	SUPPORT DE CABINE	1480-1
1490	CABIN(1)	CABINE	1490-1
1500	CABIN(2)	CABINE	1500-1

1510	CABIN(3)	CABINE	1510-1
1520	CABIN(4)	CABINE	1520-1
1525	HANDLE - CABIN	HANDLE	1525-1
1530	FLOOR MAT	PLANCHER	1530-1
1540	FLOOR PLATE	TOLE DE PLANCHER	1540-1
1550	HANDLE ASS'Y	HANDLE	1550-1
1560	ROOF COVER	COUVERCLE	1560-1
1570	FOOT REST - L.H.	REPOS DE PIED	1570-1
1580	FOOT REST - R.H.	REPOS DE PIED	1580-1
1590	SUPPORT	SUPPORT	1590-1
1600	BAFFLE	COUVERCLE	1600-1
1610	SIDE DOOR - L.H	ENSEMBLE DE PORTE	1610-1
1620	SIDE DOOR - R.H	ENSEMBLE DE PORTE	1620-1
1630	BATTERY COVER	COUVERCLE	1630-1
1640	COVER	COUVERCLE	1640-1
1650	ENGINE COVER	COUVERTURE DE MOTEUR	1650-1
1660	ACOUSTIC FOAM	ENSEMBLE DE EPONGE	1660-1
1670	UNDER COVER	TOLES IMFERIEVRES	1670-1
1680	LUBRICATION PIPING	LUBRIFICATION	1680-1
1690	ELECTRIC BOX ASS'Y	EQUIPMENT ELECTRIQUE	1690-1
1691	ELECTRIC BOX ASS'Y	EQUIPMENT ELECTRIQUE	1691-1
1700	ELECTRIC PARTS - CABIN	PIECES ELECTRIQUES	1700-1
1710	ELECTRIC PARTS - CONTROL STAND	PIECES ELECTRIQUES	1710-1
1720	ELECTRIC PARTS - RELATED	PIECES ELECTRIQUES	1720-1
1730	ELECTRIC PARTS - ENGINE	PIECES ELECTRIQUES	1730-1
1731	ELECTRIC PARTS - ENGINE	PIECES ELECTRIQUES	1731-1
1740	ALTERNATOR MOUNTING	ALTERNATEUR	1740-1
1750	ELECTRIC PARTS - WORKING LAMP	EQUIPMENT ELECTRIQUE	1750-1
1760	ELECTRIC WIRING	POSE DE FILES ELECTRIQUES	1760-1
1770	HEATER PIPING(1)	CONDUITES DE CHAUFFAGE	1770-1
1780	HEATER PIPING(2)	CONDUITES DE CHAUFFAGE	1780-1
1790	AIRCON UNIT	REFRIGERATION	1790-1
1800	AIRCONDITIONER	REFRIGERATION	1800-1

● TRACK PARTS

Fig. 2100	TRACK FRAME-LONG(DX225LCA)	TRAIN DE ROULEMENT	2100-1

2105	TRACK FRAME-STD(DX220A)	TRAIN DE ROULEMENT	2105-1
2110	TRAVEL DEVICE(DX225LCA)	SYSTEME D'TRANSLATION	2110-1
2115	TRAVEL DEVICE(DX220A)	SYSTEME D'TRANSLATION	2115-1
2120	IDLER(DX225LCA)	BARBOTIN	2120-1
2125	IDLER(DX220A)	BARBOTIN	2125-1
2130	TRACK SPRING	TENDEUR DE CHENILLE	2130-1
2140	UPPER ROLLER	GALET SUPERIEUR	2140-1
2141	UPPER ROLLER	GALET SUPERIEUR	2141-1
2150	LOWER ROLLER	GALET INFERIEUR	2150-1
2160	CENTER JOINT	JOINT CENTRAL	2160-1
2161	CENTER JOINT	JOINT CENTRAL	2161-1
2170	TRACK SHOE ASS'Y - 600G(DX225LCA)	MAILLON DE CHAINE	2170-1
2175	TRACK SHOE ASS'Y - 600G(DX220A)	MAILLON DE CHAINE	2175-1
2180	TRAVEL PIPING - LONG CRAWLER(DX225LCA)	ARMATURE DE VOYAGE	2180-1
2185	TRAVEL PIPING - STD(DX220A)	ARMATURE DE VOYAGE	2185-1

● FRONT PARTS

Fig. 3100	BOOM - 5.7m	FLECHE	3100-1
3110	ARM - 2.9m	BALANCIER	3110-1
3120	BUCKET ASS'Y - 0.92m³	ENSEMBLE DE GODET	3120-1
3130	BOOM PIPING	CONDUITES DE FLECHE	3130-1
3140	LUBRICATION PIPING - BOOM	LUBRIFICATION	3140-1
3150	ARM PIPING	CONDUITES DE BALANCIER	3150-1
3160	LUBRICATION PIPING - ARM	LUBRIFICATION	3160-1

● HYDRAULIC PARTS

Fig. 4100	MAIN PUMP	POMPE	4100-1
4110	REGULATOR	REGULATEUR	4110-1
4120	GEAR PUMP	POMPE	4120-1
4130	SWING MOTOR	MOTEUR D'ORIENTATION	4130-1
4140	SWING REDUCTION GEAR	REDEUTEUR D'ORIENTATION	4140-1
4150	TRAVEL MOTOR	MOTEUR DE TRANSLATION	4150-1
4160	TRAVEL REDUCTION GEAR	BOITE REDUCTEUR	4160-1
4170	CONTROL VALVE(1)	DISTRIBUTEUR	4170-1
4180	CONTROL VALVE(2)	DISTRIBUTEUR	4180-1
4190	CONTROL VALVE(3)	DISTRIBUTEUR	4190-1

4200	REMOTE CONTROL VALVE	VANNE DE COMMAND A DISTANCE	4200-1
4210	PEDAL VALVE	VANNE	4210-1
4220	SOLENOID VALVE	VANNE	4220-1
4230	BOOM CYLINDER - L.H.	VERIN DE FLECHE	4230-1
4240	BOOM CYLINDER - R.H.	VERIN DE FLECHE	4240-1
4250	ARM CYLINDER	VERIN DE BALANCIER	4250-1
4260	BUCKET CYLINDER - ARM 2.9m	VERIN DE GODET	4260-1
4270	PEDAL VALVE - TWO WAY	VANNE DE PEDALE	4270-1
4280	BUCKET CYLINDER - ARM 2.4m	VERIN DE GODET	4280-1
4290	BUCKET CYLINDER - ARM 3.5m	VERIN DE GODET	4290-1
4300	BUCKET CYLINDER - ARM 6.2m	VERIN DE GODET	4300-1
4310	BOOM CYLINDER - L.H (LOCK VALVE)	VERIN DE FLECHE	4310-1
4320	BOOM CYLINDER - R.H (LOCK VALVE)	VERIN DE FLECHE	4320-1
4330	ARM CYLINDER - LOCK VALVE	VERIN DE BALANCIER	4330-1
4340	GEAR PUMP-ROTATION	POMPE	4340-1

● OTHER PARTS

Fig. 5100	TOOLS	OUTILLAGE	5100-1
5110	SPARE PARTS	PIECES DE RECHANGE	5110-1
5120	NAME PLATE - CABIN(EXPORT)	PLAQUE D'IDENTIFICATION	5120-1
5130	NAME PLATE - EXPORT	PLAQUE D'IDENTIFICATION	5130-1
5140	DECAL - SPEC(DX225LCA)	DECALQUE	5140-1
5145	DECAL - SPEC(DX220A)	DECALQUE	5145-1
5150	DECAL - FUSE BOX	DECAL	5150-1
5160	DECAL - MACHINE NAME(DX225LCA)	DECALQUE	5160-1
5165	DECAL - MACHINE NAME(DX220A)	DECALQUE	5165-1
5170	DECAL - LUBRICATION(EXPORT)	DECAL	5170-1
5180	DECAL - BOOM	DECAL	5180-1
5190	DECAL - SERIAL	DECAL	5190-1
5200	DECAL - LIFTING CAPA(DX225LCA)	DECALQUE	5200-1
5205	DECAL - LIFTING CAPA(DX220A)	DECALQUE	5205-1
5210	DECAL - PATTERN CHANGE	DECAL	5210-1
5220	DECAL - PATTERN CHANGE	DECAL	5220-1

● OPTION PARTS

Fig. 6100	FUEL FILLER PUMP	POMPE	6100-1

6110	MAIN PIPING - ONE WAY	CONDUITES DE BATI PRINCIPAL	6110-1
6120	ONE WAY PIPING - WITH FILTER	TUYAUTERIE A SENS UNIQUE	6120-1
6130	MAIN PIPING - TWO WAY	CONDUITES DE BATI PRINCIPAL	6130-1
6140	TWO WAY PIPING - WITH FILTER	TUYAUTERIE DE DEUX MANIERES	6140-1
6150	PILOT PIPING - ONE OR TWO WAY	CONDUITES DE PILOTE	6150-1
6151	PILOT PIPING - ONE OR TWO WAY	CONDUITES DE PILOTE	6151-1
6155	PILOT PIPING - ONE WAY	CONDUITES DE PILOTE	6155-1
6160	PILOT PIPING - TWO WAY(1)	CONDUITES DE PILOTE	6160-1
6170	PILOT PIPING - TWO WAY(2)	CONDUITES DE PILOTE	6170-1
6180	BOOM PIPING - BOOM 5.7m(ONE & TWO WAY)	CONDUITES DE FLECHE	6180-1
6190	ARM PIPING - ARM 2.9m(ONE & TWO WAY)	CONDUITES DE BALANCIER	6190-1
6200	MAIN PIPING - QUICK FIT	CONDUITES DE BATI PRINCIPAL	6200-1
6210	ELECTRIC PARTS - QUICK CLAMP	BRIDE RAPIDE	6210-1
6220	BOOM PIPING - BOOM 5.7m(QUICK CLAMP)	CONDUITES DE FLECHE	6220-1
6230	ARM PIPING - ARM 2.9m(QUICK CLAMP)	CONDUITES DE BALANCIER	6230-1
6240	ALTERNATOR - 80A	ALTERNATEUR	6240-1
6250	CD PLAYER	PLAQUEUR DE CD	6250-1
6260	SUN ROOF COVER	COUVERTURE DE TOIT DU SOLEIL	6260-1
6270	RAIN SHIELD	BOUCLIER DE PLUIE	6270-1
6280	RAIN SHIELD & LAMP MOUNTING	BOUCLIER ET DE LAMPE DE PLUIE	6280-1
6290	CABIN LOWER GUARD	LA CARLINGUE ABAISSENT LA GARDE	6290-1
6300	WINDOW GUARD	GARDE DE FENETRE	6300-1
6310	FLOOR MAT - TWO WAY	PLANCHER	6310-1
6320	FLOOR MAT - ROTATING	PLANCHER	6320-1
6330	FLOOR MAT - TWO WAY & ROTATING	PLANCHER	6330-1
6340	FOGS GUARD ASS'Y	EMBRUME LA GARDE ASS'Y	6340-1
6350	TRACK SHOE ASS'Y - 700G(DX225LCA)	MAILLON DE CHAINE	6350-1
6360	TRACK SHOE ASS'Y - 800G(DX225LCA)	MAILLON DE CHAINE	6360-1
6365	TRACK SHOE ASS'Y - 800G(DX220A)	MAILLON DE CHAINE	6365-1
6370	TRACK SHOE ASS'Y - 900G(DX225LCA)	MAILLON DE CHAINE	6370-1
6380	SWING ALARM - NOT ONE OR TWO WAY	AVERTISSEUR	6380-1
6390	SWING ALARM - ONE OR TWO WAY	AVERTISSEUR	6390-1
6400	RADIO	RADIO	6400-1
6410	LOCK VALVE PIPING - BOOM	CONDUITES DE VERROU VANNE	6410-1
6420	BOOM PIPING - LOCK VALVE	DONDUITER DE FLECHE	6420-1
6430	PILOT PIPING - ARM LOCK V/V	CONDUITES DE PILOTE	6430-1

6440	ARM PIPING - LOCK VALVE	CONDUITES DE BALANCIER	6440−1
6450	ARM PIPING - ARM 2.9m(CLAMSHELL)	CONDUITES DE BALANCIER	6450−1
6460	MAIN PIPING-ROTATION	CONDUITES DE BATI PRINCIPAL	6460−1
6470	PILOT PIPING(1) - ROTATING	CONDUITES DE PILOTE	6470−1
6480	PILOT PIPING(2) - ROTATING	CONDUITES DE PILOTE	6480−1
6490	BOOM PIPING - ROTATING(BOOM 5.7m)	CONDUITES DE FLECHE	6490−1
6500	ARM PIPING - ROTATING(ARM 2.9m)	CONDUITES DE BALANCIER	6500−1
6510	BUCKET ASS'Y - 0.73m³(36") - SIDE PIN	ENSEMBLE DE GODET	6510−1
6520	BUCKET ASS'Y - 0.90m³(42") - SIDE PIN	ENSEMBLE DE GODET	6520−1
6530	BUCKET ASS'Y - 1.07m³(48") - SIDE PIN	ENSEMBLE DE GODET	6530−1
6540	BUCKET ASS'Y - 1.24m³(54") - SIDE PIN	ENSEMBLE DE GODET	6540−1
6550	BUCKET ASS'Y - 1.32m³(57") - SIDE PIN	ENSEMBLE DE GODET	6550−1
6560	BUCKET ASS'Y - 1.49m³(63") - SIDE PIN	ENSEMBLE DE GODET	6560−1
6570	ARM - 2.0m	BALANCIER	6570−1
6580	ARM PIPING - ARM 2.0m	CONDUITES DE BALANCIER	6580−1
6590	LUBRICATION PIPING - ARM 2.0m	LUBRIFICATION	6590−1
6600	ARM PIPING - ARM 2.0m(ONE & TWO WAY)	CONDUITES DE BALANCIER	6600−1
6610	ARM PIPING - ARM 2.0m(QUICK CLAMP)	CONDUITES DE BALANCIER	6610−1
6620	ARM PIPING - ARM 2.0m(CLAMSHELL)	CONDUITES DE BALANCIER	6620−1
6630	ARM PIPING - ARM 2.0m(ROTATING)	CONDUITES DE BALANCIER	6630−1
6640	ARM - 2.4m	BALANCIER	6640−1
6650	ARM PIPING - ARM 2.4m	CONDUITES DE BALANCIER	6650−1
6660	LUBRICATION PIPING - ARM 2.4m	LUBRIFICATION	6660−1
6670	ARM PIPING - ARM 2.4m(ONE & TWO WAY)	CONDUITES DE BALANCIER	6670−1
6680	ARM PIPING - ARM 2.4m(QUICK CLAMP)	CONDUITES DE BALANCIER	6680−1
6690	ARM PIPING - ARM 2.4m(CLAMSHELL)	CONDUITES DE BALANCIER	6690−1
6700	ARM PIPING - ARM 2.4m(ROTATING)	CONDUITES DE BALANCIER	6700−1
6710	ARM - 3.5m	BALANCIER	6710−1
6720	ARM PIPING - ARM 3.5m	CONDUITES DE BALANCIER	6720−1
6730	LUBRICATION PIPING - ARM 3.5m	LUBRIFICATION	6730−1
6740	ARM PIPING - ARM 3.5m(ONE & TWO WAY)	CONDUITES DE BALANCIER	6740−1
6750	ARM PIPING - ARM 3.5m(QUICK CLAMP)	CONDUITES DE BALANCIER	6750−1
6760	ARM PIPING - ARM 3.5m(CLAMSHELL)	CONDUITES DE BALANCIER	6760−1
6770	ARM PIPING - ARM 3.5m(ROTATING)	CONDUITES DE BALANCIER	6770−1
6780	BUCKET ASS'Y - 0.51m³	ENSEMBLE DE GODET	6780−1
6790	BUCKET ASS'Y - 0.81m³	ENSEMBLE DE GODET	6790−1

6800	BUCKET ASS'Y - 1.05m³	ENSEMBLE DE GODET	6800-1
6810	BUCKET ASS'Y - 1.17m³	ENSEMBLE DE GODET	6810-1
6820	BUCKET ASS'Y - 1.28m³	ENSEMBLE DE GODET	6820-1
6830	BOOM - 5.2m	ENSEMBLE FLECHE	6830-1
6840	BOOM PIPING - BOOM 5.2m	CONDUITES DE FLECHE	6840-1
6850	LUBRICATION PIPING - BOOM 5.2m	LUBRIFICATION	6850-1
6860	BOOM PIPING - BOOM 5.2m(ONE & TWO WAY)	CONDUITES DE FLECHE	6860-1
6870	BOOM PIPING - BOOM 5.2m(QUICK FIT)	CONDUITES DE FLECHE	6870-1
6880	BOOM PIPING - BOOM 5.2m(ROTATING)	CONDUITES DE FLECHE	6880-1
6890	LOCK VALVE PIPING - BOOM 5.2m	CONDUITES DE BALANCIER	6890-1
6900	BOOM - 8.5m	ENSEMBLE FLECHE	6900-1
6910	ARM - 6.2m	BALANCIER	6910-1
6920	COUNTER WEIGHT - SUPER LONG(DX225LCA)	MASSE D'EQUILIBRAGE	6920-1
6930	COUNTER WEIGHT - 5.3TON(NOISE KIT - DX225L	MASSE D'EQUILIBRAGE	6930-1
6940	BUCKET ASS'Y - 0.39m³	ENSEMBLE DE GODET	6940-1
6950	BUCKET ASS'Y - 0.45m³ - DITCH CLEANING	GODET	6950-1
6960	BUCKET ASS'Y - 0.54m³ - DITCH CLEANING	GODET	6960-1
6970	BOOM PIPING - BOOM 8.5m	CONDUITES DE FLECHE	6970-1
6980	LUBRICATION PIPING - BOOM 8.5m	LUBRIFICATION	6980-1
6990	LOCK VALVE PIPING - BOOM 8.5m	CONDUITES DE BALANCIER	6990-1
7000	BOOM PIPING - BOOM 8.5m(ROTATING)	CONDUITES DE FLECHE	7000-1
7010	ARM PIPING - ARM 6.2m	CONDUITES DE BALANCIER	7010-1
7020	LUBRICATION PIPING - ARM 6.2m	LUBRIFICATION	7020-1
7030	ARM PIPING - ARM 6.2m(ROTATING)	CONDUITES DE BALANCIER	7030-1
7040	TRAVEL ALARM	ALARME DE VOYAGE	7040-1
7050	WORKING LAMP(2-LAMP)	LAMPE FONCTIONNANTE	7050-1
7060	WORKING LAMP(4-LAMP)	LAMPE FONCTIONNANTE	7060-1
7070	WORKING LAMP - REAR	AVERTISSEUR RELAIS	7070-1
7080	ROTATING BEACON	FEU DE CIRCULATION	7080-1
7090	ROTATING BEACON MOUNTING	SUPPORT TOURNANT DE BALISE	7090-1
7100	ROTATING BEACON(TELESCOPIC) WITH LAMP	FEU DE CIRCULATION	7100-1
7110	ROTATING BEACON(TELESCOPIC) W/O LAMP	FEU DE CIRCULATION	7110-1
7120	OVERLOAD WARNING	AVERTISSEMENT DE SURCHARGE	7120-1
7130	LOWER WIPER	ABAISSEZ L'ESSUIE-GLACE	7130-1
7140	WORKING LAMP(2-LAMP)	LAMPE FONCTIONNANTE	7140-1
7150	WORKING LAMP(4-LAMP)	LAMPE FONCTIONNANTE	7150-1

7160	ROTATING BEACON-WITH FOGS	FEU DE CIRCULATION	7160-1
7170	SIDE DOOR - L.H (TROPICAL)	ENSEMBLE DE PORTE	7170-1
7180	TROPICAL PARTS	PIECES TROPICALES	7180-1
7190	ACOUSTIC FOAM - NOISE KIT	MOUSSE ACOUSTIQUE - KIT DE BRUIT	7190-1
7200	PATTERN CHANGE PIPING(1)	TUYAUTERIE DE CHANGEMENT DE MODELE	7200-1
7210	PATTERN CHANGE PIPING(2)	TUYAUTERIE DE CHANGEMENT DE MODELE	7210-1
7220	COUNTER WEIGHT - 3.8TON(NOISE KIT - DX220/	MASSE D'EQUILIBRAGE	7220-1
7230	ALTERNATOR - 50A	ALTERNATEUR	7230-1
7240	ALTERNATOR	ALTERNATEUR	7240-1
7250	ELECTRIC PARTS - ENGINE(ALTERNATOR - 50A)	PIECES ELECTRIQUES	7250-1

● **WORLDWIDE NETWORK**

DATE	SEP. 12, 2012
4th EDITION	

Fig. 001 CYLINDER BLOCK
BLOC CYLINDRE

Serial No. ;

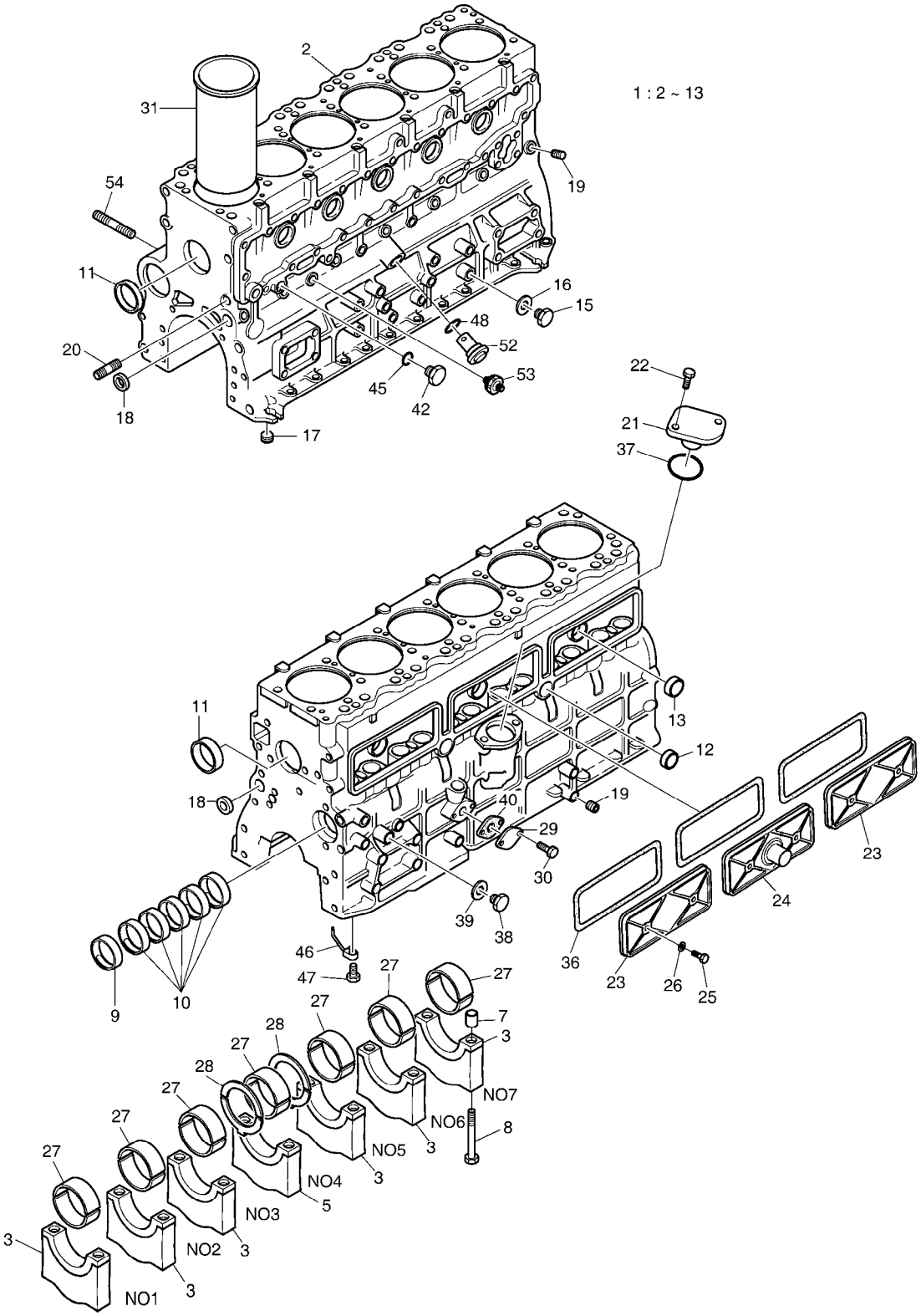

DATE	SEP. 12, 2012
4th EDITION	

Fig. 001 CYLINDER BLOCK
BLOC CYLINDRE

Serial No. ;

Key No.	Part No.	Description	Description	Q'ty	S.C	Serial No.	ICA	Replaceable part	
								Part No.	Q'ty
001 -1	65.01101-6079D	CYLINDER BLOCK ASS'Y	BLOC CYLINDRE	1					
2	65.01101-0030I	BLOCK;CYLINDER	BLOC CYLINDRE	1	D				
3	65.01105-1048A	CAP;BEARING(F.M.R)	PALIER	6	D				
5	65.01105-1047A	CAP;BEARING(NO.4)	PALIER	1	D				
7	65.91710-0001	RING;STOPPER	BAGUE D`ETANCHEITE	2					
8	65.90020-0066A	BOLT;BRG CAP	BOULON A 6 PANS	14					
9	65.04410-0007C	BUSH;CAM SHAFT	DOUILLE	1	B				
10	65.04410-0006C	BUSH;CAM SHAFT	DOUILLE	5	B				
11	65.90302-0009	PLUG;CORE	BOUCHON	2					
12	65.90302-0041	PLUG;CORE	BOUCHON B28D	2					
13	65.90302-0042	PLUG;CORE	BOUCHON	3					
15	65.90310-0030	SCREW;PLUG M12X1.25	VIS	1					
16	06.56190-0704	RING;SEAL	BAGUE D`ETANCHEITE	1					
17	65.90320-0019	PLUG SCREW PT3/8	BOUCHON	1					
18	06.15091-0313	PLUG;CORE	BOUCHON	2					
19	65.90320-0022	PLUG SCREW PT1/8	VIS DE REGLAGE	10					
20	65.90201-0058	BOLT;STUD M14X12.5X45	BOULON A 6 PANS	1					
21	65.91605-0001E	COVER	COUVERCLE	1					
22	06.01913-3113	BOLT ASS'Y M8X20	BOULON A 6 PANS	2					
23	65.01112-0021A	COVER;PUSH ROD CHAMBER	COUVERCLE	2					
24	65.01112-5018	COVER;PUSH ROD CHAMBER	COUVERCLE	1					
25	65.90020-0049	BOLT;HEX.	BOULON A 6 PANS	6					
26	65.96507-0007	PACKING;PUSH ROD CHAMBER	EMBALLAGE	6					
27	65.01110-6090B	METAL;CRANK STD	COUSSINET	7					
	65.01110-6091B	METAL;CRANK 0.25	COUSSINET	7	US				
	65.01110-6092B	METAL;CRANK 0.50	COUSSINET	7	US				
28	65.01150-6008	WASHER;THRUST	RONDELLE	2					
	65.01150-6034A	WASHER;THRUST 0.25	RONDELLE DE BUTEE	2	OS				
	65.01150-6035A	WASHER;THRUST 0.50	RONDELLE DE BUTEE	2	OS				
29	65.91615-0011	COVER;BLIND	COUVERCLE	1					
30	06.01913-3113	BOLT ASS'Y M8X20	BOULON A 6 PANS	2					
31	65.01201-0067	LINER;CYLINDER (ALTV.)	CHEMISE DE CYLINDRE	6	D				
	65.01201-0068	LINER;CYLINDER(1A)	CHEMISE DE CYLINDRE	6					
	65.01201-0069	LINER;CYLINDER(1B)	CHEMISE DE CYLINDRE	6					
	65.01201-0070	LINER;CYLINDER(2A)	CHEMISE DE CYLINDRE	6					
	65.01201-0071	LINER;CYLINDER(2B)	CHEMISE DE CYLINDRE	6					
36	65.01901-0020	GASKET;PUSH ROD CHAMBER	JOINT	3					
37	06.56021-0106	O-RING;O/P DRIVE FLANGE	JOINT TORIQUE	1					

DATE	SEP. 12, 2012
4th EDITION	

Fig. 001 CYLINDER BLOCK
BLOC CYLINDRE

Serial No. ;

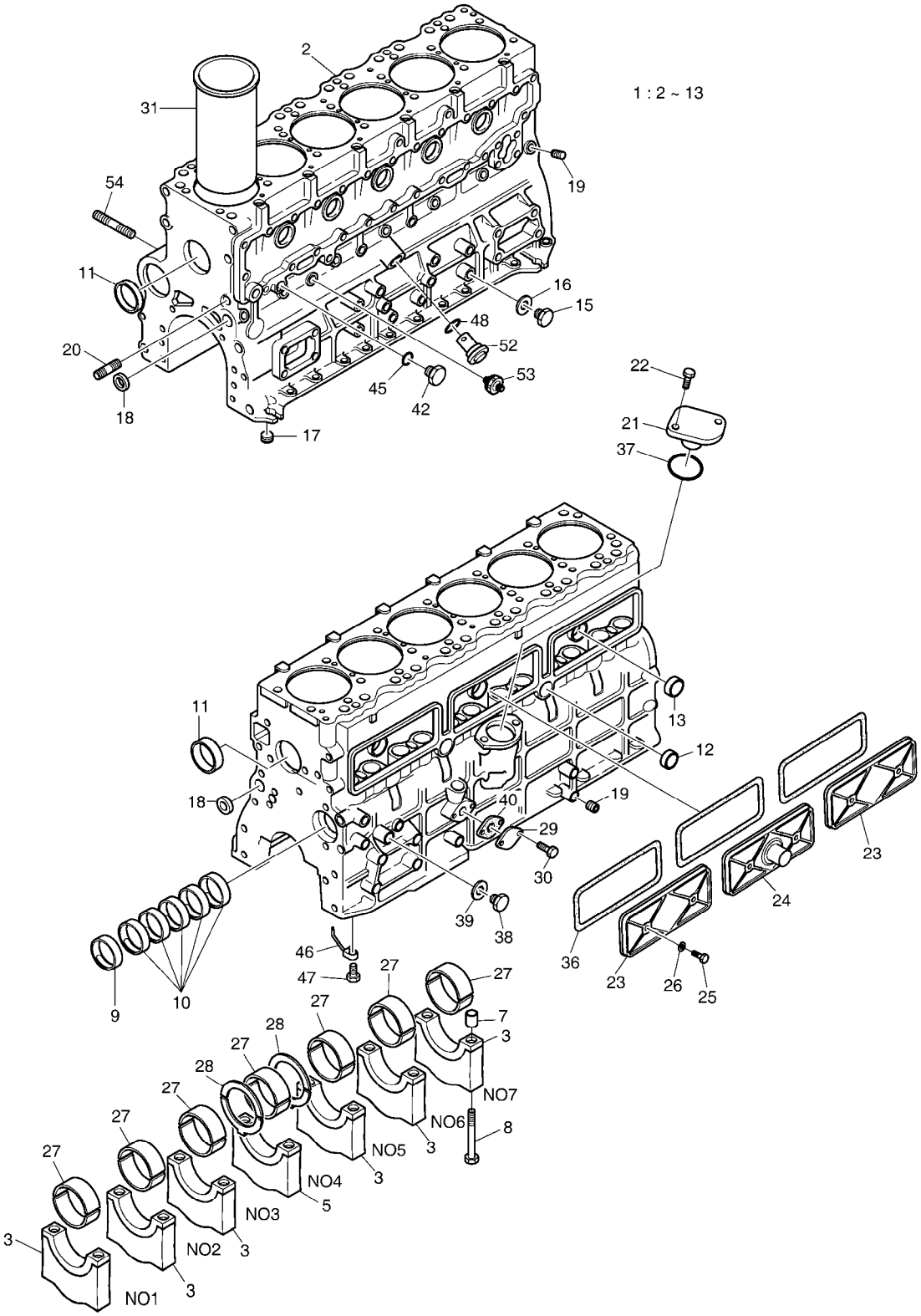

DATE	SEP. 12, 2012
4th EDITION	

Fig. 001 CYLINDER BLOCK
BLOC CYLINDRE

Serial No. ;

Key No.	Part No.	Description	Description	Q'ty	S.C	Serial No.	ICA	Replaceable part	
								Part No.	Q'ty
001 -38	65.90310-0135	PLUG;SCREW	BOUCHON	1					
39	06.56190-0706	SEAL RING A14X20	BAGUE D`ETANCHEITE	1					
40	65.05903A0013	GASKET;FLANGE	JOINT	1					
42	65.90310-0122	PLUG;DRAIN	BOUCHON DE VIDANGE	1					
45	06.56190-0713	RING;SEAL A18X24	BAGUE D`ETANCHEITE	2					
46	65.01601-5010A	OIL JET PIPE	REFROIDISSEUR D`HUILE	6					
47	65.05401-5023	RELIEF VALVE ASS'Y	COUVERCLE ETANCHE	6					
48	06.56021-0102	O-RING	JOINT TORIQUE	1					
52	65.05401-5002F	RELIEF VALVE ASS'Y	SOULAGEMENT VANNE	1					
53	65.27441-7006	SWITCH;OIL PRESS.	INTERRUPTEUR	1					
54	65.90201-0182	BOLT;STUD	BOULON A 6 PANS	1					

DATE	SEP. 12, 2012
4th EDITION	

Fig. 002 TIMING GEAR CASE
CARTER DE DISTRIBUTION

Serial No. ;

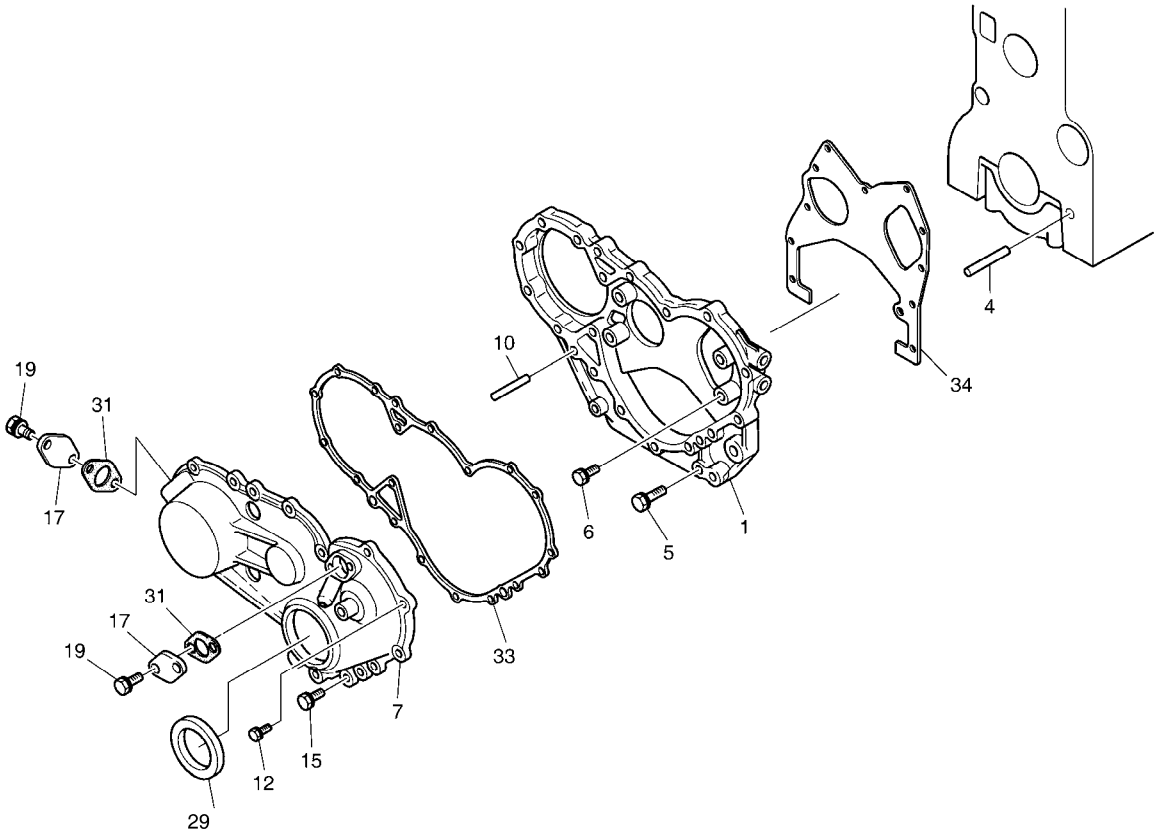

DATE	SEP. 12, 2012
4th EDITION	

Fig. 002 TIMING GEAR CASE
CARTER DE DISTRIBUTION

Serial No. ;

Key No.	Part No.	Description	Description	Q'ty	S.C	Serial No.	ICA	Replaceable part	
								Part No.	Q'ty
002 -1	65.01304-0003C	CASE;TIMING GEAR	CARTER	1					
4	06.22022-3119	PIN	GOUJON	1					
5	06.01913-3120	BOLT ASS`Y M8X45	BOULON A 6 PANS	2					
6	06.01913-3113	BOLT ASS'Y M8X20	BOULON A 6 PANS	4					
7	65.01305-5074A	COVER;TIMING GEAR CASE	COUVERCLE	1					
10	06.22022-3111	PIN	GOUJON	1					
12	06.01913-3115	BOLT ASS'Y M8X25	BOULON A 6 PANS	7					
15	06.01913-3122	BOLT ASS'Y M8X55	BOULON A 6 PANS	5					
17	65.01307-0002B	COVER;TIMING CHECK HOLE	COUVERCLE	2					
19	06.01913-2911	BOLT ASS'Y M6X16	BOULON A 6 PANS	4					
29	65.01510-0001	SEAL;OIL(FRONT)	JOINT D`HUILE	1					
31	65.01903-0002C	GASKET	JOINT	2					
33	65.01903B0003	GASKET;TIMING GEAR CASE CC	JOINT	1					
34	65.01903B0004	GASKET;TIMING GEAR CASE(BL	JOINT	1					

DATE	SEP. 12, 2012
4th EDITION	

Fig. 003 FLYWHEEL HOUSING
CARTER DE VOLANT MOTEUR

Serial No. ;

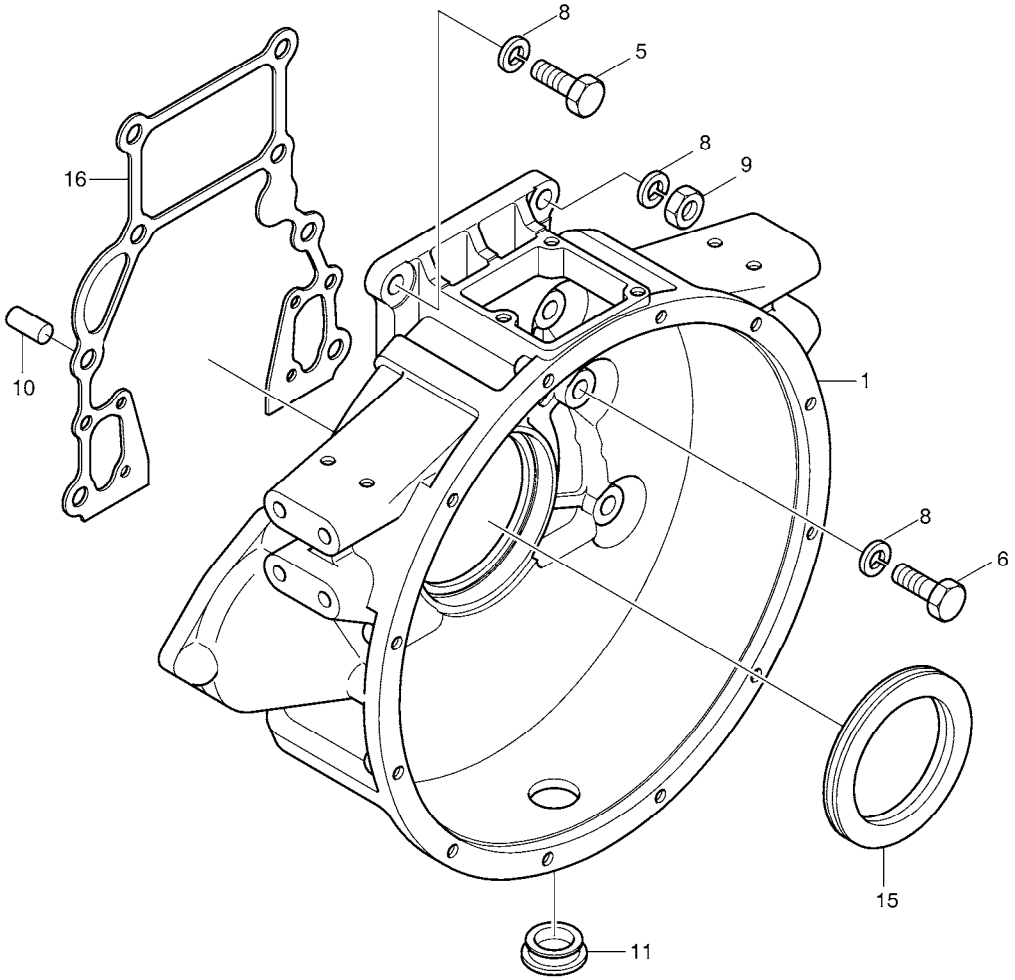

DATE	SEP. 12, 2012
4th EDITION	

Fig. 003 FLYWHEEL HOUSING
CARTER DE VOLANT MOTEUR

Serial No. ;

Key No.	Part No.	Description	Description	Q'ty	S.C	Serial No.	ICA	Replaceable part	
								Part No.	Q'ty
003 -1	65.01401-0119A	HOUSING;FLYWHEEL	CARTER	1					
5	06.01494-4407	BOLT;HEX. M14X1.5X40	BOULON A 6 PANS	1					
6	06.01494-4409	BOLT;HEX. M14X1.5X50	BOULON A 6 PANS	6					
8	06.16731-2110	WASHER;SPRING	RONDELLE ELASTIQUE	8					
9	06.11063-9217	NUT	ECROU 6 PANS	1					
10	06.22022-3111	PIN	GOUJON	2					
11	65.96401-0007	CAP;RUBBER	CHAPEAU DE CAOUTCHOU	1					
15	65.01510-0101	SEAL;OIL(REAR)	JOINT D`HUILE	1					
16	65.01904-0021	GASKET;FLYWHEEL HOUSING	JOINT	1					

DATE	SEP. 12, 2012
4th EDITION	

Fig. 004 CRANK SHAFT VILEBREQUIN

Serial No. ;

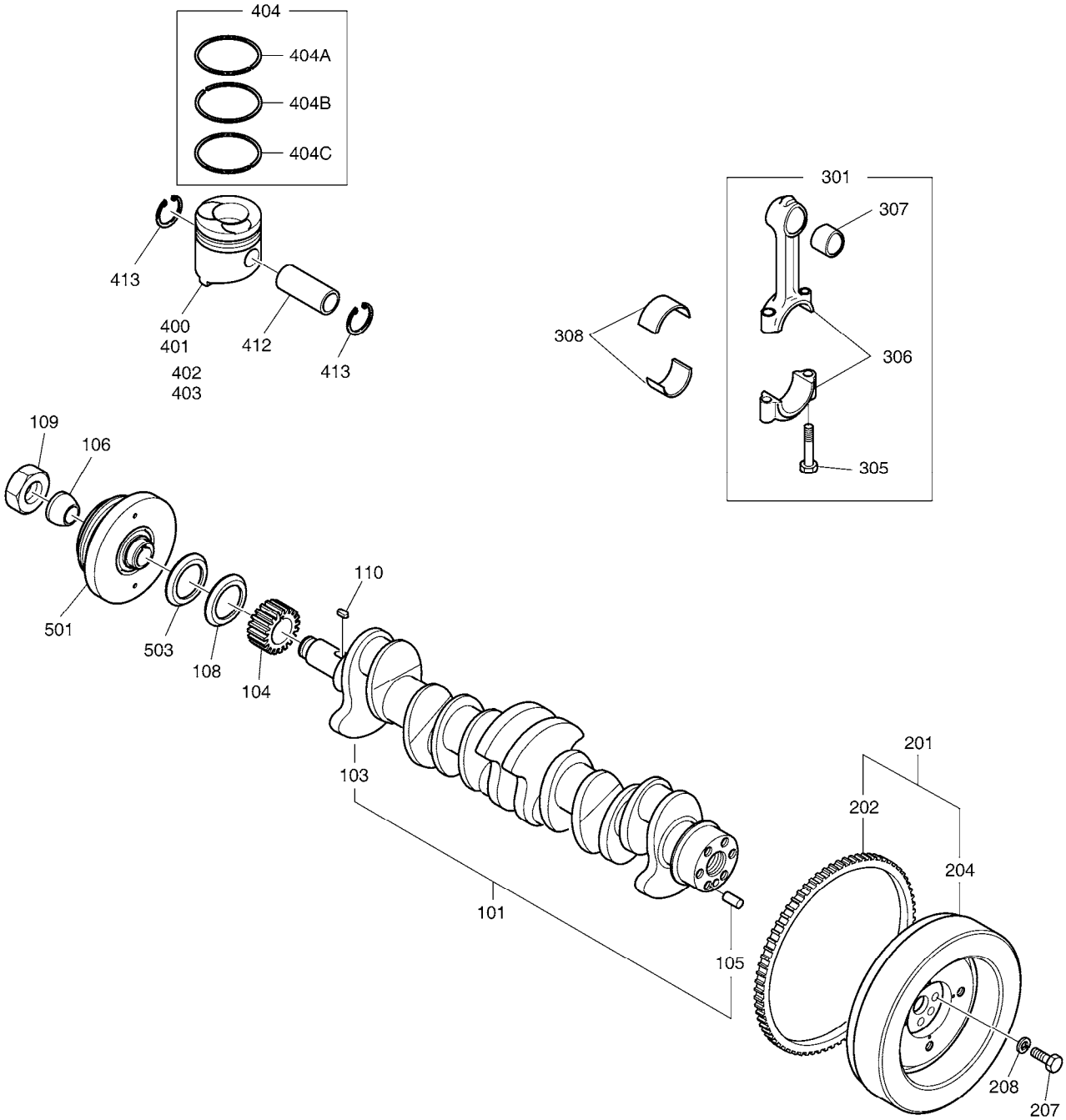

DATE	SEP. 12, 2012
4th EDITION	

Fig. 004 CRANK SHAFT VILEBREQUIN

Serial No. ;

Key No.	Part No.	Description	Description	Q'ty	S.C	Serial No.	ICA	Replaceable part	
								Part No.	Q'ty
004 -101	65.02101-6018A	CRANK SHAFT ASS'Y	ENSEMBLE VILEBREQUIN	1					
103	65.02101-0045A	SHAFT;CRANK	VILEBREGUIN	1					
105	06.22022-3212	PIN;PARALLEL	GOUPILLE	1					
104	65.02115-0009	GEAR;CRANK SHAFT	PIGNON DE VILEBREQUIN	1					
106	65.93020-0015	BUSH;TAPER	COUSSINET	1					
108	65.02120-0002	RING;OIL THROWER	BAGUE	1					
109	65.90501-0006	NUT	ECROU	1					
110	65.91501-0006	KEY;SLIDING	KEY	1					
201	65.02301-5099A	FLYWHEEL ASS'Y	VOLANT	1					
202	65.02310-0006	GEAR;RING	ENGRENAGE	1					
204	65.02301-0245A	FLY WHEEL	VOLANT	1					
207	06.01494-4506	BOLT M16X1.5X35	BOULON A 6 PANS	6					
208	06.16731-2111	WASHER;SPRING	RONDELLE	6					
301	65.02401-6021	CONNECTING ROD ASS'Y	BIELLE	6					
305	65.02411-0006A	BOLT	BOULON A 6 PANS	2					
306	65.02401-0163D	ROD;CONNECTING	TIGE	1	D				
307	65.02405-0006	BUSH	AMPOULE	1	B				
308	65.02410-6083B	METAL;CON-ROD STD	PALIER	6					
	65.02410-6124B	METAL;CON-ROD 0.125mm	PALIER	6	US				
	65.02410-6125B	METAL;CON-ROD 0.25mm	PALIER	6	US				
400	65.02501-0440	PISTON(ALTV.)	PIISTON	6	D				
401	65.02501-0416	PISTON(ALTV.)	PIISTON	6	D				
	65.02501-0443	PISTON(ALTV.-2)	PIISTON	6	D				
402	65.02501-0417	PISTON-1;A GRADE	PIISTON	6					
	65.02501-0444	PISTON-2;A GRADE	PIISTON	6					
403	65.02501-0418	PISTON-1;B GRADE	PIISTON	6					
	65.02501-0445	PISTON-2;B GRADE	PIISTON	6					
404	65.02503-8058	PISTON RING KIT	BAGUE D'ETANCHEITE	1					
404A	-	. RING;TOP	. BAGUE	6	K				
404B	-	. RING,SECOND	. BAGUE	6	K				
404C	-	. RING;OIL	. BAGUE	6	K				
412	65.02502-0082A	PIN;PISTON	AXE DE PISTON	6					
413	65.90815-0007	RING;RETAINING	BAGUE	12					
501	65.02601-5019	PULLEY;DAMPER	POULIE	1					
503	65.02122-0001	COVER;DUST	PARE-POUSSIERES	1					

DATE	SEP. 12, 2012
4th EDITION	

Fig. 005 CYLINDER HEAD CULLASSE

Serial No. ;

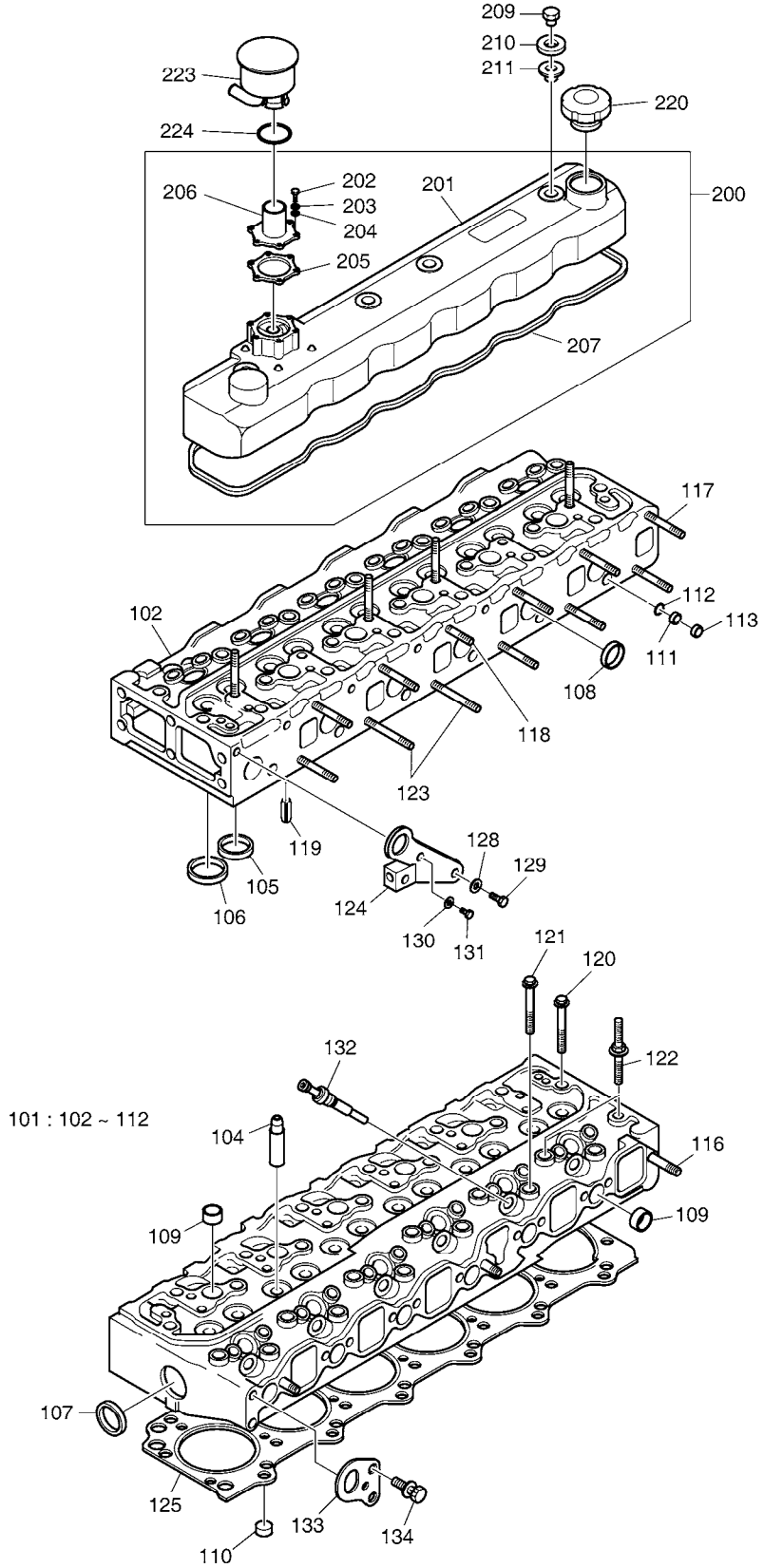

DATE	SEP. 12, 2012
4th EDITION	

Fig. 005 CYLINDER HEAD CULLASSE

Serial No. ;

Key No.	Part No.	Description	Description	Q'ty	S.C	Serial No.	ICA	Replaceable part	
								Part No.	Q'ty
005 -101	65.03101-6071B	CYLINDER HEAD ASS'Y	ENSEMBLE CULASSE	1					
102	65.03101-1043C	HEAD;CYLINDER	CULASSE	1	D				
104	65.03201-1013A	GUIDE;VALVE	GUIDE-SOUPAPE	12	B				
105	65.03203-1054	SEAT;EXHAUST VALVE	SIEGE	6	B				
106	65.03203-1053	SEAT;INLET VALVE	SIEGE	6	B				
107	65.90302-0015	PLUG;CORE(NEAR FACE)	BOUCHON	1					
108	65.90302-0030	PLUG;CORE(EXHAUST MAIN)	BOUCHON	6					
109	65.90302-0019B	PLUG;CORE	COUPELLE	11					
110	65.90302-0045	PLUG;CORE	BOUCHON	3					
111	65.90302-0027	PLUG;CORE	BOUCHON	6					
112	65.90302-0011	PLUG;DRILLED PASS	BOUCHON	6					
113	65.90302-0017	PLUG;WATER JET CORE	BOUCHON	6					
116	06.06225-0706	BOLT;STUD M8X25	GOUJON	3					
117	06.06125-8717	BOLT;STUD	GOUJON	9					
118	06.06125-8709	BOLT;STUD M8X35	GOUJON	1					
119	65.91710-0004	RING;STOPPER	BAGUE	2					
120	65.90021-0002	BOLT;CYLINDER HEAD	BOULON DE CULASSE	18					
121	65.90021-0003	BOLT;CYLINDER HEAD	BOULON DE CULASSE	6					
122	65.90021-0004	BOLT;CYLINDER HEAD	BOULON DE CULASSE	2					
123	06.06125-8723	BOLT;STUD M8X110	GOUJON	2					
124	65.19202-5005	HOOK;LIFTING	CROCHET	1					
125	65.03901-0066A	GASKET;CYLINDER HEAD	JOINT	1					
128	06.16731-2110	WASHER;SPRING	RONDELLE ELASTIQUE	1					
129	06.01733-4409	BOLT;HEX M14X1.5X25	BOULON A 6 PANS	1					
130	06.16731-2108	WASHER;SPRING	RONDELLE	1					
131	06.01733-4208	BOLT M10X1.25X22	BOULON A 6 PANS	1					
132	65.26815-0002	PLUG;DUMMY	PRISE DE LUEUR	6					
133	65.19202-0005	HOOK;LIFTING	CROCHET	1					
134	06.01943-3213	BOLT ASS'Y M10X1.25X20	BOULON A 6 PANS	2					
200	65.03401-6097B	CYLINDER HEAD COVER ASS'Y	COUVRE-CULASSE	1					
201	65.03401-6094	COVER;CYL. HEAD	COUVERCLE	1					
202	06.04190-8808	BOLT M5X16	BOULON A 6 PANS	6					
203	06.16731-2104	WASHER;SPRING	RONDELLE ELASTIQUE	6					
204	06.15010-0308	WASHER;PLAIN	RONDELLE	6					
205	65.03903-0001	PACKING;BREATHER PIPE	EMBALLAGE	1					
206	65.01801-0011	CASE;BREATHER	BOITE	1					
207	65.03905-0002C	GASKET;CYLINDER HEAD COVE	JOINT	1					
209	65.90501-0028	NUT;CYLINDER HEAD COVER	ECROU	4					

DATE	SEP. 12, 2012
4th EDITION	

Fig. 005 CYLINDER HEAD CULLASSE

Serial No. ;

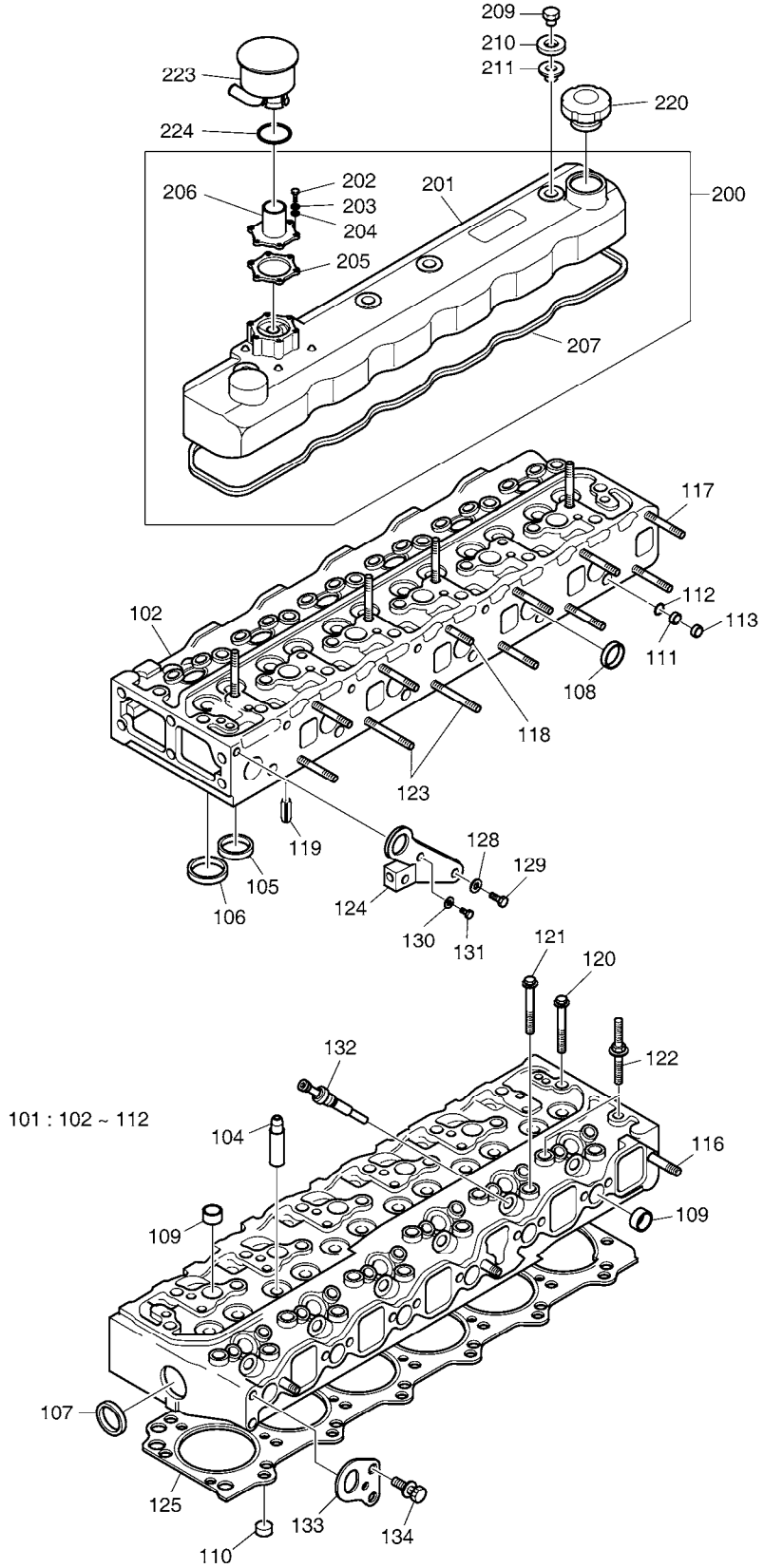

DATE	SEP. 12, 2012
4th EDITION	

Fig. 005 CYLINDER HEAD CULLASSE

Serial No. ;

Key No.	Part No.	Description	Description	Q'ty	S.C	Serial No.	ICA	Replaceable part	
								Part No.	Q'ty
005 -210	65.90701-0202	WASHER;PLATE	RONDELLE	4					
211	65.03905-0023A	GASKET;CYLINDER HEAD COVE	JOINT	4					
220	65.01810-5011	CAP;OIL FILLER	VIBREUR	1					
223	65.01801-5035A	BREATHER PIPE ASS'Y	CLAPET DE RECHANGE	1					
224	65.96501-0032B	O-RING;BREATHER	JOINT TORIQUE	1					

DATE	SEP. 12, 2012
4th EDITION	

Fig. 006 VALVE MECHANISM CALAGE D'INJECTION

Serial No. ;

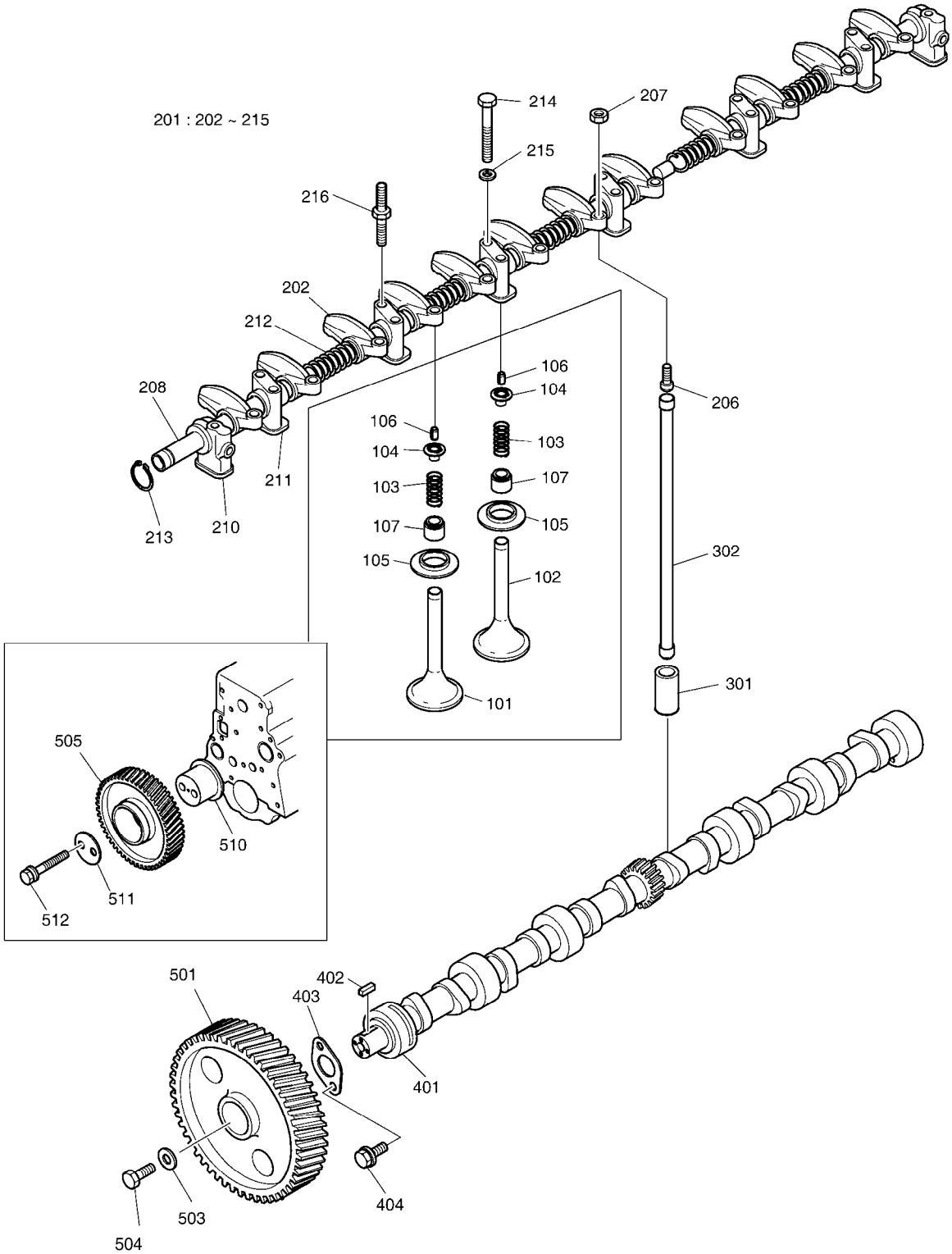

DATE	SEP. 12, 2012
4th EDITION	

Fig. 006 VALVE MECHANISM CALAGE D'INJECTION

Serial No. ;

Key No.	Part No.	Description	Description	Q'ty	S.C	Serial No.	ICA	Replaceable part	
								Part No.	Q'ty
006 -101	65.04101-0032	VALVE;INLET	VANNE	6					
102	65.04101-0025A	VALVE;EXHAUST	VANNE	6					
103	65.04102-0005	SPRING;VALVE	RESSORT	12					
104	65.04103-0001B	RETAINER;VALVE SPRING	PLAQUE	12					
105	65.04103-0002	PLATE;SPRING	PLAQUE	12					
106	65.04104-0001	SPLIT;COLLAR	GOUPILLE	24					
107	65.04902-0015	SEAL;VALVE STEM	JOINT	12					
201	65.04200-6019D	ROCKER ARM & SHAFT ASS'Y	AXE DE BRAS DE CULBUTE	1					
202	65.04201-5002C	ROCKER ARM ASS'Y	BALANCIER	12					
206	65.04205-0001	SCREW;ADJUST	VIS DE REGLAGE	12					
207	65.90501-0013	NUT;HEX.	ECROU 6 PANS	12					
208	65.04203-5008C	ROCKER ARM SHAFT ASS'Y	ENSEMBLE AXE DE CULBU	1					
210	65.04202-0009	BRACKET(FRONT)	SUPPORT	1					
211	65.04202-0003C	BRACKET(ROCKER ARM)	SUPPORT	6					
212	65.97601-0048	SPRING;ROCKER ARM	RESSORT D`AXE DE CULB	5					
213	06.29010-0116	RING;SNAP	CIRCLIP	1					
214	06.01013-9118	BOLT;HEX. M8X65	BOULON A 6 PANS	10					
215	06.15010-2311	WASHER	RONDELLE	10					
216	65.90201-0081	BOLT;STUD	GOUJON	4					
301	65.04301-0009	TAPPET	POUSSOIR DE TIGE DE CU	12					
302	65.04302-5006	ROD;PUSH	TIGE DE POUSSOIR	12					
401	65.04401-0018B	SHAFT;CAM	ARBRE A CAMES	1					
402	06.29151-4608	KEY	KEY	1					
403	65.98112-0009A	FLANGE	BRIDE	1					
404	06.01913-3115	BOLT ASS'Y M8X25	BOULON A 6 PANS	2					
501	65.04501-0004	GEAR;CAM SHAFT	PIGNON D`ARBRE A CAME	1					
503	65.90701-0059	WASHER;PLAIN	RONDELLE	1					
504	06.01733-4410	BOLT M14X1.5X28	BOULON A 6 PANS	1					
505	65.04505-5012	IDLE GEAR ASS'Y	BARBOTIN	1					
510	65.04506-0011	SHAFT;IDLE GEAR	GOUJON DE PIGNON FOU	1					
511	65.90720-0016	WASHER;THRUST	RONDELLE DE BUTEE	1					
512	06.01943-3222	BOLT ASS'Y M10X1.25X55	BOULON A 6 PANS	2					

DATE	SEP. 12, 2012
4th EDITION	

Fig. 007 BREATHER PIPE
CONDUIT DE VENTILATION

Serial No. ;

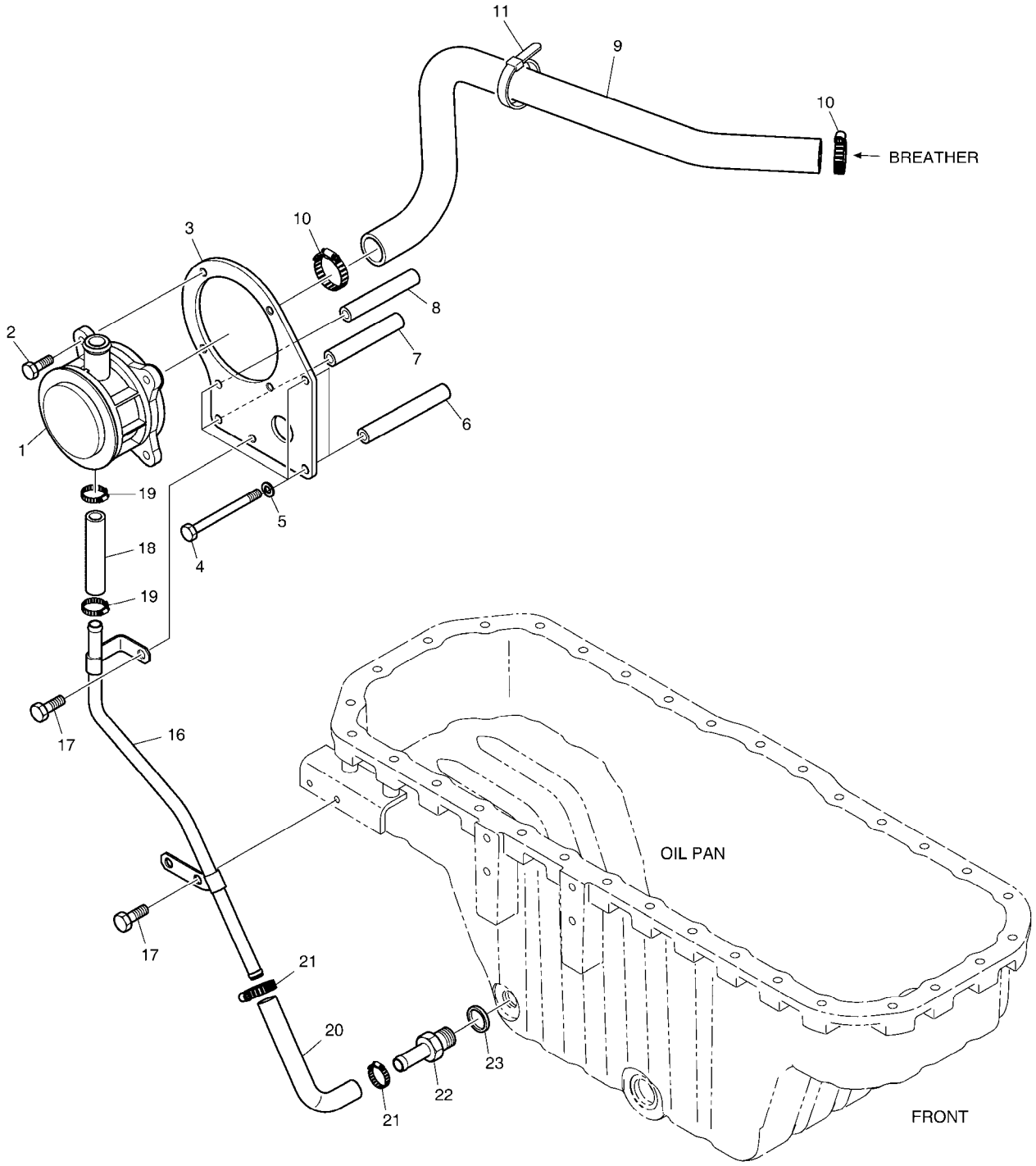

DATE	SEP. 12, 2012
4th EDITION	

Fig. 007 BREATHER PIPE
CONDUIT DE VENTILATION

Serial No. ;

Key No.	Part No.	Description	Description	Q'ty	S.C	Serial No.	ICA	Replaceable part	
								Part No.	Q'ty
007 -1	65.01801-5100	HOUSING;BREATHER	CARTER	1					
2	06.01923-3114	BOLT ASS'Y M8X22	BOULON A 6 PANS	4					
3	65.01840-0008A	BRACKET;BREATHER PIPE	SUPPORT	1					
4	65.90001-0139	BOLT;HEX. M8X150	BOULON A 6 PANS	4					
5	06.16731-2107	WASHER	RONDELLE	4					
6	65.91701-0197	SPACER	ENTRETOISE	2					
7	65.91701-0199	SPACER	ENTRETOISE	1					
8	65.91701-0233	SPACER	BAGUE D'ECARTEMENT	1					
9	65.96301-0421	HOSE;RUBBER	FLEXIBLE CAOUTCHOUC	1					
10	06.67020-0105	CLAMP;HOSE	COLLIER	2					
11	65.97460-0002	CABLE TIA	CABLE TIA	2					
16	65.05701-5541	PIPE;OIL	CONDUITES DE HUILE	1					
17	06.01923-3113	BOLT ASS'Y M8X20	BOULON A 6 PANS	3					
18	65.96301-0422A	HOSE;RUBBER	TUYAU FLEXIBLE	1					
19	06.67020-0101	CLAMP;HOSE	COLLIER	2					
20	65.96301-0386	HOSE;RUBBER	TUYAU FLEXIBLE	1					
21	06.67020-0101	CLAMP;HOSE	COLLIER	2					
22	65.98131-0119	NIPPLE	GRAISSEUR	1					
23	06.56190-0719	RING;SEAL	BAGUE	1					

DATE	SEP. 12, 2012
4th EDITION	

Fig. 008 OIL PUMP
POMPE A HUILE

Serial No. ;

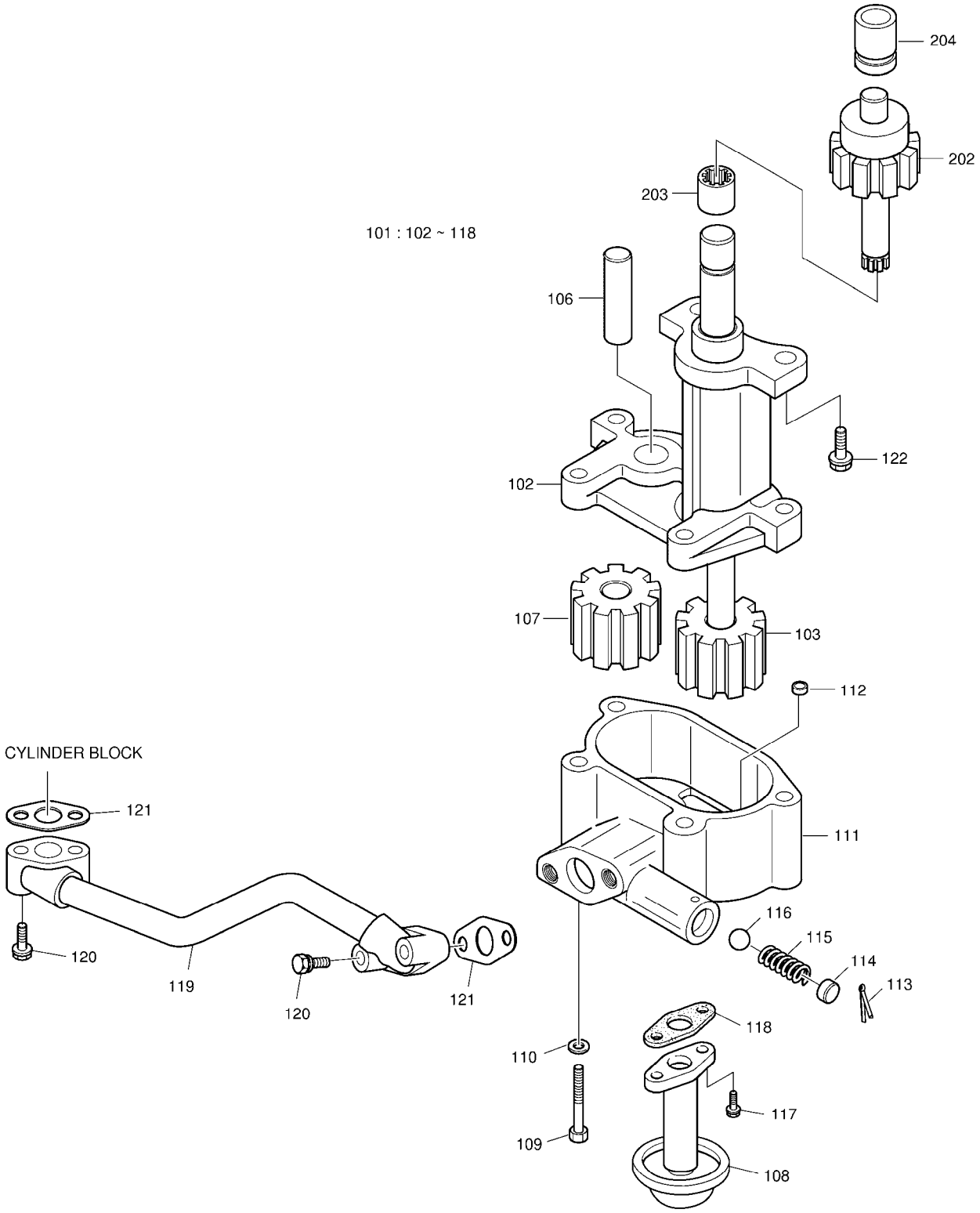

DATE	SEP. 12, 2012
4th EDITION	

Fig. 008 OIL PUMP POMPE A HUILE

Serial No. ;

Key No.	Part No.	Description	Description	Q'ty	S.C	Serial No.	ICA	Replaceable part	
								Part No.	Q'ty
008 -101	65.05101-7025	OIL PUMP ASS'Y	POMPE D'CHUILE	1					
102	65.05102-0018	HOUSING;OIL PUMP	CARTER	1	D				
103	65.05104-6065	GEAR ASS'Y;OIL PUMP	PIGNON	1					
106	65.05105-0044	SHAFT;OIL PUMP	ARBRE	1					
107	65.05104-0177	GEAR;OIL PUMP	PIGNON	1					
108	65.05705-6023	STRAINER ASS'Y	FILTRE	1					
109	06.01013-9117	BOLT M8X65	BOULON A 6 PANS	4					
110	06.16731-2107	WASHER	RONDELLE	4					
111	65.05103-0051	COVER;OIL PUMP	COUVERCLE	1	D				
112	65.91710-0012	RING;STOPPER	BAGUE	1					
113	06.22070-0913	PIN;SPLIT 4X30	GOUJON	1					
114	65.91305-0007	SEAT;SPRING	RESSORT	1					
115	65.97601-0090	SPRING;COMPRESSION	RESSORT	1					
116	06.31641-0222	BALL;STEEL	BILLE	1					
117	06.01913-3113	BOLT ASS'Y M8X20	BOULON A 6 PANS	2					
118	65.96601-0058	GASKET	JOINT	1					
119	65.05701-5636A	OIL PIPE ASS'Y	CONDUITE	1					
120	06.01923-3120	BOLT ASS'Y M8X45	BOULON A 6 PANS	4					
121	65.05903A0002	GASKET	JOINT	2					
122	06.01944-3215	BOLT ASS'Y M10X1.25X25	BOULON A 6 PANS	2					
202	65.05201-0065	GEAR;OIL PUMP DRIVE	PIGNON	1					
203	65.05207-0006	COUPLING;SLEEVE	FIXATION DE POMPE	1					
204	65.05202-0001B	BUSH;DRIVE GEAR	DOUILLE	1					

DATE	SEP. 12, 2012
4th EDITION	

Fig. 009 OIL FILTER
FILTRE A HUILE

Serial No. ;

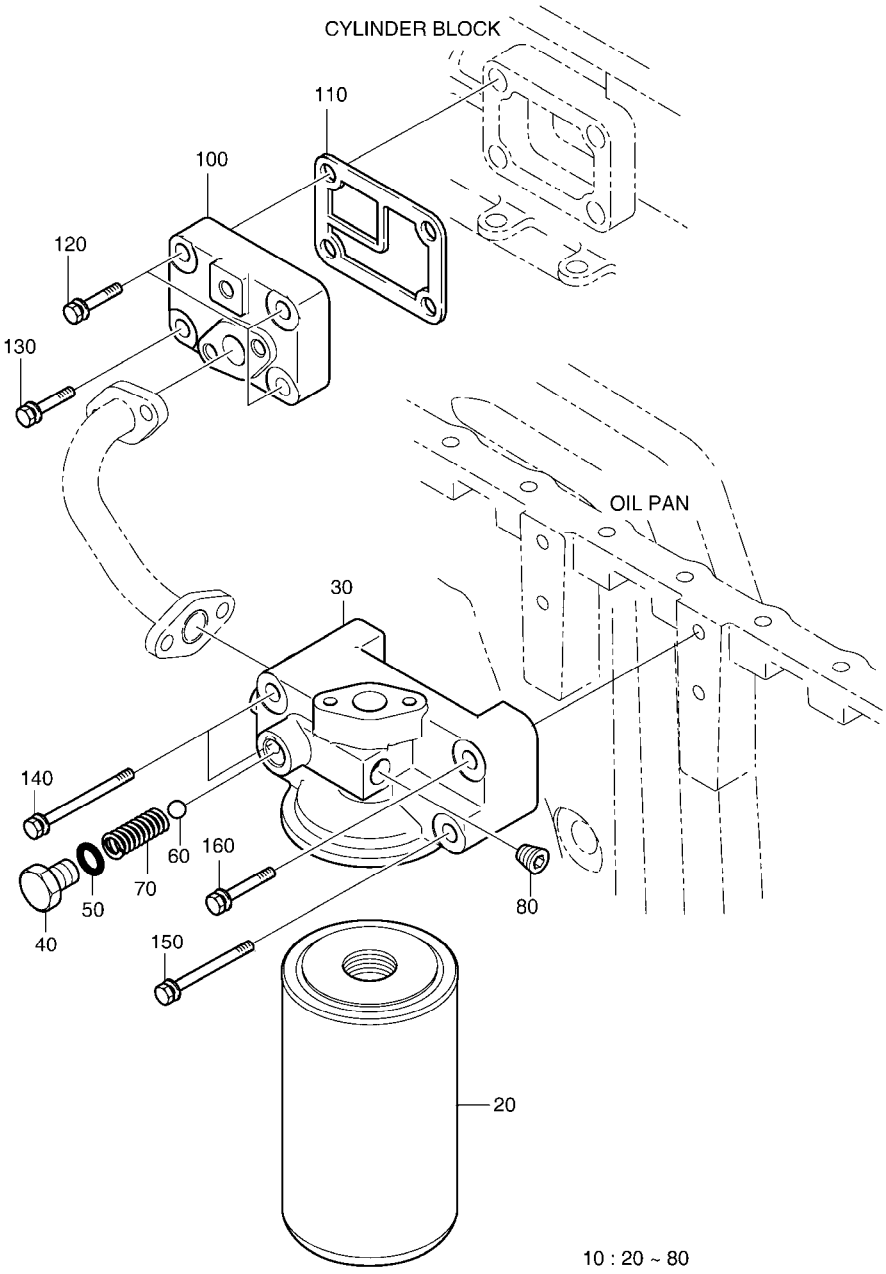

DATE	SEP. 12, 2012
4th EDITION	

Fig. 009 OIL FILTER
FILTRE A HUILE

Serial No. ;

Key No.	Part No.	Description	Description	Q'ty	S.C	Serial No.	ICA	Replaceable part	
								Part No.	Q'ty
009 -10	65.05501-7084A	OIL FILTER ASS'Y	FILTRE A HUILE	1					
20	65.05510-5028A	CARTRIDGE,OIL FILTER	ELEMENT FILTRANT	1					
30	65.05503-5053	HEAD;OIL FILTER	CULASSE	1					
40	65.90310-0036A	PLUG;SCREW	VIS	1					
50	06.56190-0709	SEAL;RING	BAGUE D`ETANCHEITE	1					
60	06.31641-0222	BALL;STEEL	BILLE	1					
70	65.97601-0045	SPRING;COMPRESS	RESSORT	1					
80	65.90350-0005	SCREW;PLUG PT 3/8	VIS	1					
100	65.05520-5001	FLANGE;INTERMEDIATE	BRIDE	1					
110	65.05901C0004	GASKET;OIL FILTER	JOINT	1					
120	06.01953-3219	BOLT ASS'Y M10X1.25X40	BOULON A 6 PANS	3					
130	65.90001-6013	BOLT;HEX.	BOULON A 6 PANS	1					
140	06.01923-3228	BOLT ASS'Y M10X85	BOULON A 6 PANS	2					
150	06.01923-3225	BOLT ASS'Y M10X70	BOULON A 6 PANS	1					
160	06.01923-3222	BOLT ASS`Y	BOULON A 6 PANS	1					

DATE	SEP. 12, 2012
4th EDITION	

Fig. 010 OIL COOLER
REFROIDISSEMENT DE HUILE

Serial No. ;

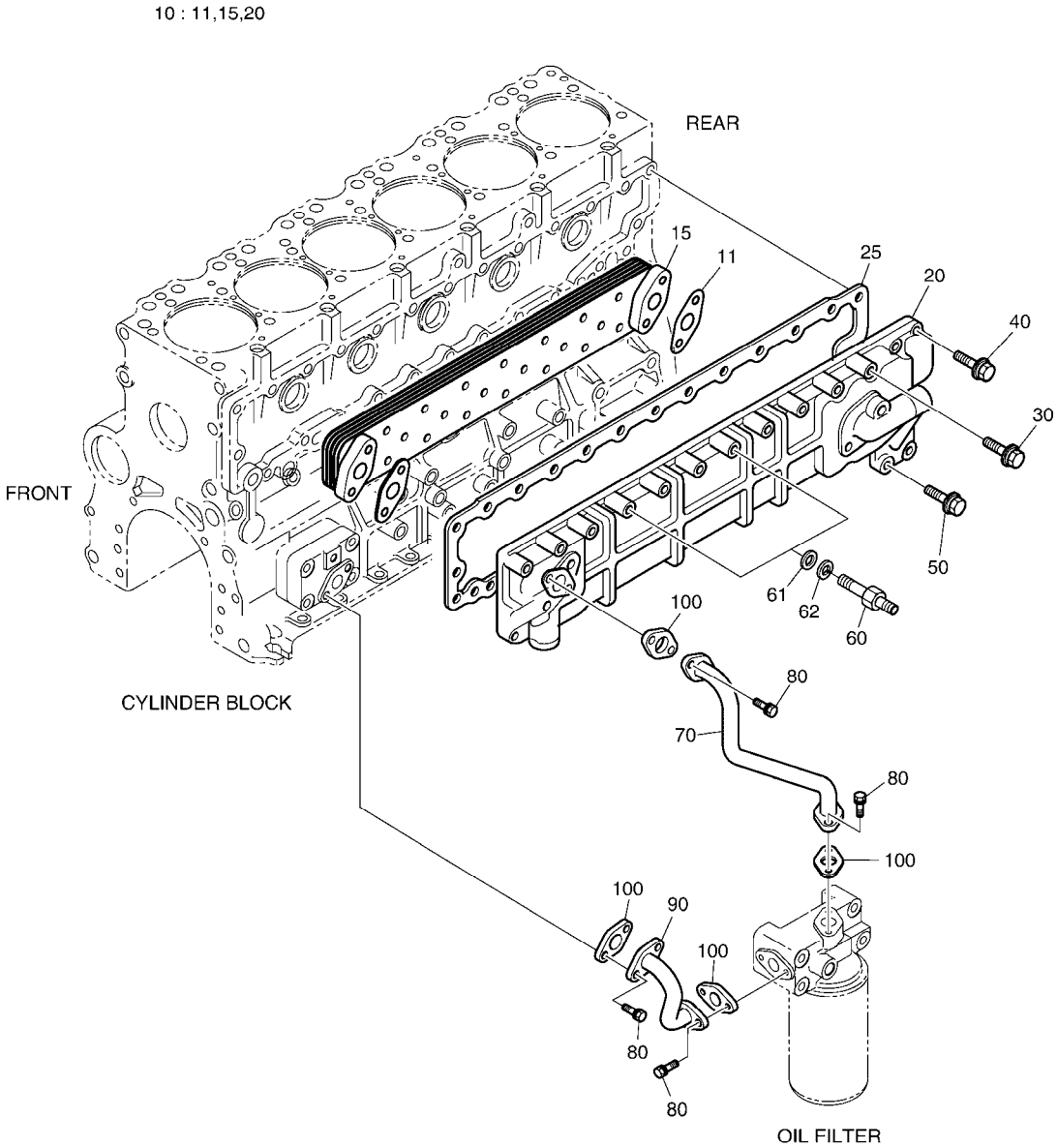

DATE	SEP. 12, 2012
4th EDITION	

Fig. 010 OIL COOLER REFROIDISSEMENT DE HUILE

Serial No. ;

Key No.	Part No.	Description	Description	Q'ty	S.C	Serial No.	ICA	Replaceable part	
								Part No.	Q'ty
010 -10	65.05601-7056E	OIL COOLER ASS'Y	ENSEMBLE REFROIDISSEU	1					
11	65.05902-0025	GASKET;ELEMENT	JOINT	2					
15	65.05606-5024	ELEMENT;OIL COOLER	ELEMENT FILTRANT	1					
20	65.05604-0013B	HOUSING;OIL COOLER	BOITIER	1					
25	65.05902A0005	GASKET;OIL COOLER	JOINT	1					
30	06.01923-3120	BOLT ASS'Y M8X45	BOULON A 6 PANS	12					
40	06.01923-3115	BOLT ASS'Y M8X25	BOULON A 6 PANS	14					
50	06.01923-3113	BOLT ASS'Y M8X20	BOULON A 6 PANS	2					
60	65.90201-0103	BOLT;STUD	BOULON DE GOUJON	2					
61	06.15010-2311	WASHER	RONDELLE	2					
62	06.16731-2107	WASHER	RONDELLE	2					
70	65.05701-5531	OIL PIPE ASS'Y	CONDUITES DE HUILE	1					
80	06.01913-3114	BOLT ASS'Y M8X22	BOULON A 6 PANS	8					
90	65.05701-5530	PIPE ASS'Y;OIL	TUYAU	1					
100	65.05903A0001	GASKET	JOINT	4					

DATE	SEP. 12, 2012
4th EDITION	

Fig. 011 OIL PAN
CARTER D'HUILE

Serial No. ;

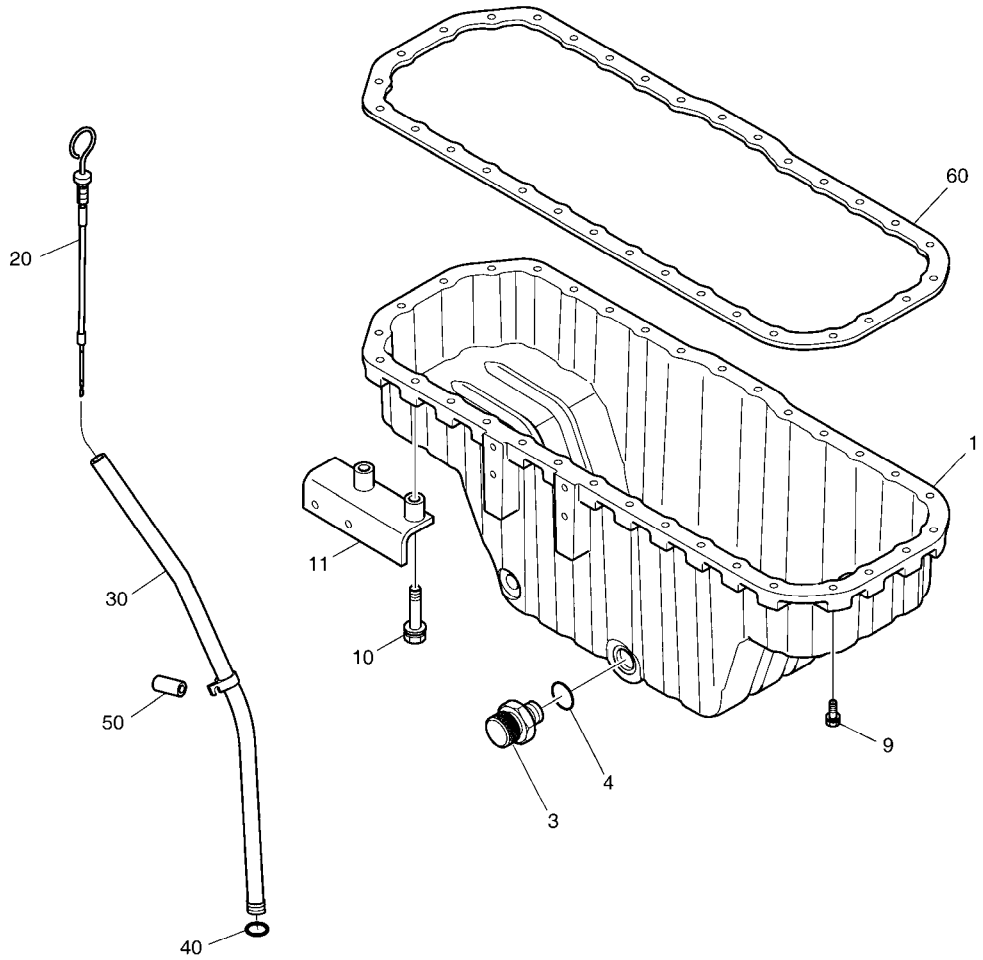

DATE	SEP. 12, 2012
4th EDITION	

Fig. 011 OIL PAN
CARTER D'HUILE

Serial No. ;

Key No.	Part No.	Description	Description	Q'ty	S.C	Serial No.	ICA	Replaceable part	
								Part No.	Q'ty
011 -1	65.05801-5247	PAN;OIL	CAOUTCHOUC	1					
3	65.98125-5022A	JOINT;DRAIN	JOINT	1					
4	06.56190-0732	SEAL;RING	CONTACT DE NIVEAU D'HU	1					
9	06.01913-3119	BOLT ASS'Y M8X40	BOULON A 6 PANS	21					
10	06.01913-3123	BOLT;HEX. M8X60	BOULON A 6 PANS	2					
11	65.05740-5007	BRACKET	PLAQUE	1					
20	65.05805-5222A	GAUGE;OIL LEVEL	JAUGE D'HUILE	1					
30	65.05806-5102A	TUBE;GUIDE	DOUILLE ACIER	1					
40	06.56017-0303	O-RING	JOINT TORIQUE	2					
50	65.91701-0086	SPACER	BAGUE D`ECARTEMENT	2					
60	65.05904A0002	GASKET;OIL PAN	JOINT	1					

DATE	SEP. 12, 2012
4th EDITION	

Fig. 012 THERMOSTAT
THERMOSTAT

Serial No. ;

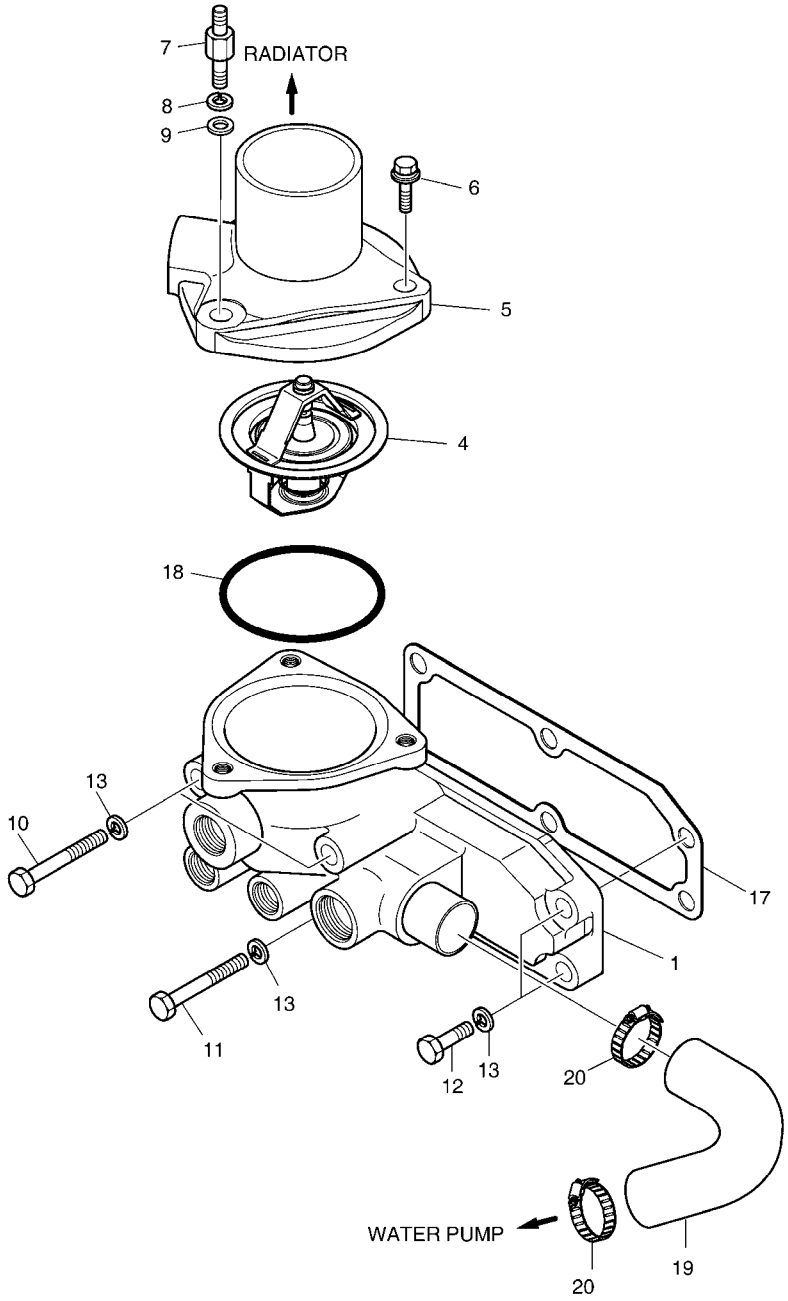

DATE	SEP. 12, 2012
4th EDITION	

Fig. 012 THERMOSTAT
THERMOSTAT

Serial No. ;

Key No.	Part No.	Description	Description	Q'ty	S.C	Serial No.	ICA	Replaceable part	
								Part No.	Q'ty
012 -1	65.06404-5032	HOUSING ASS'Y	ENSEMBLE DE CORPS DE	1					
4	65.06402-5015	THERMOSTAT	FILTRE	1					
5	65.06405-0039	OUTLET;WATER	SORTIE DE L`EAU	1					
6	06.01923-3114	BOLT ASS'Y M8X22	BOULON A 6 PANS	2					
7	65.90201-0037	BOLT;SPACER	BOULON A 6 PANS	1					
8	06.16731-2107	WASHER	RONDELLE	1					
9	06.15010-2311	WASHER	RONDELLE	1					
10	06.01493-4217	BOLT M10X1.25X90	BOULON A 6 PANS	2					
11	06.01493-4216	BOLT M10X1.25X85	BOULON A 6 PANS	1					
12	06.01943-3217	BOLT M10X1.25X30	BOULON A 6 PANS	3					
13	06.16044-0211	WASHER;SPRING	RONDELLE ELASTIQUE	6					
17	65.06904A0004	GASKET;THERMOSTAT HSG	JOINT	1					
18	65.06904-0003	GASKET;THERMOSTAT	JOINT	1					
19	65.96301-0045C	HOSE;RUBBER	TUYAU FLEXIBLE	1					
20	06.67020-0106	CLAMP;HOSE	COLLIER	2					

DATE	SEP. 12, 2012
4th EDITION	

Fig. 013 WATER PUMP & COOLING FAN
POMPE A EAU VENTILATEUR

Serial No. ;

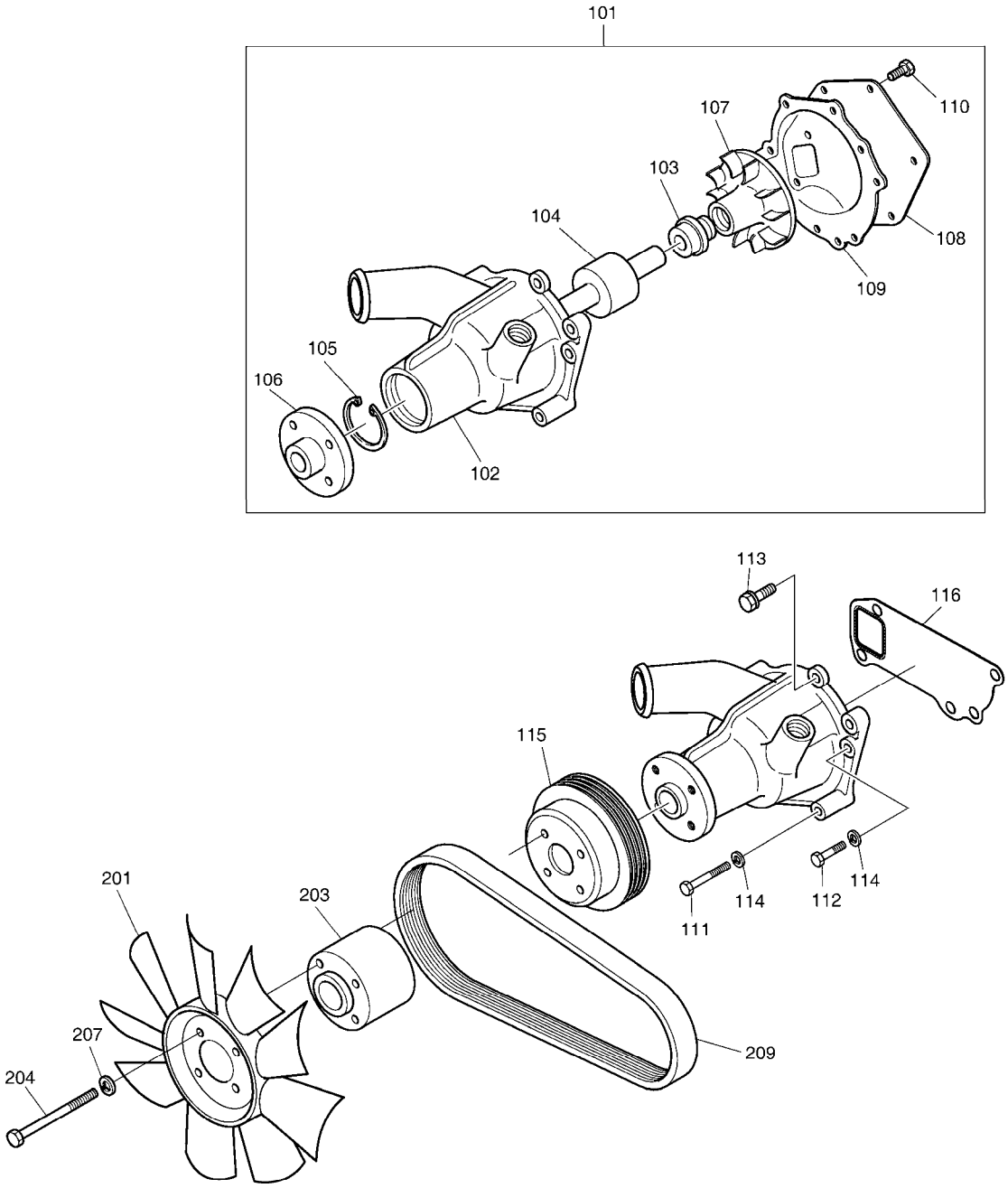

DATE	SEP. 12, 2012
4th EDITION	

Fig. 013 WATER PUMP & COOLING FAN
POMPE A EAU VENTILATEUR

Serial No. ;

Key No.	Part No.	Description	Description	Q'ty	S.C	Serial No.	ICA	Replaceable part	
								Part No.	Q'ty
013 -101	65.06500-6144A	WATER PUMP ASS'Y	POMPE DE EAU	1					
102	65.06501-0214	HOUSING	BOITIER	1	D				
103	65.06520-6007	SEAL;MECHANICAL	JOINT	1					
104	65.93410-0027	BEARING	PALIER	1					
105	06.29020-0132	SNAP RING 55X2	BAGUE ELASTIQUE	1					
106	65.06504-0033	HUB;V-BELT PULLEY	MOYEU	1					
107	65.06506-0085	IMPELLER	TURBINE	1					
108	65.06512-0016	COVER	COUVERCLE	1					
109	65.06901-0035A	GASKET	JOINT	1					
110	06.04200-9009	SCREW;CROSS M8X20	VIS	3					
111	06.01493-4215	BOLT M10X1.25X80	BOULON A 6 PANS	1					
112	06.01493-4212	BOLT M10X1.25X65	BOULON A 6 PANS	2					
113	06.01943-3218	BOLT ASS'Y M10X1.25X35	BOULON A 6 PANS	1					
114	06.16731-2108	WASHER;SPRING	RONDELLE	3					
115	65.06606-0039	PULLEY;FAN	POLLEY	1					
116	65.06901B0002	GASKET;WATER PUMP	JOINT	1					
201	65.06601-5070	FAN;COOLING	VENTILATEUR	1					
203	65.06611-0132	FLANGE;FAN	BRIDE	1					
204	06.01013-9130	BOLT M8X150	BOULON A 6 PANS	4					
207	06.16731-2107	WASHER	RONDELLE	4					
209	65.96801-0124A	BELT;POLY	CEINTURE	1					

DATE	SEP. 12, 2012
4th EDITION	

Fig. 014 INTAKE & EXHAUST MANIFOLD D'ADMISSION ET D'ECHAPPEMENT

Serial No. ;

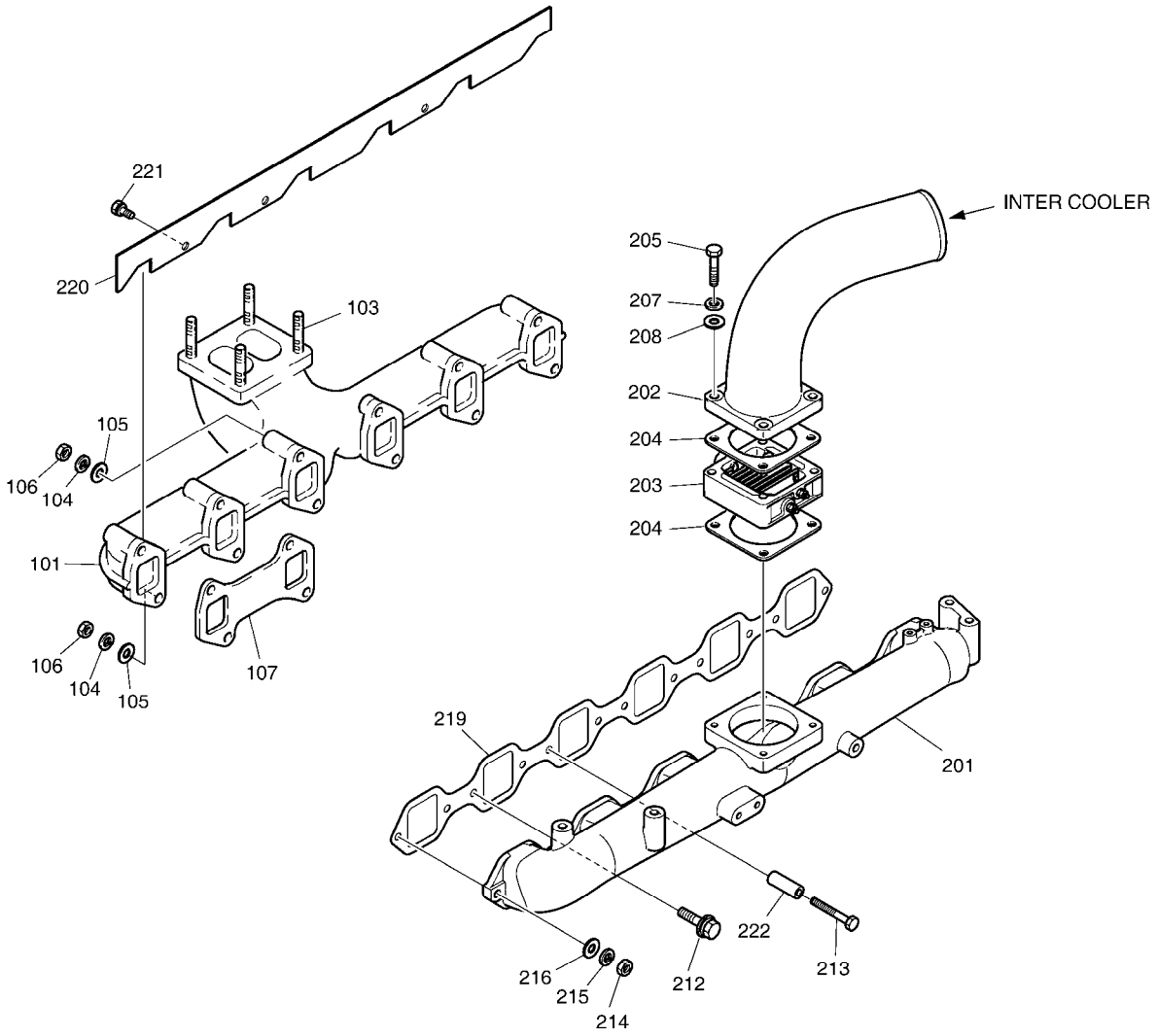

DATE	SEP. 12, 2012
4th EDITION	

Fig. 014 INTAKE & EXHAUST MANIFOLD D'ADMISSION ET D'ECHAPPEMENT

Serial No. ;

Key No.	Part No.	Description	Description	Q'ty	S.C	Serial No.	ICA	Replaceable part	
								Part No.	Q'ty
014 -101	65.08101-0274	MANIFOLD;EXHAUST	COLLECTEUR	1					
103	06.06175-8208	BOLT;STUD M10X1.25X30	GOUJON	4					
104	06.16731-2107	WASHER	RONDELLE	12					
105	06.15010-2311	WASHER	RONDELLE	12					
106	06.11063-8214	NUT	ECROU	12					
107	65.08901-0028	GASKET;EXHAUST MANIFOLD	JOINT	3					
201	65.08201-5062	MANIFOLD;INTAKE	COLLECTEUR	1					
202	65.08202-0175	STAKE;INTAKE	PIEU DE PRISE	1					
203	65.26803-7028B	AIR HEATER	RECHAUFFEUR D`AIR	1					
204	65.09904-0008	GASKET;AIR HEATER	JOINT	2					
205	06.01923-3124	BOLT ASS'Y M8X65	BOULON A 6PANS	4					
207	06.16731-2107	WASHER	RONDELLE	4					
208	06.15010-2311	WASHER	RONDELLE	4					
212	65.90020-0142	BOLT ASS'Y	BOULON A 6 PANS	7					
213	06.01013-9127	BOLT M8X120	BOULON A 6 PANS	1					
214	06.11063-8214	NUT	ECROU	3					
215	06.16731-2107	WASHER	RONDELLE	3					
216	06.15010-2311	WASHER	RONDELLE	3					
219	65.08902-0034	GASKET;INTAKE MANIFOLD	JOINT	1					
220	65.08120-0026	HEAT;SCREEN	LA CHALEUR D`ECRAN	1					
221	06.01913-3111	BOLT ASS'Y M8X16	BOULON A 6 PANS	3					
222	65.91701-0029	SPACER	ENTRETOISE	1					

DATE	SEP. 12, 2012
4th EDITION	

Fig. 015 TURBO CHARGER & OIL PIPE
CHARGEUR DE TURBO

Serial No. ;

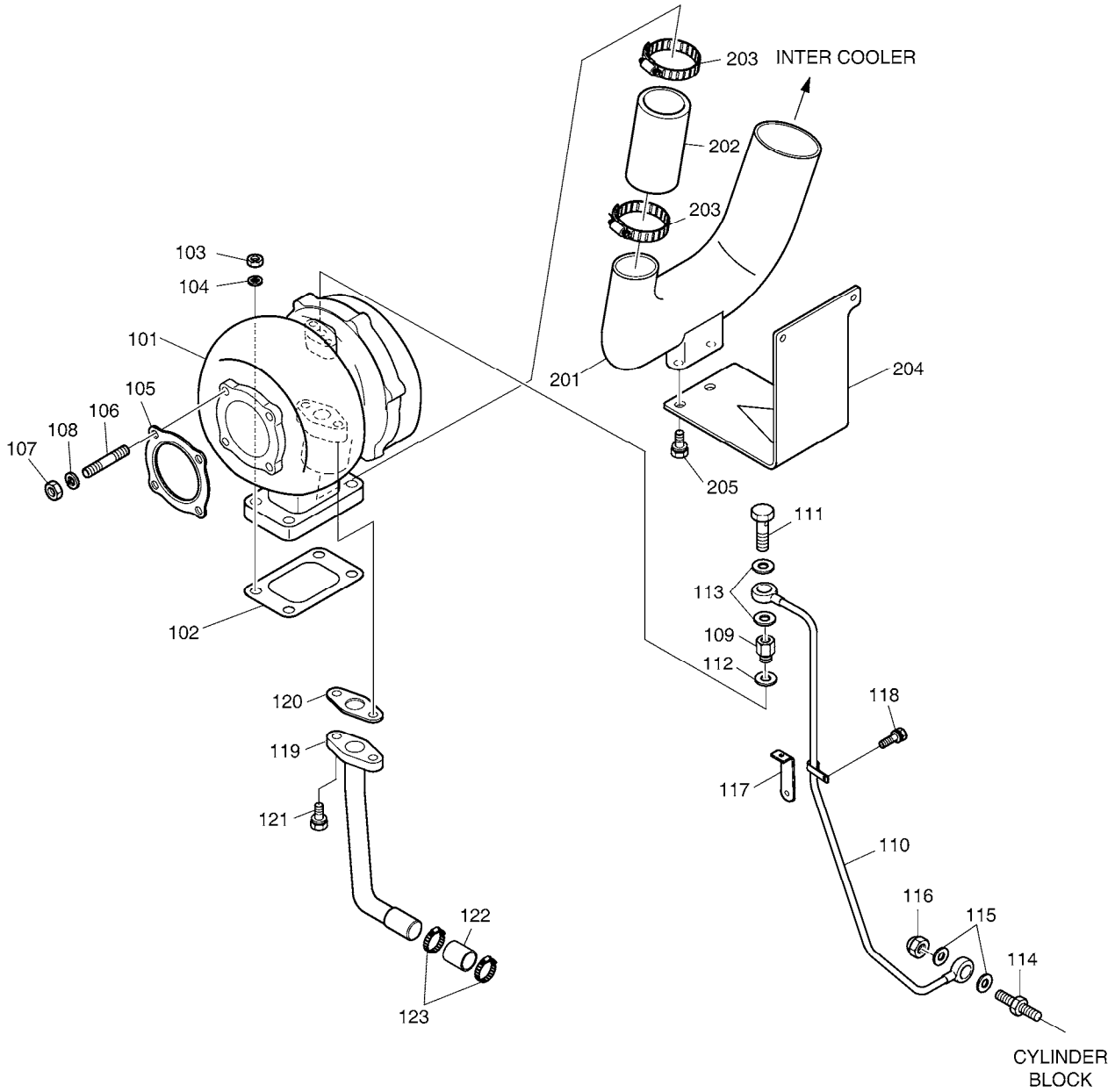

DATE	SEP. 12, 2012
4th EDITION	

Fig. 015 TURBO CHARGER & OIL PIPE
CHARGEUR DE TURBO

Serial No. ;

Key No.	Part No.	Description	Description	Q'ty	S.C	Serial No.	ICA	Replaceable part	
								Part No.	Q'ty
015 -101	65.09100-7080A	TURBO CHARGER ASS'Y	TURBO CHARGER	1					
102	65.09901-0018A	GASKET	JOINT	1					
103	06.11024-9202	NUT M10X1.25	ECROU	4					
104	06.16731-2108	WASHER;SPRING	RONDELLE	4					
105	65.09901-0020	GASKET;TURBO CHARGER	JOINT	1					
106	65.90201-0096	BOLT;STUD M8X30	BOULON DE GOUJON	4					
107	06.11063-8214	NUT	ECROU	4					
108	06.16731-2107	WASHER	RONDELLE	4					
109	65.98130-0200A	ADAPTER	ADAPTEUR	1					
110	65.05701-5342	OIL PIPE ASS'Y	CONDUITE	1					
111	06.78144-2403	HOLLOW SCREW M12X1.5	VIS CREUSE	1					
112	06.56190-0709	SEAL;RING	BAGUE D`ETANCHEITE	1					
113	06.56190-0704	RING;SEAL	BAGUE D`ETANCHEITE	2					
114	65.98155-0011	UNION;HOLLOW	GRAISSEUR	1					
115	06.56180-0714	RING;SEAL	BAGUE D`ETANCHEITE	2					
116	06.12172-9314	NUT;CAP	CHAPEAU DE ECROU	1					
117	65.97480-0135	HOLDER	POSSESSEUR	1					
118	06.01913-3110	BOLT ASS'Y M8X12	BOULON A 6 PANS	1					
119	65.05701-5343	OIL PIPE ASS'Y	CONDUITE	1					
120	65.96601-0067	GASKET;T/C OIL RETURN	JOINT	1					
121	06.01913-3115	BOLT ASS'Y M8X25	BOULON A 6 PANS	2					
122	65.96301-0280A	HOSE;RUBBER	TUYAU FLEXIBLE	1					
123	06.67020-0106	CLAMP;HOSE	COLLIER	2					
201	65.09411-5054	PIPE;INLET	CONDUITES	1					
202	65.96301-0279	HOSE;RUBBER	TUYAU FLEXIBLE	1					
203	06.67020-0109	CLAMP;HOSE	COLLIER	2					
204	65.09440-0016	BRACKET	SUPPORT	1					
205	06.01923-3215	BOLT ASS'Y M10X25	BOULON A 6 PANS	2					

DATE	SEP. 12, 2012
4th EDITION	

Fig. 016 FUEL SYSTEM
INJECTEUR ET POMPE-INJECTEUR

Serial No. ;

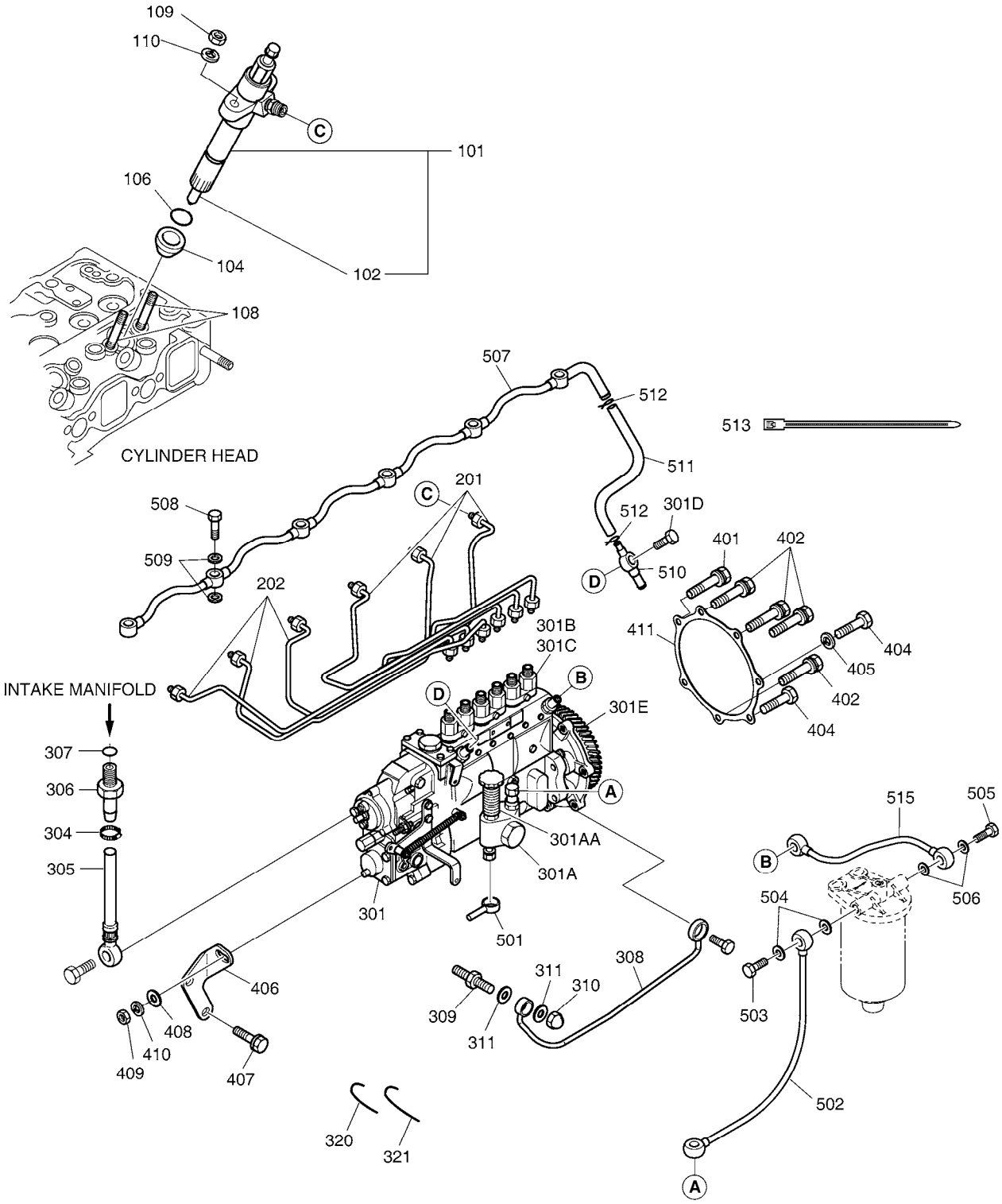

DATE	SEP. 12, 2012
4th EDITION	

Fig. 016 FUEL SYSTEM
INJECTEUR ET POMPE-INJECTEUR

Serial No. ;

Key No.	Part No.	Description	Description	Q'ty	S.C	Serial No.	ICA	Replaceable part	
								Part No.	Q'ty
016 -101	65.10101-7099A	NOZZLE HOLDER ASS'Y	BEC SUPPORT	6					
102	65.10102-6069	NOZZLE	BEC	1					
104	65.96507-0044B	RING;SEAL	BAGUE D'ETANCHEITE	6					
106	65.96507-0050	SEAL;RING	BAGUE D`ETANCHEITE	6					
108	65.90201-0099	BOLT;STUD	GOUJON	12					
109	06.11063-8214	NUT	ECROU	12					
110	06.16731-2107	WASHER	RONDELLE	12					
201	65.10301-6088	PRESSURE PIPE ASS'Y	PIPE DE PRESSION	1					
202	65.10301-6089	PRESSURE PIPE ASS'Y	CONDUITE	1					
301	65.11101-7420A	PUMP;INJECTION	POMPE D'INJECTION	1		-100226	I	400912-00071	1
	400912-00071	PUMP ASSY,INJECTION	POMPE D'INJECTION	1		100227-			
301A	105220-649A	. PUMP,FEED	. POMPE	1					
301A/	400908-00004	.. HAND PRIMING PUMP	.. POMPE	1					
301B	131150-2620	. PLUNGER	. POMPE	6					
301C	65.11108-6006S	. VALVE,DELIVERY	. POMPE	1					
301D	131424-1520	. VALVE;OVERFLOW	. VANNE	1					
301E	156639-8820	. COUPLING	. POMPE	1					
304	06.67020-0101	CLAMP;HOSE	COLLIER	1					
305	65.08301-6008	HOSE;AIR	TUYAU FLEXIBLE	1					
306	65.98131-0050	CONN SCREW	TUYAU FLEXIBLE	1					
307	06.56180-0714	RING;SEAL	BAGUE D`ETANCHEITE	1					
308	65.05701-5200	PIPE;OIL	CONDUITE	1					
309	65.98155-0011	UNION;HOLLOW	GRAISSEUR	1					
310	06.12172-9314	NUT;CAP	CHAPEAU DE ECROU	1					
311	06.56180-0714	RING;SEAL	BAGUE D`ETANCHEITE	2					
320	65.11596-0001	WIRE;SEAL	FIL	3					
321	65.11596-0002	WIRE;SEAL	FIL	1					
401	06.01913-3122	BOLT ASS'Y M8X55	BOULON A 6 PANS	1					
402	06.01913-3124	BOLT ASS'Y M8X65	BOULON A 6 PANS	4					
404	06.01283-7128	BOLT;HEX. M8X85	BOULON A 6 PANS	2					
405	06.16731-2107	WASHER	RONDELLE	1					
406	65.11401-0002C	BRACKET;REAR	SUPPORT	1					
407	06.01953-3213	BOLT ASS'Y M10X1.25X20	BOULON A 6 PANS	2					
408	06.15010-2312	WASHER;PLAIN	RONDELLE	1					
409	06.11063-9215	NUT M10X1.25	ECROU	1					
410	06.16731-2108	WASHER;SPRING	RONDELLE	1					
411	65.11902A0001	GASKET;INJECTION PUMP MOU	JOINT	1					
501	65.12301-5022	PIPE;FUEL(RETURN)	CANALISATION DE GAZOLE	1					

DATE	SEP. 12, 2012
4th EDITION	

Fig. 016 FUEL SYSTEM INJECTEUR ET POMPE-INJECTEUR

Serial No. ;

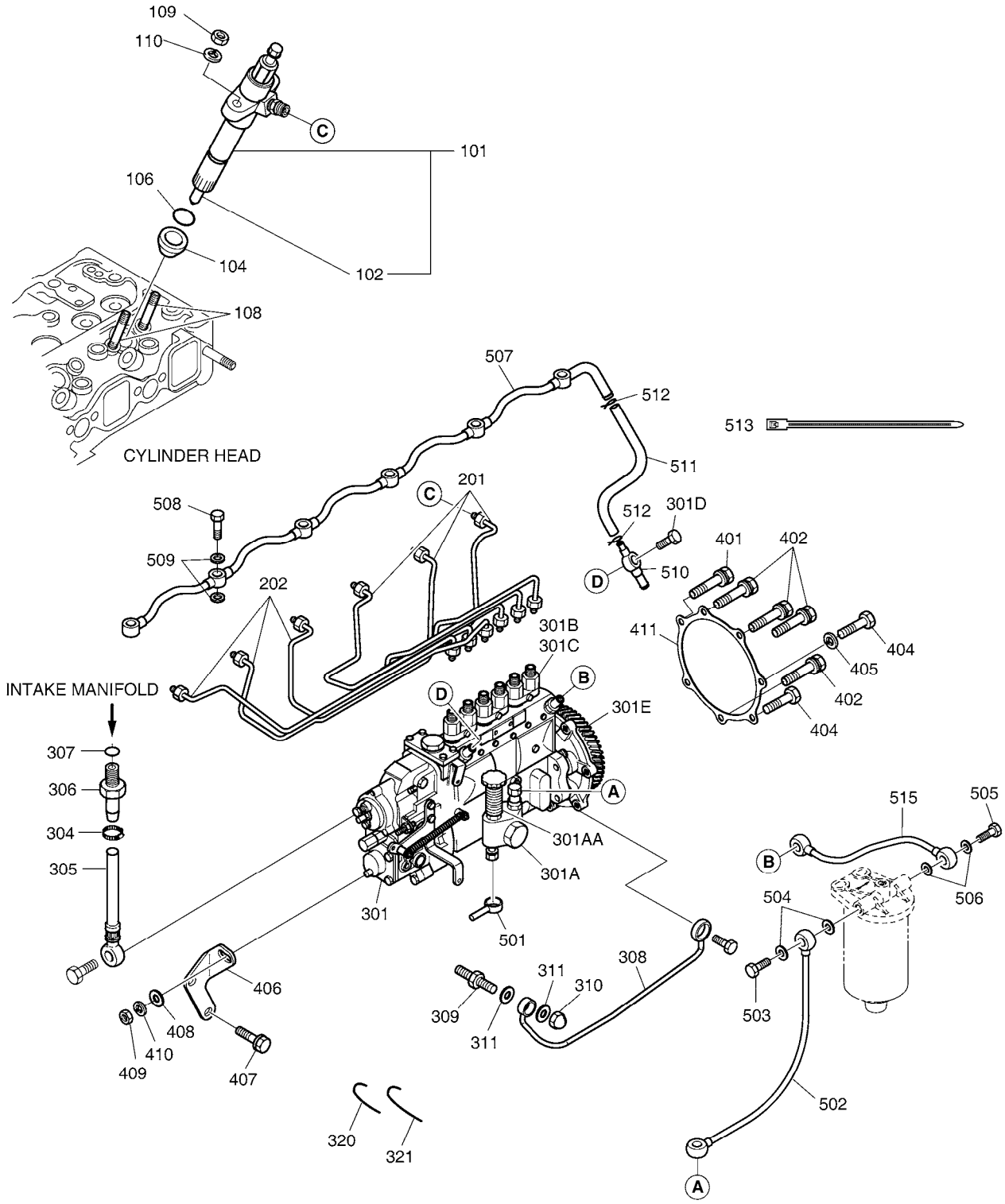

DATE	SEP. 12, 2012
4th EDITION	

Fig. 016 FUEL SYSTEM
INJECTEUR ET POMPE-INJECTEUR

Serial No. ;

Key No.	Part No.	Description	Description	Q'ty	S.C	Serial No.	ICA	Replaceable part	
								Part No.	Q'ty
016 -502	65.96341-0100	HOSE;FUEL	TUYAU A GAZOLE	1					
503	06.78144-2204	SCREW;HOLLOW	VIS CREUSE	1					
504	65.96507-0043	RING;SEAL A14X20	BAGUE D`ETANCHEITE	2					
505	06.78144-2204	SCREW;HOLLOW	VIS CREUSE	1					
506	65.96507-0043	RING;SEAL A14X20	BAGUE D`ETANCHEITE	2					
507	65.12301-5824	PIPE;FUEL	CONDUITES	1					
508	65.98150-0015B	SCREW;HOLLOW	VIS CREUSE	6					
509	06.56180-0712	RING;SEAL	BAGUE	12					
510	65.12301-5825	PIPE;FUEL(RETURN)	CONDUITES	1					
511	65.96301-0176	HOSE;RUBBER	TUYAU FLEXIBLE	1					
512	65.97401-0089	CLIP	CLIP	2					
513	65.97460-0002	CABLE TIA	CABLE TIA	1					
515	65.96341-0100	HOSE;FUEL	TUYAU A GAZOLE	1					

DATE	SEP. 12, 2012
4th EDITION	

Fig. 017 FUEL FILTER
FILTRE A GAZOLE

Serial No. ;

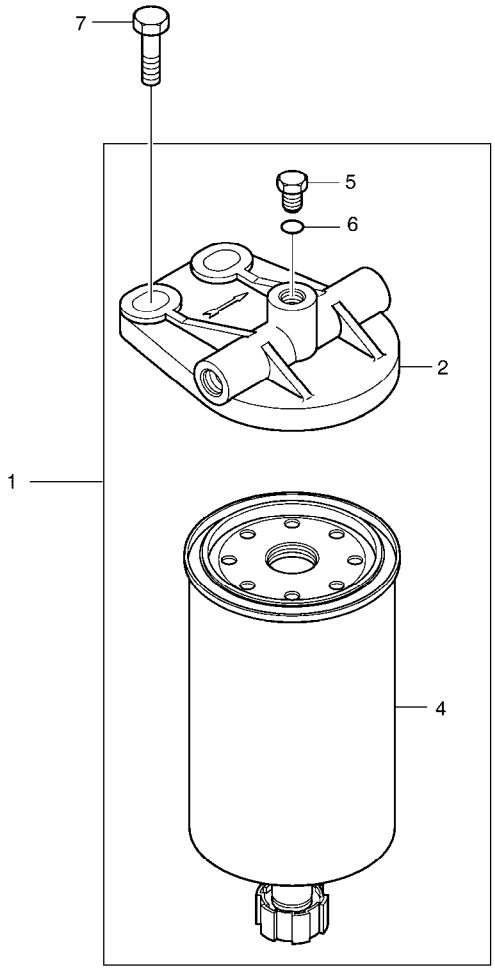

DATE	SEP. 12, 2012
4th EDITION	

Fig. 017 FUEL FILTER
FILTRE A GAZOLE

Serial No. ;

Key No.	Part No.	Description	Description	Q'ty	S.C	Serial No.	ICA	Replaceable part	
								Part No.	Q'ty
017 -1	65.12501-7023B	FUEL FILTER ASS`Y	FILTRE A GAZOLE	1					
2	65.12504-5013A	HEAD;FUEL FILTER	COUVERCLE	1					
4	65.12503-5016B	ELEMENT;E/G FUEL FILTER	ELEMENT FILTRANT	1					
5	65.90310-0143	SCREW;PLUG	VIS	1					
6	06.56180-0716	RING;SEAL	BAGUE	1					
7	06.01953-3318	BOLT ASS'Y M12X1.5X35	BOULON A 6 PANS	2					

DATE	SEP. 12, 2012
4th EDITION	

Fig. 018 ALTERNATOR MOUNTING ALTERNATEUR

Serial No. ;

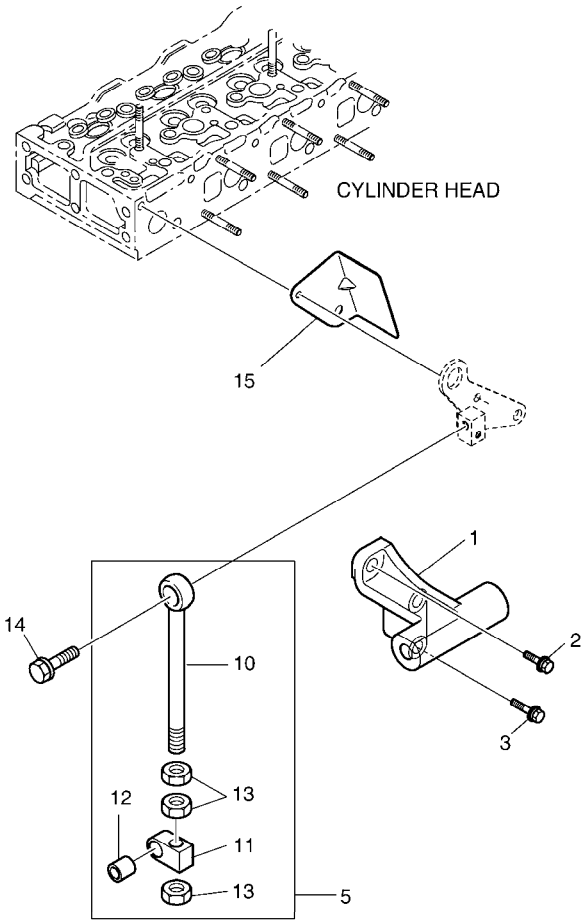

DATE	SEP. 12, 2012
4th EDITION	

Fig. 018 ALTERNATOR MOUNTING ALTERNATEUR

Serial No. ;

Key No.	Part No.	Description	Description	Q'ty	S.C	Serial No.	ICA	Replaceable part	
								Part No.	Q'ty
018 -1	65.19102-0013B	BRACKET	SUPPORT	1					
2	06.01944-3215	BOLT ASS'Y M10X1.25X25	BOULON A 6 PANS	1					
3	06.01943-3218	BOLT ASS'Y M10X1.25X35	BOULON A 6 PANS	2					
5	65.19103-6010A	EYE BOLT ASS'Y	BOUCHON A VIS	1					
10	65.90441-0009A	EYE BOLT	GUIDE	1	D				
11	65.19107-0001A	PIECE;GUIDE	AMPOULE	1	D				
12	65.93020-0055	BUSH	DOUILLE	1	D				
13	06.11063-9217	NUT	ECROU 6 PANS	3	D				
14	06.01943-3319	BOLT ASS'Y M12X1.5X40	BOULON A 6 PANS	1					
15	65.08120-0027	SCREEN;HEAT	BOULON A 6PANS	1					

DATE	SEP. 12, 2012
4th EDITION	

Fig. 019 STARTER DEMARREUR

Serial No. ;

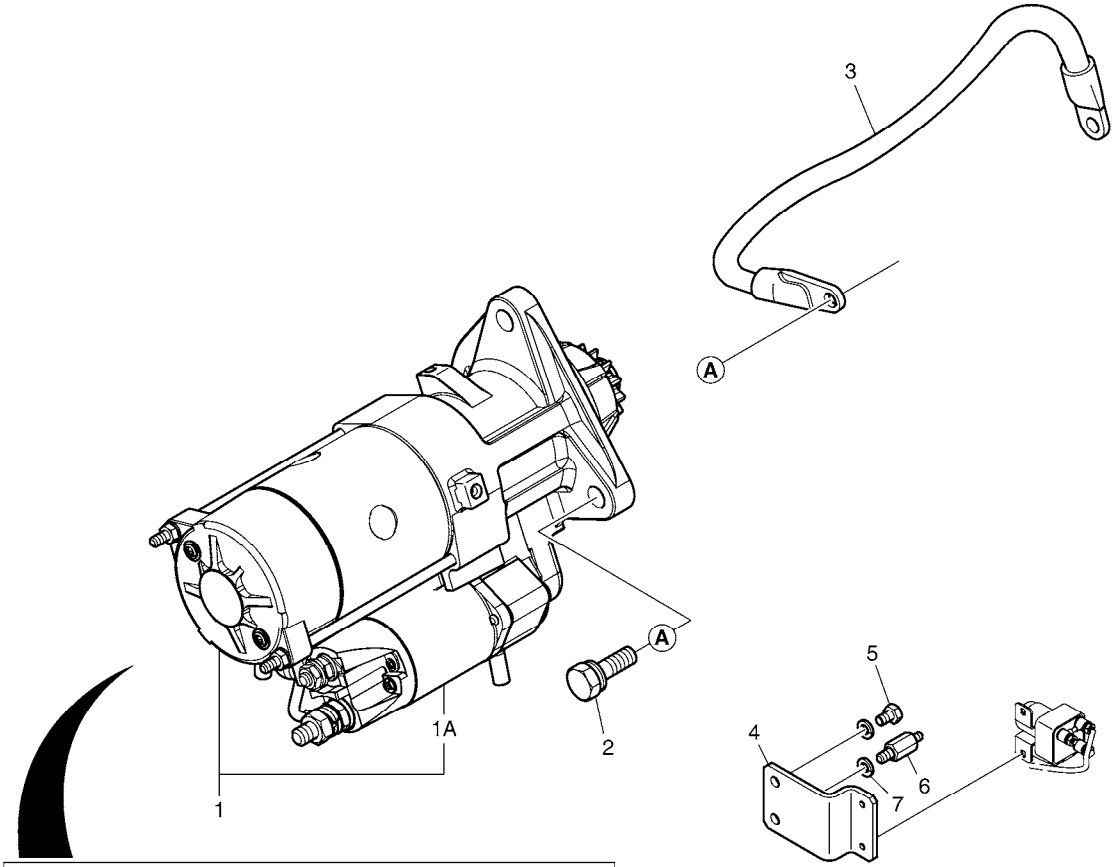

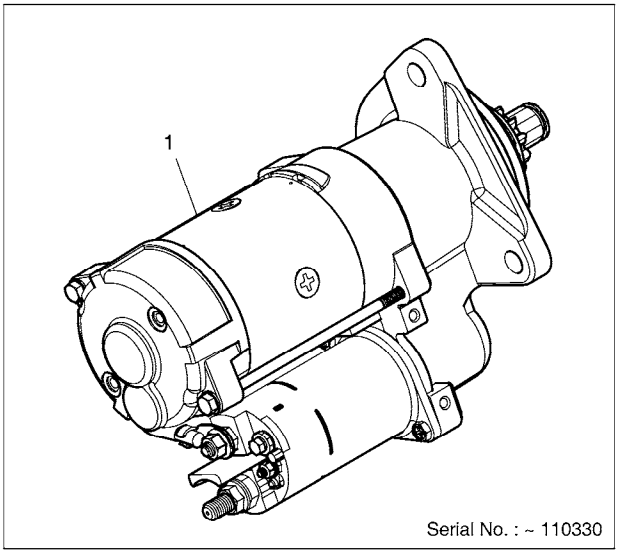

DATE	SEP. 12, 2012
4th EDITION	

Fig. 019 STARTER DEMARREUR

Serial No. ;

Key No.	Part No.	Description	Description	Q'ty	S.C	Serial No.	ICA	Replaceable part	
								Part No.	Q'ty
019 -1	65.26201-7076B	STARTER	DEMARREUR	1		-080707	Y	65.26201-7076C	1
	65.26201-7076C	STARTER	DEMARREUR	1		-090403	Y	300516-00003	1
	300516-00003	STARTER	DEMARREUR	1		-110330	I	300516-00041	1
	300516-00041	STARTER ASSY	DEMARREUR	1		110331-			
1A	65.26212-0006	. RELAY;MAGNETIC	. RELAIS	1		110331-			
2	06.01943-3318	BOLT ASS'Y M12X1.5X35	BOULON A 6 PANS	3					
3	65.29101-5001	WIRE;ELECTRIC	FIL	1					
4	65.97480-0223	HOLDER	POSSESSEUR	1					
5	06.01943-3213	BOLT ASS'Y M10X1.25X20	BOULON A 6 PANS	1					
6	65.90201-0168	BOLT;STUD	BOULON A 6 PANS	1					
7	06.16731-2108	WASHER;SPRING	RONDELLE	1					

DATE	SEP. 12, 2012
4th EDITION	

Fig. 020 OVER HAUL GASKET KIT-TOP PIECES DE RECHANGE

Serial No. ;

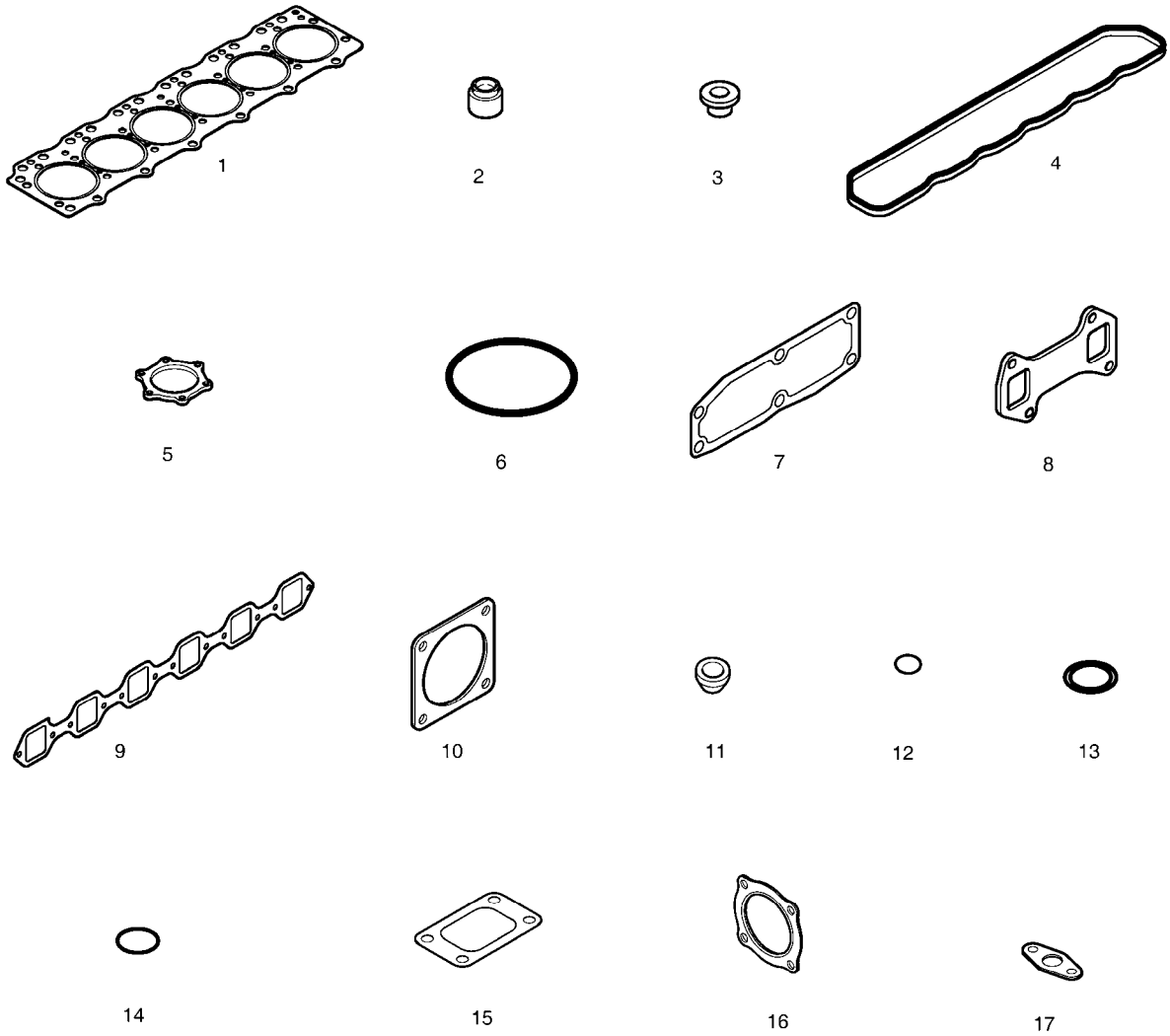

DATE	SEP. 12, 2012
4th EDITION	

Fig. 020 OVER HAUL GASKET KIT-TOP PIECES DE RECHANGE

Serial No. ;

Key No.	Part No.	Description	Description	Q'ty	S.C	Serial No.	ICA	Replaceable part	
								Part No.	Q'ty
020 --	65.99605-8020	OVER HAUL GASKET KIT-TOP	JOINT	1					
1	65.03901-0066A	GASKET;CYLINDER HEAD	JOINT	1					
2	65.04902-0011A	SEAL;VALVE STEM	JOINT	12					
3	65.03905-0023A	GASKET;CYLINDER HEAD COVE	JOINT	4					
4	65.03905-0002B	GASKET;CYLINDER HEAD COVE	JOINT	1					
5	65.03903-0001	PACKING;BREATHER PIPE	EMBALLAGE	1					
6	65.06904-0003	GASKET;THERMOSTAT	JOINT	1					
7	65.06904A0004	GASKET;THERMOSTAT HSG	JOINT	1					
8	65.08901-0028	GASKET;EXHAUST MANIFOLD	JOINT	3					
9	65.08902-0034	GASKET;INTAKE MANIFOLD	JOINT	1					
10	65.09904-0008	GASKET;AIR HEATER	JOINT	2					
11	65.96507-0044B	RING;SEAL	BAGUE D'ETANCHEITE	6					
12	65.96507-0050	SEAL;RING	BAGUE D`ETANCHEITE	6					
13	06.56180-0712	RING;SEAL	BAGUE	12					
14	65.96501-0032B	O-RING;BREATHER	JOINT TORIQUE	1					
15	65.09901-0018A	GASKET	JOINT	1					
16	65.09901-0020	GASKET;TURBO CHARGER	JOINT	1					
17	65.96601-0067	GASKET;T/C OIL RETURN	JOINT	1					

DATE	SEP. 12, 2012
4th EDITION	

Fig. 021 OVER HAUL GASKET KIT-ALL PIECES DE RECHANGE

Serial No. ;

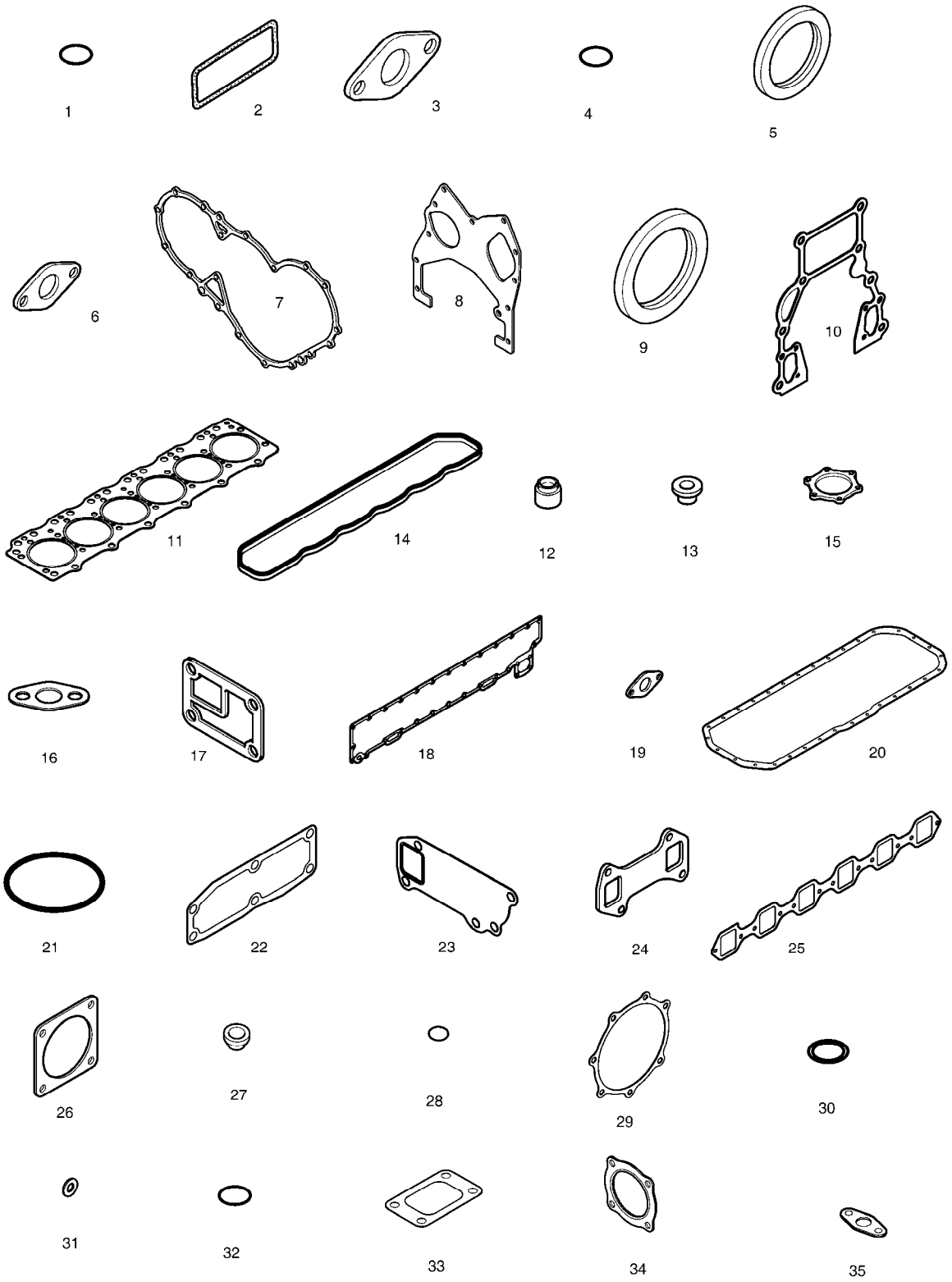

DATE	SEP. 12, 2012
4th EDITION	

Fig. 021 OVER HAUL GASKET KIT-ALL PIECES DE RECHANGE

Serial No. ;

Key No.	Part No.	Description	Description	Q'ty	S.C	Serial No.	ICA	Replaceable part	
								Part No.	Q'ty
021 --	65.99601-8027	OVER HAUL GASKET KIT-ALL	JOINT	1					
1	06.56021-0106	O-RING;O/P DRIVE FLANGE	JOINT TORIQUE	1					
2	65.01901-0020	GASKET;PUSH ROD CHAMBER	JOINT	3					
3	65.05903A0013	GASKET;FLANGE	JOINT	1					
4	06.56021-0102	O-RING	JOINT TORIQUE	1					
5	65.01510-0001	SEAL;OIL(FRONT)	JOINT D`HUILE	1					
6	65.01903-0002C	GASKET	JOINT	2					
7	65.01903B0003	GASKET;TIMING GEAR CASE CC	JOINT	1					
8	65.01903B0004	GASKET;TIMING GEAR CASE(BL	JOINT	1					
9	65.01510-0101	SEAL;OIL(REAR)	JOINT D`HUILE	1					
10	65.01904-0021	GASKET;FLYWHEEL HOUSING	JOINT	1					
11	65.03901-0066A	GASKET;CYLINDER HEAD	JOINT	1					
12	65.04902-0015	SEAL;VALVE STEM	JOINT	12					
13	65.03905-0023A	GASKET;CYLINDER HEAD COVE	JOINT	4					
14	65.03905-0002B	GASKET;CYLINDER HEAD COVE	JOINT	1					
15	65.03903-0001	PACKING;BREATHER PIPE	EMBALLAGE	1					
16	65.05903A0002	GASKET	JOINT	2					
17	65.05901C0004	GASKET;OIL FILTER	JOINT	1					
18	65.05902A0005	GASKET;OIL COOLER	JOINT	1					
19	65.05903A0001	GASKET	JOINT	2					
20	65.05904A0002	GASKET;OIL PAN	JOINT	1					
21	65.06904-0003	GASKET;THERMOSTAT	JOINT	1					
22	65.06904A0004	GASKET;THERMOSTAT HSG	JOINT	1					
23	65.06901B0002	GASKET;WATER PUMP	JOINT	1					
24	65.08901-0028	GASKET;EXHAUST MANIFOLD	JOINT	3					
25	65.08902-0034	GASKET;INTAKE MANIFOLD	JOINT	1					
26	65.09904-0008	GASKET;AIR HEATER	JOINT	2					
27	65.96507-0044B	RING;SEAL	BAGUE D'ETANCHEITE	6					
28	65.96507-0050	SEAL;RING	BAGUE D`ETANCHEITE	6					
29	65.11902A0001	GASKET;INJECTION PUMP MOU	JOINT	1					
30	06.56180-0712	RING;SEAL	BAGUE	12					
31	65.96507-0007	PACKING;PUSH ROD CHAMBER	EMBALLAGE	6					
32	65.96501-0032B	O-RING;BREATHER	JOINT TORIQUE	1					
33	65.09901-0018A	GASKET	JOINT	1					
34	65.09901-0020	GASKET;TURBO CHARGER	JOINT	1					
35	65.96601-0067	GASKET;T/C OIL RETURN	JOINT	1					

DATE	SEP. 12, 2012
4th EDITION	

Fig. 1100 MAIN FRAME
BATI PRINCIPAL

Serial No. ;

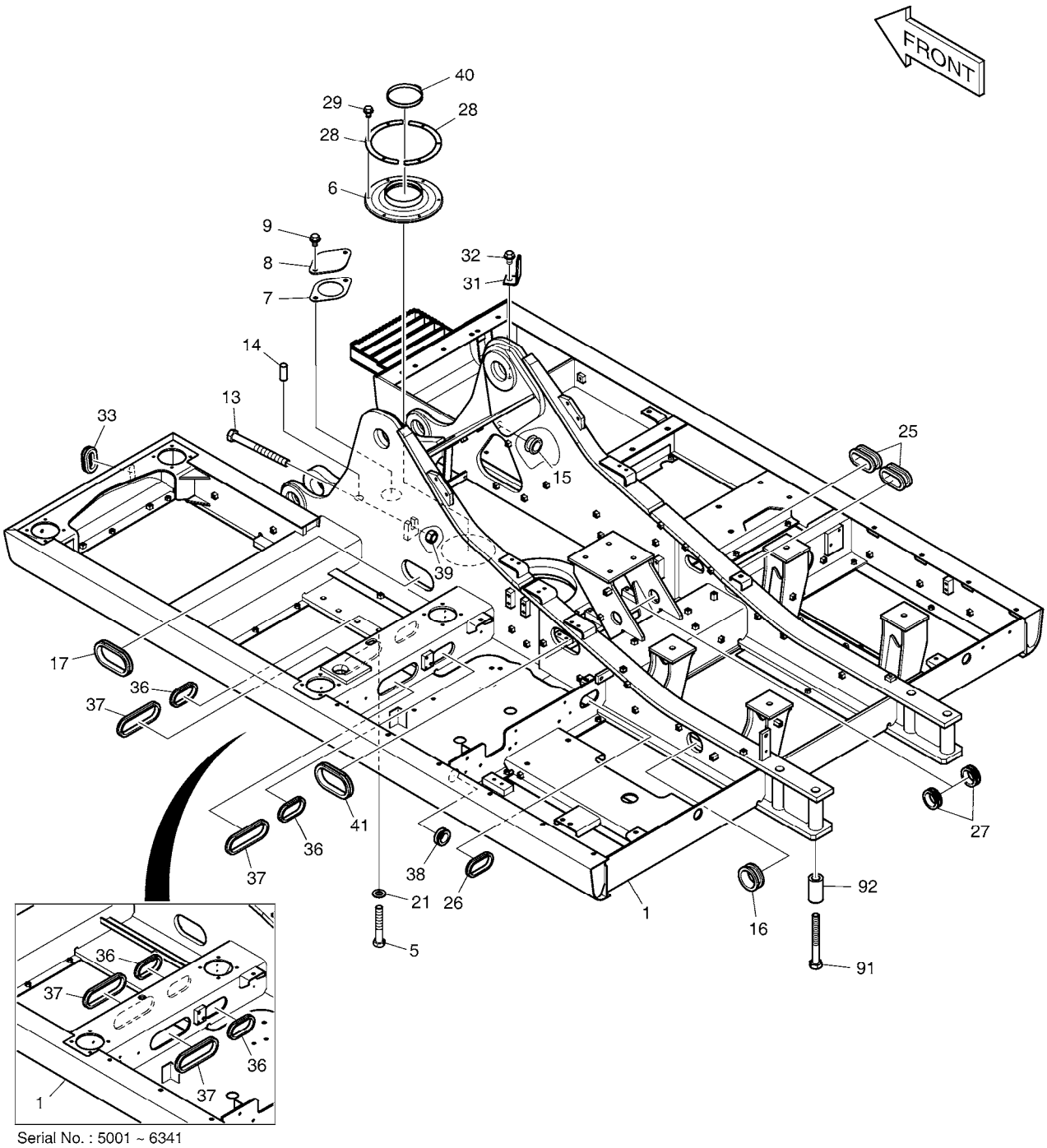

Serial No. : 5001 ~ 6341

DATE	SEP. 12, 2012
4th EDITION	

Fig. 1100 MAIN FRAME BATI PRINCIPAL

Serial No. ;

Key No.	Part No.	Description	Description	Q'ty	S.C	Serial No.	ICA	Replaceable part	
								Part No.	Q'ty
1100 --	K1045922C	MAIN FRAME	ARMATURE PRINCIPALE	-	D	5001-5589			
	160620-00073	FRAME,MAIN	ARMATURE PRINCIPALE	-	D	5590-			
1	K1045921C	FRAME;MAIN	ARMATURE PRINCIPALE	1		5001-5589	Y	160620-00074	1
	160620-00074	FRAME,MAIN	ARMATURE PRINCIPALE	1		5590-6098	I	160620-00074B	1
	160620-00074B	FRAME,MAIN	ARMATURE PRINCIPALE	1		6099-6341			
	160620-00074E	FRAME,MAIN	ARMATURE PRINCIPALE	1		6342-6978	I	160620-00074G	1
	160620-00074G	FRAME,MAIN	ARMATURE PRINCIPALE	1		6979-7754	I	160620-00074H	1
	160620-00074H	FRAME,MAIN	ARMATURE PRINCIPALE	1		7755-9144	I	160620-00074K	1
	160620-00074K	FRAME,MAIN	ARMATURE PRINCIPALE	1		09145-10721	I	160620-00074L	1
	160620-00074L	FRAME,MAIN	ARMATURE PRINCIPALE	1		10722-11451	I	160620-00074M	1
	160620-00074M	FRAME,MAIN	ARMATURE PRINCIPALE	1		11452-			
5	S0571266	BOLT	BOULON	36					
6	160-00068A	COVER;RUBBER	COUVERTURE	1					
7	180-00463	PACKING	EMBALLAGE	1					
8	621-02938B	COVER	COUVERTURE	1					
9	DS0025023	BOLT;SET	BOULON	2					
13	S0572166	BOLT M20X2.5X200	BOULON	1		5001-6098			
	S0571866	BOLT M20X2.5X170	BOULON A 6 PANS	1		6099-			
14	2123-1107D7	PIN;KNOCK	GOUPILLE	2					
15	2160-1004D48	BUSHING;RUBBER	BOUCHON	1					
16	2160-1004D39	BUSHING;RUBBER	DOUILLE	1					
17	2160-1201D11	BUSHING;RUBBER	DOUILLE	1					
21	2114-9012A	WASHER	RONDELLE	36					
25	2160-1201D13	BUSHING;RUBBER	DOUILLE	2					
26	2160-1201D12	BUSHING;RUBBER	MANCHON CAOUTCHOUC	1					
27	2160-1004D55	BUSHING;RUBBER	DOUILLE	2					
28	191-02990C	PLATE	PLAQUE	2					
29	K1049858	BOLT	BOULON	6					
31	195-02623B	BRACKET	SUPPORT	1					
32	DS0025015	BOLT;SET	BOULON	1					
33	160-00081	CAP	CHAPEAU	1					
36	DS7601020	BUSHING;RUBBER	DOUILLE	2		5001-6341			
	DS7601027	BUSHING;RUBBER	DOUILLE	2		6342-			
37	DS7601021	BUSHING;RUBBER	DOUILLE	2		5001-6341			
	DS7601028	BUSHING;RUBBER	DOUILLE	2		6342-			
38	2160-1004D31	BUSHING;RUBBER	DOUILLE	1					
39	S4013133	NUT	ECROU	1					
40	S8470165	CLAMP;HOSE	COLLIER	1					

DATE	SEP. 12, 2012
4th EDITION	

Fig. 1100 MAIN FRAME
BATI PRINCIPAL

Serial No. ;

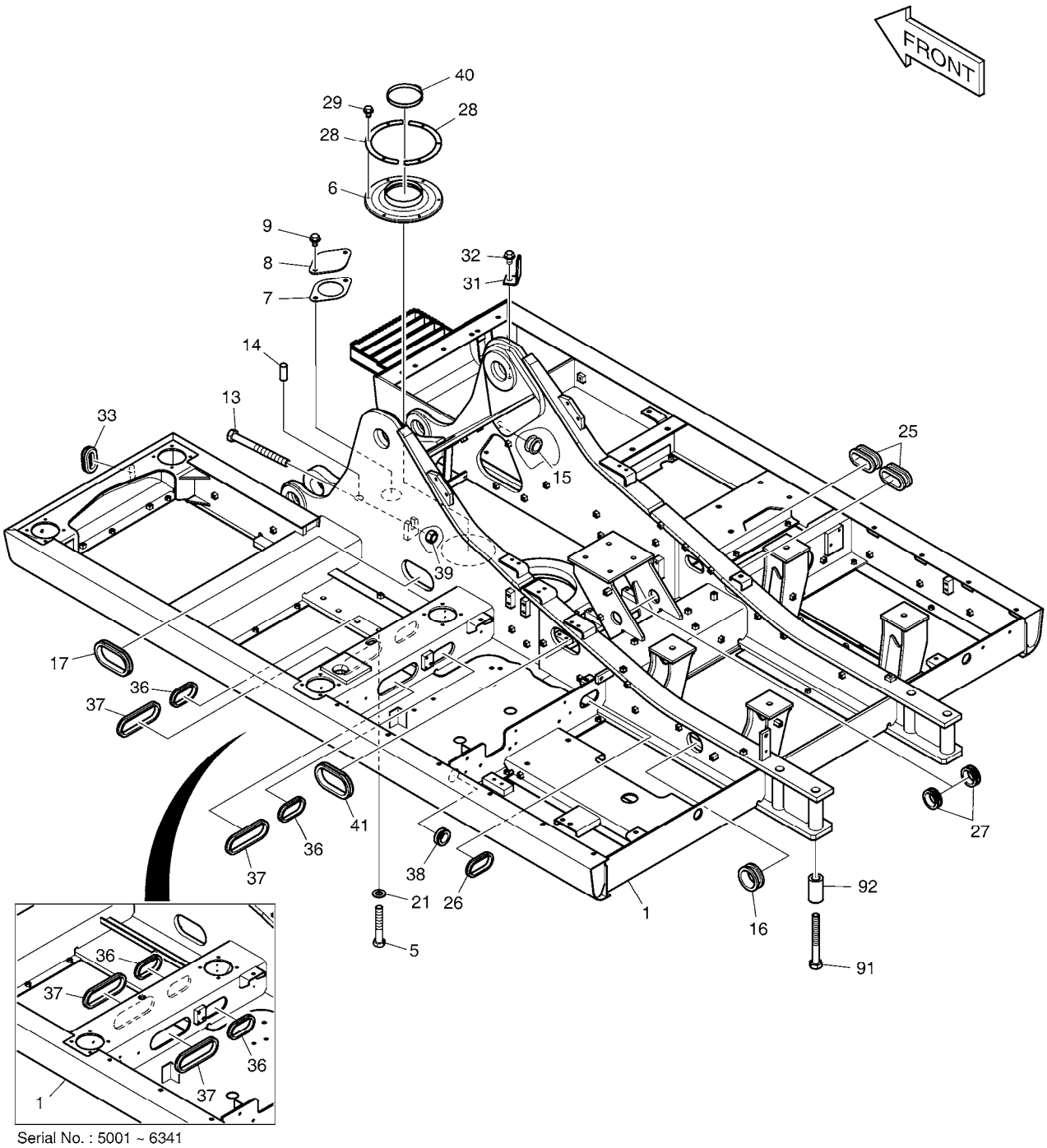

Serial No. : 5001 ~ 6341

DATE	SEP. 12, 2012
4th EDITION	

Fig. 1100 MAIN FRAME
BATI PRINCIPAL

Serial No. ;

Key No.	Part No.	Description	Description	Q'ty	S.C	Serial No.	ICA	Replaceable part	
								Part No.	Q'ty
1100 -41	DS7601046	BUSHING;RUBBER	DOUILLE	1					
91	2120-2137A	BOLT	BOULON	4					
92	2114-1817	SPACER	ENTRETOISE	4					

DATE	SEP. 12, 2012
4th EDITION	

Fig. 1110 COUNTER WEIGHT - 4.1TON(DX225LCA) MASSE D'EQUILIBRAGE

Serial No. ;

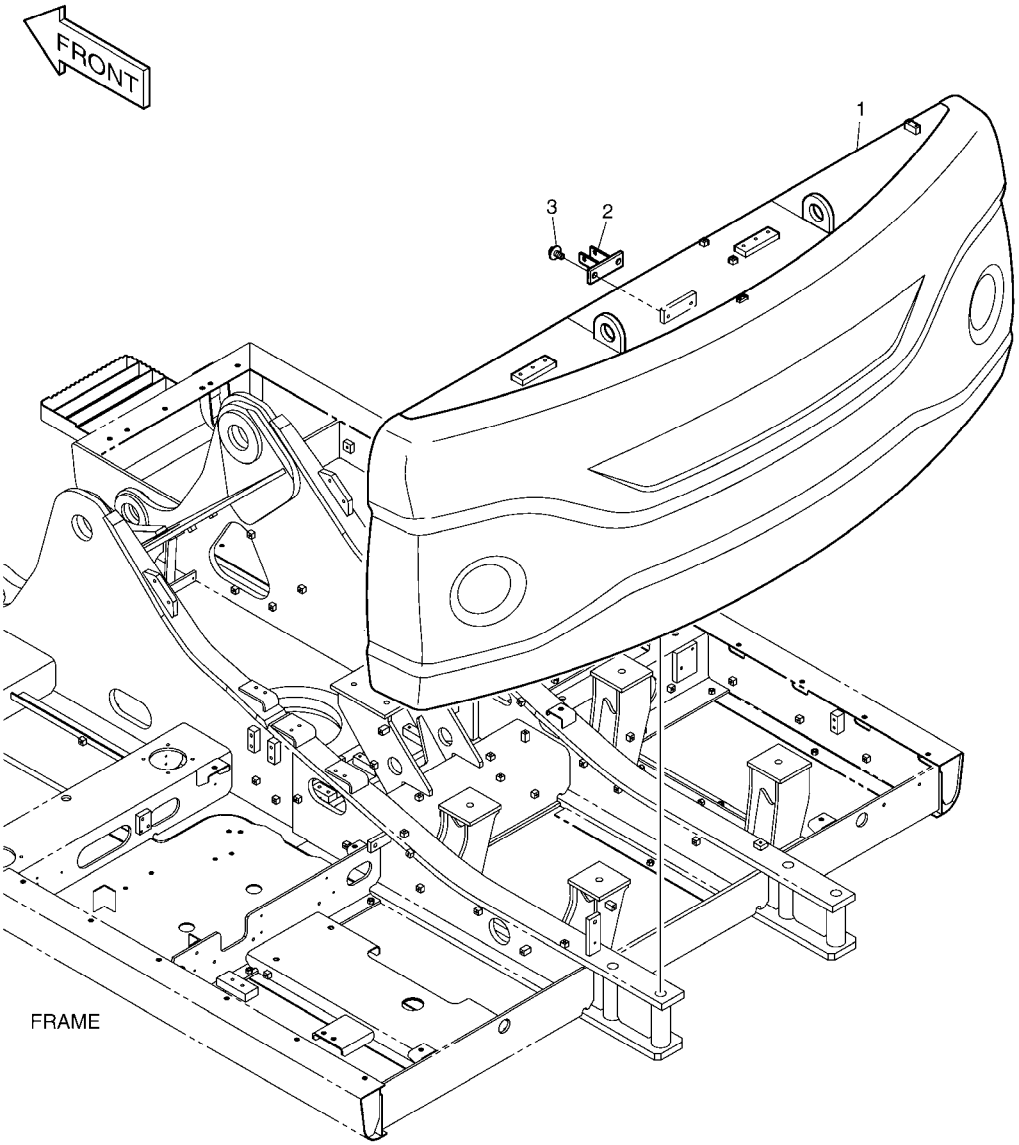

DATE	SEP. 12, 2012
4th EDITION	

Fig. 1110 COUNTER WEIGHT - 4.1TON(DX225LCA) MASSE D'EQUILIBRAGE

Serial No. ;

Key No.	Part No.	Description	Description	Q'ty	S.C	Serial No.	ICA	Replaceable part	
								Part No.	Q'ty
1110 --	K1045675A	COUNTER WEIGHT;4.1ton	MASSE D'EQUILIBRAGE	1		5001-5284	I	K1045675B	1
	K1045675B	COUNTER WEIGHT;4.1ton	MASSE D'EQUILIBRAGE	1		5285-5950	Y	160702-00048	1
	160702-00048	WEIGHT ASSY,COUNTER;4.1ton	MASSE D'EQUILIBRAGE	1		5951-			
1	K1039183C	COUNTER WEIGHT;4.1ton	MASSE D'EQUILIBRAGE	1		5001-5284	I	K1039183E	1
	K1039183E	COUNTER WEIGHT;4.1ton	MASSE D'EQUILIBRAGE	1		5285-5950	Y	160702-00046	1
	160702-00046	WEIGHT,COUNTER;4.1ton	MASSE D'EQUILIBRAGE	1		5951-			
2	K1002454B	BRACKET	SUPPORT	1					
3	DS0025015	BOLT;SET	BOULON	2					

DATE	SEP. 12, 2012
4th EDITION	

Fig. 1115 COUNTER WEIGHT - 3.8TON(DX220A) MASSE D'EQUILIBRAGE

Serial No. ;

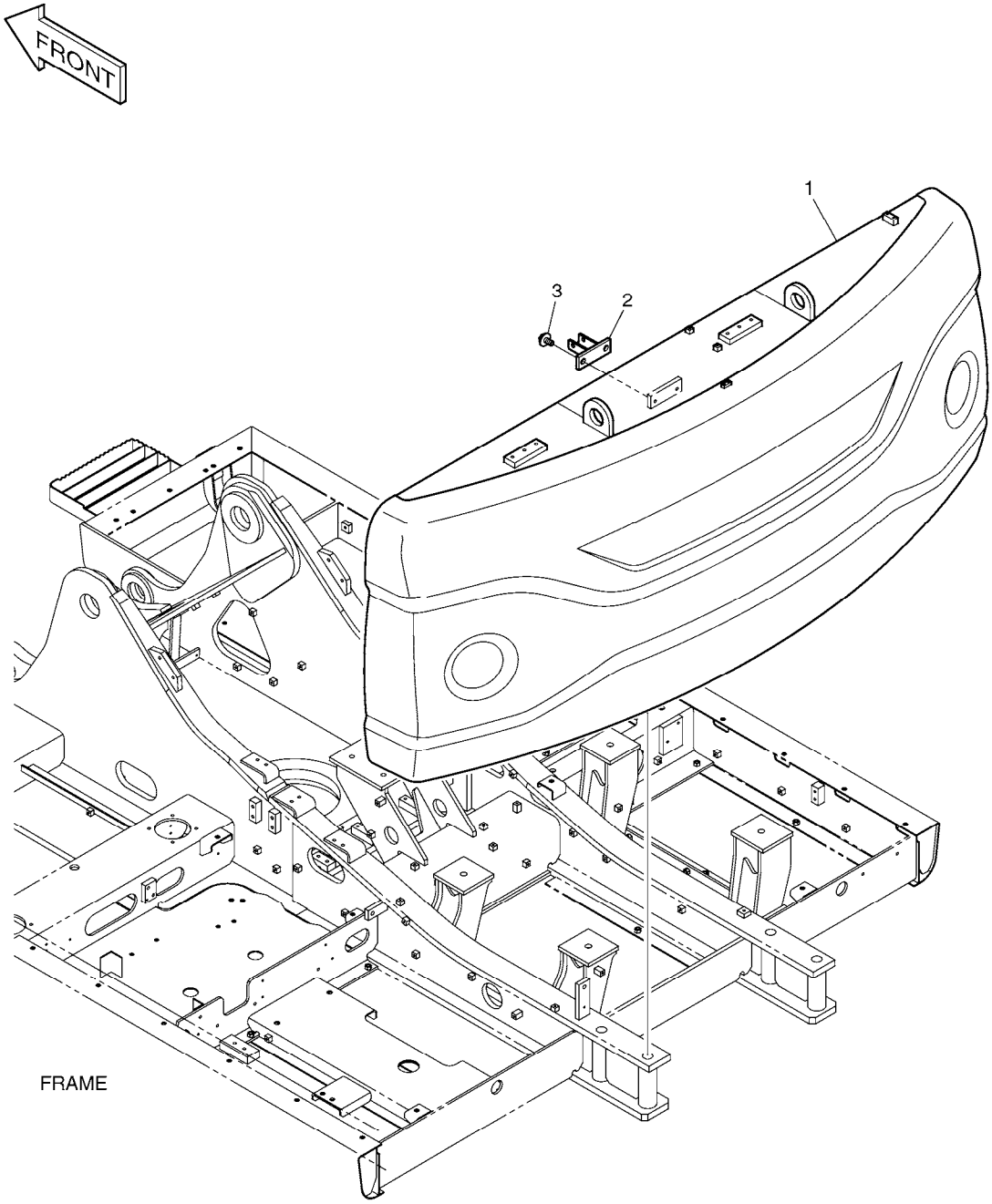

DATE	SEP. 12, 2012
4th EDITION	

Fig. 1115 COUNTER WEIGHT - 3.8TON(DX220A) MASSE D'EQUILIBRAGE

Serial No. ;

Key No.	Part No.	Description	Description	Q'ty	S.C	Serial No.	ICA	Replaceable part	
								Part No.	Q'ty
1115 --	160702-00628	WEIGHT ASSY,COUNTER;3.8TON	MASSE D'EQUILIBRAGE	1					
1	-	WEIGHT,COUNTER;3.8TON	MASSE D'EQUILIBRAGE	1	D				
2	K1002454B	BRACKET	SUPPORT	1					
3	DS0025015	BOLT;SET	BOULON	2					

DATE	SEP. 12, 2012
4th EDITION	

Fig. 1120 ENGINE MOUNTING MOTEUR

Serial No. ;

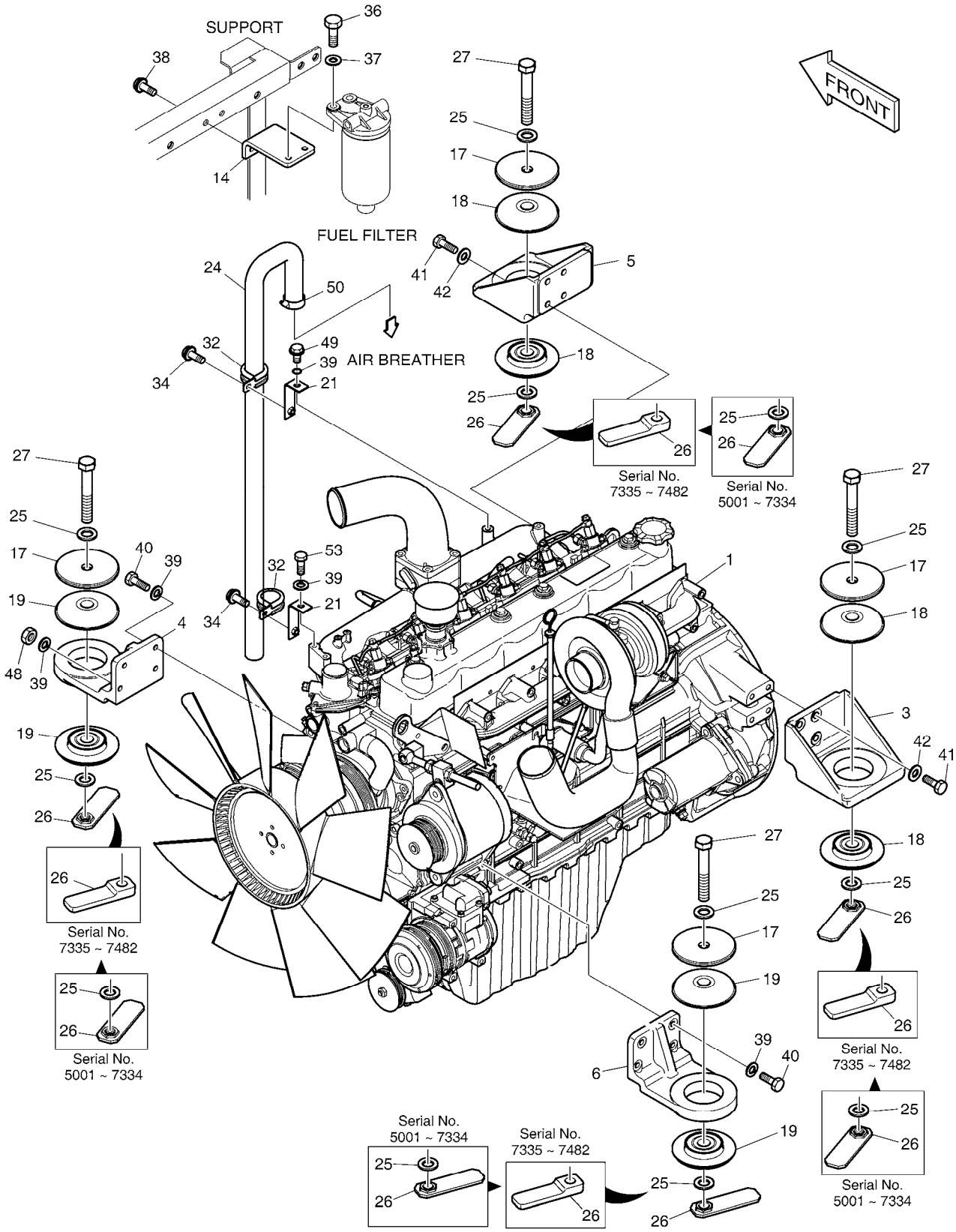

DATE	SEP. 12, 2012
4th EDITION	

Fig. 1120 ENGINE MOUNTING MOTEUR

Serial No. ;

Key No.	Part No.	Description	Description	Q'ty	S.C	Serial No.	ICA	Replaceable part	
								Part No.	Q'ty
1120 --	K1045986A	ENGINE ASS'Y	ENSEMBLE MOTEUR	-	D	5001-5571			
	150109-00018	ENGINE ASSY	ENSEMBLE MOTEUR	-	D	5572-			
1	K1000967A	ENGINE-DB58TIS	ENSEMBLE MOTEUR	1					
3	K1000039A	BRACKET;ENGINE MOUNT	SUPPORT	1		5001-7598	I	110427-00210	1
	110427-00210	BRACKET,ENGINE MOUNTING	SUPPORT	1		7599-			
4	K1000041A	BRACKET;ENGINE MOUNT	SUPPORT	1		5001-7598	I	110427-00212	1
	110427-00212	BRACKET,ENGINE MOUNTING	SUPPORT	1		7599-			
5	K1000040A	BRACKET;ENGINE MOUNT	SUPPORT	1		5001-7598	I	110427-00211	1
	110427-00211	BRACKET,ENGINE MOUNTING	SUPPORT	1		7599-			
6	K1000042A	BRACKET;ENGINE MOUNT	SUPPORT	1		5001-7598	I	110427-00213	1
	110427-00213	BRACKET,ENGINE MOUNTING	SUPPORT	1		7599-			
14	195-02465	BRACKET	SUPPORT	1					
17	2114-1929	WASHER	RONDELLE	4					
18	161-00548	RUBBER	LE CAOUTCHOUC	4					
19	161-00550	RUBBER	LE CAOUTCHOUC	4					
21	K1004487	BRACKET	SUPPORT	2					
24	K1007551	HOSE;AIR	TUYAU FLEXIBLE	1					
25	2114-9012A	WASHER	RONDELLE	8		5001-7334			
	2114-9012A	WASHER	RONDELLE	4		7335-7482			
	2114-9012A	WASHER	RONDELLE	8		7483-			
26	195-02643C	SUPPORT;NUT	APPUI	4		5001-7334			
	110958-00342	SUPPORT;NUT	APPUI	4		7335-7482	I	110958-01083	4
	110958-01083	SUPPORT;NUT	APPUI	4		7483-			
27	S0771466	BOLT	BOULON	4					
32	124-00208D6	CLIP	AGRAFE	2					
34	K1001029	BOLT	BOULON	2					
36	S0515366	BOLT	BOULON A 6 PANS	2					
37	S5010713	WASHER;PLAIN	RONDELLE	2					
38	DS0025015	BOLT;SET	BOULON	2					
39	S5102603	WASHER,SPRING	RONDELLE	10					
40	S0712366	BOLT	BOULON	7					
41	S0786366	BOLT	BOULON	8					
42	S5102703	WASHER;SPRING	RONDELLE	8					
48	S4032633	NUT M10X1.25	ECROU	1					
49	S0711866	BOLT	BOULON	1					
50	S8510044	CLAMP;HOSE	COLLIER	1					
53	S0511866	BOLT	BOULON	1					

DATE	SEP. 12, 2012
4th EDITION	

Fig. 1130 RADIATOR MOUNTING SUPPORT DE RADIATEUR

Serial No. ;

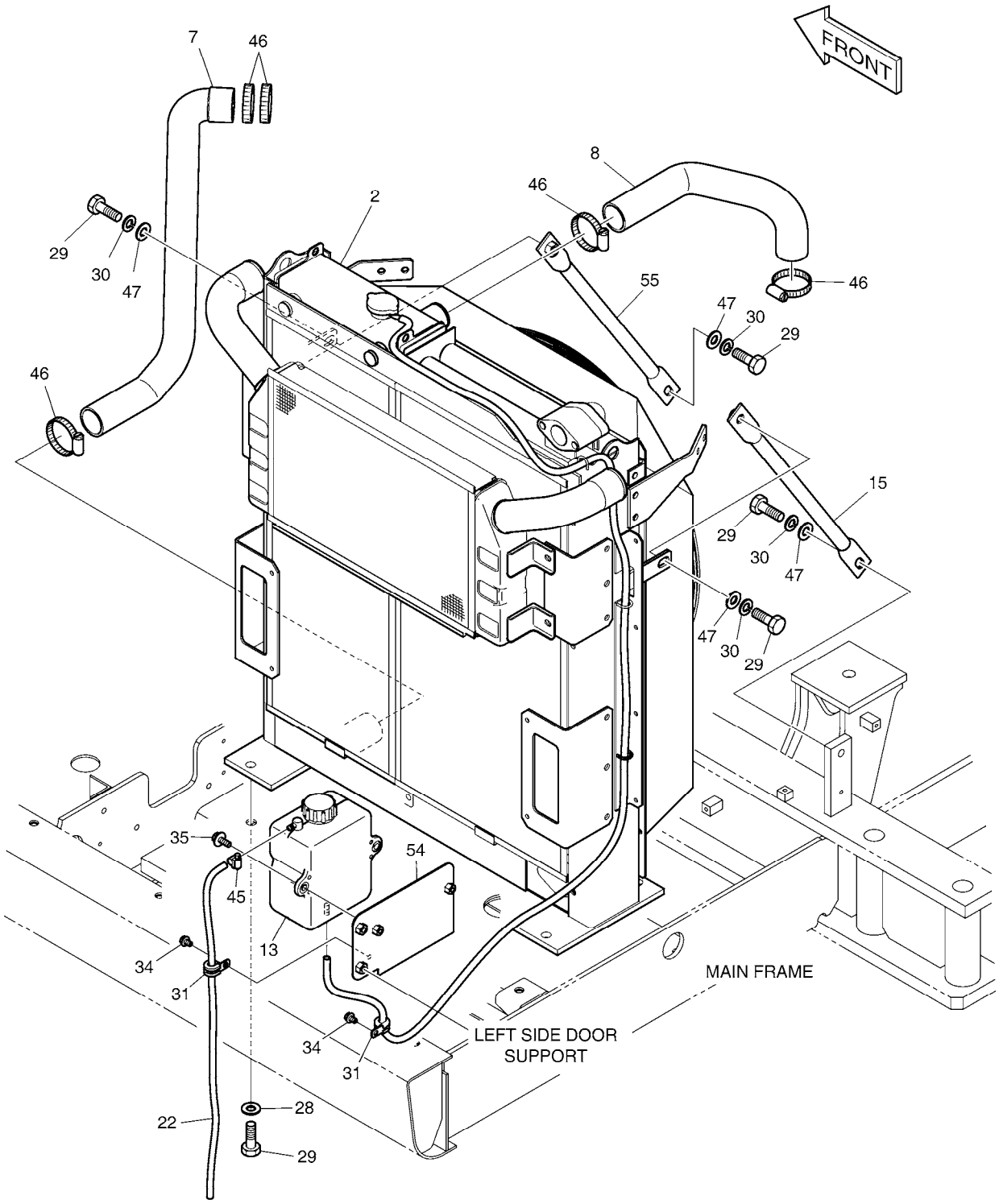

DATE	SEP. 12, 2012
4th EDITION	

Fig. 1130 RADIATOR MOUNTING SUPPORT DE RADIATEUR

Serial No. ;

Key No.	Part No.	Description	Description	Q'ty	S.C	Serial No.	ICA	Replaceable part	
								Part No.	Q'ty
1130 --	K1045986A	ENGINE ASS'Y	ENSEMBLE MOTEUR	-	D	5001-5571			
	150109-00018	ENGINE ASSY	ENSEMBLE MOTEUR	-	D	5572-			
2	K1000752C	RADIATOR ASS'Y	ENSEMBLE RADIATEUR	1					
7	K1006781	HOSE;WATER	TUYAU FLEXIBLE	1					
8	K1006780	HOSE;WATER	TUYAU FLEXIBLE	1					
13	K1038409	TANK;RESERVE	RESERVOIR	1					
15	K1000563B	STAY	ENTRETOISE	1					
22	K1004515	HOSE	TUYAU	1					
28	2114-1816A	WASHER	RONDELLE	4					
29	S0512466	BOLT	BOULON	8					
30	S5102903	WASHER,SPRING	RONDELLE	4					
31	124-00208D2	CLIP	AGRAFE	2					
34	K1001029	BOLT	BOULON	2					
35	DS0025016	BOLT;SET	BOULON	2					
45	S8450012	CLAMP	AGRAFE	1					
46	S8470075	CLAMP;HOSE	BRIDE	4		5001-9144			
	S8500079	CLAMP;HOSE	COLLIER	5		9145-			
47	S5010913	WASHER,PLAIN	RONDELLE	4					
54	K1040048	BRACKET	SUPPORT	1					
55	K1047774	STAY	ENTRETOISE	1					

DATE	SEP. 12, 2012
4th EDITION	

Fig. 1140 RADIATOR
RADIATEUR

Serial No. ;

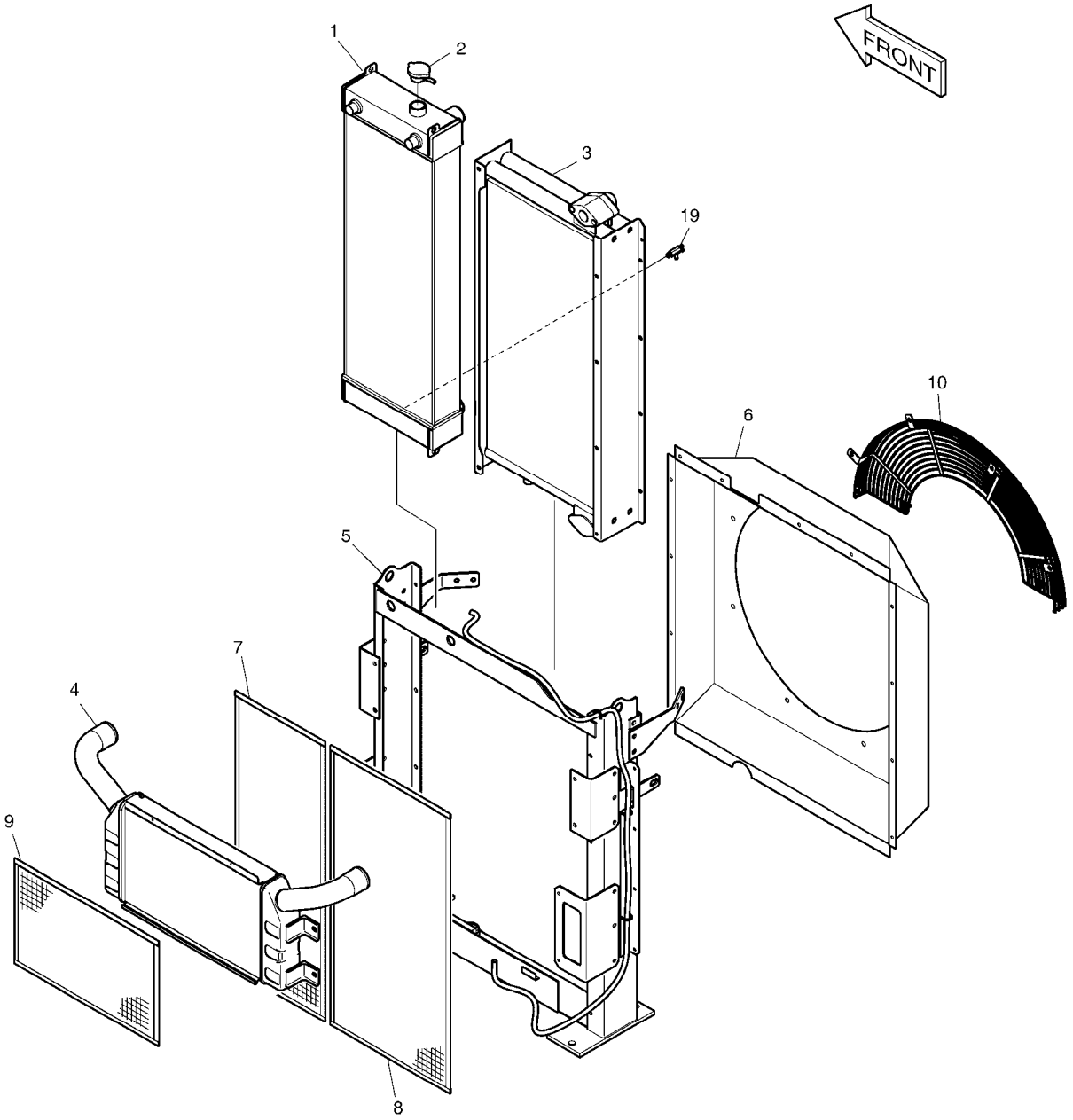

DATE	SEP. 12, 2012
4th EDITION	

Fig. 1140 RADIATOR RADIATEUR

Serial No. ;

Key No.	Part No.	Description	Description	Q'ty	S.C	Serial No.	ICA	Replaceable part	
								Part No.	Q'ty
1140 --	K1000752C	RADIATOR ASS'Y	ENSEMBLE RADIATEUR	1					
1	K1008126	RADIATOR	RADIATEUR	1					
2	K1010769	CAP;PRESSURE	CHAPEAU	1					
3	K1008128	OIL COOLER	REFRIGERANT A HUILE	1					
4	K1010767A	CAC ASS`Y	CHARGEE	1					
5	-	FRAME	ARMATURE	1	D				
6	K1008129	SHROUD	MONTURE	1					
7	K1008130	WIRE NET	FIL	1					
8	K1008131	WIRE NET	FIL	1					
9	K1010768	WIRE NET(CAC)	FIL	1					
10	K1008132	GUARD;FAN(UPPER)	GARDE	1					
19	K9003878	COCK ASS'Y	ROBINET ASS'Y	1					

DATE	SEP. 12, 2012
4th EDITION	

Fig. 1150 MUFFLER SILENCIEUX

Serial No. ;

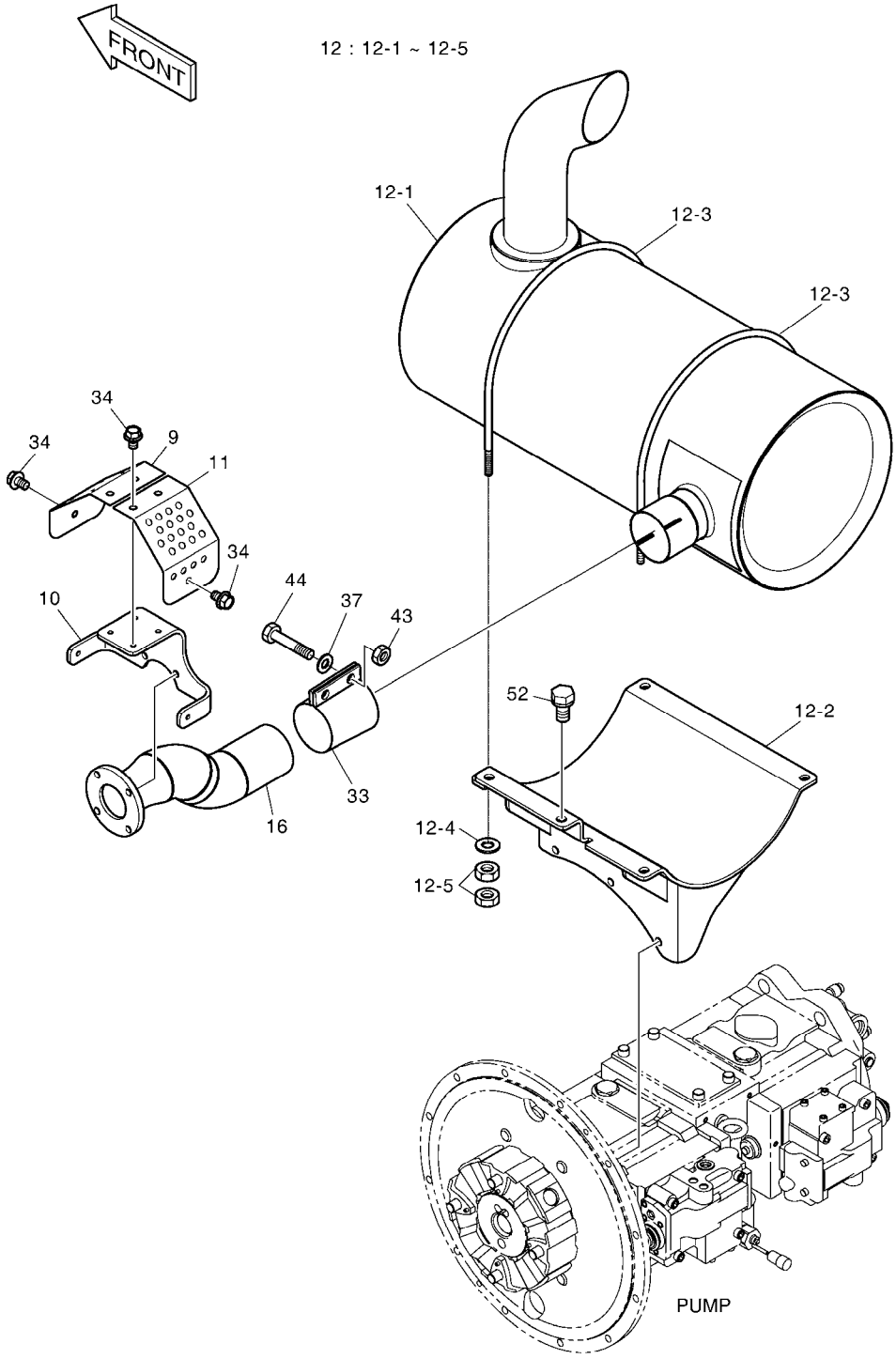

DATE	SEP. 12, 2012
4th EDITION	

Fig. 1150 MUFFLER SILENCIEUX

Serial No. ;

Key No.	Part No.	Description	Description	Q'ty	S.C	Serial No.	ICA	Replaceable part	
								Part No.	Q'ty
1150 --	K1045986A	ENGINE ASS'Y	ENSEMBLE MOTEUR	-	D	5001-5571			
	150109-00018	ENGINE ASSY	ENSEMBLE MOTEUR	-	D	5572-			
9	K1006245	COVER	COUVERCLE	1					
10	K1016432	BRACKET	SUPPORT	1					
11	K1016430	COVER	COUVERCLE	1					
12	K1045984	MUFFLER SUB ASS'Y	SILENCIEUX	1					
12-1	K1012192B	. MUFFLER	. SILENCIEUX	1					
12-2	K1045901	. BRACKET	. SUPPORT	1					
12-3	K1039117A	. U-BOLT	. BOULON A 6 PANS	2					
12-4	S5010613	. WASHER;PLAIN	. RONDELLE	4					
12-5	S4012633	. NUT	. ECROU	8					
16	K1045900	PIPE;EXHAUST	TUYAU	1					
33	124-00310A	CLAMP	BRIDE	1					
34	K1001029	BOLT	BOULON	6					
37	S5010713	WASHER;PLAIN	RONDELLE	2					
43	S4012733	NUT	ECROU	2					
44	S0515866	BOLT	BOULON	2					
52	DS0025021	BOLT;SET	BOULON	2					

DATE	SEP. 12, 2012
4th EDITION	

Fig. 1160 CAC PIPING
CHARGEE DE REFROIDISSEUR D'CAIR

Serial No. ;

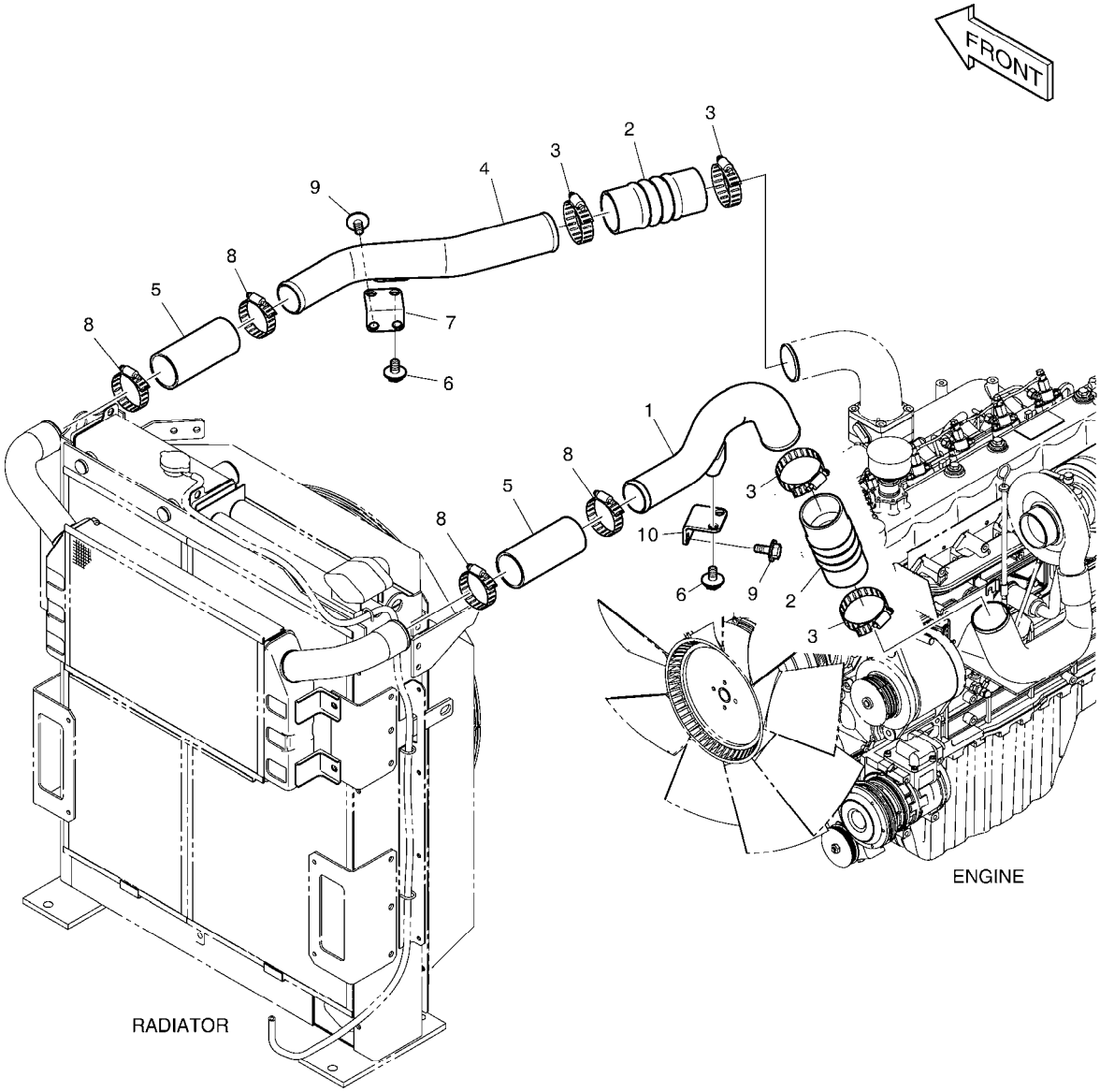

DATE	SEP. 12, 2012
4th EDITION	

Fig. 1160 CAC PIPING
CHARGEE DE REFROIDISSEUR D'CAIR

Serial No. ;

Key No.	Part No.	Description	Description	Q'ty	S.C	Serial No.	ICA	Replaceable part	
								Part No.	Q'ty
1160 --	K1046072	CAC PIPING	CHARGEE DE REFROIDISS	-	D				
1	K1012144	PIPE	TUYAU	1					
2	K1038559	HOSE;AIR	TUYAU	2					
3	124-00194	CLAMP	COLLIER	4					
4	K1006778B	PIPE	TUYAU	1					
5	K1045910	HOSE;CAC	TUYAU FLEXIBLE	2					
6	DS0025014	BOLT;SET	BOULON	4					
7	K1000663	BRACKET	SUPPORT	1					
8	K1000704A	CLAMP	BRIDE	4					
9	DS0025023	BOLT;SET	BOULON	4					
10	K1012143	BRACKET	SUPPORT	1					

DATE	SEP. 12, 2012
4th EDITION	

Fig. 1170 AIR CLEANER
FILTRE A AIR

Serial No. ;

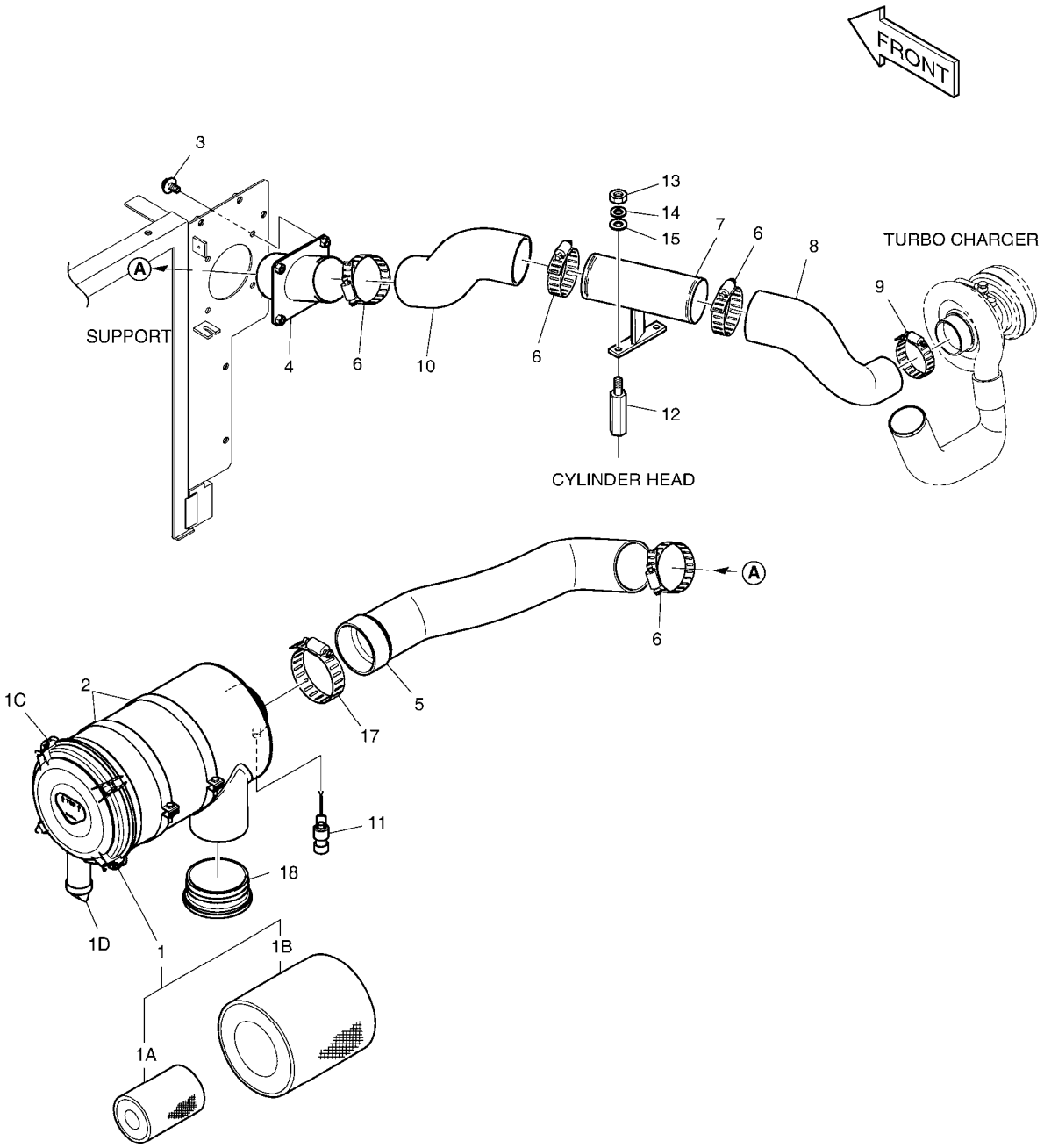

DATE	SEP. 12, 2012
4th EDITION	

Fig. 1170 AIR CLEANER
FILTRE A AIR

Serial No. ;

Key No.	Part No.	Description	Description	Q'ty	S.C	Serial No.	ICA	Replaceable part	
								Part No.	Q'ty
1170 --	K1000965E	AIR CLEANER ASS'Y	ENSEMBLE FILTRE A AIR	-	D				
1	204-00067	AIR CLEANER	FILTRE A AIR	1					
1A	474-00039	. ELEMENT;INNER	. ELEMENT	1					
1B	474-00040	. ELEMENT;OUTER	. ELEMENT	1					
1C	204-00075	. COVER	. COUVERTURE	1					
1D	204-00070	. VALVE;VACUATOR	. VANNE	1					
2	124-00298B	BAND;AIR CLEANER	BANDE	2					
3	DS0025015	BOLT;SET	BOULON	4					
4	193-00913A	PIPE;AIR	TUYAU	1					
5	K1049854	HOSE;AIR	TUYAU FLEXIBLE	1					
6	S8510118	CLAMP;HOSE	COLLIER DE LA CONDUITE	4					
7	193-00912	PIPE;AIR	TUYAU	1					
8	K1000562	HOSE;AIR	TUYAU FLEXIBLE	1					
9	S8510092	CLAMP;HOSE	COLLIER	1					
10	185-00410C	HOSE;AIR	TUYAU FLEXIBLE	1					
11	170-00004	INDICATOR;DUST	INDICATEUR	1					
12	2120-2165	BOLT	BOUCHON	2					
13	S4012633	NUT	ECROU	2					
14	S5102603	WASHER,SPRING	RONDELLE	2					
15	S5010613	WASHER;PLAIN	RONDELLE	2					
17	S8510143	CLAMP;HOSE	COLLIER DE LA CONDUITE	1					
18	K1003618	CAP;RAIN	CHAPEAU	1					

DATE	SEP. 12, 2012
4th EDITION	

Fig. 1180 PUMP MOUNTING POMPE

Serial No. ;

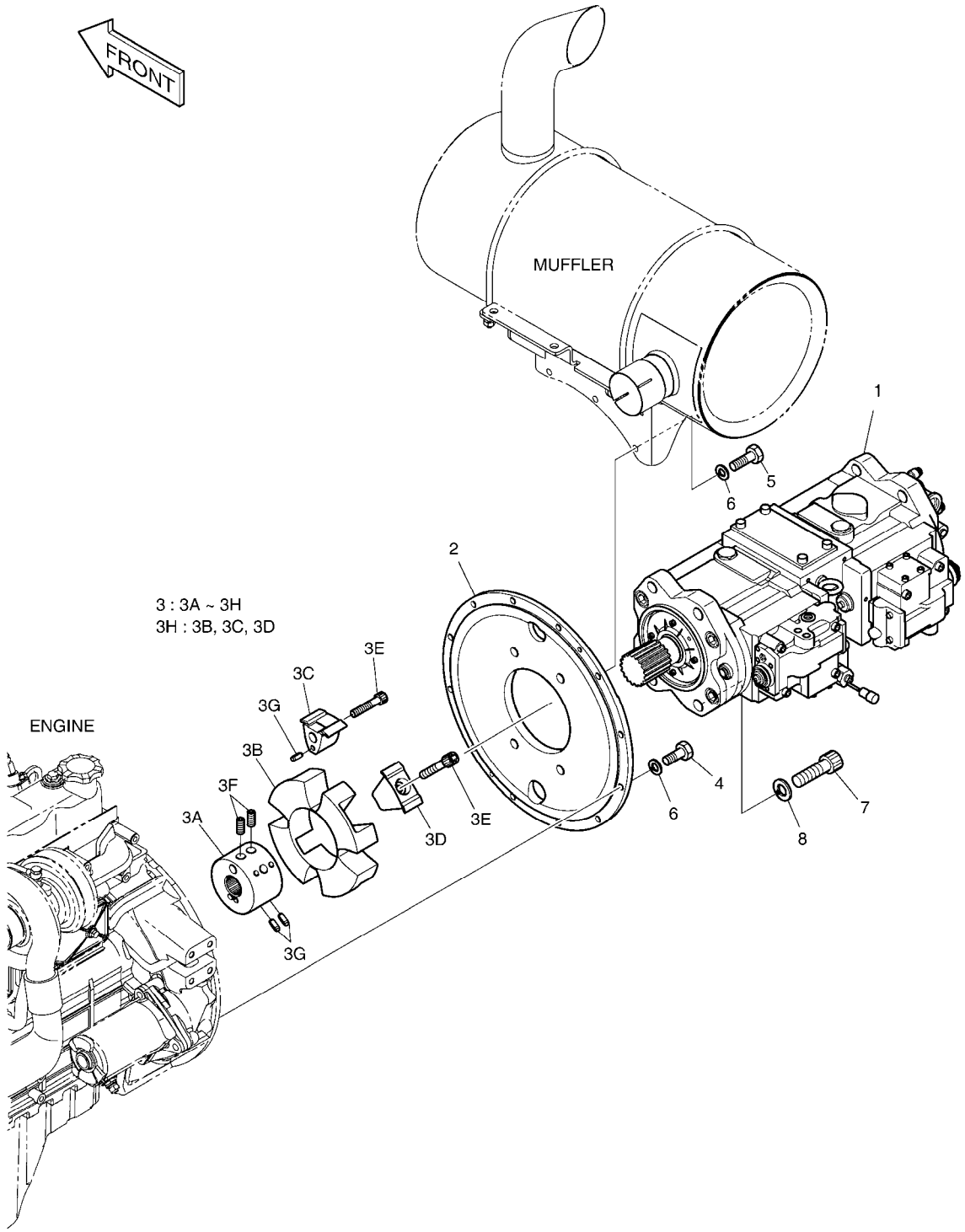

DATE	SEP. 12, 2012
4th EDITION	

Fig. 1180 PUMP MOUNTING POMPE

Serial No. ;

Key No.	Part No.	Description	Description	Q'ty	S.C	Serial No.	ICA	Replaceable part	
								Part No.	Q'ty
1180 --	401-00502H	PUMP MOUNTING	POMPE	-	D	5001-6004			
	400911-00005	PUMP INSTALLATION	BATI POMPE	-	D	6005-			
1	K1000698G	PUMP;MAIN	POMPE DE BATI PRINCIPAL	1		5001-6004			
	K1000698E	MAIN PUMP	POMPE DE BATI PRINCIPAL	1		6005-8751	I	400914-00212	1
	400914-00212	PUMP,MAIN	POMPE DE BATI PRINCIPAL	1		8752-			
2	229-00025C	COVER;PUMP	COUVERTURE	1					
3	K1013825	COUPLING	FIXATION DE POMPE	1					
3A	-	. HUB	. MOYEU	1	D				
3B	2474-7009	. ELEMENT	. ELEMENT	1					
3C	-	. INSERT(A)	. INSERTION	4	D				
3D	-	. INSERT(R)	. INSERTION	4	D				
3E	K9000422	. SET;SOCKET BOLT	. ENSEMBLE DE BOULON	1					
3F	-	. BOLT;CLAMPING	. BOULON	2	D				
3G	-	. PIN;SPRING	. GOUPILLE	12	D				
3H	2474-7009K	. ELEMENT KIT	. ELEMENT	1					
4	S0512266	BOLT	BOULON	9					
5	S0512366	BOLT	BOULON	3					
6	S5102603	WASHER,SPRING	RONDELLE	12					
7	S2227866	BOLT;SOCKET	BOULON	4					
8	S5111103	WASHER;SPRING	RONDELLE	4					

DATE	SEP. 12, 2012
4th EDITION	

Fig. 1190 SWING MOTOR
MOTEUR D'ORIENTATION

Serial No. ;

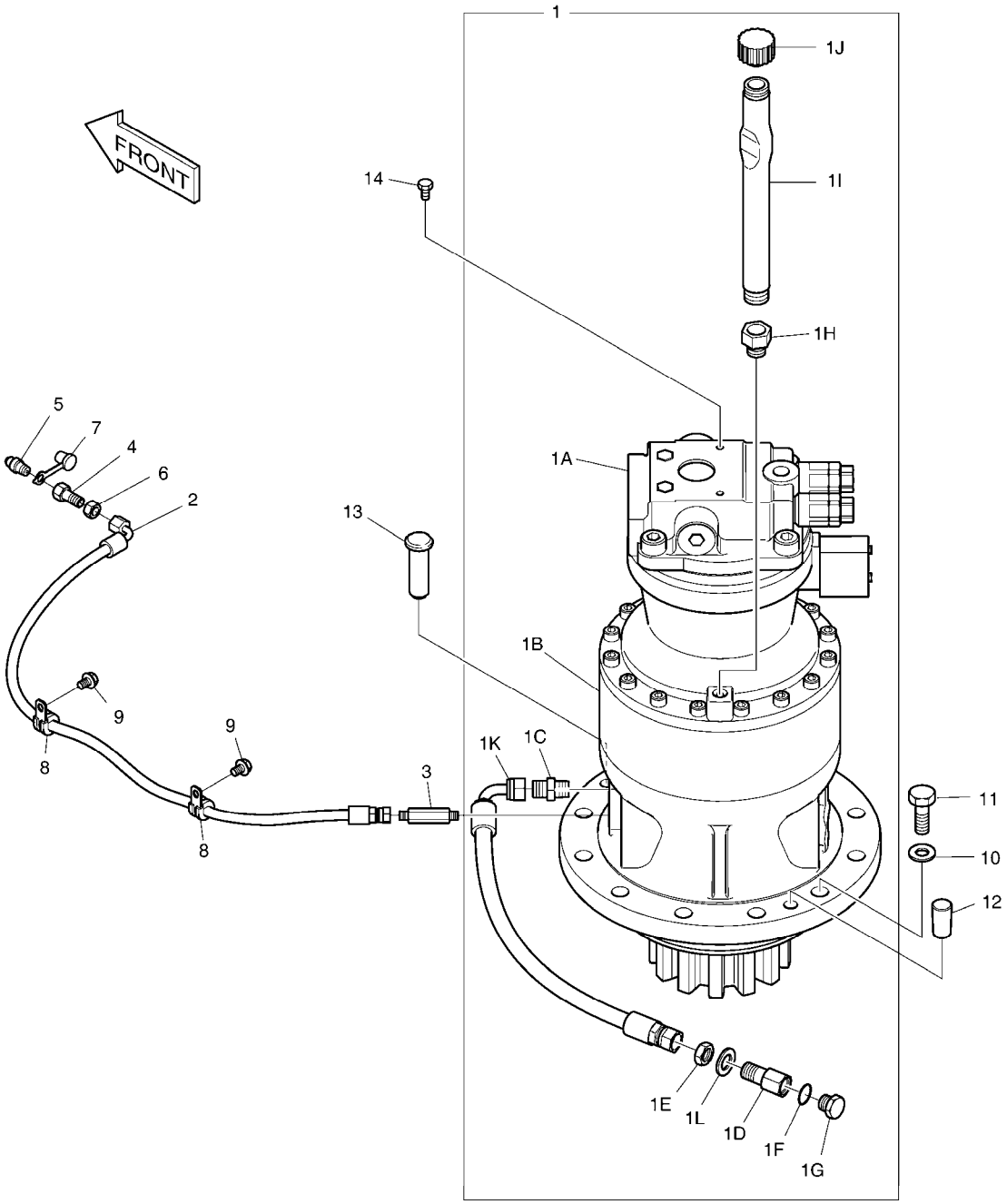

DATE	SEP. 12, 2012
4th EDITION	

Fig. 1190 SWING MOTOR MOTEUR D'ORIENTATION

Serial No. ;

Key No.	Part No.	Description	Description	Q'ty	S.C	Serial No.	ICA	Replaceable part Part No.	Q'ty
1190 --	401-00477J	SWING DEVICE ASS'Y	DISPOSITIF D'OSCILLATION	-	D				
1	K1045919	SWING DEVICE SUB ASS'Y	DISPOSITIF D'OSCILLATION	1		5001-6317	I	170301-00111	1
	170301-00111	DEVICE,SWING	DISPOSITIF D'OSCILLATION	1		6318-7334	I	170301-00111A	1
	170301-00111A	DEVICE,SWING;SUB	DISPOSITIF D'OSCILLATION	1		7335-9520	I	170301-00111B	1
	170301-00111B	DEVICE,SWING;SUB	DISPOSITIF D'OSCILLATION	1		9521-			
1A	K1045024	. SWING MOTOR	. MOTEUR D'OSCILLATION	1		5001-7334	I	170303-00049	1
	170303-00049	. MOTOR,SWING	. MOTEUR D'OSCILLATION	1		7335-9520	I	170303-00049B	1
	170303-00049B	. MOTOR,SWING	. MOTEUR D'OSCILLATION	1		9521-			
1B	K1038203	. SWING REDUCTION GEAR ASS	. ENSEMBLE DE REDUCTE	1		5001-6317	I	130426-00010	1
	130426-00010	. GEAR ASSY,REDUCTION	. ENSEMBLE DE REDUCTE	1		6318-			
1C	2181-1110D3	. ADAPTER	. ADAPTEUR	1					
1D	181-00698	. REDUCER	. REDUCTEUR	1					
1E	121-00010D3	. NUT	. ECROU	1					
1F	S8000181	. O-RING	. JOINT CIRCULAIRE	1					
1G	2181-1950D7	. PLUG	. PRISE	1					
1H	2181-1913D24	. REDUCER	. REDUCTEUR	1					
1I	K1000266	. PIPE	. TUYAU	1					
1J	2119-1063B	. CAP	. CHAPEAU	1					
1K	2184-1036D43	. HOSE PF1/2-550L	. TUYAU	1					
1L	S5011113	. WASHER;PLAIN	. RONDELLE	1					
2	2184-1046D50	HOSE	TUYAU FLEXIBLE	1					
3	DS2214051	ADAPTER	ADAPTEUR	1					
4	181-00103	REDUCER	REDUCTEUR	1					
5	S6710041	NIPPLE;GREASE	GRAISSEUR	1					
6	121-00006	NUT	ECROU	1					
7	160-00020	CAP;GREASE NIPPLE	CHAPEAU	1					
8	124-00208D2	CLIP	AGRAFE	2					
9	120-00276	BOLT M8X1.25X12	BOULON A 6 PANS	2					
10	2114-9012A	WASHER	RONDELLE	11					
11	S0570166	BOLT M20X2.5X65	BOULON	11					
12	160-00027	CAP	CHAPEAU	2					
13	2123-4030	PIN;LOCK	GOUPILLE	1					
14	S0511666	BOLT	BOULON	2					

DATE	SEP. 12, 2012
4th EDITION	

Fig. 1200 FUEL TANK
RESERVOIR DE GAZOLE

Serial No. ;

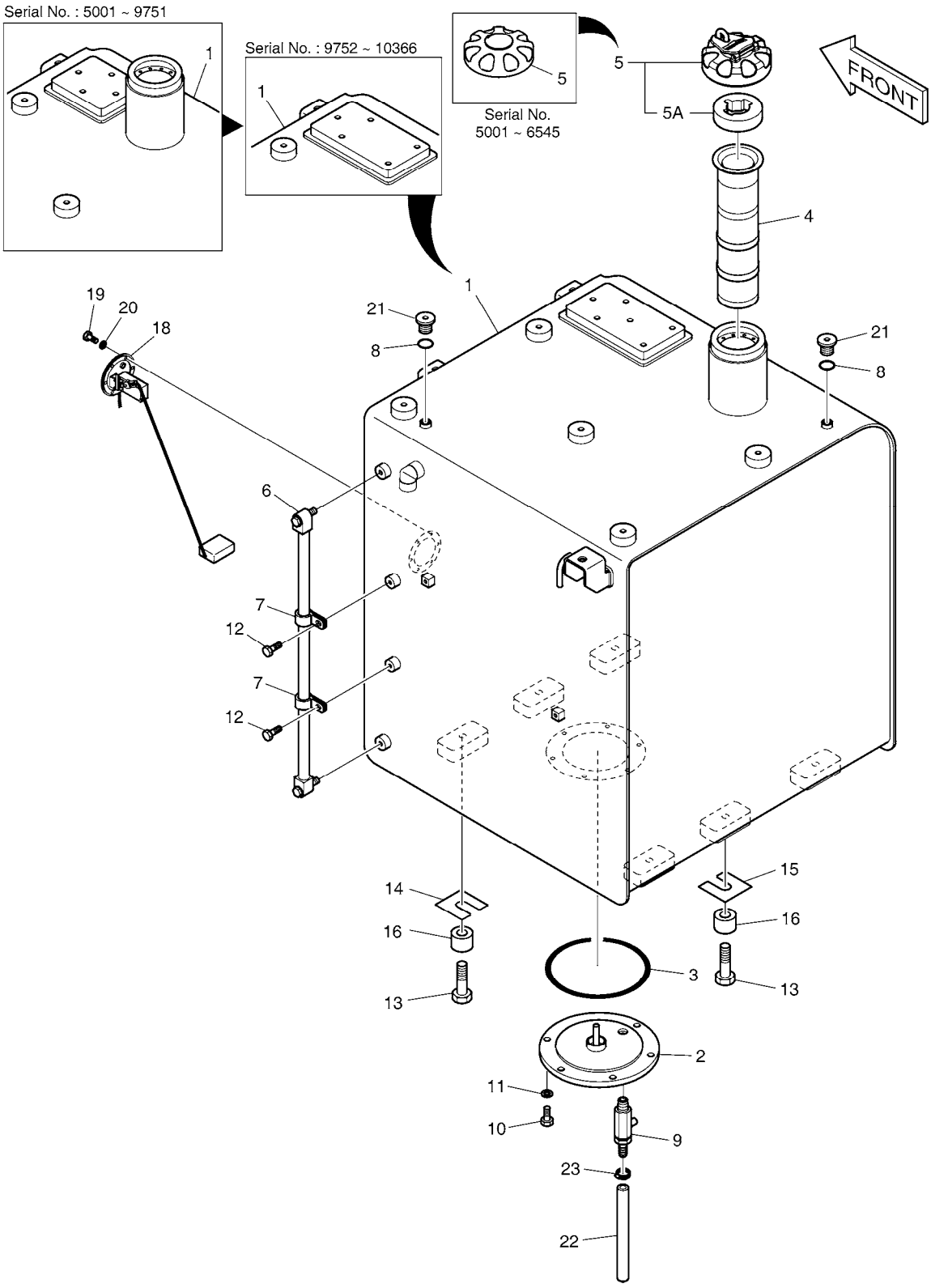

DATE	SEP. 12, 2012
4th EDITION	

Fig. 1200 FUEL TANK
RESERVOIR DE GAZOLE

Serial No. ;

Key No.	Part No.	Description	Description	Q'ty	S.C	Serial No.	ICA	Replaceable part	
								Part No.	Q'ty
1200 --	K1045318A	FUEL TANK ASS`Y	RESERVOIR A GAZOLE	-	D	5001-6545			
	450103-00131	TANK ASSY,FUEL	RESERVOIR A GAZOLE	-	D	6546-			
1	K1044948A	TANK;FUEL	RESERVOIR DE CARBURA	1		5001-6978	I	450103-00150	1
	450103-00150	TANK,FUEL	RESERVOIR DE CARBURA	1		6979-9751			
	450103-00150A	TANK,FUEL	RESERVOIR DE CARBURA	1		09752-10366	I	450103-00150B	1
	450103-00150B	TANK,FUEL	RESERVOIR DE CARBURA	1		10367-			
2	473-00033	COVER	COUVERTURE	1					
3	S8011450	O-RING	JOINT CIRCULAIRE	1					
4	471-00105A	FILTER;FUEL STRAINER	FILTRE	1					
5	K1004266	CAP;FUEL	CHAPEAU	1		5001-6545	I	110911-00126	1
	110911-00126	CAP,FUEL	CHAPEAU	1		6546-			
5A	400504-00045	. ELEMENT(FUEL CAP)	. ELEMENT	1		6546-			
6	119-00014AD1	GAUGE;LEVEL	MESURE	1					
7	DS2802021	CLIP	AGRAFE	2					
8	S8000111	O-RING	JOINT TORIQUE	2					
9	186-00017A	COCK;DRAIN	ROBINET	1					
10	S0512066	BOLT M10X1.5X25	BOULON	6					
11	S5102603	WASHER,SPRING	RONDELLE	6					
12	K1001029	BOLT	BOULON	2					
13	S0565466	BOLT	BOULON A 6 PANS	6					
14	2114-1813	SHIM	CALE	3					
15	2114-1814	SHIM	CALE	3					
16	114-00425	SPACER	ENTERTOISE	6					
18	547-00026	SENDER;FUEL	EXPEDITEUR	1		5001-6669	Y	301316-00016	1
	301316-00016	SENDER,FUEL	EXPEDITEUR	1		6670-			
19	S3450833	SCREW	VIS	6					
20	S5100203	WASHER;SPRING	RONDELLE	6					
21	2181-1890D2	PLUG	BOUCHON	2					
22	DS2105053	HOSE	TUYAU FLEXIBLE	1					
23	S8450012	CLAMP	AGRAFE	1					

DATE	SEP. 12, 2012
4th EDITION	

Fig. 1210 FUEL PIPING
CONDUITES DE GAZOLE

Serial No. ;

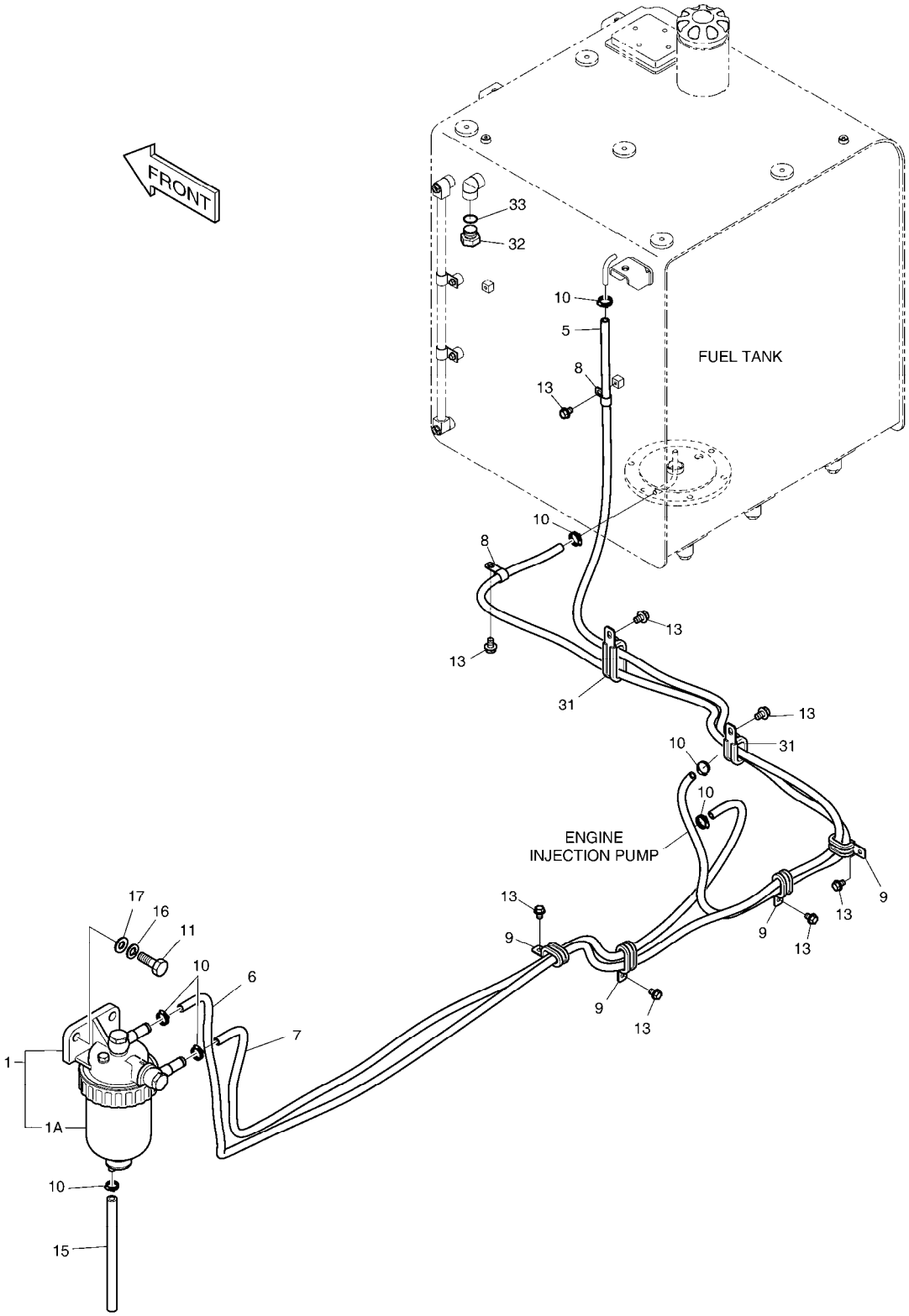

DATE	SEP. 12, 2012
4th EDITION	

Fig. 1210 FUEL PIPING
CONDUITES DE GAZOLE

Serial No. ;

Key No.	Part No.	Description	Description	Q'ty	S.C	Serial No.	ICA	Replaceable part	
								Part No.	Q'ty
1210 --	K1007631B	FUEL PIPING	TUYAUTERIE DE CARBUR/	-	D				
1	K1013251	SEPARATOR;WATER	SEPARATEUR	1					
1A	K9002044	. ELEMENT	. ELEMENT	1					
5	DS2105022	HOSE;FUEL	TUYAU FLEXIBLE	1					
6	DS2105026	HOSE	TUYAU FLEXIBLE	1					
7	DS2105018	HOSE	TUYAU FLEXIBLE	1					
8	2124-1509D2	CLIP	ATTACHE	2					
9	124-00209D1	CLIP	AGRAFE	4					
10	S8470014	CLAMP;HOSE	COLLIER	7					
11	S0512266	BOLT	BOULON	2					
13	K1001029	BOLT	BOULON	8					
15	DS2105011	HOSE;FUEL	TUYAU FLEXIBLE	1					
16	S5102603	WASHER,SPRING	RONDELLE	2					
17	S5010613	WASHER;PLAIN	RONDELLE	2					
31	124-00209D1	CLIP	AGRAFE	2					
32	2181-1950D7	PLUG	PRISE	1					
33	S8000181	O-RING	JOINT CIRCULAIRE	1					

DATE	SEP. 12, 2012
4th EDITION	

Fig. 1220 OIL TANK RESERVOIR D'HUILE

Serial No. ;

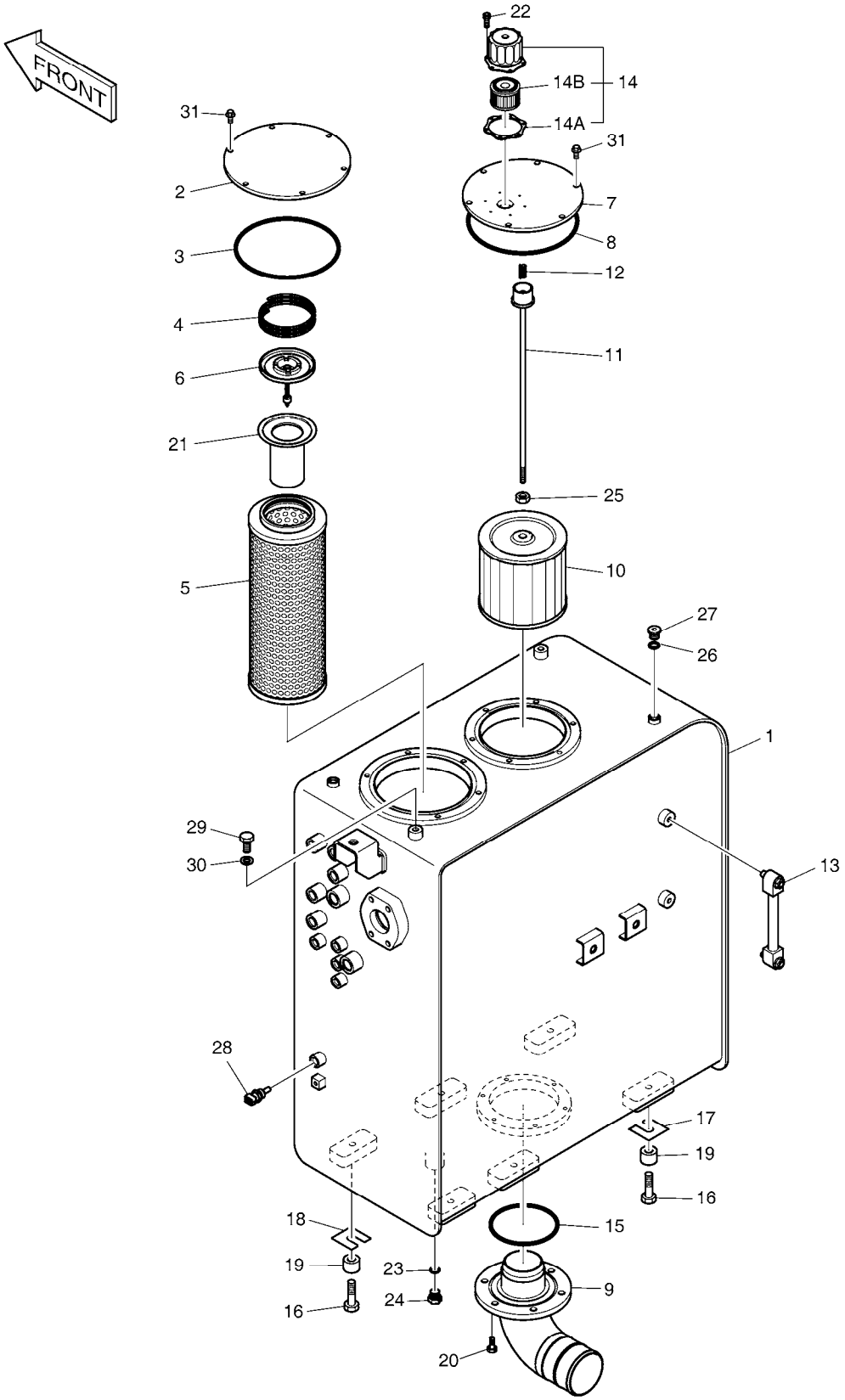

DATE	SEP. 12, 2012
4th EDITION	

Fig. 1220 OIL TANK RESERVOIR D'HUILE

Serial No. ;

Key No.	Part No.	Description	Description	Q'ty	S.C	Serial No.	ICA	Replaceable part	
								Part No.	Q'ty
1220 --	K1046833	OIL TANK ASS'Y	POMPE	-	D				
1	K1046831	TANK;OIL	RESERVOIR DE HUILE	1					
2	K1011675A	COVER	COUVERTURE	1					
3	S8011850	O-RING	JOINT CIRCULAIRE	1					
4	2129-1393	SPRING	RESSORT	1					
5	474-00055	ELEMENT;RETURN FILTER	ELEMENT	1					
6	2426-1175	VALVE;BY-PASS	VANNE	1					
7	473-00052	COVER	COUVERTURE	1					
8	S8011650	O-RING	JOINT CIRCULAIRE	1					
9	K1000269A	PIPE;SUCTION	TUYAU	1					
10	2474-9016A	FILTER;SUCTION	FILTRE	1					
11	136-00002	ROD	TIGE	1					
12	2129-1008	SPRING;COMPRESS	RESSORT	1					
13	119-00025B	GAUGE;LEVEL	MESURE	1					
14	K1012685A	BREATHER;AIR	RENIFLARD D'AIR	1					
14A	K9005662	. GASKET	. JOINT	1					
14B	K1029257	. ELEMENT;AIR BREATHER	. ELEMENT	1					
15	S8011200	O-RING	JOINT CIRCULAIRE	1					
16	S0565466	BOLT	BOULON A 6 PANS	6					
17	2114-1813	SHIM	CALE	3					
18	2114-1814	SHIM	CALE	3					
19	114-00425	SPACER	ENTERTOISE	6					
20	DS0025024	BOLT;SET	BOULON	6					
21	471-00127	STRAINER;BY-PASS	TAMIS	1		05001-11735	I	400411-00001A	1
	400411-00001A	STRAINER;BY-PASS	TAMIS	1		11736-			
22	2120-2166D41	BOLT;SOCKET M5X0.8X8	BOULON	6					
23	S8000181	O-RING	JOINT CIRCULAIRE	1					
24	2181-1950D7	PLUG	PRISE	1					
25	S4012733	NUT	ECROU	1					
26	S8000111	O-RING	JOINT TORIQUE	2					
27	2181-1890D2	PLUG	BOUCHON	2					
28	K1003296	SENSOR;HYD OIL TEMP	SONDE	1					
29	S0514666	BOLT M12X1.75X16	BOULON	2					
30	S5102703	WASHER;SPRING	RONDELLE	2					
31	K1007957	BOLT;SET	BOULON	12					

DATE	SEP. 12, 2012
4th EDITION	

Fig. 1230 OIL COOLER PIPING(1) CONDUITES DE HUILE

Serial No. ;

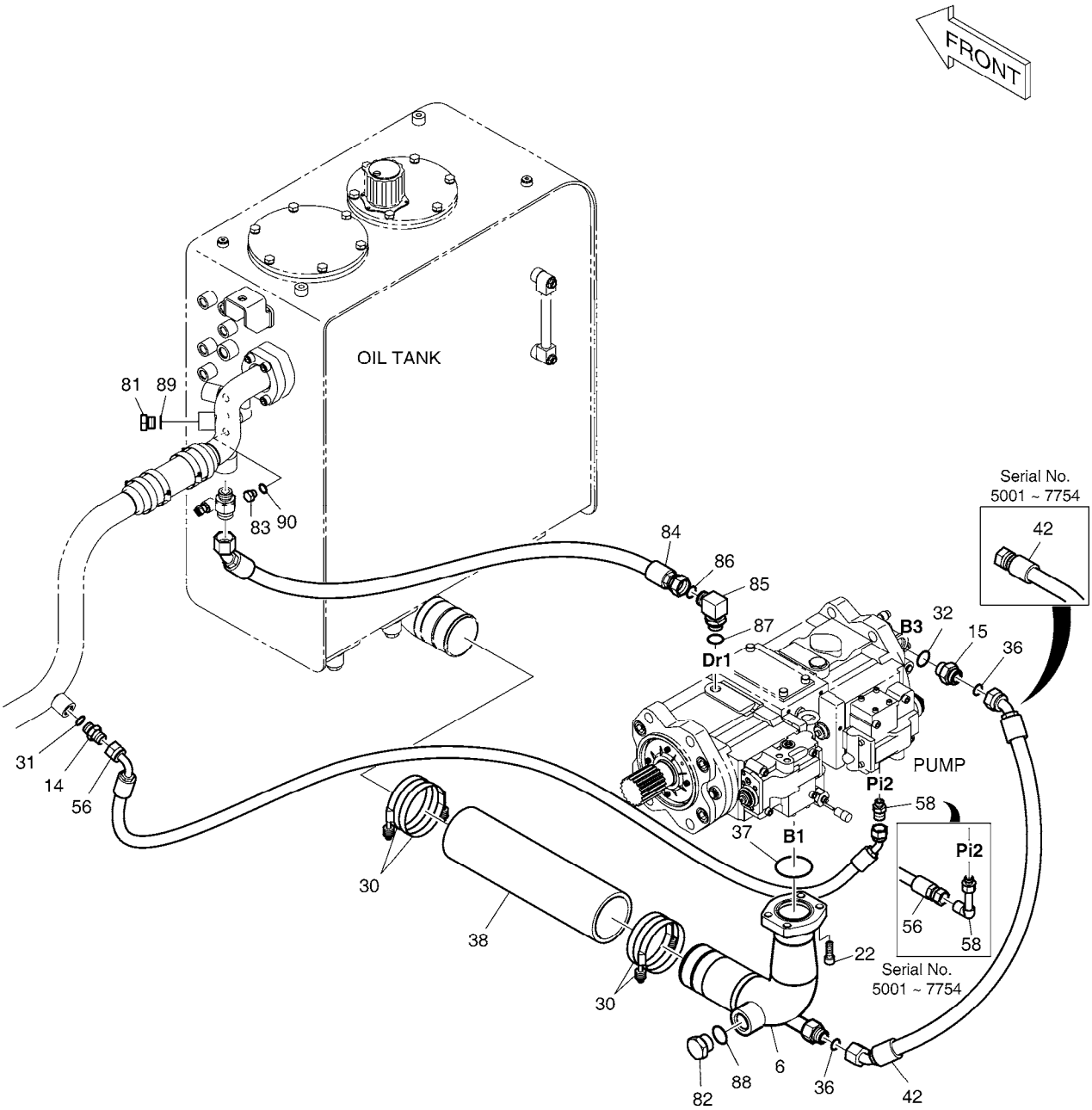

DATE	SEP. 12, 2012
4th EDITION	

Fig. 1230 OIL COOLER PIPING(1) CONDUITES DE HUILE

Serial No. ;

Key No.	Part No.	Description	Description	Q'ty	S.C	Serial No.	ICA	Replaceable part	
								Part No.	Q'ty
1230 --	K1039406A	OIL COOLER PIPING	CONDUITES DE HUILE	-	D	5001-7754			
	420212-00225	PIPING,OIL COOLER	CONDUITES DE HUILE	-	D	7755-			
6	140-01603A	PIPE;SUCTION	PIPE;OIL	1		5001-7754	I	420218-00104A	1
	420218-00104A	PIPE,SUCTION	PIPE;OIL	1		7755-			
14	2181-1126D6	ADAPTER	ADAPTEUR	1					
15	2181-4133D5	ADAPTER	ADAPTEUR	1					
22	S2215366	BOLT;SOCKET M12X35	BOULON	4					
30	S8500118	CLAMP;HOSE	COLLIER DE LA CONDUITE	4					
31	S8000181	O-RING	JOINT CIRCULAIRE	1					
32	S8000241	O-RING	JOINT CIRCULAIRE	1					
36	S8030121	O-RING	JOINT CIRCULAIRE	2					
37	2180-1026D31	O-RING	JOINT CIRCULAIRE	1					
38	2185-1737D8	HOSE	TUYAU	1					
42	DS2012136	HOSE	TUYAU FLEXIBLE	1		5001-7754			
	DS2020108	HOSE ASSY,HYDRAULIC	TUYAU FLEXIBLE	1		7755-9656	I	DS2020128	1
	DS2020128	HOSE ASSY,HYDRAULIC	TUYAU FLEXIBLE	1		9657-			
56	DS2055950	HOSE	TUYAU FLEXIBLE	1		5001-7754			
	DS2058331	HOSE ASSY,HYDRAULIC	TUYAU FLEXIBLE	1		7755-			
58	2181-1702D36	ELBOW	COUDE	1		5001-7754			
	2181-1126D115	ADAPTER	COUDE	1		7755-			
81	2181-1950D3	PLUG	PRISE	1					
82	2181-1950D9	PLUG	BOUCHON	1					
83	2181-1950D1	PLUG	BOUCHON	1					
84	DS2012070	HOSE	TUYAU	1					
85	2181-2294D2	ELBOW	COUDE	1					
86	S8030121	O-RING	JOINT CIRCULAIRE	1					
87	S8000241	O-RING	JOINT CIRCULAIRE	1					
88	S8000291	O-RING	JOINT CIRCULAIRE	1					
89	S8000181	O-RING	JOINT CIRCULAIRE	1					
90	S8000111	O-RING	JOINT TORIQUE	1					

DATE	SEP. 12, 2012
4th EDITION	

Fig. 1240 OIL COOLER PIPING(2) CONDUITES DE HUILE

Serial No. ;

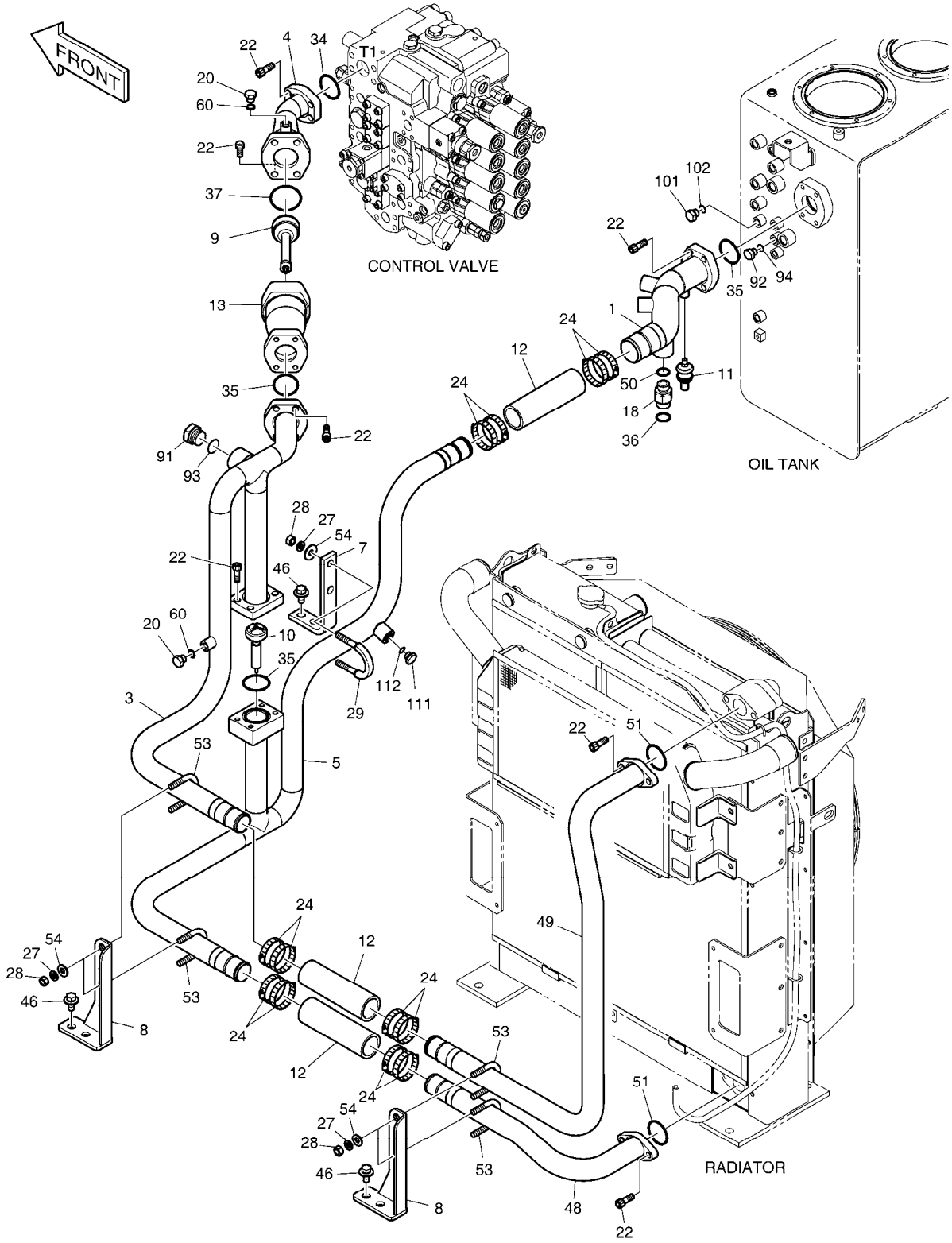

DATE	SEP. 12, 2012
4th EDITION	

Fig. 1240 OIL COOLER PIPING(2) CONDUITES DE HUILE

Serial No. ;

Key No.	Part No.	Description	Description	Q'ty	S.C	Serial No.	ICA	Replaceable part	
								Part No.	Q'ty
1240 --	K1039406A	OIL COOLER PIPING	CONDUITES DE HUILE	-	D	5001-5589			
	420212-00225	PIPING,OIL COOLER	CONDUITES DE HUILE	-	D	5590-			
1	K1036301	PIPE	TUYAU	1		5001-5589	I	420202-00015	1
	420202-00015	PIPE	TUYAU	1		5590-			
3	K1036303B	PIPE	TUYAU	1					
4	140-01604C	PIPE	TUYAU	1					
5	K1036302B	PIPE	TUYAU	1					
7	K1044617	PLATE	PLAQUE	1					
8	K1039456A	PLATE	PLAQUE	2		5001-5589	I	110406-00039	2
	110406-00039	BRACKET	SUPPORT	2		5590-			
9	K1002341	VALVE;BYPASS	VALVE	1					
10	K1007197	VALVE;BYPASS	VALVE	1					
11	549-00095	SWITCH;PRESSURE	COMMUTATEUR	1					
12	2185-1776D2	HOSE	TUYAU FLEXIBLE	3					
13	K1000644B	PIPE	TUYAU	1					
18	2181-2627D5	ADAPTER	ADAPTEUR	1					
20	2181-1950D1	PLUG	BOUCHON	2					
22	S2215366	BOLT;SOCKET M12X35	BOULON	24					
24	S8500079	CLAMP;HOSE	COLLIER	12					
27	S5102703	WASHER;SPRING	RONDELLE	10					
28	S4012733	NUT	ECROU	10					
29	120-00317	BOLT;U	BOULON	1					
34	2180-1026D24	O-RING	JOINT CIRCULAIRE	1					
35	2180-1026D27	O-RING	JOINT CIRCULAIRE	3					
36	S8030121	O-RING	JOINT CIRCULAIRE	1					
37	2180-1026D31	O-RING	JOINT CIRCULAIRE	1					
46	DS0025018	BOLT;SET	BOULON	6					
48	K1036143A	PIPE	TUYAU	1					
49	K1036299A	PIPE	TUYAU	1					
50	S8000231	O-RING	JOINT CIRCULAIRE	1					
51	2180-1026D28	O-RING	JOINT TORIQUE	2					
53	2120-1413D12	U-BOLT	U-BOULON	4					
54	2114-1058D46	WASHER	RONDELLE	10		5001-5589			
	2114-1058D72	WASHER;PLAIN	RONDELLE	10		5590-			
60	S8000111	O-RING	JOINT TORIQUE	2					
91	2181-1950D9	PLUG	BOUCHON	1					
92	2181-1950D1	PLUG	BOUCHON	1					
93	S8000291	O-RING	JOINT CIRCULAIRE	1					

DATE	SEP. 12, 2012
4th EDITION	

Fig. 1240 OIL COOLER PIPING(2) CONDUITES DE HUILE

Serial No. ;

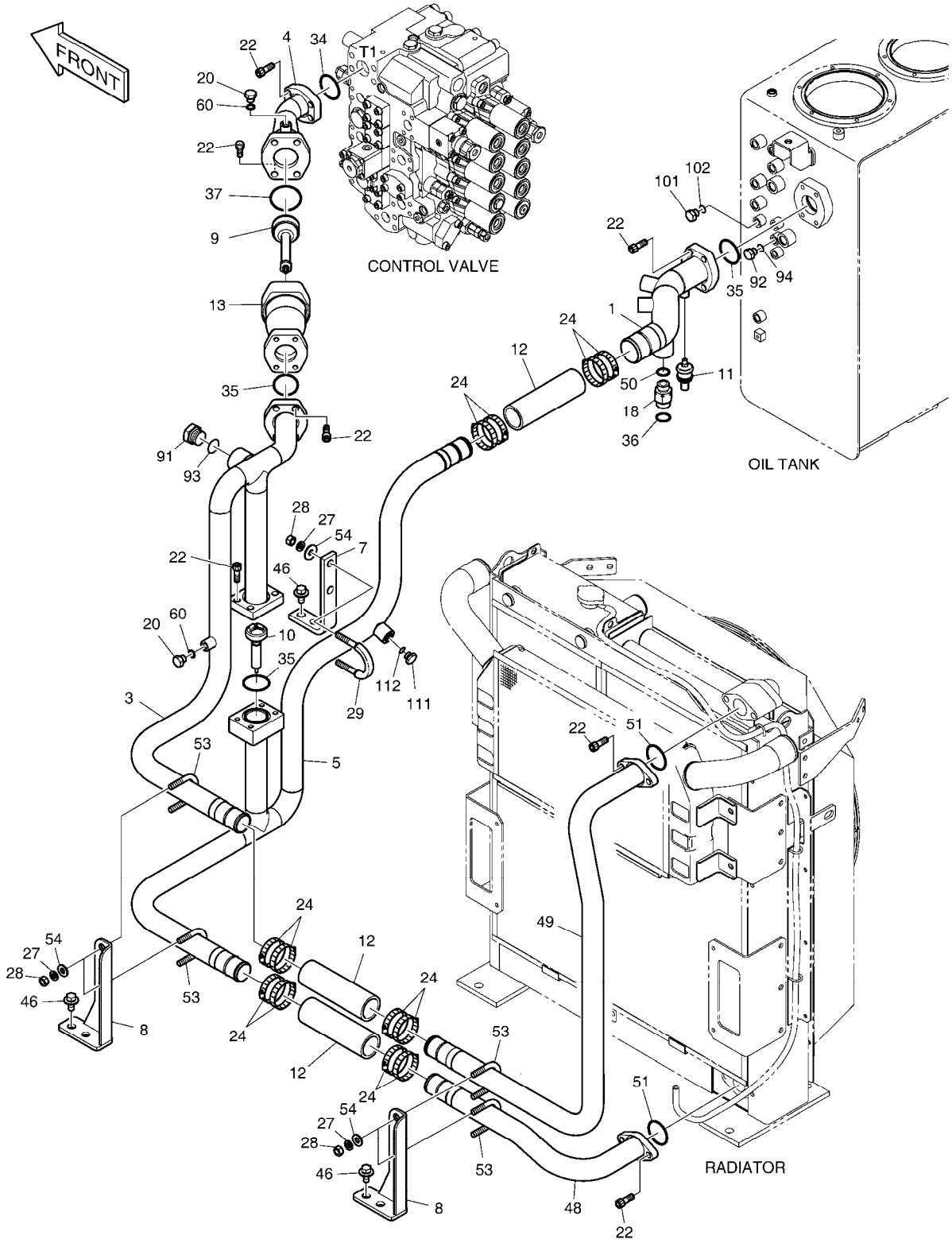

DATE	SEP. 12, 2012
4th EDITION	

Fig. 1240 OIL COOLER PIPING(2) CONDUITES DE HUILE

Serial No. ;

Key No.	Part No.	Description	Description	Q'ty	S.C	Serial No.	ICA	Replaceable part	
								Part No.	Q'ty
1240 -94	S8000111	O-RING	JOINT TORIQUE	1					
101	2181-1950D1	PLUG	BOUCHON	1					
102	S8000111	O-RING	JOINT TORIQUE	1					
111	2181-1950D2	PLUG	BOUCHON	1					
112	S8000141	O-RING	JOINT TORIQUE	1					

DATE	SEP. 12, 2012
4th EDITION	

Fig. 1250 OIL COOLER PIPING(3) CONDUITES DE HUILE

Serial No. ;

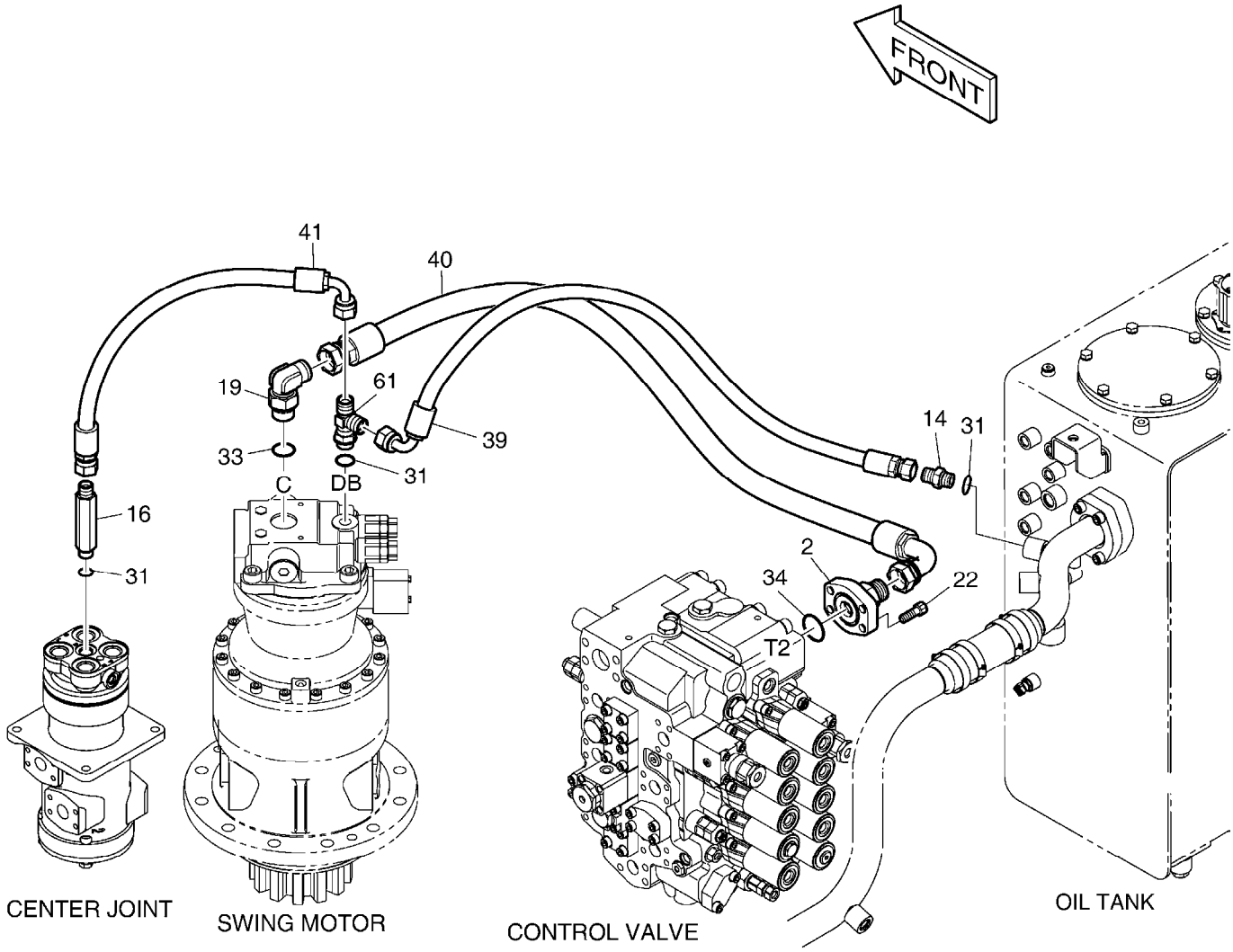

DATE	SEP. 12, 2012
4th EDITION	

Fig. 1250 OIL COOLER PIPING(3) CONDUITES DE HUILE

Serial No. ;

Key No.	Part No.	Description	Description	Q'ty	S.C	Serial No.	ICA	Replaceable part	
								Part No.	Q'ty
1250 --	K1039406A	OIL COOLER PIPING	CONDUITES DE HUILE	-	D				
2	140-02009A	PIPE	TUYAU	1					
14	2181-1126D6	ADAPTER	ADAPTEUR	1					
16	DS2213167	ADAPTER	ADAPTEUR	1					
19	2181-1702D73	ELBOW	COUDE	1					
22	S2215366	BOLT;SOCKET M12X35	BOULON	4					
31	S8000181	O-RING	JOINT CIRCULAIRE	3					
33	S8000291	O-RING	JOINT CIRCULAIRE	1					
34	2180-1026D24	O-RING	JOINT CIRCULAIRE	1					
39	2184-1036D293	HOSE PF1/2-600L	TUYAU FLEXIBLE	1					
40	DS20551024	HOSE	TUYAU FLEXIBLE	1					
41	DS2055976	HOSE	TUYAU	1					
61	2181-1951D5	TEE	TE	1					

DATE	SEP. 12, 2012
4th EDITION	

Fig. 1260 ENGINE CONTROL
COMMANDE REGIME MOTEUR

Serial No. ;

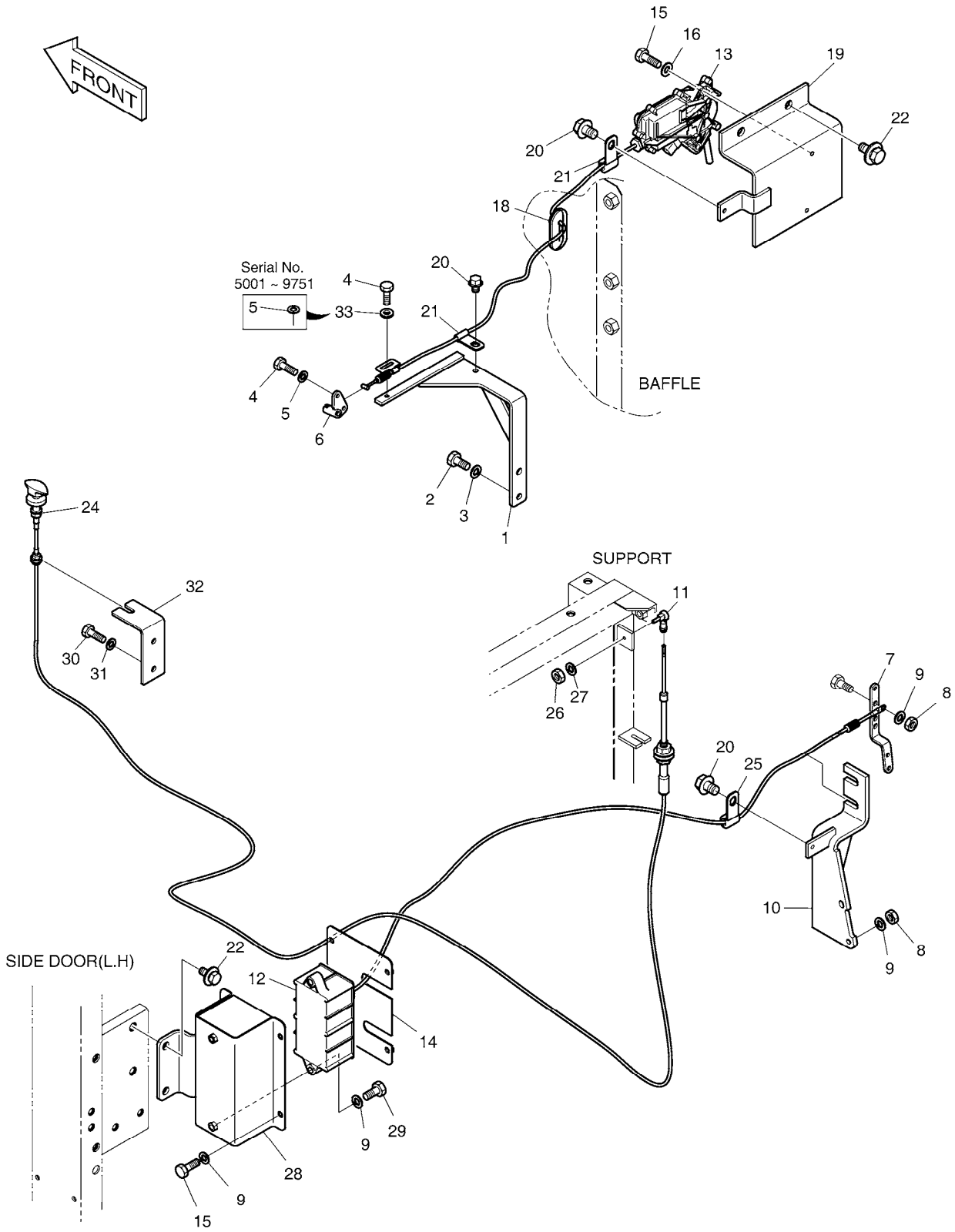

DATE	SEP. 12, 2012
4th EDITION	

Fig. 1260 ENGINE CONTROL COMMANDE REGIME MOTEUR

Serial No. ;

Key No.	Part No.	Description	Description	Q'ty	S.C	Serial No.	ICA	Replaceable part	
								Part No.	Q'ty
1260 --	K1046113	ENGINE CONTROL	COMMANDE DE MOTEUR	-	D	5001-9751			
	K1046113A	ENGINE CONTROL ASS'Y	COMMANDE DE MOTEUR	-	D	9752-			
1	2197-1777A	BRACKET	SUPPORT	1					
2	S0711866	BOLT	BOULON	2					
3	S5102603	WASHER,SPRING	RONDELLE	2					
4	S0504566	BOLT M6X1.0X14	BOULON A 6 PANS	3					
5	S5102303	WASHER;SPRING	RONDELLE	3		5001-9751			
	S5102303	WASHER;SPRING	RONDELLE	2		9752-			
6	2150-1122	HOOK;CABLE	CROCHET	1					
7	133-00172	LEVER	LEVIER	1					
8	S4012533	NUT	ECROU	3					
9	S5102503	WASHER,SPRING	RONDELLE	9					
10	195-02079	BRACKET	SUPPORT	1					
11	2138-9006B	JOINT;BALL	JOINT SPHERIQUE	1					
12	523-00006	MOTOR;E/G CONTROL	ENSEMBLE MOTEUR	1					
13	2523-9016	MOTOR;E/G STOP	MOTEUR	1					
14	159-00227	COVER	COUVERCLE	1					
15	S0508966	BOLT	BOULON	6					
16	S5010513	WASHER,PLAIN	RONDELLE	2					
18	160-00040	BUSHING;RUBBER	DOUILLE	1					
19	2197-1802A	BRACKET	SUPPORT	1					
20	K1001029	BOLT	BOULON	3					
21	2124-1509D10	CLIP	ATTACHE	2					
22	DS0025019	BOLT;SET	BOULON	4					
24	K1007835	CABLE;CONTROL	CABLE	1					
25	2124-1509D1	CLIP	AGRAFE	1					
26	S4012233	NUT	ECROU	1					
27	S5102203	WASHER;SPRING	RONDELLE ELASTIQUE	1					
28	195-02157	BRACKET	SUPPORT	1					
29	S0509366	BOLT	BOULON	2					
30	2120-2166D5	BOLT	BOULON	2					
31	2114-1898D14	WASHER;PLAIN	RONDELLE	2					
32	K1003118	BRACKET	SUPPORT	1					
33	120810-00145	WASHER,PLAIN	RONDELLE	1		9752-			

DATE	SEP. 12, 2012
4th EDITION	

Fig. 1270 MAIN PIPING(1) - PUMP
CONDUITES DE BATI PRINCIPAL

Serial No. ; 5001 ~ 6004

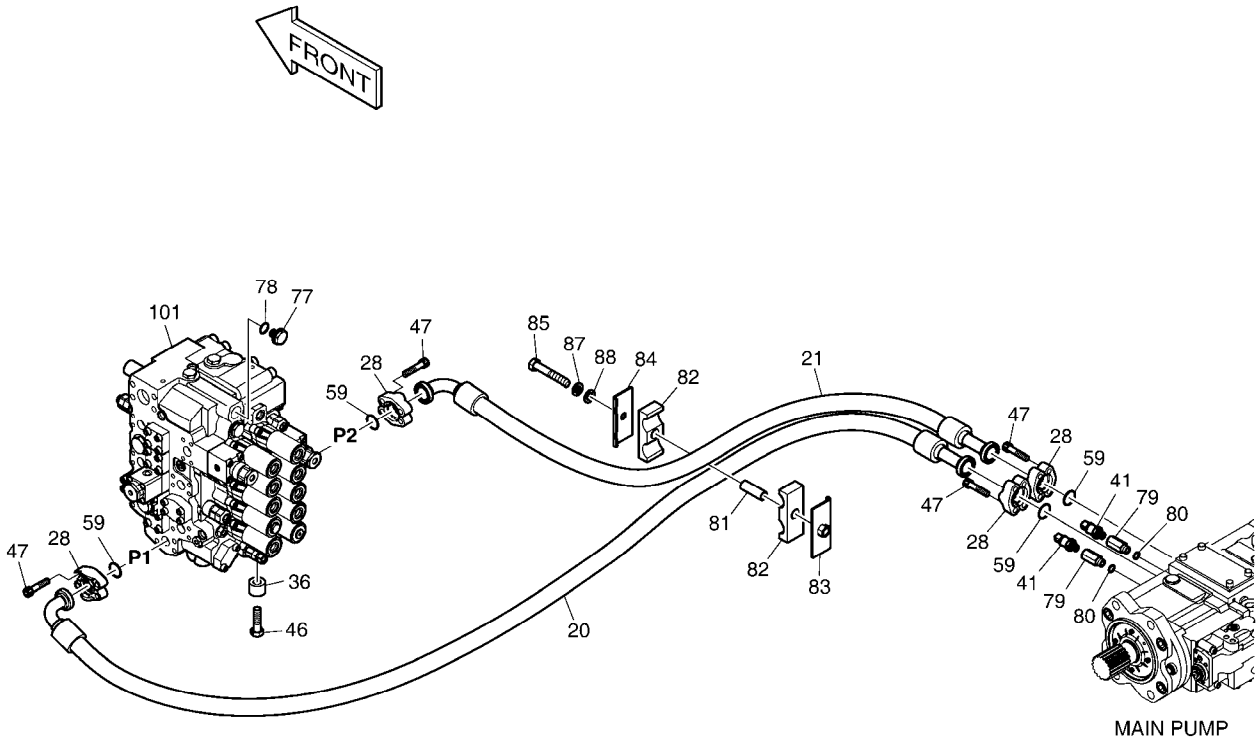

DATE	SEP. 12, 2012
4th EDITION	

Fig. 1270 MAIN PIPING(1) - PUMP
CONDUITES DE BATI PRINCIPAL

Serial No. ; 5001 ~ 6004

Key No.	Part No.	Description	Description	Q'ty	S.C	Serial No.	ICA	Replaceable part	
								Part No.	Q'ty
1270 --	K1044586B	MAIN PIPING	CIRCUIT HYDRAULIQUE PF	-	D				
20	DS2040687	HOSE	TUYAU FLEXIBLE	1					
21	DS2040709	HOSE	TUYAU FLEXIBLE	1					
28	2181-9081	FLANGE;SPLIT	BRIDE	8					
36	114-00425	SPACER	ENTERTOISE	4					
41	K1048145	SENSOR;PRESSURE	CAPTEUR	2					
46	S0565466	BOLT	BOULON A 6 PANS	4					
47	S2215466	BOLT;SOCKET M12X1.75X40	BOULON	16					
59	2180-1026D19	O-RING	JOINT CIRCULAIRE	4					
77	2181-1950D9	PLUG	BOUCHON	1					
78	S8000291	O-RING	JOINT CIRCULAIRE	1					
79	DS2242029	REDUCER	REDUCTEUR	2					
80	S8000141	O-RING	JOINT TORIQUE	2					
81	K1050297	SPACER	BAGUE D'ECARTEMENT	1					
82	124-00247	CLAMP;HOSE	COLLIER DE LA CONDUITE	2					
83	K1038968	PLATE	PLAQUE	1					
84	2191-3705C	PLATE	PLAQUE	1					
85	S0566266	BOLT	BOULON A 6 PANS	1					
87	S5102903	WASHER,SPRING	RONDELLE	1					
88	S5010913	WASHER,PLAIN	RONDELLE	1					
101	K1025391	VALVE;CONTROL	VALVE	1					

DATE	SEP. 12, 2012
4th EDITION	

Fig. 1271 MAIN PIPING(1) - PUMP
CONDUITES DE BATI PRINCIPAL

Serial No. ; 6005 ~

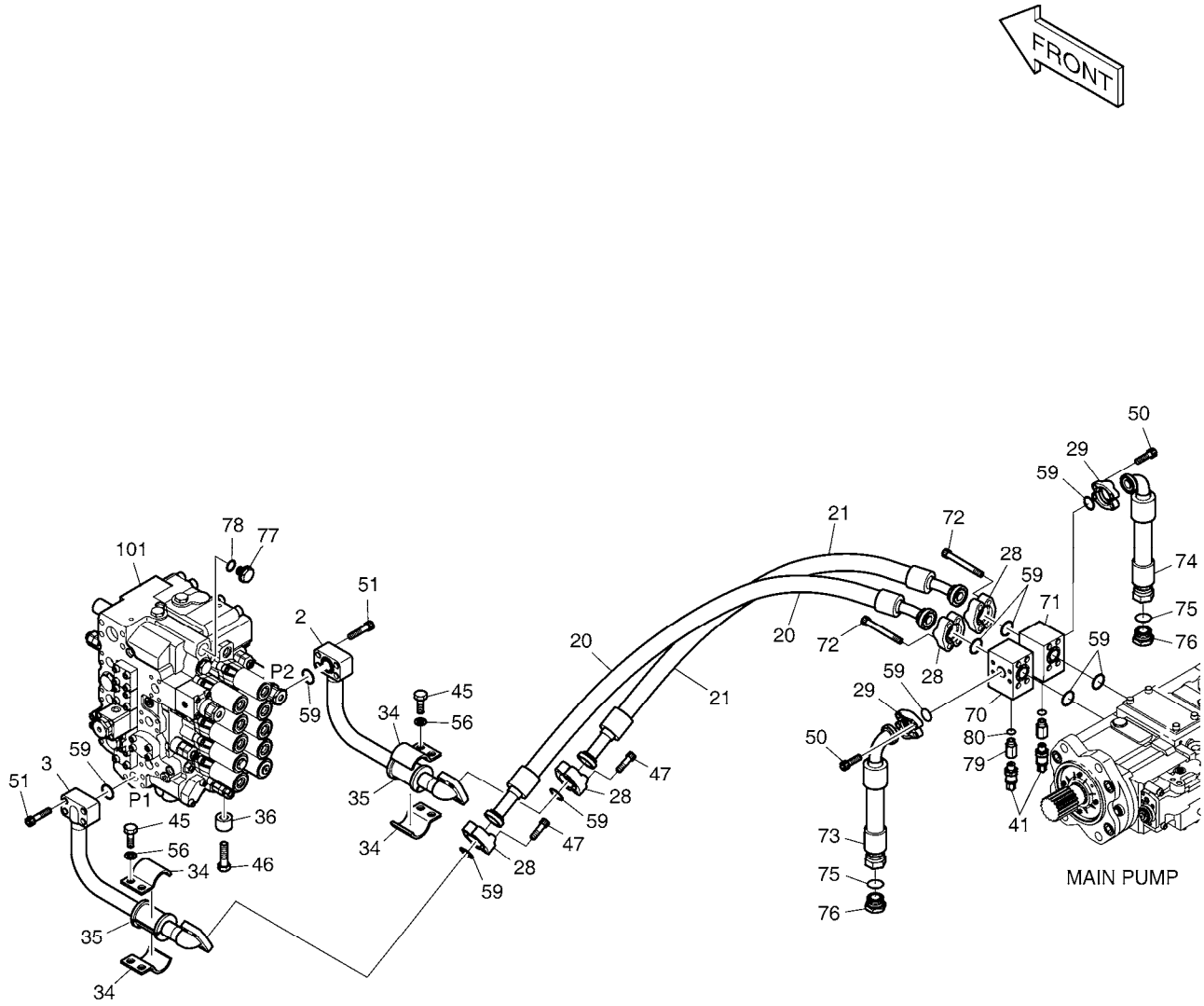

DATE	SEP. 12, 2012
4th EDITION	

Fig. 1271 MAIN PIPING(1) - PUMP
CONDUITES DE BATI PRINCIPAL

Serial No. ; 6005 ~

Key No.	Part No.	Description	Description	Q'ty	S.C	Serial No.	ICA	Replaceable part	
								Part No.	Q'ty
1271 --	420212-00576	PIPING,MAIN	CONDUITES DE BATI PRIN(	-	D				
2	140-01484B	PIPE	TUYAU	1					
3	140-01485B	PIPE	TUYAU	1					
20	DS2097013	HOSE	TUYAU FLEXIBLE	1					
21	DS2097014	HOSE	TUYAU FLEXIBLE	1					
28	2181-9081	FLANGE;SPLIT	BRIDE	8					
29	2181-9078	FLANGE	BRIDE	4					
34	124-00218	CLAMP	COLLIER	4					
35	161-00281	RUBBER	LE CAOUTCHOUC	2					
36	114-00425	SPACER	ENTERTOISE	4					
41	K1048145	SENSOR;PRESSURE	CAPTEUR	2					
45	S0562766	BOLT	BOULON	4					
46	S0565466	BOLT	BOULON A 6 PANS	4					
47	S2215466	BOLT;SOCKET M12X1.75X40	BOULON	8					
50	S2212266	BOLT;SOCKET M10X1.5X30	BOULON A 6 PANS CREUX	8					
51	S2215766	BOLT;SOCKET M12X55	BOULON	8					
56	S5102803	WASHER;SPRING	RONDELLE	4					
59	2180-1026D19	O-RING	JOINT CIRCULAIRE	10					
70	K1006396B	BLOCK	BLOC	1					
71	K1007164B	BLOCK	BLOC	1					
72	S2217066	BOLT;SOCKET	BOULON	8					
73	DS2018100	HOSE	TUYAU	1					
74	DS2018100	HOSE	TUYAU	1					
75	S8030161	O-RING	JOINT CIRCULAIRE	2					
76	2181-2218D6	PLUG	BOUCHON	2					
77	2181-1950D9	PLUG	BOUCHON	1					
78	S8000291	O-RING	JOINT CIRCULAIRE	1					
79	DS2242029	REDUCER	REDUCTEUR	2					
80	S8000141	O-RING	JOINT TORIQUE	2					
101	K1025391	VALVE;CONTROL	VALVE	1					

DATE	SEP. 12, 2012
4th EDITION	

Fig. 1280 MAIN PIPING(2) - BOOM
CONDUITES DE BATI PRINCIPAL

Serial No. ;

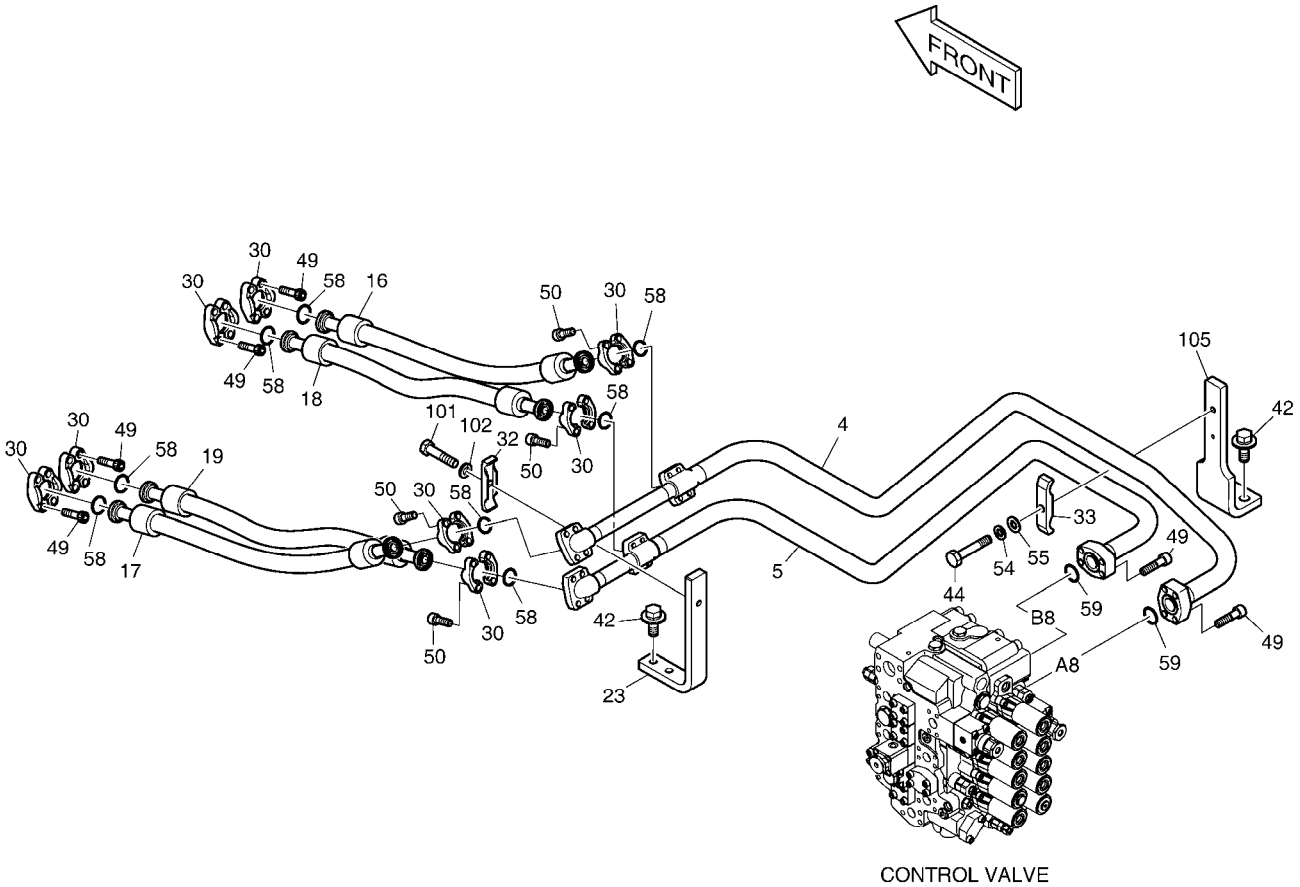

DATE	SEP. 12, 2012
4th EDITION	

Fig. 1280 MAIN PIPING(2) - BOOM
CONDUITES DE BATI PRINCIPAL

Serial No. ;

Key No.	Part No.	Description	Description	Q'ty	S.C	Serial No.	ICA	Replaceable part	
								Part No.	Q'ty
1280 --	K1044586B	MAIN PIPING	CIRCUIT HYDRAULIQUE PF	-	D				
4	140-01601C	PIPE;BOOM UP	TUYAU	1					
5	140-01602C	PIPE;BOOM DOWN	TUYAU	1					
16	DS2038222	HOSE	TUYAU	1					
17	DS2038222	HOSE	TUYAU	1					
18	DS2038144	HOSE	TUYAU	1					
19	DS2038144	HOSE	TUYAU	1					
23	195-02883B	PLATE	PLAQUE	1					
30	2181-9079	FLANGE	BRIDE	16					
32	2124-1025D6	CLAMP;PIPE	COLLIER	1					
33	2124-1025D5	CLAMP;PIPE	BRIDE	1					
42	DS0025020	BOLT;SET	BOULON	4					
44	S0561066	BOLT M12X1.75X65	BOULON A 6 PANS	1					
49	S2212466	BOLT;SOCKET M10X1.5X40	BOULON	24					
50	S2212266	BOLT;SOCKET M10X1.5X30	BOULON A 6 PANS CREUX	16					
54	S5102703	WASHER;SPRING	RONDELLE	1					
55	S5010713	WASHER;PLAIN	RONDELLE	1					
58	2180-1026D2	O-RING	JOINT CIRCULAIRE	8					
59	2180-1026D19	O-RING	JOINT CIRCULAIRE	2					
101	S0560866	BOLT M12X1.75X55	BOULON	1					
102	S5102703	WASHER;SPRING	RONDELLE	1					
105	195-02884B	PLATE	PLAQUE	1					

DATE	SEP. 12, 2012
4th EDITION	

Fig. 1290 MAIN PIPING(3) - ARM, BUCKET CIRCUIT HYDRAULIQUE PRINCIPAL

Serial No. ;

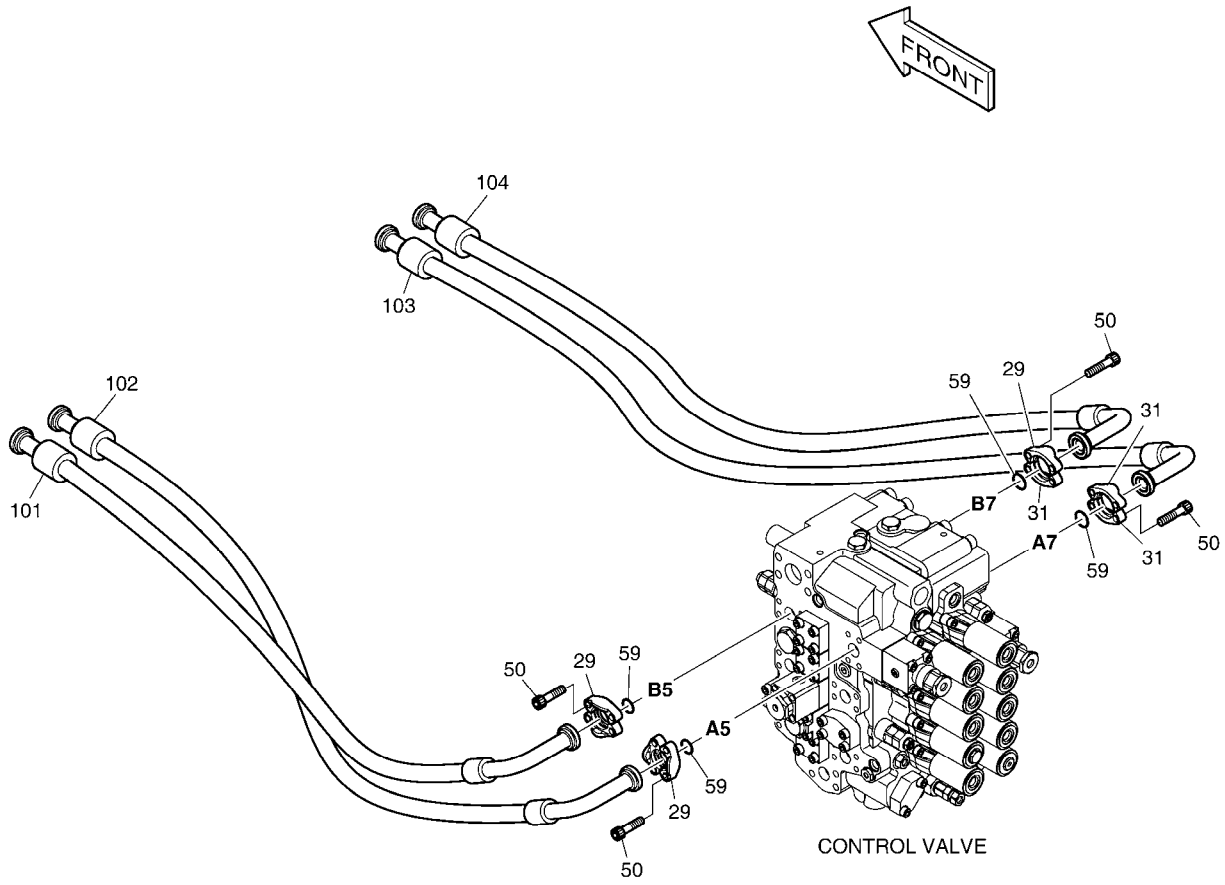

DATE	SEP. 12, 2012
4th EDITION	

Fig. 1290 MAIN PIPING(3) - ARM, BUCKET
CIRCUIT HYDRAULIQUE PRINCIPAL

Serial No. ;

Key No.	Part No.	Description	Description	Q'ty	S.C	Serial No.	ICA	Replaceable part	
								Part No.	Q'ty
1290 --	K1044586B	MAIN PIPING	CIRCUIT HYDRAULIQUE PR	-	D				
29	2181-9078	FLANGE	BRIDE	6					
31	2181-9083	FLANGE;SPLIT	BRIDE	3					
50	S2212266	BOLT;SOCKET M10X1.5X30	BOULON A 6 PANS CREUX	16					
59	2180-1026D19	O-RING	JOINT CIRCULAIRE	4					
101	DS2040683	HOSE	TUYAU	1					
102	DS2040684	HOSE	TUYAU	1					
103	DS2040686	HOSE	TUYAU	1					
104	DS2040685	HOSE	TUYAU	1					

DATE	SEP. 12, 2012
4th EDITION	

Fig. 1300 MAIN PIPING(4) - SWING
CONDUITES DE BATI PRINCIPAL

Serial No. ;

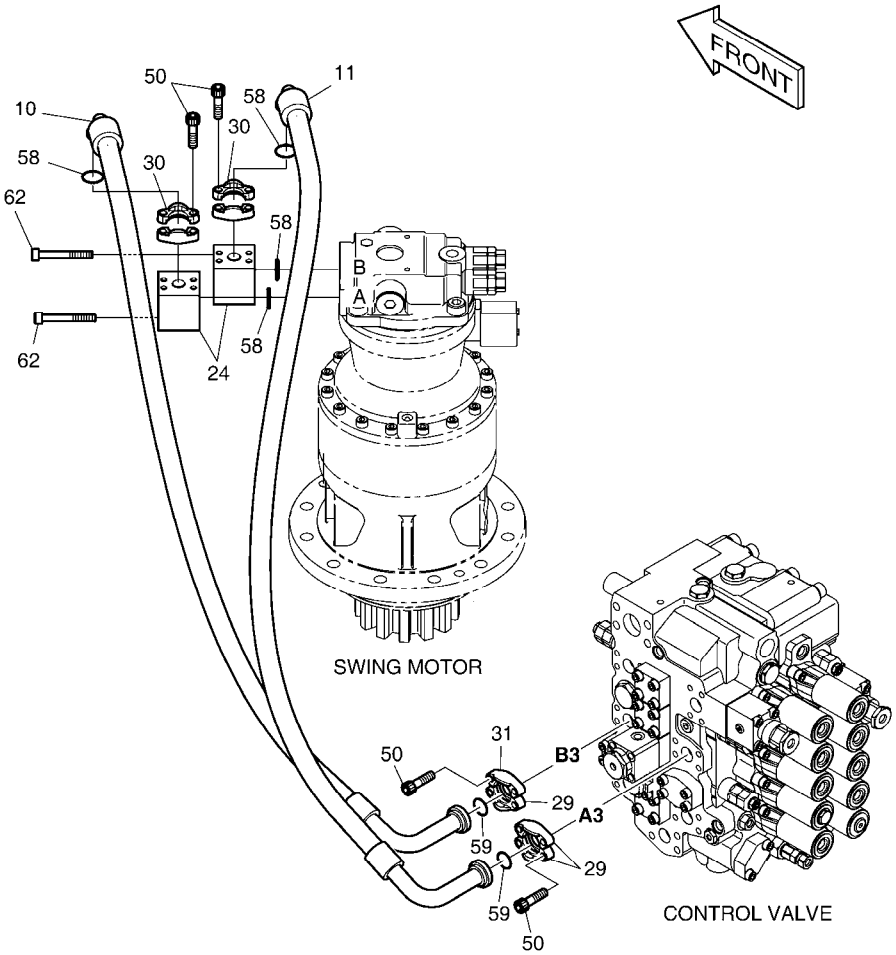

DATE	SEP. 12, 2012
4th EDITION	

Fig. 1300 MAIN PIPING(4) - SWING
CONDUITES DE BATI PRINCIPAL

Serial No. ;

Key No.	Part No.	Description	Description	Q'ty	S.C	Serial No.	ICA	Replaceable part	
								Part No.	Q'ty
1300 --	K1044586B	MAIN PIPING	CIRCUIT HYDRAULIQUE PR	-	D				
10	DS2045337	HOSE	TUYAU FLEXIBLE	1					
11	DS2045338	HOSE	TUYAU FLEXIBLE	1					
24	423-00202	BLOCK	BLOC	2					
29	2181-9078	FLANGE	BRIDE	3					
30	2181-9079	FLANGE	BRIDE	4					
31	2181-9083	FLANGE;SPLIT	BRIDE	1					
50	S2212266	BOLT;SOCKET M10X1.5X30	BOULON A 6 PANS CREUX	16					
58	2180-1026D2	O-RING	JOINT CIRCULAIRE	4					
59	2180-1026D19	O-RING	JOINT CIRCULAIRE	2					
62	S2213166	BOLT;SOCKET	BOULON	8					

DATE	SEP. 12, 2012
4th EDITION	

Fig. 1310 MAIN PIPING(5) - CENTER JOINT
CONDUITES DE BATI PRINCIPAL

Serial No. ;

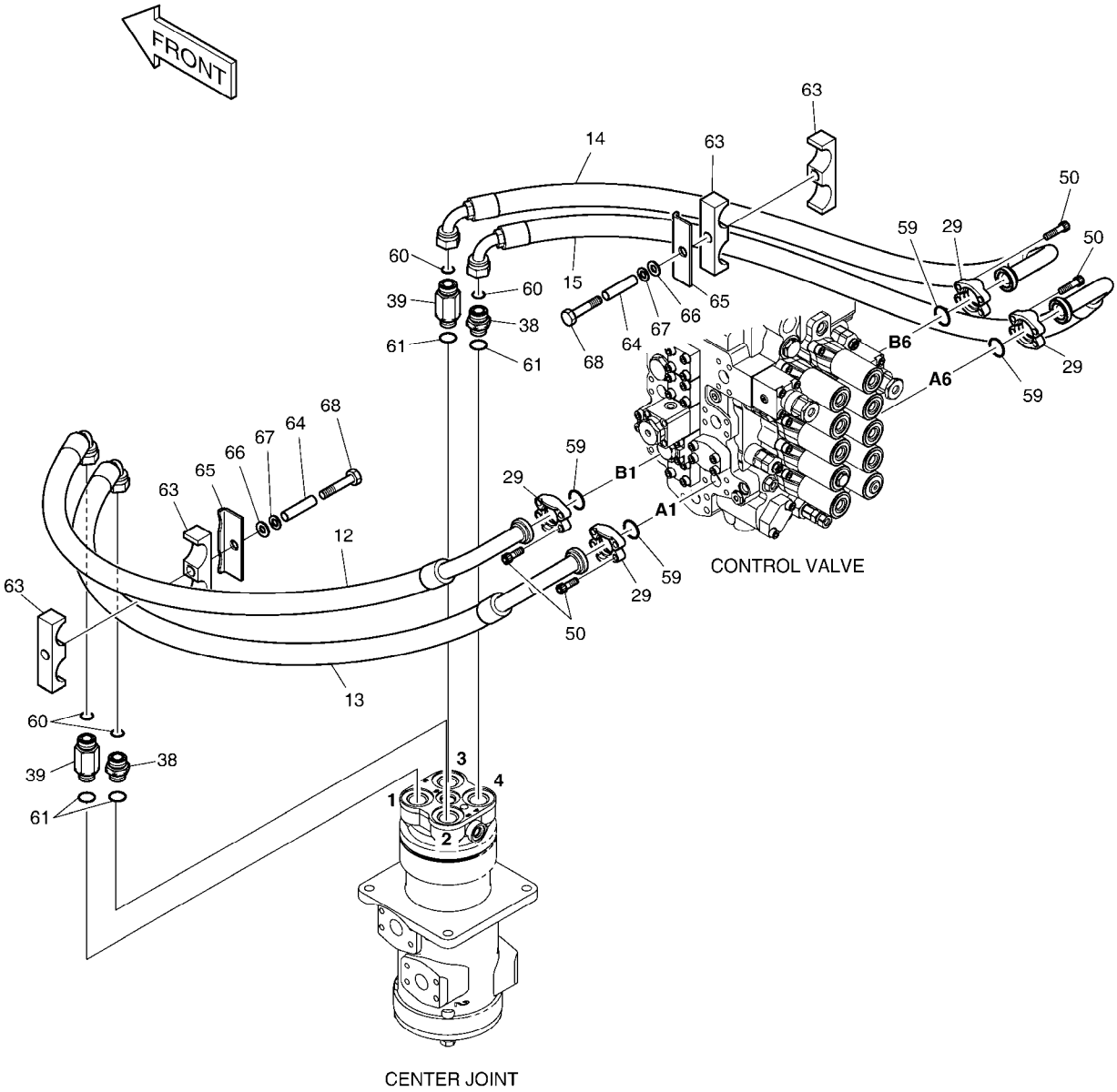

DATE	SEP. 12, 2012
4th EDITION	

Fig. 1310 MAIN PIPING(5) - CENTER JOINT
CONDUITES DE BATI PRINCIPAL

Serial No. ;

Key No.	Part No.	Description	Description	Q'ty	S.C	Serial No.	ICA	Replaceable part	
								Part No.	Q'ty
1310 --	K1044586B	MAIN PIPING	CIRCUIT HYDRAULIQUE PF	-	D				
12	DS2026146	HOSE	TUYAU FLEXIBLE	1					
13	DS2026129	HOSE	TUYAU FLEXIBLE	1					
14	DS2026145	HOSE	TUYAU FLEXIBLE	1					
15	DS2026127	HOSE	TUYAU FLEXIBLE	1					
29	2181-9078	FLANGE	BRIDE	8					
38	2181-2627D1	ADAPTER	ADAPTEUR	2					
39	2181-2627D3	ADAPTER	ADAPTEUR	2					
50	S2212266	BOLT;SOCKET M10X1.5X30	BOULON A 6 PANS CREUX	16					
59	2180-1026D19	O-RING	JOINT CIRCULAIRE	4					
60	S8030121	O-RING	JOINT CIRCULAIRE	4					
61	S8000231	O-RING	JOINT CIRCULAIRE	4					
63	124-00192	CLAMP;HOSE	BRIDE	4					
64	2114-1737	SPACER	ENTRETOISE	2					
65	621-02850B	PLATE	PLAQUE	2					
66	S5010913	WASHER,PLAIN	RONDELLE	2					
67	S5102903	WASHER,SPRING	RONDELLE	2					
68	S0566066	BOLT	BOULON	2					

DATE	SEP. 12, 2012
4th EDITION	

Fig. 1320 PILOT PIPING(1) CONDUITES DE PILOTE

Serial No. ;

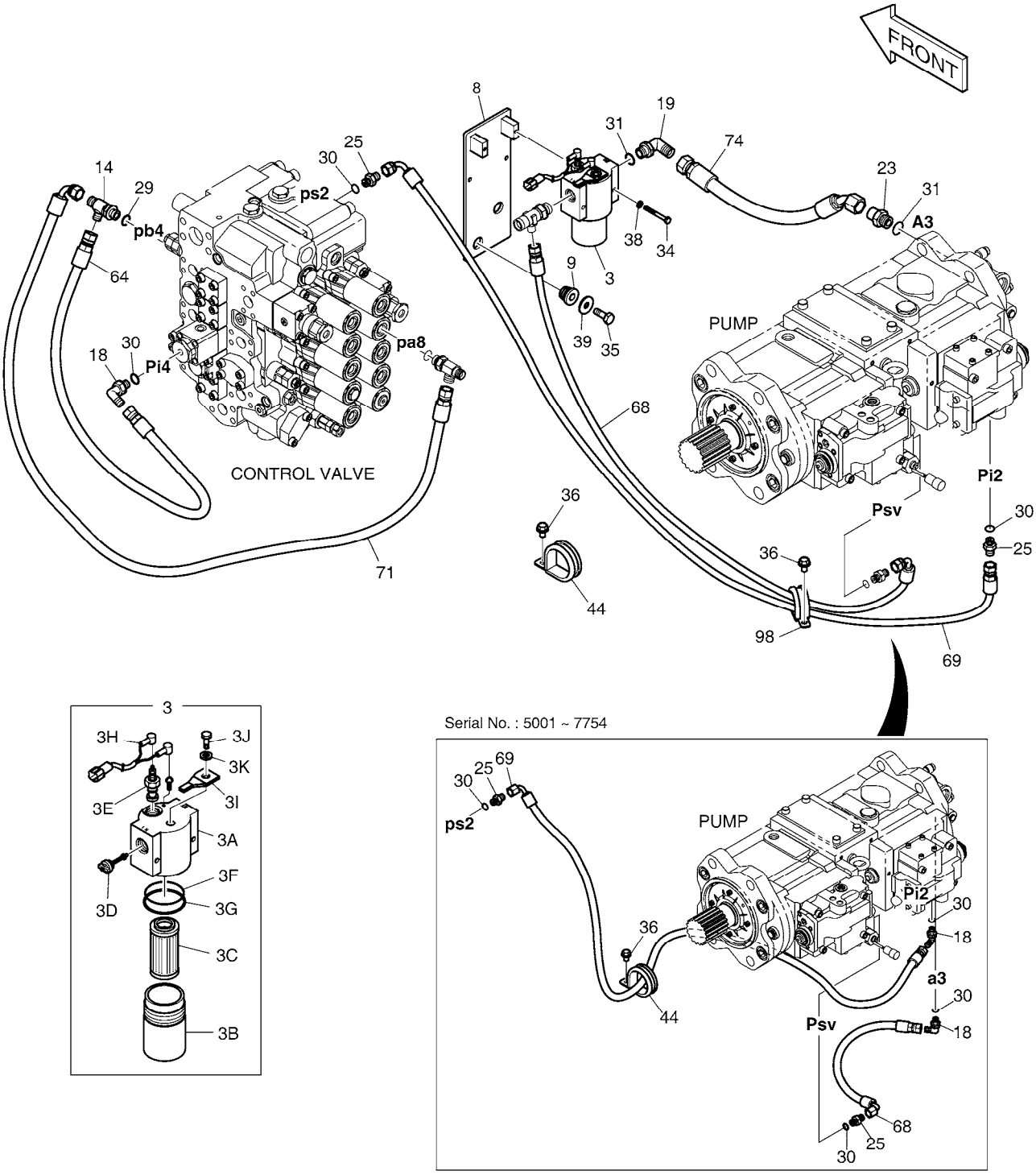

DATE	SEP. 12, 2012
4th EDITION	

Fig. 1320 PILOT PIPING(1) CONDUITES DE PILOTE

Serial No. ;

Key No.	Part No.	Description	Description	Q'ty	S.C	Serial No.	ICA	Replaceable part	
								Part No.	Q'ty
1320 --	K1044664A	PILOT PIPING	CONDUITES DE PILOTE	-	D				
3	471-00075A	FILTER;PILOT	FILTRE	1					
3A	-	. HEAD	. TETE	1	D				
3B	2472-7003	. CASE	. CARTER	1					
3C	2471-1154	. ELEMENT;FILTER(PILOT)	. ELEMENT	1					
3D	2426-1237	. VALVE;BY-PASS	. VANNE	1					
3E	2471-1155A	. INDICATOR	. INDICATEUR	1					
3F	Y-3738-04	. O-RING	. JOINT CIRCULAIRE	1					
3G	Y-3738-05	. RING;BACK UP	. ANNEAU	1					
3H	530-00236	. HARNESS;PILOT FILTER	. HARNAIS	1					
3I	2197-1661	. BRACKET	. SUPPORT	1					
3J	S0508653	. BOLT	. BOULON	1					
3K	S5102503	. WASHER,SPRING	. RONDELLE	1					
8	195-02716C	BRACKET;FILTER	SUPPORT	1					
9	198-00016	RUBBER	LE CAOUTCHOUC	2					
14	2181-1951D6	TEE	TE	1					
18	2181-1702D4	ELBOW	COUDE	3		5001-7754			
	2181-1702D4	ELBOW	COUDE	1		7755-			
19	2181-1702D2	ELBOW	COUDE	1					
23	2181-1126D6	ADAPTER	ADAPTEUR	1					
25	2181-1126D14	ADAPTER	ADAPTEUR	3					
29	S8000141	O-RING	JOINT TORIQUE	1					
30	S8000111	O-RING	JOINT TORIQUE	5		5001-7754			
	S8000111	O-RING	JOINT TORIQUE	2		7755-			
31	S8000181	O-RING	JOINT CIRCULAIRE	2					
34	S0553766	BOLT	BOULON	2					
35	S0512266	BOLT	BOULON	2					
36	K1001029	BOLT	BOULON	1		5001-7754			
	K1001029	BOLT	BOULON	2		7755-			
38	S5102303	WASHER;SPRING	RONDELLE	2					
39	2114-1058D10	WASHER	RONDELLE	2					
44	124-00208D9	CLIP	AGRAFE	1					
64	DS2094053	HOSE	TUYAU FLEXIBLE	1					
68	DS2093180	HOSE PF1/4-450L	TUYAU FLEXIBLE	1		5001-7754			
	2184-1046D94	HOSE PF1/4-780L	TUYAU FLEXIBLE	1		7755-			
69	DS2093182	HOSE PF1/4-2350L	TUYAU FLEXIBLE	1		5001-7754			
	2184-1046D120	HOSE PF1/4-1950L	TUYAU FLEXIBLE	1		7755-			
71	DS2093003	HOSE PF3/8-1350L	TUYAU	1					

DATE	SEP. 12, 2012
4th EDITION	

Fig. 1320 PILOT PIPING(1) CONDUITES DE PILOTE

Serial No. ;

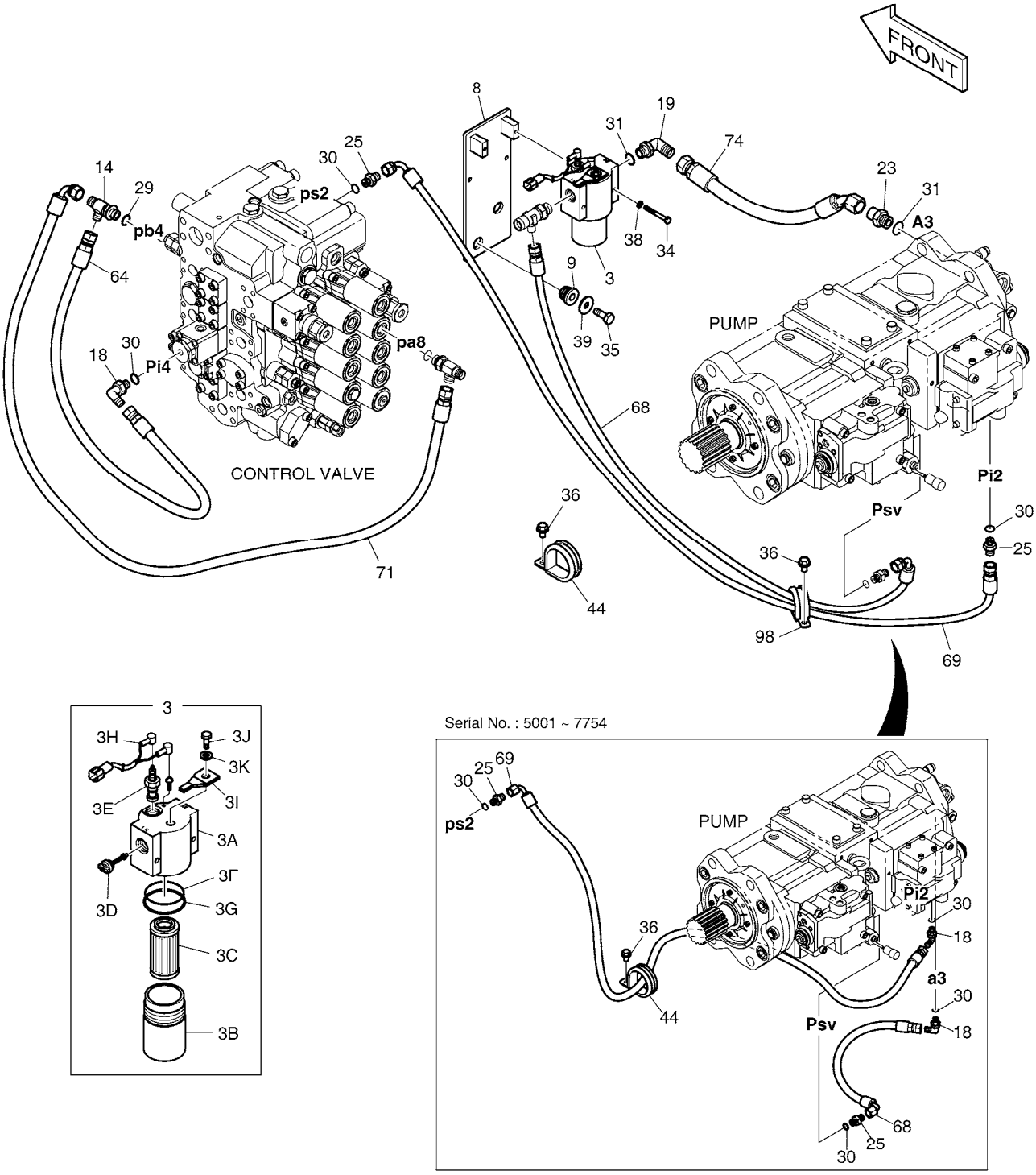

DATE	SEP. 12, 2012
4th EDITION	

Fig. 1320 PILOT PIPING(1)
CONDUITES DE PILOTE

Serial No. ;

Key No.	Part No.	Description	Description	Q'ty	S.C	Serial No.	ICA	Replaceable part	
								Part No.	Q'ty
1320 -74	DS2054133	HOSE	TUYAU FLEXIBLE	1					
98	124-00208D6	CLIP	AGRAFE	1		7755-			

DATE	SEP. 12, 2012
4th EDITION	

Fig. 1330 PILOT PIPING(2) CONDUITES DE PILOTE

Serial No. ;

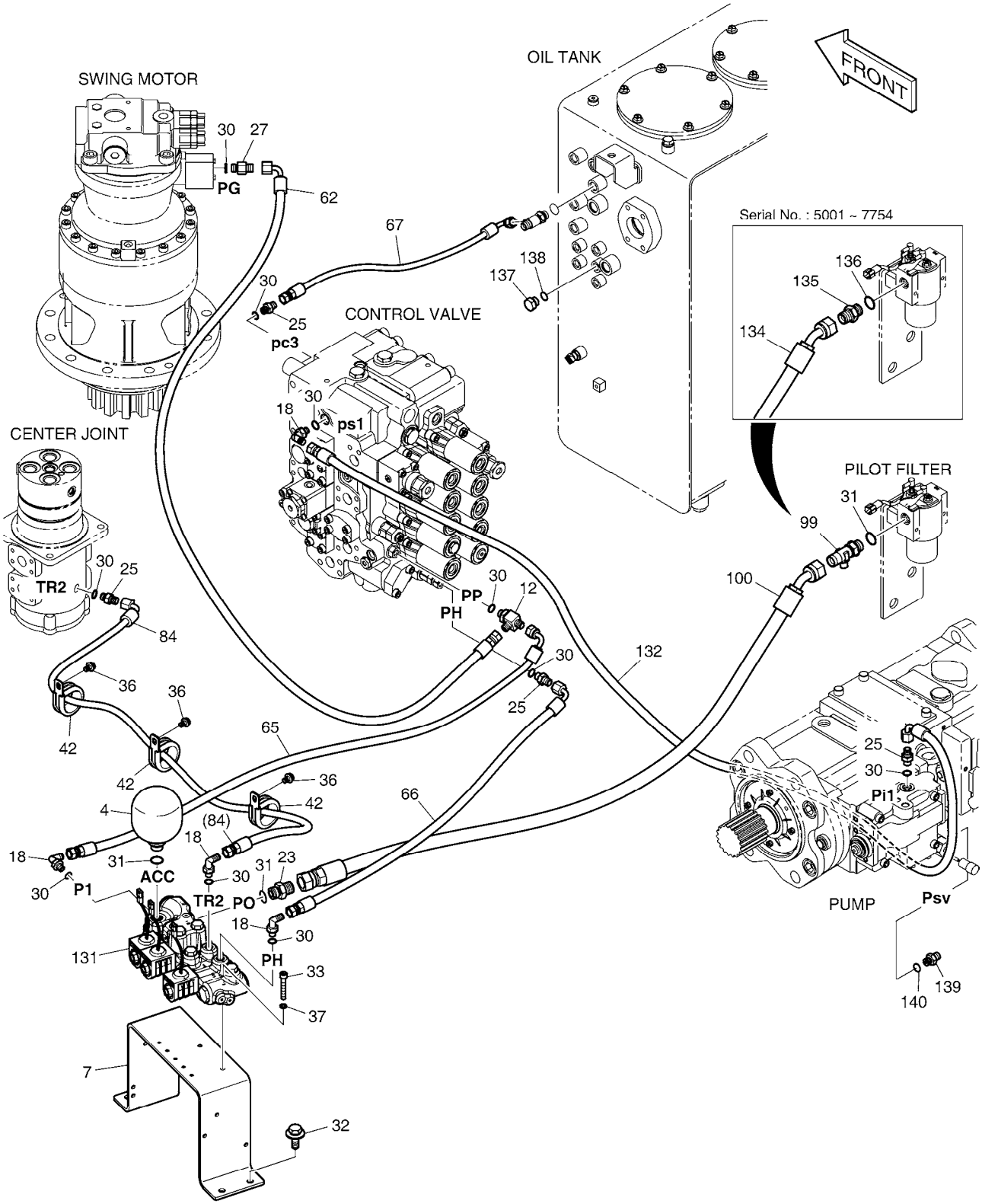

DATE	SEP. 12, 2012
4th EDITION	

Fig. 1330 PILOT PIPING(2) CONDUITES DE PILOTE

Serial No. ;

Key No.	Part No.	Description	Description	Q'ty	S.C	Serial No.	ICA	Replaceable part	
								Part No.	Q'ty
1330 --	K1044664A	PILOT PIPING	CONDUITES DE PILOTE	-	D				
4	2460-9057A	ACCUMULATOR	ACCUMULATEUR	1					
7	K1039014A	BRACKET	SUPPORT	1					
12	K1038032	TEE	TE	1					
18	2181-1702D4	ELBOW	COUDE	4					
23	2181-1126D6	ADAPTER	ADAPTEUR	1					
25	2181-1126D14	ADAPTER	ADAPTEUR	4					
27	2181-1126D38	ADAPTER	ADAPTEUR	1					
30	S8000111	O-RING	JOINT TORIQUE	10					
31	S8000181	O-RING	JOINT CIRCULAIRE	2		5001-7754			
	S8000181	O-RING	JOINT CIRCULAIRE	3		7755-			
32	DS0025017	BOLT	BOULON	4					
33	S2209666	BOLT;SOCKET	BOULON	2					
36	K1001029	BOLT	BOULON	3					
37	S5110503	WASHER;SPRING	RONDELLE	2					
42	124-00208D7	CLIP	AGRAFE	3					
62	DS2093193	HOSE	TUYAU	1					
65	DS2093080	HOSE	TUYAU FLEXIBLE	1					
66	DS2093212	HOSE	TUYAU FLEXIBLE	1					
67	DS2093017	HOSE	TUYAU	1					
84	DS2093034	HOSE	TUYAU FLEXIBLE	1					
99	2181-1951D19	TEE	TE	1		7755-			
100	2184-1060D70	HOSE PF1/2-1700L	TUYAU FLEXIBLE	1		7755-			
131	K1047557	VALVE;SOLENOID	VALVE	1					
132	DS2093181	HOSE PF1/4-2500L	TUYAU FLEXIBLE	1		5001-7754			
	2184-1046D187	HOSE PF1/4-2600L	TUYAU FLEXIBLE	1		7755-			
134	DS2054336	HOSE PF1/2-1760L	TUYAU FLEXIBLE	1		5001-7754			
135	2181-1126D6	ADAPTER	ADAPTEUR	1		5001-7754			
136	S8000181	O-RING	JOINT CIRCULAIRE	1		5001-7754			
137	2181-1950D1	PLUG	BOUCHON	1					
138	S8000111	O-RING	JOINT TORIQUE	1					
139	2181-1126D14	ADAPTER	ADAPTEUR	1		7755-			
140	S8000111	O-RING	JOINT TORIQUE	1		7755-			

DATE	SEP. 12, 2012
4th EDITION	

Fig. 1340 PILOT PIPING(3) CONDUITES DE PILOTE

Serial No. ;

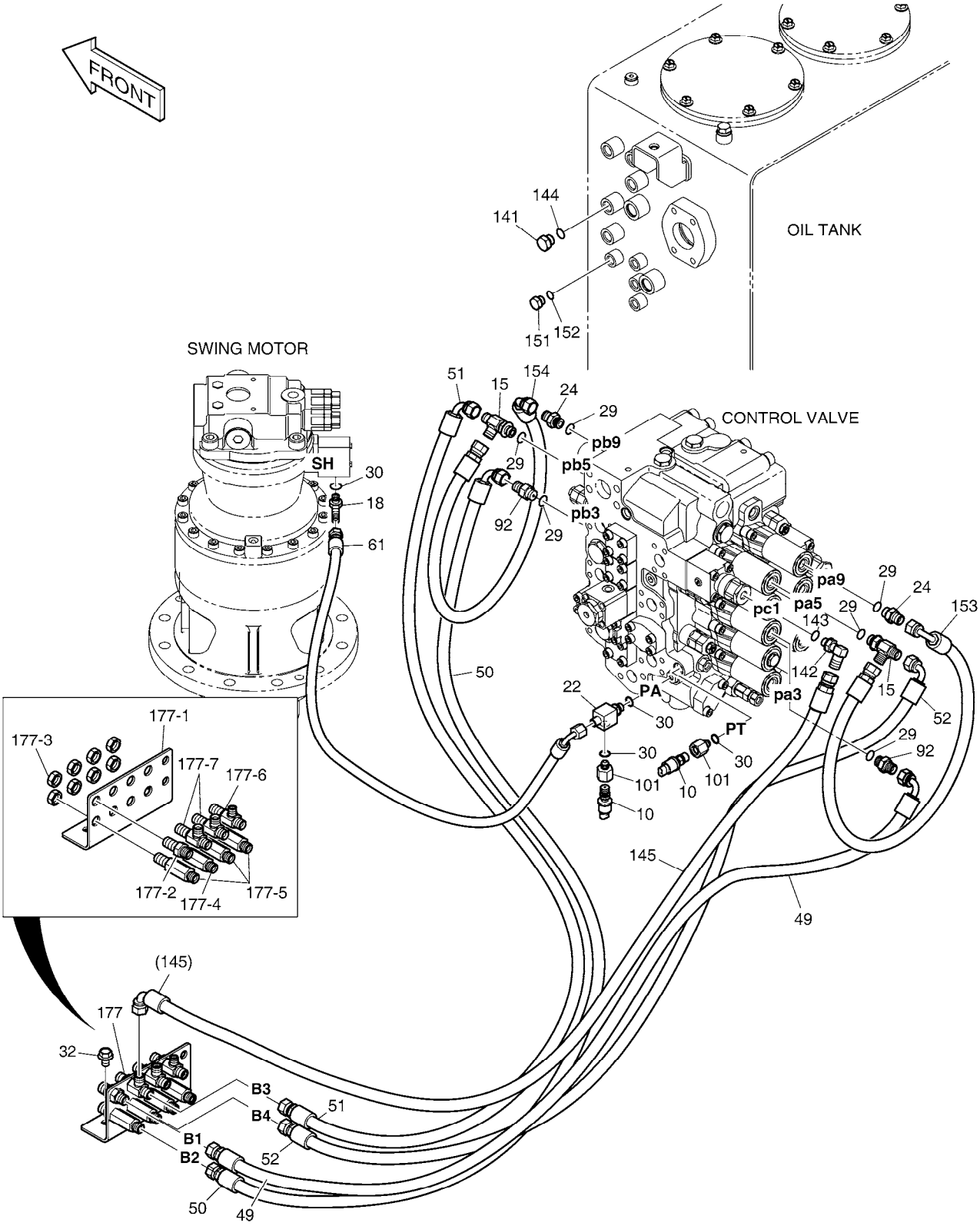

DATE	SEP. 12, 2012
4th EDITION	

Fig. 1340 PILOT PIPING(3) CONDUITES DE PILOTE

Serial No. ;

Key No.	Part No.	Description	Description	Q'ty	S.C	Serial No.	ICA	Replaceable part	
								Part No.	Q'ty
1340 --	K1044664A	PILOT PIPING	CONDUITES DE PILOTE	-	D				
10	2549-9112	SWITCH;PRESSURE	COMMUTATEUR	2					
15	2181-1951D16	TEE	TE	2					
18	2181-1702D4	ELBOW	COUDE	1					
22	2181-2635	TEE	TE	1					
24	2181-1126D7	ADAPTER	ADAPTEUR	2					
29	S8000141	O-RING	JOINT TORIQUE	6					
30	S8000111	O-RING	JOINT TORIQUE	3		5001-7482			
	S8000111	O-RING	JOINT TORIQUE	5		7483-			
32	DS0025017	BOLT	BOULON	2					
49	DS2093134	HOSE	TUYAU	1					
50	DS2093174	HOSE	TUYAU FLEXIBLE	1					
51	DS2093175	HOSE	TUYAU	1					
52	DS2093178	HOSE	TUYAU	1					
61	DS2093090	HOSE	TUYAU FLEXIBLE	1					
92	181-00144D5	ADAPTER	ADAPTEUR	2					
101	430223-00011	REDUCER	RÉDUCTEUR	2		7483-			
141	2181-1950D2	PLUG	BOUCHON	1					
142	2181-1702D3	ELBOW PFO1/4XPF3/8	COUDE	1					
143	S8000111	O-RING	JOINT TORIQUE	1					
144	S8000141	O-RING	JOINT TORIQUE	1					
145	DS2093134	HOSE	TUYAU	1					
151	2181-1951D1	TEE	TE	1					
152	S8000111	O-RING	JOINT TORIQUE	1					
153	DS2093155	HOSE	TUYAU FLEXIBLE	1					
154	DS2093184	HOSE	TUYAU	1					
177	K1044408	JOINT PLATE SUB ASS`Y	SOUS-MARIN COMMUN AS	1		5001-5645	Y	430216-00004	1
	430216-00004	JOINT PLATE SUB ASS`Y	SOUS-MARIN COMMUN AS	1		5646-			
177-1	K1000354	. BRACKET;JOINT	. SUPPORT	1					
177-2	181-00078D1	. ADAPTER	. ADAPTEUR	1					
177-3	121-00010D1	. NUT	. ECROU	8					
177-4	420-00352D1	. VALVE;SHOCKLESS	. VANNE	1					
177-5	DS2410009	. ADAPTER	. ADAPTEUR	3					
177-6	181-00086D1	. TEE	. TE	1					
177-7	181-00086D2	. TEE	. TE	2					

DATE	SEP. 12, 2012
4th EDITION	

Fig. 1350 PILOT PIPING(4)
CONDUITES DE PILOTE

Serial No. ;

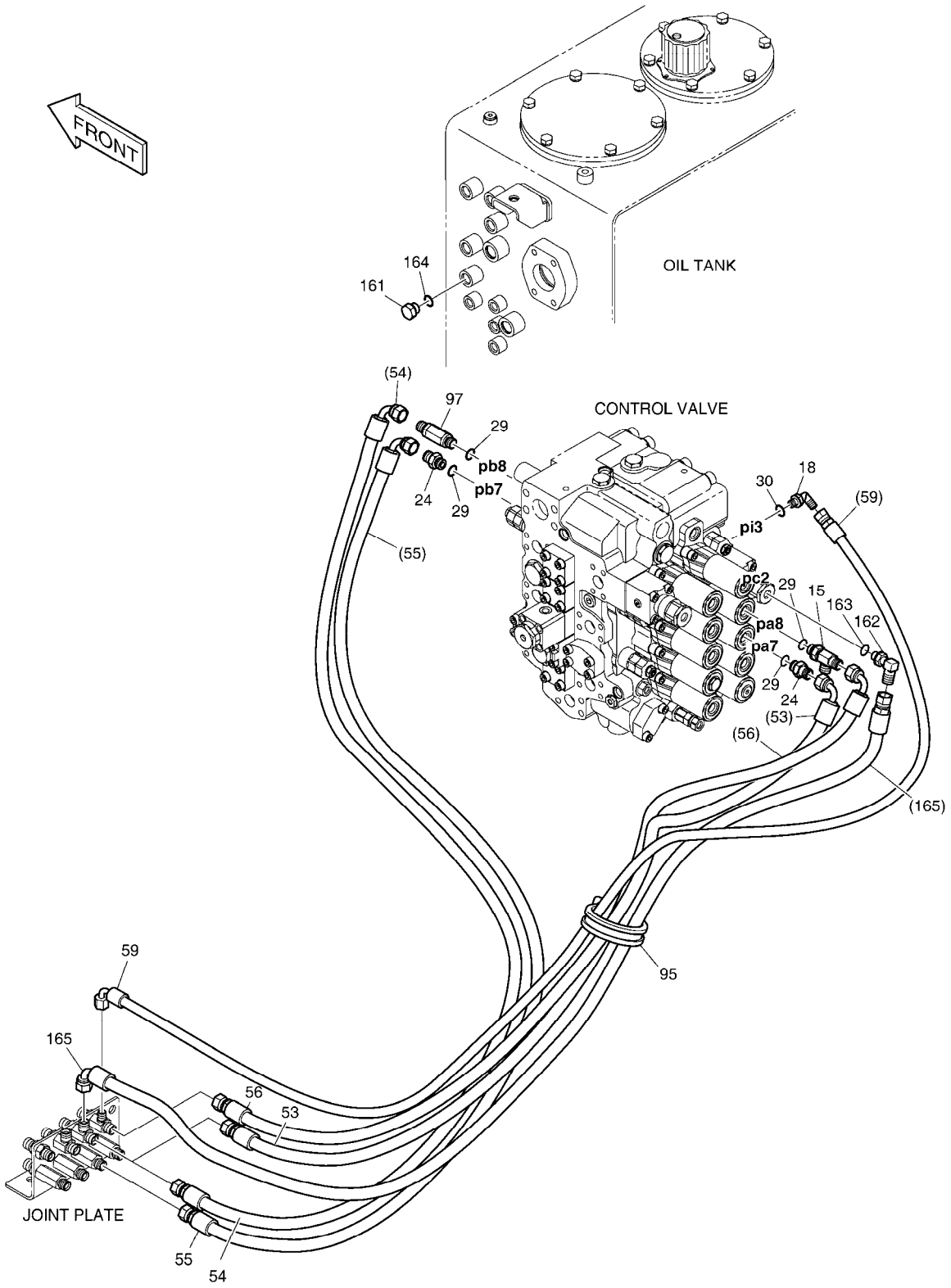

DATE	SEP. 12, 2012
4th EDITION	

Fig. 1350 PILOT PIPING(4) CONDUITES DE PILOTE

Serial No. ;

Key No.	Part No.	Description	Description	Q'ty	S.C	Serial No.	ICA	Replaceable part	
								Part No.	Q'ty
1350 --	K1044664A	PILOT PIPING	CONDUITES DE PILOTE	-	D				
15	2181-1951D16	TEE	TE	1					
18	2181-1702D4	ELBOW	COUDE	1					
24	2181-1126D7	ADAPTER	ADAPTEUR	2					
29	S8000141	O-RING	JOINT TORIQUE	4					
30	S8000111	O-RING	JOINT TORIQUE	1					
53	DS2093139	HOSE	TUYAU FLEXIBLE	1					
54	DS2093222	HOSE	TUYAU	1					
55	DS2093022	HOSE	TUYAU	1					
56	DS2093173	HOSE	TUYAU	1					
59	DS2093026	HOSE	TUYAU FLEXIBLE	1					
95	124-00208D8	CLIP	AGRAFE	1					
97	K1003664D1	VALVE;SHOCKLESS	VALVE	1					
161	2181-1950D2	PLUG	BOUCHON	1					
162	2181-1702D3	ELBOW PFO1/4XPF3/8	COUDE	1					
163	S8000111	O-RING	JOINT TORIQUE	1					
164	S8000141	O-RING	JOINT TORIQUE	1					
165	DS2093178	HOSE	TUYAU	1					

DATE	SEP. 12, 2012
4th EDITION	

Fig. 1360 PILOT PIPING(5)
CONDUITES DE PILOTE

Serial No. ;

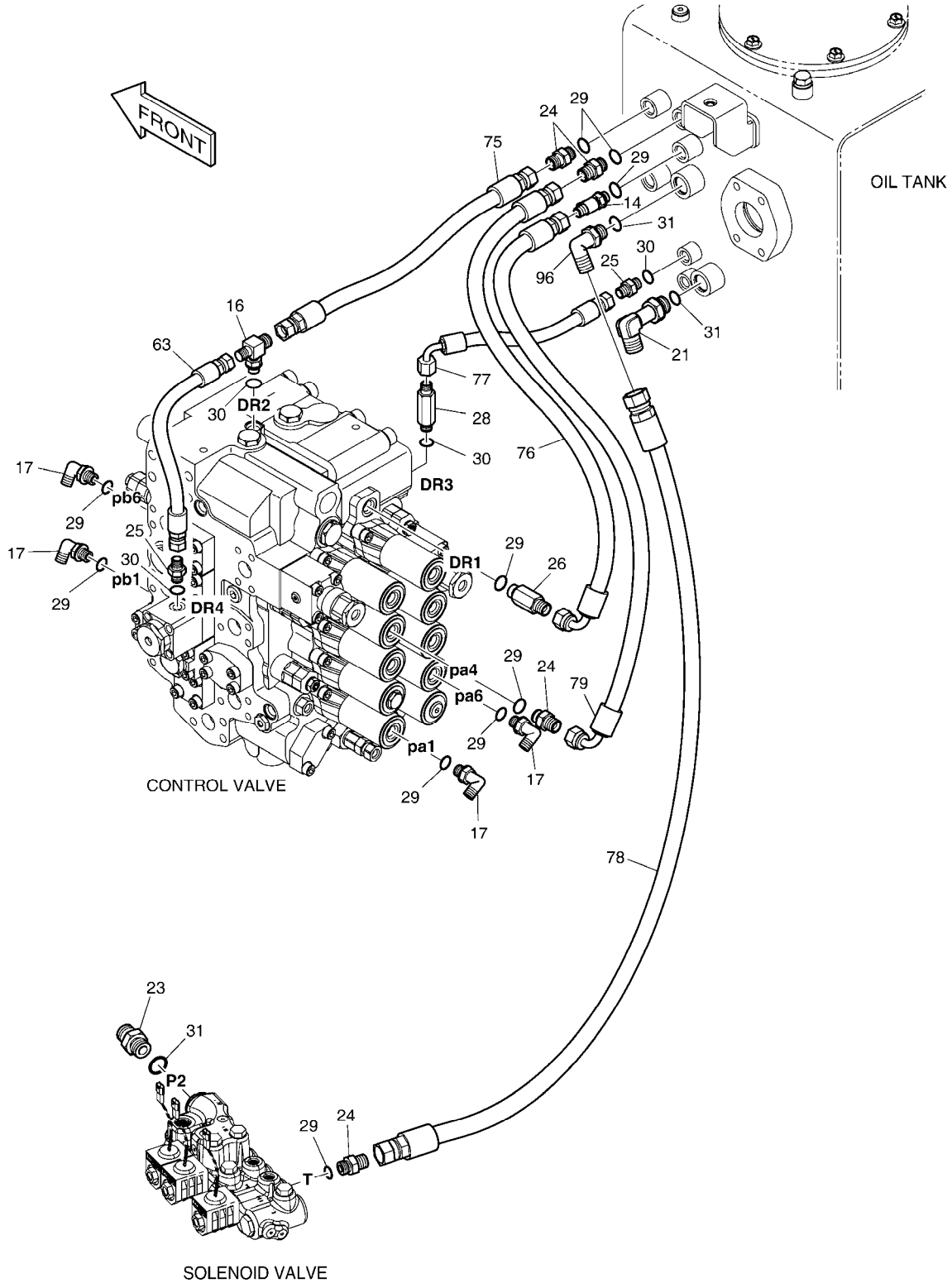

DATE	SEP. 12, 2012
4th EDITION	

Fig. 1360 PILOT PIPING(5) CONDUITES DE PILOTE

Serial No. ;

Key No.	Part No.	Description	Description	Q'ty	S.C	Serial No.	ICA	Replaceable part	
								Part No.	Q'ty
1360 --	K1044664A	PILOT PIPING	CONDUITES DE PILOTE	-	D				
14	2181-1951D6	TEE	TE	1					
16	2181-2281D21	TEE	TE	1					
17	2181-1702D10	ELBOW	COUDE	4					
21	2181-1702D34	ELBOW	COUDE	1					
23	2181-1126D6	ADAPTER	ADAPTEUR	1					
24	2181-1126D7	ADAPTER	ADAPTEUR	4					
25	2181-1126D14	ADAPTER	ADAPTEUR	2					
26	2181-1126D27	ADAPTER	ADAPTEUR	1					
28	2181-1126D103	ADAPTER	ADAPTEUR	1					
29	S8000141	O-RING	JOINT TORIQUE	10					
30	S8000111	O-RING	JOINT TORIQUE	4					
31	S8000181	O-RING	JOINT CIRCULAIRE	3					
63	DS2094004	HOSE	TUYAU FLEXIBLE	1					
75	DS2094055	HOSE	TUYAU	1					
76	DS2093185	HOSE	TUYAU	1					
77	DS2093130	HOSE	TUYAU	1					
78	DS2094037	HOSE	TUYAU FLEXIBLE	1					
79	DS2093030	HOSE	TUYAU	1					
96	2181-1702D9	ELBOW	COUDE	1					

DATE	SEP. 12, 2012
4th EDITION	

Fig. 1370 PILOT PIPING(6) CONDUITES DE PILOTE

Serial No. ;

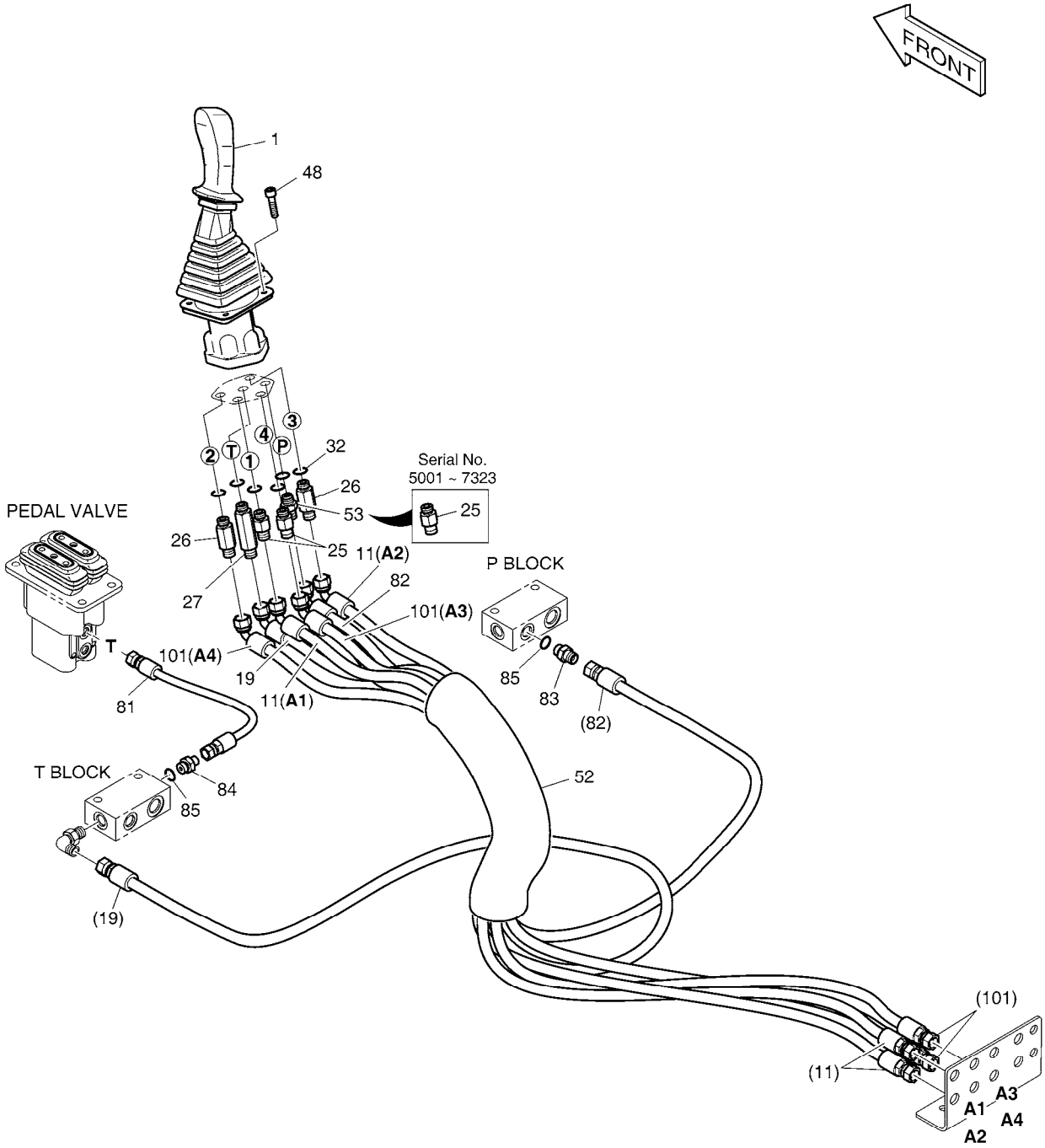

DATE	SEP. 12, 2012
4th EDITION	

Fig. 1370 PILOT PIPING(6) CONDUITES DE PILOTE

Serial No. ;

Key No.	Part No.	Description	Description	Q'ty	S.C	Serial No.	ICA	Replaceable part	
								Part No.	Q'ty
1370 --	K1044708	PILOT PIPING	CONDUITES DE PILOTE	-	D	5001-6341			
	420212-02892	PIPING,PILOT	CONDUITES DE PILOTE	-	D	6342-7323			
	420212-02892A	PIPING,PILOT	CONDUITES DE PILOTE	-	D	7324-			
1	K1000556H	REMOTE CONTROL VALVE(L.H)	VALVE DE REMOCON	1		5001-6341	I	410113-00022A	1
	410113-00022A	VALVE,JOYSTICK(L.H)	MANETTE DE CONTROLE	1		6342-			
11	DS2095001	HOSE	TUYAU FLEXIBLE	2					
19	DS2095004	HOSE	TUYAU FLEXIBLE	1					
25	DS2213165	ADAPTER	ADAPTEUR	3		5001-7323			
	DS2213165	ADAPTER	ADAPTEUR	2		7324-			
26	2181-1126D27	ADAPTER	ADAPTEUR	2					
27	2181-1126D28	ADAPTER	ADAPTEUR	1					
32	S8000141	O-RING	JOINT TORIQUE	6					
48	S2205066	BOLT;SOCKET M6X1.0X25	BOULON	4					
52	K1003945	PROTECTOR	PROTECTEUR	1					
53	430201-00113	ADAPTER,FILTER	ADAPTEUR	1		7324-			
81	DS2094006	HOSE	TUYAU FLEXIBLE	1					
82	DS2095003	HOSE	TUYAU	1					
83	2181-1126D7	ADAPTER	ADAPTEUR	1					
84	2181-1126D36	ADAPTER	ADAPTEUR	1					
85	S8000141	O-RING	JOINT TORIQUE	2					
101	DS2095001	HOSE	TUYAU FLEXIBLE	2					

DATE	SEP. 12, 2012
4th EDITION	

Fig. 1380 PILOT PIPING(7) CONDUITES DE PILOTE

Serial No. ;

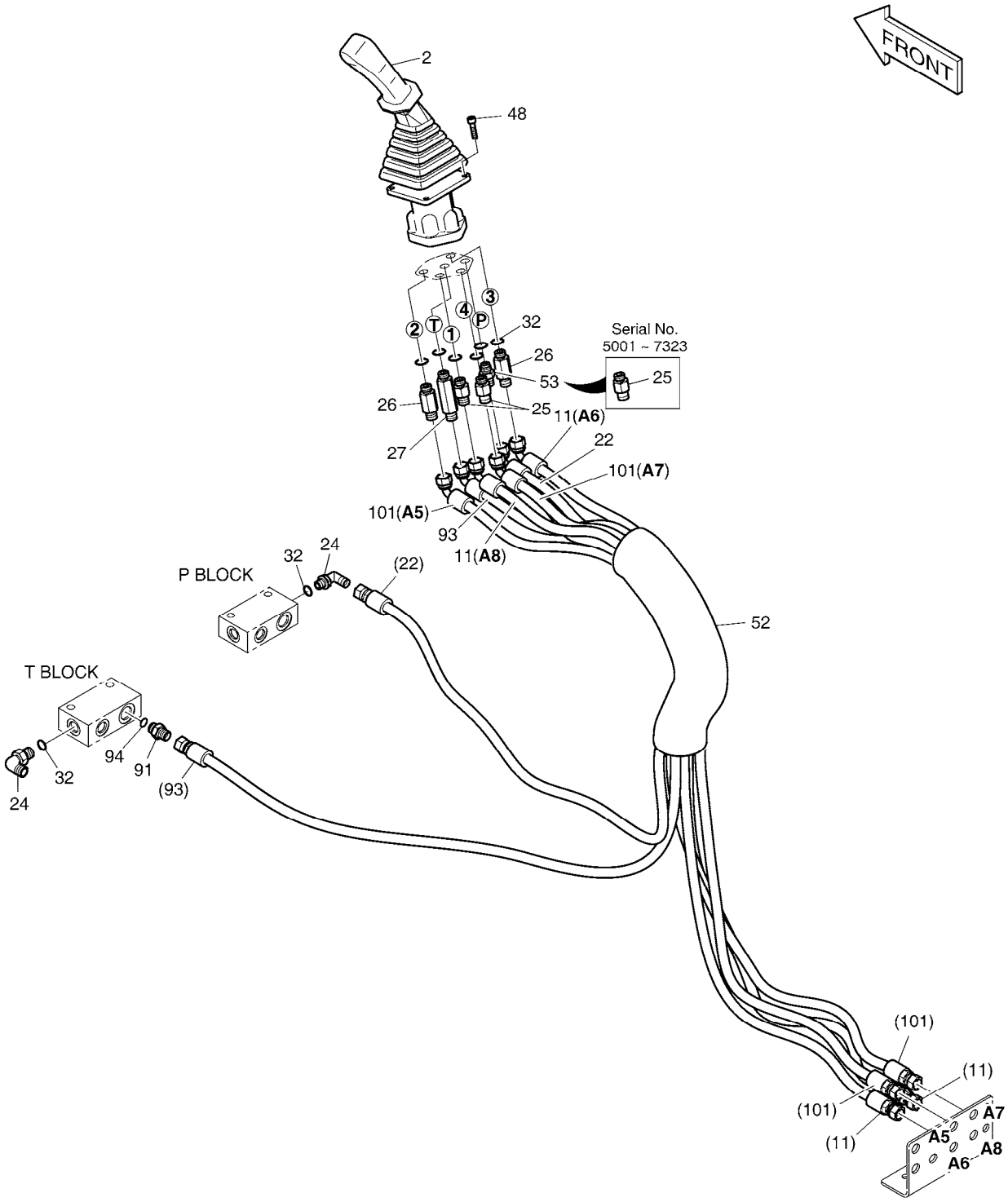

DATE	SEP. 12, 2012
4th EDITION	

Fig. 1380 PILOT PIPING(7) CONDUITES DE PILOTE

Serial No. ;

Key No.	Part No.	Description	Description	Q'ty	S.C	Serial No.	ICA	Replaceable part	
								Part No.	Q'ty
1380 --	K1044708	PILOT PIPING	CONDUITES DE PILOTE	-	D	5001-6341			
	420212-02892	PIPING,PILOT	CONDUITES DE PILOTE	-	D	6342-7323			
	420212-02892A	PIPING,PILOT	CONDUITES DE PILOTE	-	D	7324-			
2	K1000555H	REMOTE CONTROL VALVE(R.H)	VALVE DE REMOCON	1		5001-6341	I	410113-00021A	1
	410113-00021A	VALVE,JOYSTICK(R.H)	MANETTE DE CONTROLE	1		6342-			
11	DS2095001	HOSE	TUYAU FLEXIBLE	2					
22	DS2095002	HOSE PF3/8-1750L	TUYAU FLEXIBLE	1					
24	2181-1702D5	ELBOW	COUDE	2					
25	DS2213165	ADAPTER	ADAPTEUR	3		5001-7323			
	DS2213165	ADAPTER	ADAPTEUR	2		7324-			
26	2181-1126D27	ADAPTER	ADAPTEUR	2					
27	2181-1126D28	ADAPTER	ADAPTEUR	1					
32	S8000141	O-RING	JOINT TORIQUE	8					
48	S2205066	BOLT;SOCKET M6X1.0X25	BOULON	4					
52	K1003945	PROTECTOR	PROTECTEUR	1					
53	430201-00113	ADAPTER,FILTER	ADAPTEUR	1		7324-			
91	2181-1126D7	ADAPTER	ADAPTEUR	1					
93	DS2095003	HOSE	TUYAU	1					
94	S8000141	O-RING	JOINT TORIQUE	1					
101	DS2095001	HOSE	TUYAU FLEXIBLE	2					

DATE	SEP. 12, 2012
4th EDITION	

Fig. 1390 PILOT PIPING(8) CONDUITES DE PILOTE

Serial No. ;

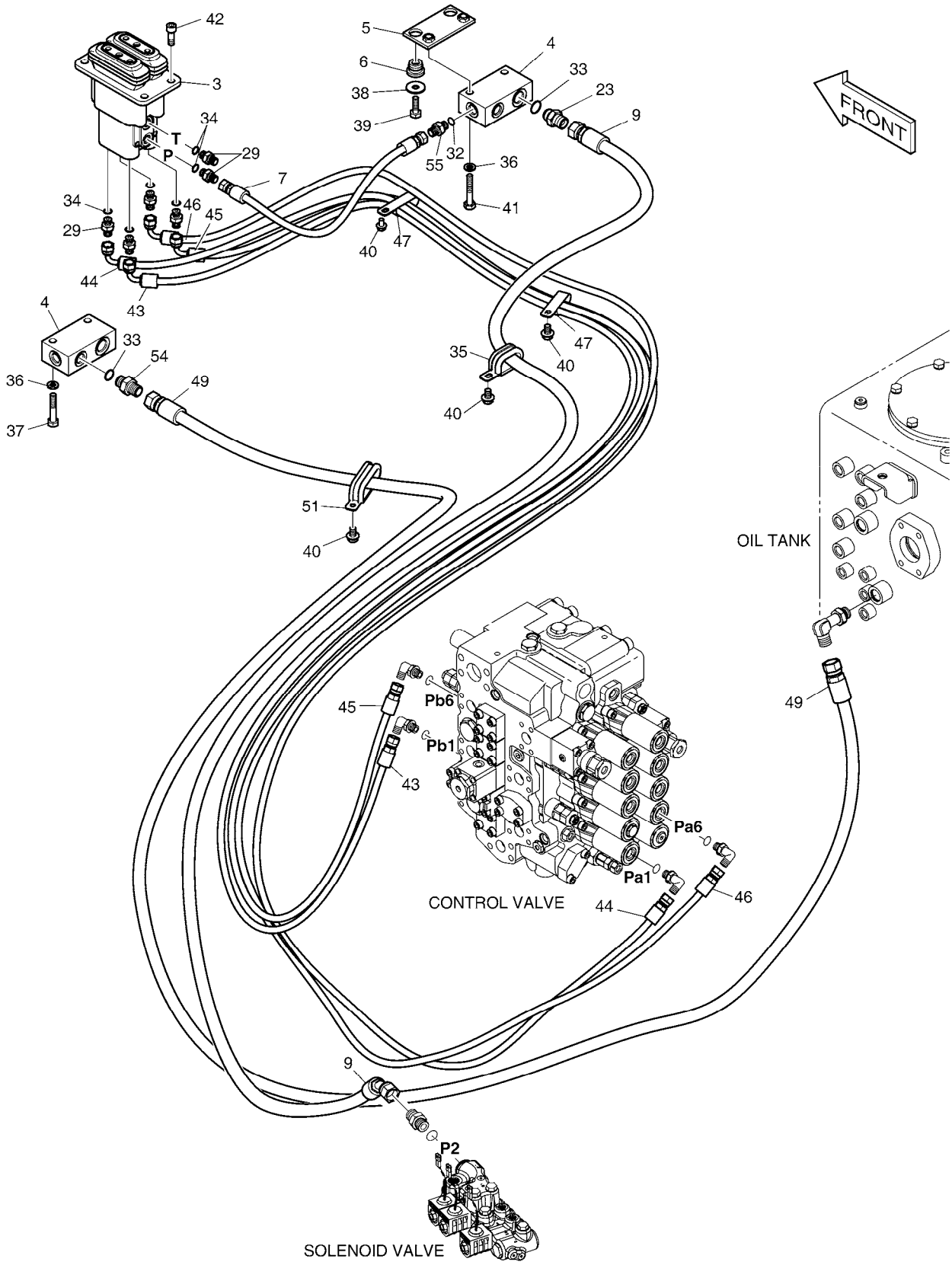

DATE	SEP. 12, 2012
4th EDITION	

Fig. 1390 PILOT PIPING(8) CONDUITES DE PILOTE

Serial No. ;

Key No.	Part No.	Description	Description	Q'ty	S.C	Serial No.	ICA	Replaceable part	
								Part No.	Q'ty
1390 --	K1044708	PILOT PIPING	CONDUITES DE PILOTE	-	D	5001-6341			
	420212-02892	PIPING,PILOT	CONDUITES DE PILOTE	-	D	6342-7323			
	420212-02892A	PIPING,PILOT	CONDUITES DE PILOTE	-	D	07324-11350			
	420212-02892B	PIPING PILOT	CONDUITES DE PILOTE	-	D	11351-			
3	420-00467A	VALVE;PEDAL	VANNE	1					
4	2423-1470	BLOCK	BLOC	2					
5	621-02151	PLATE	PLAQUE	1					
6	198-00016	RUBBER	LE CAOUTCHOUC	2					
7	DS2094006	HOSE	TUYAU FLEXIBLE	1					
9	DS2054356	HOSE	TUYAU	1					
23	2471-1135	FILTER;ADAPTER	FILTRE DE ADAPTEUR	1					
29	2181-1126D14	ADAPTER	ADAPTEUR	6					
32	S8000141	O-RING	JOINT TORIQUE	1					
33	S8000181	O-RING	JOINT CIRCULAIRE	2					
34	S8000111	O-RING	JOINT TORIQUE	6					
35	124-00209D2	CLIP	AGRAFE	1					
36	2114-2031D5	WASHER;SPRING	RONDELLE	4					
37	S0558666	BOLT	BOULON	2					
38	2114-1058D10	WASHER	RONDELLE	2					
39	S0512266	BOLT	BOULON	2					
40	K1001029	BOLT	BOULON	4					
41	S0558766	BOLT	BOULON	2					
42	S2212266	BOLT;SOCKET M10X1.5X30	BOULON A 6 PANS CREUX	4					
43	DS2093189	HOSE	TUYAU	1					
44	DS2093191	HOSE PF1/4-2880L	TUYAU	1					
45	DS2093190	HOSE	TUYAU FLEXIBLE	1					
46	DS2093192	HOSE	TUYAU FLEXIBLE	1					
47	124-00209D3	CLIP	AGRAFE	2					
49	DS2053833	HOSE	TUYAU FLEXIBLE	1					
51	124-00209D8	CLIP	AGRAFE	1					
54	2181-1126D6	ADAPTER	ADAPTEUR	1					
55	2181-1126D36	ADAPTER	ADAPTEUR	1					

DATE	SEP. 12, 2012
4th EDITION	

Fig. 1400 CONTROL STAND - L.H.
CONSOLE DE COMMANDE

Serial No. ;

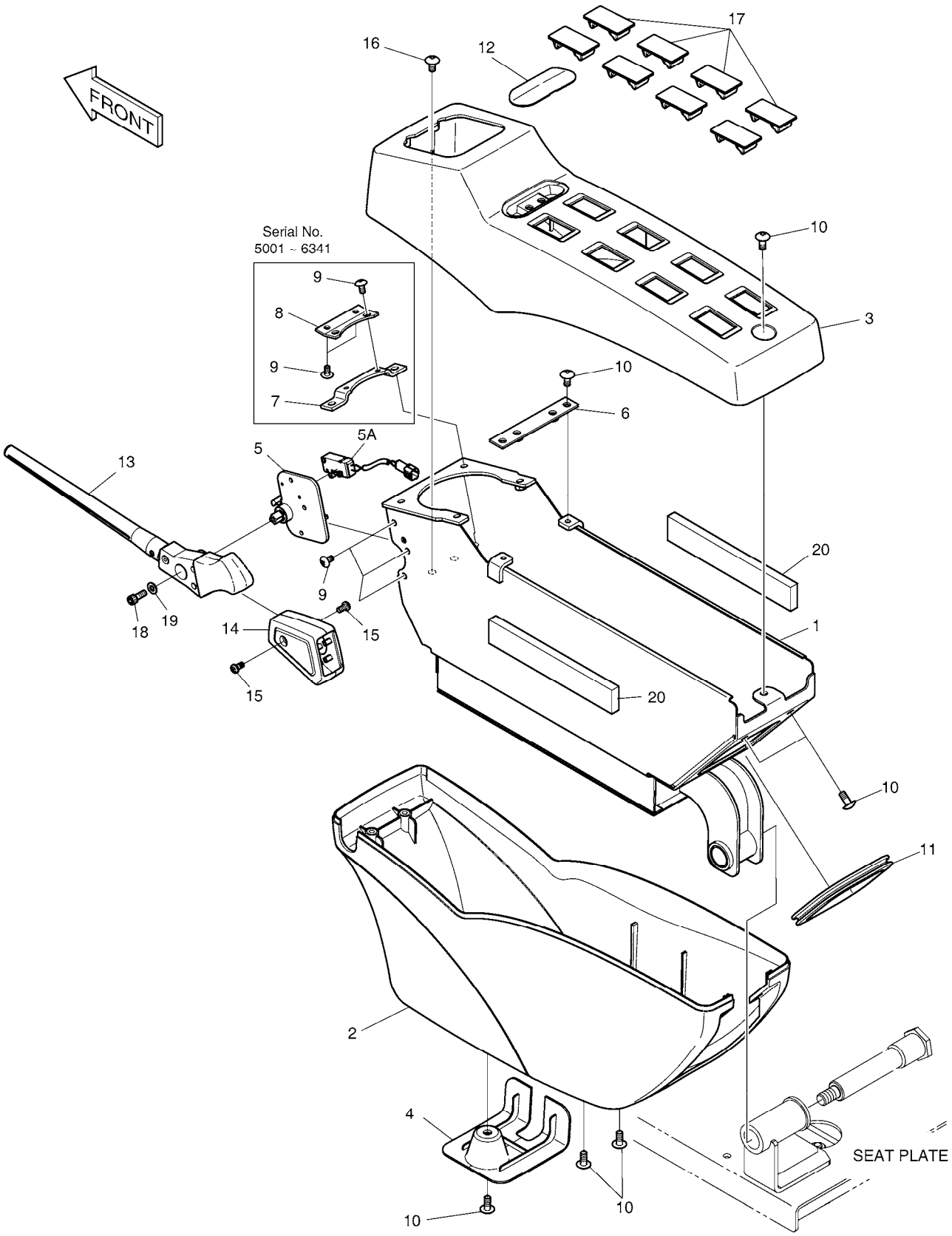

DATE	SEP. 12, 2012
4th EDITION	

Fig. 1400 CONTROL STAND - L.H.
CONSOLE DE COMMANDE

Serial No. ;

Key No.	Part No.	Description	Description	Q'ty	S.C	Serial No.	ICA	Replaceable part	
								Part No.	Q'ty
1400 --	K1002202H	CONTROL STAND L.H.	COMMANDEZ LE GAUCHE	-	D	5001-6341			
	220111-00022	STAND ASSY,CONTROL	COMMANDEZ LE STAND	-	D	6342-			
1	195-02753C	BRACKET;STAND LH	SUPPORT	1					
2	621-02901B	COVER;STAND LH LOWER	COUVERTURE	1					
3	621-03012G	COVER;STAND LH UPPER	COUVERTURE	1		5001-6341	I	220204-00099	1
	220204-00099	COVER,STAND	COUVERCLE	1		6342-			
4	621-03014B	COVER;STAND LOW	COUVERTURE	1					
5	195-02868C	BRACKET;SAFETY	SUPPORT	1					
5A	549-00089	. SWITCH;MICRO	. COMMUTATEUR	1					
6	621-02957B	PLATE;STAND MOUNT	PLAQUE	1					
7	159-00290B	PLATE	PLAQUE	1		5001-6341			
8	159-00287B	PLATE;COVER MOUNT	PLAQUE	1		5001-6341			
9	2120-2166D53	SCREW	VIS	7		5001-6341			
	2120-2166D53	SCREW	VIS	3		6342-			
10	2120-2166D10	SCREW	VIS	10					
11	K1001023	STRIP;WEATHER	BANDE	1					
12	621-03733C	COVER	COUVERTURE	1					
13	K1000840	LEVER	LEVIER	1					
14	K1000842A	COVER	COUVERTURE	1					
15	S3450823	SCREW	VIS	2					
16	2120-2166D52	BOLT M6X1.0X12	BOULON	2					
17	621-02801	COVER;SWITCH	COUVERTURE	8					
18	S2202966	BOLT;SOCKET	BOULON	1					
19	2114-1898D4	WASHER	RONDELLE	1					
20	K1010466	FOAM	MOUSSE	2					

DATE	SEP. 12, 2012
4th EDITION	

Fig. 1410 CONTROL STAND - R.H.
CONSOLE DE COMMANDE

Serial No. ;

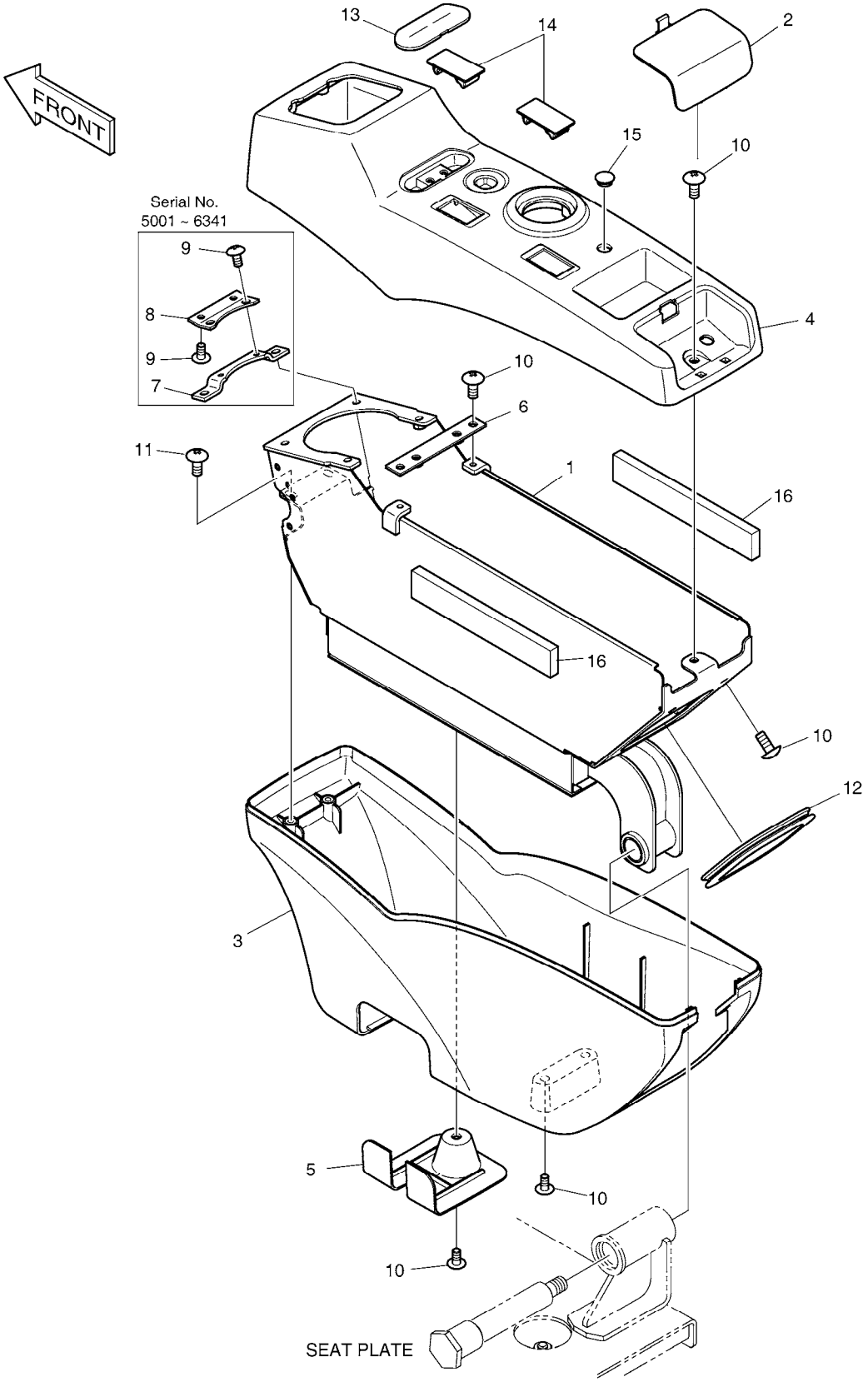

DATE	SEP. 12, 2012
4th EDITION	

Fig. 1410 CONTROL STAND - R.H.
CONSOLE DE COMMANDE

Serial No. ;

Key No.	Part No.	Description	Description	Q'ty	S.C	Serial No.	ICA	Replaceable part	
								Part No.	Q'ty
1410 --	K1002162H	CONTROL STAND-R.H	CONSOLE DE COMMANDE	-	D	5001-6341			
	220111-00023	STAND ASSY,CONTROL	COMMANDEZ LE STAND	-	D	6342-			
1	195-02755C	BRACKET;R.H.	SUPPORT	1					
2	621-02926E	COVER;SWITCH	COUVERTURE	1					
3	621-02900B	COVER;STAND LOWER	COUVERTURE	1					
4	621-02898G	COVER;STAND RH UPPER	COUVERCLE	1		5001-6341	I	220204-00100	1
	220204-00100	COVER,STAND	COUVERCLE	1		6342-			
5	621-03014B	COVER;STAND LOW	COUVERTURE	1					
6	621-02957B	PLATE;STAND MOUNT	PLAQUE	1					
7	159-00290B	PLATE	PLAQUE	1		5001-6341			
8	159-00287B	PLATE;COVER MOUNT	PLAQUE	1		5001-6341			
9	2120-2166D53	SCREW	VIS	4		5001-6341			
10	2120-2166D10	SCREW	VIS	10					
11	2120-2166D52	BOLT M6X1.0X12	BOULON	2					
12	K1001023	STRIP;WEATHER	BANDE	1					
13	621-03733C	COVER	COUVERTURE	1					
14	621-02801	COVER;SWITCH	COUVERTURE	2					
15	K1006995	CAP	CHAPEAU	1					
16	K1010466	FOAM	MOUSSE	2					

DATE	SEP. 12, 2012
4th EDITION	

Fig. 1420 SEAT SLIDING PLATE
POSEZ GLISSER LE PLAT

Serial No. ;

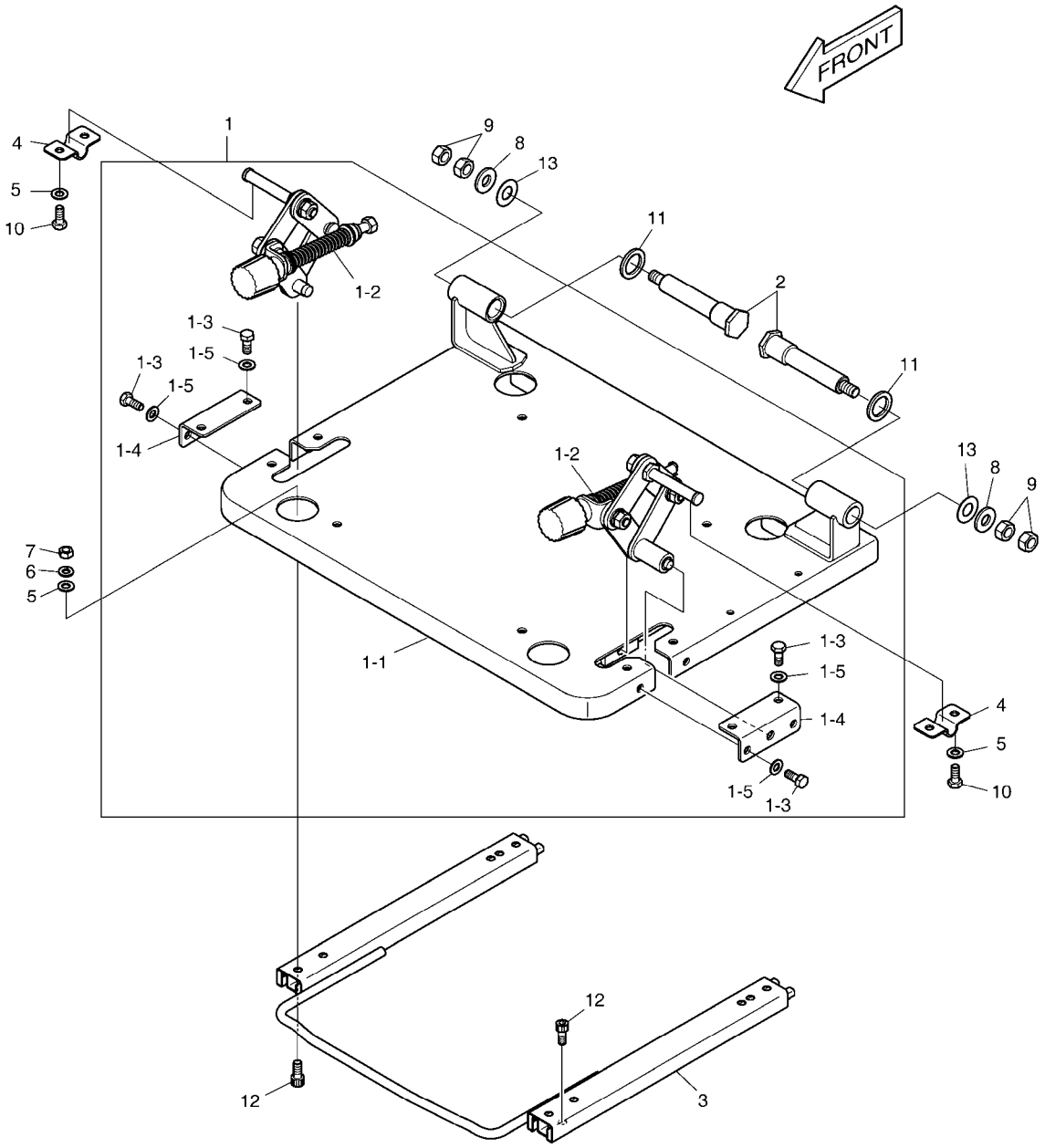

DATE	SEP. 12, 2012
4th EDITION	

Fig. 1420 SEAT SLIDING PLATE POSEZ GLISSER LE PLAT

Serial No. ;

Key No.	Part No.	Description	Description	Q'ty	S.C	Serial No.	ICA	Replaceable part	
								Part No.	Q'ty
1420 --	K1002204C	SEAT PLATE ASS`Y	SIEGE	-	D				
1	621-03011E	SEAT PLATE ASS'Y	POSEZ LE PLAT ASS'Y	1					
1-1	621-02895C	. PLATE;SEAT MOUNT	. PLAQUE	1					
1-2	195-02904C	. STAND TILT BRACKET ASS'Y	. PARENTHÈSE D'INCLINAI	1					
1-3	2120-2166D5	. BOLT	. BOULON	8					
1-4	621-02925A	. PLATE	. PLAQUE	2					
1-5	2114-1898D14	. WASHER;PLAIN	. RONDELLE	8					
2	123-00524B	PIN;TILT STAND	GOUPILLE	2					
3	K1003381	RAIL	RAIL	1		5001-5299	I	K1040096	1
	K1040096	RAIL	RAIL	1		5300-			
4	621-03005A	PLATE	PLAQUE	2					
5	2114-1898D14	WASHER;PLAIN	RONDELLE	8					
6	2114-2031D4	WASHER;SPRING	RONDELLE	4					
7	2121-1311D2	NUT	ECROU	4					
8	2114-1898D17	WASHER M12	RONDELLE	2					
9	2121-1311D1	NUT	ECROU	4					
10	2120-2166D5	BOLT	BOULON	4					
11	2114-1898D18	WASHER	RONDELLE	2					
12	S2208866	BOLT;SOCKET	BOULON	8					
13	114-00590	WASHER	RONDELLE	2					

DATE	SEP. 12, 2012
4th EDITION	

Fig. 1430 SEAT PLATE
POSEZ LE PLAT

Serial No. ;

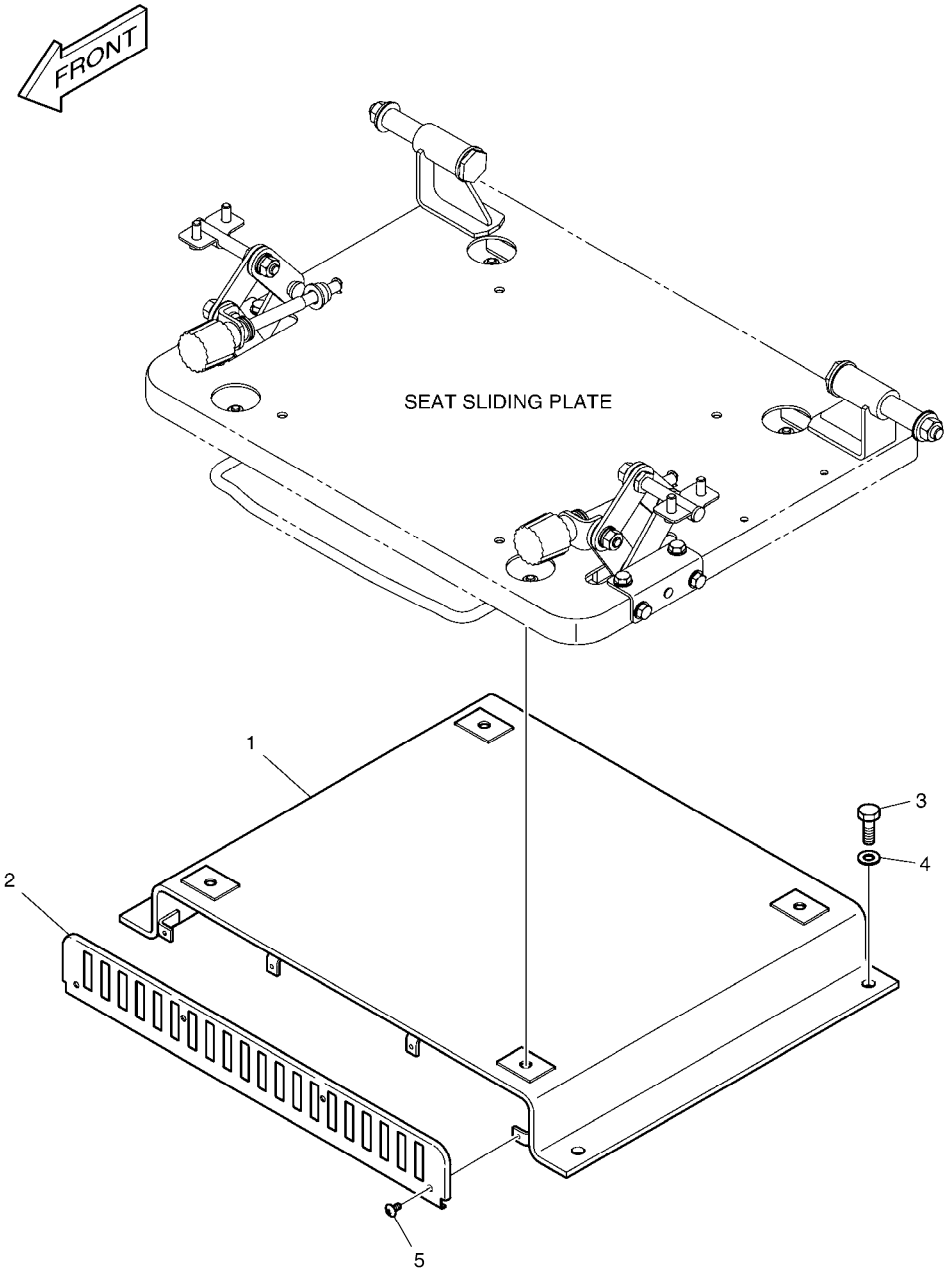

DATE	SEP. 12, 2012
4th EDITION	

Fig. 1430 SEAT PLATE POSEZ LE PLAT

Serial No. ;

Key No.	Part No.	Description	Description	Q'ty	S.C	Serial No.	ICA	Replaceable part	
								Part No.	Q'ty
1430 --	K1002229A	SEAT PLATE	POSEZ LE PLAT	-	D				
1	K1002230A	BRACKET;SEAT LOWER	SUPPORT	1					
2	K1002231A	PLATE;COVER	PLAQUE	1					
3	2120-2166D10	SCREW	VIS	4					
4	2114-1898D15	WASHER;PLAIN	RONDELLE	4					
5	2120-2166D53	SCREW	VIS	4					

DATE	SEP. 12, 2012
4th EDITION	

Fig. 1440 SEAT MOUNTING
SIEGE LE SUPPORT

Serial No. ;

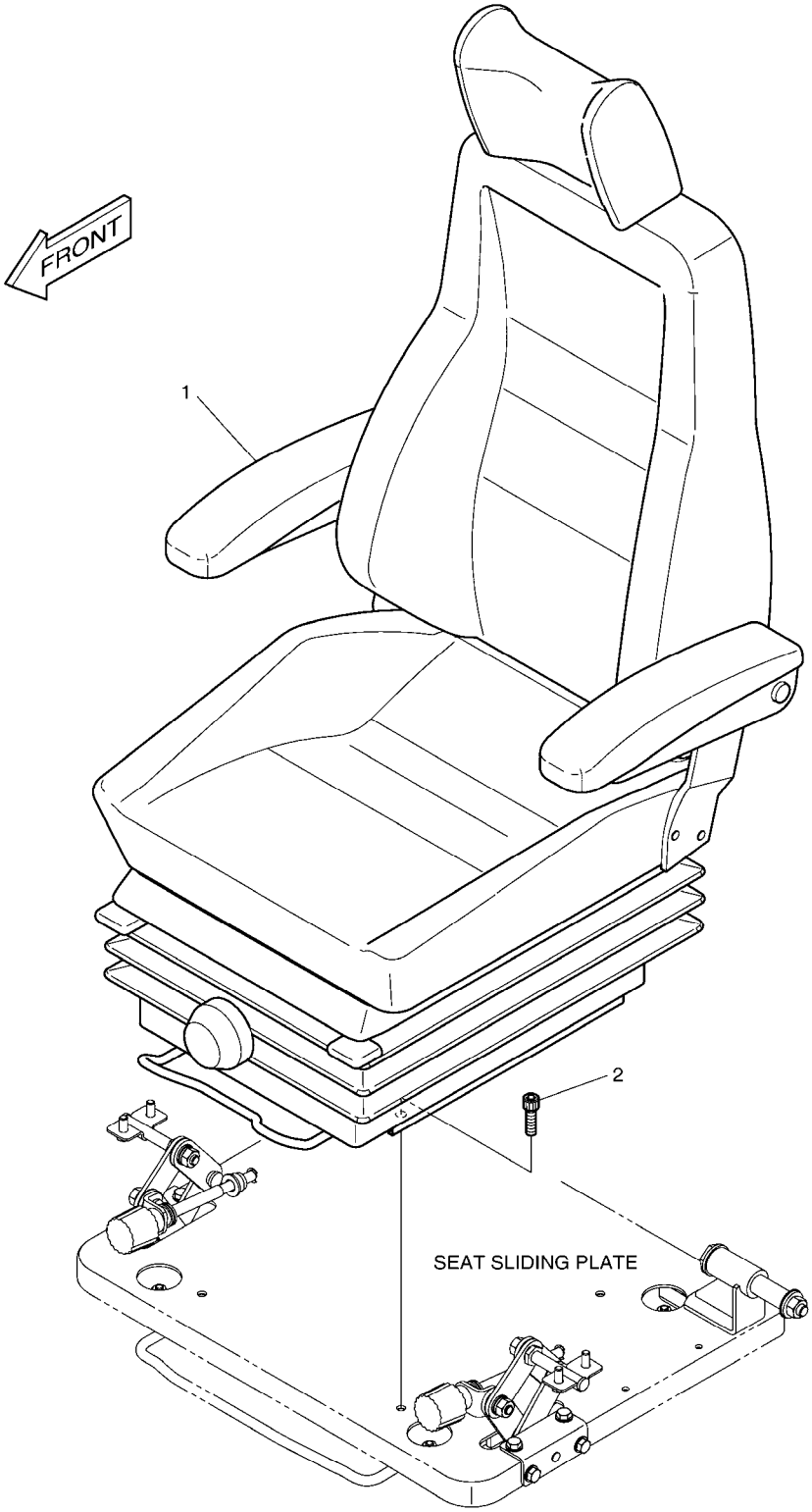

DATE	SEP. 12, 2012
4th EDITION	

Fig. 1440 SEAT MOUNTING SIEGE LE SUPPORT

Serial No. ;

Key No.	Part No.	Description	Description	Q'ty	S.C	Serial No.	ICA	Replaceable part	
								Part No.	Q'ty
1440 --	K1002084A	SEAT MOUNTING	SUPPORT DE SIEGE	-	D				
1	901-00045	SEAT ASS'Y	POSEZ ASS'Y	1					
2	S2208866	BOLT;SOCKET	BOULON	4					

DATE	SEP. 12, 2012
4th EDITION	

Fig. 1450 SEAT SIEGE

Serial No. ;

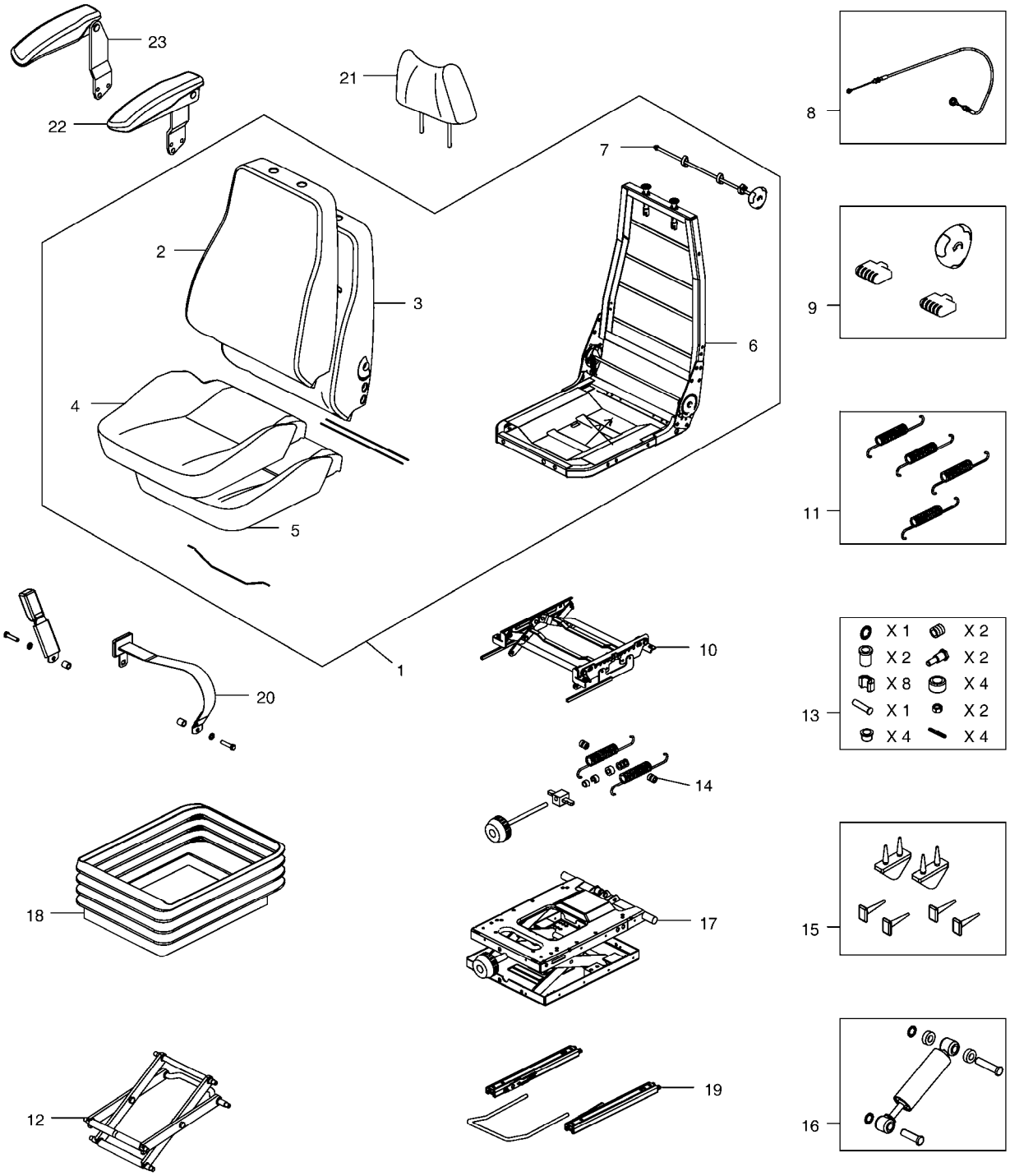

DATE	SEP. 12, 2012
4th EDITION	

Fig. 1450 SEAT SIEGE

Serial No. ;

Key No.	Part No.	Description	Description	Q'ty	S.C	Serial No.	ICA	Replaceable part	
								Part No.	Q'ty
1450 --	901-00045	SEAT ASS'Y	POSEZ ASS'Y	1					
1	K9001695	UPPER ASS'Y	ASS' SUPERIEUR	1					
2	K9001201	BACK COVER	COUVERTURE ARRIERE	1					
3	K9001202	BACK FOAM	MOUSSE ARRIERE	1					
4	K9001203	SEAT COVER	COUVERTURE DE SIEGE	1					
5	K9001204	SEAT FOAM	POSEZ LA MOUSSE	1					
6	-	FRAME	ARMATURE	1	D				
7	K9001206	LUMBAR KIT	KIT LOMBAIRE	1					
8	K9001207	CABLE;ADJUST	CABLE	1					
9	2.172-00003	HANDLE	POIGNEE	1					
10	K9001208	HEIGHT RISER	CANALISATION VERTICALE	1					
11	K9001209	HEIGHT RISER SPRING KIT	KIT DE RESSORT DE CANA	1					
12	K9001210	LEVER/CENTRE PIVOT KIT	KIT DE PIVOT DE LEVER/CE	1					
13	K9001211	BEARING KIT	KIT DE ROULEMENT	1					
14	K9001212	WEIGHT ADJUST KIT	LE POIDS AJUSTENT LE KIT	1					
15	K9001213	UPSTOP/BUMP STOP KIT	KIT D'ARRET D'UPSTOP/BU	1					
16	K9001214	DAMPER KIT	AMORTISSEUR	1					
17	K9001215	SUSPENSION ASS'Y	SUSPENSION ASS'Y	1					
18	K9001216	SUSPENSION COVER	COUVERTURE DE SUSPEN	1					
19	K9001217	SLIDING RAIL ASS'Y	GLISSEMENT DU RAIL ASS	1					
20	K9001218	BELT;SEAT	CEINTURE	1					
21	K9001219	HEAD REST	REPOS PRINCIPAL	1					
22	K9001220	ARM REST-L.H	REPOS DE BRAS	1					
23	K9001221	ARM REST-R.H	REPOS DE BRAS	1					

DATE	SEP. 12, 2012
4th EDITION	

Fig. 1460 DUCT COVER
CONDUITES COUVERCLE

Serial No. ;

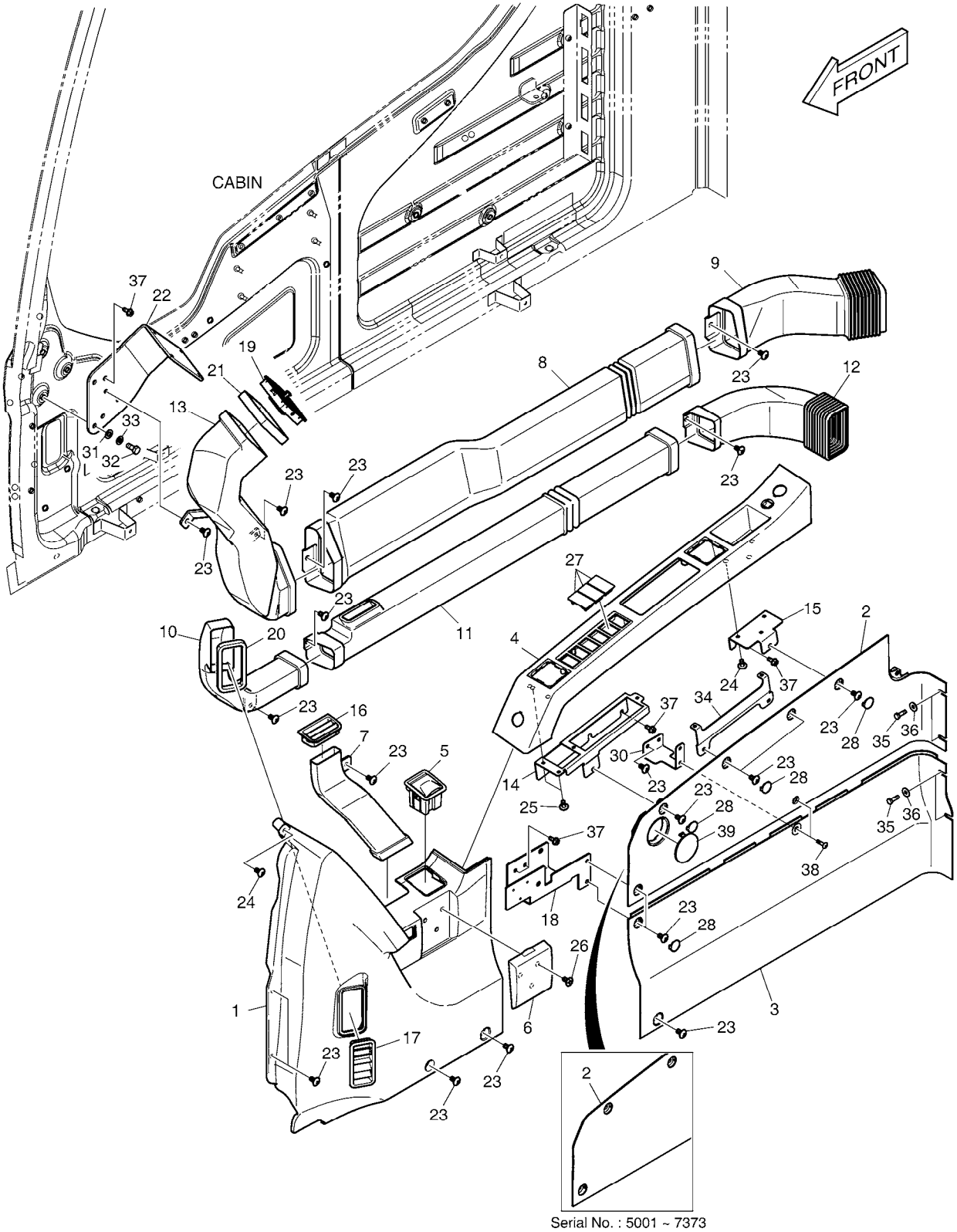

DATE	SEP. 12, 2012
4th EDITION	

Fig. 1460 DUCT COVER
CONDUITES COUVERCLE

Serial No. ;

Key No.	Part No.	Description	Description	Q'ty	S.C	Serial No.	ICA	Replaceable part	
								Part No.	Q'ty
1460 --	K1048688	SIDE COVER ASS'Y	COUVERCLE	-	D	5001-7373			
	110517-00370	COVER ASSY,SIDE	COUVERCLE	-	D	7374-			
1	621-02903C	COVER;SIDE FRONT	COUVERTURE	1					
2	621-02905C	COVER;SIDE MID UPPER	COUVERTURE	1		5001-7373			
	110517-00364	COVER,SIDE;MID UPPER	COUVERCLE	1		7374-			
3	621-02904C	COVER;SIDE MID LOWER	COUVERTURE	1					
4	621-02909G	COVER;SWITCH	COUVERTURE	1					
5	906-00002A	ASHTRAY ASM	CENDRIER	1					
6	621-02908B	HOLDER;CUP	CONDUIT	1					
7	213-00035B	DUCT;DEFROSTER SIDE	CONDUIT	1					
8	213-00030B	DUCT;FACE MID	CONDUIT	1					
9	213-00031E	DUCT;FACE REAR	CONDUIT	1					
10	213-00032B	DUCT;DEFROSTER FRONT	CONDUIT	1					
11	213-00033B	DUCT;DEFROSTER MID	CONDUIT	1					
12	213-00034E	DUCT;DEFROSTER REAR	CONDUIT	1					
13	213-00029C	DUCT;FACE FRONT	CONDUIT	1					
14	195-02768E	BRACKET;SWITCH	SUPPORT	1					
15	195-02769E	BRACKET;SWITCH	SUPPORT	1					
16	415-00046B	LOUVER DEF SIDE	AUVENT	1					
17	415-00045B	LOUVER DEF FRONT	AUVENT	1					
18	195-02770E	BRACKET;CUP	SUPPORT	1					
19	415-00044B	LOUVER FACE	AUVENT	1					
20	K1001068	FOAM	MOUSSE	1					
21	K1048689	FOAM	MOUSSE	1					
22	K1039212C	PLATE	PLAQUE	1					
23	2120-2166D52	BOLT M6X1.0X12	BOULON	22					
24	2120-2166D53	SCREW	VIS	4					
25	S3654523	SCREW	VIS	4					
26	2120-2166D23	SCREW	VIS	3					
27	621-02801	COVER;SWITCH	COUVERTURE	3					
28	621-03734A	COVER	COUVERTURE	6					
30	K1005007A	PLATE	PLAQUE	1					
31	2114-1898D14	WASHER;PLAIN	RONDELLE	3					
32	2120-2166D5	BOLT	BOULON	3					
33	2114-2031D4	WASHER;SPRING	RONDELLE	3					
34	K1009627	PLATE	PLAQUE	1					
35	2120-2166D36	BOLT	BOULON	4					
36	2114-1898D5	WASHER M6	RONDELLE	4					

DATE	SEP. 12, 2012
4th EDITION	

Fig. 1460 DUCT COVER
CONDUITES COUVERCLE

Serial No. ;

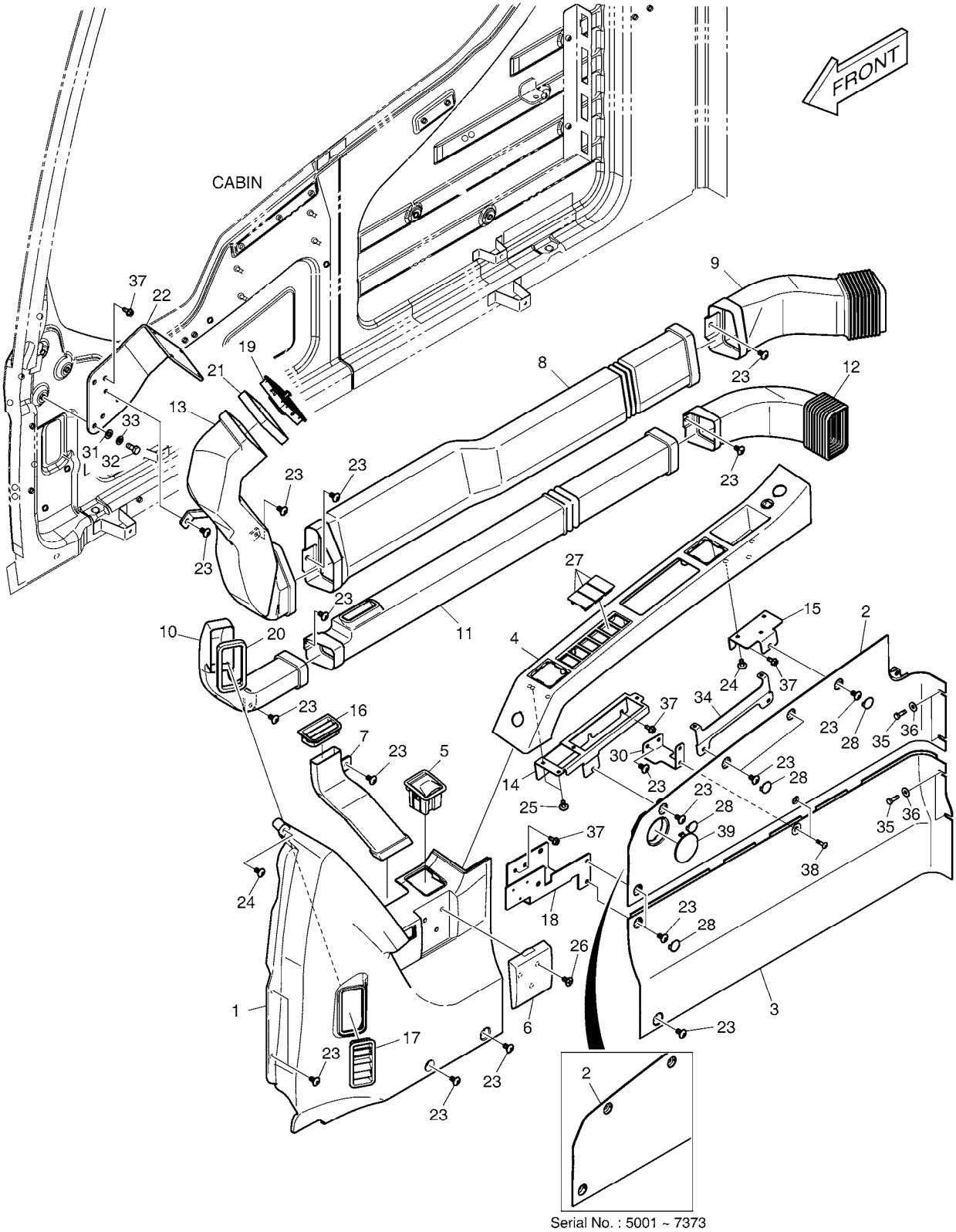

DATE	SEP. 12, 2012
4th EDITION	

Fig. 1460 DUCT COVER
CONDUITES COUVERCLE

Serial No. ;

Key No.	Part No.	Description	Description	Q'ty	S.C	Serial No.	ICA	Replaceable part	
								Part No.	Q'ty
1460 -37	K1010304	BOLT;FLANGE	BOULON	8					
38	2120-2166D57	BOLT;GREEN	BOULON	2					
39	110910-00265	CAP	CHAPEAU	1		7374-			

DATE	SEP. 12, 2012
4th EDITION	

Fig. 1470 HEATER COVER
BOITIES DE CHAUFFAGE

Serial No. ;

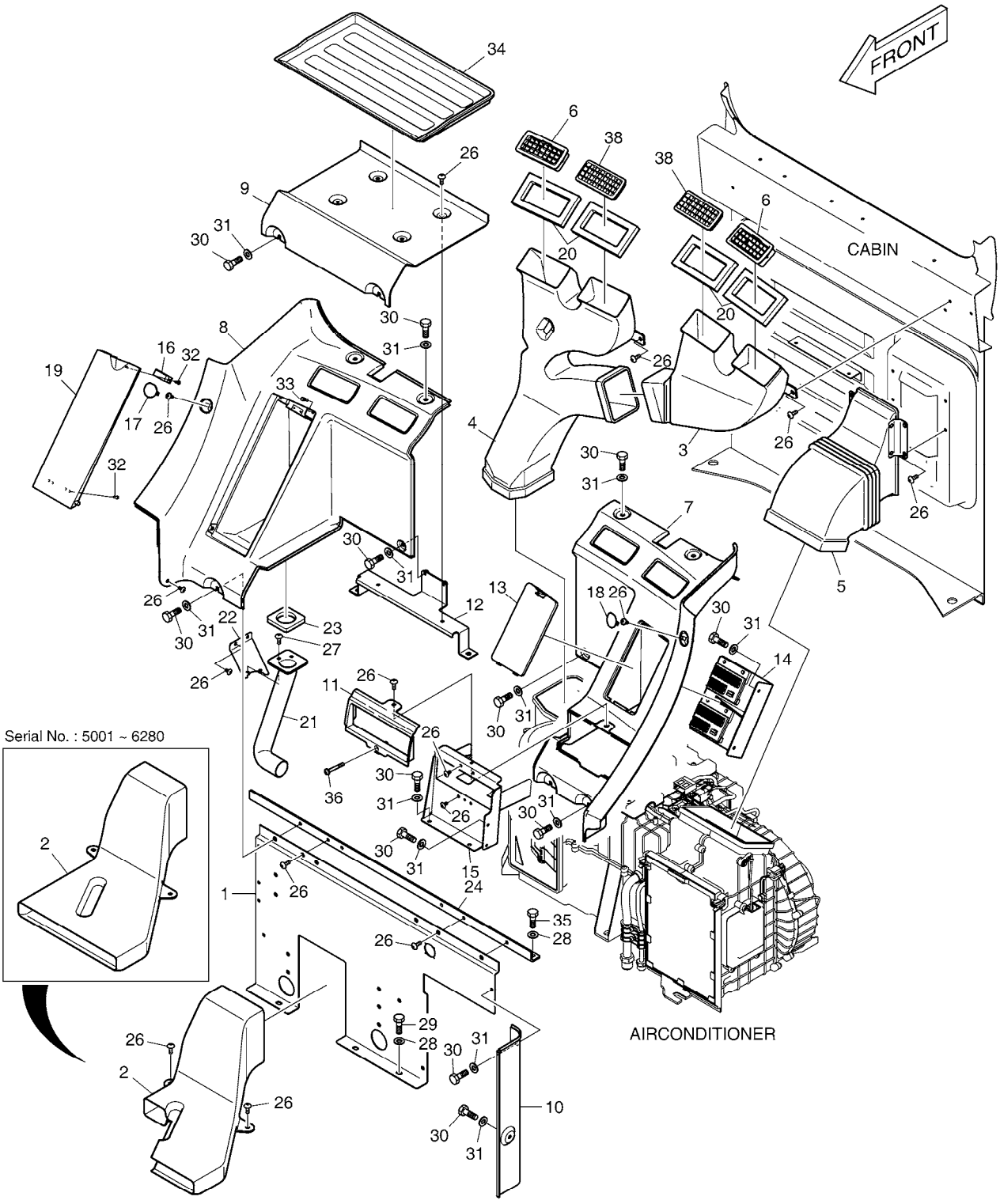

DATE	SEP. 12, 2012
4th EDITION	

Fig. 1470 HEATER COVER BOITIES DE CHAUFFAGE

Serial No. ;

Key No.	Part No.	Description	Description	Q'ty	S.C	Serial No.	ICA	Replaceable part Part No.	Q'ty
1470 --	621-02896K	HEATER COVER	COUVERTURE DE RECHA	-	D	5001-6280			
	650103-00002	REAR ASS'Y;COVER	ARRIERE	-	D	06281-12604			
	650103-00002A	REAR ASSY;COVER	ARRIERE	-	D	12605-			
1	621-02894G	COVER;REAR LOWER	COUVERTURE	1					
2	213-00036B	DUCT;FOOT	CONDUIT	1		5001-6280			
	460103-00039	DUCT,FOOT	CONDUIT	1		6281-			
3	213-00037B	DUCT;REAR(L.H.)	CONDUIT	1					
4	213-00038B	DUCT;REAR(R.H.)	CONDUIT	1					
5	213-00039B	DUCT;AIR INLET	CONDUIT	1					
6	415-00043B	NOZZLE;REAR	BEC	2					
7	621-02913C	COVER;REAR(L.H.)	COUVERTURE	1					
8	621-02914C	COVER;REAR(R.H.)	COUVERTURE	1					
9	621-02915B	COVER;REAR CENTER	COUVERTURE	1					
10	621-02907B	COVER;SIDE REAR(L.H.)	COUVERTURE	1					
11	621-02917C	COVER;STEREO UP	COUVERTURE	1					
12	K1001295B	PLATE	PLAQUE	1					
13	621-02919B	COVER;FUSE	COUVERTURE	1					
14	195-02771C	BRACKET;FUSE BOX	SUPPORT	1					
15	195-02772G	BRACKET;STEREO	SUPPORT	1		05001-12604	I	110406-02099	1
	110406-02099	BRACKET;STEREO	SUPPORT	1		12605-			
16	2125-1095A	CATCH;MAGNETIC	CROCHET	1					
17	K1005344A	COVER	COUVERTURE	1					
18	K1005345A	COVER;HOLE	COUVERTURE	1					
19	621-02920C	COVER;BOX	COUVERTURE	1					
20	K1001310	FOAM	MOUSSE	4					
21	213-00040A	DUCT;AIR BOX	CONDUIT	1					
22	195-02774A	BRACKET;AIR DUCT MOUNT	SUPPORT	1					
23	161-00622	FOAM;AIR SEAL	MOUSSE	1					
24	195-02785E	BRACKET;CROSS BAR	SUPPORT	1					
26	2120-2166D10	SCREW	VIS	19					
27	2120-2166D53	SCREW	VIS	2					
28	2114-1898D14	WASHER;PLAIN	RONDELLE	5					
29	2120-2166D12	BOLT;HEX	BOULON	3					
30	2120-2166D36	BOLT	BOULON	19					
31	2114-1898D5	WASHER M6	RONDELLE	19					
32	S3644163	SCREW	VIS	8					
33	K1002385	STOPPER	TAQUET	2					
34	161-00624	PAD;FOAM	GARNITURE	1					

DATE	SEP. 12, 2012
4th EDITION	

Fig. 1470 HEATER COVER
BOITIES DE CHAUFFAGE

Serial No. ;

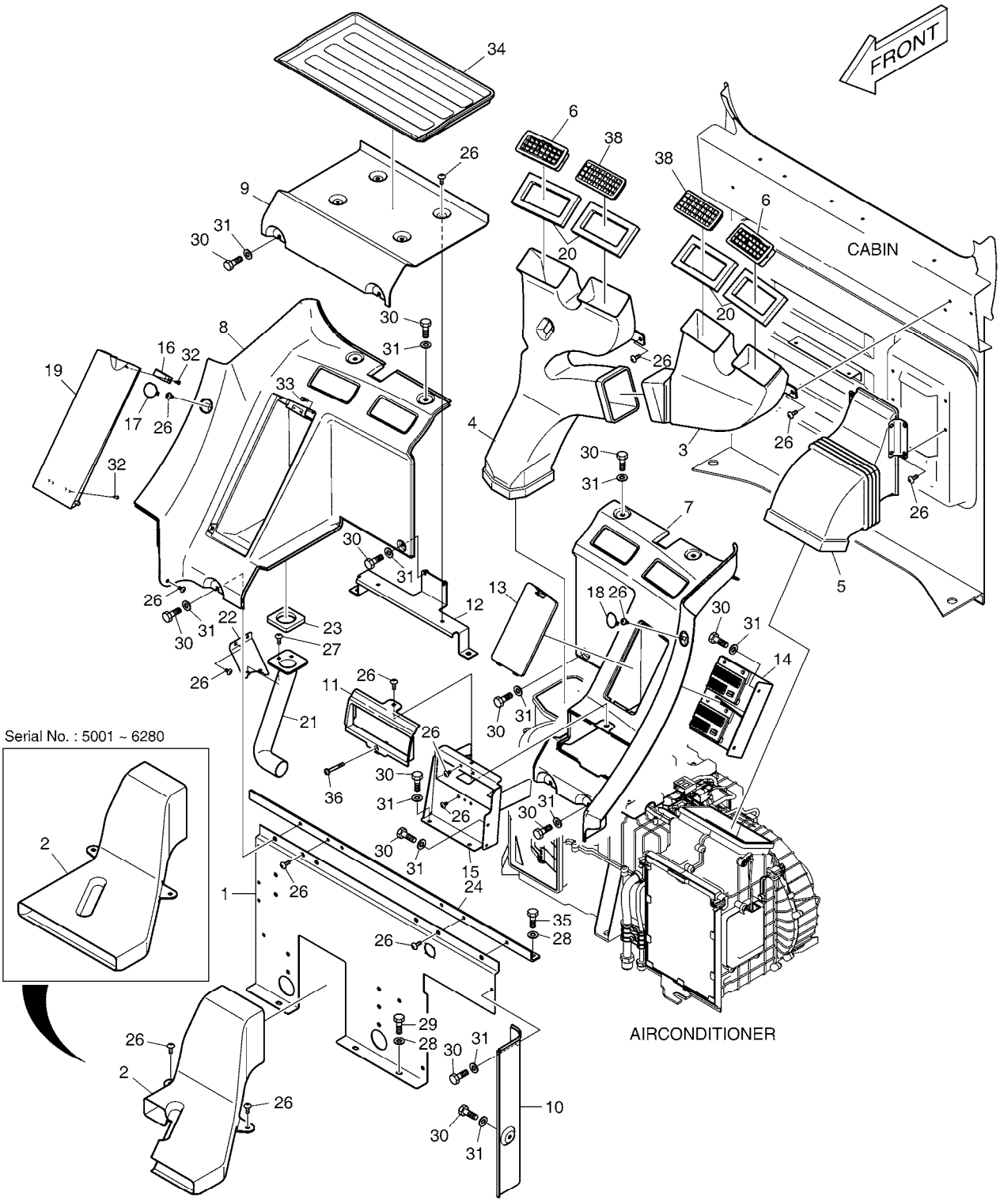

DATE	SEP. 12, 2012
4th EDITION	

Fig. 1470 HEATER COVER
BOITIES DE CHAUFFAGE

Serial No. ;

Key No.	Part No.	Description	Description	Q'ty	S.C	Serial No.	ICA	Replaceable part	
								Part No.	Q'ty
1470 -35	2120-2166D5	BOLT	BOULON	2					
36	2120-2166D58	BOLT	BOULON	1					
38	K1043726	NOZZLE;REAR	BEC	2					

DATE	SEP. 12, 2012
4th EDITION	

Fig. 1480 CABIN MOUNTING SUPPORT DE CABINE

Serial No. ;

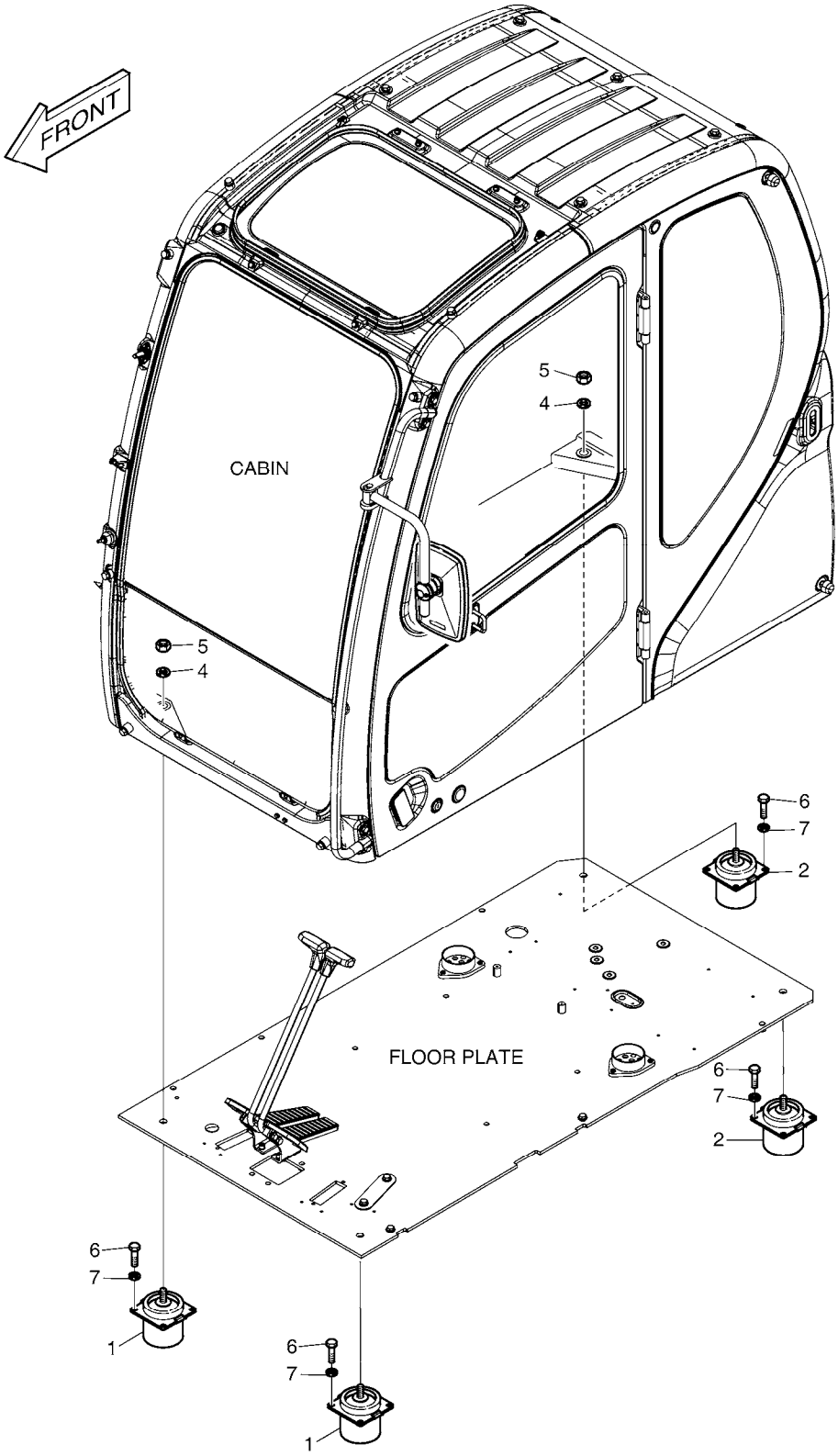

DATE	SEP. 12, 2012
4th EDITION	

Fig. 1480 CABIN MOUNTING SUPPORT DE CABINE

Serial No. ;

Key No.	Part No.	Description	Description	Q'ty	S.C	Serial No.	ICA	Replaceable part	
								Part No.	Q'ty
1480 --	621-03224B	CABIN MOUNT	SUPPORT DE CABINE	-	D				
1	161-00010	RUBBER;MOUNT(FRONT)	LE CAOUTCHOUC	2					
2	161-00011	RUBBER;MOUNT(REAR)	LE CAOUTCHOUC	2					
4	2114-1058D2	WAHSER	RONDELLE	4					
5	2121-9007	NUT	ECROU	4					
6	2120-2166D2	BOLT	BOULON	16					
7	2114-1898D1	WASHER	RONDELLE	16					

DATE	SEP. 12, 2012
4th EDITION	

Fig. 1490 CABIN(1) CABINE

Serial No. ;

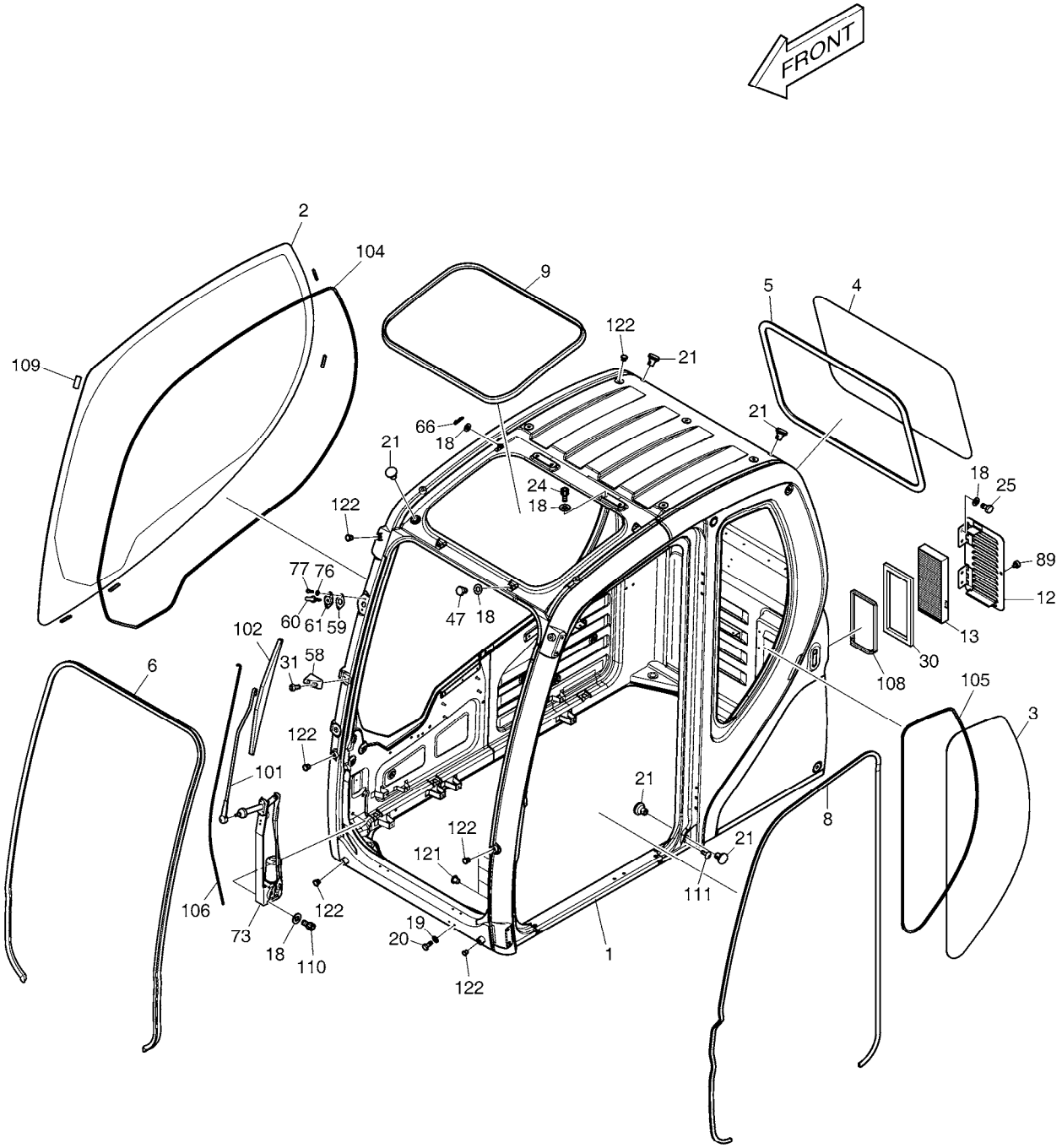

DATE	SEP. 12, 2012
4th EDITION	

Fig. 1490 CABIN(1) CABINE

Serial No. ;

Key No.	Part No.	Description	Description	Q'ty	S.C	Serial No.	ICA	Replaceable part Part No.	Q'ty
1490 --	622-00351M	CABIN ASS`Y	CABINE	1		5001-6341			
	220101-00192A	CABIN ASSY	CABINE	1		6342-6669	I	220101-00192B	1
	220101-00192B	CABIN ASSY	CABINE	1		6670-9556	I	220101-00192G	1
	220101-00192G	CABIN ASSY	CABINE	1		09557-12300	Y	220101-00192H	1
	220101-00192H	CABIN ASSY	CABINE	1		12301-12604	I	220101-00192K	1
	220101-00192K	CABIN ASSY	CABINE	1		12605-			
1	-	BODY;CABIN	CORPS	1	D				
2	903-00072A	GLASS;RH	VERRE	1					
3	903-00073A	GLASS;LH REAR	VERRE	1					
4	903-00075	GLASS;REAR	VERRE	1					
5	198-00054A	TRIM;REAR GLASS	EQUILIBRE	1					
6	162-00035A	STRIP;WEATHER	BANDE	1		5001-9556	I	220214-00023B	1
	220214-00023B	STRIP,WEATHER	BANDE	1		9557-			
8	162-00039A	STRIP;BODY	BANDE	1					
9	162-00038	TRIM;ROOF	EQUILIBRE	1					
12	621-02864	COVER;FRESH AIR ASM	COUVERTURE	1					
13	471-00119	FILTER;FRESH AIR	FILTRE	1					
18	2114-1898D14	WASHER;PLAIN	RONDELLE	15					
19	2114-1898D3	WASHER;PLAIN	RONDELLE	2					
20	2120-2166D28	BOLT;HEX	BOULON	2					
21	2160-1310	BUSHING;RUBBER	MANCHON CAOUTCHOUC	5					
24	S2208561	BOLT;SOCKET	BOULON	4					
25	2120-2166D12	BOLT;HEX	BOULON	4					
30	161-00640A	SPONGE	EPONGE	1					
31	2120-2166D7	SCREW	VIS	2					
47	2120-2166D5	BOLT	BOULON	2					
58	195-02729	BRACKET;BLADE	SUPPORT	1					
59	161-00598A	RUBBER;WASHER NOZZLE	LE CAOUTCHOUC	1					
60	554-00005	NOZZLE;WASHER	BEC	1					
61	621-02837A	COVER;WASHER NOZZLE	COUVERTURE	1					
66	123-00523	PIN;GAS-SPRING	GOUPILLE	2					
73	538-00011	MOTOR;WIPER	MOTEUR	1		5001-7973			
	300512-00010	MOTOR,WIPER	MOTEUR	1		7974-			
76	2114-1898D13	WASHER;PLAIN	RONDELLE	2					
77	2120-2166D26	SCREW	VIS	2					
89	K1003427	BOLT;KNOB	BOULON	1					
101	541-00015	ARM;WIPER	BRAS	1					
102	507-00006	BLADE;WIPER	LAME	1					

DATE	SEP. 12, 2012
4th EDITION	

Fig. 1490 CABIN(1) CABINE

Serial No. ;

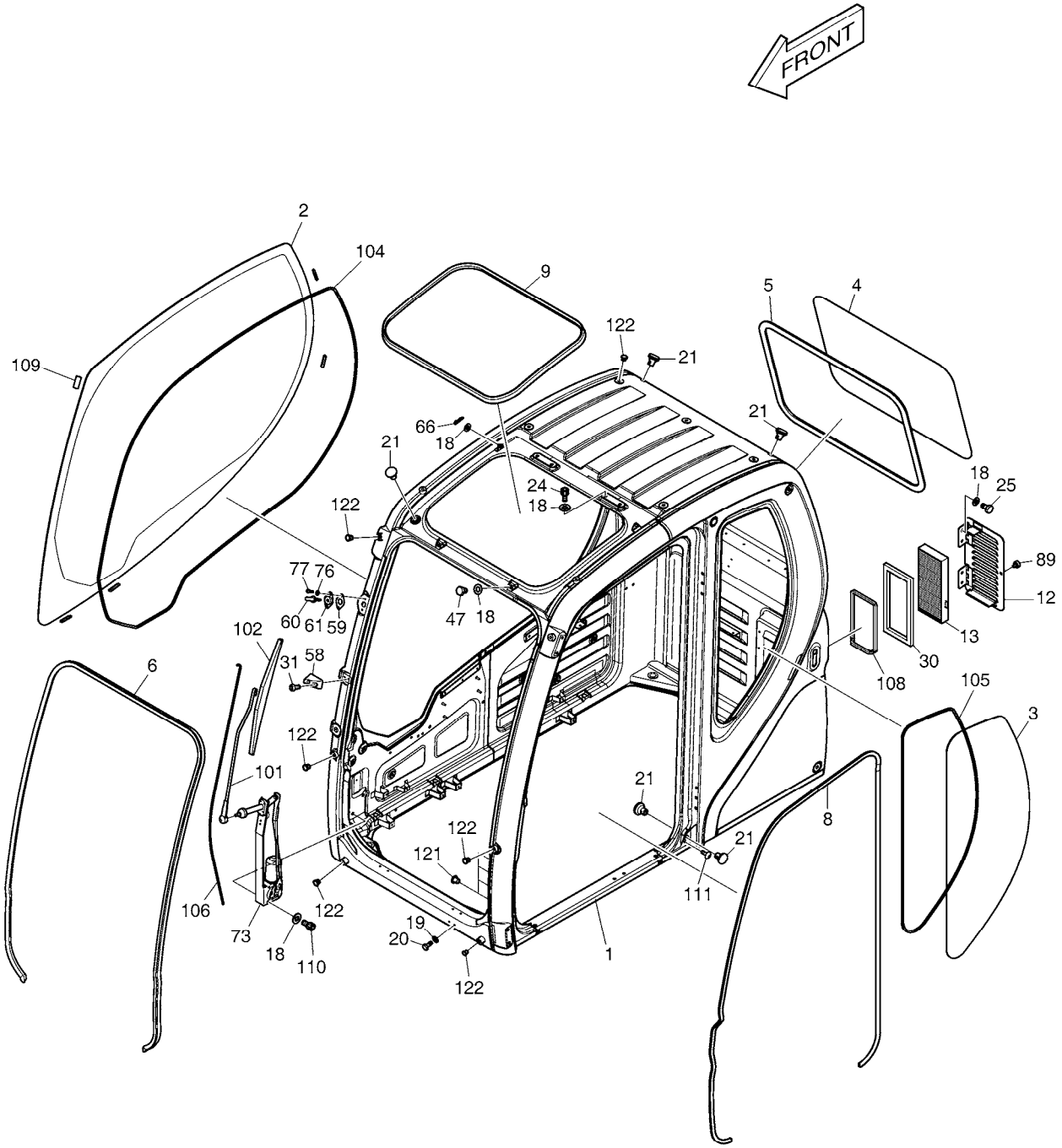

DATE	SEP. 12, 2012
4th EDITION	

Fig. 1490 CABIN(1) CABINE

Serial No. ;

Key No.	Part No.	Description	Description	Q'ty	S.C	Serial No.	ICA	Replaceable part	
								Part No.	Q'ty
1490 -104	K1002635	DAMPER	AMORTISSEUR	1					
105	K1002636	DAMPER	AMORTISSEUR	1					
106	2185-1660	HOSE	TUYAU FLEXIBLE	1					
108	K1004061	FOAM	MOUSSE	1					
109	K1003522	STOPPER	TAQUET	5					
110	S2208466	BOLT;SOCKET	BOULON	3					
111	2120-2166D53	SCREW	VIS	1					
121	160-00074A	CAP	CHAPEAU	2		5001-6669	I	110910-00038A	2
	110910-00038A	CAP,PLASTIC	CHAPEAU	2		6670-			
122	160-00075A	CAP	CHAPEAU	13		5001-6669	I	110910-00077	13
	110910-00077	CAP,PLASTIC	CHAPEAU	13		6670-			

DATE	SEP. 12, 2012
4th EDITION	

Fig. 1500 CABIN(2) CABINE

Serial No. ;

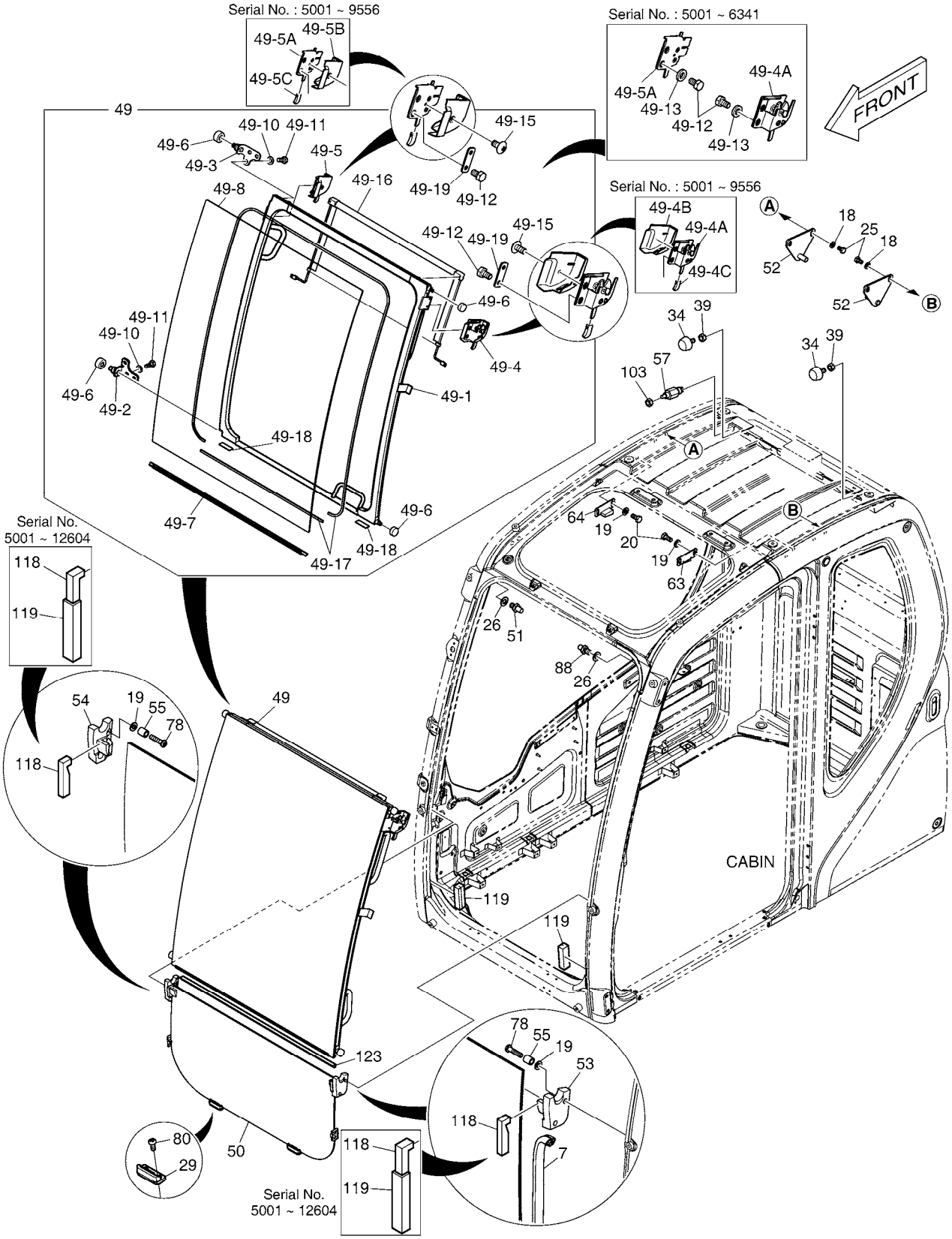

DATE	SEP. 12, 2012
4th EDITION	

Fig. 1500 CABIN(2) CABINE

Serial No. ;

Key No.	Part No.	Description	Description	Q'ty	S.C	Serial No.	ICA	Replaceable part	
								Part No.	Q'ty
1500 --	622-00351M	CABIN ASS`Y	CABINE	1		5001-6341			
	220101-00192A	CABIN ASSY	CABINE	1		6342-6669	I	220101-00192B	1
	220101-00192B	CABIN ASSY	CABINE	1		6670-9556	I	220101-00192G	1
	220101-00192G	CABIN ASSY	CABINE	1		09557-12300	Y	220101-00192H	1
	220101-00192H	CABIN ASSY	CABINE	1		12301-12604	I	220101-00192K	1
	220101-00192K	CABIN ASSY	CABINE	1		12605-			
7	162-00034B	STRIP;WEATHER	BANDE	1					
18	2114-1898D14	WASHER;PLAIN	RONDELLE	4					
19	2114-1898D3	WASHER;PLAIN	RONDELLE	8					
20	2120-2166D28	BOLT;HEX	BOULON	4					
25	2120-2166D12	BOLT;HEX	BOULON	4					
26	2114-1898D6	WASHER;PLAIN	RONDELLE	2					
29	416-00019B	STOPPER;LOWER	TAQUET	2					
34	161-00195	STOPPER	TAQUET	2					
39	2121-1311D4	NUT	ECROU	2					
49	622-00359K	DOOR;SLIDE	PORTE	1		5001-6341	I	220205-00024	1
	220205-00024	DOOR ASS'Y;SLIDE	PORTE	1		6342-9556			
	220205-00024B	DOOR ASSY,SLIDE	PORTE	1		9557-			
49-1	K1033991	. PANEL ASS'Y	. PANNEAU	1					
49-2	195-02739C	. BRACKET;RH LOWER ROLLER	. SUPPORT	1					
49-3	195-02740E	. BRACKET;RH ROLLER UPPER	. SUPPORT	1					
49-4	125-00096A	. CATCH ASS'Y;SLIDE DOOR(L.H	. CROCHET	1		5001-9556	I	100601-00023	1
	100601-00023	. CATCH ASS'Y;SLIDE(L.H)	. CROCHET	1		9557-			
49-4A	125-00073B	.. CATCH;LH	.. CROCHET	1		5001-9556			
49-4B	621-03724	.. COVER;CATCH LH	.. COUVERTURE	1		5001-9556			
49-4C	133-00248	.. KNOB;SLIDE DOOR CATCH	.. BOUTON	1		5001-9556			
49-5	125-00097A	. CATCH ASS'Y;SLIDE DOOR(R.H	. CROCHET	1		5001-9556	I	100601-00024	1
	100601-00024	. CATCH ASS'Y;SLIDE(R.H)	. CROCHET	1		9557-			
49-5A	125-00074B	.. CATCH;RH	.. CROCHET	1		5001-9556			
49-5B	621-03725	.. COVER;CATCH RH	.. COUVERTURE	1		5001-9556			
49-5C	133-00248	.. KNOB;SLIDE DOOR CATCH	.. BOUTON	1		5001-9556			
49-6	270-00054B	. ROLLER	. ROULEAU	4		5001-9556	Y	900131-00014A	4
	900131-00014A	. ROLLER;SLIDE DOOR	. ROULEAU	4		9557-			
49-7	K1036331	. BAR	. BARRE	1					
49-8	K1033880	. GLASS;FRONT UPPER	. VERRE	1					
49-10	2114-1898D3	. WASHER;PLAIN	. RONDELLE	6					
49-11	2120-2166D28	. BOLT;HEX	. BOULON	6					
49-12	2120-2166D12	. BOLT;HEX	. BOULON	4					

DATE	SEP. 12, 2012
4th EDITION	

Fig. 1500 CABIN(2) CABINE

Serial No. ;

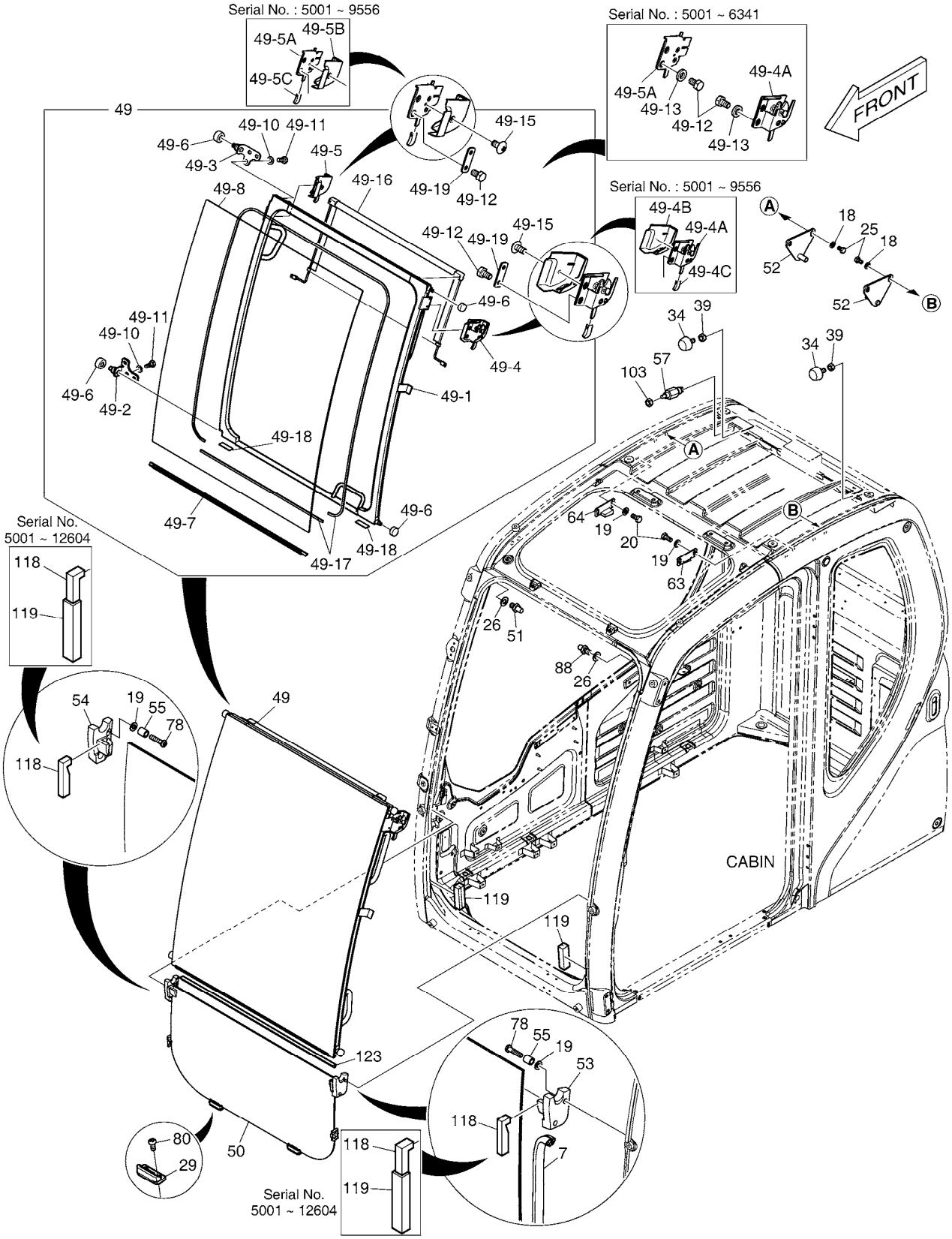

DATE	SEP. 12, 2012
4th EDITION	

Fig. 1500 CABIN(2) CABINE

Serial No. ;

Key No.	Part No.	Description	Description	Q'ty	S.C	Serial No.	ICA	Replaceable part	
								Part No.	Q'ty
1500 -49-13	2114-1898D2	. WASHER	. RONDELLE	4		5001-6341			
49-15	2120-2166D52	. BOLT M6X1.0X12	. BOULON	2					
49-16	474-00044A	. SUN SCREEN;FRONT	. ECRAN DE SOLEIL	1					
49-17	K1036967	. DAMPER	. AMORTISSEUR	1					
49-18	K1006368	. RUBBER	. LE CAOUTCHOUC	2					
49-19	K1056987	. PLATE	. PLAQUE	2		6342-			
50	903-00074	GLASS;FRONT LOWER	VITRE	1					
51	142-00128B	STRIKER;RH	BUTEE	1					
52	142-00127C	STRIKER;SLIDE DOOR REAR	BUTEE	2					
53	116-00089B	STOPPER;RUBBER LH	TAQUET	1		05001-12604	I	110956-00328	1
	110956-00328	STOPPER,FRONT(L.H)	TAQUET	1		12605-			
54	116-00090B	STOPPER;RUBBER RH	TAQUET	1		05001-12604	I	110956-00329	1
	110956-00329	STOPPER,FRONT(R.H)	TAQUET	1		12605-			
55	2140-1338	PIPE;SPACER	CONDUITE	4					
57	549-00086	SWITCH;SLIDE	COMMUTATEUR	1					
63	161-00618B	STOPPER;SLIDE DOOR OPEN(L.	TAQUET	1					
64	161-00619B	STOPPER;SLIDE DOOR OPEN(R	TAQUET	1					
78	S3450993	SCREW	VIS	4					
80	2120-2166D52	BOLT M6X1.0X12	BOULON	4					
88	K1003284	STRIKER;LH	BUTEE	1					
103	S4034833	NUT	ECROU	1					
118	K1027768	FOAM	MOUSSE	2		05001-12604	I	180102-00744	2
	180102-00744	FOAM	MOUSSE	2		12605-			
119	K1027769	FOAM	MOUSSE	2		05001-12604	I	180102-00743	2
	180102-00743	FOAM	MOUSSE	2		12605-			
123	198-00036A	STRIP;WEATHER	TAMPON	1		9557-			

DATE	SEP. 12, 2012
4th EDITION	

Fig. 1510 CABIN(3) CABINE

Serial No. ;

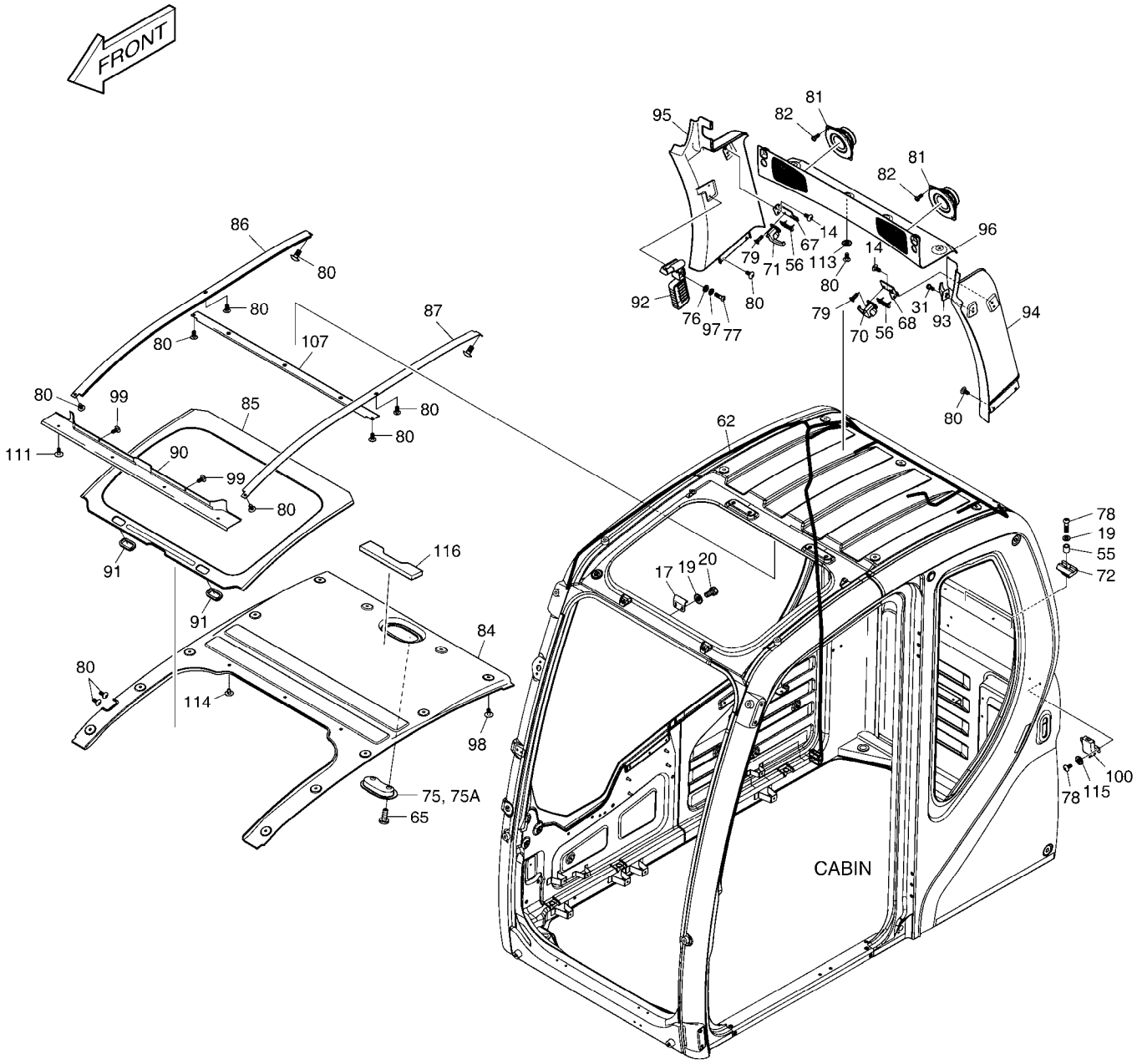

DATE	SEP. 12, 2012
4th EDITION	

Fig. 1510 CABIN(3) CABINE

Serial No. ;

Key No.	Part No.	Description	Description	Q'ty	S.C	Serial No.	ICA	Replaceable part	
								Part No.	Q'ty
1510 --	622-00351M	CABIN ASS`Y	CABINE	1		5001-6341			
	220101-00192A	CABIN ASSY	CABINE	1		6342-6669	I	220101-00192B	1
	220101-00192B	CABIN ASSY	CABINE	1		6670-9556	I	220101-00192G	1
	220101-00192G	CABIN ASSY	CABINE	1		09557-12300	Y	220101-00192H	1
	220101-00192H	CABIN ASSY	CABINE	1		12301-12604	I	220101-00192K	1
	220101-00192K	CABIN ASSY	CABINE	1		12605-			
14	2120-2166D10	SCREW	VIS	4					
17	191-03166C	STRIKER PLATE ROOF	TOIT DE PLAT DE BUTEE	1					
19	2114-1898D3	WASHER;PLAIN	RONDELLE	4					
20	2120-2166D28	BOLT;HEX	BOULON	2					
31	2120-2166D7	SCREW	VIS	1					
55	2140-1338	PIPE;SPACER	CONDUITE	2					
56	K1000794	STOPPER;RUBBER	TAQUET	2					
62	530-00417B	HARNESS;CABIN	HARNAIS	1					
65	S3458843	SCREW	VIS	2					
67	621-03113B	PLATE;STOPPER (R.H)	PLAQUE	1					
68	621-03114B	PLATE;STOPPER (L.H)	PLAQUE	1					
70	125-00077	LOCK;REAR GLASS (L.H)	SERRURE	1					
71	125-00078	LOCK;REAR GLASS (R.H)	SERRURE	1					
72	2161-2212	STOPPER;RUBBER	TAQUET	2					
75	534-00079	ROOM LAMP	LAMPE DE PIECE	1					
75A	2515-1021D1	. BULB	. AMPOULE	1					
76	2114-1898D13	WASHER;PLAIN	RONDELLE	2					
77	2120-2166D26	SCREW	VIS	2					
78	S3450993	SCREW	VIS	4					
79	S3452853	SCREW	VIS	4					
80	2120-2166D52	BOLT M6X1.0X12	BOULON	20					
81	2541-9020	SPEAKER	ORATEUR	2					
82	S3450833	SCREW	VIS	8					
84	161-00609E	PAD;ROOF REAR	GARNITURE	1					
85	161-00610E	PAD;ROOF CENTER	GARNITURE	1					
86	359-00022A	RAIL;ROOF PANEL RH	RAIL	1		5001-9556	I	150120-00035	1
	150120-00035	RAIL,ROOF(R.H)	RAIL	1		9557-			
87	359-00021A	RAIL;ROOF PANEL LH	RAIL	1		5001-9556	I	150120-00034	1
	150120-00034	RAIL,ROOF(L.H)	RAIL	1		9557-			
90	161-00613B	PAD;ROOF FRONT	GARNITURE	1		5001-9556	I	161-00613C	1
	161-00613C	PAD;ROOF FRONT	GARNITURE	1		9557-			
91	172-00055A	HANDLE;ROOF	POIGNEE	2					

DATE	SEP. 12, 2012
4th EDITION	

Fig. 1510 CABIN(3) CABINE

Serial No. ;

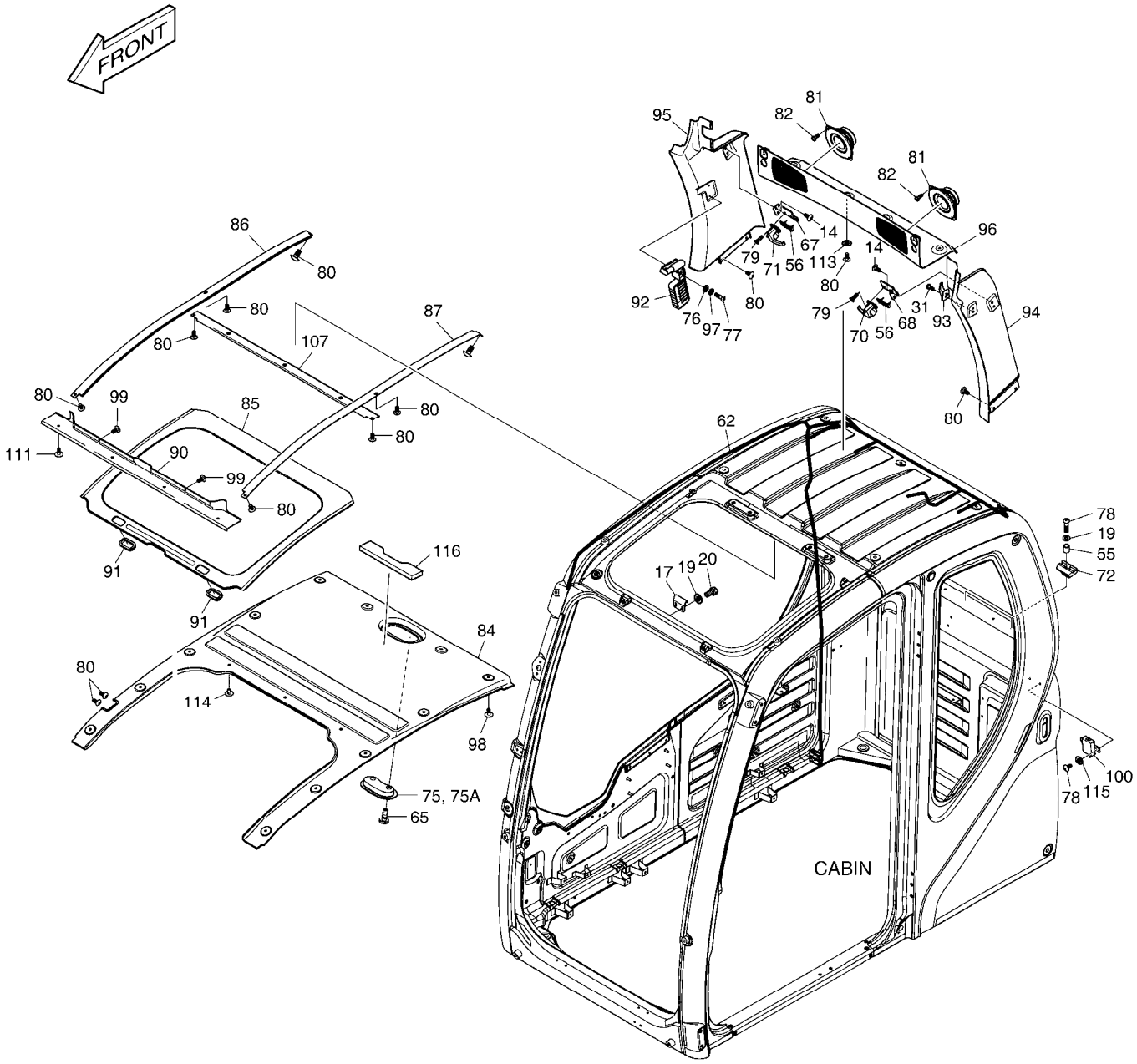

DATE	SEP. 12, 2012
4th EDITION	

Fig. 1510 CABIN(3) CABINE

Serial No. ;

Key No.	Part No.	Description	Description	Q'ty	S.C	Serial No.	ICA	Replaceable part	
								Part No.	Q'ty
1510 -92	2199-9058	HAMMER	MARTEAU	1					
93	2150-1133	HOOK;COAT	CROCHET	1					
94	621-02910C	COVER;PILLAR LH	COUVERTURE	1					
95	621-02911C	COVER;PILLAR RH	COUVERTURE	1					
96	621-02912B	COVER;REAR UPPER	COUVERTURE	1					
97	2114-2031D1	WASHER;SPRING	RONDELLE	2					
98	K1006936	SCRIVET	SCRIVET	12					
99	2120-2166D18	SCREW	VIS	2					
100	K1002641	MODULE ASS'Y	MODULE	1					
107	K1003676B	PLATE	PLAQUE	1					
111	2120-2166D53	SCREW	VIS	4					
113	2114-1898D5	WASHER M6	RONDELLE	4					
114	K1006933	SCRIVET	SCRIVET	3					
115	S5010313	WASHER	RONDELLE	2					
116	K1010839	FORM	FORME	1					

DATE	SEP. 12, 2012
4th EDITION	

Fig. 1520 CABIN(4) CABINE

Serial No. ;

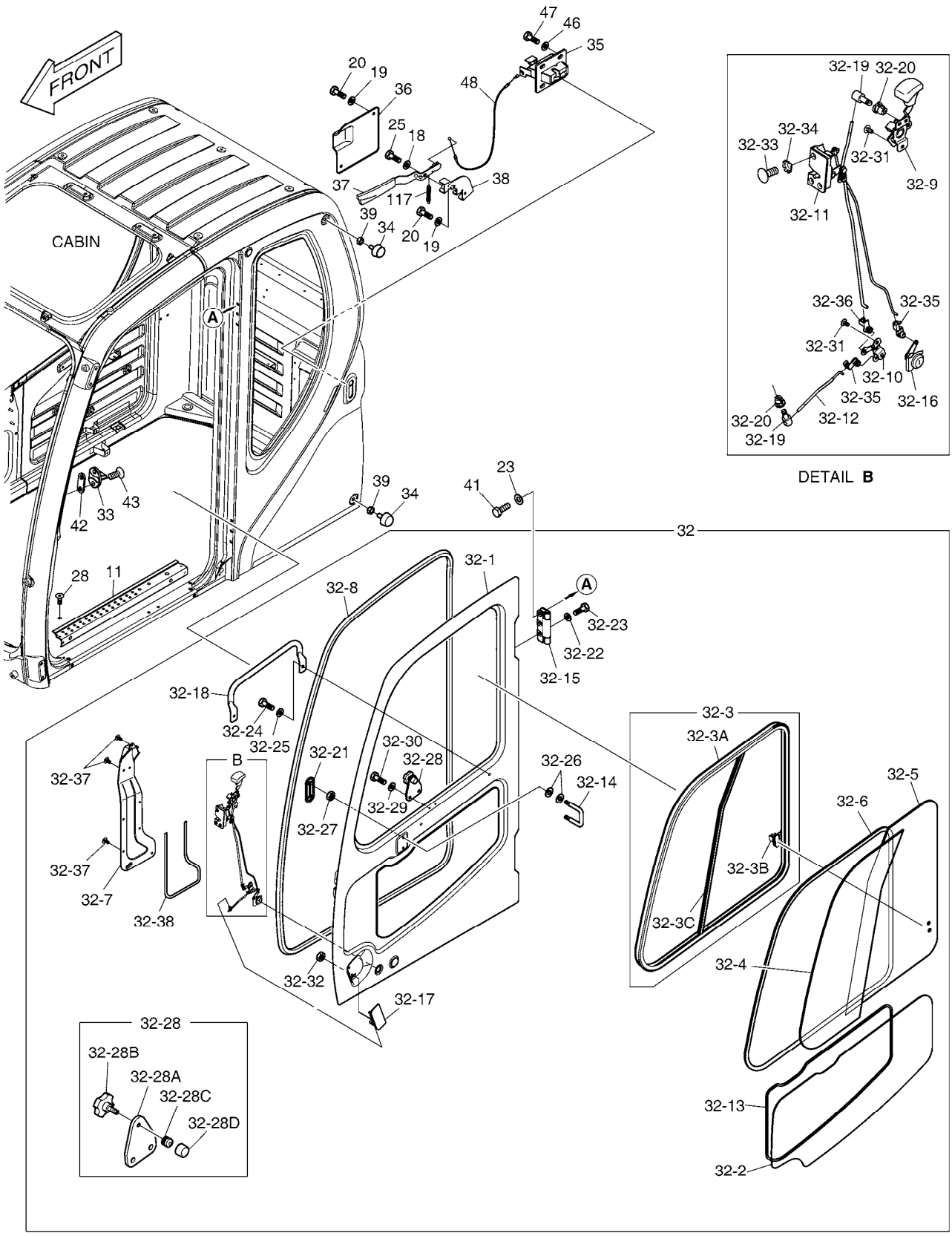

DATE	SEP. 12, 2012
4th EDITION	

Fig. 1520 CABIN(4) CABINE

Serial No. ;

Key No.	Part No.	Description	Description	Q'ty	S.C	Serial No.	ICA	Replaceable part Part No.	Q'ty
1520 --	622-00351M	CABIN ASS`Y	CABINE	1		5001-6341			
	220101-00192A	CABIN ASSY	CABINE	1		6342-6669	I	220101-00192B	1
	220101-00192B	CABIN ASSY	CABINE	1		6670-9556	I	220101-00192G	1
	220101-00192G	CABIN ASSY	CABINE	1		09557-12300	Y	220101-00192H	1
	220101-00192H	CABIN ASSY	CABINE	1		12301-12604	I	220101-00192K	1
	220101-00192K	CABIN ASSY	CABINE	1		12605-			
11	625-00159B	STEP;CABIN DOOR	ETAPE	1					
18	2114-1898D14	WASHER;PLAIN	RONDELLE	1					
19	2114-1898D3	WASHER;PLAIN	RONDELLE	4					
20	2120-2166D28	BOLT;HEX	BOULON	4					
23	2114-1898D15	WASHER;PLAIN	RONDELLE	6					
25	2120-2166D12	BOLT;HEX	BOULON	1					
28	2120-2150D3	SCREW	VIS	4					
32	622-00353J	DOOR ASS`Y	VERROU	1		5001-6341	I	622-00353K	1
	622-00353K	DOOR ASS'Y	VERROU	1		6342-			
32-1	-	. DOOR;BODY	. PORTE	1	D				
32-2	903-00069A	. GLASS;DOOR LOWER	. VERRE	1					
32-3	622-00355A	. SASH ASS'Y	. SASH	1					
32-3A	622-00356	.. FRAME ASS'Y;SASH	.. ARMATURE	1					
32-3B	2123-6119	.. LOCK;SASH	.. SERRURE	1					
32-3C	162-00033A	.. BAR;CENTER	.. BARRE	1					
32-4	903-00070B	. GLASS;SASH FRONT	. VERRE	1					
32-5	903-00071B	. GLASS;SASH REAR	. VERRE	1					
32-6	161-00623	. TRIM	. EQUILIBRE	1					
32-7	621-02869C	. COVER;LOCK	. COUVERTURE	1					
32-8	198-00053A	. RUBBER TRIM;DOOR INNER	. LE CAOUTCHOUC	1					
32-9	133-00221	. LEVER ASS'Y;INNER HANDLE	. LEVIER	1					
32-10	137-00092	. LINK;DOOR INNER	. LIEN	1					
32-11	125-00072	. CATCH ASS'Y;DOOR INNER	. CROCHET	1					
32-12	136-00055A	. ROD;OUTER HANDLE	. TIGE	1					
32-13	K1002637	. DAMPER	. AMORTISSEUR	1					
32-14	2150-1132A	. HOOK;CATCH DOOR	. CROCHET	1					
32-15	K1027765	. HINGE ASS'Y;DOOR	. CHARNIERE	2					
32-16	K1003900	. KEY ASS`Y;DOOR	. CLE	1					
32-17	2172-9021	. HANDLE;OUTER	. POIGNEE	1					
32-18	145-00124A	. STAY	. SEJOUR	1					
32-19	2123-2247	. PIN	. GOUPILLE	2					
32-20	2124-1689A	. SNAP	. RUPTURE	2					

DATE	SEP. 12, 2012
4th EDITION	

Fig. 1520 CABIN(4) CABINE

Serial No. ;

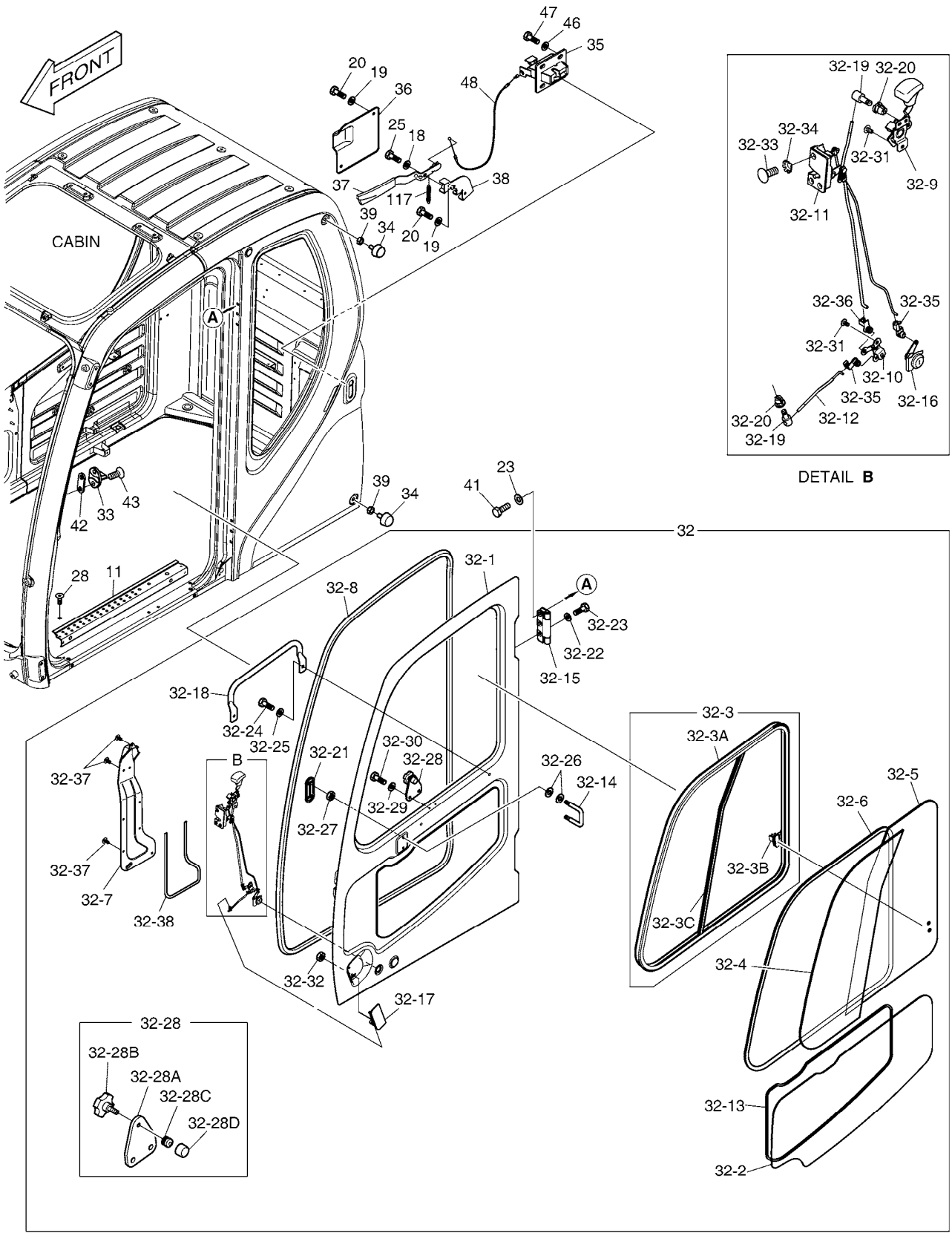

DATE	SEP. 12, 2012
4th EDITION	

Fig. 1520 CABIN(4) CABINE

Serial No. ;

Key No.	Part No.	Description	Description	Q'ty	S.C	Serial No.	ICA	Replaceable part Part No.	Q'ty
1520 -32-21	621-02867A	. COVER;DOOR INNER	. COUVERTURE	1					
32-22	2114-1898D15	. WASHER;PLAIN	. RONDELLE	6					
32-23	2120-2166D1	. BOLT	. BOULON	6					
32-24	2120-2166D5	. BOLT	. BOULON	2					
32-25	2114-1898D2	. WASHER	. RONDELLE	2					
32-26	2891-1311	. PLATE	. PLAQUE	4					
32-27	S4012533	. NUT	. ECROU	2					
32-28	161-00621B	. STOPPER;RUBBER	. TAQUET	1					
32-28	191-03283	.. PLATE;STOPPER	.. PLAQUE	1					
32-28	4132-1138	.. KNOB	.. BOUTON	1					
32-28	161-00620	.. RUBBER;STOPPER	.. LE CAOUTCHOUC	1					
32-28	116-00092A	.. STOPPER	.. TAQUET	1					
32-29	2114-1898D3	. WASHER;PLAIN	. RONDELLE	2					
32-30	2120-2166D28	. BOLT;HEX	. BOULON	2					
32-31	2120-2166D52	. BOLT M6X1.0X12	. BOULON	5					
32-32	S4012333	. NUT	. ECROU	2					
32-33	2120-2150D3	. SCREW	. VIS	3					
32-34	S5210303	. WASHER;TOOTHED	. RONDELLE	3					
32-35	124-00010	. CLIP;ROD	. AGRAFE	2					
32-36	124-00344	. CLIP;ROD	. AGRAFE	1					
32-37	2120-2166D53	. SCREW	. VIS	8					
32-38	K1006370	. FOAM	. MOUSSE	1					
33	2142-9005	STRIKER;DOOR	BUTEE	1					
34	161-00195	STOPPER	TAQUET	2					
35	2125-9055	LOCK;BACK	SERRURE	1					
36	621-02849A	COVER;BACK LOCK INNER	COUVERTURE	1		5001-9556	I	621-02849B	1
	621-02849B	COVER;BACK LOCK INNER	COUVERCLE	1		9557-			
37	133-00220E	LEVER;BACK LOCK	LEVIER	1					
38	195-02719C	BRACKET;BACK LOCK	SUPPORT	1					
39	2121-1311D4	NUT	ECROU	2					
41	2120-2166D1	BOLT	BOULON	6					
42	2114-1856	SHIM;STRIKER	CALE	1					
43	2120-2150D1	BOLT	BOULON	2					
46	2114-1898D2	WASHER	RONDELLE	4					
47	2120-2166D5	BOLT	BOULON	4					
48	2127-1002A	CABLE;BACK LOCK	CABLE	1					
117	2129-1446	SPRING	RESSORT	1					

DATE	SEP. 12, 2012
4th EDITION	

Fig. 1525 HANDLE - CABIN HANDLE

Serial No. ;

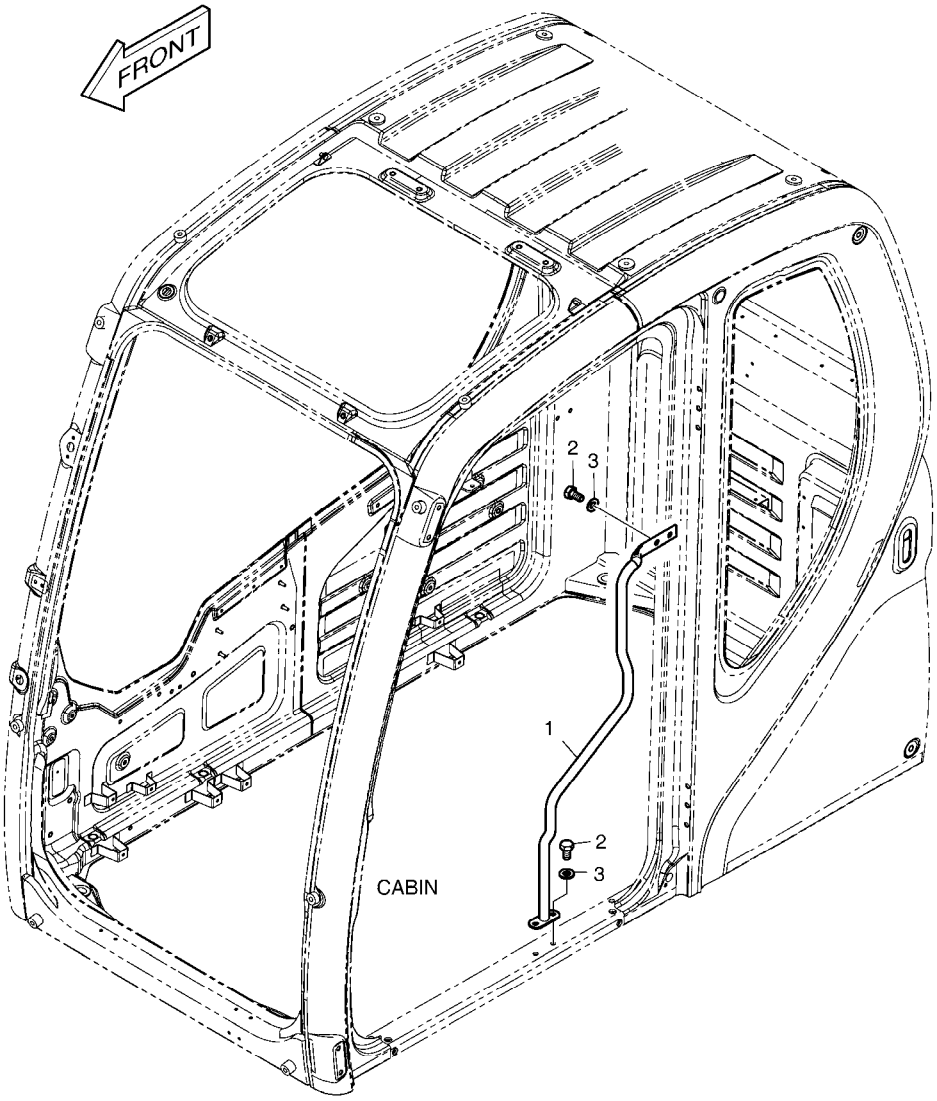

DATE	SEP. 12, 2012
4th EDITION	

Fig. 1525 HANDLE - CABIN HANDLE

Serial No. ;

Key No.	Part No.	Description	Description	Q'ty	S.C	Serial No.	ICA	Replaceable part	
								Part No.	Q'ty
1525 --	K1038240	HANDLE ASS'Y	POIGNEE	-	D				
1	K1038247	HANDLE	POIGNEE	1					
2	2120-2166D4	BOLT M10X1.5X20	BOULON	4					
3	2114-1898D15	WASHER;PLAIN	RONDELLE	4					

DATE	SEP. 12, 2012
4th EDITION	

Fig. 1530 FLOOR MAT PLANCHER

Serial No. ;

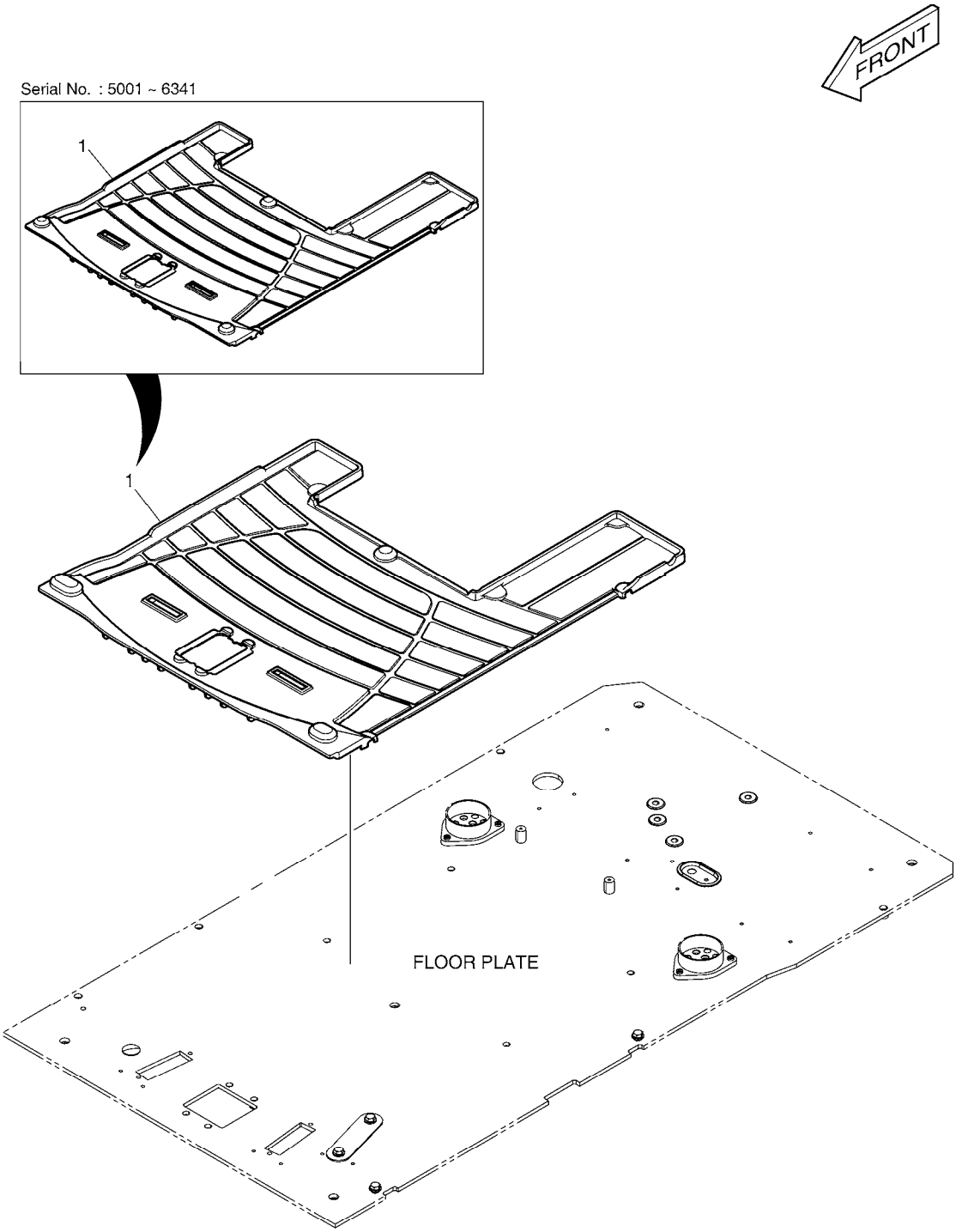

DATE	SEP. 12, 2012
4th EDITION	

Fig. 1530 FLOOR MAT PLANCHER

Serial No. ;

Key No.	Part No.	Description	Description	Q'ty	S.C	Serial No.	ICA	Replaceable part	
								Part No.	Q'ty
1530 -1	K1002081B	MAT;FLOOR	TAPIS	1		5001-6341	I	110935-00069	1
	110935-00069	MAT;FLOOR	TAPIS	1		6342-			

DATE	SEP. 12, 2012
4th EDITION	

Fig. 1540 FLOOR PLATE
TOLE DE PLANCHER

Serial No. ;

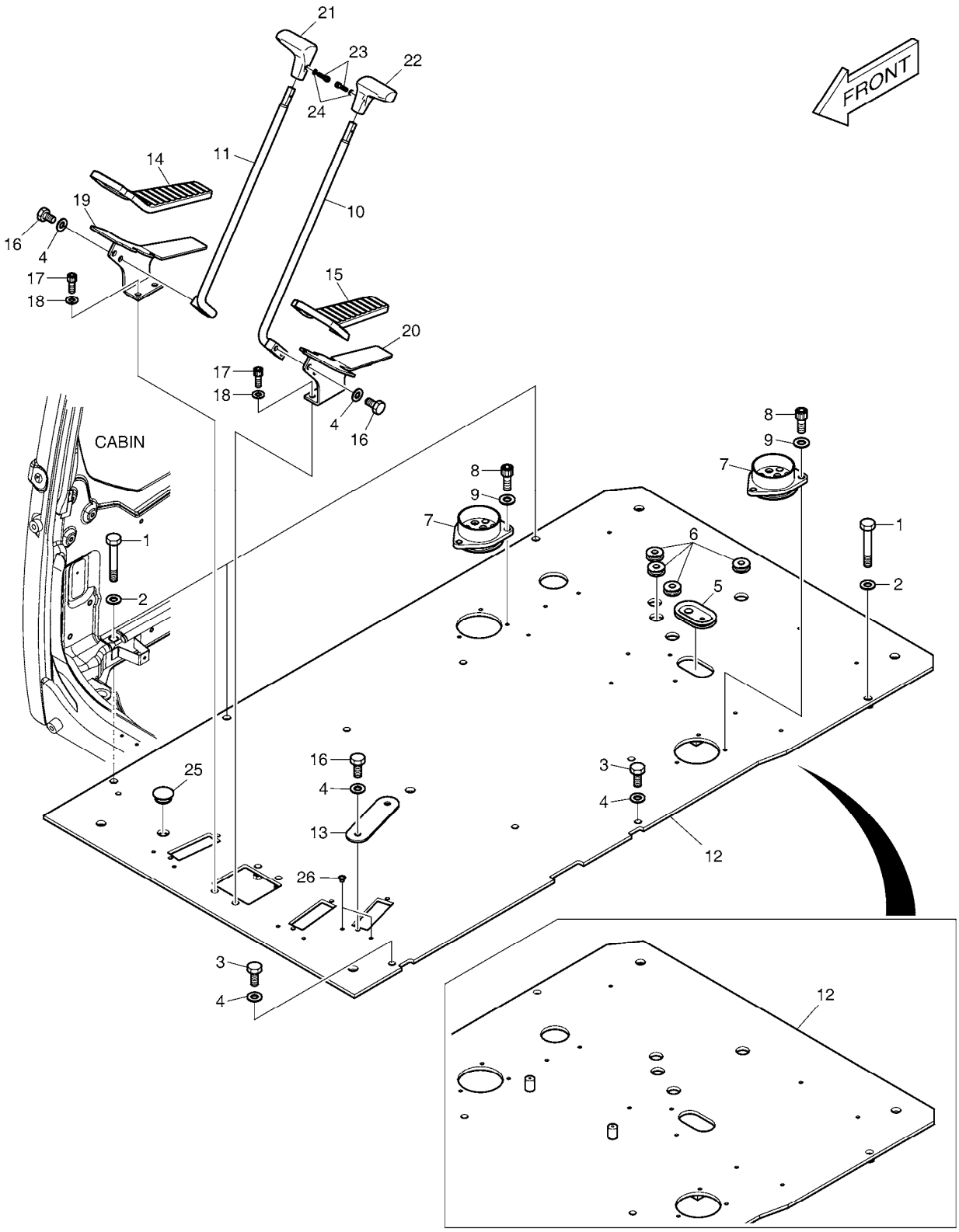

Serial No. : 5001 ~ 6280

DATE	SEP. 12, 2012
4th EDITION	

Fig. 1540 FLOOR PLATE TOLE DE PLANCHER

Serial No. ;

Key No.	Part No.	Description	Description	Q'ty	S.C	Serial No.	ICA	Replaceable part	
								Part No.	Q'ty
1540 --	622-00426G	FLOOR PLATE ASS`Y	TOLE DE PLANCHER	-	D	5001-6280			
	250106-00125	PLATE ASSY,FLOOR	TOLE DE PLANCHER	-	D	6281-6341			
	250106-00125A	PLATE ASSY,FLOOR	TOLE DE PLANCHER	-	D	6342-			
1	2120-2166D55	BOLT	BOULON	4					
2	2114-1898D17	WASHER M12	RONDELLE	4					
3	2120-2166D1	BOLT	BOULON	2					
4	2114-1898D1	WASHER	RONDELLE	8					
5	160-00071	BUSHING;RUBBER	MANCHON CAOUTCHOUC	1					
6	160-00072	BUSHING;RUBBER	MANCHON CAOUTCHOUC	4					
7	160-00080B	BUSHING;RUBBER	MANCHON CAOUTCHOUC	2					
8	S2208866	BOLT;SOCKET	BOULON	6					
9	2114-1898D14	WASHER;PLAIN	RONDELLE	6					
10	133-00229A	LEVER;TRAVEL (L.H)	LEVIER	1					
11	133-00230A	LEVER;TRAVEL (R.H)	LEVIER	1					
12	621-02892J	PLATE;FLOOR	PLAQUE	1		5001-6280			
	250106-00126	PLATE,FLOOR	PLAQUE	1		6281-6341			
	250106-00126A	PLATE,FLOOR	PLAQUE	1		6342-			
13	621-01507A	PLATE	PLAQUE	1					
14	161-00381	RUBBER;PEDAL(R.H)	LE CAOUTCHOUC	1					
15	161-00382	RUBBER;PEDAL(L.H)	LE CAOUTCHOUC	1					
16	2120-2166D4	BOLT M10X1.5X20	BOULON	6					
17	S2211866	BOLT;SOCKET	BOULON	4					
18	S5110603	WASHER;SPRING	RONDELLE	4					
19	K1039515	BRACKET;PEDAL(R.H)	SUPPORT	1					
20	K1039514	BRACKET;PEDAL(L.H)	SUPPORT	1					
21	2132-1134B	GRIP;LEVER(R.H)	POIGNEE	1					
22	2132-1133B	GRIP;LEVER(L.H)	POIGNEE	1					
23	S2201766	BOLT;SOCKET	BOULON	2					
24	S5000113	WASHER;PLAIN	RONDELLE	2					
25	2161-2487	CAP;RUBBER	CHAPEAU	1					
26	160-00073A	CAP	CHAPEAU	2					

DATE	SEP. 12, 2012
4th EDITION	

Fig. 1550 HANDLE ASS'Y HANDLE

Serial No. ;

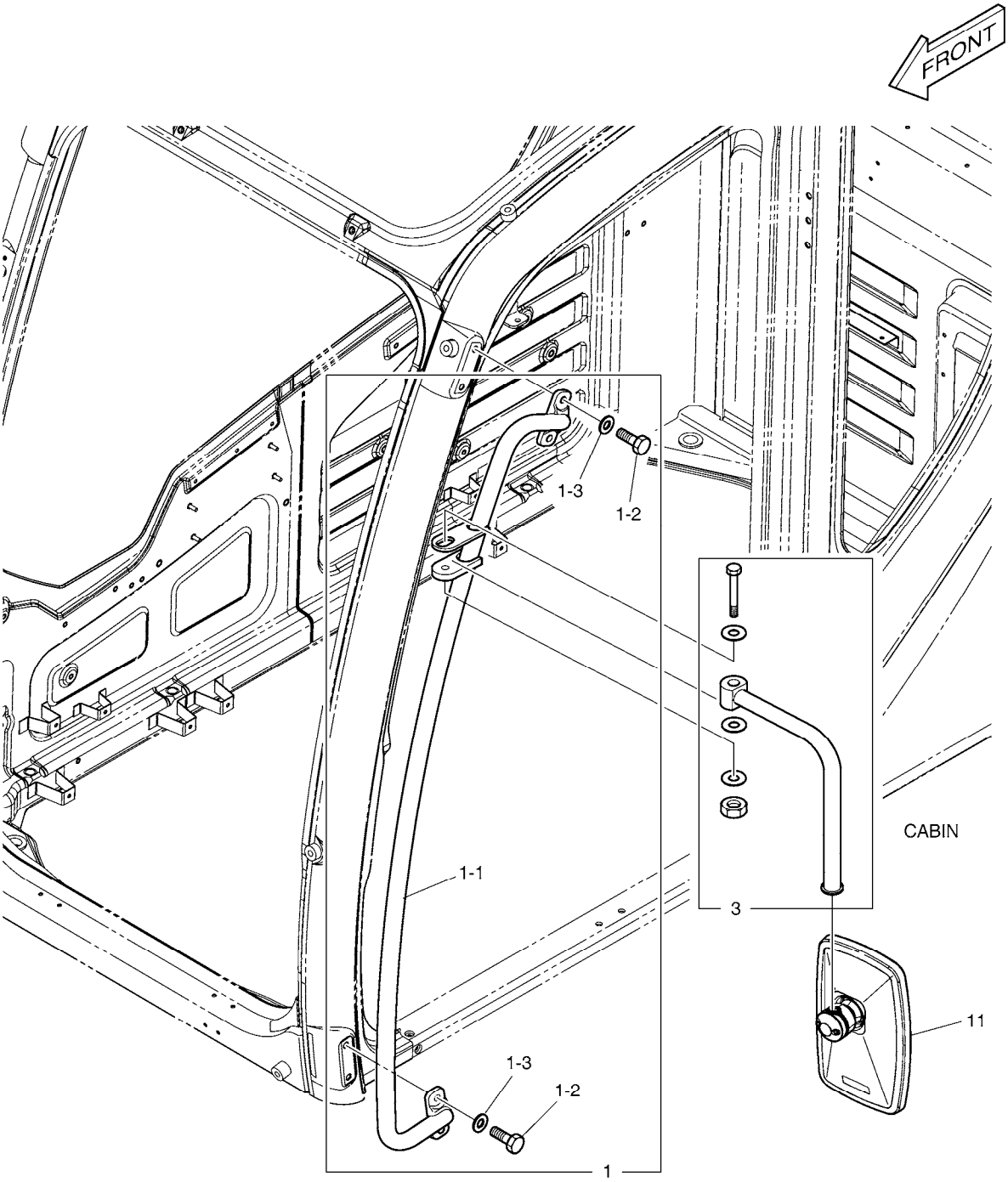

DATE	SEP. 12, 2012
4th EDITION	

Fig. 1550 HANDLE ASS'Y HANDLE

Serial No. ;

Key No.	Part No.	Description	Description	Q'ty	S.C	Serial No.	ICA	Replaceable part	
								Part No.	Q'ty
1550 -1	110925-00007	HANDLE ASS'Y;OUTER	HANDLE	1					
1-1	172-00053B	. HANDLE;OUTER	. POIGNEE	1					
1-2	2120-2166D2	. BOLT	. BOULON	4					
1-3	2114-1898D15	. WASHER;PLAIN	. RONDELLE	4					
3	K1004272	STAY;MIRROR	SEJOUR	1					
11	K1040606	MIRROR;SIDE	MAIN COURANTE	1					

DATE	SEP. 12, 2012
4th EDITION	

Fig. 1560 ROOF COVER COUVERCLE

Serial No. ;

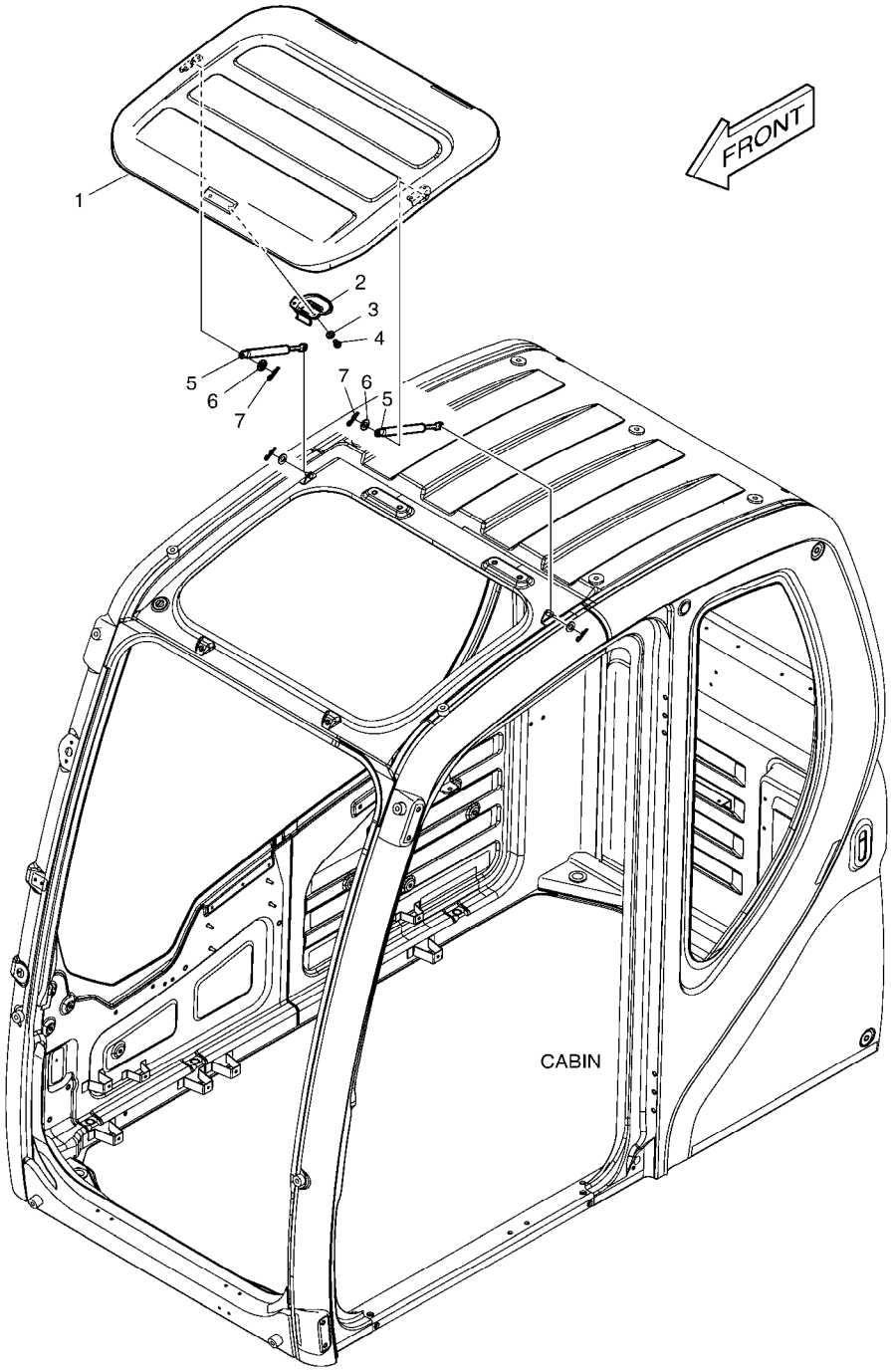

DATE	SEP. 12, 2012
4th EDITION	

Fig. 1560 ROOF COVER COUVERCLE

Serial No. ;

Key No.	Part No.	Description	Description	Q'ty	S.C	Serial No.	ICA	Replaceable part	
								Part No.	Q'ty
1560 --	621-03732C	ROOF COVER ASS'Y	COUVERTURE ASS' DE TO	-	D				
1	621-03727B	COVER;ROOF	COUVERTURE	1					
2	123-00516B	LOCK ASS'Y;ROOF COVER	SERRURE	1					
3	2114-1898D3	WASHER;PLAIN	RONDELLE	2					
4	2120-2166D9	SCREW	VIS	2					
5	DS1003009	GAS-SPRING	VERIN PNEUMATIQUE	2					
6	2114-1898D14	WASHER;PLAIN	RONDELLE	2					
7	123-00523	PIN;GAS-SPRING	GOUPILLE	2					

DATE	SEP. 12, 2012
4th EDITION	

Fig. 1570 FOOT REST - L.H.
REPOS DE PIED

Serial No. ;

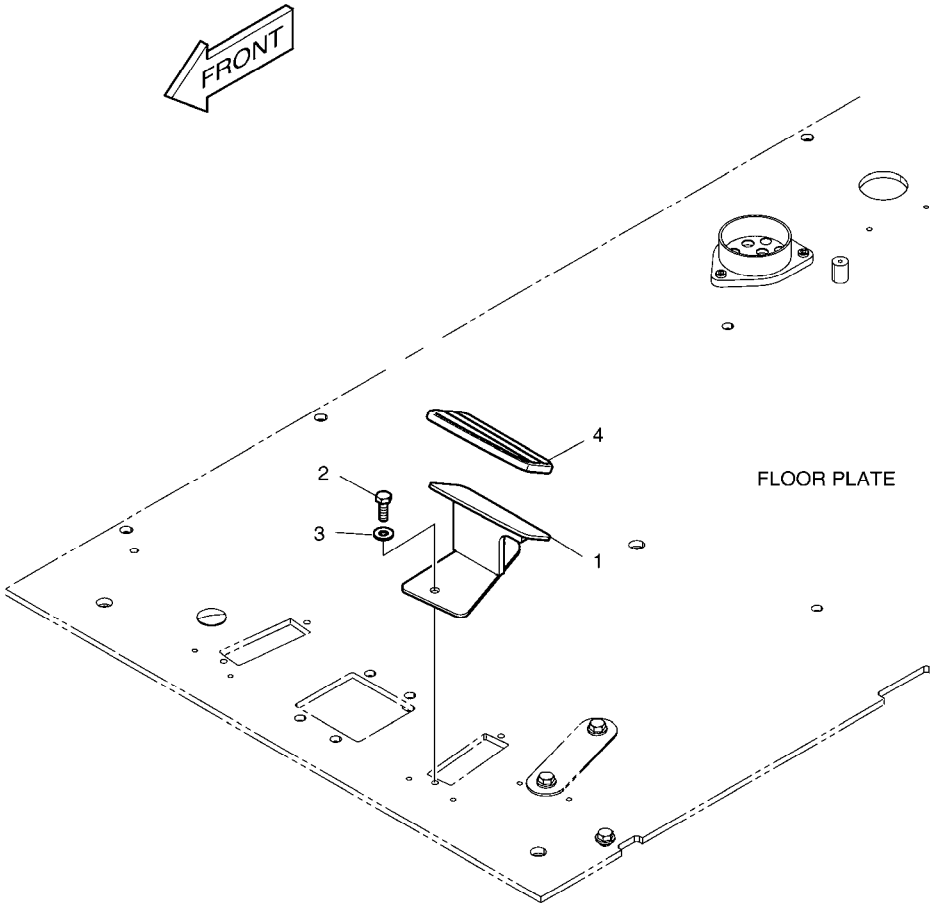

DATE	SEP. 12, 2012
4th EDITION	

Fig. 1570 FOOT REST - L.H.
REPOS DE PIED

Serial No. ;

Key No.	Part No.	Description	Description	Q'ty	S.C	Serial No.	ICA	Replaceable part	
								Part No.	Q'ty
1570 --	K1002082	FOOT REST(L.H)	REPOS DE PIED	-	D				
1	195-02949A	BRACKET;FOOT REST(L.H)	SUPPORT	1					
2	2120-2166D1	BOLT	BOULON	2					
3	2114-1898D1	WASHER	RONDELLE	2					
4	2160-1345	COVER;FOOT REST	COUVERTURE	1					

DATE	SEP. 12, 2012
4th EDITION	

Fig. 1580 FOOT REST - R.H.
REPOS DE PIED

Serial No. ;

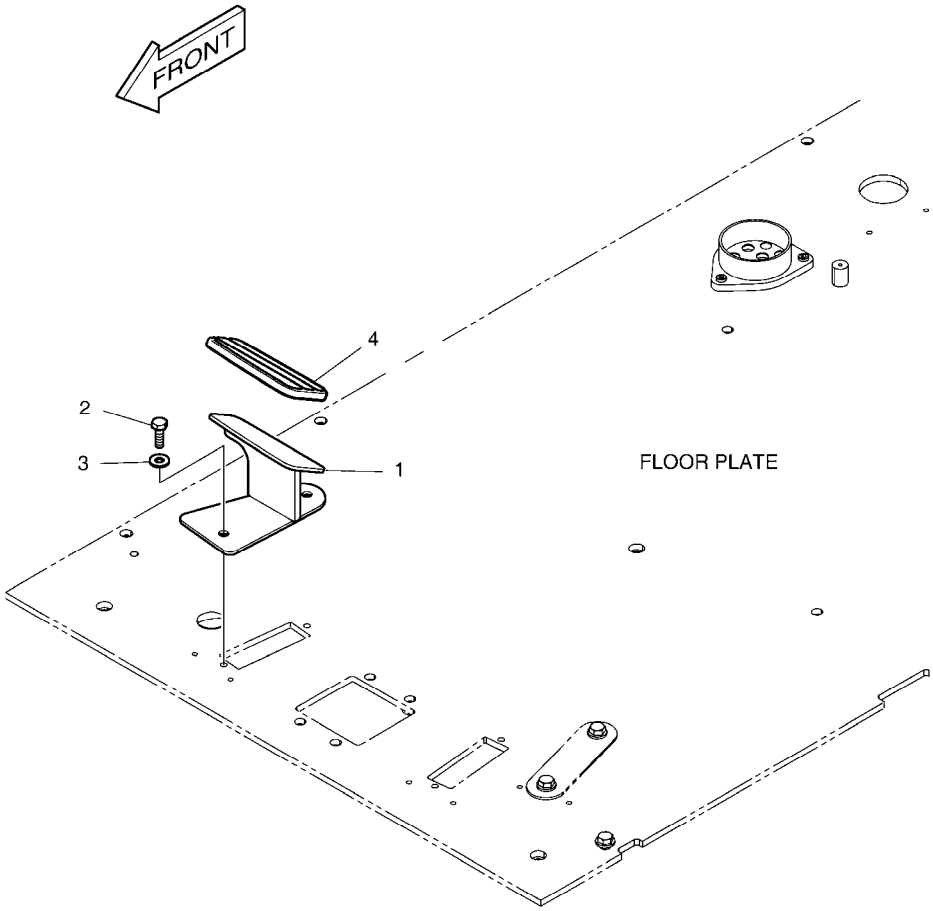

DATE	SEP. 12, 2012
4th EDITION	

Fig. 1580 FOOT REST - R.H.
REPOS DE PIED

Serial No. ;

Key No.	Part No.	Description	Description	Q'ty	S.C	Serial No.	ICA	Replaceable part	
								Part No.	Q'ty
1580 --	K1002083	FOOT REST(R.H)	REPOS DE PIED	-	D				
1	195-02948A	BRACKET;FOOT REST(R.H)	SUPPORT	1					
2	2120-2166D1	BOLT	BOULON	2					
3	2114-1898D1	WASHER	RONDELLE	2					
4	2160-1346	COVER;FOOT REST	COUVERTURE	1					

DATE	SEP. 12, 2012
4th EDITION	

Fig. 1590 SUPPORT SUPPORT

Serial No. ;

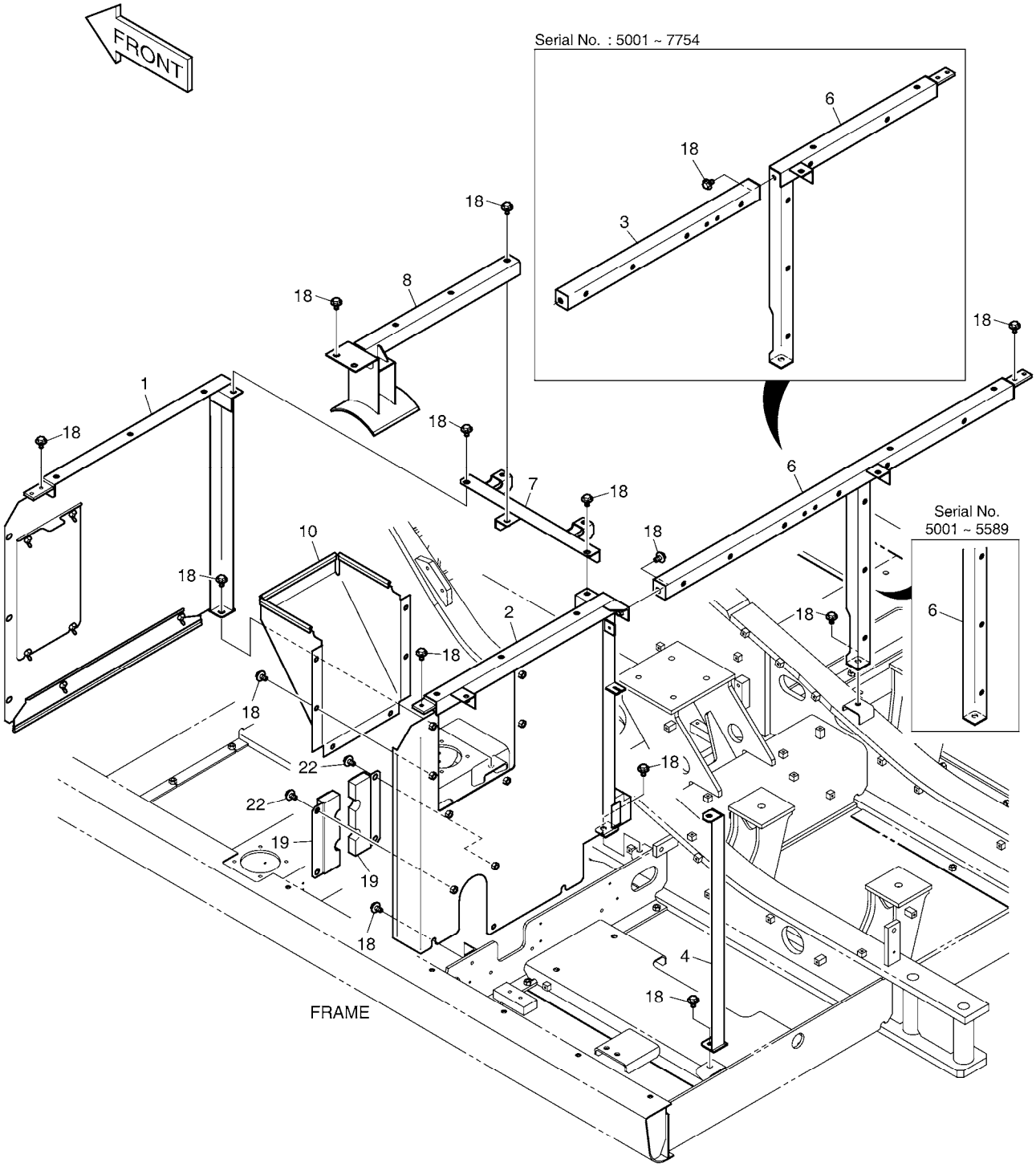

DATE	SEP. 12, 2012
4th EDITION	

Fig. 1590 SUPPORT SUPPORT

Serial No. ;

Key No.	Part No.	Description	Description	Q'ty	S.C	Serial No.	ICA	Replaceable part	
								Part No.	Q'ty
1590 --	K1045990B	SUPPORT ASS'Y	SUPPORT	-	D	5001-5589			
	110958-00014	SUPPORT & BAFFLE ASSY	SUPPORT	-	D	5590-			
1	K1038954B	SUPPORT	SUPPORT	1					
2	K1045903A	SUPPORT	SUPPORT	1		5001-7754			
	110958-00097	SUPPORT	SUPPORT	1		7755-			
3	K1045907A	SUPPORT	SUPPORT	1		5001-7754			
4	K1030750A	SUPPORT	SUPPORT	1					
6	K1030529A	SUPPORT	SUPPORT	1		5001-5589	I	110958-00015	1
	110958-00015	SUPPORT	SUPPORT	1		5590-7754			
	110958-01055	SUPPORT	SUPPORT	1		7755-			
7	K1030506B	SUPPORT	SUPPORT	1					
8	195-03434E	SUPPORT	APPUI	1					
10	K1039465	COVER;BAFFLE	COUVERCLE	1		5001-5589	I	110502-00025	1
	110502-00025	COVER,BAFFLE	COUVERCLE	1		5590-			
18	DS0025015	BOLT;SET	BOULON	26		5001-7754			
	DS0025015	BOLT;SET	BOULON	25		7755-			
19	K1039427A	COVER	COUVERCLE	2		5001-9751			
	110502-00524	COVER,BAFFLE	COUVERCLE	2		9752-			
22	DS0025022	BOLT;SET	BOULON	4					

DATE	SEP. 12, 2012
4th EDITION	

Fig. 1600 BAFFLE COUVERCLE

Serial No. ;

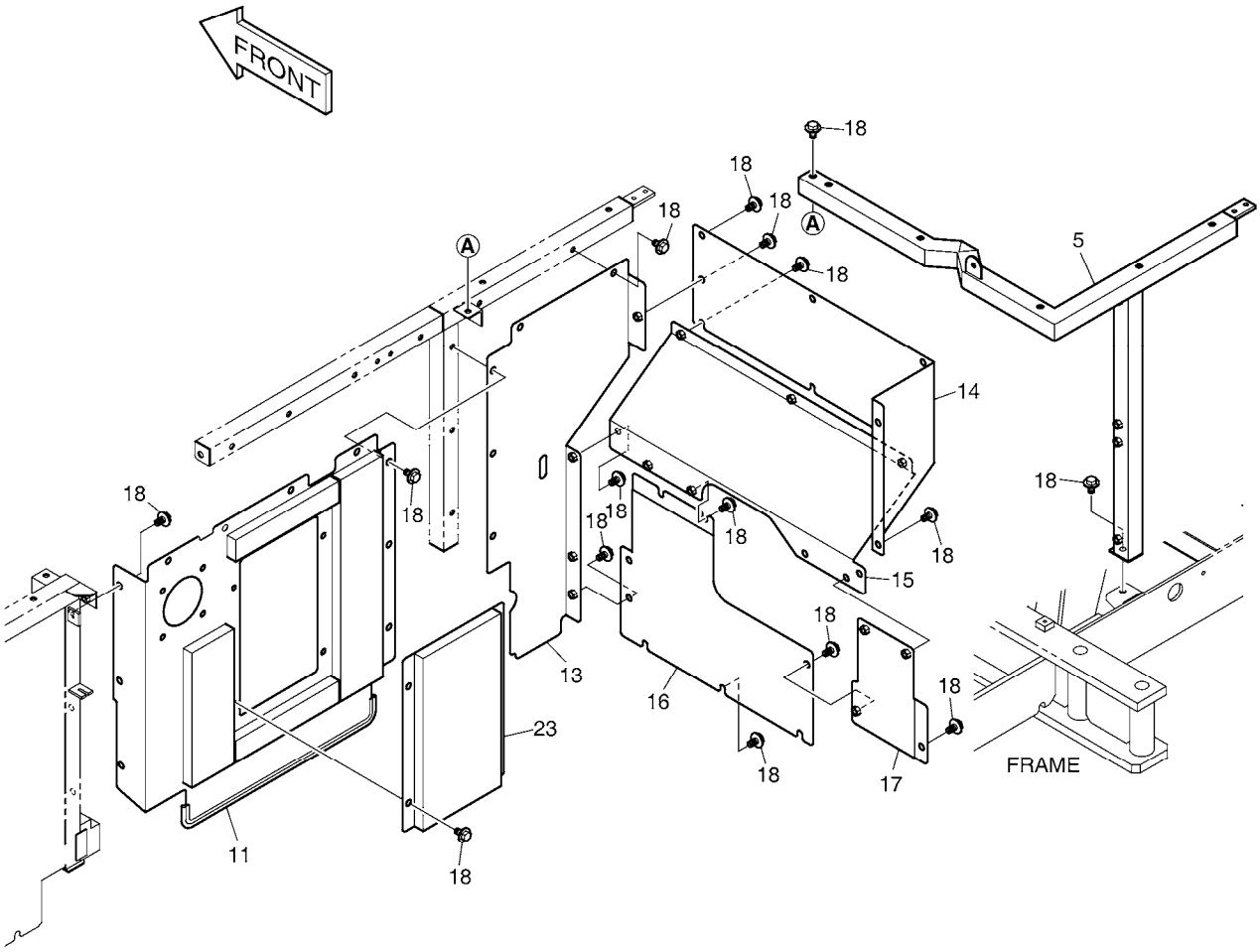

DATE	SEP. 12, 2012
4th EDITION	

Fig. 1600 BAFFLE COUVERCLE

Serial No. ;

Key No.	Part No.	Description	Description	Q'ty	S.C	Serial No.	ICA	Replaceable part	
								Part No.	Q'ty
1600 --	K1045990B	SUPPORT ASS'Y	SUPPORT	-	D	5001-5589			
	110958-00014	SUPPORT & BAFFLE ASSY	SUPPORT	-	D	5590-			
5	K1049826	SUPPORT	SUPPORT	1					
11	K1049011	COVER;BAFFLE	COUVERCLE	1					
13	K1045908	COVER;BAFFLE	COUVERCLE	1					
14	K1030731	COVER;BAFFLE	COUVERCLE	1					
15	K1030732A	COVER;BAFFLE	COUVERCLE	1					
16	K1030735A	COVER;BAFFLE	COUVERCLE	1					
17	K1030734A	COVER;BAFFLE	COUVERCLE	1					
18	DS0025015	BOLT;SET	BOULON	43					
23	K1038966	COVER;BAFFLE	COUVERCLE	1					

DATE	SEP. 12, 2012
4th EDITION	

Fig. 1610 SIDE DOOR - L.H
ENSEMBLE DE PORTE

Serial No. ;

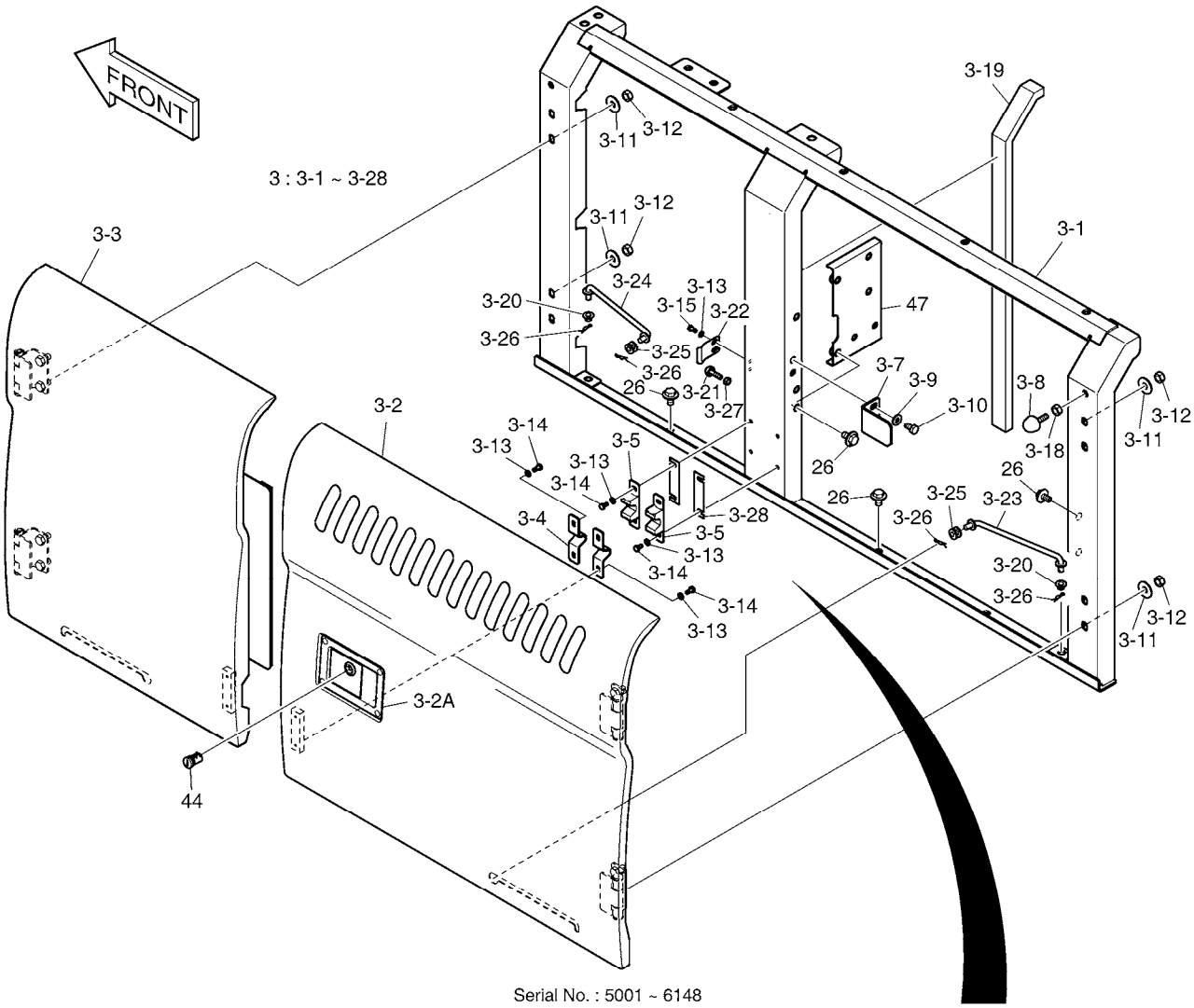

Serial No. : 5001 ~ 6148

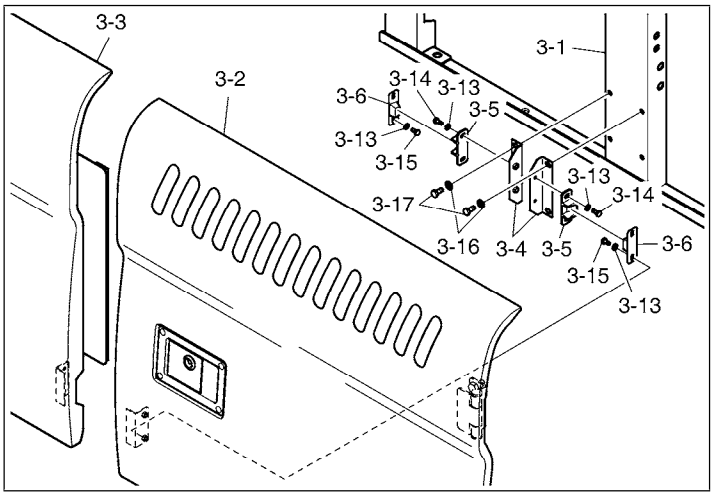

DATE	SEP. 12, 2012
4th EDITION	

Fig. 1610 SIDE DOOR - L.H
ENSEMBLE DE PORTE

Serial No. ;

Key No.	Part No.	Description	Description	Q'ty	S.C	Serial No.	ICA	Replaceable part	
								Part No.	Q'ty
1610 --	K1039799B	COVER ASS`Y	COUVERCLE	-	D				
3	K1038922B	SIDE DOOR ASS`Y (L.H)	PORTE	1		5001-6148	I	110982-00129	1
	110982-00129	DOOR ASSY,SIDE(L.H)	PORTE	1		6149-6781	I	110982-00129A	1
	110982-00129A	DOOR ASSY,SIDE;(L.H)	PORTE	1		06782-10481	I	110982-00129B	1
	110982-00129B	DOOR ASSY,SIDE;(L.H)	PORTE	1		10482-			
3-1	K1038917B	. SUPPORT(L.H)	. SUPPORT	1		5001-6148			
	110958-00230	. SUPPORT	. SUPPORT	1		6149-			
3-2	K1038918	. DOOR(R.H)	. DIODE	1		5001-6148			
	110982-00130	. DOOR,SIDE	. DIODE	1		06149-10481	I	110982-00130A	1
	110982-00130A	. DOOR,SIDE	. DIODE	1		10482-			
3-2A	125-00034A	.. LOCK	.. SERRURE	1					
3-3	K1038919B	. DOOR(L.H)	. DIODE	1		5001-6148			
	110982-00131	. DOOR,SIDE(L.H)	. PORTE	1		6149-			
3-4	2116-1522	. PLATE	. PLAQUE	2		5001-6148			
	250201-00028	. PLATE;STOPPER	. PLAQUE	2		6149-			
3-5	2161-9052	. STOPPER;PLATE	. ARRET	2		5001-6148			
	110956-00002	. STOPPER,RUBBER	. TAQUET	2		6149-6781	I	110956-00002A	2
	110956-00002A	. STOPPER,RUBBER	. TAQUET	2		6782-			
3-6	2161-9053	. STOPPER;RUBBER	. ARRET	2		5001-6148			
3-7	K1038920	. PLATE;LOCK	. PLAQUE	1					
3-8	K1001260A	. STOPPER;RUBBER	. TAQUET	1					
3-9	2114-1058D45	. WASHER	. RONDELLE	2					
3-10	S0511853	. BOLT	. BOULON	2					
3-11	2114-1058D30	. WASHER;PLAIN	. RONDELLE	8					
3-12	S4012733	. NUT	. ECROU	8					
3-13	S5010313	. WASHER	. RONDELLE	10					
3-14	S0504553	. BOLT M6X1.0X14	. BOULON	4		5001-6148			
	S0504553	. BOLT M6X1.0X14	. BOULON	8		6149-			
3-15	S0504453	. BOLT M6X1.0X12	. BOULON	6		5001-6148			
	S0504453	. BOLT M6X1.0X12	. BOULON	2		6149-			
3-16	S5010513	. WASHER,PLAIN	. RONDELLE	4		5001-6148			
3-17	S0508753	. BOLT M8X1.25X18	. BOULON A 6 PANS	4		5001-6148			
3-18	S4012633	. NUT	. ECROU	1					
3-19	-	. FOAM	. MOUSSE	1	D				
3-20	K1000602	. BUSHING	. DOUILLE	2					
3-21	K1048085	. STOPPER;RUBBER	. TAQUET	1					
3-22	K1039869B	. PLATE;LOCK	. PLAQUE	1					
3-23	623-00074B	. STAY	. SEJOUR	1					

DATE	SEP. 12, 2012
4th EDITION	

Fig. 1610 SIDE DOOR - L.H
ENSEMBLE DE PORTE

Serial No. ;

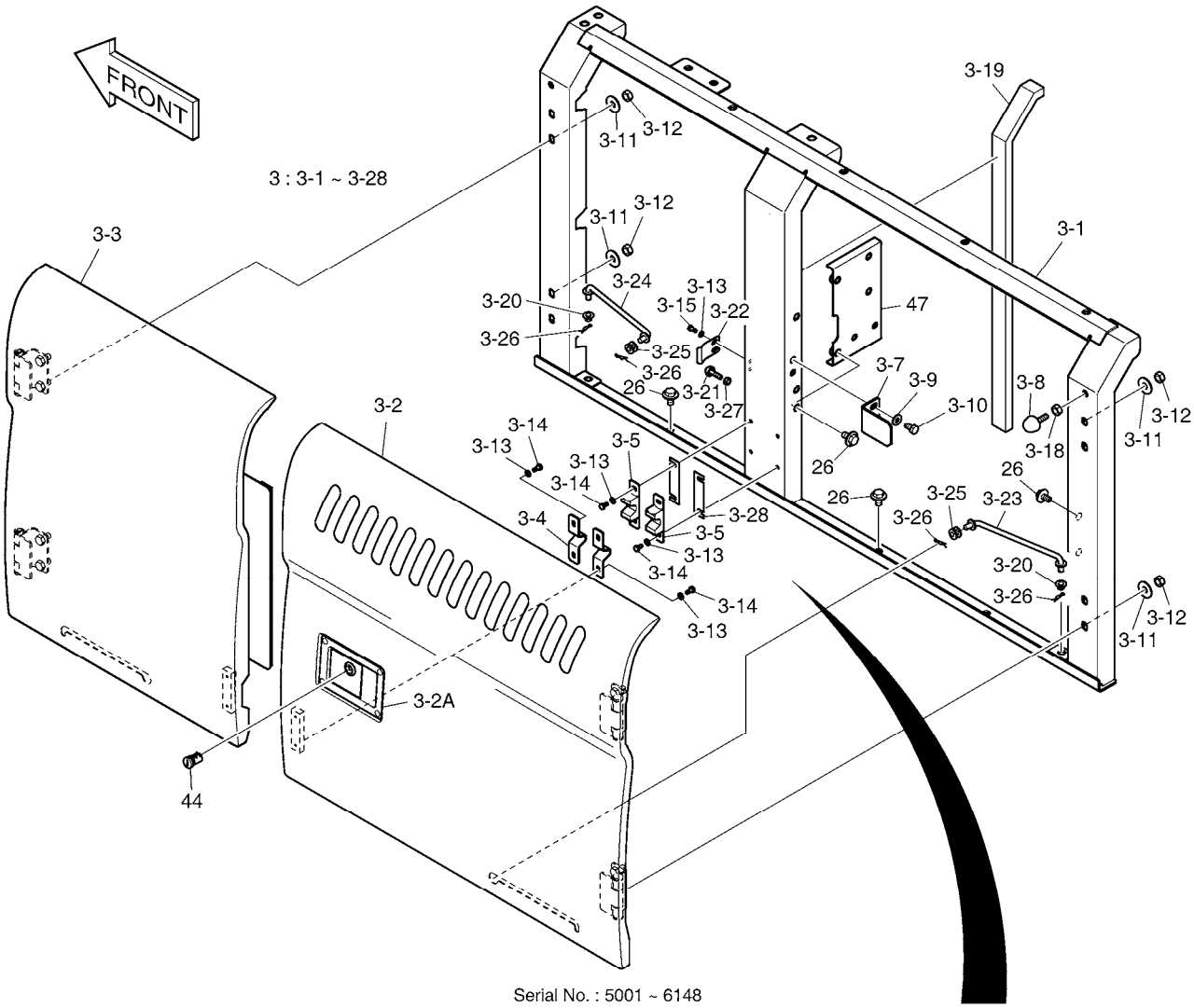

Serial No. : 5001 ~ 6148

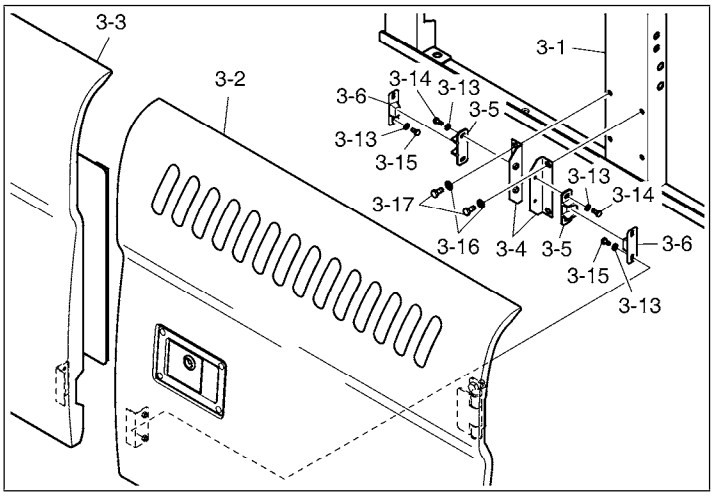

DATE	SEP. 12, 2012
4th EDITION	

Fig. 1610 SIDE DOOR - L.H
ENSEMBLE DE PORTE

Serial No. ;

Key No.	Part No.	Description	Description	Q'ty	S.C	Serial No.	ICA	Replaceable part	
								Part No.	Q'ty
1610 -3-24	623-00075B	. STAY	. SEJOUR	1					
3-25	K1008335	. BUSHING	. DOUILLE	2					
3-26	2705-9002	. PIN;LOCK	. GOUPILLE	4					
3-27	S4012533	. NUT	. ECROU	1					
3-28	110947-00027	. SHIM	. CALE	2		6149-			
26	DS0025015	BOLT;SET	BOULON	10					
44	K1004630	KEY;CYLINDER	CLE	1					
47	K1045909	PLATE	PLAQUE	1					

DATE	SEP. 12, 2012
4th EDITION	

Fig. 1620 SIDE DOOR - R.H
ENSEMBLE DE PORTE

Serial No. ;

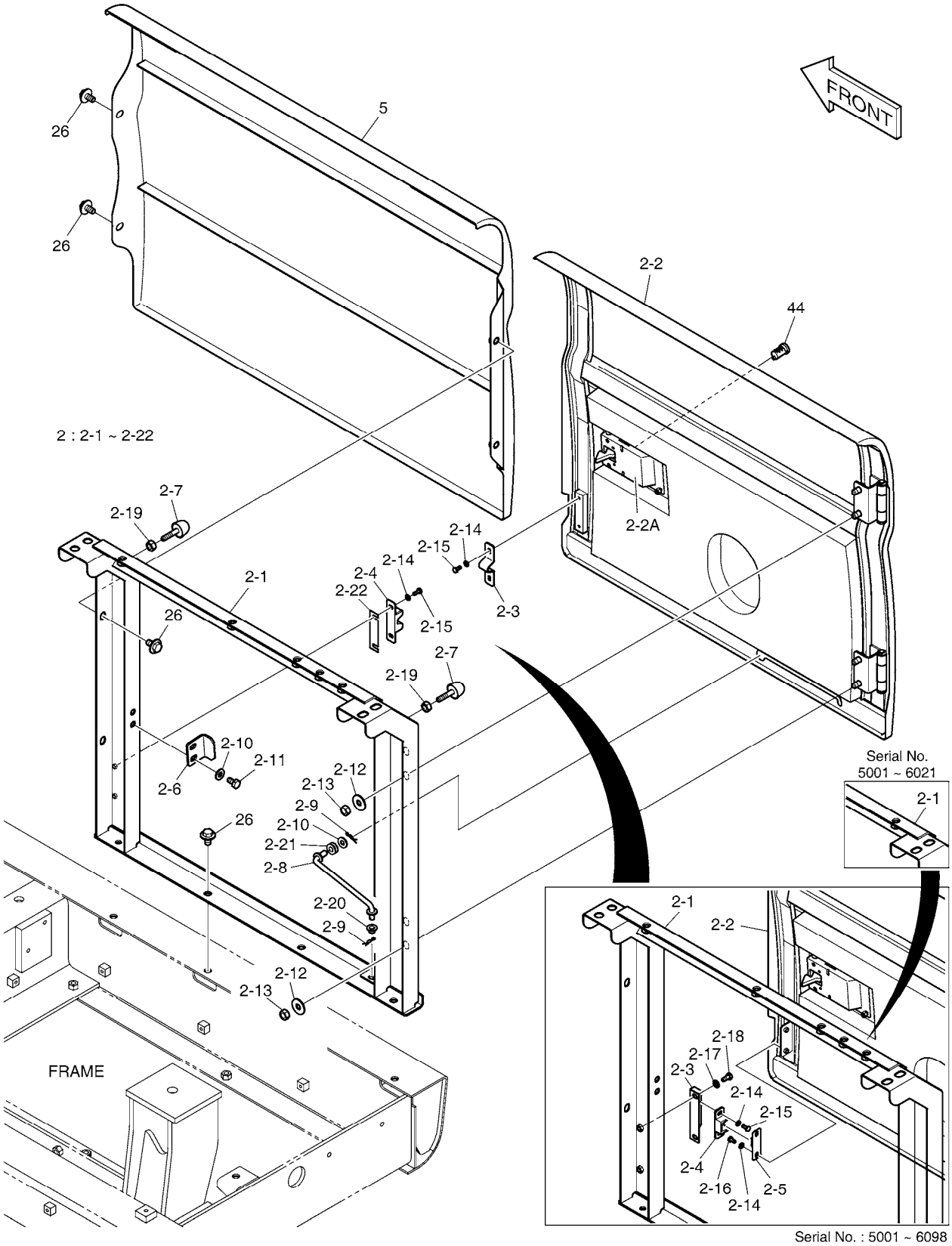

DATE	SEP. 12, 2012
4th EDITION	

Fig. 1620 SIDE DOOR - R.H
ENSEMBLE DE PORTE

Serial No. ;

Key No.	Part No.	Description	Description	Q'ty	S.C	Serial No.	ICA	Replaceable part	
								Part No.	Q'ty
1620 --	K1046071C	COVER ASS'Y	COUVERCLE	-	D	5001-6021			
	110508-00244	COVER ASSY	COUVERCLE	-	D	6022-			
2	K1043854A	SIDE DOOR ASS`Y (R.H)	PORTE	1		5001-6021	I	110982-00103	1
	110982-00103	DOOR ASSY,SIDE(R.H)	PORTE	1		6022-6098	I	110982-00103A	1
	110982-00103A	DOOR ASSY,SIDE(R.H)	PORTE	1		6099-6669	I	110982-00103B	1
	110982-00103B	DOOR ASSY,SIDE;(R.H)	PORTE	1		06670-10481	I	110982-00103C	1
	110982-00103C	DOOR ASSY,SIDE;(R.H)	PORTE	1		10482-			
2-1	K1043855A	. SUPPORT(R.H)	. SUPPORT	1		5001-6021			
	110958-00181	. SUPPORT	. SUPPORT	1		6022-6098			
	110958-00181A	. SUPPORT	. SUPPORT	1		6099-			
2-2	621-03449E	. SIDE DOOR	. PORTE	1		5001-6098			
	110982-00128	. DOOR,SIDE	. PORTE	1		06099-10481	I	110982-00128A	1
	110982-00128A	. DOOR,SIDE	. PORTE	1		10482-			
2-2A	125-00035A	.. LOCK	.. SERRURE	1					
2-3	2116-1522	. PLATE	. PLAQUE	1		5001-6098			
	250201-00028	. PLATE;STOPPER	. PLAQUE	1		6099-			
2-4	2161-9052	. STOPPER;PLATE	. ARRET	1		5001-6098			
	110956-00002	. STOPPER,RUBBER	. TAQUET	1		6099-6669	I	110956-00002A	1
	110956-00002A	. STOPPER,RUBBER	. TAQUET	1		6670-			
2-5	2161-9053	. STOPPER;RUBBER	. ARRET	1		5001-6098			
2-6	621-02726A	. PLATE;LOCK	. PLAQUE	1					
2-7	K1001260A	. STOPPER;RUBBER	. TAQUET	2					
2-8	623-00075B	. STAY	. SEJOUR	1					
2-9	2705-9002	. PIN;LOCK	. GOUPILLE	2					
2-10	2114-1058D45	. WASHER	. RONDELLE	3					
2-11	S0511853	. BOLT	. BOULON	2					
2-12	2114-1058D30	. WASHER;PLAIN	. RONDELLE	4					
2-13	S4012733	. NUT	. ECROU	4					
2-14	S5010313	. WASHER	. RONDELLE	4					
2-15	S0504553	. BOLT M6X1.0X14	. BOULON	2		5001-6098			
	S0504553	. BOLT M6X1.0X14	. BOULON	4		6099-			
2-16	S0504453	. BOLT M6X1.0X12	. BOULON	2		5001-6098			
2-17	S5010513	. WASHER,PLAIN	. RONDELLE	2		5001-6098			
2-18	S0508753	. BOLT M8X1.25X18	. BOULON A 6 PANS	2		5001-6098			
2-19	S4012633	. NUT	. ECROU	2					
2-20	K1000602	. BUSHING	. DOUILLE	1					
2-21	K1008335	. BUSHING	. DOUILLE	1					
2-22	110947-00027	. SHIM	. CALE	1		6099-			

DATE	SEP. 12, 2012
4th EDITION	

Fig. 1620 SIDE DOOR - R.H
ENSEMBLE DE PORTE

Serial No. ;

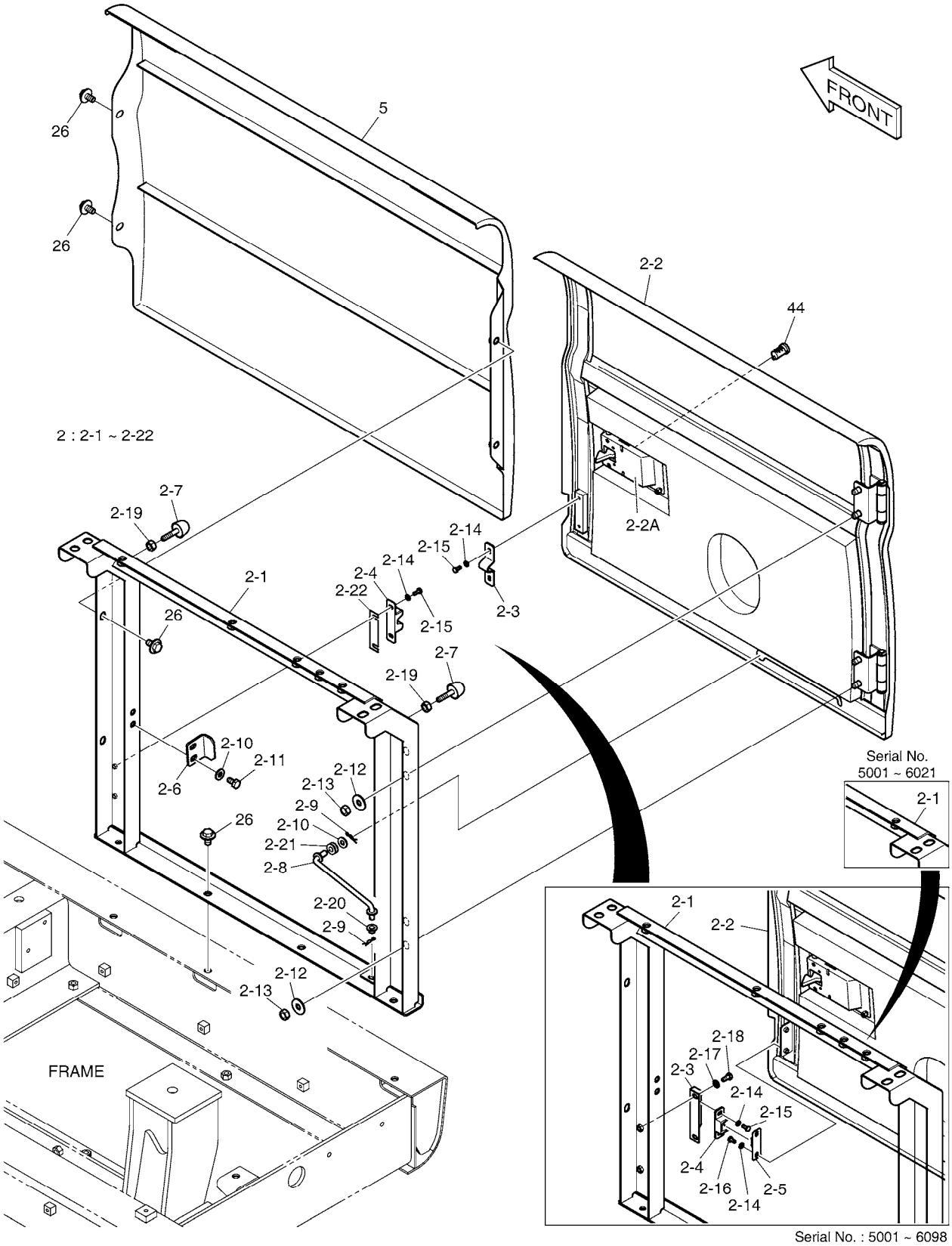

DATE	SEP. 12, 2012
4th EDITION	

Fig. 1620 SIDE DOOR - R.H
ENSEMBLE DE PORTE

Serial No. ;

Key No.	Part No.	Description	Description	Q'ty	S.C	Serial No.	ICA	Replaceable part	
								Part No.	Q'ty
1620 -5	621-03642C	COVER;TANK	COUVERCLE	1					
26	DS0025015	BOLT;SET	BOULON	8					
44	K1004630	KEY;CYLINDER	CLE	1					

DATE	SEP. 12, 2012
4th EDITION	

Fig. 1630 BATTERY COVER COUVERCLE

Serial No. ;

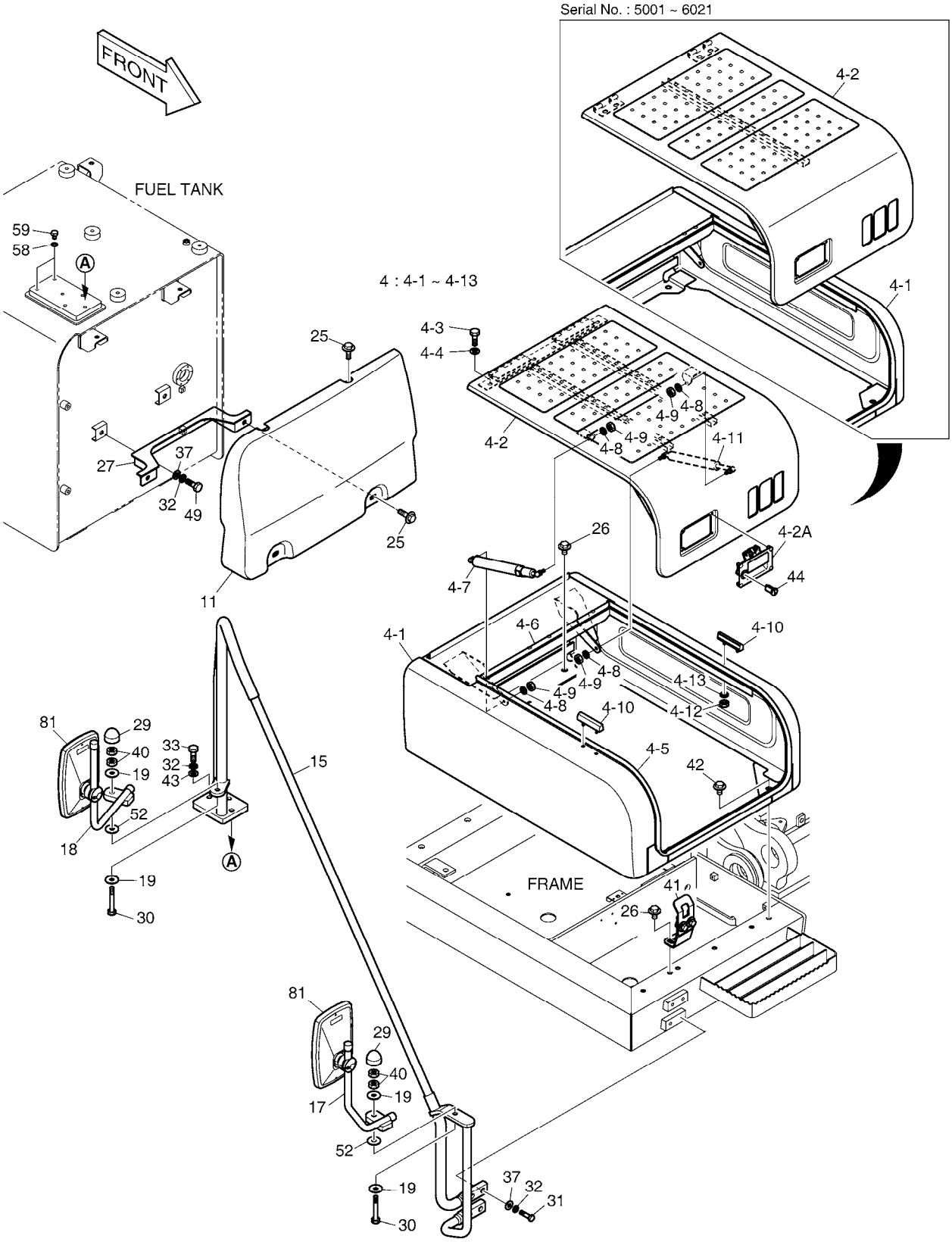

DATE	SEP. 12, 2012
4th EDITION	

Fig. 1630 BATTERY COVER COUVERCLE

Serial No. ;

Key No.	Part No.	Description	Description	Q'ty	S.C	Serial No.	ICA	Replaceable part Part No.	Q'ty
1630 --	K1046071C	COVER ASS'Y	COUVERCLE	-	D	5001-6021			
	110508-00244	COVER ASSY	COUVERCLE	-	D	6022-			
4	K1039067B	BATTERY COVER ASS'Y	COUVERCLE	1		5001-5284	I	K1039067C	1
	K1039067C	BATTERY COVER ASS`Y	COUVERCLE	1		5285-6021	I	110503-00016A	1
	110503-00016A	COVER ASSY,BATTERY	COUVERCLE	1		6022-7427	Y	110503-00016B	1
	110503-00016B	COVER ASSY,BATTERY	COUVERCLE	1		07428-10481	I	110503-00016C	1
	110503-00016C	COVER ASSY,BATTERY	COUVERCLE	1		10482-			
4-1	-	. BATTERY COVER	. COUVERTURE DE BATTE	1	D				
4-2	K1038697A	. COVER	. COUVERCLE	1		5001-5284	I	K1038697B	1
	K1038697B	. COVER	. COUVERCLE	1		5285-6021			
	110503-00008A	. COVER,BATTERY	. COUVERCLE	1		6022-			
4-2A	125-00071B	.. LATCH;FRONT	.. LATCH;FRONT	1					
4-3	S0512066	. BOLT M10X1.5X25	. BOULON	4					
4-4	S5010613	. WASHER;PLAIN	. RONDELLE	4					
4-5	-	. RUBBER	. CAOUTCHOUC	1	D				
4-6	-	. RUBBER	. CAOUTCHOUC	1	D				
4-7	K1001968	. CYLINDER;GAS	. CYLINDRE	1		5001-7427	I	400315-00026	1
	400315-00026	. CYLINDER,GAS	. CYLINDRE	1		7428-			
4-8	S5102503	. WASHER,SPRING	. RONDELLE	4					
4-9	S4012533	. NUT	. ECROU	4					
4-10	K1005305A	. STOPPER;RUBBER	. TAQUET	2					
4-11	DS1001061	. CYLINDER;GAS	. CYLINDRE	1					
4-12	S4012333	. NUT	. ECROU	4					
4-13	S5102303	. WASHER;SPRING	. RONDELLE	4					
11	621-03657B	COVER;TANK	COUVERCLE	1					
15	K1013266B	STAY	RONDELLE	1					
17	K1038110A	STAY;MIRROR	SEJOUR	1					
18	K1038107A	STAY;MIRROR	SEJOUR	1					
19	2114-1058D68	WASHER	RONDELLE	4					
25	DS0025014	BOLT;SET	BOULON	4					
26	DS0025015	BOLT;SET	BOULON	4					
27	195-02706C	BRACKET	SUPPORT	1					
29	161-00580	CAP;RUBBER	BOULON	2					
30	S0561066	BOLT M12X1.75X65	BOULON A 6 PANS	2					
31	S0560666	BOLT	BOULON A 6 PANS	4					
32	S5102703	WASHER;SPRING	RONDELLE	10					
33	S0560566	BOLT M12X1.75X40	BOULON A 6 PANS	4					
37	2114-1154	WASHER	RONDELLE	6					

DATE	SEP. 12, 2012
4th EDITION	

Fig. 1630 BATTERY COVER COUVERCLE

Serial No. ;

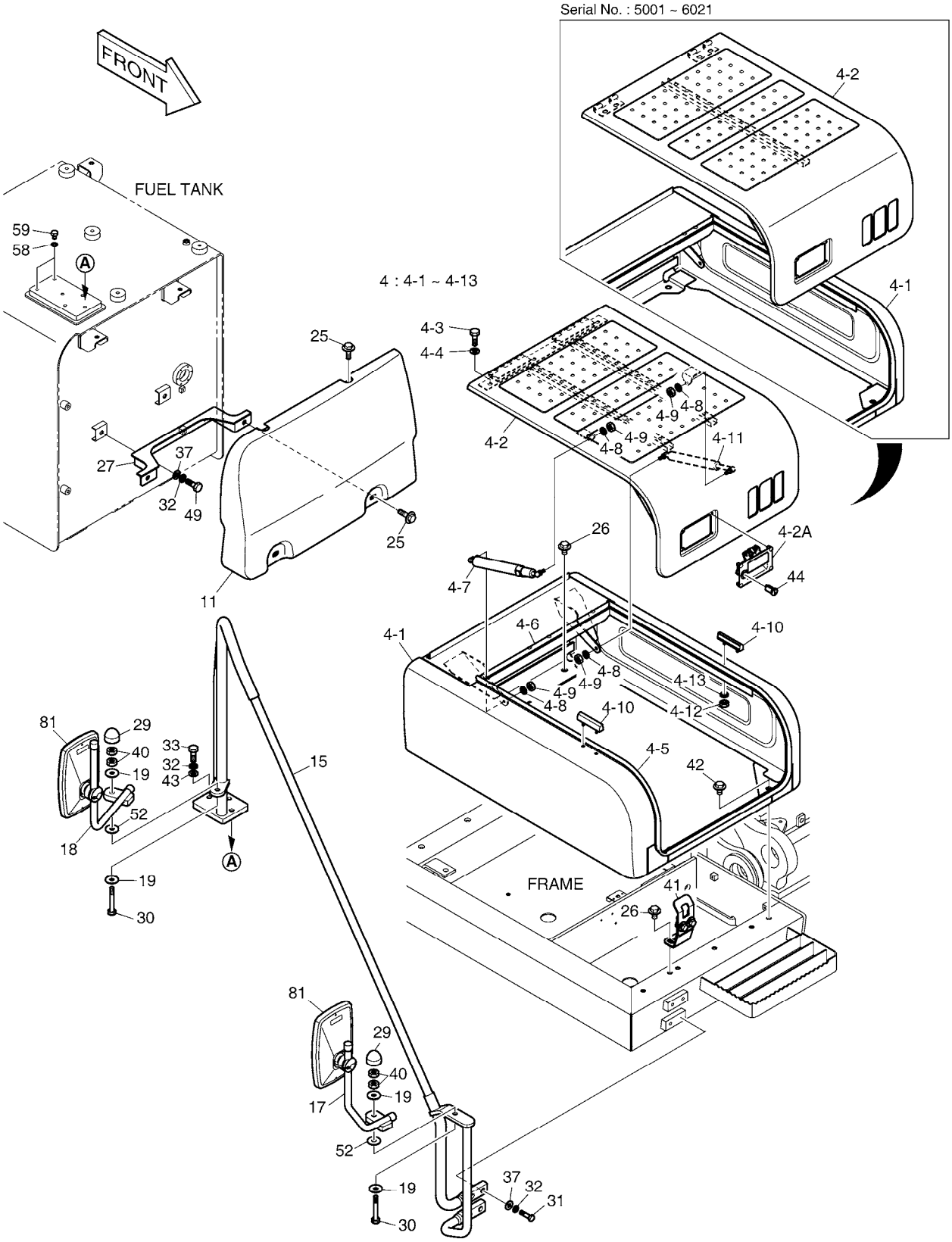

DATE	SEP. 12, 2012
4th EDITION	

Fig. 1630 BATTERY COVER COUVERCLE

Serial No. ;

Key No.	Part No.	Description	Description	Q'ty	S.C	Serial No.	ICA	Replaceable part	
								Part No.	Q'ty
1630 -40	S4012733	NUT	ECROU	4					
41	195-02624C	BRACKET	SUPPORT	1					
42	DS0025027	BOLT;SET	BOULON	2		5001-6021			
	DS0025025	BOLT;SET	BOULON	2		6022-			
43	S5010713	WASHER;PLAIN	RONDELLE	4					
44	K1004630	KEY;CYLINDER	CLE	1					
49	S0515166	BOLT M12X1.75X28	BOULON A 6 PANS	2					
52	2114-1058D54	WASHER	RONDELLE	2					
58	DS0401164	WASHER	RONDELLE	2		10722-			
59	S0514666	BOLT M12X1.75X16	BOULON	2		10722-			
81	K1040606	MIRROR;SIDE	MAIN COURANTE	2					

DATE	SEP. 12, 2012
4th EDITION	

Fig. 1640 COVER
COUVERCLE

Serial No. ;

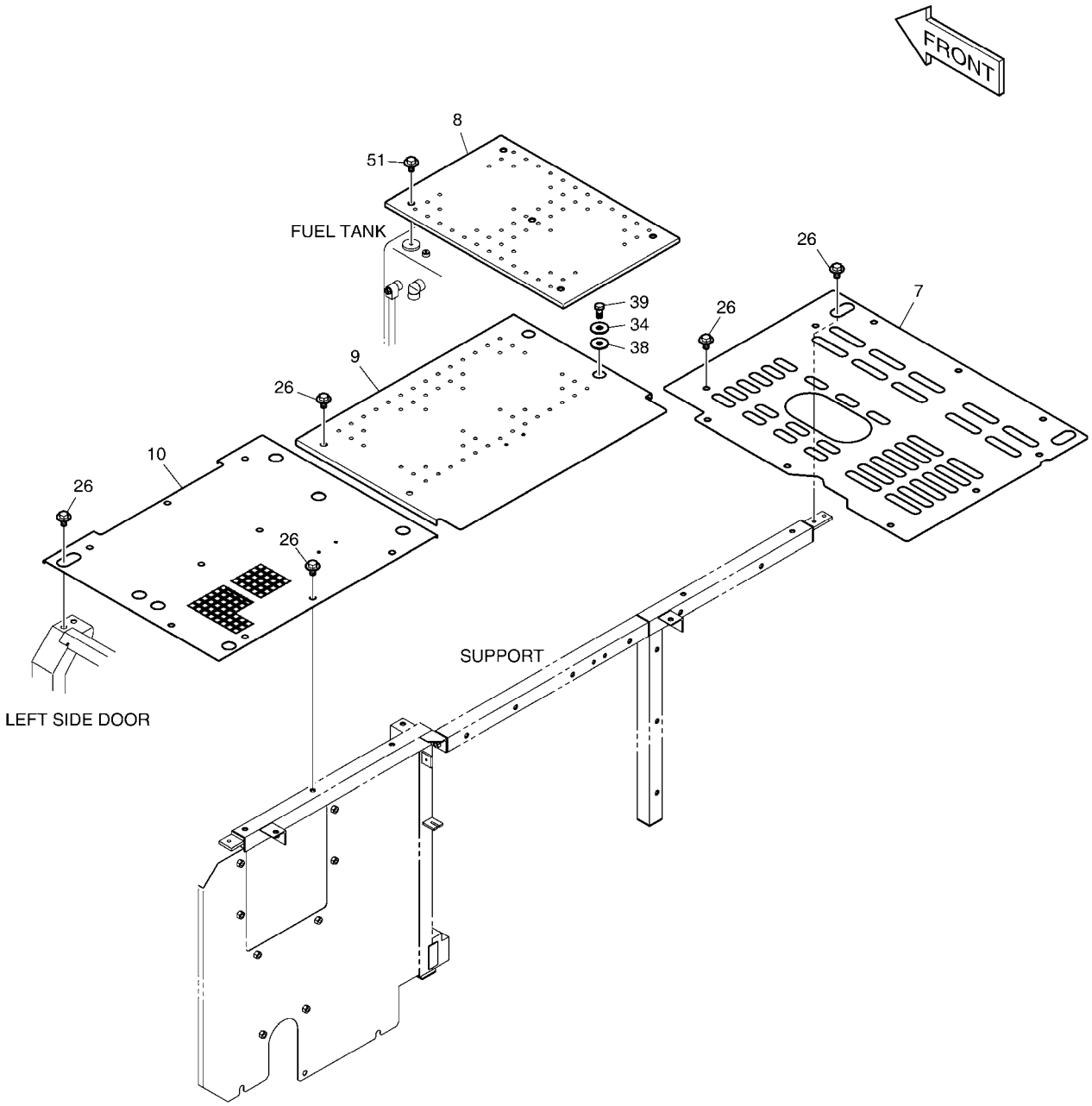

DATE	SEP. 12, 2012
4th EDITION	

Fig. 1640 COVER COUVERCLE

Serial No. ;

Key No.	Part No.	Description	Description	Q'ty	S.C	Serial No.	ICA	Replaceable part	
								Part No.	Q'ty
1640 --	K1046071C	COVER ASS'Y	COUVERCLE	-	D				
7	K1049827	COVER	COUVERCLE	1					
8	K1039208A	COVER	COUVERCLE	1					
9	K1039209A	COVER	COUVERCLE	1					
10	K1039468B	COVER	COUVERCLE	1		05001-10200	Y	110508-08802	1
	110508-08802	COVER	COUVERCLE	1		10201-			
26	DS0025015	BOLT;SET	BOULON	21					
34	114-00529	SPACER	ENTRETOISE	2					
38	K1002943	RUBBER	LE CAOUTCHOUC	2					
39	S0515266	BOLT	BOULON	2					
51	DS0025022	BOLT;SET	BOULON	5					

DATE	SEP. 12, 2012
4th EDITION	

Fig. 1650 ENGINE COVER
COUVERTURE DE MOTEUR

Serial No. ;

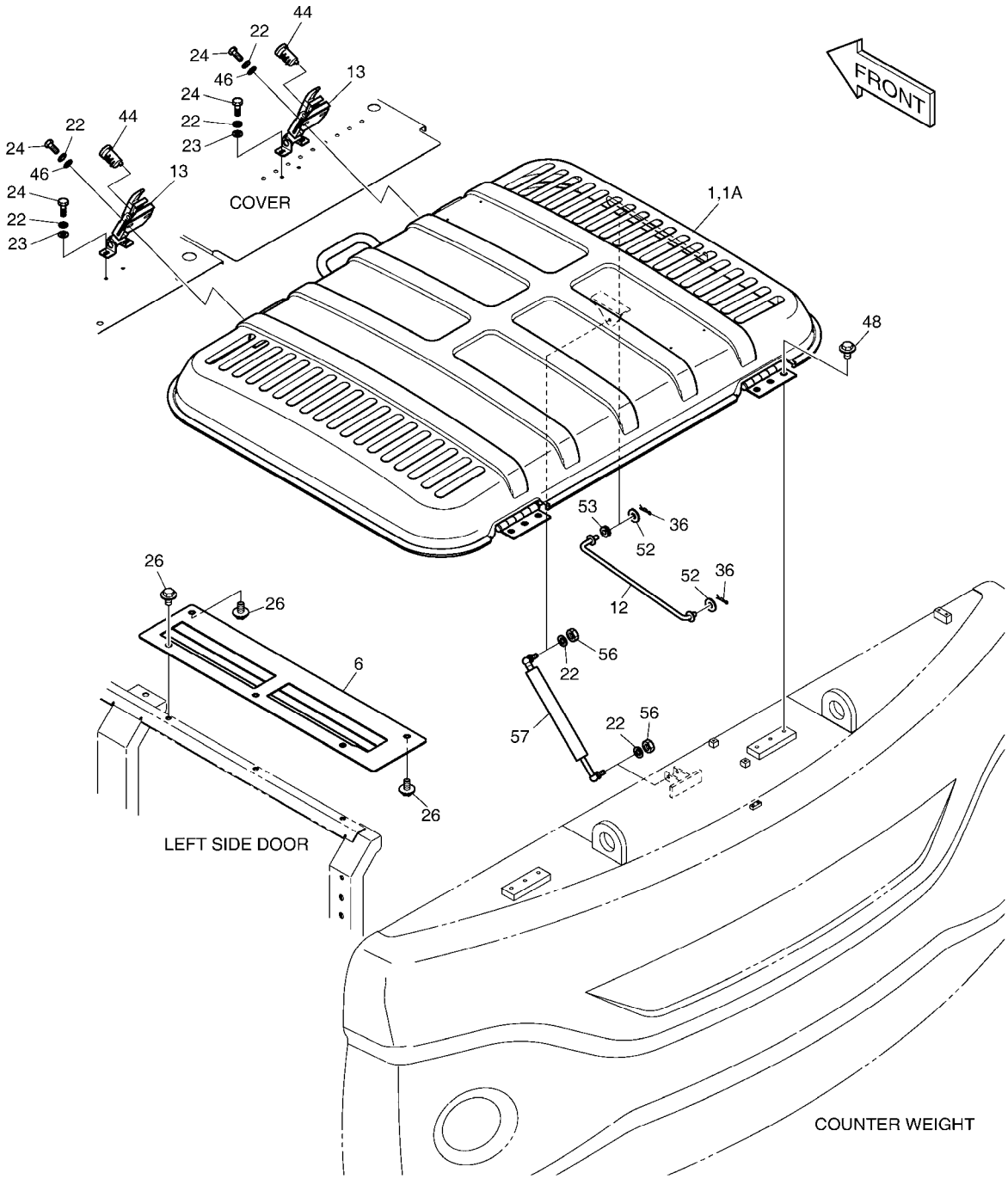

DATE	SEP. 12, 2012
4th EDITION	

Fig. 1650 ENGINE COVER COUVERTURE DE MOTEUR

Serial No. ;

Key No.	Part No.	Description	Description	Q'ty	S.C	Serial No.	ICA	Replaceable part	
								Part No.	Q'ty
1650 --	K1046071C	COVER ASS'Y	COUVERCLE	-	D				
1	K1038688C	ENGINE COVER ASS`Y	COUVERCLE	1		5001-6098	I	110506-00047	1
	110506-00047	COVER,ENGINE	COUVERCLE	1		6099-			
1A	1.162-00001	. RUBBER;CUSHION	. LE CAOUTCHOUC	1					
6	K1038870B	COVER	COUVERCLE	1					
12	K1039430C	STAY	ENTRETOISE	1					
13	125-00075A	CATCH	CROCHET	2					
22	S5102503	WASHER,SPRING	RONDELLE	10					
23	2114-1058D56	WASHER	RONDELLE	4					
24	S0508866	BOLT	BOULON	8					
26	DS0025015	BOLT;SET	BOULON	5					
36	2705-9002	PIN;LOCK	GOUPILLE	2					
44	K1004630	KEY;CYLINDER	CLE	2					
46	S5010513	WASHER,PLAIN	RONDELLE	4					
48	DS0025019	BOLT;SET	BOULON	6					
52	2114-1058D54	WASHER	RONDELLE	2					
53	K1013812	BUSHING	DOUILLE	1					
56	S4012533	NUT	ECROU	2					
57	DS1001088	SPRING;GAS	RESSORT	1					

DATE	SEP. 12, 2012
4th EDITION	

Fig. 1660 ACOUSTIC FOAM ENSEMBLE DE EPONGE

Serial No. ;

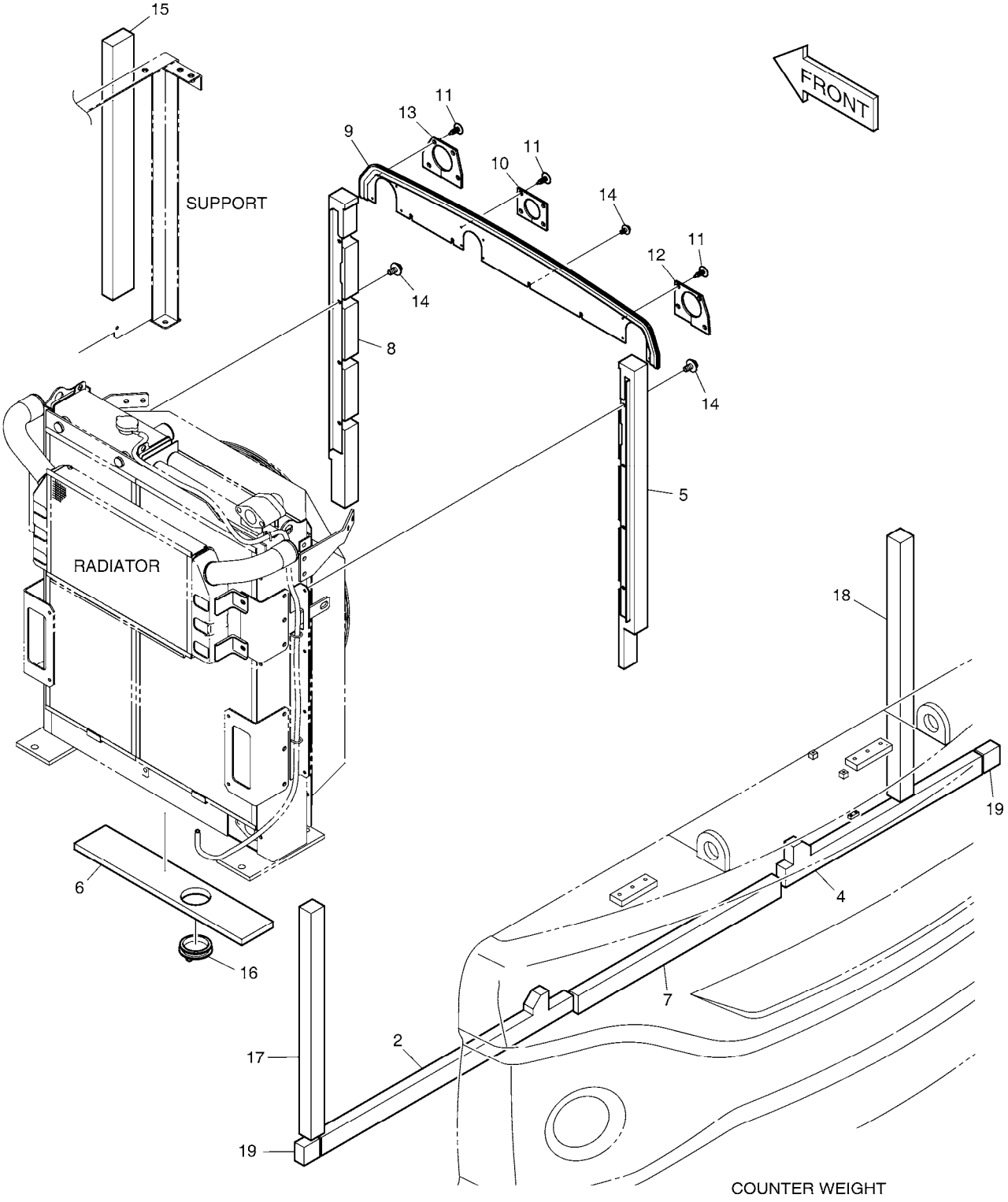

DATE	SEP. 12, 2012
4th EDITION	

Fig. 1660 ACOUSTIC FOAM
ENSEMBLE DE EPONGE

Serial No. ;

Key No.	Part No.	Description	Description	Q'ty	S.C	Serial No.	ICA	Replaceable part	
								Part No.	Q'ty
1660 --	K1045987A	FOAM ASS'Y	EPONGE	-	D				
2	K1000485A	FOAM;POLYURETHANE	EPONGE	1					
4	K1000488A	FOAM;POLYURETHANE	EPONGE	1					
5	K1000489A	COVER	COUVERCLE	1					
6	K1000490A	FOAM;POLYURETHANE	MOUSSE	1					
7	K1000491	FOAM;POLYURETHANE	EPONGE	1					
8	K1000492A	COVER	COUVERCLE	1					
9	K1045902A	COVER	COUVERCLE	1					
10	K1000500	RUBBER	LE CAOUTCHOUC	1					
11	124-00070	CLIP;TREE	AGRAFE	12					
12	K1000504	RUBBER	CAOUTCHOUC	1					
13	K1000852A	RUBBER	CAOUTCHOUC	1					
14	K1001029	BOLT	BOULON	12					
15	161-00614	FOAM	MOUSSE	1					
16	K1007044	BUSHING	BUSHING	1					
17	K1038009	FOAM	MOUSSE	1					
18	K1038010	FOAM	MOUSSE	1					
19	K1038011	FOAM	MOUSSE	2					

DATE	SEP. 12, 2012
4th EDITION	

Fig. 1670 UNDER COVER TOLES IMFERIEVRES

Serial No. ;

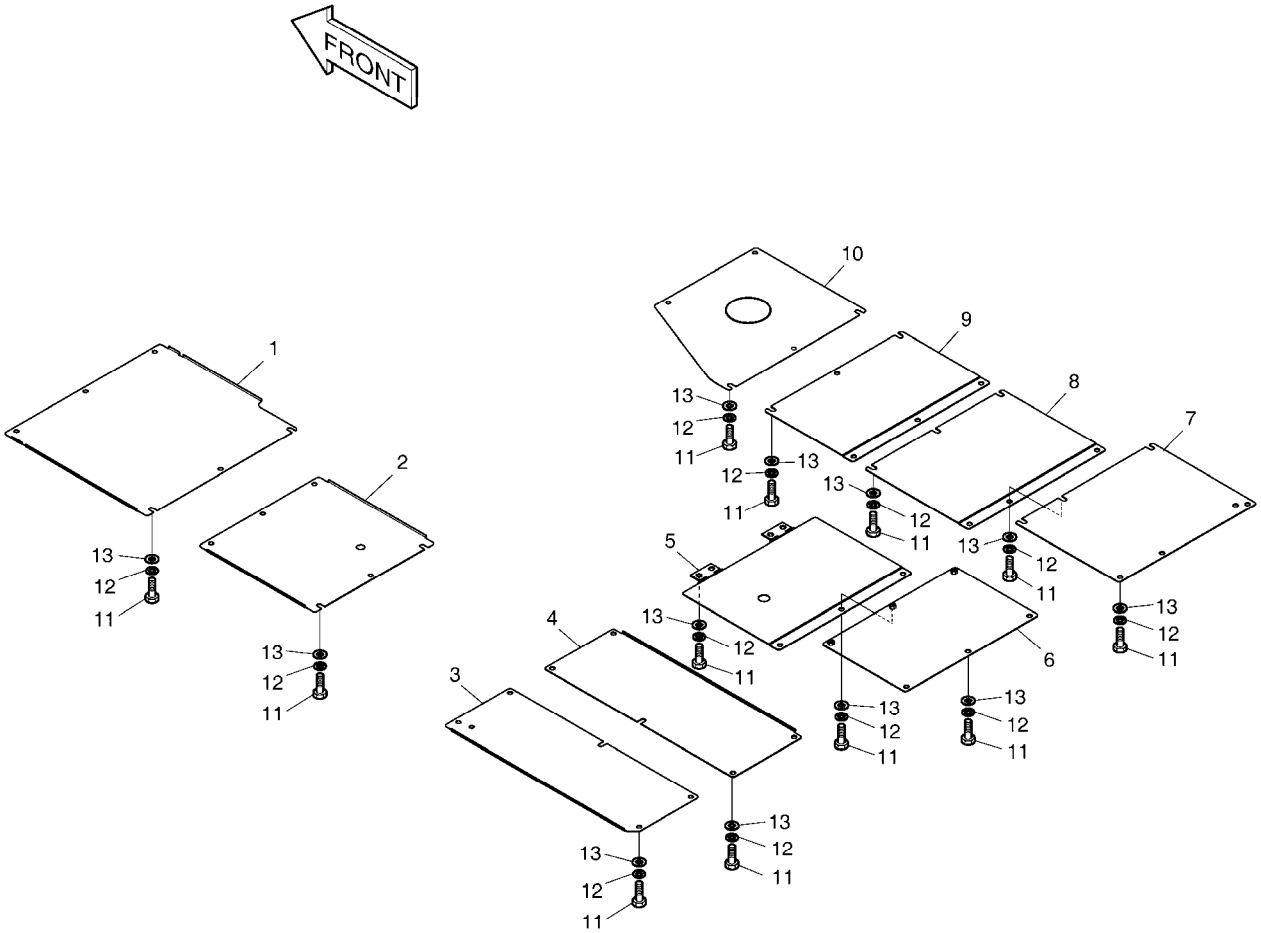

DATE	SEP. 12, 2012
4th EDITION	

Fig. 1670 UNDER COVER
TOLES IMFERIEVRES

Serial No. ;

Key No.	Part No.	Description	Description	Q'ty	S.C	Serial No.	ICA	Replaceable part	
								Part No.	Q'ty
1670 --	K1045932	UNDER COVER ASS'Y	COUVERCLE	-	D				
1	K1000591A	COVER;UNDER	COUVERCLE	1					
2	K1000592A	COVER;UNDER	COUVERCLE	1					
3	K1024692	COVER;UNDER	COUVERCLE	1					
4	K1039134	COVER;UNDER	COUVERCLE	1					
5	K1045929	COVER;UNDER	COUVERCLE	1					
6	K1039137	COVER;UNDER	COUVERTURE	1					
7	K1041250	COVER;UNDER	COUVERCLE	1					
8	K1041251	COVER;UNDER	COUVERCLE	1					
9	K1041252	COVER;UNDER	COUVERCLE	1					
10	K1000600B	COVER;UNDER	COUVERCLE	1					
11	S0560466	BOLT M12X1.75X35	BOULON	49					
12	S5102703	WASHER;SPRING	RONDELLE	49					
13	DS0401188	WASHER	RONDELLE	49					

DATE	SEP. 12, 2012
4th EDITION	

Fig. 1680 LUBRICATION PIPING
LUBRIFICATION

Serial No. ;

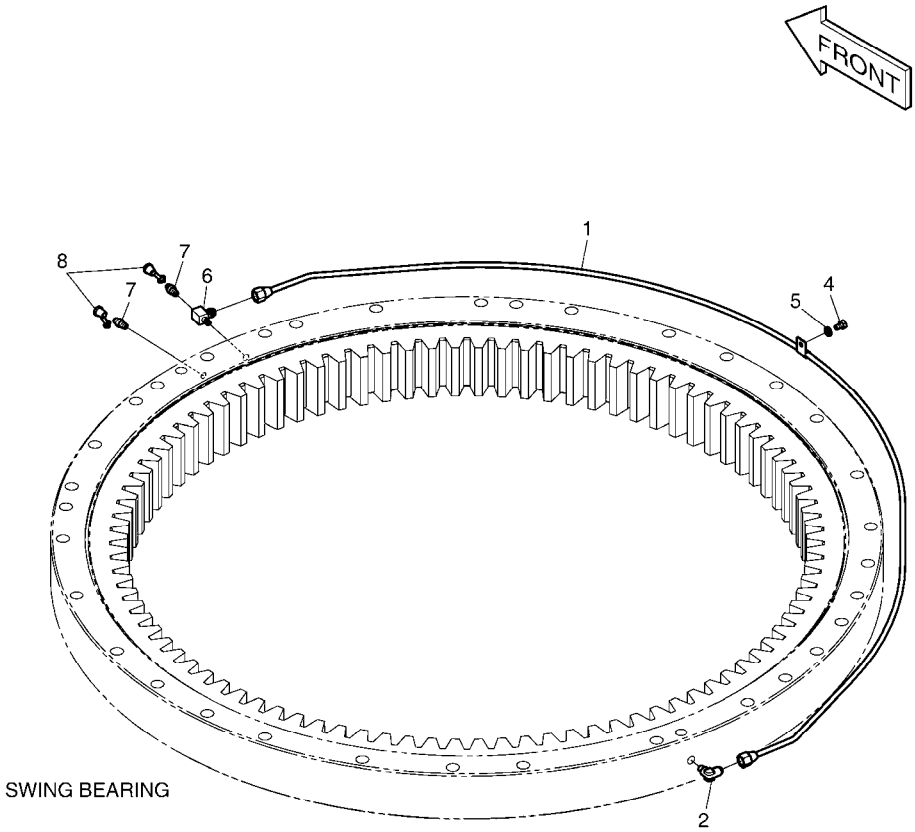

DATE	SEP. 12, 2012
4th EDITION	

Fig. 1680 LUBRICATION PIPING LUBRIFICATION

Serial No. ;

Key No.	Part No.	Description	Description	Q'ty	S.C	Serial No.	ICA	Replaceable part	
								Part No.	Q'ty
1680 --	K1007600B	LUBRICATION PIPING	LUBRIFICATION	-	D				
1	K1007665B	PIPE;GREASE	TUYAU	1					
2	2181-1925	ELBOW	COUDE	1					
4	S0504366	BOLT	BOULON	1					
5	S5102303	WASHER;SPRING	RONDELLE	1					
6	2181-2527	TEE	TE	1					
7	S6710041	NIPPLE;GREASE	GRAISSEUR	2					
8	160-00020	CAP;GREASE NIPPLE	CHAPEAU	2					

DATE	SEP. 12, 2012
4th EDITION	

Fig. 1690 ELECTRIC BOX ASS'Y
EQUIPMENT ELECTRIQUE

Serial No. ; 5001 ~ 7754

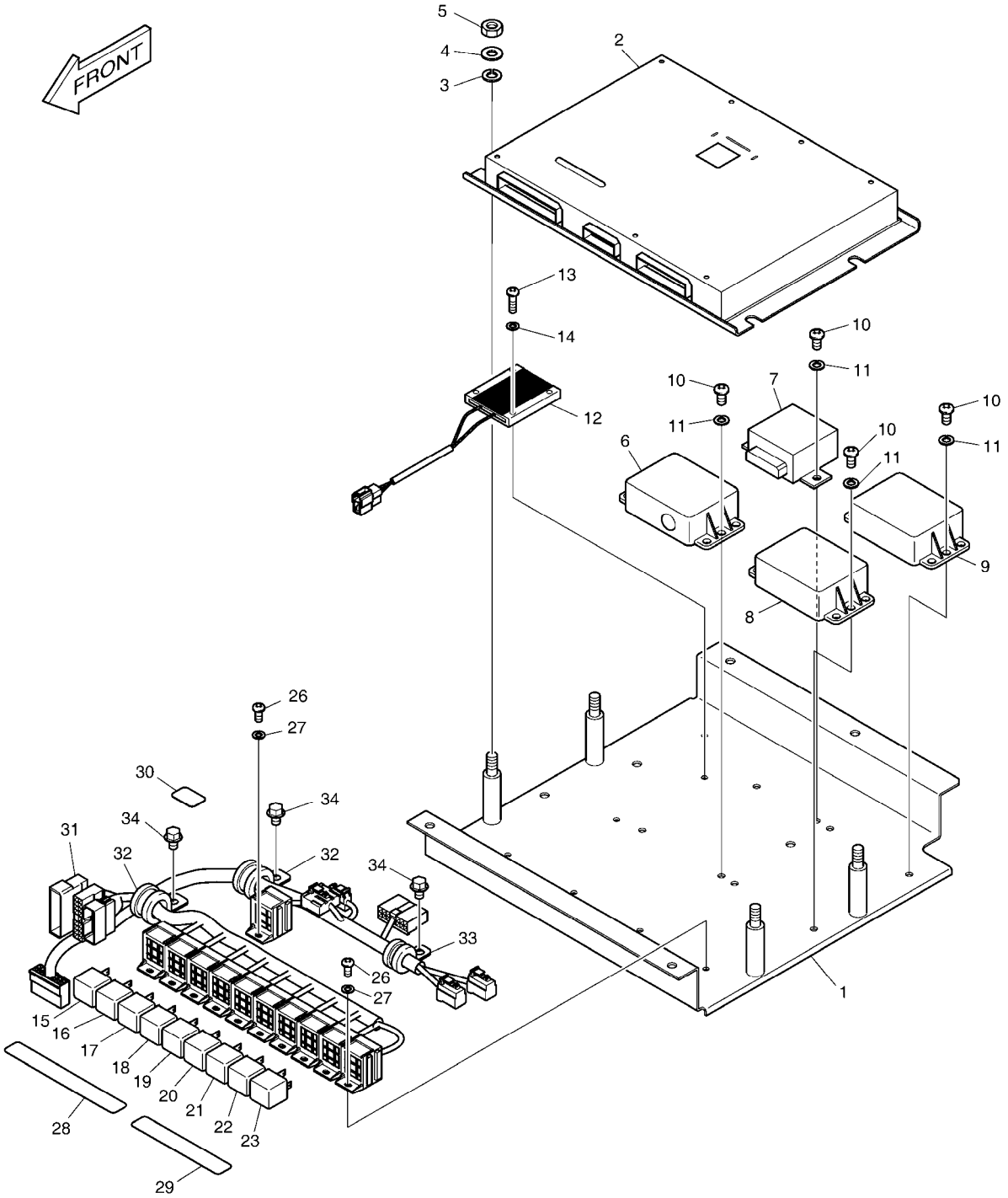

DATE	SEP. 12, 2012
4th EDITION	

Fig. 1690 ELECTRIC BOX ASS'Y EQUIPMENT ELECTRIQUE

Serial No. ; 5001 ~ 7754

Key No.	Part No.	Description	Description	Q'ty	S.C	Serial No.	ICA	Replaceable part	
								Part No.	Q'ty
1690 --	K1001324E	ELECTRIC BOX ASS'Y	BOITIER ELECTRIQUE	1		5001-6280	Y	300619-00316	1
	300619-00316	ELECTRIC ASSY;ELECTRIC BOX	BOITIER ELECTRIQUE	1		6281-			
1	621-02955C	PLATE;ELECTRIC BOX	PLAQUE	1					
2	K1001369C	CONTROLLER;EPOS	COMMANDE	1		5001-6280	Y	300611-00042	1
	300611-00042	CONTROLLER,EPOS	COMMANDE	1		6281-			
3	S5010613	WASHER;PLAIN	RONDELLE	4					
4	S5102603	WASHER,SPRING	RONDELLE	4					
5	S4012633	NUT	ECROU	4					
6	2543-9015	CONTROLLER;STARTER	CONTROLEUR	1					
7	543-00106	CONTROLLER;WIPER	CONTROLEUR	1					
8	2531-1003	CONVERTER;DC-DC	CONVERTISSEUR	1					
9	2531-1003	CONVERTER;DC-DC	CONVERTISSEUR	1					
10	S3450953	SCREW M6X12	VIS	8					
11	S5102303	WASHER;SPRING	RONDELLE	8					
12	545-00011	RESISTOR;AUXILIARY	RESISTANCE	1					
13	S3450863	SCREW	VIS	2					
14	S5100203	WASHER;SPRING	RONDELLE	2					
15	2544-9033	RELAY	RELAIS	1					
16	2544-9033	RELAY	RELAIS	1					
17	2544-9033	RELAY	RELAIS	1					
18	2544-9033	RELAY	RELAIS	1					
19	2544-9033	RELAY	RELAIS	1					
20	2544-9033	RELAY	RELAIS	1					
21	2544-9033	RELAY	RELAIS	1					
22	2544-9033	RELAY	RELAIS	1					
23	2544-9033	RELAY	RELAIS	1					
26	S3450833	SCREW	VIS	5					
27	S5100203	WASHER;SPRING	RONDELLE	5					
28	190-01192D2	PLATE;NAME(RELAY)	PLAQUE	1					
29	190-01192D7	PLATE;NAME(RELAY)	PLAQUE	1					
30	190-01192D8	PLATE;NAME(RELAY)	PLAQUE	1					
31	K1001370A	HARNESS;ELECTRIC BOX	HARNAIS	1					
32	124-00208D3	CLIP	AGRAFE	2					
33	124-00208D2	CLIP	AGRAFE	1					
34	K1001029	BOLT	BOULON	3					

DATE	SEP. 12, 2012
4th EDITION	

Fig. 1691 ELECTRIC BOX ASS'Y
EQUIPMENT ELECTRIQUE

Serial No. ; 7755 ~

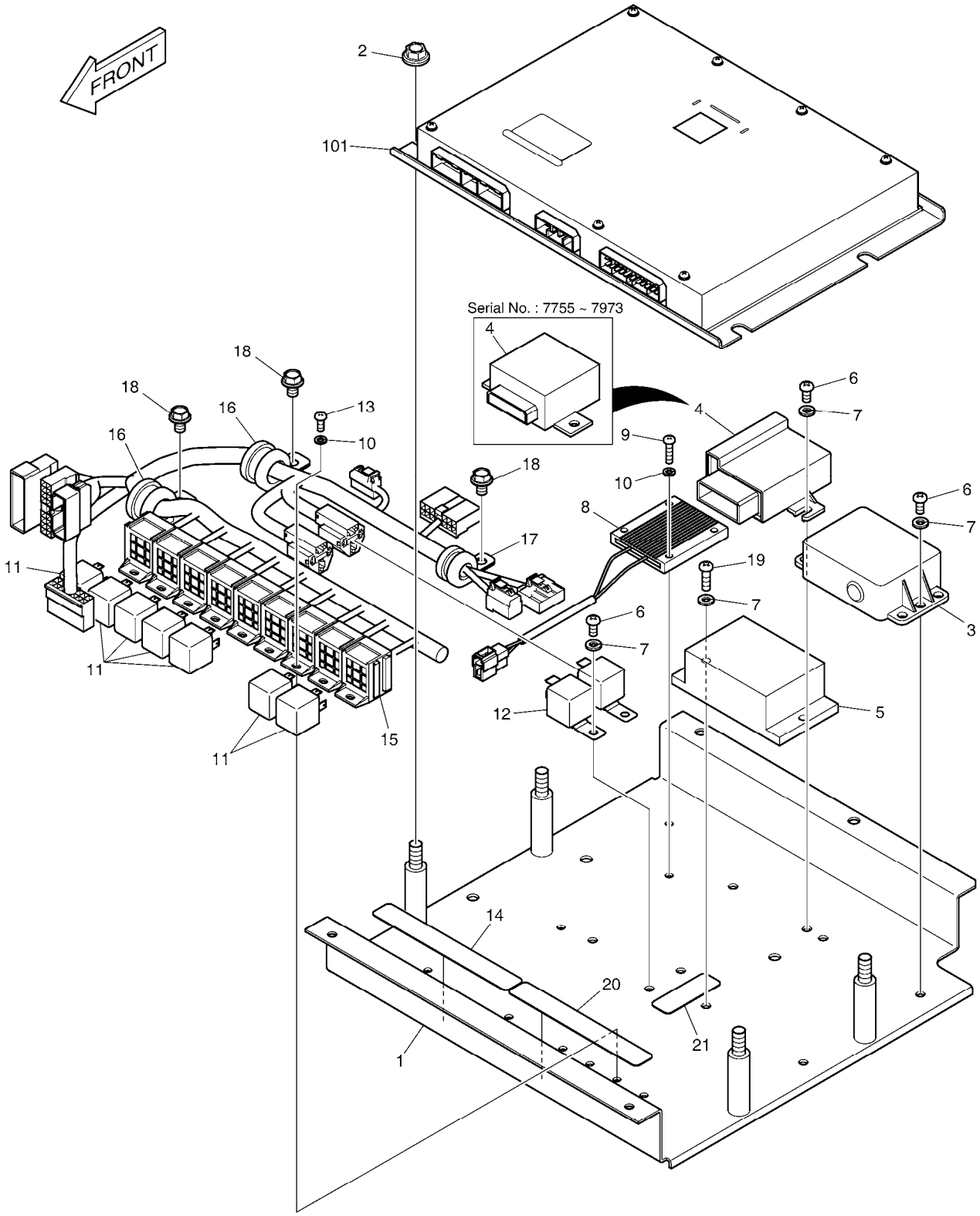

DATE	SEP. 12, 2012
4th EDITION	

Fig. 1691 ELECTRIC BOX ASS'Y EQUIPMENT ELECTRIQUE

Serial No. ; 7755 ~

Key No.	Part No.	Description	Description	Q'ty	S.C	Serial No.	ICA	Replaceable part	
								Part No.	Q'ty
1691 --	300619-00514A	ELECTRIC ASSY;EBOX	EQUIPMENT ELECTRIQUE	1		7755-9556			
	300619-00514B	ELECTRIC ASSY;EBOX	EQUIPMENT ELECTRIQUE	1		9557-			
1	250201-00795A	PLATE,ELECTRIC BOX	PLAQUE	1					
2	D913109	NUT,FLANGE	ECROU	4					
3	2543-9015	CONTROLLER;STARTER	CONTROLEUR	1					
4	543-00106	CONTROLLER;WIPER	CONTROLEUR	1		7755-7973			
	300611-00271	CONTROLLER;WIPER MOTOR	CONTROLEUR	1		7974-			
5	300612-00001A	CONVERTER;DC	CONVERTISSEUR	1					
6	S3450953	SCREW M6X12	VIS	6					
7	S5102303	WASHER;SPRING	RONDELLE	8					
8	545-00011	RESISTOR;AUXILIARY	RESISTANCE	1					
9	S3450863	SCREW	VIS	2					
10	S5100203	WASHER;SPRING	RONDELLE	6					
11	2544-9033	RELAY	RELAIS	7					
12	301202-00042	RELAY	RELAIS	2					
13	S3450833	SCREW	VIS	4					
14	190-01192D24	PLATE,NAME;RELAY	PLAQUE D'IDENTIFICATION	1					
15	310207-00425A	HARNESS,ELECTRIC BOX	HARNAIS	1					
16	124-00208D3	CLIP	AGRAFE	2					
17	124-00208D2	CLIP	AGRAFE	1					
18	K1001029	BOLT	BOULON	3					
19	S3450983	SCREW M16X20	VIS	2					
20	190-01192D29	PLATE,NAME;RELAY	PLAQUE D'IDENTIFICATION	1					
21	190-01192D26	PLATE,NAME;RELAY	PLAQUE D'IDENTIFICATION	1					
101	300611-00042	CONTROLLER,EPOS	COMMANDE	1		7755-9957	I	300611-00042A	1
	300611-00042A	CONTROLLER,EPOS	COMMANDE	1		09958-12604	I	300611-00042B	1
	300611-00042B	CONTROLLER,EPOS	COMMANDE	1		12605-			

DATE	SEP. 12, 2012
4th EDITION	

Fig. 1700 ELECTRIC PARTS - CABIN
PIECES ELECTRIQUES

Serial No. ;

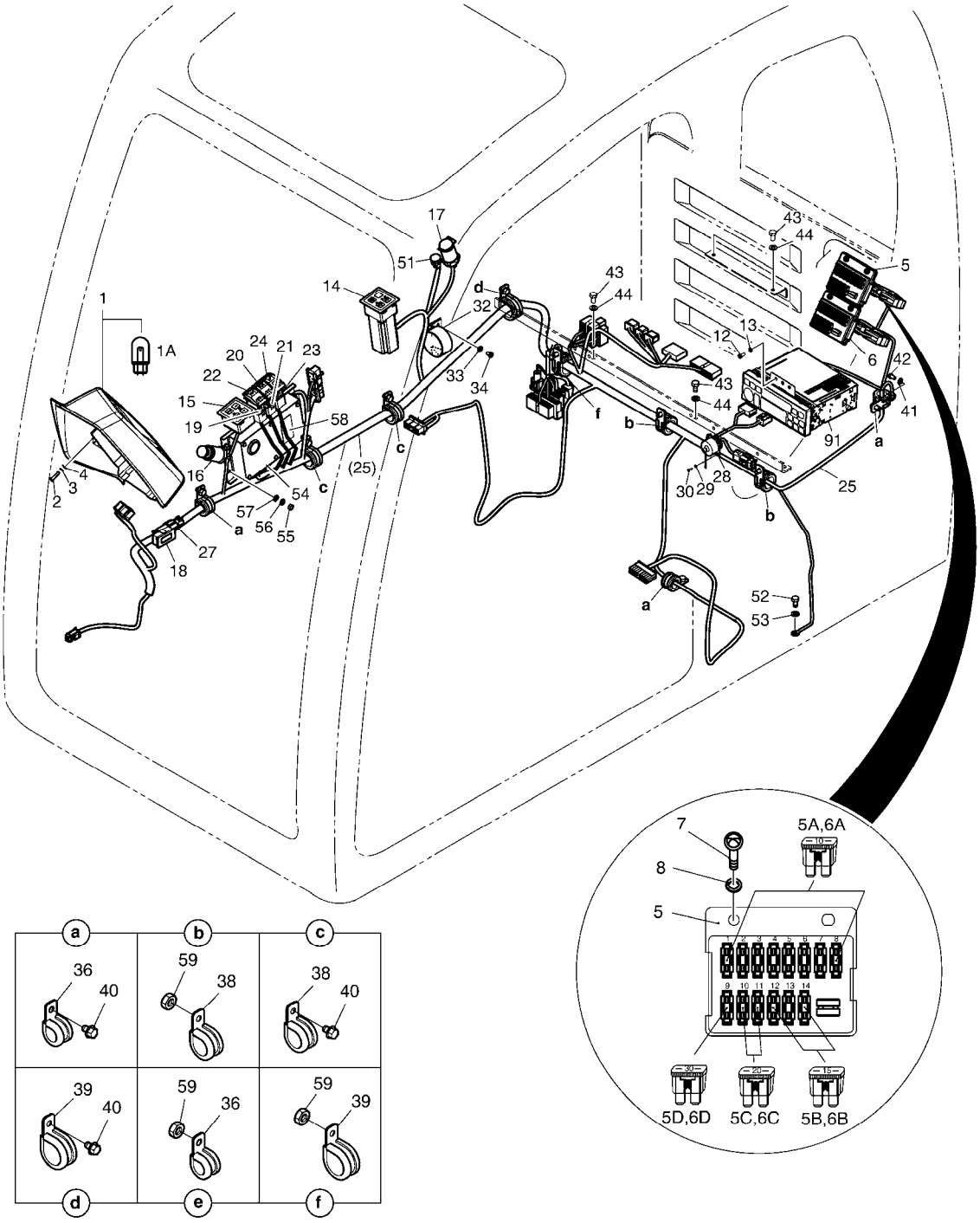

DATE	SEP. 12, 2012
4th EDITION	

Fig. 1700 ELECTRIC PARTS - CABIN
PIECES ELECTRIQUES

Serial No. ;

Key No.	Part No.	Description	Description	Q'ty	S.C	Serial No.	ICA	Replaceable part	
								Part No.	Q'ty
1700 --	K1001325Q	ELECTRIC PARTS-CABIN	EQUIPMENT ELECTRIQUE	-	D	5001-5626			
	300619-00056	ELECTRIC ASSY;CABIN	EQUIPMENT ELECTRIQUE	-	D	5627-6280			
	300619-00056A	ELECTRIC ASSY;CABIN	EQUIPMENT ELECTRIQUE	-	D	6281-6974			
	300619-00056B	ELECTRIC ASSY;CABIN	EQUIPMENT ELECTRIQUE	-	D	6975-7754			
	300619-00056C	ELECTRIC ASSY;CABIN	EQUIPMENT ELECTRIQUE	-	D	07755-12921			
	300619-00056E	ELECTRIC ASSY;CABIN	EQUIPMENT ELECTRIQUE	-	D	12922-			
1	539-00076E	PANEL;GAUGE	PANNEAU	1		5001-5299			
	K1051986	PANEL;GAUGE	PANNEAU	1		5300-6280	Y	300426-00012	1
	300426-00012	PANEL,GAUGE;3.8INCH	PANNEAU	1		06281-12921	I	300426-00012A	1
	300426-00012A	PANEL,GAUGE;3.8INCH	PANNEAU	1		12922-			
1A	515-00012A	. BULB	. AMPOULE	6					
2	S3450863	SCREW	VIS	4					
3	S5100203	WASHER;SPRING	RONDELLE	4					
4	S5000213	WASHER;PLAIN M5	RONDELLE	4					
5	K1001263A	BOX;FUSE	BOITE	1					
5A	2527-1016	. FUSE;BLADE 10A	. FUSIBLE	8					
5B	2527-1017	. FUSE;BLADE 15A	. FUSIBLE	3					
5C	2527-1018	. FUSE;BLADE 20A	. FUSIBLE	2					
5D	2527-1025	. FUSE;BLADE 30A	. FUSIBLE	1					
6	K1001263A	BOX;FUSE	BOITE	1					
6A	2527-1016	. FUSE;BLADE 10A	. FUSIBLE	8					
6B	2527-1017	. FUSE;BLADE 15A	. FUSIBLE	3					
6C	2527-1018	. FUSE;BLADE 20A	. FUSIBLE	2					
6D	2527-1025	. FUSE;BLADE 30A	. FUSIBLE	1					
7	S3450983	SCREW M16X20	VIS	4					
8	S5102303	WASHER;SPRING	RONDELLE	4					
12	S3450833	SCREW	VIS	4					
13	S5100203	WASHER;SPRING	RONDELLE	4					
14	543-00095	PANEL ASS'Y;WIPER CONTROL	PANNEAU	1					
15	543-00096	RADIO CONTROL PANEL ASS'Y	PANNEAU DE COMMANDE	1					
16	545-00001	LIGHTER;CIGAR	PLUS LEGER	1		5001-7754	I	300730-00006	1
	300730-00006	LIGHTER,CIGAR	PLUS LEGER	1		7755-			
17	527-00006	SOCKET;12V POWER	DOUILLE	1		5001-7754	I	K1053423	1
	K1053423	SOCKET;12V POWER	DOUILLE	1		7755-			
18	2528-9040	METER;HOUR	METRE	1					
19	549-00103	SWITCH;ROCKER(2STEP)	COMMUTATEUR	1					
20	K1002406D11	ACTUATOR;SWITCH	ACTIONNEUR	1					
21	549-00103	SWITCH;ROCKER(2STEP)	COMMUTATEUR	1					

DATE	SEP. 12, 2012
4th EDITION	

Fig. 1700 ELECTRIC PARTS - CABIN
PIECES ELECTRIQUES

Serial No. ;

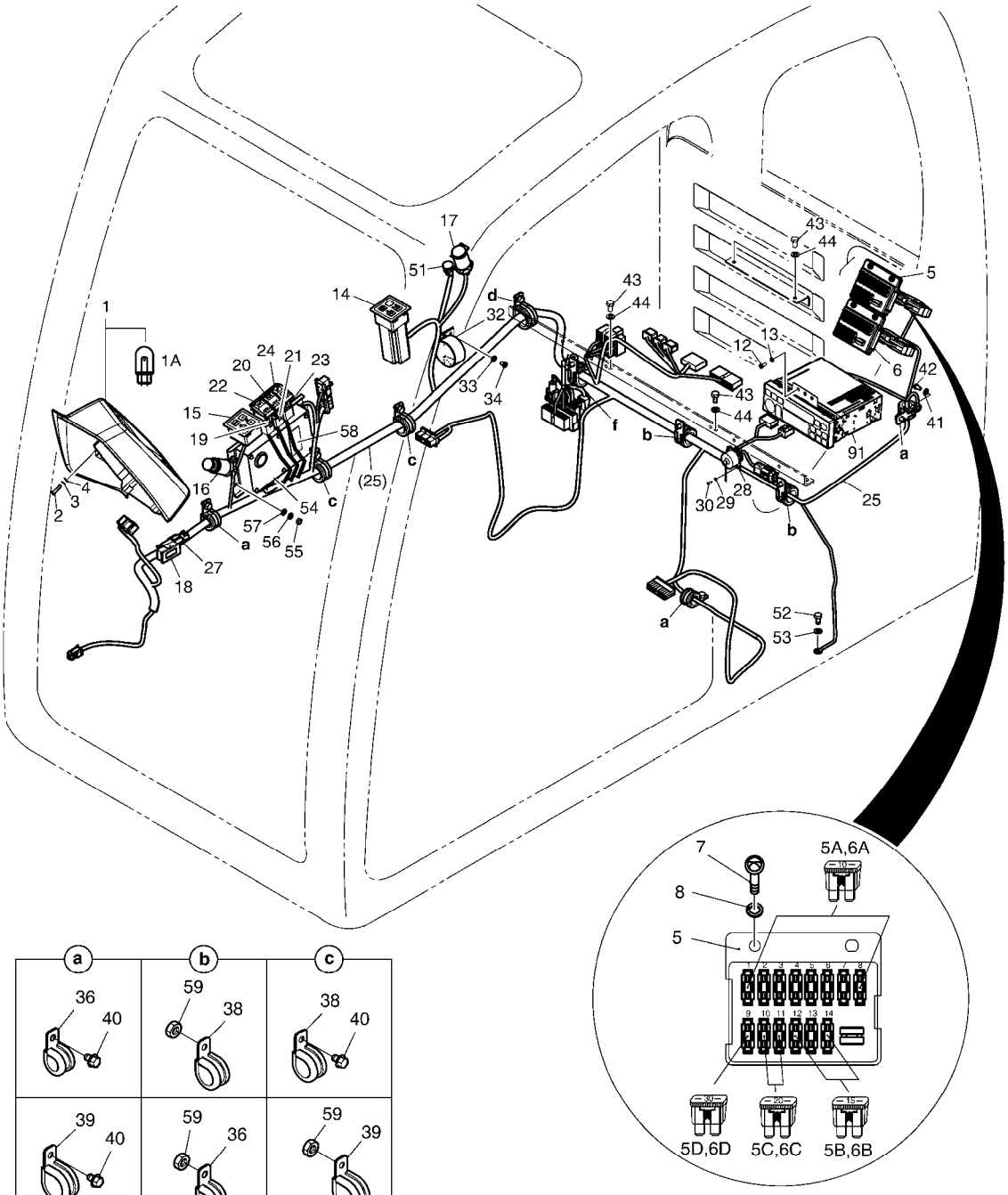

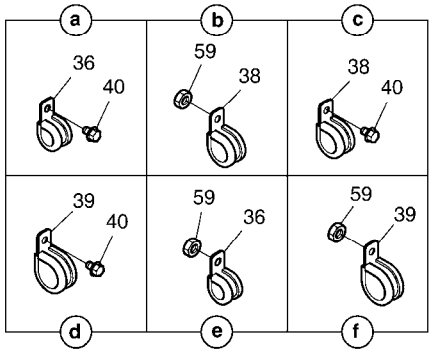

DATE	SEP. 12, 2012
4th EDITION	

Fig. 1700 ELECTRIC PARTS - CABIN
PIECES ELECTRIQUES

Serial No. ;

Key No.	Part No.	Description	Description	Q'ty	S.C	Serial No.	ICA	Replaceable part	
								Part No.	Q'ty
1700 -22	K1002406D12	ACTUATOR;SWITCH	ACTIONNEUR	1					
23	K1006572	SWITCH;BREAKER/SHEAR;2 LED	COMMUTATEUR	1					
24	K1002406D21	ACTUATOR;SWITCH	ACTIONNEUR	1					
25	K1001371G	HARNESS;CABIN	HARNAIS	1		5001-7754			
	310207-00417B	HARNESS,CABIN	HARNAIS	1		7755-			
27	530-00434B	HARNESS;HOUR METER JOINT	HARNAIS	1					
28	530-00477A	HARNESS;CHECK CONNECTOR	FAISCEAU	1		5001-7754	I	310207-00708	1
	310207-00708	HARNESS;CHECK CONNECTOR	HARNAIS	1		7755-			
29	S5100003	WASHER;SPRING	RONDELLE	4					
30	S3450343	SCREW	VIS	4					
32	2516-1116	BUZZER;PILOT	VIBREUR	1					
33	S5102303	WASHER;SPRING	RONDELLE	2					
34	S3450943	SCREW	VIS	2					
36	124-00208D3	CLIP	AGRAFE	3					
38	124-00208D4	CLIP	ATTACHE	4					
39	124-00208D5	CLIP	ATTACHE	2					
40	K1001029	BOLT	BOULON	5					
41	S5102303	WASHER;SPRING	RONDELLE	1					
42	S3450953	SCREW M6X12	VIS	1					
43	S0508653	BOLT	BOULON	4					
44	S5102503	WASHER,SPRING	RONDELLE	4					
51	547-00023	SENSOR;SUN	SONDE	1					
52	S0508653	BOLT	BOULON	1					
53	S5102503	WASHER,SPRING	RONDELLE	1					
54	K1003111	CONTROLLER;ENGINE THROTT	COMMANDE	1		5001-5626	I	300611-00003	1
	300611-00003	CONTROLLER,ENGINE THROTT	COMMANDE	1		5627-6974	I	300611-00138	1
	300611-00138	CONTROLLER,ENGINE THROTT	COMMANDE	1		6975-			
55	S4012333	NUT	ECROU	4					
56	S5102303	WASHER;SPRING	RONDELLE	4					
57	S5010313	WASHER	RONDELLE	4					
58	K1003113D4	PLATE;NAME	PLAQUE	1					
59	2121-1305	NUT	ECROU	5					
91	K1026654	CAR STEREO	STEREO DE VOITURE	1					

DATE	SEP. 12, 2012
4th EDITION	

Fig. 1710 ELECTRIC PARTS - CONTROL STAND
PIECES ELECTRIQUES

Serial No. ;

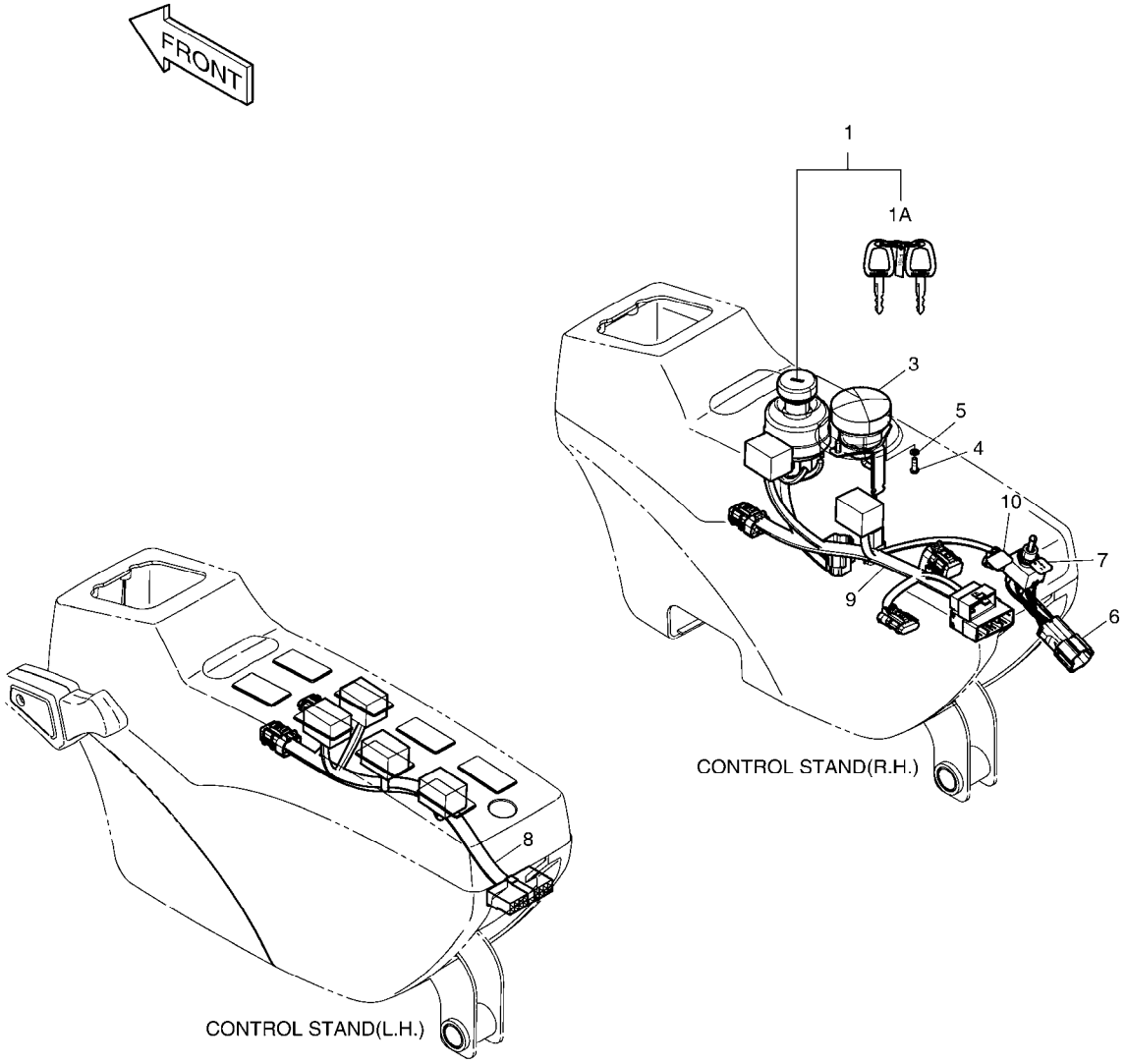

DATE	SEP. 12, 2012
4th EDITION	

Fig. 1710 ELECTRIC PARTS - CONTROL STAND
PIECES ELECTRIQUES

Serial No. ;

Key No.	Part No.	Description	Description	Q'ty	S.C	Serial No.	ICA	Replaceable part	
								Part No.	Q'ty
1710 --	K1001326G	ELECTRIC PARTS-STAND	EQUIPMENT ELECTRIQUE	-	D	5001-6341			
	300619-00793	ELECTRIC ASSY,STAND	EQUIPMENT ELECTRIQUE	-	D	6342-7754			
	300619-00793A	ELECTRIC ASSY,STAND	PIECES ELECTRIQUES	-	D	7755-			
1	K1001858A	SWITCH;STARTER	COMMUTATEUR	1					
1A	K1009605B	. KEY;STARTER	. CLAVETTE	2					
3	K1013846	DIAL;ENGINE CONTROL	CADRAN	1		5001-6341	Y	300661-00004	1
	300661-00004	DIAL,ENGINE CONTROL	CADRAN	1		6342-			
4	S3450583	SCREW	VIS	2					
5	S5100103	WASHER;SPRING	RONDELLE	2					
6	549-00090A	SWITCH;TOGGLE	COMMUTATEUR	1					
7	K1004427	PLATE;NAME	PLAQUE	1					
8	530-00415E	HARNESS;STAND(L.H)	FAISCEAU	1		5001-7754			
	K1002534A	HARNESS;STAND(L.H)	HARNAIS	1		7755-			
9	K1001373C	HARNESS;STAND(R.H)	FAISCEAU	1		5001-7754			
	310207-01182	HARNESS,STAND(R.H)	HARNAIS	1		7755-			
10	K1004426	PLATE;NAME	PLAQUE	1					

DATE	SEP. 12, 2012
4th EDITION	

Fig. 1720 ELECTRIC PARTS - RELATED
PIECES ELECTRIQUES

Serial No. ;

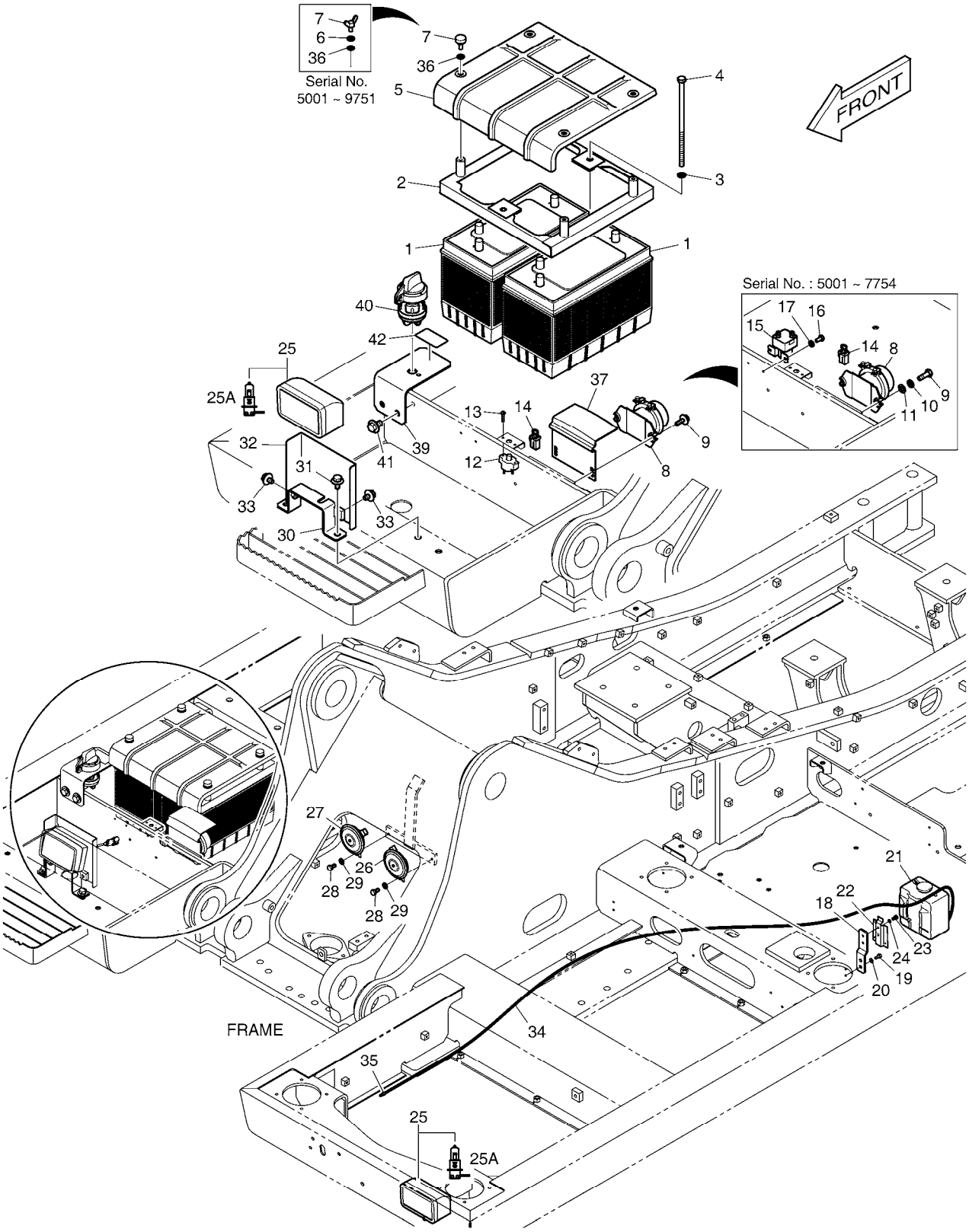

DATE	SEP. 12, 2012
4th EDITION	

Fig. 1720 ELECTRIC PARTS - RELATED PIECES ELECTRIQUES

Serial No. ;

Key No.	Part No.	Description	Description	Q'ty	S.C	Serial No.	ICA	Replaceable part	
								Part No.	Q'ty
1720 --	K1046733A	ELECTRIC PARTS;CHASSIS	EQUIPMENT ELECTRIQUE	-	D				
1	2506-1104	BATTERY	BATTERIE	2					
2	K1039521A	BRACKET	SUPPORT	1					
3	S5102603	WASHER,SPRING	RONDELLE	2					
4	DS0001079	BOLT	BOULON	2					
5	K1039068	COVER	COUVERTURE	1					
6	S5102503	WASHER,SPRING	RONDELLE	4		5001-9751			
7	S3050863	BOLT;WING	BOULON	4		5001-9751			
	K1018595	BOLT;KNOB	BOULON	4		9752-			
8	2544-9024	RELAY;BATTERY	RELAIS	1					
9	S0509066	BOLT	BOULON	2		5001-7754			
	DS0025039	BOLT;SET	BOULON	2		7755-			
10	S5102503	WASHER,SPRING	RONDELLE	2		5001-7754			
11	S5010503	WASHER	RONDELLE	2		5001-7754			
12	2527-9004	BREAKER;CIRCUIT	BRISEUR	1					
13	2120-1354	SCREW	VIS	2					
14	2527-1023A	LINK;FUSIBLE	LIEN	1					
15	2544-1022	RELAY;STARTER	RELAIS DEMARREUR	1		5001-7754			
16	S0504453	BOLT M6X1.0X12	BOULON	2		5001-7754			
17	S5102303	WASHER;SPRING	RONDELLE	2		5001-7754			
18	K1007668	BRACKET	SUPPORT	1					
19	S0508666	BOLT	BOULON	2					
20	S5102503	WASHER,SPRING	RONDELLE	2					
21	K1000789	TANK;RESERVE	RESERVOIR	1					
22	2195-1534	BRACKET	SUPPORT	1					
23	S0504453	BOLT M6X1.0X12	BOULON	2					
24	S5102303	WASHER;SPRING	RONDELLE	2					
25	534-00085	LAMP;HEAD	LAMPE	2		5001-9751			
	K1055454	LAMP;HEAD	LAMPE	2		9752-			
25A	2515-1016D4	. BULB;HALOGEN	. AMPOULE	1					
26	516-00014	HORN;HIGH	AVERTISSEUR	1		5001-6021	Y	300726-00002	1
	300726-00002	HORN;HIGH	AVERTISSEUR	1		6022-			
27	516-00015	HORN;LOW	AVERTISSEUR	1		5001-6021	Y	300726-00003	1
	300726-00003	HORN;LOW	AVERTISSEUR	1		6022-			
28	S0508666	BOLT	BOULON	2					
29	S5102503	WASHER,SPRING	RONDELLE	2					
30	195-02622C	BRACKET	SUPPORT	1		5001-9751			
	110406-01352	BRACKET	SUPPORT	1		9752-			

DATE	SEP. 12, 2012
4th EDITION	

Fig. 1720 ELECTRIC PARTS - RELATED
PIECES ELECTRIQUES

Serial No. ;

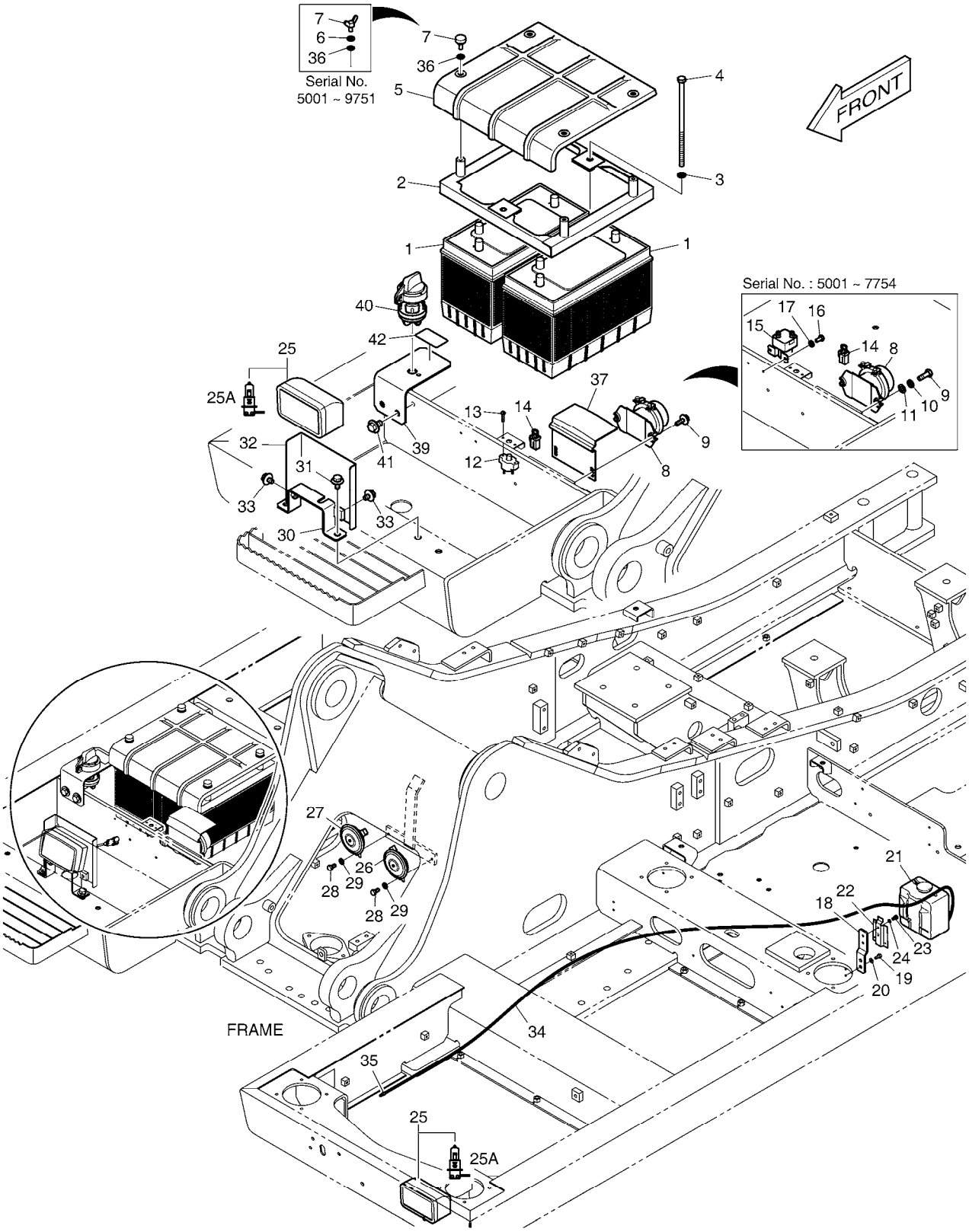

DATE	SEP. 12, 2012
4th EDITION	

Fig. 1720 ELECTRIC PARTS - RELATED
PIECES ELECTRIQUES

Serial No. ;

Key No.	Part No.	Description	Description	Q'ty	S.C	Serial No.	ICA	Replaceable part	
								Part No.	Q'ty
1720 -31	DS0025019	BOLT;SET	BOULON	2					
32	621-02643C	PLATE	PLAQUE	1					
33	DS0025013	BOLT;SET	BOULON	2					
34	4185-1777	HOSE;WATER	TUYAU FLEXIBLE	1					
35	2415-1018	ADAPTER;HOSE	ADAPTEUR	1					
36	S5010513	WASHER,PLAIN	RONDELLE	4					
37	110508-04839	COVER,RELAY	COUVERTURE	1		7755-			
39	110406-00608	BRACKET	SUPPORT	1		9752-			
40	K1057605	SWITCH;DISCONNECTOR	COMMUTATEUR	1		9752-			
41	DS0025015	BOLT;SET	BOULON	2		9752-			
42	600105-00002	NAME PLATE;SWITCH	PLAQUE D'INDETIFICATION	1		9752-			

DATE	SEP. 12, 2012
4th EDITION	

Fig. 1730 ELECTRIC PARTS - ENGINE
PIECES ELECTRIQUES

Serial No. ; 5001 ~ 7754

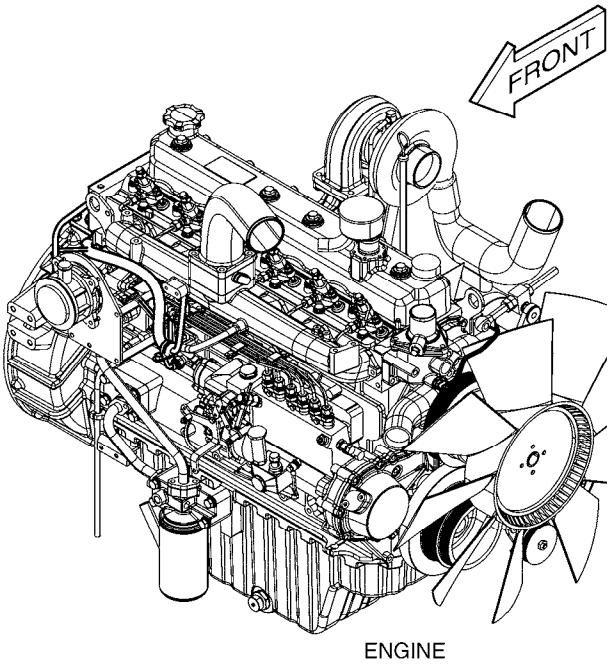

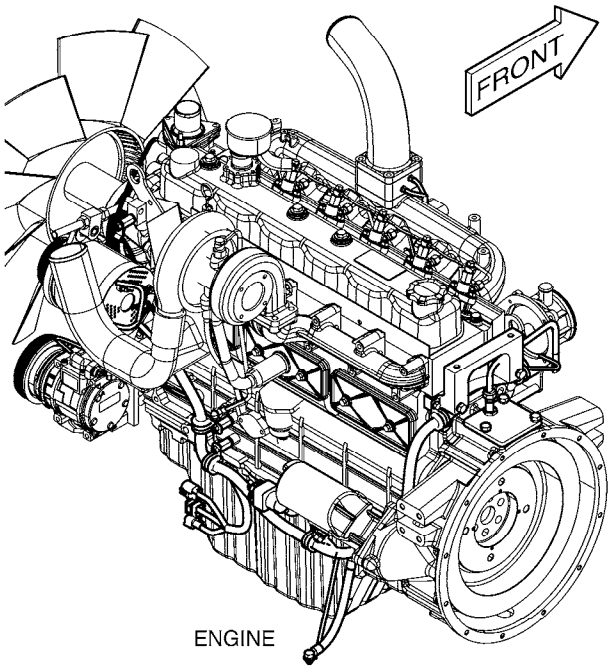

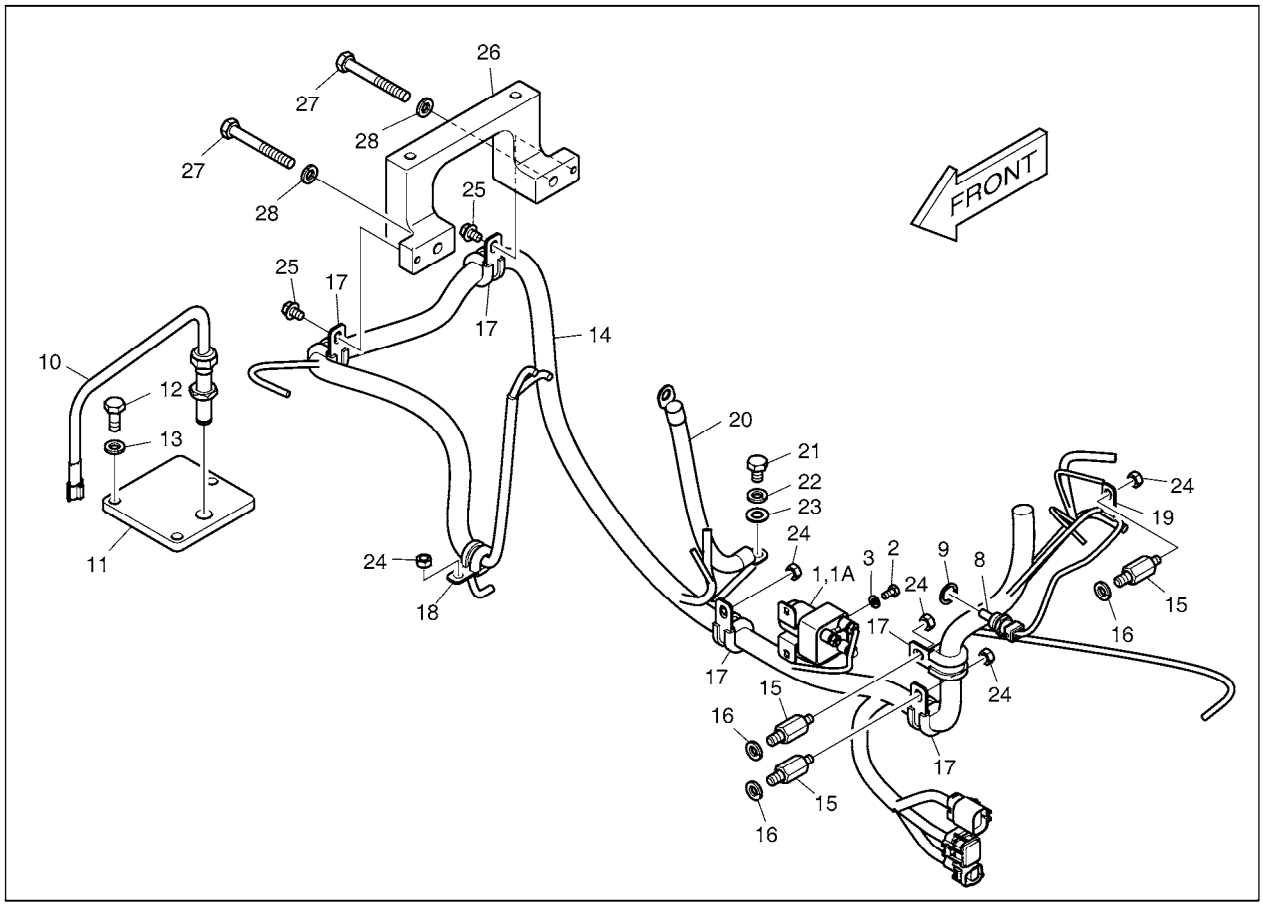

DATE	SEP. 12, 2012
4th EDITION	

Fig. 1730 ELECTRIC PARTS - ENGINE PIECES ELECTRIQUES

Serial No. ; 5001 ~ 7754

Key No.	Part No.	Description	Description	Q'ty	S.C	Serial No.	ICA	Replaceable part	
								Part No.	Q'ty
1730 --	K1001328C	ELECTRIC PARTS;ENGINE	EQUIPMENT ELECTRIQUE	-	D				
1	544-00007	RELAY;PREHEAT	RELAIS	1					
1A	527-00005	. FUSE;PREHEAT RELAY	. FUSIBLE	1					
2	S0504453	BOLT M6X1.0X12	BOULON	2					
3	S5102303	WASHER;SPRING	RONDELLE	2					
8	2547-9038B	SENSOR;WATER TEMP	CAPTEUR	1					
9	S8180251	PACKING	RONDELLE D'ETANCHEITE	1					
10	2547-1015	SENSOR;ENG SPEED	CAPTEUR	1					
11	2197-1793	BRACKET;SPEED SENSOR	SUPPORT	1					
12	S0512066	BOLT M10X1.5X25	BOULON	3					
13	S5102603	WASHER,SPRING	RONDELLE	3					
14	K1001398B	HARNESS;ENGINE	FAISCEAU	1					
15	2120-2235	BOLT;STUD	BOUCHON	3					
16	S5102603	WASHER,SPRING	RONDELLE	3					
17	124-00208D3	CLIP	AGRAFE	5					
18	124-00208D2	CLIP	AGRAFE	1					
19	2124-1509D10	CLIP	ATTACHE	1					
20	553-00001D4	CABLE;E/G EARTH	CABLE	1					
21	S0511653	BOLT	BOULON	1					
22	S5102603	WASHER,SPRING	RONDELLE	1					
23	S5010613	WASHER;PLAIN	RONDELLE	1					
24	2121-1305	NUT	ECROU	5					
25	K1001029	BOLT	BOULON	2					
26	K1010584	BLOCK	BLOC	1					
27	S0759166	BOLT	BOULON	2					
28	S5102603	WASHER,SPRING	RONDELLE	2					

DATE	SEP. 12, 2012
4th EDITION	

Fig. 1731 ELECTRIC PARTS - ENGINE
PIECES ELECTRIQUES

Serial No. ; 7755 ~

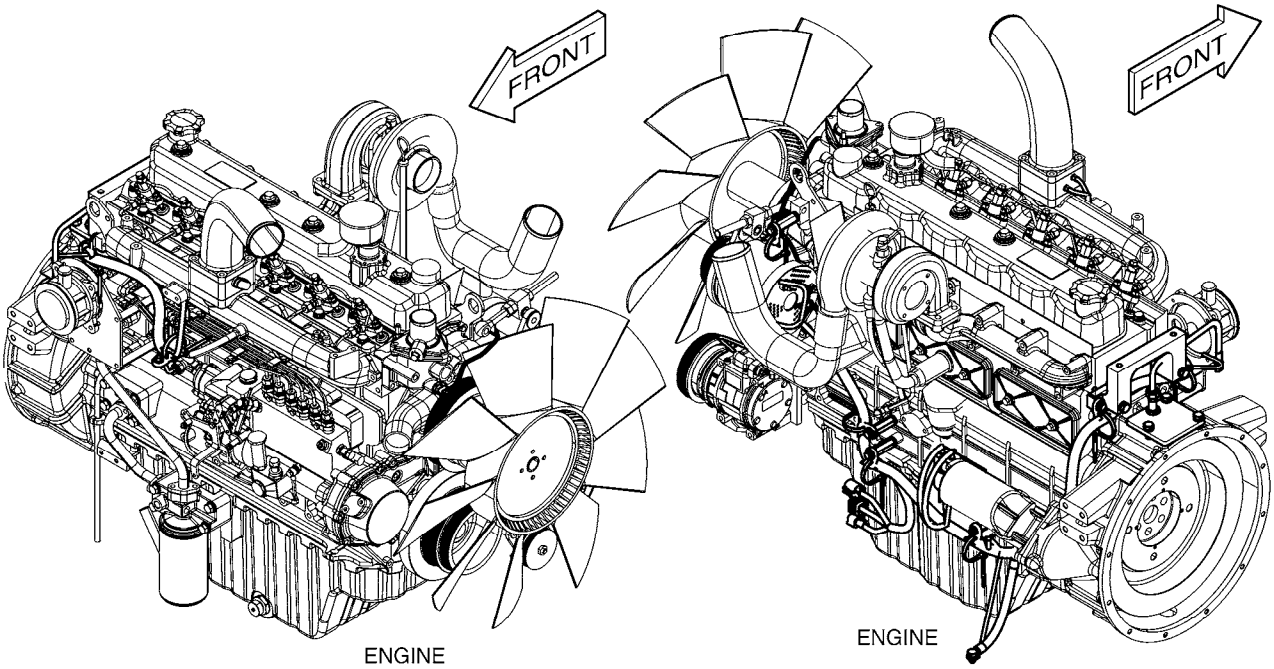

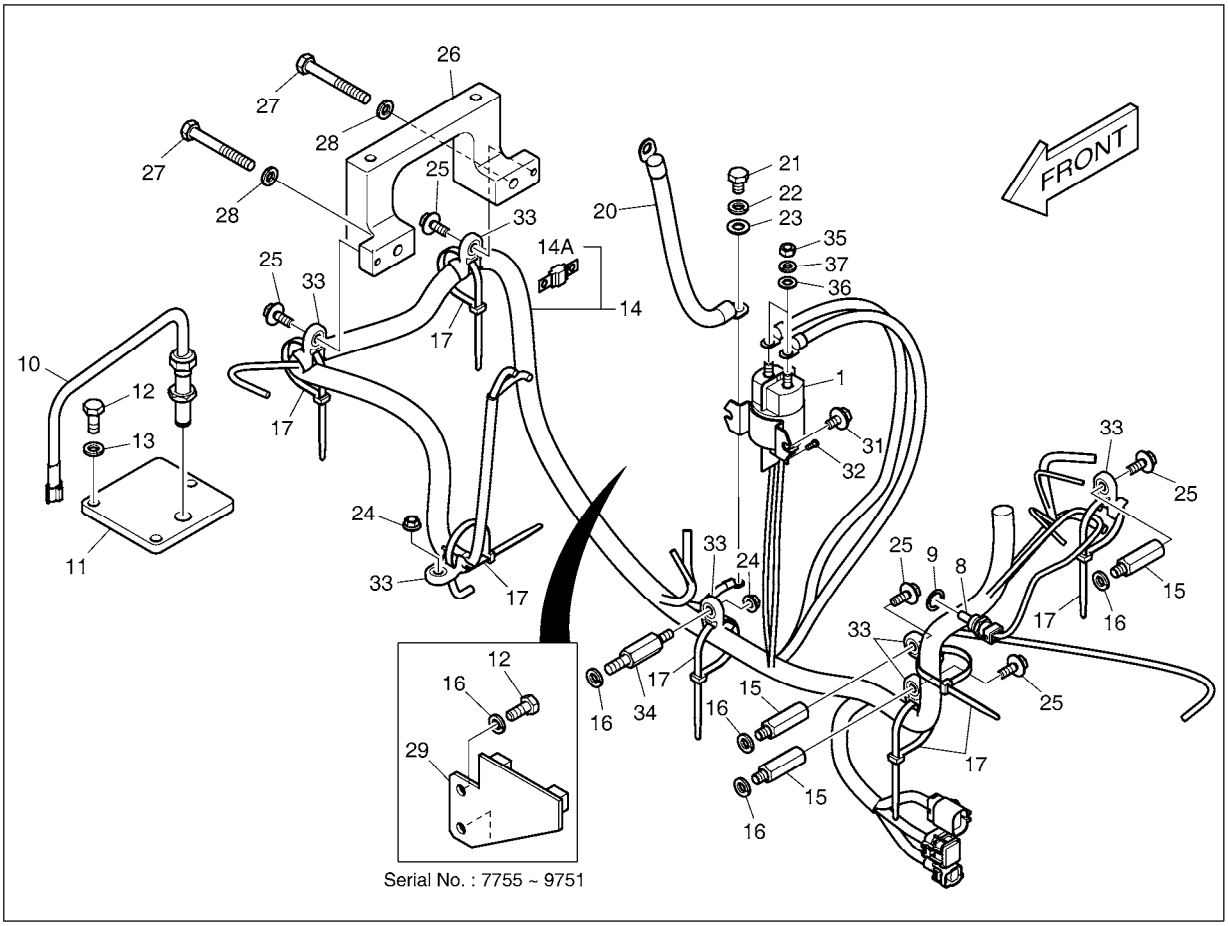

DATE	SEP. 12, 2012
4th EDITION	

Fig. 1731 ELECTRIC PARTS - ENGINE PIECES ELECTRIQUES

Serial No. ; 7755 ~

Key No.	Part No.	Description	Description	Q'ty	S.C	Serial No.	ICA	Replaceable part	
								Part No.	Q'ty
1731 --	K1001328C	ELECTRIC PARTS;ENGINE	EQUIPMENT ELECTRIQUE	-	D				
1	301202-00067	RELAY	RELAIS	1					
8	2547-9038B	SENSOR;WATER TEMP	CAPTEUR	1					
9	S8180251	PACKING	RONDELLE D'ETANCHEITE	1					
10	2547-1015	SENSOR;ENG SPEED	CAPTEUR	1					
11	2197-1793	BRACKET;SPEED SENSOR	SUPPORT	1					
12	S0512066	BOLT M10X1.5X25	BOULON	4		7755-9751			
	S0512066	BOLT M10X1.5X25	BOULON	2		9752-			
13	S5102603	WASHER,SPRING	RONDELLE	3					
14	310207-01044	HARNESS,ENGINE	FAISCEAU	1					
14A	300803-00086	. FUSE;200A	. FUSIBLE	1					
15	DS0026006	BOLT,STUD	BOULON A 6 PANS	3					
16	S5102603	WASHER,SPRING	RONDELLE	5		7755-9751			
	S5102603	WASHER,SPRING	RONDELLE	3		9752-			
17	310101-00035	TIE,CABLE	CRAVATE	7					
20	553-00001D4	CABLE;E/G EARTH	CABLE	1					
21	S0511653	BOLT	BOULON	1					
22	S5102603	WASHER,SPRING	RONDELLE	1					
23	S5010613	WASHER;PLAIN	RONDELLE	1					
24	2121-1305	NUT	ECROU	2					
25	DS0025049	BOLT	BOULON	5					
26	K1010584	BLOCK	BLOC	1					
27	S0759166	BOLT	BOULON	2					
28	S5102603	WASHER,SPRING	RONDELLE	2					
29	110406-01141	BRACKET	SUPPORT	1		7755-9751			
31	DS0025033	BOLT;SET	BOULON	2					
32	S3450573	SCREW M4X0.7X10	VIS	2					
33	110420-00330	BRACKET	SUPPORT	7					
34	120117-00071	BOLT,STUD	BOULON A 6 PANS	1					
35	S4012533	NUT	ECROU	2		9752-			
36	S5010513	WASHER,PLAIN	RONDELLE	2		9752-			
37	S5102503	WASHER,SPRING	RONDELLE	2		9752-			

DATE	SEP. 12, 2012
4th EDITION	

Fig. 1740 ALTERNATOR MOUNTING ALTERNATEUR

Serial No. ;

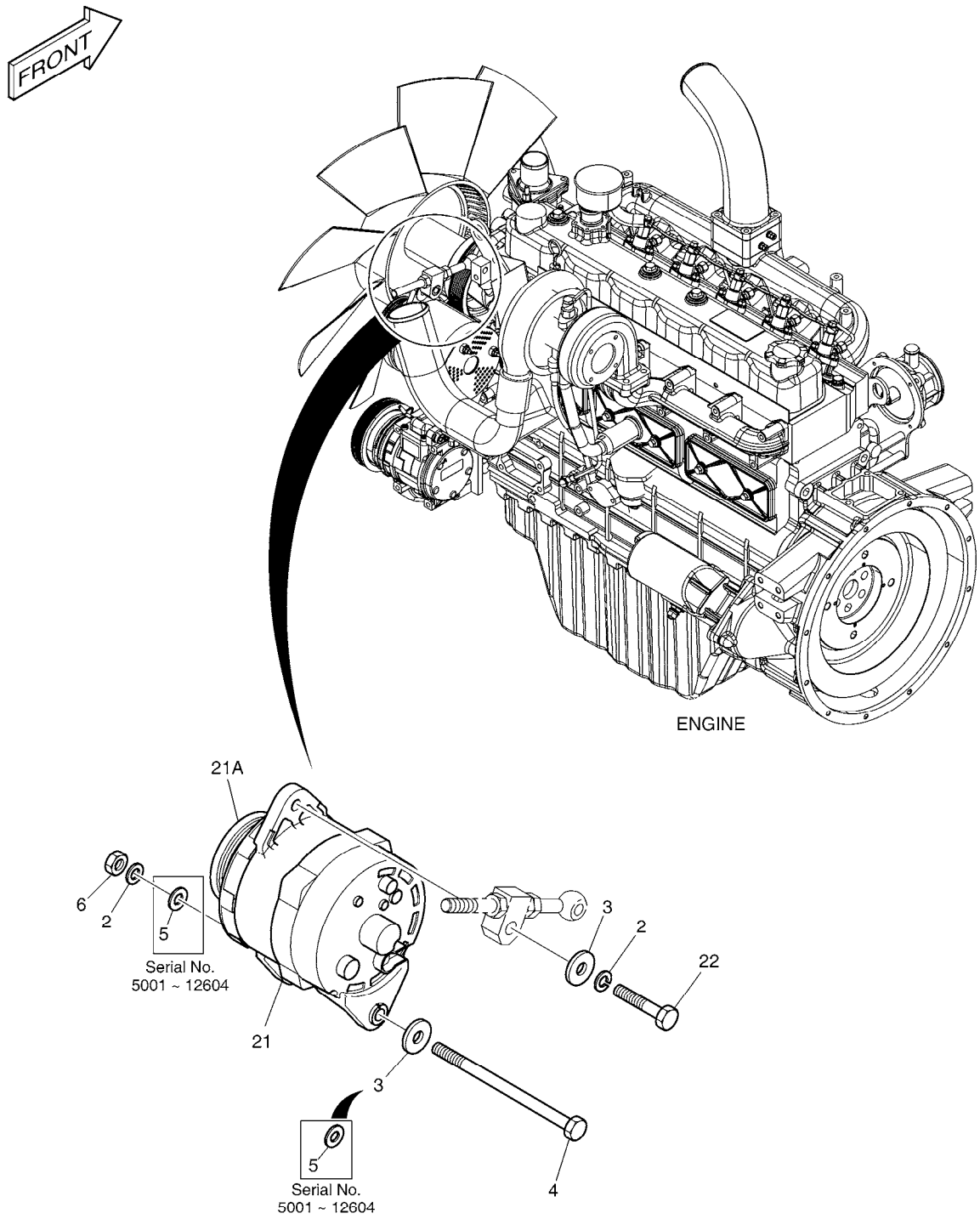

DATE	SEP. 12, 2012
4th EDITION	

Fig. 1740 ALTERNATOR MOUNTING ALTERNATEUR

Serial No. ;

Key No.	Part No.	Description	Description	Q'ty	S.C	Serial No.	ICA	Replaceable part	
								Part No.	Q'ty
1740 --	K1007371	ALTERNATOR MOUNTING	SUPPORT D'ALTERNATEU	-	D	05001-12604			
	300619-01893	ALTERNATOR MOUNTING	SUPPORT D'ALTERNATEU	-	D	12605-			
2	S5102703	WASHER;SPRING	RONDELLE	2					
3	2114-1058D54	WASHER	RONDELLE	1		05001-12604			
	DS0401188	WASHER	RONDELLE	2		12605-			
4	S0562653	BOLT M12X1.75X160	BOULON	1		05001-12604	I	S0562666	1
	S0562666	BOLT M12X1.75X160	BOULON	1		12605-			
5	S5010713	WASHER;PLAIN	RONDELLE	2		05001-12604			
6	S4012733	NUT	ECROU	1					
21	K1010702	ALTERNATOR 60A	ALTERNATEUR	1		5001-6341	Y	300901-00034	1
	300901-00034	ALTERNATOR;60A	ALTERNATEUR	1		6342-			
21A	130707-00030	. PULLEY,ALTERNATOR	. POULIE	1		5001-6341	Y	130707-00042	1
	130707-00042	. PULLEY,ALTERNATOR	. POULIE	1		6342-			
22	S0760853	BOLT	BOULON	1					

DATE	SEP. 12, 2012
4th EDITION	

Fig. 1750 ELECTRIC PARTS - WORKING LAMP
EQUIPMENT ELECTRIQUE

Serial No. ;

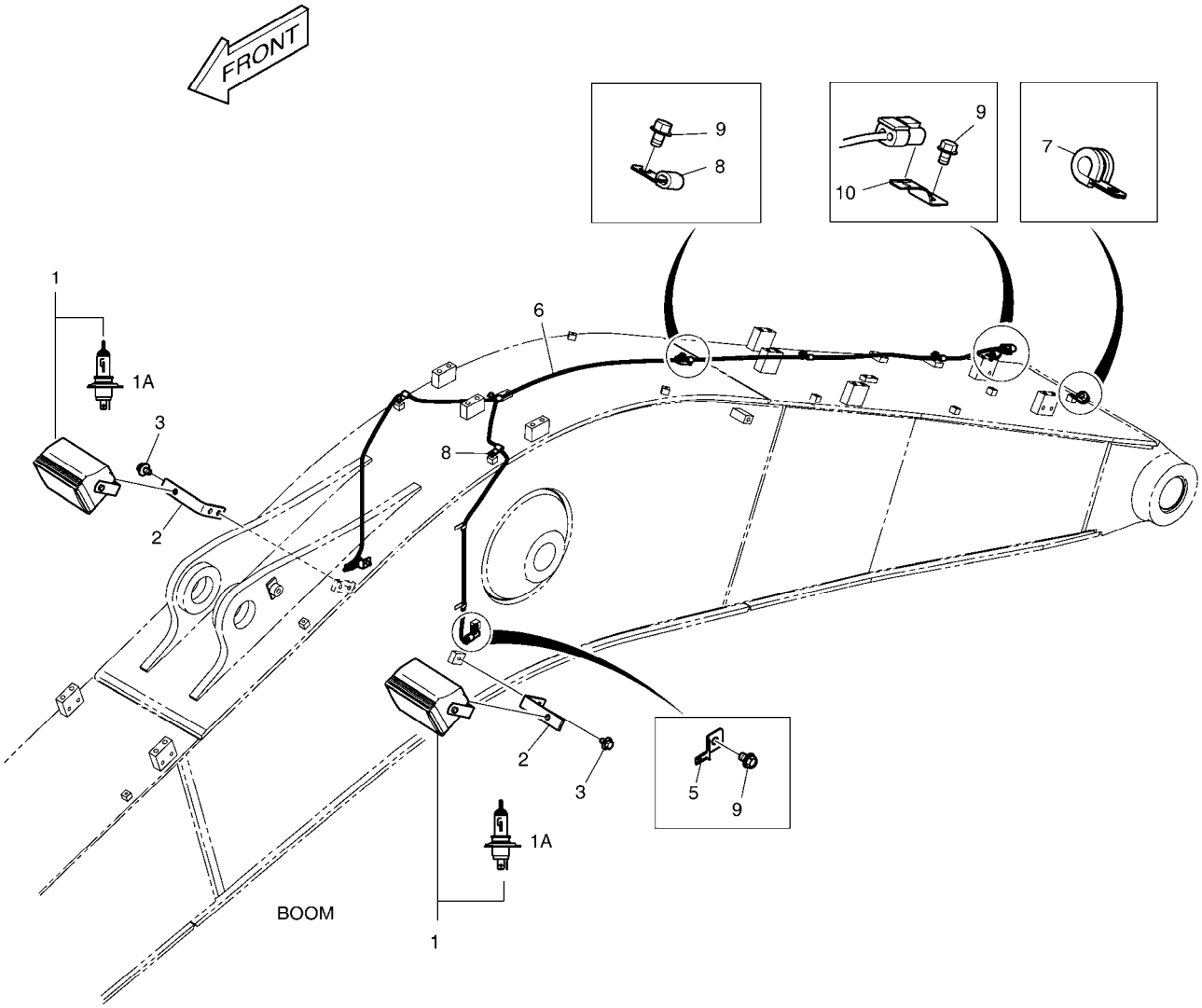

DATE	SEP. 12, 2012
4th EDITION	

Fig. 1750 ELECTRIC PARTS - WORKING LAMP
EQUIPMENT ELECTRIQUE

Serial No. ;

Key No.	Part No.	Description	Description	Q'ty	S.C	Serial No.	ICA	Replaceable part	
								Part No.	Q'ty
1750 --	K1001329A	ELECTRIC PARTS;WORKING LAI	EQUIPMENT ELECTRIQUE	-	D				
1	534-00064	LAMP ASS'Y;WORKING	LAMPE	2					
1A	2515-1022D1	. BULB;HALOGEN	. AMPOULE	1					
2	2195-2394B	BRACKET	SUPPORT	2					
3	DS0025019	BOLT;SET	BOULON	4					
5	2197-1661	BRACKET	SUPPORT	2					
6	530-00418D2	HARNESS;WORKING LAMP	FAISCEAU	1					
7	124-00208D2	CLIP	AGRAFE	1					
8	2124-1509D1	CLIP	AGRAFE	6					
9	K1001029	BOLT	BOULON	8					
10	2197-1660	BRACKET	SUPPORT	1					

DATE	SEP. 12, 2012
4th EDITION	

Fig. 1760 ELECTRIC WIRING
POSE DE FILES ELECTRIQUES

Serial No. ;

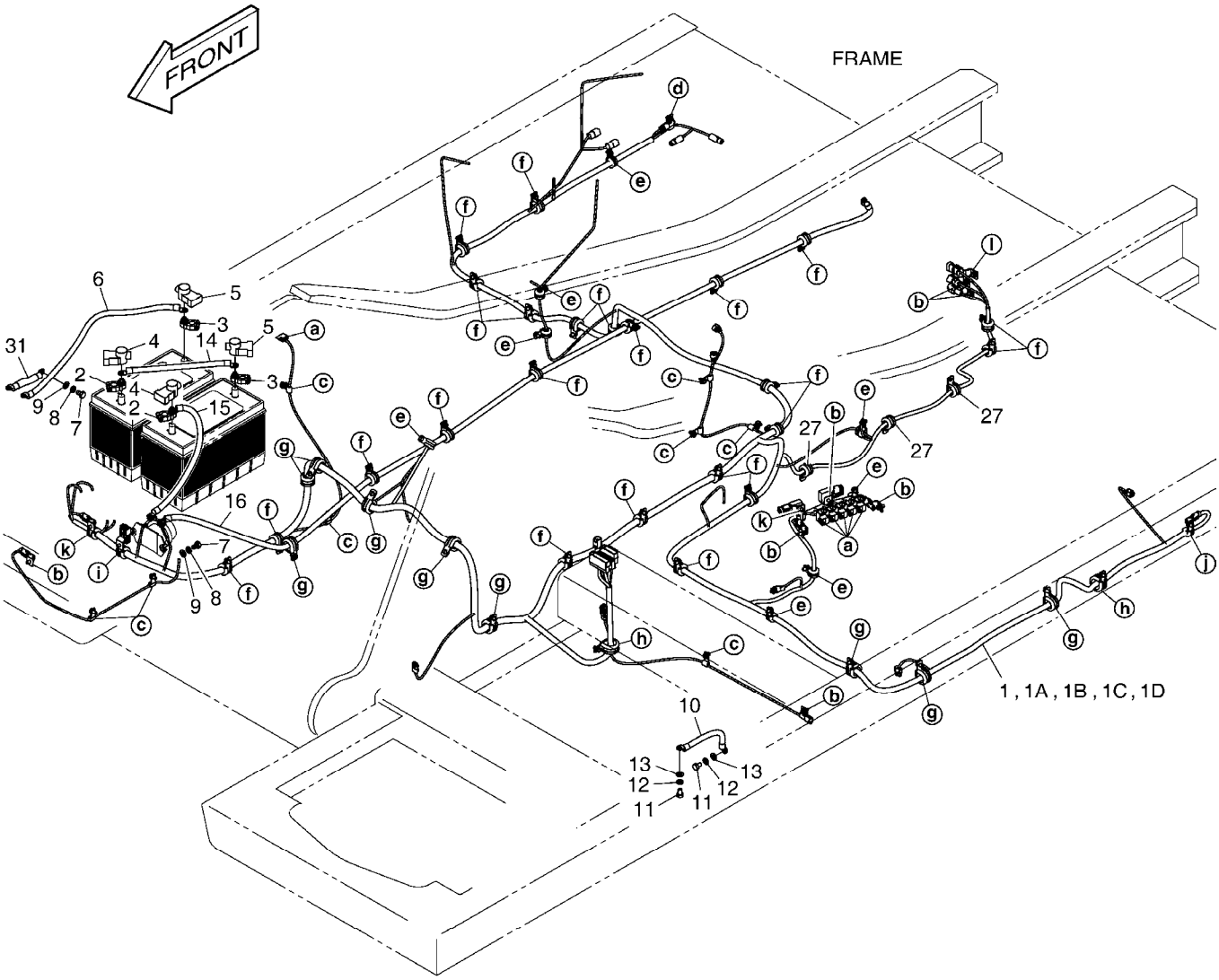

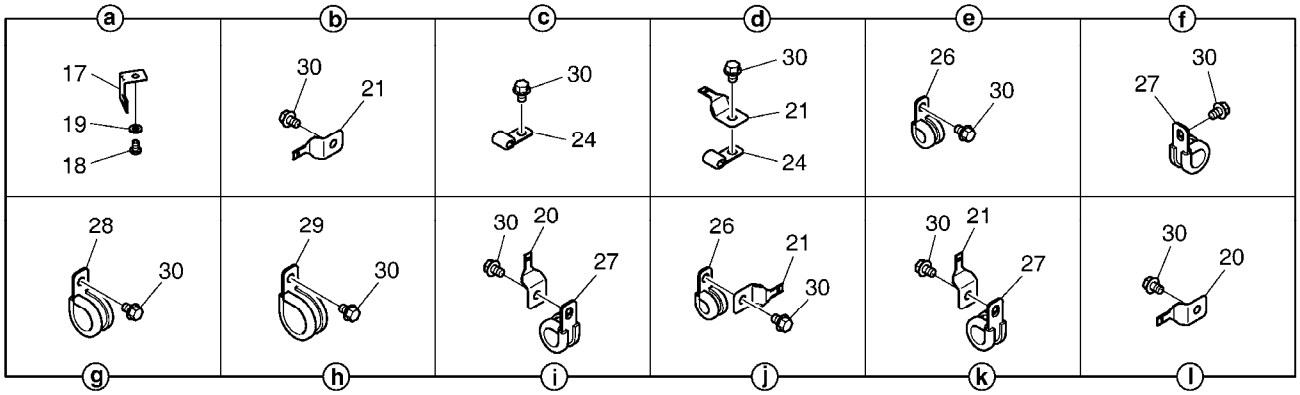

DATE	SEP. 12, 2012
4th EDITION	

Fig. 1760 ELECTRIC WIRING
POSE DE FILES ELECTRIQUES

Serial No. ;

Key No.	Part No.	Description	Description	Q'ty	S.C	Serial No.	ICA	Replaceable part	
								Part No.	Q'ty
1760 --	K1046430	ELECTRIC WIRING	POSE DE FILES ELECTRIQU	-	D	5001-6171			
	300619-00265	ELECTRIC ASSY;WIRING	POSE DE FILES ELECTRIQU	-	D	6172-			
1	K1001374G	HARNESS;MAIN	FAISCEAU	1		5001-7754			
	310207-01176	HARNESS,MAIN	FAISCEAU	1		7755-			
1A	2548-1027	. DIODE	. DIODE	4					
1B	548-00003A	. DIODE;ZENER	. DIODE	1					
1C	K1000814	. DIODE;4 PIN	. DIODE	1					
1D	K1000815	. DIODE;8 PIN	. DIODE	1					
2	2550-1014D1	TERMINAL;BATTERY(+)	BORNE	2					
3	2550-1014D2	TERMINAL;BATTERY(-)	BORNE	2					
4	2160-1212	CAP;BATT. TML (+)	CHAPEAU	2					
5	2160-1213	CAP;BATT. TML (-)	CHAPEAU	2					
6	2553-1275D78	CABLE;BATT RELAY	CABLE	1					
7	S0511653	BOLT	BOULON	2					
8	S5102603	WASHER,SPRING	RONDELLE	2					
9	S5010613	WASHER;PLAIN	RONDELLE	2					
10	2553-1275D39	CABLE;EARTH	CABLE	1					
11	S0511653	BOLT	BOULON	2					
12	S5102603	WASHER,SPRING	RONDELLE	2					
13	S5010613	WASHER;PLAIN	RONDELLE	2					
14	2553-1275D46	CABLE;BATT-BATT	CABLE	1					
15	2553-1275D7	CABLE;BATT-BATT RELAY 60R	CABLE	1		5001-9751			
	2553-1275D69	CABLE;BATT-BATT RELAY 60R	CABLE	1		9752-			
16	2553-1275D88	CABLE;BATT RY-STARTER	CABLE	1		5001-6171			
	2553-1275D81	CABLE;BATT RY-STARTER	CABLE	1		6172-			
17	2195-3500	BRACKET	SUPPORT	6					
18	S0504453	BOLT M6X1.0X12	BOULON	6					
19	S5102303	WASHER;SPRING	RONDELLE	6					
20	2197-1660	BRACKET	SUPPORT	2					
21	2197-1661	BRACKET	SUPPORT	11					
24	2124-1509D1	CLIP	AGRAFE	9					
26	124-00208D2	CLIP	AGRAFE	9					
27	124-00208D3	CLIP	AGRAFE	26					
28	124-00208D4	CLIP	ATTACHE	9					
29	124-00208D5	CLIP	ATTACHE	2					
30	K1001029	BOLT	BOULON	63					
31	310203-00020	CABLE,EARTH	CABLE	1		9752-			

DATE	SEP. 12, 2012
4th EDITION	

Fig. 1770 HEATER PIPING(1)
CONDUITES DE CHAUFFAGE

Serial No. ;

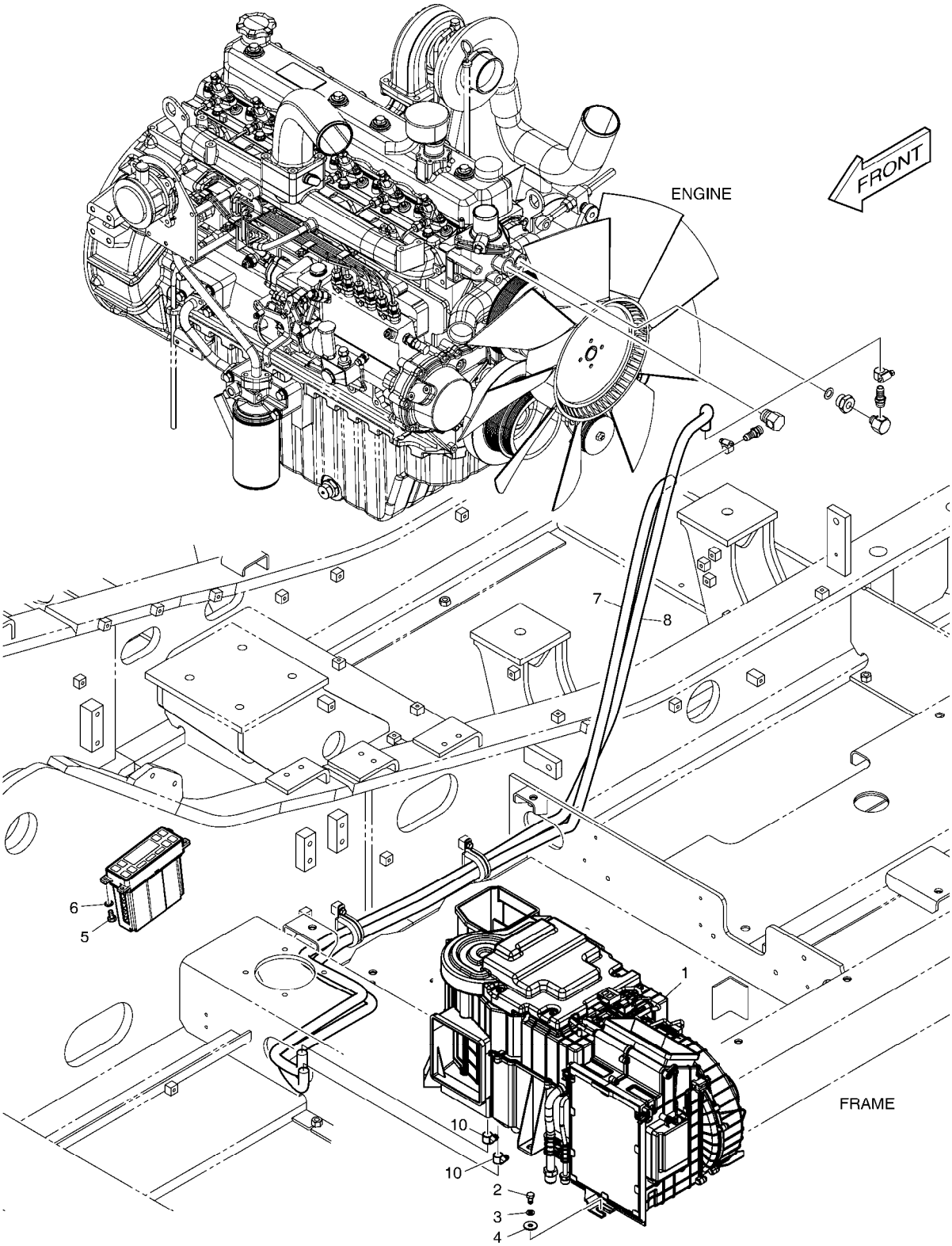

DATE	SEP. 12, 2012
4th EDITION	

Fig. 1770 HEATER PIPING(1)
CONDUITES DE CHAUFFAGE

Serial No. ;

Key No.	Part No.	Description	Description	Q'ty	S.C	Serial No.	ICA	Replaceable part	
								Part No.	Q'ty
1770 --	K1001331E	AIR CONDITIONER	REFRIGERATION	-	D				
1	920-00127A	UNIT;AIR CON. & HEATING	UNITE	1					
2	S0508653	BOLT	BOULON	6					
3	S5102503	WASHER,SPRING	RONDELLE	6					
4	2114-1058D29	WASHER	RONDELLE	6					
5	S3450833	SCREW	VIS	4					
6	S5000213	WASHER;PLAIN M5	RONDELLE	4					
7	2185-1308D5	HOSE;RUBBER	TUYAU FLEXIBLE	1					
8	2185-1308D5	HOSE;RUBBER	TUYAU FLEXIBLE	1					
10	S8450016	CLAMP	COLLIER	2					

DATE	SEP. 12, 2012
4th EDITION	

Fig. 1780 HEATER PIPING(2) CONDUITES DE CHAUFFAGE

Serial No. ;

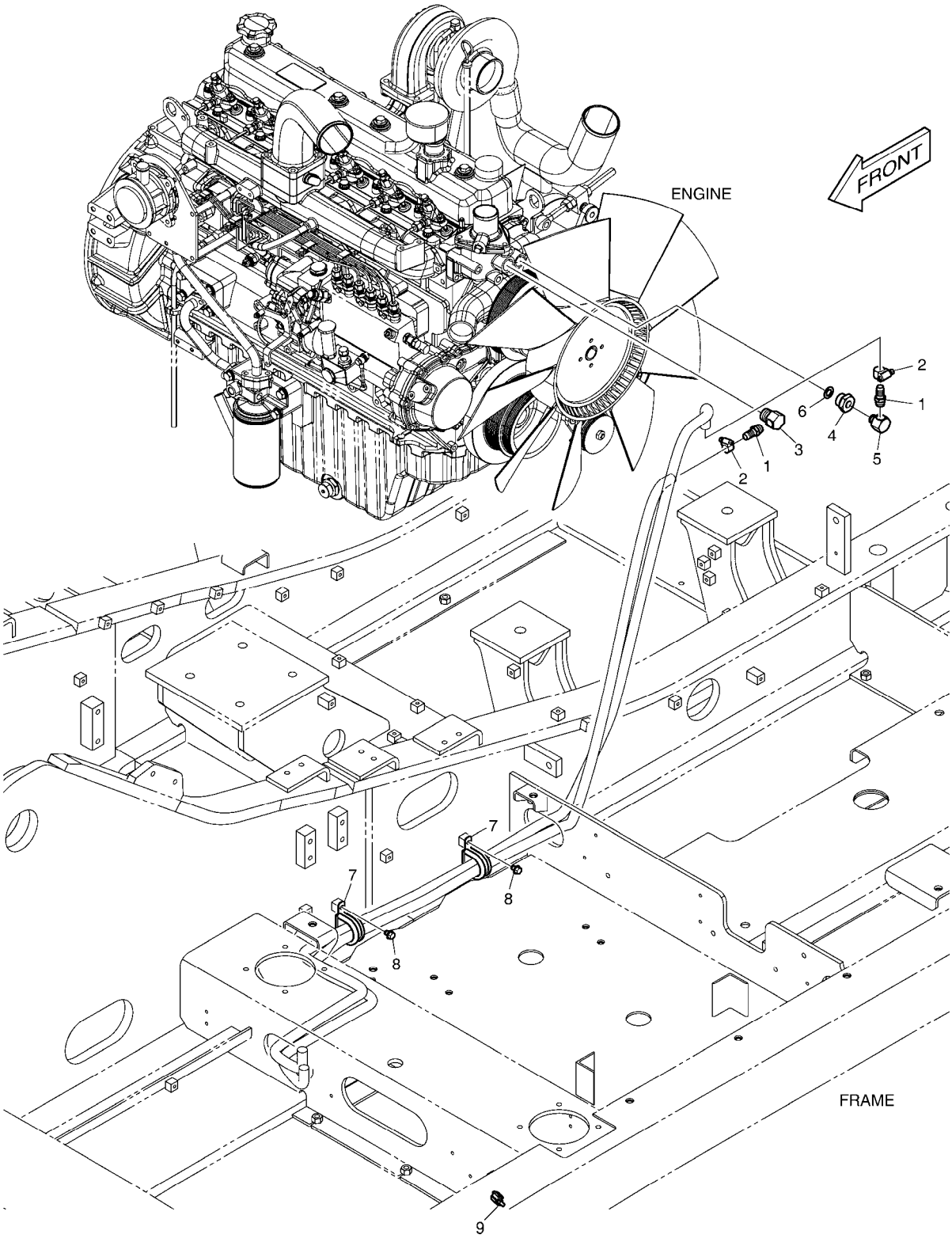

DATE	SEP. 12, 2012
4th EDITION	

Fig. 1780 HEATER PIPING(2) CONDUITES DE CHAUFFAGE

Serial No. ;

Key No.	Part No.	Description	Description	Q'ty	S.C	Serial No.	ICA	Replaceable part	
								Part No.	Q'ty
1780 --	K1045898	AIR CONDITIONER	REFRIGERATION	-	D				
1	2181-2774	NIPPLE;HOSE	MAMELON	2					
2	S8450016	CLAMP	COLLIER	2					
3	2181-1159	ADAPTER	ADAPTEUR	1					
4	2181-1160A	ADAPTER	ADAPTEUR	1					
5	2181-1161A	ADAPTER	ADAPTEUR	1					
6	S8180411	SEAL;COPPER	CACHET	1					
7	124-00208D7	CLIP	AGRAFE	2					
8	K1001029	BOLT	BOULON	2					
9	547-00024A	SENSOR;AMBENT	SONDE	1					

DATE	SEP. 12, 2012
4th EDITION	

Fig. 1790 AIRCON UNIT REFRIGERATION

Serial No. ;

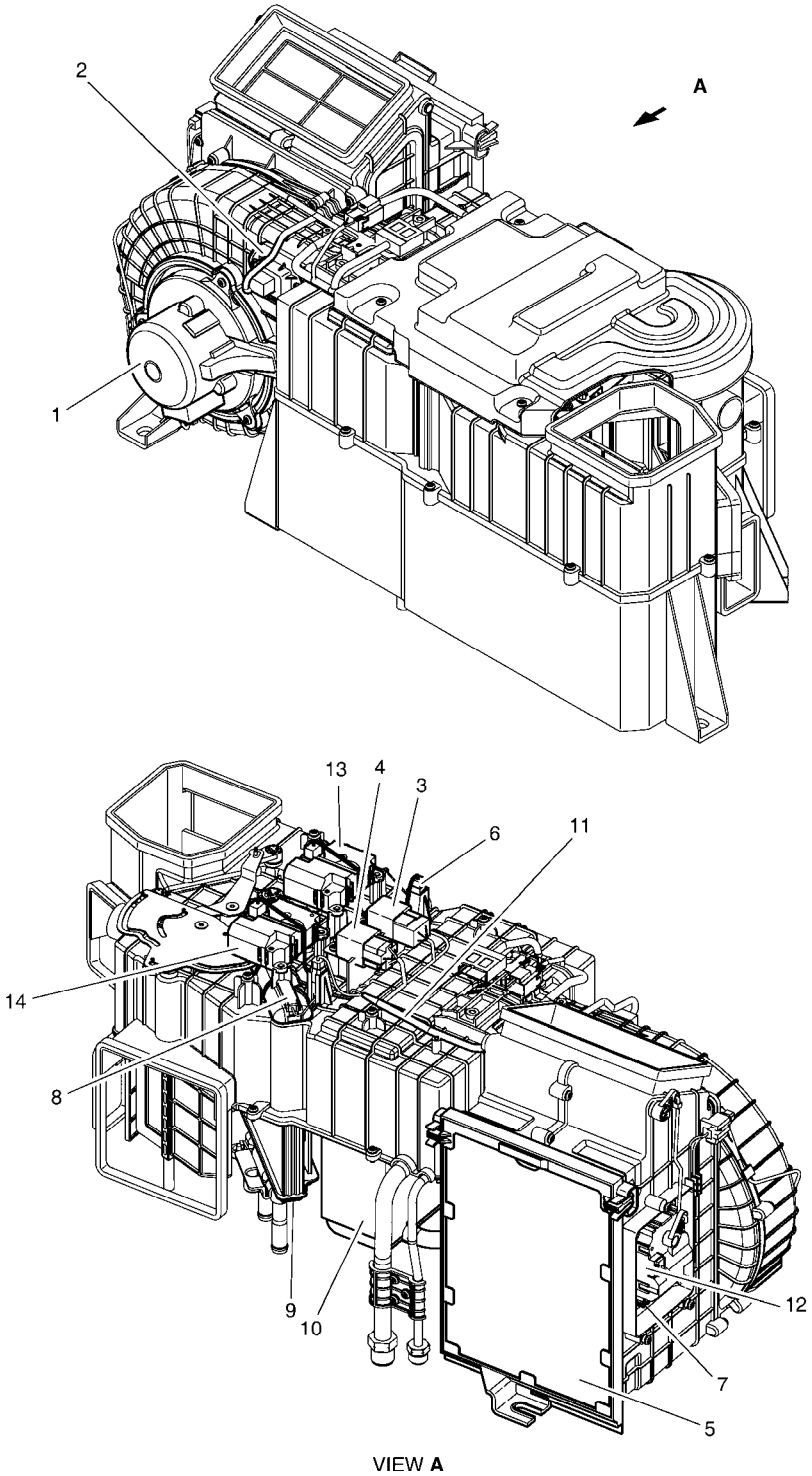

VIEW **A**

DATE	SEP. 12, 2012
4th EDITION	

Fig. 1790 AIRCON UNIT REFRIGERATION

Serial No. ;

Key No.	Part No.	Description	Description	Q'ty	S.C	Serial No.	ICA	Replaceable part	
								Part No.	Q'ty
1790 --	920-00127A	UNIT;AIR CON. & HEATING	UNITE	1					
1	K1002206	MOTOR;BLOWER;24V	MOTEUR	1					
2	K1002207	POWER FET	PIGNON	1					
3	K1002208	RELAY;BLOWER 24V	RELAIS	1					
4	K1002209	RELAY;AIRCON 24V	RELAIS	1					
5	K1002210	FILTER;AIR CON.	FILTRE	1					
6	K1002211	SENSOR;TEMP EVAPORATOR	SONDE	1					
7	K1002212	SENSOR;TEMPERATURE	SONDE	1					
8	K1002213	SENSOR;WATER TEMP	SONDE	1					
9	K1002214	CORE;HEATER	NOYAU	1					
10	K1002215	EVAPORATOR	NOYAU DE VAPORISATEUR	1					
11	K1002216	HARNESS;AIR CONDITIONER	HARNAIS	1					
12	K1002217	ACTUATOR;INTAKE	ACTIONNEUR	1					
13	K1002218	ACTUATOR;AIR MIX	ACTIONNEUR	1					
14	K1002219	ACTUATOR;MODE	ACTIONNEUR	1					

DATE	SEP. 12, 2012
4th EDITION	

Fig. 1800 AIRCONDITIONER REFRIGERATION

Serial No. ;

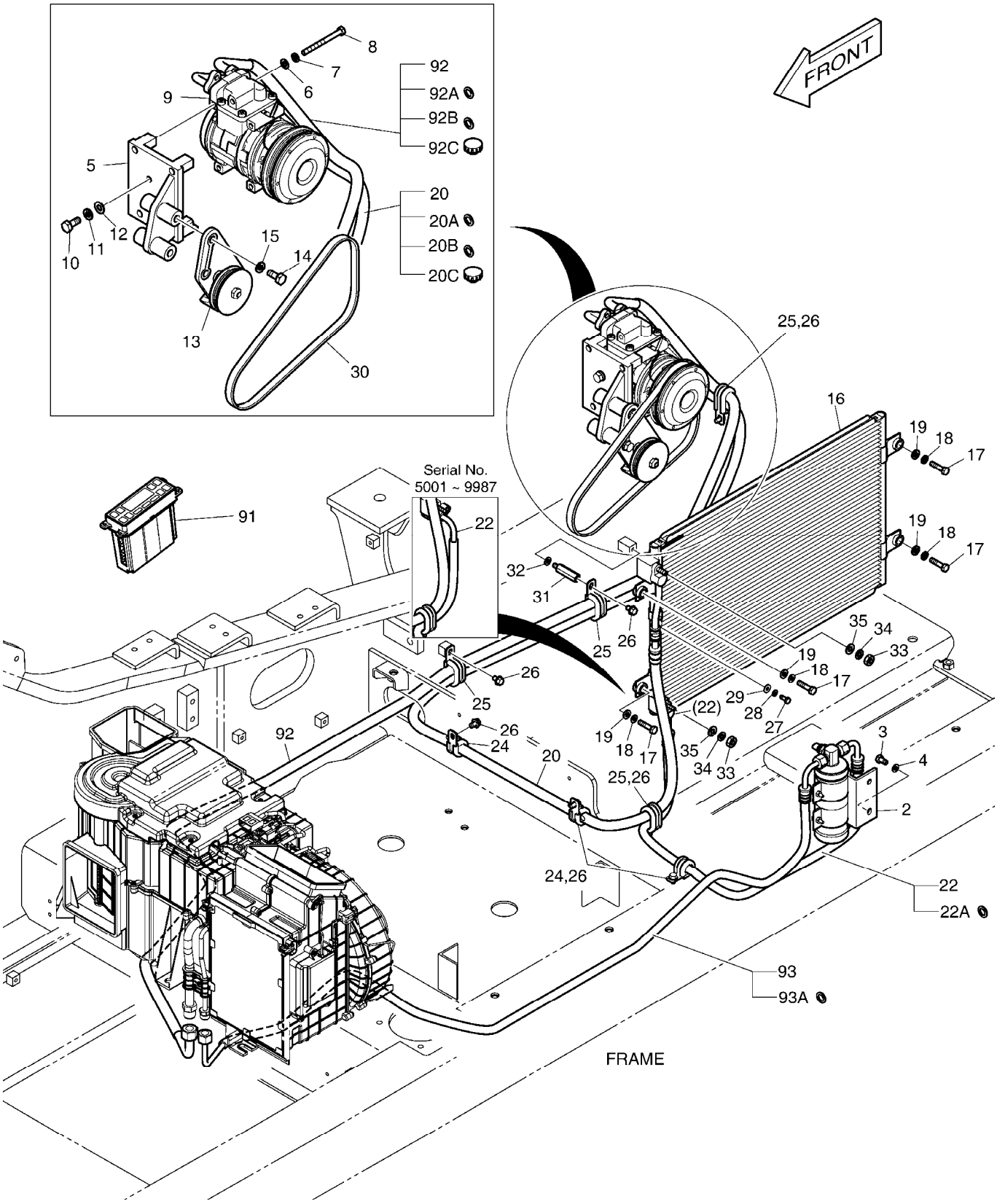

DATE	SEP. 12, 2012
4th EDITION	

Fig. 1800 AIRCONDITIONER REFRIGERATION

Serial No. ;

Key No.	Part No.	Description	Description	Q'ty	S.C	Serial No.	ICA	Replaceable part	
								Part No.	Q'ty
1800 --	K1001332G	AIR CONDITIONER	CLIMATISEUR	-	D				
2	2204-6039A	RECEIVER DRIER	DESSICCATEUR DE RECEI	1					
3	S0508666	BOLT	BOULON	2					
4	S5102503	WASHER,SPRING	RONDELLE	2					
5	2197-1798C	BRACKET;COMPRESSOR	SUPPORT	1					
6	S5010513	WASHER,PLAIN	RONDELLE	4					
7	S5102503	WASHER,SPRING	RONDELLE	4					
8	S0557166	BOLT	BOULON	4					
9	2208-6013B	COMPRESSOR	COMPRESSEUR	1					
10	S0712153	BOLT M10X1.25X28	BOULON A 6 PANS	1					
11	S5102603	WASHER,SPRING	RONDELLE	1					
12	S5010613	WASHER;PLAIN	RONDELLE	1					
13	2107-6006	PULLEY ASS'Y;IDLE	POULIE	1					
14	S0759853	BOLT M10X1.25X115	BOULON A 6 PANS	2					
15	S5102603	WASHER,SPRING	RONDELLE	2					
16	520-00004	CONDENSER;AIR CON	CONDENSATEUR	1					
17	S0509366	BOLT	BOULON	4					
18	S5102503	WASHER,SPRING	RONDELLE	4					
19	2114-1058D29	WASHER	RONDELLE	4					
20	K1001277C	HOSE;DISCHARGE	TUYAU FLEXIBLE	1					
20A	2180-6088	. O-RING;DISCHARGE	. JOINT CIRCULAIRE	1					
20B	K1011384	. O-RING;CONDENSER	. JOINT CIRCULAIRE	1					
20C	1.161-00018	. CAP;CHECK PORT(H)	. CHAPEAU	1					
22	K1001279C	HOSE;LIQUID(1)	TUYAU FLEXIBLE	1		5001-9987	I	420102-00239	1
	420102-00239	HOSE;LIQUID(1)	TUYAU FLEXIBLE	1		9988-			
22A	K1011388	. O-RING	. JOINT CIRCULAIRE	2					
24	124-00208D3	CLIP	AGRAFE	3					
25	124-00209D1	CLIP	AGRAFE	4					
26	K1001029	BOLT	BOULON	7					
27	S0504666	BOLT M6X1.0X16	BOULON	1					
28	S5010303	WASHER	RONDELLE	1					
29	2114-1058D52	WASHER	RONDELLE	1					
30	2106-1019D10	V-BELT 4PK 990L	COURROIE-V	1					
31	2120-2187	BOLT;STUD	BOULON	1					
32	S5102503	WASHER,SPRING	RONDELLE	1					
33	S4012303	NUT	ECROU	2					
34	S5102303	WASHER;SPRING	RONDELLE	2					
35	S5000313	WASHER;PLAIN	RONDELLE	2					

DATE	SEP. 12, 2012
4th EDITION	

Fig. 1800 AIRCONDITIONER REFRIGERATION

Serial No. ;

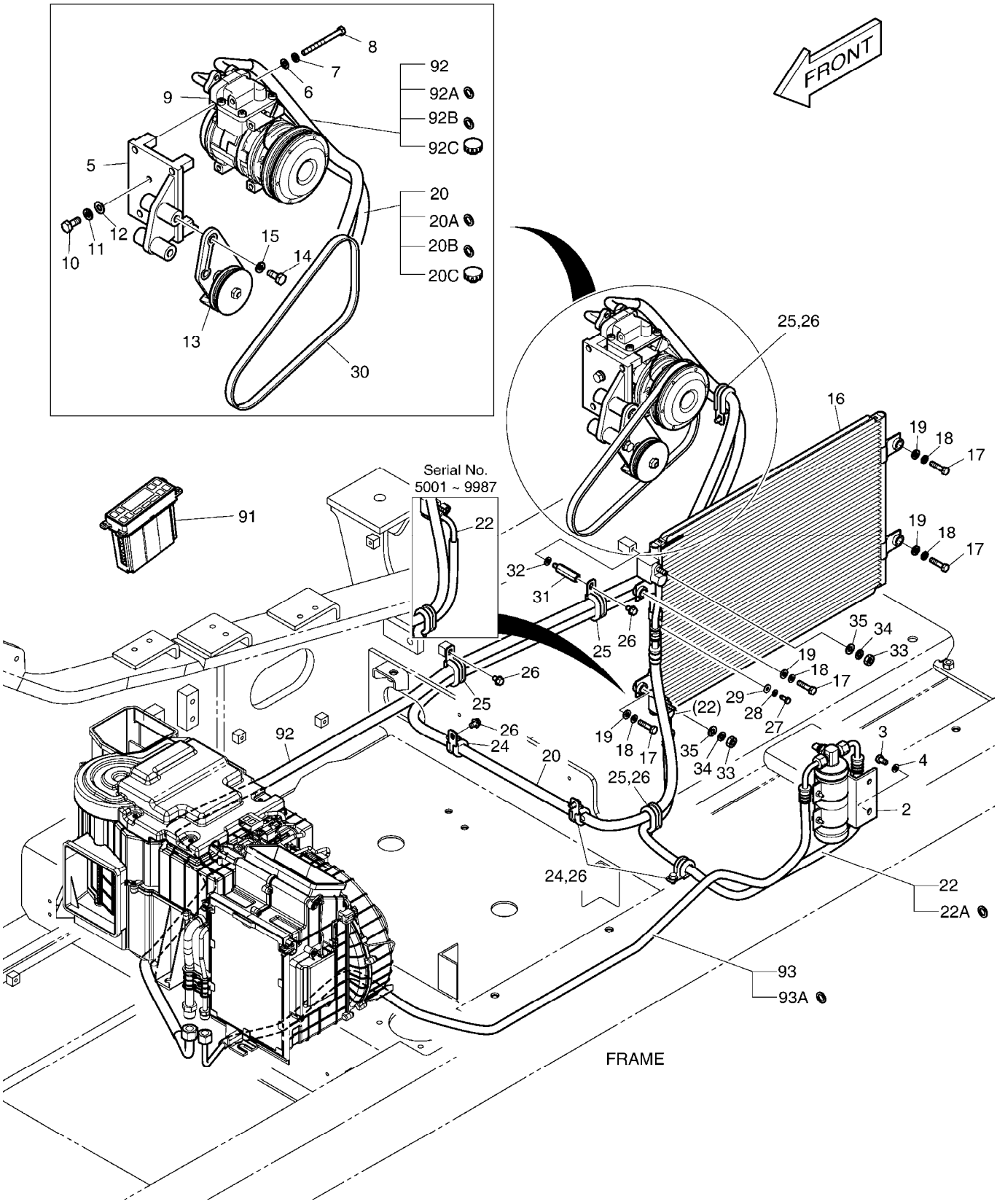

DATE	SEP. 12, 2012
4th EDITION	

Fig. 1800 AIRCONDITIONER REFRIGERATION

Serial No. ;

Key No.	Part No.	Description	Description	Q'ty	S.C	Serial No.	ICA	Replaceable part	
								Part No.	Q'ty
1800 -91	543-00107	CONTROL PANEL;AIR CON	PANNEAU DE COMMANDE	1					
92	K1001278C	HOSE;SUCTION	TUYAU FLEXIBLE	1					
92A	2180-6086	. O-RING;SUCTION	. JOINT CIRCULAIRE	1					
92B	K1011385	. O-RING;EVAPORATOR	. JOINT CIRCULAIRE	1					
92C	1.161-00019	. CAP;CHECK PORT(L)	. CHAPEAU	1					
93	K1001280C	HOSE;LIQUID(2)	TUYAU	1					
93A	K1011388	. O-RING	. JOINT CIRCULAIRE	2					

DATE	SEP. 12, 2012
4th EDITION	

Fig. 2100 TRACK FRAME-LONG(DX225LCA) TRAIN DE ROULEMENT

Serial No. ;

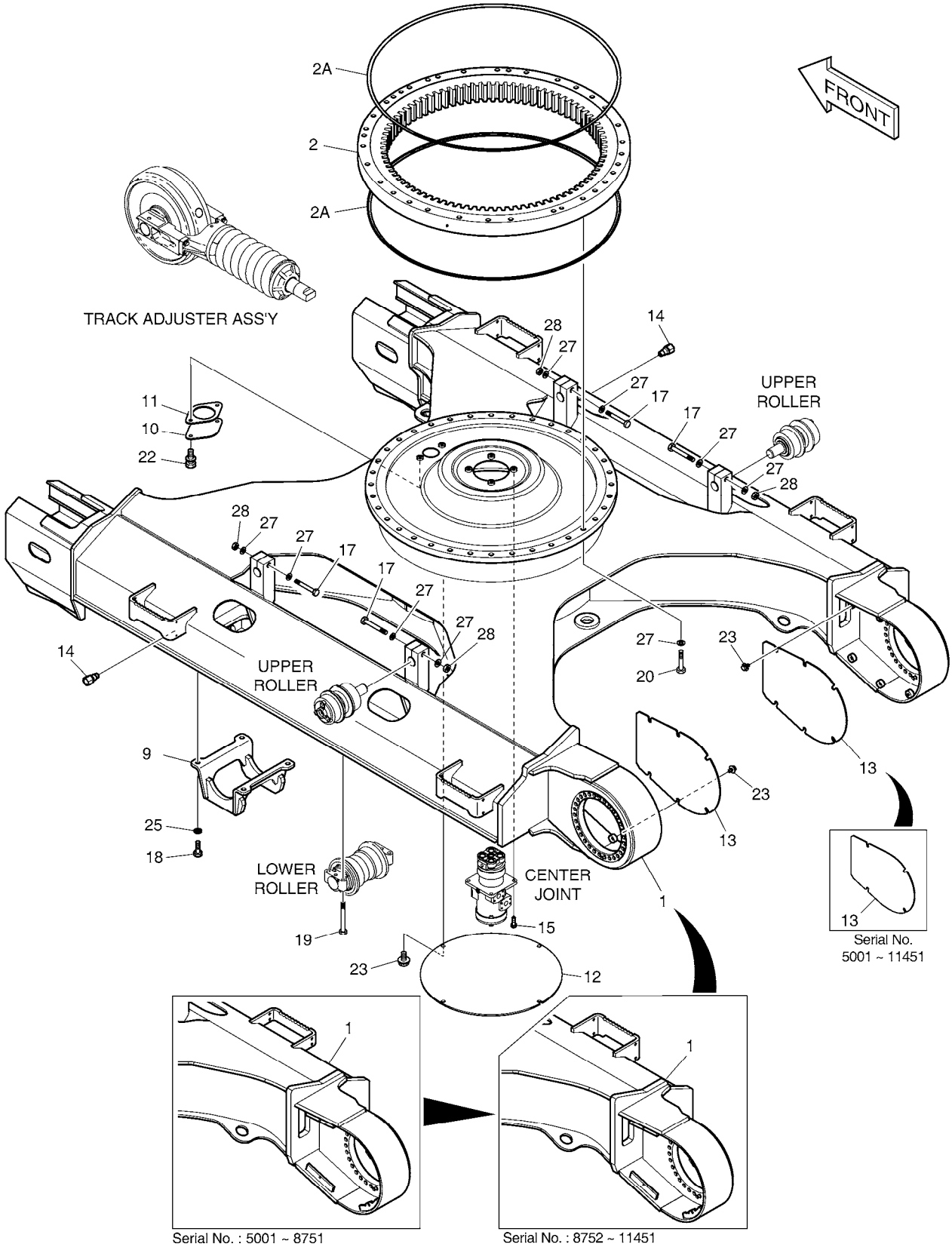

DATE	SEP. 12, 2012
4th EDITION	

Fig. 2100 TRACK FRAME-LONG(DX225LCA) TRAIN DE ROULEMENT

Serial No. ;

Key No.	Part No.	Description	Description	Q'ty	S.C	Serial No.	ICA	Replaceable part	
								Part No.	Q'ty
2100 --	K1039703B	TRACK ASS`Y	TRAIN	-	D	5001-5927			
	650105-00059	UNDERCARRIAGE ASSY	TRAIN	-	D	5928-			
1	604-00277H	FRAME;TRACK	CHASSIS	1		5001-5927	Y	160617-00115	1
	160617-00115	FRAME,TRACK	CHASSIS	1		5928-6978			
	160617-00115A	FRAME,TRACK	CHASSIS	1		6979-8751	I	160617-00115B	1
	160617-00115B	FRAME,TRACK	CHASSIS	1		8752-9680	I	160617-00115C	1
	160617-00115C	FRAME,TRACK	CHASSIS	1		09681-11451	I	160617-00115E	1
	160617-00115E	FRAME,TRACK	CHASSIS	1		11452-			
2	109-00162A	BEARING;SWING	PALIER D'ORIENTATION	1		5001-9144	I	140109-00048	1
	140109-00048	BEARING,SWING	PALIER D'ORIENTATION	1		9145-			
2A	180-00297D3	. SEAL	. JOINT	2		5001-9144			
	401107-00751	. SEAL,SWING BEARING	. JOINT	2		9145-			
9	142-00126A	GUARD;TRACK	GARDE	4		5001-6148	I	200112-00022	4
	200112-00022	GUARD,TRACK	GARDE	4		6149-9144	I	200112-00073	4
	200112-00073	GUARD,TRACK	GARDE	4		9145-9751	I	200112-00073A	4
	200112-00073A	GUARD,TRACK	GARDE	4		9752-			
10	621-02938B	COVER	COUVERTURE	1					
11	180-00463	PACKING	EMBALLAGE	1					
12	621-03166	COVER	COUVERTURE	1					
13	621-03167	COVER;MOTOR	COUVERTURE	2		05001-11451			
	110508-00675	COVER,MOTOR	COUVERCLE	2		11452-			
14	422-00055	VALVE;GREASE	VANNE	2					
15	S0515366	BOLT	BOULON A 6 PANS	4					
17	S0571166	BOLT	BOULON	4					
18	S0721466	BOLT M16X1.5X40	BOULON	16					
19	S0765966	BOLT	BOULON	72					
20	S0770266	BOLT M20X1.5X70	BOULON	36					
22	DS0025016	BOLT;SET	BOULON	2					
23	DS0025019	BOLT;SET	BOULON	12		05001-11451			
	DS0025019	BOLT;SET	BOULON	16		11452-			
25	S5102903	WASHER,SPRING	RONDELLE	16					
27	2114-9012A	WASHER	RONDELLE	44					
28	S4013133	NUT	ECROU	4					

DATE	SEP. 12, 2012
4th EDITION	

Fig. 2105 TRACK FRAME-STD(DX220A) TRAIN DE ROULEMENT

Serial No. ;

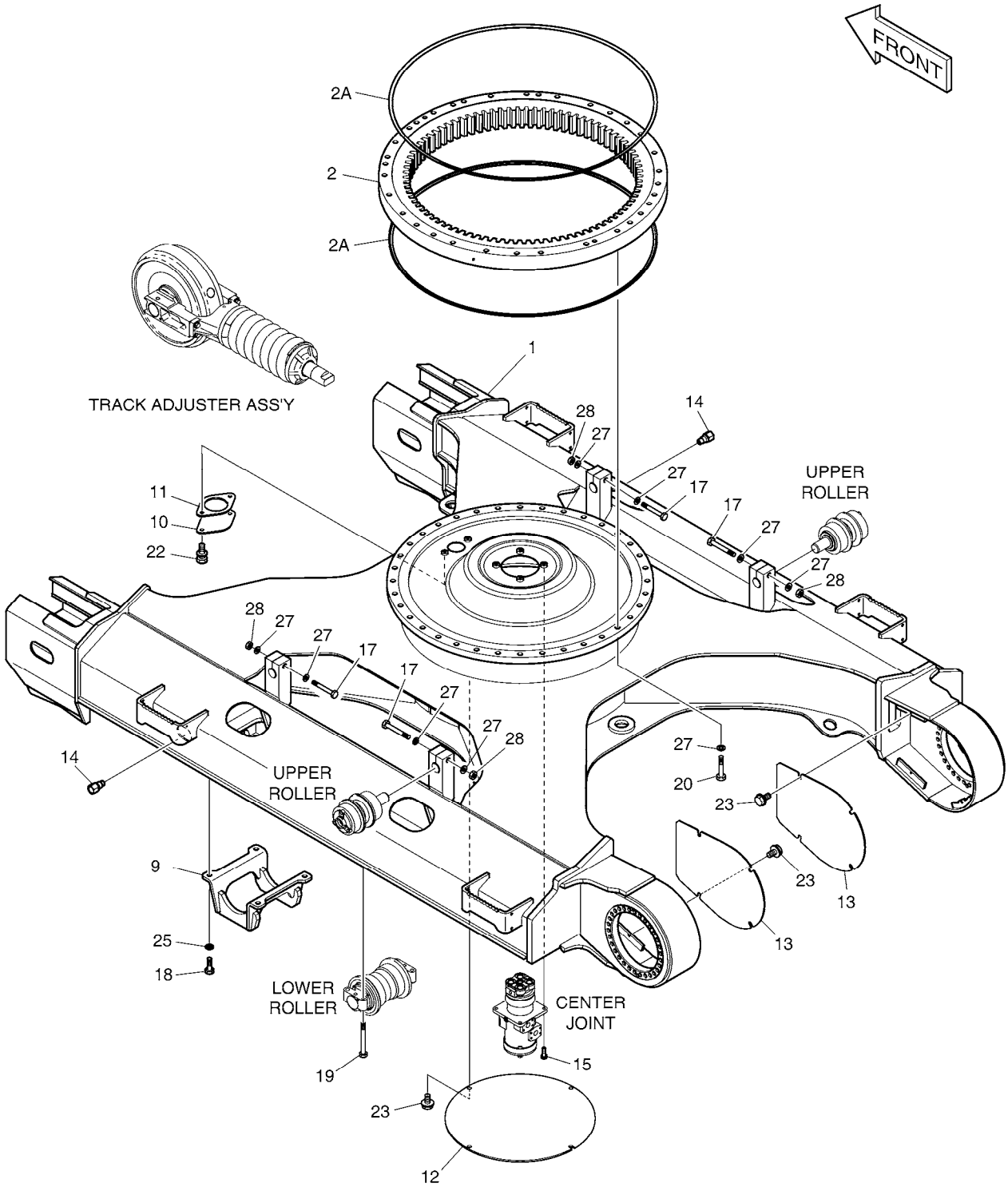

DATE	SEP. 12, 2012
4th EDITION	

Fig. 2105 TRACK FRAME-STD(DX220A) TRAIN DE ROULEMENT

Serial No. ;

Key No.	Part No.	Description	Description	Q'ty	S.C	Serial No.	ICA	Replaceable part	
								Part No.	Q'ty
2105 --	650105-00126	UNDERCARRIAGE ASSY;STD	TRAIN	-	D				
1	160617-00290	FRAME,TRACK	CHASSIS	1					
2	140109-00048	BEARING,SWING	PALIER D'ORIENTATION	1					
2A	401107-00751	. SEAL,SWING BEARING	. JOINT	2					
9	200112-00073A	GUARD,TRACK	GARDE	2					
10	621-02938B	COVER	COUVERTURE	1					
11	180-00463	PACKING	EMBALLAGE	1					
12	110513-00242	COVER,UNDER	COUVERCLE	1					
13	110508-00675	COVER,MOTOR	COUVERCLE	2					
14	422-00055	VALVE;GREASE	VANNE	2					
15	S0515366	BOLT	BOULON A 6 PANS	4					
17	S0571166	BOLT	BOULON	4					
18	S0721466	BOLT M16X1.5X40	BOULON	8					
19	S0765966	BOLT	BOULON	56					
20	S0770266	BOLT M20X1.5X70	BOULON	36					
22	DS0025016	BOLT;SET	BOULON	2					
23	DS0025019	BOLT;SET	BOULON	16					
25	S5102903	WASHER,SPRING	RONDELLE	8					
27	2114-9012A	WASHER	RONDELLE	44					
28	S4013133	NUT	ECROU	4					

DATE	SEP. 12, 2012
4th EDITION	

Fig. 2110 TRAVEL DEVICE(DX225LCA) SYSTEME D'TRANSLATION

Serial No. ;

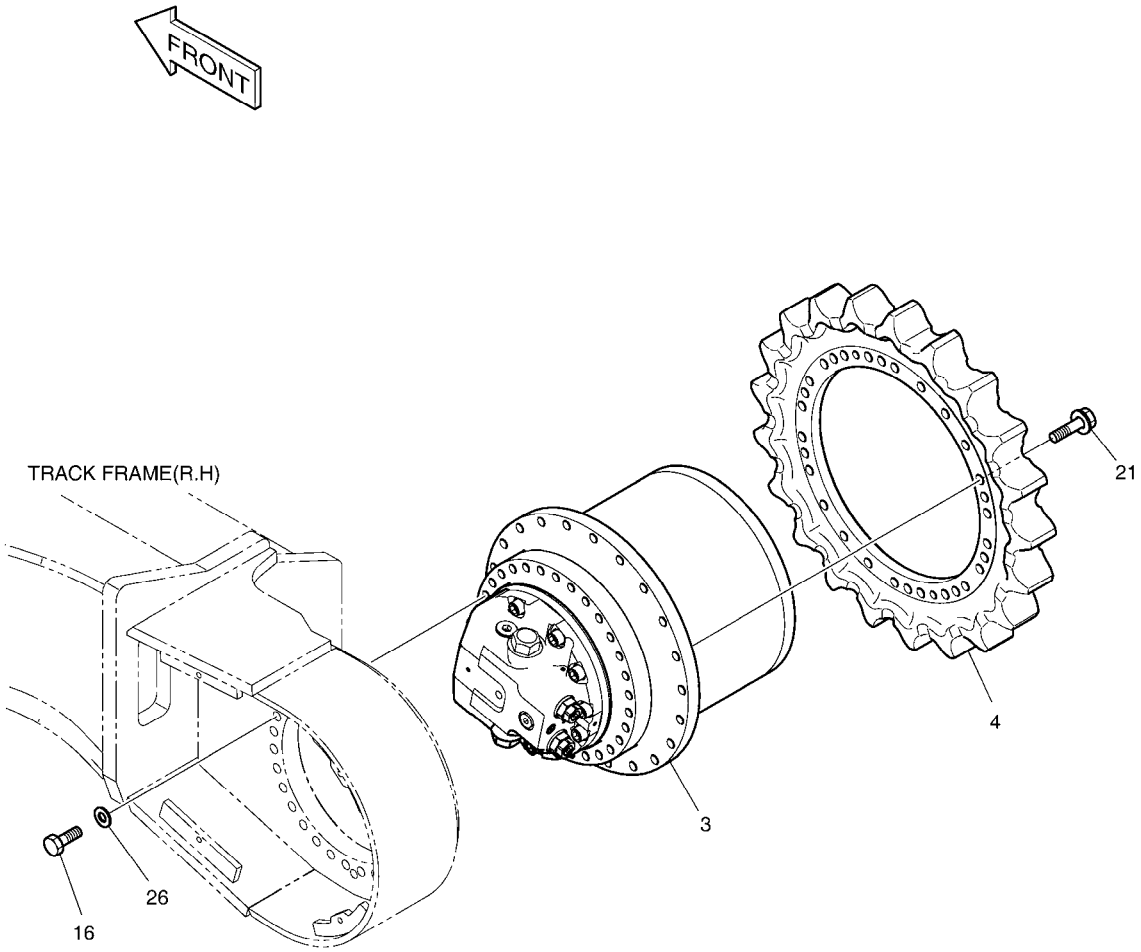

DATE	SEP. 12, 2012
4th EDITION	

Fig. 2110 TRAVEL DEVICE(DX225LCA) SYSTEME D'TRANSLATION

Serial No. ;

Key No.	Part No.	Description	Description	Q'ty	S.C	Serial No.	ICA	Replaceable part	
								Part No.	Q'ty
2110 --	K1039703B	TRACK ASS`Y	TRAIN	-	D				
3	K1037757	TRAVEL DEVICE	DISPOSITIF DE VOYAGE	2		5001-6978	Y	170401-00039	2
	170401-00039	DEVICE,TRAVEL	DISPOSITIF DE VOYAGE	2		6979-7482	I	170401-00039A	2
	170401-00039A	DEVICE,TRAVEL	DISPOSITIF DE VOYAGE	2		07483-10721	I	170401-00039B	2
	170401-00039B	DEVICE,TRAVEL	DISPOSITIF DE VOYAGE	2		10722-			
4	K1000682	SPROCKET	COURONNE DENTEE	2		10001-10997	I	200108-00095	2
	200108-00095	SPROCKET	COURONNE DENTEE	2		10998-			
16	S0565666	BOLT M16X2.0X70	BOULON	60					
21	120-00050B	BOLT;FLANGE	BOULON	60					
26	2114-1816A	WASHER	RONDELLE	60					

DATE	SEP. 12, 2012
4th EDITION	

Fig. 2115 TRAVEL DEVICE(DX220A) SYSTEME D'TRANSLATION

Serial No. ;

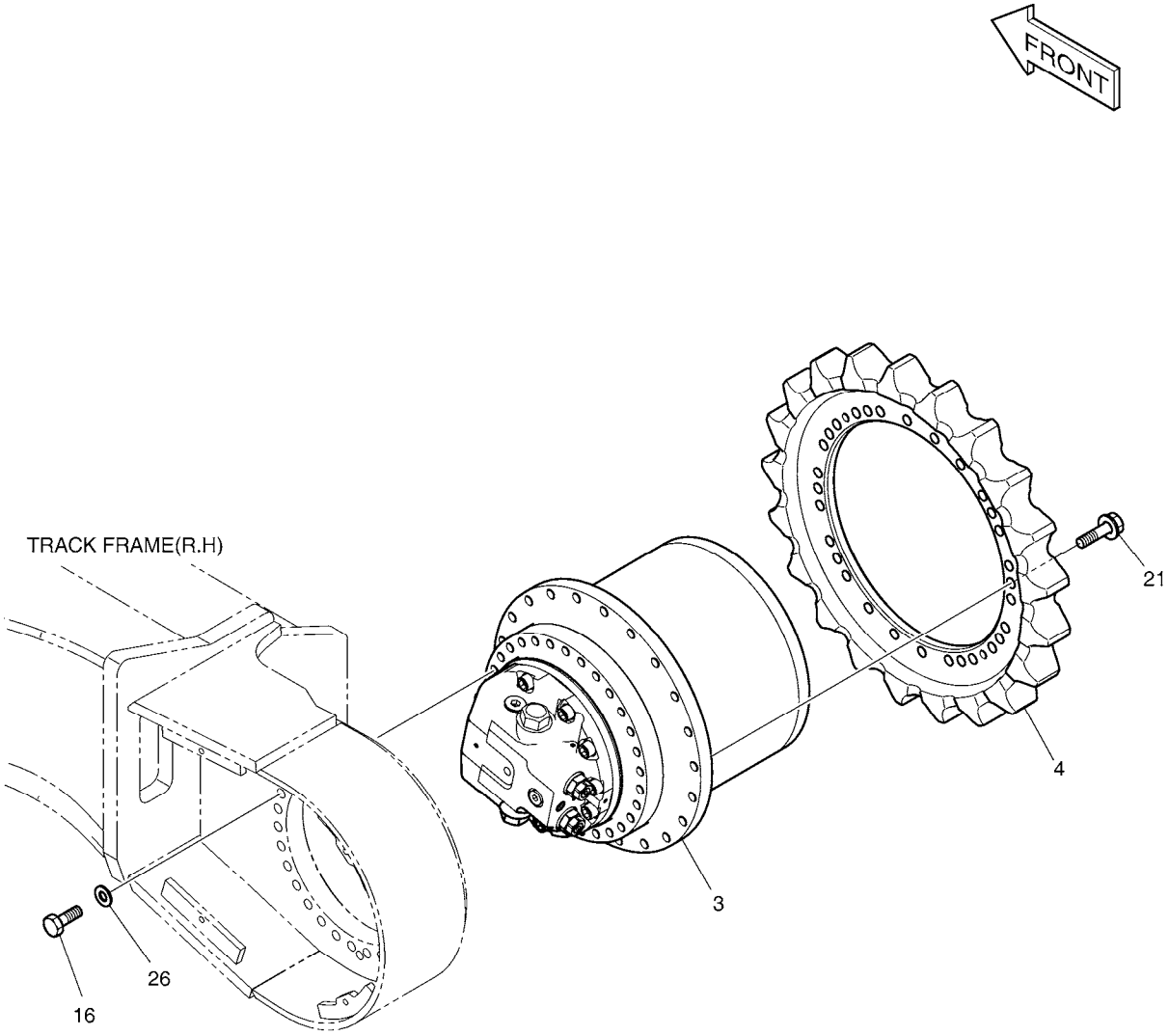

DATE	SEP. 12, 2012
4th EDITION	

Fig. 2115 TRAVEL DEVICE(DX220A) SYSTEME D'TRANSLATION

Serial No. ;

Key No.	Part No.	Description	Description	Q'ty	S.C	Serial No.	ICA	Replaceable part	
								Part No.	Q'ty
2115 --	K1039703B	TRACK ASS`Y	TRAIN	-	D				
3	170401-00039B	DEVICE,TRAVEL	DISPOSITIF DE VOYAGE	2					
4	200108-00008A	SPROCKET	PIGNON	2					
16	S0565666	BOLT M16X2.0X70	BOULON	60					
21	120-00050B	BOLT;FLANGE	BOULON	60					
26	2114-1816A	WASHER	RONDELLE	60					

DATE	SEP. 12, 2012
4th EDITION	

Fig. 2120 IDLER(DX225LCA) BARBOTIN

Serial No. ;

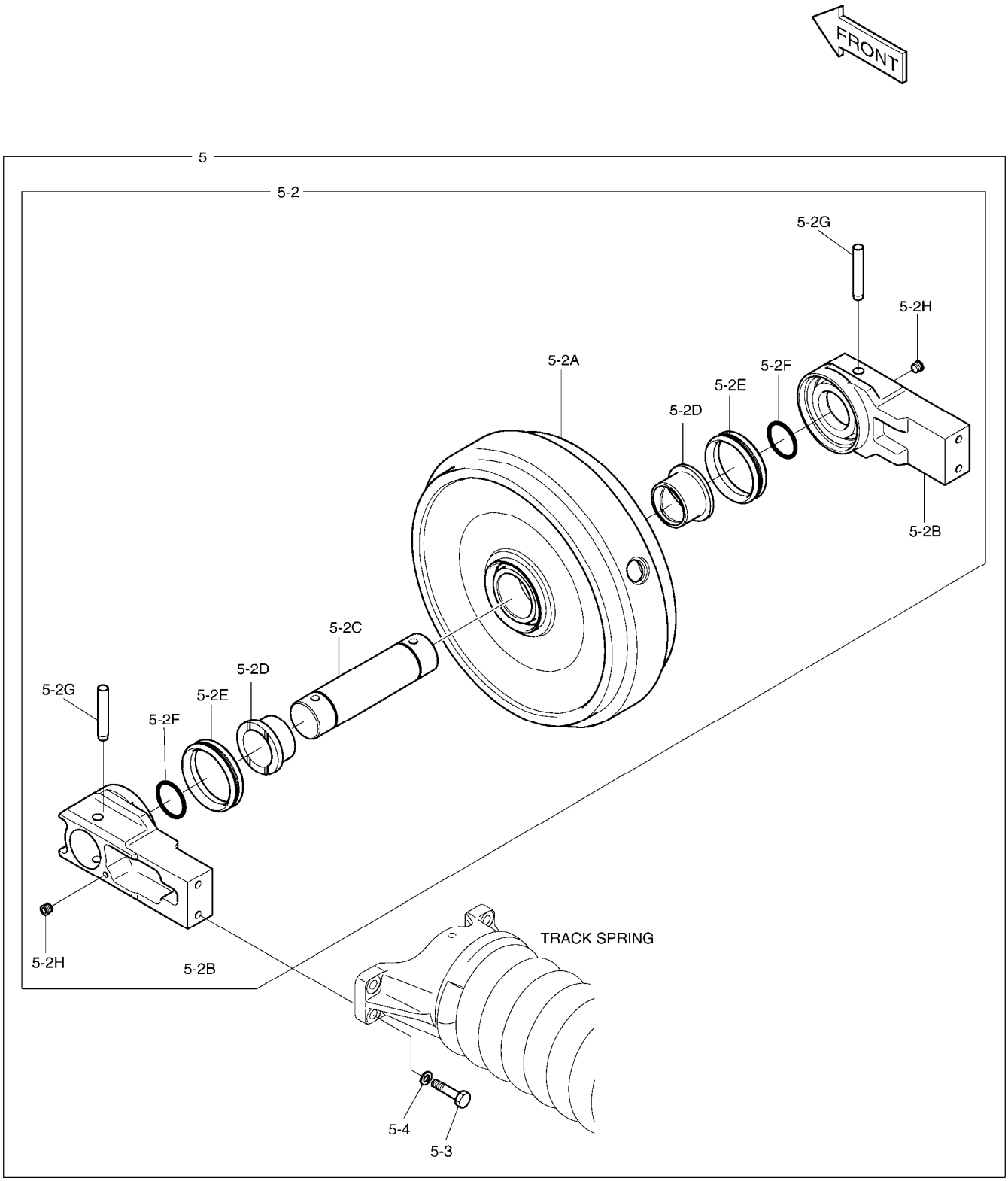

DATE	SEP. 12, 2012
4th EDITION	

Fig. 2120 IDLER(DX225LCA) BARBOTIN

Serial No. ;

Key No.	Part No.	Description	Description	Q'ty	S.C	Serial No.	ICA	Replaceable part	
								Part No.	Q'ty
2120 --	K1039703B	TRACK ASS`Y	TRAIN	-	D				
5	K1039702	ADJUSTER ASS`Y	SUPPORT	2		5001-6176	I	200101-00033	2
	200101-00033	ADJUSTER ASS'Y,TRACK	TENDEUR DE CHENILLE	2		6177-			
5-2	270-00063B	. IDLER ASS`Y	. ENSEMBLE BARBOTIN	1		5001-6176	I	200102-00052	1
	200102-00052	. IDLER ASS'Y	. ENSEMBLE BARBOTIN	1		6177-			
5-2A	-	.. BODY	.. CORPS	1	D				
5-2B	271-00026	.. SUPPORT	.. SUPPORT	2		5001-6176	I	140204-00005	2
	140204-00005	.. SUPPORT	.. APPUI	2		6177-			
5-2C	2220-1013	.. AXLE	.. ESSIEU	1					
5-2D	K1036466	.. BUSHING	.. BUSHING	2					
5-2E	2180-9020	.. SEAL;GROUP	.. CACHET	2					
5-2F	S8010700	.. O-RING	.. JOINT CIRCULAIRE	2					
5-2G	2123-1011	.. PIN	.. GOUPILLE	2					
5-2H	2181-1116D2	.. PLUG	.. BOUCHON	2					
5-3	S0565466	. BOLT	. BOULON A 6 PANS	4					
5-4	S5102903	. WASHER,SPRING	. RONDELLE	4					

DATE	SEP. 12, 2012
4th EDITION	

Fig. 2125 IDLER(DX220A) BARBOTIN

Serial No. ;

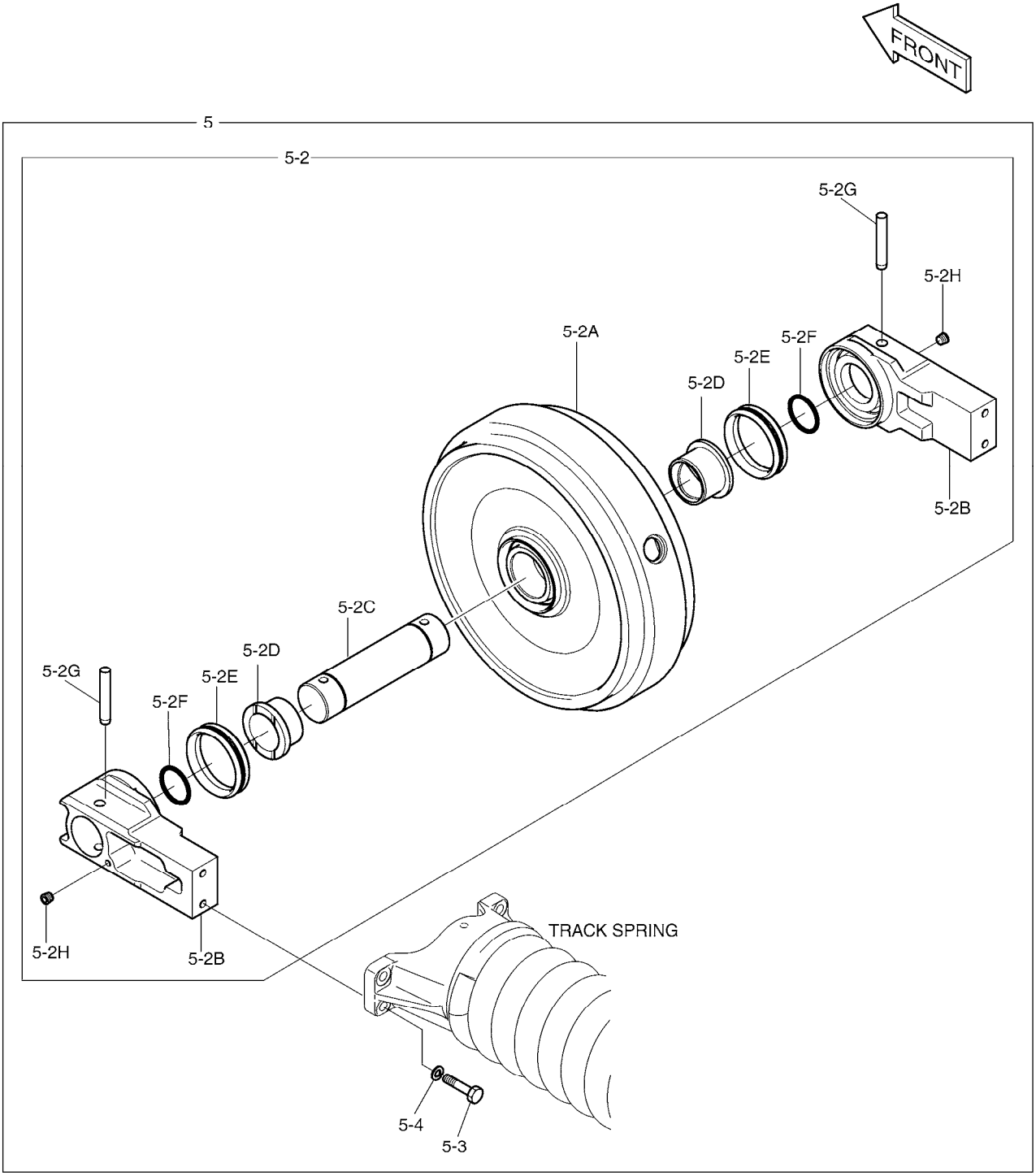

DATE	SEP. 12, 2012
4th EDITION	

Fig. 2125 IDLER(DX220A) BARBOTIN

Serial No. ;

Key No.	Part No.	Description	Description	Q'ty	S.C	Serial No.	ICA	Replaceable part	
								Part No.	Q'ty
2125 --	650105-00126	UNDERCARRIAGE ASSY;STD	TRAIN	-	D				
5	K1039702	ADJUSTER ASS`Y	SUPPORT	2					
5-2	270-00063B	. IDLER ASS`Y	. ENSEMBLE BARBOTIN	1					
5-2A	-	.. BODY	.. CORPS	1	D				
5-2B	271-00026	.. SUPPORT	.. SUPPORT	2					
5-2C	2220-1013	.. AXLE	.. ESSIEU	1					
5-2D	K1036466	.. BUSHING	.. BUSHING	2					
5-2E	2180-9020	.. SEAL;GROUP	.. CACHET	2					
5-2F	S8010700	.. O-RING	.. JOINT CIRCULAIRE	2					
5-2G	2123-1011	.. PIN	.. GOUPILLE	2					
5-2H	2181-1116D2	.. PLUG	.. BOUCHON	2					
5-3	S0565466	. BOLT	. BOULON A 6 PANS	4					
5-4	S5102903	. WASHER,SPRING	. RONDELLE	4					

DATE	SEP. 12, 2012
4th EDITION	

Fig. 2130 TRACK SPRING
TENDEUR DE CHENILLE

Serial No. ;

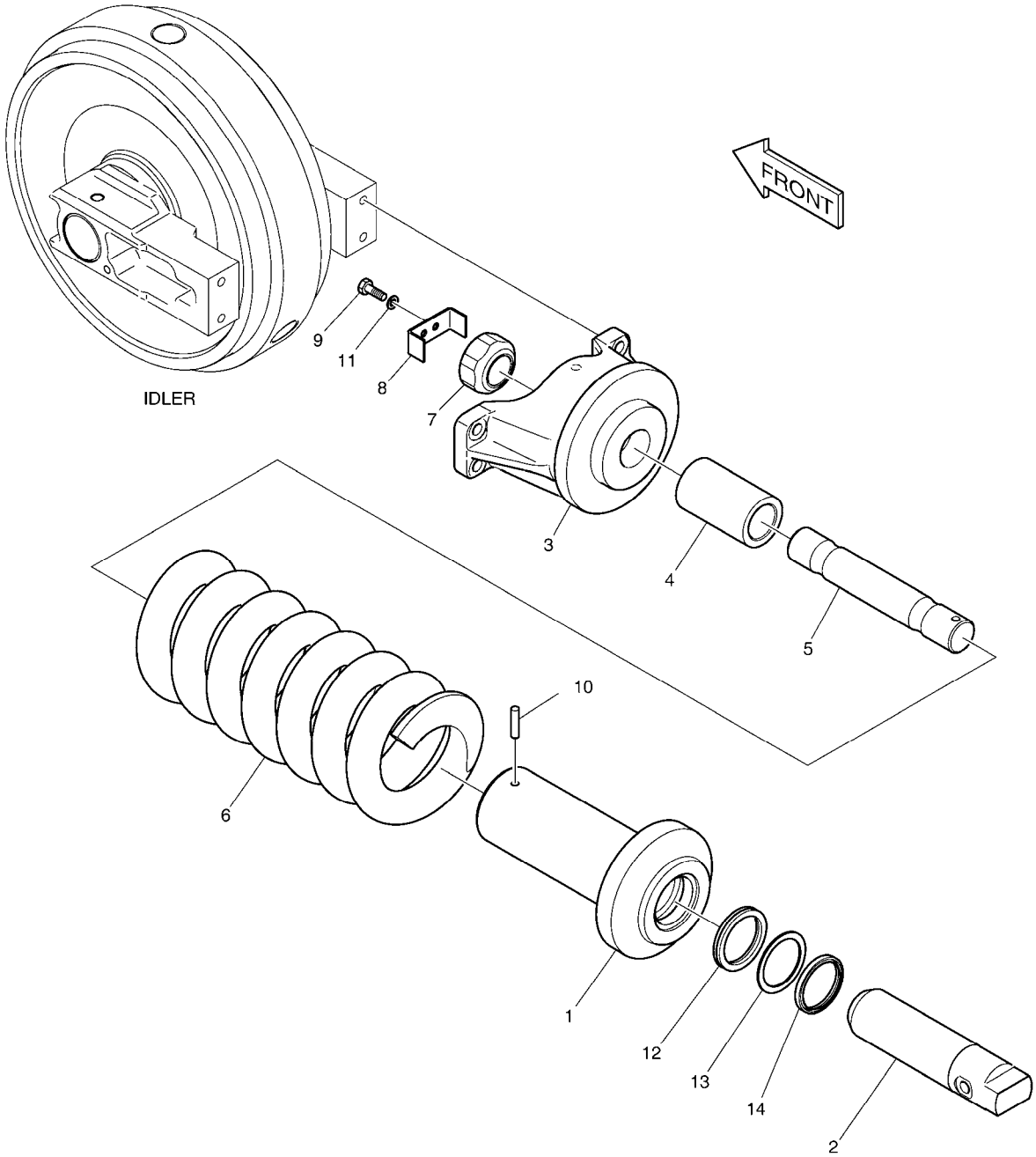

DATE	SEP. 12, 2012
4th EDITION	

Fig. 2130 TRACK SPRING
TENDEUR DE CHENILLE

Serial No. ;

Key No.	Part No.	Description	Description	Q'ty	S.C	Serial No.	ICA	Replaceable part	
								Part No.	Q'ty
2130 --	K1038864	TRACK SPRING	RESSORT DE VOIE	2					
1	K1038865	BODY	CORPS	1					
2	K1039450	ROD;PISTON	TIGE	1					
3	K1039451	BRACKET	SUPPORT	1					
4	K1039452	SPACER	ENTRETOISE	1					
5	K1039453	SHAFT	AXE	1					
6	2129-1236	SPRING	RESSORT	1					
7	K1024956	NUT	ECROU	1					
8	621-03707	PLATE	PLAQUE	1					
9	S0512263	BOLT M10X1.5X30	BOLT M10X1.5X30	2					
10	S5741250	PIN;SPRING	GOUPILLE	1					
11	S5102603	WASHER,SPRING	RONDELLE	2					
12	-	PACKING	EMBALLAGE	1	K				
13	-	RING;BACK UP	ANNEAU	1	K				
14	-	SEAL;DUST	CACHET	1	K				
*	K9006882	SEAL KIT;TRACK SPRING	KIT DE JOINT	1					

DATE	SEP. 12, 2012
4th EDITION	

Fig. 2140 UPPER ROLLER GALET SUPERIEUR

Serial No. ; 5001 ~ 6978

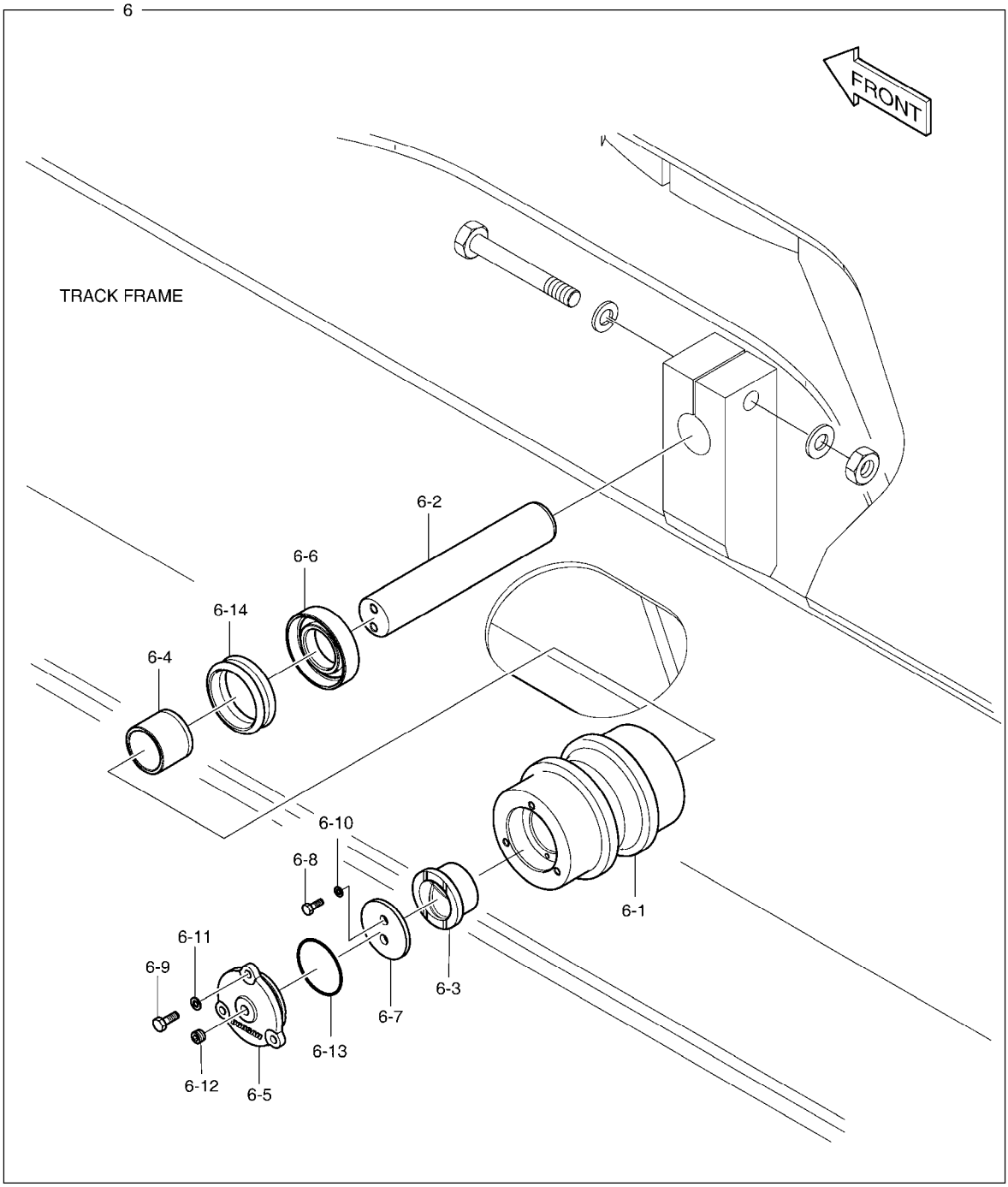

DATE	SEP. 12, 2012
4th EDITION	

Fig. 2140 UPPER ROLLER GALET SUPERIEUR

Serial No. ; 5001 ~ 6978

Key No.	Part No.	Description	Description	Q'ty	S.C	Serial No.	ICA	Replaceable part	
								Part No.	Q'ty
2140 --	K1039703B	TRACK ASS`Y	TRAIN	-	D				
6	K1037728	ROLLER;UPPER	GALET	4		5001-6176	I	200105-00022	4
	200105-00022	ROLLER,UPPER	GALET SUPERIEUR	4		6177-			
6-1	-	. BODY	. CORPS	1	D				
6-2	K1038389	. SHAFT	. ARBRE	1		5001-6176	I	130712-00208	1
	130712-00208	. SHAFT	. AXE	1		6177-			
6-3	K1038390	. BUSHING	. BUSHING	1					
6-4	K1038391	. BUSHING	. BUSHING	1					
6-5	K1038392	. COVER	. COUVERTURE	1					
6-6	K1038393	. RING;THRUST	. BAGUE	1		5001-6176	I	401003-00094	1
	401003-00094	. RING,THRUST	. ANNEAU	1		6177-			
6-7	K1038394	. WASHER	. RONDELLE	1					
6-8	S0712061	. BOLT	. BOULON	2					
6-9	S0508861	. BOLT M8X1.25X20	. BOULON	3					
6-10	S5102603	. WASHER,SPRING	. RONDELLE	2					
6-11	S5102503	. WASHER,SPRING	. RONDELLE	3					
6-12	2181-1116D2	. PLUG	. BOUCHON	1					
6-13	S8010650	. O-RING	. JOINT CIRCULAIRE	1					
6-14	2180-9005B	. SEAL;FLOATING	. CACHET	2					

DATE	SEP. 12, 2012
4th EDITION	

Fig. 2141 UPPER ROLLER GALET SUPERIEUR

Serial No. ; 6979 ~

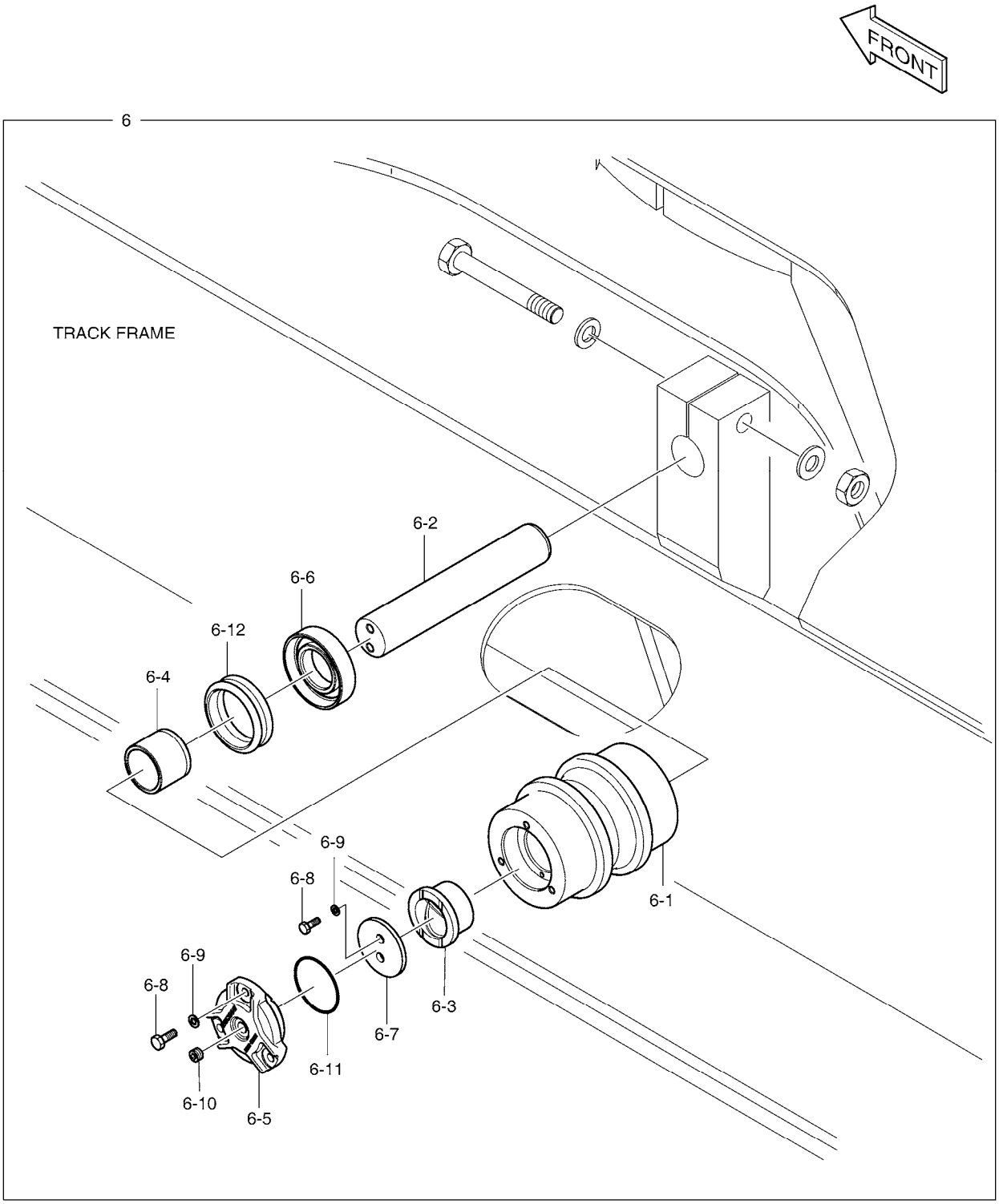

DATE	SEP. 12, 2012
4th EDITION	

Fig. 2141 UPPER ROLLER GALET SUPERIEUR

Serial No. ; 6979 ~

Key No.	Part No.	Description	Description	Q'ty	S.C	Serial No.	ICA	Replaceable part	
								Part No.	Q'ty
2141 --	650105-00059	UNDERCARRIAGE ASSY	TRAIN	-	D				
6	200105-00025	ROLLER,UPPER	GALET SUPERIEUR	4					
6-1	-	. BODY ASSY;UPPER ROLLER	. CARTER	1	D				
6-2	130712-00293	. SHAFT;UPPER ROLLER	. AXE	1					
6-3	130702-00066	. BUSHING	. DOUILLE	1					
6-4	130702-00065	. BUSHING	. DOUILLE	1					
6-5	110508-01424	. COVER;UPPER ROLLER	. COUVERCLE	1					
6-6	401003-00145	. RING,THRUST	. BAGUE	1					
6-7	120810-00084	. WASHER;UPPER ROLLER	. RONDELLE	1					
6-8	S0512061	. BOLT M10X1.5X25	. BOULON A 6 PANS	5					
6-9	S5102603	. WASHER,SPRING	. RONDELLE	5					
6-10	2181-6005	. PLUG	. BOUCHON	1					
6-11	2180-6005	. O-RING	. JOINT TORIQUE	1					
6-12	2180-9005B	. SEAL;FLOATING	. CACHET	1					

DATE	SEP. 12, 2012
4th EDITION	

Fig. 2150 LOWER ROLLER GALET INFERIEUR

Serial No. ;

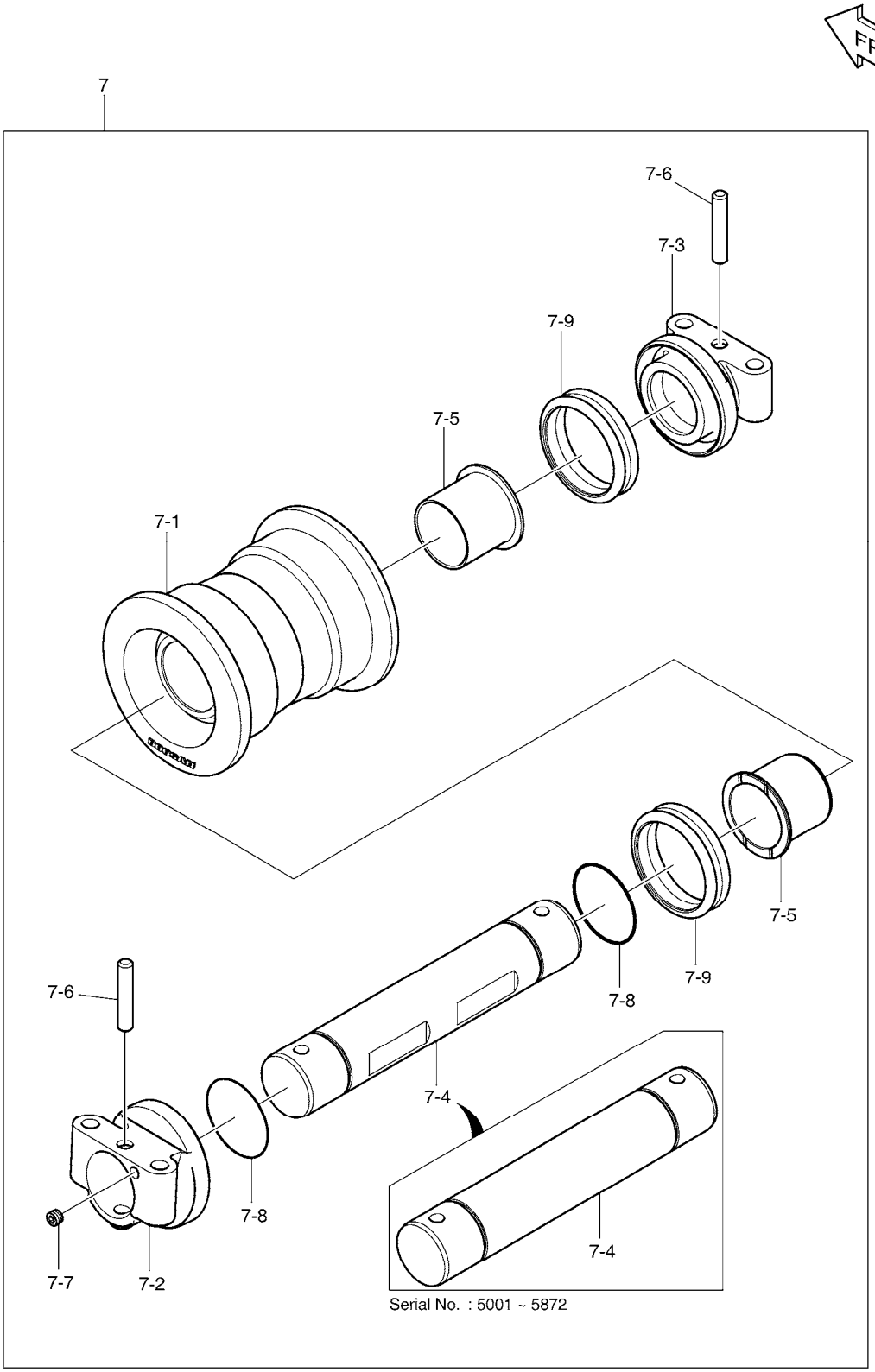

DATE	SEP. 12, 2012
4th EDITION	

Fig. 2150 LOWER ROLLER GALET INFERIEUR

Serial No. ;

Key No.	Part No.	Description	Description	Q'ty	S.C	Serial No.	ICA	Replaceable part	
								Part No.	Q'ty
2150 --	K1039703B	TRACK ASS`Y	TRAIN	-	D	5001-5871			
	650105-00059	UNDERCARRIAGE ASSY	TRAIN	-	D	5872-			
7	K1037713A	ROLLER;LOWER	GALET	18		5001-5871	Y	200104-00021	18
	200104-00021	ROLLER,LOWER	GALET	18		5872-7686	Y	200104-00044	18
	200104-00044	ROLLER,LOWER	GALET	18		7687-			
7-1	-	. BODY	. CORPS	1	D				
7-2	K1038383A	. COLLAR	. COLLIER	1		5001-5871			
	110917-00013	. COLLAR;A	. BRIDE	1		5872-			
7-3	K1038386A	. COLLAR	. COLLIER	1		5001-5871			
	110917-00014	. COLLAR;B	. BRIDE	1		5872-			
7-4	K1038387	. SHAFT	. AXE	1		5001-5871	I	130712-00125	1
	130712-00125	. SHAFT	. AXE	1		5872-			
7-5	K1013713A	. BUSHING	. BUSHING	2					
7-6	K1013714	. PIN	. GOUPILLE	2					
7-7	2181-1116D2	. PLUG	. BOUCHON	1					
7-8	S8010600	. O-RING	. JOINT CIRCULAIRE	2					
7-9	2180-9098	. SEAL;FLOATING	. CACHET	2					

DATE	SEP. 12, 2012
4th EDITION	

Fig. 2160 CENTER JOINT
JOINT CENTRAL

Serial No. ; 5001 ~ 12604

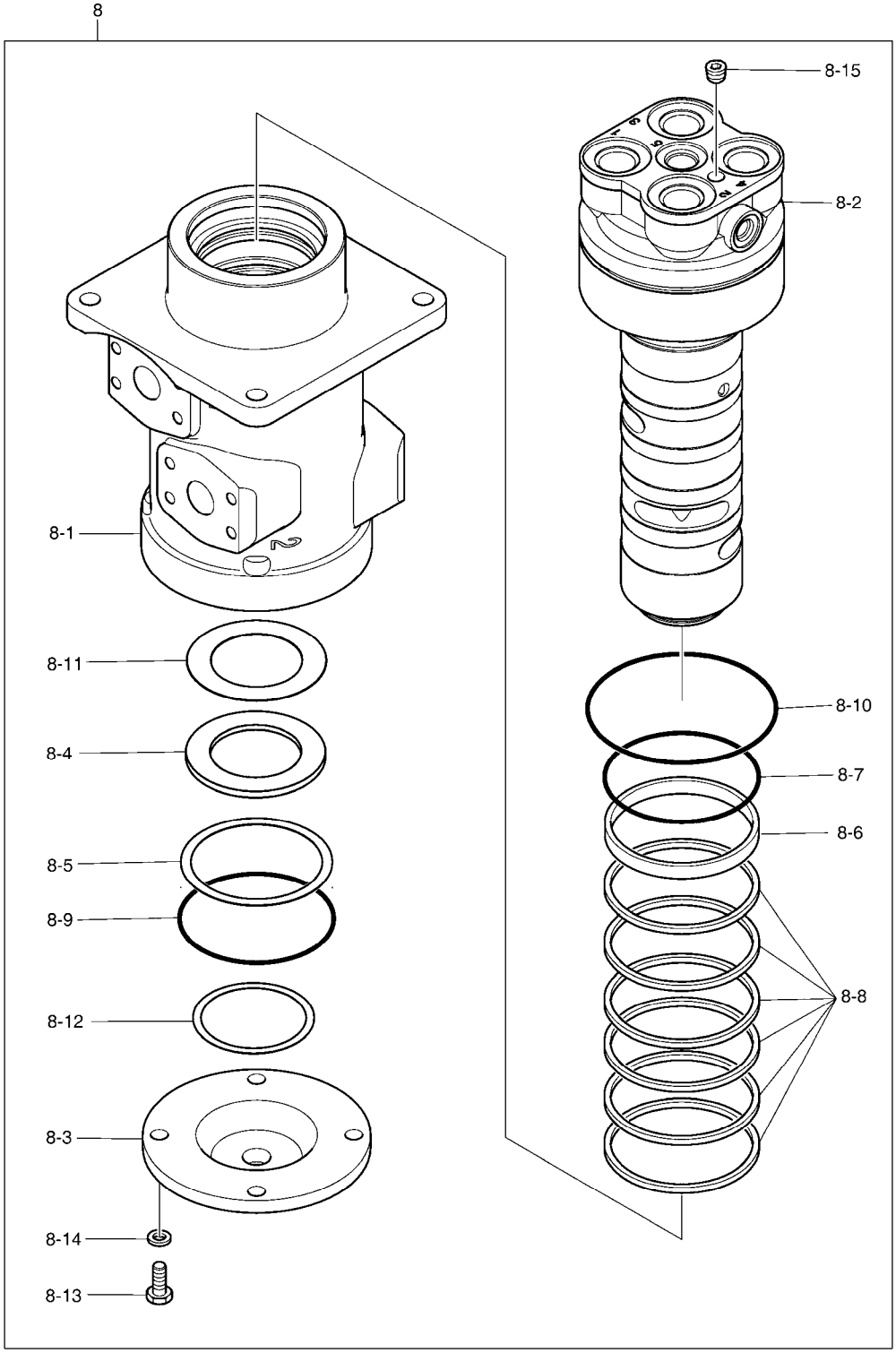

DATE	SEP. 12, 2012
4th EDITION	

Fig. 2160 CENTER JOINT
JOINT CENTRAL

Serial No. ; 5001 ~ 12604

Key No.	Part No.	Description	Description	Q'ty	S.C	Serial No.	ICA	Replaceable part	
								Part No.	Q'ty
2160 --	K1039703B	TRACK ASS`Y	TRAIN	-	D				
8	K1038790	JOINT;CENTER	JOINT	1					
8-1	K1038791	. HUB	. MOYEU	1					
8-2	K1038792	. SPINDLE	. AXE	1					
8-3	K1038793	. COVER	. COUVERTURE	1					
8-4	K1038794	. SPACER	. ENTRETOISE	1					
8-5	S6500600	. RING;RETAINER	. ANNEAU	1					
8-6	-	. RING;WEAR	. ANNEAU	1	K				
8-7	S8000901	. O-RING	. JOINT CIRCULAIRE	1	K				
8-8	-	. SEAL;SLIPPER	. JOINT	6	K				
8-9	S8011000	. O-RING	. JOINT CIRCULAIRE	1	K				
8-10	S8001050	. O-RING	. JOINT CIRCULAIRE	1	K				
8-11	K9006884	. SHIM	. CALE	1					
8-12	K9006883	. SHIM	. CALE	1					
8-13	S0515253	. BOLT M12X1.75X30	. BOULON	4					
8-14	S5102703	. WASHER;SPRING	. RONDELLE	4					
8-15	2181-1116D2	. PLUG	. BOUCHON	1					
*	K1038790KT	SEAL KIT;CENTER JOINT	KIT DE JOINT	1					

Fig. 2161 CENTER JOINT JOINT CENTRAL

Serial No. ; 12605 ~

DATE	SEP. 12, 2012
4th EDITION	

Fig. 2161 CENTER JOINT
JOINT CENTRAL

Serial No. ; 12605 ~

Key No.	Part No.	Description	Description	Q'ty	S.C	Serial No.	ICA	Replaceable part	
								Part No.	Q'ty
2161 --	650105-00059	UNDERCARRIAGE ASSY	TRAIN	-	D				
8	400826-00011A	JOINT,CENTER	JOINT CENTRAL	1					
8-1	900122-00112	. HUB	. MOYEU	1					
8-2	130713-01619	. SPINDLE	. AXE	1					
8-3	K1038793	. COVER	. COUVERTURE	1					
8-4	K1038794	. SPACER	. ENTRETOISE	1					
8-5	S6500600	. RING;RETAINER	. ANNEAU	1					
8-6	S8000801	. O-RING	. JOINT TORIQUE	1	K				
8-7	-	. SEAL;DUST	. JOINT	1	K				
8-8	-	. SEAL;SLIPPER	. JOINT	7	K				
8-9	S8011000	. O-RING	. JOINT CIRCULAIRE	1	K				
8-10	S8001050	. O-RING	. JOINT CIRCULAIRE	1	K				
8-11	K9006884	. SHIM	. CALE	1					
8-12	K9006883	. SHIM	. CALE	1					
8-13	S0515253	. BOLT M12X1.75X30	. BOULON	4					
8-14	S5102703	. WASHER;SPRING	. RONDELLE	4					
8-15	2181-1116D2	. PLUG	. BOUCHON	1					
*	401107-01330	SEAL KIT,CENTER JOINT	KIT DE JOINT	1					

DATE	SEP. 12, 2012
4th EDITION	

Fig. 2170 TRACK SHOE ASS'Y - 600G(DX225LCA) MAILLON DE CHAINE

Serial No. ;

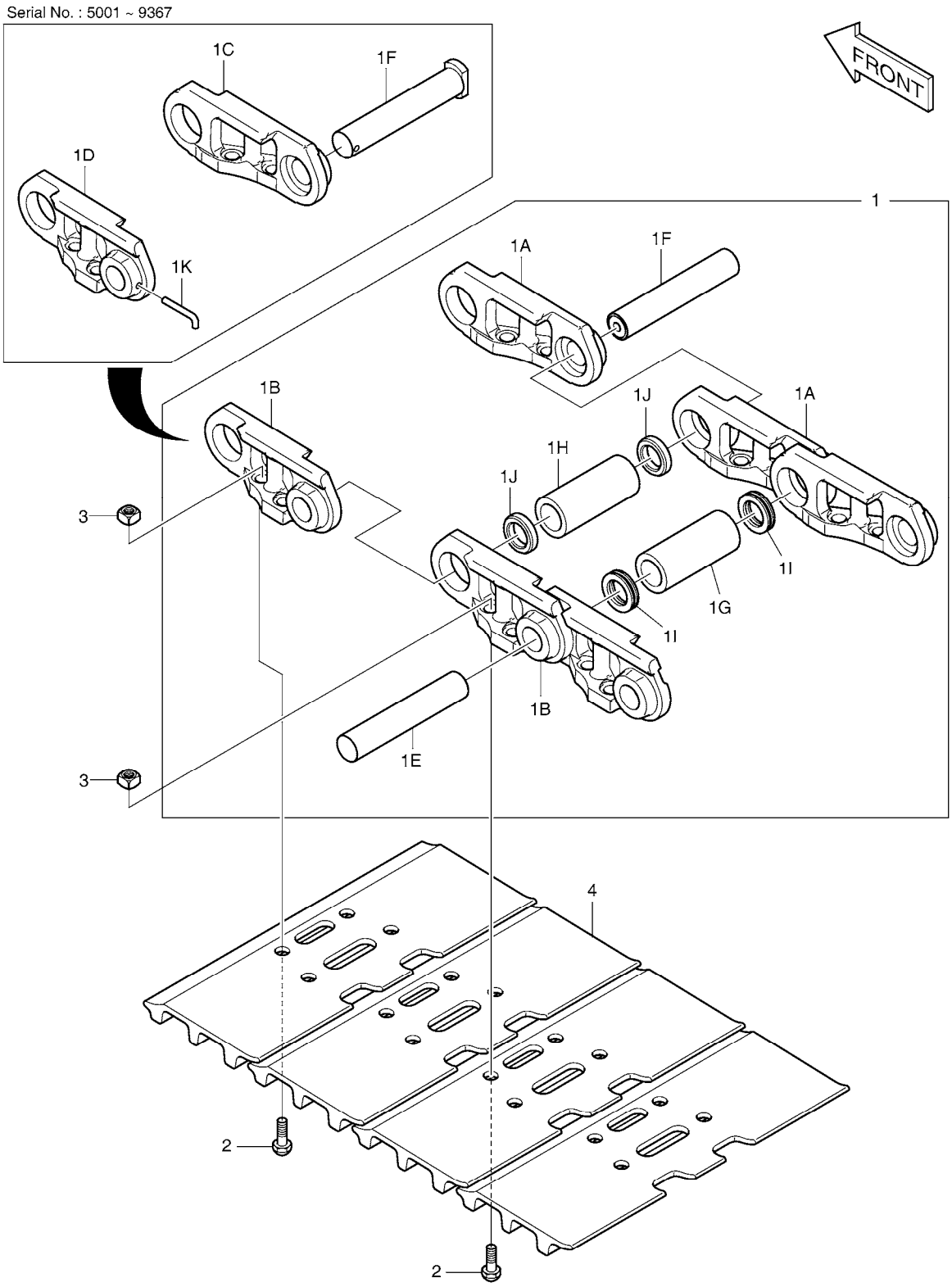

DATE	SEP. 12, 2012
4th EDITION	

Fig. 2170 TRACK SHOE ASS'Y - 600G(DX225LCA) MAILLON DE CHAINE

Serial No. ;

Key No.	Part No.	Description	Description	Q'ty	S.C	Serial No.	ICA	Replaceable part	
								Part No.	Q'ty
2170 --	K1038365	TRACK SHOE ASS`Y	MAILLON DE CHAINE	2		5001-9367	I	200106-00346	2
	200106-00346	SHOE ASSY,TRACK;600MM	MAILLON DE CHAINE	2		09368-11735	I	200106-00346A	2
	200106-00346A	SHOE ASSY,TRACK;600MM	MAILLON DE CHAINE	2		11736-			
1	K1038366	TRACK LINK ASS`Y	ENSEMBLE MAILLON DE CI	1		5001-9367	I	200103-00102	1
	200103-00102	TRACK LINK ASS`Y	ENSEMBLE MAILLON DE CI	1		09368-11735	Y	200103-00102A	1
	200103-00102A	TRACK LINK ASS`Y	ENSEMBLE MAILLON DE CI	1		11736-			
1A	K1038367	. LINK;TRACK(RH)	. PIECE DE JONCTION	48		5001-9367			
	K1038367	. LINK;TRACK(RH)	. PIECE DE JONCTION	49		9368-			
1B	K1038368	. LINK;TRACK(LH)	. PIECE DE JONCTION	48		5001-9367			
	K1038368	. LINK;TRACK(LH)	. PIECE DE JONCTION	49		9368-			
1C	K1038429	. LINK;MASTER(RH)	. PIECE DE JONCTION	1		5001-9367			
1D	K1038430	. LINK;MASTER(LH)	. PIECE DE JONCTION	1		5001-9367			
1E	K1038369	. PIN	. GOUPILLE	48					
1F	K1038370	. PIN;MASTER	. GOUPILLE	1		5001-9367			
	120501-01370	. PIN,MASTER	. GOUPILLE	1		9368-			
1G	K1038371	. BUSHING	. DOUILLE	48					
1H	K1038372	. BUSHING;MASTER	. DOUILLE	1					
1I	K1038373	. SEAL;DUST	. CACHET	96					
1J	K1038374	. SPACER	. ENTRETOISE	2					
1K	K1038376	. PIN;SMALL	. GOUPILLE	1		5001-9367			
2	K1038377	BOLT	BOULON	196					
3	K1038378	NUT	ECROU	196					
4	K1038379	SHOE 600mm	CHAUSSURE	49					

DATE	SEP. 12, 2012
4th EDITION	

Fig. 2175 TRACK SHOE ASS'Y - 600G(DX220A) MAILLON DE CHAINE

Serial No. ;

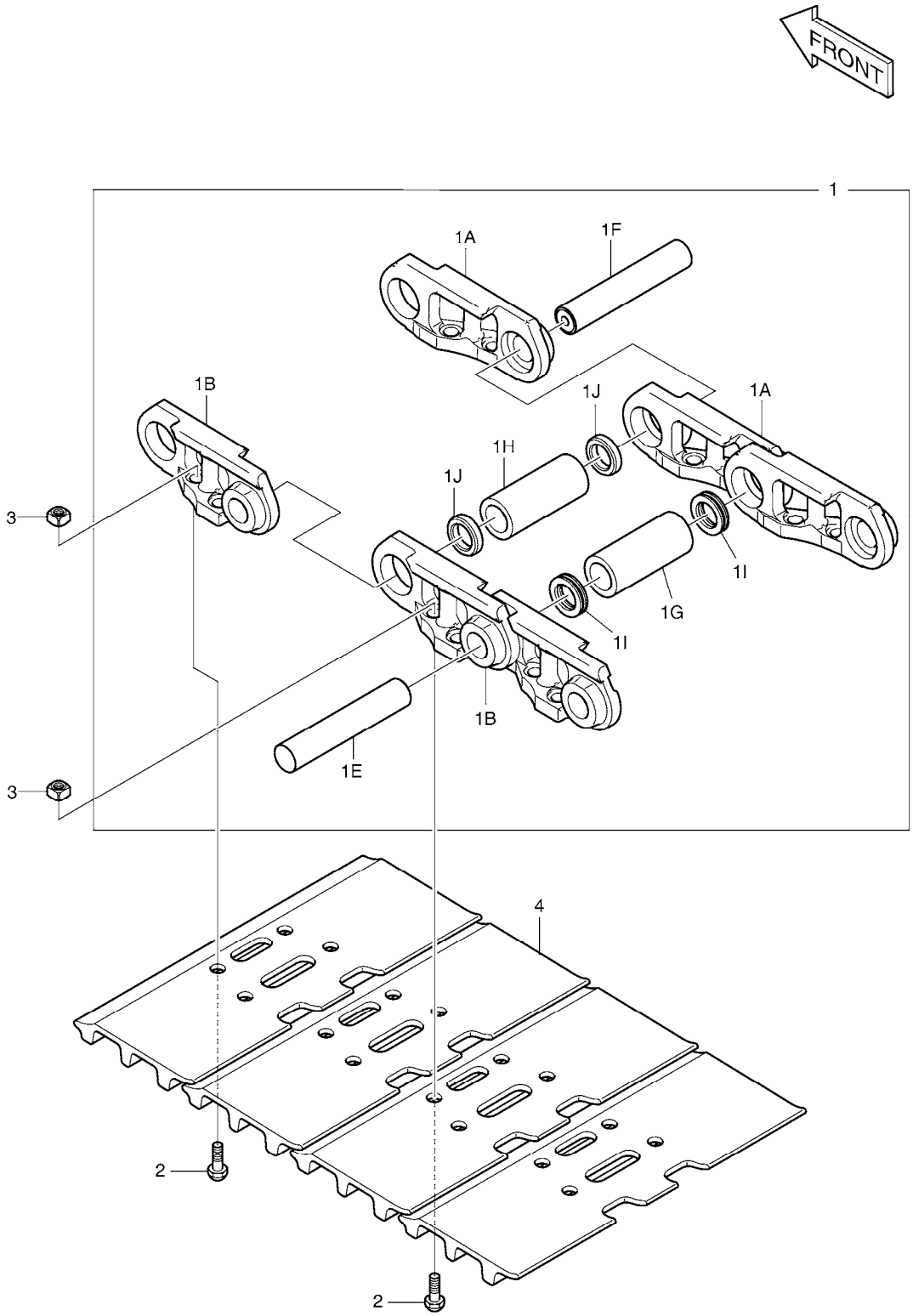

DATE	SEP. 12, 2012
4th EDITION	

Fig. 2175 TRACK SHOE ASS'Y - 600G(DX220A) MAILLON DE CHAINE

Serial No. ;

Key No.	Part No.	Description	Description	Q'ty	S.C	Serial No.	ICA	Replaceable part	
								Part No.	Q'ty
2175 --	200106-00191	SHOE ASSY,TRACK	MAILLON DE CHAINE	2					
1	200103-00084A	LINK ASSY,TRACK	ENSEMBLE MAILLON DE CI	1					
1A	101539-00136	. LINK;(R.H)	. LIEN	45					
1B	101539-00137	. LINK;(L.H)	. LIEN	45					
1E	2123-6060	. PIN	. GOUPILLE	44					
1F	120501-01341	. PIN,LINK;MASTER	. GOUPILLE	1					
1G	130702-00118	. BUSHING	. DOUILLE	44					
1H	130702-00119	. BUSHING;MASTER	. MANCHON	1					
1I	180-00441	. SEAL;DUST	. JOINT	88					
1J	2114-6035	. SPACER	. ENTERTOISE	2					
2	2120-6017	BOLT	BOULON A 6 PANS	180					
3	120312-00134	NUT,TRACK SHOE;(M20)	ECROU	180					
4	200106-00262D1	SHOE,TRACK(600mm)	SABOT	45					

DATE	SEP. 12, 2012
4th EDITION	

Fig. 2180 TRAVEL PIPING - LONG CRAWLER(DX225LCA) ARMATURE DE VOYAGE

Serial No. ;

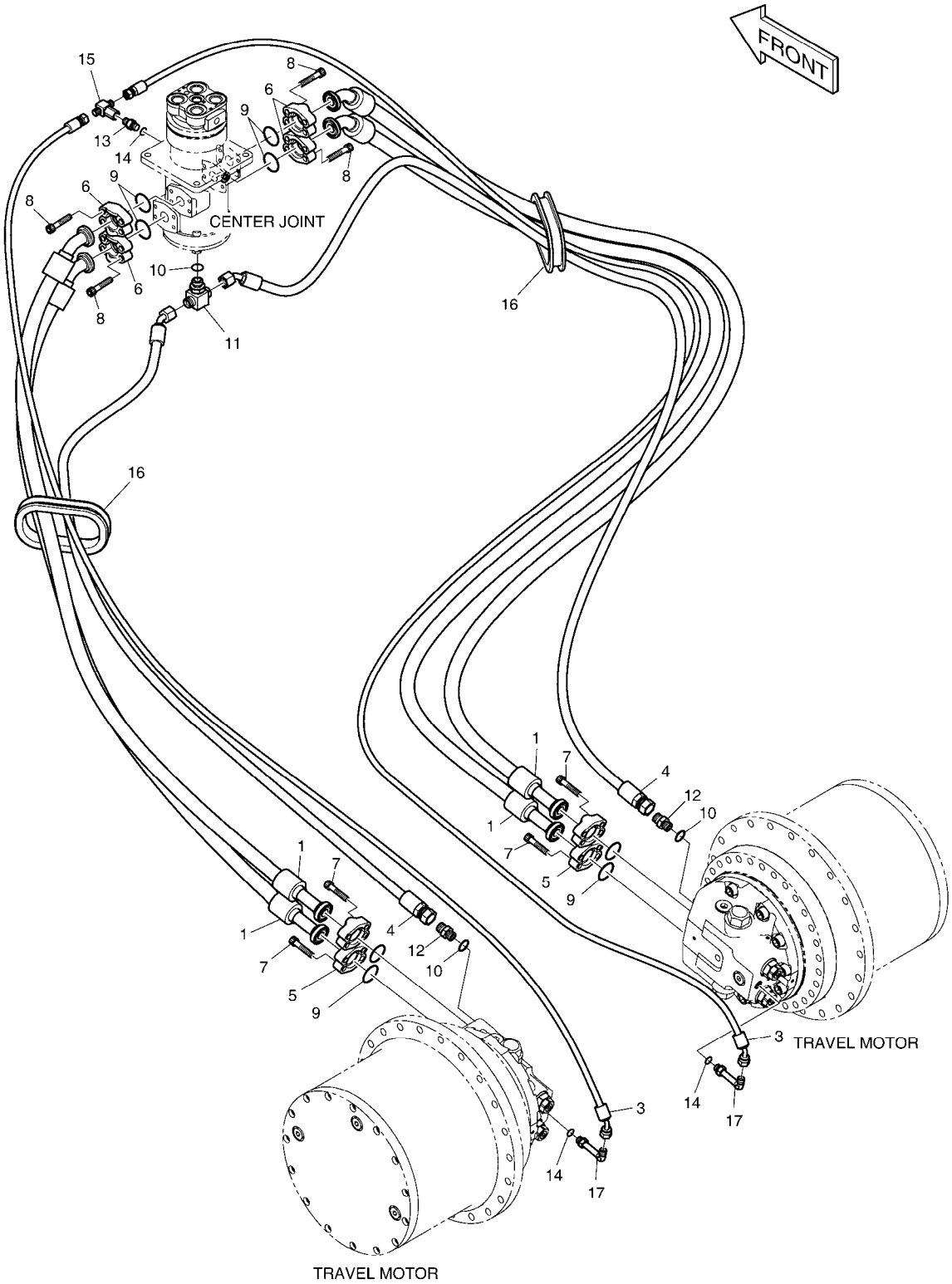

DATE	SEP. 12, 2012
4th EDITION	

Fig. 2180 TRAVEL PIPING - LONG CRAWLER(DX225LCA) ARMATURE DE VOYAGE

Serial No. ;

Key No.	Part No.	Description	Description	Q'ty	S.C	Serial No.	ICA	Replaceable part	
								Part No.	Q'ty
2180 --	K1044576B	TRAVELLING PIPING	TUYAUTERIE DE DEPLACE	-	D				
1	DS2112002	HOSE	TUYAU FLEXIBLE	4					
3	DS2092177	HOSE	TUYAU FLEXIBLE	2					
4	DS2054217	HOSE	TUYAU FLEXIBLE	2					
5	2181-9078	FLANGE	BRIDE	8					
6	2181-9081	FLANGE;SPLIT	BRIDE	8					
7	S2212266	BOLT;SOCKET M10X1.5X30	BOULON A 6 PANS CREUX	16					
8	S2215466	BOLT;SOCKET M12X1.75X40	BOULON	16					
9	2180-1026D19	O-RING	JOINT CIRCULAIRE	8					
10	S8000181	O-RING	JOINT CIRCULAIRE	3					
11	2181-2281D10	TEE	TE	1					
12	2181-1126D6	ADAPTER	ADAPTEUR	2					
13	2181-1126D14	ADAPTER	ADAPTEUR	1					
14	S8000111	O-RING	JOINT TORIQUE	3					
15	2181-4125	TEE	TE	1					
16	160-00069	BUSHING;RUBBER	MANCHON CAOUTCHOUC	2					
17	2181-1702D56	ELBOW	COUDE	2					

DATE	SEP. 12, 2012
4th EDITION	

Fig. 2185 TRAVEL PIPING - STD(DX220A) ARMATURE DE VOYAGE

Serial No. ;

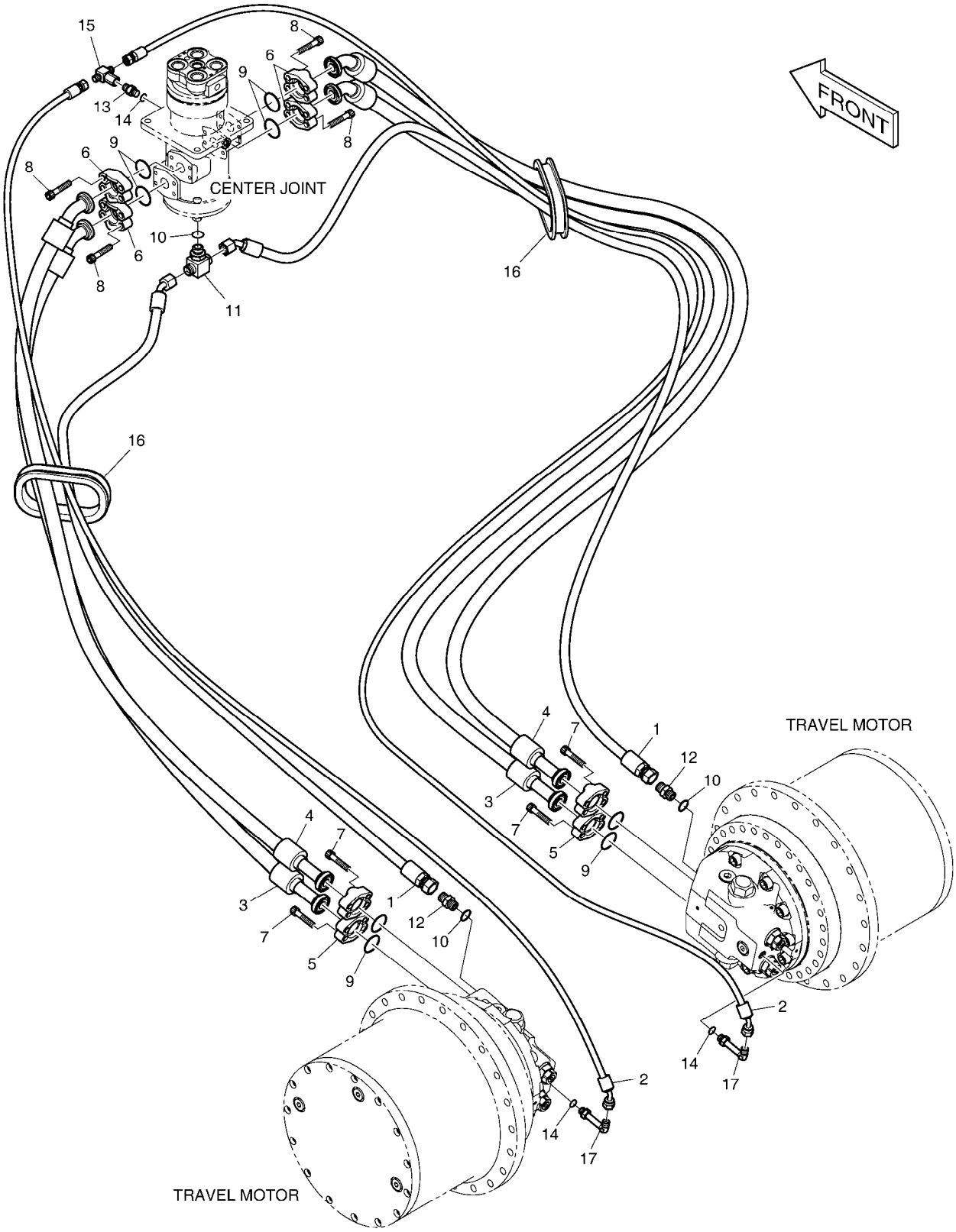

DATE	SEP. 12, 2012
4th EDITION	

Fig. 2185 TRAVEL PIPING - STD(DX220A) ARMATURE DE VOYAGE

Serial No. ;

Key No.	Part No.	Description	Description	Q'ty	S.C	Serial No.	ICA	Replaceable part	
								Part No.	Q'ty
2185 --	420212-07632	TRAVELLING PIPING	TUYAUTERIE DE DEPLACE	-	D				
1	2184-1070D49	HOSE PF1/2-1960L	TUYAU FLEXIBLE	2					
2	DS2092087	HOSE	TUYAU FLEXIBLE	2					
3	DS2112012	HOSE	TUYAU FLEXIBLE	2					
4	DS2112011	HOSE	TUYAU FLEXIBLE	2					
5	2181-9078	FLANGE	BRIDE	8					
6	2181-9081	FLANGE;SPLIT	BRIDE	8					
7	S2212266	BOLT;SOCKET M10X1.5X30	BOULON A 6 PANS CREUX	16					
8	S2215466	BOLT;SOCKET M12X1.75X40	BOULON	16					
9	2180-1026D19	O-RING	JOINT CIRCULAIRE	8					
10	S8000181	O-RING	JOINT CIRCULAIRE	3					
11	2181-2281D10	TEE	TE	1					
12	2181-1126D6	ADAPTER	ADAPTEUR	2					
13	2181-1126D14	ADAPTER	ADAPTEUR	1					
14	S8000111	O-RING	JOINT TORIQUE	3					
15	2181-4125	TEE	TE	1					
16	160-00069	BUSHING;RUBBER	MANCHON CAOUTCHOUC	2					
17	2181-1702D56	ELBOW	COUDE	2					

DATE	SEP. 12, 2012
4th EDITION	

Fig. 3100 BOOM - 5.7m FLECHE

Serial No. ;

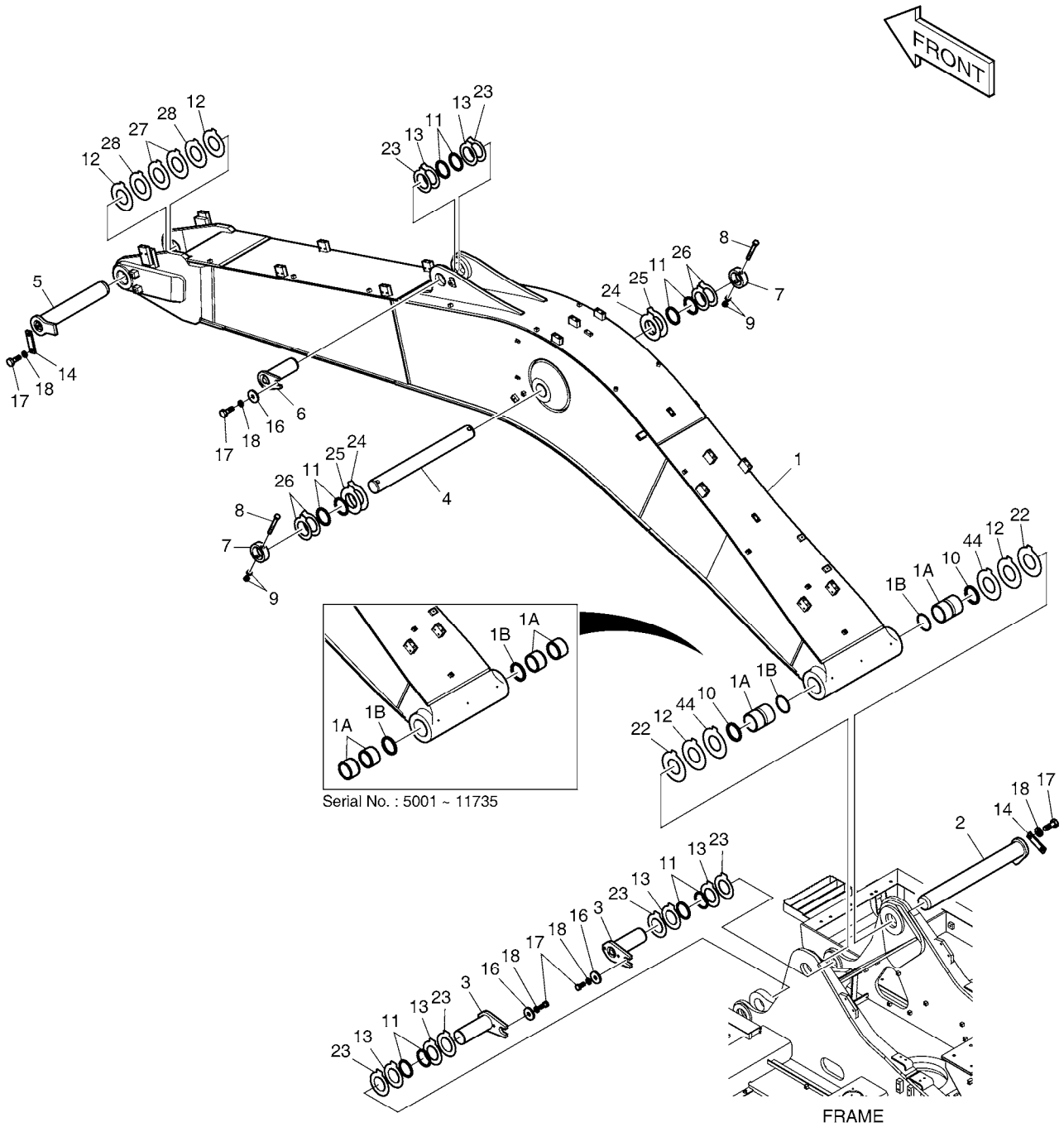

DATE	SEP. 12, 2012
4th EDITION	

Fig. 3100 BOOM - 5.7m FLECHE

Serial No. ;

Key No.	Part No.	Description	Description	Q'ty	S.C	Serial No.	ICA	Replaceable part Part No.	Q'ty
3100 --	K1037858E	BOOM ASS'Y	FLECHE	-	D	5001-6071			
	230207-00081	BOOM ASS'Y	FLECHE	-	D	6072-			
1	K1037857E	BOOM SUB ASS'Y-5.7M	ENSEMBLE FLECHE	1		05001-11735	Y	230211-00054A	1
	230211-00054A	BOOM,MACHINE;(5.7M)	ENSEMBLE FLECHE	1		11736-			
1A	K1037847A	. BUSHING	. BUSHING	4		05001-11735	Y	131008-00074A	2
	131008-00074A	. BUSHING	. BUSHING	2		11736-			
1B	2180-1106BD6	. SEAL;DUST	. CACHET	2					
2	2123-2180G	PIN	GOUJON	1		5001-8381	I	120501-01812	1
	120501-01812	PIN,BOOM FOOT	GOUJON	1		8382-			
3	123-00409A	PIN	GOUPILLE	2		5001-8240	I	120501-01061	2
	120501-01061	PIN	GOUPILLE	2		8241-			
4	K1007253B	PIN	GOUPILLE	1					
5	2123-2185G	PIN	GOUPILLE	1					
6	2123-2187E	PIN	GOUJON	1		5001-8240	I	120501-01062	1
	120501-01062	PIN	GOUJON	1		8241-			
7	2116-1531A	STOPPER	TAQUET	2					
8	S0567066	BOLT	BOULON	2					
9	S4012933	NUT	ECROU	4					
10	2180-1106BD6	SEAL;DUST	CACHET	2					
11	2180-1106BD24	SEAL;DUST	CACHET	10					
12	DS7752018	SHIM	CALE	4					
13	DS7752012	SHIM	CALE	6					
14	621-03710A	PLATE;STOPPER	PLAQUE	2					
16	2116-1060D6	STOPPER	TAQUET	3					
17	S0521366	BOLT	BOULON	7					
18	S5102903	WASHER,SPRING	RONDELLE	7					
22	DS7752017	SHIM	CALE	2		5001-8973			
	DS7752093	SHIM	CALE	2		8974-			
23	DS7752013	SHIM	CALE	6					
24	DS7752026	SHIM	CALE	2					
25	DS7752027	SHIM	CALE	2					
26	DS7752025	SHIM	CALE	4					
27	DS7752017	SHIM	CALE	2					
28	DS7752093	SHIM	CALE	2		8974-			
44	DS7752028	SHIM	CALE	2		8974-			

DATE	SEP. 12, 2012
4th EDITION	

Fig. 3110 ARM - 2.9m BALANCIER

Serial No. ;

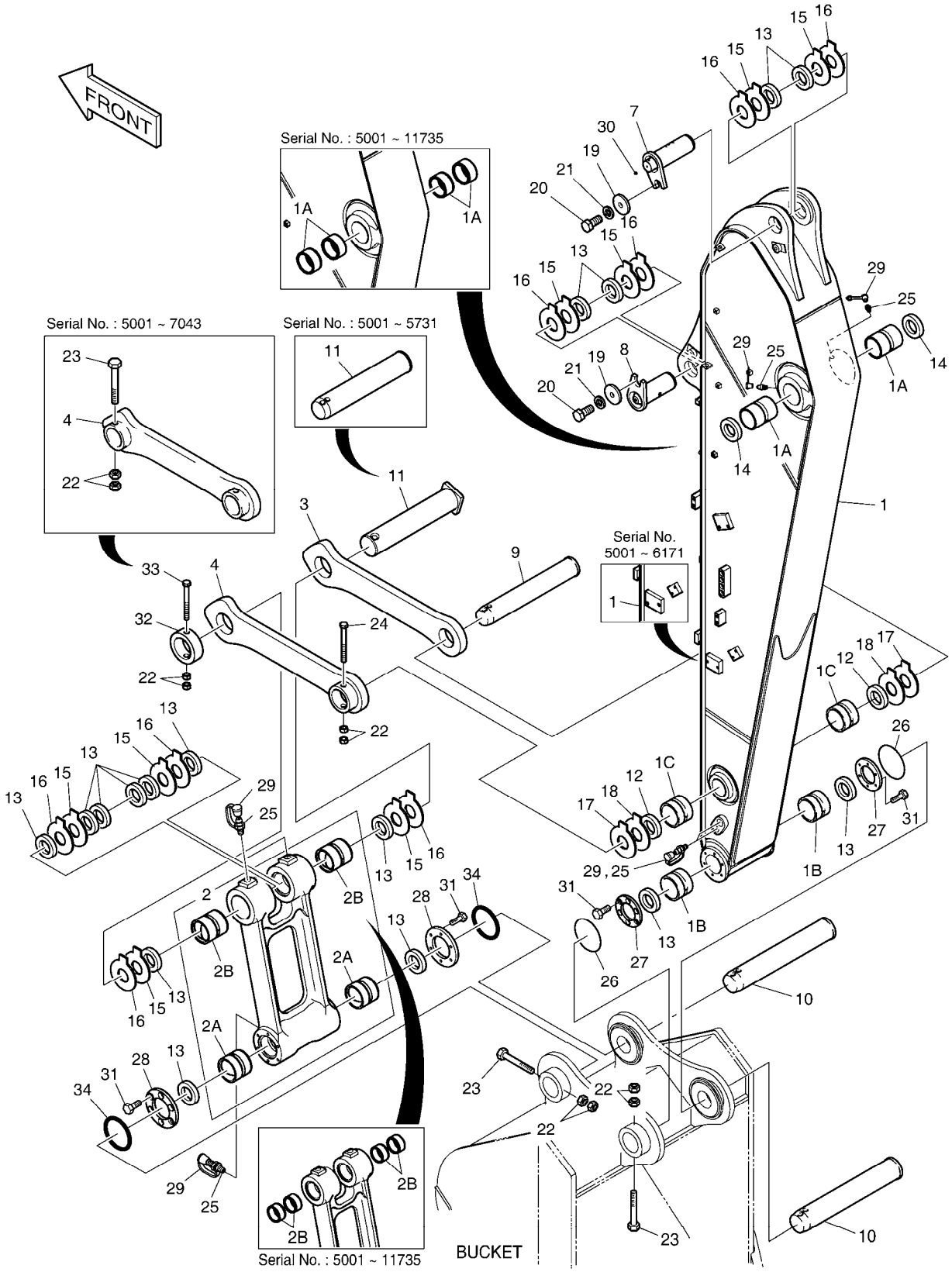

DATE	SEP. 12, 2012
4th EDITION	

Fig. 3110 ARM - 2.9m BALANCIER

Serial No. ;

Key No.	Part No.	Description	Description	Q'ty	S.C	Serial No.	ICA	Replaceable part Part No.	Q'ty
3110 --	K1037998C	ARM ASS'Y	BALANCIER	-	D	5001-5731			
	230201-00104	ARM ASS'Y	BALANCIER	-	D	5732-			
1	K1037999B	ARM SUB ASS'Y-2.9m	ENSEMBLE BALANCIER	1		5001-6171			
	230204-00083A	ARM;2.9M	ENSEMBLE BALANCIER	1		6172-9957	I	230204-00083B	1
	230204-00083B	ARM;2.9M	ENSEMBLE BALANCIER	1		09958-11735			
	230204-00083E	ARM,MACHINE;2.9M	ENSEMBLE BALANCIER	1		11736-			
1A	K1037848A	. BUSHING	. BUSHING	4		05001-11735	Y	131008-00064A	2
	131008-00064A	. BUSHING	. BUSHING	2		11736-			
1B	K1037849A	. BUSHING	. BUSHING	2		05001-11735	Y	K1000733	2
	K1000733	. BUSHING	. BUSHING	2		11736-			
1C	K1037850A	. BUSHING	. BUSHING	2		05001-11735	Y	K1000734	2
	K1000734	. BUSHING	. BUSHING	2		11736-			
2	K1041214A	PUSH LINK ASS'Y	ENSEMBLE DE ARTICULAT	1		05001-11735	Y	K1002294	1
	K1002294	PUSH LINK ASS`Y	ENSEMBLE DE ARTICULAT	1		11736-			
2A	K1037852A	. BUSHING	. BUSHING	2		05001-11735	Y	110-00249	2
	110-00249	. BUSHING	. BUSHING	2		11736-			
2B	K1037851A	. BUSHING	. BUSHING	4		05001-11735	Y	K1000735	2
	K1000735	. BUSHING	. BUSHING	2		11736-			
3	2155-1299B	LINK;GUIDE(R.H)	ARTICULATION	1		5001-5731	Y	101540-00012	1
	101540-00012	LINK,GUIDE(R.H)	LIEN	1		5732-			
4	2155-1300B	LINK;GUIDE(L.H)	LIEN	1		5001-7043			
	101540-00028	LINK,GUIDE(L.H)	LIEN	1		7044-			
7	K1046927	PIN	GOUJON	1		5001-8240	Y	120501-01063	1
	120501-01063	PIN	GOUJON	1		8241-			
8	K1002130A	PIN	GOUJON	1		5001-8240	Y	120501-01064	1
	120501-01064	PIN	GOUJON	1		8241-			
9	K1007255A	PIN	GOUJON	1		5001-8240	Y	120501-01065	1
	120501-01065	PIN	GOUJON	1		8241-			
10	2123-2192E	PIN	GOUJON	2		5001-8240	Y	120501-01052	2
	120501-01052	PIN	GOUJON	2		8241-			
11	K1007256A	PIN	GOUJON	1		5001-5731	Y	120501-00130	1
	120501-00130	PIN;BUCKET CYL ROD	GOUJON	1		5732-			
12	2180-1106BD4	SEAL;DUST	CACHET	2					
13	2180-1106BD24	SEAL;DUST	CACHET	14					
14	2180-1106BD6	SEAL;DUST	CACHET	2					
15	DS7752012	SHIM	CALE	8					
16	DS7752013	SHIM	CALE	8					
17	DS7752006	SHIM	CALE	2					

DATE	SEP. 12, 2012
4th EDITION	

Fig. 3110 ARM - 2.9m BALANCIER

Serial No. ;

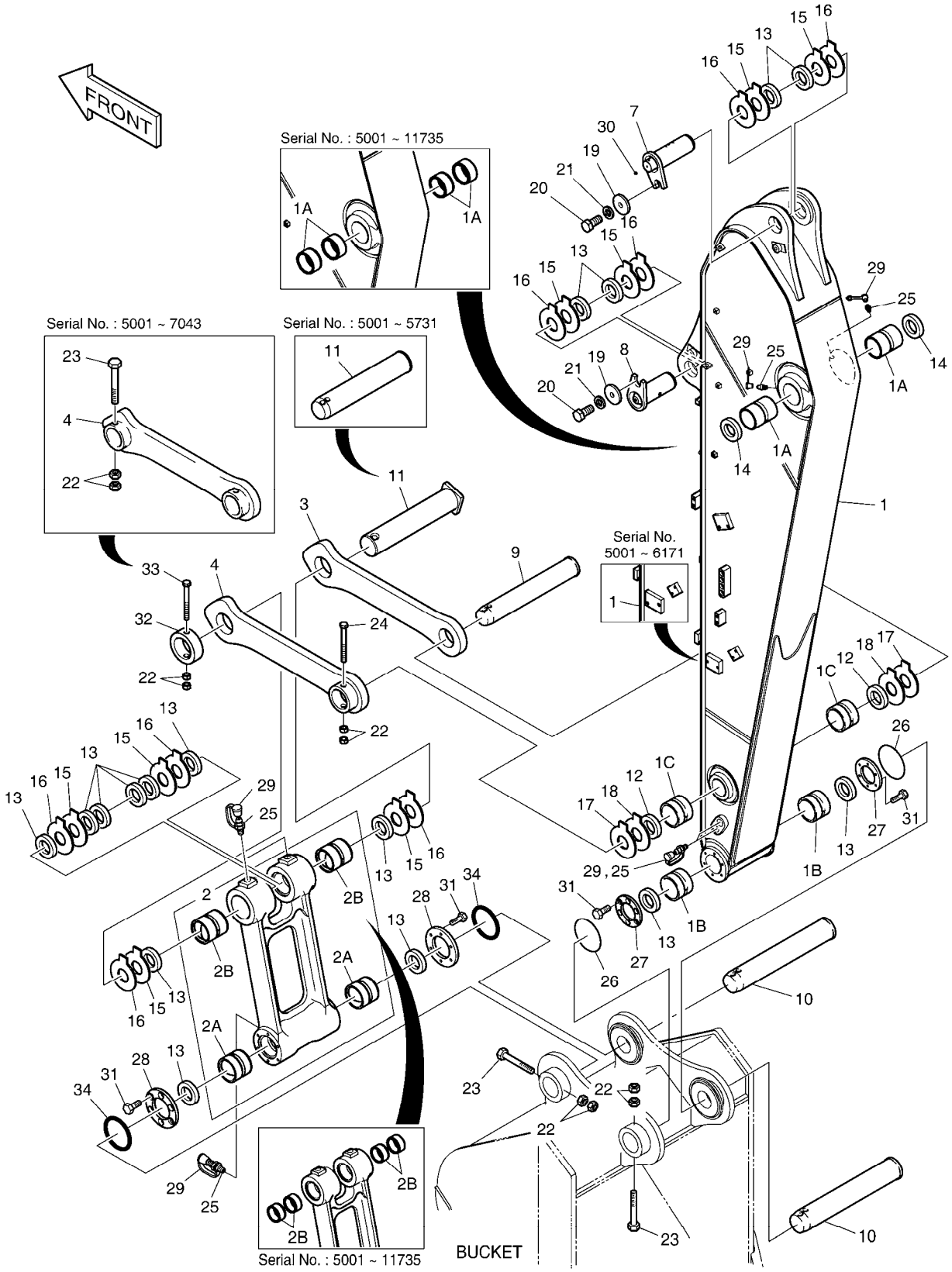

DATE	SEP. 12, 2012
4th EDITION	

Fig. 3110 ARM - 2.9m BALANCIER

Serial No. ;

Key No.	Part No.	Description	Description	Q'ty	S.C	Serial No.	ICA	Replaceable part	
								Part No.	Q'ty
3110 -18	DS7752007	SHIM	CALE	2					
19	2116-1060D6	STOPPER	TAQUET	2					
20	S0521366	BOLT	BOULON	2					
21	S5102903	WASHER,SPRING	RONDELLE	2					
22	S4012933	NUT	ECROU	8					
23	DS0001084	BOLT	BOULON	3		5001-7043			
	DS0001084	BOLT	BOULON	2		7044-			
24	DS0001083	BOLT	BOULON	1					
25	S6710041	NIPPLE;GREASE	GRAISSEUR	7					
26	180-00077D5	O-RING	JOINT CIRCULAIRE	2					
27	K1000911	SPACER	ENTRETOISE	2					
28	K1000912B	SPACER	ENTRETOISE	2					
29	160-00020	CAP;GREASE NIPPLE	CHAPEAU	7					
30	2181-1116D1	PLUG	BOUCHON	1					
31	S0712066	BOLT	BOULON	24					
32	2116-1531A	STOPPER	TAQUET	1		7044-			
33	S0567066	BOLT	BOULON	1		7044-			
34	180-00077D3	O-RING	JOINT TORIQUE	2		10998-			

DATE	SEP. 12, 2012
4th EDITION	

Fig. 3120 BUCKET ASS'Y - 0.92m³ ENSEMBLE DE GODET

Serial No. ;

Serial No. : 5001 ~ 10997

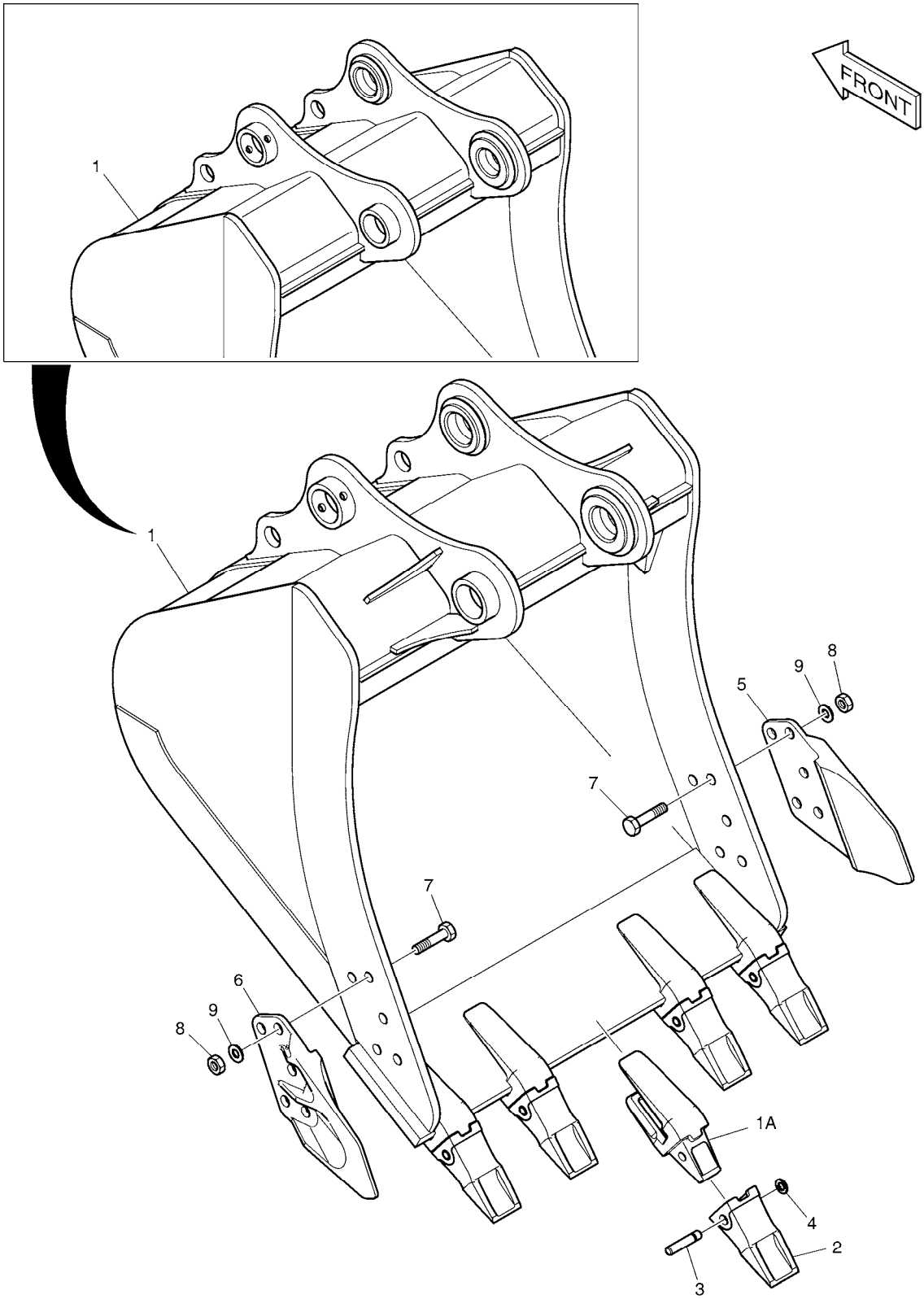

DATE	SEP. 12, 2012
4th EDITION	

Fig. 3120 BUCKET ASS'Y - 0.92m³ ENSEMBLE DE GODET

Serial No. ;

Key No.	Part No.	Description	Description	Q'ty	S.C	Serial No.	ICA	Replaceable part	
								Part No.	Q'ty
3120 --	K1000321G	BUCKET ASS'Y-0.92㎥	ENSEMBLE GODET	1		05001-10997	Y	230104-01245	1
	230104-01245	BUCKET ASS'Y-0.92㎥	ENSEMBLE GODET	1		10998-			
1	K1000322G	BUCKET-0.92㎥	GODET	1		05001-10997	I	230104-01246	1
	230104-01246	BUCKET-0.92㎥	GODET	1		10998-			
1A	2713-1218A	. ADAPTER;TOOTH	. ADAPTEUR	5					
2	K1038006A	TOOTH	DENT	5					
3	2705-1020	PIN;LOCKING	GOUPILLE	5					
4	2114-1848A	WASHER;LOCKING	RONDELLE	5					
5	2713-1059A	CUTTER;SIDE(R.H)	COUPEUR	1					
6	2713-1060A	CUTTER;SIDE(L.H)	COUPEUR	1					
7	S0574661	BOLT M24X3.0X65	BOULON	10					
8	S4013333	NUT	ECROU	10					
9	2114-1831A	WASHER;HARDEN	RONDELLE	10					

DATE	SEP. 12, 2012
4th EDITION	

Fig. 3130 BOOM PIPING
CONDUITES DE FLECHE

Serial No. ;

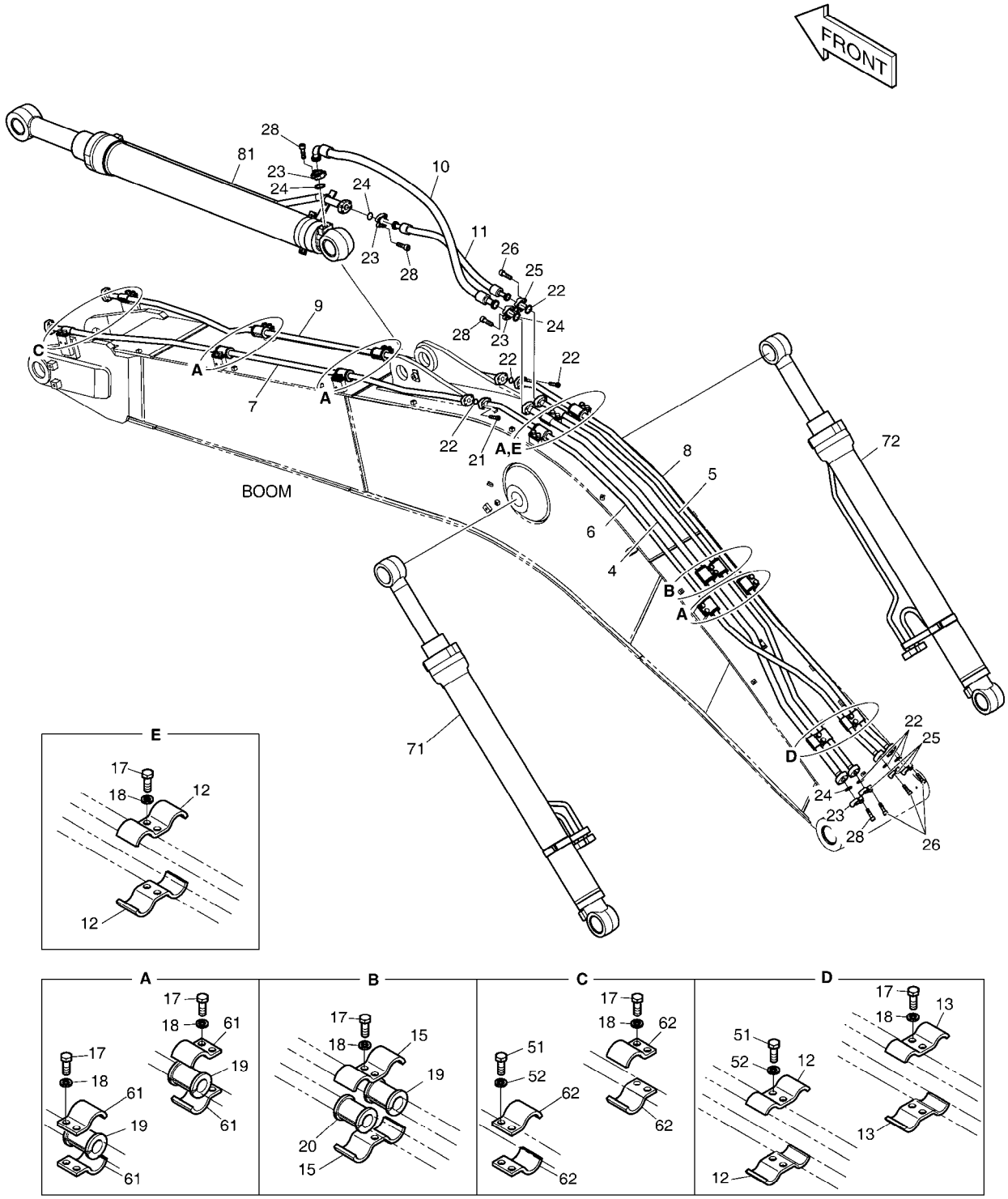

DATE	SEP. 12, 2012
4th EDITION	

Fig. 3130 BOOM PIPING CONDUITES DE FLECHE

Serial No. ;

Key No.	Part No.	Description	Description	Q'ty	S.C	Serial No.	ICA	Replaceable part	
								Part No.	Q'ty
3130 --	K1041795	BOOM PIPING	TUYAUTERIE DE PERCHE	-	D				
4	K1033273	PIPE	TUYAU	1					
5	K1033274	PIPE	TUYAU	1					
6	K1033265	PIPE	TUYAU	1					
7	K1033267	PIPE	TUYAU	1					
8	K1033266	PIPE	TUYAU	1					
9	K1033268	PIPE	TUYAU	1					
10	DS2040610	HOSE	TUYAU	1					
11	DS2038190	HOSE	TUYAU	1					
12	124-00367	CLAMP;PIPE	BRIDE	4					
13	124-00300	CLAMP;PIPE	BRIDE	2					
15	124-00368	CLAMP;PIPE	BRIDE	2					
17	S0562766	BOLT	BOULON	24					
18	S5102803	WASHER;SPRING	RONDELLE	24					
19	161-00574	RUBBER	LE CAOUTCHOUC	9					
20	161-00281	RUBBER	LE CAOUTCHOUC	1					
21	S2212566	BOLT;SOCKET	BOULON	8					
22	2180-1026D2	O-RING	JOINT CIRCULAIRE	6					
23	2181-9078	FLANGE	BRIDE	8					
24	2180-1026D19	O-RING	JOINT CIRCULAIRE	4					
25	2181-9079	FLANGE	BRIDE	8					
26	S2212366	BOLT;SOCKET M10X1.5X35	BOULON	20					
28	S2212466	BOLT;SOCKET M10X1.5X40	BOULON	12					
51	S0562766	BOLT	BOULON	4					
52	S5102803	WASHER;SPRING	RONDELLE	4					
61	124-00302	CLAMP;PIPE	BRIDE	16					
62	124-00303	CLAMP;PIPE	COLLIER	4					
71	K1044989B	CYLINDER;BOOM (LH)	CYLINDRE	1		5001-9957	Y	400309-00341	1
	400309-00341	CYLINDER,BOOM;(L.H)	CYLINDRE	1		09958-11554	Y	400309-00341A	1
	400309-00341A	CYLINDER,BOOM;(L.H)	CYLINDRE	1		11555-			
72	K1044990B	CYLINDER;BOOM (RH)	CYLINDRE	1		5001-9957	Y	400309-00343	1
	400309-00343	CYLINDER,BOOM;(R.H)	CYLINDRE	1		09958-11554	Y	400309-00343A	1
	400309-00343A	CYLINDER,BOOM;(R.H)	CYLINDRE	1		11555-			
81	K1044991A	CYLINDER;ARM	VERIN DE BALANCIER	1		05001-11735	Y	400305-00219	1
	400305-00219	CYLINDER,ARM	VERIN DE BALANCIER	1		11736-			

DATE	SEP. 12, 2012
4th EDITION	

Fig. 3140 LUBRICATION PIPING - BOOM LUBRIFICATION

Serial No. ;

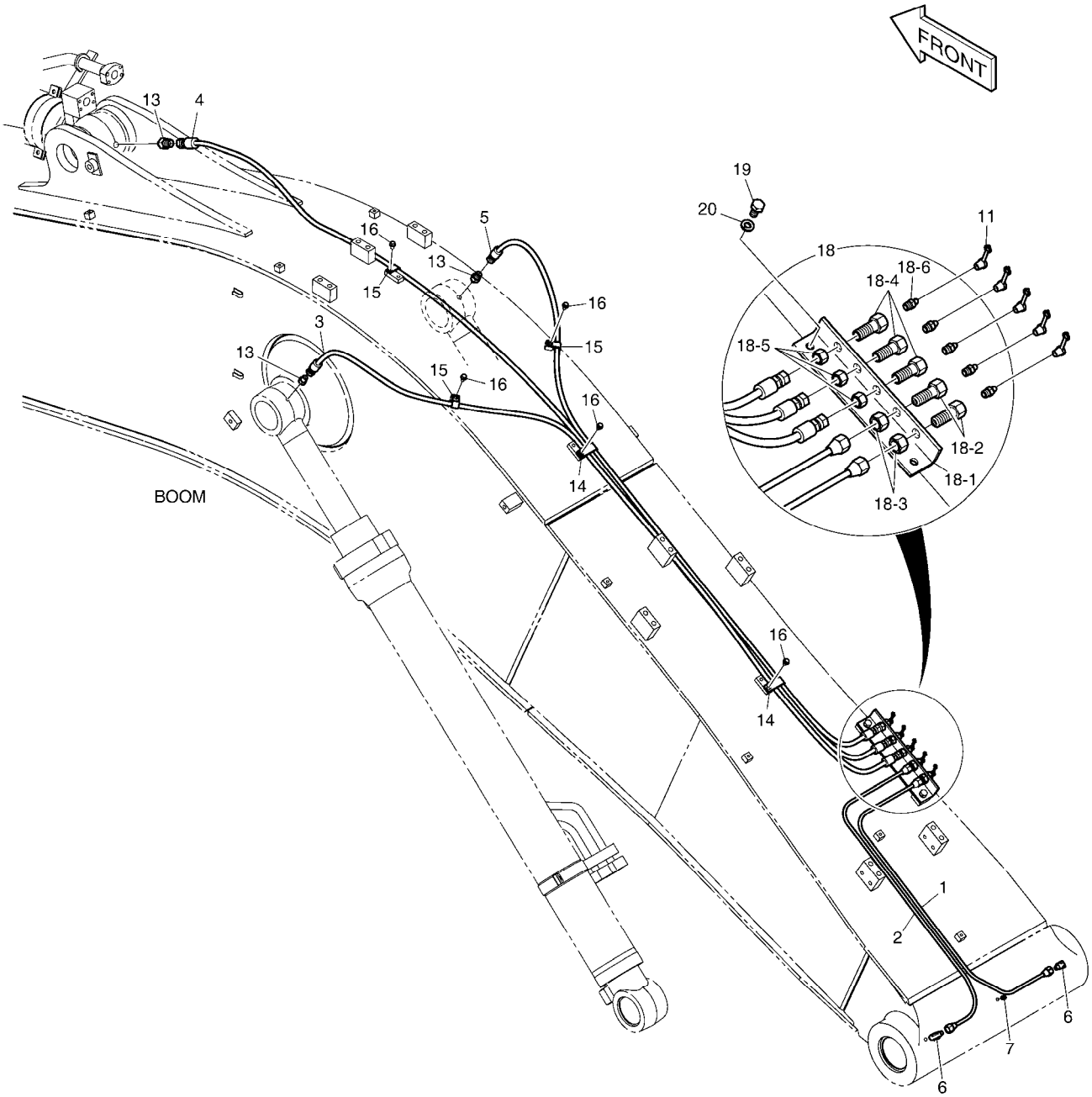

DATE	SEP. 12, 2012
4th EDITION	

Fig. 3140 LUBRICATION PIPING - BOOM LUBRIFICATION

Serial No. ;

Key No.	Part No.	Description	Description	Q'ty	S.C	Serial No.	ICA	Replaceable part	
								Part No.	Q'ty
3140 --	K1041834	LUBRICATION PIPING-BOOM	LUBRIFICATION	-	D				
1	K1038814	PIPE	TUYAU	1					
2	K1038815	PIPE	TUYAU	1					
3	DS2053864	HOSE	TUYAU	1					
4	2184-1045D126	HOSE	TUYAU	1					
5	2184-1045D254	HOSE	TUYAU FLEXIBLE	1					
6	2181-1925	ELBOW	COUDE	2					
7	S3524403	PLUG	PRISE	1					
11	160-00020	CAP;GREASE NIPPLE	CHAPEAU	5					
13	2181-4112	ADAPTER	ADAPTEUR	3					
14	124-00199D4	CLIP	AGRAFE	2					
15	2124-1353D2	CLIP	AGRAFE	3					
16	K1001029	BOLT	BOULON	5					
18	K1038003	GREASE PLATE ASS'Y	TUYAUTERIE DE GRAISSE	1					
18-1	K1037887	. PLATE	. PLAQUE	1					
18-2	181-00525	. REDUCER	. REDUCTEUR	2					
18-3	S4032833	. NUT	. ECROU	2					
18-4	181-00103	. REDUCER	. REDUCTEUR	3					
18-5	121-00006	. NUT	. ECROU	3					
18-6	S6710041	. NIPPLE;GREASE	. GRAISSEUR	5					
19	S0511866	BOLT	BOULON	2					
20	S5102603	WASHER,SPRING	RONDELLE	2					

DATE	SEP. 12, 2012
4th EDITION	

Fig. 3150 ARM PIPING
CONDUITES DE BALANCIER

Serial No. ;

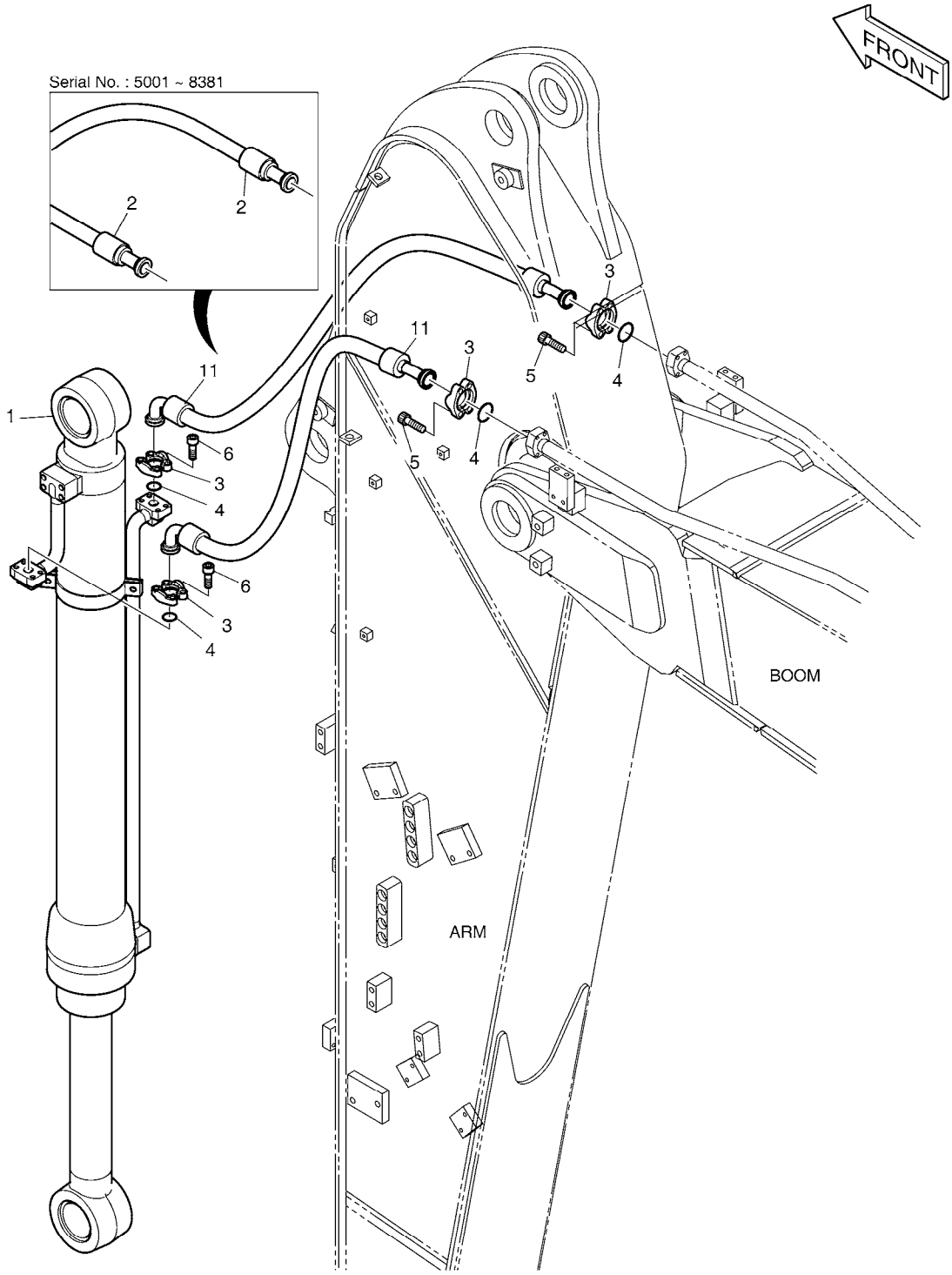

DATE	SEP. 12, 2012
4th EDITION	

Fig. 3150 ARM PIPING
CONDUITES DE BALANCIER

Serial No. ;

Key No.	Part No.	Description	Description	Q'ty	S.C	Serial No.	ICA	Replaceable part	
								Part No.	Q'ty
3150 --	K1041817A	ARM PIPING	TUYAUTERIE DU BRAS	-	D	5001-8381			
	420212-05427	ARM PIPING	TUYAUTERIE DU BRAS	-	D	8382-			
1	K1041218A	BUCKET CYLINDER	VERIN DE GODET	1		05001-11589	Y	400310-00214	1
	400310-00214	CYLINDER;BUCKET	VERIN DE GODET	1		11590-			
2	2184-1100D178	HOSE PF3/4-1450L	TUYAU	2		5001-8381	I	DS2130006	2
3	2181-9079	FLANGE	BRIDE	8					
4	2180-1026D2	O-RING	JOINT CIRCULAIRE	4					
5	S2212366	BOLT;SOCKET M10X1.5X35	BOULON	8					
6	S2212266	BOLT;SOCKET M10X1.5X30	BOULON A 6 PANS CREUX	8					
11	DS2130006	HOSE ASSY,HYDRAULIC	TUYAU	2		8382-			

DATE	SEP. 12, 2012
4th EDITION	

Fig. 3160 LUBRICATION PIPING - ARM LUBRIFICATION

Serial No. ;

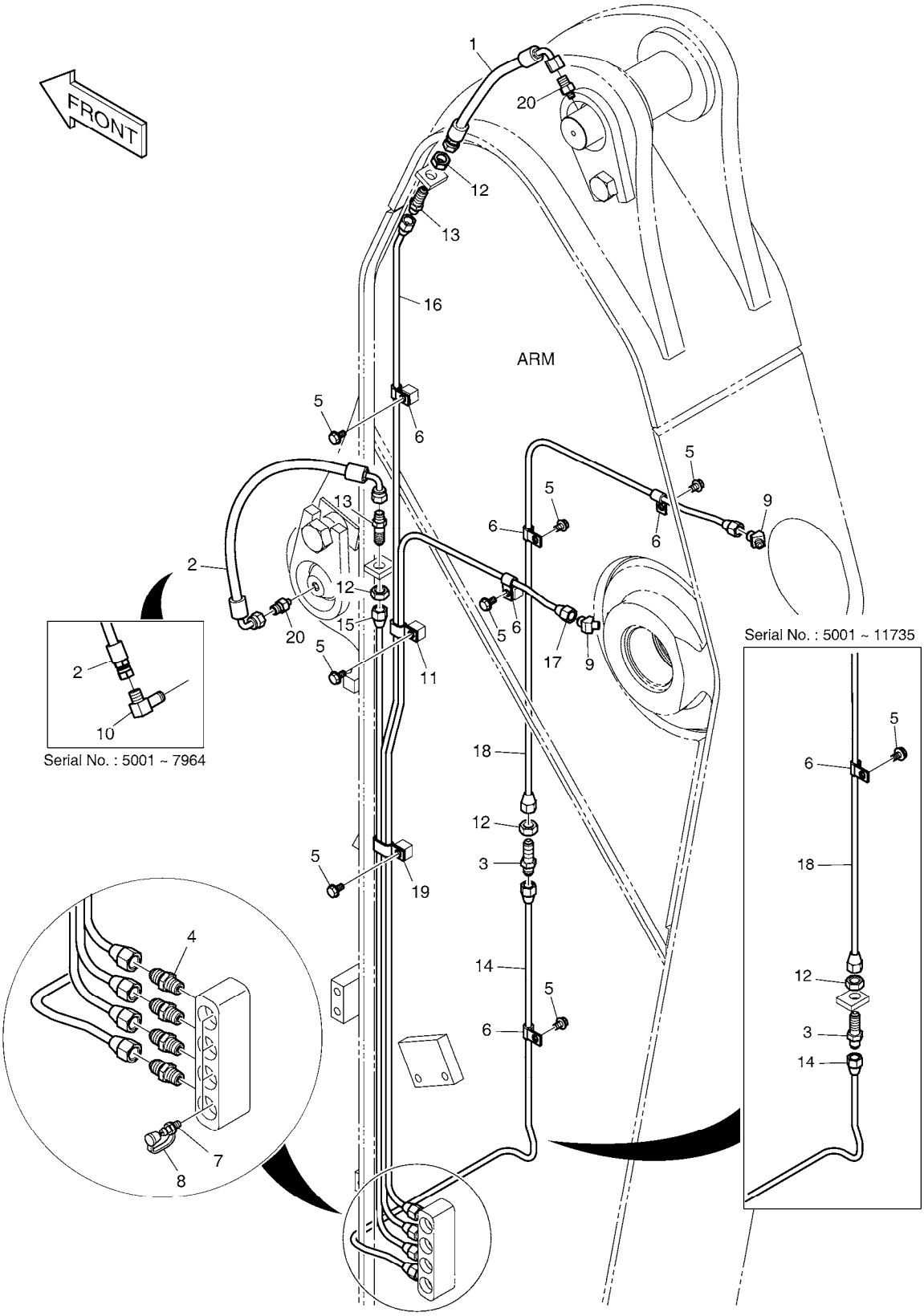

DATE	SEP. 12, 2012
4th EDITION	

Fig. 3160 LUBRICATION PIPING - ARM LUBRIFICATION

Serial No. ;

Key No.	Part No.	Description	Description	Q'ty	S.C	Serial No.	ICA	Replaceable part	
								Part No.	Q'ty
3160 --	K1047299	LUBRICATION PIPING-ARM	LUBRIFICATION	-	D	5001-7964			
	420212-05309	LUBRICATION PIPING - ARM	LUBRIFICATION	-	D	7965-			
1	DS2055849	HOSE	TUYAU	1					
2	2184-1036D11	HOSE	TUYAU	1		5001-7964			
	DS2059595	HOSE PF1/4-310L	TUYAU	1		7965-			
3	DS2225009	ADAPTER	ADAPTEUR	1					
4	2181-1184	ADAPTER	ADAPTEUR	4					
5	K1001029	BOLT	BOULON	7					
6	DS2802023	CLIP	AGRAFE	5					
7	S6710041	NIPPLE;GREASE	GRAISSEUR	4					
8	160-00020	CAP;GREASE NIPPLE	CHAPEAU	4					
9	K1010730	ELBOW	COUDE	2					
10	2181-1111D11	ELBOW	COUDE	1		5001-7964			
11	DS2805007	CLIP	AGRAFE	1					
12	S4032833	NUT	ECROU	3					
13	2181-1923D12	ADAPTER	ADAPTEUR	2					
14	K1047301	PIPE	TUYAU	1		5001-9957	I	420205-00241	1
	420205-00241	PIPE	TUYAU	1		09958-11735			
	420205-00241A	PIPE	TUYAU	1		11736-			
15	K1047302	PIPE	TUYAU	1					
16	K1047303	PIPE	TUYAU	1					
17	K1047304	PIPE	TUYAU	1					
18	K1047305	PIPE	TUYAU	1		05001-11735			
	420207-02037	PIPE	TUYAU	1		11736-			
19	DS2805008	CLIP	AGRAFE	1					
20	2181-4112	ADAPTER	ADAPTEUR	1		5001-7964			
	2181-4112	ADAPTER	ADAPTEUR	2		7965-			

DATE	SEP. 12, 2012
4th EDITION	

Fig. 4100 MAIN PUMP POMPE

Serial No. ;

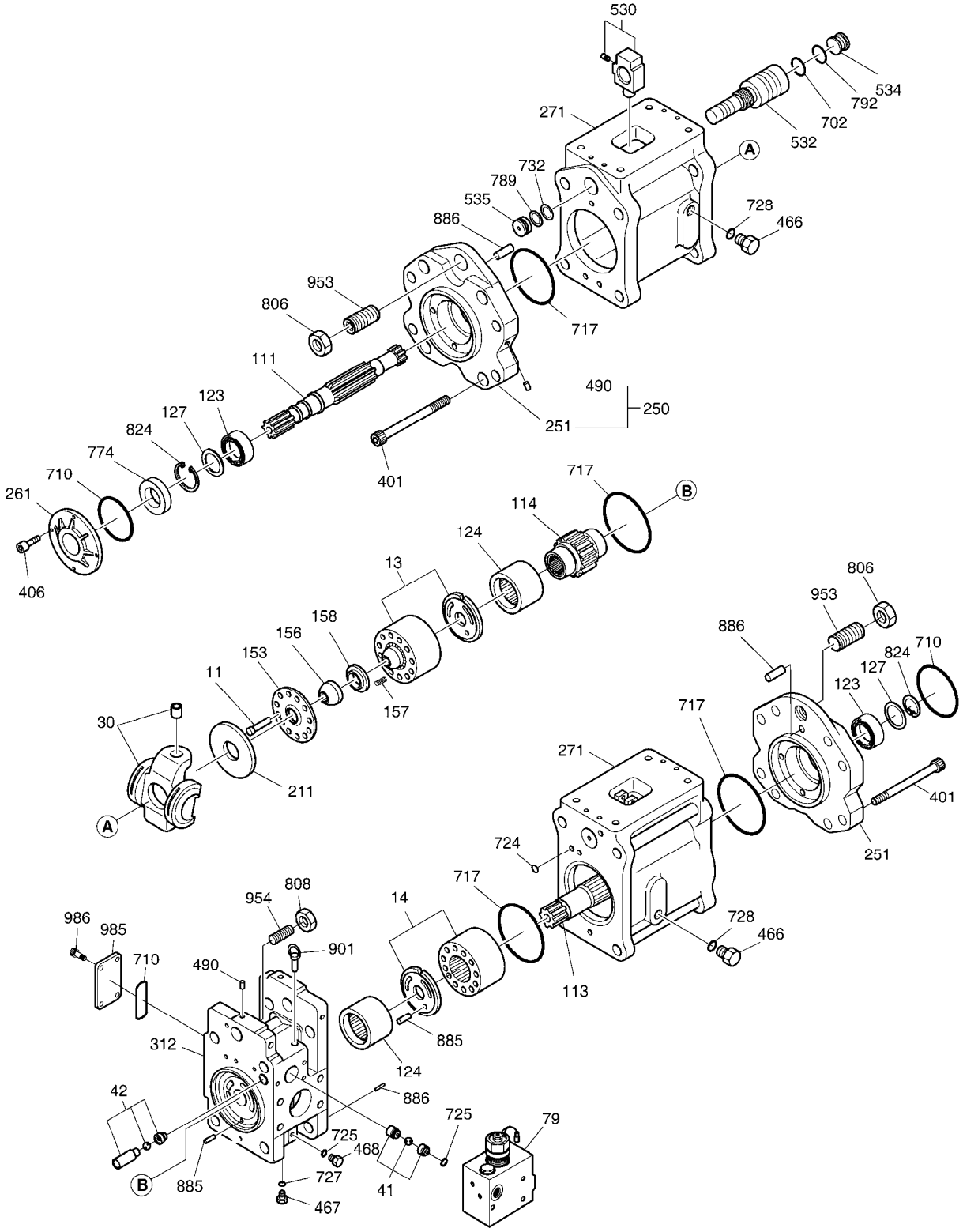

DATE	SEP. 12, 2012
4th EDITION	

Fig. 4100 MAIN PUMP POMPE

Serial No. ;

Key No.	Part No.	Description	Description	Q'ty	S.C	Serial No.	ICA	Replaceable part	
								Part No.	Q'ty
4100 --	K1000698G	PUMP;MAIN	POMPE DE BATI PRINCIPAL	1		5001-6004			
	K1000698E	MAIN PUMP	POMPE DE BATI PRINCIPAL	1		6005-8751	I	400914-00212	1
	400914-00212	PUMP,MAIN	POMPE DE BATI PRINCIPAL	1		8752-			
11	1.409-00167	PISTON & SHOE ASS`Y	PISTON	2					
13	K9007364	CYLINDER ASS`Y(R)	CYLINDRE	1		5001-6004			
	1.451-00063	CYLINDER ASS'Y(R)	CYLINDRE	1		6005-			
14	K9007365	CYLINDER ASS`Y(L)	CYLINDRE	1		5001-6004			
	1.451-00060	CYLINDER ASS'Y(L)	CYLINDRE	1		6005-			
30	284-00005	SWASH PLATE ASS`Y	CLAPOTIS	2					
41	K9001849	CHECK 1 ASS`Y	CONTROLE	2					
42	K9001850	CHECK 2 ASS`Y	CONTROLE	2					
79	420-00127	VALVE;PROPORTIONAL	VANNE	1					
111	1.405-00060	SHAFT;DRIVING(F)	AXE	1					
113	405-00008	SHAFT;DRIVING(R)	AXE	1					
114	101-00006	GEAR	VITESSE	1					
123	109-00097	BEARING;ROLLER	ROULEMENT	2					
124	109-00098	BEARING;SPACER	ROULEMENT	2					
127	1.109-00124	SPACER;BEARING	ENTRETOISE	4					
153	1.412-00083	PLATE;PUSH	PLAQUE	2					
156	408-00013	BUSH;SPHERICAL	BAGUE	2					
157	129-00044	SPRING;CYLINDER	RESSORT	18					
158	114-00228	SPACER	ENTRETOISE	2					
211	412-00006	PLATE;SHOE	PLAQUE	2					
250	1.197-00005	SUPPORT KIT	APPUI	1					
251	195-00463	SUPPORT	APPUI	2					
261	1.430-00212	COVER;SEAL(F)	COUVERCLE	1					
271	402-00026A	CASING;PUMP	CARTER	2					
312	100201-00158	BLOCK,VALVE	BLOC	1					
401	S2229071	BOLT;SOCKET	BOULON	8					
406	S2208871	BOLT;SOCKET	BOULON	4					
466	2181-1950D5	PLUG PF3/4	PRISE	4					
467	2181-1950D2	PLUG	BOUCHON	2					
468	2181-1890D2	PLUG	BOUCHON	2					
490	181-00519	PLUG	BOUCHON	18	D				
530	123-00150	TILTING PIN ASS`Y	GOUPILLE	2					
532	409-00003	PISTON;SERVO	PISTON	2					
534	416-00004	STOPPER(L)	TAQUET	2					
535	416-00005	STOPPER(S)	TAQUET	2					

DATE	SEP. 12, 2012
4th EDITION	

Fig. 4100 MAIN PUMP POMPE

Serial No. ;

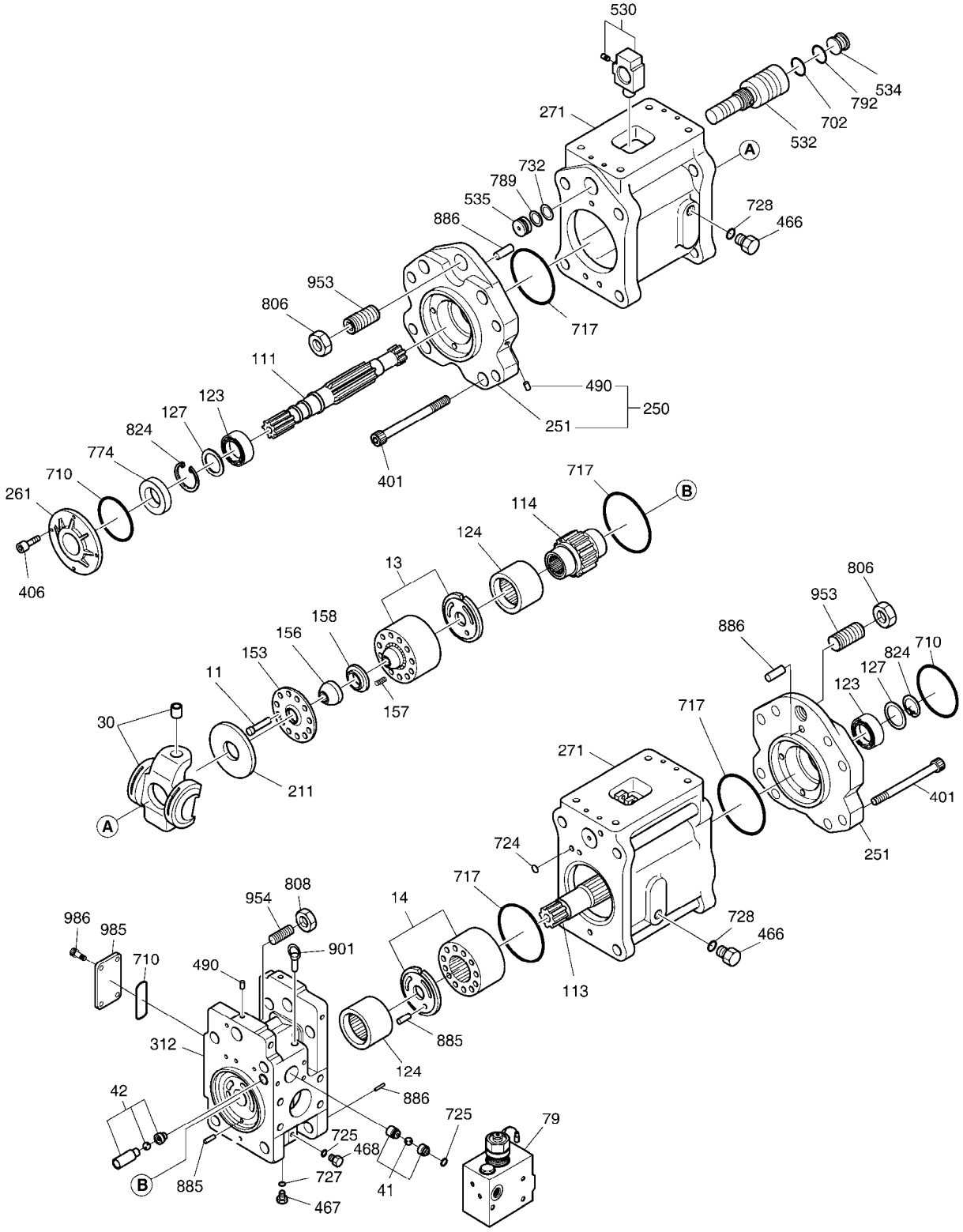

DATE	SEP. 12, 2012
4th EDITION	

Fig. 4100 MAIN PUMP POMPE

Serial No. ;

Key No.	Part No.	Description	Description	Q'ty	S.C	Serial No.	ICA	Replaceable part	
								Part No.	Q'ty
4100 -702	S8010355	O-RING	JOINT CIRCULAIRE	2	K				
710	S8010951	O-RING	JOINT TORIQUE	3	K				
717	S8011451	O-RING	JOINT CIRCULAIRE	4	K				
724	S8000081	O-RING	JOINT CIRCULAIRE	16	K				
725	S8000111	O-RING	JOINT TORIQUE	2	K				
727	S8000141	O-RING	JOINT TORIQUE	2	K				
728	S8000241	O-RING	JOINT CIRCULAIRE	4	K				
732	S8000185	O-RING	JOINT CIRCULAIRE	2	K				
774	K9001851	SEAL;OIL	JOINT D'HUILE	1	K	5001-8751	I	401106-00179	1
	401106-00179	SEAL,OIL	CACHET	1	K	8752-			
789	S8060181	RING;BACKUP	ANNEAU	2	K				
792	S8090350	RING;BACK-UP	ANNEAU	2	K				
806	S4012933	NUT	ECROU	2					
808	S4013133	NUT	ECROU	2					
824	S6500400	RING;RETAINING	ANNEAU	2					
885	123-00151	PIN D8X12L	GOUPILLE	2					
886	S5740870	PIN;SPRING	GOUPILLE	4					
901	S3140025	BOLT;EYE	BOULON	2					
953	S3527808	SCREW;SET M16X30L	VIS	2					
954	120-00130	SCREW;ADJUST	VIS	2					
985	K9001852	COVER	COUVERCLE	1					
986	S2212061	BOLT;SOCKET M10X1.5X25	BOULON A 6 PANS CREUX	4					
*	K9001902	SEAL KIT;MAIN PUMP+REG.	JOINT	1		5001-8751	I	K9001902A	1
	K9001902A	SEAL KIT;MAIN PUMP	KIT D`ETANCHEITE	1		8752-			

DATE	SEP. 12, 2012
4th EDITION	

Fig. 4110 REGULATOR
REGULATEUR

Serial No. ;

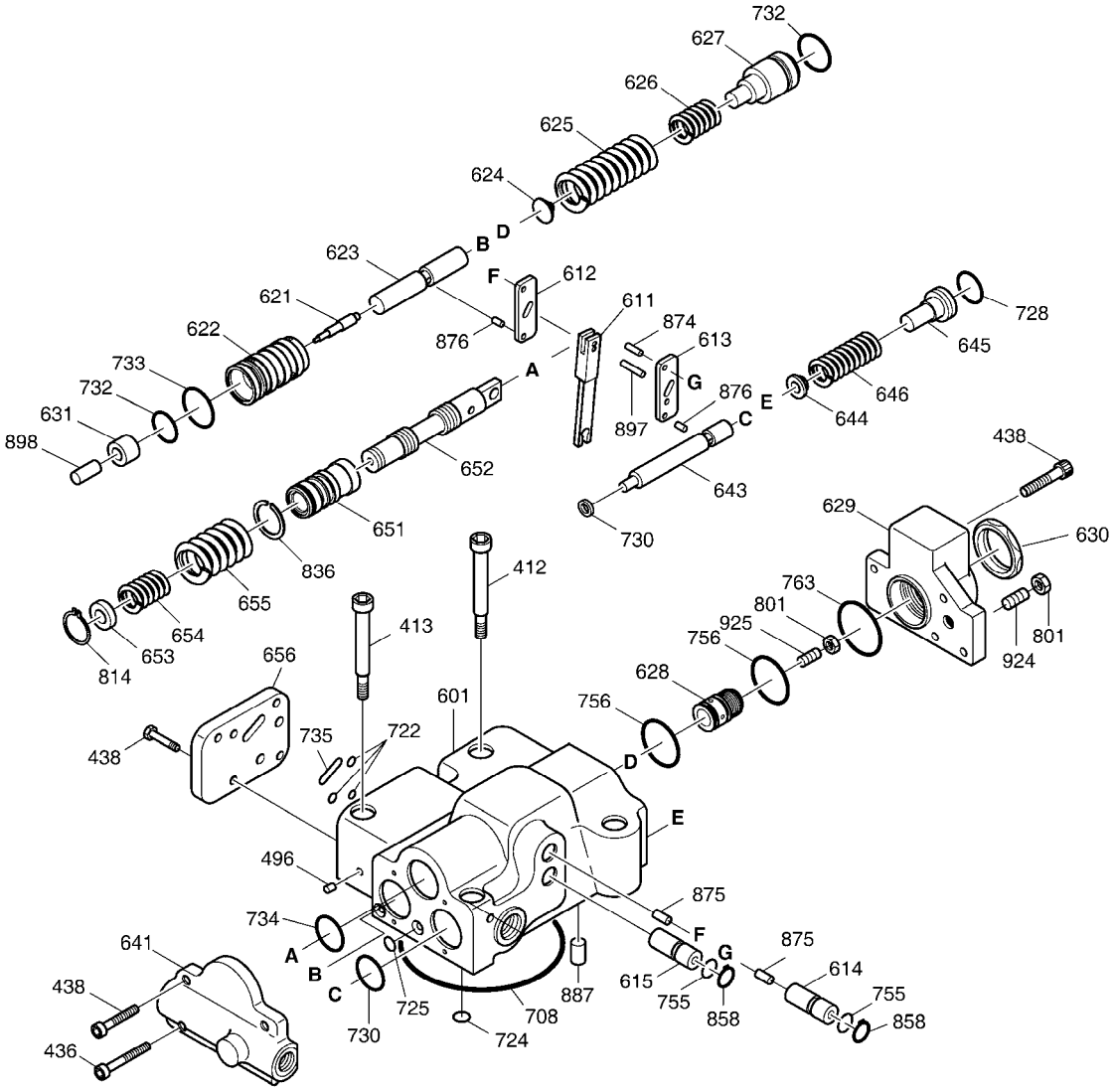

DATE	SEP. 12, 2012
4th EDITION	

Fig. 4110 REGULATOR REGULATEUR

Serial No. ;

Key No.	Part No.	Description	Description	Q'ty	S.C	Serial No.	ICA	Replaceable part	
								Part No.	Q'ty
4110 --	K9001833	REGULATOR ASS`Y	REDUCTEUR	2					
412	S2209661	BOLT;SOCKET	BOULON	2					
413	S2210071	BOLT;SOCKET	BOULON	2					
436	S2205261	BOLT;SOCKET M6X1.0X30	BOULON	2					
438	S2204861	BOLT;SOCKER	BOULON	10					
496	181-00318	PLUG	BOUCHON	5					
601	1.402-00055	CASING(A)	CARTER	1	D				
611	1.357-00014	LEVER;FEEDBACK(A)	LEVIER	1	D				
612	1.357-00005	LEVER 1(A)	LEVIER	1	D				
613	1.357-00008	LEVER 2(B)	LEVIER	1	D				
614	1.181-00136	PLUG;CENTER(A)	BOUCHON	1	D				
615	1.181-00090	PLUG;ADJUST(A)	BOUCHON	1	D				
621	1.409-00189	PISTON;COMPEN	PISTON	1	D				
622	1.402-00036	CASE;PISTON	CARTER	1	D				
623	1.428-00208	ROD;COMPEN	TIGE	1	D				
624	1.131-00165	SEAT;SPRING(C)	SIEGE	1	D				
625	1.131-00143	SPRING;OUTER	RESSORT	1	D				
626	1.131-00139	SPRING;INNER	RESSORT	1	D				
627	K9001834	RING;ADJUST(C)	ANNEAU	1	D				
628	K9001835	SCREW;ADJUST(C)	VIS	1	D				
629	K9001836	COVER C(A)	COUVERCLE	1	D				
630	1.121-00044	NUT;LOCK	ECROU	1	D				
631	K9001837	SLEEVE;PF	DOUILLE	1	D				
641	K9001838	COVER;PILOT	COUVERCLE	1	D				
643	1.409-00204	PISTON;PILOT	PISTON	1	D				
644	1.131-00170	SEAT;SPRING(Q)	SIEGE	1	D				
645	1.115-00171	RING;ADJUST(Q)	ANNEAU	1	D				
646	1.131-00157	SPRING;PILOT	RESSORT	1	D				
651	1.425-00001	SLEEVE	DOUILLE	1	D				
652	1.424-00038	SPOOL(A)	SPOOL	1	D				
653	1.131-00166	SEAT;SPRING	SIEGE	1	D				
654	1.131-00160	SPRING;RETURN	RESSORT	1	D				
655	1.131-00172	SPRING;SET	RESSORT	1	D				
656	1.430-00017	COVER	COUVERTURE	1	D				
708	S8010755	O-RING 1BG-75	JOINT TORIQUE	1	K				
722	S8000061	O-RING	JOINT CIRCULAIRE	3	K				
724	S8000085	O-RING	JOINT CIRCULAIRE	9	K				
725	S8000111	O-RING	JOINT TORIQUE	1	K				

DATE	SEP. 12, 2012
4th EDITION	

Fig. 4110 REGULATOR
REGULATEUR

Serial No. ;

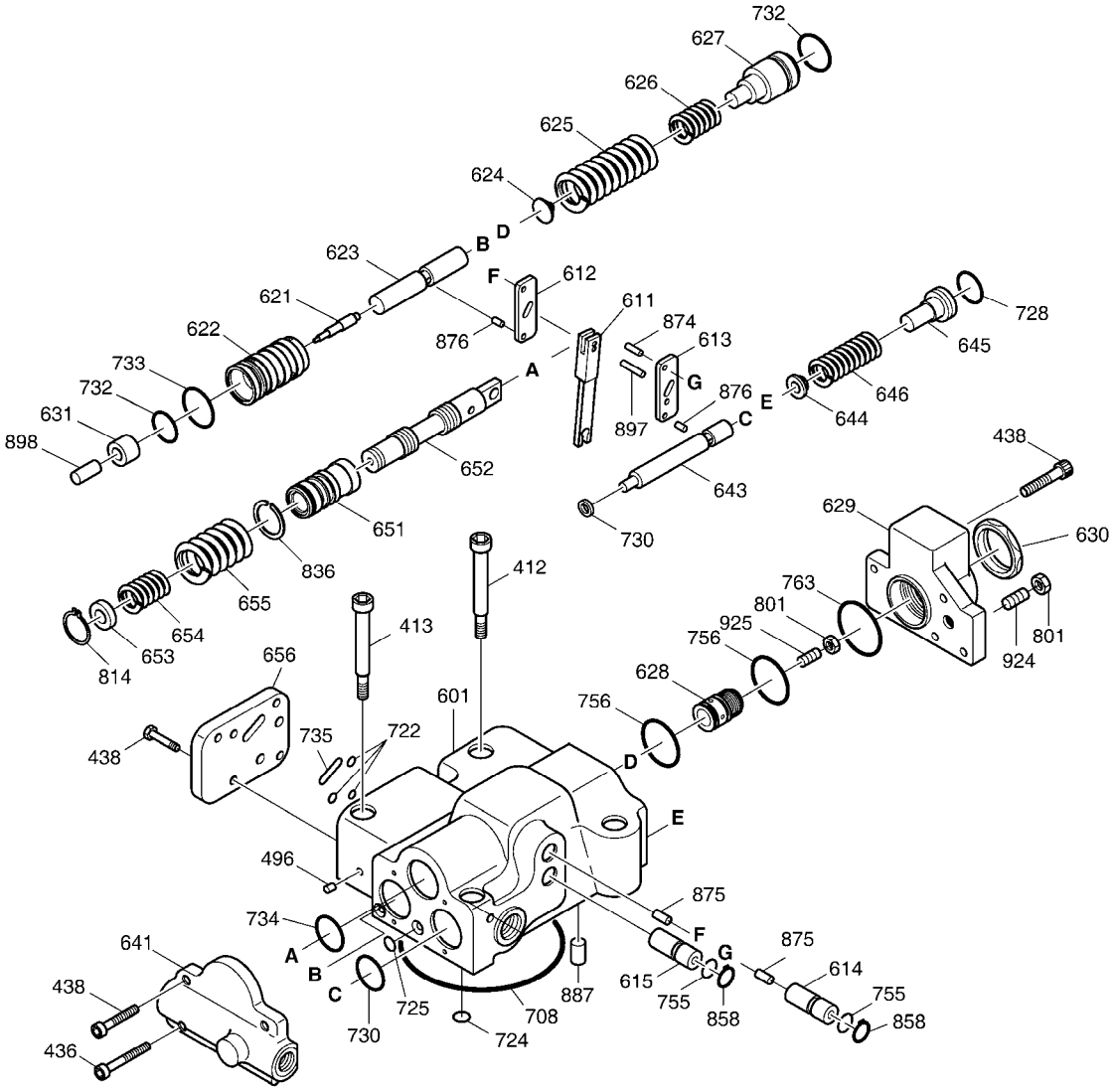

DATE	SEP. 12, 2012
4th EDITION	

Fig. 4110 REGULATOR REGULATEUR

Serial No. ;

Key No.	Part No.	Description	Description	Q'ty	S.C	Serial No.	ICA	Replaceable part	
								Part No.	Q'ty
4110 -728	S8000181	O-RING	JOINT CIRCULAIRE	1	K				
730	S8000221	O-RING	JOINT CIRCULAIRE	1	K				
732	S8000161	O-RING	JOINT TORIQUE	1	K				
733	S8000201	O-RING	JOINT TORIQUE	1	K				
734	S8010251	O-RING	JOINT CIRCULAIRE	1	K				
735	S8002721	O-RING	JOINT CIRCULAIRE	1	K				
755	S8000111	O-RING	JOINT TORIQUE	2	K				
756	S8000261	O-RING	JOINT CIRCULAIRE	1	K				
763	S8010351	O-RING	JOINT CIRCULAIRE	1	K				
801	S4012533	NUT	ECROU	2					
814	S6500100	RING;SNAP	ANNEAU	1					
836	1.115-00366	RING;STOP	ANNEAU	1	D				
858	S6510150	RING;SNAP	ANNEAU	2					
874	1.123-00007	PIN	GOUPILLE	1					
875	1.123-00012	PIN(A)	GOUPILLE	2	D				
876	1.123-00014	PIN(A)	GOUPILLE	2	D				
887	1.123-00009	PIN	GOUPILLE	1	D				
897	1.123-00016	PIN(A)	GOUPILLE	1	D				
898	K9001839	PIN	GOUPILLE	1	D				
924	S3524008	SCREW;SET	VIS	1					
925	120-00199	SCREW;ADJUST(Qi)	VIS	1					

DATE	SEP. 12, 2012
4th EDITION	

Fig. 4120 GEAR PUMP POMPE

Serial No. ;

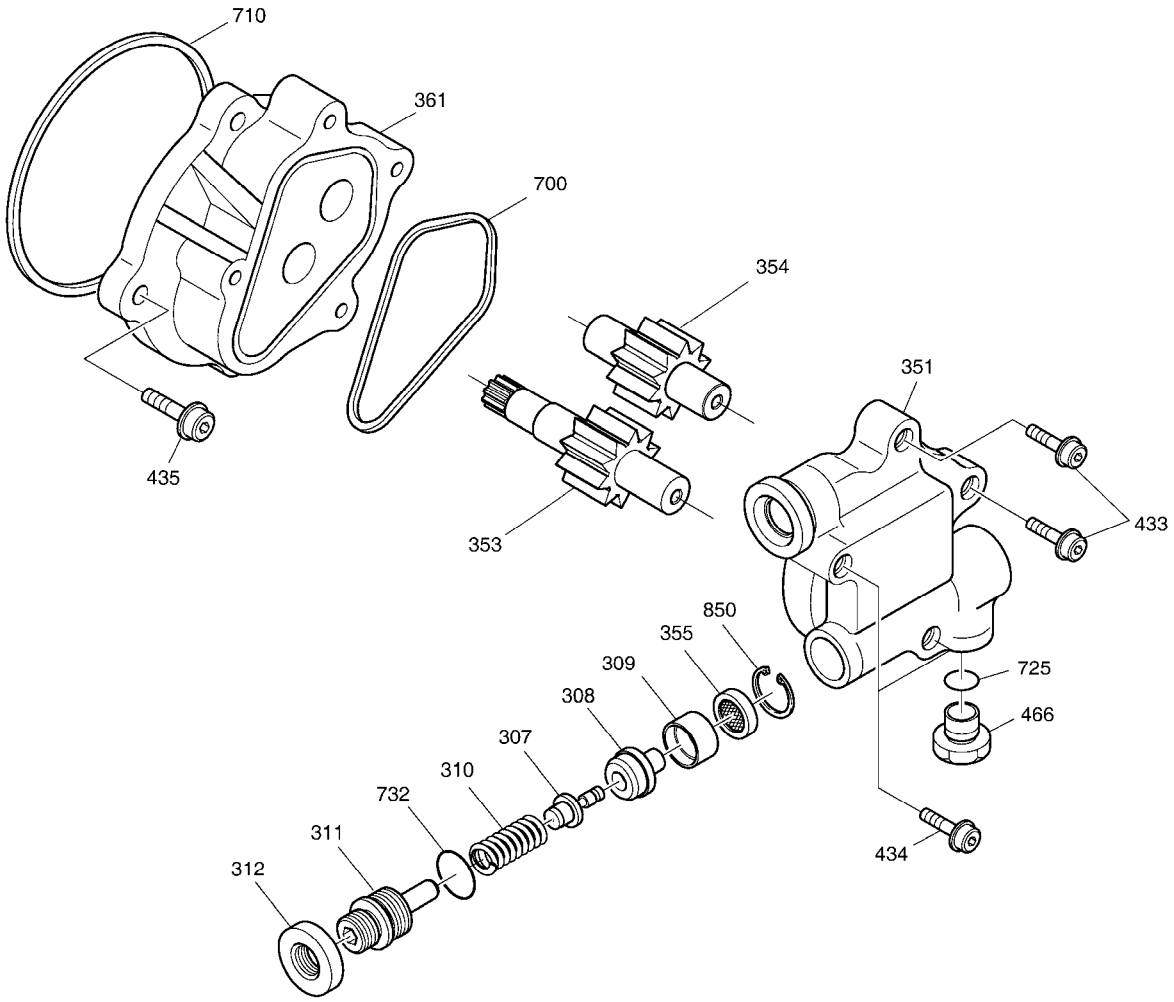

DATE	SEP. 12, 2012
4th EDITION	

Fig. 4120 GEAR PUMP POMPE

Serial No. ;

Key No.	Part No.	Description	Description	Q'ty	S.C	Serial No.	ICA	Replaceable part	
								Part No.	Q'ty
4120 --	K9001811	PUMP;GEAR	POMPE	1					
307	1.426-00005	POPPET	POUPEE	1					
308	1.427-00002	SEAT	SIEGE	1					
309	180-00211	RING	ANNEAU	1					
310	129-00045	SPRING	RESSORT	1					
311	120-00131	SCREW;ADJUSTING	VIS	1					
312	121-00038	NUT;LOCK	ECROU	1					
351	-	CASE;GEAR	CARTER	1	D				
353	1.403-00037	GEAR;DRIVE	VITESSE	1	D				
354	1.403-00040	GEAR;DRIVEN	VITESSE	1	D				
355	471-00030	FILTER	FILTRE	1					
361	1.402-00017	CASE;FRONT	CARTER	1	D				
433	S2209666	BOLT;SOCKET	BOULON	2					
434	S2209961	BOLT;SOCKET	BOULON	2					
435	S2208871	BOLT;SOCKET	BOULON	4					
466	2181-1950D1	PLUG	BOUCHON	1					
700	115-00043	RING	ANNEAU	1	K				
710	S8010951	O-RING	JOINT TORIQUE	1	K				
725	S8000111	O-RING	JOINT TORIQUE	1	K				
732	S8000161	O-RING	JOINT TORIQUE	1	K				
850	S6510180	RING;SNAP	ANNEAU	1					
*	719212KT	SEAL KIT;GEAR PUMP	KIT D`ETANCHEITE	1					

DATE	SEP. 12, 2012
4th EDITION	

Fig. 4130 SWING MOTOR
MOTEUR D'ORIENTATION

Serial No. ;

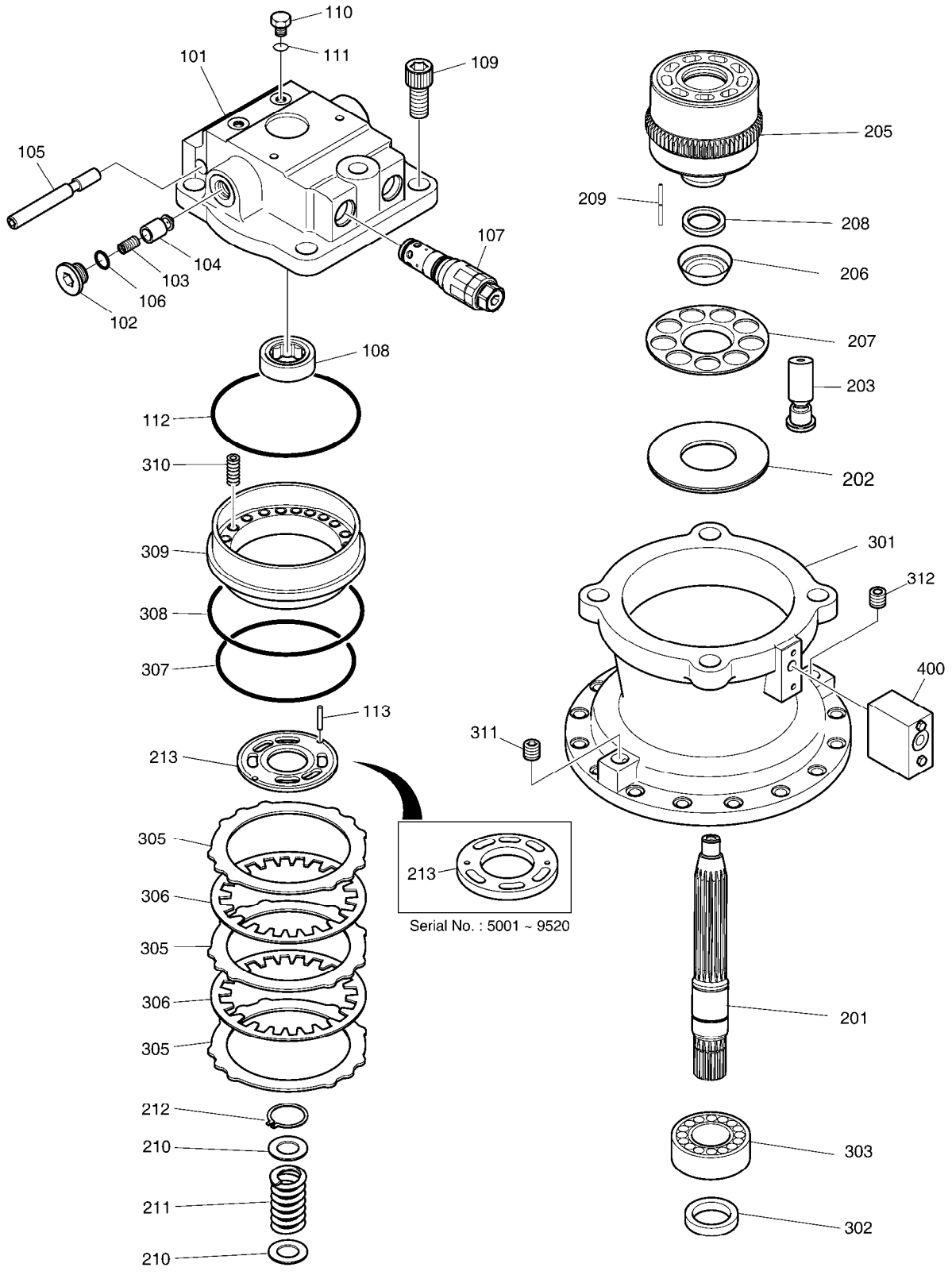

DATE	SEP. 12, 2012
4th EDITION	

Fig. 4130 SWING MOTOR MOTEUR D'ORIENTATION

Serial No. ;

Key No.	Part No.	Description	Description	Q'ty	S.C	Serial No.	ICA	Replaceable part	
								Part No.	Q'ty
4130 --	K1045024	SWING MOTOR	MOTEUR D'OSCILLATION	1		5001-7334	I	170303-00049	1
	170303-00049	MOTOR,SWING	MOTEUR D'OSCILLATION	1		7335-9520	I	170303-00049B	1
	170303-00049B	MOTOR,SWING	MOTEUR D'OSCILLATION	1		9521-			
101	-	CASING;VALVE	CARTER	1	D				
102	2.121-00009	PLUG	BOUCHON	2					
103	K9001840	SPRING	RESSORT	2					
104	K9001841	PLUNGER	PLONGEUR	2					
105	K9006899	VALVE;SWING REACTIONLESS	VANNE	1		5001-9520	I	410116-00410	1
	410116-00410	VALVE;SWING REACTIONLESS	VANNE	1		9521-			
106	S8000341	O-RING	JOINT CIRCULAIRE	2	K				
107	K9008333	VALVE;RELIEF	VANNE	2		5001-7334	I	K9008333A	2
	K9008333A	VALVE,RELIEF	SOULAGEMENT VANNE	2		7335-9520			
	410127-00095	VALVE,RELIEF	VANNE	2		9521-			
108	S6005050	BEARING;BALL	ROULEMENT	1					
109	S2227561	BOLT;SOCKET	BOULON	4					
110	2181-1950D1	PLUG	BOUCHON	2					
111	S8000111	O-RING	JOINT TORIQUE	2	K				
112	K9001842	O-RING	JOINT CIRCULAIRE	1	K				
113	S5741162	PIN;SPRING	GOUPILLE	2					
201	K9001843	SHAFT;DRIVE	AXE	1					
202	412-00011	PLATE;SHOE	PLAQUE	1					
203	K9001845	PISTON & SHOE ASS`Y	PISTON	1					
205	K9001846	BLOCK;CYLINDER	BLOC	1		5001-9520			
	150102-00439	BLOCK,CYLINDER	BLOC	1		9521-			
206	1.148-00015	BALL;THRUST	BOULE	1					
207	1.412-00092	PLATE;RETAINER	PLAQUE	1					
208	1.114-00009	COLLAR	COLLIER	1					
209	1.109-00134	ROLLER	ROULEAU	5					
210	1.114-00286	WASHER	RONDELLE	2					
211	1.131-00048	SPRING	RESSORT	1					
212	S6510620	RING;SNAP	ANNEAU	1					
213	K9001847	PLATE;TIMING	PLAQUE	1		5001-9520			
	250201-01934	PLATE;TIMING	PLAQUE	1		9521-			
301	K9008334	CASING	CARTER	1		5001-9520	I	K9008334A	1
	K9008334A	CASE	CARTER	1		9521-			
302	K9006399	SEAL;OIL	JOINT D'HUILE	1	K	5001-9520	I	401106-00181	1
	401106-00181	SEAL,OIL	JOINT D'HUILE	1	K	9521-			
303	K9008335	BEARING;ROLLER	A BILLES ROULEMENT	1					

DATE	SEP. 12, 2012
4th EDITION	

Fig. 4130 SWING MOTOR
MOTEUR D'ORIENTATION

Serial No. ;

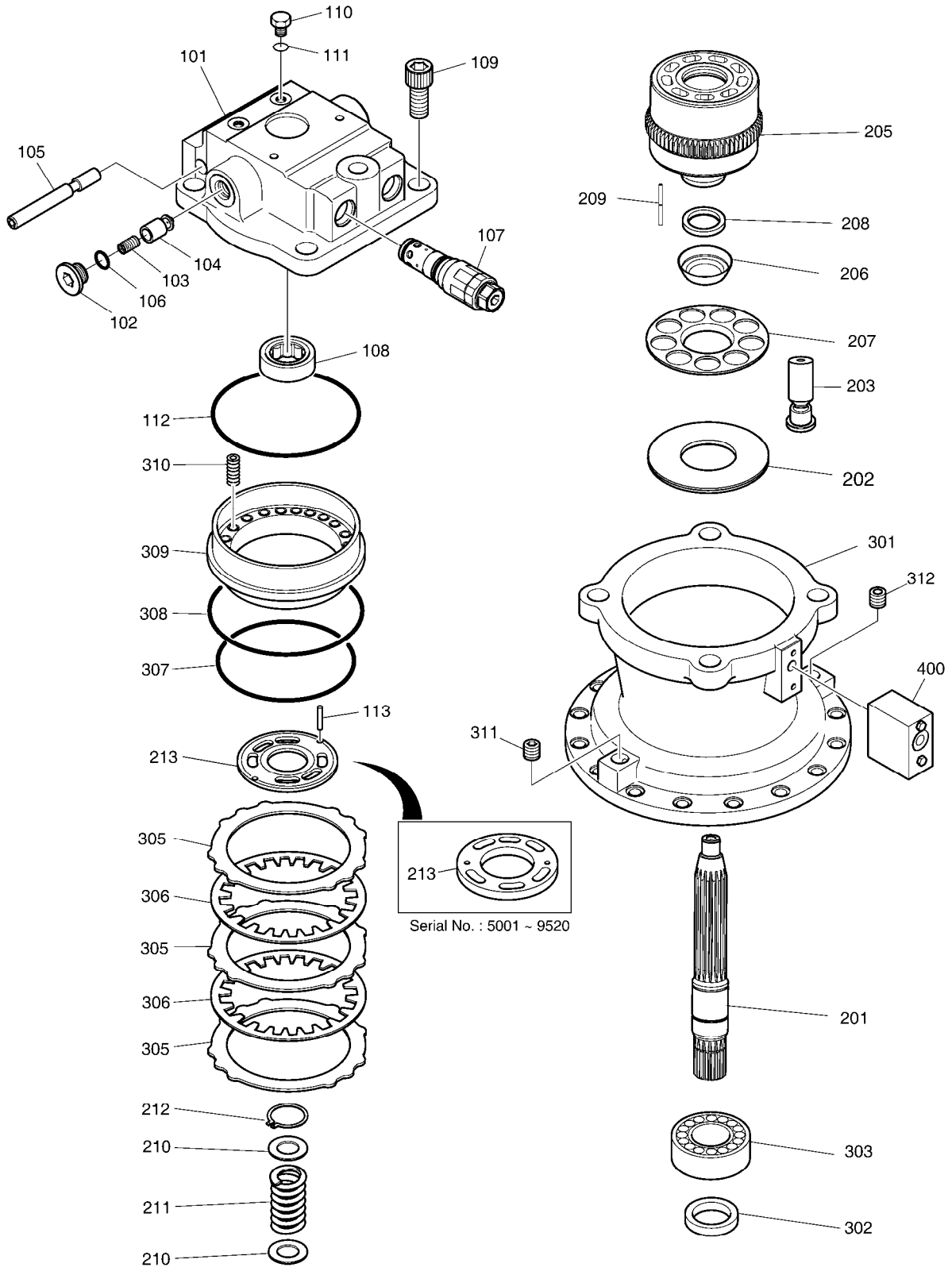

DATE	SEP. 12, 2012
4th EDITION	

Fig. 4130 SWING MOTOR MOTEUR D'ORIENTATION

Serial No. ;

Key No.	Part No.	Description	Description	Q'ty	S.C	Serial No.	ICA	Replaceable part	
								Part No.	Q'ty
4130 -305	352-00014	PLATE;SEPARATION	PLAQUE	3					
306	412-00013	PLATE;FRICTION	PLAQUE	2					
307	180-00220	O-RING	JOINT CIRCULAIRE	1	K				
308	180-00221	O-RING	JOINT CIRCULAIRE	1	K				
309	452-00020	PISTON;BRAKE	PISTON	1					
310	129-00062	SPRING;BRAKE	RESSORT	18					
311	2181-1116D4	PLUG;PT	BOUCHON	1					
312	2181-1116D2	PLUG	BOUCHON	1					
400	420-00110	VALVE;BRAKE	VALVE	1		5001-9520	I	410102-00024	1
	410102-00024	VALVE,BRAKE	VANNE	1		9521-			
*	K9008336	SEAL KIT;SWING MOTOR	KIT DE JOINT	1		5001-9520	I	K9008336A	1
	K9008336A	SEAL KIT;SWING MOTOR	KIT DE JOINT	1		9521-			

DATE	SEP. 12, 2012
4th EDITION	

Fig. 4140 SWING REDUCTION GEAR
REDEUTEUR D'ORIENTATION

Serial No. ;

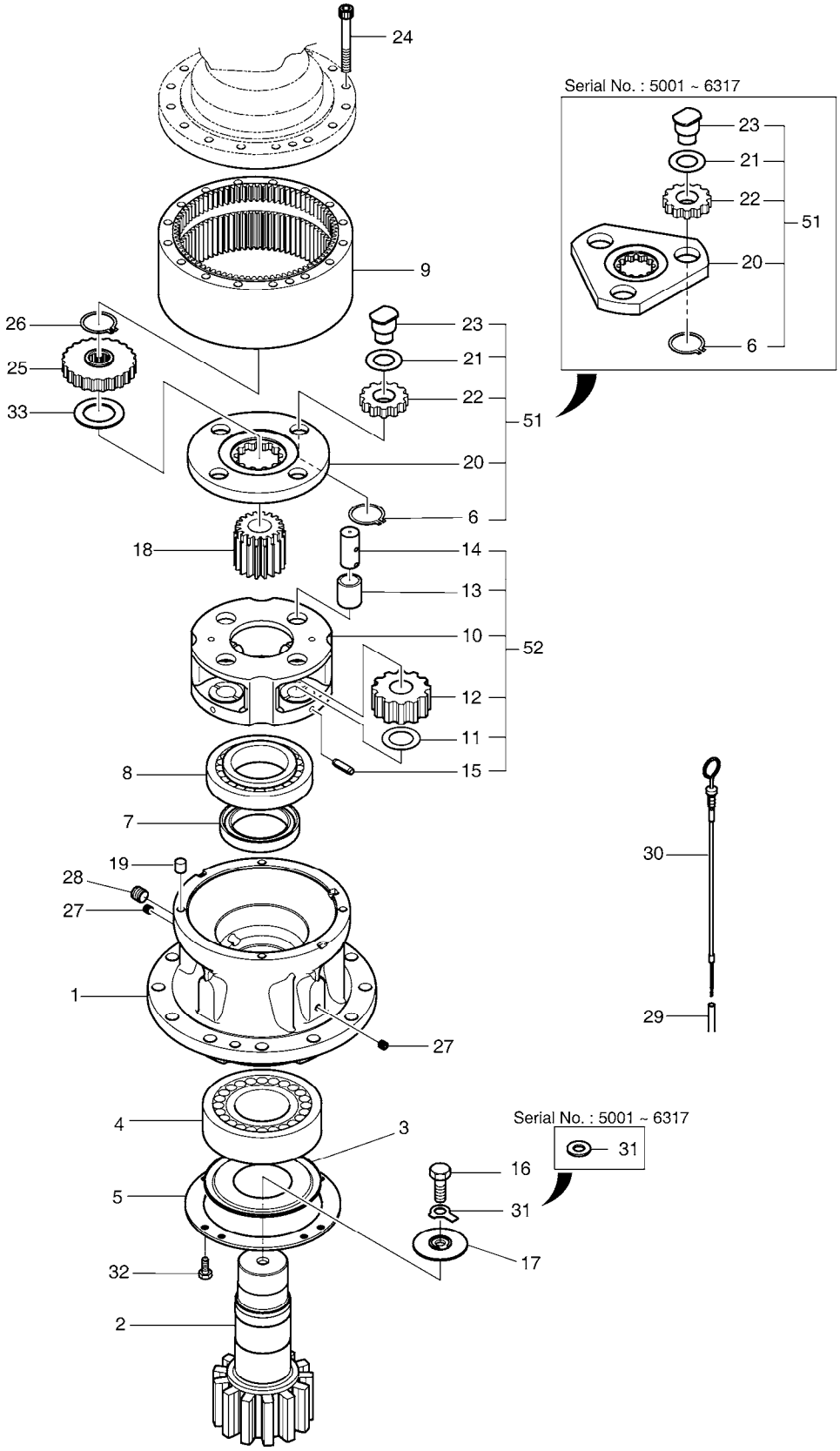

DATE	SEP. 12, 2012
4th EDITION	

Fig. 4140 SWING REDUCTION GEAR REDEUTEUR D'ORIENTATION

Serial No. ;

Key No.	Part No.	Description	Description	Q'ty	S.C	Serial No.	ICA	Replaceable part Part No.	Q'ty
4140 --	K1038203	SWING REDUCTION GEAR ASS`	ENSEMBLE DE REDUCTEU	1		5001-6317	I	130426-00010	1
	130426-00010	GEAR ASSY,REDUCTION	ENSEMBLE DE REDUCTEU	1		6318-			
1	K1038206	CASING	CARTER	1					
2	K1038207	SHAFT;DRIVE	AXE	1					
3	2412-1040	PLATE	PLAQUE	1					
4	2109-9033	BEARING;ROLLER	ROULEMENT	1					
5	K1038685	PLATE;COVER	PLAQUE	1					
6	S6500380	RING;SNAP	ANNEAU	3		5001-6317			
	S6500380	RING;SNAP	ANNEAU	4		6318-			
7	2180-1254	SEAL;OIL	CACHET	1					
8	109-00174	BEARING;ROLLER	ROULEMENT	1					
9	K1038210	GEAR;RING	PIGNON	1		5001-6317			
	130422-00001A	GEAR,RING	VITESSE	1		6318-			
10	K1038205	CARRIER NO.2	PORTEUR	1					
11	2114-1901A	WASHER;THRUST NO.2	RONDELLE	4					
12	104-00050	GEAR;PLANET NO.2	VITESSE	4					
13	110-00219	BUSH NO.2	BUSH	4					
14	K1038208	PIN NO.2	GOUPILLE	4					
15	S5741200	PIN;SPRING	GOUPILLE	4					
16	S0121061	BOLT	BOULON	1					
17	114-00548	WASHER;THRUST NO.3	RONDELLE	1					
18	104-00048	GEAR;SUN NO.2	VITESSE	1					
19	2705-1030	PIN;KNOCK	GOUPILLE	4					
20	K1038204	CARRIER NO.1	SUPPORT	1		5001-6317			
	100502-00001	CARRIER NO.1	SUPPORT	1		6318-			
21	114-00527	WASHER;THRUST NO.1	RONDELLE	3		5001-6317			
	114-00527	WASHER;THRUST NO.1	RONDELLE	4		6318-			
22	104-00049A	GEAR;PLANET NO.1	PIGNON	3		5001-6317			
	130424-00001	GEAR;PLANET NO.1	PIGNON	4		6318-			
23	123-00435A	PIN ASS`Y NO.1	GOUJON	3		5001-6317			
	120501-00009	PIN ASS'Y;NO1	GOUJON	4		6318-			
24	S2217471	BOLT;SOCKET M12X150	BOULON A 6 PANS CREUX	16		5001-6317			
	120107-00002	BOLT,HEX SOCKET	BOULON A 6 PANS CREUX	16		6318-			
25	104-00047A	GEAR;SUN NO.1	PIGNON	1		5001-6317	I	130425-00001	1
	130425-00001	GEAR,SUN;NO1	PIGNON	1		6318-			
26	S6500450	RING;SNAP	ANNEAU	1					
27	2181-1116D2	PLUG	BOUCHON	2					
28	2181-1116D4	PLUG;PT	BOUCHON	1					

DATE	SEP. 12, 2012
4th EDITION	

Fig. 4140 SWING REDUCTION GEAR
REDEUTEUR D'ORIENTATION

Serial No. ;

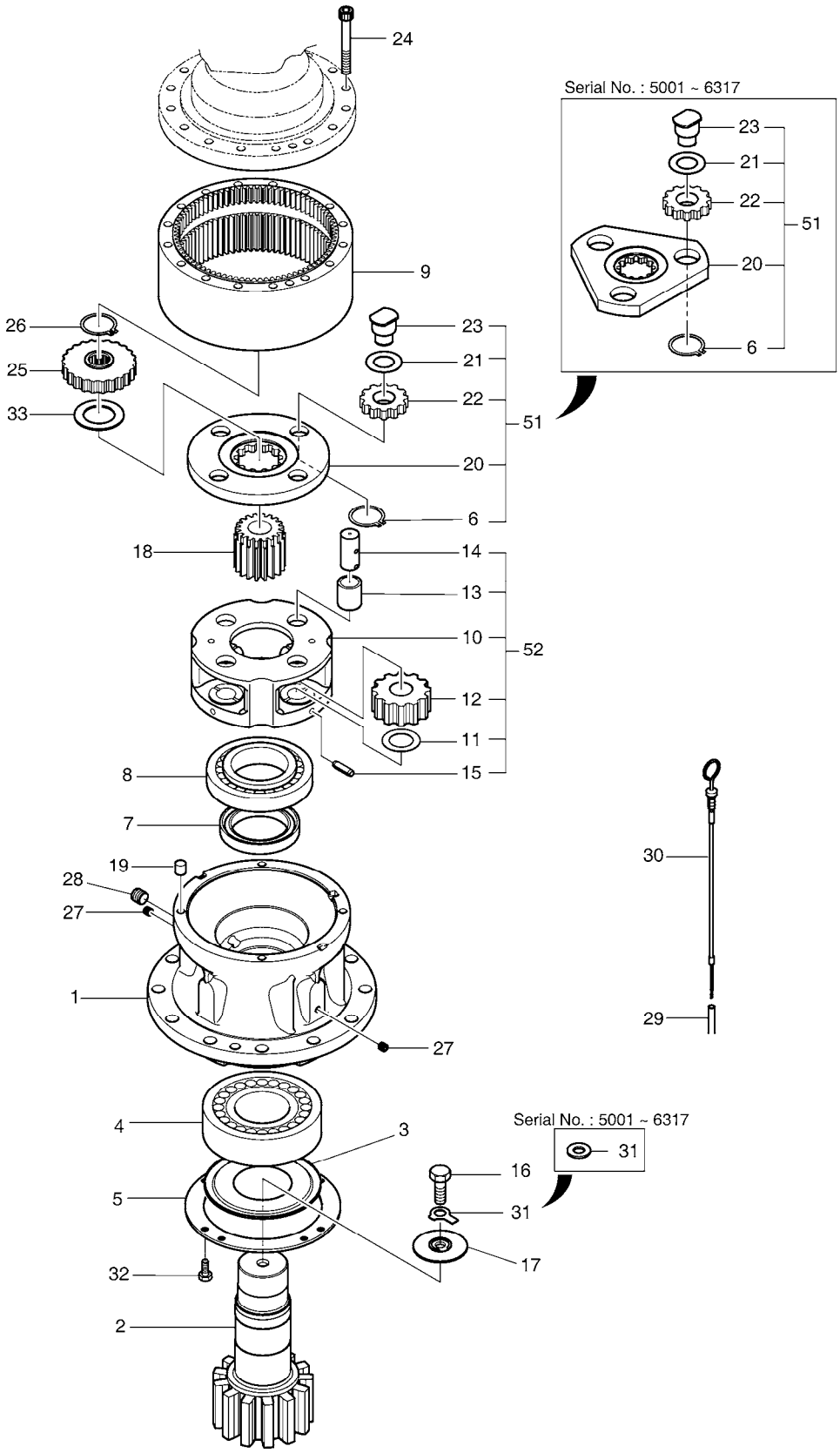

DATE	SEP. 12, 2012
4th EDITION	

Fig. 4140 SWING REDUCTION GEAR REDEUTEUR D'ORIENTATION

Serial No. ;

Key No.	Part No.	Description	Description	Q'ty	S.C	Serial No.	ICA	Replaceable part	
								Part No.	Q'ty
4140 -29	2140-1406	PIPE;LEVEL GAUGE	TUYAU	1					
30	2119-1065	GAUGE;LEVEL	MESURE	1					
31	S5231090	WASHER;DOUBLE TAP	RONDELLE	1		5001-6317			
	120811-00001	WASHER,DOUBLE TAB	RONDELLE	1		6318-			
32	120-00144	BOLT	BOULON	8					
33	120816-00001	WASHER,THRUST	RONDELLE	1		6318-			
51	K9008337	CARRIER NO1 ASS`Y	PORTEUR	1		5001-6317			
	100502-00022	CARRIER ASS'Y;NO.1	PORTEUR	1		6318-			
52	K9008338	CARRIER NO2 ASS`Y	PORTEUR	1					

DATE	SEP. 12, 2012
4th EDITION	

Fig. 4150 TRAVEL MOTOR
MOTEUR DE TRANSLATION

Serial No. ;

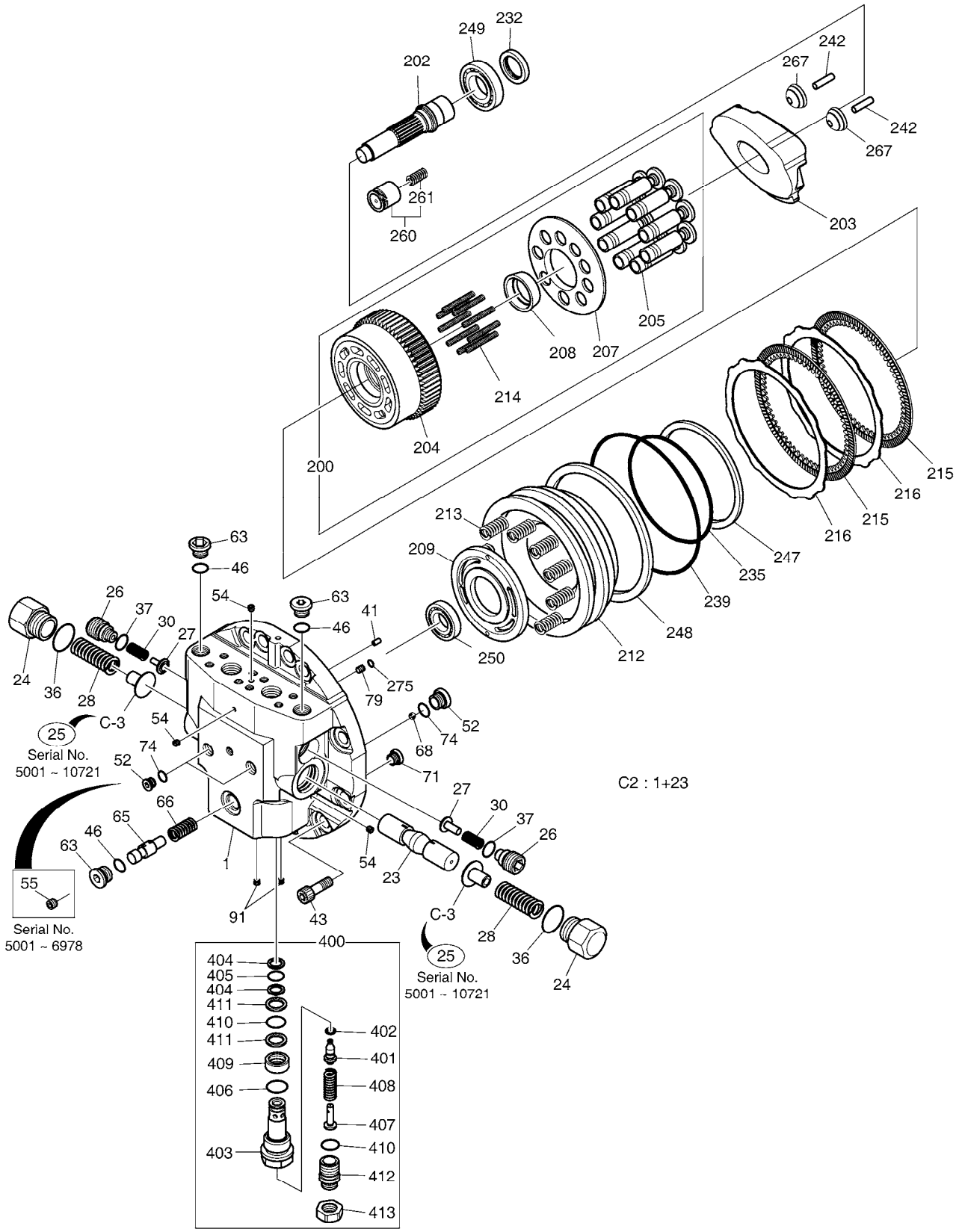

DATE	SEP. 12, 2012
4th EDITION	

Fig. 4150 TRAVEL MOTOR
MOTEUR DE TRANSLATION

Serial No. ;

Key No.	Part No.	Description	Description	Q'ty	S.C	Serial No.	ICA	Replaceable part	
								Part No.	Q'ty
4150 -C	K9007410	CONTROL PART ASS`Y	PANNEAU	1		05001-10721	I	300609-00069	1
	300609-00069	CONTROL PART ASSY	PANNEAU	1		10722-			
C-1	K9007408	. FLANGE ASSY;REAR	. RESERVOIR DESSICATEU	1		5001-6978			
	K9007408A	. FLANGE ASSY;REAR	. RESERVOIR DESSICATEU	1		06979-10721	I	430215-00552	1
	430215-00552	. FLANGE ASS'Y;REAR	. RESERVOIR DESSICATEU	1		10722-			
C-2	K9007409	. FLANGE KIT;REAR	. BRIDE ARRIERE	1		5001-6978			
	K9007409A	. FLANGE KIT;REAR	. BRIDE ARRIERE	1		6979-			
C-3	110956-00060	. STOPPER	. TAQUET	2		10722-			
1	-	REAR FLANGE	AMORTISSEUR	1	D				
23	K9007399	MAIN SPOOL	KIT DE RESSORT	1		5001-6978			
	410207-00163	SPOOL,MAIN	SPOOL	1		6979-7482			
	410207-00163A	SPOOL,MAIN	SPOOL	1		07483-10721			
	410207-00307	SPOOL,MAIN	SPOOL	1		10722-			
24	1.181-00059	PLUG;FOR MAIN	BOUCHON	2					
25	110956-00071	STOPPER	TAQUET	2		05001-10721			
26	1.181-00067	PLUG;CHECK	BOUCHON	2					
27	1.420-00013	VALVE;CHECK	VALVE	2					
28	1.131-00058	SPRING;FOR MAIN	RESSORT	2					
30	1.129-00006	SPRING;CHECK	RESSORT	2					
36	S8000321	O-RING	JOINT CIRCULAIRE	2	K				
37	S8002731	O-RING	JOINT CIRCULAIRE	2	K				
41	S5700891	PIN;PARALLEL	GOUPILLE	1					
43	S2221471	BOLT;SOCKET	BOULON	12					
46	S8000181	O-RING	JOINT CIRCULAIRE	2	K				
52	2181-1890D2	PLUG	BOUCHON	2		5001-6978			
	2181-1890D2	PLUG	BOUCHON	4		6979-			
54	2181-1116D10	PLUG	BOUCHON	5					
55	2181-1116D2	PLUG	BOUCHON	2		5001-6978			
63	2181-1890D4	PLUG	BOUCHON	2					
65	1.424-00041	SPOOL;2 SPEED	SPOOL	1					
66	1.131-00001	SPRING	RESSORT	1		05001-10721	I	111601-00354	1
	111601-00354	SPRING	RESSORT	1		10722-			
68	S6250182	BALL;STEEL	BILLE	2					
71	1.415-00005	ORIFICE	ORIFICE	1					
74	S8000111	O-RING	JOINT TORIQUE	2	K	5001-6978			
	S8000111	O-RING	JOINT TORIQUE	4	K	6979-			
79	1.471-00001	FILTER	FILTRE	1		5001-7482			
	1.471-00001A	FILTER	FILTRE	1		7483-			

DATE	SEP. 12, 2012
4th EDITION	

Fig. 4150 TRAVEL MOTOR
MOTEUR DE TRANSLATION

Serial No. ;

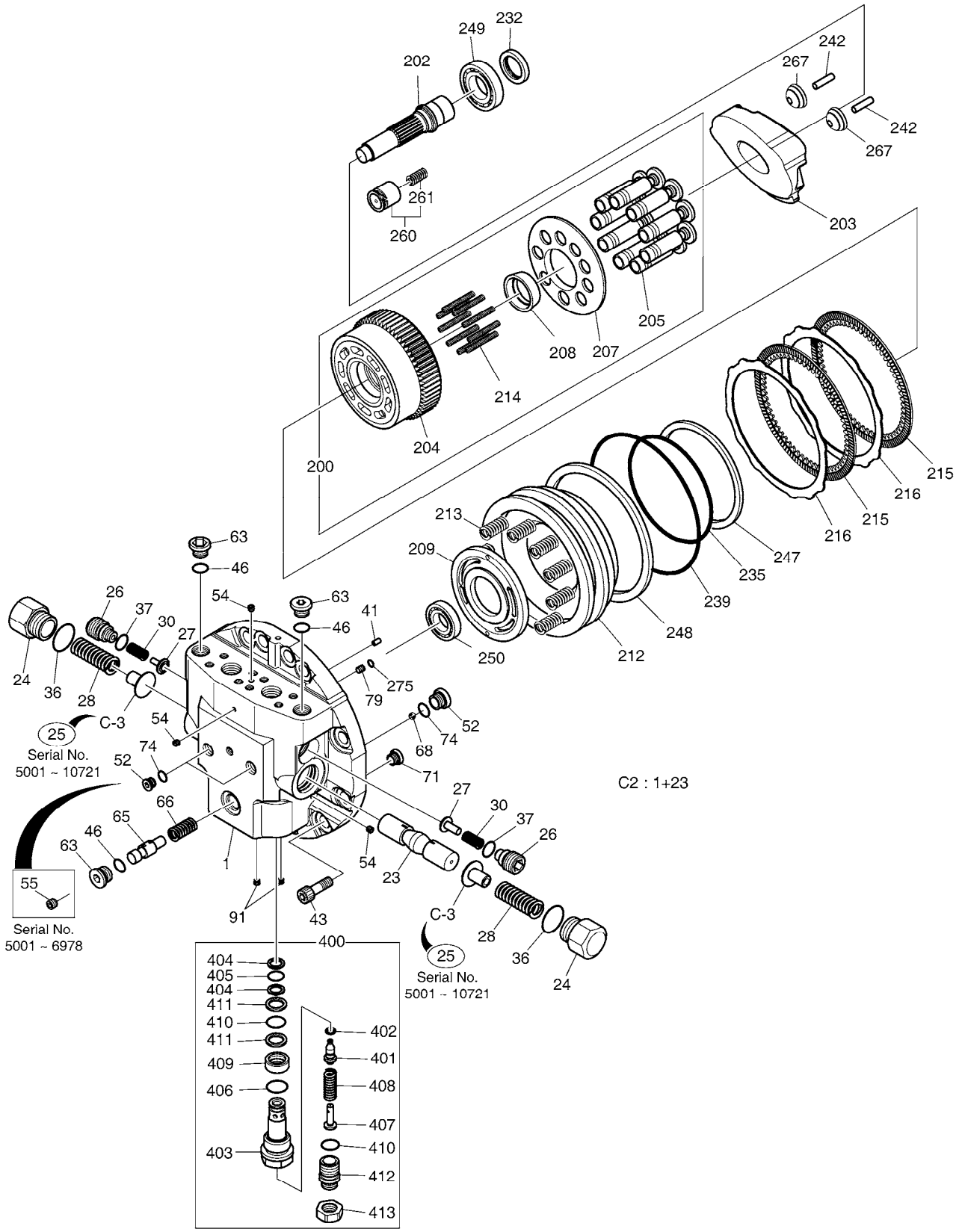

DATE	SEP. 12, 2012
4th EDITION	

Fig. 4150 TRAVEL MOTOR
MOTEUR DE TRANSLATION

Serial No. ;

Key No.	Part No.	Description	Description	Q'ty	S.C	Serial No.	ICA	Replaceable part	
								Part No.	Q'ty
4150 -91	2181-1116D1	PLUG	BOUCHON	2					
-	K9007405	MOTOR;TRAVEL	MOTEUR	1		05001-10721	I	170403-00134	1
	170403-00134	MOTOR,TRAVEL	MOTEUR	1		10722-			
200	K9007407	CYL BLOCK & PISTON KIT	CYLINDRES	1		05001-10721	I	400701-00004	1
	400701-00004	CYL BLOCK & PISTON KIT	CYLINDRES	1		10722-			
205	K9007406	PISTON ASS`Y	PISTON	1		5001-7482			
	K9007406A	PISTON ASSY	PISTON	1		7483-			
204	K9007397	BLOCK;CYLINDER	BLOC-CYLINDRES	1					
207	K9004447	PLATE;RETAINER	PLAQUE	1					
208	K9004448	BALL;THRUST	BILLE	1					
202	K9007415	SHAFT;DRIVE	AXE	1		5001-6978	I	K9007415A	1
	K9007415A	SHAFT,DRIVE	AXE	1		6979-			
203	K9007382	PLATE;SWASH	PLAQUE	1					
209	K9007398	PLATE;TIMING	PLAQUE	1		5001-6978			
	K9007398A	PLATE,TIMING	PLAQUE	1		6979-			
212	K9004453	PISTON;PARKING	PISTON	1					
213	1.131-00049	SPRING	RESSORT	12		5001-7482			
	1.131-00049A	SPRING	RESSORT	12		7483-			
214	K9004449	SPRING	RESSORT	1					
215	412-00013	PLATE;FRICTION	PLAQUE	2					
216	352-00014	PLATE;SEPARATION	PLAQUE	2					
232	K9007401	SEAL;OIL	JOINT D'HUILE	1	K				
235	S8001801	O-RING	JOINT TORIQUE	1	K				
239	S8002101	O-RING	JOINT CIRCULAIRE	1	K				
242	1.123-00053	PIN;PARALLEL	GOUPILLE	4					
247	S8061800	RING;BACK UP	BAGUE ANTIEXTRUSION	1	K				
248	S8062100	RING;BACK UP	BAGUE ANTIEXTRUSION	1	K				
249	K9007400	BEARING;BALL	PALIER	1					
250	1.109-00026	BEARING;BALL	ROULEMENT	1					
260	1.409-00180	PISTON KIT;2 SPEED	PISTON	1		5001-6978			
	130602-00200	PISTON KIT;2 SPEED	KIT DE PISTON	1		6979-			
261	1.131-00042	SPRING	RESSORT	1		5001-6978			
	111601-00117	SPRING,SPEED-ADJUSTING	RESSORT	1		6979-			
267	1.540-00006	PIVOT	PIVOT	2					
275	S8000081	O-RING	JOINT CIRCULAIRE	2	K				
400	K9007413	RELIEF VALVE ASS`Y	CLAPET DE DECHARGE	2		5001-6978			
	410127-00058	VALVE ASSY,RELIEF	CLAPET DE DECHARGE	2		6979-7482			
	410127-00058A	VALVE ASSY,RELIEF	CLAPET DE DECHARGE	2		07483-10721	I	410127-00190	2

DATE	SEP. 12, 2012
4th EDITION	

Fig. 4150 TRAVEL MOTOR
MOTEUR DE TRANSLATION

Serial No. ;

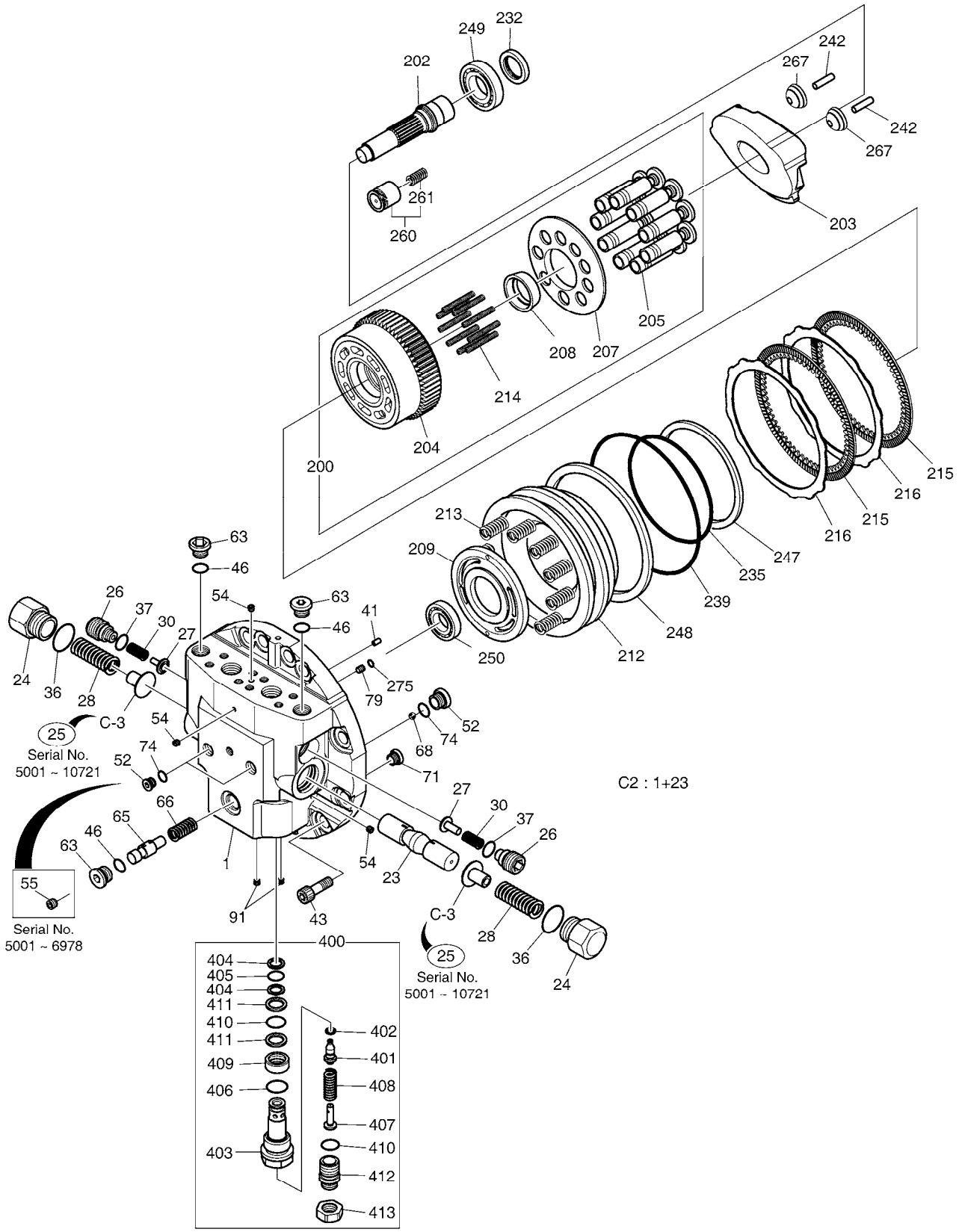

DATE	SEP. 12, 2012
4th EDITION	

Fig. 4150 TRAVEL MOTOR
MOTEUR DE TRANSLATION

Serial No. ;

Key No.	Part No.	Description	Description	Q'ty	S.C	Serial No.	ICA	Replaceable part	
								Part No.	Q'ty
4150 -	410127-00190	VALVE ASSY,RELIEF	CLAPET DE DECHARGE	2		10722-			
401	-	PLUNGER	PLONGEUR	1	D				
402	1.180-00527	SEAL;PISTON	JOINT DE PISTON	1					
403	-	BODY	CORPS	1	D				
404	S8060161	RING;BACK-UP	ANNEAU	2					
405	S8000161	O-RING	JOINT TORIQUE	3					
406	S8010291	O-RING	JOINT TORIQUE	1					
407	-	RETAINER;SPRING	ARRETOIR	1	D				
408	-	SPRING	RESSORT	1	D				
409	-	PISTON	PISTON	1	D				
410	S8000221	O-RING	JOINT CIRCULAIRE	2					
411	S8060221	RING;BACK UP	ANNEAU	3					
412	-	PLUG;ADJUST	BOUCHON	1	D				
413	-	NUT;LOCK	ECROU	1	D				
*	K9008310	SEAL KIT;TRAVEL MOTOR	KIT D`ETANCHEITE	1					

DATE	SEP. 12, 2012
4th EDITION	

Fig. 4160 TRAVEL REDUCTION GEAR BOITE REDUCTEUR

Serial No. ;

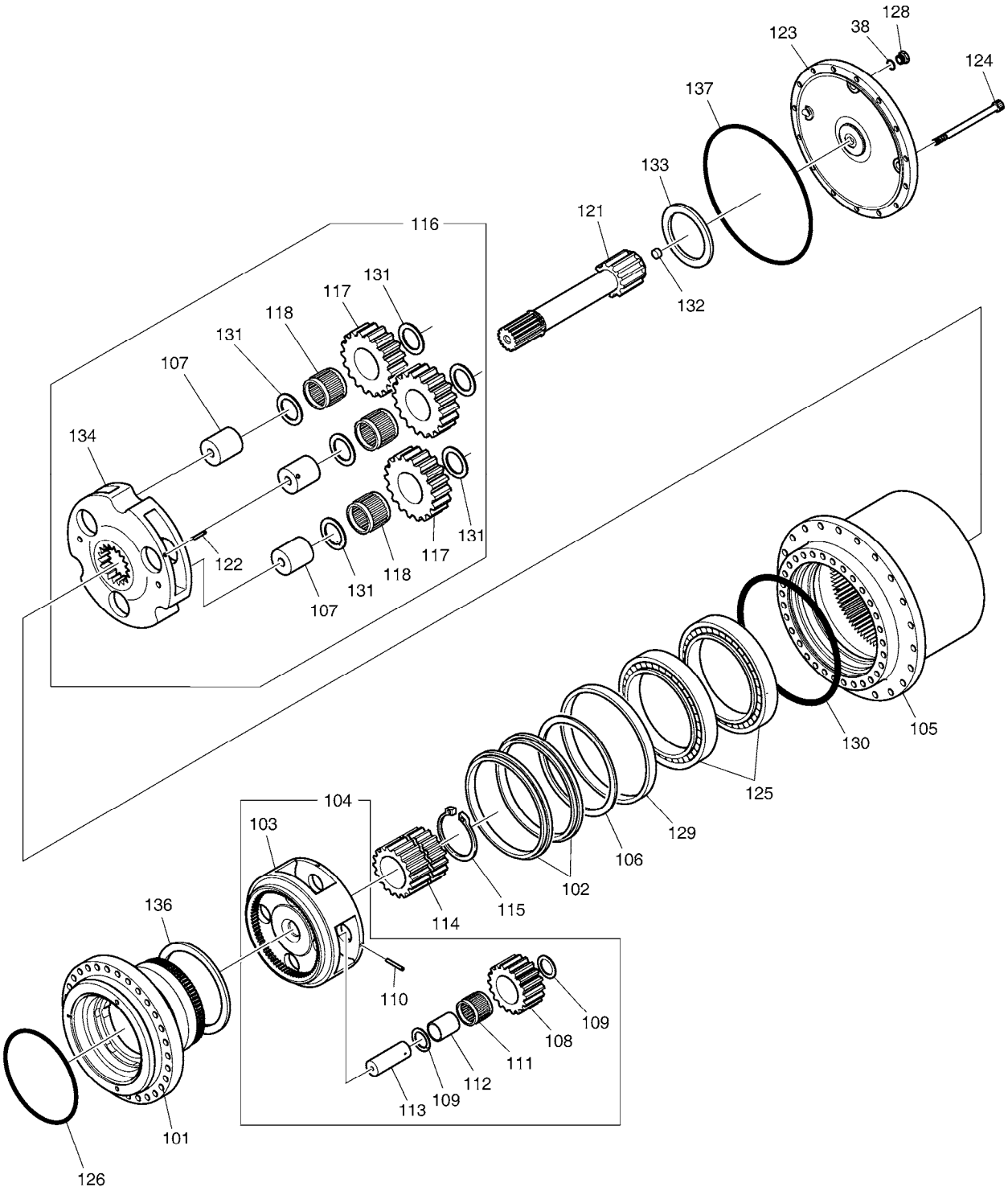

DATE	SEP. 12, 2012
4th EDITION	

Fig. 4160 TRAVEL REDUCTION GEAR BOITE REDUCTEUR

Serial No. ;

Key No.	Part No.	Description	Description	Q'ty	S.C	Serial No.	ICA	Replaceable part	
								Part No.	Q'ty
4160 --	K9007404	REDUCTION GEAR	CLAPET DE TROP-PLEIN	1		05001-10721	I	170402-00028	1
	170402-00028	REDUCTION GEAR	CLAPET DE TROP-PLEIN	1		10722-			
38	S8000181	O-RING	JOINT CIRCULAIRE	3	K				
101	K9007383	SPINDLE	TOUPIE	1		5001-7482	I	K9007383A	1
	K9007383A	SPINDLE	TOUPIE	1		7483-			
102	1.180-00512	SEAL;FLOATING	CACHET	1					
105	K9007384	HUB	PIVOT	1		05001-10721			
	900122-00079	HUB	PIVOT	1		10722-			
106	1.540-00003	PIECE;DISTANCE	GUIDE	1					
104	K9007412	CARRIER NO 2 ASSY	PORTEUR	1					
103	-	CARRIER NO2	PORTEUR	1	D				
108	K9007393	GEAR;PLANETARY	PIGNON	4					
109	K9007394	WASHER;THRUST	RONDELLE	8					
110	S5740960	PIN;SPRING	GOUPILLE	4					
111	K9007402	BEARING;NEEDLE	ROULEMENT A AIGUILLE	4					
112	K9007396	BUSH;FLOATING	DOUILLE	4					
113	K9007392	SHAFT	AXE	4					
114	K9007391	GEAR;SUN	PIGNON	1					
115	S6500750	RING;RETAINING	RONDELLE DE RETENUE	1					
116	K9007411	CARRIER NO 1 ASSY	PORTEUR	1					
107	K9007388	BEARING;SHAFT	ROULEMENT A AIGUILLES	3					
117	K9007387	GEAR;PLANETARY	PIGNON	3					
118	1.216-00017	CAGE;NEEDLE	ROULEMENT A AIGUILLES	3					
122	S5740770	PIN;SPRING	GOUPILLE	3					
131	K9007389	WASHER;THRUST	RONDELLE	6					
134	-	CARRIER NO1.	PORTEUR	1	D				
121	K9007390	GEAR;DRIVE	PIGNON MOTEUR	1					
123	K9007385	COVER	COUVERCLE	1		05001-10721			
	110508-09675	COVER	COUVERCLE	1		10722-			
124	S2212266	BOLT;SOCKET M10X1.5X30	BOULON A 6 PANS CREUX	16					
125	K9007403	BEARING;ANGULAR BALL	A BILLES ROULEMENT	2					
126	S8012300	O-RING	JOINT TORIQUE	1	K				
128	2181-1890D4	PLUG	BOUCHON	3					
129	K9007386	RING;SEAL	JOINT	1		5001-7482	I	K9007386A	1
	K9007386A	RING;SEAL	JOINT	1		7483-			
130	1.180-00144	O-RING	JOINT TORIQUE	1	K				
132	K9004304	WASHER;THRUST	RONDELLE DE BUTEE	1					
133	1.412-00157	PLATE;THRUST	PLAQUE	1					

DATE	SEP. 12, 2012
4th EDITION	

Fig. 4160 TRAVEL REDUCTION GEAR BOITE REDUCTEUR

Serial No. ;

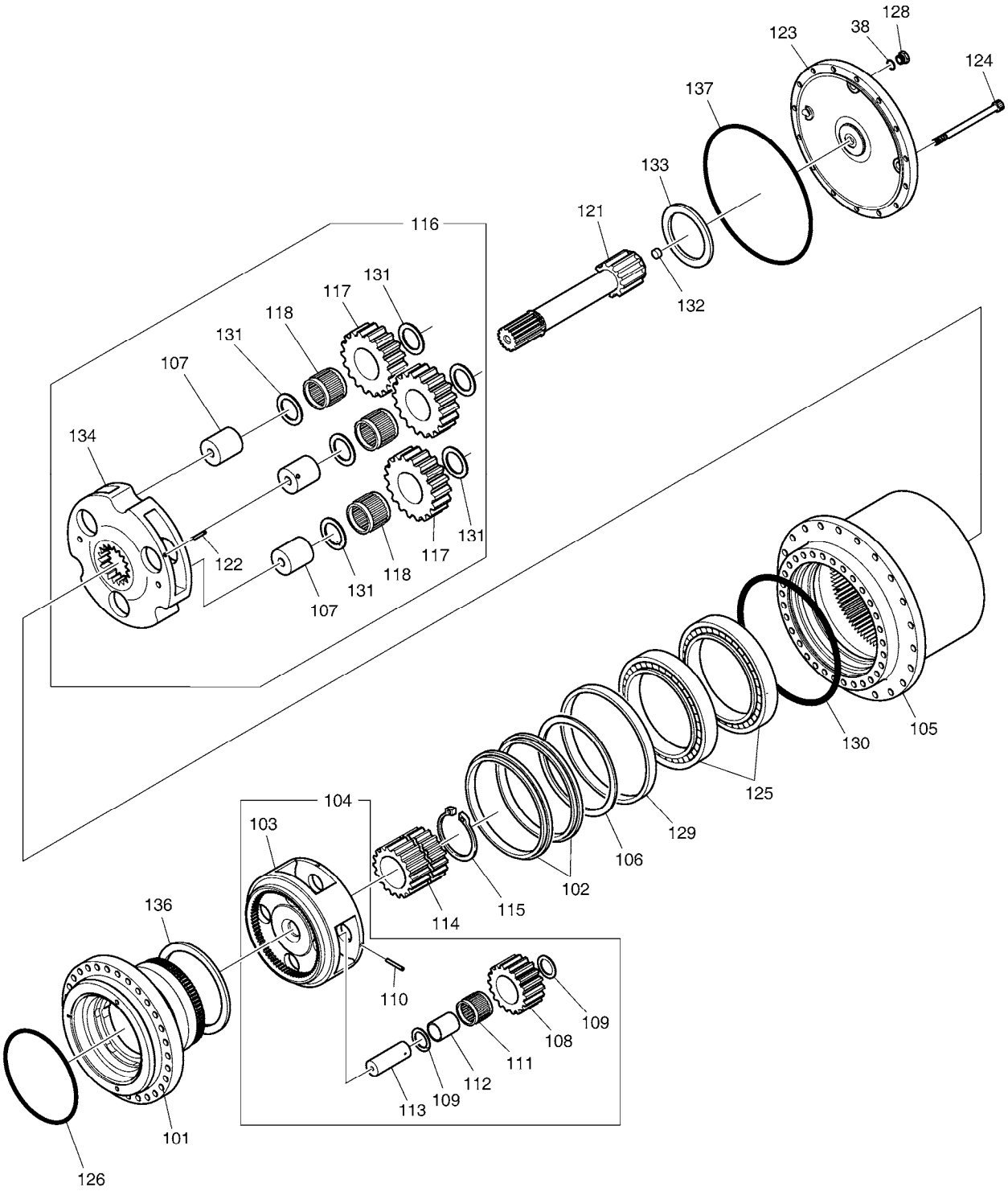

DATE	SEP. 12, 2012
4th EDITION	

Fig. 4160 TRAVEL REDUCTION GEAR BOITE REDUCTEUR

Serial No. ;

Key No.	Part No.	Description	Description	Q'ty	S.C	Serial No.	ICA	Replaceable part	
								Part No.	Q'ty
4160 -136	K9007395	PLATE;SHIM	PLAQUE D'IDENTIFICATION	2		5001-7482	I	K9007395A	2
	K9007395A	SHIM	CALE	2		7483-			
137	401002-00739	RING,O	JOINT CIRCULAIRE	1		10722-			

DATE	SEP. 12, 2012
4th EDITION	

Fig. 4170 CONTROL VALVE(1) DISTRIBUTEUR

Serial No. ;

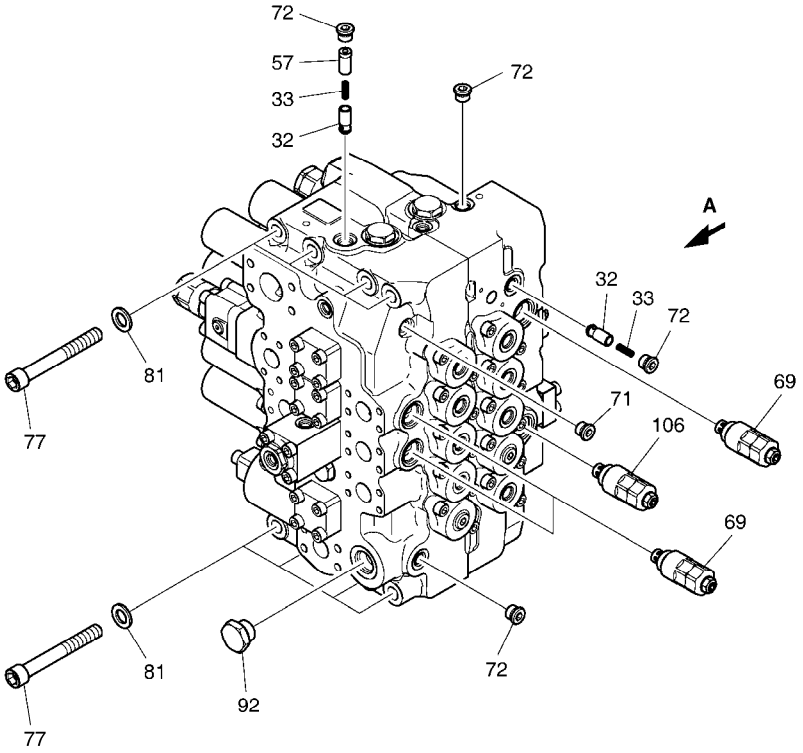

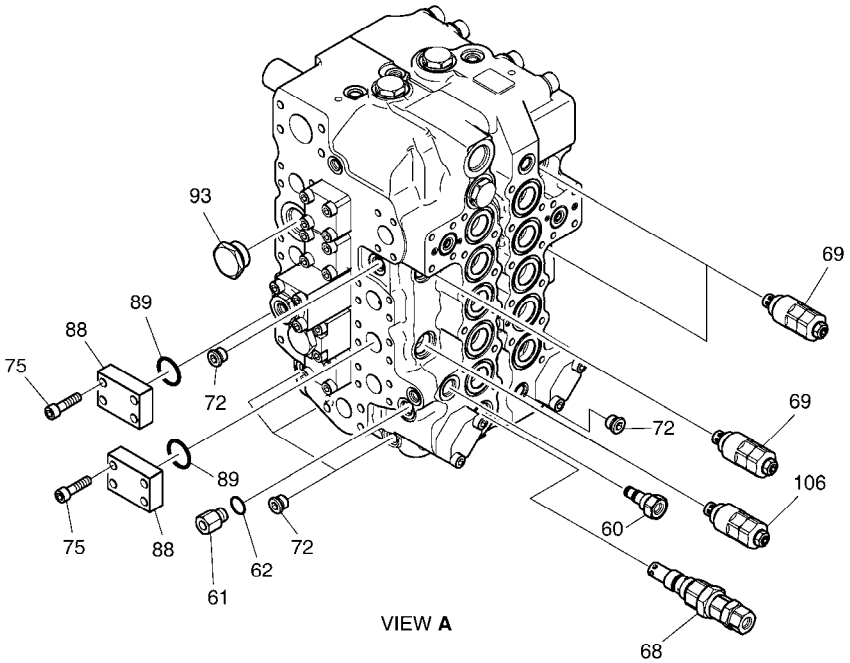

DATE	SEP. 12, 2012
4th EDITION	

Fig. 4170 CONTROL VALVE(1) DISTRIBUTEUR

Serial No. ;

Key No.	Part No.	Description	Description	Q'ty	S.C	Serial No.	ICA	Replaceable part	
								Part No.	Q'ty
4170 --	K1025391	VALVE;CONTROL	VALVE	1					
32	426-00168	POPET	POPET	2					
33	129-00126	SPRING	RESSORT	2					
57	114-00414	SPACER	ENTRETOISE	1					
60	181-00633	PLUG ASS'Y	PRISE	1					
61	2181-2337D13	REDUCER	REDUCTEUR	1					
62	S8000141	O-RING	JOINT TORIQUE	1	K				
68	K9001804	VALVE;MAIN RELIEF	VANNE	1					
69	420-00258	VALVE;OVERLOAD RELIEF	VANNE	6					
71	181-00565	PLUG ASS`Y	BOUCHON	1					
72	181-00701	PLUG ASS`Y	BOUCHON	12					
75	S2212466	BOLT;SOCKET M10X1.5X40	BOULON	8					
77	S2223266	BOLT;SOCKET M16X130L	BOULON	8					
81	S5010913	WASHER,PLAIN	RONDELLE	8					
88	2181-2434	FLANGE	BRIDE	2					
89	2180-1217D109	O-RING	JOINT CIRCULAIRE	2	K				
92	181-00647	PLUG ASS'Y	BOUCHON	1					
93	181-00649	PLUG ASS'Y	BOUCHON	1					
106	K9001805	VALVE;OVERLOAD RELIEF	VANNE	2					
*	420-00295KT	SEAL KIT;CONTROL VALVE	KIT DE JOINT	1					

DATE	SEP. 12, 2012
4th EDITION	

Fig. 4180 CONTROL VALVE(2) DISTRIBUTEUR

Serial No. ;

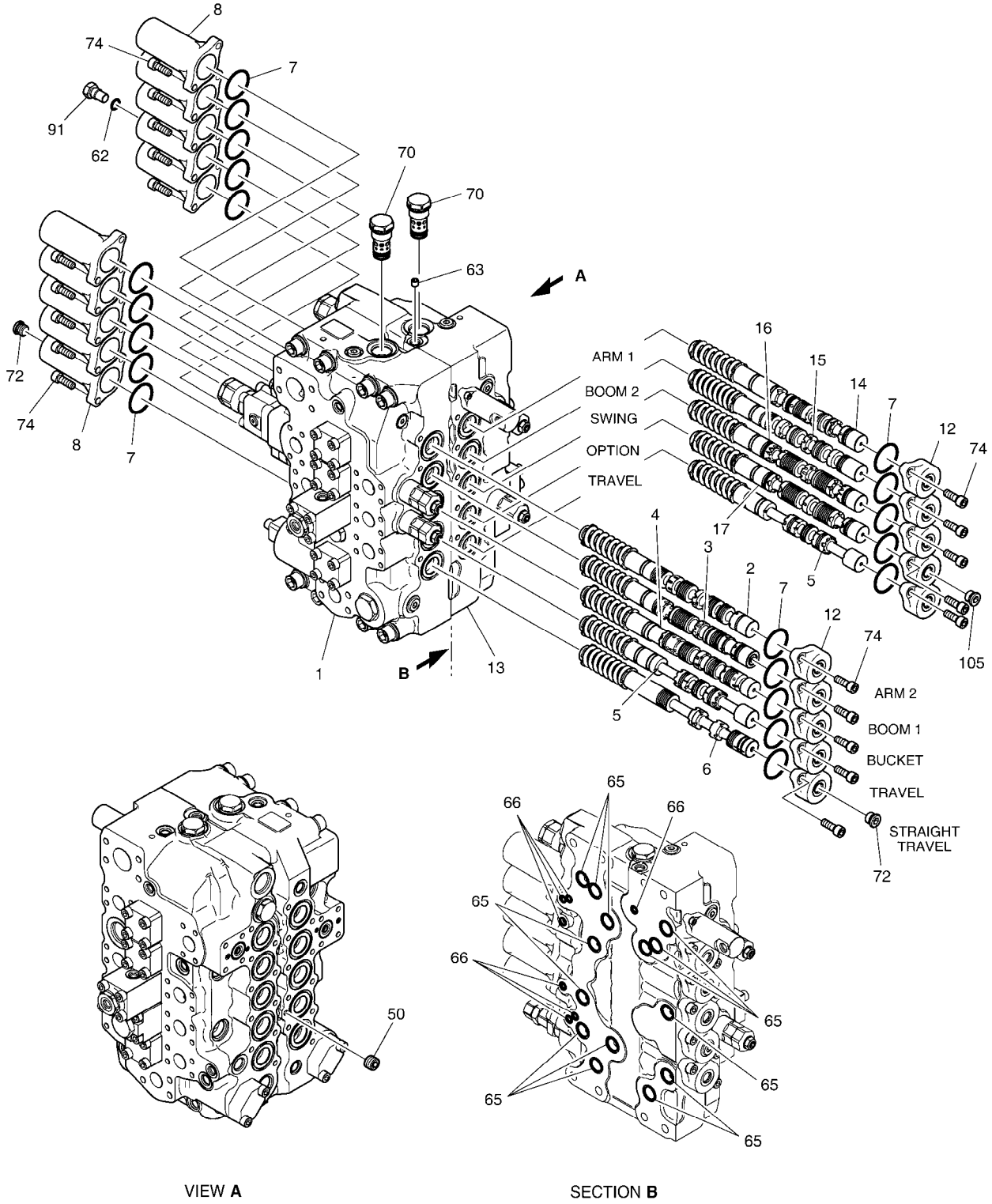

DATE	SEP. 12, 2012
4th EDITION	

Fig. 4180 CONTROL VALVE(2) DISTRIBUTEUR

Serial No. ;

Key No.	Part No.	Description	Description	Q'ty	S.C	Serial No.	ICA	Replaceable part	
								Part No.	Q'ty
4180 --	K1025391	VALVE;CONTROL	VALVE	1					
1	423-00096	HOUSING;VALVE	LOGEMENT	1	D				
2	424-00185	SPOOL ASS`Y-ARM2	PLUNGEUR	1					
3	K9003671	SPOOL ASS'Y-BOOM1	SPOOL	1					
4	424-00199	SPOOL ASS`Y-BUCKET	SPOOL	1					
5	K9001807	SPOOL ASS`Y-TRAVEL	SPOOL	2					
6	424-00115	SPOOL ASS`Y-T/S	PLUNGEUR	1					
7	S8010451	O-RING	JOINT CIRCULAIRE	20	K				
8	430-00033	CAP	CHAPEAU	10					
12	430-00035	CAP	CHAPEAU	10					
13	423-00097	HOUSING;VALVE	LOGEMENT	1	D				
14	K9003672	SPOOL ASS'Y-ARM1	SPOOL	1					
15	K9003673	SPOOL ASS'Y-BOOM2	SPOOL	1					
16	K9001809	SPOOL ASS`Y-SWING	SPOOL	1					
17	K9001810	SPOOL ASS`Y-OPTION	SPOOL	1					
50	K9001199	PLUG	BOUCHON	1					
62	S8000141	O-RING	JOINT TORIQUE	1	K				
63	415-00037	PLUG;ORIFICE	BOUCHON	1					
65	180-00403	O-RING	JOINT CIRCULAIRE	14	K				
66	180-00402	O-RING	JOINT CIRCULAIRE	7	K				
70	420-00259	FOOT RELIFE VALVE	CLAPET DE DECHARGE	2					
72	181-00701	PLUG ASS`Y	BOUCHON	2					
74	S2212266	BOLT;SOCKET M10X1.5X30	BOULON A 6 PANS CREUX	40					
91	181-00646	PLUG	BOUCHON	1					
105	181-00701	PLUG ASS`Y	BOUCHON	1					

DATE	SEP. 12, 2012
4th EDITION	

Fig. 4190 CONTROL VALVE(3) DISTRIBUTEUR

Serial No. ;

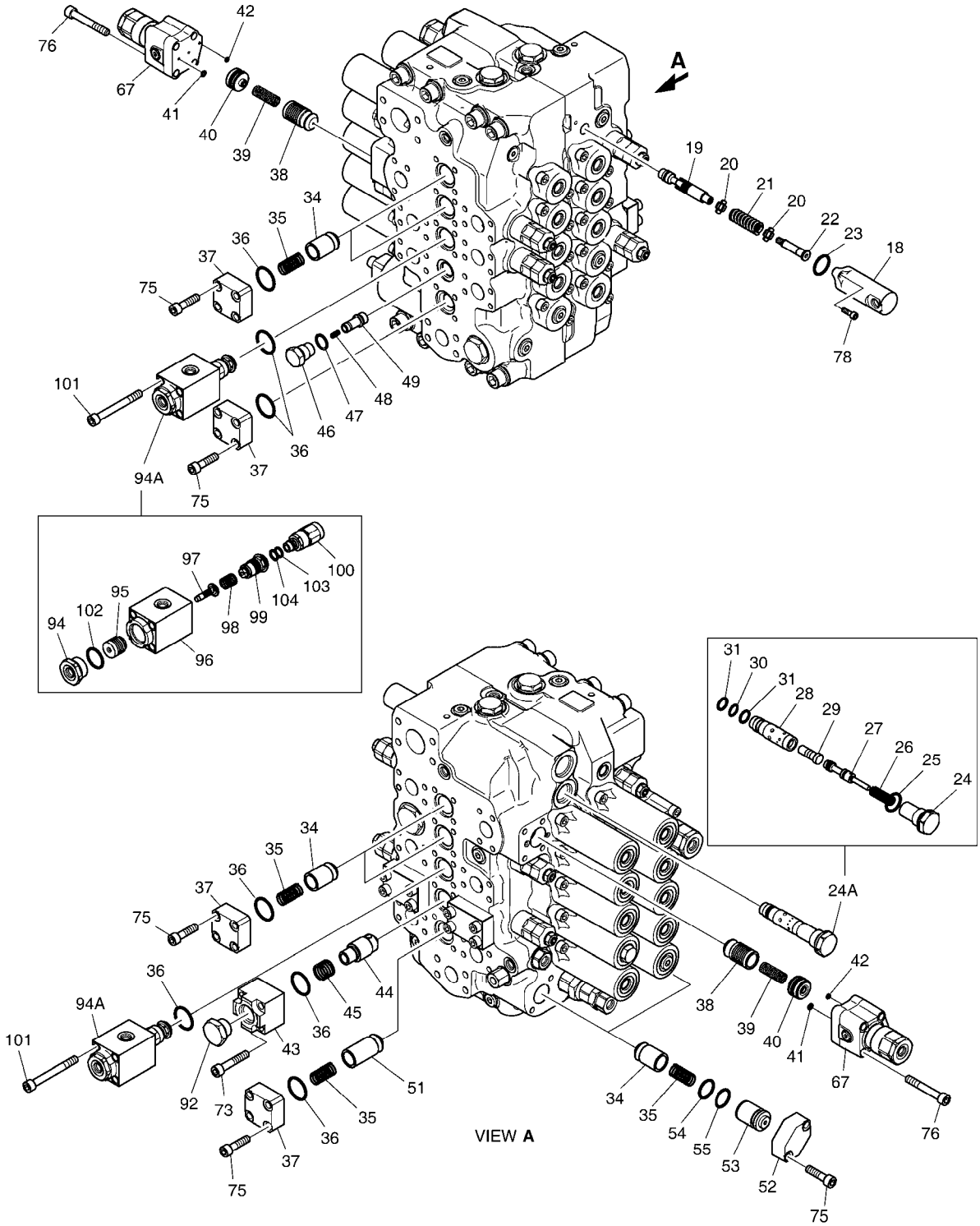

DATE	SEP. 12, 2012
4th EDITION	

Fig. 4190 CONTROL VALVE(3) DISTRIBUTEUR

Serial No. ;

Key No.	Part No.	Description	Description	Q'ty	S.C	Serial No.	ICA	Replaceable part	
								Part No.	Q'ty
4190 --	K1025391	VALVE;CONTROL	VALVE	1					
18	430-00038	CAP	CHAPEAU	1					
19	-	SPOOL	PLUNGEUR	1	D				
20	429-00024	SEAT;SPRING	SIEGE	2					
21	129-00124	SPRING	RESSORT	1					
22	430-00040	SPOOL END	PLUNGEUR	1					
23	S8000261	O-RING	JOINT CIRCULAIRE	1	K				
24A	420-00314	. ARM REGEN ASS'Y	. REPOS DE BRAS	1					
24	430-00041	PLUG	BOUCHON	1					
25	S8000241	O-RING	JOINT CIRCULAIRE	1	K				
26	129-00125	SPRING	RESSORT	1					
27	-	SPOOL	PLUNGEUR	1	D				
28	-	SLEEVE	DOUILLE	1	D				
29	-	PISTON	PISTON	1	D				
30	S8000161	O-RING	JOINT TORIQUE	1	K				
31	S8060161	RING;BACK-UP	ANNEAU	2	K				
34	426-00169	POPET	POUPEE	6					
35	129-00127	SPRING	RESSORT	7					
36	S8000321	O-RING	JOINT CIRCULAIRE	9	K				
37	181-00628	FLANGE	BRIDE	6					
38	426-00170	POPET	POPET	2					
39	129-00128	SPRING	RESSORT	2					
40	114-00411	SPACER ASS`Y	ENTRETOISE	2					
41	S8000061	O-RING	JOINT CIRCULAIRE	2	K				
42	S8000041	O-RING	JOINT CIRCULAIRE	2	K				
43	181-00630	FLANGE	BRIDE	1					
44	426-00171	POPPET,LOAD CHECK	POPET	1					
45	129-00130	SPRING	RESSORT	1					
46	430-00042	PLUG	PRISE	1					
47	180-00398	O-RING	JOINT CIRCULAIRE	1	K				
48	129-00129	SPRING	RESSORT	1					
49	426-00172	POPET	POPET	1					
51	426-00173	POPET	POPET	1					
52	181-00631	FLANGE	BRIDE	2					
53	114-00413	SPACER	ENTERTOISE	2					
54	S8010250	O-RING	JOINT CIRCULAIRE	2	K				
55	180-00445	RING;BACK-UP	ANNEAU	2	K				
67	420-00246	ANTI-DRIFT VALVE ASS'Y	VANNE	2					

DATE	SEP. 12, 2012
4th EDITION	

Fig. 4190 CONTROL VALVE(3) DISTRIBUTEUR

Serial No. ;

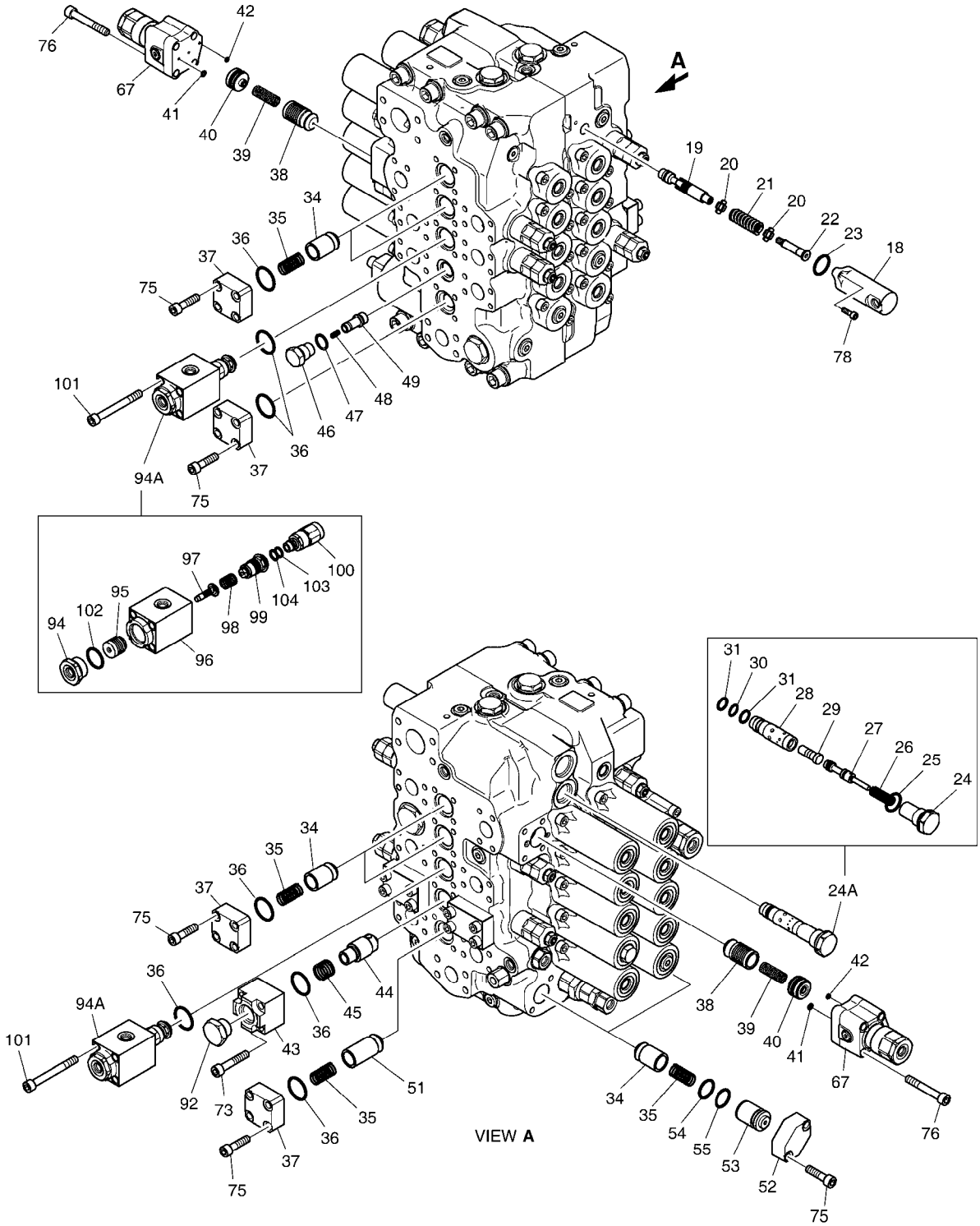

DATE	SEP. 12, 2012
4th EDITION	

Fig. 4190 CONTROL VALVE(3) DISTRIBUTEUR

Serial No. ;

Key No.	Part No.	Description	Description	Q'ty	S.C	Serial No.	ICA	Replaceable part	
								Part No.	Q'ty
4190 -73	S2212766	BOLT;SOCKET M10X1.5X55	BOULON	4					
75	S2212466	BOLT;SOCKET M10X1.5X40	BOULON	28					
76	S2213066	BOLT;SOCKET M10X1.5X70	BOULON	8					
78	S2204866	BOLT;SOCKET	BOULON	2					
92	181-00647	PLUG ASS'Y	BOUCHON	1					
94A	420-00309	. BOOM PRIORITY VALVE	. VANNE	2					
94	430-00045	PLUG	BOUCHON	2					
95	409-00049	PISTON	PISTON	2					
96	-	BODY	CORPS	2	D				
97	409-00050	PISTON	PISTON	2					
98	129-00139	SPRING	RESSORT	2					
99	-	SLEEVE	DOUILLE	2	D				
100	426-00182	POPET ASS`Y	POPET	2					
102	180-00400	O-RING	JOINT CIRCULAIRE	2	K				
103	S8060121	RING;BACK UP	ANNEAU	2	K				
104	S8000121	O-RING	JOINT CIRCULAIRE	2	K				
101	S2213466	BOLT;SOCKET M10X90	BOULON	8					

DATE	SEP. 12, 2012
4th EDITION	

Fig. 4200 REMOTE CONTROL VALVE
VANNE DE COMMAND A DISTANCE

Serial No. ;

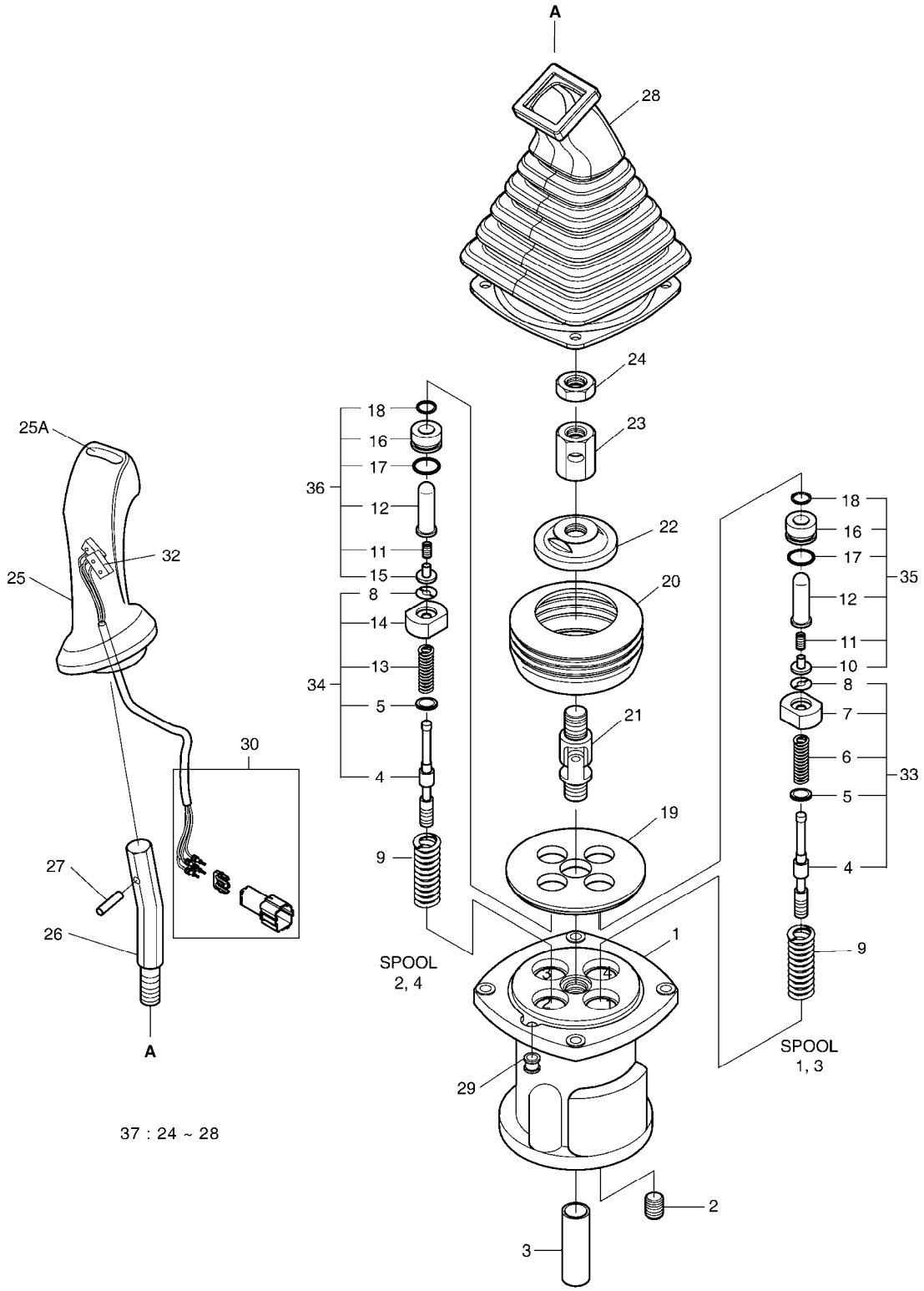

DATE	SEP. 12, 2012
4th EDITION	

Fig. 4200 REMOTE CONTROL VALVE
VANNE DE COMMAND A DISTANCE

Serial No. ;

Key No.	Part No.	Description	Description	Q'ty	S.C	Serial No.	ICA	Replaceable part	
								Part No.	Q'ty
4200 --	K1000556H	REMOTE CONTROL VALVE(L.H)	VALVE DE REMOCON	1		5001-6341	I	410113-00022A	1
	410113-00022A	VALVE,JOYSTICK(L.H)	MANETTE DE CONTROLE	1		6342-			
	K1000555H	REMOTE CONTROL VALVE(R.H)	VALVE DE REMOCON	1		5001-6341	I	410113-00021A	1
	410113-00021A	VALVE,JOYSTICK(R.H)	MANETTE DE CONTROLE	1		6342-			
1	K9001114	CASE	CARTER	1	D				
2	2181-1116D2	PLUG	BOUCHON	4					
3	K9001115	BUSHING	DOUILLE	1					
4	K9001116	SPOOL	PLUNGEUR	4	D				
5	1.114-00012	SHIM	CALE	1	D				
6	K9001117	SPRING	RESSORT	2	D				
7	K9001762	SEAT;SPRING	SIEGE	2	D				
8	K9001763	STOPPER	CHAPEAU	4	D				
9	K9001119	SPRING	RESSORT	4					
10	1.416-00017	STOPPER	CHAPEAU	2	D				
11	K9001121	SPRING	RESSORT	4	D				
12	K9001766	ROD;PUSH	TIGE DE POUSSOIR	4	D				
13	K9001123	SPRING	RESSORT	2	D				
14	K9001767	SEAT;SPRING	SIEGE	2	D				
15	1.416-00018	STOPPER	CHAPEAU	2	D				
16	K9001768	PLUG	BOUCHON	4	D				
17	S8000205	O-RING	JOINT CIRCULAIRE	4					
18	180-00198	SEAL;ROD	CACHET	4					
19	1.412-00017	PLATE	PLAQUE	1					
20	K9001128	BOOT	BOTTE	1					
21	1.138-00004	JOINT ASS`Y	ENSEMBLE DE JOINT	1					
22	K9001129	PLATE;SWASH	PLAQUE	1		5001-6341	I	K9001129A	1
	K9001129A	PLATE;SWASH	PLAQUE	1		6342-			
23	1.121-00028	NUT	ECROU	1					
24	S4012833	NUT	ECROU	1					
25	K9001130	HANDLE ASS`Y(L.H)	HANDLE	1					
	K9001131	HANDLE ASS`Y(R.H)	HANDLE	1					
25A	1.161-00021	. CAP;PEANUT	. CHAPEAU	1					
26	1.178-00004	BAR;HANDLE	BARRE	1					
27	S5740800	PIN;SPRING	GOUPILLE	1					
28	K9001132	BELLOWS	SOUFFLETS	1					
29	1.110-00169	BUSHING	DOUILLE	1					
30	K9001133	CONNECTOR ASS`Y	CONNECTOR	1					
32	K9001001	SWITCH ASS`Y	INTERRUPTEUR	1					

DATE	SEP. 12, 2012
4th EDITION	

Fig. 4200 REMOTE CONTROL VALVE
VANNE DE COMMAND A DISTANCE

Serial No. ;

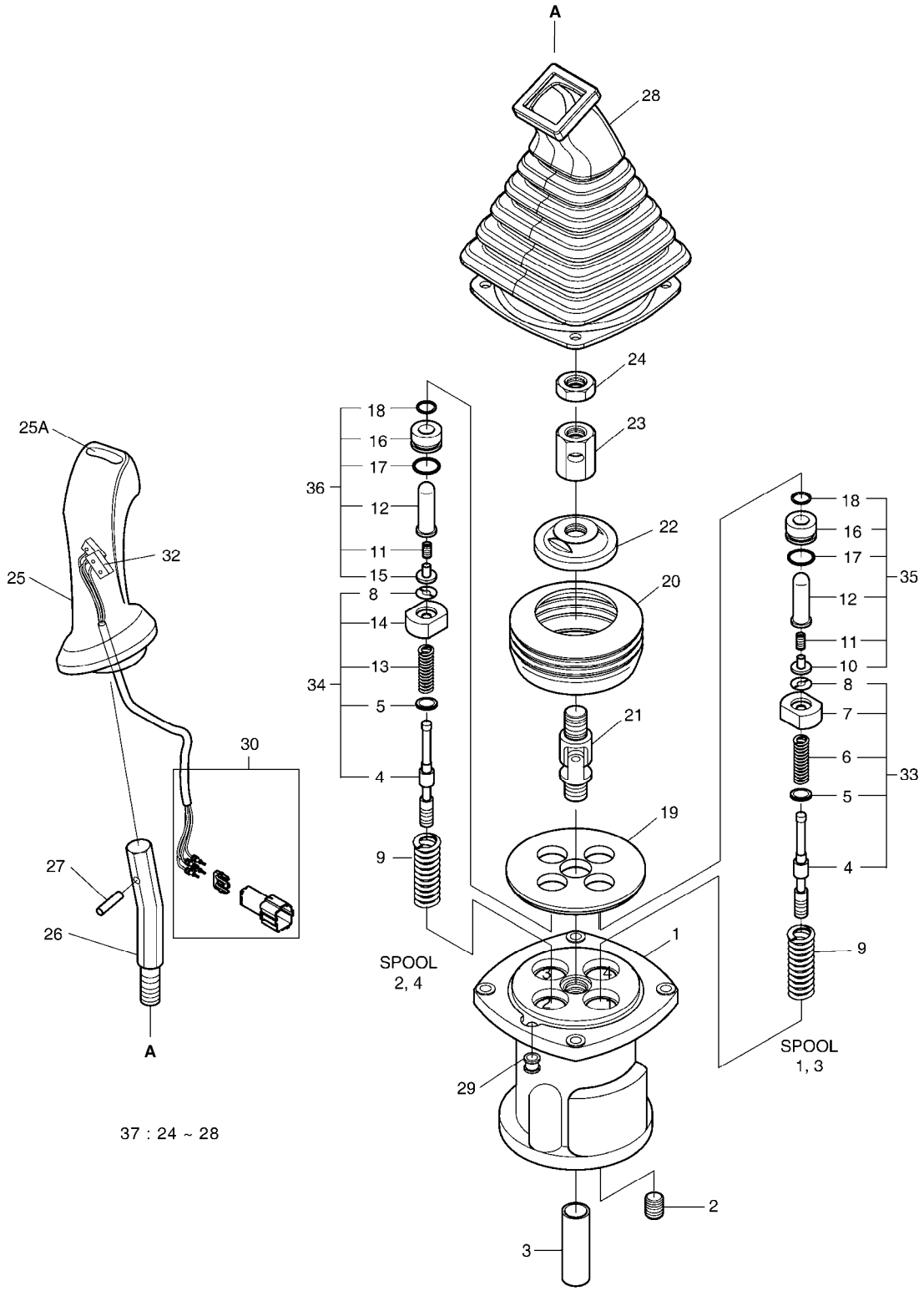

DATE	SEP. 12, 2012
4th EDITION	

Fig. 4200 REMOTE CONTROL VALVE
VANNE DE COMMAND A DISTANCE

Serial No. ;

Key No.	Part No.	Description	Description	Q'ty	S.C	Serial No.	ICA	Replaceable part	
								Part No.	Q'ty
4200 -33	K9003998	KIT;SPOOL(1,3)	KIT	1		5001-6341			
	410207-00175	SPOOL KIT;(1,3)	KIT DE SPOOL	1		6342-			
34	K9003999	KIT;SPOOL(2,4)	KIT	1		5001-6341			
	410207-00176	SPOOL KIT;(2,4)	KIT DE SPOOL	1		6342-			
35	K9006480	KIT;PLUG(1,3)	KIT	1		5001-6341	I	K9004000	1
	K9004000	KIT;PLUG(1,3)	KIT	1		6342-			
36	K9006481	KIT;PLUG(2,4)	KIT	1		5001-6341	I	K9004001	1
	K9004001	KIT;PLUG(2,4)	KIT	1		6342-			
37	K9001139	KIT;HANDLE(R.H)	KIT	1					
	K9001140	KIT;HANDLE(L.H)	KIT	1					

DATE	SEP. 12, 2012
4th EDITION	

Fig. 4210 PEDAL VALVE VANNE

Serial No. ;

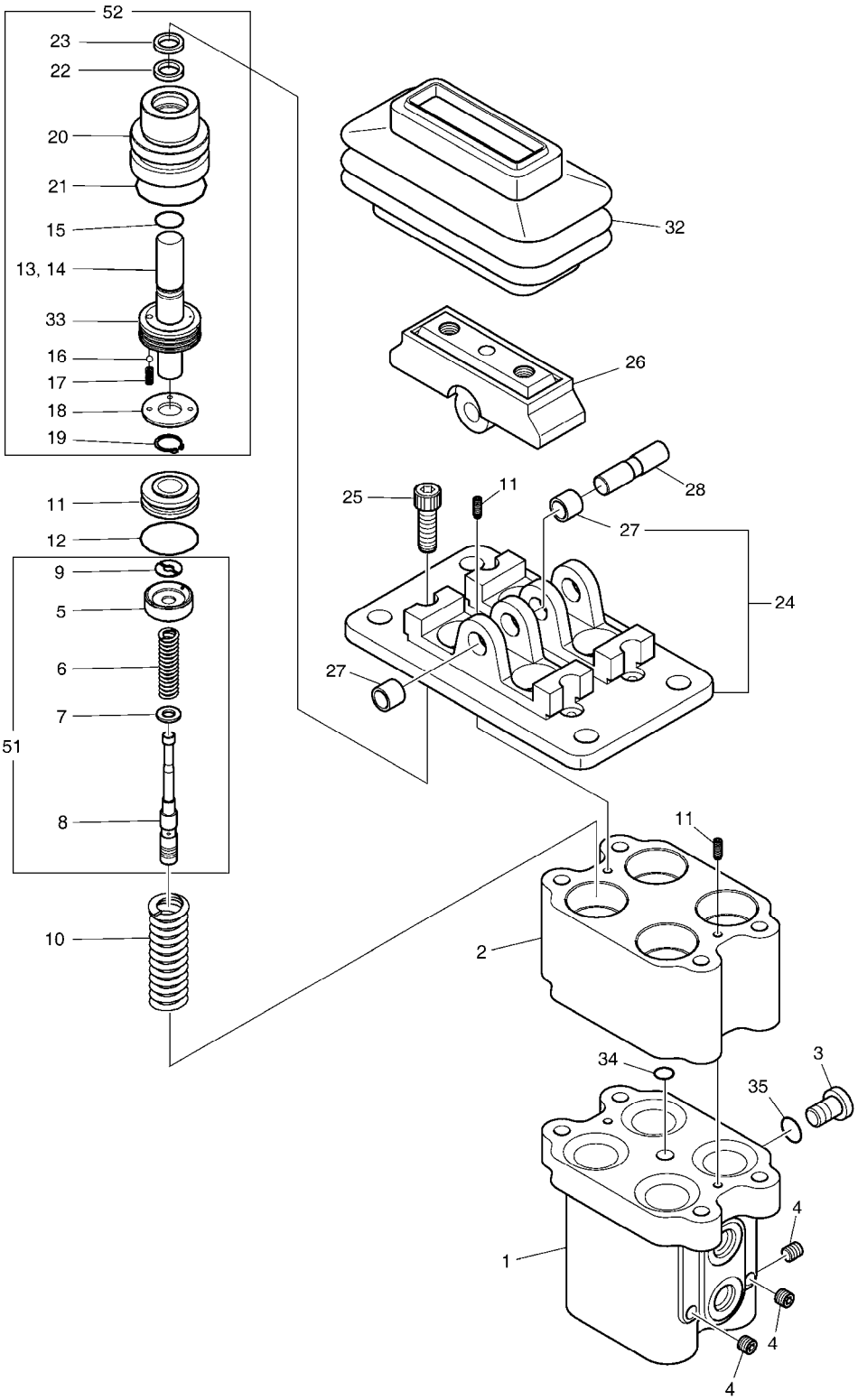

DATE	SEP. 12, 2012
4th EDITION	

Fig. 4210 PEDAL VALVE VANNE

Serial No. ;

Key No.	Part No.	Description	Description	Q'ty	S.C	Serial No.	ICA	Replaceable part	
								Part No.	Q'ty
4210 --	420-00467A	VALVE;PEDAL	VANNE	1					
1	-	BODY	CORPS	1	D				
2	-	BODY	CORPS	1	D				
3	420-00112	PLUG	PRISE	1					
4	2181-1116D1	PLUG	BOUCHON	3					
51	K9006863	KIT;SPOOL	KIT DE SPOOL	4					
5	429-00004	SEAT;SPRING	SIEGE	4					
6	K9001141	SPRING	RESSORT	4					
7	429-00005	SEAT;SPRING	SIEGE	4					
8	424-00042	SPOOL	PLUNGEUR	4					
9	161-00080	STOPPER	TAQUET	4					
10	K9006860	SPRING	RESSORT	4					
11	S5740600	PIN;SPRING	GOUPILLE	4					
12	S8000261	O-RING	JOINT CIRCULAIRE	4					
52	K9006864	KIT;PLUG	KIT DE PRISE	4					
13	-	ROD;PUSH	TIGE	4	D				
14	S5740480	PIN;SPRING	GOUPILLE	4					
15	-	SEAL	CACHET	4	D				
16	148-00012	BALL;STEEL	BOULE	4					
17	129-00043	SPRING	RESSORT	4					
18	159-00017	PLATE	PLAQUE	4					
19	115-00042	RING;SNAP	ANNEAU	4					
20	-	PLUG	PRISE	4	D				
21	S8010251	O-RING	JOINT CIRCULAIRE	4					
22	180-00198	SEAL;ROD	CACHET	4					
23	180-00199	SEAL;DUST	CACHET	4					
33	1.409-00225	PISTON	PISTON	4					
24	K9006865	KIT;COVER	KIT DE COUVERTURE	1					
27	2110-1184D7	BUSH;DU 10X10	DOUILLE	4					
25	S2210071	BOLT;SOCKET	BOULON	4					
26	K9006866	KIT;CAM	KIT DE FAO	2					
28	K9006861	SHAFT;CAM	ARBRE	2					
32	K9006862	BELLOWS	SOUFFLETS	2					
34	S8000081	O-RING	JOINT CIRCULAIRE	1					
35	S8000111	O-RING	JOINT TORIQUE	1					

DATE	SEP. 12, 2012
4th EDITION	

Fig. 4220 SOLENOID VALVE VANNE

Serial No. ;

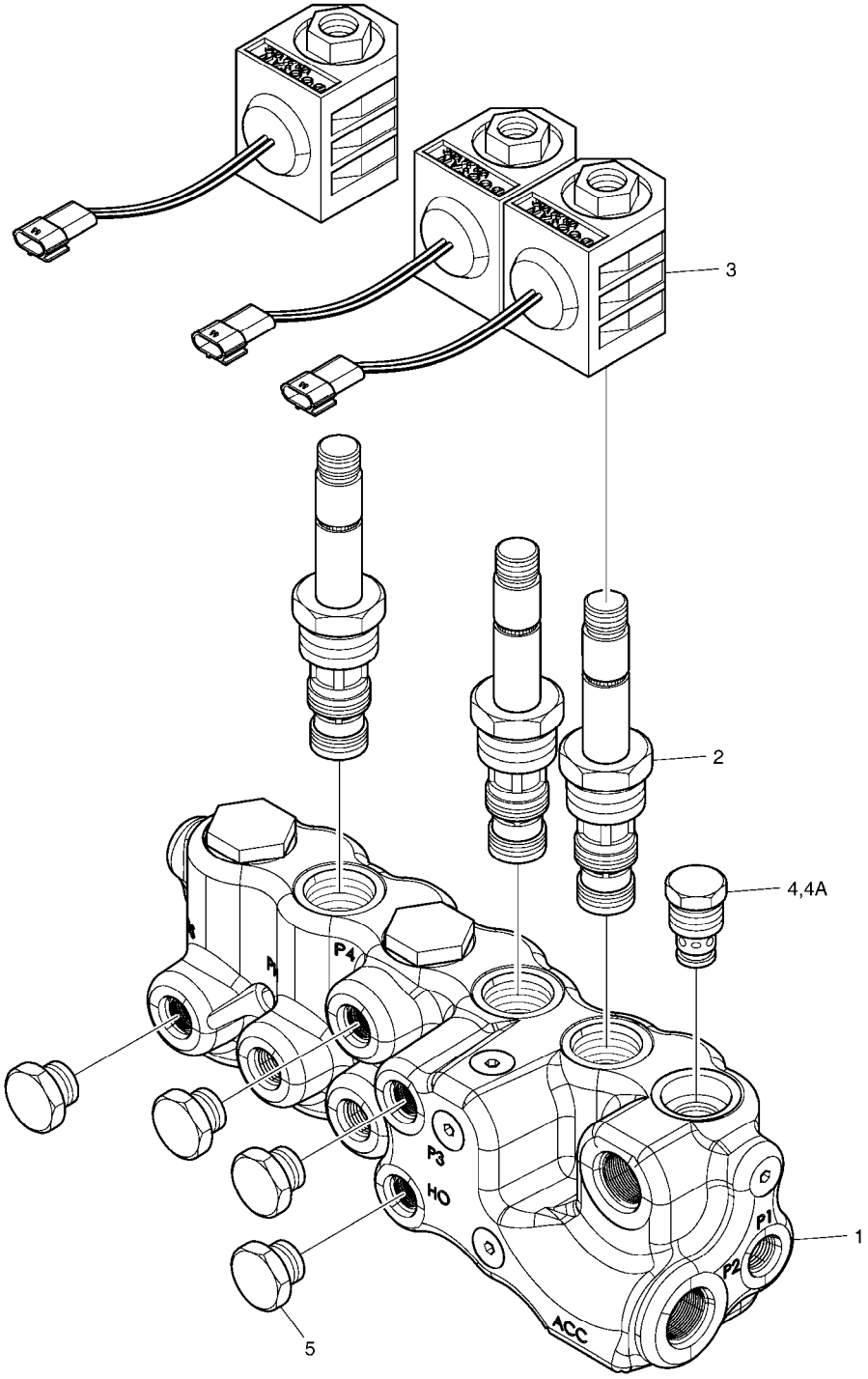

DATE	SEP. 12, 2012
4th EDITION	

Fig. 4220 SOLENOID VALVE VANNE

Serial No. ;

Key No.	Part No.	Description	Description	Q'ty	S.C	Serial No.	ICA	Replaceable part	
								Part No.	Q'ty
4220 --	K1047557	VALVE;SOLENOID	VALVE	1					
1	-	BLOCK	BLOC	1	D				
2	K9007363	SPOOL;SOLENOID	PLUNGEUR	3					
3	1.519-00001	COIL 24V	ENROULEMENT	3					
4	K9002065	VALVE;CHECK	VANNE	1					
4A	1.180-00447	. KIT;SEAL	. KIT DE JOINT	1					
5	2181-1950D1	PLUG	BOUCHON	4					

DATE	SEP. 12, 2012
4th EDITION	

Fig. 4230 BOOM CYLINDER - L.H. VERIN DE FLECHE

Serial No. ;

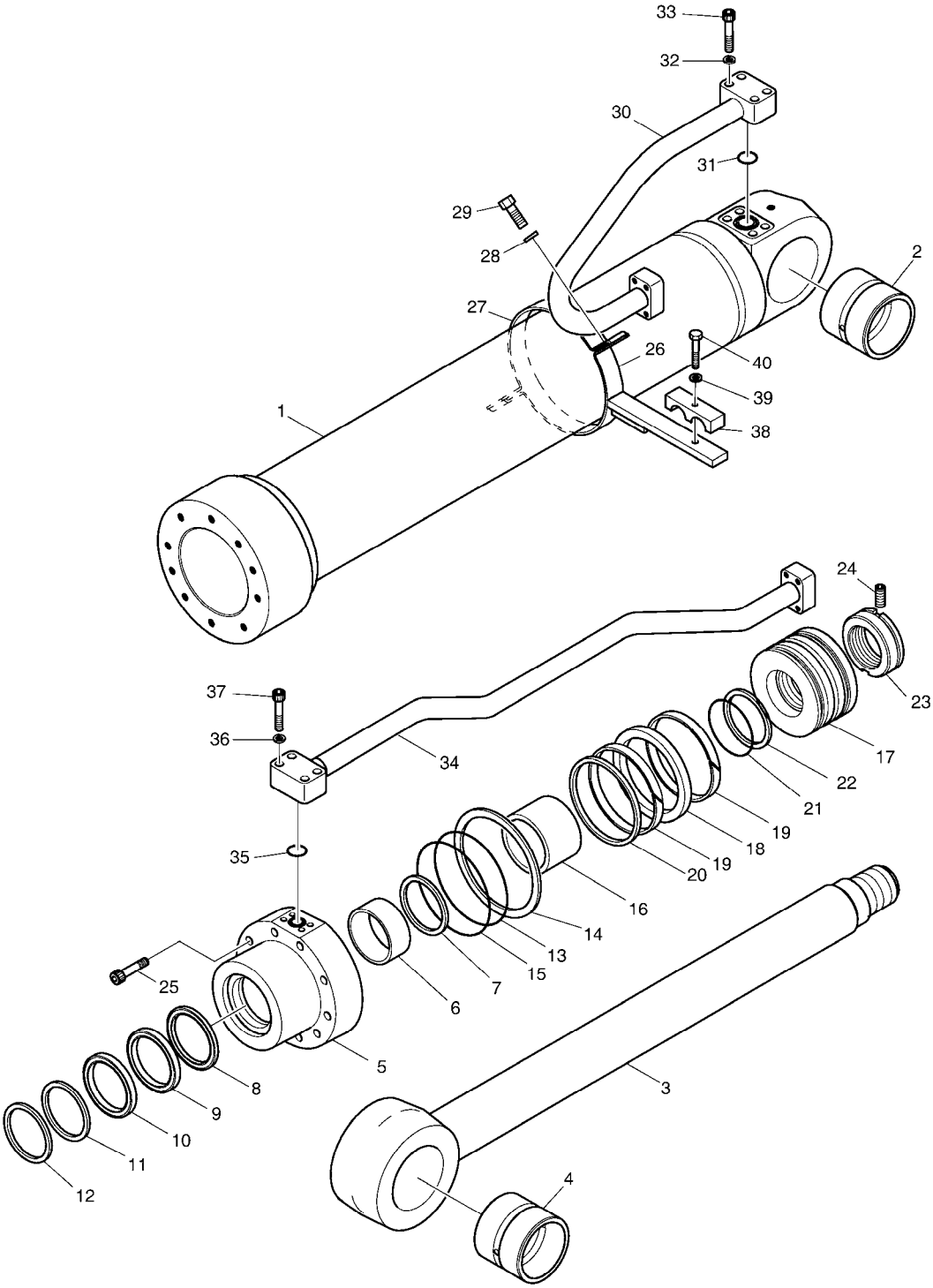

DATE	SEP. 12, 2012
4th EDITION	

Fig. 4230 BOOM CYLINDER - L.H. VERIN DE FLECHE

Serial No. ;

Key No.	Part No.	Description	Description	Q'ty	S.C	Serial No.	ICA	Replaceable part	
								Part No.	Q'ty
4230 --	K1044989B	CYLINDER;BOOM (LH)	CYLINDRE	1		5001-9957	Y	400309-00341	1
	400309-00341	CYLINDER,BOOM;(L.H)	CYLINDRE	1		09958-11554	Y	400309-00341A	1
	400309-00341A	CYLINDER,BOOM;(L.H)	CYLINDRE	1		11555-			
1	K9007361	TUBE ASS'Y	ENSEMBLE TUBE	1		05001-11554	Y	420406-01077	1
	420406-01077	TUBE ASS'Y	ENSEMBLE TUBE	1		11555-			
2	K1037853A	BUSH	DOUILLE	1		05001-11554	Y	131008-00067A	1
	131008-00067A	BUSH	DOUILLE	1		11555-			
3	K9007362	ROD ASS'Y	ENSEMBLE TIGE	1		05001-11554	Y	400337-00454	1
	400337-00454	ROD ASS'Y	ENSEMBLE TIGE	1		11555-			
4	K1037853A	BUSH	DOUILLE	1		05001-11554	Y	131008-00067A	1
	131008-00067A	BUSH	DOUILLE	1		11555-			
5	K9001856	ROD;COVER	TIGE	1					
6	110-00079	DD-BUSH	COUSSINET	1					
7	115-00050	RING;RETAINING	BAGUE	1					
8	K9001857	SEAL;BUFFER	ETANCHEITE A GRADINS	1	K				
9	K9001858	U-PACKING	JOINT EN U	1	K				
10	K9001877	RING;BACK UP	BAGUE ANTIEXTRUSION	1	K				
11	115-00059	WIPER;DUST	PARE-POUSSIERE	1	K				
12	115-00051	RING;RETAINING	BAGUE D'ARRET	1					
13	S8011201	O-RING	JOINT CIRCULAIRE	1	K				
14	K9001859	RING;BACK UP	ANNEAU	1	K				
15	S8011251	O-RING	JOINT CIRCULAIRE	1	K				
16	1.115-00204	RING;CUSHION	BAGUE D'AMORTISSEMEN	1					
17	K9001860	PISTON	PISTON	1					
18	K9001890	SEAL;SLIPPER	CACHET	1	K				
19	115-00087	RING;WEAR	ANNEAU	2	K				
20	K9001861	RING;DUST	BAGUE	1	K				
21	S8010651	O-RING	JOINT TORIQUE	1	K				
22	1.180-00277	RING;BACK UP	BAGUE ANTIEXTRUSION	2	K				
23	K9001862	NUT;PISTON	ECROU	1					
24	1.120-00219	SCREW;SET	VIS	1					
25	S2222272	BOLT;SOCKET	BOULON	10					
26	K9007358	PIPE BAND ASS'Y	BANDE ASS'Y DE PIPE	1		5001-9957			
	K9007358A	BAND ASSY,PIPE	BANDE ASS'Y DE PIPE	1		9958-			
27	124-00088	BAND;PIPE	ATTACHE	1					
28	S5100603	WASHER;SPRING	RONDELLE	2					
29	S0558153	BOLT	BOULON	2					
30	K9007360	PIPE ASS'Y-H(L.H)	ENSEMBLE CONDUITES	1		5001-9957			

DATE	SEP. 12, 2012
4th EDITION	

Fig. 4230 BOOM CYLINDER - L.H.
VERIN DE FLECHE

Serial No. ;

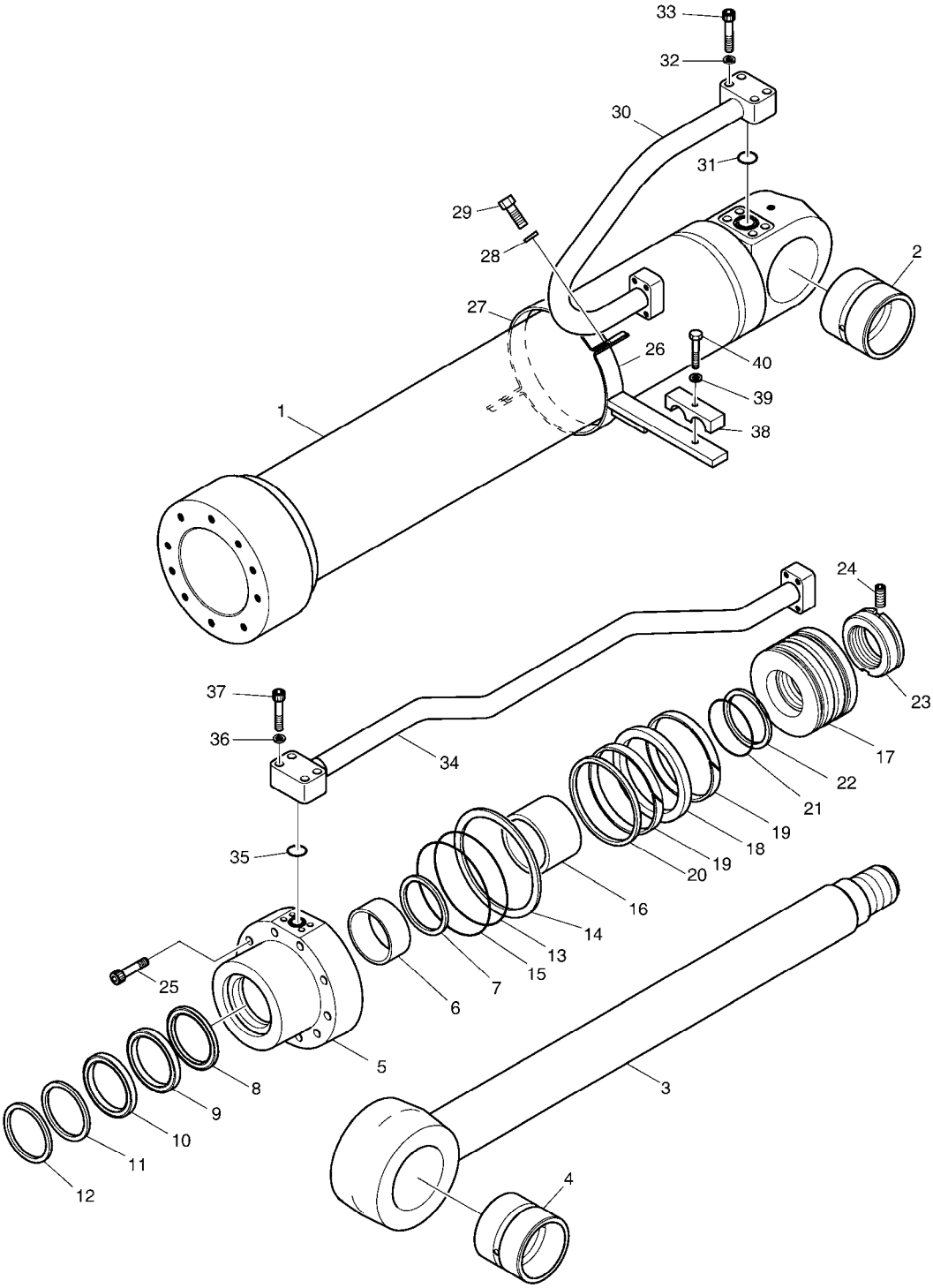

DATE	SEP. 12, 2012
4th EDITION	

Fig. 4230 BOOM CYLINDER - L.H. VERIN DE FLECHE

Serial No. ;

Key No.	Part No.	Description	Description	Q'ty	S.C	Serial No.	ICA	Replaceable part	
								Part No.	Q'ty
4230 -	K9007360A	PIPE ASSY;H(L.H)	ENSEMBLE CONDUITES	1		9958-			
31	S8000281	O-RING	JOINT TORIQUE	1					
32	S5100603	WASHER;SPRING	RONDELLE	4					
33	S2212761	BOLT;SOCKET M10X1.5X55	BOULON	4					
34	K9007368	PIPE ASS'Y-R(L.H)	ENSEMBLE CONDUITES	1		5001-9957			
	K9007368A	PIPE ASSY;R(L.H)	ENSEMBLE CONDUITES	1		9958-			
35	S8000281	O-RING	JOINT TORIQUE	1					
36	S5100603	WASHER;SPRING	RONDELLE	4					
37	S2212761	BOLT;SOCKET M10X1.5X55	BOULON	4					
38	1.124-00157	CLAMP;PIPE	COLLIER	1					
39	S5100703	WASHER;SPRING	RONDELLE	1					
40	S0561053	BOLT M12X1.75X65	BOULON	1					
*	K9001878	SEAL KIT;BOOM CYLINDER	JOINT	1					

DATE	SEP. 12, 2012
4th EDITION	

Fig. 4240 BOOM CYLINDER - R.H.
VERIN DE FLECHE

Serial No. ;

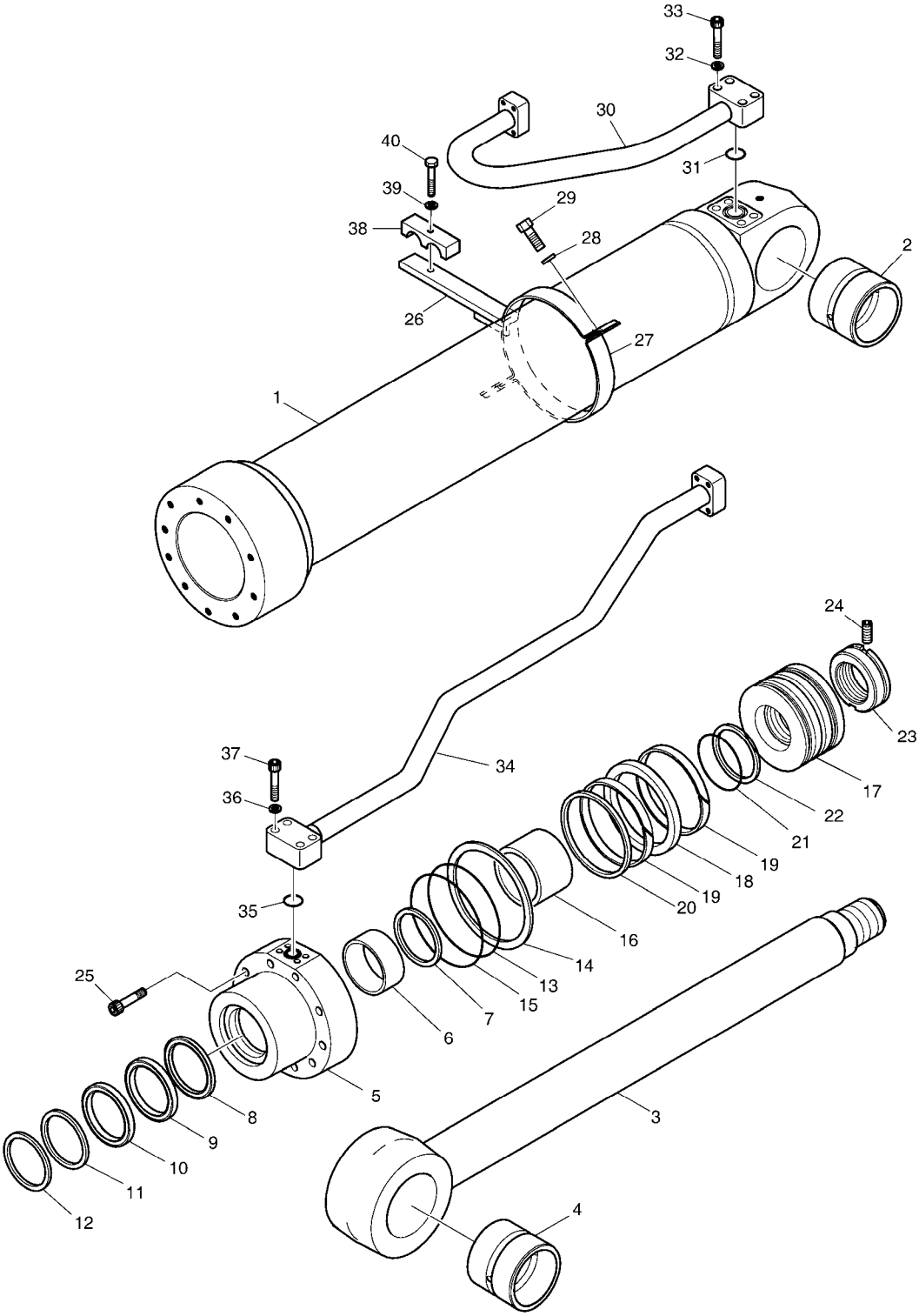

DATE	SEP. 12, 2012
4th EDITION	

Fig. 4240 BOOM CYLINDER - R.H. VERIN DE FLECHE

Serial No. ;

Key No.	Part No.	Description	Description	Q'ty	S.C	Serial No.	ICA	Replaceable part	
								Part No.	Q'ty
4240 --	K1044990B	CYLINDER;BOOM (RH)	CYLINDRE	1		5001-9957	Y	400309-00343	1
	400309-00343	CYLINDER,BOOM;(R.H)	CYLINDRE	1		09958-11554	Y	400309-00343A	1
	400309-00343A	CYLINDER,BOOM;(R.H)	CYLINDRE	1		11555-			
1	K9007361	TUBE ASS'Y	ENSEMBLE TUBE	1		05001-11554	Y	420406-01077	1
	420406-01077	TUBE ASS'Y	ENSEMBLE TUBE	1		11555-			
2	K1037853A	BUSH	DOUILLE	1		05001-11554	Y	131008-00067A	1
	131008-00067A	BUSH	DOUILLE	1		11555-			
3	K9007362	ROD ASS'Y	ENSEMBLE TIGE	1		05001-11554	Y	400337-00454	1
	400337-00454	ROD ASS'Y	ENSEMBLE TIGE	1		11555-			
4	K1037853A	BUSH	DOUILLE	1		05001-11554	Y	131008-00067A	1
	131008-00067A	BUSH	DOUILLE	1		11555-			
5	K9001856	ROD;COVER	TIGE	1					
6	110-00079	DD-BUSH	COUSSINET	1					
7	115-00050	RING;RETAINING	BAGUE	1					
8	K9001857	SEAL;BUFFER	ETANCHEITE A GRADINS	1	K				
9	K9001858	U-PACKING	JOINT EN U	1	K				
10	K9001877	RING;BACK UP	BAGUE ANTIEXTRUSION	1	K				
11	115-00059	WIPER;DUST	PARE-POUSSIERE	1	K				
12	115-00051	RING;RETAINING	BAGUE D'ARRET	1					
13	S8011201	O-RING	JOINT CIRCULAIRE	1	K				
14	K9001859	RING;BACK UP	ANNEAU	1	K				
15	S8011251	O-RING	JOINT CIRCULAIRE	1	K				
16	1.115-00204	RING;CUSHION	BAGUE D'AMORTISSEMEN	1					
17	K9001860	PISTON	PISTON	1					
18	K9001890	SEAL;SLIPPER	CACHET	1	K				
19	115-00087	RING;WEAR	ANNEAU	2	K				
20	K9001861	RING;DUST	BAGUE	1	K				
21	S8010651	O-RING	JOINT TORIQUE	1	K				
22	1.180-00277	RING;BACK UP	BAGUE ANTIEXTRUSION	2	K				
23	K9001862	NUT;PISTON	ECROU	1					
24	1.120-00219	SCREW;SET	VIS	1					
25	S2222272	BOLT;SOCKET	BOULON	10					
26	K9007358	PIPE BAND ASS'Y	BANDE ASS'Y DE PIPE	1		5001-9957			
	K9007358A	BAND ASSY,PIPE	BANDE ASS'Y DE PIPE	1		9958-			
27	124-00088	BAND;PIPE	ATTACHE	1					
28	S5100603	WASHER;SPRING	RONDELLE	2					
29	S0558153	BOLT	BOULON	2					
30	K9007359	PIPE ASS'Y-H(R.H)	ENSEMBLE CONDUITES	1		5001-9957			

DATE	SEP. 12, 2012
4th EDITION	

Fig. 4240 BOOM CYLINDER - R.H.
VERIN DE FLECHE

Serial No. ;

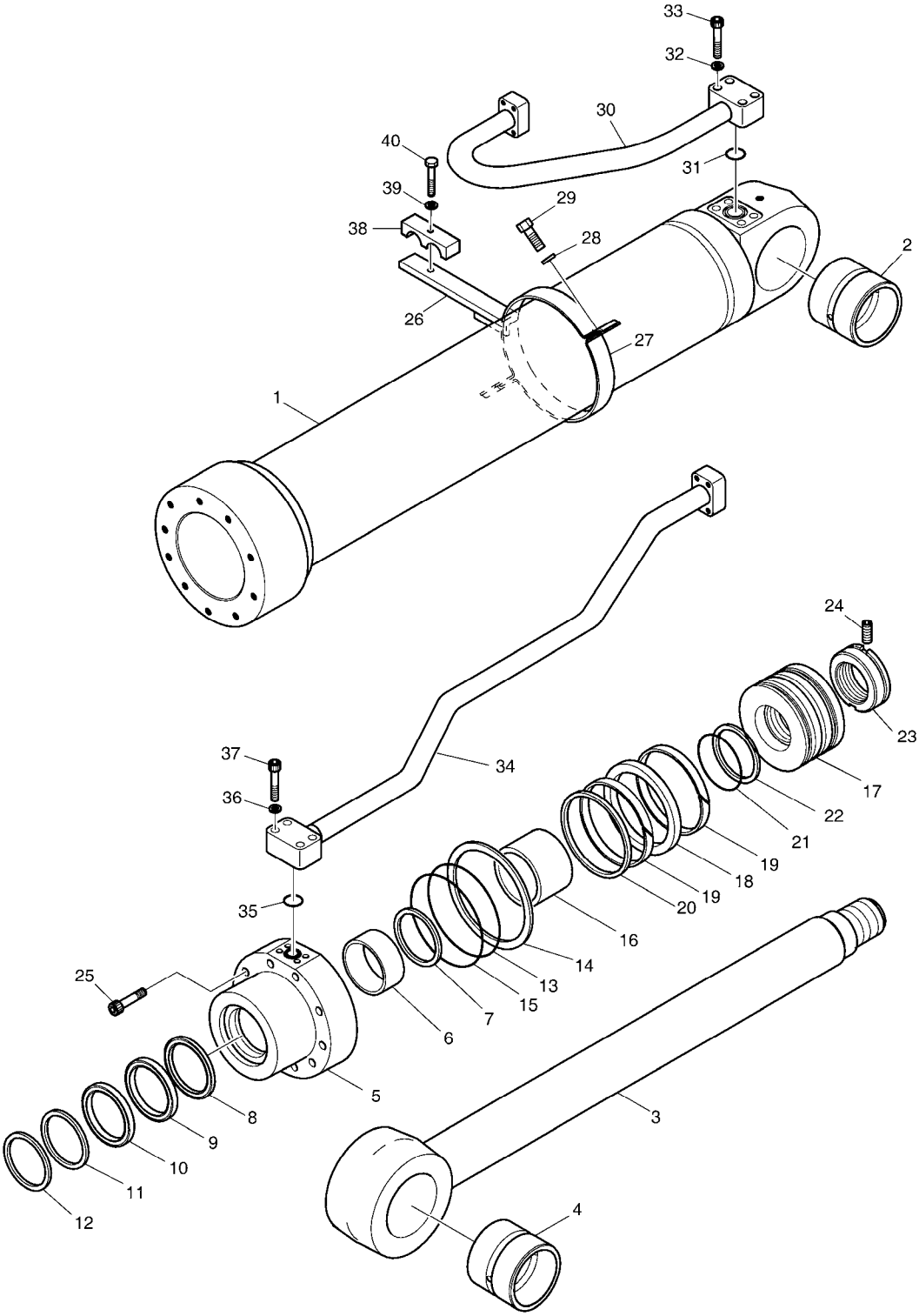

DATE	SEP. 12, 2012
4th EDITION	

Fig. 4240 BOOM CYLINDER - R.H.
VERIN DE FLECHE

Serial No. ;

Key No.	Part No.	Description	Description	Q'ty	S.C	Serial No.	ICA	Replaceable part	
								Part No.	Q'ty
4240 -	K9007359A	PIPE ASSY;H(R.H)	ENSEMBLE CONDUITES	1		9958-			
31	S8000281	O-RING	JOINT TORIQUE	1					
32	S5100603	WASHER;SPRING	RONDELLE	4					
33	S2212761	BOLT;SOCKET M10X1.5X55	BOULON	4					
34	K9007367	PIPE ASS'Y-R(R.H)	ENSEMBLE CONDUITES	1		5001-9957			
	K9007367A	PIPE ASSY;R(R.H)	ENSEMBLE CONDUITES	1		9958-			
35	S8000281	O-RING	JOINT TORIQUE	1					
36	S5100603	WASHER;SPRING	RONDELLE	4					
37	S2212761	BOLT;SOCKET M10X1.5X55	BOULON	4					
38	1.124-00157	CLAMP;PIPE	COLLIER	1					
39	S5100703	WASHER;SPRING	RONDELLE	1					
40	S0561053	BOLT M12X1.75X65	BOULON	1					
*	K9001878	SEAL KIT;BOOM CYLINDER	JOINT	1					

DATE	SEP. 12, 2012
4th EDITION	

Fig. 4250 ARM CYLINDER VERIN DE BALANCIER

Serial No. ;

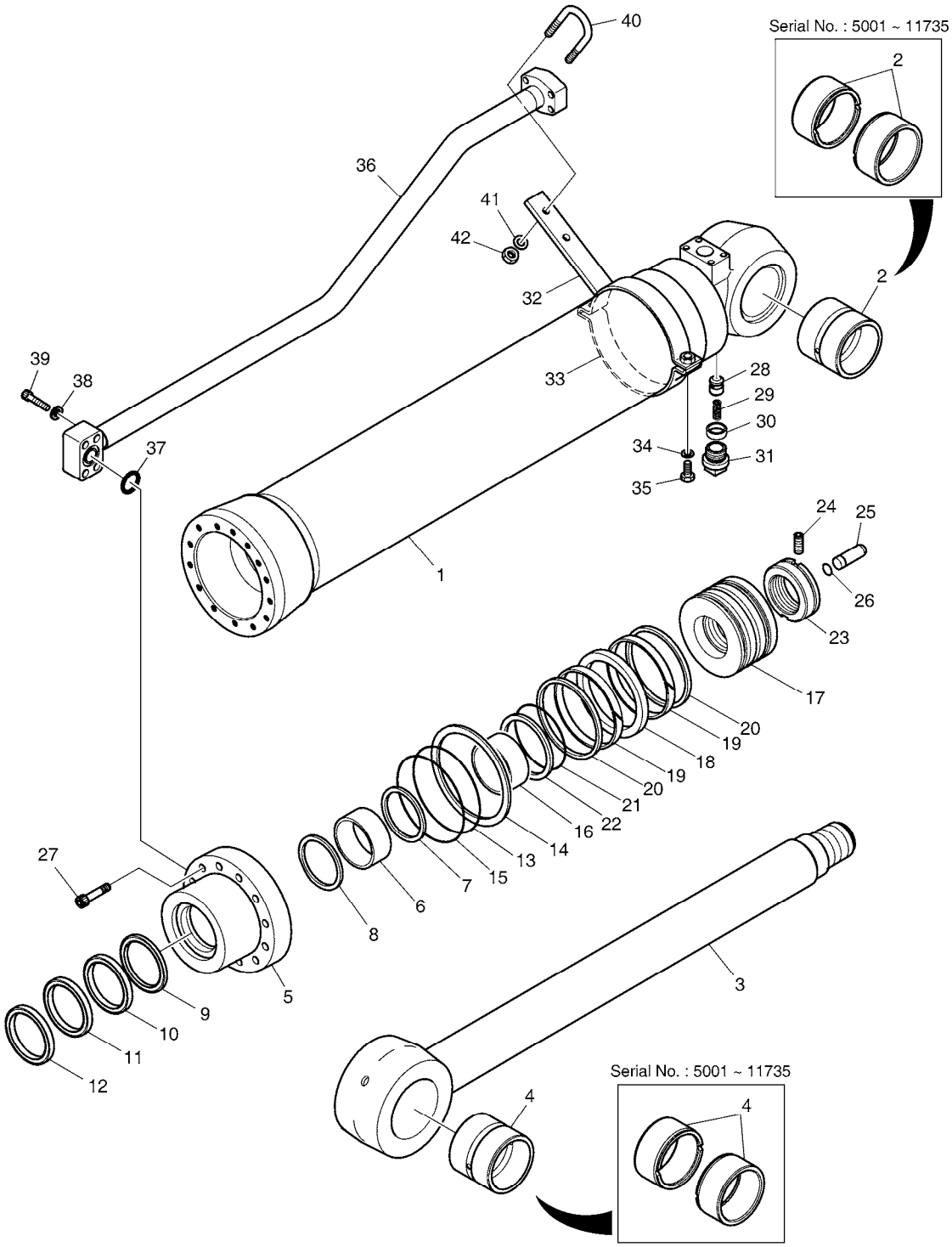

DATE	SEP. 12, 2012
4th EDITION	

Fig. 4250 ARM CYLINDER VERIN DE BALANCIER

Serial No. ;

Key No.	Part No.	Description	Description	Q'ty	S.C	Serial No.	ICA	Replaceable part	
								Part No.	Q'ty
4250 --	K1044991A	CYLINDER;ARM	VERIN DE BALANCIER	1		05001-11735	Y	400305-00219	1
	400305-00219	CYLINDER,ARM	VERIN DE BALANCIER	1		11736-			
1	K9001879A	TUBE ASS'Y	DOUILLE ACIER	1		05001-11735	Y	420406-01072	1
	420406-01072	TUBE ASS'Y	DOUILLE ACIER	1		11736-			
2	K1037854A	BUSH	DOUILLE	2		05001-11735	Y	131008-00130	1
	131008-00130	BUSH	DOUILLE	1		11736-			
3	K9001880	ROD ASS`Y	TIGE	1		05001-11735	Y	400337-00452	1
	400337-00452	ROD ASS`Y	TIGE	1		11736-			
4	K1037854A	BUSH	DOUILLE	2		05001-11735	Y	131008-00130	1
	131008-00130	BUSH	DOUILLE	1		11736-			
5	K9001881	ROD;COVER	TIGE	1					
6	110-00081	DD-BUSH	DD-BUSH	1					
7	115-00073	RING;RETAINING	ANNEAU	1					
8	K9001882	SEAL;BUFFER	CACHET	1	K				
9	K9001883	U-PACKING	U-EMBALLAGE	1	K				
10	K9001884	RING;BACK UP	ANNEAU	1	K				
11	115-00077	WIPER;DUST	ESSUIE-GLACE	1	K				
12	115-00078	RING;RETAINING	ANNEAU	1					
13	S8011351	O-RING	JOINT CIRCULAIRE	1	K				
14	1.180-00662	RING;BACK UP	ANNEAU	1	K				
15	2180-1217D96	O-RING	JOINT CIRCULAIRE	1	K				
16	K9001893	RING;CUSHION	ANNEAU	1					
17	K9001894	PISTON	PISTON	1					
18	K9001148	SEAL;SLIPPER	CACHET	1	K				
19	115-00079	RING;WEAR	ANNEAU	2	K				
20	K9001149	RING;DUST	ANNEAU	2	K				
21	S8010801	O-RING	JOINT CIRCULAIRE	1	K				
22	K9001895	RING;BACK UP	ANNEAU	2	K				
23	K9001896	NUT;RISTON	ECROU	1					
24	1.120-00219	SCREW;SET	VIS	1					
25	K9001897	PLUNGER;CUSHION	PLONGEUR	1					
26	115-00081	RING;STOP	BAGUE	1					
27	S2222272	BOLT;SOCKET	BOULON	14					
28	1.420-00050	VALVE;CHECK	VALVE	1					
29	129-00071	SPRING	RESSORT	1					
30	1.195-00022	SUPPORT;SPRING	APPUI	1					
31	2181-1116D3	PLUG;HEX. SOCKET	BOUCHON	1					
32	K9001898	PIPE BAND ASS'Y-B	ENSEMBLE DE FIXATION	1					

DATE	SEP. 12, 2012
4th EDITION	

Fig. 4250 ARM CYLINDER VERIN DE BALANCIER

Serial No. ;

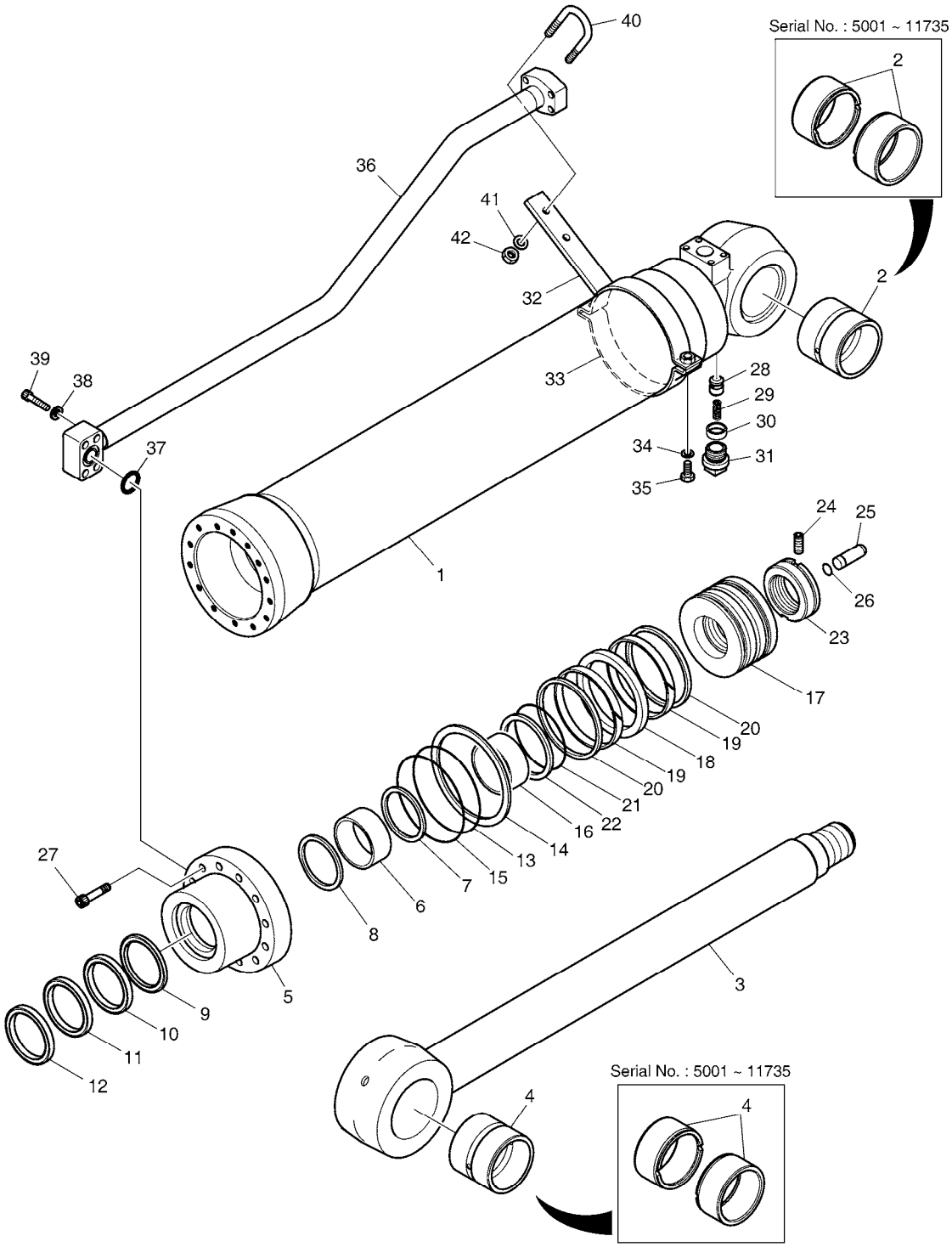

DATE	SEP. 12, 2012
4th EDITION	

Fig. 4250 ARM CYLINDER VERIN DE BALANCIER

Serial No. ;

Key No.	Part No.	Description	Description	Q'ty	S.C	Serial No.	ICA	Replaceable part	
								Part No.	Q'ty
4250 -33	124-00052	BAND;PIPE	BANDE	1					
34	S5100703	WASHER;SPRING	RONDELLE	2					
35	S0560563	BOLT;HEX	BOULON	2					
36	K9001900	PIPE ASS`Y-R	TUYAU	1					
37	S8000341	O-RING	JOINT CIRCULAIRE	1					
38	S5100703	WASHER;SPRING	RONDELLE	4					
39	S2215961	BOLT;SOCKET	BOULON	4					
40	K9001158	U-BOLT	U-BOULON	1					
41	S5100603	WASHER;SPRING	RONDELLE	2					
42	S4012633	NUT	ECROU	2					
*	K9001901	SEAL KIT;ARM CYLINDER	KIT DE JOINT	1					

DATE	SEP. 12, 2012
4th EDITION	

Fig. 4260 BUCKET CYLINDER - ARM 2.9m
VERIN DE GODET

Serial No. ;

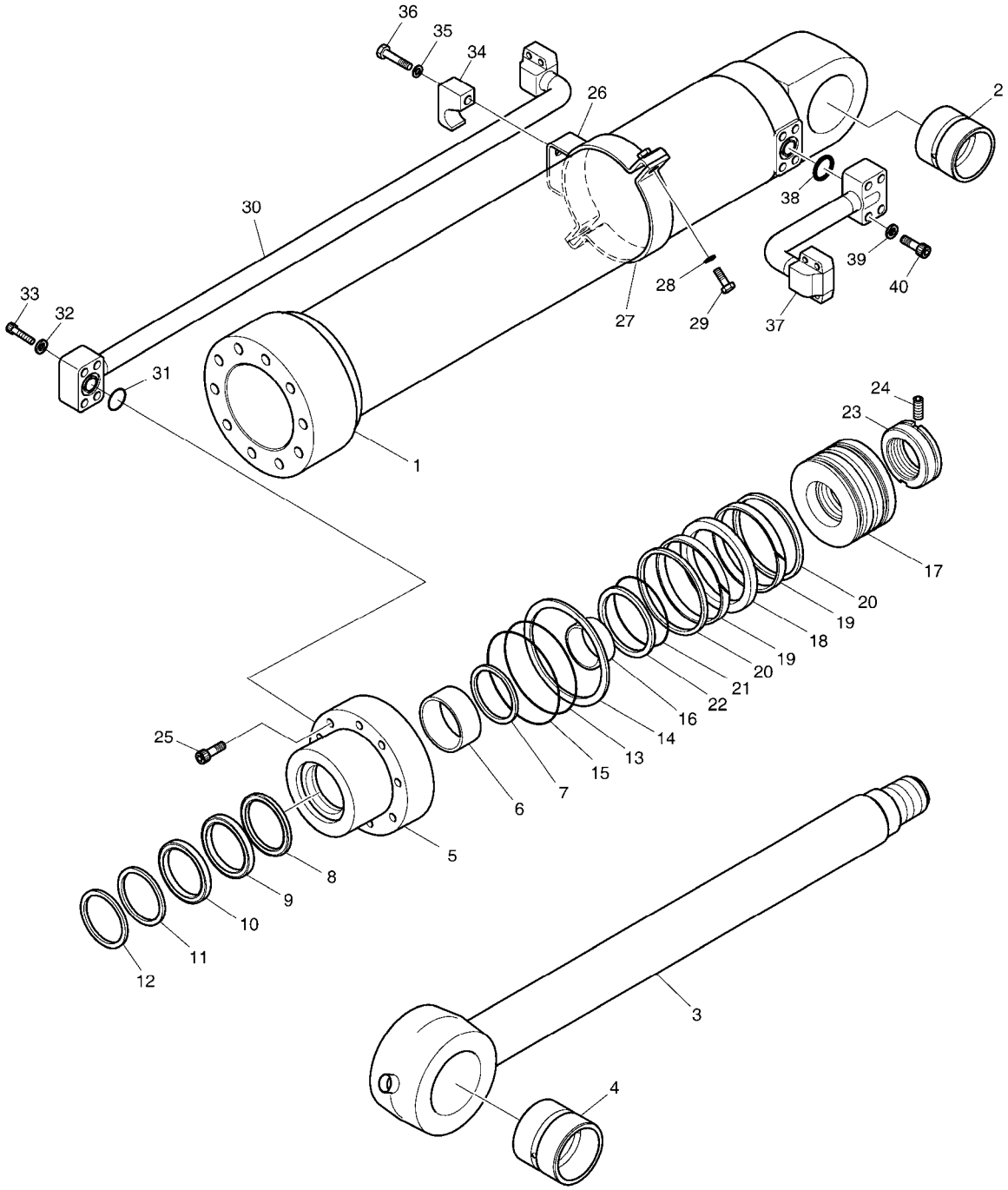

DATE	SEP. 12, 2012
4th EDITION	

Fig. 4260 BUCKET CYLINDER - ARM 2.9m VERIN DE GODET

Serial No. ;

Key No.	Part No.	Description	Description	Q'ty	S.C	Serial No.	ICA	Replaceable part	
								Part No.	Q'ty
4260 --	K1041218A	BUCKET CYLINDER	VERIN DE GODET	1		05001-11589	Y	400310-00214	1
	400310-00214	CYLINDER;BUCKET	VERIN DE GODET	1		11590-			
1	K9001868	TUBE ASS`Y	ENSEMBLE TUBE	1		05001-11589	Y	420406-01074	1
	420406-01074	TUBE ASS`Y	ENSEMBLE TUBE	1		11590-			
2	K1037853A	BUSH	DOUILLE	1		05001-11589	Y	131008-00067A	1
	131008-00067A	BUSH	DOUILLE	1		11590-			
3	K9001869A	ROD ASS'Y	TIGE	1		05001-11589	Y	400337-00453	1
	400337-00453	ROD ASSY,CYLINDER	TIGE	1		11590-			
4	K1037853A	BUSH	DOUILLE	1		05001-11589	Y	131008-00067A	1
	131008-00067A	BUSH	DOUILLE	1		11590-			
5	K9001870	COVER;ROD	COUVERTURE	1					
6	110-00097	DD-BUSH	DD-BUSH	1					
7	K9001401	RING;RETAINING	ANNEAU	1					
8	K9001402	SEAL;BUFFER	CACHET	1	K				
9	K9001403	U-PACKING	U-EMBALLAGE	1	K				
10	K9001404	RING;BACK UP	ANNEAU	1	K				
11	115-00084	WIPER;DUST	ESSUIE-GLACE	1	K				
12	115-00063	RING;RETAINING	ANNEAU	1					
13	S8011151	O-RING	JOINT CIRCULAIRE	1	K				
14	1.180-00278	RING;BACK UP	ANNEAU	1	K				
15	S8011201	O-RING	JOINT CIRCULAIRE	1	K				
16	K9001406	RING;CUSHION	ANNEAU	1					
17	K9001871	PISTON	PISTON	1					
18	K9001891	SEAL;SLIPPER	CACHET	1	K				
19	115-00055	RING;WEAR	ANNEAU	2	K				
20	K9001872	RING;DUST	ANNEAU	2	K				
21	180-00276	O-RING	JOINT CIRCULAIRE	1	K				
22	K9001410	RING;BACK UP	ANNEAU	2	K				
23	K9001862	NUT;PISTON	ECROU	1					
24	1.120-00219	SCREW;SET	VIS	1					
25	S2222171	BOLT;SOCKET M16X2.0X75	BOULON	10					
26	K9001873	PIPE BAND ASS`Y	ENSEMBLE DE FIXATION	1					
27	K9001874	BAND;PIPE	BANDE	1					
28	S5100703	WASHER;SPRING	RONDELLE	2					
29	S0560563	BOLT;HEX	BOULON	2					
30	K9001875	PIPE ASS`Y-R	TUYAU	1					
31	S8000281	O-RING	JOINT TORIQUE	1					
32	S5100603	WASHER;SPRING	RONDELLE	4					

DATE	SEP. 12, 2012
4th EDITION	

Fig. 4260 BUCKET CYLINDER - ARM 2.9m
VERIN DE GODET

Serial No. ;

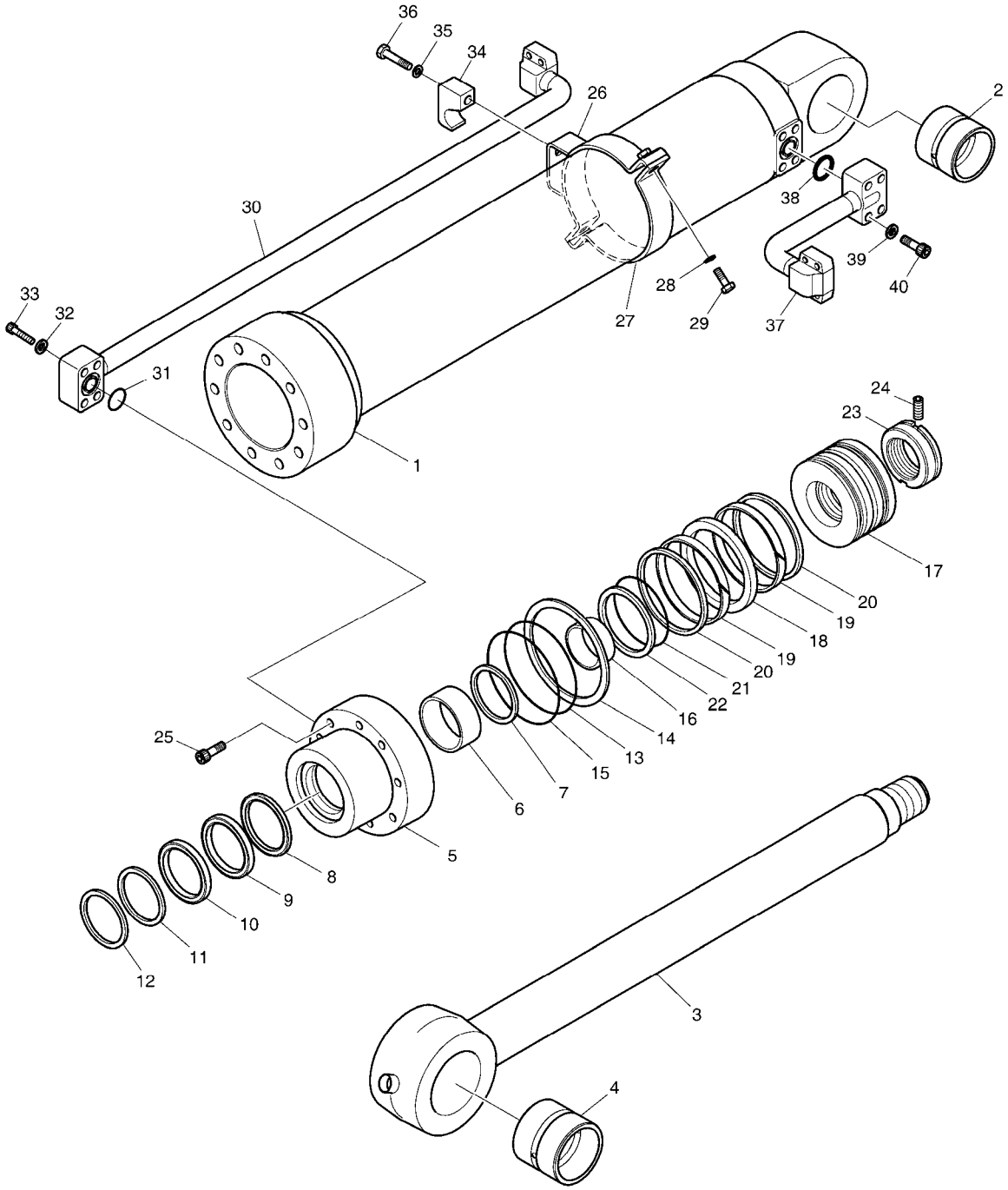

DATE	SEP. 12, 2012
4th EDITION	

Fig. 4260 BUCKET CYLINDER - ARM 2.9m
VERIN DE GODET

Serial No. ;

Key No.	Part No.	Description	Description	Q'ty	S.C	Serial No.	ICA	Replaceable part	
								Part No.	Q'ty
4260 -33	S2212761	BOLT;SOCKET M10X1.5X55	BOULON	4					
34	K9001413	CLAMP;PIPE	COLLIER	1					
35	S5100603	WASHER;SPRING	RONDELLE	1					
36	S2221873	BOLT	BOULON	1					
37	K9001876	PIPE ASS`Y-H	TUYAU	1					
38	S8000281	O-RING	JOINT TORIQUE	1					
39	S5100603	WASHER;SPRING	RONDELLE	4					
40	S2212761	BOLT;SOCKET M10X1.5X55	BOULON	4					
*	K9001892	SEAL KIT;BUCKET CYLINDER	KIT DE JOINT	1					

DATE	SEP. 12, 2012
4th EDITION	

Fig. 4270 PEDAL VALVE - TWO WAY
VANNE DE PEDALE

Serial No. ;

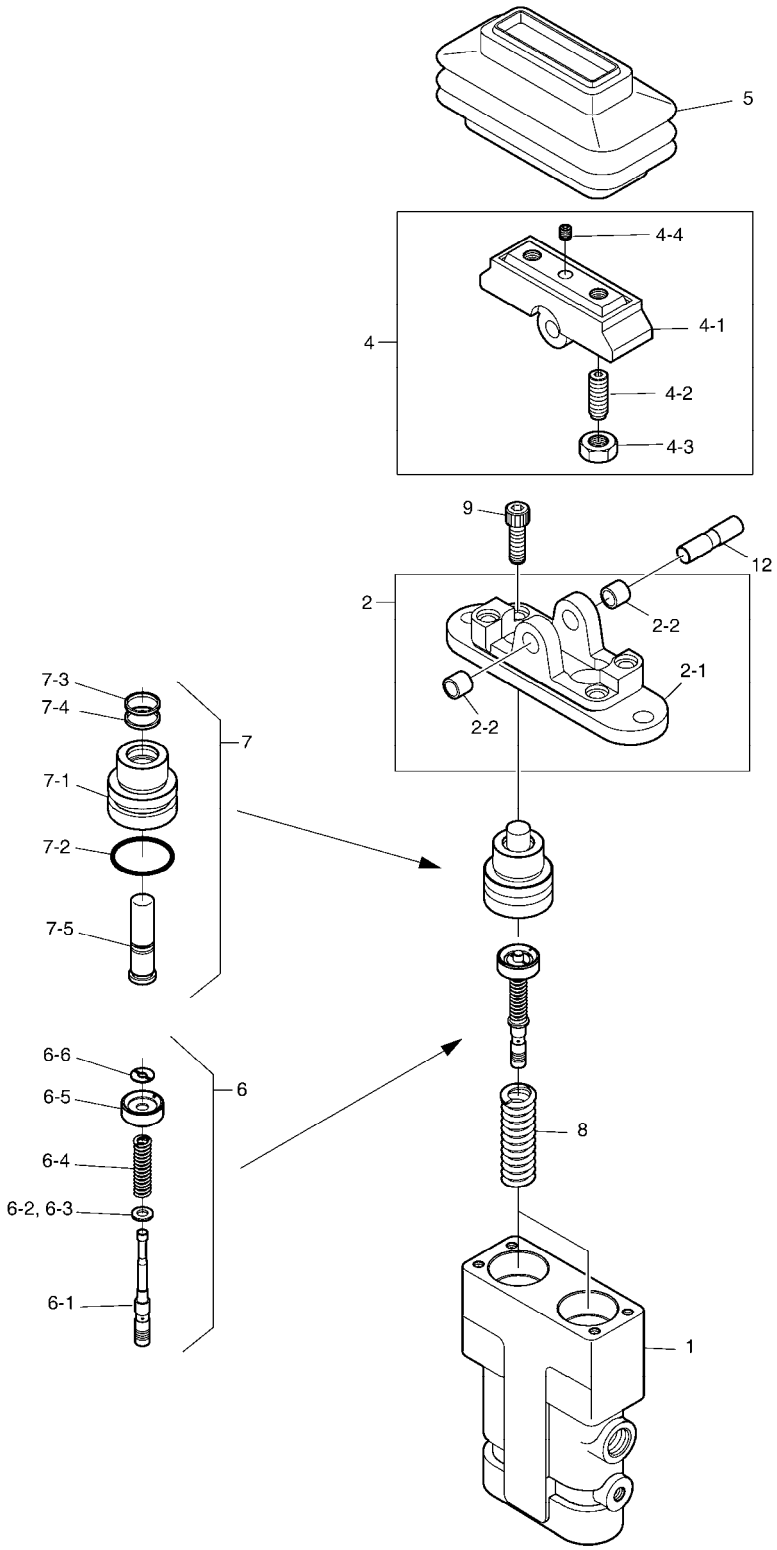

DATE	SEP. 12, 2012
4th EDITION	

Fig. 4270 PEDAL VALVE - TWO WAY VANNE DE PEDALE

Serial No. ;

Key No.	Part No.	Description	Description	Q'ty	S.C	Serial No.	ICA	Replaceable part	
								Part No.	Q'ty
4270 --	K1017382A	PEDAL VALVE	VALVE DE PEDALE	1					
1	-	CASING	CARTER	1	D				
2	K9002934	COVER KIT	COUVERTURE	1					
2-1	-	. COVER	. COUVERTURE	1	D				
2-2	2110-1184D7	. BUSH;DU 10X10	. DOUILLE	2					
4	K9003465	CAM KIT	CAME	1					
4-1	-	. CAM	. CAME	1	D				
4-2	-	. SCREW;SET	. VIS	2	D				
4-3	S4014633	. NUT M10	. ECROU	2					
4-4	S3523601	. SCREW;SET M8X12	. VIS	1					
5	160-00008	BELLOW	SOUFFLET	1					
6	402-00036	SPOOL ASS'Y	SPOOL	2					
6-1	-	. SPOOL	. PLUNGEUR	1	D				
6-2	-	. SHIM	. CALE	1	D				
6-3	-	. SEAT;SPRING	. SIEGE	1	D				
6-4	-	. SPRING	. RESSORT	1	D				
6-5	-	. SEAT;SPRING	. SIEGE	1	D				
6-6	-	. STOPPER	. TAQUET	1	D				
7	1.428-00241A	PLUG ASS'Y	PRISE	2					
7-1	-	. PLUG	. PRISE	1	D				
7-2	-	. O-RING	. JOINT TORIQUE	1	D				
7-3	-	. SEAL;DUST	. CACHET	1	D				
7-4	-	. SEAL;ROD	. CACHET	1	D				
7-5	-	. ROD;PUSH	. TIGE	1	D				
8	K9002935	SPRING	RESSORT	2					
9	S2209261	BOLT;WRENCH M8X30	BOULON A 6 PANS CREUX	2					
12	354-00003	SHAFT;CAM	ARBRE	1					

DATE	SEP. 12, 2012
4th EDITION	

Fig. 4280 BUCKET CYLINDER - ARM 2.4m VERIN DE GODET

Serial No. ;

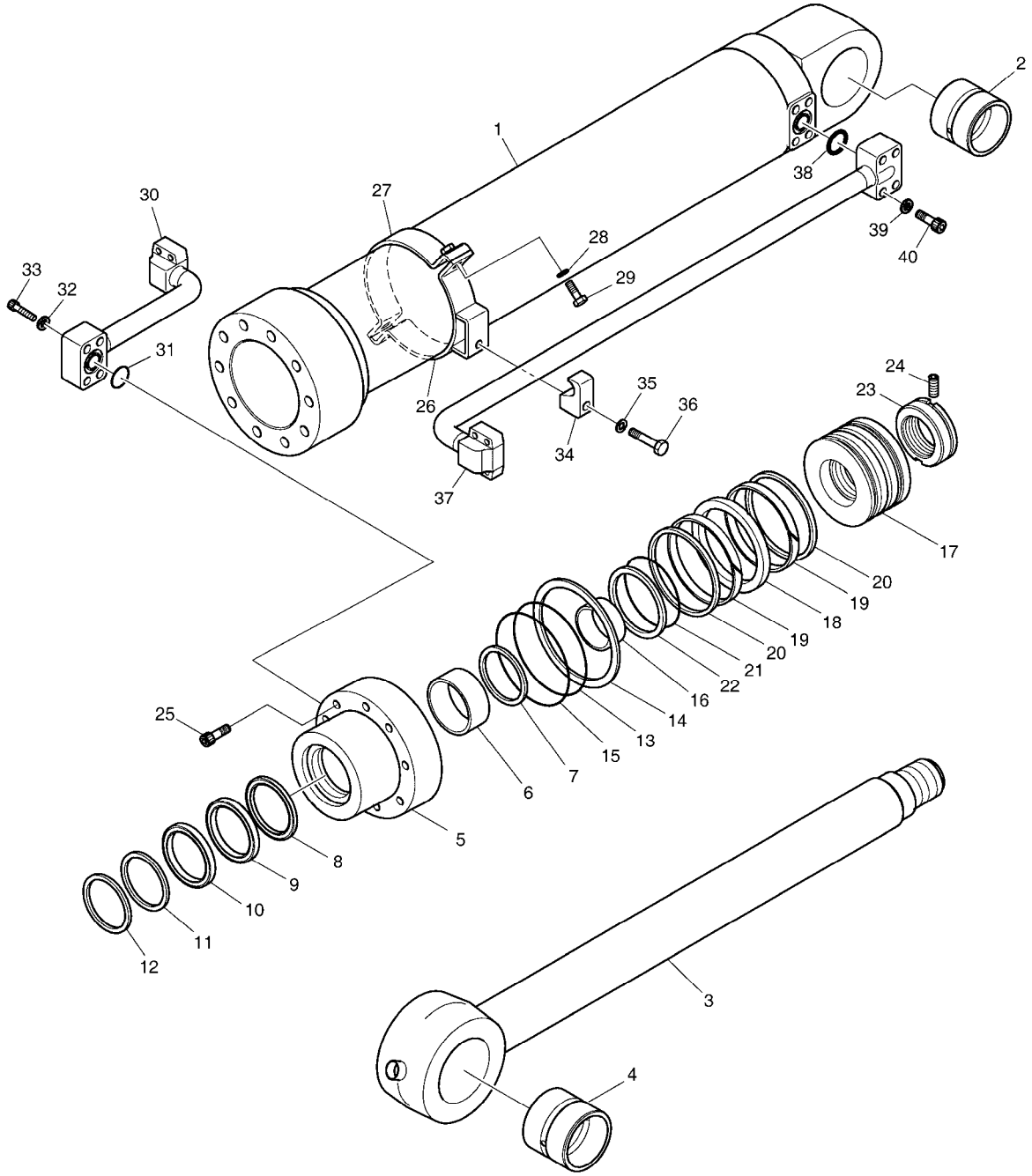

DATE	SEP. 12, 2012
4th EDITION	

Fig. 4280 BUCKET CYLINDER - ARM 2.4m VERIN DE GODET

Serial No. ;

Key No.	Part No.	Description	Description	Q'ty	S.C	Serial No.	ICA	Replaceable part	
								Part No.	Q'ty
4280 --	K1046326	CYLINDER;BUCKET	VERIN DE GODET	1		05001-11589	Y	400310-00215	1
	400310-00215	CYLINDER,BUCKET	VERIN DE GODET	1		11590-			
1	K9007373	TUBE ASS'Y	ENSEMBLE TUBE	1		05001-11589	Y	420406-01075	1
	420406-01075	TUBE ASS'Y	ENSEMBLE TUBE	1		11590-			
2	K1037853A	BUSH	DOUILLE	1		05001-11589	Y	131008-00067A	1
	131008-00067A	BUSH	DOUILLE	1		11590-			
3	K9007371	ROD ASS'Y	ENSEMBLE TIGE	1		05001-11589	Y	400337-00453	1
	400337-00453	ROD ASSY,CYLINDER	TIGE	1		11590-			
4	K1037853A	BUSH	DOUILLE	1		05001-11589	Y	131008-00067A	1
	131008-00067A	BUSH	DOUILLE	1		11590-			
5	K9001870	COVER;ROD	COUVERTURE	1					
6	110-00097	DD-BUSH	DD-BUSH	1					
7	K9001401	RING;RETAINING	ANNEAU	1					
8	K9001402	SEAL;BUFFER	CACHET	1	K				
9	K9001403	U-PACKING	U-EMBALLAGE	1	K				
10	K9001404	RING;BACK UP	ANNEAU	1	K				
11	115-00084	WIPER;DUST	ESSUIE-GLACE	1	K				
12	115-00063	RING;RETAINING	ANNEAU	1					
13	S8011151	O-RING	JOINT CIRCULAIRE	1	K				
14	1.180-00278	RING;BACK UP	ANNEAU	1	K				
15	S8011201	O-RING	JOINT CIRCULAIRE	1	K				
16	K9001406	RING;CUSHION	ANNEAU	1					
17	K9001871	PISTON	PISTON	1					
18	K9001891	SEAL;SLIPPER	CACHET	1	K				
19	115-00055	RING;WEAR	ANNEAU	2	K				
20	K9001872	RING;DUST	ANNEAU	2	K				
21	180-00276	O-RING	JOINT CIRCULAIRE	1	K				
22	K9001410	RING;BACK UP	ANNEAU	2	K				
23	K9001862	NUT;PISTON	ECROU	1					
24	1.120-00219	SCREW;SET	VIS	1					
25	S2222171	BOLT;SOCKET M16X2.0X75	BOULON	10					
26	K9001873	PIPE BAND ASS`Y	ENSEMBLE DE FIXATION	1					
27	K9001874	BAND;PIPE	BANDE	1					
28	S5100703	WASHER;SPRING	RONDELLE	2					
29	S0560563	BOLT;HEX	BOULON	2					
30	K9003467	PIPE ASS'Y-R	ENSEMBLE CONDUITES	1					
31	S8000281	O-RING	JOINT TORIQUE	1					
32	S5100603	WASHER;SPRING	RONDELLE	4					

DATE	SEP. 12, 2012
4th EDITION	

Fig. 4280 BUCKET CYLINDER - ARM 2.4m VERIN DE GODET

Serial No. ;

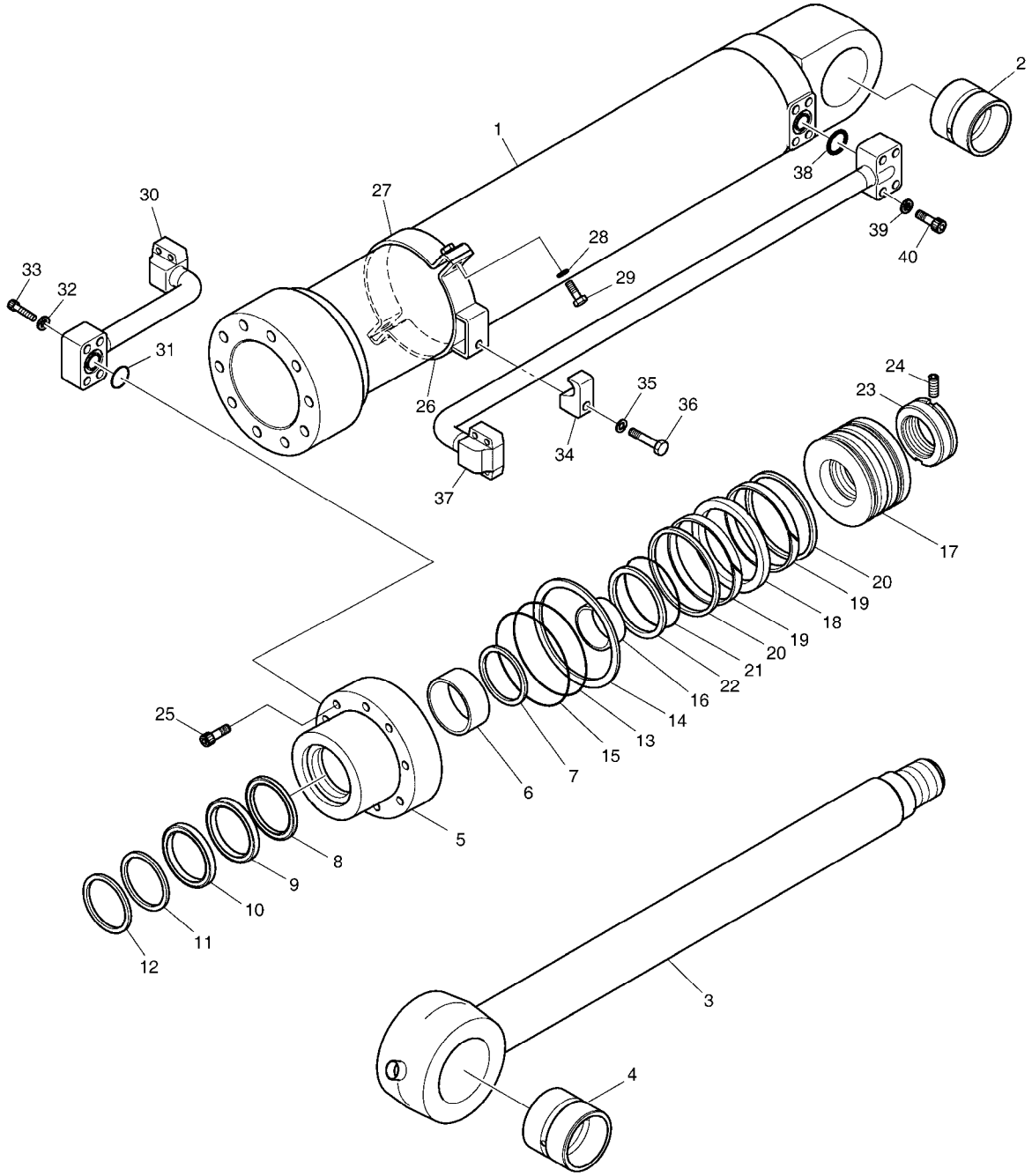

DATE	SEP. 12, 2012
4th EDITION	

Fig. 4280 BUCKET CYLINDER - ARM 2.4m VERIN DE GODET

Serial No. ;

Key No.	Part No.	Description	Description	Q'ty	S.C	Serial No.	ICA	Replaceable part	
								Part No.	Q'ty
4280 -33	S2212761	BOLT;SOCKET M10X1.5X55	BOULON	4					
34	K9001413	CLAMP;PIPE	COLLIER	1					
35	S5100603	WASHER;SPRING	RONDELLE	1					
36	S2221873	BOLT	BOULON	1					
37	K9003468	PIPE ASS'Y-H	ENSEMBLE CONDUITES	1					
38	S8000281	O-RING	JOINT TORIQUE	1					
39	S5100603	WASHER;SPRING	RONDELLE	4					
40	S2212761	BOLT;SOCKET M10X1.5X55	BOULON	4					
*	K9001892	SEAL KIT;BUCKET CYLINDER	KIT DE JOINT	1					

DATE	SEP. 12, 2012
4th EDITION	

Fig. 4290 BUCKET CYLINDER - ARM 3.5m
VERIN DE GODET

Serial No. ;

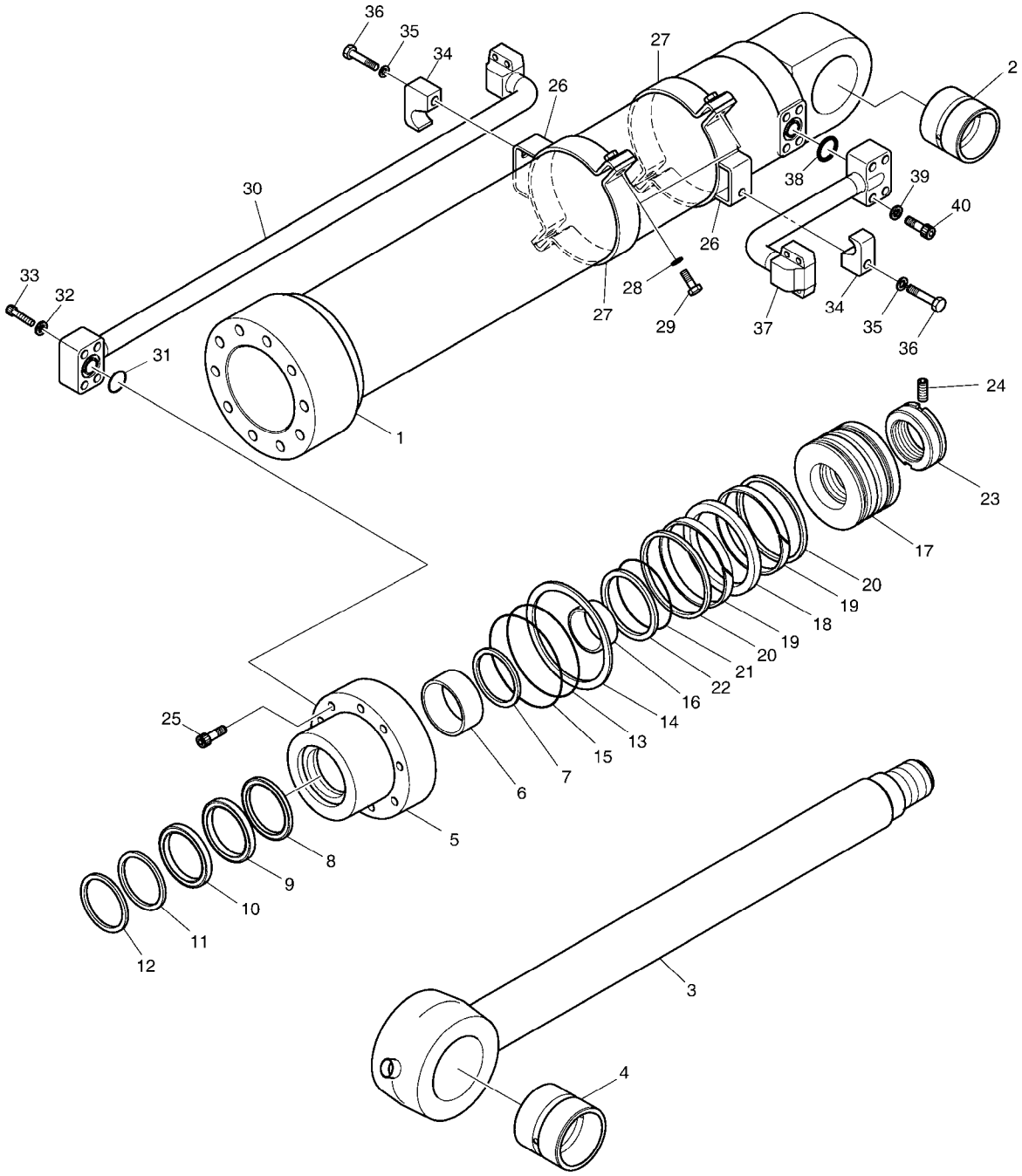

DATE	SEP. 12, 2012
4th EDITION	

Fig. 4290 BUCKET CYLINDER - ARM 3.5m VERIN DE GODET

Serial No. ;

Key No.	Part No.	Description	Description	Q'ty	S.C	Serial No.	ICA	Replaceable part	
								Part No.	Q'ty
4290 --	K1046333	BUCKET CYLINDER	VERIN DE GODET	1		05001-11467	Y	400310-00216	1
	400310-00216	BUCKET CYLINDER	VERIN DE GODET	1		11468-			
1	K9007372	TUBE ASS'Y	ENSEMBLE TUBE	1		05001-11467	Y	420406-01076	1
	420406-01076	TUBE ASS'Y	ENSEMBLE TUBE	1		11468-			
2	K1037853A	BUSH	DOUILLE	1		05001-11467	Y	131008-00067A	1
	131008-00067A	BUSH	DOUILLE	1		11468-			
3	K9007371	ROD ASS'Y	ENSEMBLE TIGE	1		05001-11467	Y	400337-00453	1
	400337-00453	ROD ASSY,CYLINDER	TIGE	1		11468-			
4	K1037853A	BUSH	DOUILLE	1		05001-11467	Y	131008-00067A	1
	131008-00067A	BUSH	DOUILLE	1		11468-			
5	K9001870	COVER;ROD	COUVERTURE	1					
6	110-00097	DD-BUSH	DD-BUSH	1					
7	K9001401	RING;RETAINING	ANNEAU	1					
8	K9001402	SEAL;BUFFER	CACHET	1	K				
9	K9001403	U-PACKING	U-EMBALLAGE	1	K				
10	K9001404	RING;BACK UP	ANNEAU	1	K				
11	115-00084	WIPER;DUST	ESSUIE-GLACE	1	K				
12	115-00063	RING;RETAINING	ANNEAU	1					
13	S8011151	O-RING	JOINT CIRCULAIRE	1	K				
14	1.180-00278	RING;BACK UP	ANNEAU	1	K				
15	S8011201	O-RING	JOINT CIRCULAIRE	1	K				
16	K9001406	RING;CUSHION	ANNEAU	1					
17	K9001871	PISTON	PISTON	1					
18	K9001891	SEAL;SLIPPER	CACHET	1	K				
19	115-00055	RING;WEAR	ANNEAU	2	K				
20	K9001872	RING;DUST	ANNEAU	2	K				
21	180-00276	O-RING	JOINT CIRCULAIRE	1	K				
22	K9001410	RING;BACK UP	ANNEAU	2	K				
23	K9001862	NUT;PISTON	ECROU	1					
24	1.120-00219	SCREW;SET	VIS	1					
25	S2222171	BOLT;SOCKET M16X2.0X75	BOULON	10					
26	K9001873	PIPE BAND ASS`Y	ENSEMBLE DE FIXATION	2					
27	K9001874	BAND;PIPE	BANDE	2					
28	S5100703	WASHER;SPRING	RONDELLE	4					
29	S0560563	BOLT;HEX	BOULON	4					
30	K9003470	PIPE ASS'Y-R	ENSEMBLE CONDUITES	1					
31	S8000281	O-RING	JOINT TORIQUE	1					
32	S5100603	WASHER;SPRING	RONDELLE	4					

DATE	SEP. 12, 2012
4th EDITION	

Fig. 4290 BUCKET CYLINDER - ARM 3.5m VERIN DE GODET

Serial No. ;

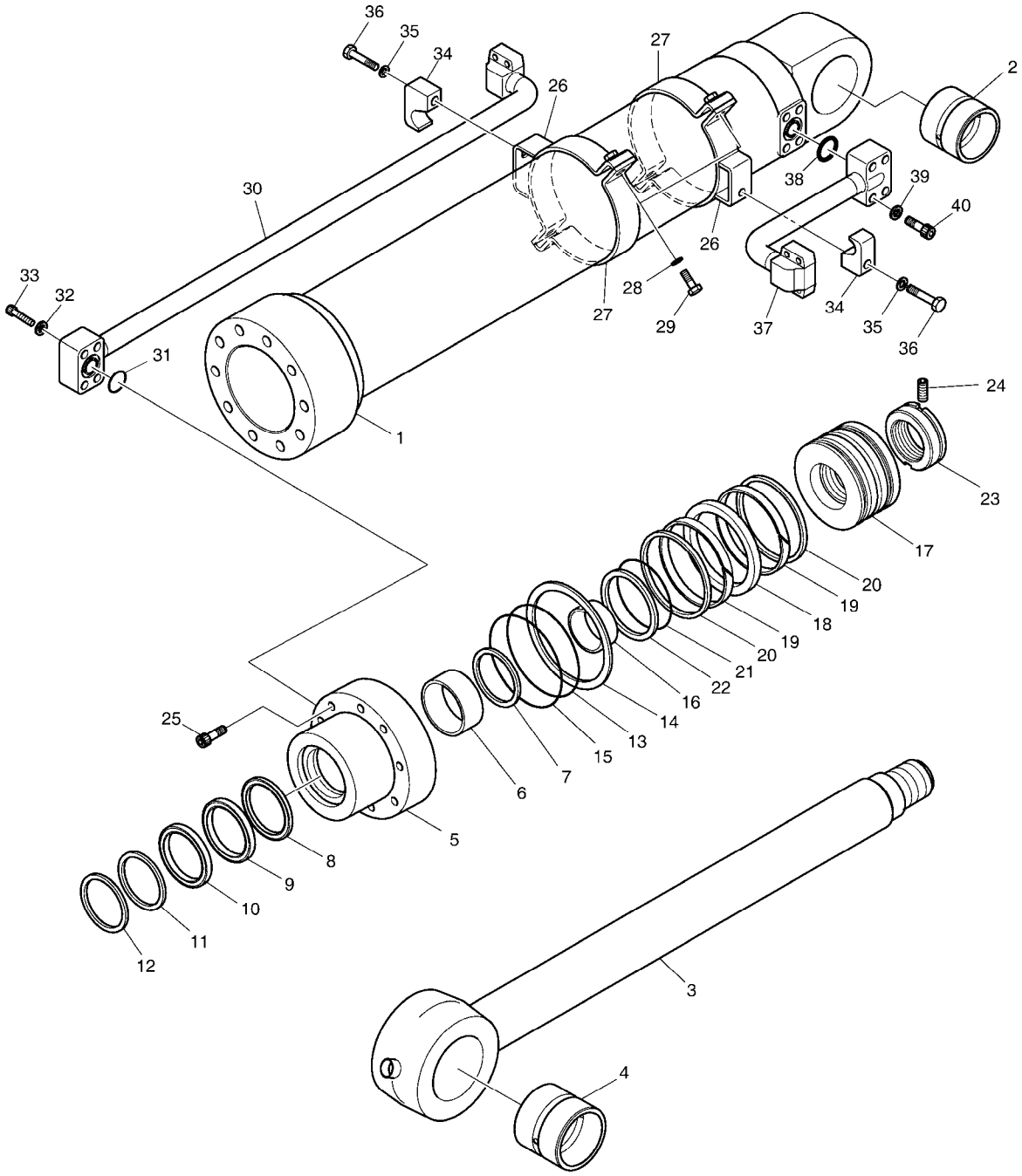

DATE	SEP. 12, 2012
4th EDITION	

Fig. 4290 BUCKET CYLINDER - ARM 3.5m VERIN DE GODET

Serial No. ;

Key No.	Part No.	Description	Description	Q'ty	S.C	Serial No.	ICA	Replaceable part	
								Part No.	Q'ty
4290 -33	S2212761	BOLT;SOCKET M10X1.5X55	BOULON	4					
34	K9001413	CLAMP;PIPE	COLLIER	2					
35	S5100603	WASHER;SPRING	RONDELLE	2					
36	S2221873	BOLT	BOULON	2					
37	K9003471	PIPE ASS'Y-H	ENSEMBLE CONDUITES	1					
38	S8000281	O-RING	JOINT TORIQUE	1					
39	S5100603	WASHER;SPRING	RONDELLE	4					
40	S2212761	BOLT;SOCKET M10X1.5X55	BOULON	4					
*	K9001892	SEAL KIT;BUCKET CYLINDER	KIT DE JOINT	1					

DATE	SEP. 12, 2012
4th EDITION	

Fig. 4300 BUCKET CYLINDER - ARM 6.2m VERIN DE GODET

Serial No. ;

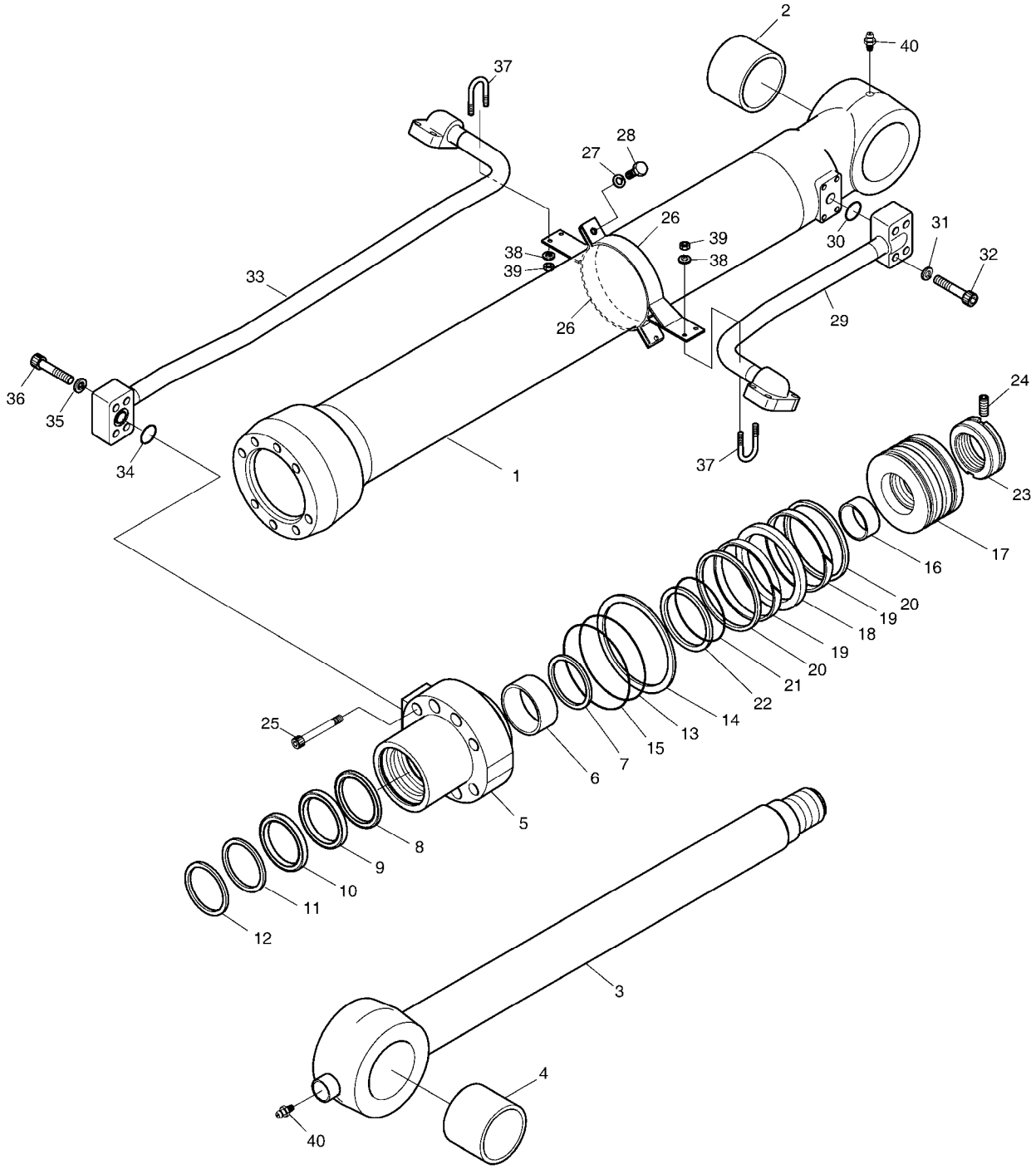

DATE	SEP. 12, 2012
4th EDITION	

Fig. 4300 BUCKET CYLINDER - ARM 6.2m VERIN DE GODET

Serial No. ;

Key No.	Part No.	Description	Description	Q'ty	S.C	Serial No.	ICA	Replaceable part	
								Part No.	Q'ty
4300 --	K1011434A	BUCKET CYLINDER	VERIN DE GODET	1					
1	K9001753	TUBE ASS`Y	DOUILLE ACIER	1					
2	K1004106	BUSH;ROLLED	DOUILLE	1					
3	K9001754A	ROD ASS`Y	TIGE	1					
4	K1004106	BUSH;ROLLED	DOUILLE	1					
5	110508-00989	COVER,ROD	COUVERCLE	1					
6	1.110-00068	DD-BUSH	COUSSINET	1					
7	1.115-00032	RING;RETAINING	BAGUE	1					
8	K9001424	SEAL;BUFFER	ETANCHEITE A GRADINS	1	K				
9	K9001425	U-PACKING	JOINT EN U	1	K				
10	K9001426	RING;BACK UP	BAGUE	1	K				
11	1.180-00496	WIPER;DUST	PARE-POUSSIERE	1	K				
12	115-00052	RING;RETAINING	BAGUE	1					
13	S8010901	O-RING	JOINT TORIQUE	1	K				
14	K9001427	RING;BACK UP	BAGUE	1	K				
15	S8010951	O-RING	JOINT TORIQUE	1	K				
16	K9001428	RING;CUSHION	BAGUE	1					
17	K9001429	PISTON	PISTON	1					
18	K9001430	SEAL;SLIPPER	PATIN D'ETANCHEITE	1	K				
19	1.180-00415	RING;WEAR	SEGMENT D'USURE	2	K				
20	K9001431	RING;DUST	BAGUE DE SOUTIEN	2	K				
21	1.180-00117	O-RING	JOINT TORIQUE	1	K				
22	K9001374	BACK UP RING	BAGUE	2	K				
23	K9001375	NUT;PISTION	ECROU	1					
24	1.120-00219	SCREW;SET	VIS	1					
25	S2218961	BOLT	BOULON A 6 PANS CREUX	8					
26	K9001755	PIPE BAND ASS`Y	ENSEMBLE DE FIXATION	2					
27	S5100703	WASHER;SPRING	RONDELLE	4					
28	S0560563	BOLT;HEX	BOULON	4					
29	K9001756	PIPE ASS`Y-H	ENSEMBLE CONDUITES	1					
30	S8000251	O-RING	JOINT TORIQUE	1					
31	S5100703	WASHER;SPRING	RONDELLE	4					
32	S2212761	BOLT;SOCKET M10X1.5X55	BOULON	4					
33	K9001757	PIPE ASS`Y-R	ENSEMBLE CONDUITES	1					
34	S8000251	O-RING	JOINT TORIQUE	1					
35	S5100703	WASHER;SPRING	RONDELLE	4					
36	S2212761	BOLT;SOCKET M10X1.5X55	BOULON	4					
37	K9001158	U-BOLT	U-BOULON	2					

DATE	SEP. 12, 2012
4th EDITION	

Fig. 4300 BUCKET CYLINDER - ARM 6.2m VERIN DE GODET

Serial No. ;

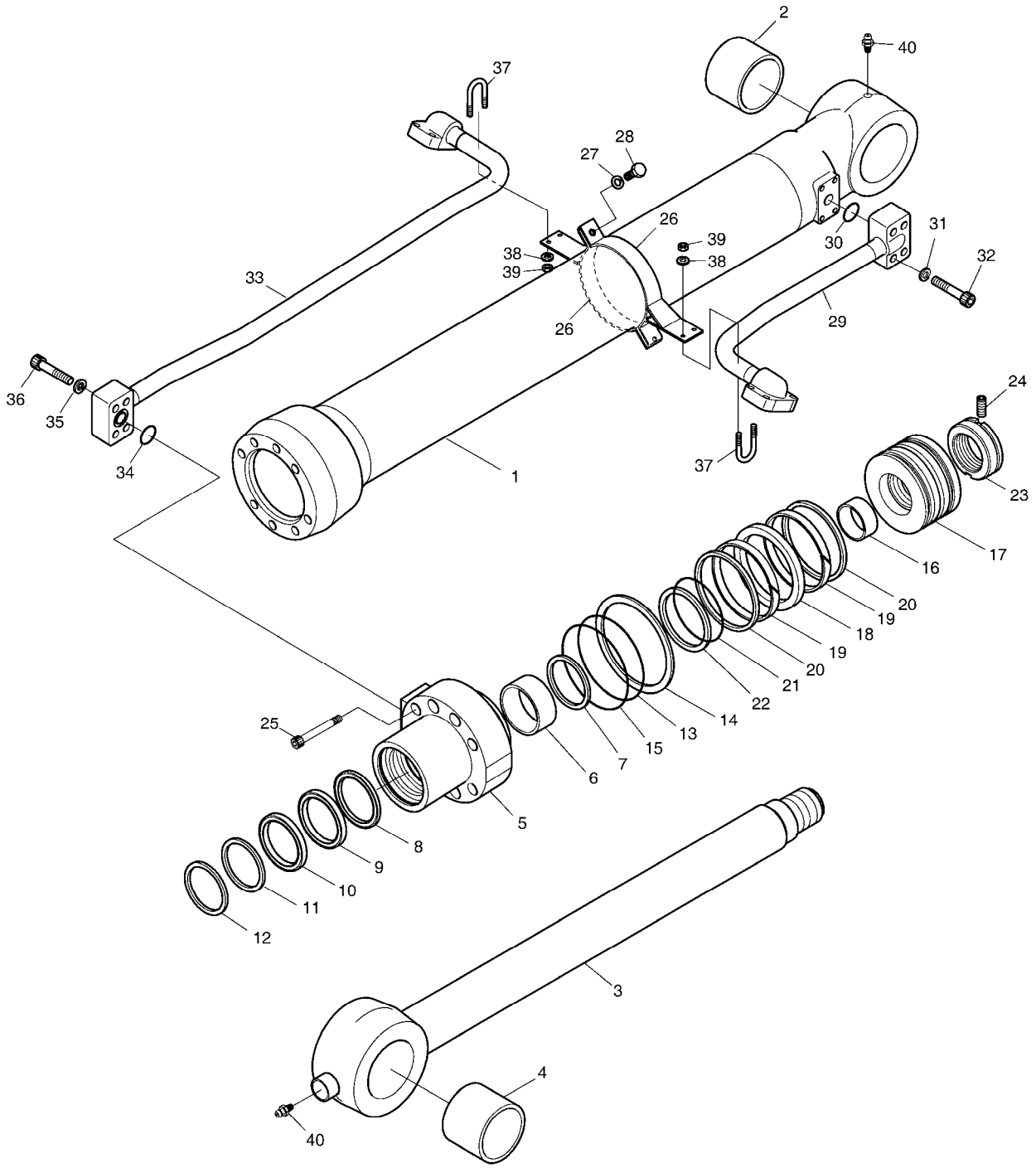

DATE	SEP. 12, 2012
4th EDITION	

Fig. 4300 BUCKET CYLINDER - ARM 6.2m
VERIN DE GODET

Serial No. ;

Key No.	Part No.	Description	Description	Q'ty	S.C	Serial No.	ICA	Replaceable part	
								Part No.	Q'ty
4300 -38	S5100603	WASHER;SPRING	RONDELLE	4					
39	S4012633	NUT	ECROU	4					
40	S6710032	NIPPLE;GREASE	MAMELON	2					
*	K9001752	SEAL KIT;BUCKET CYL.	KIT DE JOINT	1					

DATE	SEP. 12, 2012
4th EDITION	

Fig. 4310 BOOM CYLINDER - L.H (LOCK VALVE) VERIN DE FLECHE

Serial No. ;

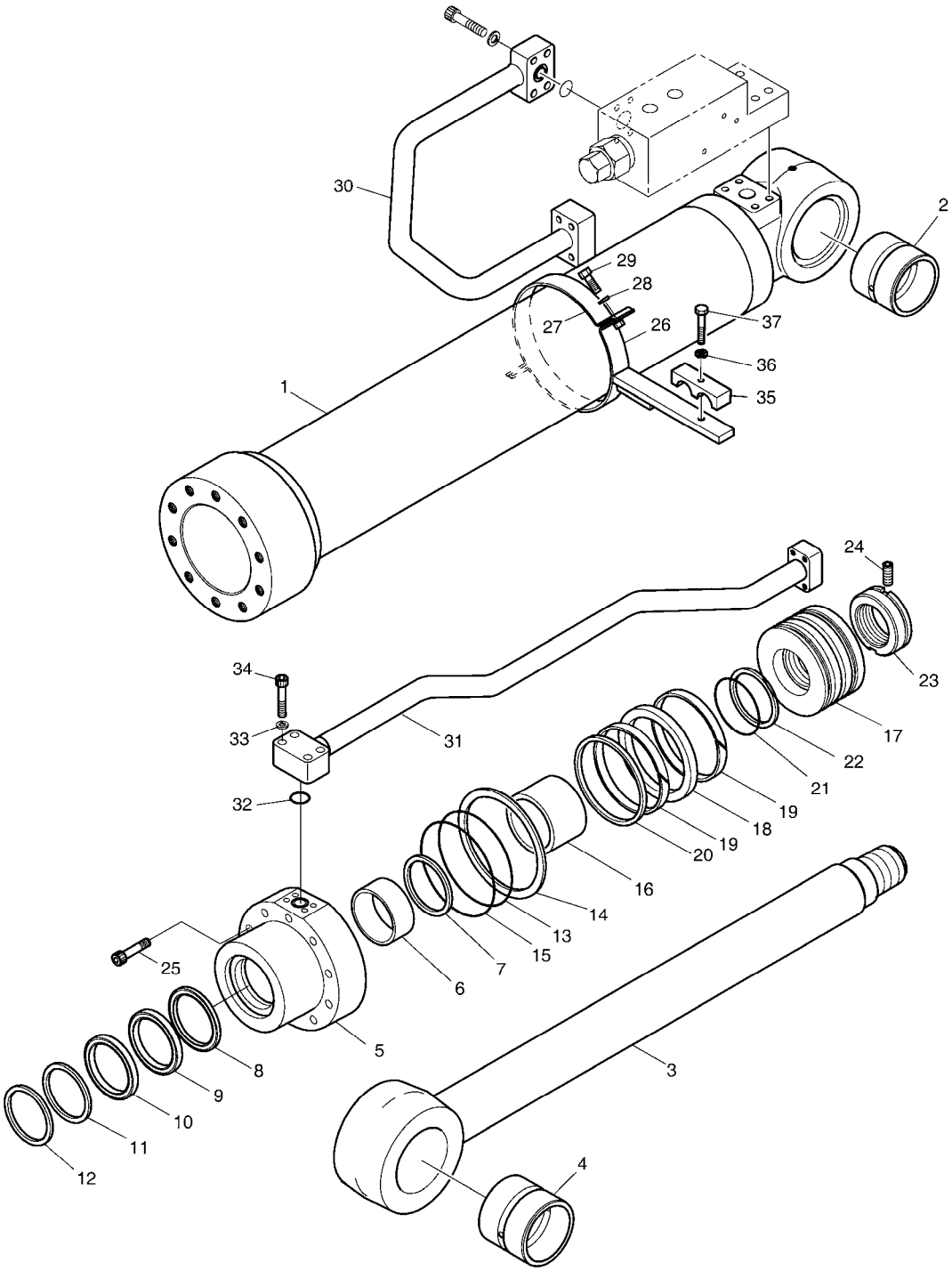

DATE	SEP. 12, 2012
4th EDITION	

Fig. 4310 BOOM CYLINDER - L.H (LOCK VALVE) VERIN DE FLECHE

Serial No. ;

Key No.	Part No.	Description	Description	Q'ty	S.C	Serial No.	ICA	Replaceable part	
								Part No.	Q'ty
4310 --	K1041220B	CYLINDER;BOOM(L.H)	VERIN DE FLECHE	1		5001-9957	Y	400309-00345	1
	400309-00345	CYLINDER;BOOM(L.H)	VERIN DE FLECHE	1		09958-11554	Y	400309-00345A	1
	400309-00345A	CYLINDER;BOOM(L.H)	VERIN DE FLECHE	1		11555-			
1	K9007361	TUBE ASS'Y	ENSEMBLE TUBE	1		05001-11554	Y	420406-01077	1
	420406-01077	TUBE ASS'Y	ENSEMBLE TUBE	1		11555-			
2	K1037853A	BUSH	DOUILLE	1		05001-11554	Y	131008-00067A	1
	131008-00067A	BUSH	DOUILLE	1		11555-			
3	K9007362	ROD ASS'Y	ENSEMBLE TIGE	1		05001-11554	Y	400337-00454	1
	400337-00454	ROD ASS'Y	ENSEMBLE TIGE	1		11555-			
4	K1037853A	BUSH	DOUILLE	1		05001-11554	Y	131008-00067A	1
	131008-00067A	BUSH	DOUILLE	1		11555-			
5	K9001856	ROD;COVER	TIGE	1					
6	110-00079	DD-BUSH	COUSSINET	1					
7	115-00050	RING;RETAINING	BAGUE	1					
8	K9001857	SEAL;BUFFER	ETANCHEITE A GRADINS	1	K				
9	K9001858	U-PACKING	JOINT EN U	1	K				
10	K9001877	RING;BACK UP	BAGUE ANTIEXTRUSION	1	K				
11	115-00059	WIPER;DUST	PARE-POUSSIERE	1	K				
12	115-00051	RING;RETAINING	BAGUE D'ARRET	1					
13	S8011201	O-RING	JOINT CIRCULAIRE	1	K				
14	K9001859	RING;BACK UP	ANNEAU	1	K				
15	S8011251	O-RING	JOINT CIRCULAIRE	1	K				
16	1.115-00204	RING;CUSHION	BAGUE D'AMORTISSEMEN	1					
17	K9001860	PISTON	PISTON	1					
18	K9001890	SEAL;SLIPPER	CACHET	1	K				
19	115-00087	RING;WEAR	ANNEAU	2	K				
20	K9001861	RING;DUST	BAGUE	1	K				
21	S8010651	O-RING	JOINT TORIQUE	1	K				
22	1.180-00277	RING;BACK UP	BAGUE ANTIEXTRUSION	2	K				
23	K9001862	NUT;PISTON	ECROU	1					
24	1.120-00219	SCREW;SET	VIS	1					
25	S2222272	BOLT;SOCKET	BOULON	10					
26	K9007358	PIPE BAND ASS'Y	BANDE ASS'Y DE PIPE	1		5001-9957			
	K9007358A	BAND ASSY,PIPE	BANDE ASS'Y DE PIPE	1		9958-			
27	124-00088	BAND;PIPE	ATTACHE	1					
28	S5100603	WASHER;SPRING	RONDELLE	2					
29	S0558153	BOLT	BOULON	2					
30	K9007370	PIPE ASS'Y-H(L.H)	ENSEMBLE CONDUITES	1		5001-9957			

DATE	SEP. 12, 2012
4th EDITION	

Fig. 4310 BOOM CYLINDER - L.H (LOCK VALVE) VERIN DE FLECHE

Serial No. ;

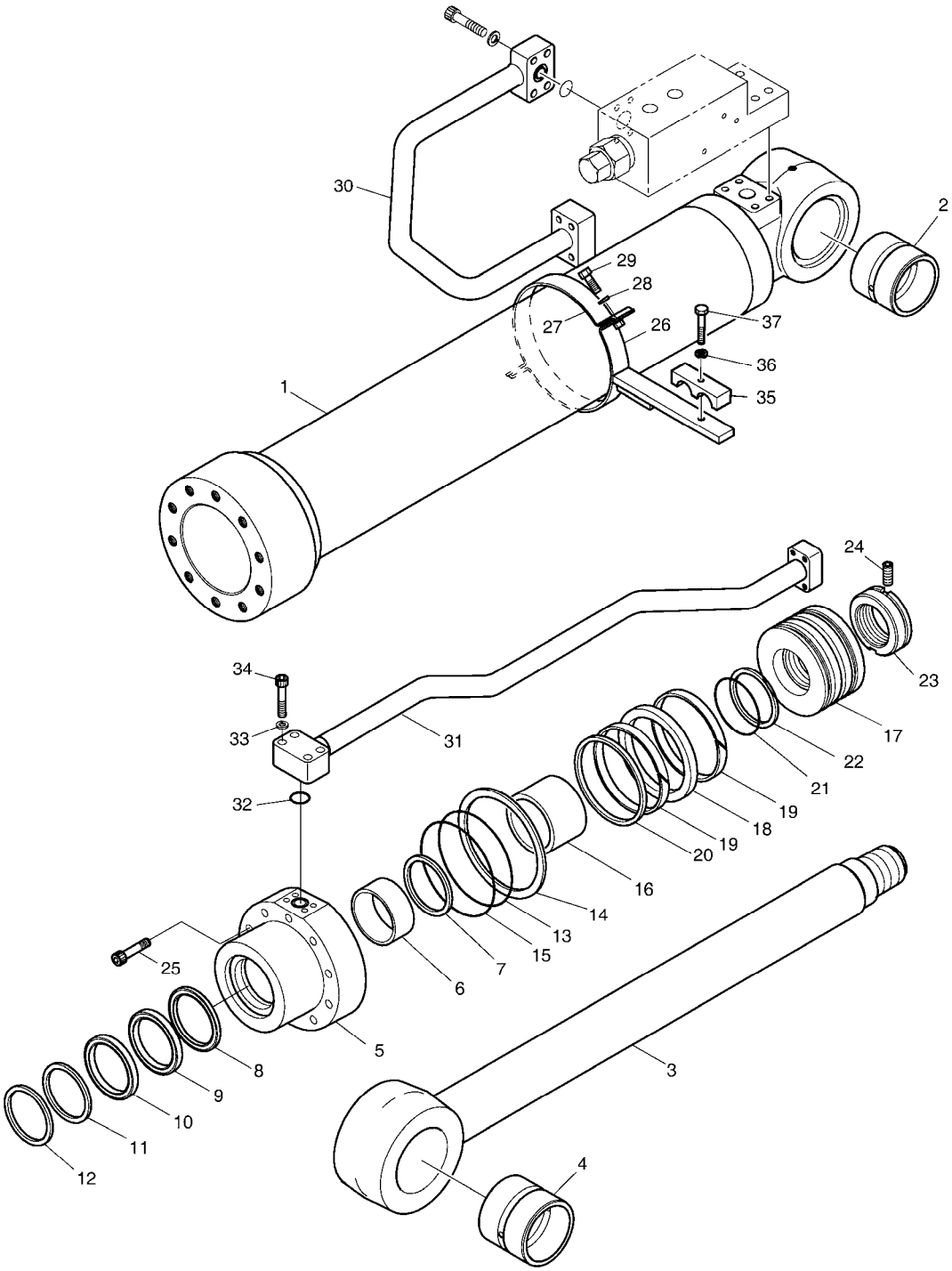

DATE	SEP. 12, 2012
4th EDITION	

Fig. 4310 BOOM CYLINDER - L.H (LOCK VALVE) VERIN DE FLECHE

Serial No. ;

Key No.	Part No.	Description	Description	Q'ty	S.C	Serial No.	ICA	Replaceable part	
								Part No.	Q'ty
4310 -	K9007370A	PIPE ASSY;H(L.H)	ENSEMBLE CONDUITES	1		9958-			
31	K9007368	PIPE ASS'Y-R(L.H)	ENSEMBLE CONDUITES	1		5001-9957			
	K9007368A	PIPE ASSY;R(L.H)	ENSEMBLE CONDUITES	1		9958-			
32	S8000281	O-RING	JOINT TORIQUE	1					
33	S5100603	WASHER;SPRING	RONDELLE	4					
34	S2212761	BOLT;SOCKET M10X1.5X55	BOULON	4					
35	1.124-00157	CLAMP;PIPE	COLLIER	1					
36	S5100703	WASHER;SPRING	RONDELLE	1					
37	S0561053	BOLT M12X1.75X65	BOULON	1					
*	K9001878	SEAL KIT;BOOM CYLINDER	JOINT	1					

DATE	SEP. 12, 2012
4th EDITION	

Fig. 4320 BOOM CYLINDER - R.H (LOCK VALVE) VERIN DE FLECHE

Serial No. ;

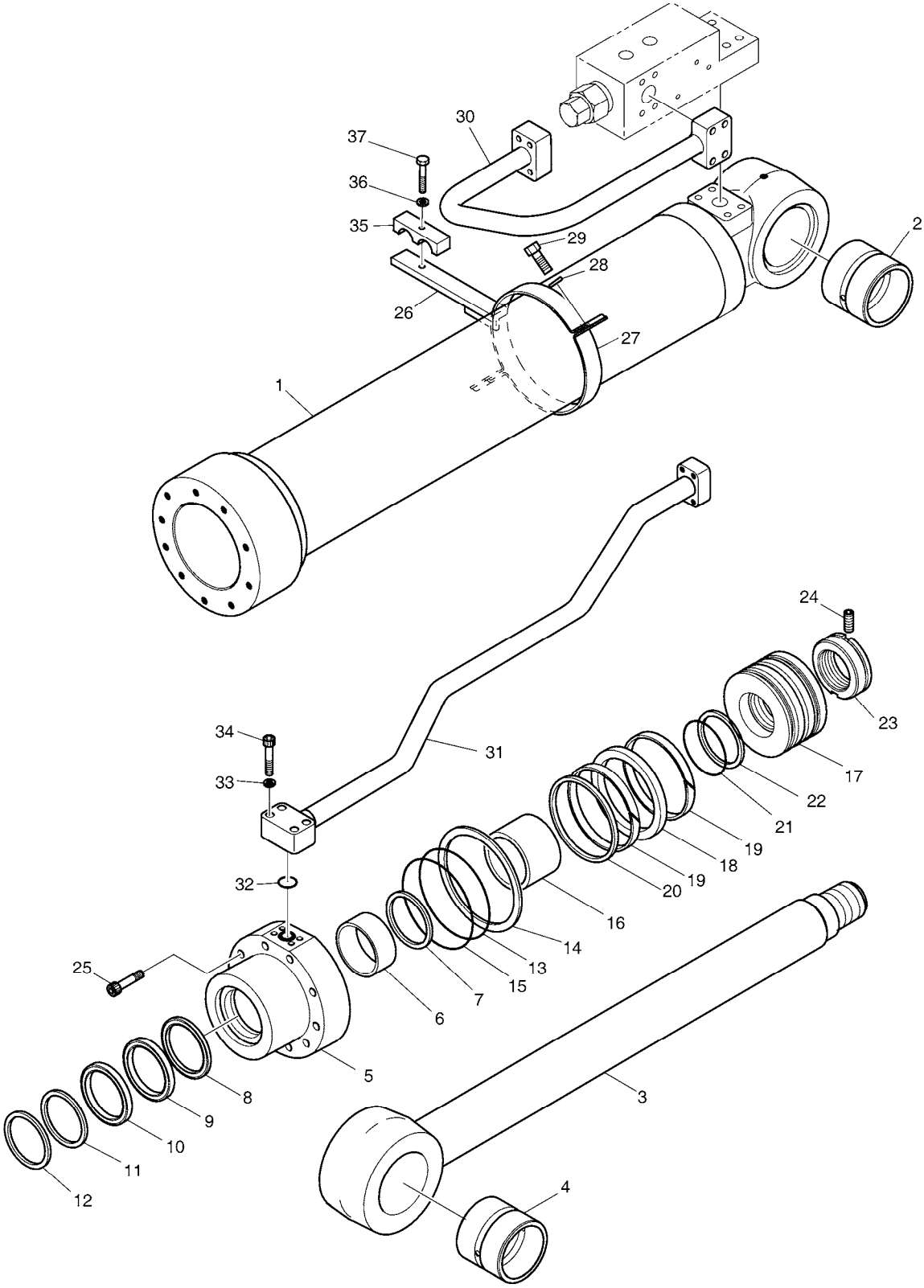

DATE	SEP. 12, 2012
4th EDITION	

Fig. 4320 BOOM CYLINDER - R.H (LOCK VALVE) VERIN DE FLECHE

Serial No. ;

Key No.	Part No.	Description	Description	Q'ty	S.C	Serial No.	ICA	Replaceable part	
								Part No.	Q'ty
4320 --	K1041221B	CYLINDER;BOOM(R.H)	VERIN DE FLECHE	1		5001-9957	Y	400309-00347	1
	400309-00347	CYLINDER;BOOM (R.H)	VERIN DE FLECHE	1		09958-11554	Y	400309-00347A	1
	400309-00347A	CYLINDER;BOOM (R.H)	VERIN DE FLECHE	1		11555-			
1	K9007361	TUBE ASS'Y	ENSEMBLE TUBE	1		05001-11554	Y	420406-01077	1
	420406-01077	TUBE ASS'Y	ENSEMBLE TUBE	1		11555-			
2	K1037853A	BUSH	DOUILLE	1		05001-11554	Y	131008-00067A	1
	131008-00067A	BUSH	DOUILLE	1		11555-			
3	K9007362	ROD ASS'Y	ENSEMBLE TIGE	1		05001-11554	Y	400337-00454	1
	400337-00454	ROD ASS'Y	ENSEMBLE TIGE	1		11555-			
4	K1037853A	BUSH	DOUILLE	1		05001-11554	Y	131008-00067A	1
	131008-00067A	BUSH	DOUILLE	1		11555-			
5	K9001856	ROD;COVER	TIGE	1					
6	110-00079	DD-BUSH	COUSSINET	1					
7	115-00050	RING;RETAINING	BAGUE	1					
8	K9001857	SEAL;BUFFER	ETANCHEITE A GRADINS	1	K				
9	K9001858	U-PACKING	JOINT EN U	1	K				
10	K9001877	RING;BACK UP	BAGUE ANTIEXTRUSION	1	K				
11	115-00059	WIPER;DUST	PARE-POUSSIERE	1	K				
12	115-00051	RING;RETAINING	BAGUE D'ARRET	1					
13	S8011201	O-RING	JOINT CIRCULAIRE	1	K				
14	K9001859	RING;BACK UP	ANNEAU	1	K				
15	S8011251	O-RING	JOINT CIRCULAIRE	1	K				
16	1.115-00204	RING;CUSHION	BAGUE D'AMORTISSEMEN	1					
17	K9001860	PISTON	PISTON	1					
18	K9001890	SEAL;SLIPPER	CACHET	1	K				
19	115-00087	RING;WEAR	ANNEAU	2	K				
20	K9001861	RING;DUST	BAGUE	1	K				
21	S8010651	O-RING	JOINT TORIQUE	1	K				
22	1.180-00277	RING;BACK UP	BAGUE ANTIEXTRUSION	2	K				
23	K9001862	NUT;PISTON	ECROU	1					
24	1.120-00219	SCREW;SET	VIS	1					
25	S2222272	BOLT;SOCKET	BOULON	10					
26	K9007358	PIPE BAND ASS'Y	BANDE ASS'Y DE PIPE	1		5001-9957			
	K9007358A	BAND ASSY,PIPE	BANDE ASS'Y DE PIPE	1		9958-			
27	124-00088	BAND;PIPE	ATTACHE	1					
28	S5100603	WASHER;SPRING	RONDELLE	2					
29	S0558153	BOLT	BOULON	2					
30	420210-00714	PIPE ASSY;H(R.H)	ENSEMBLE CONDUITES	1		5001-9957			

DATE	SEP. 12, 2012
4th EDITION	

Fig. 4320 BOOM CYLINDER - R.H (LOCK VALVE) VERIN DE FLECHE

Serial No. ;

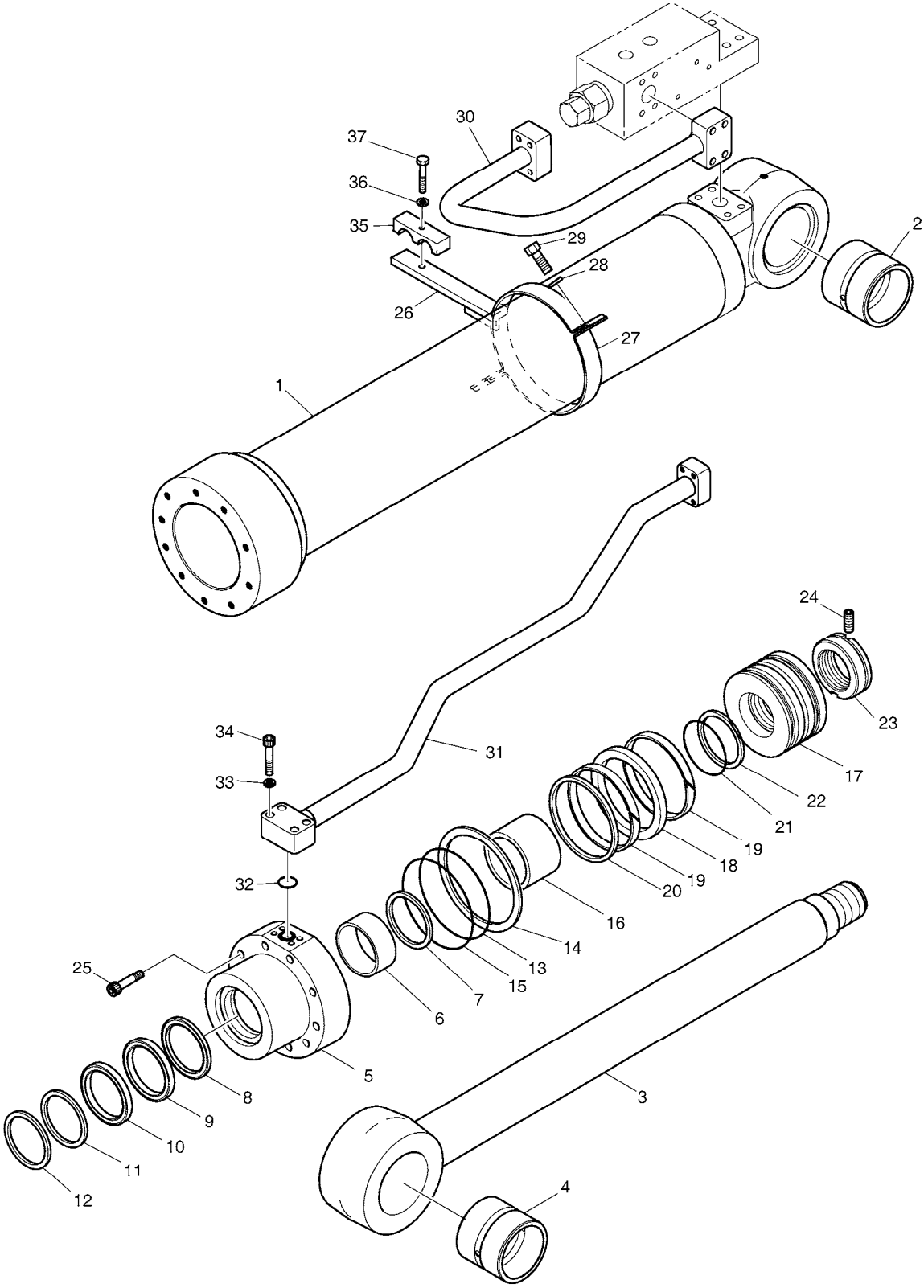

DATE	SEP. 12, 2012
4th EDITION	

Fig. 4320 BOOM CYLINDER - R.H (LOCK VALVE) VERIN DE FLECHE

Serial No. ;

Key No.	Part No.	Description	Description	Q'ty	S.C	Serial No.	ICA	Replaceable part	
								Part No.	Q'ty
4320 -	420210-00714A	PIPE ASSY;H(R.H)	ENSEMBLE CONDUITES	1		9958-			
31	K9007367	PIPE ASS'Y-R(R.H)	ENSEMBLE CONDUITES	1		5001-9957			
	K9007367A	PIPE ASSY;R(R.H)	ENSEMBLE CONDUITES	1		9958-			
32	S8000281	O-RING	JOINT TORIQUE	1					
33	S5100603	WASHER;SPRING	RONDELLE	4					
34	S2212761	BOLT;SOCKET M10X1.5X55	BOULON	4					
35	1.124-00157	CLAMP;PIPE	COLLIER	1					
36	S5100703	WASHER;SPRING	RONDELLE	1					
37	S0561053	BOLT M12X1.75X65	BOULON	1					
*	K9001878	SEAL KIT;BOOM CYLINDER	JOINT	1					

DATE	SEP. 12, 2012
4th EDITION	

Fig. 4330 ARM CYLINDER - LOCK VALVE
VERIN DE BALANCIER

Serial No. ;

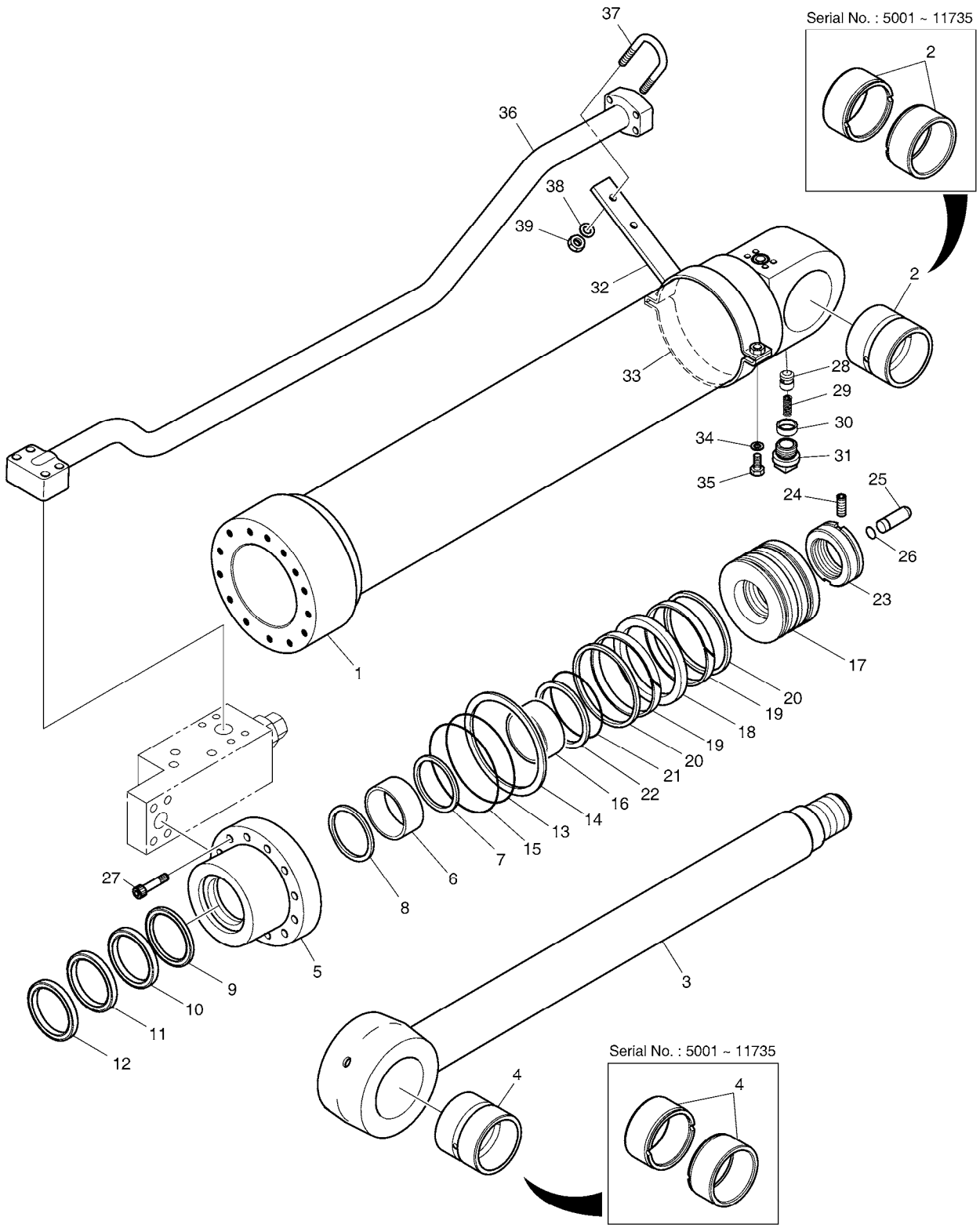

DATE	SEP. 12, 2012
4th EDITION	

Fig. 4330 ARM CYLINDER - LOCK VALVE
VERIN DE BALANCIER

Serial No. ;

Key No.	Part No.	Description	Description	Q'ty	S.C	Serial No.	ICA	Replaceable part	
								Part No.	Q'ty
4330 --	K1041222A	CYLINDER;ARM(LOCK V/V)	CYLINDRE	1		05001-11735	Y	400305-00220	1
	400305-00220	CYLINDER;ARM(LOCK V/V)	CYLINDRE	1		11736-			
1	K9003676	TUBE ASS'Y	ENSEMBLE TUBE	1		05001-11735	Y	420406-01073	1
	420406-01073	TUBE ASS'Y	ENSEMBLE TUBE	1		11736-			
2	K1037854A	BUSH	DOUILLE	2		05001-11735	Y	131008-00130	1
	131008-00130	BUSH	DOUILLE	1		11736-			
3	K9001880	ROD ASS`Y	TIGE	1		05001-11735	Y	400337-00452	1
	400337-00452	ROD ASS`Y	TIGE	1		11736-			
4	K1037854A	BUSH	DOUILLE	2		05001-11735	Y	131008-00130	1
	131008-00130	BUSH	DOUILLE	1		11736-			
5	K9001881	ROD;COVER	TIGE	1					
6	110-00081	DD-BUSH	DD-BUSH	1					
7	115-00073	RING;RETAINING	ANNEAU	1					
8	K9001882	SEAL;BUFFER	CACHET	1	K				
9	K9001883	U-PACKING	U-EMBALLAGE	1	K				
10	K9001884	RING;BACK UP	ANNEAU	1	K				
11	115-00077	WIPER;DUST	ESSUIE-GLACE	1	K				
12	115-00078	RING;RETAINING	ANNEAU	1					
13	S8011351	O-RING	JOINT CIRCULAIRE	1	K				
14	1.180-00662	RING;BACK UP	ANNEAU	1	K				
15	2180-1217D96	O-RING	JOINT CIRCULAIRE	1	K				
16	K9001893	RING;CUSHION	ANNEAU	1					
17	K9001894	PISTON	PISTON	1					
18	K9001148	SEAL;SLIPPER	CACHET	1	K				
19	115-00079	RING;WEAR	ANNEAU	2	K				
20	K9001149	RING;DUST	ANNEAU	2	K				
21	S8010801	O-RING	JOINT CIRCULAIRE	1	K				
22	K9001895	RING;BACK UP	ANNEAU	2	K				
23	K9001896	NUT;RISTON	ECROU	1					
24	1.120-00219	SCREW;SET	VIS	1					
25	K9001897	PLUNGER;CUSHION	PLONGEUR	1					
26	115-00081	RING;STOP	BAGUE	1					
27	S2222272	BOLT;SOCKET	BOULON	14					
28	1.420-00050	VALVE;CHECK	VALVE	1					
29	129-00071	SPRING	RESSORT	1					
30	1.195-00022	SUPPORT;SPRING	APPUI	1					
31	2181-1116D3	PLUG;HEX. SOCKET	BOUCHON	1					
32	K9001898	PIPE BAND ASS'Y-B	ENSEMBLE DE FIXATION	1					

DATE	SEP. 12, 2012
4th EDITION	

Fig. 4330 ARM CYLINDER - LOCK VALVE
VERIN DE BALANCIER

Serial No. ;

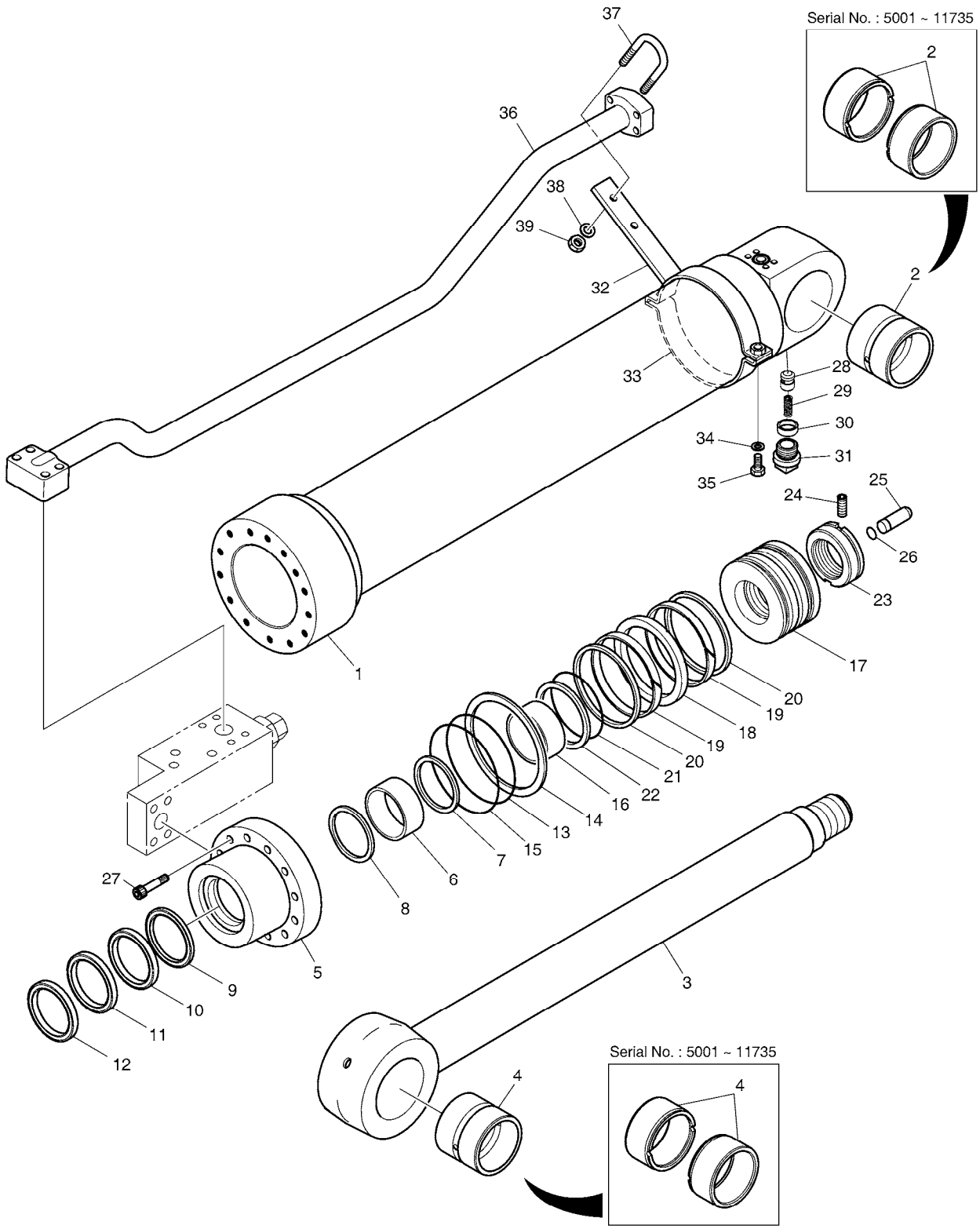

DATE	SEP. 12, 2012
4th EDITION	

Fig. 4330 ARM CYLINDER - LOCK VALVE
VERIN DE BALANCIER

Serial No. ;

Key No.	Part No.	Description	Description	Q'ty	S.C	Serial No.	ICA	Replaceable part	
								Part No.	Q'ty
4330 -33	124-00052	BAND;PIPE	BANDE	1					
34	S5100703	WASHER;SPRING	RONDELLE	2					
35	S0560563	BOLT;HEX	BOULON	2					
36	K9003677	PIPE ASS'Y-R	ENSEMBLE CONDUITES	1					
37	K9001158	U-BOLT	U-BOULON	1					
38	S5100603	WASHER;SPRING	RONDELLE	2					
39	S4012633	NUT	ECROU	2					
*	K9001901	SEAL KIT;ARM CYLINDER	KIT DE JOINT	1					

DATE	SEP. 12, 2012
4th EDITION	

Fig. 4340 GEAR PUMP-ROTATION POMPE

Serial No. ;

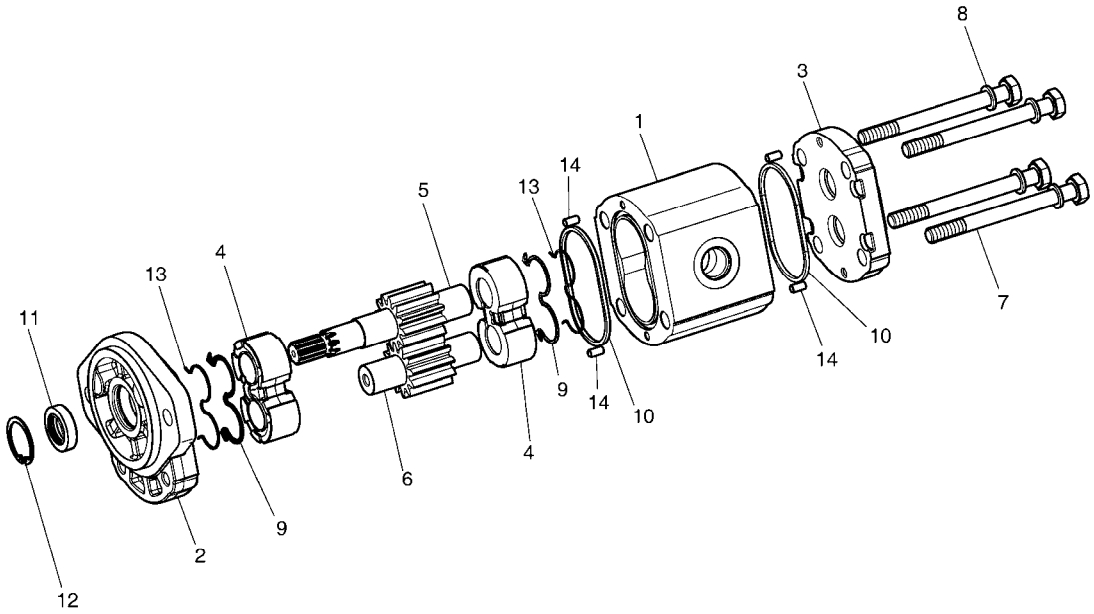

DATE	SEP. 12, 2012
4th EDITION	

Fig. 4340 GEAR PUMP-ROTATION POMPE

Serial No. ;

Key No.	Part No.	Description	Description	Q'ty	S.C	Serial No.	ICA	Replaceable part	
								Part No.	Q'ty
4340 --	K1000410	GEAR PUMP	POMPE A ENGRENAGES	1					
1	-	BODY	CORPS	1	D				
2	-	COVER;FRONT	COUVERTURE	1	D				
3	-	COVER;REAR	COUVERTURE	1	D				
4	-	PLATE;THRUST	PLAQUE	2	D				
5	-	SHAFT;DRIVE	AXE	1	D				
6	-	GEAR;DRIVEN	VITESSE	1	D				
7	S0559553	BOLT	BOULON	4					
8	S5102603	WASHER,SPRING	RONDELLE	4					
9	-	SEAL	CACHET	2	K				
10	-	SEAL	CACHET	2	K				
11	-	SEAL;SHAFT	CACHET	1	K				
12	-	RING;SNAP	ANNEAU	1	D				
13	-	RING;BACK UP	ANNEAU	2	K				
14	-	PIN;DOWEL	GOUPILLE	4	D				
*	K9001457	SEAL KIT;GEAR PUMP	KIT DE JOINT	1					

DATE	SEP. 12, 2012
4th EDITION	

Fig. 5100 TOOLS OUTILLAGE

Serial No. ;

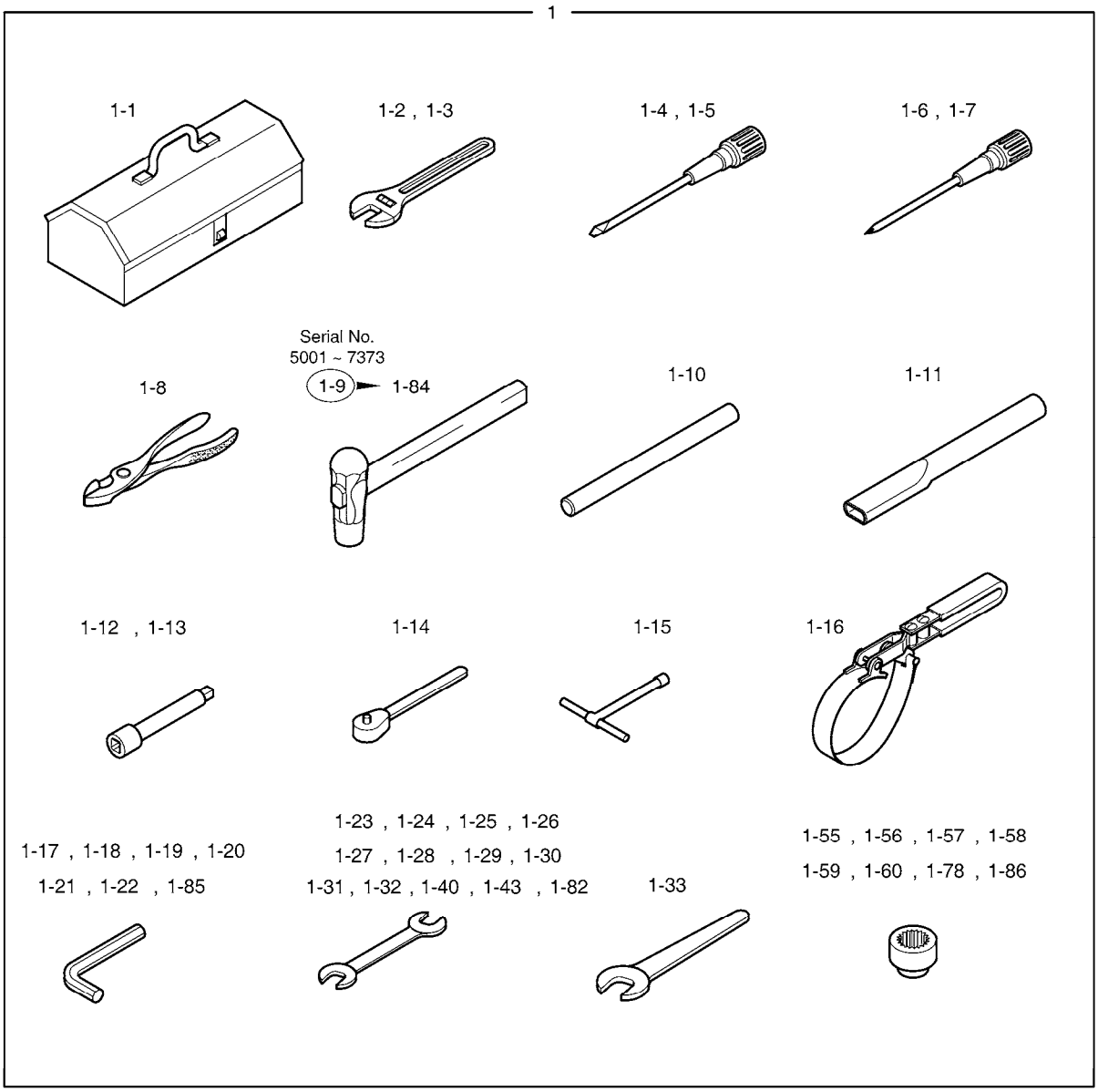

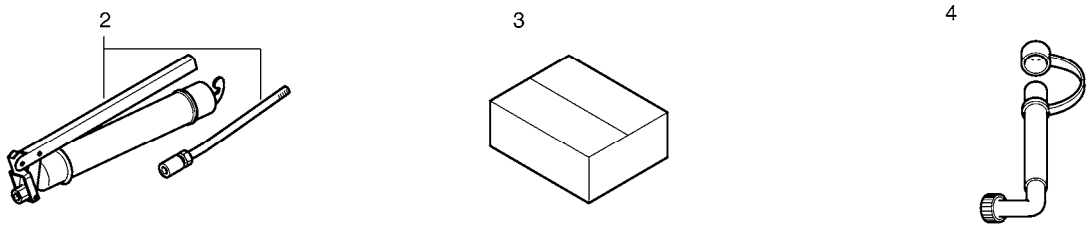

DATE	SEP. 12, 2012
4th EDITION	

Fig. 5100 TOOLS OUTILLAGE

Serial No. ;

Key No.	Part No.	Description	Description	Q'ty	S.C	Serial No.	ICA	Replaceable part	
								Part No.	Q'ty
5100 --	K1007832	TOOL ASS'Y	ENSEMBLE OUTILLAGE	-	D				
1	2199-1063F34A	TOOL ASS`Y	ENSEMBLE OUTILLAGE	1		5001-7373	I	2199-1063F34B	1
	2199-1063F34B	TOOL ASSY	OUTILLAGE	1		07374-11451	I	2199-1063F34C	1
	2199-1063F34C	TOOL ASSY	ENSEMBLE OUTILLAGE	1		11452-			
1-1	2199-9043	. BOX;TOOL	. BOITE A OUTILS	1	D				
1-2	T6580008	. WRENCH;ADJUSTABLE 6'	. CLE A MOLETTE	1	D				
1-3	T6580020	. WRENCH;ADJUST	. RONDELLE	1	D				
1-4	T7050003	. DRIVER(-)	. CONDUCTEUR	1	D				
1-5	T7050013	. DRIVER	. CONDUCTEUR	1	D				
1-6	T7050021	. DRIVER	. CONDUCTEUR	1	D				
1-7	T7050022	. DRIVER	. CONDUCTEUR	1	D				
1-8	T7500004	. PILER;COMBI	. GERBEUR COMBI	1	D				
1-9	T7260057	. HAMMER	. MARTEAU	1	D	5001-7373			
1-10	2199-1004	. BAR	. BARRE	1					
1-11	2199-1005	. PIPE	. CONDUITE	1					
1-12	T6690012	. BAR;EXTENSION	. BARRE DE PROLONGATIC	1	D				
1-13	T6690013	. BAR;EXTENSION	. BARRE DE PROLONGATIC	1	D				
1-14	T6750003	. HANDLE;RATCHET	. POIGNEE	1	D				
1-15	2199-9009	. CLIP;DRIVER	. AGRAFE	1	D				
1-16	K1008167	. WRENCH;FILTER	. CLE A FILTRE	1					
1-17	T6550005	. L-WRENCH	. CLE MALE	1	D				
1-18	T6550006	. L-WRENCH	. CLE MALE	1	D				
1-19	T6550007	. L-WRENCH	. CLE MALE	1	D				
1-20	T6550009	. L-WRENCH	. CLE MALE	1	D				
1-21	T6550011	. L-WRENCH	. CLE MALE	1	D				
1-22	T6550018	. L-WRENCH 17	. CLE MALE	1	D				
1-23	T6510062	. SPANNER	. CLE PLATE	1	D				
1-24	T6510066	. SPANNER 10x13	. CLE PLATE	1	D				
1-25	T6510070	. SPANNER	. CLE PLATE	1	D				
1-26	T6510072	. SPANNER	. CLE PLATE	1	D				
1-27	T6510075	. SPANNER 19x22	. CLE PLATE	1	D				
1-28	T6510081	. SPANNER 24X27	. CLE PLATE	1	D				
1-29	T6510085	. SPANNER 27X30	. CLE PLATE	1	D				
1-30	T6510089	. SPANNER 32X36	. CLE PLATE	1	D				
1-31	T6510091	. SPANNER 36X41	. CLE PLATE	1	D				
1-32	T6510018	. SPANNER 24	. CLE PLATE	1	D				
1-33	T6510027	. SPANNER 41	. CLE PLATE	1	D				
1-40	T6510079	. SPANNER 22x24	. CLE PLATE	1		7374-			

DATE	SEP. 12, 2012
4th EDITION	

Fig. 5100 TOOLS OUTILLAGE

Serial No. ;

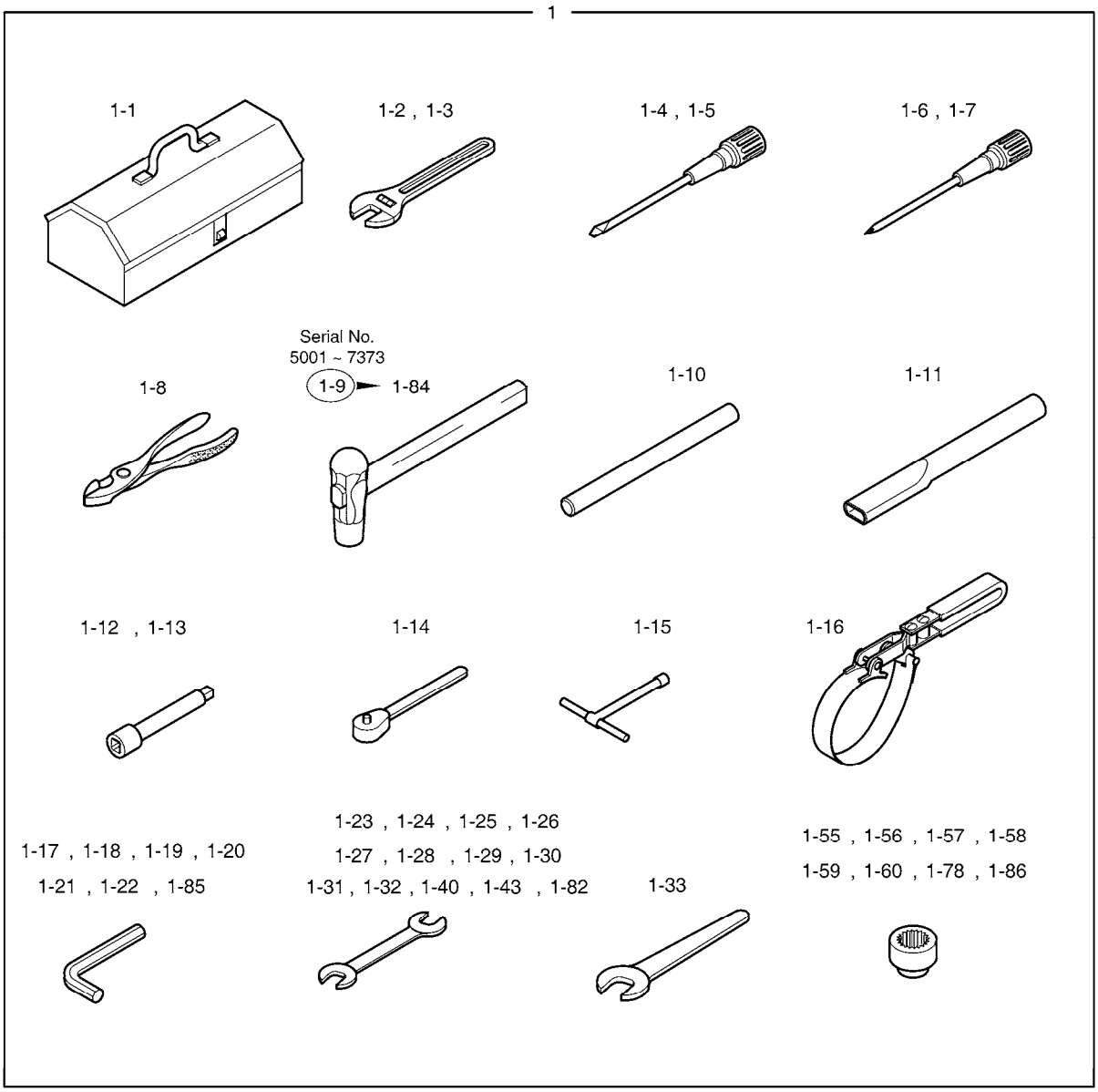

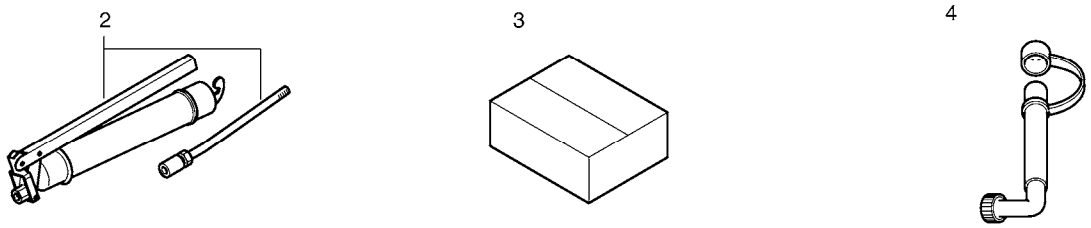

DATE	SEP. 12, 2012
4th EDITION	

Fig. 5100 TOOLS OUTILLAGE

Serial No. ;

Key No.	Part No.	Description	Description	Q'ty	S.C	Serial No.	ICA	Replaceable part	
								Part No.	Q'ty
5100 -1-43	T6510087	. SPANNER 30x32	. CLE PLATE	1		7374-			
1-55	T6600183	. SOCKET M6	. DOUILLE	1	D				
1-56	T6600189	. SOCKET M8	. DOUILLE	1	D				
1-57	T6600197	. SOCKET;WRENCH	. CLE A DOUILLE	1	D				
1-58	T6600201	. SOCKET;WRENCH	. CLE A DOUILLE	1	D				
1-59	T6600211	. SOCKET;WRENCH	. CLE A DOUILLE	1	D				
1-60	T6600223	. SOCKET;WRENCH	. CLE A DOUILLE	1	D				
1-78	T6600217	. SOCKET;WRENCH	. CLE A DOUILLE	1	D				
1-82	T6510069	. SPANNER 12X14	. CLE PLATE	1		7374-			
1-84	850315-00029	. HAMMER	. MARTEAU	1		7374-			
1-85	850334-00008	. WRENCH,L	. CLE MALE	1		7374-			
1-86	T6600191	. SOCKET;WRENCH	. DOUILLE	1		11452-			
2	2199-9008	GREASE GUN	PISTOLET DE GRAISSAGE	1					
3	2199-9007	BOX	BOITE	1					
4	K1007669	HOSE;OIL DRAIN	TUYAU FLEXIBLE	1					

DATE	SEP. 12, 2012
4th EDITION	

Fig. 5110 SPARE PARTS PIECES DE RECHANGE

Serial No. ;

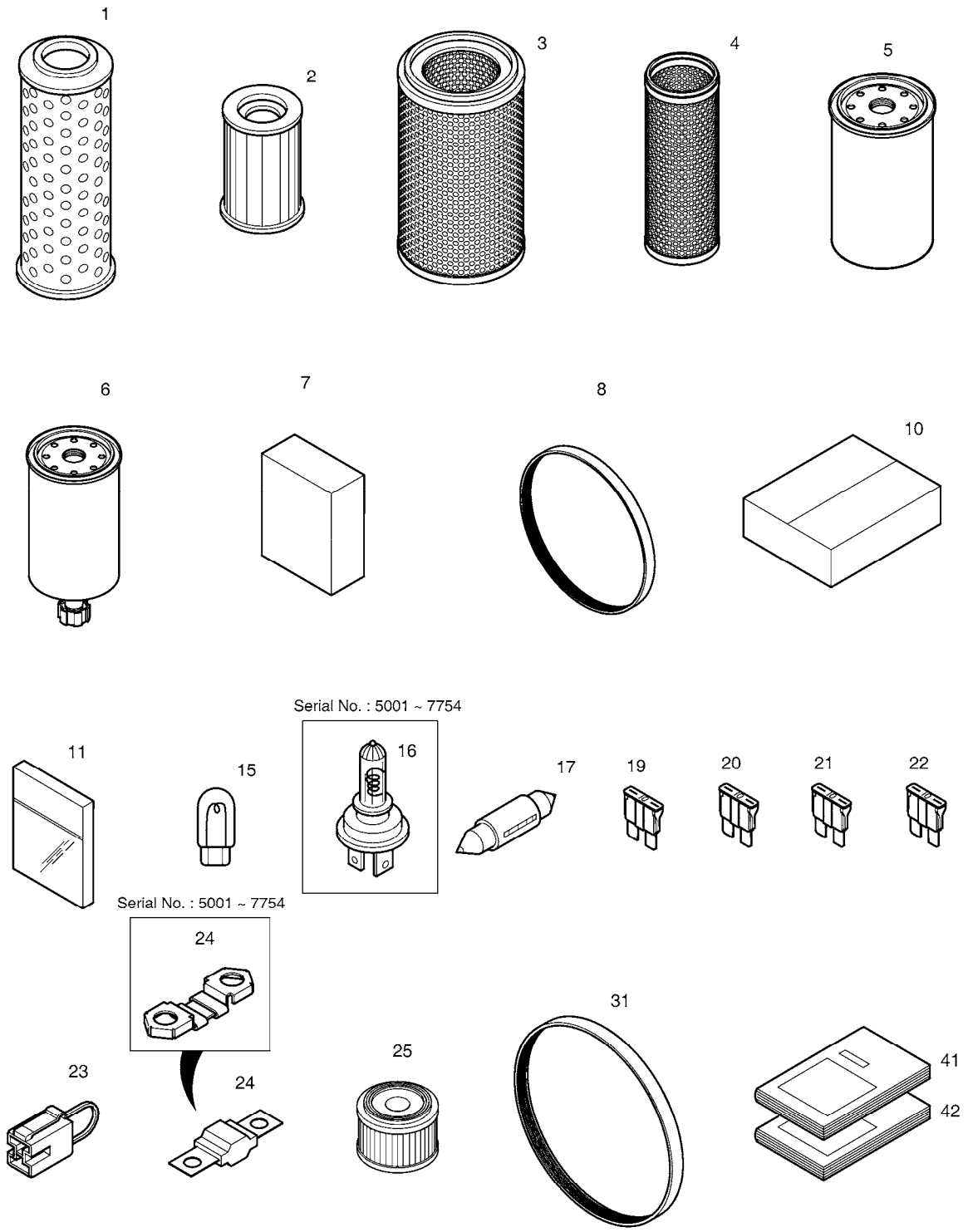

DATE	SEP. 12, 2012
4th EDITION	

Fig. 5110 SPARE PARTS PIECES DE RECHANGE

Serial No. ;

Key No.	Part No.	Description	Description	Q'ty	S.C	Serial No.	ICA	Replaceable part	
								Part No.	Q'ty
5110 --	K1049153B	SPARE PARTS	PIECES DE RECHANGE	-	D				
1	474-00055	ELEMENT;RETURN FILTER	ELEMENT	1					
2	2471-1154	ELEMENT;FILTER(PILOT)	ELEMENT	1					
3	474-00040	ELEMENT;OUTER	ELEMENT	1					
4	474-00039	ELEMENT;INNER	ELEMENT	1					
5	65.05510-5028A	CARTRIDGE,OIL FILTER	ELEMENT FILTRANT	1					
6	65.12503-5016B	ELEMENT;E/G FUEL FILTER	ELEMENT FILTRANT	1					
7	910-00019	OIL;ENGINE	HUILE MOTEUR	6		05001-11217			
	910-00019	OIL;ENGINE	HUILE MOTEUR	7		11218-			
8	2106-1019D10	V-BELT 4PK 990L	COURROIE-V	1					
10	2512-1095D1	BOX;SPARE PARTS	BOITE DE PIECES DE RECH	1					
11	2180-9153	O-RING KIT	KIT DE REPARATION	1					
15	515-00012A	BULB	AMPOULE	2					
16	2515-1022D1	BULB;HALOGEN	AMPOULE	1		5001-7754			
17	2515-1016D4	BULB;HALOGEN	AMPOULE	1		5001-7754			
	2515-1016D4	BULB;HALOGEN	AMPOULE	2		7755-			
19	2527-1016	FUSE;BLADE 10A	FUSIBLE	2					
20	2527-1017	FUSE;BLADE 15A	FUSIBLE	2					
21	2527-1018	FUSE;BLADE 20A	FUSIBLE	1					
22	2527-1025	FUSE;BLADE 30A	FUSIBLE	1					
23	2527-1023A	LINK;FUSIBLE	LIEN	1					
24	527-00005	FUSE;PREHEAT RELAY	FUSIBLE	1		5001-7754			
	300803-00086	FUSE;200A	FUSIBLE	1		7755-			
25	K1029257	ELEMENT;AIR BREATHER	ELEMENT	1					
31	65.96801-0124A	BELT;POLY	CEINTURE	1					
41	K1049154EF	PARTS BOOK	CATALOGUE DES PIECES D	1					
42	K1049155E	OPERATION MANUAL	MANUEL D'OPERATION	1					

DATE	SEP. 12, 2012
4th EDITION	

Fig. 5120 NAME PLATE - CABIN(EXPORT) PLAQUE D'IDENTIFICATION

Serial No. ;

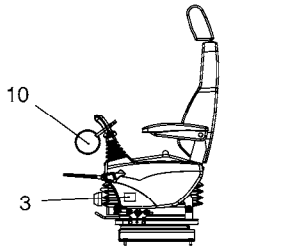

LEFT SIDE VIEW OF
LEFT CONTROL STAND

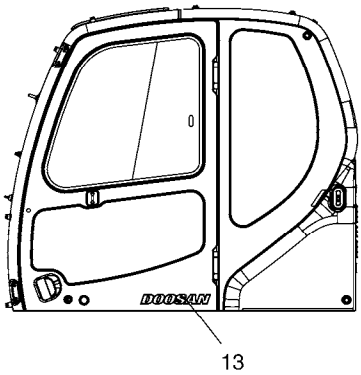

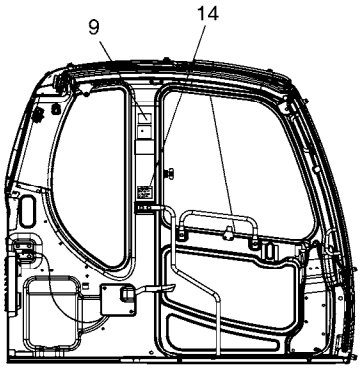

LEFT SIDE VIEW
OF CABIN INSIDE

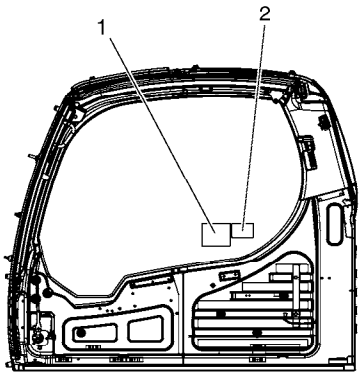

RIGHT SIDE VIEW
OF CABIN INSIDE

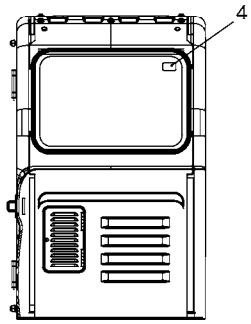

DATE	SEP. 12, 2012
4th EDITION	

Fig. 5120 NAME PLATE - CABIN(EXPORT) PLAQUE D'IDENTIFICATION

Serial No. ;

Key No.	Part No.	Description	Description	Q'ty	S.C	Serial No.	ICA	Replaceable part	
								Part No.	Q'ty
5120 --	K1007342J	NAME PLATE ASS'Y	PLAQUE D'IDENTIFICATION	-	D	5001-6341			
	950205-00864	DECAL ASSY;CABIN	PLAQUE D'IDENTIFICATION	-	D	6342-			
1	K1034000	PLATE;NAME	PLAQUE D'IDENTIFICATION	1					
2	2190-3297	PLATE;NAME	PLAQUE	1					
3	K1005909	PLATE;NAME	PLAQUE	1					
4	2190-2480	PLATE;NAME	PLAQUE D'IDENTIFICATION	1					
9	2190-3388	PLATE;NAME	PLAQUE D'IDENTIFICATION	1					
10	190-00695A	PLATE;NAME	PLAQUE D'IDENTIFICATION	1					
13	K1011743D6	PLATE;NAME	PLAQUE	1					
14	950205-00862	DECAL	DECALQUE	1		6342-			

DATE	SEP. 12, 2012
4th EDITION	

Fig. 5130 NAME PLATE - EXPORT
PLAQUE D'IDENTIFICATION

Serial No. ;

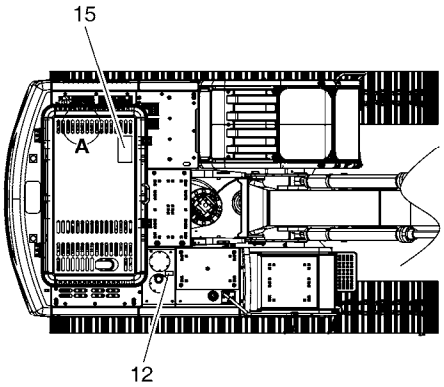

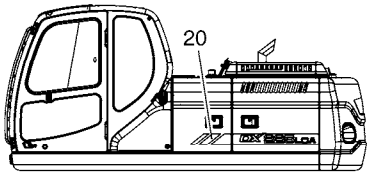

Serial No. : 5001 ~ 5947

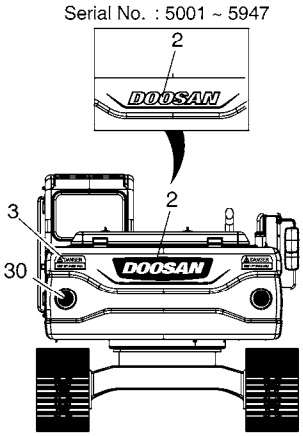

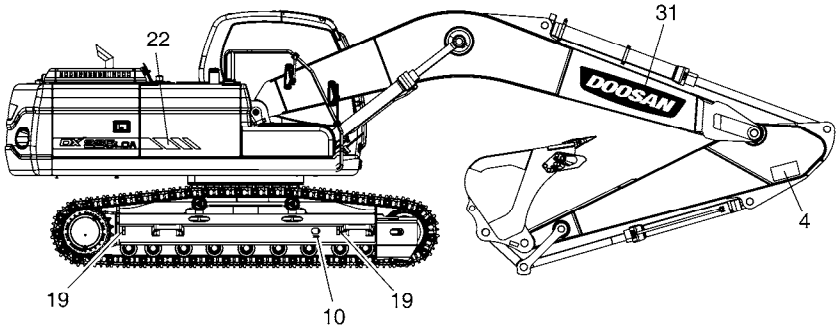

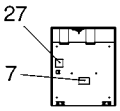

BATTERY DOOR

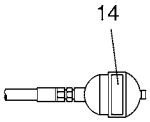

ACCUMULATOR

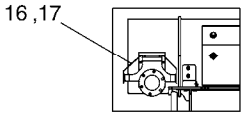

TOP VIEW OF
TURBO CHARGER COVER

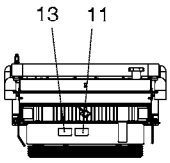

DETAIL **A**

DATE	SEP. 12, 2012
4th EDITION	

Fig. 5130 NAME PLATE - EXPORT PLAQUE D'IDENTIFICATION

Serial No. ;

Key No.	Part No.	Description	Description	Q'ty	S.C	Serial No.	ICA	Replaceable part	
								Part No.	Q'ty
5130 --	K1023656K	NAME PLATE ASS'Y	PLAQUE D'IDENTIFICATION	-	D	5001-5947			
	950205-00668	DECAL ASSY;EXPORT	PLAQUE D'IDENTIFICATION	-	D	5948-			
2	K1011645D1	PLATE;NAME	PLAQUE D`IDENTIFICATION	1		5001-5947	I	950205-00662	1
	950205-00662	DECAL(DOOSAN)	DECALQUE	1		5948-			
3	2190-3379A	PLATE;NAME	PLAQUE D'IDENTIFICATION	2					
4	190-00652	PLATE;NAME	PLAQUE	2					
7	2190-2533A	PLATE;NAME	PLAQUE D'IDENTIFICATION	1					
10	190-00122	PLATE;NAME	PLAQUE	2					
11	190-00694	PLATE;NAME	PLAQUE D'IDENTIFICATION	1					
12	190-00691A	PLATE;NAME	PLAQUE D'IDENTIFICATION	1					
13	190-00692	PLATE;NAME	PLAQUE D'IDENTIFICATION	1					
14	190-00703	PLATE;NAME	PLAQUE D'IDENTIFICATION	1					
15	190-00522A	PLATE;NAME	PLAQUE	1					
16	190-00648A	PLATE;NAME	PLAQUE	1					
17	2122-1002D4	RIVET	RIVET	4					
19	K1042074	PLATE;NAME	PLAQUE D'IDENTIFICATION	4		5001-5263	I	K1042074A	4
	K1042074A	PLATE;NAME	PLAQUE D'IDENTIFICATION	4		5264-			
20	K1011000	DECAL	DECALQUE	1					
22	K1011002	DECAL	DECALQUE	1					
27	K1015739	PLATE;NAME	PLAQUE D'IDENTIFICATION	1					
30	K1039697	DECAL	DECALQUE	2					
31	950205-00663	DECAL(DOOSAN)	DECALQUE	2		5948-			

DATE	SEP. 12, 2012
4th EDITION	

Fig. 5140 DECAL - SPEC(DX225LCA) DECALQUE

Serial No. ;

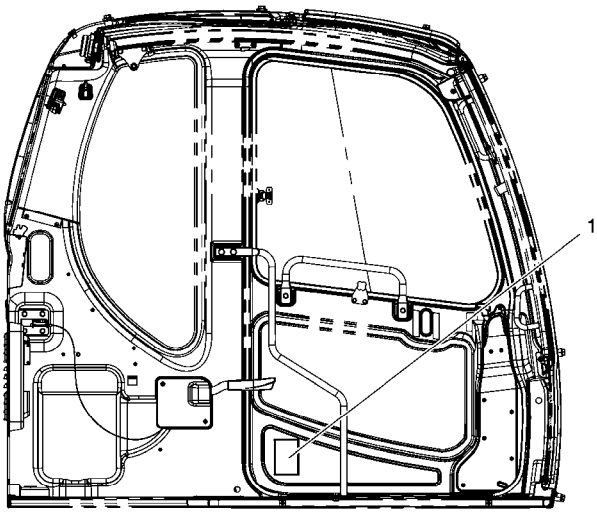

LEFT SIDE VIEW
OF CABIN INSIDE

DATE	SEP. 12, 2012
4th EDITION	

Fig. 5140 DECAL - SPEC(DX225LCA) DECALQUE

Serial No. ;

Key No.	Part No.	Description	Description	Q'ty	S.C	Serial No.	ICA	Replaceable part	
								Part No.	Q'ty
5140 --	K1049177	NAME PLATE ASS'Y	PLAQUE D'IDENTIFICATION	-	D				
1	2190-2556D179	PLATE;NAME	PLAQUE D'IDENTIFICATION	1					

DATE	SEP. 12, 2012
4th EDITION	

Fig. 5145 DECAL - SPEC(DX220A) DECALQUE

Serial No. ;

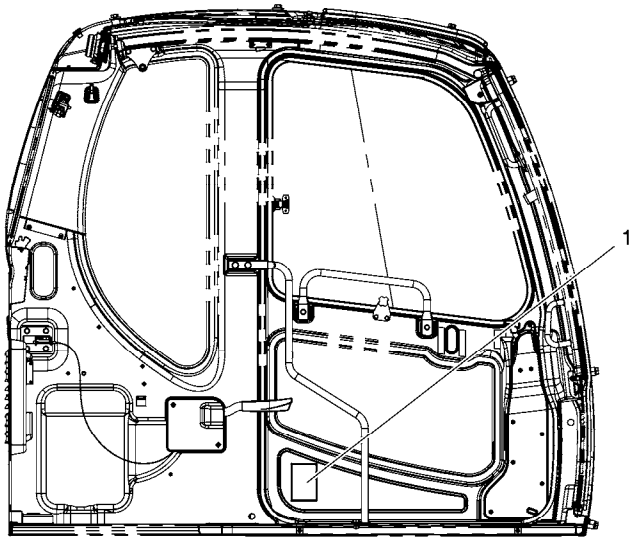

LEFT SIDE VIEW
OF CABIN INSIDE

DATE	SEP. 12, 2012
4th EDITION	

Fig. 5145 DECAL - SPEC(DX220A) DECALQUE

Serial No. ;

Key No.	Part No.	Description	Description	Q'ty	S.C	Serial No.	ICA	Replaceable part	
								Part No.	Q'ty
5145 --	950205-02543	DECAL ASSY;SPEC	DECALQUE	-	D				
1	950205-02544	DECAL;SPEC	DECALQUE	1					

DATE	SEP. 12, 2012
4th EDITION	

Fig. 5150 DECAL - FUSE BOX DECAL

Serial No. ;

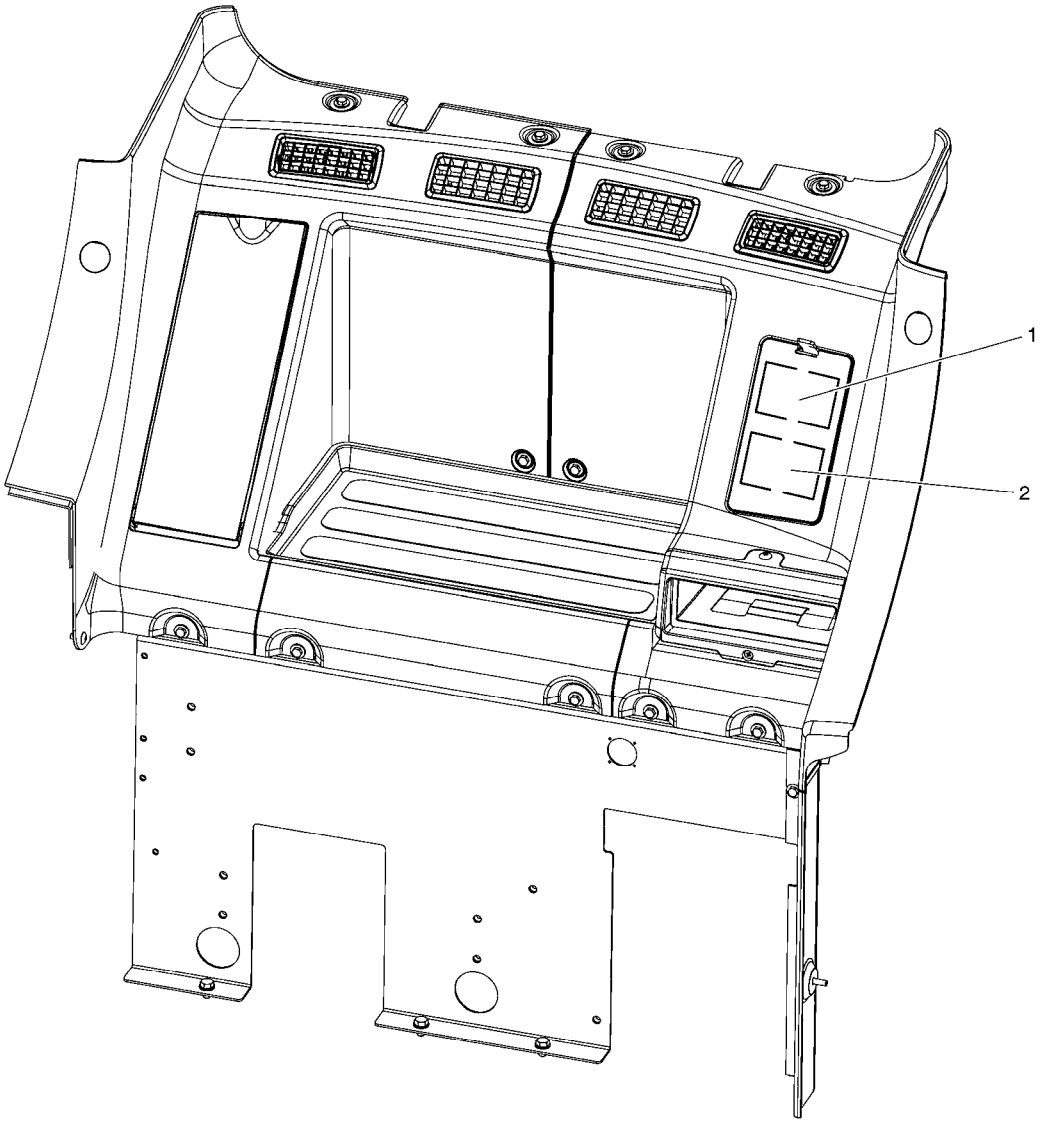

CABIN REAR COVER VIEW

DATE	SEP. 12, 2012
4th EDITION	

Fig. 5150 DECAL - FUSE BOX DECAL

Serial No. ;

Key No.	Part No.	Description	Description	Q'ty	S.C	Serial No.	ICA	Replaceable part	
								Part No.	Q'ty
5150 --	K1049168	NAME PLATE ASS'Y	PLAQUE D'IDENTIFICATION	-	D				
1	K1008019D21	PLATE;NAME	PLAQUE D'IDENTIFICATION	1					
2	K1008019D22	PLATE;NAME	PLAQUE D'IDENTIFICATION	1					

DATE	SEP. 12, 2012
4th EDITION	

Fig. 5160 DECAL - MACHINE NAME(DX225LCA) DECALQUE

Serial No. ;

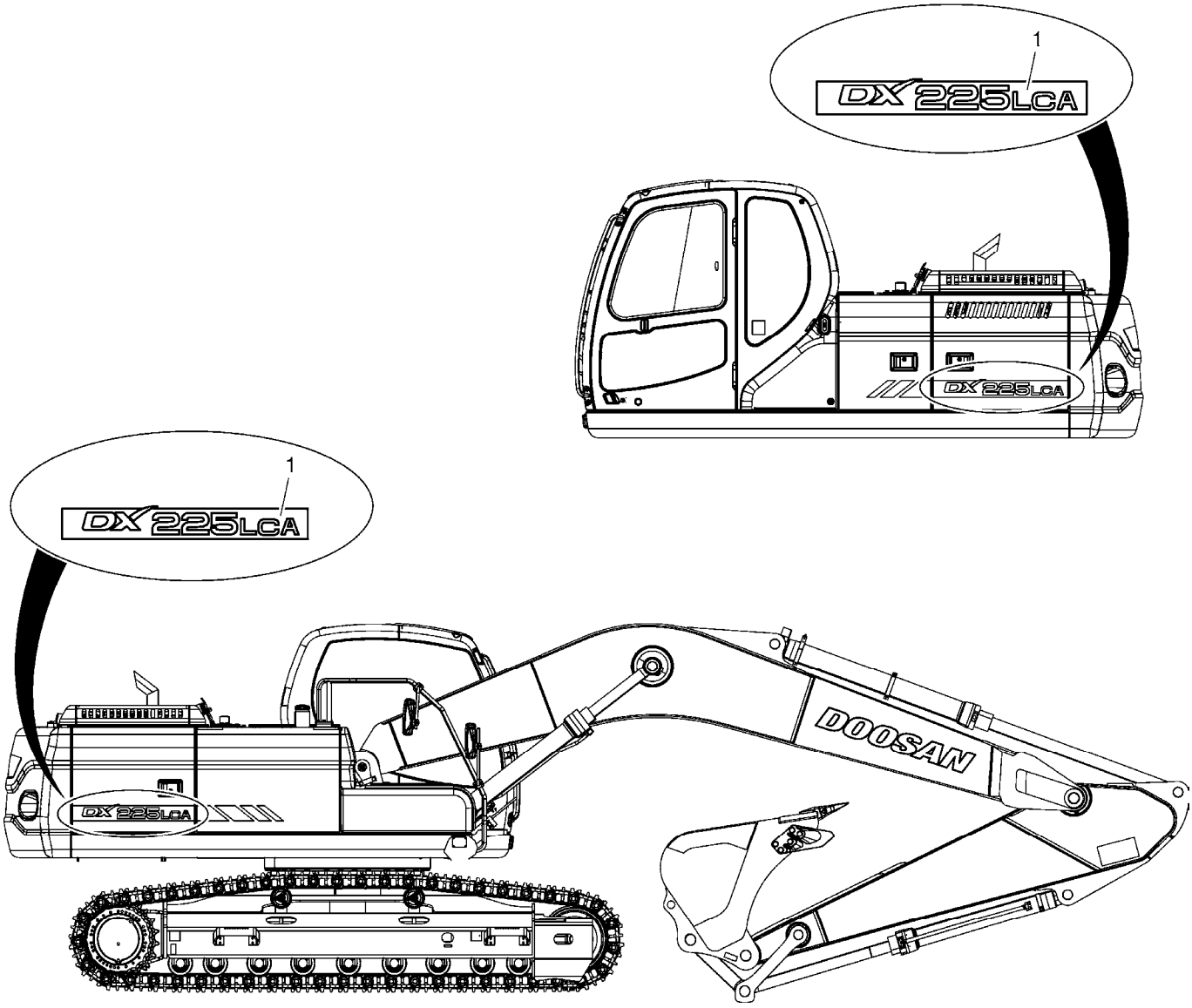

DATE	SEP. 12, 2012
4th EDITION	

Fig. 5160 DECAL - MACHINE NAME(DX225LCA) DECALQUE

Serial No. ;

Key No.	Part No.	Description	Description	Q'ty	S.C	Serial No.	ICA	Replaceable part	
								Part No.	Q'ty
5160 --	K1049182	NAME PLATE ASS'Y	PLAQUE D'IDENTIFICATION	-	D				
1	K1049184	PLATE;NAME	PLAQUE D'IDENTIFICATION	2					

DATE	SEP. 12, 2012
4th EDITION	

Fig. 5165 DECAL - MACHINE NAME(DX220A) DECALQUE

Serial No. ;

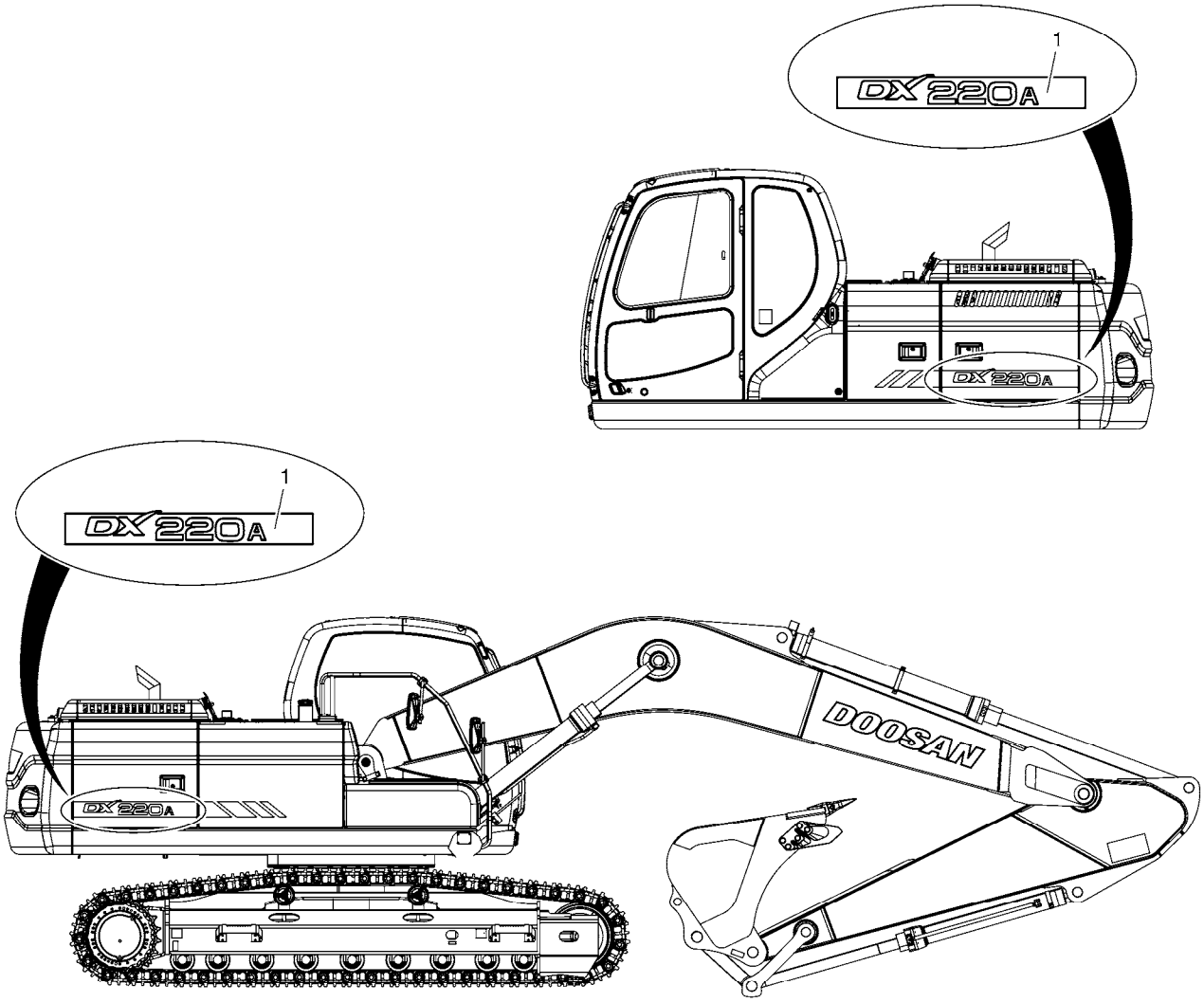

DATE	SEP. 12, 2012
4th EDITION	

Fig. 5165 DECAL - MACHINE NAME(DX220A) DECALQUE

Serial No. ;

Key No.	Part No.	Description	Description	Q'ty	S.C	Serial No.	ICA	Replaceable part	
								Part No.	Q'ty
5165 --	950205-02546	DECAL ASSY;NAME PLATE	DECALQUE	-	D				
1	950205-02547	DECAL	DECALQUE	2					

DATE	SEP. 12, 2012
4th EDITION	

Fig. 5170 DECAL - LUBRICATION(EXPORT) DECAL

Serial No. ;

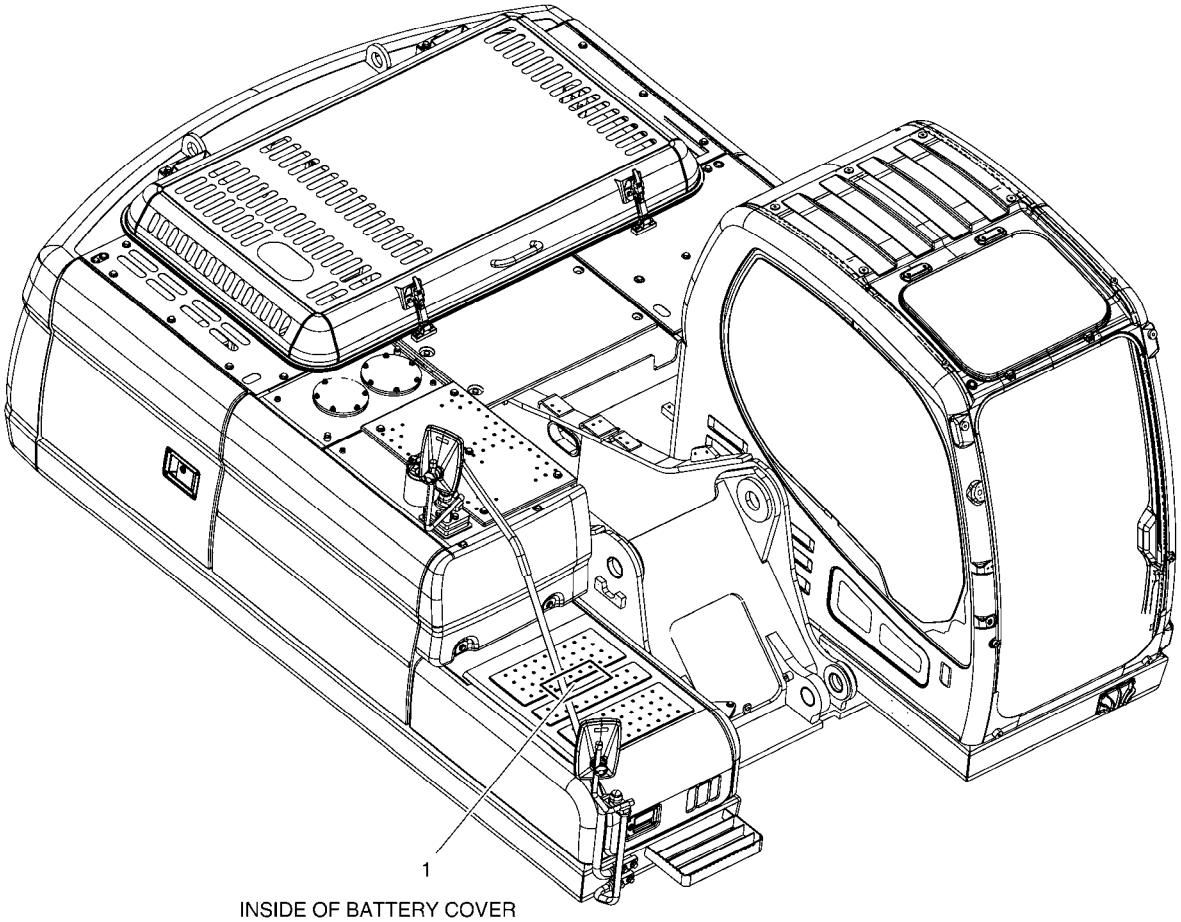

DATE	SEP. 12, 2012
4th EDITION	

Fig. 5170 DECAL - LUBRICATION(EXPORT) DECAL

Serial No. ;

Key No.	Part No.	Description	Description	Q'ty	S.C	Serial No.	ICA	Replaceable part	
								Part No.	Q'ty
5170 --	K1049178	NAME PLATE ASS'Y	PLAQUE D'IDENTIFICATION	-	D	05001-11735			
	950209-03552	PLATE ASSY,NAME	PLAQUE D'IDENTIFICATION	-	D	11736-			
1	K1049167	PLATE;NAME	PLAQUE D'IDENTIFICATION	1		05001-11735	I	950209-03553	1
	950209-03553	PLATE,NAME	PLAQUE D'IDENTIFICATION	1		11736-			

DATE	SEP. 12, 2012
4th EDITION	

Fig. 5180 DECAL - BOOM DECAL

Serial No. ;

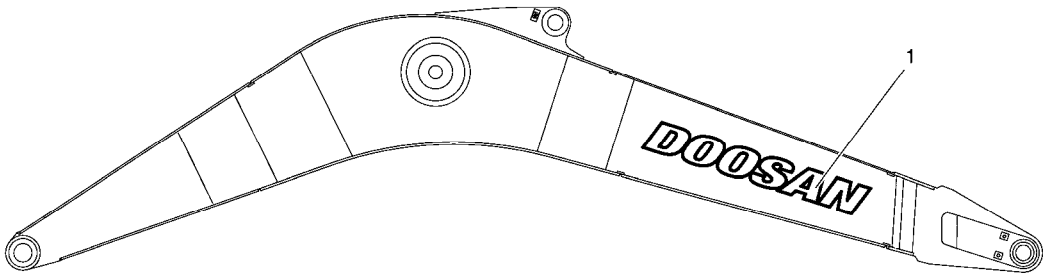

MONO BOOM

DATE	SEP. 12, 2012
4th EDITION	

Fig. 5180 DECAL - BOOM DECAL

Serial No. ;

Key No.	Part No.	Description	Description	Q'ty	S.C	Serial No.	ICA	Replaceable part	
								Part No.	Q'ty
5180 --	K1047156	NAME PLATE ASS'Y	PLAQUE D'IDENTIFICATION	-	D				
1	K1011645D2	DECAL(DOOSAN)	DECALQUE	1					

DATE	SEP. 12, 2012
4th EDITION	

Fig. 5190 DECAL - SERIAL DECAL

Serial No. ;

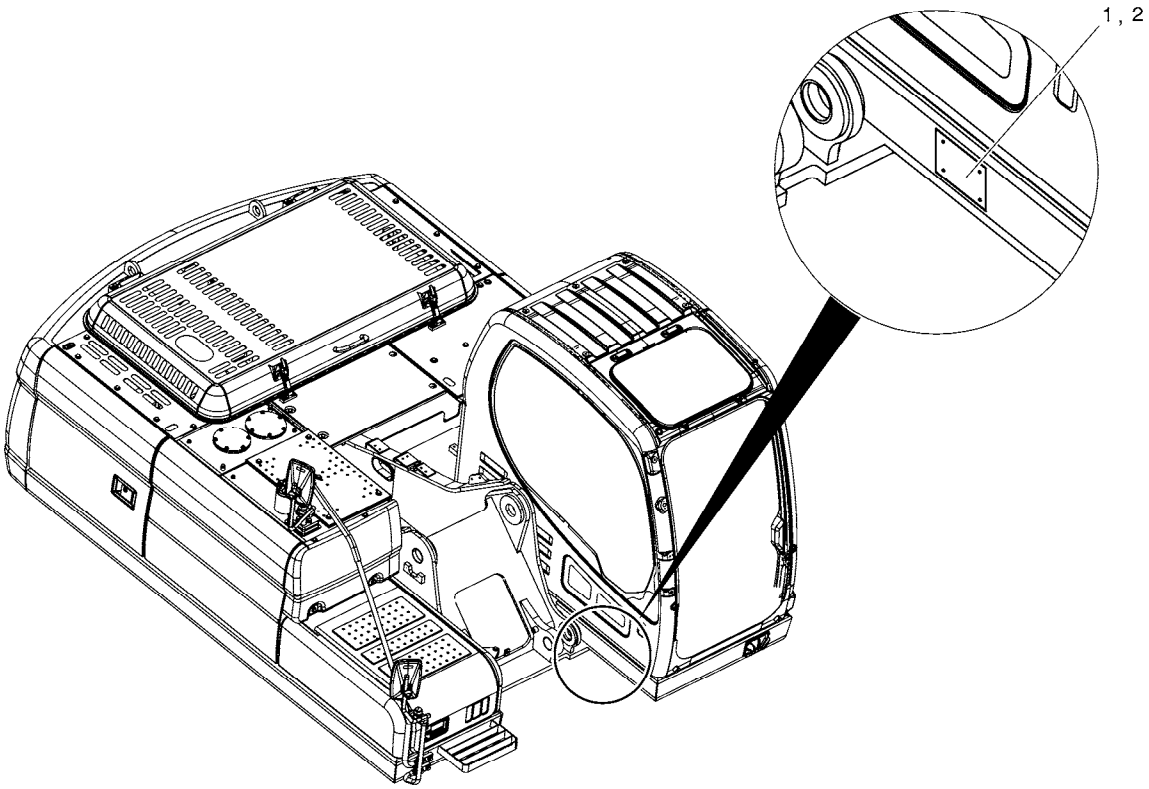

DATE	SEP. 12, 2012
4th EDITION	

Fig. 5190 DECAL - SERIAL DECAL

Serial No. ;

Key No.	Part No.	Description	Description	Q'ty	S.C	Serial No.	ICA	Replaceable part	
								Part No.	Q'ty
5190 --	950209-00348	DECAL & NAME PLATE ASSY	PLAQUE D'IDENTIFICATION	-	D				
1	K1027513B	PLATE;NAME	PLAQUE D'IDENTIFICATION	1		01001-11735	I	950209-02979	1
	950209-02979	PLATE,NAME	PLAQUE D'IDENTIFICATION	1		11736-			
2	2122-1002D2	RIVET	RIVET	4					

DATE	SEP. 12, 2012
4th EDITION	

Fig. 5200 DECAL - LIFTING CAPA(DX225LCA) DECALQUE

Serial No. ;

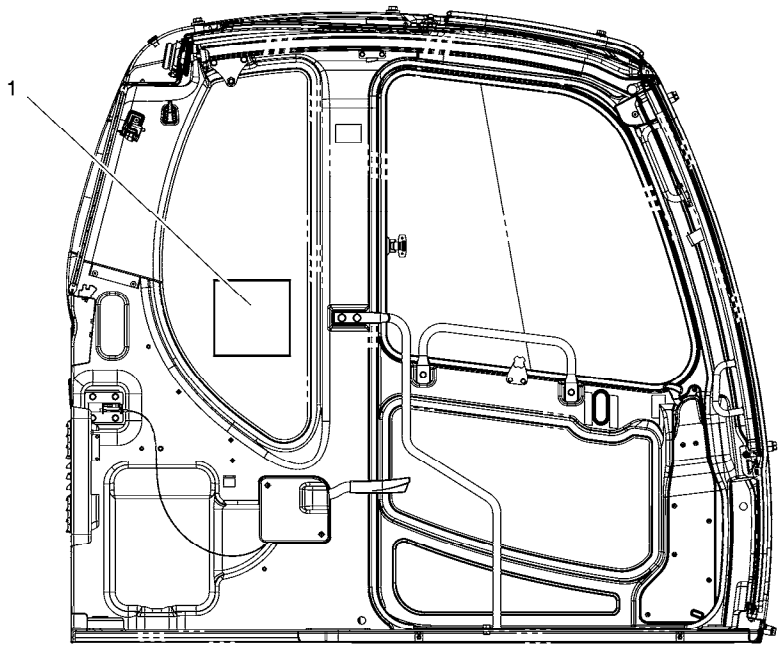

LEFT SIDE VIEW OF CABIN INSIDE

DATE	SEP. 12, 2012
4th EDITION	

Fig. 5200 DECAL - LIFTING CAPA(DX225LCA) DECALQUE

Serial No. ;

Key No.	Part No.	Description	Description	Q'ty	S.C	Serial No.	ICA	Replaceable part	
								Part No.	Q'ty
5200 --	950209-00501	PLATE ASSY,NAME;LIFTING CAP	PLAQUE D`IDENTIFICATIOI	-	D				
1	950209-00487	PLATE,NAME;LIFTING CAPA.	PLAQUE D`IDENTIFICATIOI	1					

DATE	SEP. 12, 2012
4th EDITION	

Fig. 5205 DECAL - LIFTING CAPA(DX220A) DECALQUE

Serial No. ;

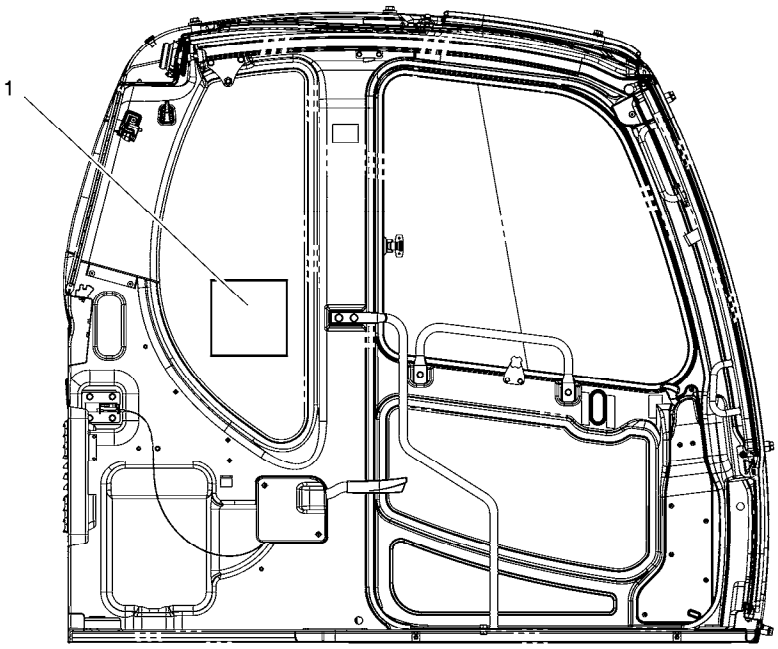

LEFT SIDE VIEW OF CABIN INSIDE

DATE	SEP. 12, 2012
4th EDITION	

Fig. 5205 DECAL - LIFTING CAPA(DX220A) DECALQUE

Serial No. ;

Key No.	Part No.	Description	Description	Q'ty	S.C	Serial No.	ICA	Replaceable part	
								Part No.	Q'ty
5205 --	950209-03539	PLATE ASSY,NAME;LIFTING CAP	DECALQUE	-	D				
1	950209-03540	PLATE,NAME	DECALQUE	1					

DATE	SEP. 12, 2012
4th EDITION	

Fig. 5210 DECAL - PATTERN CHANGE DECAL

Serial No. ;

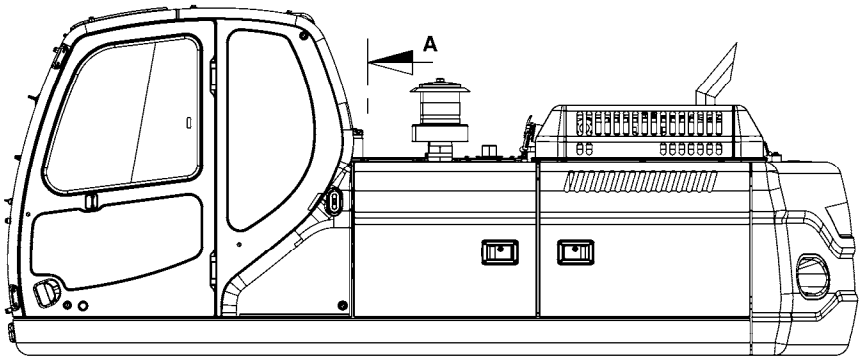

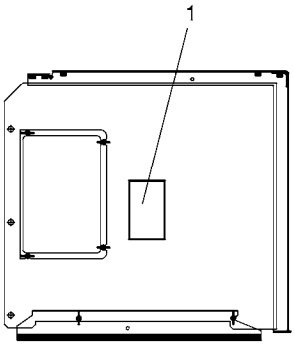

SECTION **A**

DATE	SEP. 12, 2012
4th EDITION	

Fig. 5210 DECAL - PATTERN CHANGE DECAL

Serial No. ;

Key No.	Part No.	Description	Description	Q'ty	S.C	Serial No.	ICA	Replaceable part	
								Part No.	Q'ty
5210 --	950205-00527	DECAL ASSY;PATTERN CHANGE	DECALQUE	-	D				
1	950205-01404C	DECAL;CONTROL PATTERN	DECALQUE	1					

DATE	SEP. 12, 2012
4th EDITION	

Fig. 5220 DECAL - PATTERN CHANGE DECAL

Serial No. ;

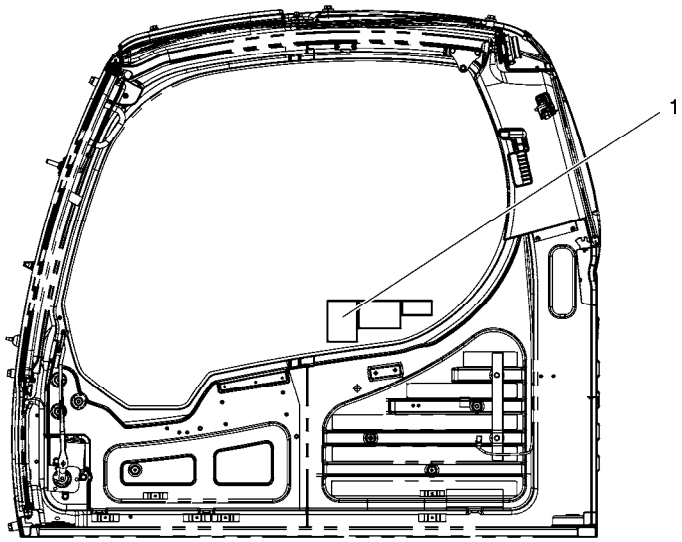

RIGHT SIDE VIEW OF CABIN INSIDE

DATE	SEP. 12, 2012
4th EDITION	

Fig. 5220 DECAL - PATTERN CHANGE DECAL

Serial No. ;

Key No.	Part No.	Description	Description	Q'ty	S.C	Serial No.	ICA	Replaceable part	
								Part No.	Q'ty
5220 --	950205-00528	DECAL ASSY;PATTERN CHANGE	DECALQUE	-	D				
1	950205-01404C	DECAL;CONTROL PATTERN	DECALQUE	1					

DATE	SEP. 12, 2012
4th EDITION	

Fig. 6100 FUEL FILLER PUMP POMPE

Serial No. ;

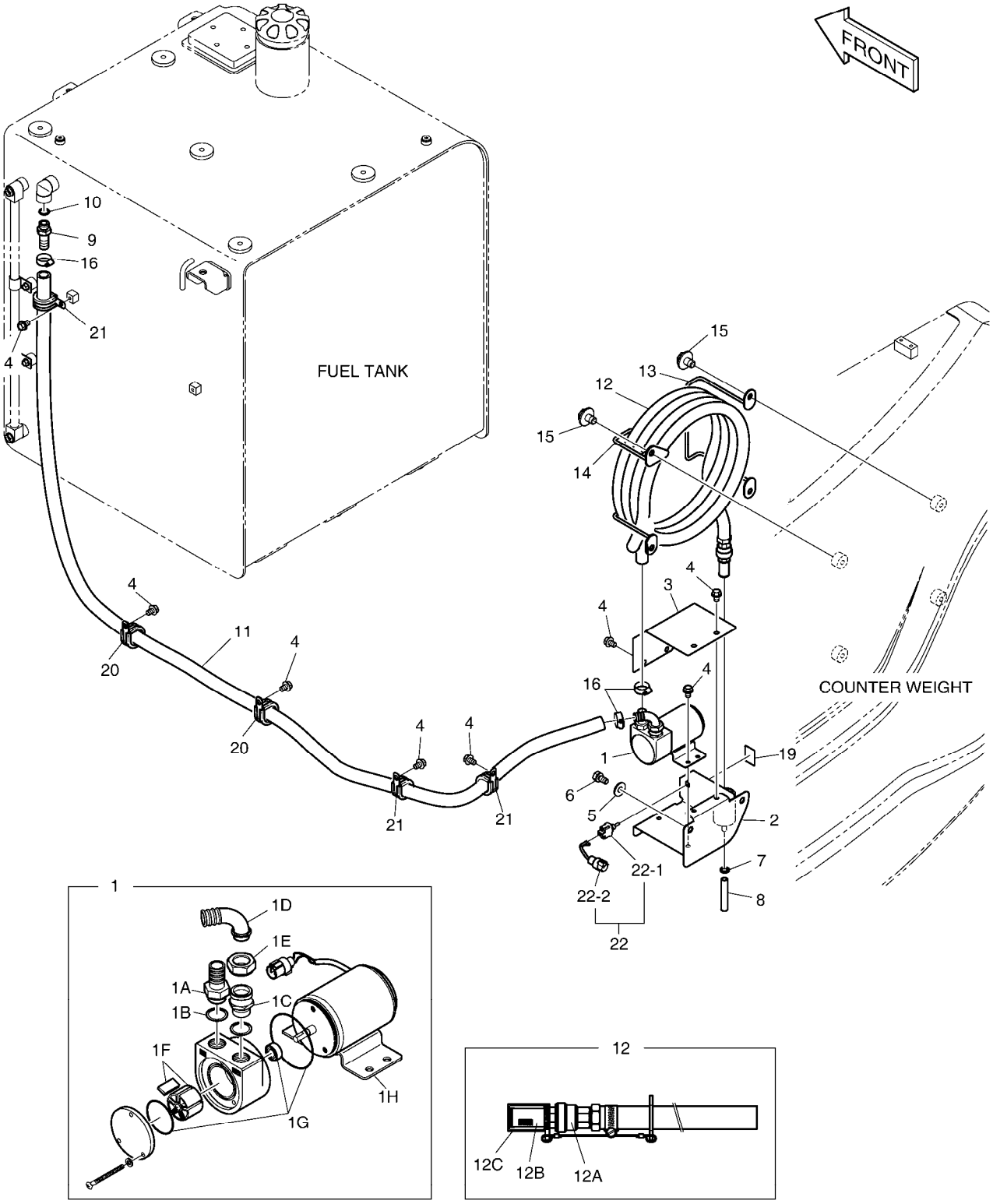

DATE	SEP. 12, 2012
4th EDITION	

Fig. 6100 FUEL FILLER PUMP POMPE

Serial No. ;

Key No.	Part No.	Description	Description	Q'ty	S.C	Serial No.	ICA	Replaceable part	
								Part No.	Q'ty
6100 --	K1000378B	FUEL FILLER PUMP ASS'Y	POMPE	-	D	5001-9367			
	400909-00073	FUEL FILLER PUMP ASS'Y	POMPE	-	D	9368-			
1	401-00449	PUMP;FUEL FILLER	POMPE	1					
1A	2181-2755B	. ADAPTER	. ADAPTEUR	1					
1B	S8180321	. RING;SEAL	. ANNEAU	2					
1C	181-00809	. ADAPTER	. ADAPTEUR	1					
1D	181-00810	. ELBOW	. COUDE	1					
1E	121-00085	. NUT	. ECROU	1					
1F	407-00001	. VANE KIT	. KIT DE PALETTE	1					
1G	2401-1276KT	. SEAL KIT	. KIT DE JOINT	1					
1H	523-00012	. MOTOR;FUEL TRANS. PUMP	. MOTEUR	1					
2	195-02662B	BRACKET	SUPPORT	1					
3	621-02739B	COVER	COUVERTURE	1					
4	K1001029	BOLT	BOULON	11					
5	2114-1058D72	WASHER;PLAIN	RONDELLE	2					
6	DS0025021	BOLT;SET	BOULON	2					
7	S8470014	CLAMP;HOSE	COLLIER	1					
8	DS2079153	HOSE	TUYAU	1		5001-9367	I	DS2105005	1
	DS2105005	HOSE	TUYAU FLEXIBLE	1		09368-10631			
	DS2105146	HOSE	TUYAU	1		10632-			
9	2181-2104D6	ADAPTER	ADAPTEUR	1					
10	S8000181	O-RING	JOINT CIRCULAIRE	1					
11	DS2079171	HOSE	TUYAU	1					
12	185-00167D3	HOSE ASS`Y	TUYAU FLEXIBLE	1					
12A	2420-1258	. VALVE;CHECK	. VALVE	1					
12B	2471-1152	. STRAINER	. TAMIS	1					
12C	2160-1336	. CAP;STRAINER	. CHAPEAU	1					
13	K1011080	BRACKET	SUPPORT	1					
14	K1011081	BRACKET	SUPPORT	1					
15	DS0025019	BOLT;SET	BOULON	4					
16	S8470032	CLAMP;HOSE	COLLIER	3					
19	190-01172	PLATE;NAME(FUEL PUMP)	PLAQUE	1					
20	124-00208D6	CLIP	AGRAFE	2					
21	124-00208D5	CLIP	ATTACHE	3					
22	K1024144	SWITCH;TOGGLE	COMMUTATEUR	1					
22-1	549-00093	. SWITCH	. COMMUTATEUR	1					
22-2	530-00214A	. HARNESS;JOINT	. HARNAIS	1					

DATE	SEP. 12, 2012
4th EDITION	

Fig. 6110 MAIN PIPING - ONE WAY
CONDUITES DE BATI PRINCIPAL

Serial No. ;

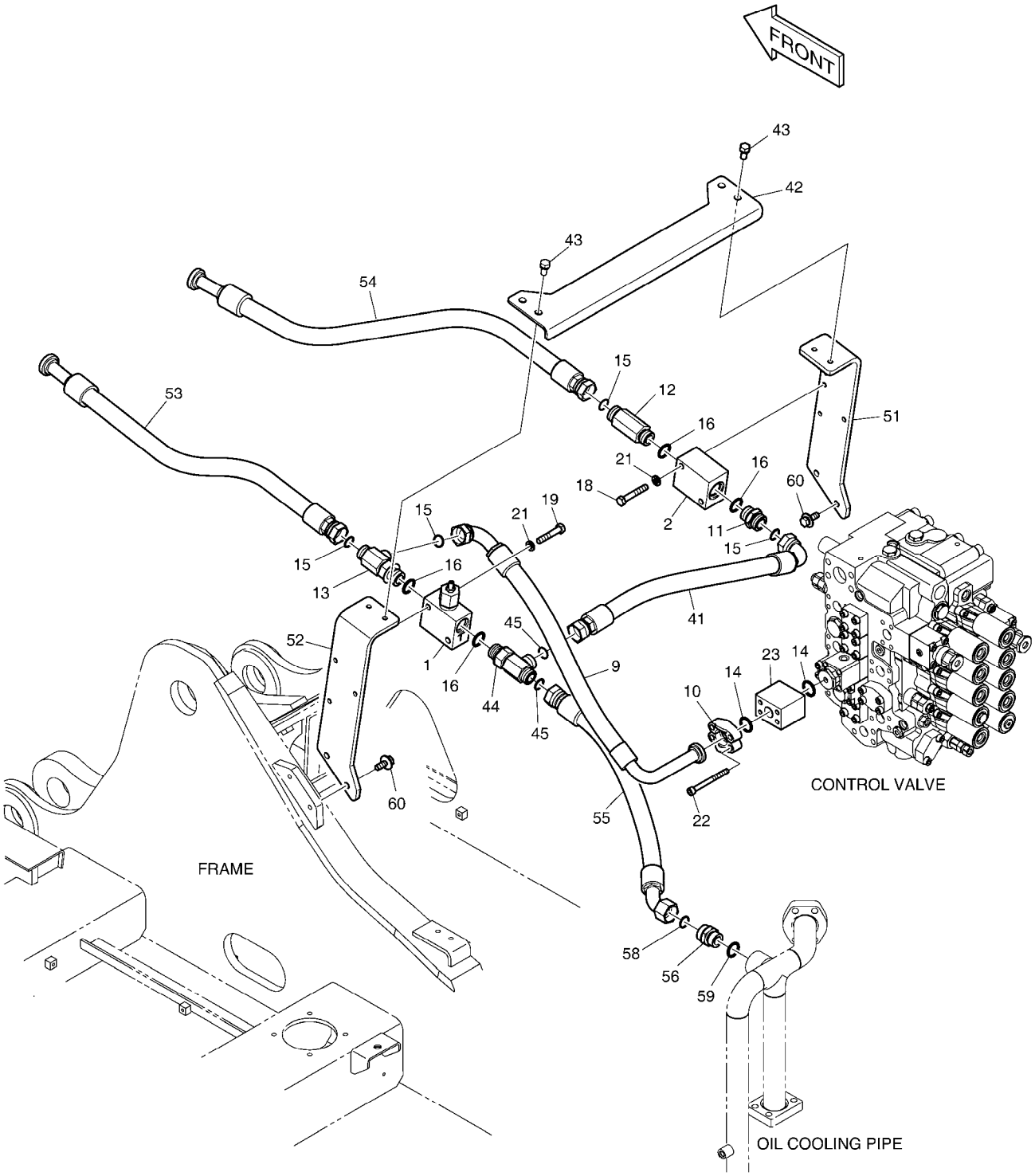

DATE	SEP. 12, 2012
4th EDITION	

Fig. 6110 MAIN PIPING - ONE WAY
CONDUITES DE BATI PRINCIPAL

Serial No. ;

Key No.	Part No.	Description	Description	Q'ty	S.C	Serial No.	ICA	Replaceable part	
								Part No.	Q'ty
6110 --	K1044599	MAIN PIPING-ONE WAY	CONDUITES DE BATI PRIN(	-	D	5001-5600			
	420212-00336	PIPING,MAIN;ONE WAY	CONDUITES DE BATI PRIN(	-	D	5601-			
1	426-00267A	VALVE;RELIEF	CLAPET DE RECHARGE	1		5001-5600	I	426-00267B	1
	426-00267B	VALVE;RELIEF	VANNE	1		5601-			
2	423-00193B	BLOCK	BLOC	1					
9	DS2026201	HOSE	TUYAU	1					
10	2181-9078	FLANGE	BRIDE	2					
11	2181-4133D6	ADAPTER	ADAPTEUR	1					
12	DS2232107	ADAPTER	ADAPTEUR	1					
13	2181-2293D4	TEE	TE	1					
14	2180-1026D19	O-RING	JOINT CIRCULAIRE	2					
15	S8030161	O-RING	JOINT CIRCULAIRE	4					
16	S8000291	O-RING	JOINT CIRCULAIRE	4					
18	S0561266	BOLT	BOULON	2					
19	S0561066	BOLT M12X1.75X65	BOULON A 6 PANS	2					
21	S5102703	WASHER;SPRING	RONDELLE	4					
22	S2213466	BOLT;SOCKET M10X90	BOULON	4					
23	2181-2170	BLOCK;SPACER	BLOC	1					
41	DS2013834	HOSE	TUYAU	1					
42	K1000358B	BRACKET	SUPPORT	1					
43	DS0025019	BOLT;SET	BOULON	4					
44	2181-2293D4	TEE	TE	1					
45	S8030161	O-RING	JOINT CIRCULAIRE	2					
51	195-03436B	BRACKET	SUPPORT	1					
52	195-03435B	BRACKET	SUPPORT	1					
53	DS2016055	HOSE	TUYAU	1					
54	DS2016055	HOSE	TUYAU	1					
55	DS2012300	HOSE	TUYAU	1					
56	2181-4133D6	ADAPTER	ADAPTEUR	1					
58	S8030161	O-RING	JOINT CIRCULAIRE	1					
59	S8000291	O-RING	JOINT CIRCULAIRE	1					
60	DS0025020	BOLT;SET	BOULON	4					

DATE	SEP. 12, 2012
4th EDITION	

Fig. 6120 ONE WAY PIPING - WITH FILTER
TUYAUTERIE A SENS UNIQUE

Serial No. ;

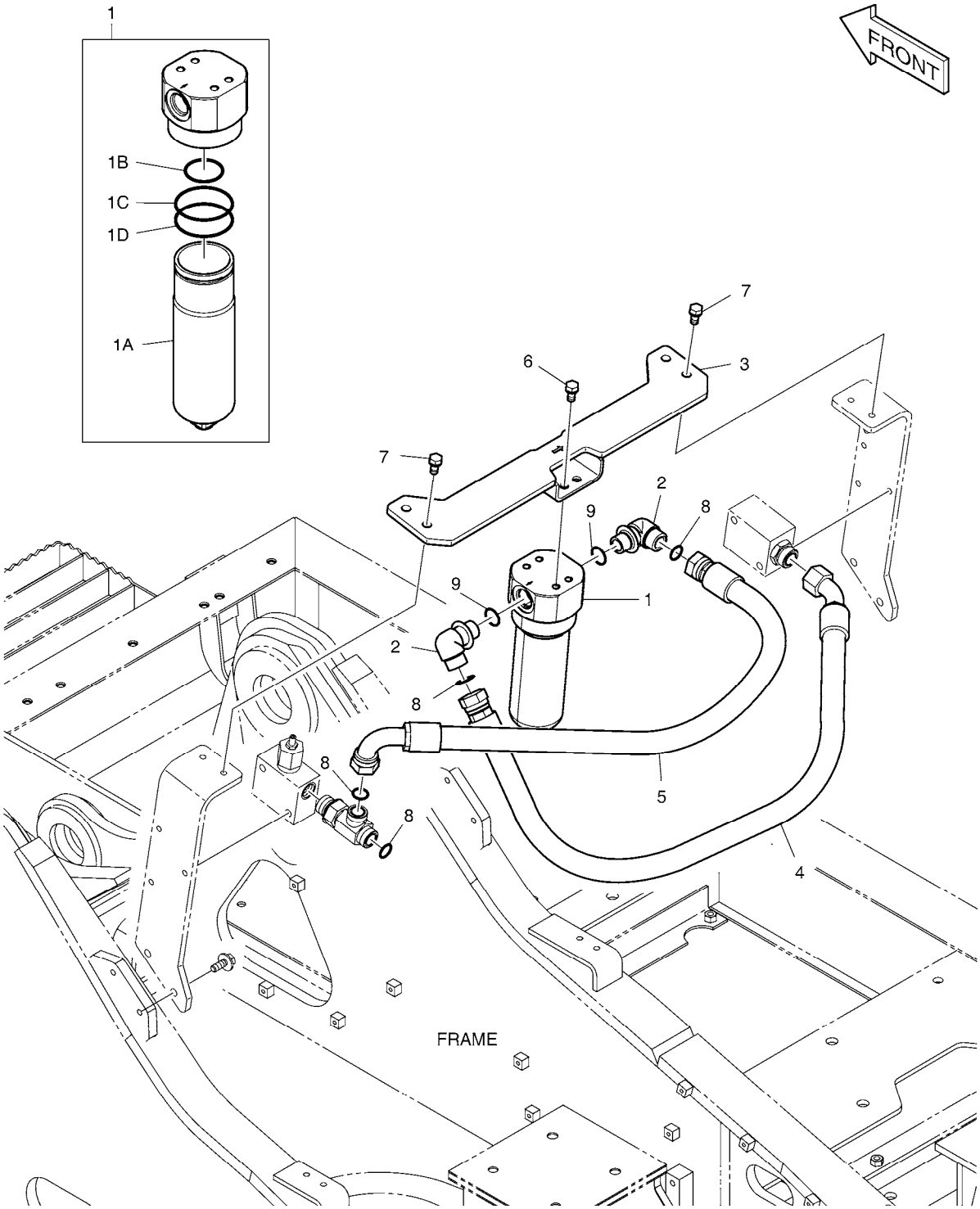

DATE	SEP. 12, 2012
4th EDITION	

Fig. 6120 ONE WAY PIPING - WITH FILTER TUYAUTERIE A SENS UNIQUE

Serial No. ;

Key No.	Part No.	Description	Description	Q'ty	S.C	Serial No.	ICA	Replaceable part	
								Part No.	Q'ty
6120 --	K1007293C	ONE WAY PIPING-WITH FILTER	TUYAUTERIE A SENS UNIQ	-	D				
1	471-00114	FILTER;BREAKER	FILTRE	1					
1A	474-00046	. ELEMENT;BREAKER FILTER	. ELEMENT	1					
1B	2180-1026D19	. O-RING	. JOINT CIRCULAIRE	1					
1C	S8010751	. O-RING	. JOINT TORIQUE	1					
1D	401003-00260	. RING,SUPPORT	. JOINT CIRCULAIRE	1					
2	2181-2815D1	ELBOW	COUDE	2					
3	195-03437E	BRACKET	SUPPORT	1					
4	DS2012217	HOSE	TUYAU	1					
5	DS2013220	HOSE	TUYAU	1					
6	DS0025021	BOLT;SET	BOULON	4					
7	DS0025018	BOLT;SET	BOULON	4					
8	S8030161	O-RING	JOINT CIRCULAIRE	4					
9	S8000291	O-RING	JOINT CIRCULAIRE	2					

DATE	SEP. 12, 2012
4th EDITION	

Fig. 6130 MAIN PIPING - TWO WAY
CONDUITES DE BATI PRINCIPAL

Serial No. ;

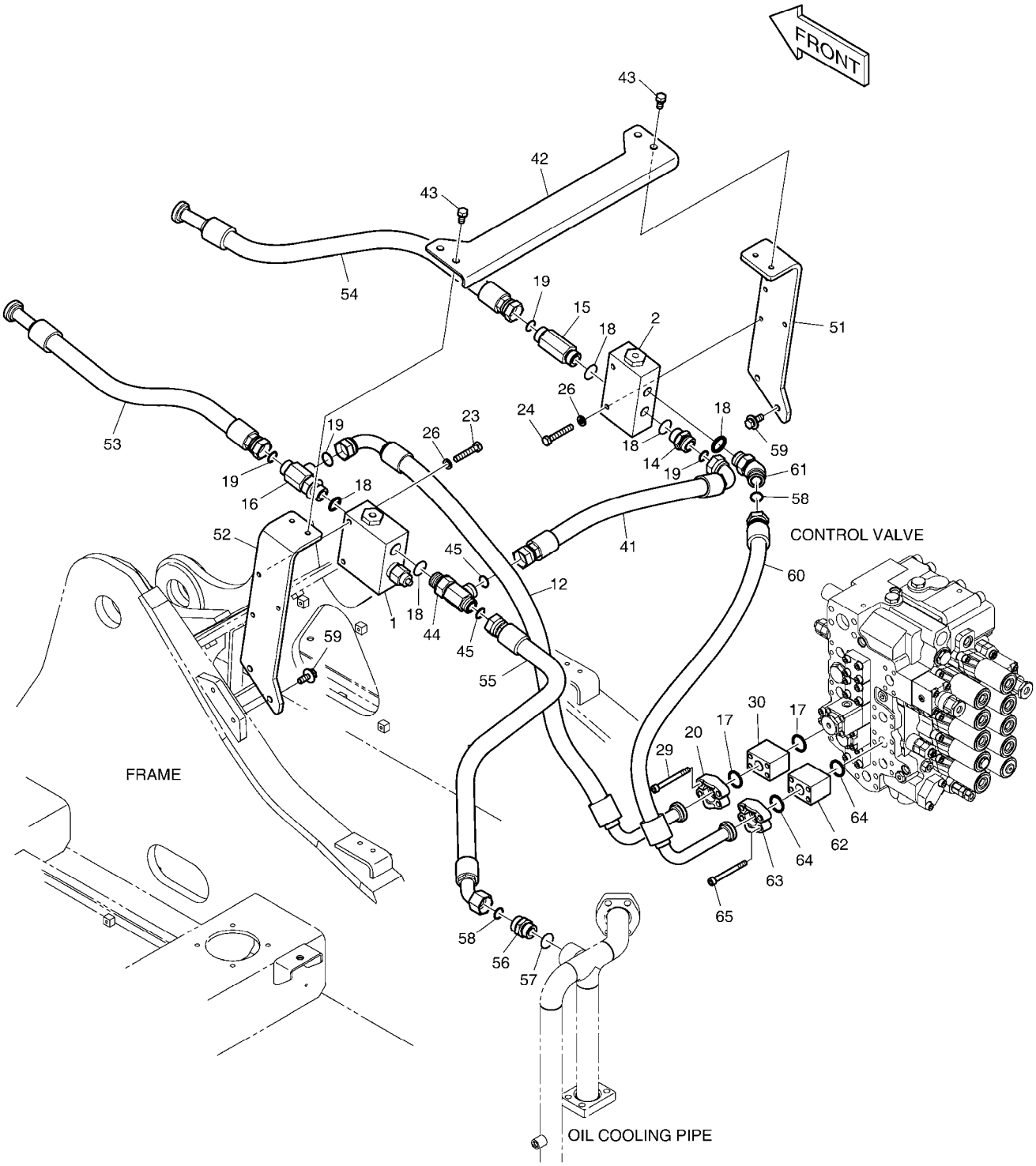

DATE	SEP. 12, 2012
4th EDITION	

Fig. 6130 MAIN PIPING - TWO WAY
CONDUITES DE BATI PRINCIPAL

Serial No. ;

Key No.	Part No.	Description	Description	Q'ty	S.C	Serial No.	ICA	Replaceable part	
								Part No.	Q'ty
6130 --	K1044602A	MAIN PIPING-TWO WAY	CONDUITES DE BATI PRIN(	-	D				
1	426-00248A	VALVE;SELECT	VANNE	1		05001-12020	Y	410132-00007	1
	410132-00007	VALVE;SELECT	VANNE	1		12021-			
2	426-00249A	VALVE;SELECT	VANNE	1		05001-12020	Y	410132-00008	1
	410132-00008	VALVE;SELECT	VANNE	1		12021-			
12	DS2026201	HOSE	TUYAU	1					
14	2181-4133D6	ADAPTER	ADAPTEUR	1					
15	DS2232107	ADAPTER	ADAPTEUR	1					
16	2181-2293D4	TEE	TE	1					
17	2180-1026D19	O-RING	JOINT CIRCULAIRE	2					
18	S8000291	O-RING	JOINT CIRCULAIRE	5					
19	S8030161	O-RING	JOINT CIRCULAIRE	4					
20	2181-9078	FLANGE	BRIDE	2					
23	S0561466	BOLT M12X1.75X85	BOULON	2					
24	S0561266	BOLT	BOULON	2					
26	S5102703	WASHER;SPRING	RONDELLE	4					
29	S2213466	BOLT;SOCKET M10X90	BOULON	4					
30	2181-2170	BLOCK;SPACER	BLOC	1					
41	DS2013834	HOSE	TUYAU	1					
42	K1000358B	BRACKET	SUPPORT	1					
43	DS0025019	BOLT;SET	BOULON	4					
44	2181-2293D4	TEE	TE	1					
45	S8030161	O-RING	JOINT CIRCULAIRE	2					
51	195-03436B	BRACKET	SUPPORT	1					
52	195-03435B	BRACKET	SUPPORT	1					
53	DS2016055	HOSE	TUYAU	1					
54	DS2016055	HOSE	TUYAU	1					
55	DS2012387	HOSE	TUYAU FLEXIBLE	1					
56	2181-4133D6	ADAPTER	ADAPTEUR	1					
57	S8000291	O-RING	JOINT CIRCULAIRE	1					
58	S8030161	O-RING	JOINT CIRCULAIRE	2					
59	DS0025020	BOLT;SET	BOULON	4					
60	DS2018201	HOSE	TUYAU	1		5001-5269			
	DS2018216	HOSE	TUYAU FLEXIBLE	1		5270-			
61	2181-2816D2	ELBOW	COUDE	1					
62	2181-2170	BLOCK;SPACER	BLOC	1					
63	2181-9078	FLANGE	BRIDE	2					
64	2180-1026D19	O-RING	JOINT CIRCULAIRE	2					

DATE	SEP. 12, 2012
4th EDITION	

Fig. 6130 MAIN PIPING - TWO WAY
CONDUITES DE BATI PRINCIPAL

Serial No. ;

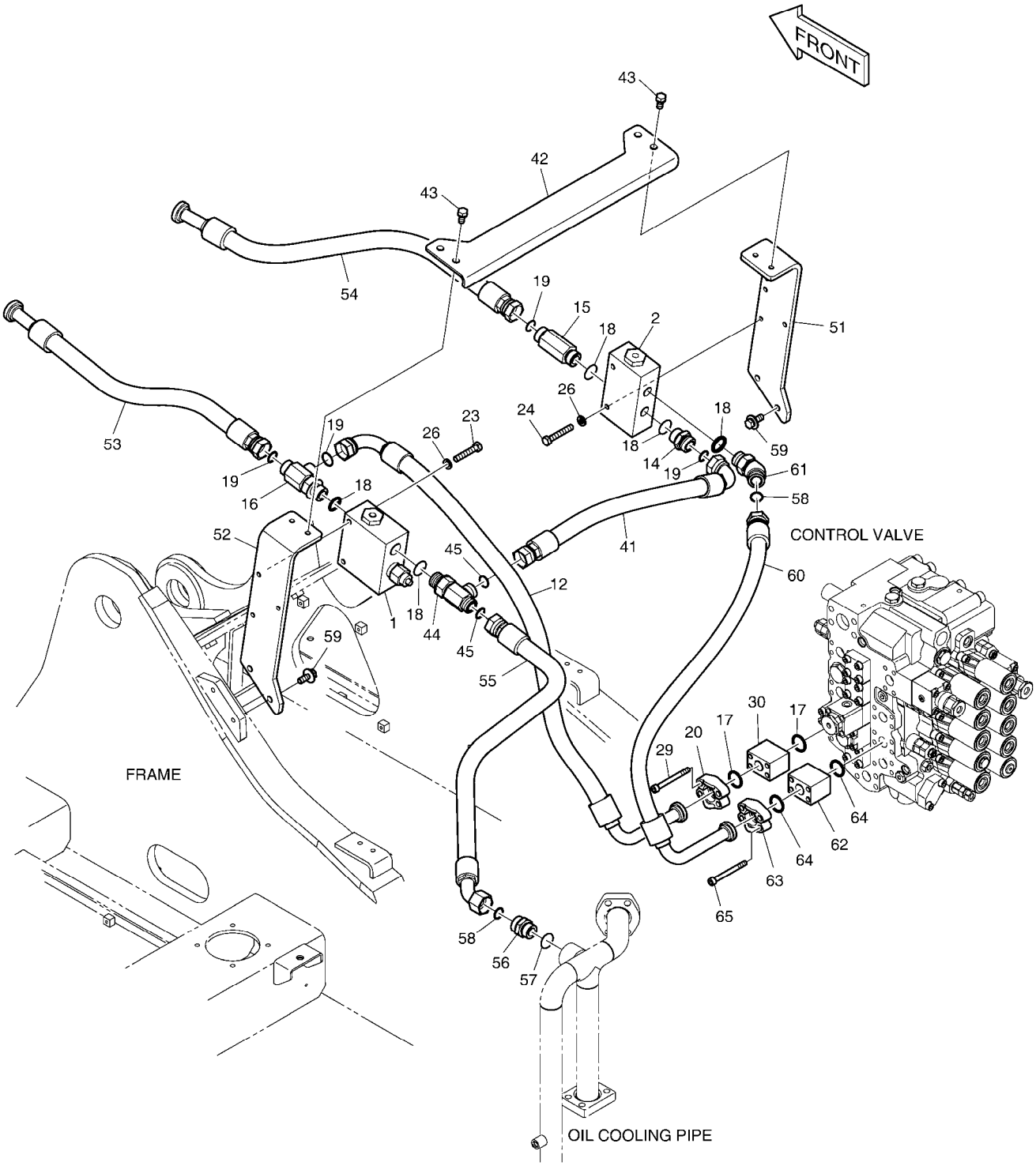

DATE	SEP. 12, 2012
4th EDITION	

Fig. 6130 MAIN PIPING - TWO WAY
CONDUITES DE BATI PRINCIPAL

Serial No. ;

Key No.	Part No.	Description	Description	Q'ty	S.C	Serial No.	ICA	Replaceable part	
								Part No.	Q'ty
6130 -65	S2213466	BOLT;SOCKET M10X90	BOULON	4					

DATE	SEP. 12, 2012
4th EDITION	

Fig. 6140 TWO WAY PIPING - WITH FILTER
TUYAUTERIE DE DEUX MANIERES

Serial No. ;

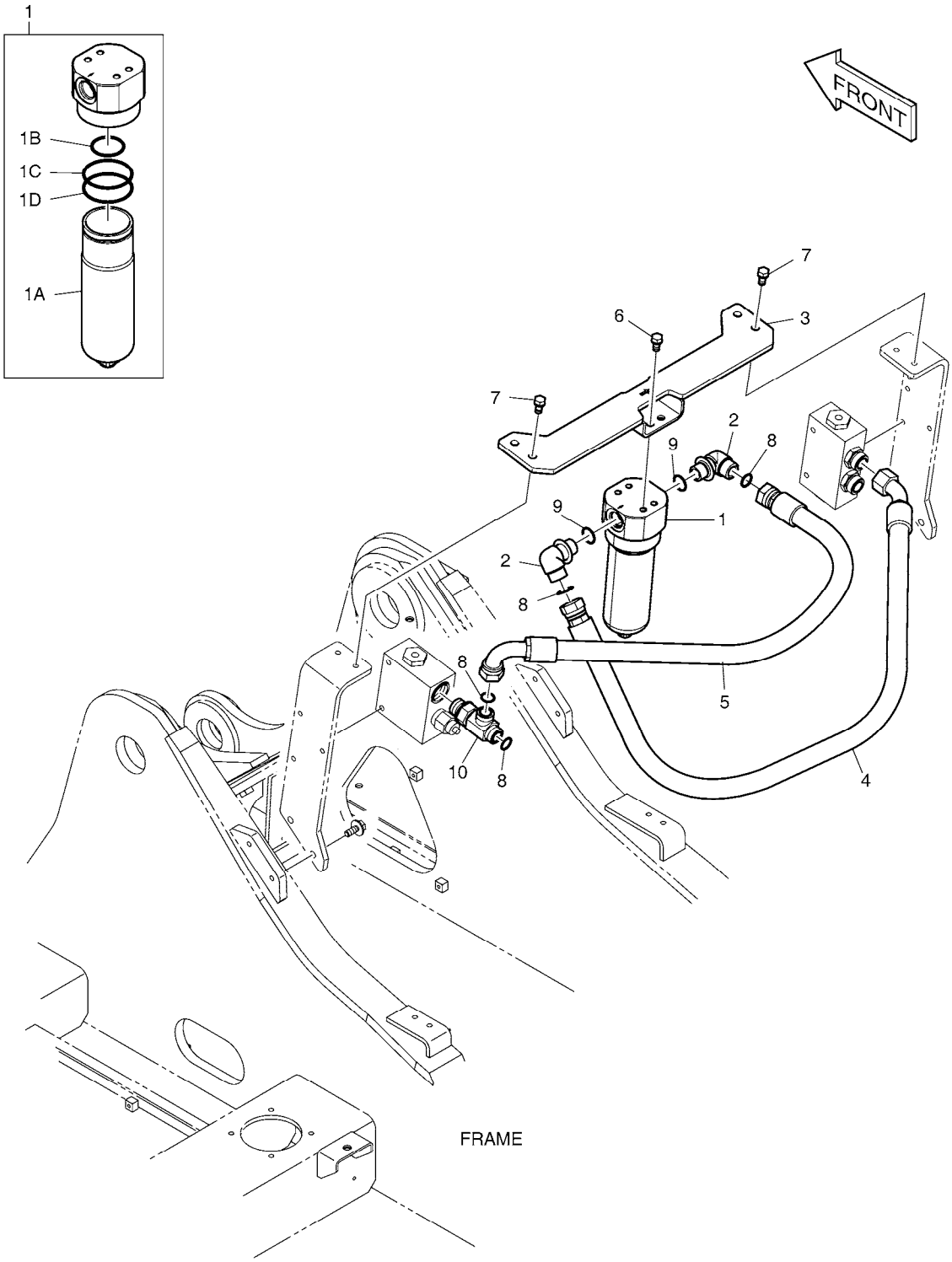

DATE	SEP. 12, 2012
4th EDITION	

Fig. 6140 TWO WAY PIPING - WITH FILTER
TUYAUTERIE DE DEUX MANIERES

Serial No. ;

Key No.	Part No.	Description	Description	Q'ty	S.C	Serial No.	ICA	Replaceable part	
								Part No.	Q'ty
6140 --	K1000097E	TWO WAY PIPING-WITH FILTER	TUYAUTERIE DE DEUX MA	-	D				
1	471-00114	FILTER;BREAKER	FILTRE	1					
1A	474-00046	. ELEMENT;BREAKER FILTER	. ELEMENT	1					
1B	2180-1026D19	. O-RING	. JOINT CIRCULAIRE	1					
1C	S8010751	. O-RING	. JOINT TORIQUE	1					
1D	401003-00260	. RING,SUPPORT	. JOINT CIRCULAIRE	1					
2	2181-2815D1	ELBOW	COUDE	2					
3	195-03437E	BRACKET	SUPPORT	1					
4	DS2012217	HOSE	TUYAU	1					
5	DS2013220	HOSE	TUYAU	1					
6	DS0025021	BOLT;SET	BOULON	4					
7	DS0025018	BOLT;SET	BOULON	4					
8	S8030161	O-RING	JOINT CIRCULAIRE	4					
9	S8000291	O-RING	JOINT CIRCULAIRE	2					
10	2181-2293D4	TEE	TE	1					

DATE	SEP. 12, 2012
4th EDITION	

Fig. 6150 PILOT PIPING - ONE OR TWO WAY CONDUITES DE PILOTE

Serial No. ; 5001 ~ 7754

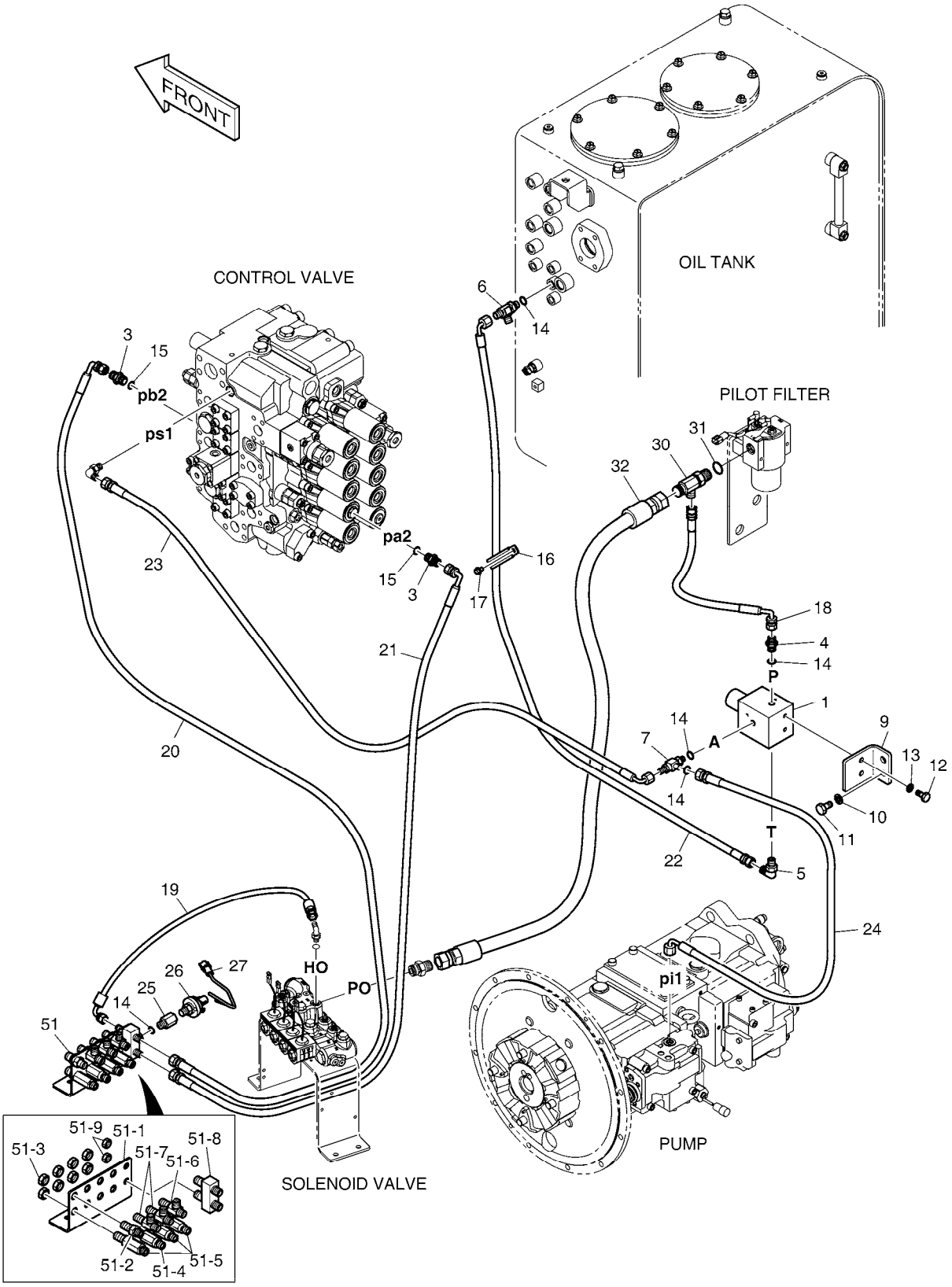

DATE	SEP. 12, 2012
4th EDITION	

Fig. 6150 PILOT PIPING - ONE OR TWO WAY CONDUITES DE PILOTE

Serial No. ; 5001 ~ 7754

Key No.	Part No.	Description	Description	Q'ty	S.C	Serial No.	ICA	Replaceable part	
								Part No.	Q'ty
6150 --	K1044672	PILOT PIPING-ONE & TWO WAY	CONDUITES DE PILOTE	-	D				
1	426-00266	VALVE;EPPR	VANNE	1					
3	2181-1126D36	ADAPTER	ADAPTEUR	2					
4	2471-1133	ADAPTER;FILTER	ADAPTEUR	1					
5	2181-1702D4	ELBOW	COUDE	1					
6	2181-1951D1	TEE	TE	1					
7	181-00779	TEE;SHUTTLE	TE	1					
9	195-02711B	BRACKET	SUPPORT	1					
10	S5102603	WASHER,SPRING	RONDELLE	2					
11	S0511866	BOLT	BOULON	2					
12	S0508766	BOLT	BOULON	2					
13	S5102503	WASHER,SPRING	RONDELLE	2					
14	S8000111	O-RING	JOINT TORIQUE	5					
15	S8000141	O-RING	JOINT TORIQUE	2					
16	124-00208D6	CLIP	AGRAFE	1					
17	K1001029	BOLT	BOULON	1					
18	DS2093115	HOSE	TUYAU FLEXIBLE	1					
19	DS2093027	HOSE PF1/4-500L	TUYAU FLEXIBLE	1					
20	DS2093021	HOSE	TUYAU	1					
21	DS2093044	HOSE	TUYAU	1					
22	DS2093124	HOSE	TUYAU FLEXIBLE	1					
23	DS2093114	HOSE	TUYAU FLEXIBLE	1					
24	DS2093090	HOSE	TUYAU FLEXIBLE	1					
25	DS2242017	REDUCER	REDUCTEUR	1					
26	549-00010	SWITCH;PRESSURE	COMMUTATEUR	1					
27	530-00067	HARNESS	HARNAIS	1					
30	2181-1951D19	TEE	TE	1					
31	S8000181	O-RING	JOINT CIRCULAIRE	1					
32	DS2054336	HOSE PF1/2-1760L	TUYAU FLEXIBLE	1					
51	K1044992	JOINT PLATE SUB ASS`Y	SOUS-MARIN COMMUN AS	1		5001-5626	Y	430216-00006	1
	430216-00006	JOINT PLATE SUB ASS`Y	SOUS-MARIN COMMUN AS	1		5627-			
51-1	K1000354	. BRACKET;JOINT	. SUPPORT	1					
51-2	181-00078D1	. ADAPTER	. ADAPTEUR	1					
51-3	121-00010D1	. NUT	. ECROU	8					
51-4	420-00352D1	. VALVE;SHOCKLESS	. VANNE	1					
51-5	DS2410009	. ADAPTER	. ADAPTEUR	3					
51-6	181-00086D1	. TEE	. TE	1					
51-7	181-00086D2	. TEE	. TE	2					

DATE	SEP. 12, 2012
4th EDITION	

Fig. 6150 PILOT PIPING - ONE OR TWO WAY CONDUITES DE PILOTE

Serial No. ; 5001 ~ 7754

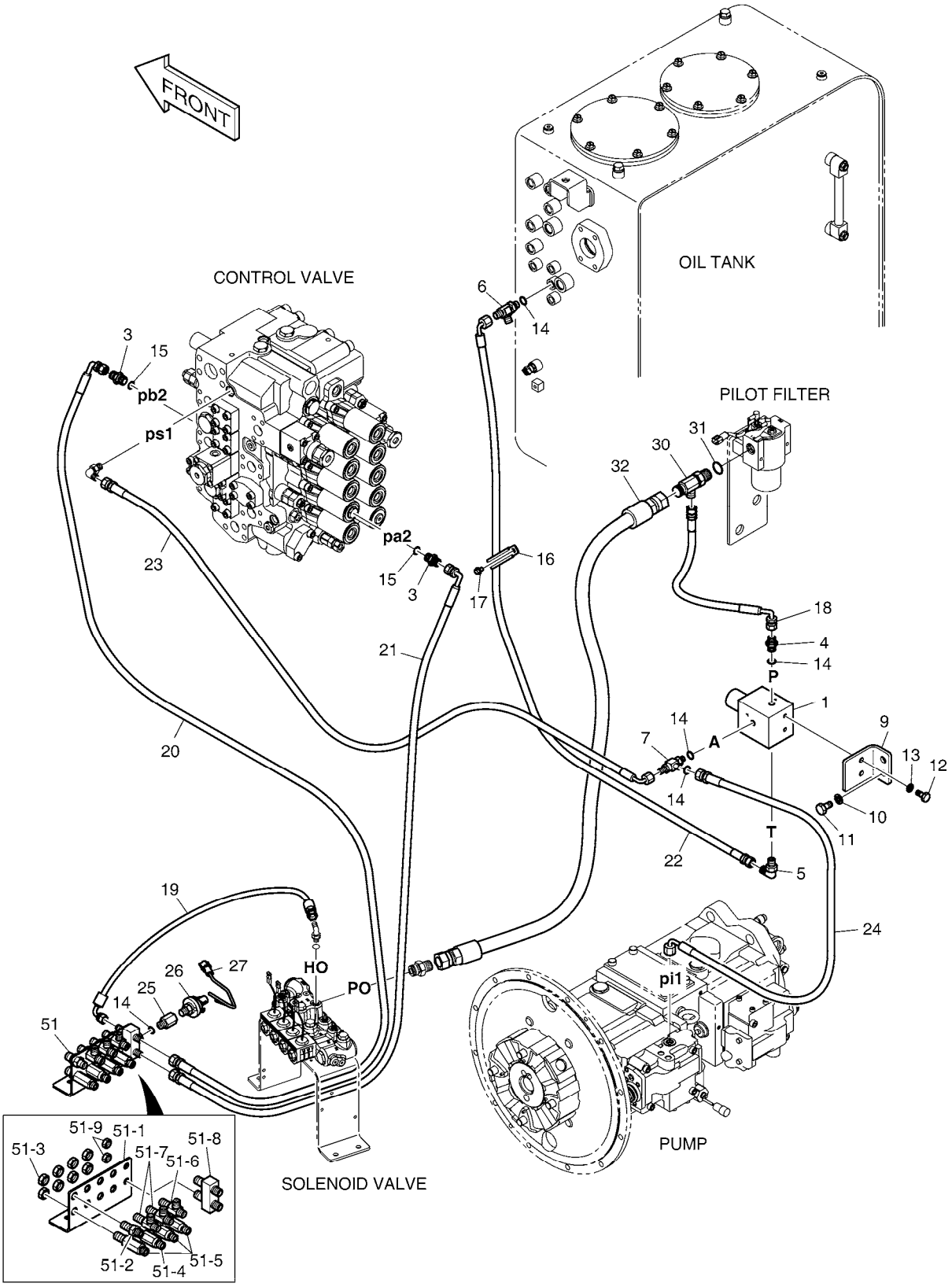

DATE	SEP. 12, 2012
4th EDITION	

Fig. 6150 PILOT PIPING - ONE OR TWO WAY
CONDUITES DE PILOTE

Serial No. ; 5001 ~ 7754

Key No.	Part No.	Description	Description	Q'ty	S.C	Serial No.	ICA	Replaceable part	
								Part No.	Q'ty
6150 -51-8	420-00476	. VALVE;SHUTTLE	. VANNE	1					
51-9	121-00010D7	. NUT	. ECROU	2					

DATE	SEP. 12, 2012
4th EDITION	

Fig. 6151 PILOT PIPING - ONE OR TWO WAY CONDUITES DE PILOTE

Serial No. ; 7755 ~

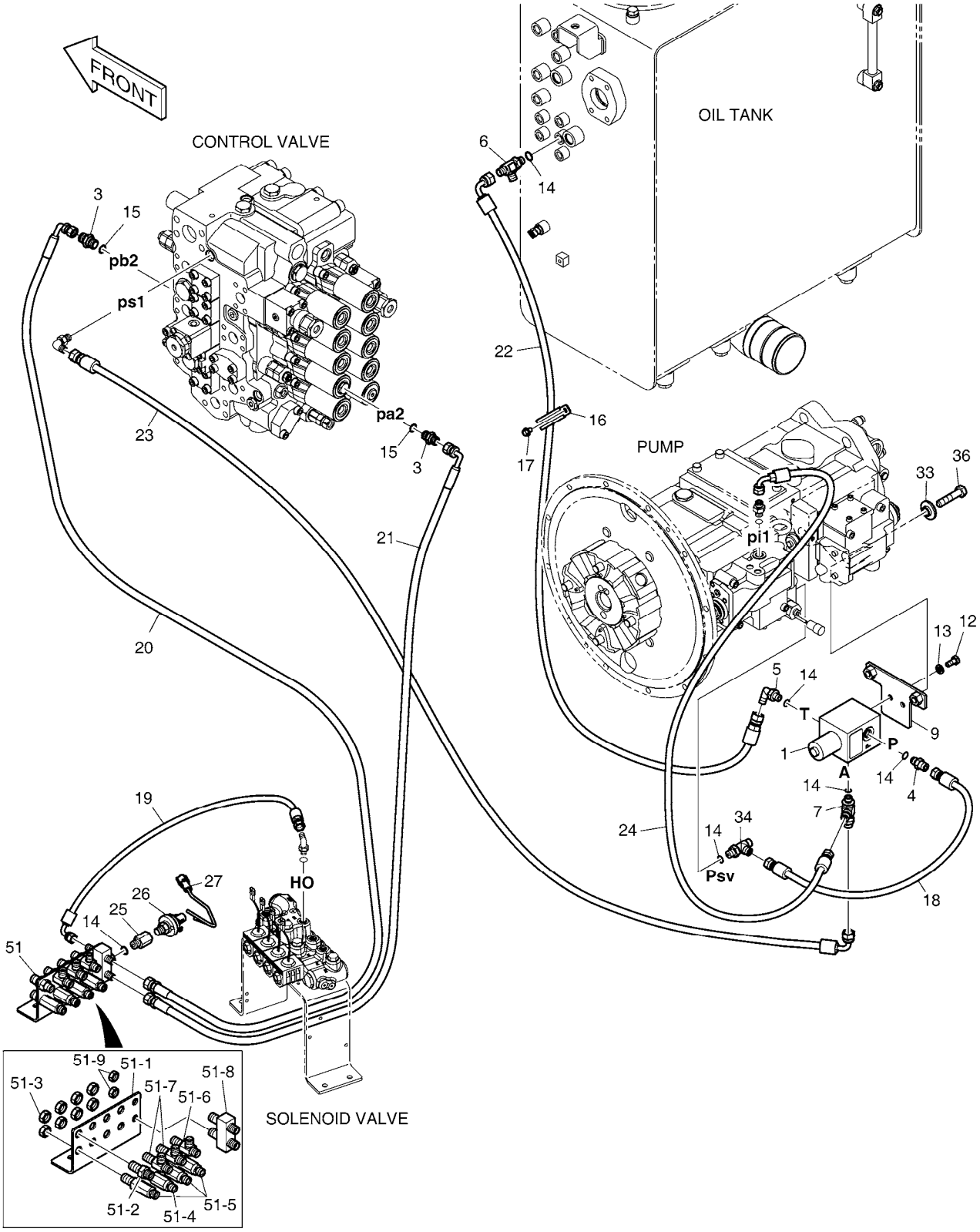

DATE	SEP. 12, 2012
4th EDITION	

Fig. 6151 PILOT PIPING - ONE OR TWO WAY CONDUITES DE PILOTE

Serial No. ; 7755 ~

Key No.	Part No.	Description	Description	Q'ty	S.C	Serial No.	ICA	Replaceable part	
								Part No.	Q'ty
6151 --	K1044672A	PILOT PIPING-ONE & TWO WAY	CONDUITES DE PILOTE	-	D				
1	426-00266	VALVE;EPPR	VANNE	1					
3	2181-1126D36	ADAPTER	ADAPTEUR	2					
4	2471-1133	ADAPTER;FILTER	ADAPTEUR	1					
5	2181-1702D4	ELBOW	COUDE	1					
6	2181-1951D1	TEE	TE	1					
7	181-00779	TEE;SHUTTLE	TE	1					
9	110425-00065	BRACKET,EPPR VALVE	SUPPORT	1					
12	S0508766	BOLT	BOULON	2					
13	S5102503	WASHER,SPRING	RONDELLE	2					
14	S8000111	O-RING	JOINT TORIQUE	6					
15	S8000141	O-RING	JOINT TORIQUE	2					
16	124-00208D6	CLIP	AGRAFE	1					
17	K1001029	BOLT	BOULON	1					
18	2184-1045D177	HOSE PF1/4-510	TUYAU FLEXIBLE	1					
19	DS2093040	HOSE	TUYAU FLEXIBLE	1					
20	DS2093021	HOSE	TUYAU	1					
21	DS2093044	HOSE	TUYAU	1					
22	2184-1046D169	HOSE PF1/4-1600L	TUYAU FLEXIBLE	1					
23	DS2055788	HOSE PF1/4-2050L	TUYAU FLEXIBLE	1					
24	2184-1046D68	HOSE PF1/4-600L	TUYAU FLEXIBLE	1					
25	DS2242017	REDUCER	REDUCTEUR	1					
26	549-00010	SWITCH;PRESSURE	COMMUTATEUR	1					
27	530-00067	HARNESS	HARNAIS	1					
33	110951-00128	SPACER	BAGUE	2					
34	2181-1951D1	TEE	TE	1					
36	S0560866	BOLT M12X1.75X55	BOULON	2					
51	430216-00006	JOINT PLATE SUB ASS`Y	SOUS-MARIN COMMUN AS	1					
51-1	K1000354	. BRACKET;JOINT	. SUPPORT	1					
51-2	181-00078D1	. ADAPTER	. ADAPTEUR	1					
51-3	121-00010D1	. NUT	. ECROU	8					
51-4	420-00352D1	. VALVE;SHOCKLESS	. VANNE	1					
51-5	DS2410009	. ADAPTER	. ADAPTEUR	3					
51-6	181-00086D1	. TEE	. TE	1					
51-7	181-00086D2	. TEE	. TE	2					
51-8	420-00476	. VALVE;SHUTTLE	. VANNE	1					
51-9	121-00010D7	. NUT	. ECROU	2					

DATE	SEP. 12, 2012
4th EDITION	

Fig. 6155 PILOT PIPING - ONE WAY
CONDUITES DE PILOTE

Serial No. ;

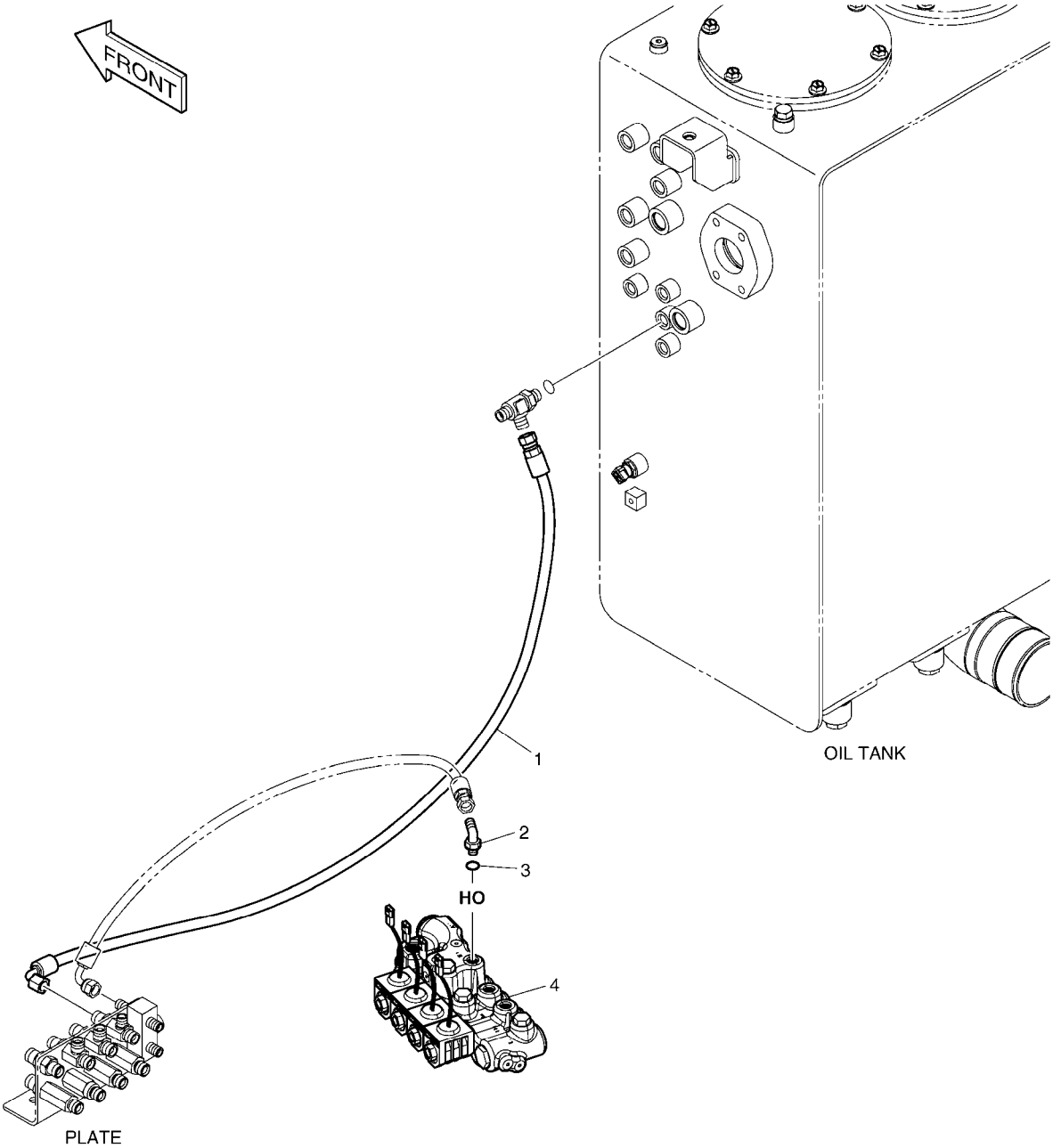

DATE	SEP. 12, 2012
4th EDITION	

Fig. 6155 PILOT PIPING - ONE WAY CONDUITES DE PILOTE

Serial No. ;

Key No.	Part No.	Description	Description	Q'ty	S.C	Serial No.	ICA	Replaceable part	
								Part No.	Q'ty
6155 --	K1044715A	PILOT PIPING;ONE WAY	CONDUITES DE PILOTE	-	D				
1	DS2093391	HOSE	TUYAU FLEXIBLE	1					
2	2181-1702D4	ELBOW	COUDE	1					
3	S8000111	O-RING	JOINT TORIQUE	1					
4	K1047556	VALVE;SOLENOID	SOUPAPE A SOLENOIDE	1					

DATE	SEP. 12, 2012
4th EDITION	

Fig. 6160 PILOT PIPING - TWO WAY(1) CONDUITES DE PILOTE

Serial No. ;

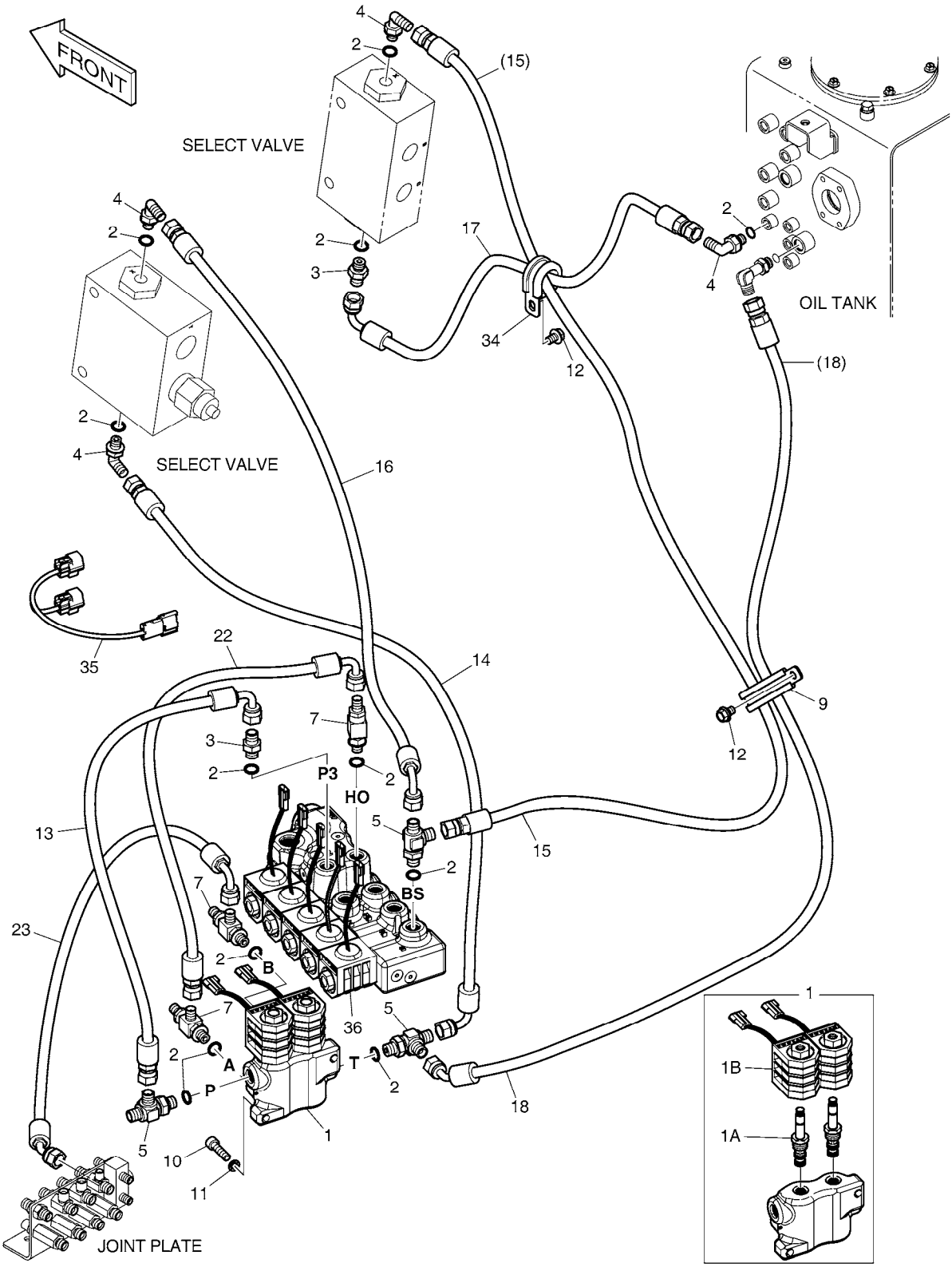

DATE	SEP. 12, 2012
4th EDITION	

Fig. 6160 PILOT PIPING - TWO WAY(1) CONDUITES DE PILOTE

Serial No. ;

Key No.	Part No.	Description	Description	Q'ty	S.C	Serial No.	ICA	Replaceable part	
								Part No.	Q'ty
6160 --	K1044674C	PILOT PIPING;TWO WAY	CONDUITES DE PILOTE	-	D				
1	426-00247B	VALVE;SOLENOID	SOUPAPE A SOLENOIDE	1					
1A	K9007363	. SPOOL;SOLENOID	. PLUNGEUR	2					
1B	1.519-00001	. COIL 24V	. ENROULEMENT	2					
2	S8000111	O-RING	JOINT TORIQUE	11					
3	2181-1126D14	ADAPTER	ADAPTEUR	2					
4	2181-1702D4	ELBOW	COUDE	4					
5	2181-1951D1	TEE	TE	3					
7	181-00779	TEE;SHUTTLE	TE	3					
9	124-00208D6	CLIP	AGRAFE	1					
10	S2209266	BOLT;SOCKET M8X1.25X30	BOULON A 6 PANS CREUX	2					
11	S5110503	WASHER;SPRING	RONDELLE	2					
12	K1001029	BOLT	BOULON	2					
13	DS2093035	HOSE PF1/4-350L	TUYAU FLEXIBLE	1					
14	DS2093193	HOSE	TUYAU	1					
15	DS2094327	HOSE PF1/4-2320L	TUYAU FLEXIBLE	1					
16	DS2093256	HOSE	TUYAU FLEXIBLE	1					
17	DS2093028	HOSE	TUYAU FLEXIBLE	1					
18	DS2092045	HOSE	TUYAU	1					
22	DS2093202	HOSE PF1/4-480L	TUYAU FLEXIBLE	1					
23	DS2090008	HOSE	TUYAU FLEXIBLE	1					
34	124-00208D4	CLIP	ATTACHE	1					
35	K1000816	HARNESS	HARNAIS	1		5001-5229			
	K1003638B	HARNESS;JOINT	HARNAIS	1		5230-			
36	K1045023	VALVE;SOLENOID	SOUPAPE A SOLENOIDE	1					

DATE	SEP. 12, 2012
4th EDITION	

Fig. 6170 PILOT PIPING - TWO WAY(2) CONDUITES DE PILOTE

Serial No. ;

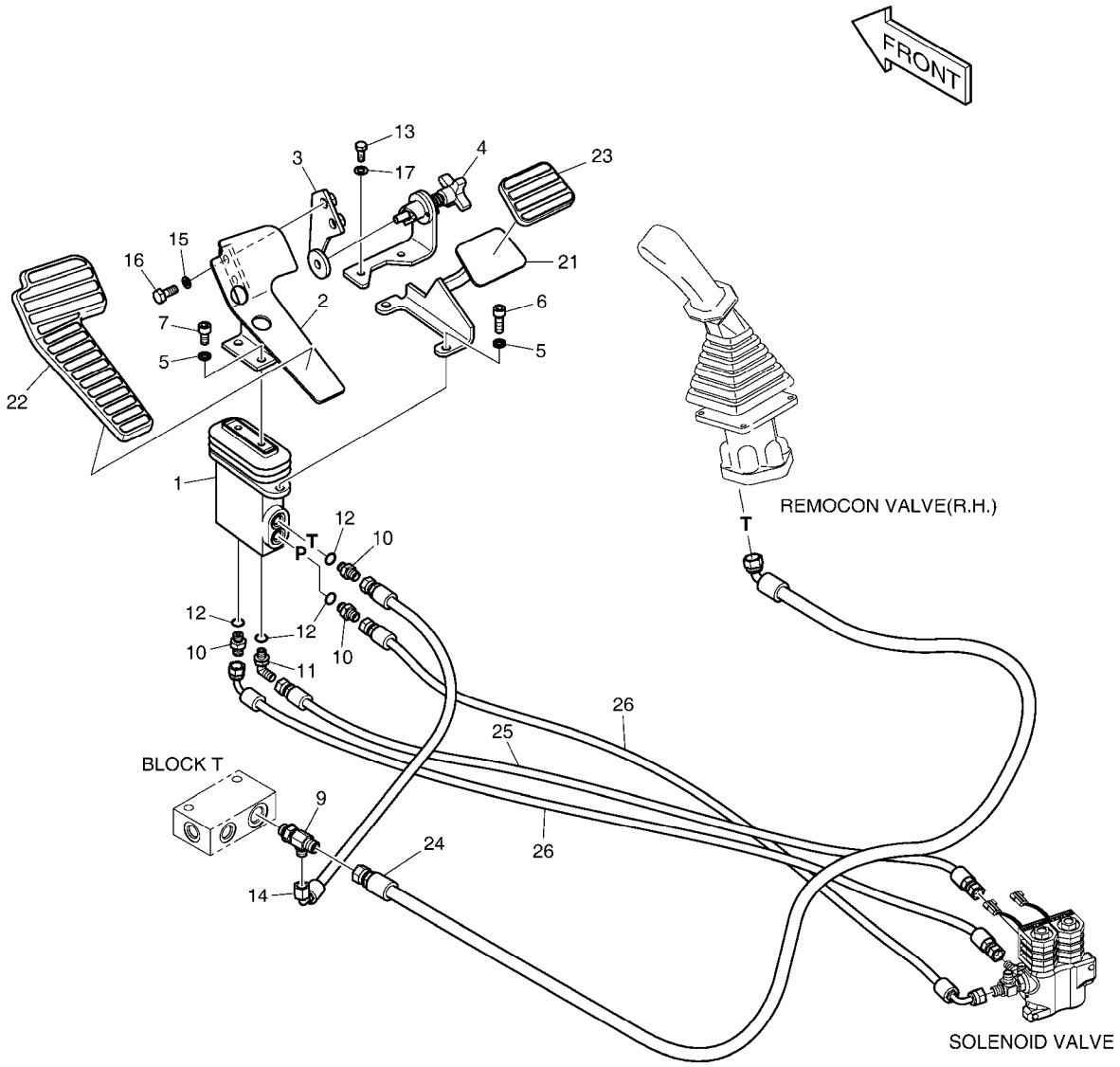

DATE	SEP. 12, 2012
4th EDITION	

Fig. 6170 PILOT PIPING - TWO WAY(2) CONDUITES DE PILOTE

Serial No. ;

Key No.	Part No.	Description	Description	Q'ty	S.C	Serial No.	ICA	Replaceable part	
								Part No.	Q'ty
6170 --	K1044710A	PILOT PIPING-TWO WAY(2)	CIRCUIT DE PILOTE	-	D				
1	K1017382A	PEDAL VALVE	VALVE DE PEDALE	1					
2	195-01683A	BRACKET;PEDAL(R.H)	SUPPORT	1					
3	K1000695A	PLATE	PLAQUE	1					
4	K1000696B	LOCK ASS'Y	SERRURE	1					
5	S5110603	WASHER;SPRING	RONDELLE	4					
6	S2212266	BOLT;SOCKET M10X1.5X30	BOULON A 6 PANS CREUX	2					
7	S2211866	BOLT;SOCKET	BOULON	2					
9	2181-1951D6	TEE	TE	1					
10	2181-1126D14	ADAPTER	ADAPTEUR	3					
11	2181-1702D4	ELBOW	COUDE	1					
12	S8000111	O-RING	JOINT TORIQUE	4					
13	S0508866	BOLT	BOULON	2					
14	DS2093200	HOSE	TUYAU	1					
15	S5102603	WASHER,SPRING	RONDELLE	2					
16	S0512066	BOLT M10X1.5X25	BOULON	2					
17	S5102503	WASHER,SPRING	RONDELLE	2					
21	K1003947A	FOOT REST	REPOS DE PIED	1					
22	161-00381	RUBBER;PEDAL(R.H)	LE CAOUTCHOUC	1					
23	K1006656	RUBBER;PEDAL	LE CAOUTCHOUC	1					
24	DS2095003	HOSE	TUYAU	1					
25	DS2094136	HOSE	TUYAU	1					
26	DS2093219	HOSE	TUYAU FLEXIBLE	2					

DATE	SEP. 12, 2012
4th EDITION	

Fig. 6180 BOOM PIPING - BOOM 5.7m(ONE & TWO WAY) CONDUITES DE FLECHE

Serial No. ;

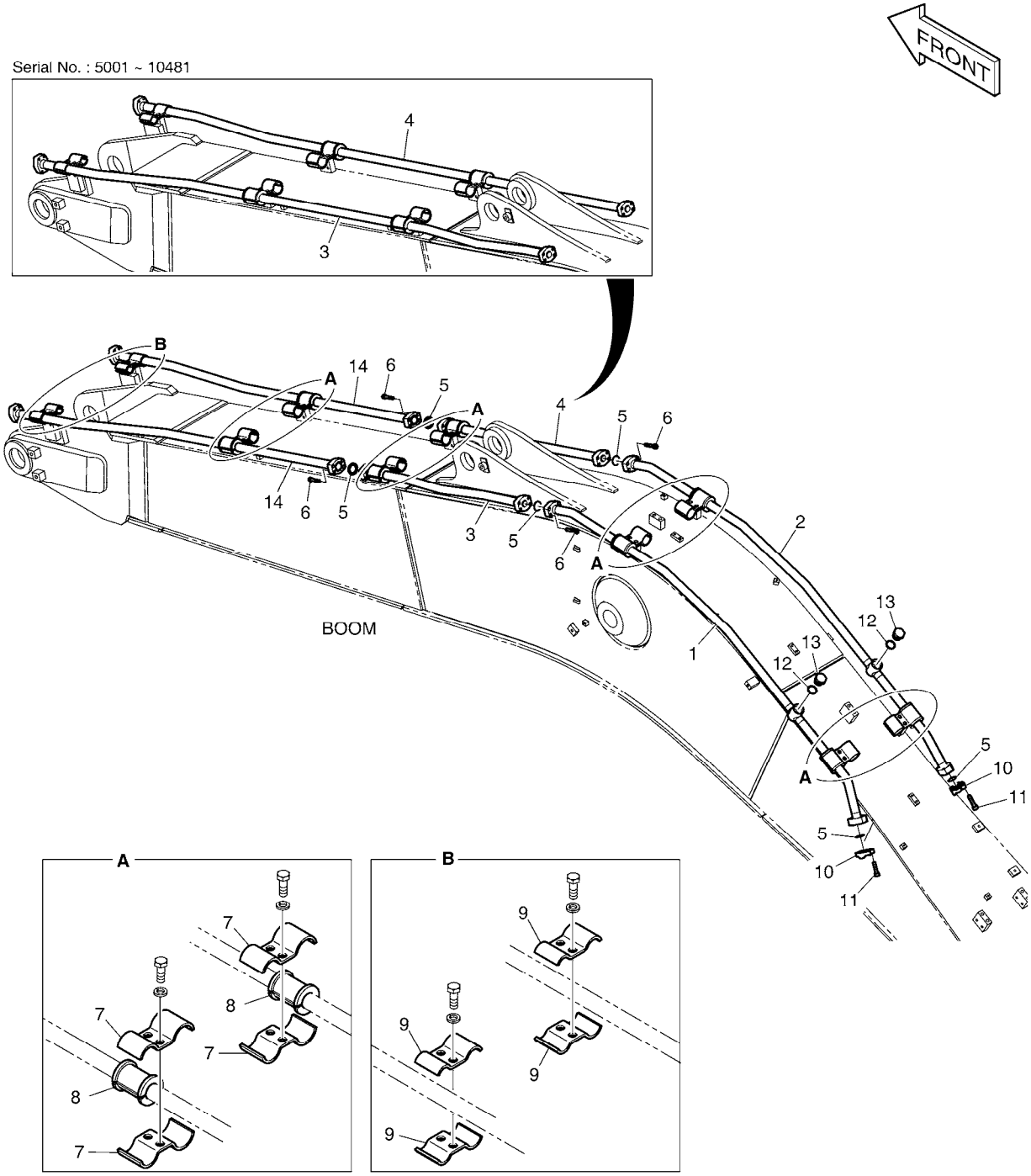

DATE	SEP. 12, 2012
4th EDITION	

Fig. 6180 BOOM PIPING - BOOM 5.7m(ONE & TWO WAY) CONDUITES DE FLECHE

Serial No. ;

Key No.	Part No.	Description	Description	Q'ty	S.C	Serial No.	ICA	Replaceable part	
								Part No.	Q'ty
6180 --	K1041835	BOOM PIPING;ONE & TWO WAY	TUYAUTERIE DE PERCHE	-	D	05433-10481			
	420212-06762	PIPING,BOOM;ONE OR TWO WAY	TUYAUTERIE DE PERCHE	-	D	10482-			
1	K1033269	PIPE	TUYAU	1					
2	K1033270	PIPE	TUYAU	1					
3	K1033271	PIPE	TUYAU	1		05433-10481			
	420207-01840	PIPE ASSY,HYDRAULIC	TUYAU	1		10482-			
4	K1033272	PIPE	TUYAU	1		05433-10481			
	420207-01841	PIPE ASSY,HYDRAULIC	TUYAU	1		10482-			
5	2180-1026D19	O-RING	JOINT CIRCULAIRE	4		05433-10481			
	2180-1026D19	O-RING	JOINT CIRCULAIRE	6		10482-			
6	S2212666	BOLT	BOULON	8		05433-10481			
	S2212666	BOLT	BOULON	16		10482-			
7	124-00368	CLAMP;PIPE	BRIDE	16					
8	161-00281	RUBBER	LE CAOUTCHOUC	8					
9	124-00367	CLAMP;PIPE	BRIDE	4					
10	2181-9078	FLANGE	BRIDE	4					
11	S2212466	BOLT;SOCKET M10X1.5X40	BOULON	8					
12	S8000291	O-RING	JOINT CIRCULAIRE	2					
13	2181-1950D9	PLUG	BOUCHON	2					
14	420207-01842	PIPE ASSY,HYDRAULIC	TUYAU	2		10482-			

DATE	SEP. 12, 2012
4th EDITION	

Fig. 6190 ARM PIPING - ARM 2.9m(ONE & TWO WAY)
CONDUITES DE BALANCIER

Serial No. ;

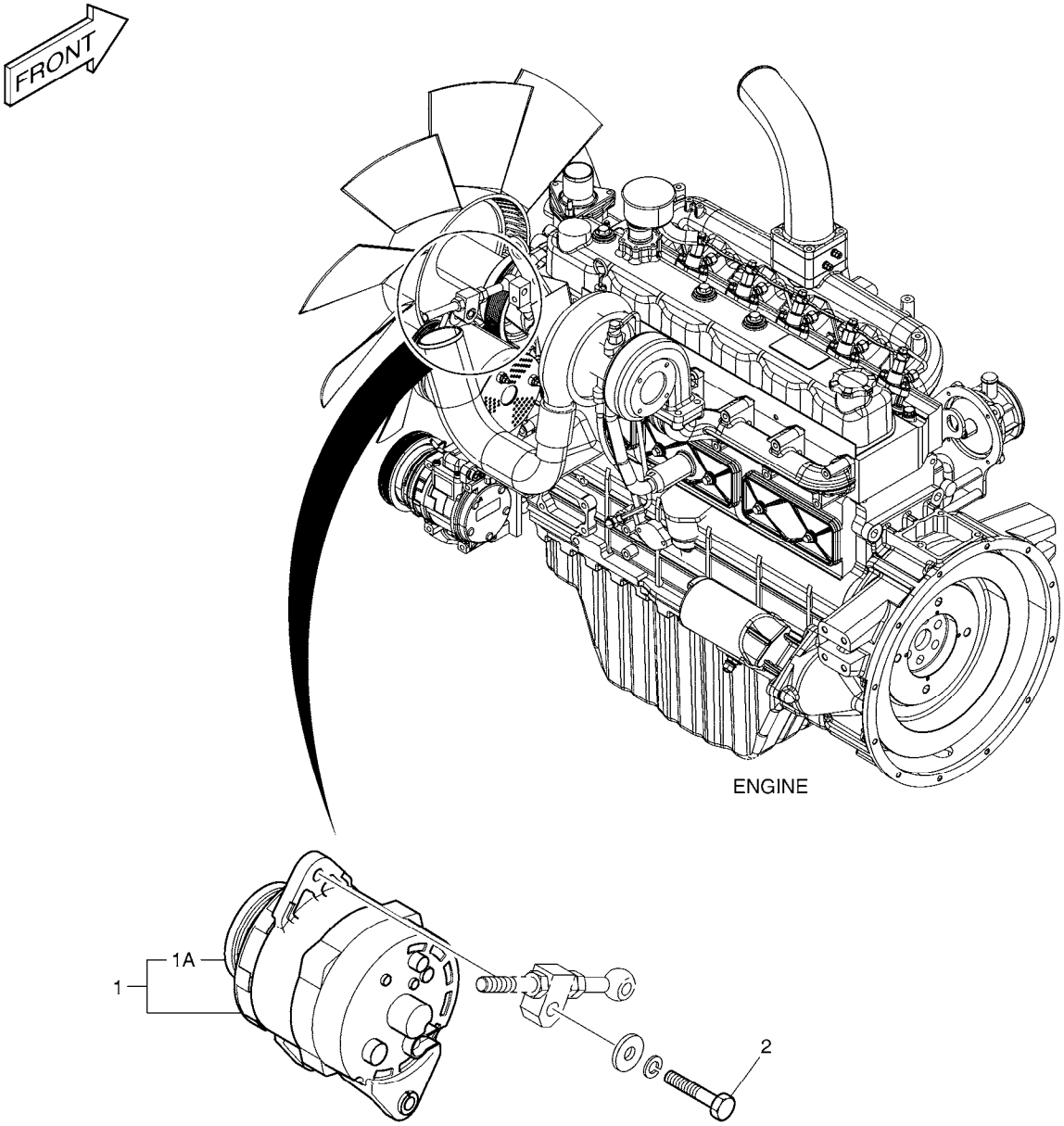

DATE	SEP. 12, 2012
4th EDITION	

Fig. 6190 ARM PIPING - ARM 2.9m(ONE & TWO WAY) CONDUITES DE BALANCIER

Serial No. ;

Key No.	Part No.	Description	Description	Q'ty	S.C	Serial No.	ICA	Replaceable part	
								Part No.	Q'ty
6190 --	K1041907	ARM PIPING-ONE & TWO WAY	CONDUITES DE BALANCIE	-	D	5001-6171			
	420212-01713	PIPING,ONE & TWO WAY,ARM	CONDUITES DE BALANCIE	-	D	6172-			
1	K1000886A	PIPE	TUYAU	2					
2	2184-1100D78	HOSE	TUYAU	2					
3	2181-9078	FLANGE	BRIDE	8					
4	2180-1026D19	O-RING	JOINT CIRCULAIRE	6					
5	S2212466	BOLT;SOCKET M10X1.5X40	BOULON	16					
6	K1004057	CLAMP;PIPE	COLLIER	8					
8	K1000334A	VALVE;STOP(L.H)	VANNE	1		5001-6171			
10	S0563666	BOLT	BOULON A 6 PANS	4		5001-6171			
	S2215966	BOLT;SOCKET	BOULON	4		6172-			
13	S2212366	BOLT;SOCKET M10X1.5X35	BOULON	8					
17	S5102803	WASHER;SPRING	RONDELLE	12		5001-6171			
	S5102803	WASHER;SPRING	RONDELLE	8		6172-			
18	S0562766	BOLT	BOULON	8					
19	K1000338A	VALVE;STOP(R.H)	VANNE	1		5001-6171			
	S5110703	WASHER;SPRING	RONDELLE	4		6172-			
41	410137-00030A	VALVE ASS'Y,STOP(L.H)	VANNE	1		6172-			
41-1	410137-00067	. VALVE,STOP(L.H)	. VANNE	1		6172-			
41-2	S8000291	. O-RING	. JOINT CIRCULAIRE	1		6172-			
41-3	2181-2816D2	. ELBOW	. COUDE	1		6172-			
41-4	2181-2817D2	. CAP	. CHAPEAU	1		6172-			
41-5	S8030161	. O-RING	. JOINT CIRCULAIRE	1		6172-			
41-6	2181-2816D4	. ELBOW	. COUDE	1		6172-			
41-7	S8000181	. O-RING	. JOINT CIRCULAIRE	1		6172-			
41-8	2181-2817D4	. CAP	. CHAPEAU	1		6172-			
41-9	S8030081	. O-RING	. JOINT CIRCULAIRE	1		6172-			
42	410137-00031A	VALVE ASS'Y,STOP(R.H)	VANNE	1		6172-			
42-1	410137-00069	. VALVE,STOP(R.H)	. VANNE	1		6172-			
42-2	S8000291	. O-RING	. JOINT CIRCULAIRE	1		6172-			
42-3	2181-2816D2	. ELBOW	. COUDE	1		6172-			
42-4	2181-2817D2	. CAP	. CHAPEAU	1		6172-			
42-5	S8030161	. O-RING	. JOINT CIRCULAIRE	1		6172-			
42-6	2181-2816D4	. ELBOW	. COUDE	1		6172-			
42-7	S8000181	. O-RING	. JOINT CIRCULAIRE	1		6172-			
42-8	2181-2817D4	. CAP	. CHAPEAU	1		6172-			
42-9	S8030081	. O-RING	. JOINT CIRCULAIRE	1		6172-			

DATE	SEP. 12, 2012
4th EDITION	

Fig. 6200 MAIN PIPING - QUICK FIT
CONDUITES DE BATI PRINCIPAL

Serial No. ;

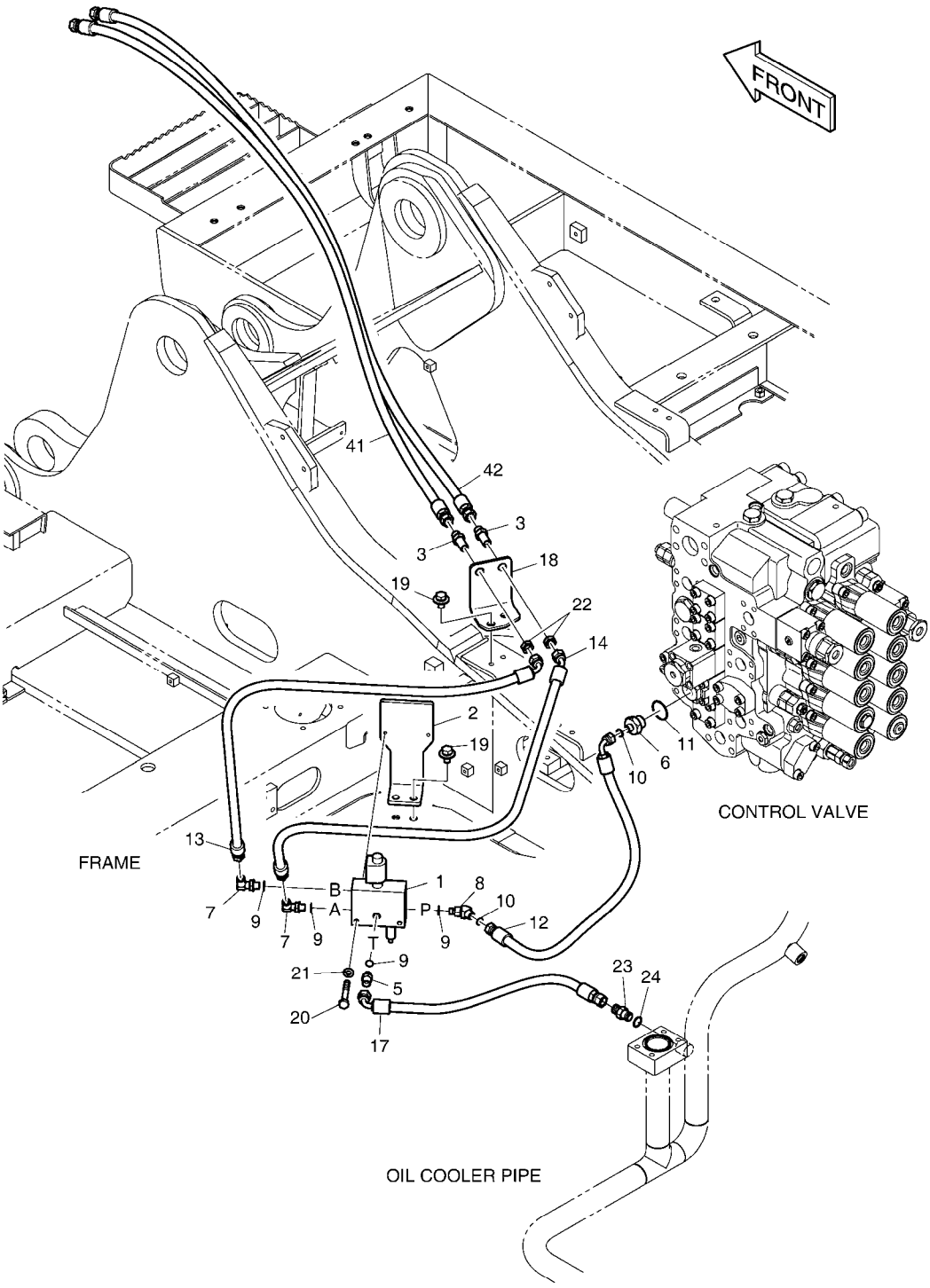

DATE	SEP. 12, 2012
4th EDITION	

Fig. 6200 MAIN PIPING - QUICK FIT
CONDUITES DE BATI PRINCIPAL

Serial No. ;

Key No.	Part No.	Description	Description	Q'ty	S.C	Serial No.	ICA	Replaceable part	
								Part No.	Q'ty
6200 --	K1027502A	MAIN PIPING-QUICK FIT	CONDUITES DE BATI PRIN(	-	D	05001-10481			
	420212-03011	PIPING,MAIN;QUICK FIT	CONDUITES DE BATI PRIN(	-	D	10482-			
1	426-00287	VALVE;QUICK-FIT	VALVE	1					
2	195-03123E	BRACKET	SUPPORT	1					
3	181-00078D1	ADAPTER	ADAPTEUR	2					
5	2181-1126D85	ADAPTER	ADAPTEUR	1					
6	DS2404024	ADAPTER	ADAPTEUR	1					
7	2181-1702D3	ELBOW PFO1/4XPF3/8	COUDE	2					
8	DS2338029	ELBOW	COUDE	1					
9	S8000111	O-RING	JOINT TORIQUE	4					
10	S8030061	O-RING	JOINT TORIQUE	2					
11	S8000231	O-RING	JOINT CIRCULAIRE	1					
12	DS2013515	HOSE	TUYAU	1					
13	DS2054293	HOSE	TUYAU	1					
14	DS2054394	HOSE	TUYAU FLEXIBLE	1					
17	DS2093001	HOSE	TUYAU FLEXIBLE	1		05001-10481			
	DS2093300	HOSE	TUYAU FLEXIBLE	1		10482-			
18	K1000351A	PLATE	PLAQUE	1					
19	DS0025019	BOLT;SET	BOULON	4					
20	S0556466	BOLT	BOULON	2					
21	S5102503	WASHER,SPRING	RONDELLE	2					
22	121-00010D1	NUT	ECROU	2					
23	2181-1126D7	ADAPTER	ADAPTEUR	1					
24	S8000141	O-RING	JOINT TORIQUE	1					
41	DS2053868	HOSE	TUYAU	1					
42	DS2053869	HOSE	TUYAU	1					

DATE	SEP. 12, 2012
4th EDITION	

Fig. 6210 ELECTRIC PARTS - QUICK CLAMP BRIDE RAPIDE

Serial No. ;

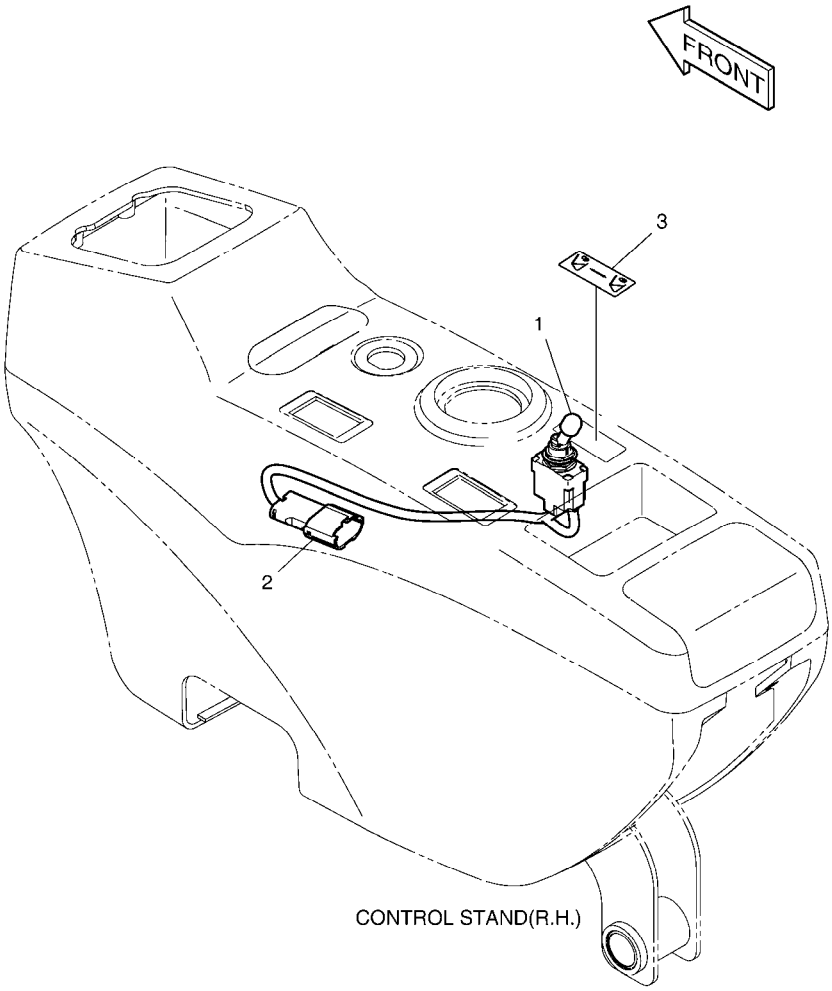

DATE	SEP. 12, 2012
4th EDITION	

Fig. 6210 ELECTRIC PARTS - QUICK CLAMP BRIDE RAPIDE

Serial No. ;

Key No.	Part No.	Description	Description	Q'ty	S.C	Serial No.	ICA	Replaceable part	
								Part No.	Q'ty
6210 --	K1007413	QUICK CLAMP PIPING	BRIDE RAPIDE	-	D				
1	549-00092	SWITCH;LOCKOUT TOGGLE	COMMUTATEUR	1					
2	530-00432A	HARNESS;JOINT	HARNAIS	1					
3	K1005776	PLATE;NAME	PLAQUE	1					

DATE	SEP. 12, 2012
4th EDITION	

Fig. 6220 BOOM PIPING - BOOM 5.7m(QUICK CLAMP) CONDUITES DE FLECHE

Serial No. ;

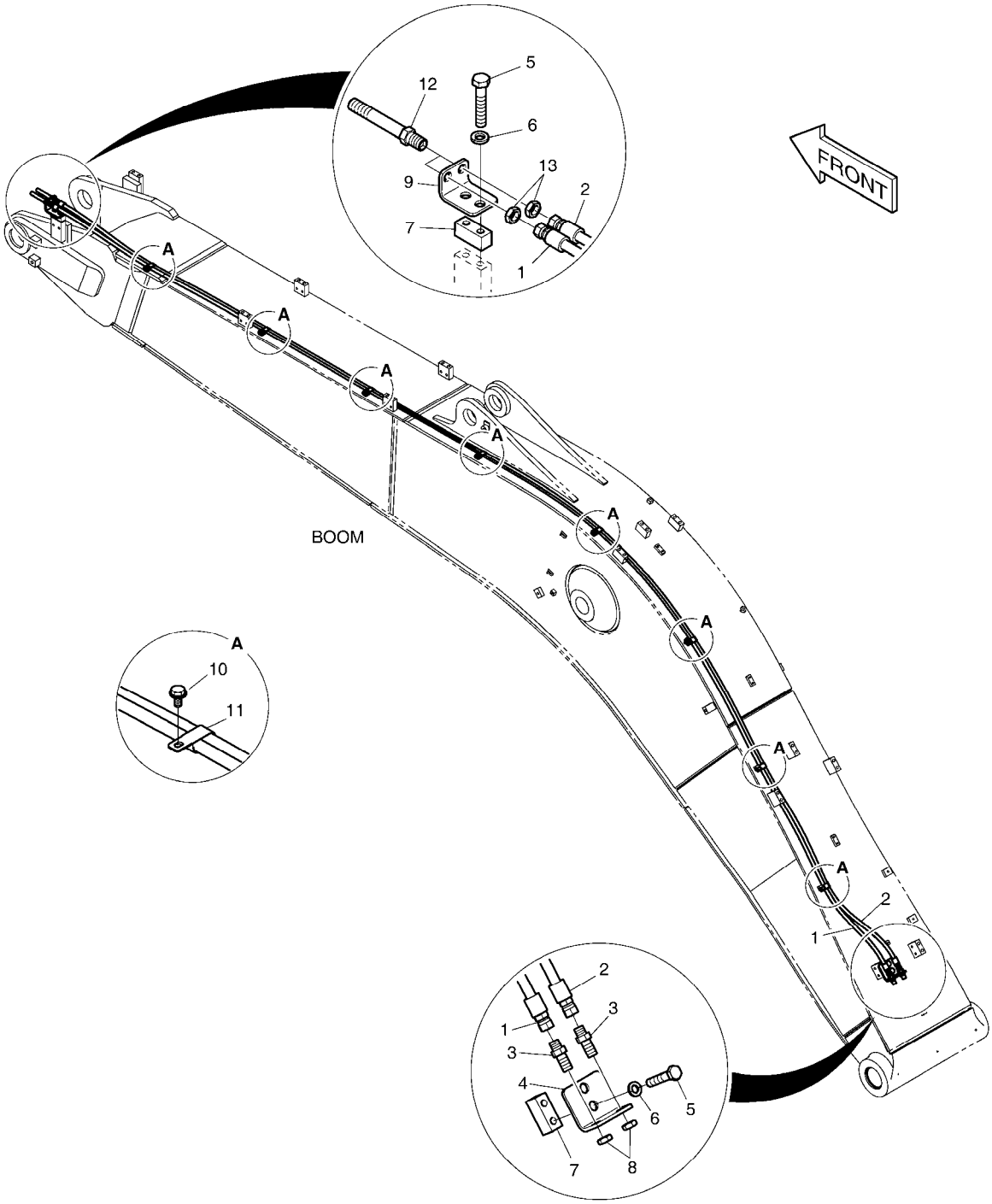

DATE	SEP. 12, 2012
4th EDITION	

Fig. 6220 BOOM PIPING - BOOM 5.7m(QUICK CLAMP)
CONDUITES DE FLECHE

Serial No. ;

Key No.	Part No.	Description	Description	Q'ty	S.C	Serial No.	ICA	Replaceable part	
								Part No.	Q'ty
6220 --	K1041837	BOOM PIPING-QUICK FIT	TUYAUTERIE DE PERCHE	-	D				
1	DS2053849	HOSE	TUYAU	1					
2	DS2053953	HOSE	TUYAU	1					
3	181-00078D5	ADAPTER	ADAPTEUR	2					
4	195-00163	BRACKET	SUPPORT	1					
5	S0563366	BOLT	BOULON	4					
6	S5102803	WASHER;SPRING	RONDELLE	4					
7	K1004006	PLATE	PLAQUE	2					
8	121-00010D1	NUT	ECROU	2					
9	K1010847	BRACKET	SUPPORT	1					
10	K1001029	BOLT	BOULON	8					
11	DS2805009	CLIP	AGRAFE	8					
12	K1000356	ADAPTER	ADAPTEUR	2					
13	121-00010D7	NUT	ECROU	2					

DATE	SEP. 12, 2012
4th EDITION	

Fig. 6230 ARM PIPING - ARM 2.9m(QUICK CLAMP)
CONDUITES DE BALANCIER

Serial No. ;

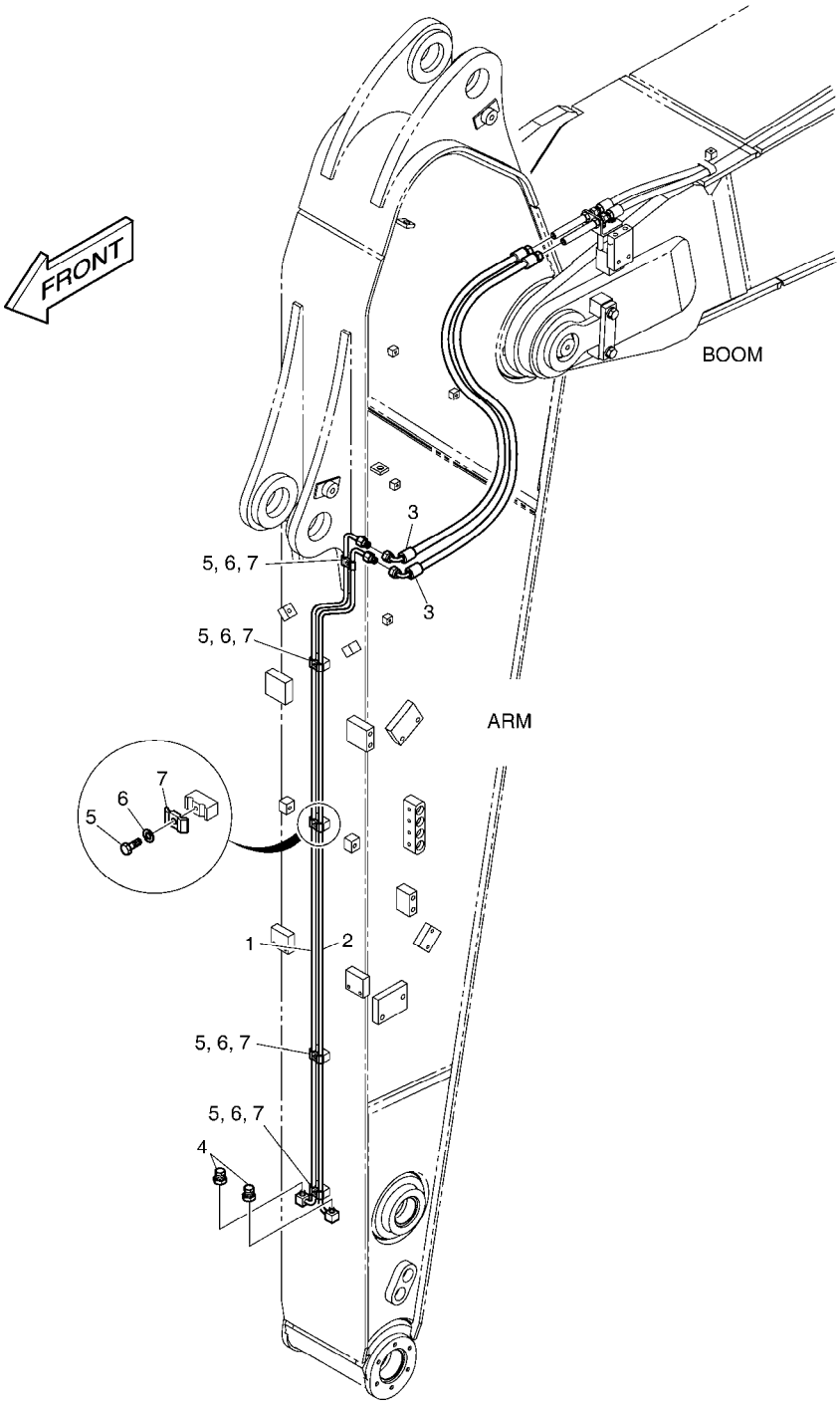

DATE	SEP. 12, 2012
4th EDITION	

Fig. 6230 ARM PIPING - ARM 2.9m(QUICK CLAMP)
CONDUITES DE BALANCIER

Serial No. ;

Key No.	Part No.	Description	Description	Q'ty	S.C	Serial No.	ICA	Replaceable part	
								Part No.	Q'ty
6230 --	K1041933	ARM PIPING-QUICK CLAMP	TUYAUTERIE DU BRAS	-	D				
1	K1001052	PIPE	TUYAU	1					
2	K1001053	PIPE	TUYAU	1					
3	DS2055866	HOSE	TUYAU	2					
4	2181-2820D1	PLUG	BOUCHON	2					
5	S0508866	BOLT	BOULON	5					
6	S5102503	WASHER,SPRING	RONDELLE	5					
7	K1004011	CLAMP;PIPE	COLLIER	5					

DATE	SEP. 12, 2012
4th EDITION	

Fig. 6240 ALTERNATOR - 80A
ALTERNATEUR

Serial No. ;

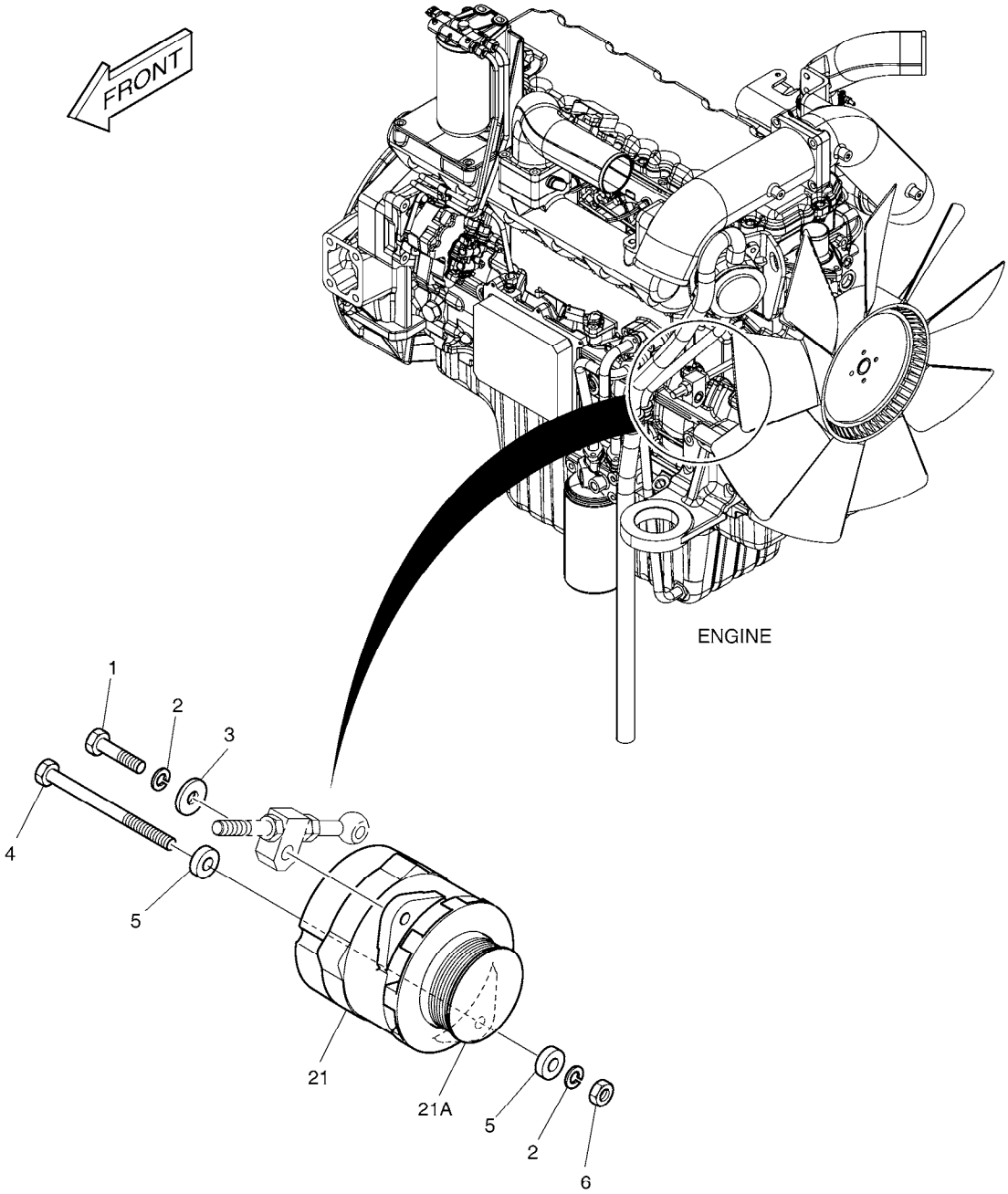

DATE	SEP. 12, 2012
4th EDITION	

Fig. 6240 ALTERNATOR - 80A ALTERNATEUR

Serial No. ;

Key No.	Part No.	Description	Description	Q'ty	S.C	Serial No.	ICA	Replaceable part	
								Part No.	Q'ty
6240 --	K1008715	ALTERNATOR MOUNTING	SUPPORT D'ALTERNATEU	-	D				
1	S0760853	BOLT	BOULON	1					
2	S5102703	WASHER;SPRING	RONDELLE	2					
3	2114-1058D54	WASHER	RONDELLE	1					
4	S0562653	BOLT M12X1.75X160	BOULON	1					
5	S5010713	WASHER;PLAIN	RONDELLE	2					
6	S4012733	NUT	ECROU	1					
21	K1010703	ALTERNATOR 80A	ALTERNATEUR	1		5001-6477	Y	300901-00033	1
	300901-00033	ALTERNATOR;80A	ALTERNATEUR	1		6478-			
21A	130707-00030	. PULLEY,ALTERNATOR	. POULIE	1		5001-6477	Y	130707-00042	1
	130707-00042	. PULLEY,ALTERNATOR	. POULIE	1		6478-			

DATE	SEP. 12, 2012
4th EDITION	

Fig. 6250 CD PLAYER PLAQUEUR DE CD

Serial No. ;

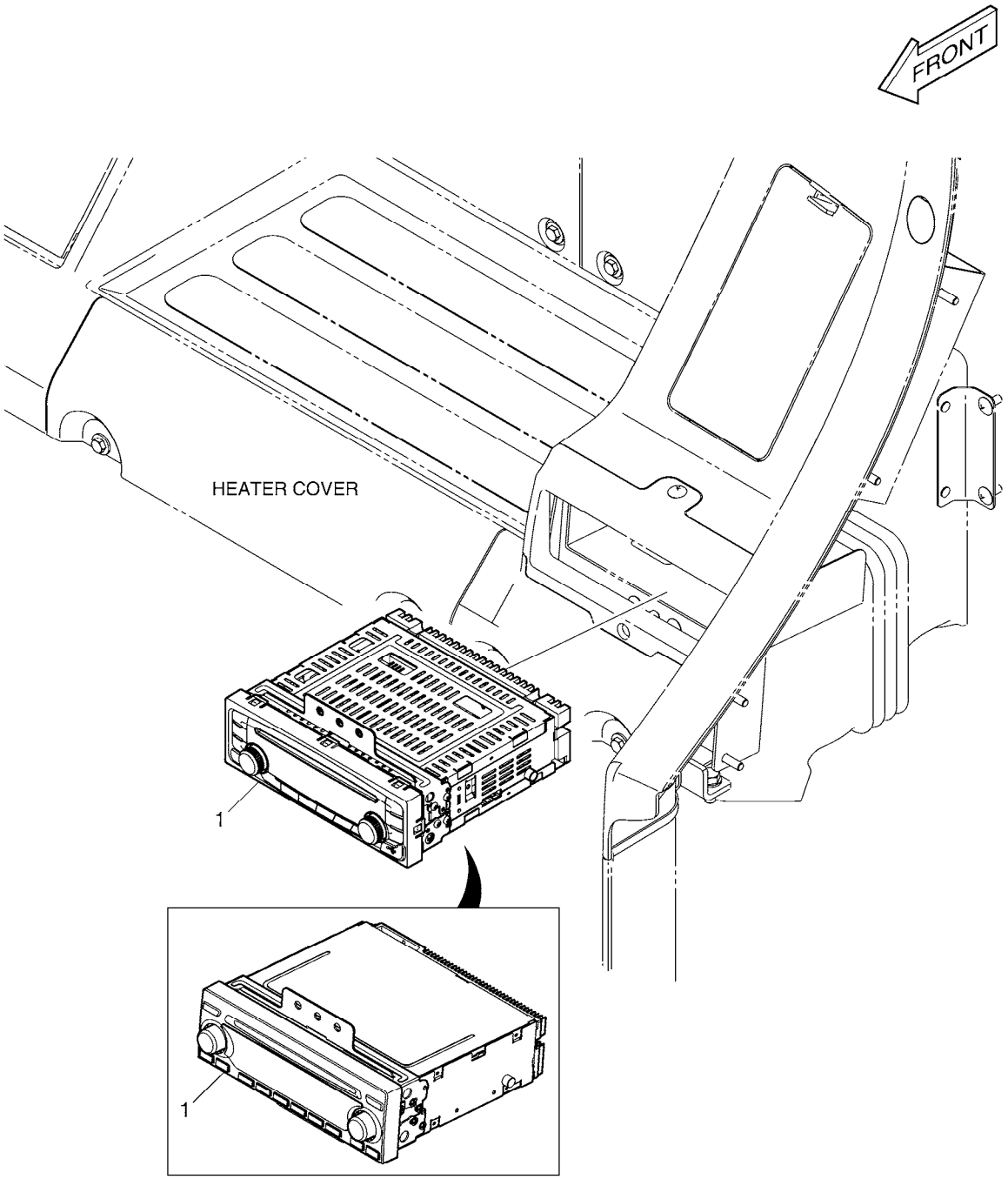

Serial No. : 5001 ~ 7754

DATE	SEP. 12, 2012
4th EDITION	

Fig. 6250 CD PLAYER PLAQUEUR DE CD

Serial No. ;

Key No.	Part No.	Description	Description	Q'ty	S.C	Serial No.	ICA	Replaceable part	
								Part No.	Q'ty
6250 --	K1007416	CD PLAYER	LECTEUR DE CD	-	D	5001-7754			
	300637-00012	PLAYER,CD;24V(USB)	PLAQUEUR DE CD	-	D	7755-			
1	K1000982	CD PLAYER	PLAQUEUR DE CD	1		5001-7754			
	300637-00009	PLAYER,CD(24V)	PLAQUEUR DE CD	1		7755-			

DATE	SEP. 12, 2012
4th EDITION	

Fig. 6260 SUN ROOF COVER
COUVERTURE DE TOIT DU SOLEIL

Serial No. ;

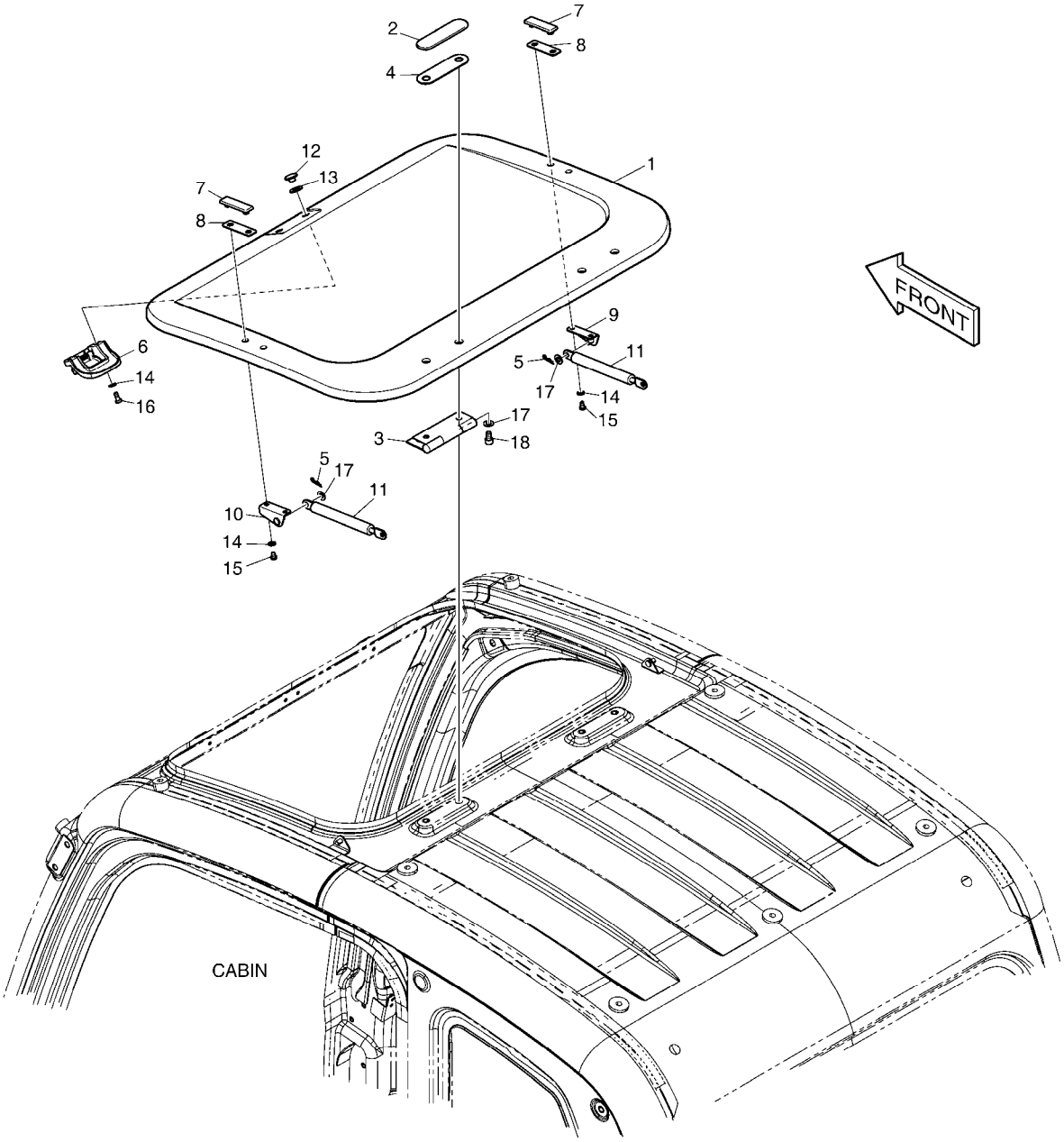

DATE	SEP. 12, 2012
4th EDITION	

Fig. 6260 SUN ROOF COVER
COUVERTURE DE TOIT DU SOLEIL

Serial No. ;

Key No.	Part No.	Description	Description	Q'ty	S.C	Serial No.	ICA	Replaceable part	
								Part No.	Q'ty
6260 --	621-02870C	SUN ROOF COVER	COUVERTURE DE TOIT DU	-	D				
1	621-02871B	COVER;SUN ROOF	COUVERTURE	1					
2	621-02872	COVER;ROOF HINGE	COUVERTURE	2					
3	171-00060A	HINGE;ROOF COVER	CHARNIERE	2					
4	161-00599	PAD;RUBBER	GARNITURE	2					
5	123-00523	PIN;GAS-SPRING	GOUPILLE	2					
6	123-00516B	LOCK ASS'Y;ROOF COVER	SERRURE	1					
7	621-02873	COVER;ROOF GAS-CYLINDER	COUVERTURE	2					
8	161-00600	PAD;RUBBER	GARNITURE	2					
9	191-03279A	PLATE;ROOF GAS-SPRING RH	PLAQUE	1					
10	191-03280A	PLATE;ROOF GAS-SPRING LH	PLAQUE	1					
11	DS1003008	GAS-SPRING	VERIN PNEUMATIQUE	2					
12	621-03103	COVER;ROOF HANDLE	COUVERTURE	2					
13	161-00639	RUBBER;ROOF HANDLE	LE CAOUTCHOUC	2					
14	2114-1898D3	WASHER;PLAIN	RONDELLE	6					
15	S3450943	SCREW	VIS	4					
16	2120-2166D7	SCREW	VIS	2					
17	2114-1898D14	WASHER;PLAIN	RONDELLE	6					
18	S2208561	BOLT;SOCKET	BOULON	4					

DATE	SEP. 12, 2012
4th EDITION	

Fig. 6270 RAIN SHIELD
BOUCLIER DE PLUIE

Serial No. ;

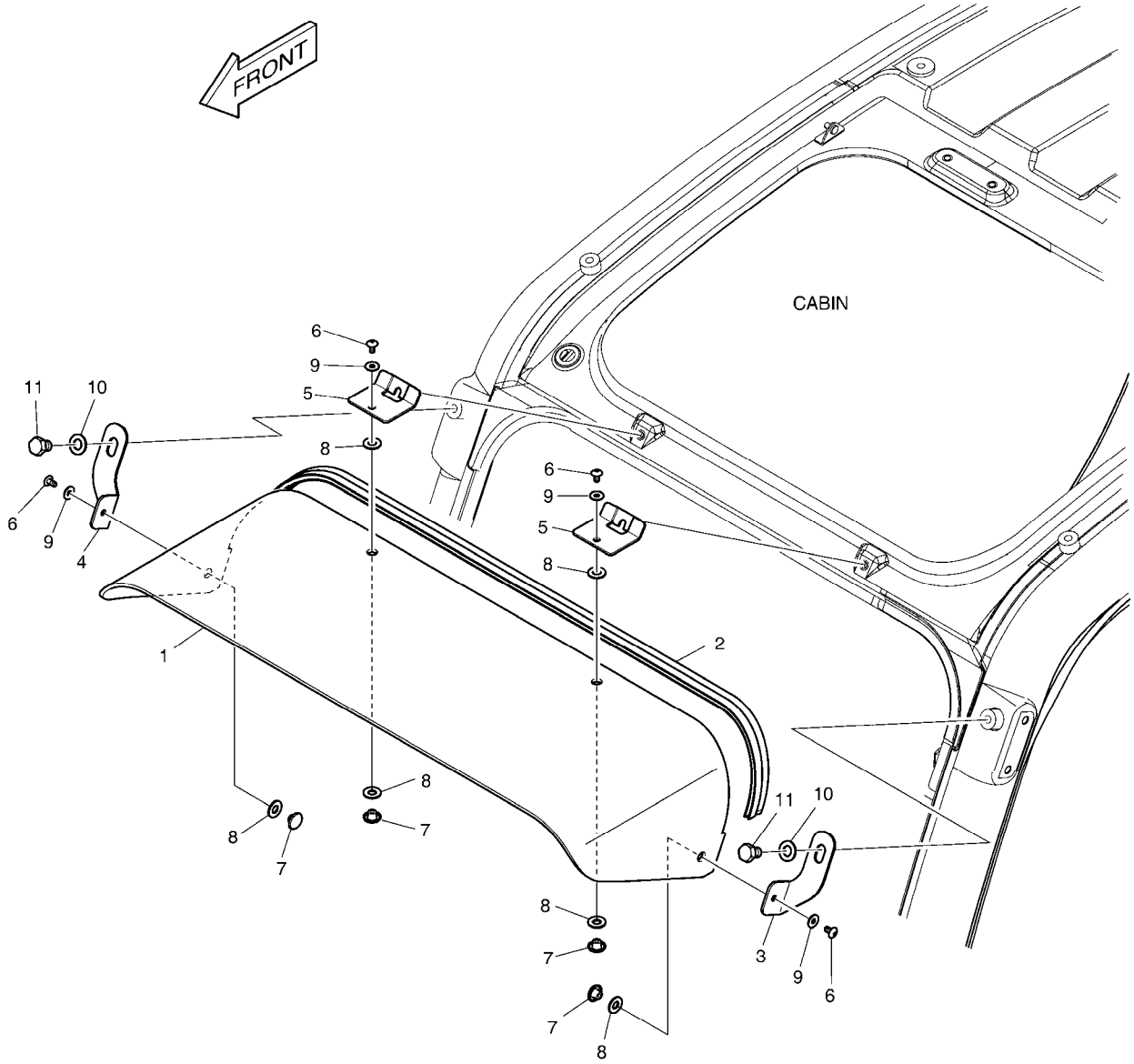

DATE	SEP. 12, 2012
4th EDITION	

Fig. 6270 RAIN SHIELD BOUCLIER DE PLUIE

Serial No. ;

Key No.	Part No.	Description	Description	Q'ty	S.C	Serial No.	ICA	Replaceable part	
								Part No.	Q'ty
6270 --	K1002561B	RAIN SHIELD	BOUCLIER DE PLUIE	-	D				
1	159-00294C	COVER;RAIN SHIELD	COUVERTURE	1					
2	162-00040A	STRIP;WEATHER	BANDE	1					
3	K1002574A	BRACKET(L.H)	SUPPORT	1					
4	K1002575A	BRACKET(R.H)	SUPPORT	1					
5	195-03374C	BRACKET;RAIN SHIELD	SUPPORT	2					
6	2120-2166D52	BOLT M6X1.0X12	BOULON	4					
7	621-03103	COVER;ROOF HANDLE	COUVERTURE	4					
8	161-00639	RUBBER;ROOF HANDLE	LE CAOUTCHOUC	6					
9	2114-1898D5	WASHER M6	RONDELLE	4					
10	2114-1898D6	WASHER;PLAIN	RONDELLE	2					
11	2120-2166D37	BOLT	BOULON	2					

DATE	SEP. 12, 2012
4th EDITION	

Fig. 6280 RAIN SHIELD & LAMP MOUNTING
BOUCLIER ET DE LAMPE DE PLUIE

Serial No. ;

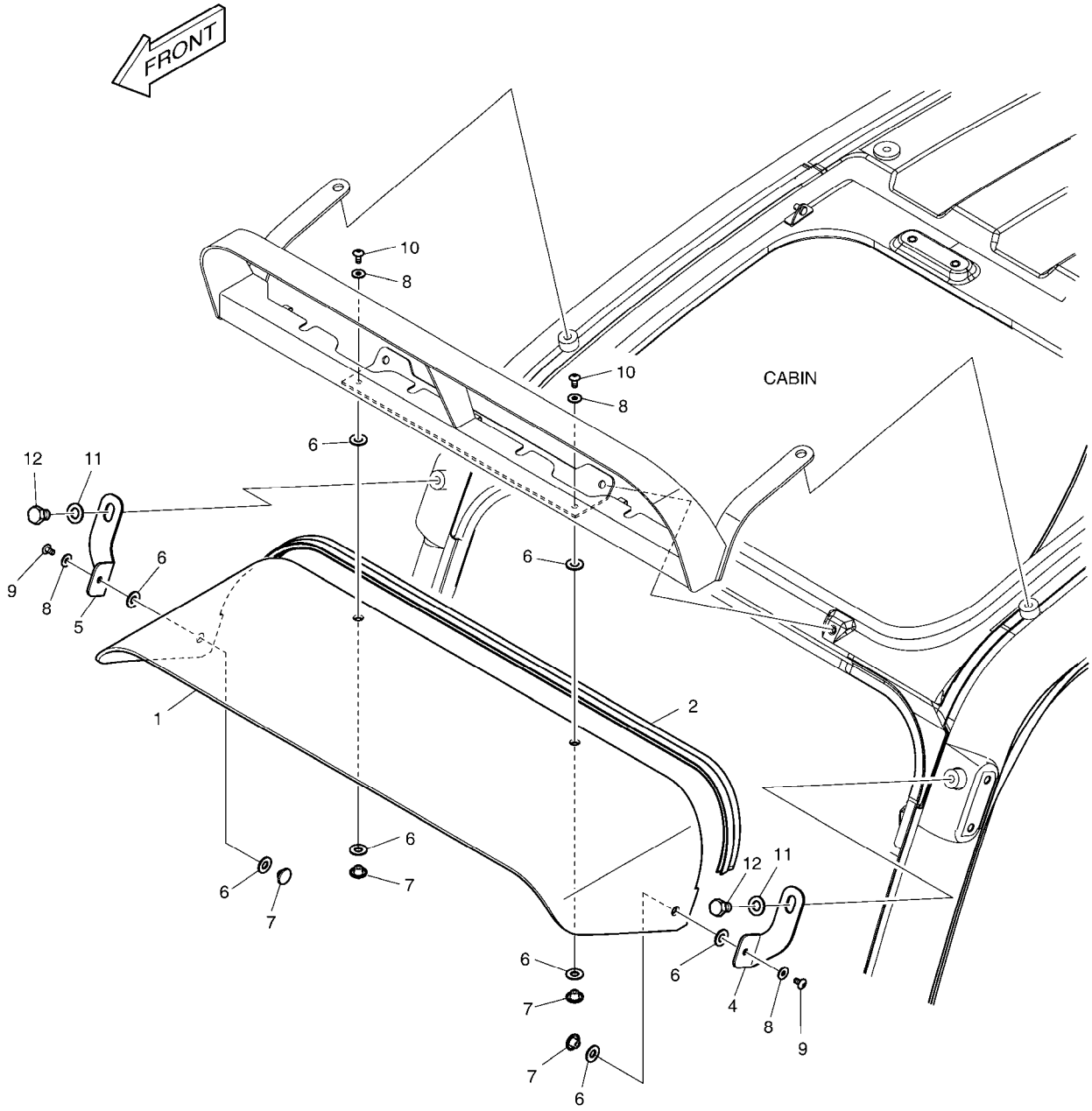

DATE	SEP. 12, 2012
4th EDITION	

Fig. 6280 RAIN SHIELD & LAMP MOUNTING
BOUCLIER ET DE LAMPE DE PLUIE

Serial No. ;

Key No.	Part No.	Description	Description	Q'ty	S.C	Serial No.	ICA	Replaceable part	
								Part No.	Q'ty
6280 --	534-00117B	RAIN SHIELD & LAMP ASS'Y	BOUCLIER DE PLUIE	-	D				
1	159-00294C	COVER;RAIN SHIELD	COUVERTURE	1					
2	162-00040A	STRIP;WEATHER	BANDE	1					
4	K1002574A	BRACKET(L.H)	SUPPORT	1					
5	K1002575A	BRACKET(R.H)	SUPPORT	1					
6	161-00639	RUBBER;ROOF HANDLE	LE CAOUTCHOUC	8					
7	621-03103	COVER;ROOF HANDLE	COUVERTURE	4					
8	2114-1898D5	WASHER M6	RONDELLE	4					
9	2120-2166D52	BOLT M6X1.0X12	BOULON	2					
10	2120-2166D10	SCREW	VIS	2					
11	2114-1898D6	WASHER;PLAIN	RONDELLE	2					
12	2120-2166D37	BOLT	BOULON	2					

DATE	SEP. 12, 2012
4th EDITION	

Fig. 6290 CABIN LOWER GUARD
LA CARLINGUE ABAISSENT LA GARDE

Serial No. ;

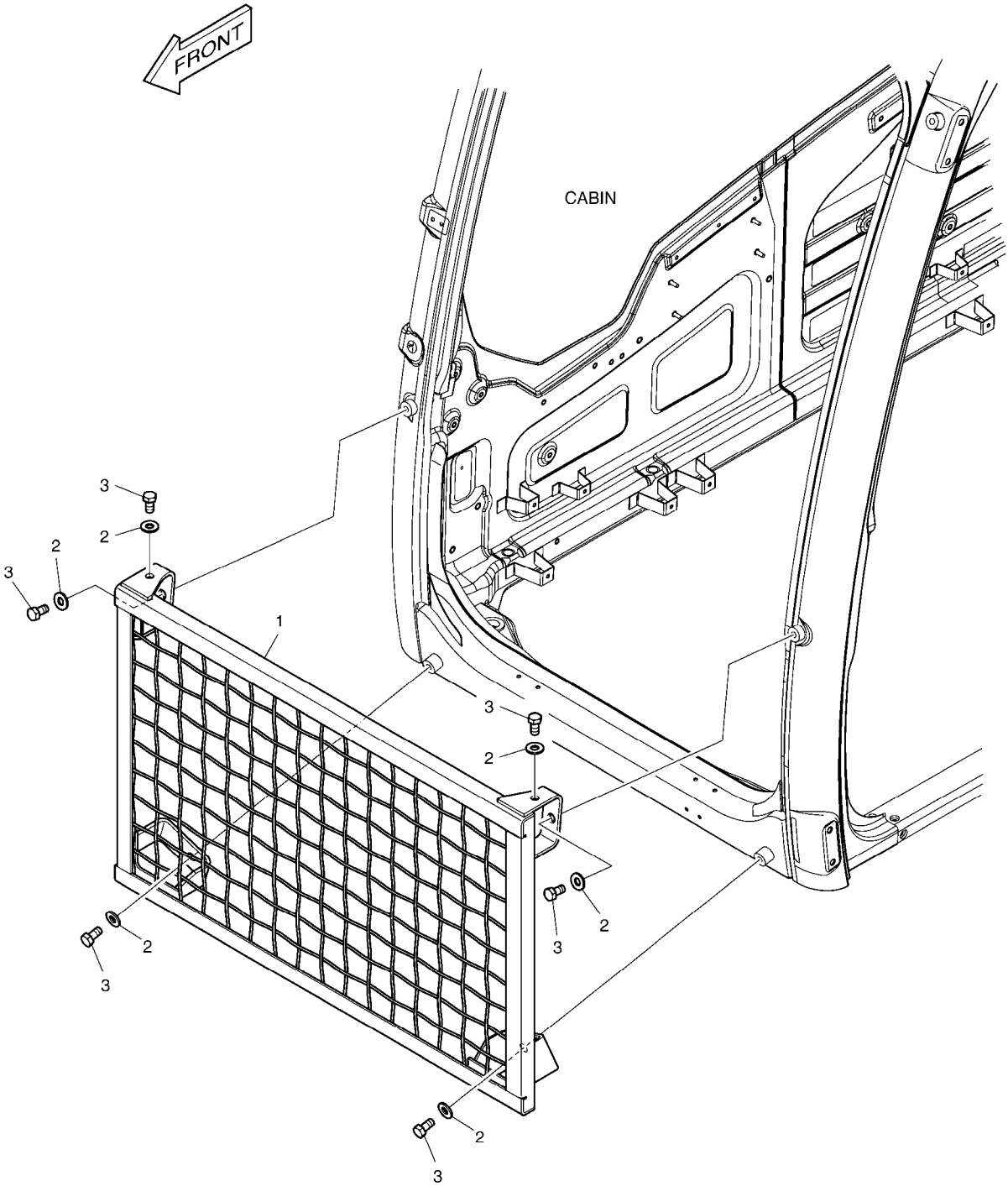

DATE	SEP. 12, 2012
4th EDITION	

Fig. 6290 CABIN LOWER GUARD
LA CARLINGUE ABAISSENT LA GARDE

Serial No. ;

Key No.	Part No.	Description	Description	Q'ty	S.C	Serial No.	ICA	Replaceable part	
								Part No.	Q'ty
6290 --	623-00086	GUARD;FRONT LOWER	GARDE	-	D				
1	623-00085A	GUARD;FRONT LOWER	GARDE	1					
2	2114-1898D17	WASHER M12	RONDELLE	6					
3	2120-2166D27	BOLT	BOULON	6					

DATE	SEP. 12, 2012
4th EDITION	

Fig. 6300 WINDOW GUARD GARDE DE FENETRE

Serial No. ;

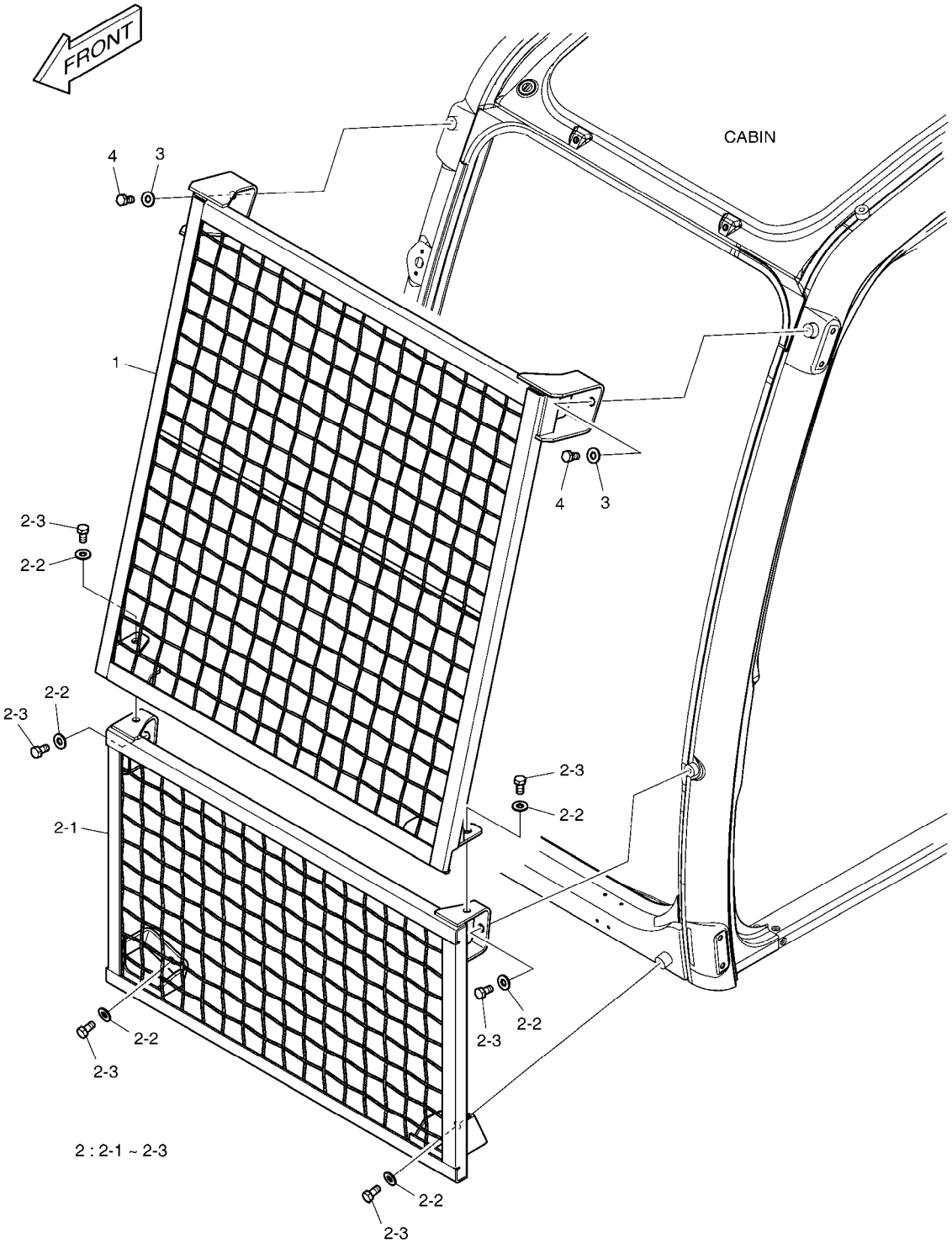

DATE	SEP. 12, 2012
4th EDITION	

Fig. 6300 WINDOW GUARD GARDE DE FENETRE

Serial No. ;

Key No.	Part No.	Description	Description	Q'ty	S.C	Serial No.	ICA	Replaceable part	
								Part No.	Q'ty
6300 --	K1002771	WINDOW GUARD	GARDE DE FENETRE	-	D				
1	K1002759A	GUARD;FRONT UPPER	GARDE	1					
2	623-00086	GUARD;FRONT LOWER	GARDE	1	D				
2-1	623-00085A	. GUARD;FRONT LOWER	. GARDE	1					
2-2	2114-1898D17	. WASHER M12	. RONDELLE	6					
2-3	2120-2166D27	. BOLT	. BOULON	6					
3	2114-1898D17	WASHER M12	RONDELLE	2					
4	2120-2166D27	BOLT	BOULON	2					

DATE	SEP. 12, 2012
4th EDITION	

Fig. 6310 FLOOR MAT - TWO WAY PLANCHER

Serial No. ;

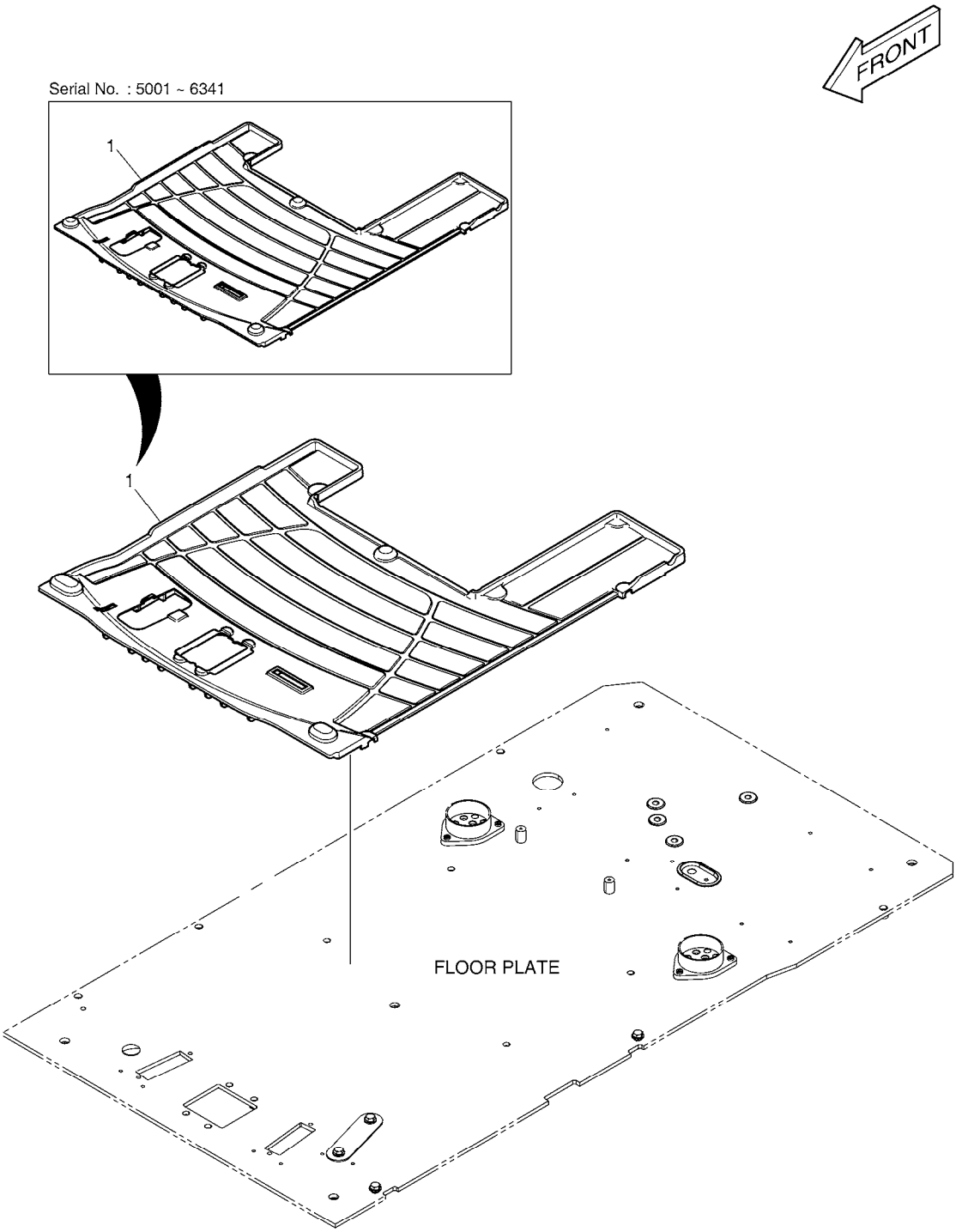

DATE	SEP. 12, 2012
4th EDITION	

Fig. 6310 FLOOR MAT - TWO WAY PLANCHER

Serial No. ;

Key No.	Part No.	Description	Description	Q'ty	S.C	Serial No.	ICA	Replaceable part	
								Part No.	Q'ty
6310 -1	K1007092B	MAT;FLOOR	PLAQUE	1		5001-6341	I	110935-00083	1
	110935-00083	MAT;FLOOR	PLAQUE	1		6342-			

DATE	SEP. 12, 2012
4th EDITION	

Fig. 6320 FLOOR MAT - ROTATING PLANCHER

Serial No. ;

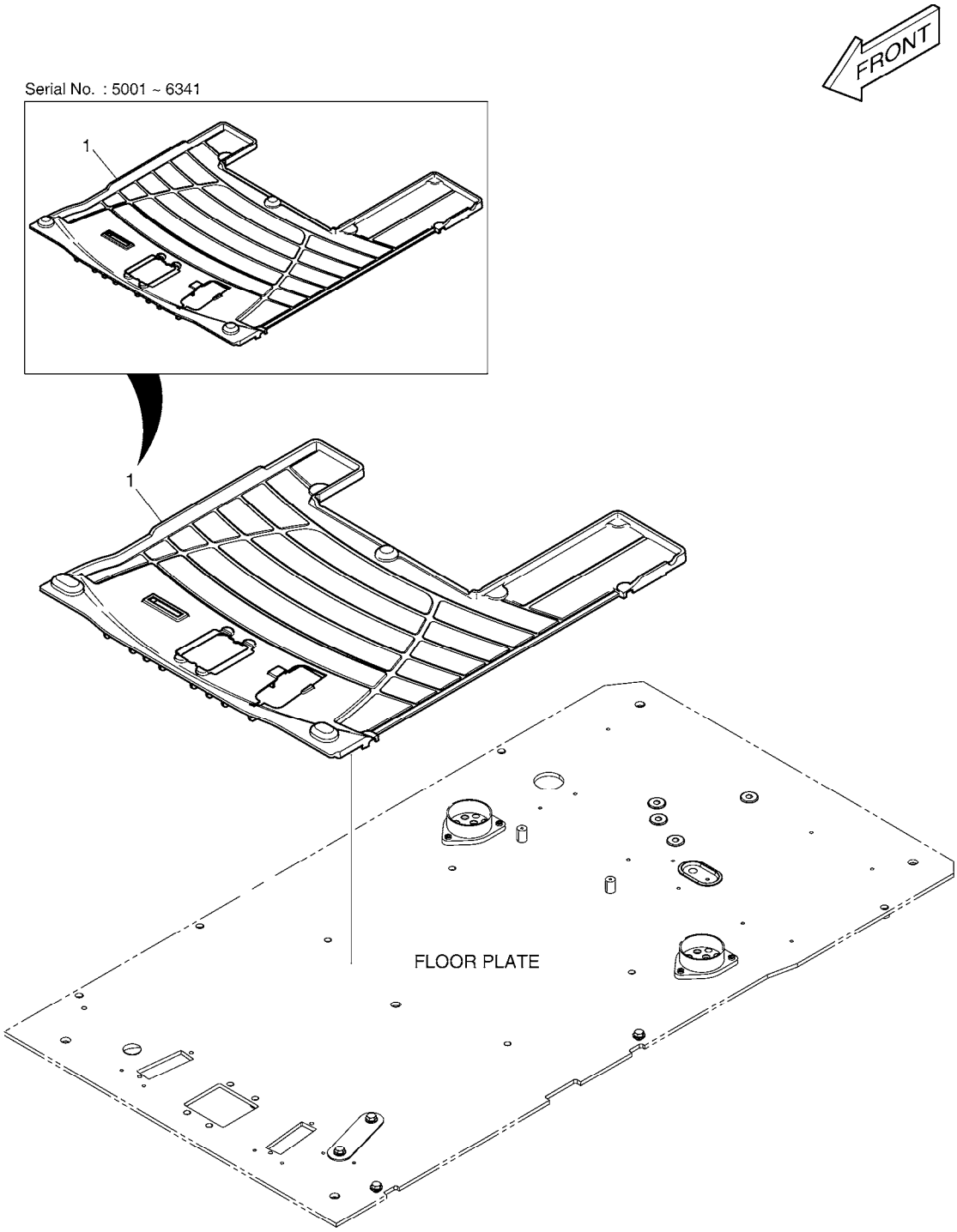

DATE	SEP. 12, 2012
4th EDITION	

Fig. 6320 FLOOR MAT - ROTATING PLANCHER

Serial No. ;

Key No.	Part No.	Description	Description	Q'ty	S.C	Serial No.	ICA	Replaceable part	
								Part No.	Q'ty
6320 -1	K1007093B	MAT;FLOOR	PLAQUE	1		5001-6341	I	110935-00084	1
	110935-00084	MAT;FLOOR	PLAQUE	1		6342-			

DATE	SEP. 12, 2012
4th EDITION	

Fig. 6330 FLOOR MAT - TWO WAY & ROTATING PLANCHER

Serial No. ;

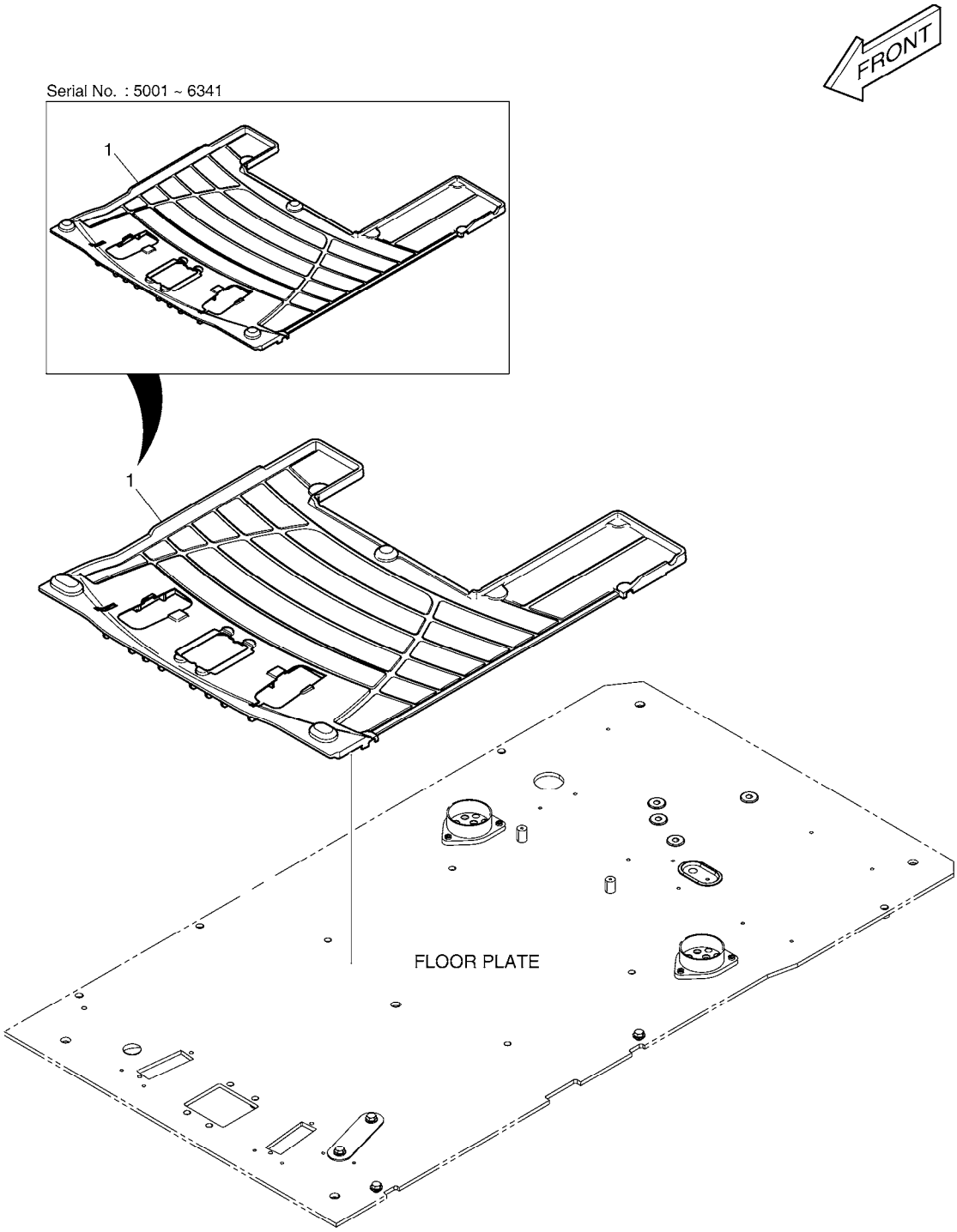

DATE	SEP. 12, 2012
4th EDITION	

Fig. 6330 FLOOR MAT - TWO WAY & ROTATING PLANCHER

Serial No. ;

Key No.	Part No.	Description	Description	Q'ty	S.C	Serial No.	ICA	Replaceable part	
								Part No.	Q'ty
6330 -1	K1007094B	MAT;FLOOR	PLAQUE	1		5001-6341	I	110935-00085	1
	110935-00085	MAT;FLOOR	PLAQUE	1		6342-			

DATE	SEP. 12, 2012
4th EDITION	

Fig. 6340 FOGS GUARD ASS'Y
EMBRUME LA GARDE ASS'Y

Serial No. ;

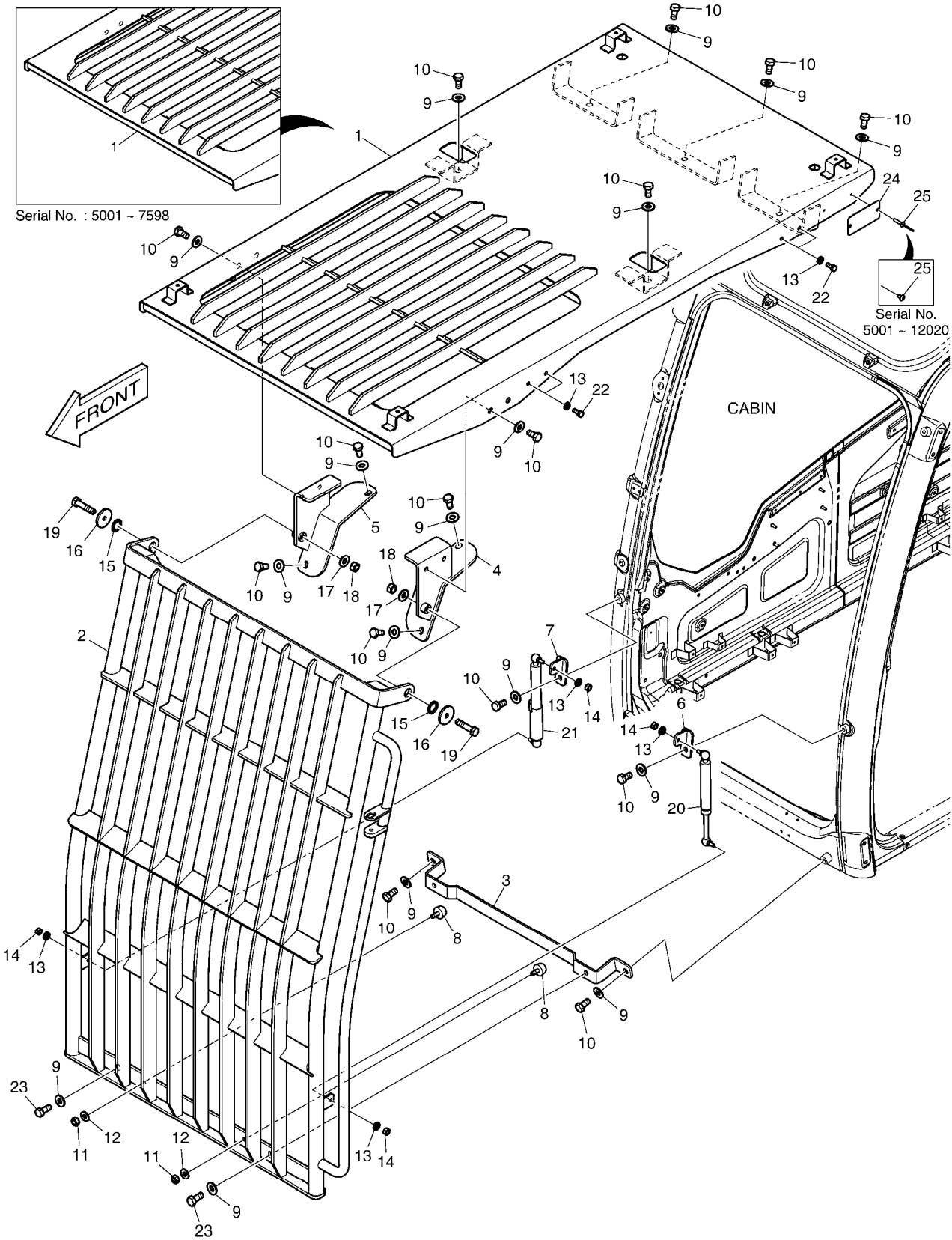

DATE	SEP. 12, 2012
4th EDITION	

Fig. 6340 FOGS GUARD ASS'Y
EMBRUME LA GARDE ASS'Y

Serial No. ;

Key No.	Part No.	Description	Description	Q'ty	S.C	Serial No.	ICA	Replaceable part	
								Part No.	Q'ty
6340 --	K1002883A	FOGS GUARD ASS'Y	EMBRUME LA GARDE ASS'	-	D	5001-7598			
	110921-01181	GUARD ASSY;FOGS	EMBRUME LA GARDE ASS'	-	D	07599-12020			
	110921-01181A	GUARD ASSY;FOGS	EMBRUME LA GARDE ASS'	-	D	12021-			
1	K1002811A	GUARD;ROOF	GARDE	1		5001-7598	I	110921-01182	1
	110921-01182	GUARD;FOGS	GARDE	1		07599-12020	Y	110921-01182A	1
	110921-01182A	GUARD;FOGS	GARDE	1		12021-			
2	K1002846	GUARD;FRONT	GARDE	1		05001-12020	Y	220103-00574	1
	220103-00574	GUARD,FOGS(FRONT)	GARDE	1		12021-			
3	K1002842A	BRACKET	SUPPORT	1					
4	K1002838	BRACKET(L.H)	SUPPORT	1					
5	K1002839A	BRACKET(R.H)	SUPPORT	1					
6	K1002840	BRACKET(L.H)	SUPPORT	1					
7	K1002841	BRACKET(R.H)	SUPPORT	1					
8	161-00195	STOPPER	TAQUET	2					
9	2114-1898D17	WASHER M12	RONDELLE	19					
10	2120-2166D27	BOLT	BOULON	17					
11	2121-1311D4	NUT	ECROU	2					
12	2114-1898D1	WASHER	RONDELLE	2					
13	2114-1898D2	WASHER	RONDELLE	8					
14	2121-1311D2	NUT	ECROU	4					
15	2114-1058D31	WASHER	RONDELLE	2					
16	2114-1898D10	WASHER M12	RONDELLE	2					
17	2114-1898D6	WASHER;PLAIN	RONDELLE	2					
18	2121-1311D1	NUT	ECROU	2					
19	S0515766	BOLT M12X1.75X55	BOULON	2					
20	K1005823	CYLINDER;GAS	CYLINDRE	1					
21	K1005822	CYLINDER;GAS	CYLINDRE	1					
22	2120-2166D5	BOLT	BOULON	4					
23	2120-2166D32	BOLT	BOULON	2					
24	K1007231A	NAME;PLATE	PLAQUE D'IDENTIFICATION	1		05001-12020			
	950209-02452A	PLATE,NAME	PLAQUE D'IDENTIFICATION	1		12021-			
25	2120-2166D52	BOLT M6X1.0X12	BOULON	2		05001-12020			
	2122-1002D2	RIVET	RIVET	2		12021-			

DATE	SEP. 12, 2012
4th EDITION	

Fig. 6350 TRACK SHOE ASS'Y - 700G(DX225LCA) MAILLON DE CHAINE

Serial No. ;

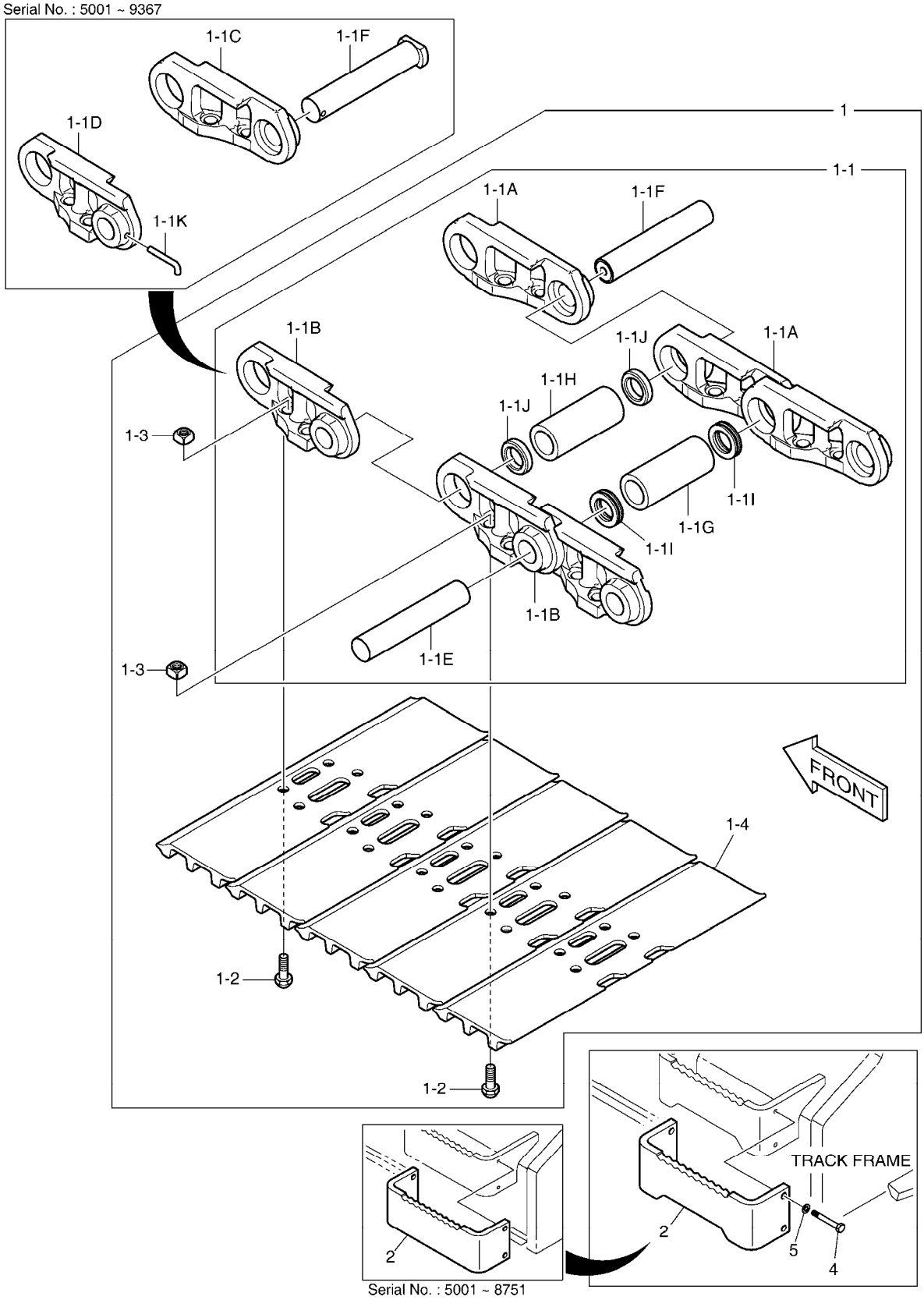

DATE	SEP. 12, 2012
4th EDITION	

Fig. 6350 TRACK SHOE ASS'Y - 700G(DX225LCA) MAILLON DE CHAINE

Serial No. ;

Key No.	Part No.	Description	Description	Q'ty	S.C	Serial No.	ICA	Replaceable part	
								Part No.	Q'ty
6350 --	K1045589A	TRACK SHOE ASS'Y	MAILLON DE CHAINE	-	D	5001-8751			
	200106-00317	SHOE ASSY,TRACK;700MM	MAILLON DE CHAINE	-	D	8752-			
1	K1045506	TRACK SHOE ASS'Y	MAILLON DE CHAINE	2		5001-9367	I	200106-00347	2
	200106-00347	SHOE ASSY,TRACK;700MM	MAILLON DE CHAINE	2		09368-11735	I	200106-00347A	2
	200106-00347A	SHOE ASSY,TRACK;700MM	MAILLON DE CHAINE	2		11736-			
1-1	K1038366	. TRACK LINK ASS`Y	. ENSEMBLE MAILLON DE C	1		5001-9367	I	200103-00102	1
	200103-00102	. TRACK LINK ASS`Y	. ENSEMBLE MAILLON DE C	1		09368-11735	Y	200103-00102A	1
	200103-00102A	. TRACK LINK ASS`Y	. ENSEMBLE MAILLON DE C	1		11736-			
1-1A	K1038367	.. LINK;TRACK(RH)	.. PIECE DE JONCTION	48		5001-9367			
	K1038367	.. LINK;TRACK(RH)	.. PIECE DE JONCTION	49		9368-			
1-1B	K1038368	.. LINK;TRACK(LH)	.. PIECE DE JONCTION	48		5001-9367			
	K1038368	.. LINK;TRACK(LH)	.. PIECE DE JONCTION	49		9368-			
1-1C	K1038429	.. LINK;MASTER(RH)	.. PIECE DE JONCTION	1		5001-9367			
1-1D	K1038430	.. LINK;MASTER(LH)	.. PIECE DE JONCTION	1		5001-9367			
1-1E	K1038369	.. PIN	.. GOUPILLE	48					
1-1F	K1038370	.. PIN;MASTER	.. GOUPILLE	1		5001-9367			
	120501-01370	.. PIN,MASTER	.. GOUPILLE	1		9368-			
1-1G	K1038371	.. BUSHING	.. DOUILLE	48					
1-1H	K1038372	.. BUSHING;MASTER	.. DOUILLE	1					
1-1I	K1038373	.. SEAL;DUST	.. CACHET	96					
1-1J	K1038374	.. SPACER	.. ENTRETOISE	2					
1-1K	K1038376	.. PIN;SMALL	.. GOUPILLE	1		5001-9367			
1-2	K1038377	. BOLT	. BOULON	196					
1-3	K1038378	. NUT	. ECROU	196					
1-4	K1045478	. SHOE 700mm	. SABOT	49					
2	K1050307	STEP	ETAPE	4		5001-8751	I	110955-00106	4
	110955-00106	STEP	ETAPE	4		08752-11451			
	110955-00106B	STEP	ETAPE	4		11452-			
4	S0558266	BOLT	BOULON	16		05001-11451			
	S0560466	BOLT M12X1.75X35	BOULON	16		11452-			
5	S5102603	WASHER,SPRING	RONDELLE	16		05001-11451			
	S5102703	WASHER;SPRING	RONDELLE	16		11452-			

DATE	SEP. 12, 2012
4th EDITION	

Fig. 6360 TRACK SHOE ASS'Y - 800G(DX225LCA) MAILLON DE CHAINE

Serial No. ;

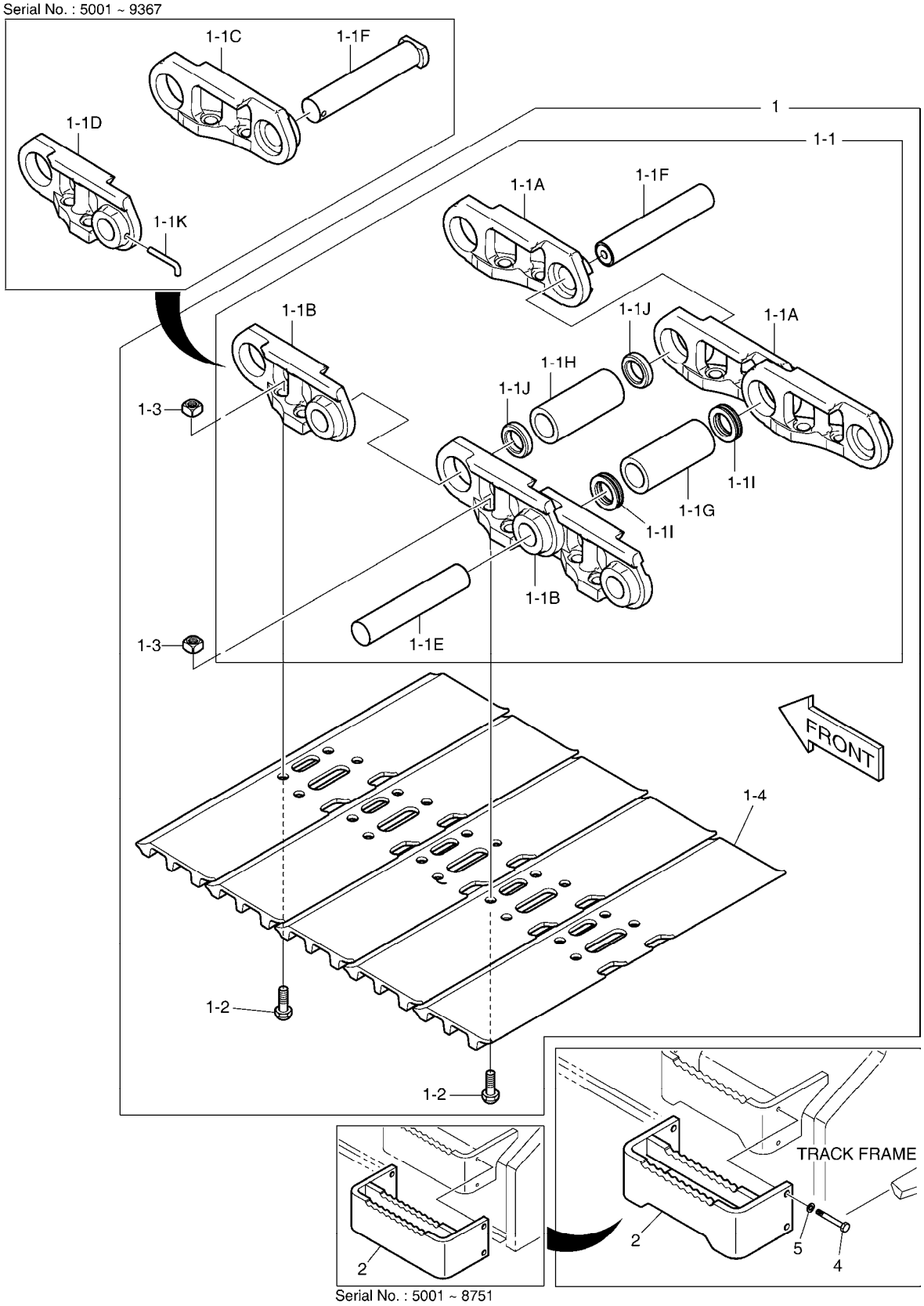

DATE	SEP. 12, 2012
4th EDITION	

Fig. 6360 TRACK SHOE ASS'Y - 800G(DX225LCA) MAILLON DE CHAINE

Serial No. ;

Key No.	Part No.	Description	Description	Q'ty	S.C	Serial No.	ICA	Replaceable part	
								Part No.	Q'ty
6360 --	K1045590A	TRACK SHOE ASS`Y	MAILLON DE CHAINE	-	D	5001-8751			
	200106-00318	SHOE ASSY,TRACK;800MM	MAILLON DE CHAINE	-	D	8752-			
1	K1045507	SHOE ASSY,TRACK;800MM	MAILLON DE CHAINE	2		5001-9367	I	200106-00348	2
	200106-00348	SHOE ASSY,TRACK;800MM	MAILLON DE CHAINE	2		09368-11735	Y	200106-00348A	2
	200106-00348A	SHOE ASSY,TRACK;800MM	MAILLON DE CHAINE	2		11736-			
1-1	K1038366	. TRACK LINK ASS`Y	. ENSEMBLE MAILLON DE C	1		5001-9367	I	200103-00102	1
	200103-00102	. TRACK LINK ASS`Y	. ENSEMBLE MAILLON DE C	1		09368-11735	Y	200103-00102A	1
	200103-00102A	. TRACK LINK ASS`Y	. ENSEMBLE MAILLON DE C	1		11736-			
1-1A	K1038367	.. LINK;TRACK(RH)	.. PIECE DE JONCTION	48		5001-9367			
	K1038367	.. LINK;TRACK(RH)	.. PIECE DE JONCTION	49		9368-			
1-1B	K1038368	.. LINK;TRACK(LH)	.. PIECE DE JONCTION	48		5001-9367			
	K1038368	.. LINK;TRACK(LH)	.. PIECE DE JONCTION	49		9368-			
1-1C	K1038429	.. LINK;MASTER(RH)	.. PIECE DE JONCTION	1		5001-9367			
1-1D	K1038430	.. LINK;MASTER(LH)	.. PIECE DE JONCTION	1		5001-9367			
1-1E	K1038369	.. PIN	.. GOUPILLE	48					
1-1F	K1038370	.. PIN;MASTER	.. GOUPILLE	1		5001-9367			
	120501-01370	.. PIN,MASTER	.. GOUPILLE	1		9368-			
1-1G	K1038371	.. BUSHING	.. DOUILLE	48					
1-1H	K1038372	.. BUSHING;MASTER	.. DOUILLE	1					
1-1I	K1038373	.. SEAL;DUST	.. CACHET	96					
1-1J	K1038374	.. SPACER	.. ENTRETOISE	2					
1-1K	K1038376	.. PIN;SMALL	.. GOUPILLE	1		5001-9367			
1-2	K1038377	. BOLT	. BOULON	196					
1-3	K1038378	. NUT	. ECROU	196					
1-4	K1045479	. SHOE 800mm	. SABOT	49					
2	K1050308	STEP	MARCHER	4		5001-8751	I	110955-00107	4
	110955-00107	STEP	MARCHER	4		08752-11451			
	110955-00107B	STEP	MARCHER	4		11452-			
4	S0558266	BOLT	BOULON	16		05001-11451			
	S0560466	BOLT M12X1.75X35	BOULON	16		11452-			
5	S5102603	WASHER,SPRING	RONDELLE	16		05001-11451			
	S5102703	WASHER;SPRING	RONDELLE	16		11452-			

DATE	SEP. 12, 2012
4th EDITION	

Fig. 6365 TRACK SHOE ASS'Y - 800G(DX220A) MAILLON DE CHAINE

Serial No. ;

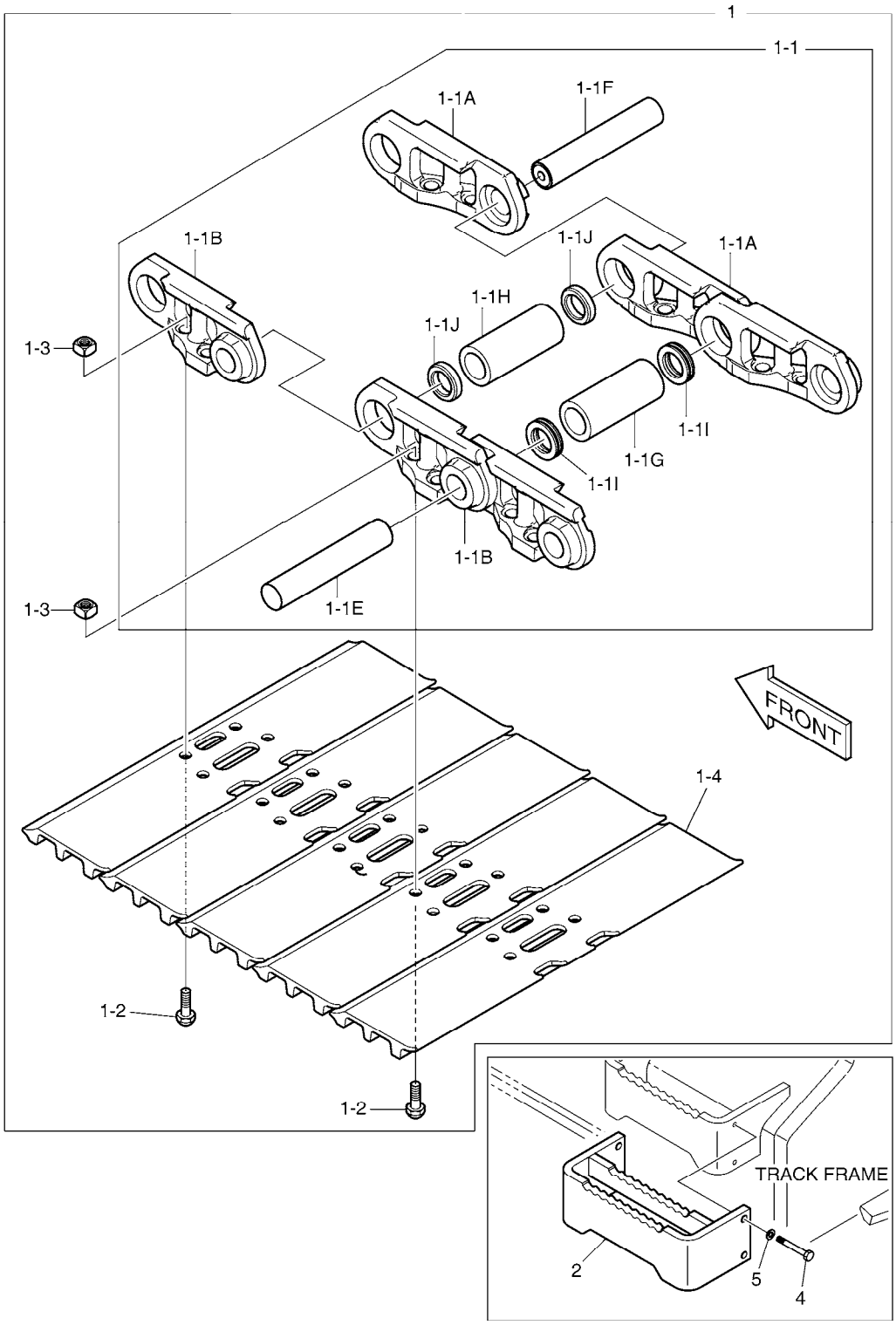

DATE	SEP. 12, 2012
4th EDITION	

Fig. 6365 TRACK SHOE ASS'Y - 800G(DX220A) MAILLON DE CHAINE

Serial No. ;

Key No.	Part No.	Description	Description	Q'ty	S.C	Serial No.	ICA	Replaceable part	
								Part No.	Q'ty
6365 --	200106-00440	TRACK SHOE ASS`Y	MAILLON DE CHAINE	-	D				
1	200106-00432	SHOE ASSY,TRACK;800MM	MAILLON DE CHAINE	2					
1-1	200103-00084A	. LINK ASSY,TRACK	. ENSEMBLE MAILLON DE C	1					
1-1A	101539-00136	.. LINK;(R.H)	.. LIEN	45					
1-1B	101539-00137	.. LINK;(L.H)	.. LIEN	45					
1-1E	2123-6060	.. PIN	.. GOUPILLE	44					
1-1F	120501-01341	.. PIN,LINK;MASTER	.. GOUPILLE	1					
1-1G	130702-00118	.. BUSHING	.. DOUILLE	44					
1-1H	130702-00119	.. BUSHING;MASTER	.. MANCHON	1					
1-1I	180-00441	.. SEAL;DUST	.. JOINT	88					
1-1J	2114-6035	.. SPACER	.. ENTERTOISE	2					
1-2	2120-6017	. BOLT	. BOULON A 6 PANS	180					
1-3	120312-00134	. NUT,TRACK SHOE;(M20)	. ECROU	180					
1-4	200106-00262D3	. SHOE,TRACK(800mm)	. SABOT	45					
2	110955-00107B	STEP	MARCHER	4					
4	S0560466	BOLT M12X1.75X35	BOULON	16					
5	S5102703	WASHER;SPRING	RONDELLE	16					

DATE	SEP. 12, 2012
4th EDITION	

Fig. 6370 TRACK SHOE ASS'Y - 900G(DX225LCA) MAILLON DE CHAINE

Serial No. ;

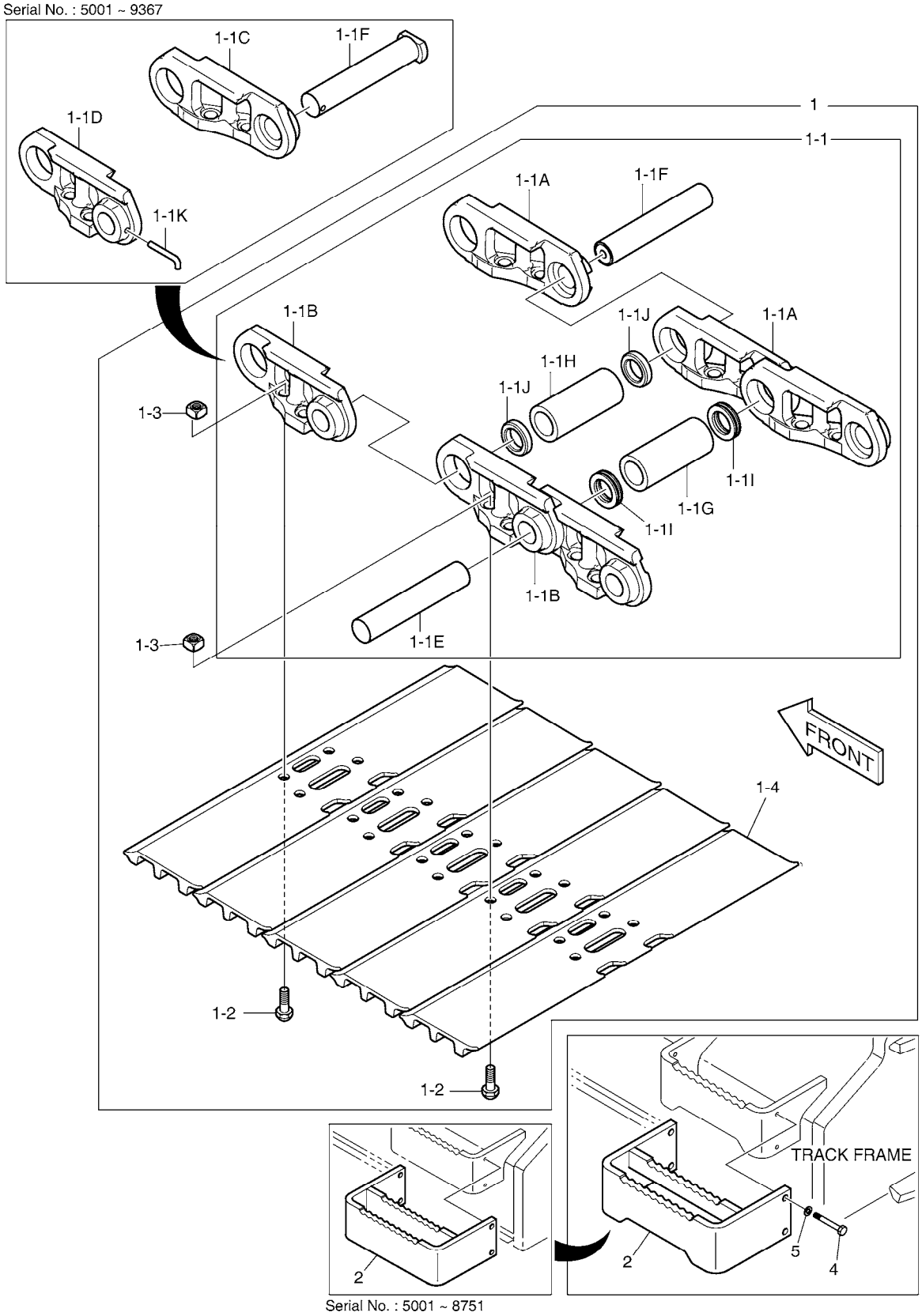

DATE	SEP. 12, 2012
4th EDITION	

Fig. 6370 TRACK SHOE ASS'Y - 900G(DX225LCA) MAILLON DE CHAINE

Serial No. ;

Key No.	Part No.	Description	Description	Q'ty	S.C	Serial No.	ICA	Replaceable part	
								Part No.	Q'ty
6370 --	K1045591A	TRACK SHOE ASS'Y	MAILLON DE CHAINE	-	D	5001-8751			
	200106-00319	SHOE ASSY,TRACK;900MM	MAILLON DE CHAINE	-	D	8752-			
1	K1045508	TRACK SHOE ASS'Y	MAILLON DE CHAINE	2		5001-9367	I	200106-00349	2
	200106-00349	SHOE ASSY,TRACK;900MM	MAILLON DE CHAINE	2		09368-11735	I	200106-00349A	2
	200106-00349A	SHOE ASSY,TRACK;900MM	MAILLON DE CHAINE	2		11736-			
1-1	K1038366	. TRACK LINK ASS`Y	. ENSEMBLE MAILLON DE C	1		5001-9367	I	200103-00102	1
	200103-00102	. TRACK LINK ASS`Y	. ENSEMBLE MAILLON DE C	1		09368-11735	Y	200103-00102A	1
	200103-00102A	. TRACK LINK ASS`Y	. ENSEMBLE MAILLON DE C	1		11736-			
1-1A	K1038367	.. LINK;TRACK(RH)	.. PIECE DE JONCTION	48		5001-9367			
	K1038367	.. LINK;TRACK(RH)	.. PIECE DE JONCTION	49		9368-			
1-1B	K1038368	.. LINK;TRACK(LH)	.. PIECE DE JONCTION	48		5001-9367			
	K1038368	.. LINK;TRACK(LH)	.. PIECE DE JONCTION	49		9368-			
1-1C	K1038429	.. LINK;MASTER(RH)	.. PIECE DE JONCTION	1		5001-9367			
1-1D	K1038430	.. LINK;MASTER(LH)	.. PIECE DE JONCTION	1		5001-9367			
1-1E	K1038369	.. PIN	.. GOUPILLE	48					
1-1F	K1038370	.. PIN;MASTER	.. GOUPILLE	1		5001-9367			
	120501-01370	.. PIN,MASTER	.. GOUPILLE	1		9368-			
1-1G	K1038371	.. BUSHING	.. DOUILLE	48					
1-1H	K1038372	.. BUSHING;MASTER	.. DOUILLE	1					
1-1I	K1038373	.. SEAL;DUST	.. CACHET	96					
1-1J	K1038374	.. SPACER	.. ENTRETOISE	2					
1-1K	K1038376	.. PIN;SMALL	.. GOUPILLE	1		5001-9367			
1-2	K1038377	. BOLT	. BOULON	196					
1-3	K1038378	. NUT	. ECROU	196					
1-4	K1045480	. SHOE 900mm	. SABOT	49					
2	K1050309	STEP	MARCHER	4		5001-8751	I	110955-00108	4
	110955-00108	STEP	MARCHER	4		8752-9751	I	110955-00108A	4
	110955-00108A	STEP	MARCHER	4		09752-11451			
	110955-00108C	STEP	MARCHER	4		11452-			
4	S0558266	BOLT	BOULON	16		05001-11451			
	S0560466	BOLT M12X1.75X35	BOULON	16		11452-			
5	S5102603	WASHER,SPRING	RONDELLE	16		05001-11451			
	S5102703	WASHER;SPRING	RONDELLE	16		11452-			

DATE	SEP. 12, 2012
4th EDITION	

Fig. 6380 SWING ALARM - NOT ONE OR TWO WAY AVERTISSEUR

Serial No. ;

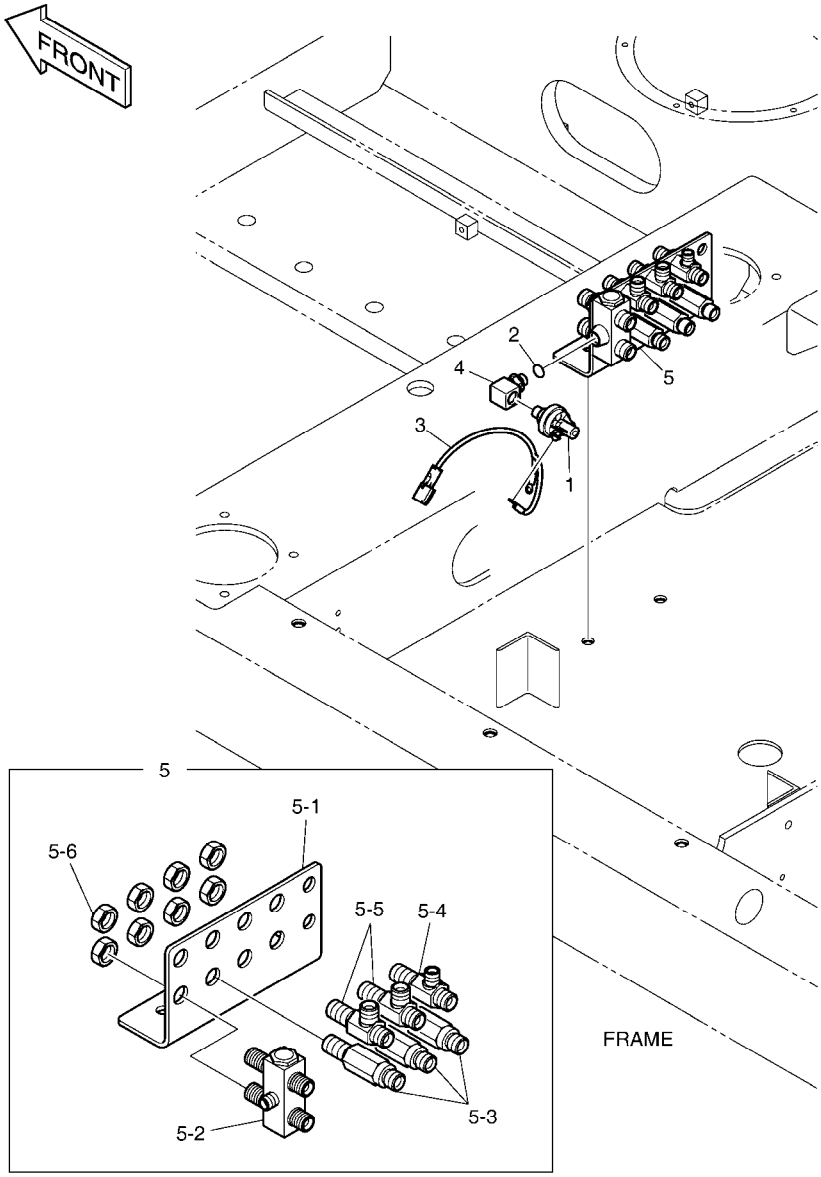

DATE	SEP. 12, 2012
4th EDITION	

Fig. 6380 SWING ALARM - NOT ONE OR TWO WAY AVERTISSEUR

Serial No. ;

Key No.	Part No.	Description	Description	Q'ty	S.C	Serial No.	ICA	Replaceable part	
								Part No.	Q'ty
6380 --	K1044685	SWING ALARM	AVERTISSEUR	-	D	5001-5645			
	420212-00478	PIPING,PILOT;S/ALARM	AVERTISSEUR	-	D	5646-			
1	549-00010	SWITCH;PRESSURE	COMMUTATEUR	1					
2	S8000111	O-RING	JOINT TORIQUE	1					
3	530-00067	HARNESS	HARNAIS	1					
4	2181-2295D4	ELBOW	COUDE	1		5001-5645			
	K1002778	ELBOW PF1/4-UNF1/2-20	COUDE	1		5646-			
5	K1044409	JOINT PLATE;SUB ASS'Y	SUPPORT	1		5001-5645	Y	430216-00005	1
	430216-00005	JOINT PLATE SUB ASS'Y	SOUS-MARIN COMMUN AS	1		5646-			
5-1	K1000354	. BRACKET;JOINT	. SUPPORT	1					
5-2	420-00282	. VALVE;SHUTTLE	. VANNE	1					
5-3	DS2410009	. ADAPTER	. ADAPTEUR	3					
5-4	181-00086D1	. TEE	. TE	1					
5-5	181-00086D2	. TEE	. TE	2					
5-6	121-00010D1	. NUT	. ECROU	8					

DATE	SEP. 12, 2012
4th EDITION	

Fig. 6390 SWING ALARM - ONE OR TWO WAY AVERTISSEUR

Serial No. ;

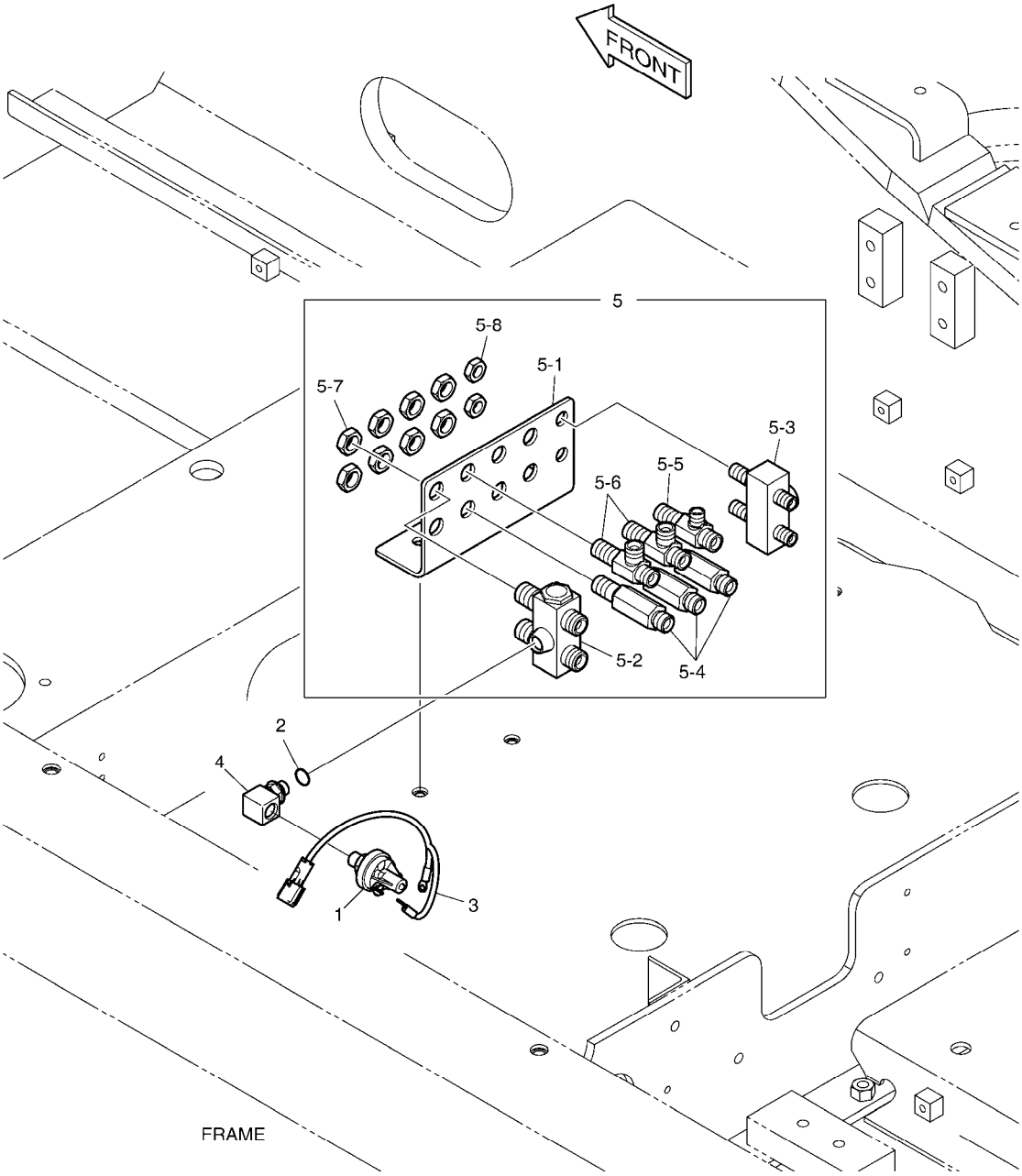

DATE	SEP. 12, 2012
4th EDITION	

Fig. 6390 SWING ALARM - ONE OR TWO WAY AVERTISSEUR

Serial No. ;

Key No.	Part No.	Description	Description	Q'ty	S.C	Serial No.	ICA	Replaceable part	
								Part No.	Q'ty
6390 --	K1044995	PILOT PIPING;SWING ALARM	CONDUITES DE PILOTE	-	D	5001-5589			
	420212-00266	PIPING,PILOT;ONE OR TWO WAY	CONDUITES DE PILOTE	-	D	5590-			
1	549-00010	SWITCH;PRESSURE	COMMUTATEUR	1					
2	S8000111	O-RING	JOINT TORIQUE	1					
3	530-00067	HARNESS	HARNAIS	1					
4	K1002778	ELBOW PF1/4-UNF1/2-20	COUDE	1					
5	K1044993	PILOT JOINT PLATE;SUB ASS'Y	PLAT COMMUN PILOTE	1		5001-5645	Y	430216-00007	1
	430216-00007	JOINT PLATE SUB ASS'Y	SOUS-MARIN COMMUN AS	1		5646-			
5-1	K1000354	. BRACKET;JOINT	. SUPPORT	1					
5-2	420-00282	. VALVE;SHUTTLE	. VANNE	1					
5-3	420-00476	. VALVE;SHUTTLE	. VANNE	1					
5-4	DS2410009	. ADAPTER	. ADAPTEUR	3					
5-5	181-00086D1	. TEE	. TE	1					
5-6	181-00086D2	. TEE	. TE	2					
5-7	121-00010D1	. NUT	. ECROU	8					
5-8	121-00010D7	. NUT	. ECROU	2					

DATE	SEP. 12, 2012
4th EDITION	

Fig. 6400 RADIO
RADIO

Serial No. ;

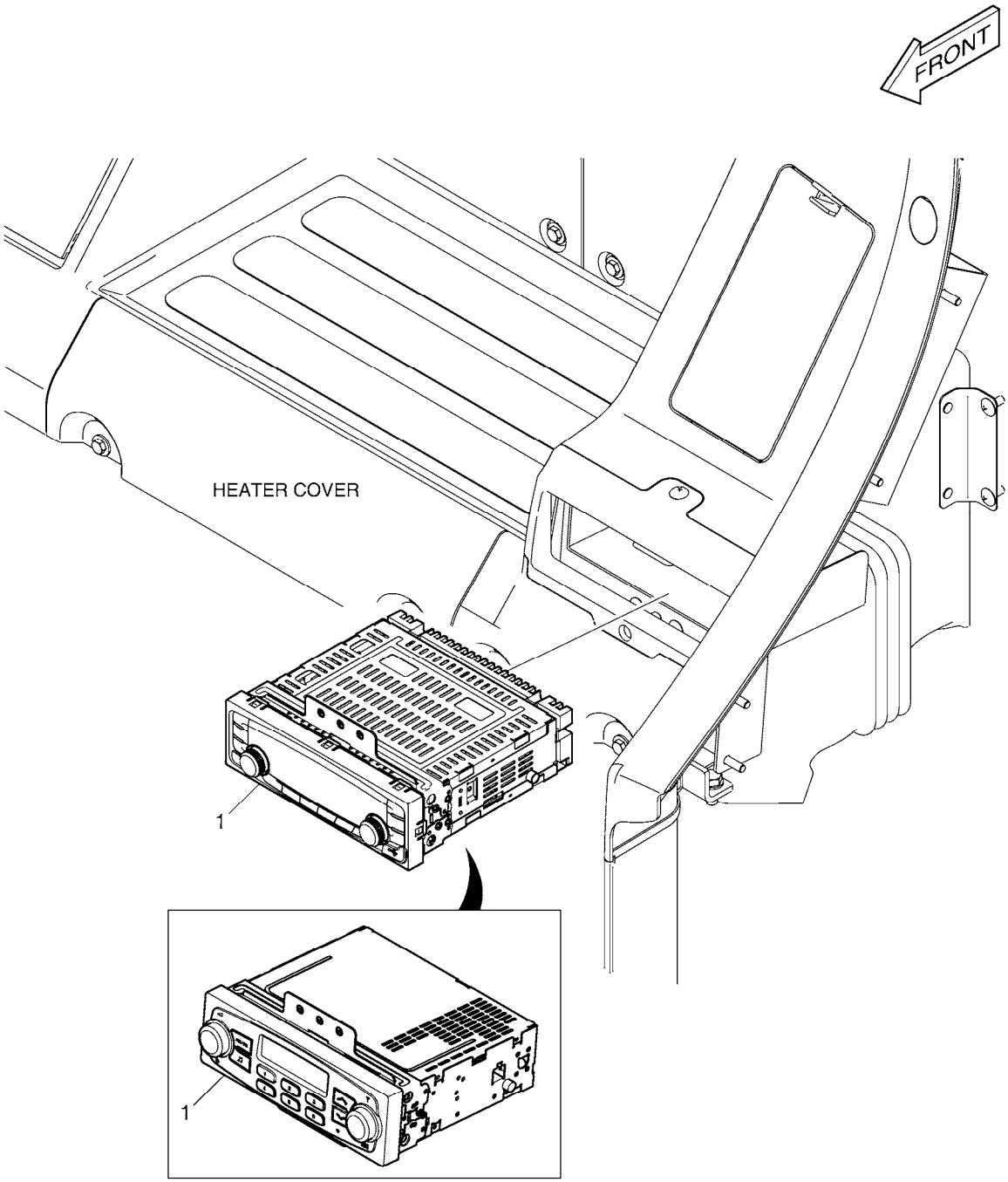

Serial No. : 5001 ~ 7754

DATE	SEP. 12, 2012
4th EDITION	

Fig. 6400 RADIO
RADIO

Serial No. ;

Key No.	Part No.	Description	Description	Q'ty	S.C	Serial No.	ICA	Replaceable part	
								Part No.	Q'ty
6400 --	K1033652	RADIO;STEREO	RADIO	-	D	5001-7754			
	300654-00039	STEREO,CAR;RADIO,24V(USB)	RADIO	-	D	7755-			
1	K1033644	RADIO;STEREO(12V)	RADIO	1		5001-7754			
	300654-00037	RADIO(24V)	RADIO	1		7755-			

DATE	SEP. 12, 2012
4th EDITION	

Fig. 6410 LOCK VALVE PIPING - BOOM
CONDUITES DE VERROU VANNE

Serial No. ;

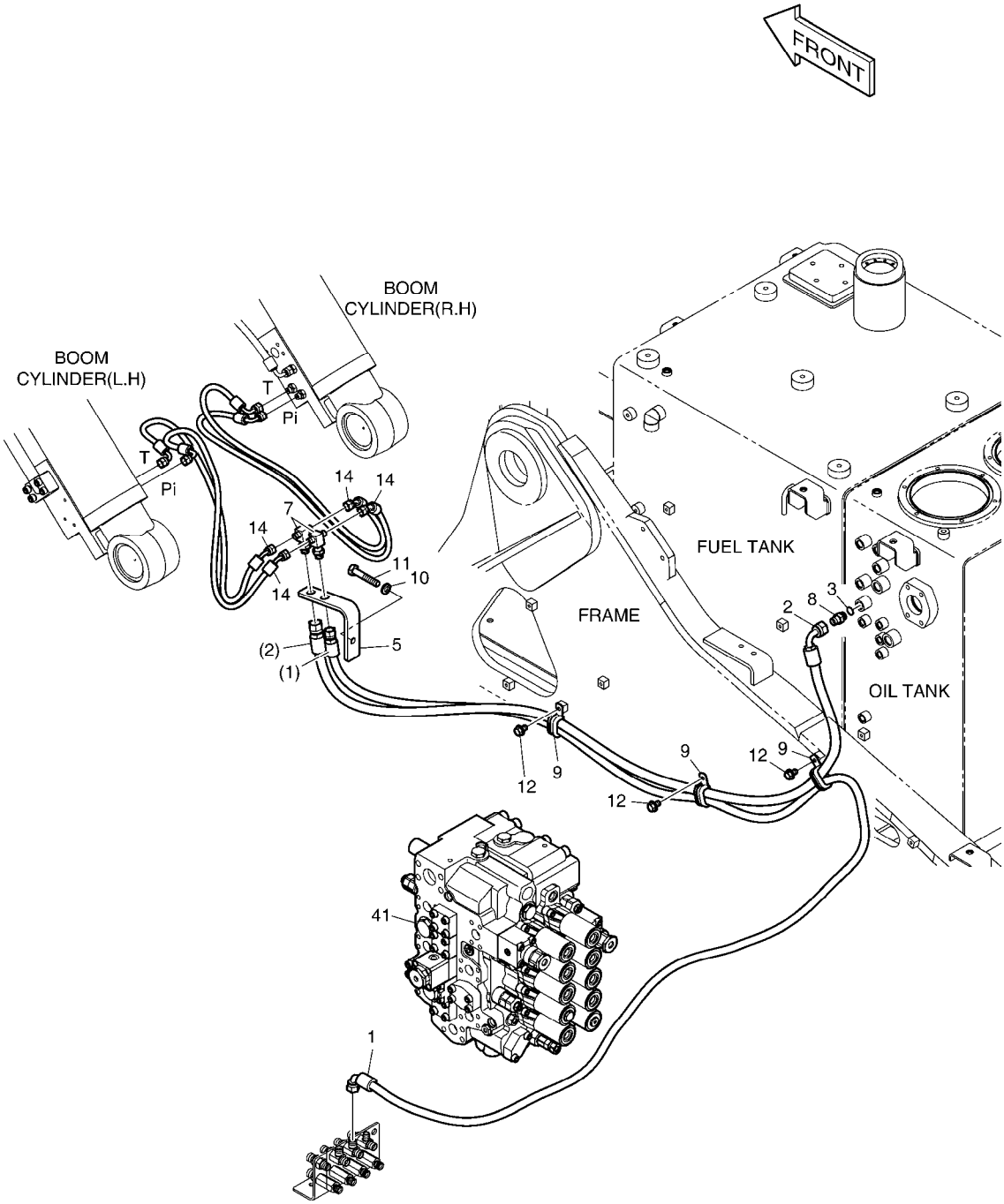

DATE	SEP. 12, 2012
4th EDITION	

Fig. 6410 LOCK VALVE PIPING - BOOM
CONDUITES DE VERROU VANNE

Serial No. ;

Key No.	Part No.	Description	Description	Q'ty	S.C	Serial No.	ICA	Replaceable part	
								Part No.	Q'ty
6410 --	K1044690	LOCK VALVE PIPING;BOOM	FERMEZ LA TUYAUTERIE A	-	D				
1	DS2093438	HOSE	TUYAU FLEXIBLE	1					
2	DS2093104	HOSE	TUYAU FLEXIBLE	1					
3	S8000141	O-RING	JOINT TORIQUE	1					
5	K1000140A	PLATE	PLAQUE	1					
7	181-00008	TEE	TE	2					
8	2181-1126D7	ADAPTER	ADAPTEUR	1					
9	124-00209D1	CLIP	AGRAFE	3					
10	S5102703	WASHER;SPRING	RONDELLE	1					
11	S0561066	BOLT M12X1.75X65	BOULON A 6 PANS	1					
12	K1001029	BOLT	BOULON	3					
14	DS2090009	HOSE	TUYAU	4					
41	K1044591	VALVE;CONTROL	VANNE	1					

DATE	SEP. 12, 2012
4th EDITION	

Fig. 6420 BOOM PIPING - LOCK VALVE
DONDUITER DE FLECHE

Serial No. ;

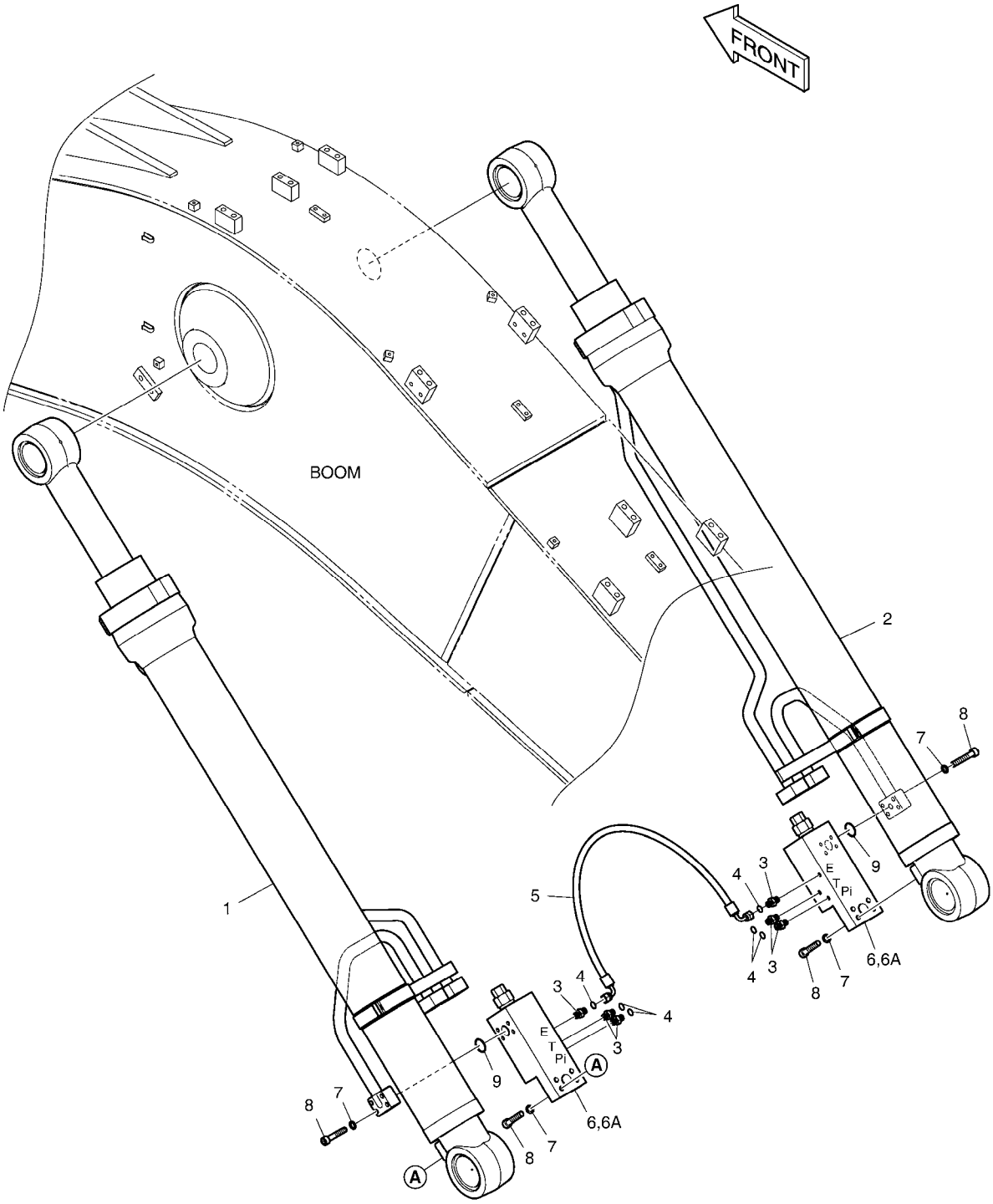

DATE	SEP. 12, 2012
4th EDITION	

Fig. 6420 BOOM PIPING - LOCK VALVE DONDUITER DE FLECHE

Serial No. ;

Key No.	Part No.	Description	Description	Q'ty	S.C	Serial No.	ICA	Replaceable part	
								Part No.	Q'ty
6420 --	K1041838B	BOOM LOCK V/V PIPING(5.7M)	CONDUITES DE PILOTE	-	D				
1	K1041220B	CYLINDER;BOOM(L.H)	VERIN DE FLECHE	1		5001-9957	Y	400309-00345	1
	400309-00345	CYLINDER;BOOM(L.H)	VERIN DE FLECHE	1		09958-11554	Y	400309-00345A	1
	400309-00345A	CYLINDER;BOOM(L.H)	VERIN DE FLECHE	1		11555-			
2	K1041221B	CYLINDER;BOOM(R.H)	VERIN DE FLECHE	1		5001-9957	Y	400309-00347	1
	400309-00347	CYLINDER;BOOM (R.H)	VERIN DE FLECHE	1		09958-11554	Y	400309-00347A	1
	400309-00347A	CYLINDER;BOOM (R.H)	VERIN DE FLECHE	1		11555-			
3	2181-1126D14	ADAPTER	ADAPTEUR	6					
4	S8000111	O-RING	JOINT TORIQUE	6					
5	DS2059383	HOSE PF1/4-800L	TUYAU	1					
6	420-00226	VALVE;LOCK	VALVE	2					
6A	K9000998	. SEAL KIT	. KIT DE JOINT	1					
7	S5110603	WASHER;SPRING	RONDELLE	16					
8	S2212766	BOLT;SOCKET M10X1.5X55	BOULON	16					
9	S8000281	O-RING	JOINT TORIQUE	2					

DATE	SEP. 12, 2012
4th EDITION	

Fig. 6430 PILOT PIPING - ARM LOCK V/V CONDUITES DE PILOTE

Serial No. ;

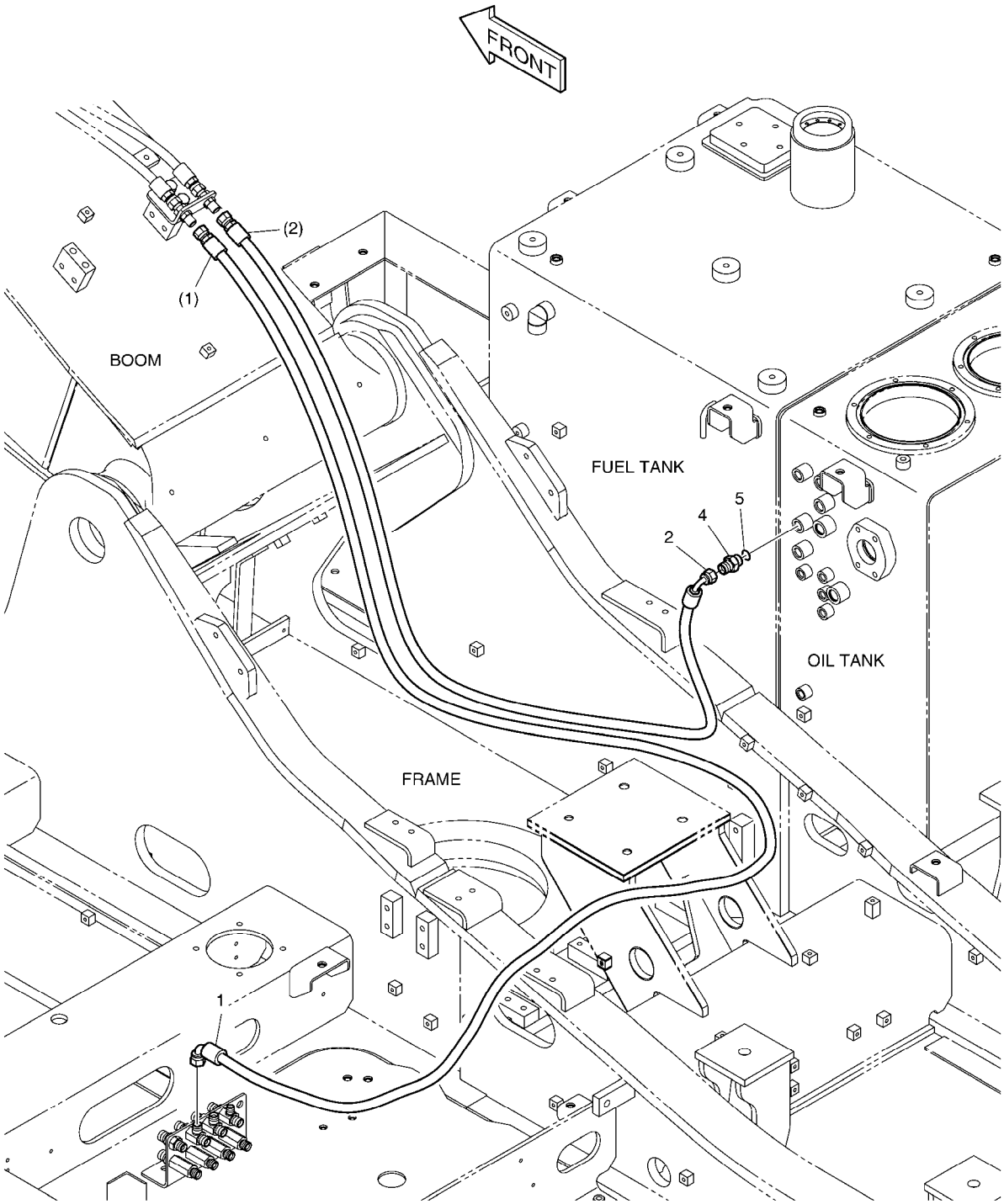

DATE	SEP. 12, 2012
4th EDITION	

Fig. 6430 PILOT PIPING - ARM LOCK V/V
CONDUITES DE PILOTE

Serial No. ;

Key No.	Part No.	Description	Description	Q'ty	S.C	Serial No.	ICA	Replaceable part	
								Part No.	Q'ty
6430 --	K1044691	LOCK VALVE PIPING;ARM	FERMEZ LA TUYAUTERIE A	-	D				
1	DS2093240	HOSE	TUYAU FLEXIBLE	1					
2	DS2093196	HOSE	TUYAU	1					
4	2181-1126D7	ADAPTER	ADAPTEUR	1					
5	S8000141	O-RING	JOINT TORIQUE	1					

DATE	SEP. 12, 2012
4th EDITION	

Fig. 6440 ARM PIPING - LOCK VALVE
CONDUITES DE BALANCIER

Serial No. ;

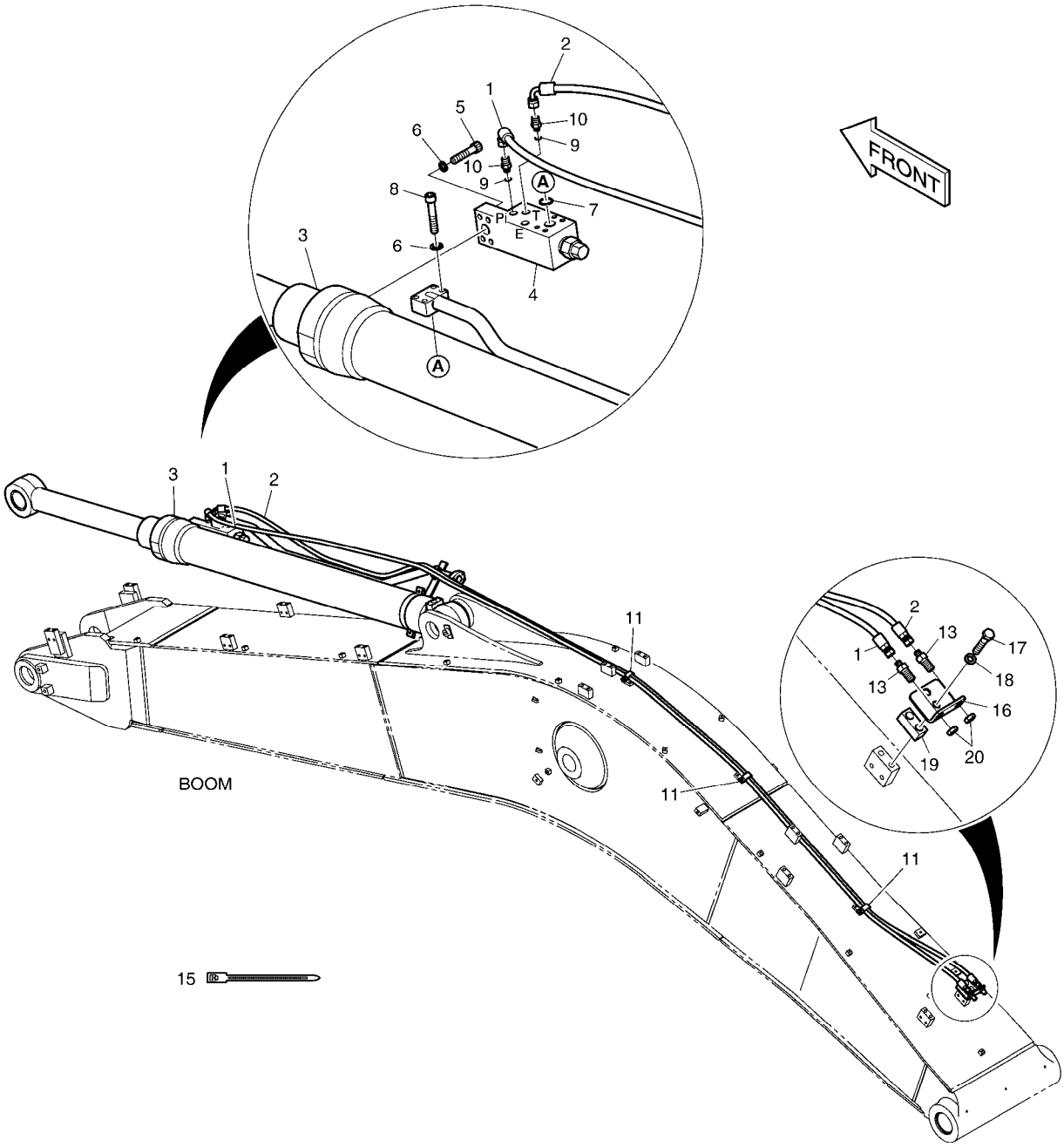

DATE	SEP. 12, 2012
4th EDITION	

Fig. 6440 ARM PIPING - LOCK VALVE CONDUITES DE BALANCIER

Serial No. ;

Key No.	Part No.	Description	Description	Q'ty	S.C	Serial No.	ICA	Replaceable part	
								Part No.	Q'ty
6440 --	K1041839A	ARM PIPING;LOCK V/V	CONDUITES DE BALANCIE	-	D				
1	DS2055666	HOSE	TUYAU	1					
2	DS2055666	HOSE	TUYAU	1					
3	K1041222A	CYLINDER;ARM(LOCK V/V)	CYLINDRE	1		05001-11735	Y	400305-00220	1
	400305-00220	CYLINDER;ARM(LOCK V/V)	CYLINDRE	1		11736-			
4	420-00004A	VALVE;LOCK	VANNE	1		05001-12020			
	410114-00154	VALVE,LOCK	VANNE	1		12021-			
4A	K9000999	. SEAL KIT	. KIT DE JOINT	1		05001-12020			
	401107-01315	. SEAL KIT	. KIT DE JOINT	1		12021-			
5	S2215766	BOLT;SOCKET M12X55	BOULON	4					
6	S5110703	WASHER;SPRING	RONDELLE	8					
7	S8000341	O-RING	JOINT CIRCULAIRE	1					
8	S2215966	BOLT;SOCKET	BOULON	8					
9	S8000111	O-RING	JOINT TORIQUE	2					
10	2181-1126D85	ADAPTER	ADAPTEUR	2					
11	DS2805009	CLIP	AGRAFE	4					
13	181-00078D1	ADAPTER	ADAPTEUR	2					
15	2124-1084D2	CLIP;BAND	AGRAFE	30					
16	195-00163	BRACKET	SUPPORT	1					
17	S0563366	BOLT	BOULON	2					
18	S5102803	WASHER;SPRING	RONDELLE	2					
19	K1004006	PLATE	PLAQUE	1					
20	121-00010D1	NUT	ECROU	2					

DATE	SEP. 12, 2012
4th EDITION	

Fig. 6450 ARM PIPING - ARM 2.9m(CLAMSHELL)
CONDUITES DE BALANCIER

Serial No. ;

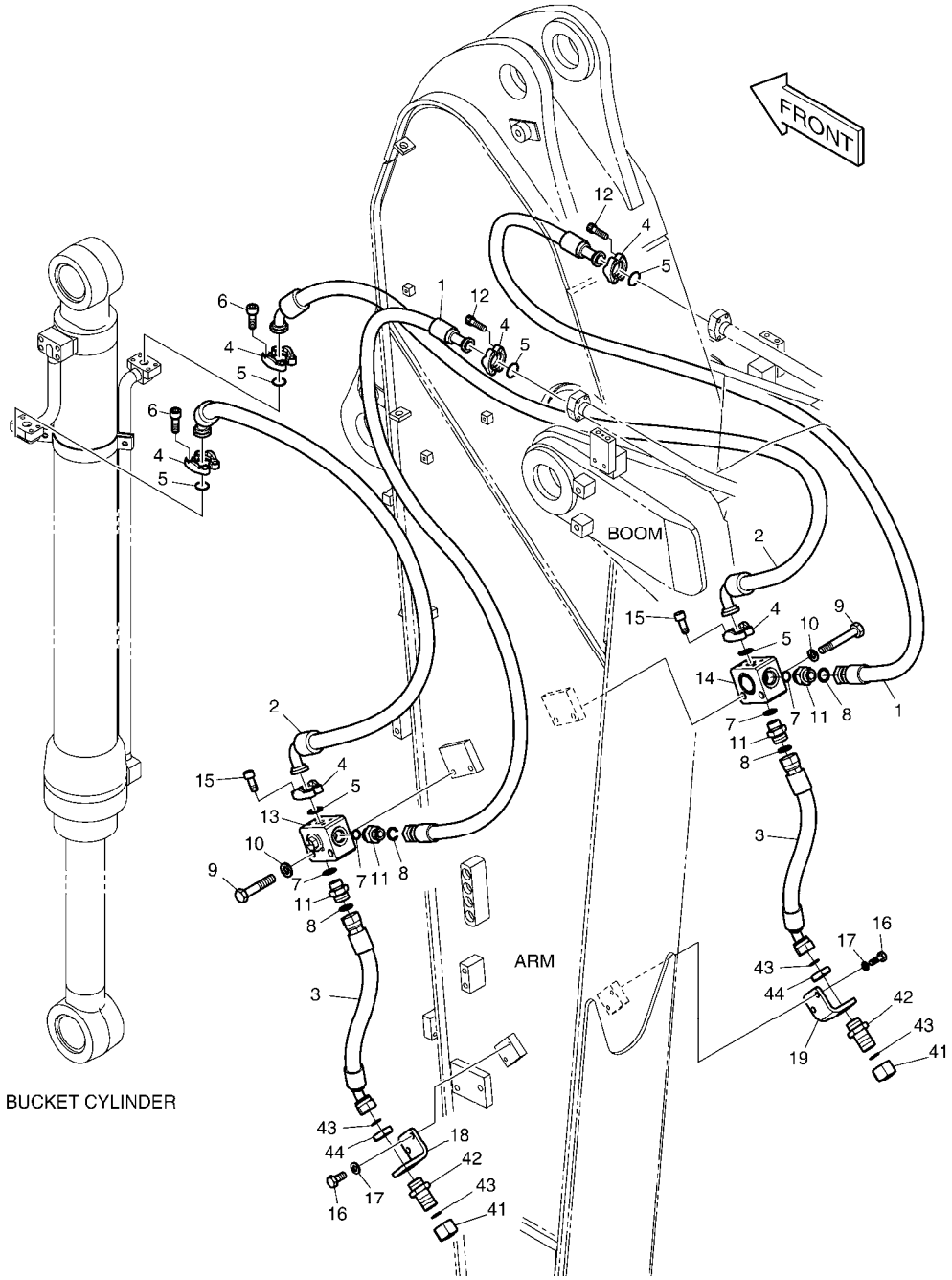

DATE	SEP. 12, 2012
4th EDITION	

Fig. 6450 ARM PIPING - ARM 2.9m(CLAMSHELL)
CONDUITES DE BALANCIER

Serial No. ;

Key No.	Part No.	Description	Description	Q'ty	S.C	Serial No.	ICA	Replaceable part	
								Part No.	Q'ty
6450 --	K1041937A	ARM PIPING-CLAMSHELL	TUYAUTERIE DU BRAS	-	D				
1	DS2016092	HOSE	TUYAU	2					
2	DS2043128	HOSE	TUYAU	2					
3	DS2012518	HOSE	TUYAU	2					
4	2181-9079	FLANGE	BRIDE	12					
5	2180-1026D2	O-RING	JOINT CIRCULAIRE	6					
6	S2212266	BOLT;SOCKET M10X1.5X30	BOULON A 6 PANS CREUX	8					
7	S8030121	O-RING	JOINT CIRCULAIRE	4					
8	S8000231	O-RING	JOINT CIRCULAIRE	4					
9	S0563466	BOLT	BOULON	4					
10	S5102803	WASHER;SPRING	RONDELLE	4					
11	2181-4133D5	ADAPTER	ADAPTEUR	4					
12	S2212366	BOLT;SOCKET M10X1.5X35	BOULON	8					
13	K1002939	VALVE;SWITCH(L.H)	VALVE	1					
14	K1002940	VALVE;SWITCH(R.H)	VALVE	1					
15	S2212066	BOLT;SOCKET M10X1.5X25	BOULON	8					
16	S0512066	BOLT M10X1.5X25	BOULON	4					
17	S5102603	WASHER,SPRING	RONDELLE	4					
18	K1014759	BRACKET	SUPPORT	1					
19	K1015093	BRACKET	SUPPORT	1					
41	2181-2817D1	CAP	CHAPEAU	2					
42	DS2415007	ADAPTER	ADAPTEUR	2					
43	S8030121	O-RING	JOINT CIRCULAIRE	4					
44	121-00010D8	NUT	ECROU	2					

DATE	SEP. 12, 2012
4th EDITION	

Fig. 6460 MAIN PIPING-ROTATION CONDUITES DE BATI PRINCIPAL

Serial No. ;

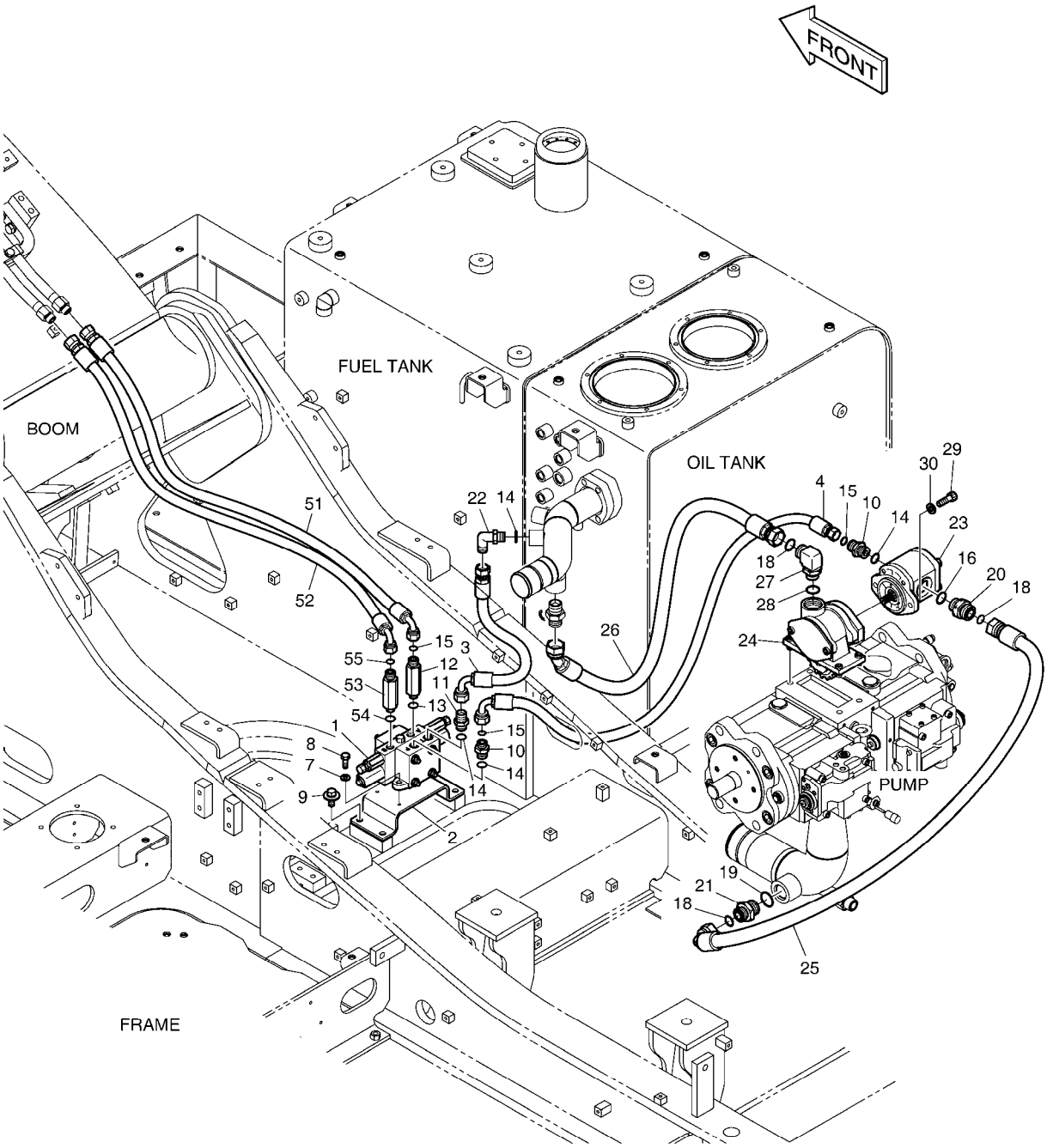

DATE	SEP. 12, 2012
4th EDITION	

Fig. 6460 MAIN PIPING-ROTATION CONDUITES DE BATI PRINCIPAL

Serial No. ;

Key No.	Part No.	Description	Description	Q'ty	S.C	Serial No.	ICA	Replaceable part	
								Part No.	Q'ty
6460 --	K1027501	MAIN PIPING;ROTATING	CIRCUIT HYDRAULIQUE PF	-	D				
1	426-00284B	VALVE;ONE SPOOL	VANNE	1					
2	K1000352A	BRACKET	PARENTHÈSE	1					
3	DS2055292	HOSE	TUYAU	1					
4	DS2013517	HOSE	TUYAU FLEXIBLE	1					
7	S5102503	WASHER,SPRING	RONDELLE	3					
8	S0508966	BOLT	BOULON	3					
9	DS0025017	BOLT	BOULON	4					
10	2181-4133D3	ADAPTER	ADAPTEUR	2					
11	2181-1126D6	ADAPTER	ADAPTEUR	1					
12	DS2232108	ADAPTER	ADAPTEUR	1					
13	S8000141	O-RING	JOINT TORIQUE	1					
14	S8000181	O-RING	JOINT CIRCULAIRE	4					
15	S8030081	O-RING	JOINT CIRCULAIRE	3					
16	S8000231	O-RING	JOINT CIRCULAIRE	1					
18	S8030121	O-RING	JOINT CIRCULAIRE	3					
19	S8000291	O-RING	JOINT CIRCULAIRE	1					
20	2181-2627D1	ADAPTER	ADAPTEUR	1					
21	2181-4133D12	ADAPTER	ADAPTEUR	1					
22	2181-1702D2	ELBOW	COUDE	1					
23	K1000410	GEAR PUMP	POMPE A ENGRENAGES	1					
24	K1001252B	PTO ASS'Y	PTO ASS'Y	1					
25	2184-1197D31	HOSE	TUYAU FLEXIBLE	1					
26	DS2012392	HOSE	TUYAU FLEXIBLE	1					
27	2181-2294D2	ELBOW	COUDE	1					
28	S8000241	O-RING	JOINT CIRCULAIRE	1					
29	S2212266	BOLT;SOCKET M10X1.5X30	BOULON A 6 PANS CREUX	2					
30	S5102603	WASHER,SPRING	RONDELLE	2					
51	DS2013672	HOSE	TUYAU	1					
52	DS2013672	HOSE	TUYAU	1					
53	DS2232108	ADAPTER	ADAPTEUR	1					
54	S8000141	O-RING	JOINT TORIQUE	1					
55	S8030081	O-RING	JOINT CIRCULAIRE	1					

DATE	SEP. 12, 2012
4th EDITION	

Fig. 6470 PILOT PIPING(1) - ROTATING CONDUITES DE PILOTE

Serial No. ;

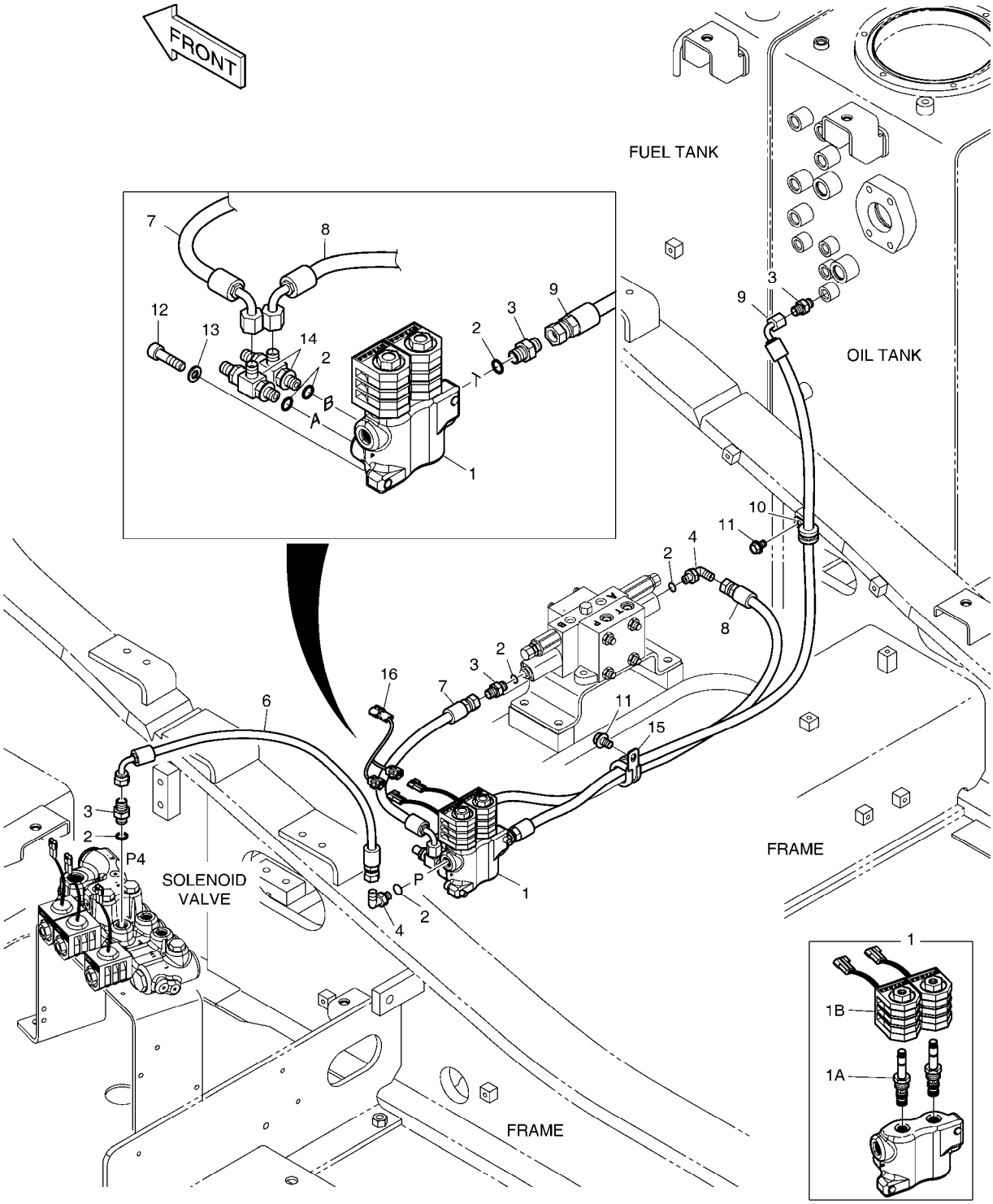

DATE	SEP. 12, 2012
4th EDITION	

Fig. 6470 PILOT PIPING(1) - ROTATING CONDUITES DE PILOTE

Serial No. ;

Key No.	Part No.	Description	Description	Q'ty	S.C	Serial No.	ICA	Replaceable part	
								Part No.	Q'ty
6470 --	K1044684	PILOT PIPING;ROTATING	CONDUITES DE PILOTE	-	D				
1	426-00247B	VALVE;SOLENOID	SOUPAPE A SOLENOIDE	1					
1A	K9007363	. SPOOL;SOLENOID	. PLUNGEUR	2					
1B	1.519-00001	. COIL 24V	. ENROULEMENT	2					
2	S8000111	O-RING	JOINT TORIQUE	7					
3	2181-1126D14	ADAPTER	ADAPTEUR	4					
4	2181-1702D4	ELBOW	COUDE	2					
6	DS2093040	HOSE	TUYAU FLEXIBLE	1					
7	DS2093027	HOSE PF1/4-500L	TUYAU FLEXIBLE	1					
8	DS2093074	HOSE	TUYAU FLEXIBLE	1					
9	DS2093201	HOSE	TUYAU	1					
10	124-00208D2	CLIP	AGRAFE	1					
11	K1001029	BOLT	BOULON	2					
12	S2209266	BOLT;SOCKET M8X1.25X30	BOULON A 6 PANS CREUX	2					
13	S5110503	WASHER;SPRING	RONDELLE	2					
14	181-00779	TEE;SHUTTLE	TE	2					
15	124-00208D4	CLIP	ATTACHE	1					
16	K1000817	HARNESS	FAISCEAU	1					

DATE	SEP. 12, 2012
4th EDITION	

Fig. 6480 PILOT PIPING(2) - ROTATING CONDUITES DE PILOTE

Serial No. ;

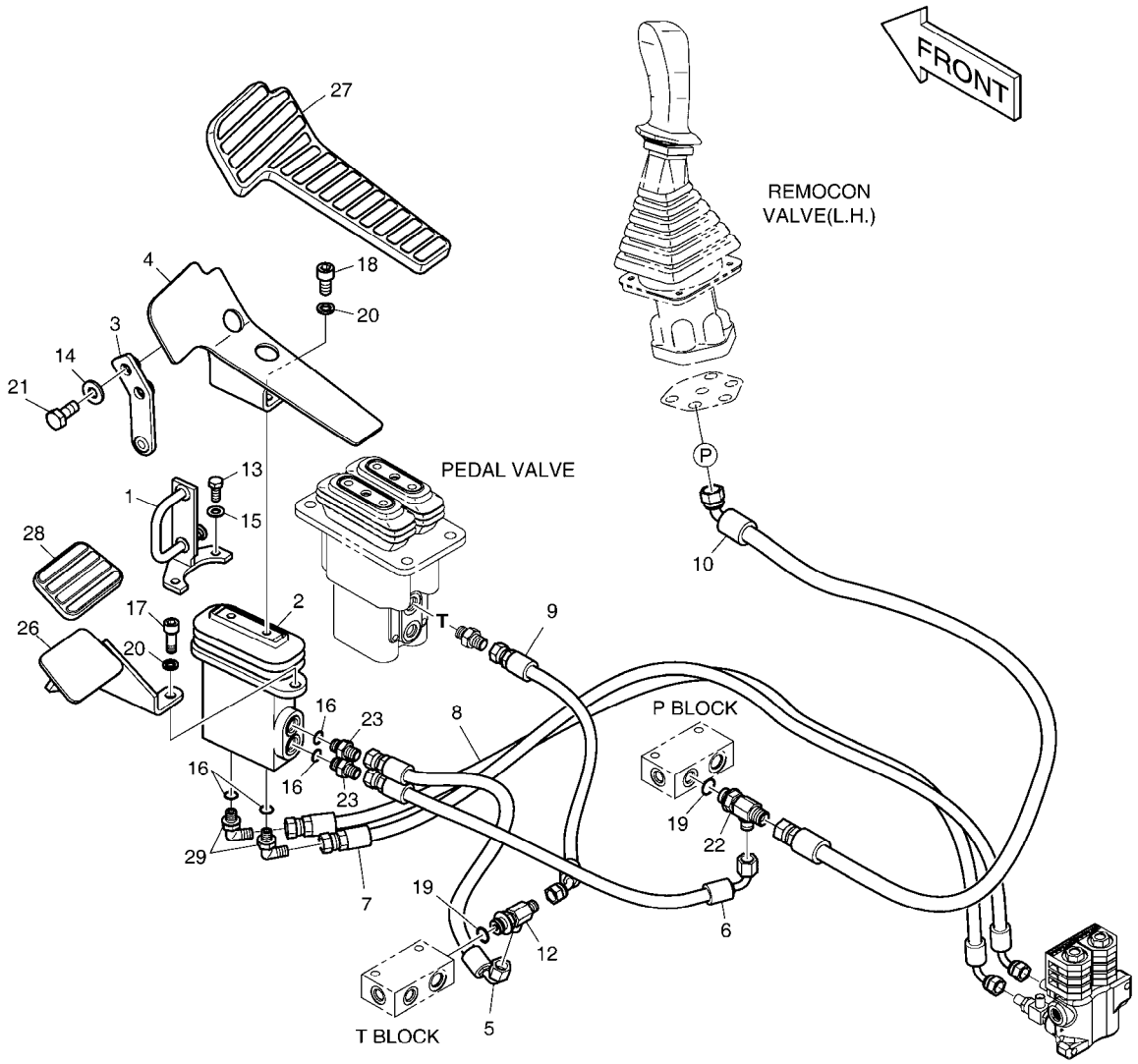

DATE	SEP. 12, 2012
4th EDITION	

Fig. 6480 PILOT PIPING(2) - ROTATING CONDUITES DE PILOTE

Serial No. ;

Key No.	Part No.	Description	Description	Q'ty	S.C	Serial No.	ICA	Replaceable part	
								Part No.	Q'ty
6480 --	K1007262E	PILOT PIPING-ROTATING	CIRCUIT DE PILOTE	-	D				
1	K1001873A	PLATE	PLAQUE	1					
2	K1017382A	PEDAL VALVE	VALVE DE PEDALE	1					
3	K1001871B	PLATE	PLAQUE	1					
4	195-01684A	BRACKET;PEDAL(L.H)	SUPPORT	1					
5	DS2093130	HOSE	TUYAU	1					
6	DS2093202	HOSE PF1/4-480L	TUYAU FLEXIBLE	1					
7	DS2093204	HOSE PF1/4-2430L	TUYAU FLEXIBLE	1					
8	DS2093205	HOSE	TUYAU	1					
9	DS2092046	HOSE	TUYAU	1					
10	DS2095003	HOSE	TUYAU	1					
12	2181-1951D7	TEE	TE	1					
13	S0508866	BOLT	BOULON	2					
14	S5102603	WASHER,SPRING	RONDELLE	2					
15	S5102503	WASHER,SPRING	RONDELLE	2					
16	S8000111	O-RING	JOINT TORIQUE	4					
17	S2212266	BOLT;SOCKET M10X1.5X30	BOULON A 6 PANS CREUX	2					
18	S2211866	BOLT;SOCKET	BOULON	2					
19	S8000141	O-RING	JOINT TORIQUE	2					
20	S5110603	WASHER;SPRING	RONDELLE	4					
21	S0512066	BOLT M10X1.5X25	BOULON	2					
22	2181-1951D6	TEE	TE	1					
23	2181-1126D14	ADAPTER	ADAPTEUR	2					
26	K1003948A	FOOT REST	REPOS DE PIED	1					
27	161-00382	RUBBER;PEDAL(L.H)	LE CAOUTCHOUC	1					
28	K1006656	RUBBER;PEDAL	LE CAOUTCHOUC	1					
29	2181-1702D4	ELBOW	COUDE	2					

DATE	SEP. 12, 2012
4th EDITION	

Fig. 6490 BOOM PIPING - ROTATING(BOOM 5.7m) CONDUITES DE FLECHE

Serial No. ;

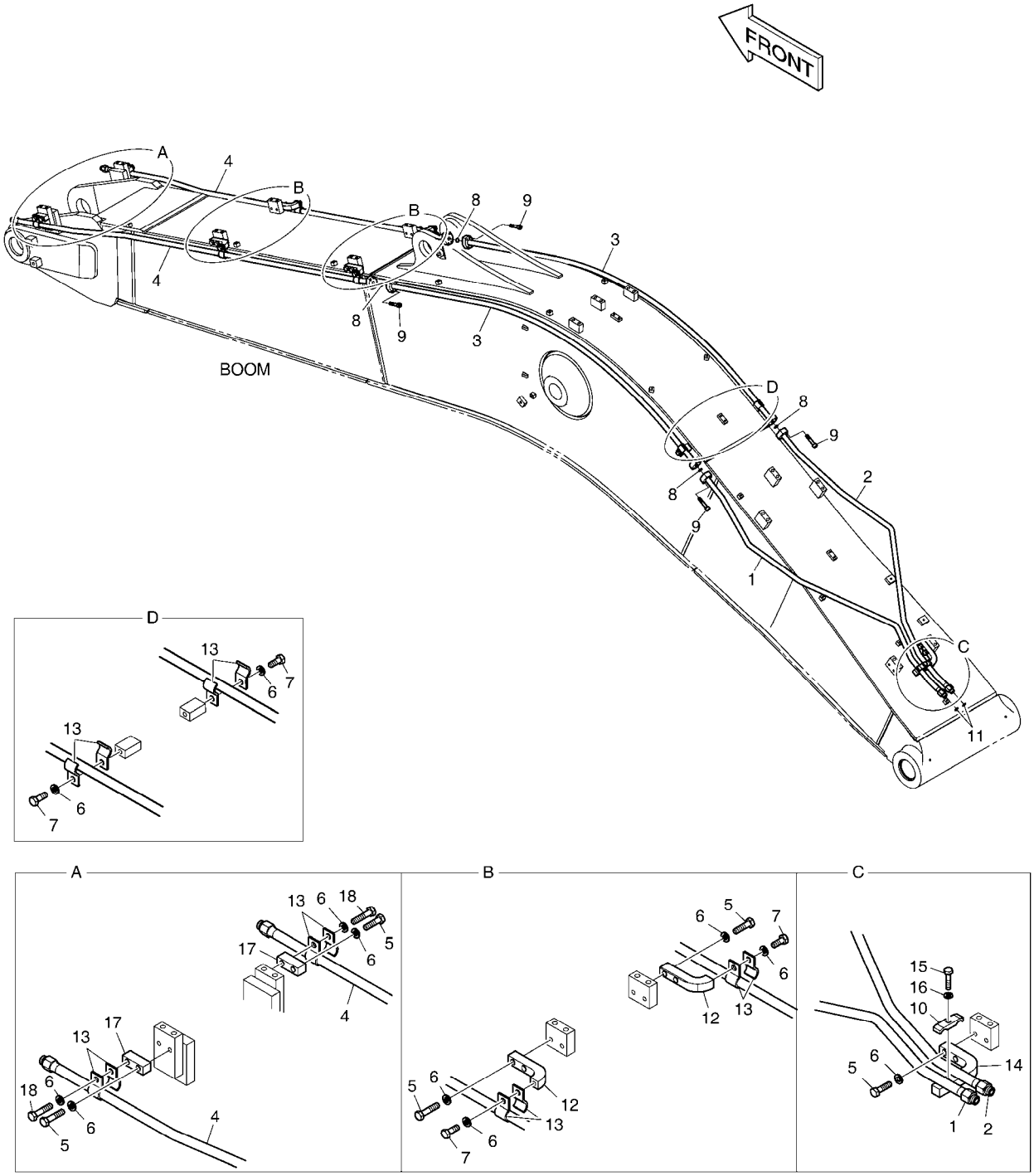

DATE	SEP. 12, 2012
4th EDITION	

Fig. 6490 BOOM PIPING - ROTATING(BOOM 5.7m) CONDUITES DE FLECHE

Serial No. ;

Key No.	Part No.	Description	Description	Q'ty	S.C	Serial No.	ICA	Replaceable part	
								Part No.	Q'ty
6490 --	K1041836	BOOM PIPING;ROTATING	BOOM PIPING	-	D				
1	K1038610	PIPE	TUYAU	1					
2	K1038611	PIPE	TUYAU	1					
3	K1038612	PIPE	TUYAU	2					
4	K1001048	PIPE	TUYAU	2					
5	S0560666	BOLT	BOULON A 6 PANS	12					
6	S5102703	WASHER;SPRING	RONDELLE	20					
7	S0515266	BOLT	BOULON	6					
8	2180-1026D30	O-RING	JOINT CIRCULAIRE	4					
9	S2209466	BOLT;SOCKET	BOULON	16					
10	K1004028	CLAMP;PIPE	BRIDE	1					
11	S8030081	O-RING	JOINT CIRCULAIRE	2					
12	621-02700A	PLATE	PLAQUE	4					
13	124-00299A	CLAMP;PIPE	COLLIER	16					
14	621-02798	PLATE	PLAQUE	1					
15	S0558466	BOLT	BOULON	1					
16	S5102603	WASHER,SPRING	RONDELLE	1					
17	K1002121	PLATE	PLAQUE	2					
18	S0560866	BOLT M12X1.75X55	BOULON	2					

DATE	SEP. 12, 2012
4th EDITION	

Fig. 6500 ARM PIPING - ROTATING(ARM 2.9m)
CONDUITES DE BALANCIER

Serial No. ;

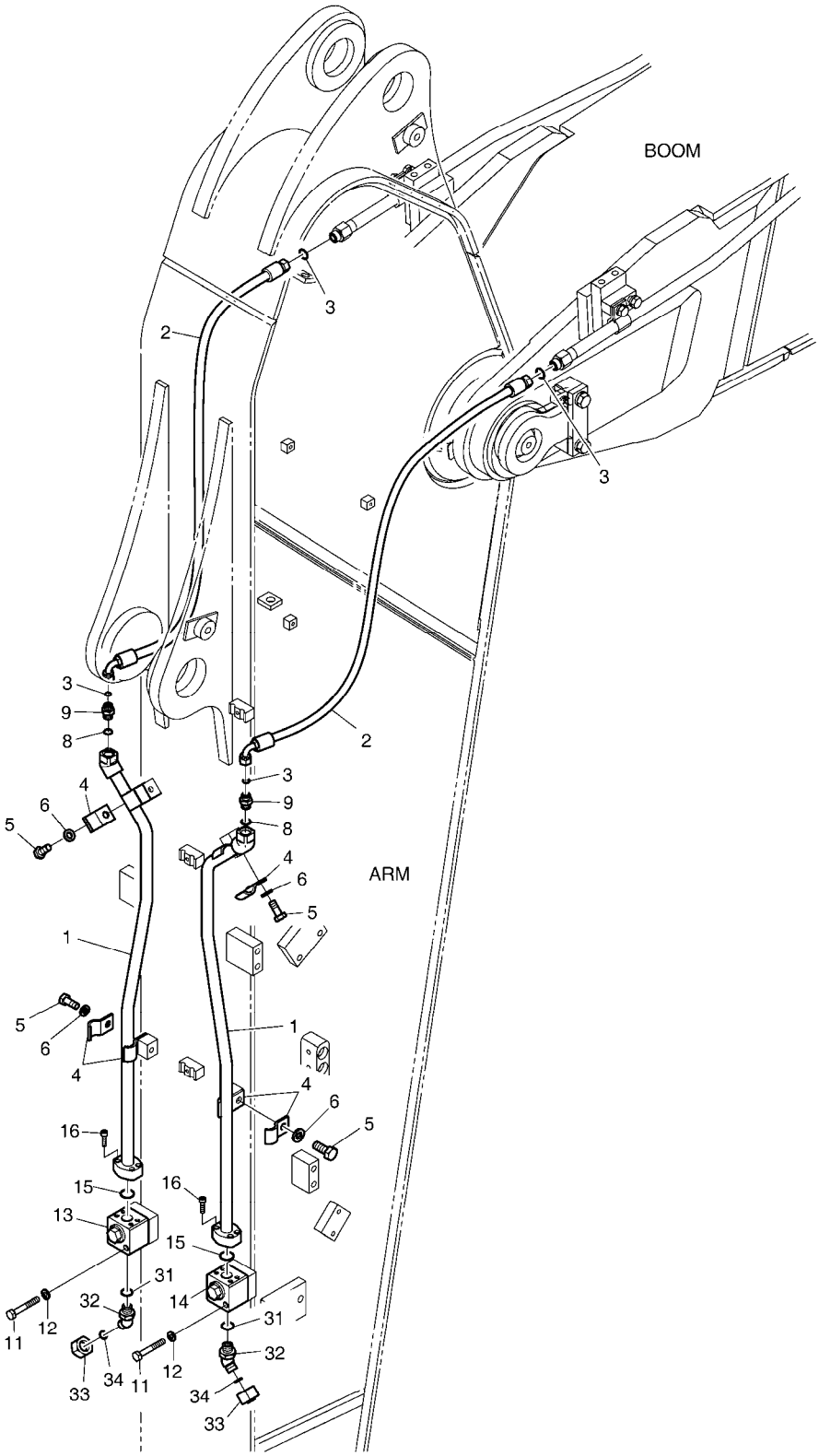

DATE	SEP. 12, 2012
4th EDITION	

Fig. 6500 ARM PIPING - ROTATING(ARM 2.9m) CONDUITES DE BALANCIER

Serial No. ;

Key No.	Part No.	Description	Description	Q'ty	S.C	Serial No.	ICA	Replaceable part	
								Part No.	Q'ty
6500 --	K1041925	ARM PIPING-ROTATION	CONDUITES DE BALANCIE	-	D				
1	K1001050A	PIPE	TUYAU	2					
2	DS2013387	HOSE	TUYAU	2					
3	S8030081	O-RING	JOINT CIRCULAIRE	4					
4	124-00299A	CLAMP;PIPE	COLLIER	8					
5	S0515266	BOLT	BOULON	4					
6	S5102703	WASHER;SPRING	RONDELLE	4					
8	S8000181	O-RING	JOINT CIRCULAIRE	2					
9	2181-4133D3	ADAPTER	ADAPTEUR	2					
11	S0558966	BOLT	BOULON	4					
12	S5102603	WASHER,SPRING	RONDELLE	4					
13	K1006227	VALVE;SWITCH(R.H)	VANNE	1					
14	K1006228	VALVE;SWITCH(L.H)	VANNE	1					
15	2180-1026D30	O-RING	JOINT CIRCULAIRE	2					
16	S2209266	BOLT;SOCKET M8X1.25X30	BOULON A 6 PANS CREUX	8					
31	S8000181	O-RING	JOINT CIRCULAIRE	2					
32	2181-2816D4	ELBOW	COUDE	2					
33	2181-2817D4	CAP	CHAPEAU	2					
34	S8030081	O-RING	JOINT CIRCULAIRE	2					

DATE	SEP. 12, 2012
4th EDITION	

Fig. 6510 BUCKET ASS'Y - 0.73m³(36") - SIDE PIN
ENSEMBLE DE GODET

Serial No. ;

Serial No. : 5001 ~ 10997

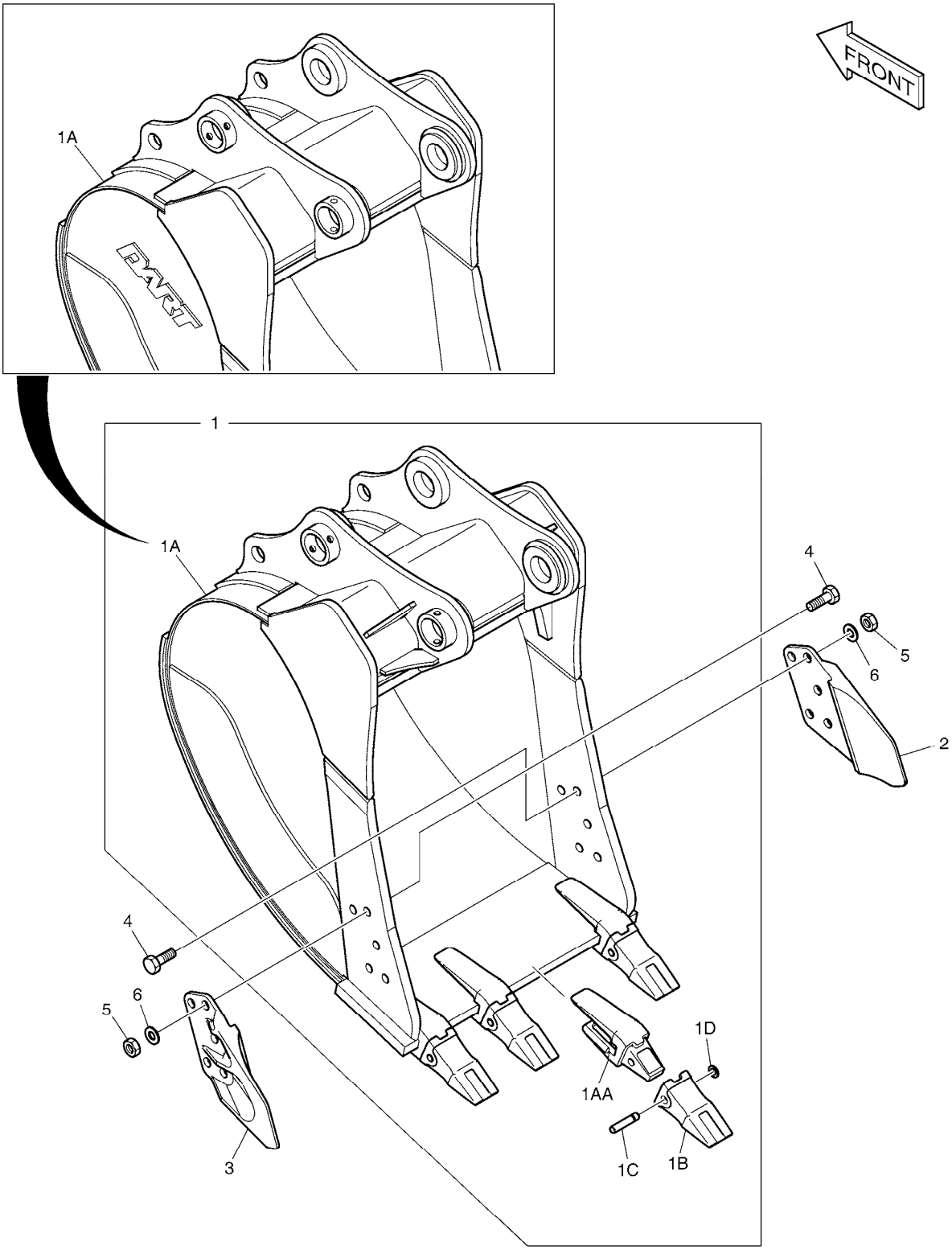

DATE	SEP. 12, 2012
4th EDITION	

Fig. 6510 BUCKET ASS'Y - 0.73m³(36") - SIDE PIN
ENSEMBLE DE GODET

Serial No. ;

Key No.	Part No.	Description	Description	Q'ty	S.C	Serial No.	ICA	Replaceable part	
								Part No.	Q'ty
6510 --	K1013100A	BUCKET ASS'Y-0.73m³(H.D)	GODET	1		05001-10997	I	230104-01259	1
	230104-01259	BUCKET ASS'Y-0.73m³(H.D)	GODET	1		10998-			
1	K1013101A	BUCKET;WITH TOOTH-0.73m³	GODET	1	D				
1A	K1013102	. BUCKET;WELD-0.73m³	. GODET	1		05001-10997	I	230104-01261	1
	230104-01261	. BUCKET;WELD-0.73m³	. GODET	1		10998-			
1AA	2713-1218A	.. ADAPTER;TOOTH	.. ADAPTEUR	4					
1B	713-00024A	. TOOTH;POINT	. DENT	4					
1C	2705-1020	. PIN;LOCKING	. GOUPILLE	4					
1D	2114-1848A	. WASHER;LOCKING	. RONDELLE	4					
2	2713-1059A	CUTTER;SIDE(R.H)	COUPEUR	1					
3	2713-1060A	CUTTER;SIDE(L.H)	COUPEUR	1					
4	S0574861	BOLT M24X3.0X75	BOULON	10					
5	S4013333	NUT	ECROU	10					
6	2114-1831A	WASHER;HARDEN	RONDELLE	10					

DATE	SEP. 12, 2012
4th EDITION	

Fig. 6520 BUCKET ASS'Y - 0.90m³(42") - SIDE PIN
ENSEMBLE DE GODET

Serial No. ;

Serial No. : 5001 ~ 10997

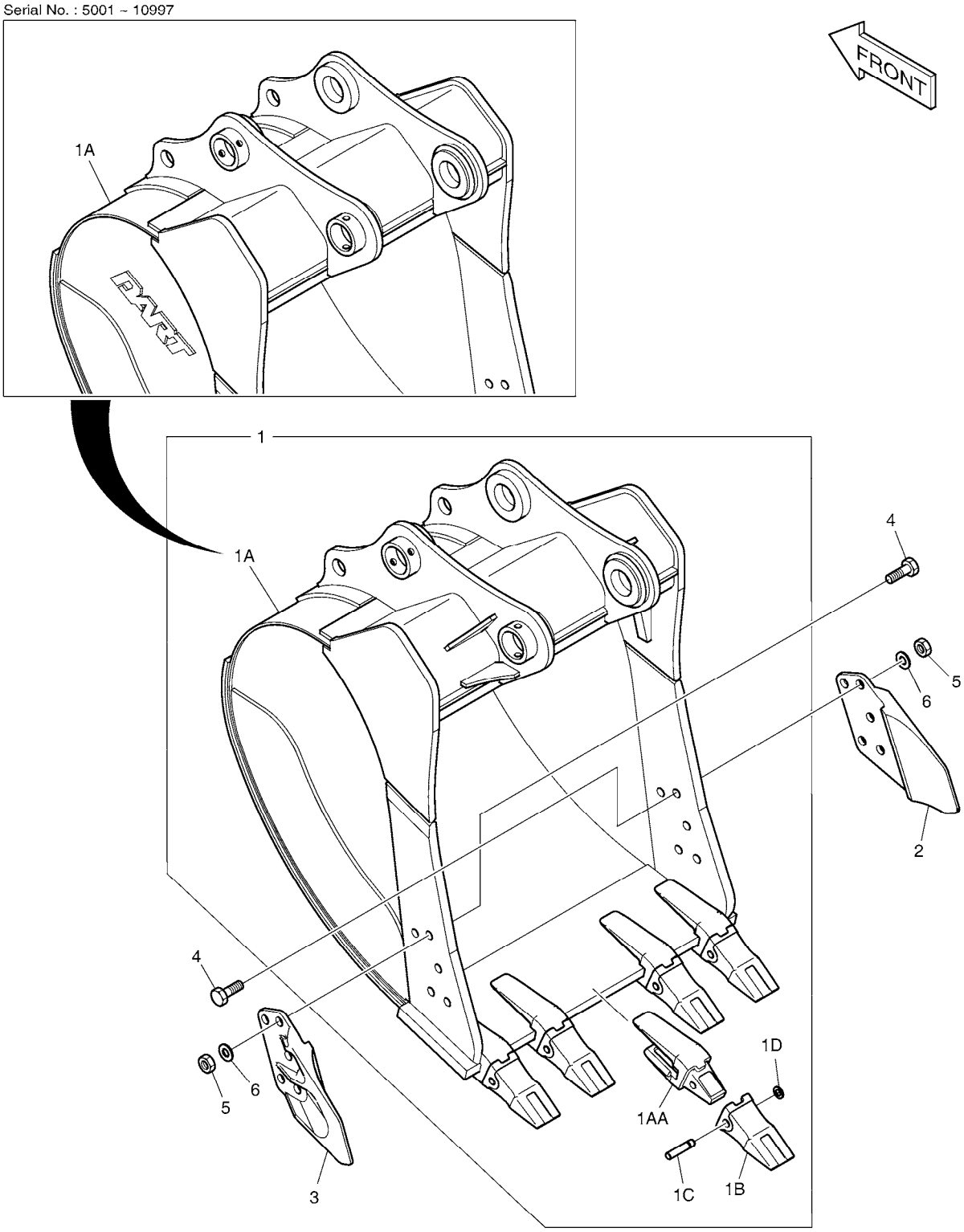

DATE	SEP. 12, 2012
4th EDITION	

Fig. 6520 BUCKET ASS'Y - 0.90m³(42") - SIDE PIN
ENSEMBLE DE GODET

Serial No. ;

Key No.	Part No.	Description	Description	Q'ty	S.C	Serial No.	ICA	Replaceable part	
								Part No.	Q'ty
6520 --	K1013103A	BUCKET ASS'Y-0.90m³(H.D)	GODET	1		05001-10997	I	230104-01262	1
	230104-01262	BUCKET ASS'Y-0.90m³(H.D)	GODET	1		10998-			
1	K1013104A	BUCKET;WITH TOOTH-0.9m³	GODET	1	D				
1A	K1013105	. BUCKET;WELD-0.9m³	. GODET	1		05001-10997	I	230104-01264	1
	230104-01264	. BUCKET;WELD-0.9m³	. GODET	1		10998-			
1AA	2713-1218A	.. ADAPTER;TOOTH	.. ADAPTEUR	5					
1B	713-00024A	. TOOTH;POINT	. DENT	5					
1C	2705-1020	. PIN;LOCKING	. GOUPILLE	5					
1D	2114-1848A	. WASHER;LOCKING	. RONDELLE	5					
2	2713-1059A	CUTTER;SIDE(R.H)	COUPEUR	1					
3	2713-1060A	CUTTER;SIDE(L.H)	COUPEUR	1					
4	S0574861	BOLT M24X3.0X75	BOULON	10					
5	S4013333	NUT	ECROU	10					
6	2114-1831A	WASHER;HARDEN	RONDELLE	10					

DATE	SEP. 12, 2012
4th EDITION	

Fig. 6530 BUCKET ASS'Y - 1.07m³(48") - SIDE PIN
ENSEMBLE DE GODET

Serial No. ;

Serial No. : 5001 ~ 10997

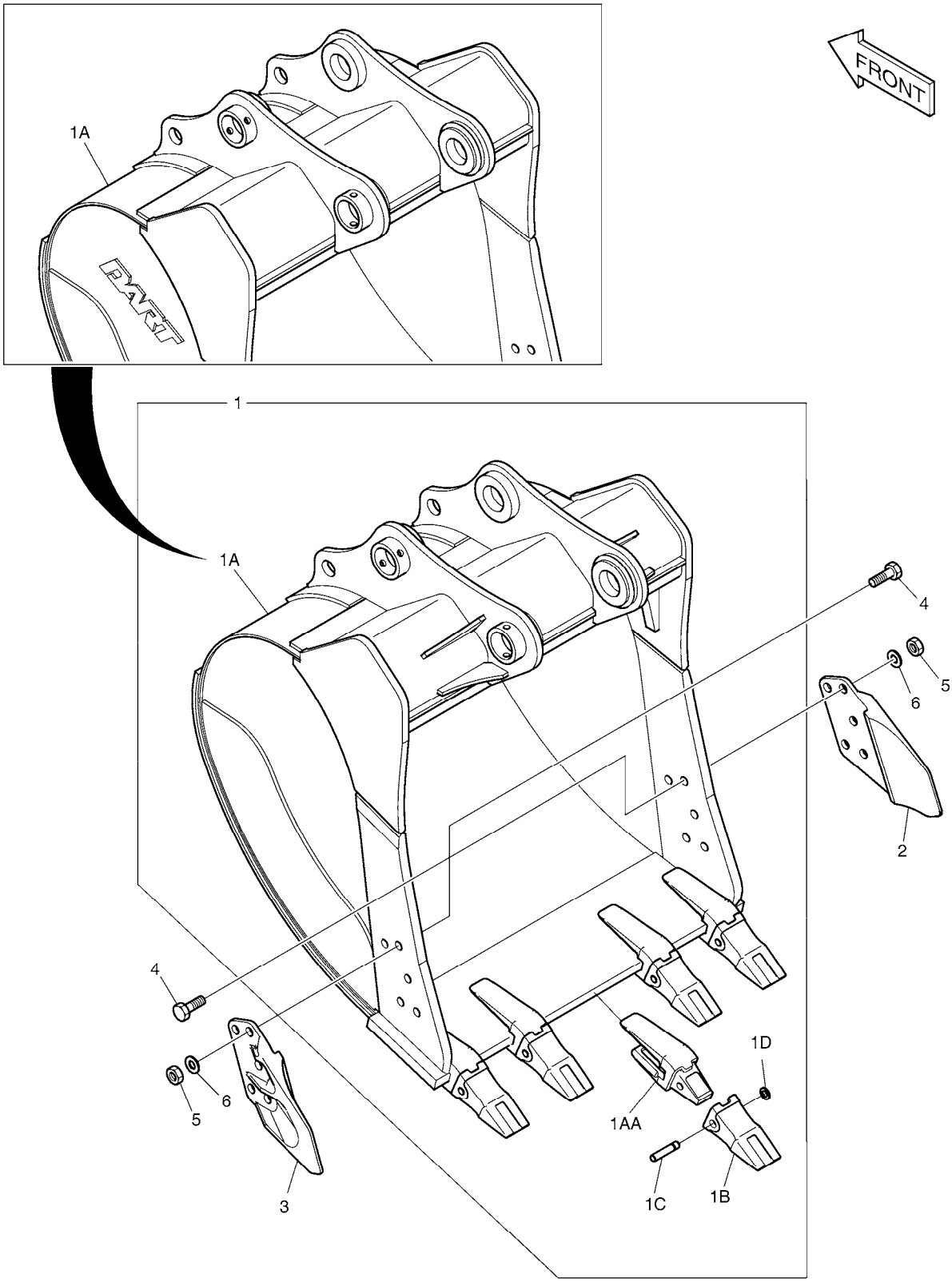

DATE	SEP. 12, 2012
4th EDITION	

Fig. 6530 BUCKET ASS'Y - 1.07m³(48") - SIDE PIN
ENSEMBLE DE GODET

Serial No. ;

Key No.	Part No.	Description	Description	Q'ty	S.C	Serial No.	ICA	Replaceable part	
								Part No.	Q'ty
6530 --	K1013106A	BUCKET ASS'Y-1.07㎥	GODET	1		05001-10997	I	230104-01266	1
	230104-01266	BUCKET ASS'Y-1.07㎥	GODET	1		10998-			
1	K1013108A	BUCKET;WITH TOOTH-1.07m³	GODET	1	D				
1A	K1013109A	. BUCKET;WELD (48")	. GODET	1		05001-10997	I	230104-01268	1
	230104-01268	. BUCKET;WELD (48")	. GODET	1		10998-			
1AA	2713-1218A	.. ADAPTER;TOOTH	.. ADAPTEUR	5					
1B	713-00024A	. TOOTH;POINT	. DENT	5					
1C	2705-1020	. PIN;LOCKING	. GOUPILLE	5					
1D	2114-1848A	. WASHER;LOCKING	. RONDELLE	5					
2	2713-1059A	CUTTER;SIDE(R.H)	COUPEUR	1					
3	2713-1060A	CUTTER;SIDE(L.H)	COUPEUR	1					
4	S0574861	BOLT M24X3.0X75	BOULON	10					
5	S4013333	NUT	ECROU	10					
6	2114-1831A	WASHER;HARDEN	RONDELLE	10					

DATE	SEP. 12, 2012
4th EDITION	

Fig. 6540 BUCKET ASS'Y - 1.24m³(54") - SIDE PIN
ENSEMBLE DE GODET

Serial No. ;

Serial No. : 5001 ~ 10997

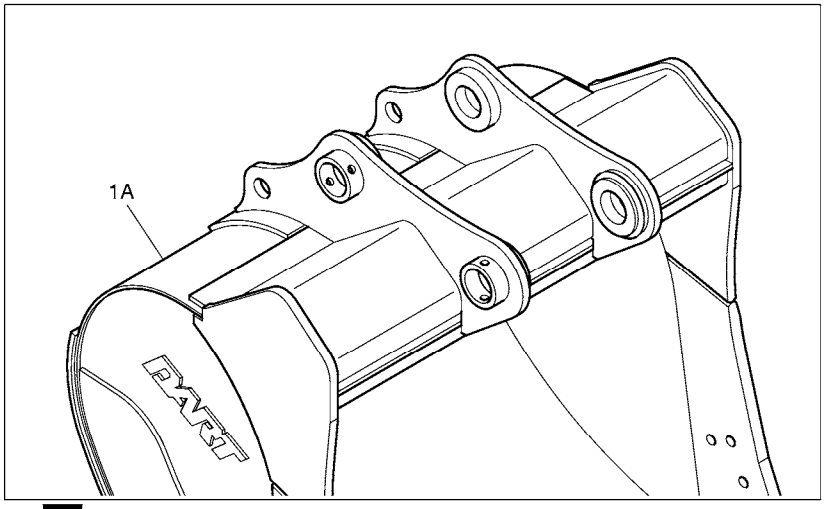

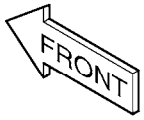

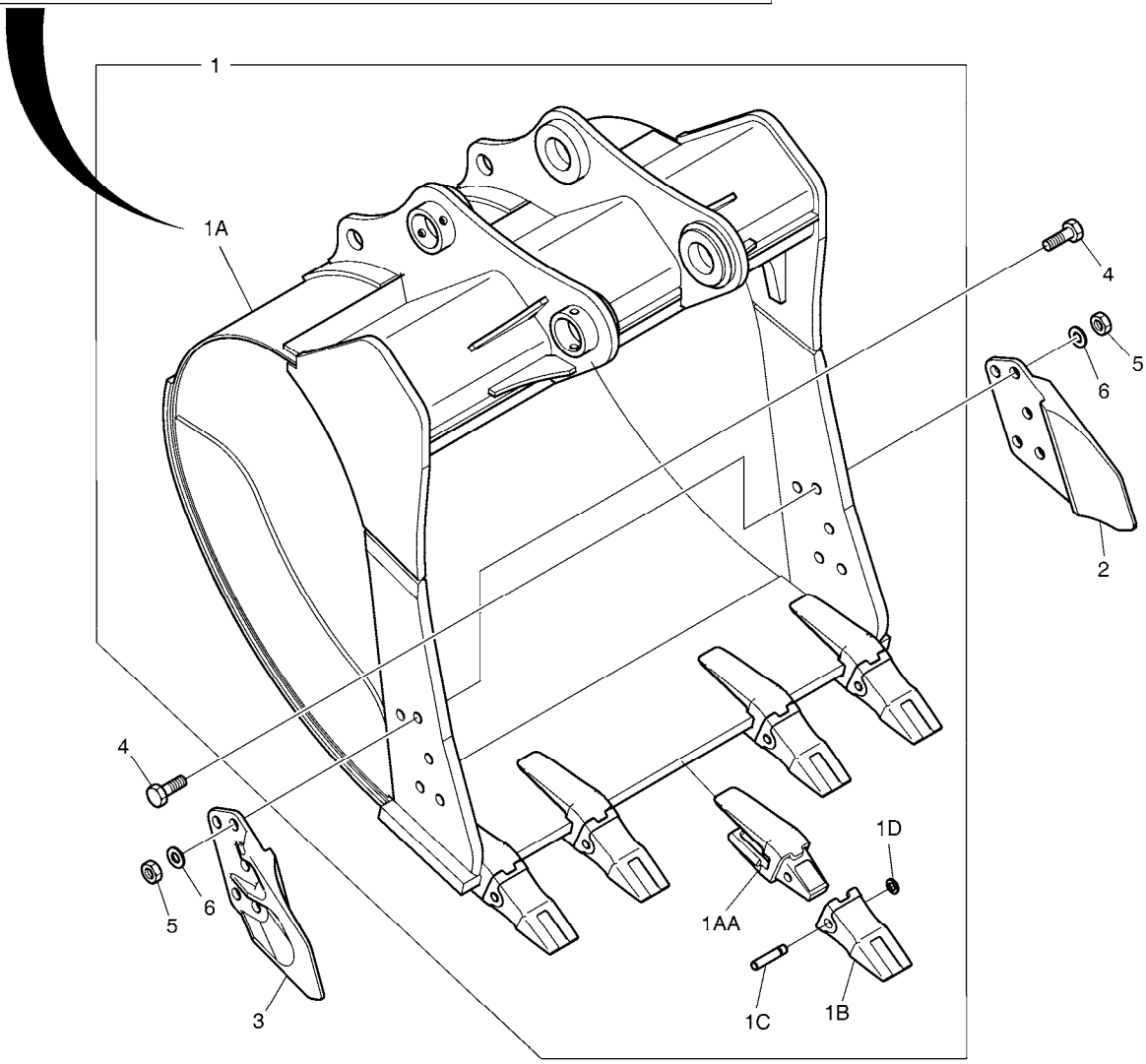

DATE	SEP. 12, 2012
4th EDITION	

Fig. 6540 BUCKET ASS'Y - 1.24m³(54") - SIDE PIN
ENSEMBLE DE GODET

Serial No. ;

Key No.	Part No.	Description	Description	Q'ty	S.C	Serial No.	ICA	Replaceable part	
								Part No.	Q'ty
6540 --	K1013110A	BUCKET ASS'Y-1.24m³(H.D)	GODET	1		05001-10997	I	230104-01269	1
	230104-01269	BUCKET ASS'Y-1.24m³(H.D)	GODET	1		10998-			
1	K1013111A	BUCKET;WITH TOOTH-1.24m³	GODET	1	D				
1A	K1013112	. BUCKET;WELD-1.24m³	. GODET	1		05001-10997	I	230104-01271	1
	230104-01271	. BUCKET;WELD-1.24m³	. GODET	1		10998-			
1AA	2713-1218A	.. ADAPTER;TOOTH	.. ADAPTEUR	5					
1B	713-00024A	. TOOTH;POINT	. DENT	5					
1C	2705-1020	. PIN;LOCKING	. GOUPILLE	5					
1D	2114-1848A	. WASHER;LOCKING	. RONDELLE	5					
2	2713-1059A	CUTTER;SIDE(R.H)	COUPEUR	1					
3	2713-1060A	CUTTER;SIDE(L.H)	COUPEUR	1					
4	S0574861	BOLT M24X3.0X75	BOULON	10					
5	S4013333	NUT	ECROU	10					
6	2114-1831A	WASHER;HARDEN	RONDELLE	10					

DATE	SEP. 12, 2012
4th EDITION	

Fig. 6550 BUCKET ASS'Y - 1.32m³(57") - SIDE PIN
ENSEMBLE DE GODET

Serial No. ;

Serial No. : 5001 ~ 10997

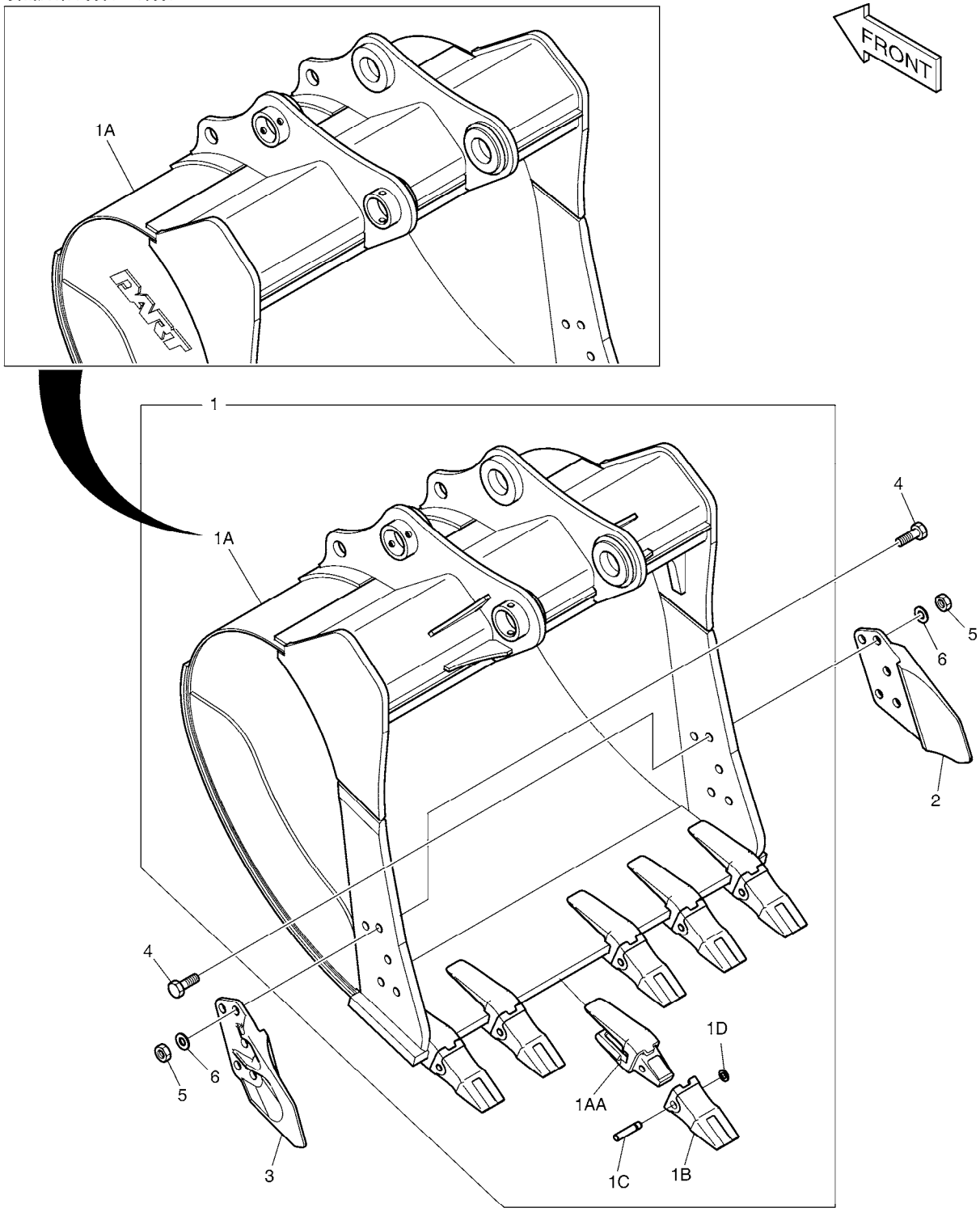

DATE	SEP. 12, 2012
4th EDITION	

Fig. 6550 BUCKET ASS'Y - 1.32m³(57") - SIDE PIN
ENSEMBLE DE GODET

Serial No. ;

Key No.	Part No.	Description	Description	Q'ty	S.C	Serial No.	ICA	Replaceable part	
								Part No.	Q'ty
6550 --	K1013113A	BUCKET ASS'Y-1.32m³(H.D)	GODET	1		05001-10997	I	230104-01272	1
	230104-01272	BUCKET ASS'Y-1.32m³(H.D)	GODET	1		10998-			
1	K1013114A	BUCKET;WITH TOOTH-1.32m³	GODET	1	D				
1A	K1013115	. BUCKET;WELD-1.32m³	. GODET	1		05001-10997	I	230104-01274	1
	230104-01274	. BUCKET;WELD-1.32m³	. GODET	1		10998-			
1AA	2713-1218A	.. ADAPTER;TOOTH	.. ADAPTEUR	6					
1B	713-00024A	. TOOTH;POINT	. DENT	6					
1C	2705-1020	. PIN;LOCKING	. GOUPILLE	6					
1D	2114-1848A	. WASHER;LOCKING	. RONDELLE	6					
2	2713-1059A	CUTTER;SIDE(R.H)	COUPEUR	1					
3	2713-1060A	CUTTER;SIDE(L.H)	COUPEUR	1					
4	S0574861	BOLT M24X3.0X75	BOULON	10					
5	S4013333	NUT	ECROU	10					
6	2114-1831A	WASHER;HARDEN	RONDELLE	10					

DATE	SEP. 12, 2012
4th EDITION	

Fig. 6560 BUCKET ASS'Y - 1.49m³(63") - SIDE PIN
ENSEMBLE DE GODET

Serial No. ;

Serial No. : 5001 ~ 10997

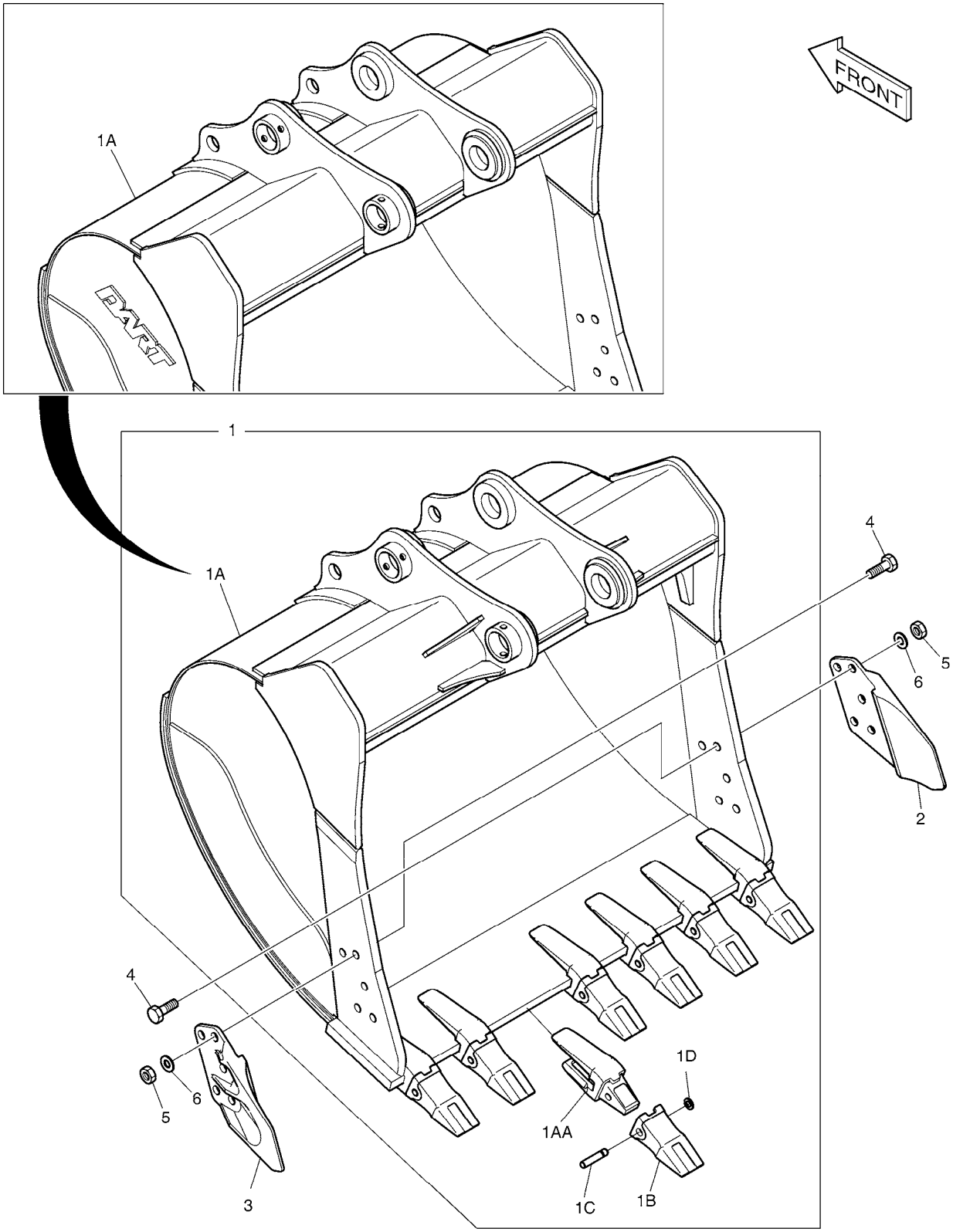

DATE	SEP. 12, 2012
4th EDITION	

Fig. 6560 BUCKET ASS'Y - 1.49m³(63") - SIDE PIN
ENSEMBLE DE GODET

Serial No. ;

Key No.	Part No.	Description	Description	Q'ty	S.C	Serial No.	ICA	Replaceable part	
								Part No.	Q'ty
6560 --	K1013117A	BUCKET ASS'Y-1.49m³(H.D)	GODET	1		05001-10997	I	230104-01275	1
	230104-01275	BUCKET ASS'Y-1.49m³(H.D)	GODET	1		10998-			
1	K1013118A	BUCKET;WITH TOOTH-1.49m³	GODET	1	D				
1A	K1013119	. BUCKET;WELD-1.49m³	. GODET	1		05001-10997	I	230104-01277	1
	230104-01277	. BUCKET;WELD-1.49m³	. GODET	1		10998-			
1AA	2713-1218A	.. ADAPTER;TOOTH	.. ADAPTEUR	7					
1B	713-00024A	. TOOTH;POINT	. DENT	7					
1C	2705-1020	. PIN;LOCKING	. GOUPILLE	7					
1D	2114-1848A	. WASHER;LOCKING	. RONDELLE	7					
2	2713-1059A	CUTTER;SIDE(R.H)	COUPEUR	1					
3	2713-1060A	CUTTER;SIDE(L.H)	COUPEUR	1					
4	S0574861	BOLT M24X3.0X75	BOULON	10					
5	S4013333	NUT	ECROU	10					
6	2114-1831A	WASHER;HARDEN	RONDELLE	10					

DATE	SEP. 12, 2012
4th EDITION	

Fig. 6570 ARM - 2.0m BALANCIER

Serial No. ;

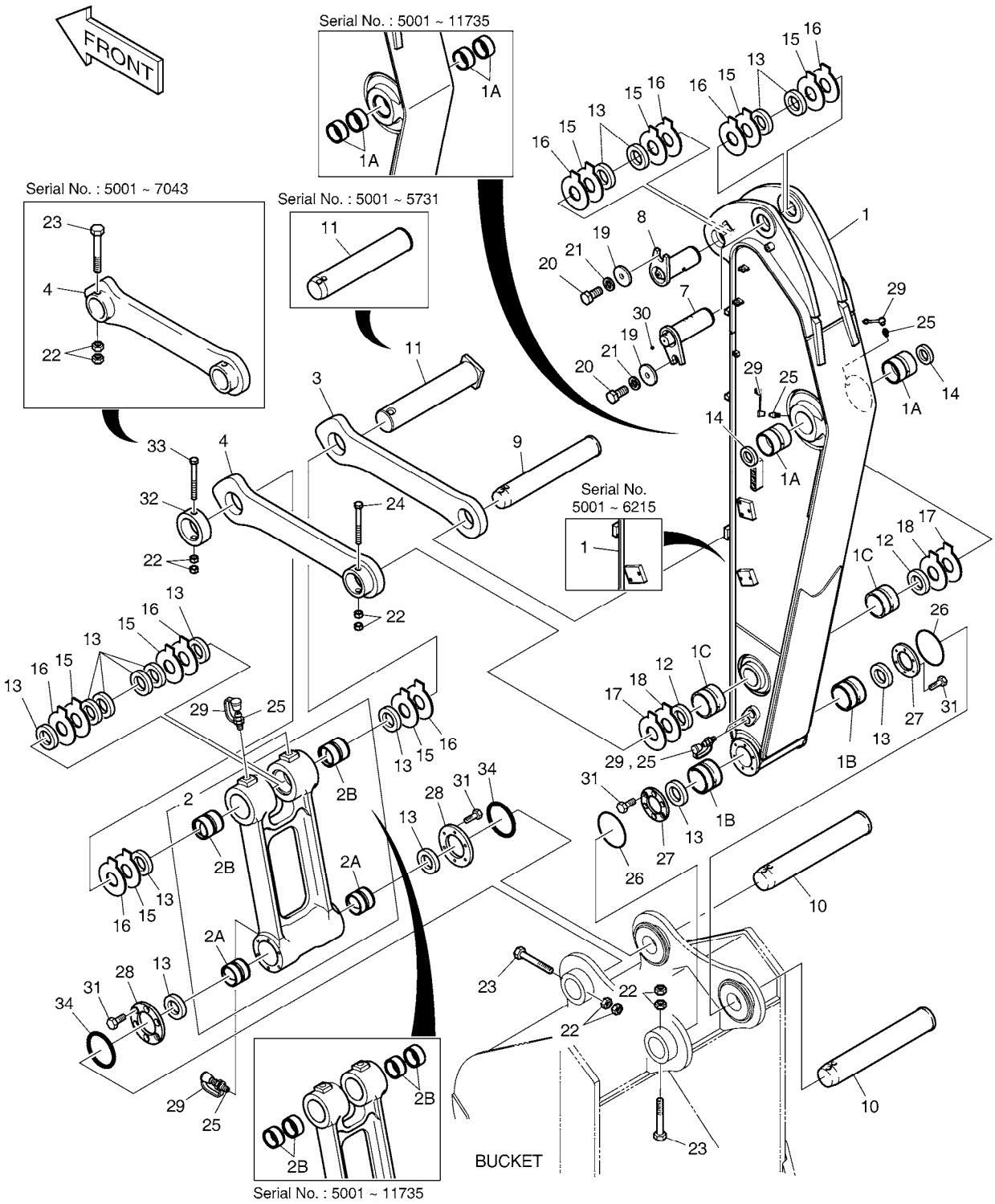

DATE	SEP. 12, 2012
4th EDITION	

Fig. 6570 ARM - 2.0m BALANCIER

Serial No. ;

Key No.	Part No.	Description	Description	Q'ty	S.C	Serial No.	ICA	Replaceable part	
								Part No.	Q'ty
6570 --	K1046238E	ARM ASS'Y	BALANCIER	-	D	5001-5731			
	230201-00106	ARM ASSY;2.0M	BALANCIER	-	D	5732-			
1	K1046248B	ARM SUB ASS'Y-2.0m	ENSEMBLE BALANCIER	1		5001-6215			
	230204-00085A	ARM;2.0M	ENSEMBLE BALANCIER	1		06216-11735			
	230204-00085C	ARM ASS'Y-2.0M	ENSEMBLE BALANCIER	1		11736-			
1A	K1037848A	. BUSHING	. BUSHING	4		05001-11735	Y	131008-00064A	2
	131008-00064A	. BUSHING	. BUSHING	2		11736-			
1B	K1037849A	. BUSHING	. BUSHING	2		05001-11735	Y	K1000733	2
	K1000733	. BUSHING	. BUSHING	2		11736-			
1C	K1037850A	. BUSHING	. BUSHING	2		05001-11735	Y	K1000734	2
	K1000734	. BUSHING	. BUSHING	2		11736-			
2	K1041214A	PUSH LINK ASS'Y	ENSEMBLE DE ARTICULAT	1		05001-11735	Y	K1002294	1
	K1002294	PUSH LINK ASS`Y	ENSEMBLE DE ARTICULAT	1		11736-			
2A	K1037852A	. BUSHING	. BUSHING	2		05001-11735	Y	110-00249	2
	110-00249	. BUSHING	. BUSHING	2		11736-			
2B	K1037851A	. BUSHING	. BUSHING	4		05001-11735	Y	K1000735	2
	K1000735	. BUSHING	. BUSHING	2		11736-			
3	2155-1299B	LINK;GUIDE(R.H)	ARTICULATION	1		5001-5731	Y	101540-00012	1
	101540-00012	LINK,GUIDE(R.H)	LIEN	1		5732-			
4	2155-1300B	LINK;GUIDE(L.H)	LIEN	1		5001-7043			
	101540-00028	LINK,GUIDE(L.H)	LIEN	1		7044-			
7	K1046927	PIN	GOUJON	1		5001-8240	Y	120501-01063	1
	120501-01063	PIN	GOUJON	1		8241-			
8	K1002130A	PIN	GOUJON	1		5001-8240	Y	120501-01064	1
	120501-01064	PIN	GOUJON	1		8241-			
9	K1007255A	PIN	GOUJON	1		5001-8240	Y	120501-01065	1
	120501-01065	PIN	GOUJON	1		8241-			
10	2123-2192E	PIN	GOUJON	2		5001-8240	Y	120501-01052	2
	120501-01052	PIN	GOUJON	2		8241-			
11	K1007256A	PIN	GOUJON	1		5001-5731	Y	120501-00130	1
	120501-00130	PIN;BUCKET CYL ROD	GOUJON	1		5732-			
12	2180-1106BD4	SEAL;DUST	CACHET	2					
13	2180-1106BD24	SEAL;DUST	CACHET	14					
14	2180-1106BD6	SEAL;DUST	CACHET	2					
15	DS7752012	SHIM	CALE	8					
16	DS7752013	SHIM	CALE	8					
17	DS7752006	SHIM	CALE	2					
18	DS7752007	SHIM	CALE	2					

DATE	SEP. 12, 2012
4th EDITION	

Fig. 6570 ARM - 2.0m BALANCIER

Serial No. ;

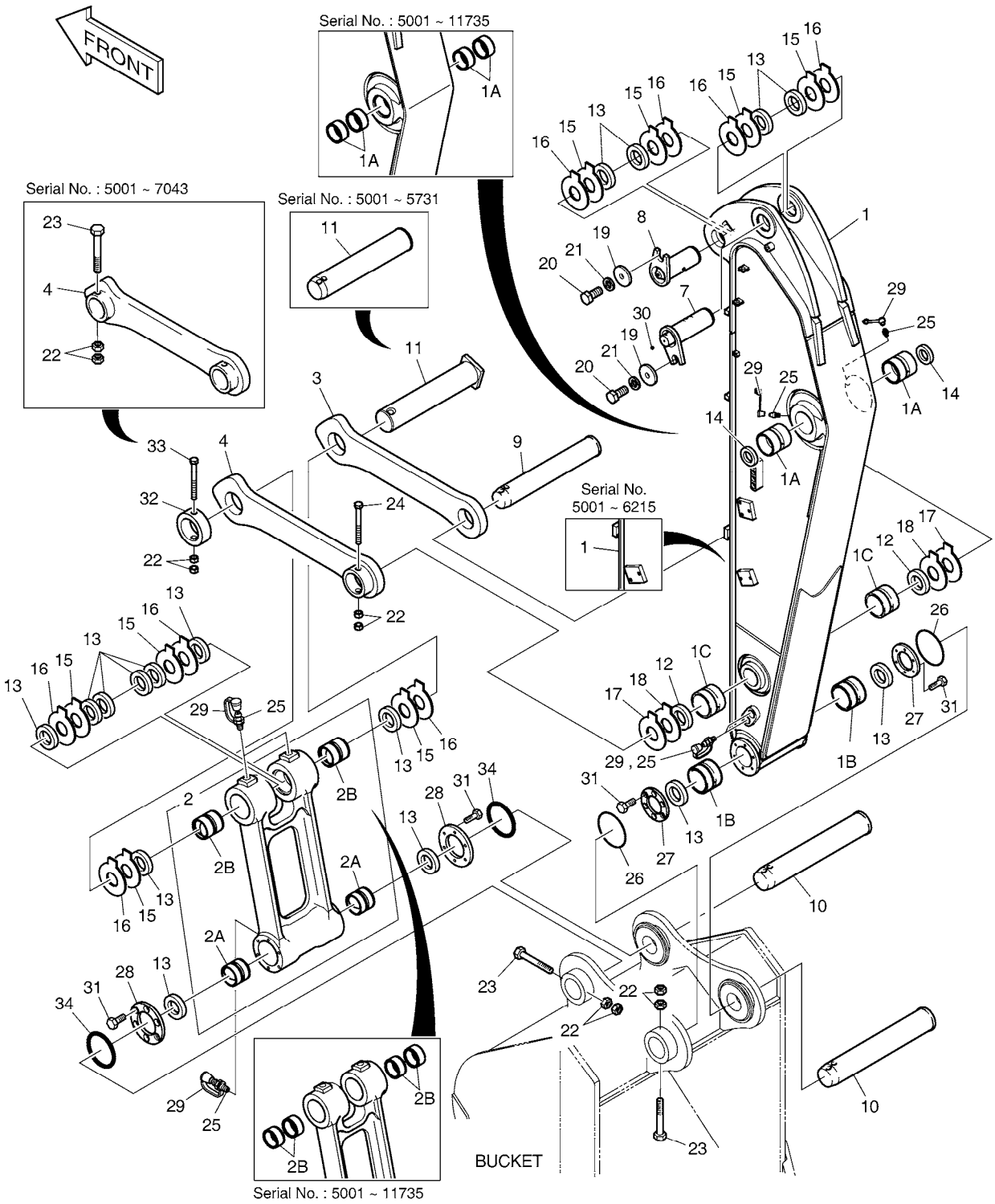

DATE	SEP. 12, 2012
4th EDITION	

Fig. 6570 ARM - 2.0m BALANCIER

Serial No. ;

Key No.	Part No.	Description	Description	Q'ty	S.C	Serial No.	ICA	Replaceable part	
								Part No.	Q'ty
6570 -19	2116-1060D6	STOPPER	TAQUET	2					
20	S0521366	BOLT	BOULON	2					
21	S5102903	WASHER,SPRING	RONDELLE	2					
22	S4012933	NUT	ECROU	8					
23	DS0001084	BOLT	BOULON	3		5001-7043			
	DS0001084	BOLT	BOULON	2		7044-			
24	DS0001083	BOLT	BOULON	1					
25	S6710041	NIPPLE;GREASE	GRAISSEUR	7					
26	180-00077D5	O-RING	JOINT CIRCULAIRE	2					
27	K1000911	SPACER	ENTRETOISE	2					
28	K1000912B	SPACER	ENTRETOISE	2					
29	160-00020	CAP;GREASE NIPPLE	CHAPEAU	7					
30	2181-1116D1	PLUG	BOUCHON	1					
31	S0712066	BOLT	BOULON	24					
32	2116-1531A	STOPPER	TAQUET	1		7044-			
33	S0567066	BOLT	BOULON	1		7044-			
34	180-00077D3	O-RING	JOINT TORIQUE	2		10998-			

DATE	SEP. 12, 2012
4th EDITION	

Fig. 6580 ARM PIPING - ARM 2.0m
CONDUITES DE BALANCIER

Serial No. ;

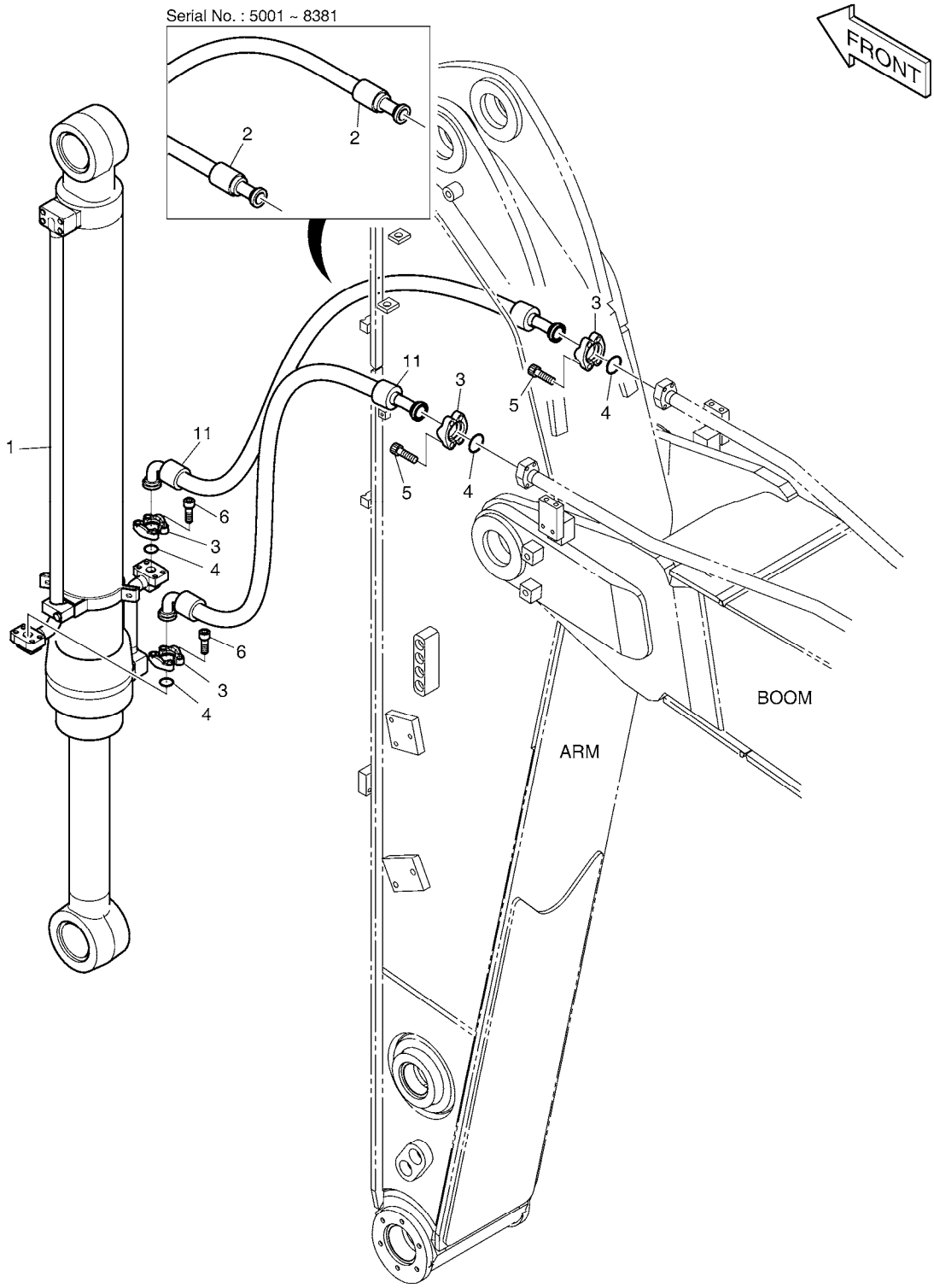

DATE	SEP. 12, 2012
4th EDITION	

Fig. 6580 ARM PIPING - ARM 2.0m CONDUITES DE BALANCIER

Serial No. ;

Key No.	Part No.	Description	Description	Q'ty	S.C	Serial No.	ICA	Replaceable part	
								Part No.	Q'ty
6580 --	K1046325	ARM PIPING	CONDUITES DE BALANCIE	-	D	5001-8381			
	420212-05428	ARM PIPING	CONDUITES DE BALANCIE	-	D	8382-			
1	K1046326	CYLINDER;BUCKET	VERIN DE GODET	1		05001-11589	Y	400310-00215	1
	400310-00215	CYLINDER,BUCKET	VERIN DE GODET	1		11590-			
2	DS2040368	HOSE	TUYAU FLEXIBLE	2		5001-8381			
3	2181-9079	FLANGE	BRIDE	8					
4	2180-1026D2	O-RING	JOINT CIRCULAIRE	4					
5	S2212366	BOLT;SOCKET M10X1.5X35	BOULON	8					
6	S2212266	BOLT;SOCKET M10X1.5X30	BOULON A 6 PANS CREUX	8					
11	DS2130011	HOSE ASSY,HYDRAULIC	TUYAU FLEXIBLE	2		8382-			

DATE	SEP. 12, 2012
4th EDITION	

Fig. 6590 LUBRICATION PIPING - ARM 2.0m
LUBRIFICATION

Serial No. ;

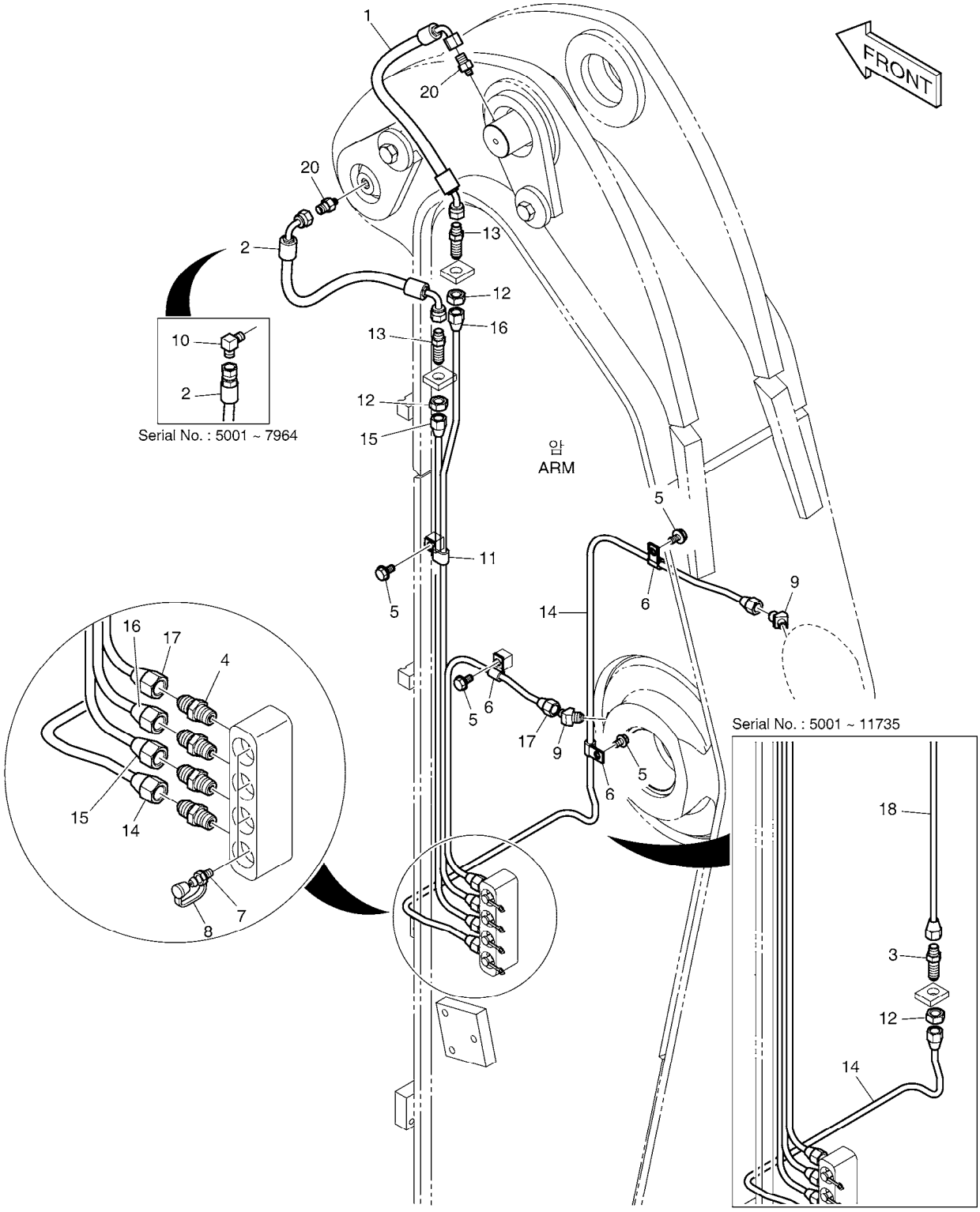

DATE	SEP. 12, 2012
4th EDITION	

Fig. 6590 LUBRICATION PIPING - ARM 2.0m LUBRIFICATION

Serial No. ;

Key No.	Part No.	Description	Description	Q'ty	S.C	Serial No.	ICA	Replaceable part	
								Part No.	Q'ty
6590 --	K1013396A	LUBRICATION PIPING-ARM	LUBRIFICATION	-	D	5001-7964			
	420212-05310	PIPING,LUBRICATION;2.0M	LUBRIFICATION	-	D	7965-			
1	DS2058279	HOSE	TUYAU FLEXIBLE	1					
2	2184-1036D11	HOSE	TUYAU	1		5001-7964			
	DS2059595	HOSE PF1/4-310L	TUYAU	1		7965-			
3	DS2225009	ADAPTER	ADAPTEUR	1		05001-11735			
4	2181-1184	ADAPTER	ADAPTEUR	4					
5	K1001029	BOLT	BOULON	3		05001-11735			
	K1001029	BOLT	BOULON	4		11736-			
6	DS2802023	CLIP	AGRAFE	2		05001-11735			
	DS2802023	CLIP	AGRAFE	3		11736-			
7	S6710041	NIPPLE;GREASE	GRAISSEUR	4					
8	160-00020	CAP;GREASE NIPPLE	CHAPEAU	4					
9	K1010730	ELBOW	COUDE	2					
10	2181-1111D11	ELBOW	COUDE	1		5001-7964			
11	DS2805007	CLIP	AGRAFE	1					
12	S4032833	NUT	ECROU	3		05001-11735			
	S4032833	NUT	ECROU	2		11736-			
13	2181-1923D12	ADAPTER	ADAPTEUR	2					
14	K1013397	PIPE	TUYAU	1		05001-11735			
	420205-00304	PIPE	TUYAU	1		11736-			
15	K1025403	PIPE	TUYAU	1					
16	K1025404	PIPE	TUYAU	1					
17	K1025405	PIPE	TUYAU	1					
18	K1025406	PIPE	TUYAU	1		05001-11735			
20	2181-4112	ADAPTER	ADAPTEUR	1		5001-7964			
	2181-4112	ADAPTER	ADAPTEUR	2		7965-			

DATE	SEP. 12, 2012
4th EDITION	

Fig. 6600 ARM PIPING - ARM 2.0m(ONE & TWO WAY)
CONDUITES DE BALANCIER

Serial No. ;

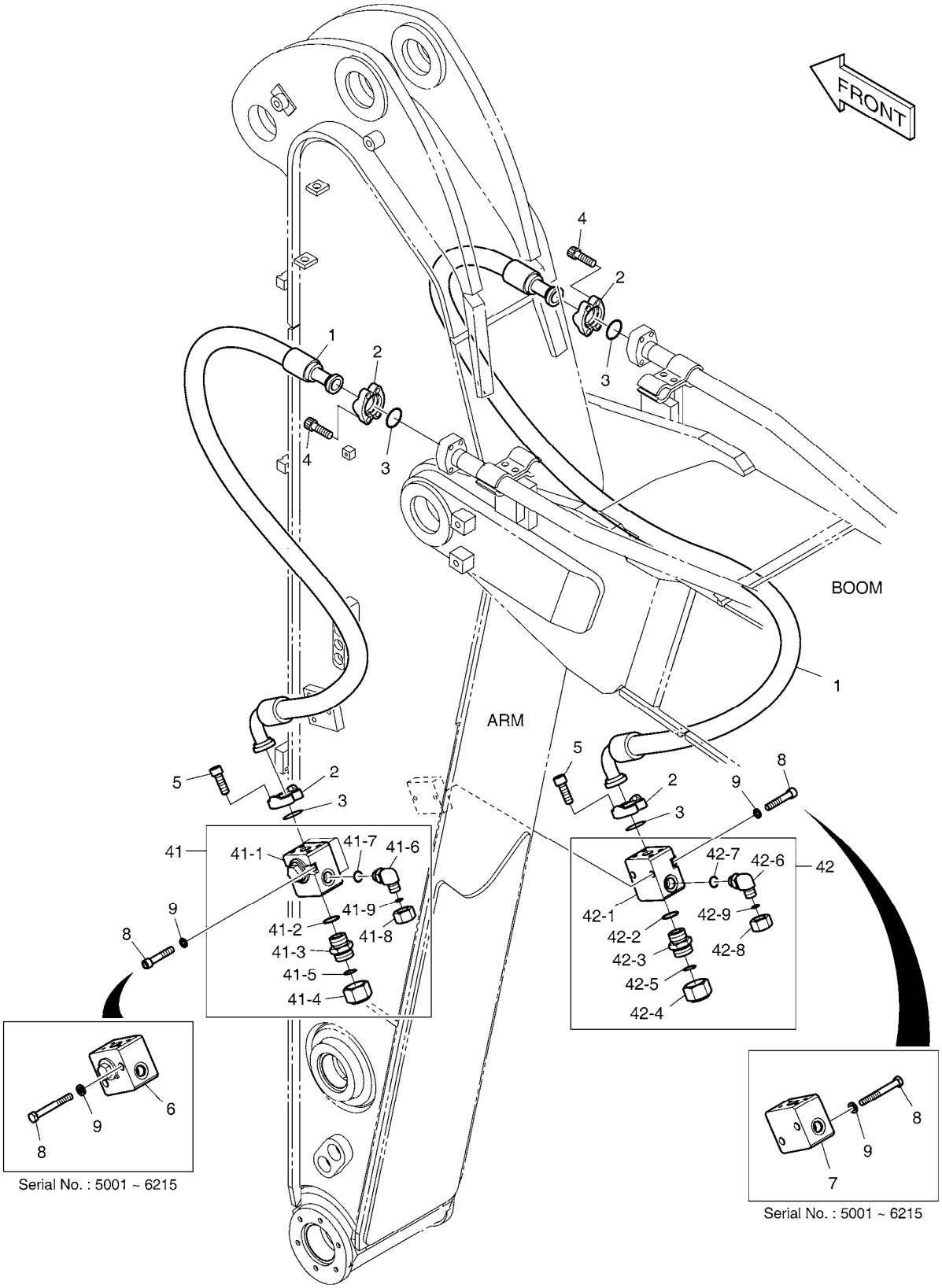

DATE	SEP. 12, 2012
4th EDITION	

Fig. 6600 ARM PIPING - ARM 2.0m(ONE & TWO WAY) CONDUITES DE BALANCIER

Serial No. ;

Key No.	Part No.	Description	Description	Q'ty	S.C	Serial No.	ICA	Replaceable part	
								Part No.	Q'ty
6600 --	K1013398A	ARM PIPING-ONE & TWO WAY	CONDUITES DE BALANCIE	-	D	5001-6215			
	420212-01715	ARM PIPING,ONE & TWO WAY	CONDUITES DE BALANCIE	-	D	6216-			
1	2184-1100D78	HOSE	TUYAU	2					
2	2181-9078	FLANGE	BRIDE	8					
3	2180-1026D19	O-RING	JOINT CIRCULAIRE	4					
4	S2212466	BOLT;SOCKET M10X1.5X40	BOULON	8					
5	S2212266	BOLT;SOCKET M10X1.5X30	BOULON A 6 PANS CREUX	8					
6	K1000334A	VALVE;STOP(L.H)	VANNE	1		5001-6215			
7	K1000338A	VALVE;STOP(R.H)	VANNE	1		5001-6215			
8	S0563666	BOLT	BOULON A 6 PANS	4		5001-6215			
	S2215966	BOLT;SOCKET	BOULON	4		6216-			
9	S5102803	WASHER;SPRING	RONDELLE	4		5001-6215			
	S5110703	WASHER;SPRING	RONDELLE	4		6216-			
41	410137-00032A	VALVE ASS'Y,STOP(L.H)	VANNE	1		6216-			
41-1	410137-00067	. VALVE,STOP(L.H)	. VANNE	1		6216-			
41-2	S8000291	. O-RING	. JOINT CIRCULAIRE	1		6216-			
41-3	2181-4133D6	. ADAPTER	. ADAPTEUR	1		6216-			
41-4	2181-2817D2	. CAP	. CHAPEAU	1		6216-			
41-5	S8030161	. O-RING	. JOINT CIRCULAIRE	1		6216-			
41-6	2181-2815D3	. ELBOW	. COUDE	1		6216-			
41-7	S8000181	. O-RING	. JOINT CIRCULAIRE	1		6216-			
41-8	2181-2817D4	. CAP	. CHAPEAU	1		6216-			
41-9	S8030081	. O-RING	. JOINT CIRCULAIRE	1		6216-			
42	410137-00033A	VALVE ASS'Y,STOP(R.H)	VANNE	1		6216-			
42-1	410137-00069	. VALVE,STOP(R.H)	. VANNE	1		6216-			
42-2	S8000291	. O-RING	. JOINT CIRCULAIRE	1		6216-			
42-3	2181-4133D6	. ADAPTER	. ADAPTEUR	1		6216-			
42-4	2181-2817D2	. CAP	. CHAPEAU	1		6216-			
42-5	S8030161	. O-RING	. JOINT CIRCULAIRE	1		6216-			
42-6	2181-2815D3	. ELBOW	. COUDE	1		6216-			
42-7	S8000181	. O-RING	. JOINT CIRCULAIRE	1		6216-			
42-8	2181-2817D4	. CAP	. CHAPEAU	1		6216-			
42-9	S8030081	. O-RING	. JOINT CIRCULAIRE	1		6216-			

DATE	SEP. 12, 2012
4th EDITION	

Fig. 6610 ARM PIPING - ARM 2.0m(QUICK CLAMP)
CONDUITES DE BALANCIER

Serial No. ;

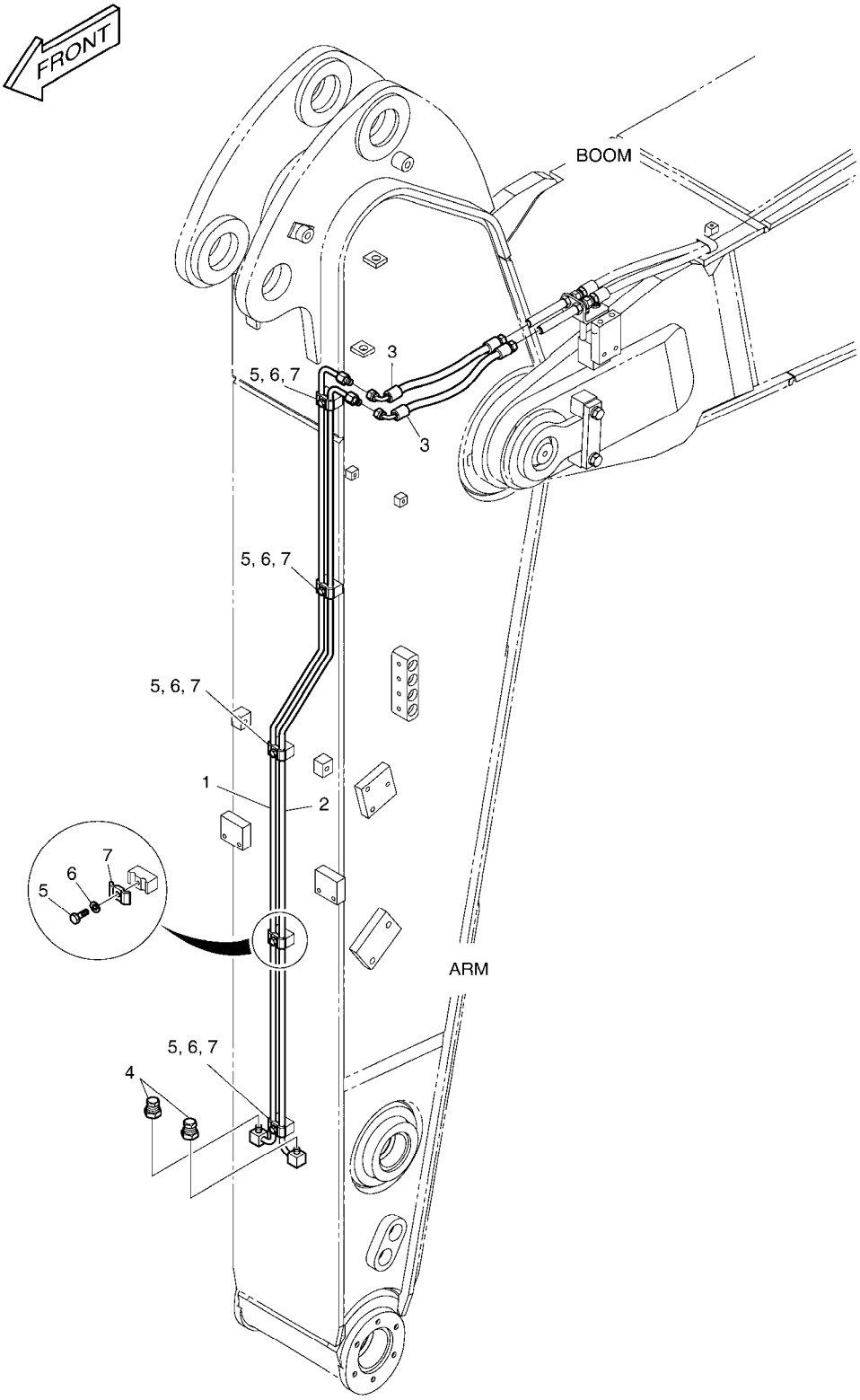

DATE	SEP. 12, 2012
4th EDITION	

Fig. 6610 ARM PIPING - ARM 2.0m(QUICK CLAMP) CONDUITES DE BALANCIER

Serial No. ;

Key No.	Part No.	Description	Description	Q'ty	S.C	Serial No.	ICA	Replaceable part	
								Part No.	Q'ty
6610 --	K1013404A	ARM PIPING-QUICK CLAMP	CONDUITES DE BALANCIE	-	D				
1	K1025408	PIPE	TUYAU	1					
2	K1025409	PIPE	TUYAU	1					
3	DS2055691	HOSE	TUYAU FLEXIBLE	2					
4	2181-2820D1	PLUG	BOUCHON	2					
5	S0508866	BOLT	BOULON	5					
6	S5102503	WASHER,SPRING	RONDELLE	5					
7	K1004011	CLAMP;PIPE	COLLIER	5					

DATE	SEP. 12, 2012
4th EDITION	

Fig. 6620 ARM PIPING - ARM 2.0m(CLAMSHELL)
CONDUITES DE BALANCIER

Serial No. ;

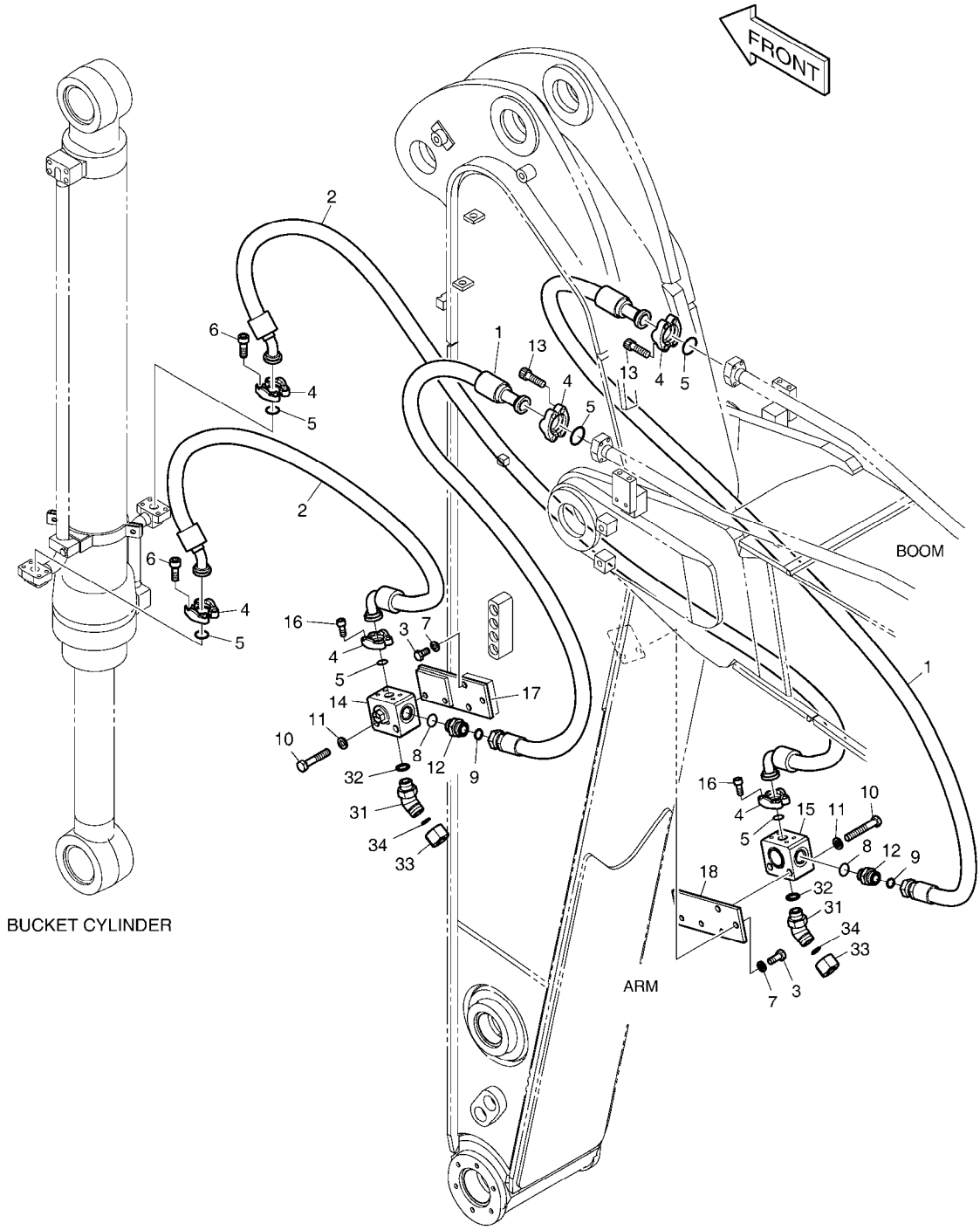

DATE	SEP. 12, 2012
4th EDITION	

Fig. 6620 ARM PIPING - ARM 2.0m(CLAMSHELL) CONDUITES DE BALANCIER

Serial No. ;

Key No.	Part No.	Description	Description	Q'ty	S.C	Serial No.	ICA	Replaceable part	
								Part No.	Q'ty
6620 --	K1013405A	ARM PIPING-CLAMSHELL	CONDUITES DE BALANCIE	-	D				
1	DS2016045	HOSE	TUYAU FLEXIBLE	2					
2	DS2043108	HOSE	TUYAU FLEXIBLE	2					
3	S0515066	BOLT	BOULON	6					
4	2181-9079	FLANGE	BRIDE	12					
5	2180-1026D2	O-RING	JOINT CIRCULAIRE	6					
6	S2212266	BOLT;SOCKET M10X1.5X30	BOULON A 6 PANS CREUX	8					
7	S5102703	WASHER;SPRING	RONDELLE	6					
8	S8030121	O-RING	JOINT CIRCULAIRE	2					
9	S8000231	O-RING	JOINT CIRCULAIRE	2					
10	S0563466	BOLT	BOULON	4					
11	S5102803	WASHER;SPRING	RONDELLE	4					
12	2181-4133D5	ADAPTER	ADAPTEUR	2					
13	S2212366	BOLT;SOCKET M10X1.5X35	BOULON	8					
14	K1002939	VALVE;SWITCH(L.H)	VALVE	1					
15	K1002940	VALVE;SWITCH(R.H)	VALVE	1					
16	S2212066	BOLT;SOCKET M10X1.5X25	BOULON	8					
17	K1025286	BRACKET(L.H)	SUPPORT	1					
18	K1025336	BRACKET(R.H)	SUPPORT	1					
31	2181-2816D1	ELBOW	COUDE	2					
32	S8000231	O-RING	JOINT CIRCULAIRE	2					
33	2181-2817D1	CAP	CHAPEAU	2					
34	S8030121	O-RING	JOINT CIRCULAIRE	2					

DATE	SEP. 12, 2012
4th EDITION	

Fig. 6630 ARM PIPING - ARM 2.0m(ROTATING)
CONDUITES DE BALANCIER

Serial No. ;

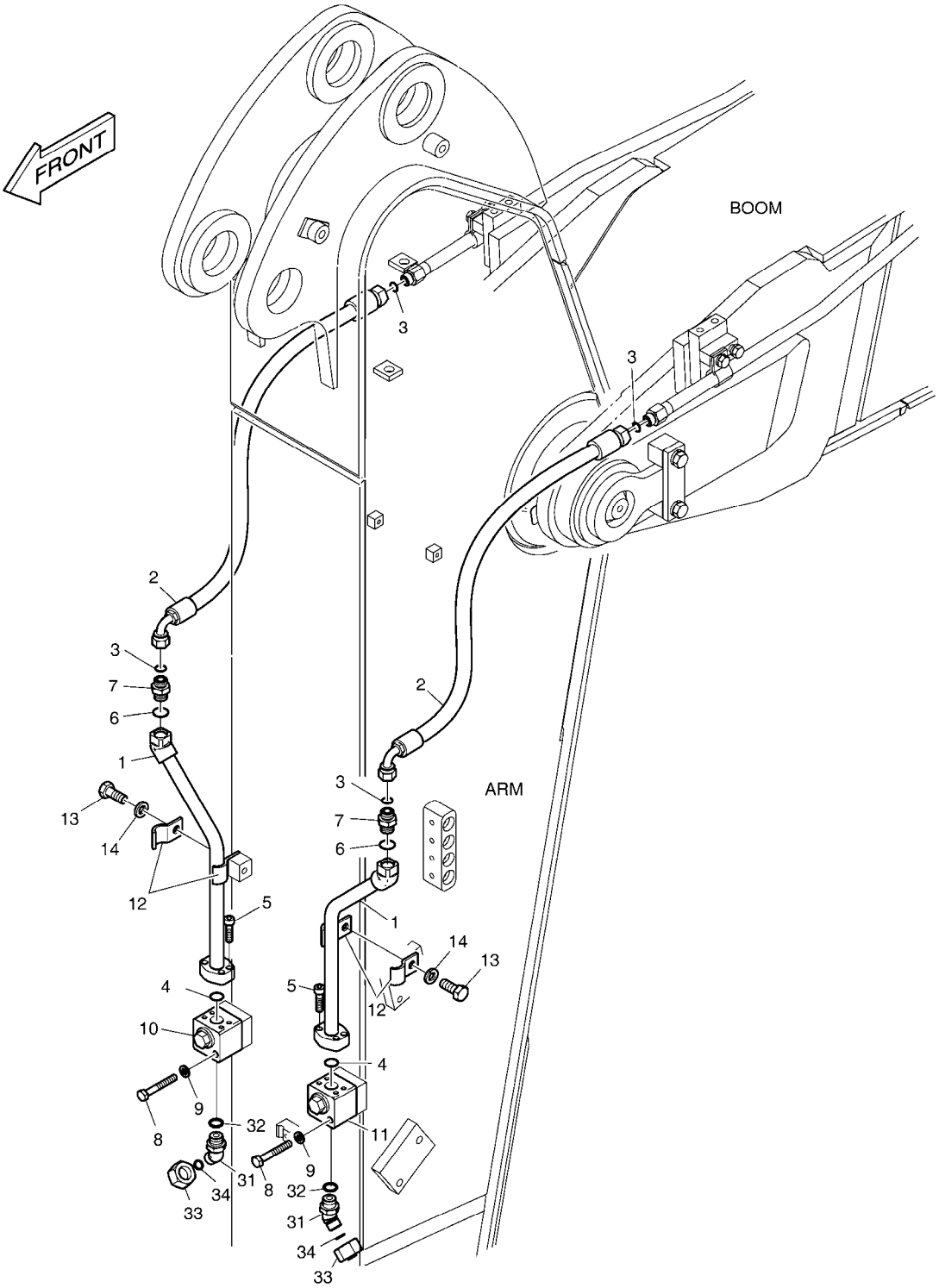

DATE	SEP. 12, 2012
4th EDITION	

Fig. 6630 ARM PIPING - ARM 2.0m(ROTATING) CONDUITES DE BALANCIER

Serial No. ;

Key No.	Part No.	Description	Description	Q'ty	S.C	Serial No.	ICA	Replaceable part	
								Part No.	Q'ty
6630 --	K1013401A	ARM PIPING;ROTATING	CONDUITES DE BALANCIE	-	D				
1	K1025407	PIPE	TUYAU	2					
2	DS2013893	HOSE	TUYAU FLEXIBLE	2					
3	S8030081	O-RING	JOINT CIRCULAIRE	4					
4	2180-1026D30	O-RING	JOINT CIRCULAIRE	2					
5	S2209266	BOLT;SOCKET M8X1.25X30	BOULON A 6 PANS CREUX	8					
6	S8000181	O-RING	JOINT CIRCULAIRE	2					
7	2181-4133D3	ADAPTER	ADAPTEUR	2					
8	S0558966	BOLT	BOULON	4					
9	S5102603	WASHER,SPRING	RONDELLE	4					
10	K1006227	VALVE;SWITCH(R.H)	VANNE	1					
11	K1006228	VALVE;SWITCH(L.H)	VANNE	1					
12	124-00299A	CLAMP;PIPE	COLLIER	2					
13	S0515266	BOLT	BOULON	2					
14	S5102703	WASHER;SPRING	RONDELLE	2					
31	2181-2816D4	ELBOW	COUDE	2					
32	S8000181	O-RING	JOINT CIRCULAIRE	2					
33	2181-2817D4	CAP	CHAPEAU	2					
34	S8030081	O-RING	JOINT CIRCULAIRE	2					

DATE	SEP. 12, 2012
4th EDITION	

Fig. 6640 ARM - 2.4m BALANCIER

Serial No. ;

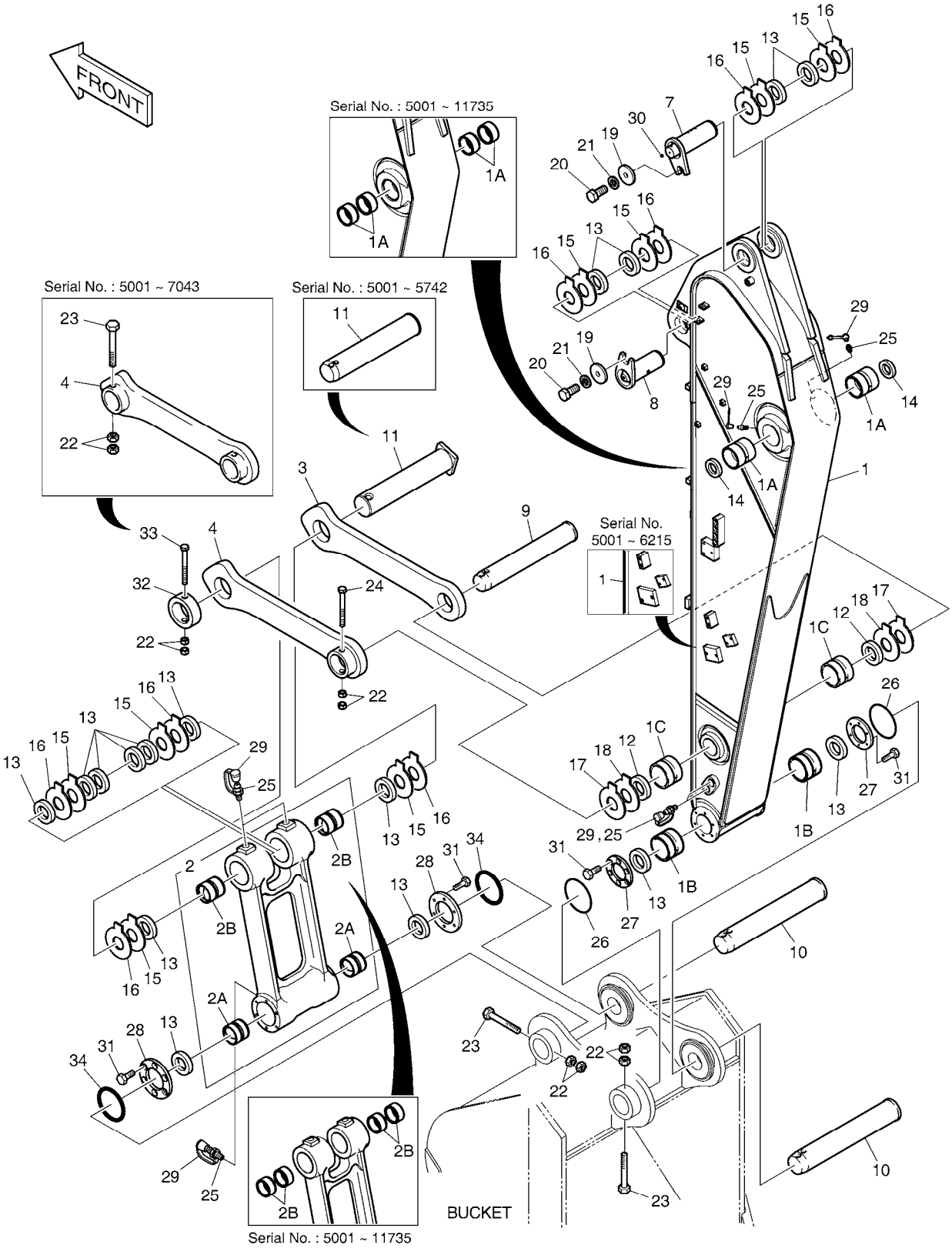

DATE	SEP. 12, 2012
4th EDITION	

Fig. 6640 ARM - 2.4m BALANCIER

Serial No. ;

Key No.	Part No.	Description	Description	Q'ty	S.C	Serial No.	ICA	Replaceable part	
								Part No.	Q'ty
6640 --	K1046237E	ARM ASS'Y	BALANCIER	-	D	5001-5742			
	230201-00105	ARM ASS'Y	BALANCIER	-	D	5743-			
1	K1046246B	ARM SUB ASS'Y-2.4m	ENSEMBLE BALANCIER	1		5001-6215			
	230204-00084A	ARM;2.4M	ENSEMBLE BALANCIER	1		06216-11735			
	230204-00084C	ARM,MACHINE;2.4M	ENSEMBLE BALANCIER	1		11736-			
1A	K1037848A	. BUSHING	. BUSHING	4		05001-11735	Y	131008-00064A	2
	131008-00064A	. BUSHING	. BUSHING	2		11736-			
1B	K1037849A	. BUSHING	. BUSHING	2		05001-11735	Y	K1000733	2
	K1000733	. BUSHING	. BUSHING	2		11736-			
1C	K1037850A	. BUSHING	. BUSHING	2		05001-11735	Y	K1000734	2
	K1000734	. BUSHING	. BUSHING	2		11736-			
2	K1041214A	PUSH LINK ASS'Y	ENSEMBLE DE ARTICULAT	1		05001-11735	Y	K1002294	1
	K1002294	PUSH LINK ASS`Y	ENSEMBLE DE ARTICULAT	1		11736-			
2A	K1037852A	. BUSHING	. BUSHING	2		05001-11735	Y	110-00249	2
	110-00249	. BUSHING	. BUSHING	2		11736-			
2B	K1037851A	. BUSHING	. BUSHING	4		05001-11735	Y	K1000735	2
	K1000735	. BUSHING	. BUSHING	2		11736-			
3	2155-1299B	LINK;GUIDE(R.H)	ARTICULATION	1		5001-5742	Y	101540-00012	1
	101540-00012	LINK,GUIDE(R.H)	LIEN	1		5743-			
4	2155-1300B	LINK;GUIDE(L.H)	LIEN	1		5001-7043			
	101540-00028	LINK,GUIDE(L.H)	LIEN	1		7044-			
7	K1046927	PIN	GOUJON	1		5001-8240	Y	120501-01063	1
	120501-01063	PIN	GOUJON	1		8241-			
8	K1002130A	PIN	GOUJON	1		5001-8240	Y	120501-01064	1
	120501-01064	PIN	GOUJON	1		8241-			
9	K1007255A	PIN	GOUJON	1		5001-8240	Y	120501-01065	1
	120501-01065	PIN	GOUJON	1		8241-			
10	2123-2192E	PIN	GOUJON	2		5001-8240	Y	120501-01052	2
	120501-01052	PIN	GOUJON	2		8241-			
11	K1007256A	PIN	GOUJON	1		5001-5742	Y	120501-00130	1
	120501-00130	PIN;BUCKET CYL ROD	GOUJON	1		5743-			
12	2180-1106BD4	SEAL;DUST	CACHET	2					
13	2180-1106BD24	SEAL;DUST	CACHET	14					
14	2180-1106BD6	SEAL;DUST	CACHET	2					
15	DS7752012	SHIM	CALE	8					
16	DS7752013	SHIM	CALE	8					
17	DS7752006	SHIM	CALE	2					
18	DS7752007	SHIM	CALE	2					

DATE	SEP. 12, 2012
4th EDITION	

Fig. 6640 ARM - 2.4m BALANCIER

Serial No. ;

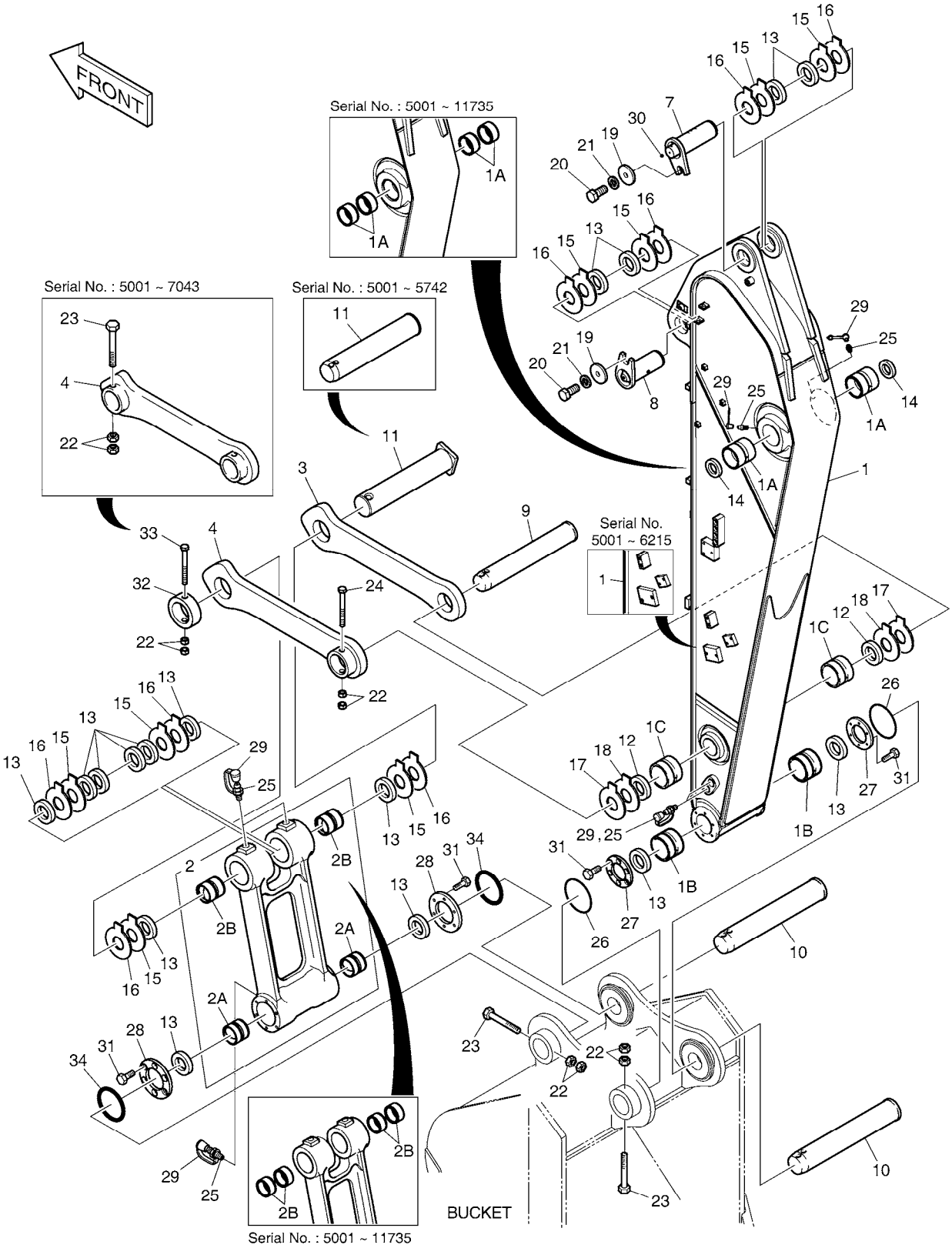

DATE	SEP. 12, 2012
4th EDITION	

Fig. 6640 ARM - 2.4m BALANCIER

Serial No. ;

Key No.	Part No.	Description	Description	Q'ty	S.C	Serial No.	ICA	Replaceable part	
								Part No.	Q'ty
6640 -19	2116-1060D6	STOPPER	TAQUET	2					
20	S0521366	BOLT	BOULON	2					
21	S5102903	WASHER,SPRING	RONDELLE	2					
22	S4012933	NUT	ECROU	8					
23	DS0001084	BOLT	BOULON	3		5001-7043			
	DS0001084	BOLT	BOULON	2		7044-			
24	DS0001083	BOLT	BOULON	1					
25	S6710041	NIPPLE;GREASE	GRAISSEUR	7					
26	180-00077D5	O-RING	JOINT CIRCULAIRE	2					
27	K1000911	SPACER	ENTRETOISE	2					
28	K1000912B	SPACER	ENTRETOISE	2					
29	160-00020	CAP;GREASE NIPPLE	CHAPEAU	7					
30	2181-1116D1	PLUG	BOUCHON	1					
31	S0712066	BOLT	BOULON	24					
32	2116-1531A	STOPPER	TAQUET	1		7044-			
33	S0712066	BOLT	BOULON	1		7044-			
34	180-00077D3	O-RING	JOINT TORIQUE	2		10998-			

DATE	SEP. 12, 2012
4th EDITION	

Fig. 6650 ARM PIPING - ARM 2.4m
CONDUITES DE BALANCIER

Serial No. ;

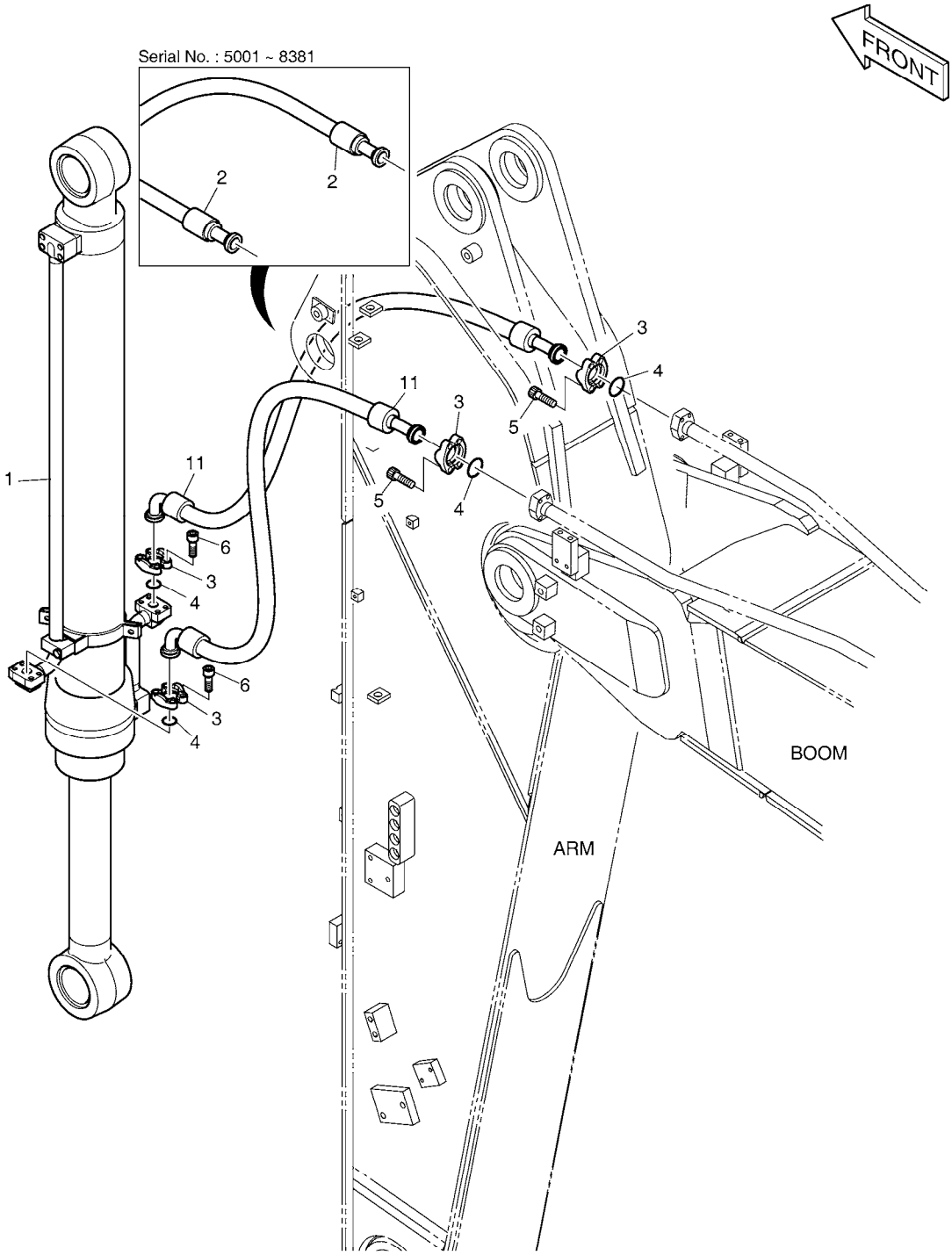

DATE	SEP. 12, 2012
4th EDITION	

Fig. 6650 ARM PIPING - ARM 2.4m CONDUITES DE BALANCIER

Serial No. ;

Key No.	Part No.	Description	Description	Q'ty	S.C	Serial No.	ICA	Replaceable part	
								Part No.	Q'ty
6650 --	K1046328	ARM PIPING	CONDUITES DE BALANCIE	-	D	5001-8381			
	420212-05429	ARM PIPING	CONDUITES DE BALANCIE	-	D	8382-			
1	K1046326	CYLINDER;BUCKET	VERIN DE GODET	1		05001-11589	Y	400310-00215	1
	400310-00215	CYLINDER,BUCKET	VERIN DE GODET	1		11590-			
2	2184-1100D59	HOSE 3/4-1750L	TUYAU	2		5001-8381			
3	2181-9079	FLANGE	BRIDE	8					
4	2180-1026D2	O-RING	JOINT CIRCULAIRE	4					
5	S2212366	BOLT;SOCKET M10X1.5X35	BOULON	8					
6	S2212266	BOLT;SOCKET M10X1.5X30	BOULON A 6 PANS CREUX	8					
11	DS2130008	HOSE ASSY,HYDRAULIC	TUYAU	2		8382-9290	I	DS20401141	2
	DS20401141	HOSE ASSY,HYDRAULIC	TUYAU	2		9291-			

DATE	SEP. 12, 2012
4th EDITION	

Fig. 6660 LUBRICATION PIPING - ARM 2.4m LUBRIFICATION

Serial No. ;

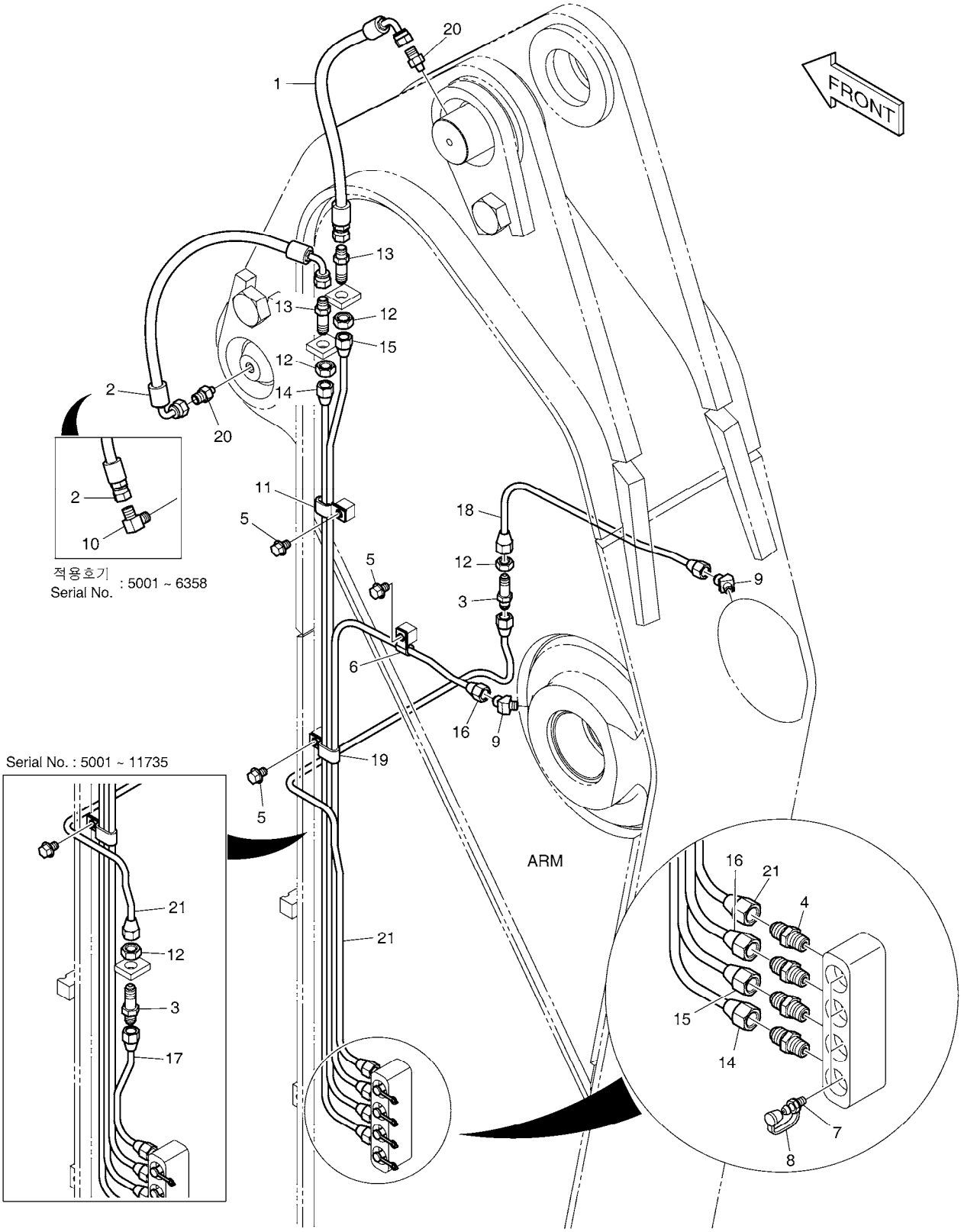

DATE	SEP. 12, 2012
4th EDITION	

Fig. 6660 LUBRICATION PIPING - ARM 2.4m LUBRIFICATION

Serial No. ;

Key No.	Part No.	Description	Description	Q'ty	S.C	Serial No.	ICA	Replaceable part	
								Part No.	Q'ty
6660 --	K1013410A	LUBRICATION PIPING-ARM	LUBRIFICATION	-	D	5001-7964			
	420212-05311	PIPING,LUBRICATION;2.4M	LUBRIFICATION	-	D	7965-			
1	DS2055920	HOSE	TUYAU	1					
2	DS2055891	HOSE	TUYAU	1		5001-7964			
	DS2059600	HOSE PF1/4-330L	TUYAU	1		7965-			
3	DS2225009	ADAPTER	ADAPTEUR	2		05001-11735			
	DS2225009	ADAPTER	ADAPTEUR	1		11736-			
4	2181-1184	ADAPTER	ADAPTEUR	4					
5	K1001029	BOLT	BOULON	3					
6	DS2802023	CLIP	AGRAFE	1					
7	S6710041	NIPPLE;GREASE	GRAISSEUR	4					
8	160-00020	CAP;GREASE NIPPLE	CHAPEAU	4					
9	K1010730	ELBOW	COUDE	2					
10	2181-1111D11	ELBOW	COUDE	1		5001-7964			
11	DS2805007	CLIP	AGRAFE	1					
12	S4032833	NUT	ECROU	4		05001-11735			
	S4032833	NUT	ECROU	3		11736-			
13	2181-1923D12	ADAPTER	ADAPTEUR	2					
14	K1025464	PIPE	TUYAU	1					
15	K1025465	PIPE	TUYAU	1					
16	K1025466	PIPE	TUYAU	1					
17	K1010271	PIPE	TUYAU	1		05001-11735			
18	K1025467	PIPE	TUYAU	1					
19	DS2805008	CLIP	AGRAFE	1					
20	2181-4112	ADAPTER	ADAPTEUR	1		5001-7964			
	2181-4112	ADAPTER	ADAPTEUR	2		7965-			
21	K1013687	PIPE	TUYAU	1		05001-11735			
	420205-00283	PIPE	TUYAU	1		11736-			

DATE	SEP. 12, 2012
4th EDITION	

Fig. 6670 ARM PIPING - ARM 2.4m(ONE & TWO WAY)
CONDUITES DE BALANCIER

Serial No. ;

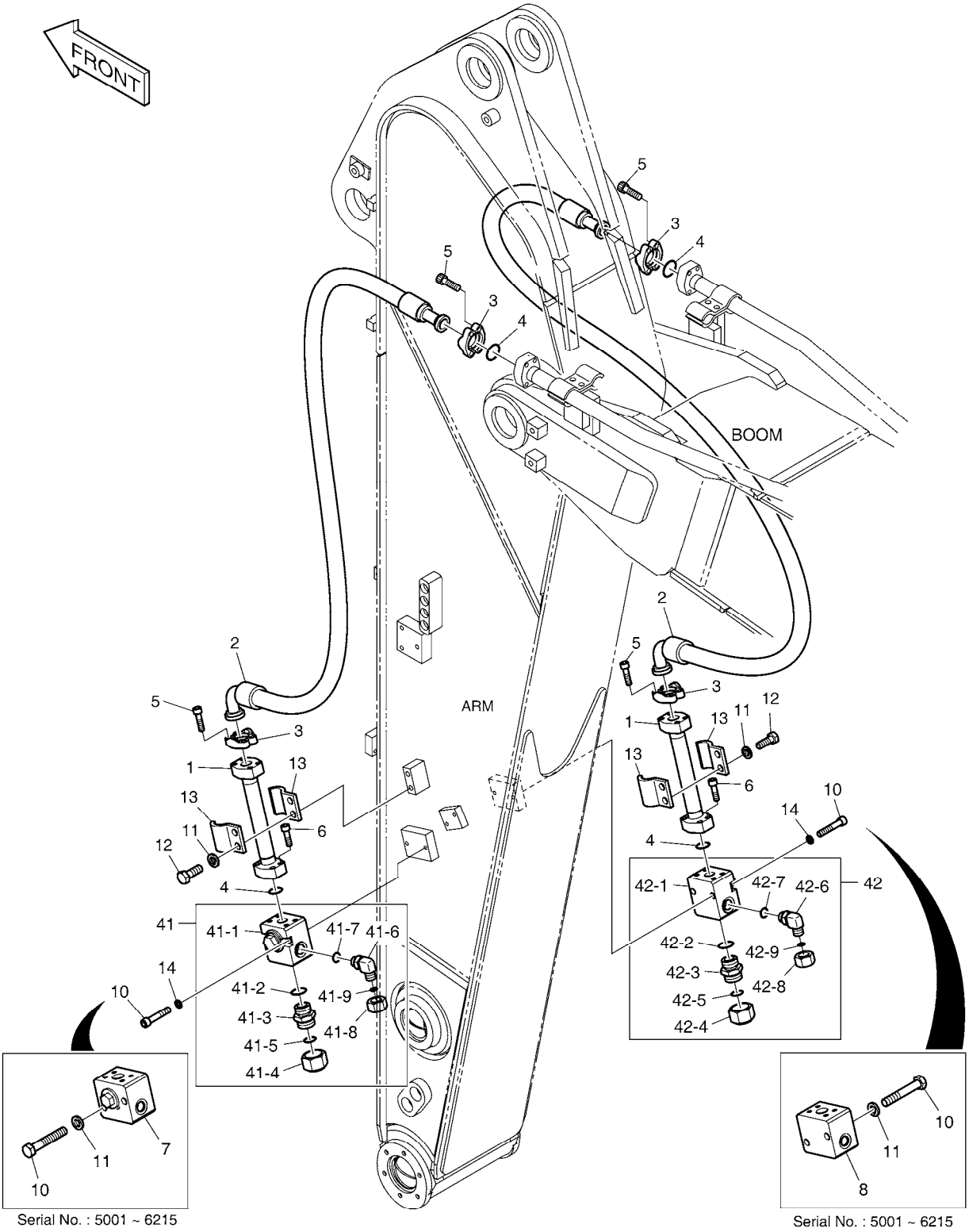

DATE	SEP. 12, 2012
4th EDITION	

Fig. 6670 ARM PIPING - ARM 2.4m(ONE & TWO WAY) CONDUITES DE BALANCIER

Serial No. ;

Key No.	Part No.	Description	Description	Q'ty	S.C	Serial No.	ICA	Replaceable part	
								Part No.	Q'ty
6670 --	K1013411B	ARM PIPING-ONE & TWO WAY	CONDUITES DE BALANCIE	-	D	5001-6215			
	420212-01717	ARM PIPING,ONE & TWO WAY	CONDUITES DE BALANCIE	-	D	6216-			
1	K1025246	PIPE	TUYAU	2					
2	2184-1100D90	HOSE	TUYAU	2					
3	2181-9078	FLANGE	BRIDE	8					
4	2180-1026D19	O-RING	JOINT CIRCULAIRE	6					
5	S2212466	BOLT;SOCKET M10X1.5X40	BOULON	16					
6	S2212366	BOLT;SOCKET M10X1.5X35	BOULON	8					
7	K1000334A	VALVE;STOP(L.H)	VANNE	1		5001-6215			
8	K1000338A	VALVE;STOP(R.H)	VANNE	1		5001-6215			
10	S0563666	BOLT	BOULON A 6 PANS	4		5001-6215			
	S2215966	BOLT;SOCKET	BOULON	4		6216-			
11	S5102803	WASHER;SPRING	RONDELLE	8		5001-6215			
	S5102803	WASHER;SPRING	RONDELLE	4		6216-			
12	S0562766	BOLT	BOULON	4					
13	K1004057	CLAMP;PIPE	COLLIER	4					
14	S5110703	WASHER;SPRING	RONDELLE	4		6216-			
41	410137-00032A	VALVE ASS'Y,STOP(L.H)	VANNE	1		6216-			
41-1	410137-00067	. VALVE,STOP(L.H)	. VANNE	1		6216-			
41-2	S8000291	. O-RING	. JOINT CIRCULAIRE	1		6216-			
41-3	2181-4133D6	. ADAPTER	. ADAPTEUR	1		6216-			
41-4	2181-2817D2	. CAP	. CHAPEAU	1		6216-			
41-5	S8030161	. O-RING	. JOINT CIRCULAIRE	1		6216-			
41-6	2181-2815D3	. ELBOW	. COUDE	1		6216-			
41-7	S8000181	. O-RING	. JOINT CIRCULAIRE	1		6216-			
41-8	2181-2817D4	. CAP	. CHAPEAU	1		6216-			
41-9	S8030081	. O-RING	. JOINT CIRCULAIRE	1		6216-			
42	410137-00033A	VALVE ASS'Y,STOP(R.H)	VANNE	1		6216-			
42-1	410137-00069	. VALVE,STOP(R.H)	. VANNE	1		6216-			
42-2	S8000291	. O-RING	. JOINT CIRCULAIRE	1		6216-			
42-3	2181-4133D6	. ADAPTER	. ADAPTEUR	1		6216-			
42-4	2181-2817D2	. CAP	. CHAPEAU	1		6216-			
42-5	S8030161	. O-RING	. JOINT CIRCULAIRE	1		6216-			
42-6	2181-2815D3	. ELBOW	. COUDE	1		6216-			
42-7	S8000181	. O-RING	. JOINT CIRCULAIRE	1		6216-			
42-8	2181-2817D4	. CAP	. CHAPEAU	1		6216-			
42-9	S8030081	. O-RING	. JOINT CIRCULAIRE	1		6216-			

DATE	SEP. 12, 2012
4th EDITION	

Fig. 6680 ARM PIPING - ARM 2.4m(QUICK CLAMP)
CONDUITES DE BALANCIER

Serial No. ;

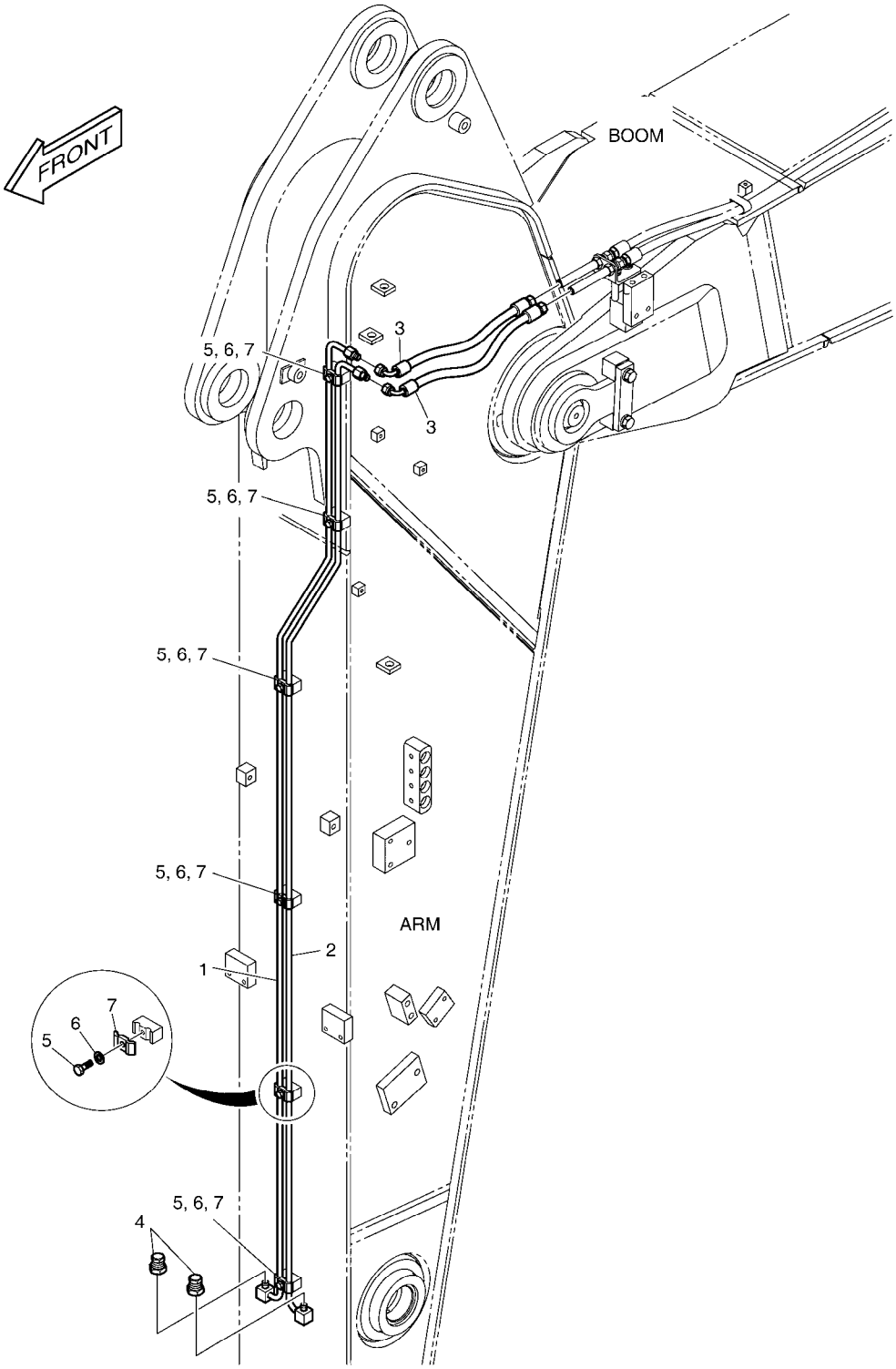

DATE	SEP. 12, 2012
4th EDITION	

Fig. 6680 ARM PIPING - ARM 2.4m(QUICK CLAMP)
CONDUITES DE BALANCIER

Serial No. ;

Key No.	Part No.	Description	Description	Q'ty	S.C	Serial No.	ICA	Replaceable part	
								Part No.	Q'ty
6680 --	K1013434A	ARM PIPING-QUICK CLAMP	TUYAUTERIE DU BRAS	-	D				
1	K1025462	PIPE	TUYAU	1					
2	K1025463	PIPE	TUYAU	1					
3	DS2055867	HOSE	TUYAU	2					
4	2181-2820D1	PLUG	BOUCHON	2					
5	S0508866	BOLT	BOULON	6					
6	S5102503	WASHER,SPRING	RONDELLE	6					
7	K1004011	CLAMP;PIPE	COLLIER	6					

DATE	SEP. 12, 2012
4th EDITION	

Fig. 6690 ARM PIPING - ARM 2.4m(CLAMSHELL)
CONDUITES DE BALANCIER

Serial No. ;

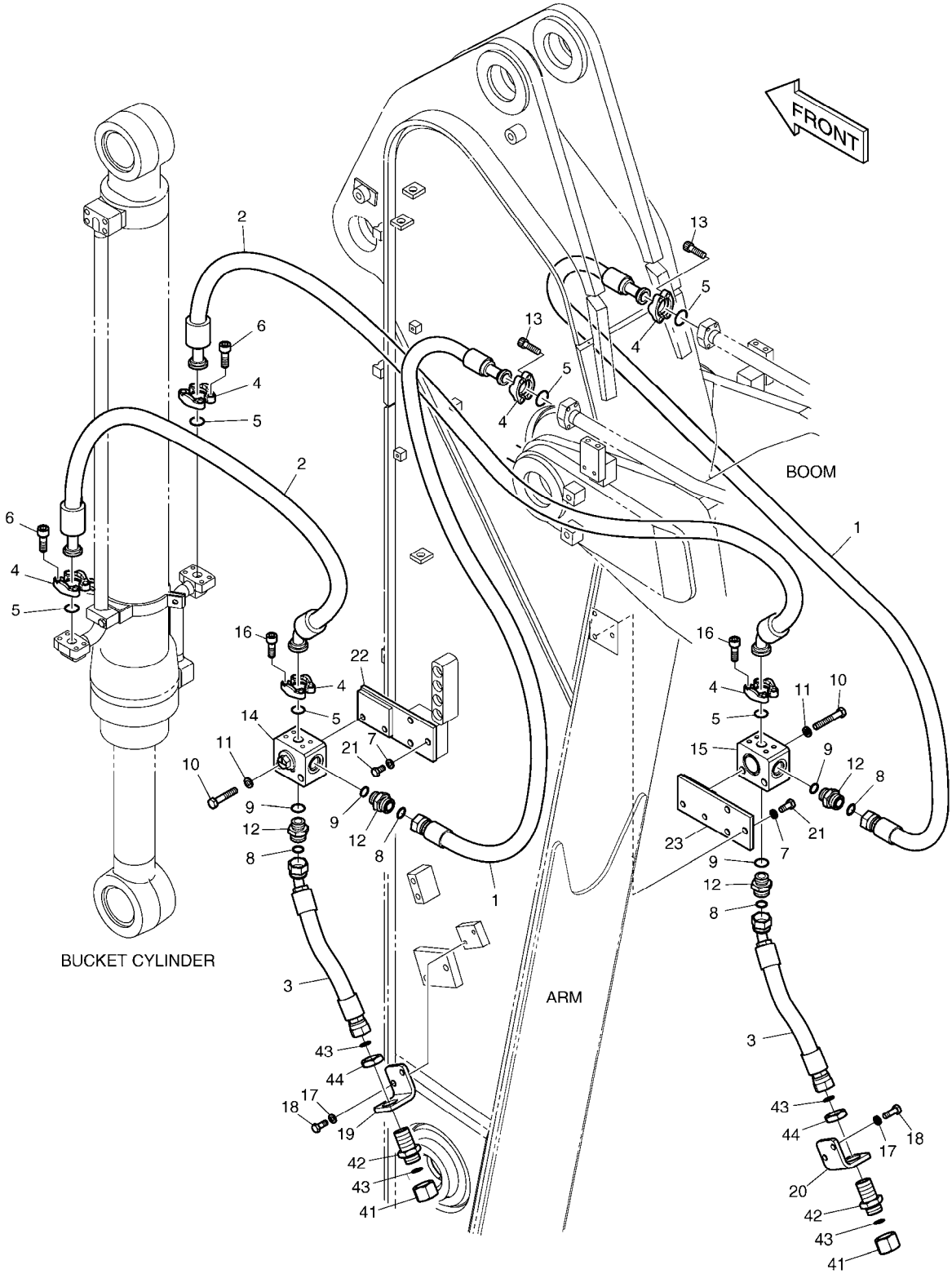

DATE	SEP. 12, 2012
4th EDITION	

Fig. 6690 ARM PIPING - ARM 2.4m(CLAMSHELL)
CONDUITES DE BALANCIER

Serial No. ;

Key No.	Part No.	Description	Description	Q'ty	S.C	Serial No.	ICA	Replaceable part	
								Part No.	Q'ty
6690 --	K1013436B	ARM PIPING-CLAMSHELL	TUYAUTERIE DU BRAS	-	D				
1	DS2016074	HOSE	TUYAU	2					
2	DS2039122	HOSE	TUYAU	2					
3	DS2012342	HOSE	TUYAU FLEXIBLE	2					
4	2181-9079	FLANGE	BRIDE	12					
5	2180-1026D2	O-RING	JOINT CIRCULAIRE	6					
6	S2212266	BOLT;SOCKET M10X1.5X30	BOULON A 6 PANS CREUX	8					
7	S5102703	WASHER;SPRING	RONDELLE	6					
8	S8030121	O-RING	JOINT CIRCULAIRE	4					
9	S8000231	O-RING	JOINT CIRCULAIRE	4					
10	S0563466	BOLT	BOULON	4					
11	S5102803	WASHER;SPRING	RONDELLE	4					
12	2181-4133D5	ADAPTER	ADAPTEUR	4					
13	S2212366	BOLT;SOCKET M10X1.5X35	BOULON	8					
14	K1002939	VALVE;SWITCH(L.H)	VALVE	1					
15	K1002940	VALVE;SWITCH(R.H)	VALVE	1					
16	S2212066	BOLT;SOCKET M10X1.5X25	BOULON	8					
17	S5102603	WASHER,SPRING	RONDELLE	4					
18	S0512066	BOLT M10X1.5X25	BOULON	4					
19	K1014759	BRACKET	SUPPORT	1					
20	K1015093	BRACKET	SUPPORT	1					
21	S0515066	BOLT	BOULON	6					
22	K1025286	BRACKET(L.H)	SUPPORT	1					
23	K1025336	BRACKET(R.H)	SUPPORT	1					
41	2181-2817D1	CAP	CHAPEAU	2					
42	DS2415007	ADAPTER	ADAPTEUR	2					
43	S8030121	O-RING	JOINT CIRCULAIRE	4					
44	121-00010D8	NUT	ECROU	2					

DATE	SEP. 12, 2012
4th EDITION	

Fig. 6700 ARM PIPING - ARM 2.4m(ROTATING)
CONDUITES DE BALANCIER

Serial No. ;

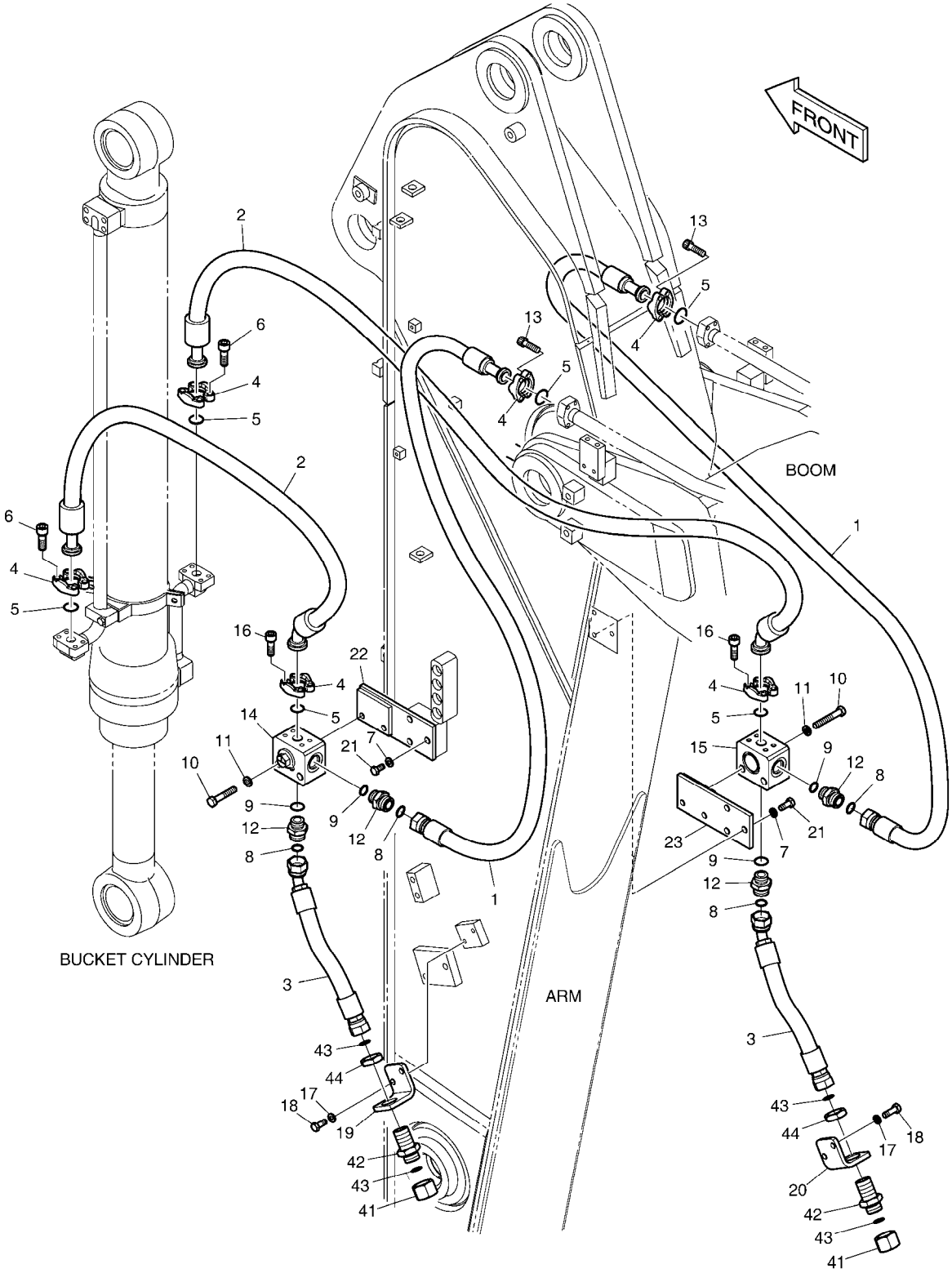

DATE	SEP. 12, 2012
4th EDITION	

Fig. 6700 ARM PIPING - ARM 2.4m(ROTATING)
CONDUITES DE BALANCIER

Serial No. ;

Key No.	Part No.	Description	Description	Q'ty	S.C	Serial No.	ICA	Replaceable part	
								Part No.	Q'ty
6700 --	K1013414A	ARM PIPING;ROTATING	TUYAUTERIE DU BRAS	-	D				
1	K1025460	PIPE	TUYAU	2					
2	DS2013356	HOSE ORS1/2-1250L	TUYAU	2					
3	S8030081	O-RING	JOINT CIRCULAIRE	4					
4	124-00299A	CLAMP;PIPE	COLLIER	4					
5	S0515266	BOLT	BOULON	2					
6	S5102703	WASHER;SPRING	RONDELLE	2					
8	S8000181	O-RING	JOINT CIRCULAIRE	2					
9	2181-4133D3	ADAPTER	ADAPTEUR	2					
11	S0558966	BOLT	BOULON	4					
12	S5102603	WASHER,SPRING	RONDELLE	4					
13	K1006227	VALVE;SWITCH(R.H)	VANNE	1					
14	K1006228	VALVE;SWITCH(L.H)	VANNE	1					
15	2180-1026D30	O-RING	JOINT CIRCULAIRE	2					
16	S2209266	BOLT;SOCKET M8X1.25X30	BOULON A 6 PANS CREUX	8					
31	S8000181	O-RING	JOINT CIRCULAIRE	2					
32	2181-2816D4	ELBOW	COUDE	2					
33	2181-2817D4	CAP	CHAPEAU	2					
34	S8030081	O-RING	JOINT CIRCULAIRE	2					

DATE	SEP. 12, 2012
4th EDITION	

Fig. 6710 ARM - 3.5m BALANCIER

Serial No. ;

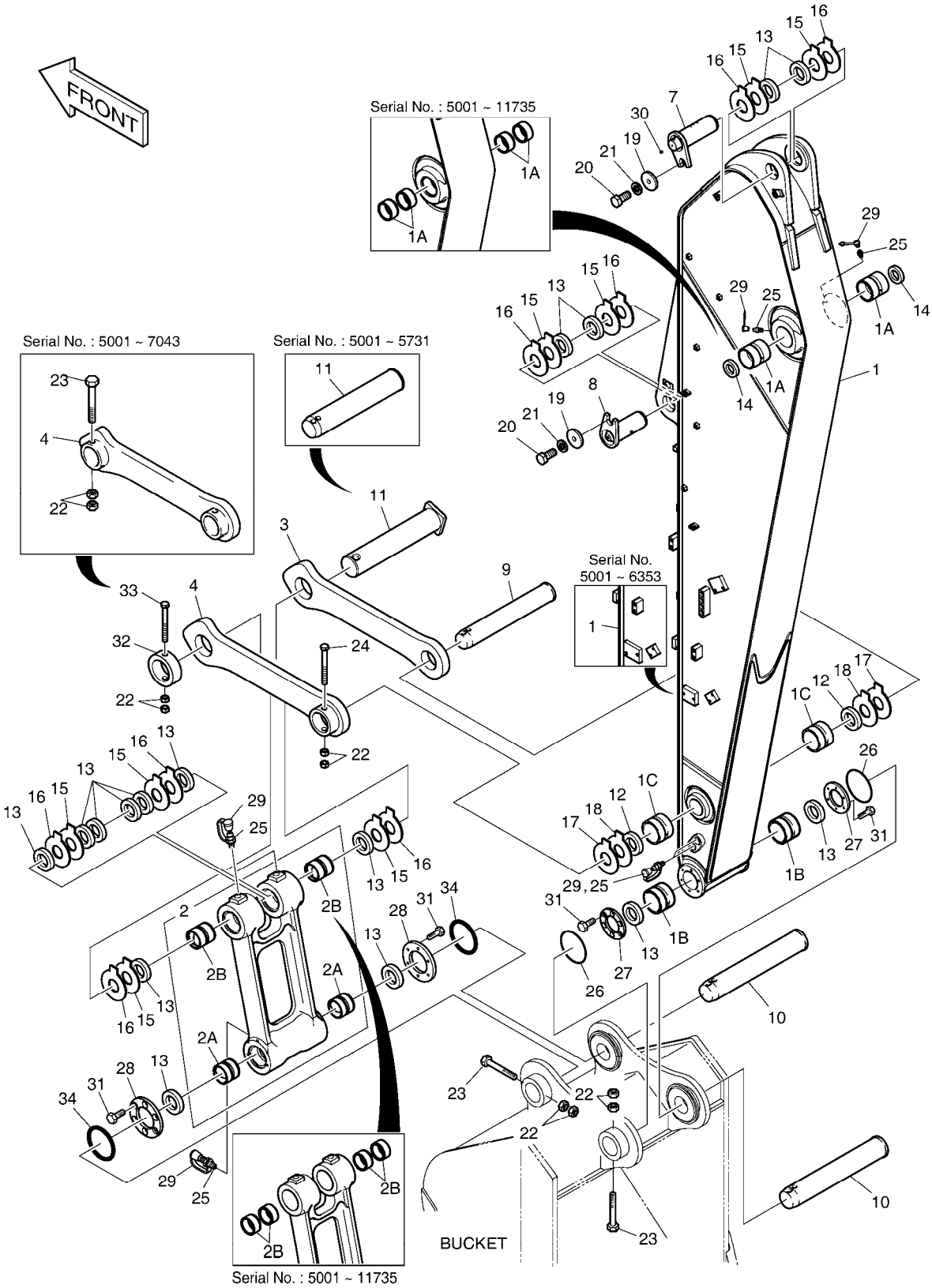

DATE	SEP. 12, 2012
4th EDITION	

Fig. 6710 ARM - 3.5m BALANCIER

Serial No. ;

Key No.	Part No.	Description	Description	Q'ty	S.C	Serial No.	ICA	Replaceable part	
								Part No.	Q'ty
6710 --	K1046239E	ARM ASS'Y	BALANCIER	-	D	5001-5731			
	230201-00107	ARM ASSY	BALANCIER	-	D	5732-			
1	K1046250B	ARM SUB ASS'Y-3.5m	ENSEMBLE BALANCIER	1		5001-6353			
	230204-00086A	ARM;3.5M	ENSEMBLE BALANCIER	1		06354-11735			
	230204-00086C	ARM ASS'Y-3.5M	ENSEMBLE BALANCIER	1		11736-			
1A	K1037848A	. BUSHING	. BUSHING	4		05001-11735	Y	131008-00064A	2
	131008-00064A	. BUSHING	. BUSHING	2		11736-			
1B	K1037849A	. BUSHING	. BUSHING	2		05001-11735	Y	K1000733	2
	K1000733	. BUSHING	. BUSHING	2		11736-			
1C	K1037850A	. BUSHING	. BUSHING	2		05001-11735	Y	K1000734	2
	K1000734	. BUSHING	. BUSHING	2		11736-			
2	K1041214A	PUSH LINK ASS'Y	ENSEMBLE DE ARTICULAT	1		05001-11735	Y	K1002294	1
	K1002294	PUSH LINK ASS`Y	ENSEMBLE DE ARTICULAT	1		11736-			
2A	K1037852A	. BUSHING	. BUSHING	2		05001-11735	Y	110-00249	2
	110-00249	. BUSHING	. BUSHING	2		11736-			
2B	K1037851A	. BUSHING	. BUSHING	4		05001-11735	Y	K1000735	2
	K1000735	. BUSHING	. BUSHING	2		11736-			
3	2155-1299B	LINK;GUIDE(R.H)	ARTICULATION	1		5001-5731	Y	101540-00012	1
	101540-00012	LINK,GUIDE(R.H)	LIEN	1		5732-			
4	2155-1300B	LINK;GUIDE(L.H)	LIEN	1		5001-7043			
	101540-00028	LINK,GUIDE(L.H)	LIEN	1		7044-			
7	K1046927	PIN	GOUJON	1		5001-8240	Y	120501-01063	1
	120501-01063	PIN	GOUJON	1		8241-			
8	K1002130A	PIN	GOUJON	1		5001-8240	Y	120501-01064	1
	120501-01064	PIN	GOUJON	1		8241-			
9	K1007255A	PIN	GOUJON	1		5001-8240	Y	120501-01065	1
	120501-01065	PIN	GOUJON	1		8241-			
10	2123-2192E	PIN	GOUJON	2		5001-8240	Y	120501-01052	2
	120501-01052	PIN	GOUJON	2		8241-			
11	K1007256A	PIN	GOUJON	1		5001-5731	Y	120501-00130	1
	120501-00130	PIN;BUCKET CYL ROD	GOUJON	1		5732-			
12	2180-1106BD4	SEAL;DUST	CACHET	2					
13	2180-1106BD24	SEAL;DUST	CACHET	14					
14	2180-1106BD6	SEAL;DUST	CACHET	2					
15	DS7752012	SHIM	CALE	8					
16	DS7752013	SHIM	CALE	8					
17	DS7752006	SHIM	CALE	2					
18	DS7752007	SHIM	CALE	2					

DATE	SEP. 12, 2012
4th EDITION	

Fig. 6710 ARM - 3.5m BALANCIER

Serial No. ;

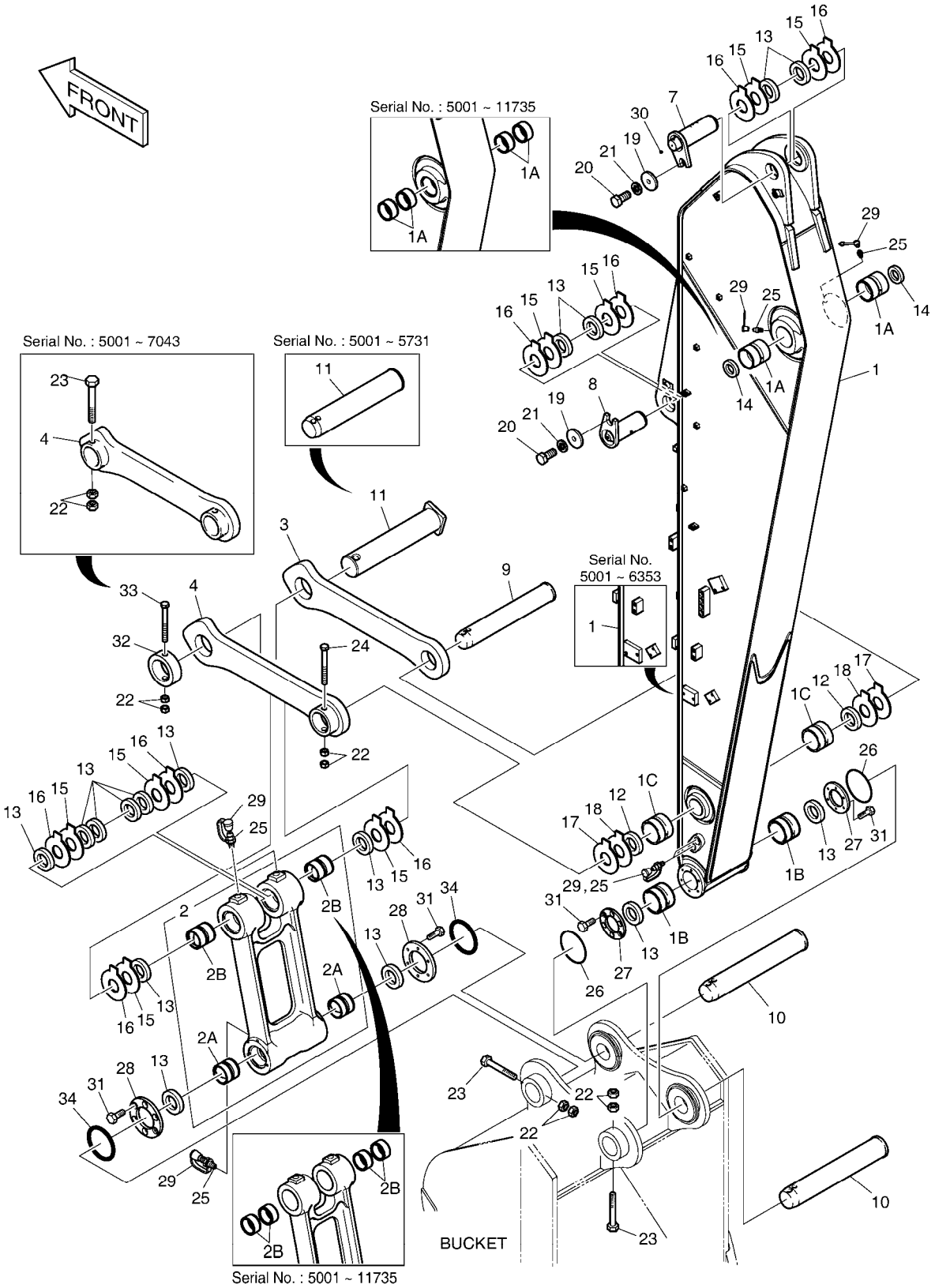

DATE	SEP. 12, 2012
4th EDITION	

Fig. 6710 ARM - 3.5m BALANCIER

Serial No. ;

Key No.	Part No.	Description	Description	Q'ty	S.C	Serial No.	ICA	Replaceable part	
								Part No.	Q'ty
6710 -19	2116-1060D6	STOPPER	TAQUET	2					
20	S0521366	BOLT	BOULON	2					
21	S5102903	WASHER,SPRING	RONDELLE	2					
22	S4012933	NUT	ECROU	8					
23	DS0001084	BOLT	BOULON	3		5001-7043			
	DS0001084	BOLT	BOULON	2		7044-			
24	DS0001083	BOLT	BOULON	1					
25	S6710041	NIPPLE;GREASE	GRAISSEUR	7					
26	180-00077D5	O-RING	JOINT CIRCULAIRE	2					
27	K1000911	SPACER	ENTRETOISE	2					
28	K1000912B	SPACER	ENTRETOISE	2					
29	160-00020	CAP;GREASE NIPPLE	CHAPEAU	7					
30	2181-1116D1	PLUG	BOUCHON	1					
31	S0712066	BOLT	BOULON	24					
32	2116-1531A	STOPPER	TAQUET	1		7044-			
33	S0567066	BOLT	BOULON	1		7044-			
34	180-00077D3	O-RING	JOINT TORIQUE	2		10998-			

DATE	SEP. 12, 2012
4th EDITION	

Fig. 6720 ARM PIPING - ARM 3.5m
CONDUITES DE BALANCIER

Serial No. ;

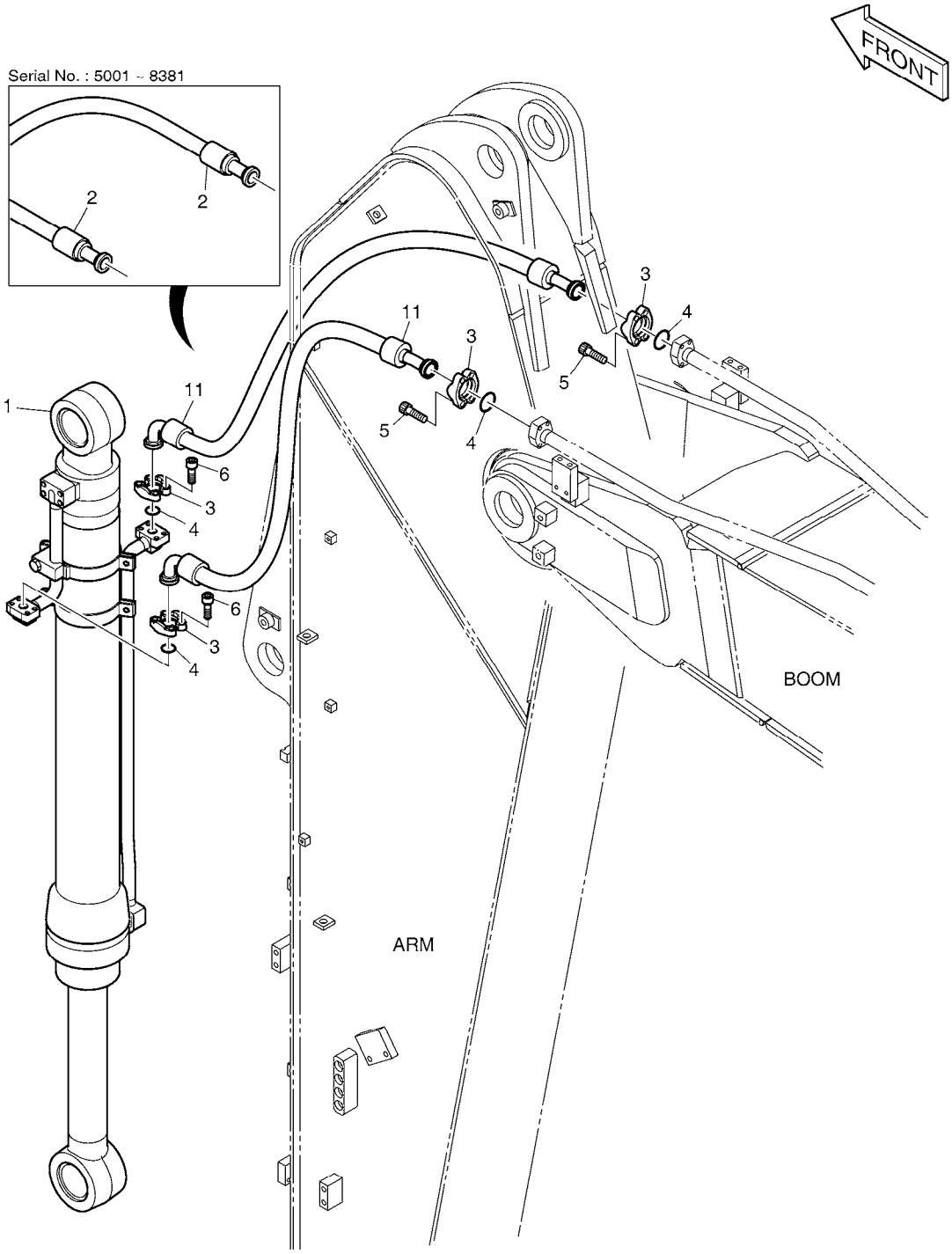

DATE	SEP. 12, 2012
4th EDITION	

Fig. 6720 ARM PIPING - ARM 3.5m CONDUITES DE BALANCIER

Serial No. ;

Key No.	Part No.	Description	Description	Q'ty	S.C	Serial No.	ICA	Replaceable part	
								Part No.	Q'ty
6720 --	K1046332	ARM PIPING	CONDUITES DE BALANCIE	-	D	5001-8381			
	420212-05430	ARM PIPING	CONDUITES DE BALANCIE	-	D	8382-			
1	K1046333	BUCKET CYLINDER	VERIN DE GODET	1		05001-11467	Y	400310-00216	1
	400310-00216	BUCKET CYLINDER	VERIN DE GODET	1		11468-			
2	DS2040488	HOSE	TUYAU FLEXIBLE	2		5001-8381	I	DS2130012	2
3	2181-9079	FLANGE	BRIDE	8					
4	2180-1026D2	O-RING	JOINT CIRCULAIRE	4					
5	S2212366	BOLT;SOCKET M10X1.5X35	BOULON	8					
6	S2212266	BOLT;SOCKET M10X1.5X30	BOULON A 6 PANS CREUX	8					
11	DS2130012	HOSE ASSY,HYDRAULIC	TUYAU FLEXIBLE	2		8382-			

DATE	SEP. 12, 2012
4th EDITION	

Fig. 6730 LUBRICATION PIPING - ARM 3.5m LUBRIFICATION

Serial No. ;

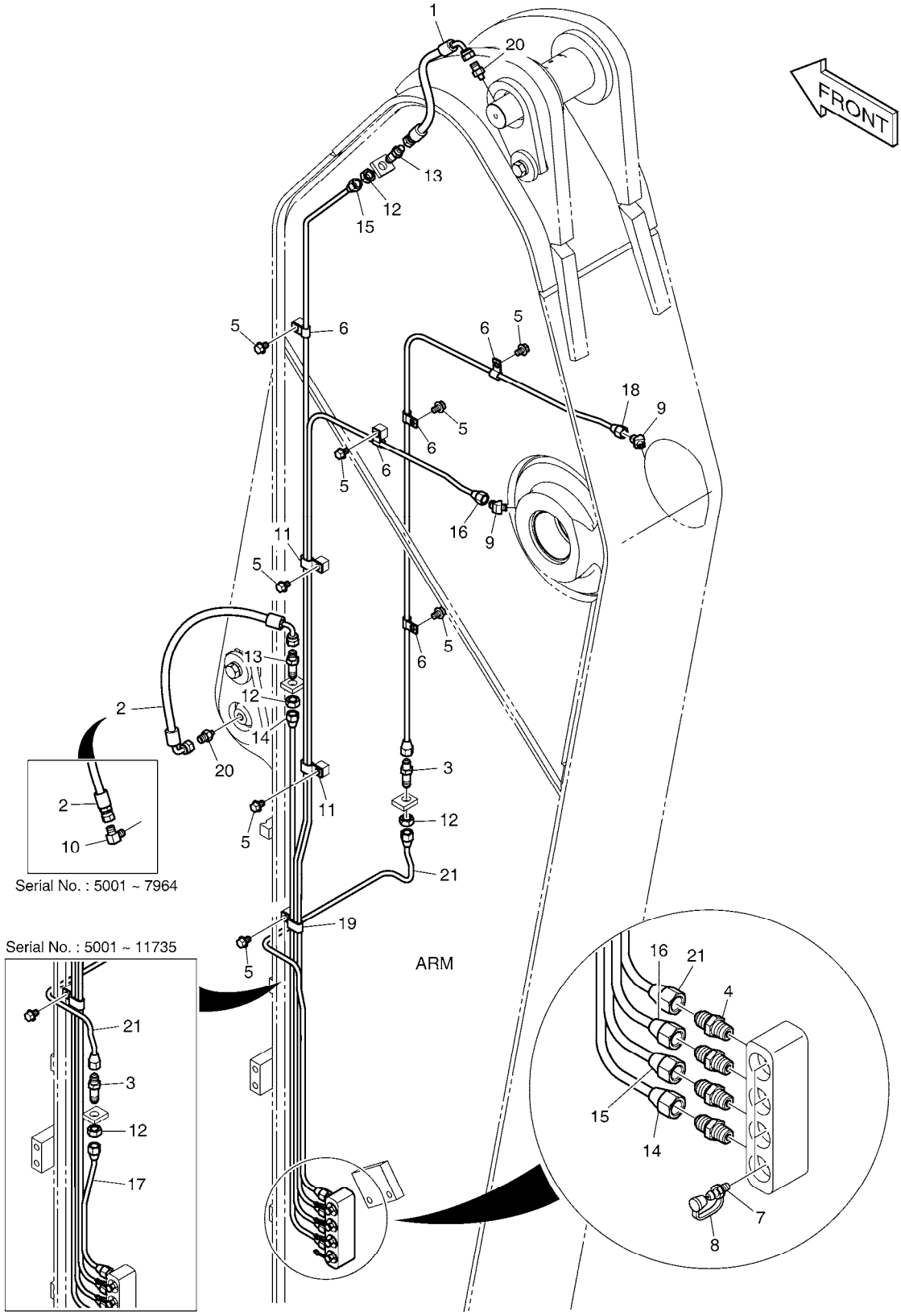

DATE	SEP. 12, 2012
4th EDITION	

Fig. 6730 LUBRICATION PIPING - ARM 3.5m LUBRIFICATION

Serial No. ;

Key No.	Part No.	Description	Description	Q'ty	S.C	Serial No.	ICA	Replaceable part	
								Part No.	Q'ty
6730 --	K1013379	LUBRICATION PIPING	LUBRIFICATION	-	D	5001-7964			
	420212-05312	PIPING,LUBRICATION;3.5M	LUBRIFICATION	-	D	7965-			
1	DS2055849	HOSE	TUYAU	1					
2	DS2055822	HOSE	TUYAU FLEXIBLE	1		5001-7964			
	DS2059598	HOSE PF1/4-360L	TUYAU FLEXIBLE	1		7965-			
3	DS2225009	ADAPTER	ADAPTEUR	2		05001-11735			
	DS2225009	ADAPTER	ADAPTEUR	1		11736-			
4	2181-1184	ADAPTER	ADAPTEUR	4					
5	K1001029	BOLT	BOULON	9					
6	DS2802023	CLIP	AGRAFE	6					
7	S6710041	NIPPLE;GREASE	GRAISSEUR	4					
8	160-00020	CAP;GREASE NIPPLE	CHAPEAU	4					
9	K1000057	ELBOW	COUDE	2					
10	2181-1111D11	ELBOW	COUDE	1		5001-7964			
11	DS2805007	CLIP	AGRAFE	2					
12	S4032833	NUT	ECROU	4		05001-11735			
	S4032833	NUT	ECROU	3		11736-			
13	2181-1923D12	ADAPTER	ADAPTEUR	2					
14	K1010218	PIPE	TUYAU	1					
15	K1013684	PIPE	TUYAU	1					
16	K1013685	PIPE	TUYAU	1					
17	K1010221	PIPE	TUYAU	1		05001-11735			
18	K1013686	PIPE	TUYAU	1					
19	DS2805008	CLIP	AGRAFE	1					
20	2181-4112	ADAPTER	ADAPTEUR	1		5001-7964			
	2181-4112	ADAPTER	ADAPTEUR	2		7965-			
21	K1013687	PIPE	TUYAU	1		05001-11735			
	420205-00284	PIPE	TUYAU	1		11736-			

DATE	SEP. 12, 2012
4th EDITION	

Fig. 6740 ARM PIPING - ARM 3.5m(ONE & TWO WAY)
CONDUITES DE BALANCIER

Serial No. ;

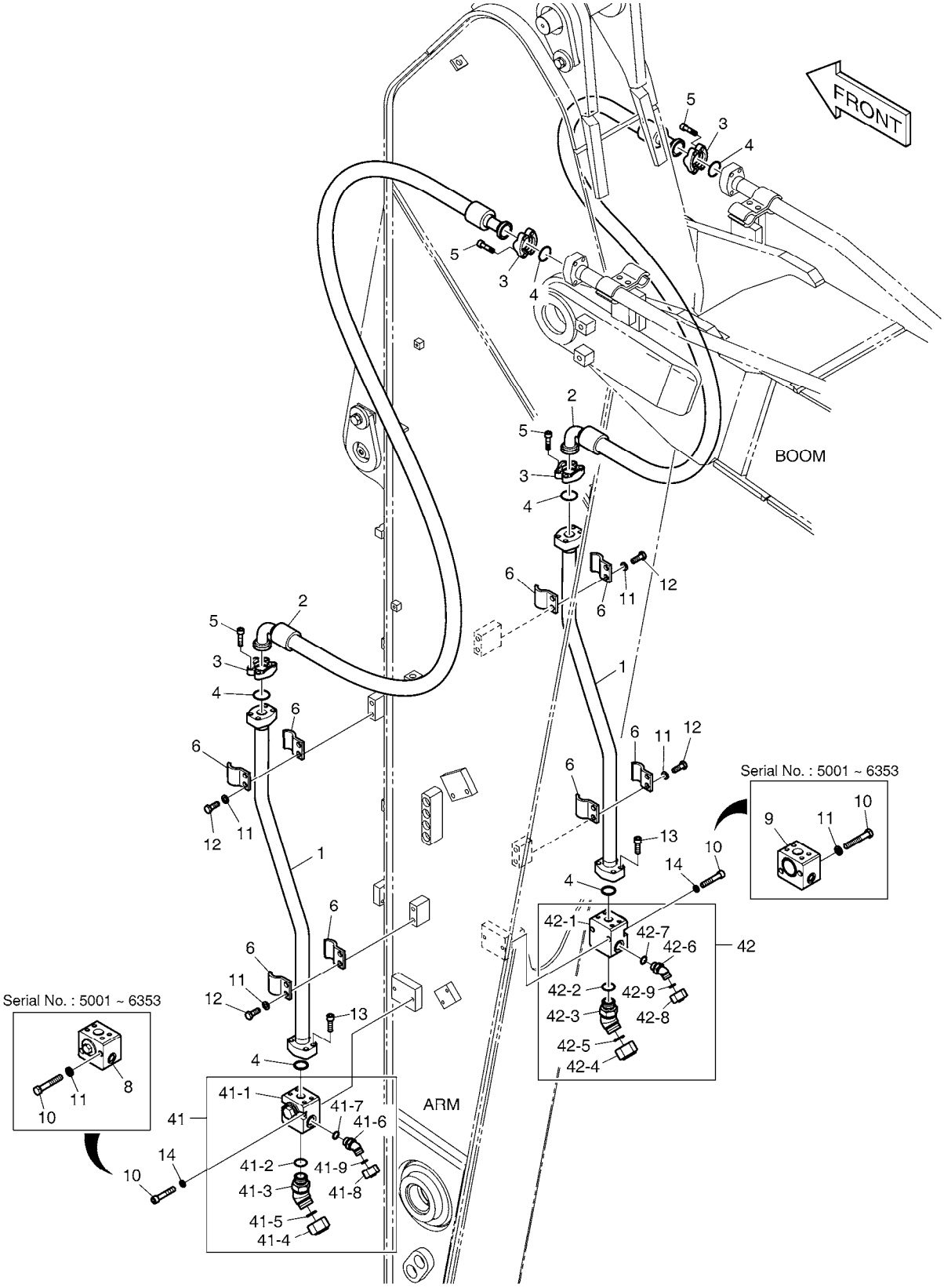

DATE	SEP. 12, 2012
4th EDITION	

Fig. 6740 ARM PIPING - ARM 3.5m(ONE & TWO WAY) CONDUITES DE BALANCIER

Serial No. ;

Key No.	Part No.	Description	Description	Q'ty	S.C	Serial No.	ICA	Replaceable part	
								Part No.	Q'ty
6740 --	K1013382A	ARM PIPING-ONE & TWO WAY	CONDUITES DE BALANCIE	-	D	5001-6353			
	420212-01719	ARM PIPING,ONE & TWO WAY	CONDUITES DE BALANCIE	-	D	6354-			
1	K1008100	PIPE	TUYAU	2					
2	DS2040489	HOSE	TUYAU FLEXIBLE	2					
3	2181-9078	FLANGE	BRIDE	8					
4	2180-1026D19	O-RING	JOINT CIRCULAIRE	6					
5	S2212466	BOLT;SOCKET M10X1.5X40	BOULON	16					
6	K1004057	CLAMP;PIPE	COLLIER	8					
8	K1000334A	VALVE;STOP(L.H)	VANNE	1		5001-6353			
9	K1000338A	VALVE;STOP(R.H)	VANNE	1		5001-6353			
10	S0563666	BOLT	BOULON A 6 PANS	4		5001-6353			
	S2215966	BOLT;SOCKET	BOULON	4		6354-			
11	S5102803	WASHER;SPRING	RONDELLE	12		5001-6353			
	S5102803	WASHER;SPRING	RONDELLE	8		6354-			
12	S0562766	BOLT	BOULON	8					
13	S2212366	BOLT;SOCKET M10X1.5X35	BOULON	8					
14	S5110703	WASHER;SPRING	RONDELLE	4		6354-			
41	410137-00030A	VALVE ASS'Y,STOP(L.H)	VANNE	1		6354-			
41-1	410137-00067	. VALVE,STOP(L.H)	. VANNE	1		6354-			
41-2	S8000291	. O-RING	. JOINT CIRCULAIRE	1		6354-			
41-3	2181-2816D2	. ELBOW	. COUDE	1		6354-			
41-4	2181-2817D2	. CAP	. CHAPEAU	1		6354-			
41-5	S8030161	. O-RING	. JOINT CIRCULAIRE	1		6354-			
41-6	2181-2816D4	. ELBOW	. COUDE	1		6354-			
41-7	S8000181	. O-RING	. JOINT CIRCULAIRE	1		6354-			
41-8	2181-2817D4	. CAP	. CHAPEAU	1		6354-			
41-9	S8030081	. O-RING	. JOINT CIRCULAIRE	1		6354-			
42	410137-00031A	VALVE ASS'Y,STOP(R.H)	VANNE	1		6354-			
42-1	410137-00069	. VALVE,STOP(R.H)	. VANNE	1		6354-			
42-2	S8000291	. O-RING	. JOINT CIRCULAIRE	1		6354-			
42-3	2181-2816D2	. ELBOW	. COUDE	1		6354-			
42-4	2181-2817D2	. CAP	. CHAPEAU	1		6354-			
42-5	S8030161	. O-RING	. JOINT CIRCULAIRE	1		6354-			
42-6	2181-2816D4	. ELBOW	. COUDE	1		6354-			
42-7	S8000181	. O-RING	. JOINT CIRCULAIRE	1		6354-			
42-8	2181-2817D4	. CAP	. CHAPEAU	1		6354-			
42-9	S8030081	. O-RING	. JOINT CIRCULAIRE	1		6354-			

DATE	SEP. 12, 2012
4th EDITION	

Fig. 6750 ARM PIPING - ARM 3.5m(QUICK CLAMP)
CONDUITES DE BALANCIER

Serial No. ;

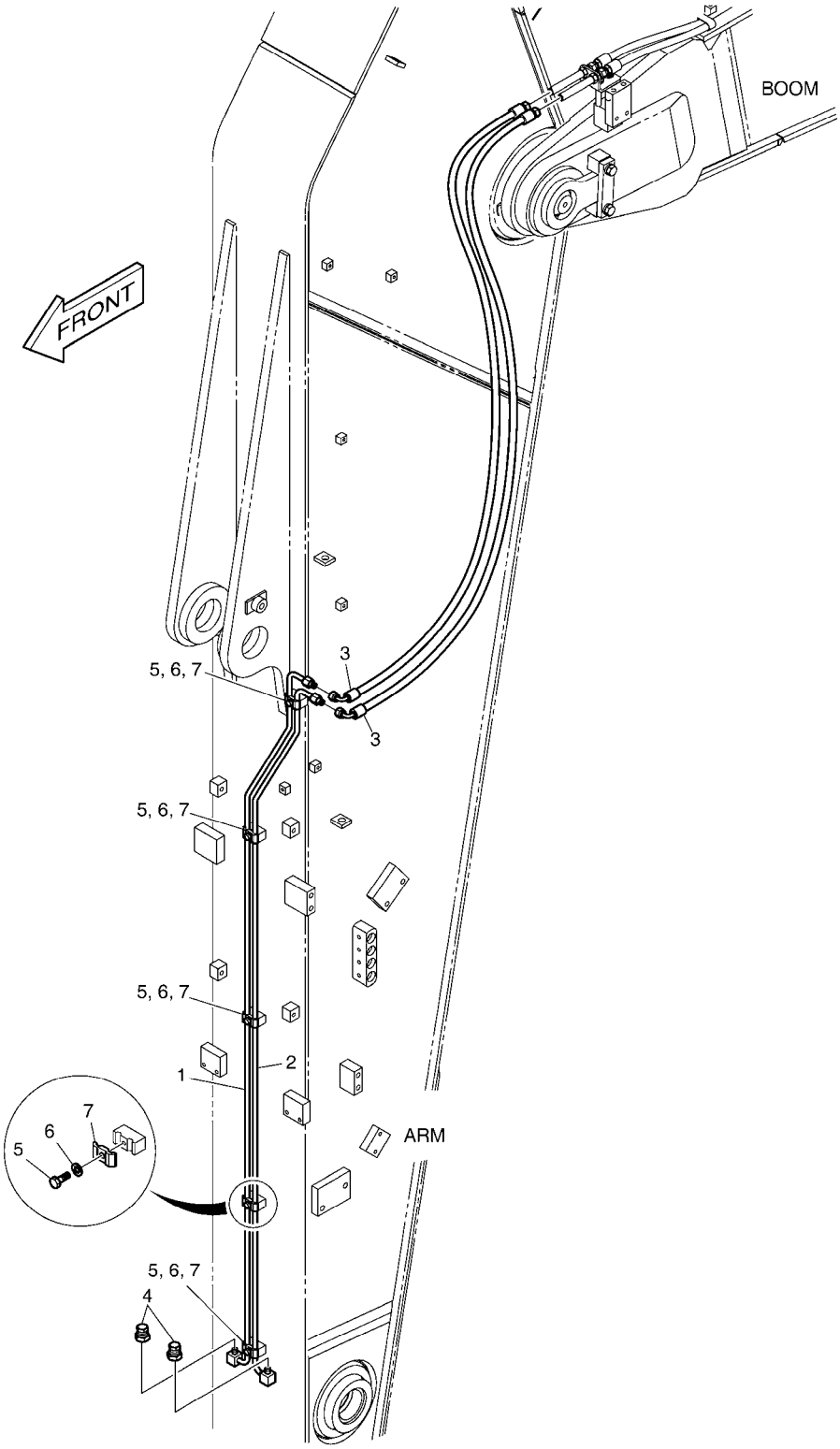

DATE	SEP. 12, 2012
4th EDITION	

Fig. 6750 ARM PIPING - ARM 3.5m(QUICK CLAMP) CONDUITES DE BALANCIER

Serial No. ;

Key No.	Part No.	Description	Description	Q'ty	S.C	Serial No.	ICA	Replaceable part	
								Part No.	Q'ty
6750 --	K1013389	ARM PIPING-QUICK CLAMP	CONDUITES DE BALANCIE	-	D				
1	K1008111	PIPE	TUYAU	1					
2	K1008112	PIPE	TUYAU	1					
3	DS2055921	HOSE	TUYAU FLEXIBLE	2					
4	2181-2820D1	PLUG	BOUCHON	2					
5	S0508866	BOLT	BOULON	5					
6	S5102503	WASHER,SPRING	RONDELLE	5					
7	K1004011	CLAMP;PIPE	COLLIER	5					

DATE	SEP. 12, 2012
4th EDITION	

Fig. 6760 ARM PIPING - ARM 3.5m(CLAMSHELL)
CONDUITES DE BALANCIER

Serial No. ;

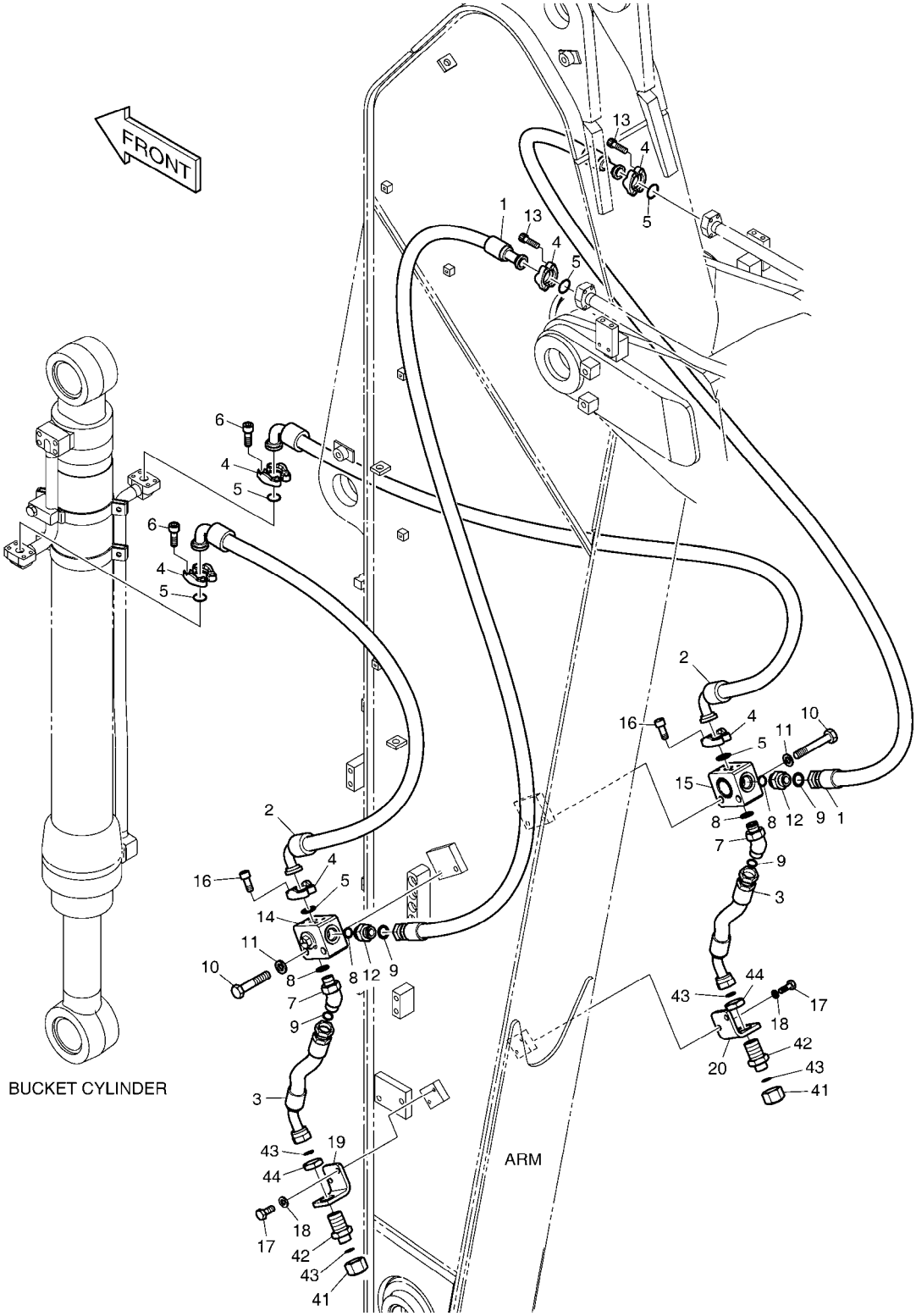

DATE	SEP. 12, 2012
4th EDITION	

Fig. 6760 ARM PIPING - ARM 3.5m(CLAMSHELL) CONDUITES DE BALANCIER

Serial No. ;

Key No.	Part No.	Description	Description	Q'ty	S.C	Serial No.	ICA	Replaceable part	
								Part No.	Q'ty
6760 --	K1013391	ARM PIPING-CLAMSHELL	CONDUITES DE BALANCIE	-	D				
1	DS2016065	HOSE	TUYAU FLEXIBLE	2					
2	DS2045406	HOSE	TUYAU FLEXIBLE	2					
3	DS2012341	HOSE	TUYAU FLEXIBLE	2					
4	2181-9079	FLANGE	BRIDE	12					
5	2180-1026D2	O-RING	JOINT CIRCULAIRE	6					
6	S2212266	BOLT;SOCKET M10X1.5X30	BOULON A 6 PANS CREUX	8					
7	2181-2816D1	ELBOW	COUDE	2					
8	S8030121	O-RING	JOINT CIRCULAIRE	4					
9	S8000231	O-RING	JOINT CIRCULAIRE	4					
10	S0563466	BOLT	BOULON	4					
11	S5102803	WASHER;SPRING	RONDELLE	4					
12	2181-4133D5	ADAPTER	ADAPTEUR	2					
13	S2212366	BOLT;SOCKET M10X1.5X35	BOULON	8					
14	K1002939	VALVE;SWITCH(L.H)	VALVE	1					
15	K1002940	VALVE;SWITCH(R.H)	VALVE	1					
16	S2212066	BOLT;SOCKET M10X1.5X25	BOULON	8					
17	S0512066	BOLT M10X1.5X25	BOULON	4					
18	S5102603	WASHER,SPRING	RONDELLE	4					
19	K1014759	BRACKET	SUPPORT	1					
20	K1015093	BRACKET	SUPPORT	1					
41	2181-2817D1	CAP	CHAPEAU	2					
42	DS2415007	ADAPTER	ADAPTEUR	2					
43	S8030121	O-RING	JOINT CIRCULAIRE	4					
44	121-00010D8	NUT	ECROU	2					

DATE	SEP. 12, 2012
4th EDITION	

Fig. 6770 ARM PIPING - ARM 3.5m(ROTATING)
CONDUITES DE BALANCIER

Serial No. ;

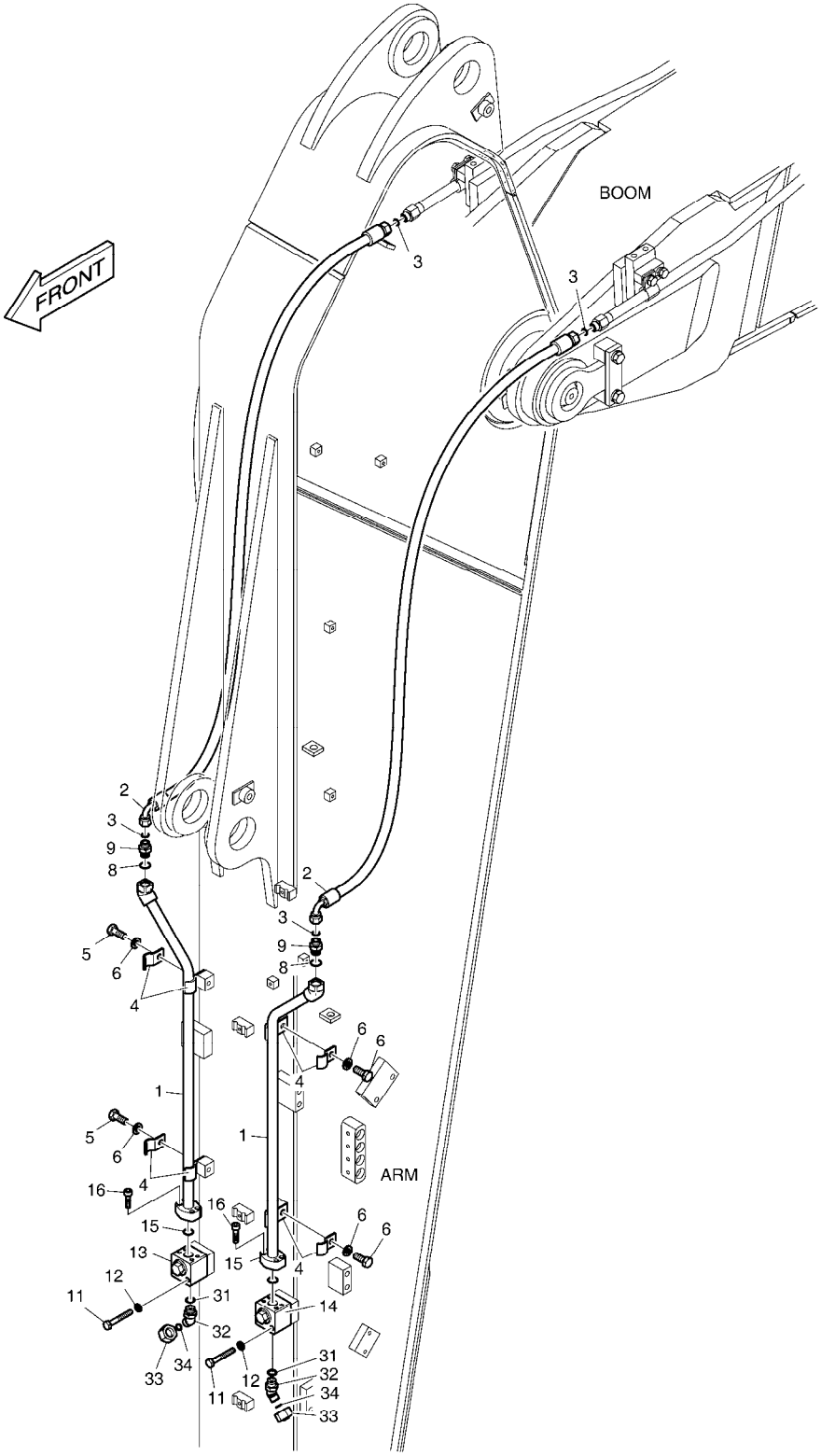

DATE	SEP. 12, 2012
4th EDITION	

Fig. 6770 ARM PIPING - ARM 3.5m(ROTATING) CONDUITES DE BALANCIER

Serial No. ;

Key No.	Part No.	Description	Description	Q'ty	S.C	Serial No.	ICA	Replaceable part	
								Part No.	Q'ty
6770 --	K1013385	ARM PIPING;ROTATING	CONDUITES DE BALANCIE	-	D				
1	K1010215	PIPE	TUYAU	2					
2	DS2013700	HOSE	TUYAU FLEXIBLE	2					
3	S8030081	O-RING	JOINT CIRCULAIRE	4					
4	124-00299A	CLAMP;PIPE	COLLIER	8					
5	S0515266	BOLT	BOULON	4					
6	S5102703	WASHER;SPRING	RONDELLE	4					
8	S8000181	O-RING	JOINT CIRCULAIRE	2					
9	2181-4133D3	ADAPTER	ADAPTEUR	2					
11	S0558966	BOLT	BOULON	4					
12	S5102603	WASHER,SPRING	RONDELLE	4					
13	K1006227	VALVE;SWITCH(R.H)	VANNE	1					
14	K1006228	VALVE;SWITCH(L.H)	VANNE	1					
15	2180-1026D30	O-RING	JOINT CIRCULAIRE	2					
16	S2209266	BOLT;SOCKET M8X1.25X30	BOULON A 6 PANS CREUX	8					
31	S8000181	O-RING	JOINT CIRCULAIRE	2					
32	2181-2816D4	ELBOW	COUDE	2					
33	2181-2817D4	CAP	CHAPEAU	2					
34	S8030081	O-RING	JOINT CIRCULAIRE	2					

DATE	SEP. 12, 2012
4th EDITION	

Fig. 6780 BUCKET ASS'Y - 0.51m³ ENSEMBLE DE GODET

Serial No. ;

Serial No. : 5001 ~ 10997

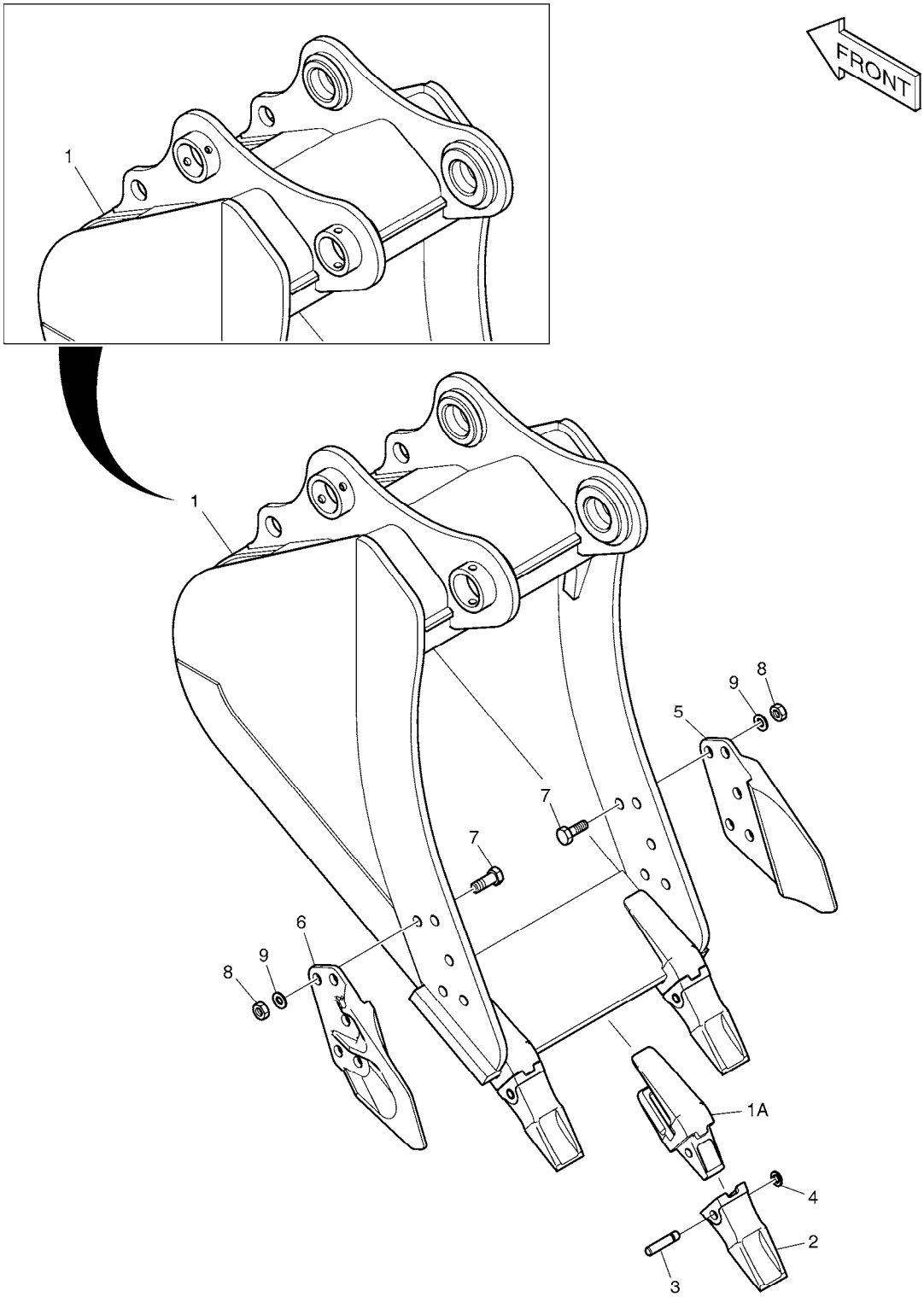

DATE	SEP. 12, 2012
4th EDITION	

Fig. 6780 BUCKET ASS'Y - 0.51m³ ENSEMBLE DE GODET

Serial No. ;

Key No.	Part No.	Description	Description	Q'ty	S.C	Serial No.	ICA	Replaceable part	
								Part No.	Q'ty
6780 --	K1011476E	BUCKET ASS'Y-0.51㎥	GODET	1		05001-10997	I	230104-01249	1
	230104-01249	BUCKET ASS'Y-0.51㎥	GODET	1		10998-			
1	K1011477E	BUCKET-0.51㎥	GODET	1		05001-10997	I	230104-01250	1
	230104-01250	BUCKET-0.51㎥	GODET	1		10998-			
1A	2713-1218A	. ADAPTER;TOOTH	. ADAPTEUR	3					
2	K1038006A	TOOTH	DENT	3					
3	2705-1020	PIN;LOCKING	GOUPILLE	3					
4	2114-1848A	WASHER;LOCKING	RONDELLE	3					
5	2713-1059A	CUTTER;SIDE(R.H)	COUPEUR	1					
6	2713-1060A	CUTTER;SIDE(L.H)	COUPEUR	1					
7	S0574661	BOLT M24X3.0X65	BOULON	10					
8	S4013333	NUT	ECROU	10					
9	2114-1831A	WASHER;HARDEN	RONDELLE	10					

DATE	SEP. 12, 2012
4th EDITION	

Fig. 6790 BUCKET ASS'Y - 0.81m³ ENSEMBLE DE GODET

Serial No. ;

Serial No. : 5001 ~ 10997

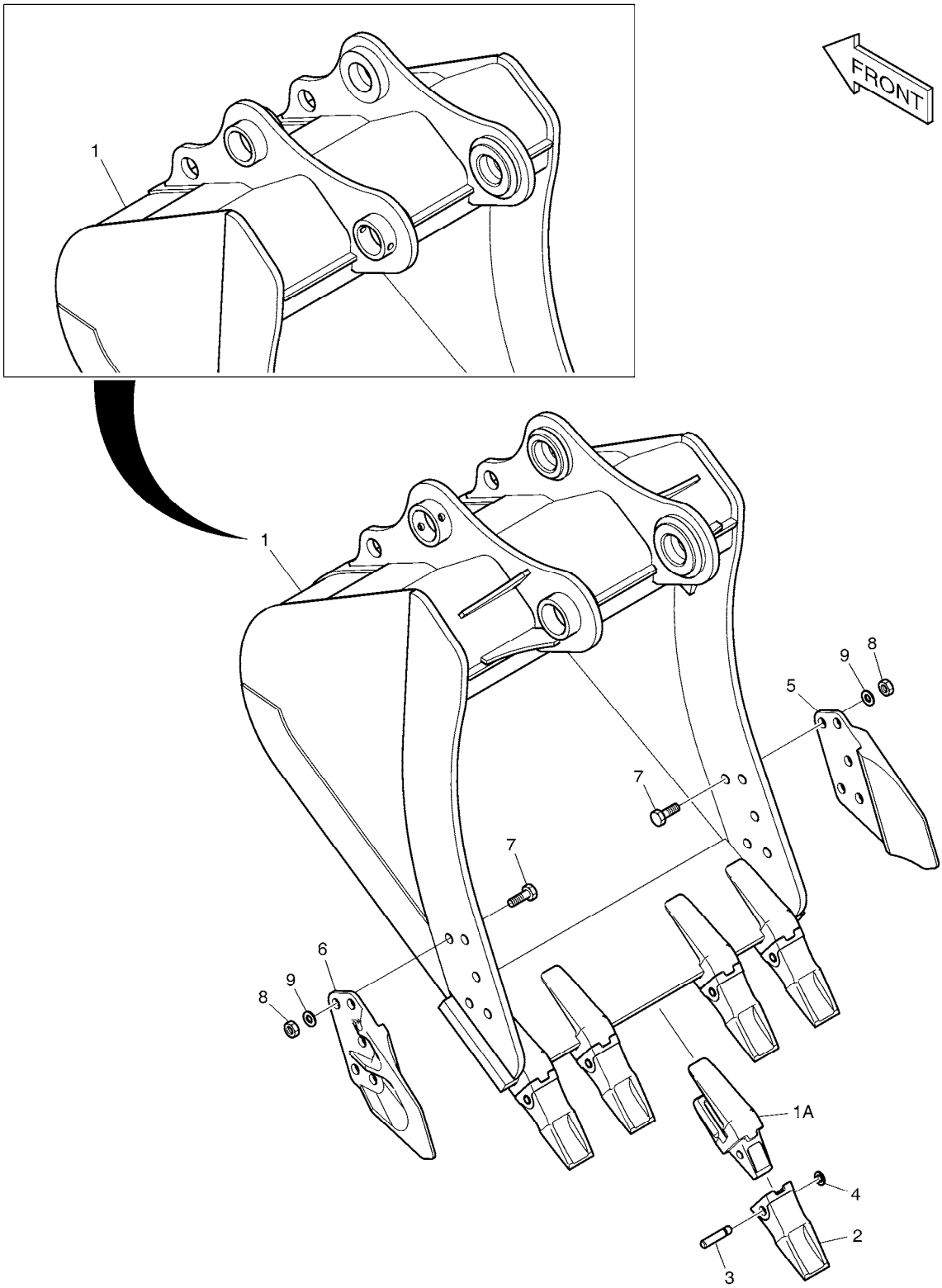

DATE	SEP. 12, 2012
4th EDITION	

Fig. 6790 BUCKET ASS'Y - 0.81m³ ENSEMBLE DE GODET

Serial No. ;

Key No.	Part No.	Description	Description	Q'ty	S.C	Serial No.	ICA	Replaceable part	
								Part No.	Q'ty
6790 --	K1011478E	BUCKET ASS'Y-0.81㎥	GODET	1		05001-10997	I	230104-01251	1
	230104-01251	BUCKET ASS'Y-0.81㎥	GODET	1		10998-			
1	K1011479E	BUCKET-0.81㎥	GODET	1		05001-10997	I	230104-01252	1
	230104-01252	BUCKET-0.81㎥	GODET	1		10998-			
1A	2713-1218A	. ADAPTER;TOOTH	. ADAPTEUR	5					
2	K1038006A	TOOTH	DENT	5					
3	2705-1020	PIN;LOCKING	GOUPILLE	5					
4	2114-1848A	WASHER;LOCKING	RONDELLE	5					
5	2713-1059A	CUTTER;SIDE(R.H)	COUPEUR	1					
6	2713-1060A	CUTTER;SIDE(L.H)	COUPEUR	1					
7	S0574661	BOLT M24X3.0X65	BOULON	10					
8	S4013333	NUT	ECROU	10					
9	2114-1831A	WASHER;HARDEN	RONDELLE	10					

DATE	SEP. 12, 2012
4th EDITION	

Fig. 6800 BUCKET ASS'Y - 1.05m³ ENSEMBLE DE GODET

Serial No. ;

Serial No. : 5001 ~ 10997

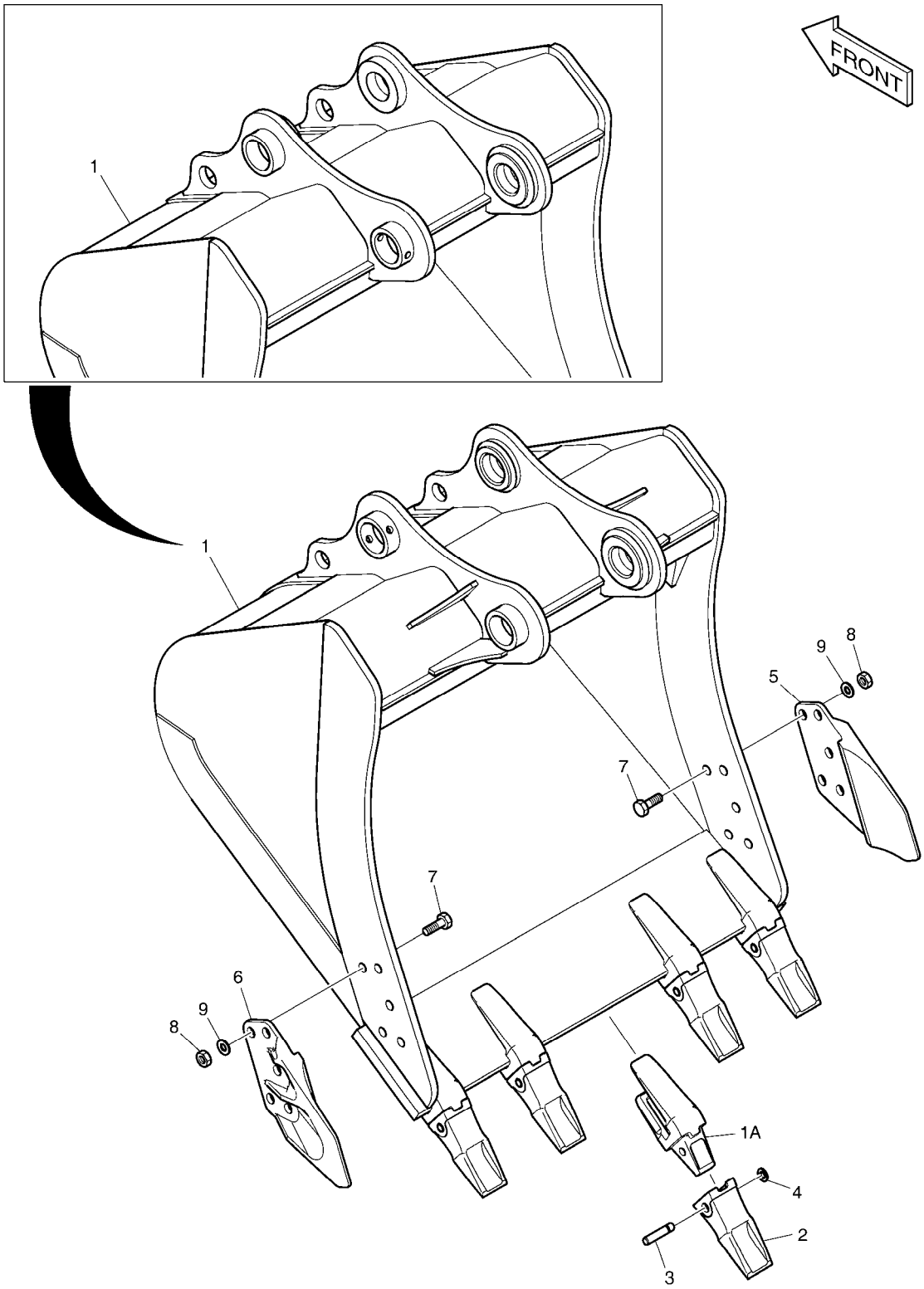

DATE	SEP. 12, 2012
4th EDITION	

Fig. 6800 BUCKET ASS'Y - 1.05m³ ENSEMBLE DE GODET

Serial No. ;

Key No.	Part No.	Description	Description	Q'ty	S.C	Serial No.	ICA	Replaceable part	
								Part No.	Q'ty
6800 --	K1011480E	BUCKET ASS'Y-1.05㎥	GODET	1		05001-10997	I	230104-01253	1
	230104-01253	BUCKET ASS'Y-1.05㎥	GODET	1		10998-			
1	K1011481E	BUCKET-1.05㎥	GODET	1		05001-10997	I	230104-01254	1
	230104-01254	BUCKET-1.05㎥	GODET	1		10998-			
1A	2713-1218A	. ADAPTER;TOOTH	. ADAPTEUR	5					
2	K1038006A	TOOTH	DENT	5					
3	2705-1020	PIN;LOCKING	GOUPILLE	5					
4	2114-1848A	WASHER;LOCKING	RONDELLE	5					
5	2713-1059A	CUTTER;SIDE(R.H)	COUPEUR	1					
6	2713-1060A	CUTTER;SIDE(L.H)	COUPEUR	1					
7	S0574661	BOLT M24X3.0X65	BOULON	10					
8	S4013333	NUT	ECROU	10					
9	2114-1831A	WASHER;HARDEN	RONDELLE	10					

DATE	SEP. 12, 2012
4th EDITION	

Fig. 6810 BUCKET ASS'Y - 1.17m³ ENSEMBLE DE GODET

Serial No. ;

Serial No. : 5001 ~ 10997

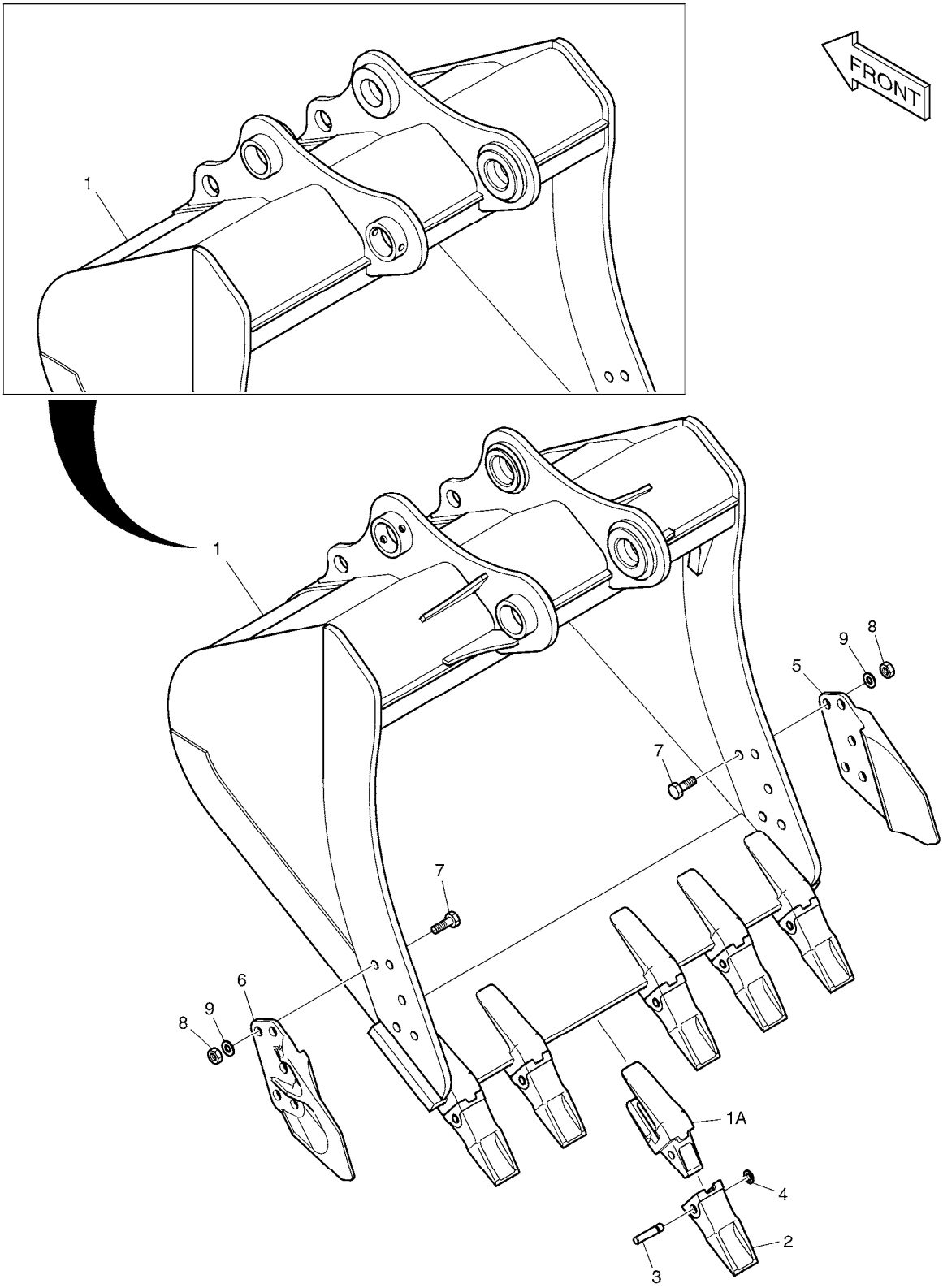

DATE	SEP. 12, 2012
4th EDITION	

Fig. 6810 BUCKET ASS'Y - 1.17m³ ENSEMBLE DE GODET

Serial No. ;

Key No.	Part No.	Description	Description	Q'ty	S.C	Serial No.	ICA	Replaceable part	
								Part No.	Q'ty
6810 --	K1011482E	BUCKET ASS'Y-1.17㎥	GODET	1		05001-10997	I	230104-01255	1
	230104-01255	BUCKET ASS'Y-1.17㎥	GODET	1		10998-			
1	K1011483E	BUCKET-1.17㎥	GODET	1		05001-10997	I	230104-01256	1
	230104-01256	BUCKET-1.17㎥	GODET	1		10998-			
1A	2713-1218A	. ADAPTER;TOOTH	. ADAPTEUR	6					
2	K1038006A	TOOTH	DENT	6					
3	2705-1020	PIN;LOCKING	GOUPILLE	6					
4	2114-1848A	WASHER;LOCKING	RONDELLE	6					
5	2713-1059A	CUTTER;SIDE(R.H)	COUPEUR	1					
6	2713-1060A	CUTTER;SIDE(L.H)	COUPEUR	1					
7	S0574661	BOLT M24X3.0X65	BOULON	10					
8	S4013333	NUT	ECROU	10					
9	2114-1831A	WASHER;HARDEN	RONDELLE	10					

DATE	SEP. 12, 2012
4th EDITION	

Fig. 6820 BUCKET ASS'Y - 1.28m³ ENSEMBLE DE GODET

Serial No. ;

Serial No. : 5001 ~ 10997

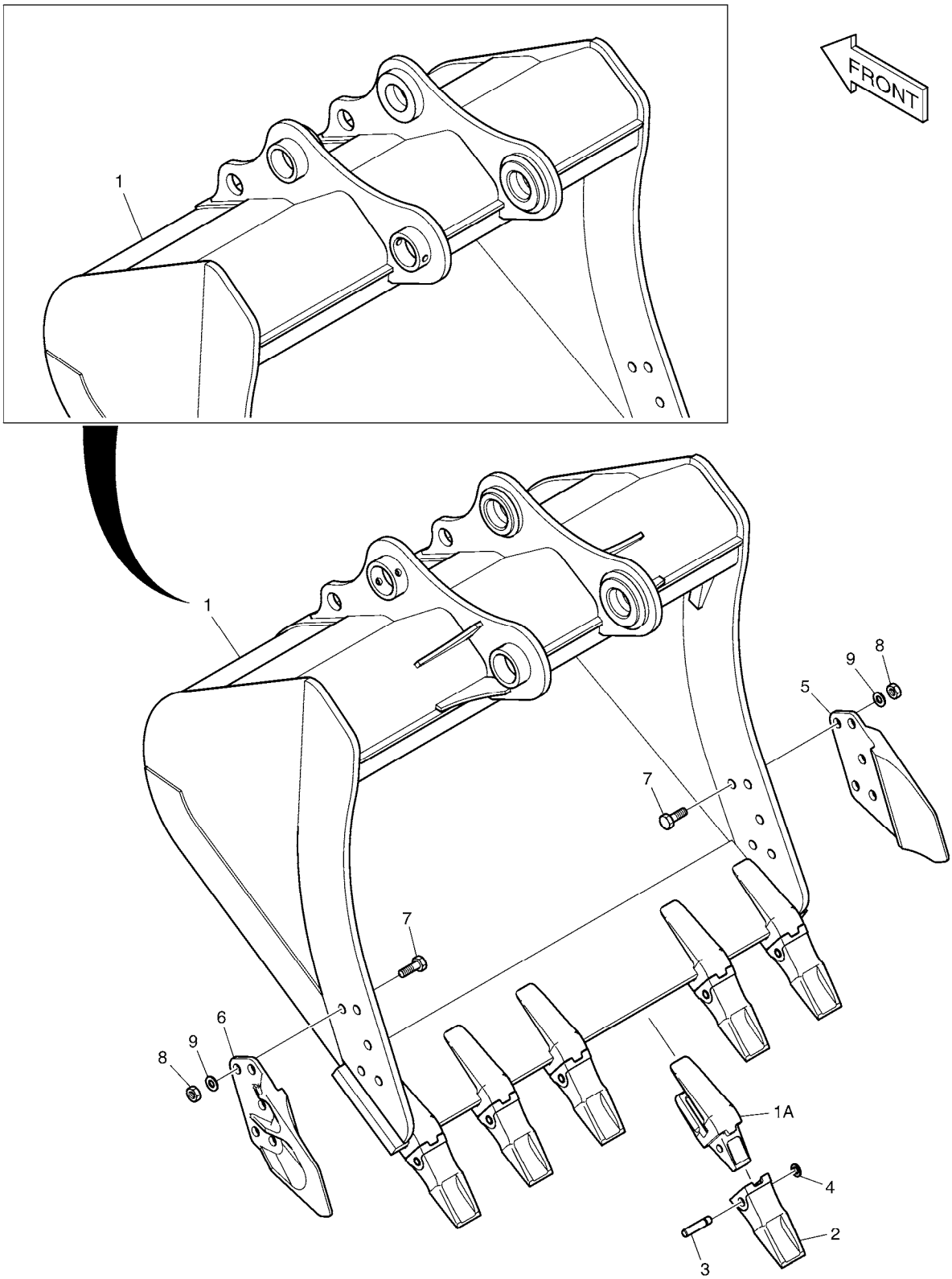

DATE	SEP. 12, 2012
4th EDITION	

Fig. 6820 BUCKET ASS'Y - 1.28m³ ENSEMBLE DE GODET

Serial No. ;

Key No.	Part No.	Description	Description	Q'ty	S.C	Serial No.	ICA	Replaceable part	
								Part No.	Q'ty
6820 --	K1011484E	BUCKET ASS'Y-1.28㎥	GODET	1		05001-10997	I	230104-01257	1
	230104-01257	BUCKET ASS'Y-1.28㎥	GODET	1		10998-			
1	K1011485E	BUCKET-1.28㎥	GODET	1		05001-10997	I	230104-01258	1
	230104-01258	BUCKET-1.28㎥	GODET	1		10998-			
1A	2713-1218A	. ADAPTER;TOOTH	. ADAPTEUR	6					
2	K1038006A	TOOTH	DENT	6					
3	2705-1020	PIN;LOCKING	GOUPILLE	6					
4	2114-1848A	WASHER;LOCKING	RONDELLE	6					
5	2713-1059A	CUTTER;SIDE(R.H)	COUPEUR	1					
6	2713-1060A	CUTTER;SIDE(L.H)	COUPEUR	1					
7	S0574661	BOLT M24X3.0X65	BOULON	10					
8	S4013333	NUT	ECROU	10					
9	2114-1831A	WASHER;HARDEN	RONDELLE	10					

DATE	SEP. 12, 2012
4th EDITION	

Fig. 6830 BOOM - 5.2m
ENSEMBLE FLECHE

Serial No. ;

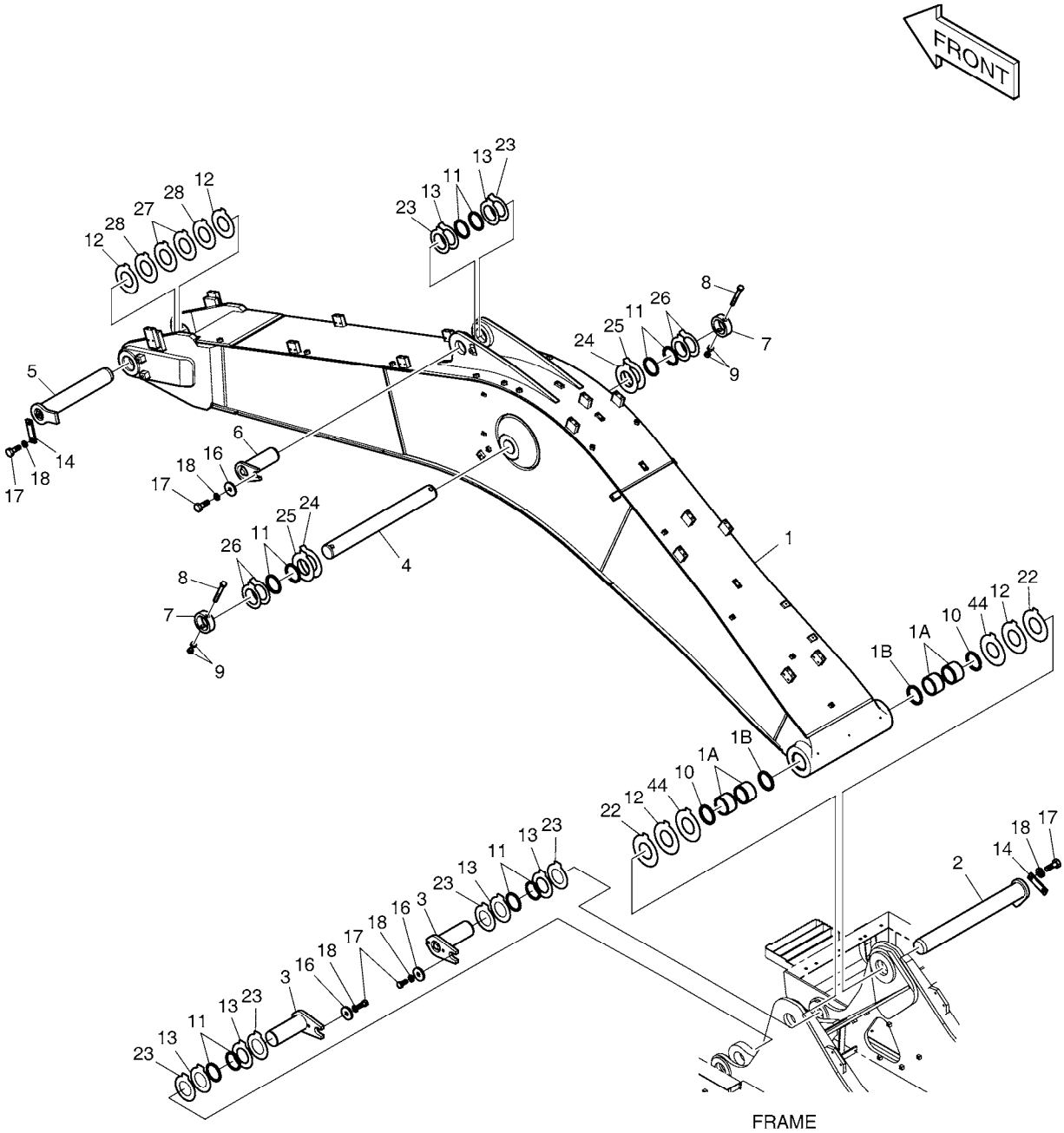

DATE	SEP. 12, 2012
4th EDITION	

Fig. 6830 BOOM - 5.2m ENSEMBLE FLECHE

Serial No. ;

Key No.	Part No.	Description	Description	Q'ty	S.C	Serial No.	ICA	Replaceable part	
								Part No.	Q'ty
6830 --	K1045659E	BOOM ASS'Y	FLECHE	-	D	5001-7378			
	230207-00082	BOOM ASSY;(5.2M)	FLECHE	-	D	7379-			
1	K1045661C	BOOM SUB ASS'Y-5.2M	ENSEMBLE FLECHE	1					
1A	K1037847A	. BUSHING	. BUSHING	4					
1B	2180-1106BD6	. SEAL;DUST	. CACHET	2					
2	2123-2180G	PIN	GOUJON	1		5001-8381	I	120501-01812	1
	120501-01812	PIN,BOOM FOOT	GOUJON	1		8382-			
3	123-00409A	PIN	GOUPILLE	2		5001-8240	I	120501-01061	2
	120501-01061	PIN	GOUPILLE	2		8241-			
4	K1007253B	PIN	GOUPILLE	1					
5	2123-2185G	PIN	GOUPILLE	1					
6	2123-2187E	PIN	GOUJON	1		5001-8240	I	120501-01062	1
	120501-01062	PIN	GOUJON	1		8241-			
7	2116-1531A	STOPPER	TAQUET	2					
8	S0567066	BOLT	BOULON	2					
9	S4012933	NUT	ECROU	4					
10	2180-1106BD6	SEAL;DUST	CACHET	2					
11	2180-1106BD24	SEAL;DUST	CACHET	10					
12	DS7752018	SHIM	CALE	4					
13	DS7752012	SHIM	CALE	6					
14	621-03710A	PLATE;STOPPER	PLAQUE	2					
16	2116-1060D6	STOPPER	TAQUET	3					
17	S0521366	BOLT	BOULON	7					
18	S5102903	WASHER,SPRING	RONDELLE	7					
22	DS7752017	SHIM	CALE	2		5001-8973			
	DS7752093	SHIM	CALE	2		8974-			
23	DS7752013	SHIM	CALE	6					
24	DS7752026	SHIM	CALE	2					
25	DS7752027	SHIM	CALE	2					
26	DS7752025	SHIM	CALE	4					
27	DS7752017	SHIM	CALE	2					
28	DS7752093	SHIM	CALE	2		8974-			
44	DS7752028	SHIM	CALE	2		8974-			

DATE	SEP. 12, 2012
4th EDITION	

Fig. 6840 BOOM PIPING - BOOM 5.2m
CONDUITES DE FLECHE

Serial No. ;

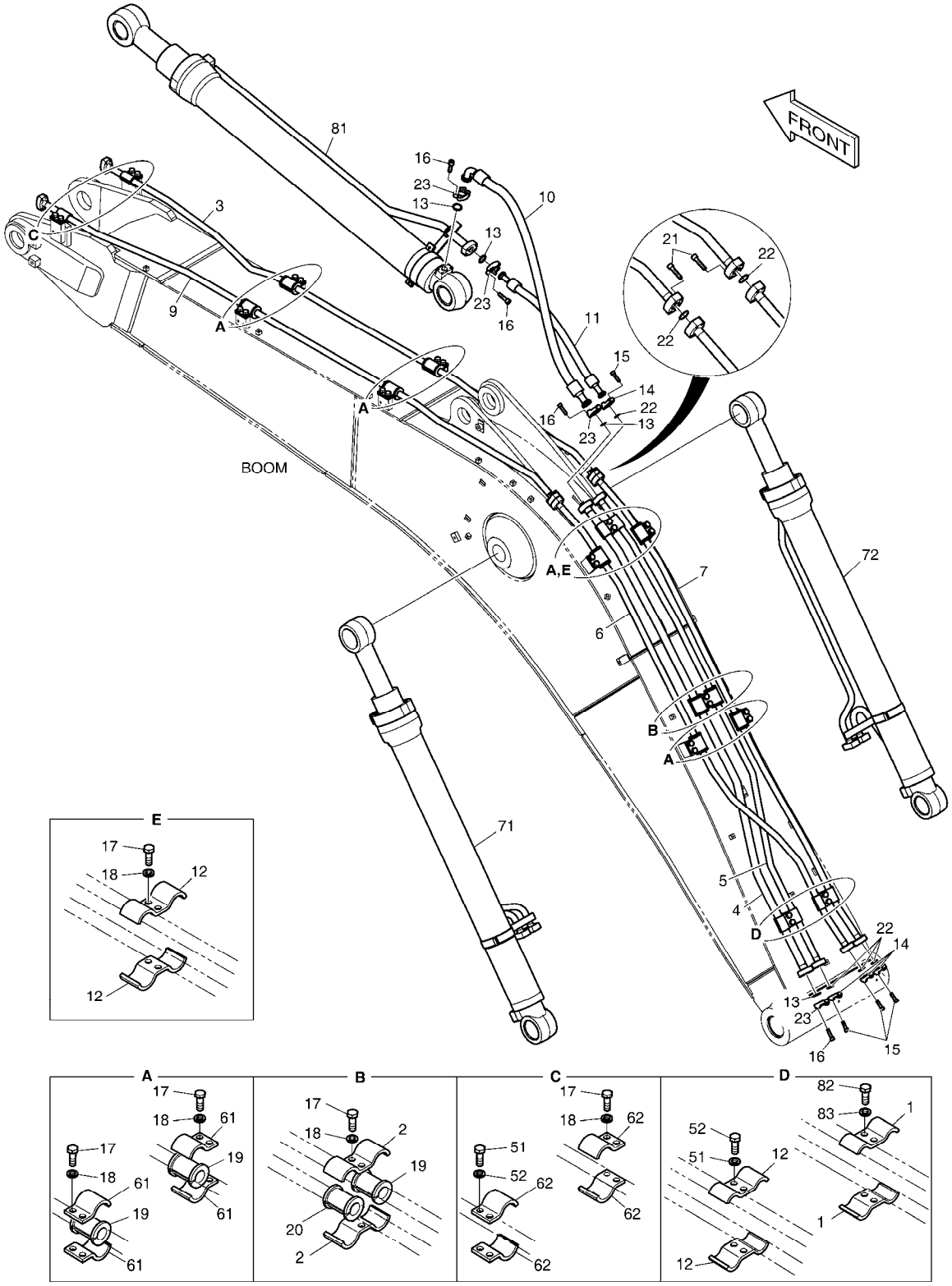

DATE	SEP. 12, 2012
4th EDITION	

Fig. 6840 BOOM PIPING - BOOM 5.2m CONDUITES DE FLECHE

Serial No. ;

Key No.	Part No.	Description	Description	Q'ty	S.C	Serial No.	ICA	Replaceable part	
								Part No.	Q'ty
6840 --	K1045913	BOOM PIPING	BOOM PIPING	-	D				
1	124-00300	CLAMP;PIPE	BRIDE	2					
2	124-00368	CLAMP;PIPE	BRIDE	2					
3	K1046104	PIPE	CONDUITES	1					
4	K1045927	PIPE	CONDUITES	1					
5	K1045928	PIPE	CONDUITES	1					
6	K1045937	PIPE	CONDUITES	1					
7	K1045938	PIPE	CONDUITES	1					
9	K1046162	PIPE	CONDUITES	1					
10	DS2040638	HOSE	TUYAU FLEXIBLE	1					
11	DS2038193	HOSE	TUYAU FLEXIBLE	1					
12	124-00367	CLAMP;PIPE	BRIDE	4					
13	2180-1026D19	O-RING	JOINT CIRCULAIRE	4					
14	2181-9079	FLANGE	BRIDE	8					
15	S2212366	BOLT;SOCKET M10X1.5X35	BOULON	20					
16	S2212466	BOLT;SOCKET M10X1.5X40	BOULON	12					
17	S0562766	BOLT	BOULON	22					
18	S5102803	WASHER;SPRING	RONDELLE	22					
19	161-00574	RUBBER	LE CAOUTCHOUC	9					
20	161-00281	RUBBER	LE CAOUTCHOUC	1					
21	S2212566	BOLT;SOCKET	BOULON	8					
22	2180-1026D2	O-RING	JOINT CIRCULAIRE	6					
23	2181-9078	FLANGE	BRIDE	8					
51	S0562766	BOLT	BOULON	4					
52	S5102803	WASHER;SPRING	RONDELLE	4					
61	124-00302	CLAMP;PIPE	BRIDE	16					
62	124-00303	CLAMP;PIPE	COLLIER	4					
71	K1044989B	CYLINDER;BOOM (LH)	CYLINDRE	1		5001-9957	Y	400309-00341	1
	400309-00341	CYLINDER,BOOM;(L.H)	CYLINDRE	1		09958-11554	Y	400309-00341A	1
	400309-00341A	CYLINDER,BOOM;(L.H)	CYLINDRE	1		11555-			
72	K1044990B	CYLINDER;BOOM (RH)	CYLINDRE	1		5001-9957	Y	400309-00343	1
	400309-00343	CYLINDER,BOOM;(R.H)	CYLINDRE	1		09958-11554	Y	400309-00343A	1
	400309-00343A	CYLINDER,BOOM;(R.H)	CYLINDRE	1		11555-			
81	K1044991A	CYLINDER;ARM	VERIN DE BALANCIER	1		05001-11735	Y	400305-00219	1
	400305-00219	CYLINDER,ARM	VERIN DE BALANCIER	1		11736-			
82	S0562766	BOLT	BOULON	2					
83	S5102803	WASHER;SPRING	RONDELLE	2					

DATE	SEP. 12, 2012
4th EDITION	

Fig. 6850 LUBRICATION PIPING - BOOM 5.2m
LUBRIFICATION

Serial No. ;

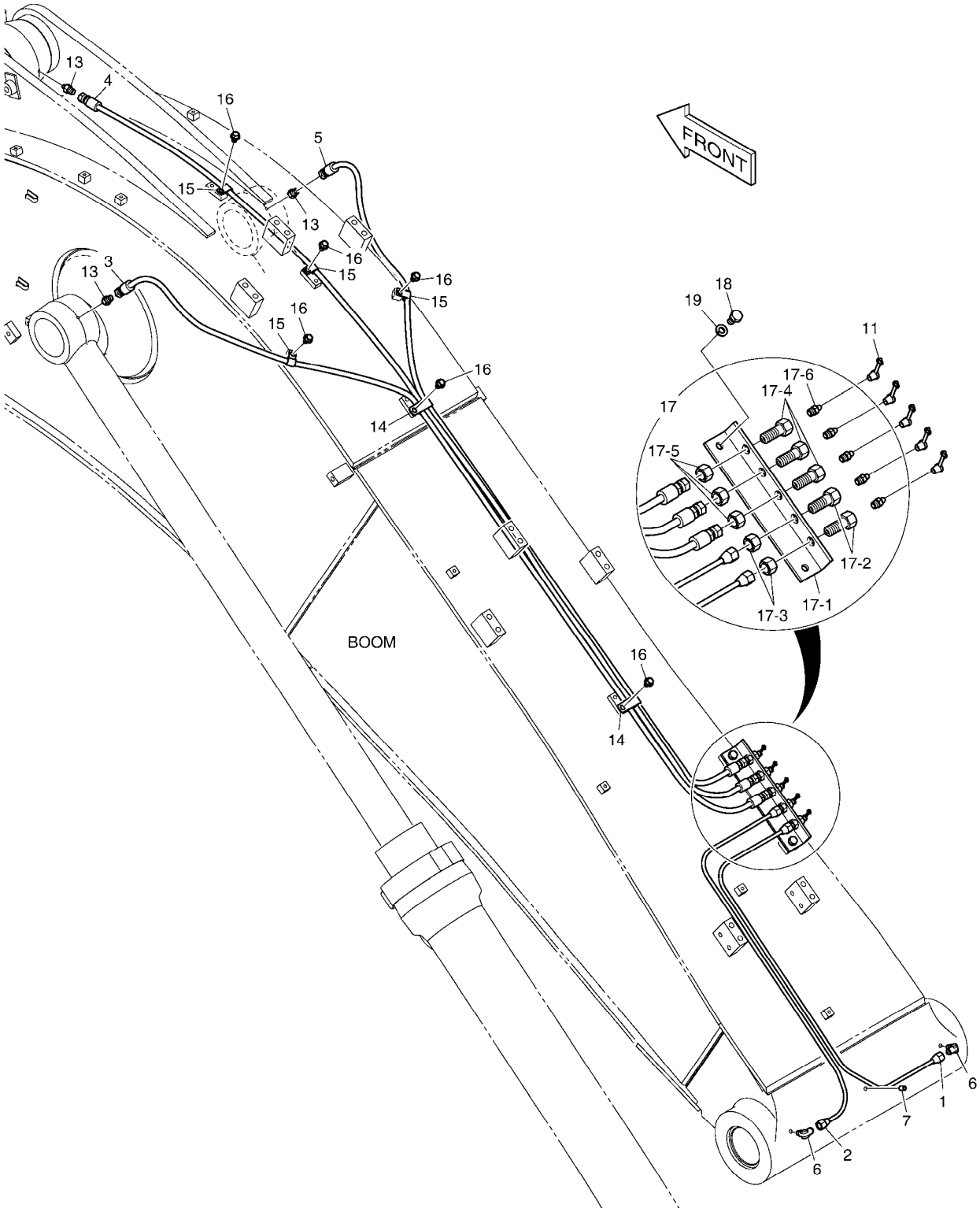

DATE	SEP. 12, 2012
4th EDITION	

Fig. 6850 LUBRICATION PIPING - BOOM 5.2m LUBRIFICATION

Serial No. ;

Key No.	Part No.	Description	Description	Q'ty	S.C	Serial No.	ICA	Replaceable part	
								Part No.	Q'ty
6850 --	K1045915	LUBRICATION PIPING-BOOM 5.2	LUBRIFICATION	-	D				
1	K1038814	PIPE	TUYAU	1					
2	K1038815	PIPE	TUYAU	1					
3	DS20531021	HOSE	TUYAU FLEXIBLE	1					
4	DS2053997	HOSE	TUYAU FLEXIBLE	1					
5	DS2053867	HOSE PF1/4-2140L	TUYAU FLEXIBLE	1					
6	2181-1925	ELBOW	COUDE	2					
7	S3524403	PLUG	PRISE	1					
11	160-00020	CAP;GREASE NIPPLE	CHAPEAU	5					
13	2181-4112	ADAPTER	ADAPTEUR	3					
14	124-00199D4	CLIP	AGRAFE	2					
15	2124-1353D2	CLIP	AGRAFE	4					
16	K1001029	BOLT	BOULON	6					
17	K1038003	GREASE PLATE ASS'Y	TUYAUTERIE DE GRAISSE	1					
17-1	K1037887	. PLATE	. PLAQUE	1					
17-2	181-00525	. REDUCER	. REDUCTEUR	2					
17-3	S4032833	. NUT	. ECROU	2					
17-4	181-00103	. REDUCER	. REDUCTEUR	3					
17-5	121-00006	. NUT	. ECROU	3					
17-6	S6710041	. NIPPLE;GREASE	. GRAISSEUR	5					
18	S0511866	BOLT	BOULON	2					
19	S5102603	WASHER,SPRING	RONDELLE	2					

DATE	SEP. 12, 2012
4th EDITION	

Fig. 6860 BOOM PIPING - BOOM 5.2m(ONE & TWO WAY) CONDUITES DE FLECHE

Serial No. ;

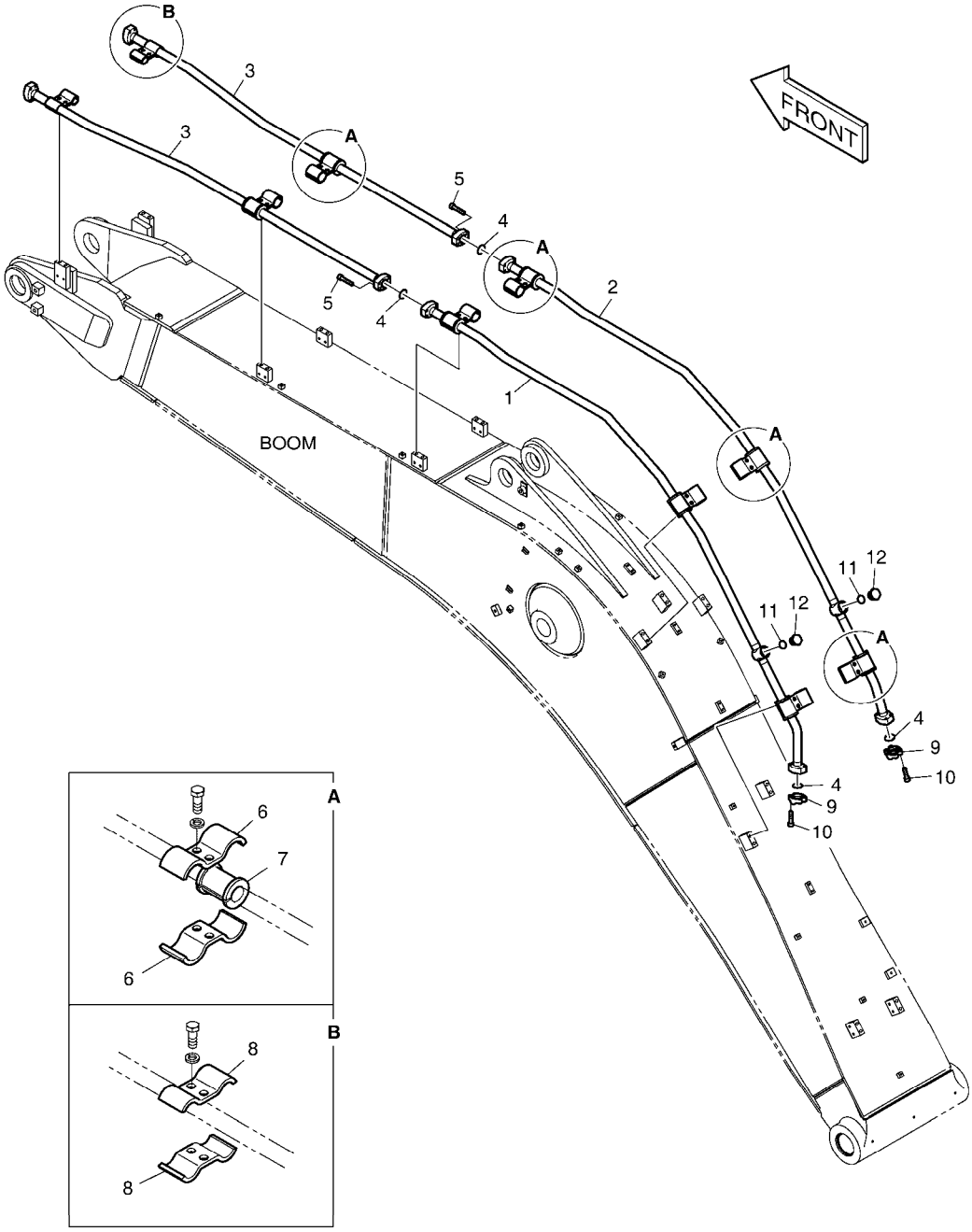

DATE	SEP. 12, 2012
4th EDITION	

Fig. 6860 BOOM PIPING - BOOM 5.2m(ONE & TWO WAY) CONDUITES DE FLECHE

Serial No. ;

Key No.	Part No.	Description	Description	Q'ty	S.C	Serial No.	ICA	Replaceable part	
								Part No.	Q'ty
6860 --	K1045916	BOOM PIPING-ONE & TWO WAY	BOOM PIPING	-	D	10001-10481			
	420212-06763	PIPING,BOOM	BOOM PIPING	-	D	10482-			
1	K1045959	PIPE	TUYAU	1		10001-10481			
	420207-01846	PIPE	TUYAU	1		10482-			
2	K1045960	PIPE	TUYAU	1		10001-10481			
	420207-01847	PIPE	TUYAU	1		10482-			
3	K1000882A	PIPE	TUYAU	2		10001-10481			
	420207-01848	PIPE	TUYAU	2		10482-			
4	2180-1026D19	O-RING	JOINT CIRCULAIRE	4					
5	S2212666	BOLT	BOULON	8					
6	124-00368	CLAMP;PIPE	BRIDE	16					
7	161-00281	RUBBER	LE CAOUTCHOUC	8					
8	124-00367	CLAMP;PIPE	BRIDE	4					
9	2181-9078	FLANGE	BRIDE	4					
10	S2212466	BOLT;SOCKET M10X1.5X40	BOULON	8					
11	S8000291	O-RING	JOINT CIRCULAIRE	2					
12	2181-1950D9	PLUG	BOUCHON	2					

DATE	SEP. 12, 2012
4th EDITION	

Fig. 6870 BOOM PIPING - BOOM 5.2m(QUICK FIT) CONDUITES DE FLECHE

Serial No. ;

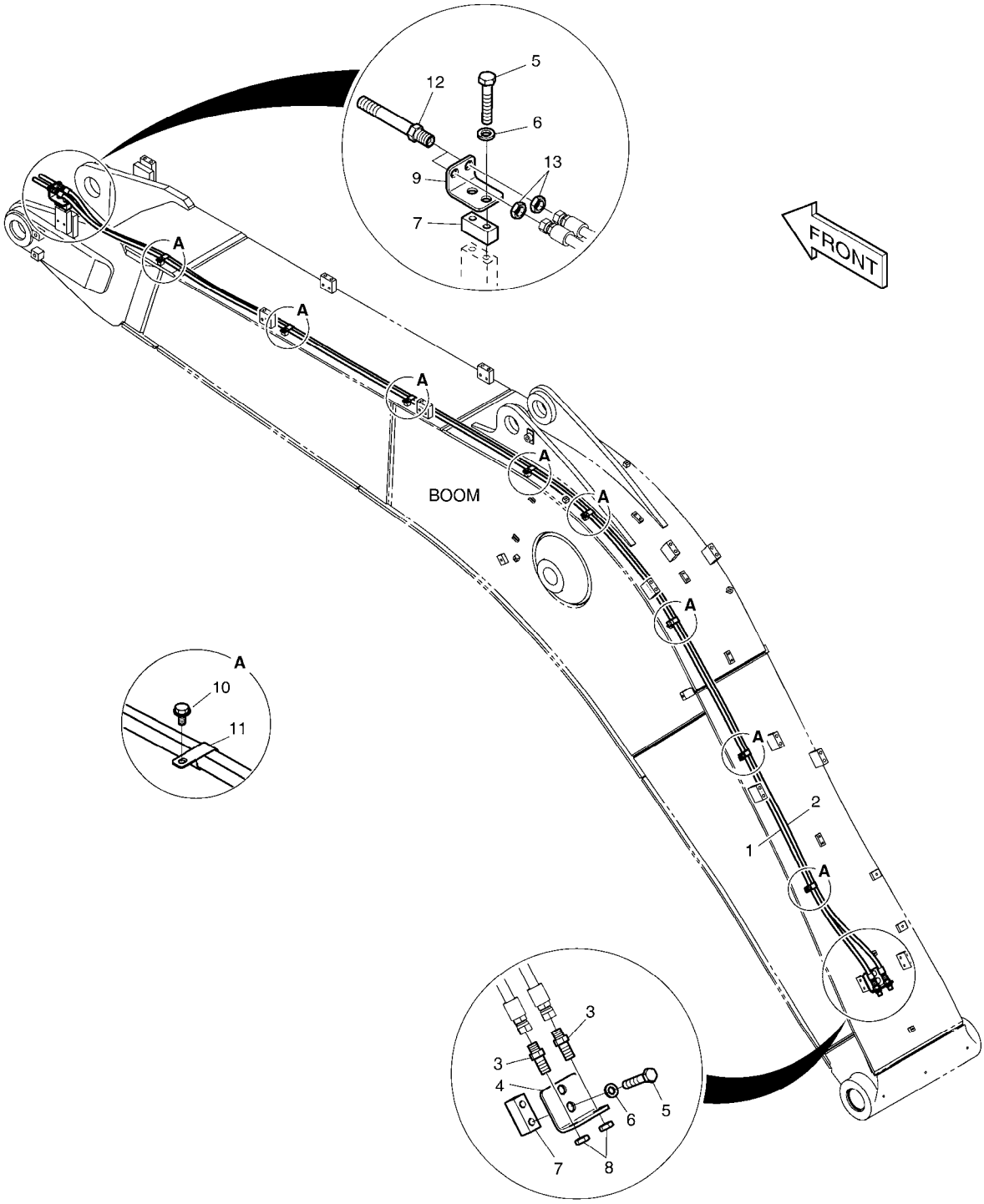

DATE	SEP. 12, 2012
4th EDITION	

Fig. 6870 BOOM PIPING - BOOM 5.2m(QUICK FIT) CONDUITES DE FLECHE

Serial No. ;

Key No.	Part No.	Description	Description	Q'ty	S.C	Serial No.	ICA	Replaceable part	
								Part No.	Q'ty
6870 --	K1046026	BOOM PIPING-QUICK FIT	CONDUITES DE FLECHE	-	D				
1	DS2053854	HOSE	TUYAU FLEXIBLE	1					
2	DS2053878	HOSE	TUYAU FLEXIBLE	1					
3	181-00078D5	ADAPTER	ADAPTEUR	2					
4	195-00163	BRACKET	SUPPORT	1					
5	S0563366	BOLT	BOULON	4					
6	S5102803	WASHER;SPRING	RONDELLE	4					
7	K1004006	PLATE	PLAQUE	2					
8	121-00010D1	NUT	ECROU	2					
9	K1010847	BRACKET	SUPPORT	1					
10	K1001029	BOLT	BOULON	8					
11	DS2805009	CLIP	AGRAFE	8					
12	K1000356	ADAPTER	ADAPTEUR	2					
13	121-00010D7	NUT	ECROU	2					

DATE	SEP. 12, 2012
4th EDITION	

Fig. 6880 BOOM PIPING - BOOM 5.2m(ROTATING) CONDUITES DE FLECHE

Serial No. ;

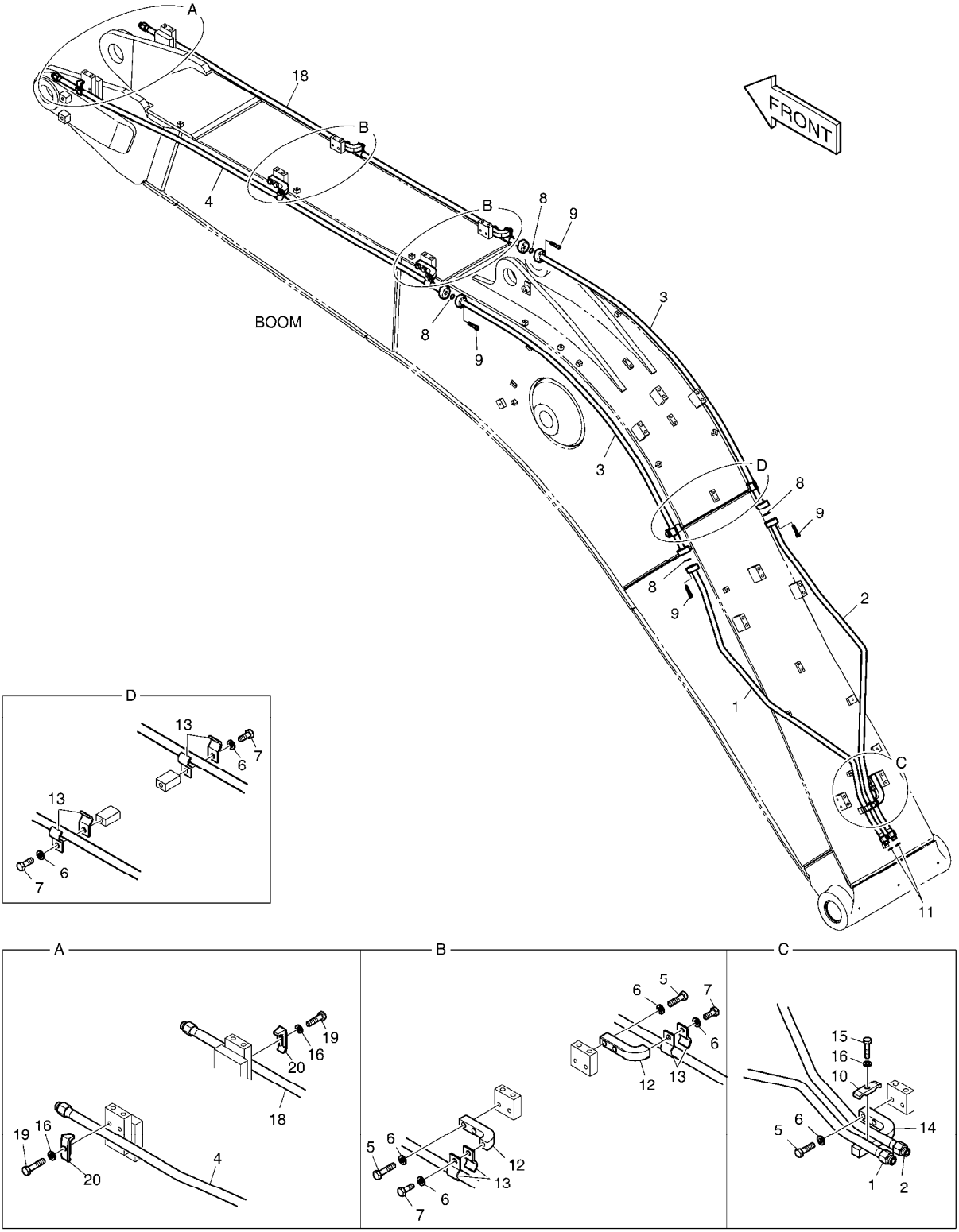

DATE	SEP. 12, 2012
4th EDITION	

Fig. 6880 BOOM PIPING - BOOM 5.2m(ROTATING) CONDUITES DE FLECHE

Serial No. ;

Key No.	Part No.	Description	Description	Q'ty	S.C	Serial No.	ICA	Replaceable part	
								Part No.	Q'ty
6880 --	K1045914	BOOM PIPING;ROTATING	BOOM PIPING	-	D				
1	K1038610	PIPE	TUYAU	1					
2	K1038611	PIPE	TUYAU	1					
3	K1046013	PIPE	TUYAU	2					
4	K1025402	PIPE	TUYAU	1					
5	S0560666	BOLT	BOULON A 6 PANS	10					
6	S5102703	WASHER;SPRING	RONDELLE	16					
7	S0515266	BOLT	BOULON	6					
8	2180-1026D30	O-RING	JOINT CIRCULAIRE	4					
9	S2209466	BOLT;SOCKET	BOULON	16					
10	K1004028	CLAMP;PIPE	BRIDE	1					
11	S8030081	O-RING	JOINT CIRCULAIRE	2					
12	621-02700A	PLATE	PLAQUE	4					
13	124-00299A	CLAMP;PIPE	COLLIER	12					
14	621-02798	PLATE	PLAQUE	1					
15	S0558466	BOLT	BOULON	1					
16	S5102603	WASHER,SPRING	RONDELLE	3					
18	K1025450	PIPE	TUYAU	1					
19	S0558566	BOLT	BOULON	2					
20	2124-1026D1	CLAMP;PIPE	BRIDE	2					

DATE	SEP. 12, 2012
4th EDITION	

Fig. 6890 LOCK VALVE PIPING - BOOM 5.2m
CONDUITES DE BALANCIER

Serial No. ;

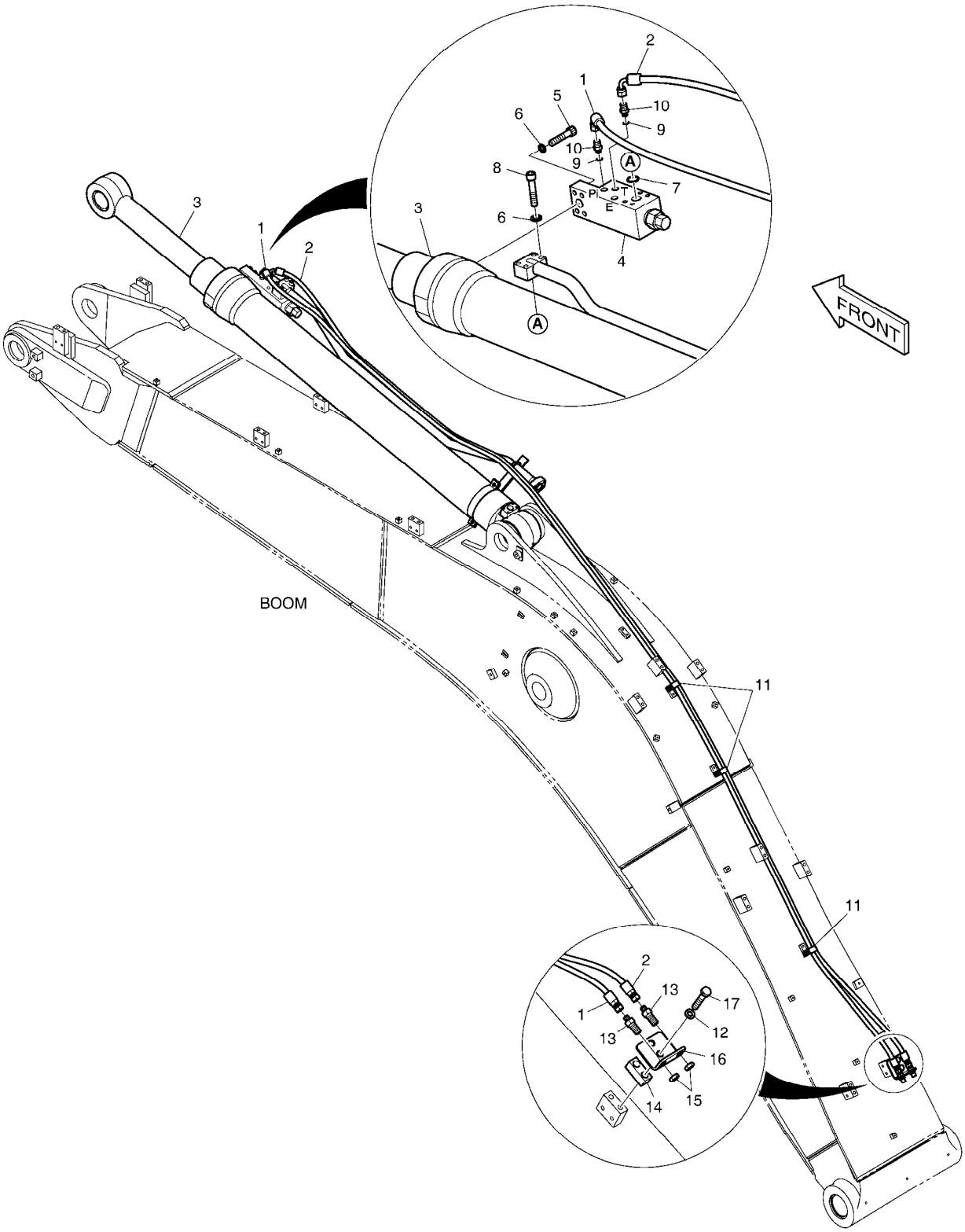

DATE	SEP. 12, 2012
4th EDITION	

Fig. 6890 LOCK VALVE PIPING - BOOM 5.2m
CONDUITES DE BALANCIER

Serial No. ;

Key No.	Part No.	Description	Description	Q'ty	S.C	Serial No.	ICA	Replaceable part	
								Part No.	Q'ty
6890 --	K1046041A	LOCK VALVE PIPING;ARM	FERMEZ LA TUYAUTERIE A	-	D				
1	DS2055672	HOSE	TUYAU FLEXIBLE	1					
2	DS2055672	HOSE	TUYAU FLEXIBLE	1					
3	K1041222A	CYLINDER;ARM(LOCK V/V)	CYLINDRE	1		05001-11735	Y	400305-00220	1
	400305-00220	CYLINDER;ARM(LOCK V/V)	CYLINDRE	1		11736-			
4	420-00004A	VALVE;LOCK	VANNE	1		05001-12020			
	410114-00154	VALVE,LOCK	VANNE	1		12021-			
4A	K9000999	. SEAL KIT	. KIT DE JOINT	1		05001-12020			
	401107-01315	. SEAL KIT	. KIT DE JOINT	1		12021-			
5	S2215766	BOLT;SOCKET M12X55	BOULON	4					
6	S5110703	WASHER;SPRING	RONDELLE	8					
7	S8000341	O-RING	JOINT CIRCULAIRE	1					
8	S2215966	BOLT;SOCKET	BOULON	4					
9	S8000111	O-RING	JOINT TORIQUE	2					
10	2181-1126D85	ADAPTER	ADAPTEUR	2					
11	DS2805009	CLIP	AGRAFE	3					
12	S5102803	WASHER;SPRING	RONDELLE	2					
13	181-00078D1	ADAPTER	ADAPTEUR	2					
14	K1004006	PLATE	PLAQUE	1					
15	121-00010D1	NUT	ECROU	2					
16	195-00163	BRACKET	SUPPORT	1					
17	S0563366	BOLT	BOULON	2					

DATE	SEP. 12, 2012
4th EDITION	

Fig. 6900 BOOM - 8.5m
ENSEMBLE FLECHE

Serial No. ;

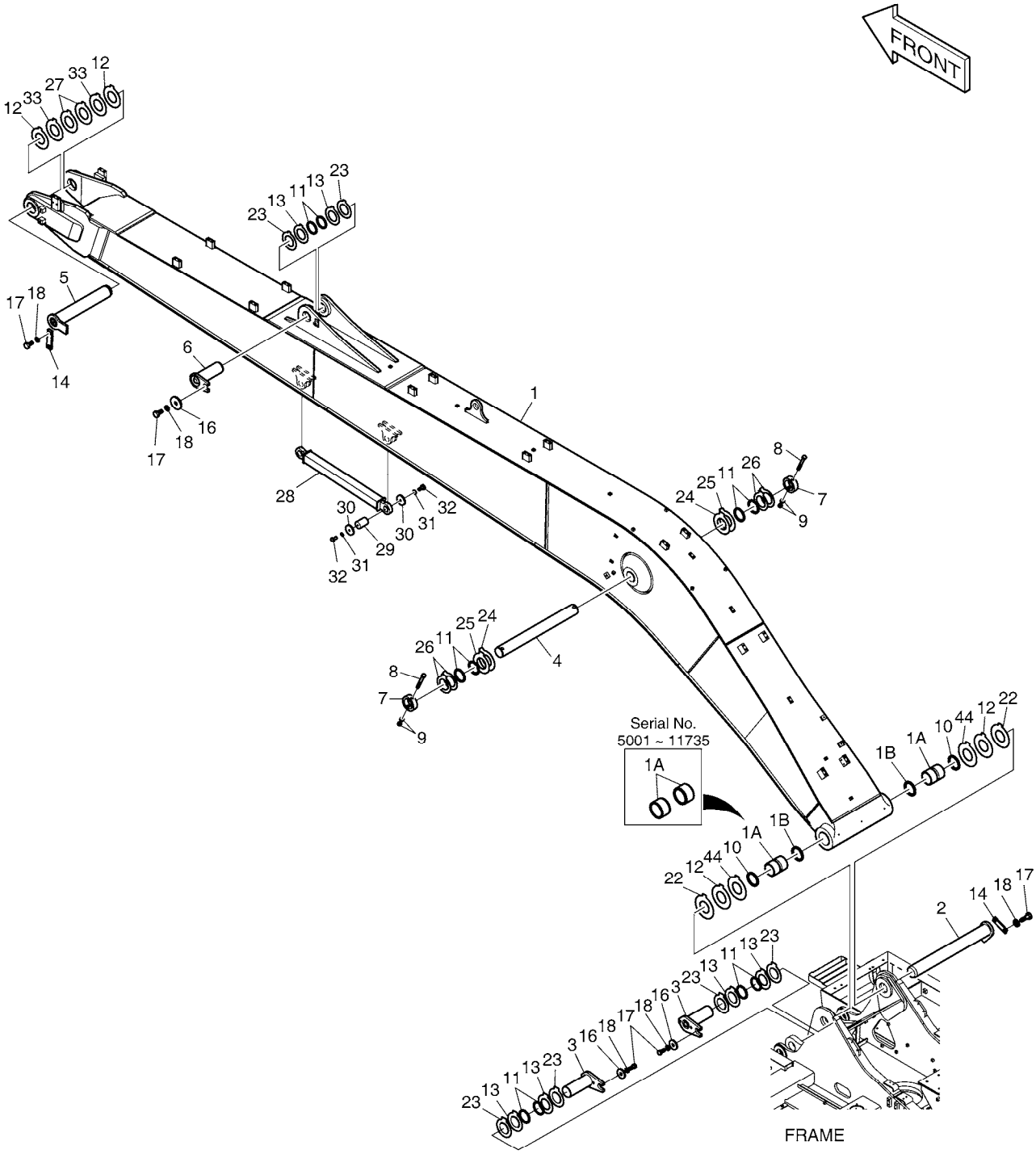

DATE	SEP. 12, 2012
4th EDITION	

Fig. 6900 BOOM - 8.5m ENSEMBLE FLECHE

Serial No. ;

Key No.	Part No.	Description	Description	Q'ty	S.C	Serial No.	ICA	Replaceable part Part No.	Q'ty
6900 --	K1045700C	BOOM ASS'Y	FLECHE	-	D	5001-8240			
	230207-00127	BOOM ASSY	FLECHE	-	D	8241-			
1	K1045701C	BOOM SUB ASS'Y-8.5M	ENSEMBLE FLECHE	1		05001-11735	Y	230211-00144A	1
	230211-00144A	BOOM,MACHINE 8.5m	ENSEMBLE FLECHE	1		11736-			
1A	K1037847A	. BUSHING	. BUSHING	4		05001-11735	Y	131008-00074A	2
	131008-00074A	. BUSHING	. BUSHING	2		11736-			
1B	2180-1106BD6	. SEAL;DUST	. CACHET	2					
2	2123-2180G	PIN	GOUJON	1		5001-8381	I	120501-01812	1
	120501-01812	PIN,BOOM FOOT	GOUJON	1		8382-			
3	123-00409A	PIN	GOUPILLE	2		5001-8240	I	120501-01061	2
	120501-01061	PIN	GOUPILLE	2		8241-			
4	K1007253B	PIN	GOUPILLE	1					
5	2123-2185G	PIN	GOUPILLE	1					
6	2123-2187E	PIN	GOUJON	1		5001-8240	I	120501-01062	1
	120501-01062	PIN	GOUJON	1		8241-			
7	2116-1531A	STOPPER	TAQUET	2					
8	S0567066	BOLT	BOULON	2					
9	S4012933	NUT	ECROU	4					
10	2180-1106BD6	SEAL;DUST	CACHET	2					
11	2180-1106BD24	SEAL;DUST	CACHET	10					
12	DS7752018	SHIM	CALE	4					
13	DS7752012	SHIM	CALE	6					
14	621-03710A	PLATE;STOPPER	PLAQUE	2					
16	2116-1060D6	STOPPER	TAQUET	3					
17	S0521366	BOLT	BOULON	7					
18	S5102903	WASHER,SPRING	RONDELLE	7					
22	DS7752017	SHIM	CALE	2		5001-8973			
	DS7752093	SHIM	CALE	2		8974-			
23	DS7752013	SHIM	CALE	6					
24	DS7752026	SHIM	CALE	2					
25	DS7752027	SHIM	CALE	2					
26	DS7752025	SHIM	CALE	4					
27	DS7752017	SHIM	CALE	2					
28	K1017764	ROD;TIE	GERBEUR COMBI	1					
29	2123-1915A	PIN	GOUJON	2					
30	2116-1472A	PLATE;STOPPER	PLAQUE	4					
31	S5102703	WASHER;SPRING	RONDELLE	4					
32	S0515053	BOLT M12X1.75X25	BOULON A 6 PANS	4					

DATE	SEP. 12, 2012
4th EDITION	

Fig. 6900 BOOM - 8.5m
ENSEMBLE FLECHE

Serial No. ;

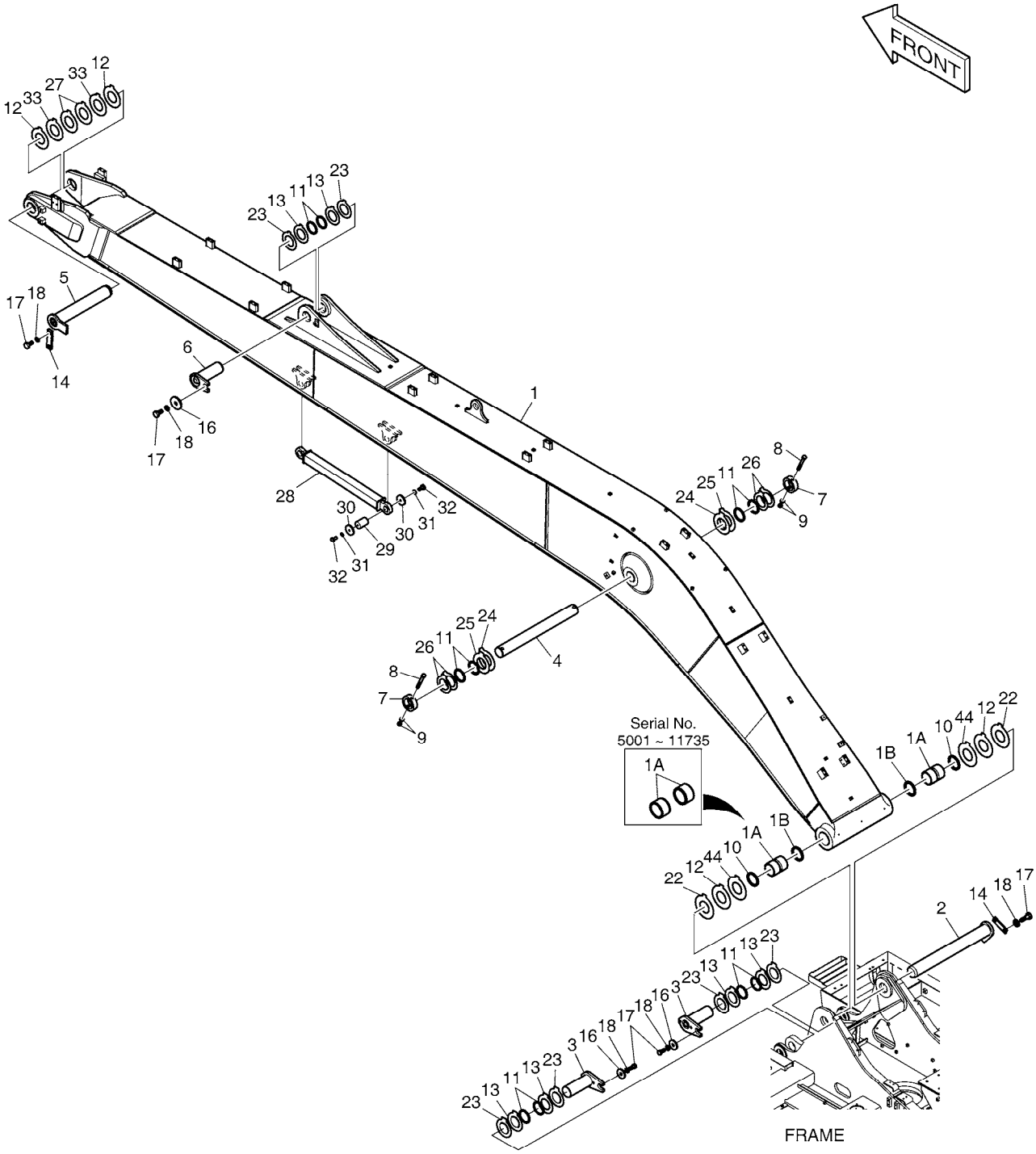

DATE	SEP. 12, 2012
4th EDITION	

Fig. 6900 BOOM - 8.5m
ENSEMBLE FLECHE

Serial No. ;

Key No.	Part No.	Description	Description	Q'ty	S.C	Serial No.	ICA	Replaceable part	
								Part No.	Q'ty
6900 -33	DS7752093	SHIM	CALE	2		8974-			
44	DS7752028	SHIM	CALE	2		8974-			

DATE	SEP. 12, 2012
4th EDITION	

Fig. 6910 ARM - 6.2m BALANCIER

Serial No. ;

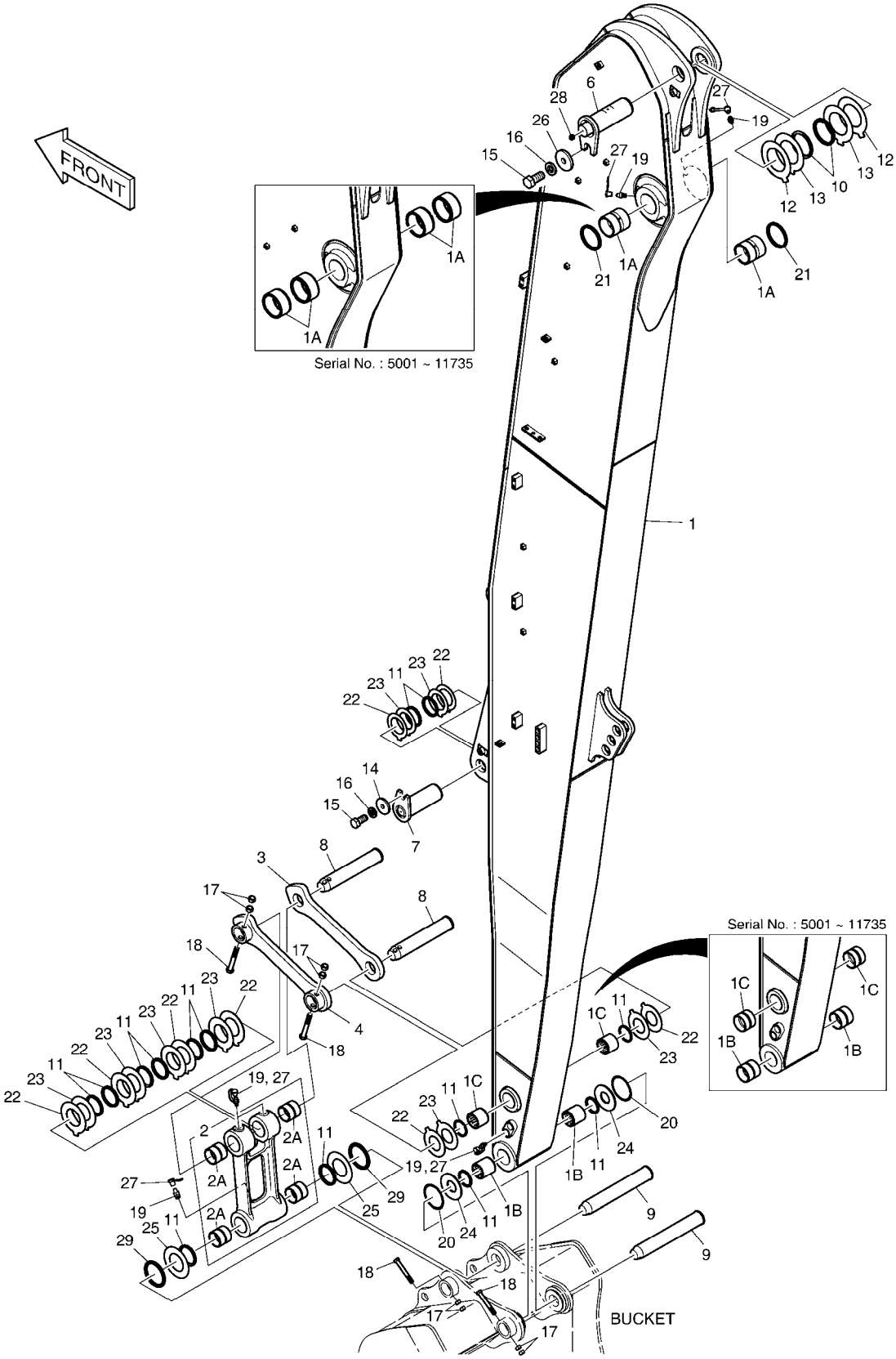

DATE	SEP. 12, 2012
4th EDITION	

Fig. 6910 ARM - 6.2m BALANCIER

Serial No. ;

Key No.	Part No.	Description	Description	Q'ty	S.C	Serial No.	ICA	Replaceable part	
								Part No.	Q'ty
6910 --	K1046272B	ARM ASS'Y (6.2m)	ENSEMBLE BALANCIER	-	D	5001-6298			
	230201-00137	ARM ASSY;(6.2M)	ENSEMBLE BALANCIER	-	D	6299-			
1	K1046275B	ARM;MACH-6.2m	BALANCIER	1		5001-6298	I	230204-00067	1
	230204-00067	ARM,MACHINE;(6.2M)	BALANCIER	1		06299-11735	Y	230204-00168B	1
	230204-00168B	ARM,MACHINE;(6.2M)	BALANCIER	1		11736-			
1A	K1037848A	. BUSHING	. BUSHING	4		05001-11735	Y	131008-00064A	2
	131008-00064A	. BUSHING	. BUSHING	2		11736-			
1B	110-00242	. BUSHING	. DOUILLE	2		5001-6298	I	2110-1329A	2
	2110-1329A	. BUSHING	. DOUILLE	2		06299-11735	Y	131004-00020A	2
	131004-00020A	. BUSHING	. DOUILLE	2		11736-			
1C	110-00243	. BUSHING	. DOUILLE	2		5001-6298	I	2110-1330A	2
	2110-1330A	. BUSHING	. DOUILLE	2		06299-11735	Y	131004-00021A	2
	131004-00021A	. BUSHING	. DOUILLE	2		11736-			
2	155-00061	LINK;PUSH ASS`Y	ARTICULATION	1		5001-5298	I	101541-00012	1
	101541-00012	LINK;PUSH ASS`Y	ARTICULATION	1		6299-			
2A	110-00245	. BUSHING	. DOUILLE	4		5001-6298	I	2110-1366A	4
	2110-1366A	. BUSHING	. MANCHON	4		6299-			
3	2155-1306B	LINK;GUIDE(R.H)	ARTICULATION	1					
4	2155-1307B	LINK;GUIDE(L.H)	ARTICULATION	1					
6	K1046927	PIN	GOUJON	1		5001-8240	Y	120501-01063	1
	120501-01063	PIN	GOUJON	1		8241-			
7	K1014836	PIN	GOUPILLE	1		5001-8240	I	120501-01066	1
	120501-01066	PIN	GOUPILLE	1		8241-			
8	K1007038A	PIN	GOUPILLE	2		5001-8240	I	120501-01041	2
	120501-01041	PIN	GOUPILLE	2		8241-			
9	K1038517	PIN	GOUPILLE	2		5001-8240	I	120501-01042	2
	120501-01042	PIN	GOUPILLE	2		8241-			
10	2180-1106BD24	SEAL;DUST	CACHET	2					
11	2180-1106BD3	SEAL;DUST	PARE-POUSSIERES	14					
12	DS7752012	SHIM	CALE	2					
13	DS7752013	SHIM	CALE	2					
14	2116-1060D6	STOPPER	TAQUET	1					
15	S0521366	BOLT	BOULON	2					
16	S5102903	WASHER,SPRING	RONDELLE	2					
17	S4012933	NUT	ECROU	8					
18	S0566766	BOLT	BOULON A 6 PANS	4					
19	S6710041	NIPPLE;GREASE	GRAISSEUR	7					
20	180-00077D3	O-RING	JOINT TORIQUE	2					

DATE	SEP. 12, 2012
4th EDITION	

Fig. 6910 ARM - 6.2m BALANCIER

Serial No. ;

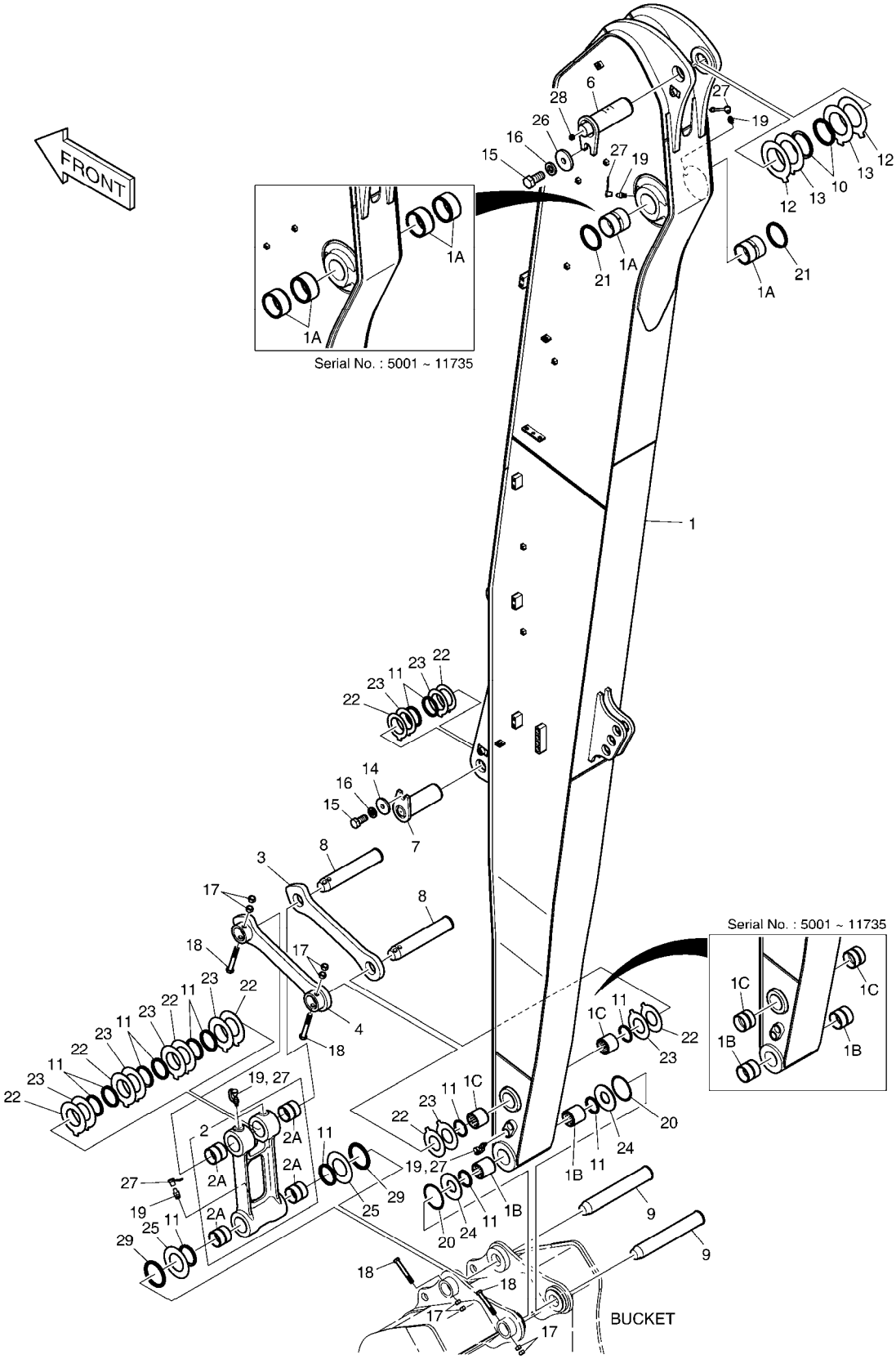

DATE	SEP. 12, 2012
4th EDITION	

Fig. 6910 ARM - 6.2m BALANCIER

Serial No. ;

Key No.	Part No.	Description	Description	Q'ty	S.C	Serial No.	ICA	Replaceable part	
								Part No.	Q'ty
6910 -21	2180-1106BD14	SEAL;DUST	CACHET	2					
22	DS7752001	SHIM	CALE	8					
23	DS7752002	SHIM	CALE	8					
24	2114-1994B	SPACER	ENTRETOISE	2					
25	2114-1995B	SPACER	ENTRETOISE	2					
26	2116-1060D6	STOPPER	TAQUET	1					
27	160-00020	CAP;GREASE NIPPLE	CHAPEAU	7					
28	2181-1116D1	PLUG	BOUCHON	1					
29	DS2854017	RING,O	JOINT TORIQUE	2		10998-			

DATE	SEP. 12, 2012
4th EDITION	

Fig. 6920 COUNTER WEIGHT - SUPER LONG(DX225LCA) MASSE D'EQUILIBRAGE

Serial No. ;

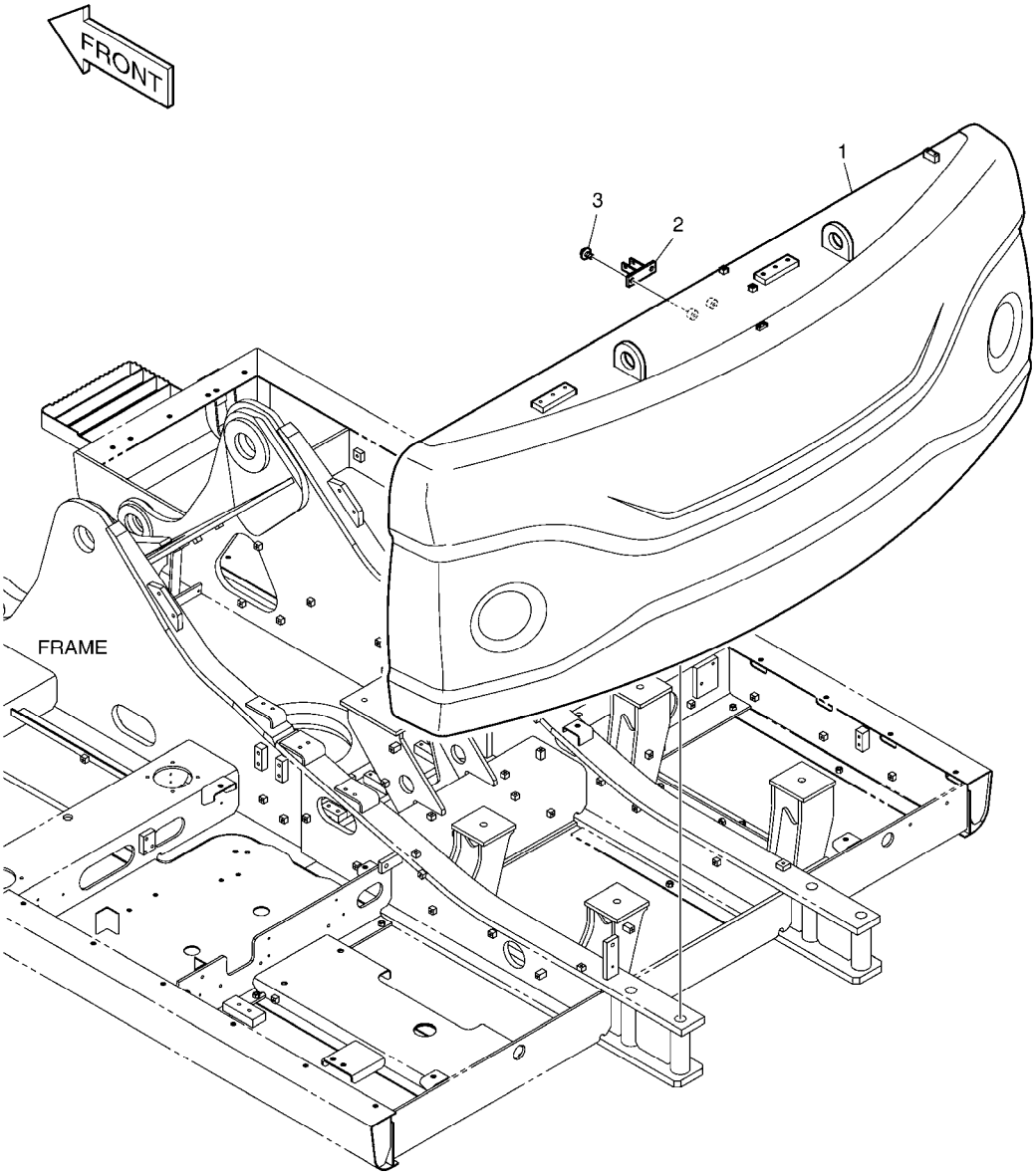

DATE	SEP. 12, 2012
4th EDITION	

Fig. 6920 COUNTER WEIGHT - SUPER LONG(DX225LCA) MASSE D'EQUILIBRAGE

Serial No. ;

Key No.	Part No.	Description	Description	Q'ty	S.C	Serial No.	ICA	Replaceable part	
								Part No.	Q'ty
6920 --	K1045677A	COUNTER WEIGHT;5.3ton	MASSE D'EQUILIBRAGE	1		5001-5284	I	K1045677B	1
	K1045677B	COUNTER WEIGHT;5.3ton	MASSE D'EQUILIBRAGE	1		5285-6048	Y	160702-00056	1
	160702-00056	WEIGHT ASSY,COUNTER;5.3TON	MASSE D'EQUILIBRAGE	1		6049-			
1	K1044939B	COUNTER WEIGHT;5.3ton	MASSE D'EQUILIBRAGE	1		5001-5284	I	K1044939C	1
	K1044939C	COUNTER WEIGHT;5.3ton	MASSE D'EQUILIBRAGE	1		5285-6048	Y	160702-00055	1
	160702-00055	WEIGHT,COUNTER;5.3TON	MASSE D'EQUILIBRAGE	1		6049-			
2	K1002454B	BRACKET	SUPPORT	1					
3	DS0025015	BOLT;SET	BOULON	2					

DATE	SEP. 12, 2012
4th EDITION	

Fig. 6930 COUNTER WEIGHT - 5.3TON(NOISE KIT - DX225LCA) MASSE D'EQUILIBRAGE

Serial No. ;

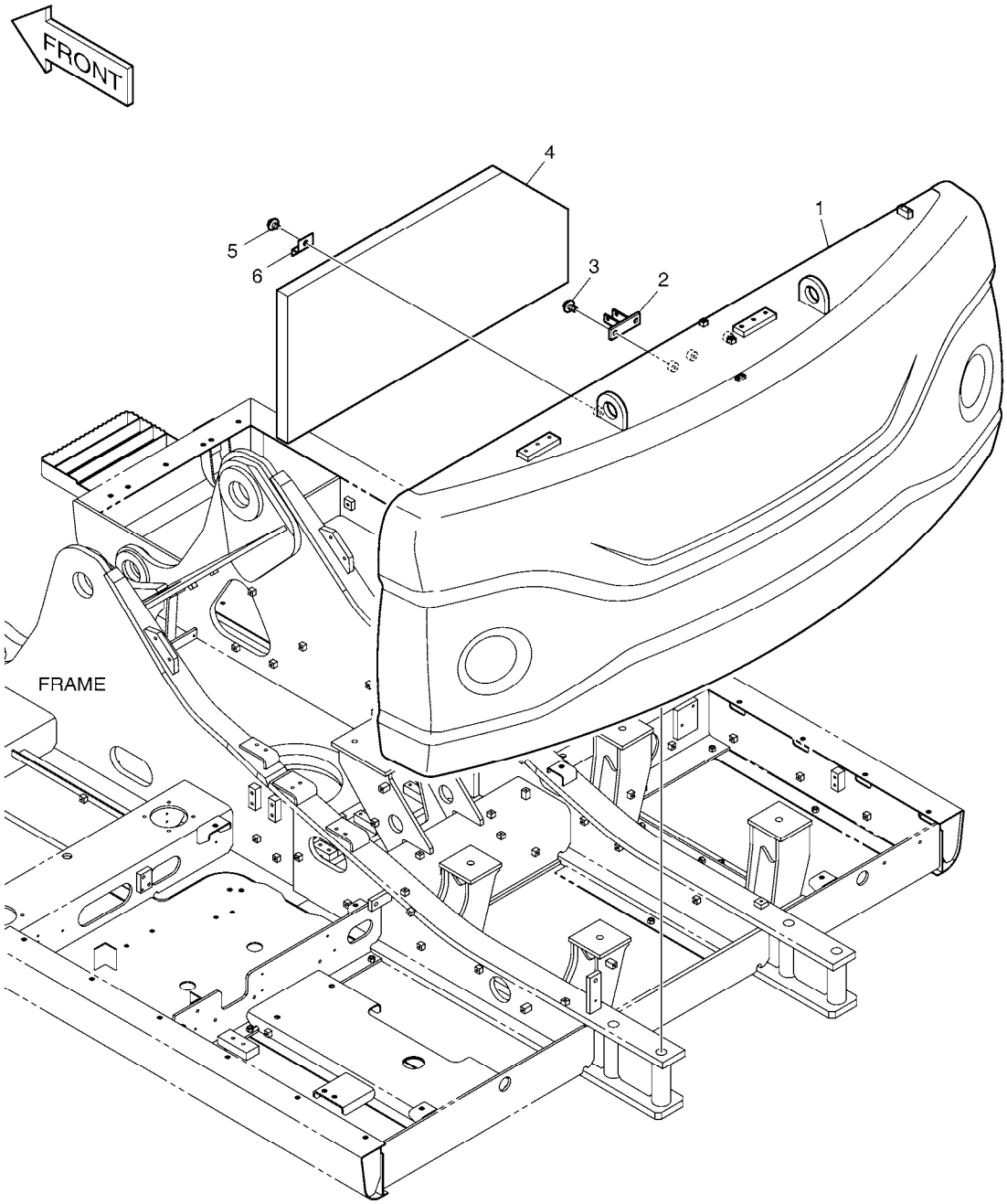

DATE	SEP. 12, 2012
4th EDITION	

Fig. 6930 COUNTER WEIGHT - 5.3TON(NOISE KIT - DX225LCA) MASSE D'EQUILIBRAGE

Serial No. ;

Key No.	Part No.	Description	Description	Q'ty	S.C	Serial No.	ICA	Replaceable part	
								Part No.	Q'ty
6930 --	K1045678A	COUNTER WEIGHT ASS'Y;FOAM	MASSE D'EQUILIBRAGE	1		5001-5284	I	K1045678B	1
	K1045678B	COUNTER WEIGHT ASS'Y;FOAM	MASSE D'EQUILIBRAGE	1		5285-5950	Y	160702-00057	1
	160702-00057	WEIGHT ASSY,COUNTER;5.3TON	MASSE D'EQUILIBRAGE	1		5951-			
1	K1044939B	COUNTER WEIGHT;5.3ton	MASSE D'EQUILIBRAGE	1		5001-5284	I	K1044939C	1
	K1044939C	COUNTER WEIGHT;5.3ton	MASSE D'EQUILIBRAGE	1		5285-5950	Y	160702-00055	1
	160702-00055	WEIGHT,COUNTER;5.3TON	MASSE D'EQUILIBRAGE	1		5951-			
2	K1002454B	BRACKET	SUPPORT	1					
3	DS0025015	BOLT;SET	BOULON	2					
4	K1011304	FOAM	EPONGE	1					
5	DS0025022	BOLT;SET	BOULON	2					
6	621-01572	PLATE	PLAQUE	2					

DATE	SEP. 12, 2012
4th EDITION	

Fig. 6940 BUCKET ASS'Y - 0.39m³ ENSEMBLE DE GODET

Serial No. ;

Serial No. : 5001 ~ 10997

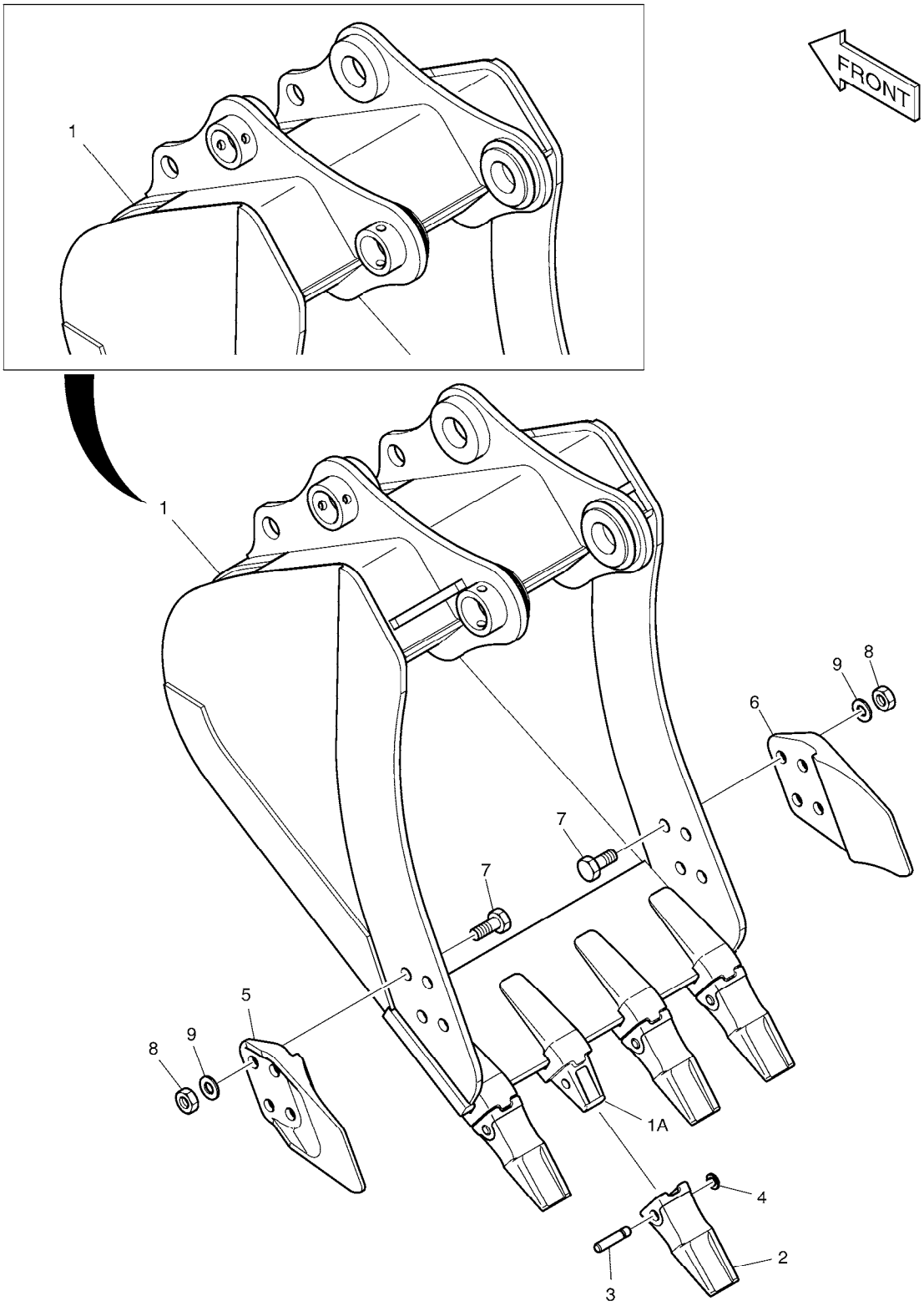

DATE	SEP. 12, 2012
4th EDITION	

Fig. 6940 BUCKET ASS'Y - 0.39m³ ENSEMBLE DE GODET

Serial No. ;

Key No.	Part No.	Description	Description	Q'ty	S.C	Serial No.	ICA	Replaceable part	
								Part No.	Q'ty
6940 --	K1007635E	BUCKET ASS'Y- 0.39m³	ENSEMBLE DE GODET	1		05001-10997	I	230104-01198	1
	230104-01198	BUCKET ASS'Y- 0.39m³	ENSEMBLE DE GODET	1		10998-			
1	K1007636E	BUCKET - 0.39m³	GODET	1		05001-10997	I	230104-01199	1
	230104-01199	BUCKET - 0.39m³	GODET	1		10998-			
1A	2713-1222B	. ADAPTER;TOOTH	. DENT DE ADAPTEUR	4					
2	713-00057C	POINT;TOOTH	DENT	4					
3	2705-1022	PIN;LOCKING	GOUPILLE DE BLOCAGE	4					
4	2114-1859	WASHER;LOCKING	RONDELLE	4					
5	2713-1229A	CUTTER;SIDE(L.H)	COIN DE GODET GAUCHE	1					
6	2713-1228A	CUTTER;SIDE(R.H)	COIN DE GODET DROIT	1					
7	S0574561	BOLT M24X3.0X60	BOULON A 6 PANS	8					
8	S4013333	NUT	ECROU	8					
9	2114-1831A	WASHER;HARDEN	RONDELLE	8					

DATE	SEP. 12, 2012
4th EDITION	

Fig. 6950 BUCKET ASS'Y - 0.45m³ - DITCH CLEANING GODET

Serial No. ;

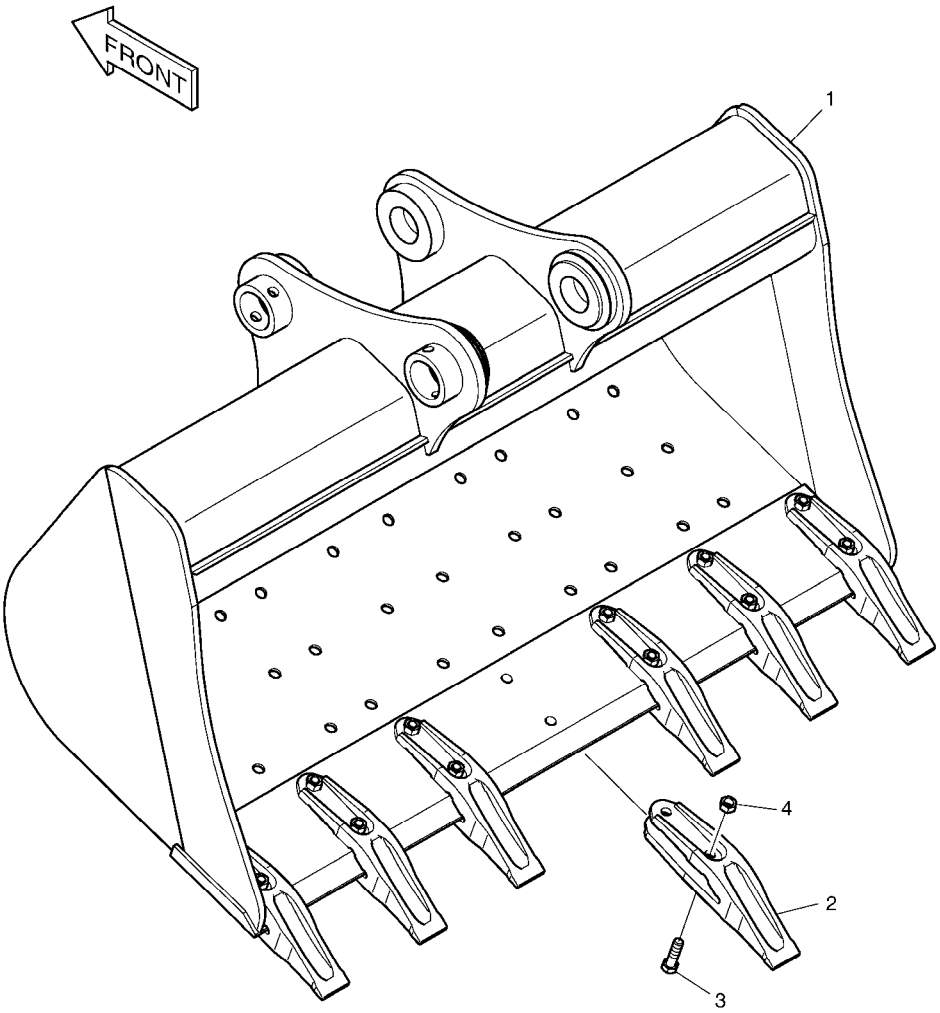

DATE	SEP. 12, 2012
4th EDITION	

Fig. 6950 BUCKET ASS'Y - 0.45m³ - DITCH CLEANING GODET

Serial No. ;

Key No.	Part No.	Description	Description	Q'ty	S.C	Serial No.	ICA	Replaceable part	
								Part No.	Q'ty
6950 --	K1010821B	BUCKET ASS`Y-0.45㎥	GODET	1					
1	K1010822B	BUCKET-0.45㎥	GODET	1					
2	4713-4004B	TOOTH	OUTILLAGE	7					
3	S0565466	BOLT	BOULON A 6 PANS	14					
4	S4012933	NUT	ECROU	14					

DATE	SEP. 12, 2012
4th EDITION	

Fig. 6960 BUCKET ASS'Y - 0.54m³ - DITCH CLEANING GODET

Serial No. ;

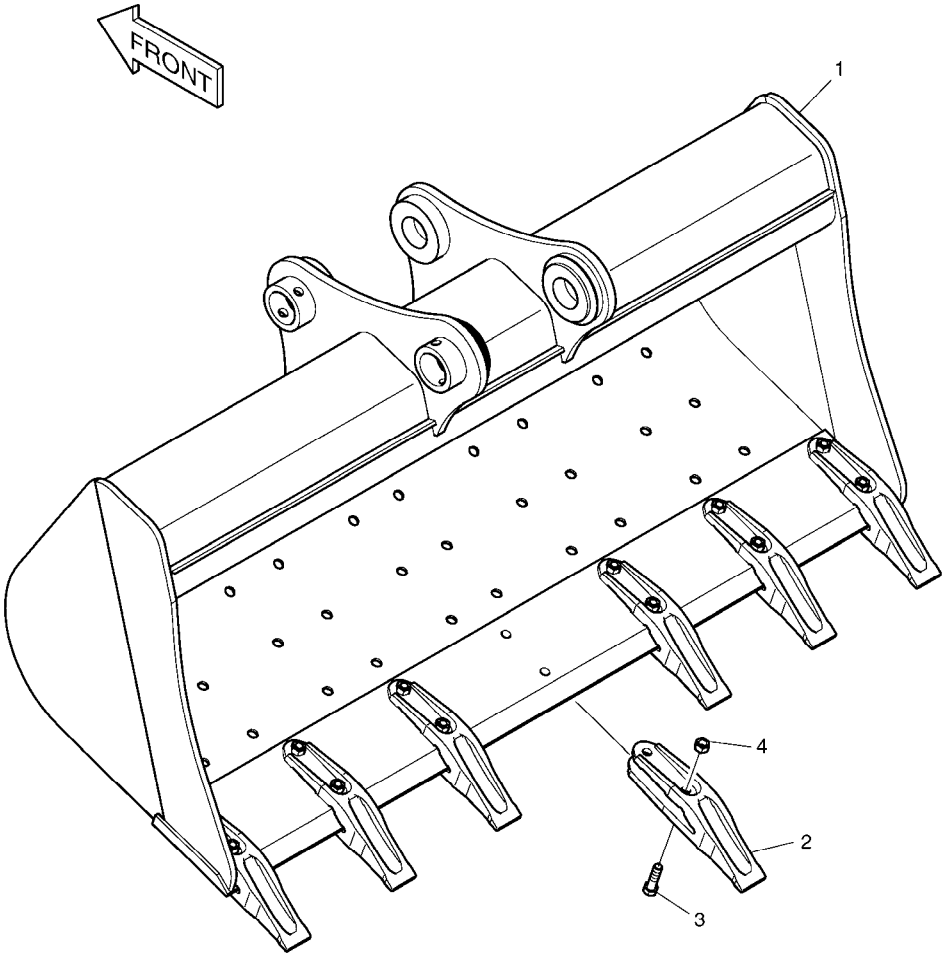

DATE	SEP. 12, 2012
4th EDITION	

Fig. 6960 BUCKET ASS'Y - 0.54m³ - DITCH CLEANING GODET

Serial No. ;

Key No.	Part No.	Description	Description	Q'ty	S.C	Serial No.	ICA	Replaceable part	
								Part No.	Q'ty
6960 --	K1010823B	BUCKET ASS`Y-0.54m³	GODET	1					
1	K1010824B	BUCKET-0.54m³	GODET	1					
2	4713-4004B	TOOTH	OUTILLAGE	7					
3	S0565466	BOLT	BOULON A 6 PANS	14					
4	S4012933	NUT	ECROU	14					

DATE	SEP. 12, 2012
4th EDITION	

Fig. 6970 BOOM PIPING - BOOM 8.5m
CONDUITES DE FLECHE

Serial No. ;

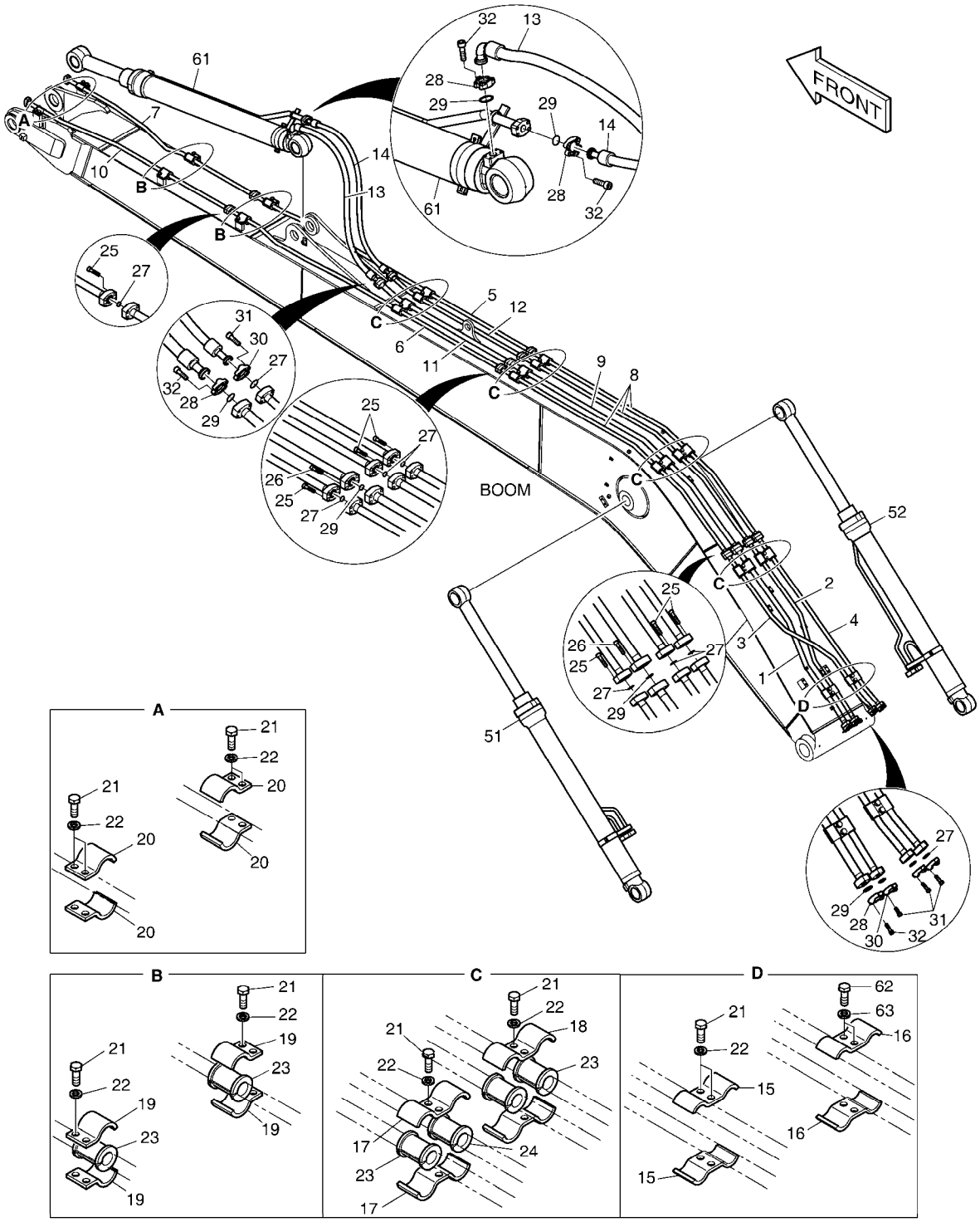

DATE	SEP. 12, 2012
4th EDITION	

Fig. 6970 BOOM PIPING - BOOM 8.5m CONDUITES DE FLECHE

Serial No. ;

Key No.	Part No.	Description	Description	Q'ty	S.C	Serial No.	ICA	Replaceable part	
								Part No.	Q'ty
6970 --	K1045837	BOOM PIPING	BOOM PIPING	-	D				
1	K1045852	PIPE	TUYAU	1					
2	K1045853	PIPE	TUYAU	1					
3	K1045854	PIPE	TUYAU	1					
4	K1045855	PIPE	TUYAU	1					
5	K1018659	PIPE	TUYAU	1					
6	K1018660	PIPE	TUYAU	1					
7	K1018706	PIPE	TUYAU	1					
8	K1045856	PIPE	TUYAU	3					
9	K1045857	PIPE	TUYAU	1					
10	K1018109	PIPE	TUYAU	1					
11	K1018709	PIPE	TUYAU	1					
12	K1018710	PIPE	TUYAU	1					
13	DS2040637	HOSE	TUYAU FLEXIBLE	1					
14	DS2038226	HOSE	TUYAU FLEXIBLE	1					
15	124-00367	CLAMP;PIPE	BRIDE	2					
16	124-00300	CLAMP;PIPE	BRIDE	2					
17	124-00368	CLAMP;PIPE	BRIDE	8					
18	K1011211	CLAMP	COLLIER	8					
19	124-00302	CLAMP;PIPE	BRIDE	8					
20	124-00303	CLAMP;PIPE	COLLIER	4					
21	S0562766	BOLT	BOULON	18					
22	S5102803	WASHER;SPRING	RONDELLE	18					
23	161-00574	RUBBER	LE CAOUTCHOUC	16					
24	161-00281	RUBBER	LE CAOUTCHOUC	4					
25	S2212566	BOLT;SOCKET	BOULON	32					
26	S2212666	BOLT	BOULON	8					
27	2180-1026D2	O-RING	JOINT CIRCULAIRE	12					
28	2181-9078	FLANGE	BRIDE	8					
29	2180-1026D19	O-RING	JOINT CIRCULAIRE	6					
30	2181-9079	FLANGE	BRIDE	8					
31	S2212366	BOLT;SOCKET M10X1.5X35	BOULON	16					
32	S2212466	BOLT;SOCKET M10X1.5X40	BOULON	16					
51	K1044989B	CYLINDER;BOOM (LH)	CYLINDRE	1		5001-6901	Y	400309-00341	1
	400309-00341	CYLINDER,BOOM;(L.H)	CYLINDRE	1		06902-11554	Y	400309-00341A	1
	400309-00341A	CYLINDER,BOOM;(L.H)	CYLINDRE	1		11555-			
52	K1044990B	CYLINDER;BOOM (RH)	CYLINDRE	1		5001-6901	Y	400309-00343	1
	400309-00343	CYLINDER,BOOM;(R.H)	CYLINDRE	1		06902-11554	Y	400309-00343A	1

DATE	SEP. 12, 2012
4th EDITION	

Fig. 6970 BOOM PIPING - BOOM 8.5m
CONDUITES DE FLECHE

Serial No. ;

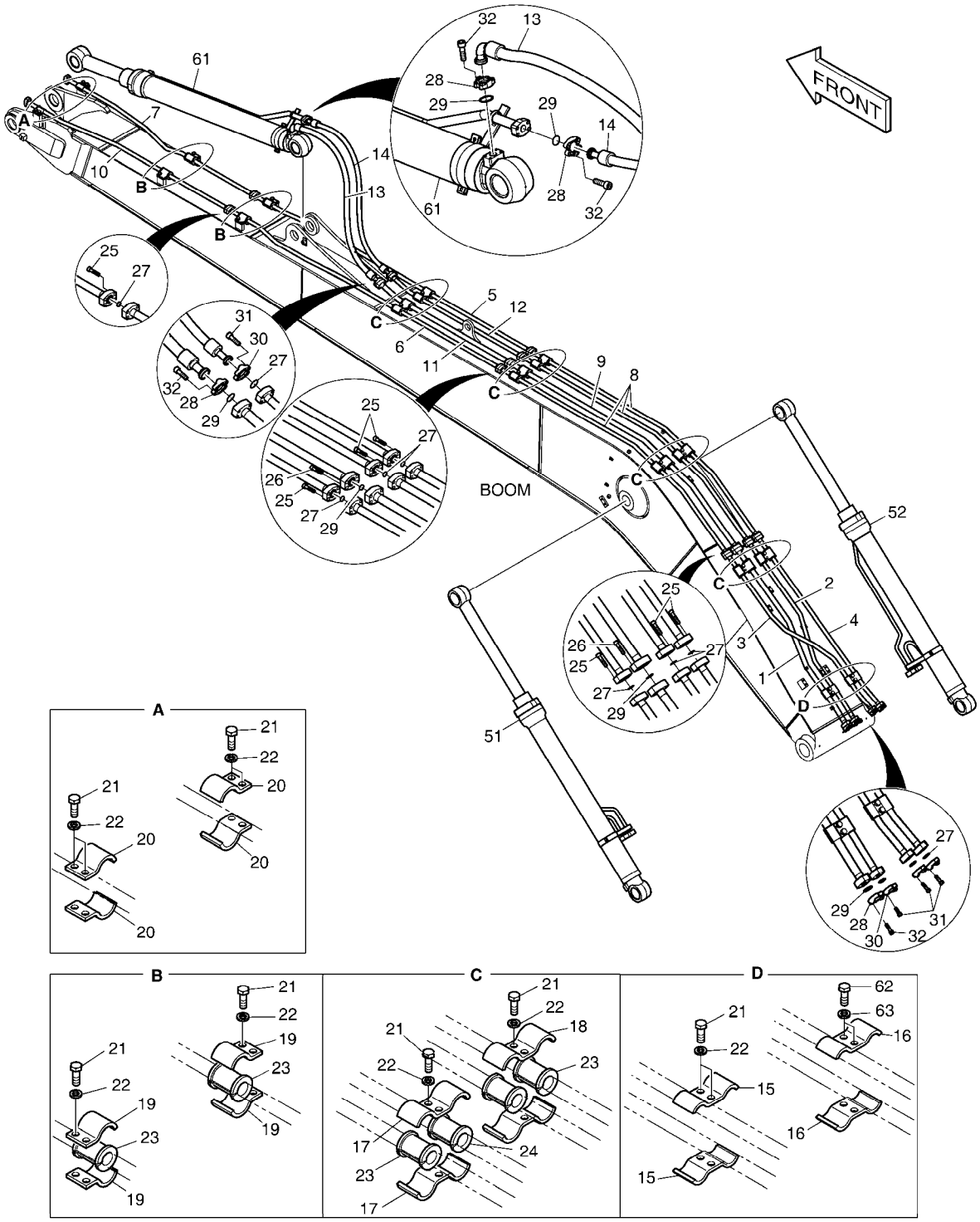

DATE	SEP. 12, 2012
4th EDITION	

Fig. 6970 BOOM PIPING - BOOM 8.5m
CONDUITES DE FLECHE

Serial No. ;

Key No.	Part No.	Description	Description	Q'ty	S.C	Serial No.	ICA	Replaceable part	
								Part No.	Q'ty
6970 -	400309-00343A	CYLINDER,BOOM;(R.H)	CYLINDRE	1		11555-			
61	K1044991A	CYLINDER;ARM	VERIN DE BALANCIER	1		05001-11735	Y	400305-00219	1
	400305-00219	CYLINDER,ARM	VERIN DE BALANCIER	1		11736-			
62	S0562766	BOLT	BOULON	2					
63	S5102803	WASHER;SPRING	RONDELLE	2					

DATE	SEP. 12, 2012
4th EDITION	

Fig. 6980 LUBRICATION PIPING - BOOM 8.5m
LUBRIFICATION

Serial No. ;

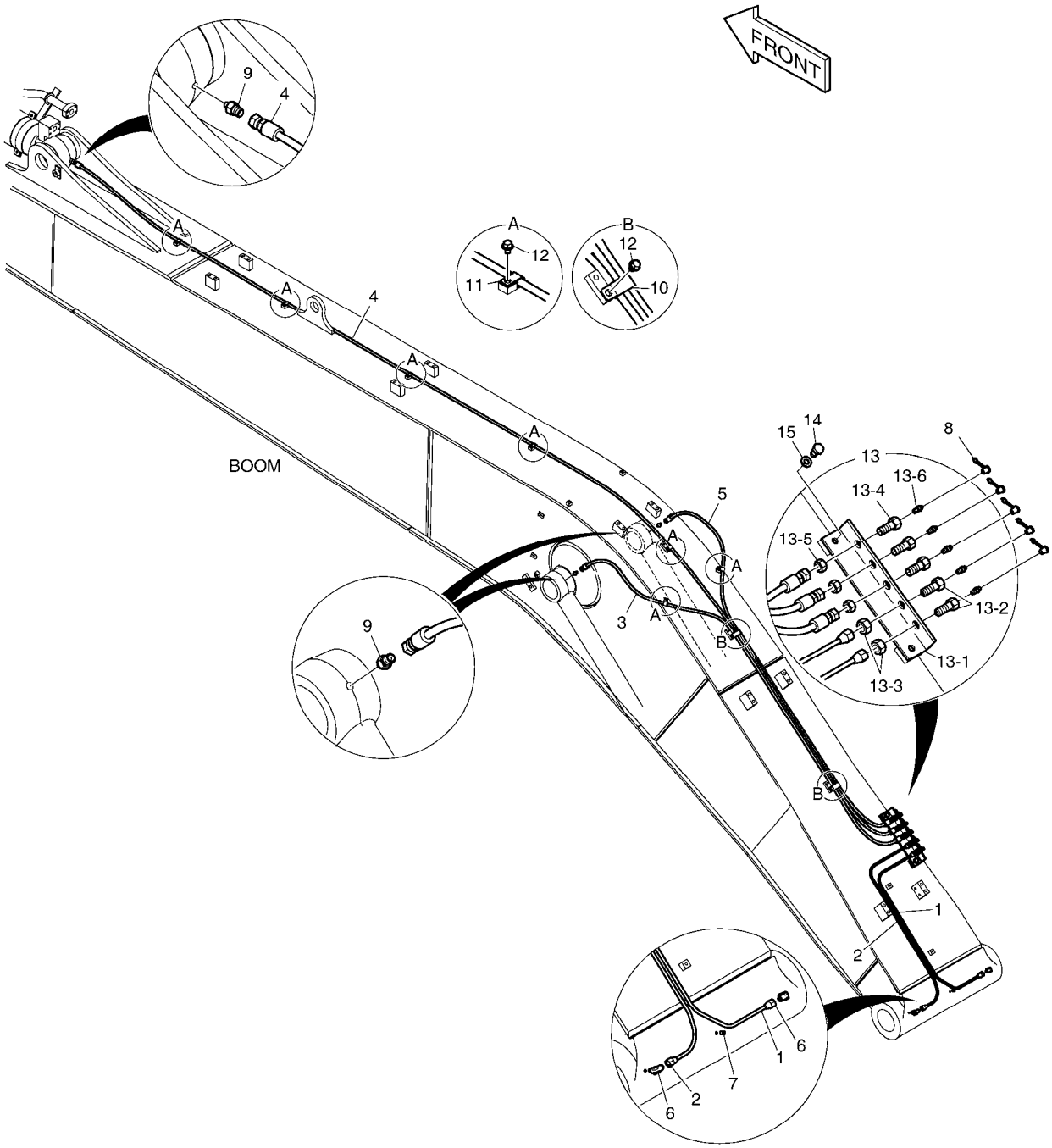

DATE	SEP. 12, 2012
4th EDITION	

Fig. 6980 LUBRICATION PIPING - BOOM 8.5m LUBRIFICATION

Serial No. ;

Key No.	Part No.	Description	Description	Q'ty	S.C	Serial No.	ICA	Replaceable part	
								Part No.	Q'ty
6980 --	K1045838	LUBRICATION PIPING(8.5M BOO	LUBRIFICATION	-	D				
1	K1038814	PIPE	TUYAU	1					
2	K1038815	PIPE	TUYAU	1					
3	DS2053864	HOSE	TUYAU	1					
4	DS2053884	HOSE	TUYAU FLEXIBLE	1					
5	2184-1045D254	HOSE	TUYAU FLEXIBLE	1					
6	2181-1925	ELBOW	COUDE	2					
7	S3524403	PLUG	PRISE	1					
8	160-00020	CAP;GREASE NIPPLE	CHAPEAU	5					
9	2181-4112	ADAPTER	ADAPTEUR	3					
10	124-00199D4	CLIP	AGRAFE	2					
11	2124-1353D2	CLIP	AGRAFE	7					
12	K1001029	BOLT	BOULON	9					
13	K1038003	GREASE PLATE ASS'Y	TUYAUTERIE DE GRAISSE	1					
13-1	K1037887	. PLATE	. PLAQUE	1					
13-2	181-00525	. REDUCER	. REDUCTEUR	2					
13-3	S4032833	. NUT	. ECROU	2					
13-4	181-00103	. REDUCER	. REDUCTEUR	3					
13-5	121-00006	. NUT	. ECROU	3					
13-6	S6710041	. NIPPLE;GREASE	. GRAISSEUR	5					
14	S0511866	BOLT	BOULON	2					
15	S5102603	WASHER,SPRING	RONDELLE	2					

DATE	SEP. 12, 2012
4th EDITION	

Fig. 6990 LOCK VALVE PIPING - BOOM 8.5m
CONDUITES DE BALANCIER

Serial No. ;

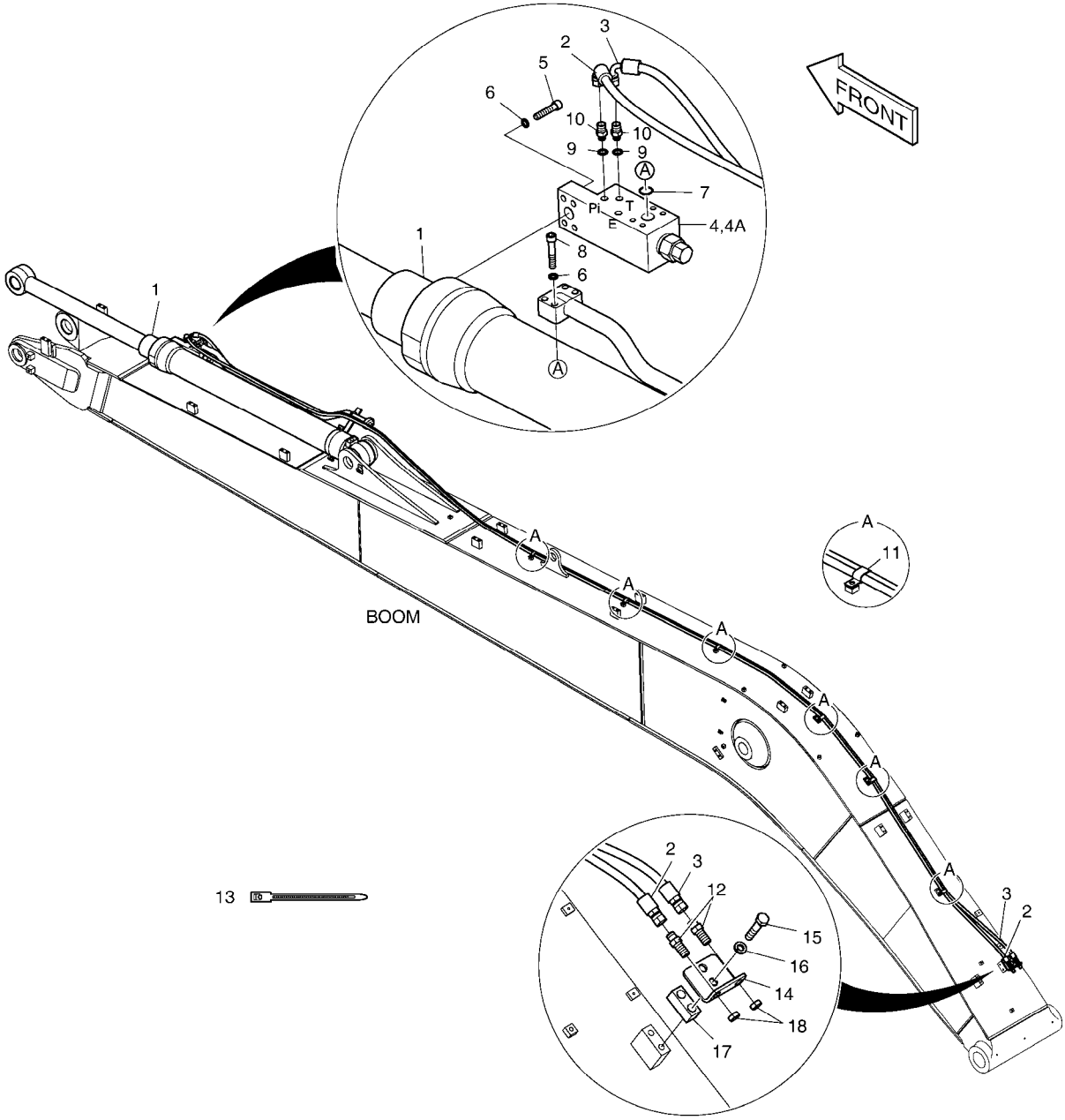

DATE	SEP. 12, 2012
4th EDITION	

Fig. 6990 LOCK VALVE PIPING - BOOM 8.5m
CONDUITES DE BALANCIER

Serial No. ;

Key No.	Part No.	Description	Description	Q'ty	S.C	Serial No.	ICA	Replaceable part	
								Part No.	Q'ty
6990 --	K1045842A	LOCK VALVE PIPING	FERMEZ LA TUYAUTERIE A	-	D				
1	K1041222A	CYLINDER;ARM(LOCK V/V)	CYLINDRE	1		05001-11735	Y	400305-00220	1
	400305-00220	CYLINDER;ARM(LOCK V/V)	CYLINDRE	1		11736-			
2	DS2055957	HOSE	TUYAU FLEXIBLE	1					
3	DS2055957	HOSE	TUYAU FLEXIBLE	1					
4	420-00004A	VALVE;LOCK	VANNE	1		05001-12020			
	410114-00154	VALVE,LOCK	VANNE	1		12021-			
4A	K9000999	. SEAL KIT	. KIT DE JOINT	1		05001-12020			
	401107-01315	. SEAL KIT	. KIT DE JOINT	1		12021-			
5	S2215766	BOLT;SOCKET M12X55	BOULON	4					
6	S5110703	WASHER;SPRING	RONDELLE	8					
7	S8000341	O-RING	JOINT CIRCULAIRE	1					
8	S2215966	BOLT;SOCKET	BOULON	4					
9	S8000111	O-RING	JOINT TORIQUE	2					
10	2181-1126D85	ADAPTER	ADAPTEUR	2					
11	DS2805009	CLIP	AGRAFE	7					
12	181-00078D1	ADAPTER	ADAPTEUR	2					
13	2124-1084D2	CLIP;BAND	AGRAFE	30					
14	195-00163	BRACKET	SUPPORT	1					
15	S0563366	BOLT	BOULON	2					
16	S5102803	WASHER;SPRING	RONDELLE	2					
17	K1004006	PLATE	PLAQUE	1					
18	121-00010D1	NUT	ECROU	2					

DATE	SEP. 12, 2012
4th EDITION	

Fig. 7000 BOOM PIPING - BOOM 8.5m(ROTATING) CONDUITES DE FLECHE

Serial No. ;

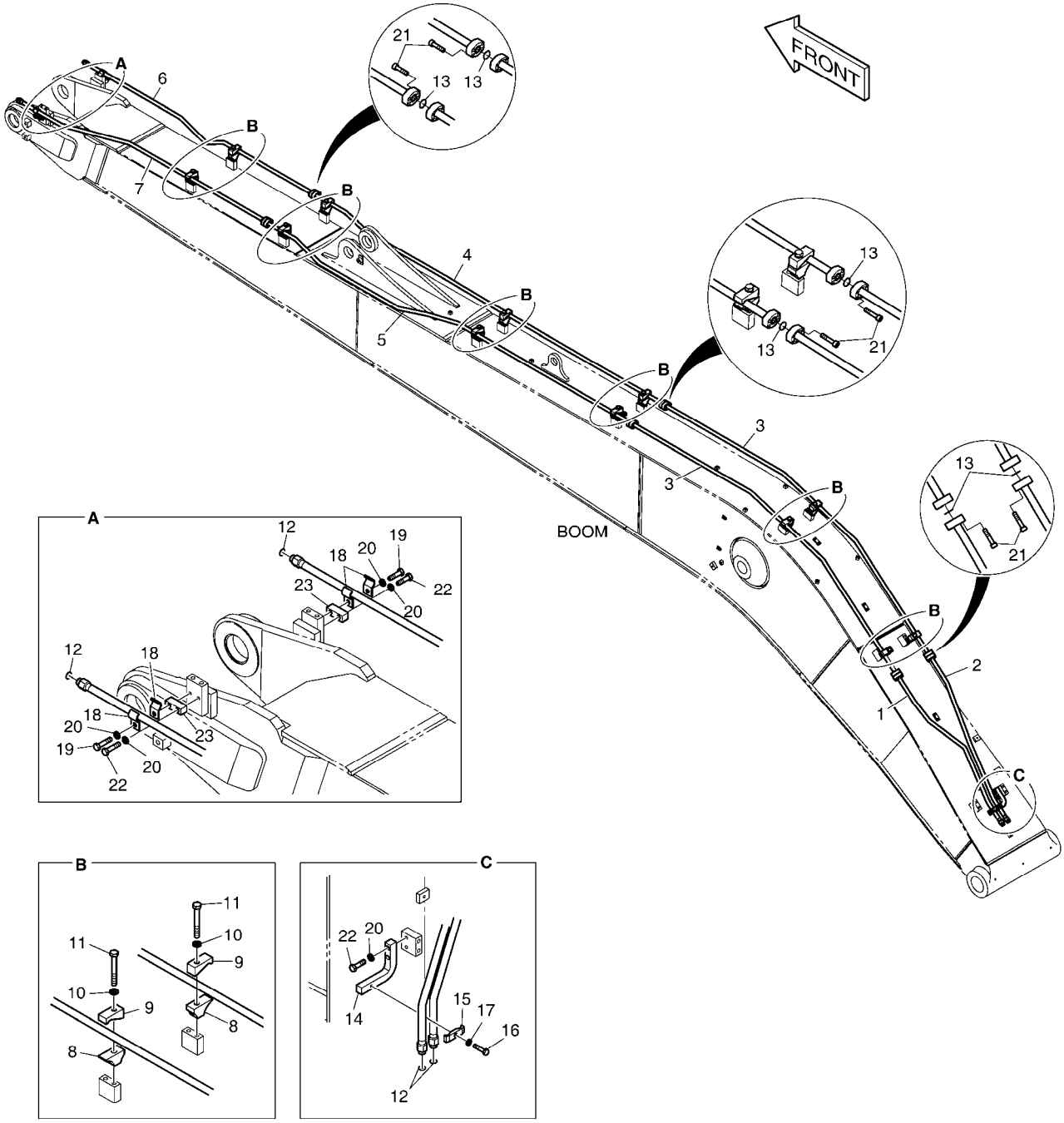

DATE	SEP. 12, 2012
4th EDITION	

Fig. 7000 BOOM PIPING - BOOM 8.5m(ROTATING) CONDUITES DE FLECHE

Serial No. ;

Key No.	Part No.	Description	Description	Q'ty	S.C	Serial No.	ICA	Replaceable part	
								Part No.	Q'ty
7000 --	K1045843	ROTATION PIPING	TUYAUTERIE DE ROTATIO	-	D				
1	K1042763	PIPE	TUYAU	1					
2	K1042764	PIPE	TUYAU	1					
3	K1046064	PIPE	TUYAU	2					
4	K1036841	PIPE	TUYAU	1					
5	K1036842	PIPE	TUYAU	1					
6	K1036843	PIPE	TUYAU	1					
7	K1036844	PIPE	TUYAU	1					
8	K1006930	CLAMP;PIPE	COLLIER	12					
9	K1006931	CLAMP;PIPE	BRIDE	12					
10	S5102803	WASHER;SPRING	RONDELLE	12					
11	S0564166	BOLT	BOULON A 6 PANS	12					
12	S8030081	O-RING	JOINT CIRCULAIRE	4					
13	2180-1026D30	O-RING	JOINT CIRCULAIRE	6					
14	621-02798	PLATE	PLAQUE	1					
15	K1004028	CLAMP;PIPE	BRIDE	1					
16	S0558466	BOLT	BOULON	1					
17	S5102603	WASHER,SPRING	RONDELLE	1					
18	124-00299A	CLAMP;PIPE	COLLIER	4					
19	S0560866	BOLT M12X1.75X55	BOULON	2					
20	S5102703	WASHER;SPRING	RONDELLE	6					
21	S2209466	BOLT;SOCKET	BOULON	24					
22	S0560666	BOLT	BOULON A 6 PANS	4					
23	K1002121	PLATE	PLAQUE	2					

DATE	SEP. 12, 2012
4th EDITION	

Fig. 7010 ARM PIPING - ARM 6.2m
CONDUITES DE BALANCIER

Serial No. ;

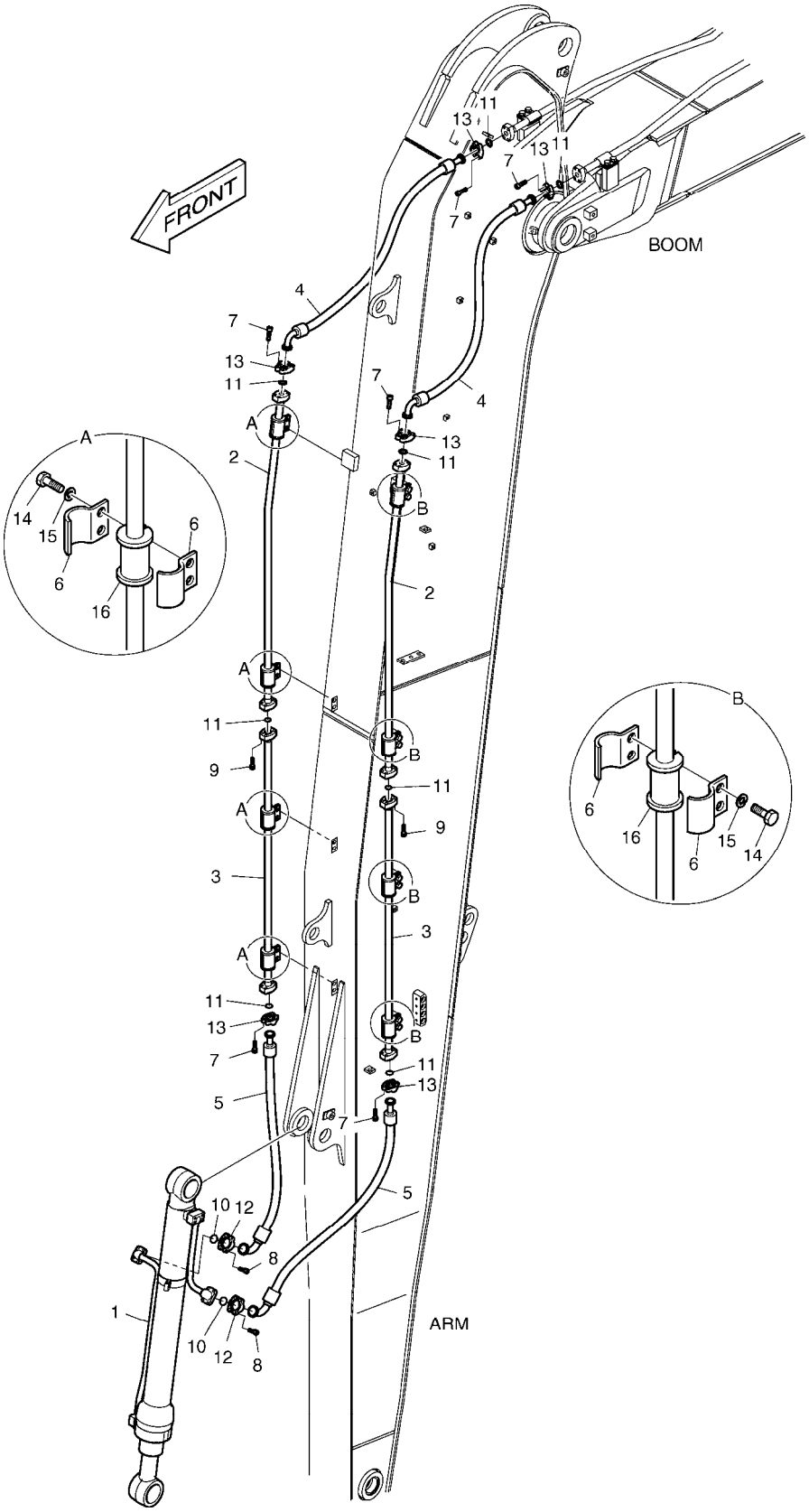

DATE	SEP. 12, 2012
4th EDITION	

Fig. 7010 ARM PIPING - ARM 6.2m CONDUITES DE BALANCIER

Serial No. ;

Key No.	Part No.	Description	Description	Q'ty	S.C	Serial No.	ICA	Replaceable part	
								Part No.	Q'ty
7010 --	K1046335A	ARM PIPING (ARM 6.2m)	CONDUITES DE BALANCIE	-	D				
1	K1011434A	BUCKET CYLINDER	VERIN DE GODET	1					
2	K1018712	PIPE	TUYAU	2					
3	K1018713	PIPE	TUYAU	2					
4	DS2040543	HOSE	TUYAU FLEXIBLE	2					
5	DS2040544	HOSE	TUYAU FLEXIBLE	2					
6	124-00302	CLAMP;PIPE	BRIDE	16					
7	S2212366	BOLT;SOCKET M10X1.5X35	BOULON	24					
8	S2212466	BOLT;SOCKET M10X1.5X40	BOULON	8					
9	S2212566	BOLT;SOCKET	BOULON	8					
10	2180-1026D19	O-RING	JOINT CIRCULAIRE	2					
11	2180-1026D2	O-RING	JOINT CIRCULAIRE	8					
12	2181-9078	FLANGE	BRIDE	4					
13	2181-9079	FLANGE	BRIDE	12					
14	S0562766	BOLT	BOULON	16					
15	S5102803	WASHER;SPRING	RONDELLE	16					
16	161-00574	RUBBER	LE CAOUTCHOUC	8					

DATE	SEP. 12, 2012
4th EDITION	

Fig. 7020 LUBRICATION PIPING - ARM 6.2m
LUBRIFICATION

Serial No. ;

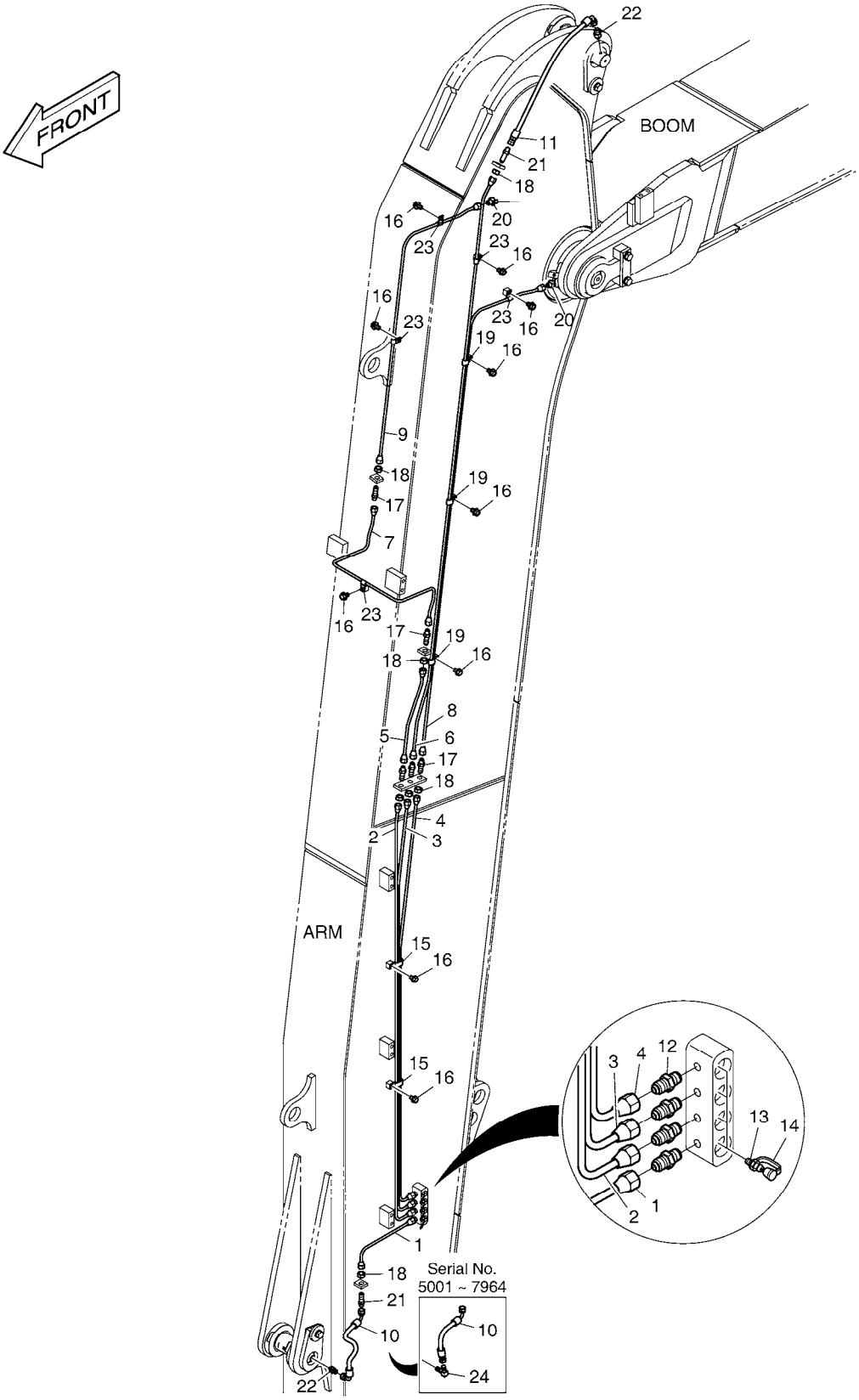

DATE	SEP. 12, 2012
4th EDITION	

Fig. 7020 LUBRICATION PIPING - ARM 6.2m LUBRIFICATION

Serial No. ;

Key No.	Part No.	Description	Description	Q'ty	S.C	Serial No.	ICA	Replaceable part	
								Part No.	Q'ty
7020 --	K1018590	LUBRICATION PIPING (6.2M_ARI	LUBRIFICATION	-	D	5001-7964			
	420212-05313	PIPING,LUBRICATION;6.2M	LUBRIFICATION	-	D	7965-			
1	K1011522	PIPE	TUYAU	1					
2	K1018714	PIPE	TUYAU	1					
3	K1018715	PIPE	TUYAU	1					
4	K1018762	PIPE	TUYAU	1					
5	K1011527	PIPE	CONDUITE	1					
6	K1018763	PIPE	TUYAU	1					
7	K1018764	PIPE	TUYAU	1					
8	K1018765	PIPE	TUYAU	1					
9	K1018766	PIPE	TUYAU	1					
10	2184-1036D38	HOSE	TUYAU FLEXIBLE	1		5001-7964			
	DS2059593	HOSE PF1/4-350L	TUYAU FLEXIBLE	1		7965-8751			
	DS2059607	HOSE PF1/4-350L	TUYAU FLEXIBLE	1		8752-			
11	2184-1036D199	HOSE	TUYAU FLEXIBLE	1					
12	2181-1184	ADAPTER	ADAPTEUR	4					
13	S6710041	NIPPLE;GREASE	GRAISSEUR	4					
14	160-00020	CAP;GREASE NIPPLE	CHAPEAU	4					
15	DS2805008	CLIP	AGRAFE	2					
16	K1001029	BOLT	BOULON	10					
17	DS2225009	ADAPTER	ADAPTEUR	5					
18	S4032833	NUT	ECROU	7					
19	DS2805007	CLIP	AGRAFE	3					
20	K1010730	ELBOW	COUDE	2					
21	2181-1923D12	ADAPTER	ADAPTEUR	2					
22	2181-4112	ADAPTER	ADAPTEUR	1		5001-7964			
	2181-4112	ADAPTER	ADAPTEUR	2		7965-			
23	DS2802023	CLIP	AGRAFE	5					
24	2181-1111D11	ELBOW	COUDE	1		5001-7964			

DATE	SEP. 12, 2012
4th EDITION	

Fig. 7030 ARM PIPING - ARM 6.2m(ROTATING)
CONDUITES DE BALANCIER

Serial No. ;

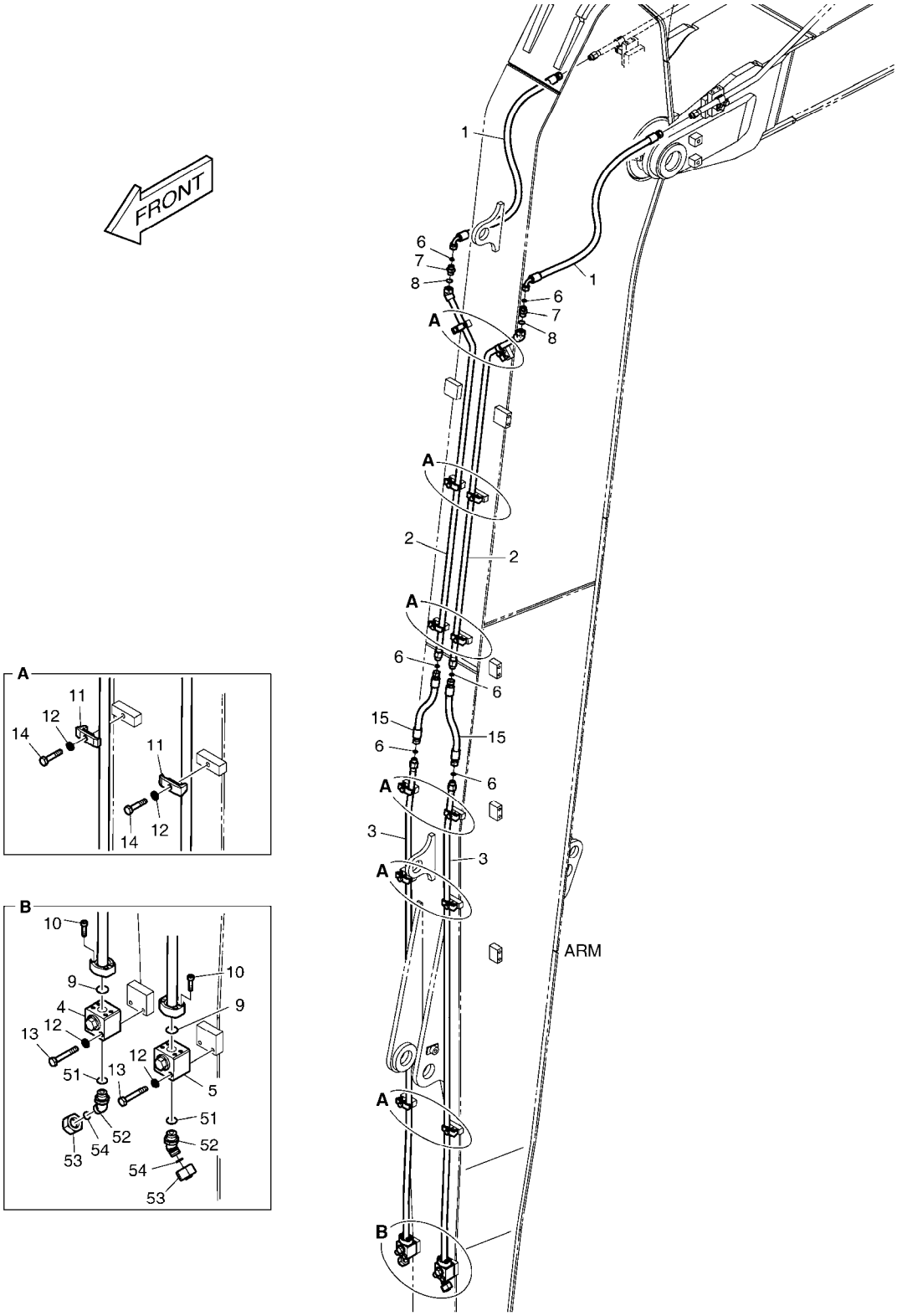

DATE	SEP. 12, 2012
4th EDITION	

Fig. 7030 ARM PIPING - ARM 6.2m(ROTATING)
CONDUITES DE BALANCIER

Serial No. ;

Key No.	Part No.	Description	Description	Q'ty	S.C	Serial No.	ICA	Replaceable part	
								Part No.	Q'ty
7030 --	K1042809	ROTATION PIPING	TUYAUTERIE DE ROTATIO	-	D				
1	DS20131208	HOSE	TUYAU FLEXIBLE	2					
2	K1042810	PIPE	TUYAU	2					
3	K1042813	PIPE	TUYAU	2					
4	K1006227	VALVE;SWITCH(R.H)	VANNE	1					
5	K1006228	VALVE;SWITCH(L.H)	VANNE	1					
6	S8030081	O-RING	JOINT CIRCULAIRE	6					
7	2181-4133D3	ADAPTER	ADAPTEUR	2					
8	S8000181	O-RING	JOINT CIRCULAIRE	2					
9	2180-1026D30	O-RING	JOINT CIRCULAIRE	2					
10	S2209266	BOLT;SOCKET M8X1.25X30	BOULON A 6 PANS CREUX	8					
11	2124-1026D1	CLAMP;PIPE	BRIDE	12					
12	S5102603	WASHER,SPRING	RONDELLE	16					
13	S0558966	BOLT	BOULON	4					
14	S0558566	BOLT	BOULON	12					
15	DS2011770	HOSE	TUYAU FLEXIBLE	2					
51	S8000181	O-RING	JOINT CIRCULAIRE	2					
52	2181-2816D4	ELBOW	COUDE	2					
53	2181-2817D4	CAP	CHAPEAU	2					
54	S8030081	O-RING	JOINT CIRCULAIRE	2					

DATE	SEP. 12, 2012
4th EDITION	

Fig. 7040 TRAVEL ALARM
ALARME DE VOYAGE

Serial No. ;

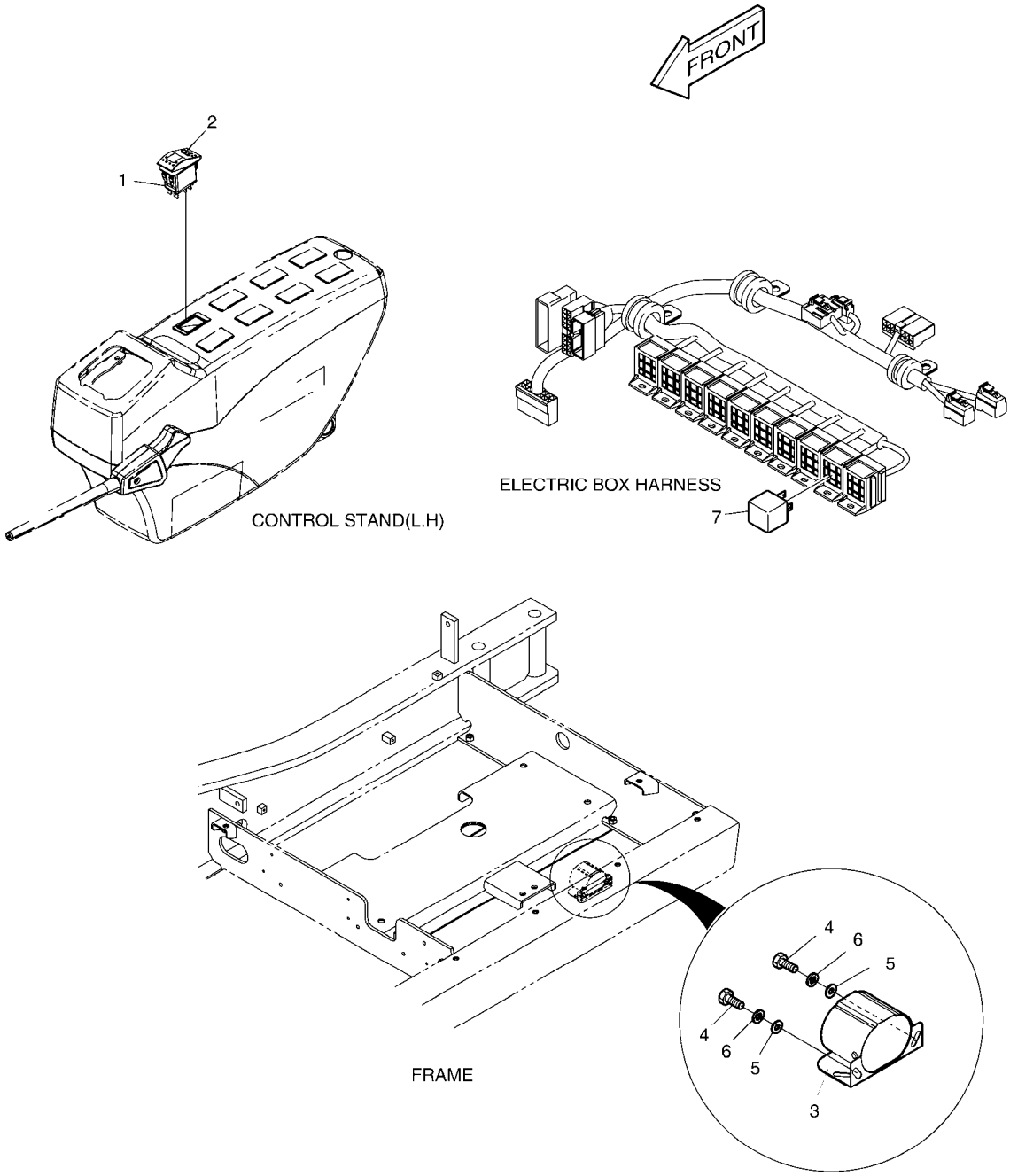

DATE	SEP. 12, 2012
4th EDITION	

Fig. 7040 TRAVEL ALARM ALARME DE VOYAGE

Serial No. ;

Key No.	Part No.	Description	Description	Q'ty	S.C	Serial No.	ICA	Replaceable part	
								Part No.	Q'ty
7040 --	K1007400B	TRAVEL ALARM	ALARME DE VOYAGE	-	D	5001-7754			
	300619-01069	ELECTRIC ASSY;ALARM	ALARME DE VOYAGE	-	D	7755-			
1	549-00103	SWITCH;ROCKER(2STEP)	COMMUTATEUR	1					
2	K1002406D14	ACTUATOR;SWITCH	ACTIONNEUR	1					
3	516-00011	BUZZER;ALARM	VIBREUR	1					
4	S0508653	BOLT	BOULON	2					
5	S5010513	WASHER,PLAIN	RONDELLE	2					
6	S5102503	WASHER,SPRING	RONDELLE	2					
7	2544-9033	RELAY	RELAIS	1					

DATE	SEP. 12, 2012
4th EDITION	

Fig. 7050 WORKING LAMP(2-LAMP) LAMPE FONCTIONNANTE

Serial No. ;

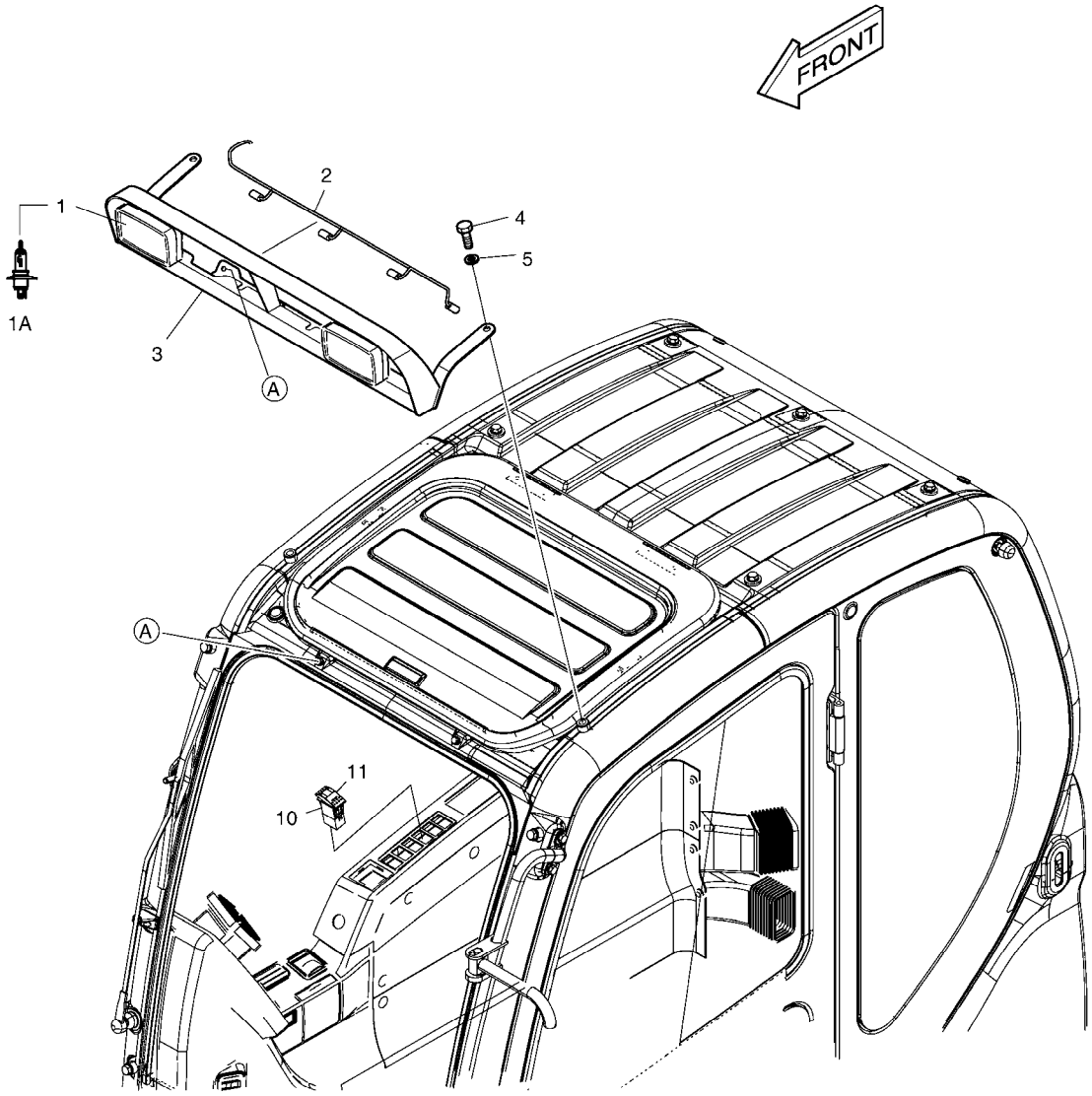

DATE	SEP. 12, 2012
4th EDITION	

Fig. 7050 WORKING LAMP(2-LAMP) LAMPE FONCTIONNANTE

Serial No. ;

Key No.	Part No.	Description	Description	Q'ty	S.C	Serial No.	ICA	Replaceable part	
								Part No.	Q'ty
7050 --	K1007403B	WORKING LAMP-2 LAMP	LAMPE FONCTIONNANTE	-	D				
1	534-00085	LAMP;HEAD	LAMPE	2					
1A	2515-1016D4	. BULB;HALOGEN	. AMPOULE	1					
2	530-00430A	HARNESS;FRONT CABIN LAMP	HARNAIS	1					
3	195-02908E	BRACKET;FRONT LAMP	SUPPORT	1					
4	2120-2166D54	BOLT;GREEN M12X1.75X20	BOULON	2					
5	2114-1898D6	WASHER;PLAIN	RONDELLE	2					
10	549-00103	SWITCH;ROCKER(2STEP)	COMMUTATEUR	1					
11	K1002406D13	ACTUATOR;SWITCH	ACTIONNEUR	1					

DATE	SEP. 12, 2012
4th EDITION	

Fig. 7060 WORKING LAMP(4-LAMP) LAMPE FONCTIONNANTE

Serial No. ;

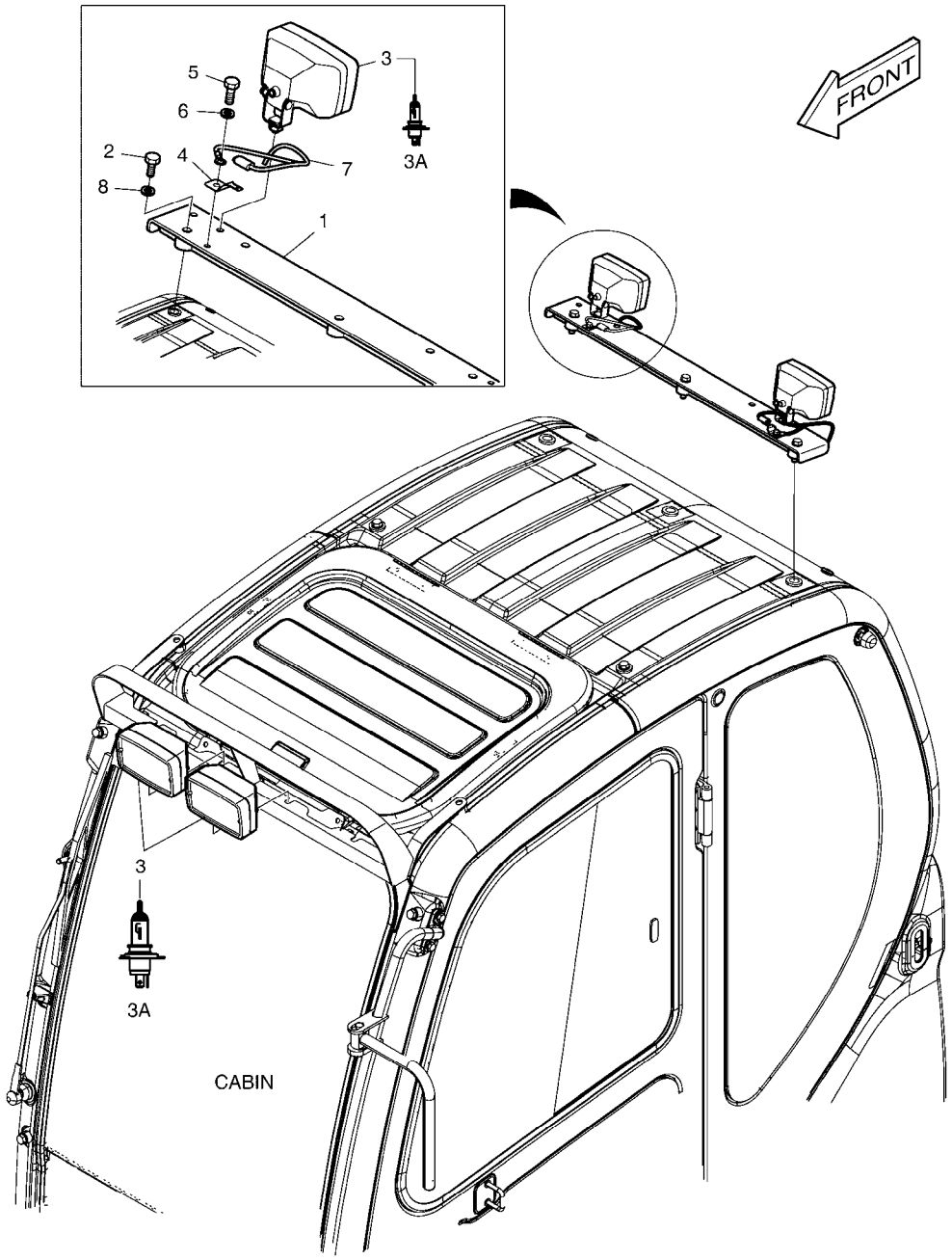

DATE	SEP. 12, 2012
4th EDITION	

Fig. 7060 WORKING LAMP(4-LAMP) LAMPE FONCTIONNANTE

Serial No. ;

Key No.	Part No.	Description	Description	Q'ty	S.C	Serial No.	ICA	Replaceable part	
								Part No.	Q'ty
7060 --	K1007404A	WORKING LAMP	LAMPE FONCTIONNANTE	-	D				
1	195-02910C	BRACKET;REAR LAMP	SUPPORT	1					
2	S0515653	BOLT	BOULON	3					
3	534-00085	LAMP;HEAD	LAMPE	4					
3A	2515-1016D4	. BULB;HALOGEN	. AMPOULE	1					
4	2197-1661	BRACKET	SUPPORT	2					
5	S0508853	BOLT	BOULON	2					
6	S5102503	WASHER,SPRING	RONDELLE	2					
7	530-00463A	HARNESS;REAR CABIN LAMP	HARNAIS	2					
8	S5010713	WASHER;PLAIN	RONDELLE	3					

DATE	SEP. 12, 2012
4th EDITION	

Fig. 7070 WORKING LAMP - REAR AVERTISSEUR RELAIS

Serial No. ;

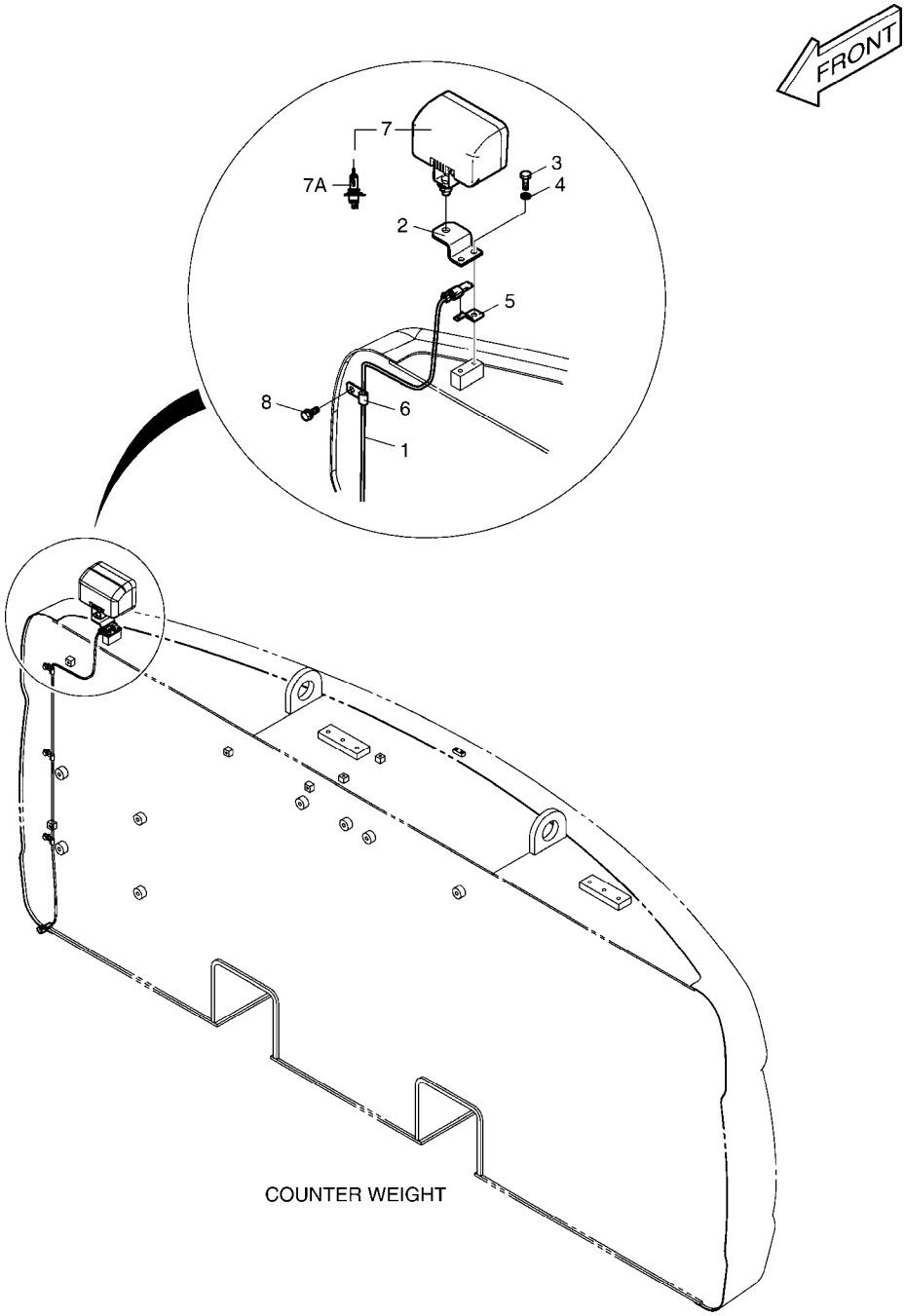

DATE	SEP. 12, 2012
4th EDITION	

Fig. 7070 WORKING LAMP - REAR AVERTISSEUR RELAIS

Serial No. ;

Key No.	Part No.	Description	Description	Q'ty	S.C	Serial No.	ICA	Replaceable part	
								Part No.	Q'ty
7070 --	K1007405	WORKING LAMP-REAR LAMP	AVERTISSEUR RELAIS	-	D				
1	530-00431	HARNESS;REAR LAMP	HARNAIS	1					
2	195-02775A	PLATE	PLAQUE	1					
3	S0508853	BOLT	BOULON	2					
4	S5102503	WASHER,SPRING	RONDELLE	2					
5	2197-1661	BRACKET	SUPPORT	1					
6	2124-1509D1	CLIP	AGRAFE	3					
7	534-00085	LAMP;HEAD	LAMPE	1					
7A	2515-1016D4	. BULB;HALOGEN	. AMPOULE	1					
8	K1001029	BOLT	BOULON	3					

DATE	SEP. 12, 2012
4th EDITION	

Fig. 7080 ROTATING BEACON FEU DE CIRCULATION

Serial No. ;

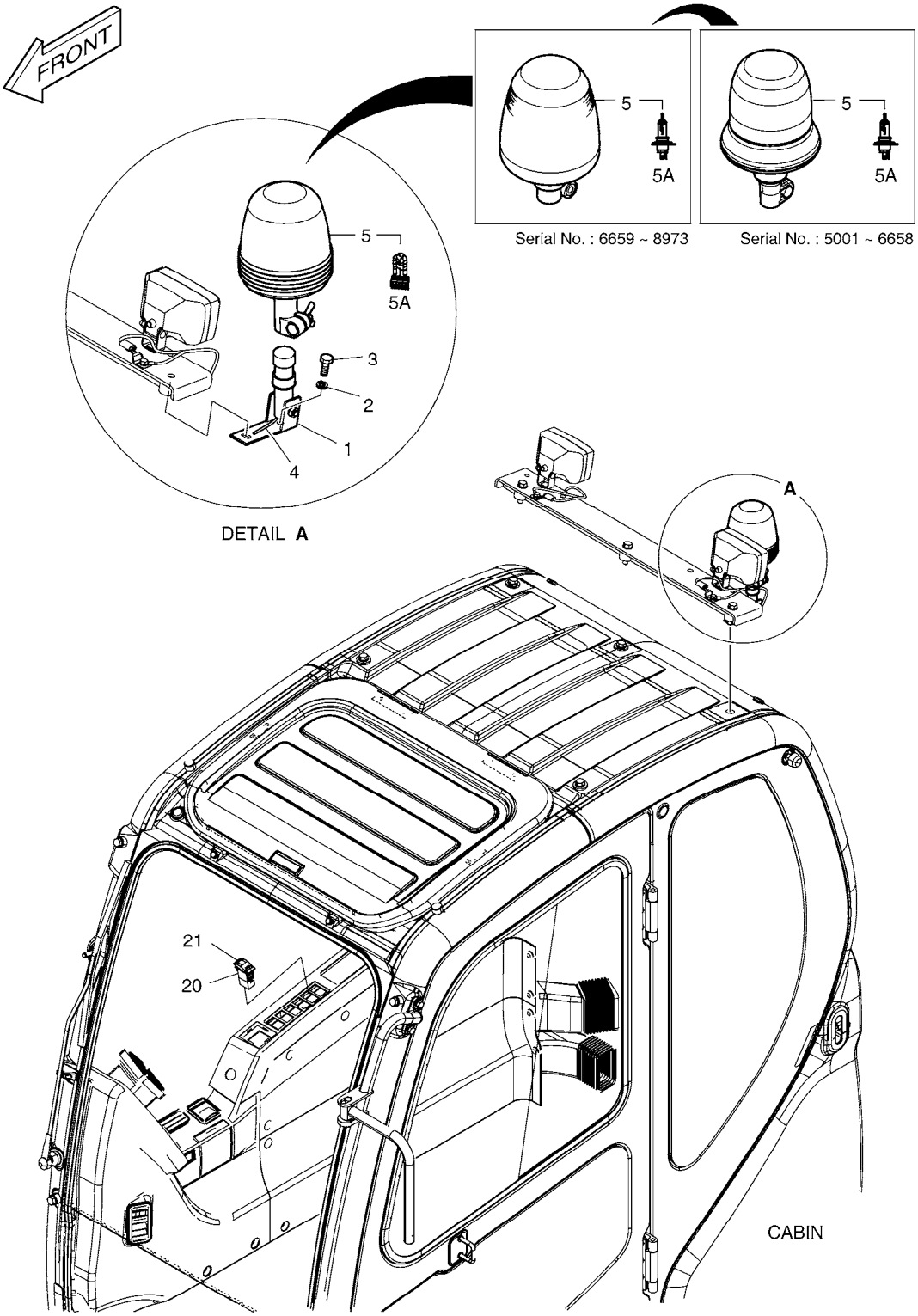

DATE	SEP. 12, 2012
4th EDITION	

Fig. 7080 ROTATING BEACON FEU DE CIRCULATION

Serial No. ;

Key No.	Part No.	Description	Description	Q'ty	S.C	Serial No.	ICA	Replaceable part	
								Part No.	Q'ty
7080 --	500-00307A	BEACON;ROTATING	FEU DE CIRCULATION	-	D	5001-6658			
	300705-00013A	BEACON ASSY,ROTATING	FEU DE CIRCULATION	-	D	6659-8973			
	300705-00013B	BEACON ASSY,ROTATING	FEU DE CIRCULATION	-	D	8974-			
1	160-00061	BUSH;MOUNTING	DOUILLE	1		5001-6658	I	131002-00085	1
	131002-00085	BUSHING ASS'Y	DOUILLE	1		6659-			
2	S5102503	WASHER,SPRING	RONDELLE	1					
3	S0508853	BOLT	BOULON	1					
4	530-00464	HARNESS;ROTATING BEACON	HARNAIS	1					
5	K1038193	BEACON;ROTATING	FEU DE CIRCULATION	1		5001-6658	I	534-00062	1
	534-00062	LAMP;ROTATING BEACON	LAMPE	1		6659-8973	I	300705-00037	1
	300705-00037	LAMP;ROTATING BEACON	LAMPE	1		8974-			
5A	K9007240	. BULB;HALOGEN 24V 70W	. AMPOULE	1		5001-6658			
	515-00013	. BULB;HALOGEN 24V 70W	. AMPOULE	1		6659-8973			
	300710-00023	. BULB;STROBE	. AMPOULE	1		8974-			
20	549-00101	SWITCH;ROCKER(1STEP)	COMMUTATEUR	1					
21	K1002406D3	ACTUATOR	ACTIONNEUR	1					

DATE	SEP. 12, 2012
4th EDITION	

Fig. 7090 ROTATING BEACON MOUNTING SUPPORT TOURNANT DE BALISE

Serial No. ;

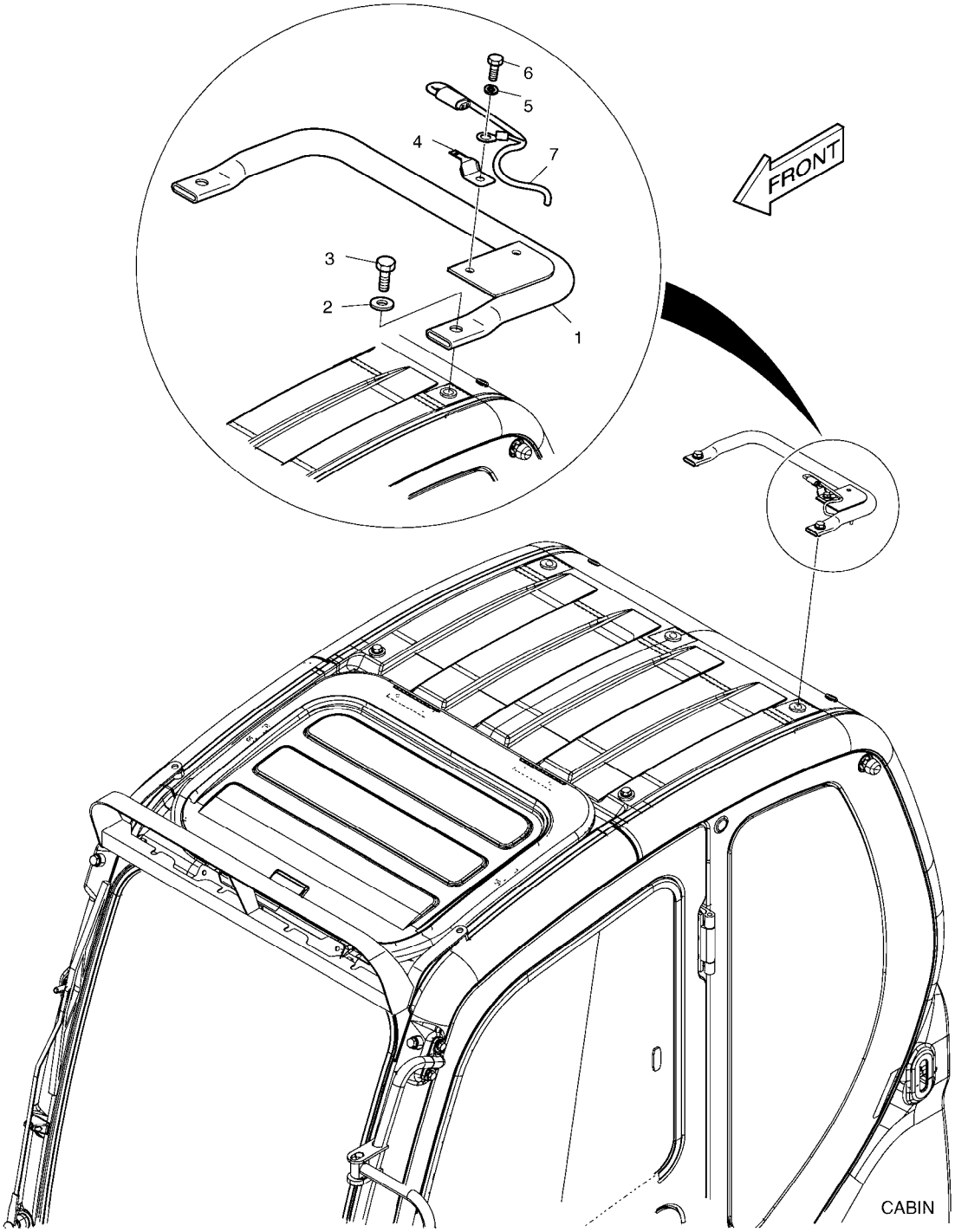

DATE	SEP. 12, 2012
4th EDITION	

Fig. 7090 ROTATING BEACON MOUNTING SUPPORT TOURNANT DE BALISE

Serial No. ;

Key No.	Part No.	Description	Description	Q'ty	S.C	Serial No.	ICA	Replaceable part	
								Part No.	Q'ty
7090 --	K1007408	ROTATING BEACON MOUNTING	SUPPORT TOURNANT DE I	-	D				
1	195-02909A	BRACKET;BEACON	SUPPORT	1					
2	2114-1898D1	WASHER	RONDELLE	2					
3	S0512053	BOLT	BOULON	2					
4	2197-1661	BRACKET	SUPPORT	1					
5	S5102503	WASHER,SPRING	RONDELLE	1					
6	S0508853	BOLT	BOULON	1					
7	530-00463A	HARNESS;REAR CABIN LAMP	HARNAIS	1					

DATE	SEP. 12, 2012
4th EDITION	

Fig. 7100 ROTATING BEACON(TELESCOPIC) WITH LAMP FEU DE CIRCULATION

Serial No. ;

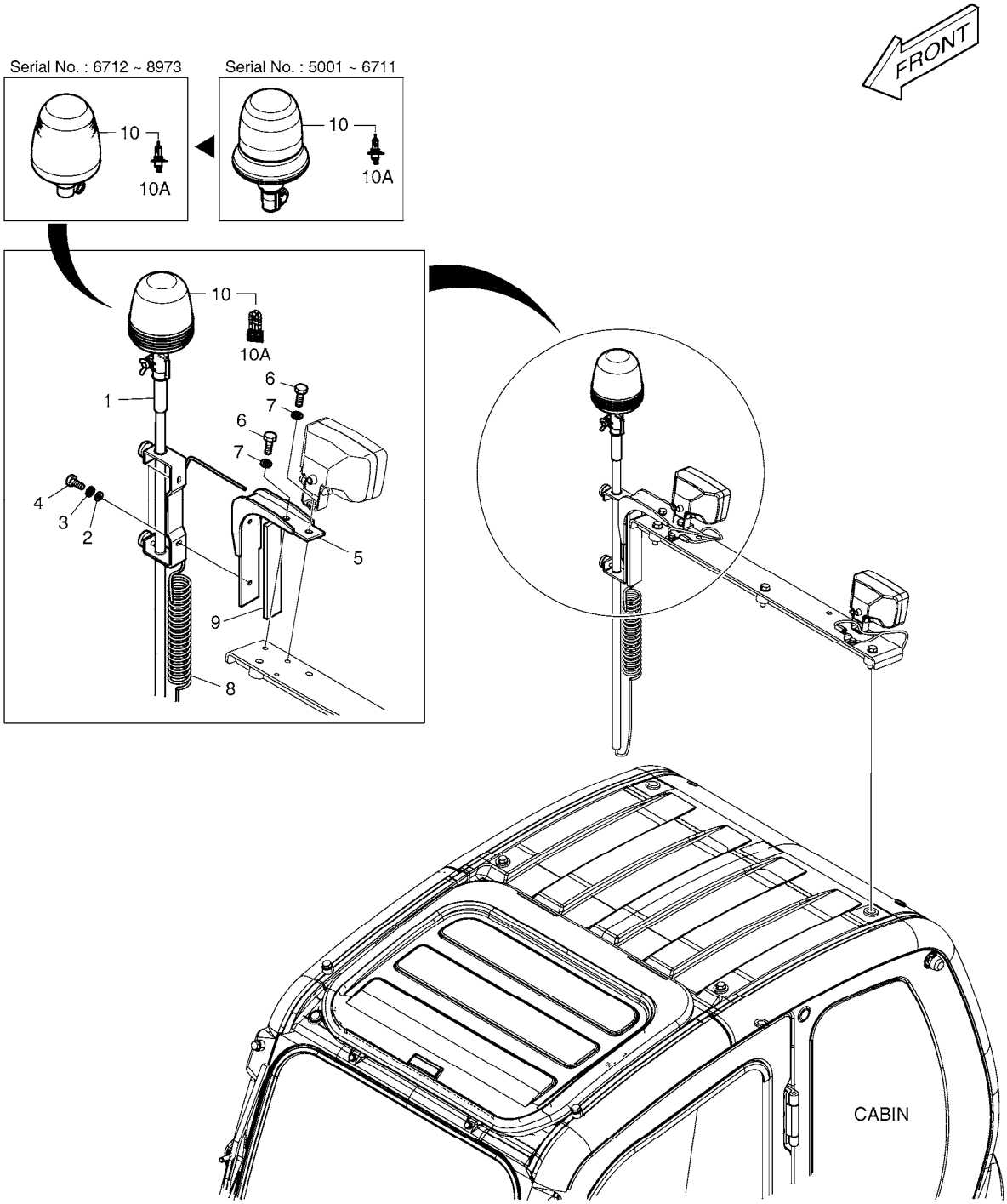

DATE	SEP. 12, 2012
4th EDITION	

Fig. 7100 ROTATING BEACON(TELESCOPIC) WITH LAMP FEU DE CIRCULATION

Serial No. ;

Key No.	Part No.	Description	Description	Q'ty	S.C	Serial No.	ICA	Replaceable part	
								Part No.	Q'ty
7100 --	500-00309C	BEACON;ROTATING	FEU DE CIRCULATION	-	D	5001-6711			
	300705-00032	BEACON,ROTATING	FEU DE CIRCULATION	-	D	6712-8973			
	300705-00032A	BEACON ASSY,ROTATING	FEU DE CIRCULATION	-	D	8974-			
1	195-01805	SUPPORT;BEACON	APPUI	1					
2	S5010513	WASHER,PLAIN	RONDELLE	2					
3	S5102503	WASHER,SPRING	RONDELLE	2					
4	S0508653	BOLT	BOULON	2					
5	195-02925A	BRACKET	SUPPORT	1					
6	S0512053	BOLT	BOULON	2					
7	S5100603	WASHER;SPRING	RONDELLE	2					
8	K1010065	HARNESS;JOINT	HARNAIS	1					
9	161-00404	RUBBER	LE CAOUTCHOUC	1					
10	K1038193	BEACON;ROTATING	FEU DE CIRCULATION	1		5001-6711	I	534-00062	1
	534-00062	LAMP;ROTATING BEACON	LAMPE	1		6712-8973	I	300705-00037	1
	300705-00037	LAMP;ROTATING BEACON	LAMPE	1		8974-			
10A	K9007240	. BULB;HALOGEN 24V 70W	. AMPOULE	1		5001-6711			
	515-00013	. BULB;HALOGEN 24V 70W	. AMPOULE	1		6712-8973			
	300710-00023	. BULB;STROBE	. AMPOULE	1		8974-			

DATE	SEP. 12, 2012
4th EDITION	

Fig. 7110 ROTATING BEACON(TELESCOPIC) W/O LAMP FEU DE CIRCULATION

Serial No. ;

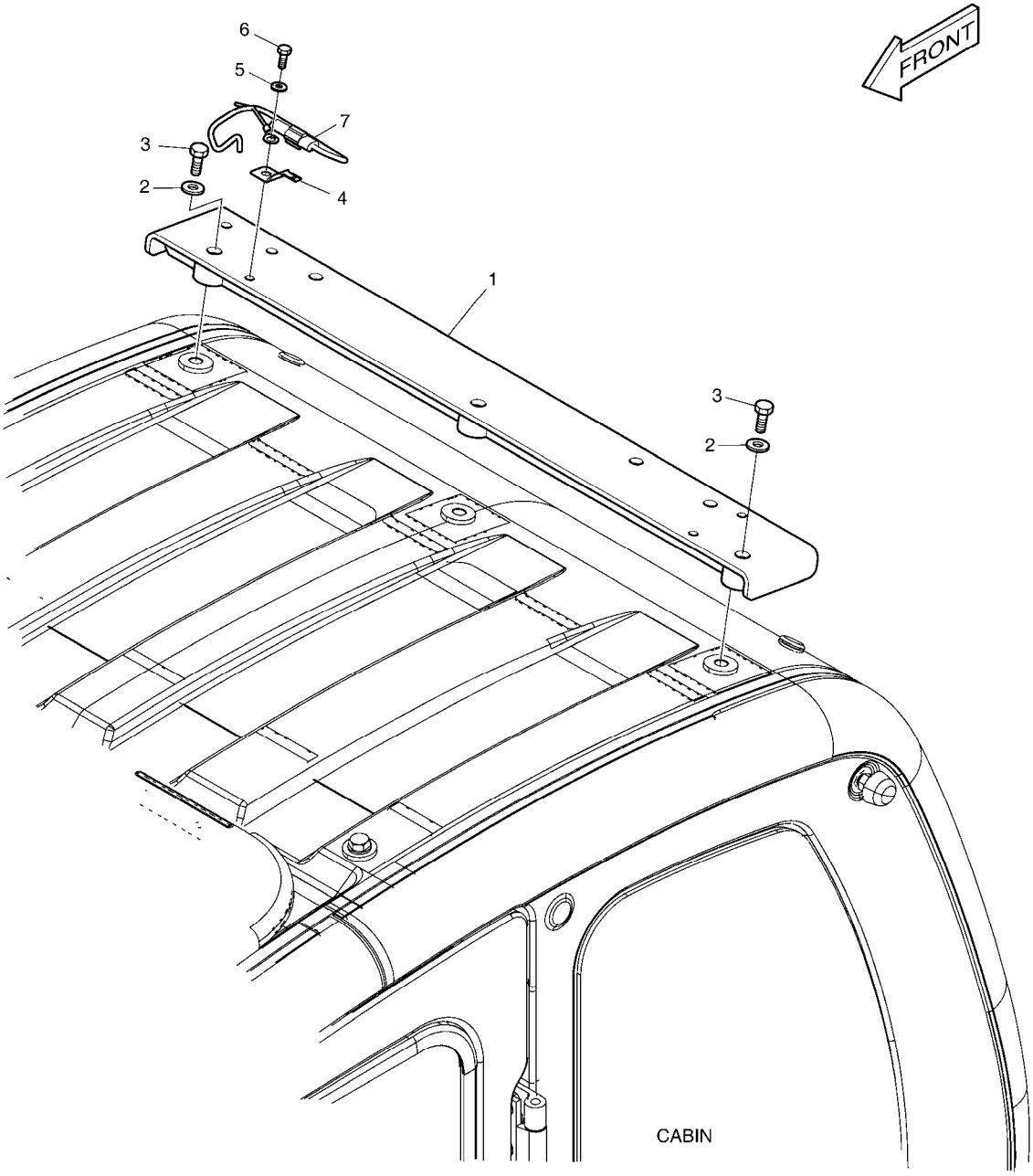

DATE	SEP. 12, 2012
4th EDITION	

Fig. 7110 ROTATING BEACON(TELESCOPIC) W/O LAMP FEU DE CIRCULATION

Serial No. ;

Key No.	Part No.	Description	Description	Q'ty	S.C	Serial No.	ICA	Replaceable part	
								Part No.	Q'ty
7110 --	K1007410A	ROTATING BEACON-TELESCOP	FEU DE CIRCULATION	-	D				
1	195-02910C	BRACKET;REAR LAMP	SUPPORT	1					
2	S5010713	WASHER;PLAIN	RONDELLE	3					
3	S0515653	BOLT	BOULON	3					
4	2197-1661	BRACKET	SUPPORT	1					
5	S5102503	WASHER,SPRING	RONDELLE	1					
6	S0508853	BOLT	BOULON	1					
7	530-00463A	HARNESS;REAR CABIN LAMP	HARNAIS	1					

DATE	SEP. 12, 2012
4th EDITION	

Fig. 7120 OVERLOAD WARNING AVERTISSEMENT DE SURCHARGE

Serial No. ;

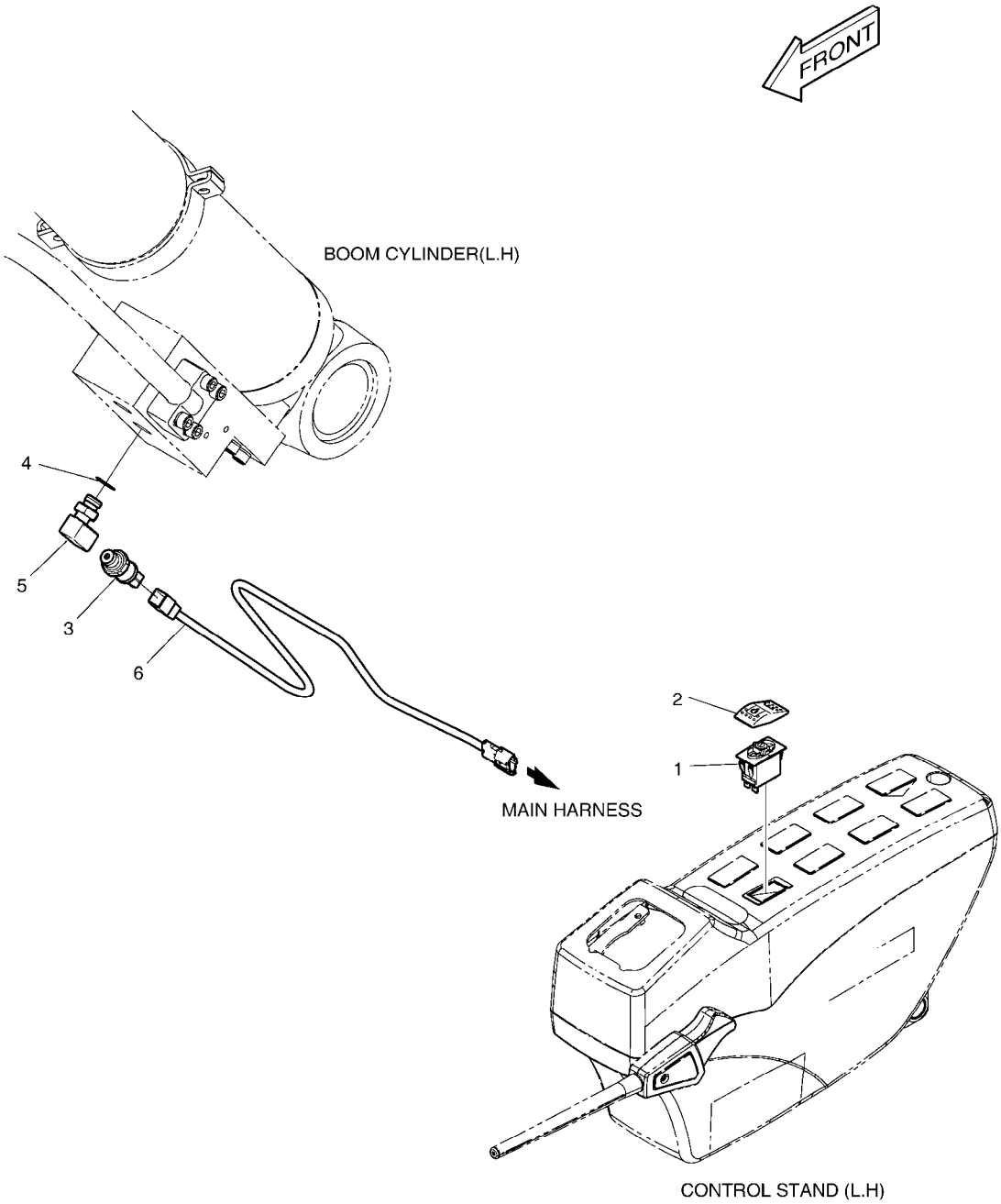

DATE	SEP. 12, 2012
4th EDITION	

Fig. 7120 OVERLOAD WARNING AVERTISSEMENT DE SURCHARGE

Serial No. ;

Key No.	Part No.	Description	Description	Q'ty	S.C	Serial No.	ICA	Replaceable part	
								Part No.	Q'ty
7120 --	K1007411	OVER LOAD WARNING	AVERTISSEMENT DE SUR(	-	D				
1	549-00102	SWITCH	COMMUTATEUR	1					
2	K1002406D4	ACTUATOR	ACTIONNEUR	1					
3	2547-9045	SENSOR;PRESSURE	SONDE	1					
4	S8000161	O-RING	JOINT TORIQUE	1					
5	DS2308021	ELBOW	COUDE	1					
6	K1002153	HARNESS;JOINT	HARNAIS	1					

DATE	SEP. 12, 2012
4th EDITION	

Fig. 7130 LOWER WIPER
ABAISSEZ L'ESSUIE-GLACE

Serial No. ;

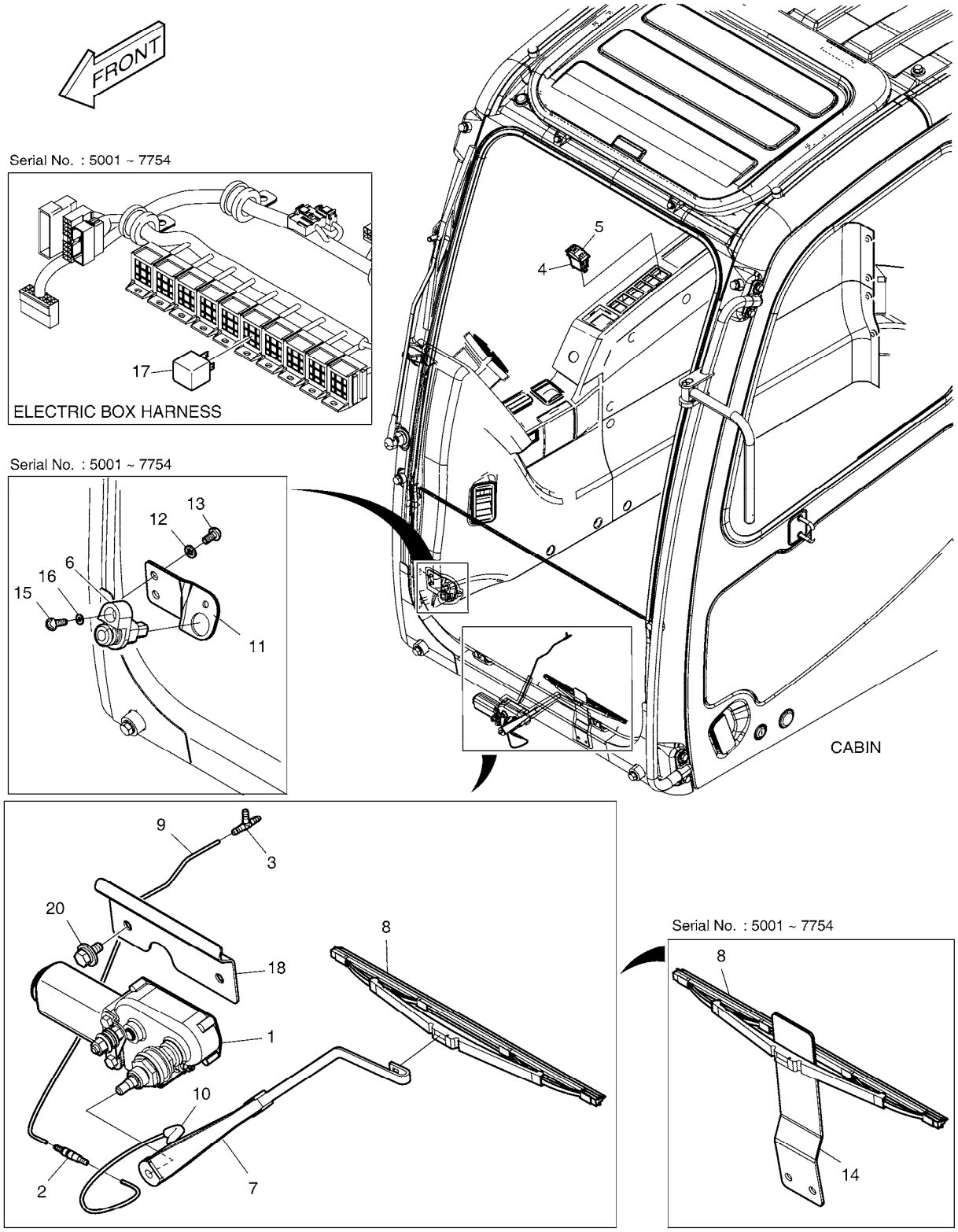

DATE	SEP. 12, 2012
4th EDITION	

Fig. 7130 LOWER WIPER ABAISSEZ L'ESSUIE-GLACE

Serial No. ;

Key No.	Part No.	Description	Description	Q'ty	S.C	Serial No.	ICA	Replaceable part	
								Part No.	Q'ty
7130 --	K1007412E	LOWER WIPER ASS'Y	ABAISSEZ L'ESSUIE-GLA	-	D	5001-7754			
	300619-01062	LOWER WIPER,NON ROPS	ABAISSEZ L'ESSUIE-GLA	-	D	7755-			
1	538-00012	MOTOR;WIPER	MOTEUR	1					
2	426-00282	VALVE;LOWER WIPER CHECK	VANNE	1					
3	181-00804	TEE	TE	1					
4	549-00101	SWITCH;ROCKER(1STEP)	COMMUTATEUR	1					
5	K1002406D5	ACTUATOR	ACTIONNEUR	1					
6	549-00077	SWITCH	COMMUTATEUR	1		5001-7754			
7	541-00016	ARM;WIPER	BRAS	1					
8	507-00007	BLADE;WIPER	LAME	1					
9	K1002866	HOSE	TUYAU FLEXIBLE	1					
10	K1002867D1	TUBE	TUBE	1					
11	195-03444	BRACKET;SWITCH	SUPPORT	1		5001-7754			
12	2114-1898D3	WASHER;PLAIN	RONDELLE	2		5001-7754			
13	2120-2166D9	SCREW	VIS	2		5001-7754			
14	191-03736E	PLATE;STOPPER	PLAQUE	1		5001-7754			
15	S3450833	SCREW	VIS	1		5001-7754			
16	S5100203	WASHER;SPRING	RONDELLE	1		5001-7754			
17	2544-9033	RELAY	RELAIS	1		5001-7754			
18	110423-00050	BRACKET;LOWER WIPER	SUPPORT	1		7755-			
20	DS0025033	BOLT;SET	BOULON	2		7755-			

DATE	SEP. 12, 2012
4th EDITION	

Fig. 7140 WORKING LAMP(2-LAMP) LAMPE FONCTIONNANTE

Serial No. ;

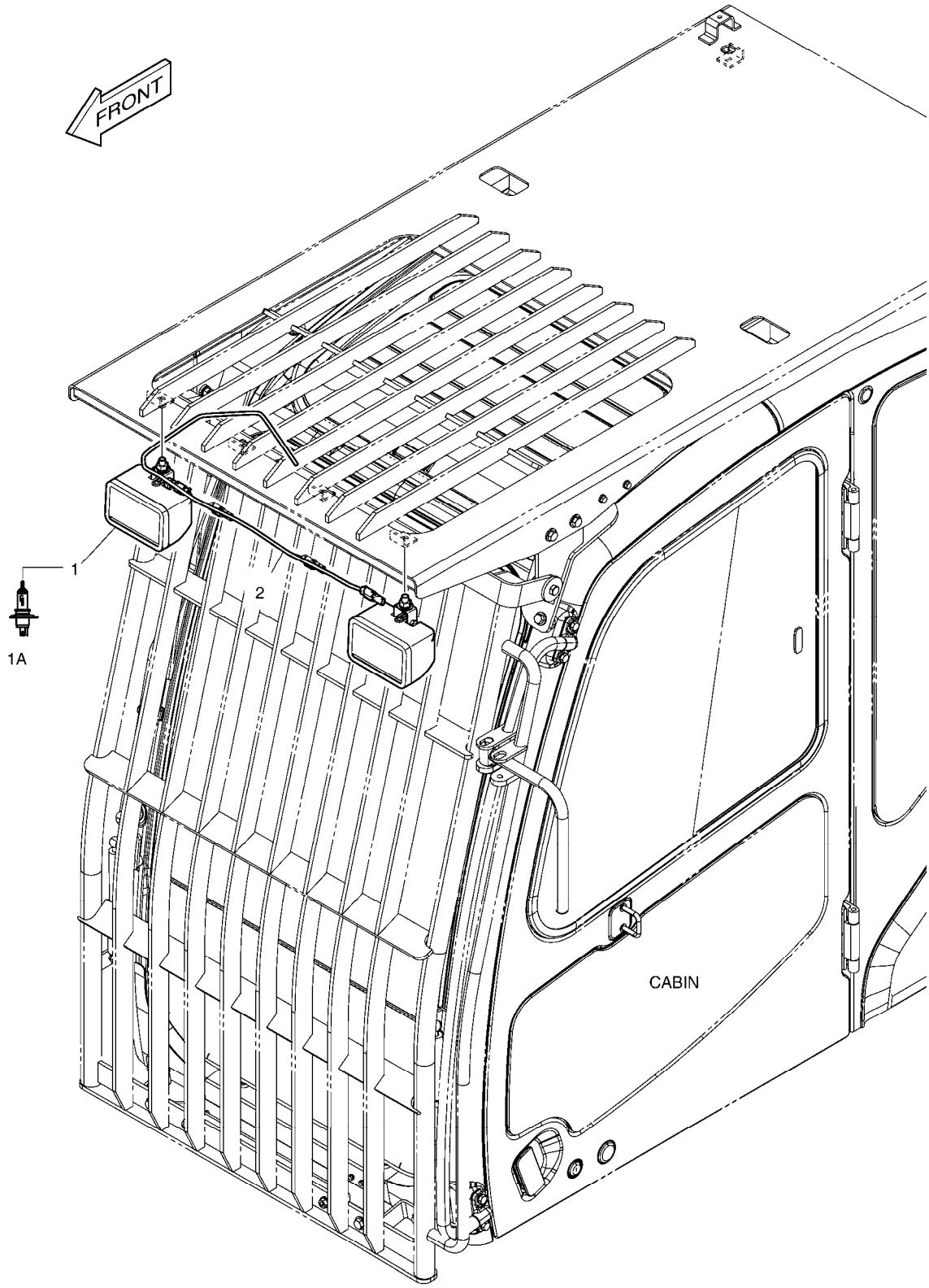

DATE	SEP. 12, 2012
4th EDITION	

Fig. 7140 WORKING LAMP(2-LAMP) LAMPE FONCTIONNANTE

Serial No. ;

Key No.	Part No.	Description	Description	Q'ty	S.C	Serial No.	ICA	Replaceable part	
								Part No.	Q'ty
7140 --	K1007418	WORKING LAMP ASS'Y	LAMPE FONCTIONNANTE	-	D				
1	534-00085	LAMP;HEAD	LAMPE	2					
1A	2515-1016D4	. BULB;HALOGEN	. AMPOULE	1					
2	K1006663	HARNESS;JOINT	HARNAIS	1					

DATE	SEP. 12, 2012
4th EDITION	

Fig. 7150 WORKING LAMP(4-LAMP) LAMPE FONCTIONNANTE

Serial No. ;

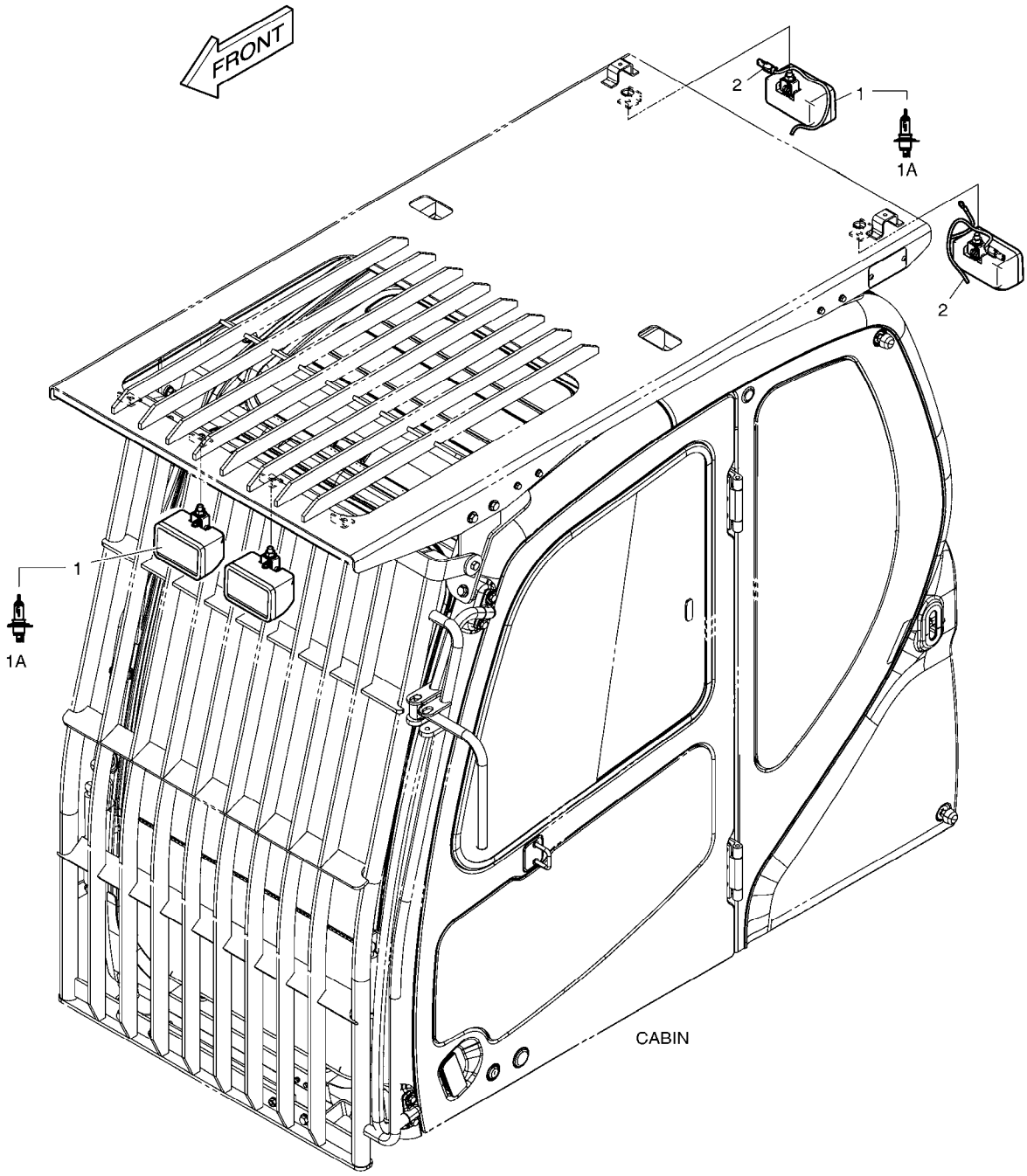

DATE	SEP. 12, 2012
4th EDITION	

Fig. 7150 WORKING LAMP(4-LAMP) LAMPE FONCTIONNANTE

Serial No. ;

Key No.	Part No.	Description	Description	Q'ty	S.C	Serial No.	ICA	Replaceable part	
								Part No.	Q'ty
7150 --	K1007419	WORKING LAMP ASS'Y	LAMPE FONCTIONNANTE	-	D				
1	534-00085	LAMP;HEAD	LAMPE	4					
1A	2515-1016D4	. BULB;HALOGEN	. AMPOULE	1					
2	530-00463A	HARNESS;REAR CABIN LAMP	HARNAIS	2					

DATE	SEP. 12, 2012
4th EDITION	

Fig. 7160 ROTATING BEACON-WITH FOGS FEU DE CIRCULATION

Serial No. ;

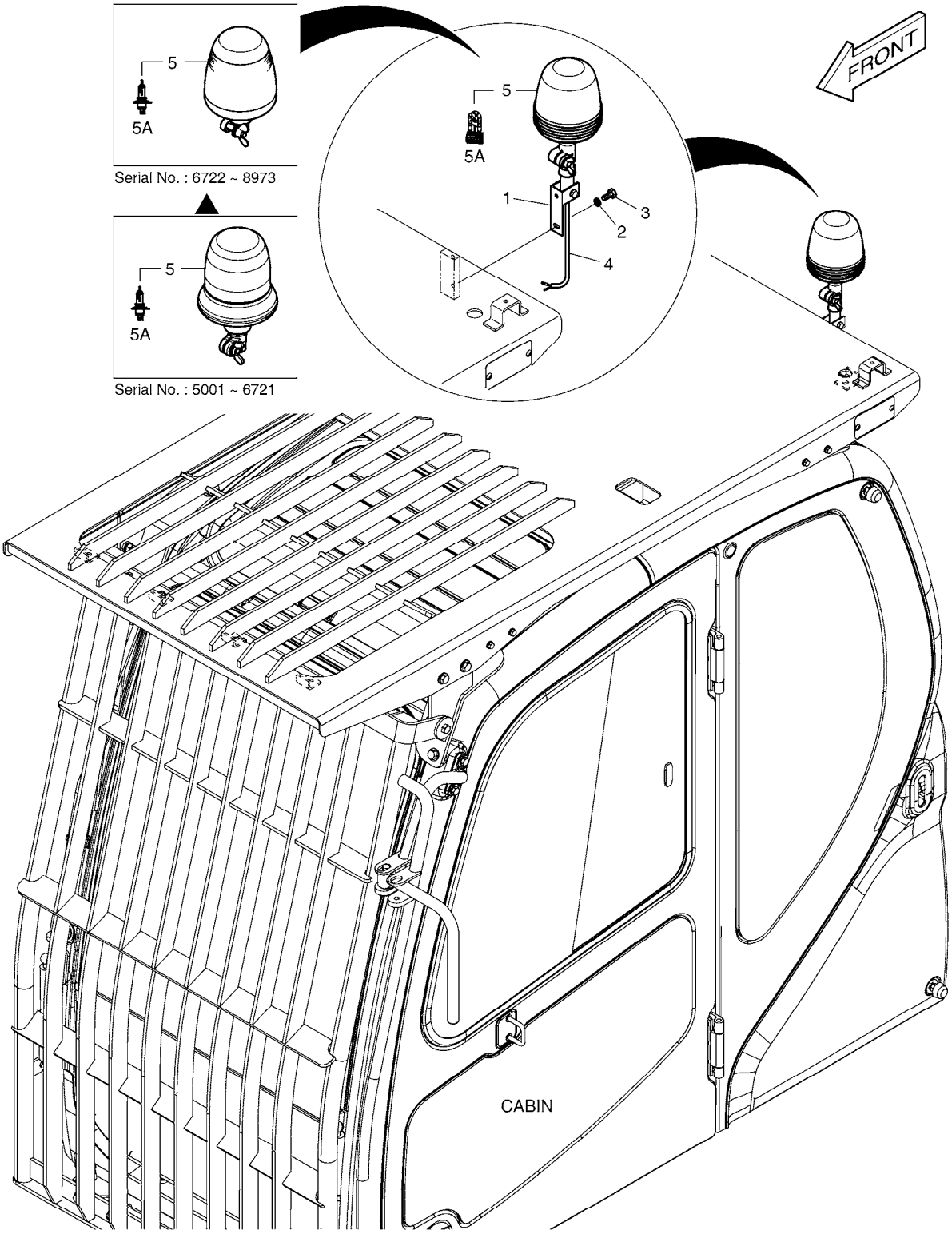

DATE	SEP. 12, 2012
4th EDITION	

Fig. 7160 ROTATING BEACON-WITH FOGS FEU DE CIRCULATION

Serial No. ;

Key No.	Part No.	Description	Description	Q'ty	S.C	Serial No.	ICA	Replaceable part	
								Part No.	Q'ty
7160 --	K1006803A	ROTATING BEACON	FEU DE CIRCULATION	-	D	5001-6721			
	300705-00014A	BEACON ASSY,ROTATING;6 LAM	FEU DE CIRCULATION	-	D	6722-8973			
	300705-00014B	BEACON ASSY,ROTATING	FEU DE CIRCULATION	-	D	8974-			
1	160-00061	BUSH;MOUNTING	DOUILLE	1		5001-6721	I	131002-00085	1
	131002-00085	BUSHING ASS'Y	DOUILLE	1		6722-			
2	S5102503	WASHER,SPRING	RONDELLE	2					
3	S0508853	BOLT	BOULON	2					
4	530-00464	HARNESS;ROTATING BEACON	HARNAIS	1					
5	K1038193	BEACON;ROTATING	FEU DE CIRCULATION	1		5001-6721	I	534-00062	1
	534-00062	LAMP;ROTATING BEACON	LAMPE	1		6722-8973	I	300705-00037	1
	300705-00037	LAMP;ROTATING BEACON	LAMPE	1		8974-			
5A	K9007240	. BULB;HALOGEN 24V 70W	. AMPOULE	1		5001-6721			
	515-00013	. BULB;HALOGEN 24V 70W	. AMPOULE	1		6722-8973			
	300710-00023	. BULB;STROBE	. AMPOULE	1		8974-			

DATE	SEP. 12, 2012
4th EDITION	

Fig. 7170 SIDE DOOR - L.H (TROPICAL) ENSEMBLE DE PORTE

Serial No. ;

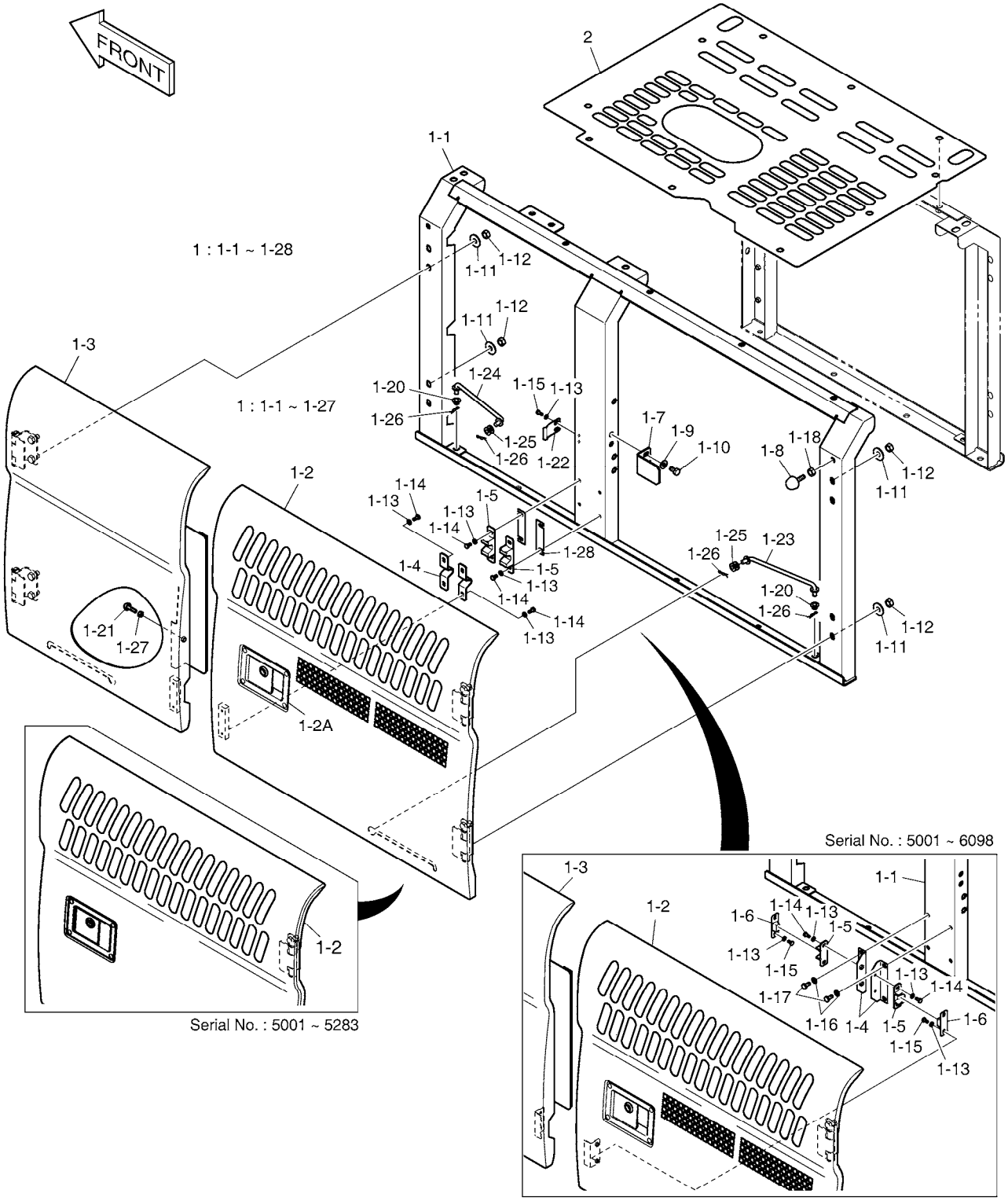

DATE	SEP. 12, 2012
4th EDITION	

Fig. 7170 SIDE DOOR - L.H (TROPICAL) ENSEMBLE DE PORTE

Serial No. ;

Key No.	Part No.	Description	Description	Q'ty	S.C	Serial No.	ICA	Replaceable part	
								Part No.	Q'ty
7170 --	K1046175A	COVER;TROPICAL	COUVERCLE	-	D	5001-5283			
	K1052773	COVER;TROPICAL	COUVERCLE	-	D	5284-			
1	K1046174A	DOOR ASS'Y;SIDE(L.H)	ENSEMBLE PORTE	1		5001-5283	I	K1052774	1
	K1052774	DOOR ASS'Y;SIDE(L.H)	ENSEMBLE PORTE	1		5284-6098	I	110982-00132	1
	110982-00132	DOOR ASSY,SIDE(L.H)	ENSEMBLE DE PORTE	1		6099-6669	I	110982-00132A	1
	110982-00132A	DOOR ASSY,SIDE;TROPICAL(L.H	ENSEMBLE DE PORTE	1		6670-			
1-1	K1038917B	. SUPPORT(L.H)	. SUPPORT	1		5001-6098			
	110958-00230	. SUPPORT	. SUPPORT	1		6099-			
1-2	K1045433	. DOOR;SIDE	. PORTE	1		5001-5283	I	K1052775	1
	K1052775	. DOOR;SIDE	. PORTE	1		5284-6098			
	110982-00133	. DOOR,SIDE	. PORTE	1		6099-			
1-2A	125-00034A	.. LOCK	.. SERRURE	1					
1-3	K1038919B	. DOOR(L.H)	. DIODE	1		5001-6098			
	110982-00131	. DOOR,SIDE(L.H)	. PORTE	1		6099-			
1-4	2116-1522	. PLATE	. PLAQUE	2		5001-6098			
	250201-00028	. PLATE;STOPPER	. PLAQUE	2		6099-			
1-5	2161-9052	. STOPPER;PLATE	. ARRET	2		5001-6098			
	110956-00002	. STOPPER,RUBBER	. TAQUET	2		6099-6669	I	110956-00002A	2
	110956-00002A	. STOPPER,RUBBER	. TAQUET	2		6670-			
1-6	2161-9053	. STOPPER;RUBBER	. ARRET	2		5001-6098			
1-7	K1038920	. PLATE;LOCK	. PLAQUE	1					
1-8	K1001260A	. STOPPER;RUBBER	. TAQUET	1					
1-9	2114-1058D45	. WASHER	. RONDELLE	2					
1-10	S0511853	. BOLT	. BOULON	2					
1-11	2114-1058D30	. WASHER;PLAIN	. RONDELLE	8					
1-12	S4012733	. NUT	. ECROU	8					
1-13	S5010313	. WASHER	. RONDELLE	10					
1-14	S0504553	. BOLT M6X1.0X14	. BOULON	4		5001-6098			
	S0504553	. BOLT M6X1.0X14	. BOULON	8		6099-			
1-15	S0504453	. BOLT M6X1.0X12	. BOULON	6		5001-6098			
	S0504453	. BOLT M6X1.0X12	. BOULON	2		6099-			
1-16	S5010513	. WASHER,PLAIN	. RONDELLE	4		5001-6098			
1-17	S0508753	. BOLT M8X1.25X18	. BOULON A 6 PANS	4		5001-6098			
1-18	S4012633	. NUT	. ECROU	3					
1-20	K1000602	. BUSHING	. DOUILLE	2					
1-21	K1048085	. STOPPER;RUBBER	. TAQUET	1					
1-22	K1039869B	. PLATE;LOCK	. PLAQUE	1					
1-23	623-00074B	. STAY	. SEJOUR	1					

DATE	SEP. 12, 2012
4th EDITION	

Fig. 7170 SIDE DOOR - L.H (TROPICAL) ENSEMBLE DE PORTE

Serial No. ;

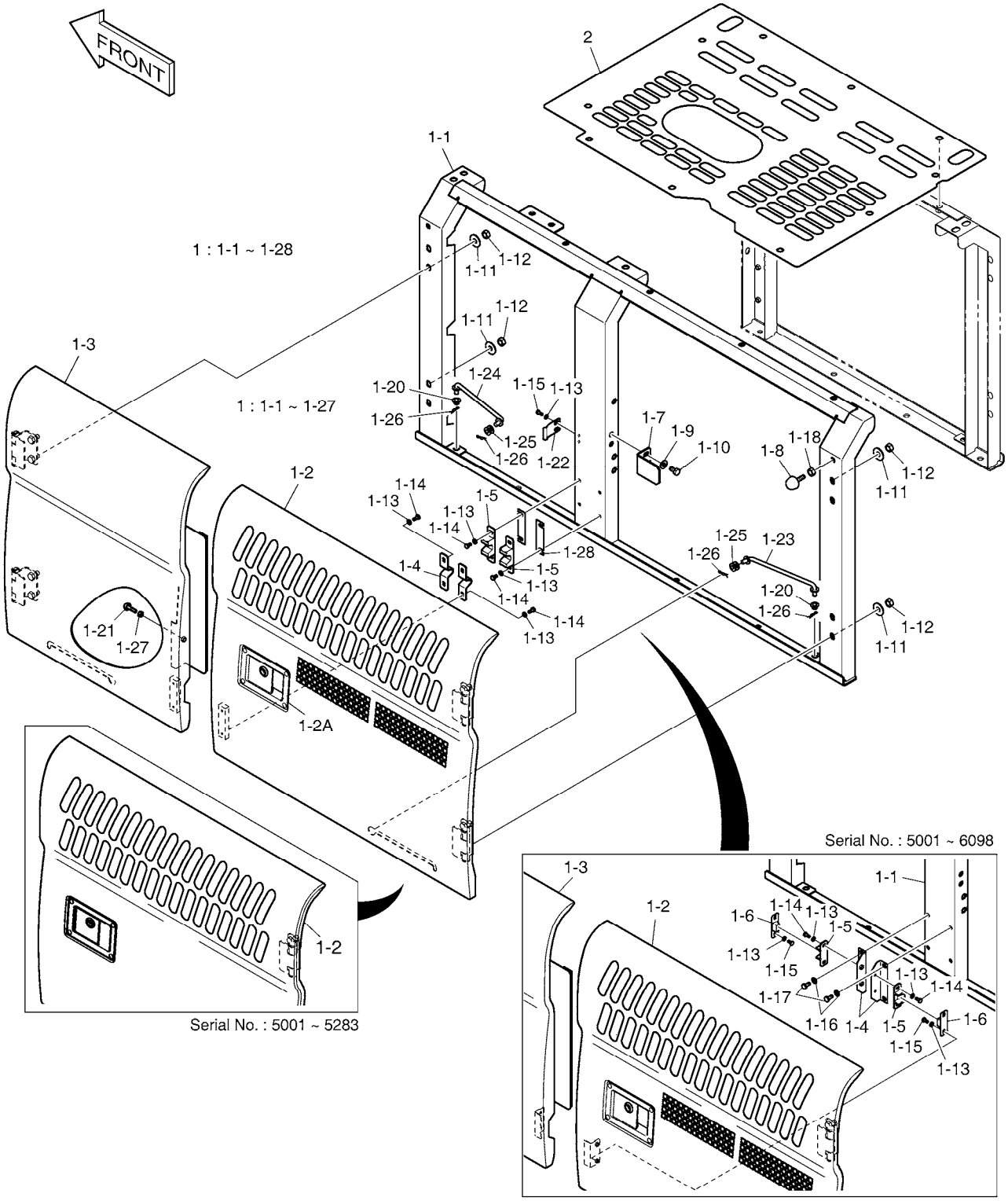

DATE	SEP. 12, 2012
4th EDITION	

Fig. 7170 SIDE DOOR - L.H (TROPICAL)
ENSEMBLE DE PORTE

Serial No. ;

Key No.	Part No.	Description	Description	Q'ty	S.C	Serial No.	ICA	Replaceable part	
								Part No.	Q'ty
7170 -1-24	623-00075B	. STAY	. SEJOUR	1					
1-25	K1008335	. BUSHING	. DOUILLE	2					
1-26	2705-9002	. PIN;LOCK	. GOUPILLE	4					
1-27	S4012533	. NUT	. ECROU	1					
1-28	110947-00027	. SHIM	. CALE	2		6099-			
2	K1052808	COVER;MUFFLER	COUVERCLE	1		5230-			

DATE	SEP. 12, 2012
4th EDITION	

Fig. 7180 TROPICAL PARTS
PIECES TROPICALES

Serial No. ;

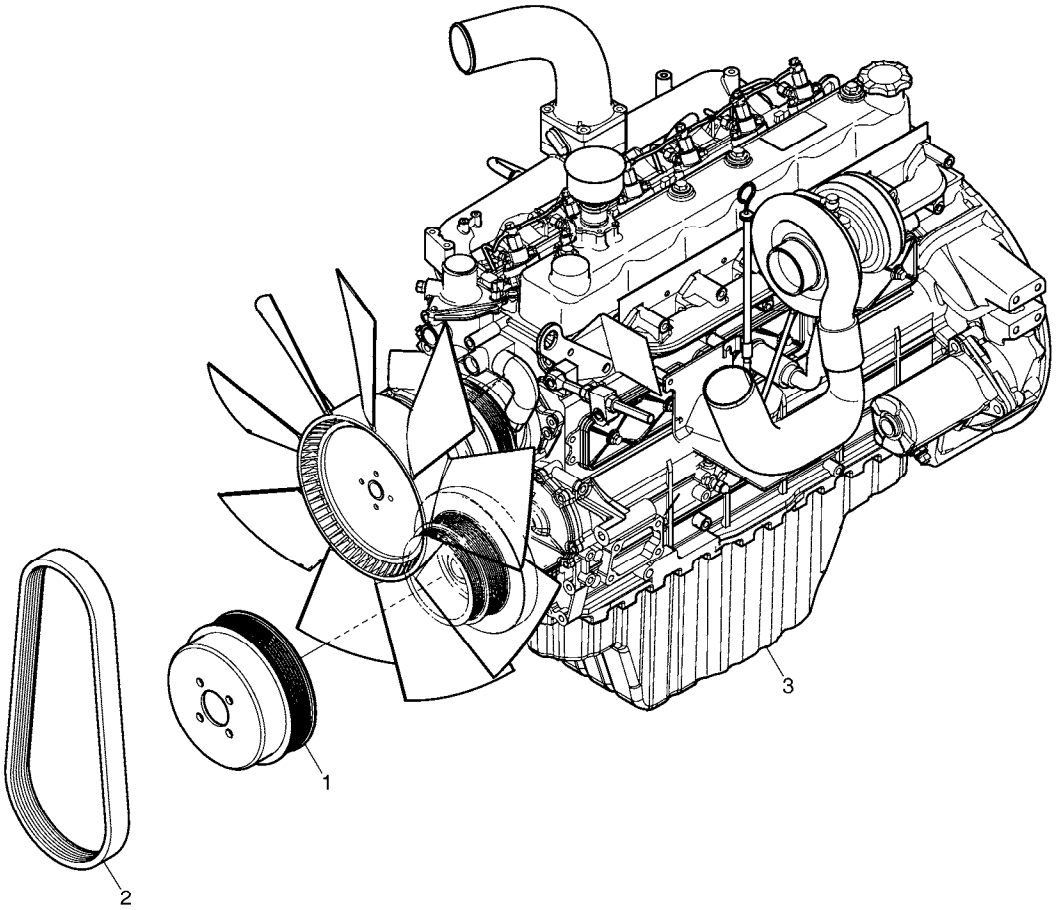

DATE	SEP. 12, 2012
4th EDITION	

Fig. 7180 TROPICAL PARTS PIECES TROPICALES

Serial No. ;

Key No.	Part No.	Description	Description	Q'ty	S.C	Serial No.	ICA	Replaceable part	
								Part No.	Q'ty
7180 --	K1052091A	TROPICAL PARTS	PIECES TROPICALES	-	D	5001-5571			
	150109-00016	ENGINE ASSY;TROPICAL	PIECES TROPICALES	-	D	5572-			
1	107-00005	PULLEY;BELT	POULIE	1		5001-5229			
	K1052729	PULLEY;BELT	POULIE	1		5230-			
2	2106-1019D18	V-BELT;ALTERNATOR	COURROIE-V	1		5001-5229			
	65.96801-0194	BELT;FAN	COURROIE	1		5230-			
3	ECOEN	ENGINE ASS'Y;TIER-2(TROPICAI	ENSEMBLE MOTEUR	1		5572-			

DATE	SEP. 12, 2012
4th EDITION	

Fig. 7190 ACOUSTIC FOAM - NOISE KIT
MOUSSE ACOUSTIQUE - KIT DE BRUIT

Serial No. ;

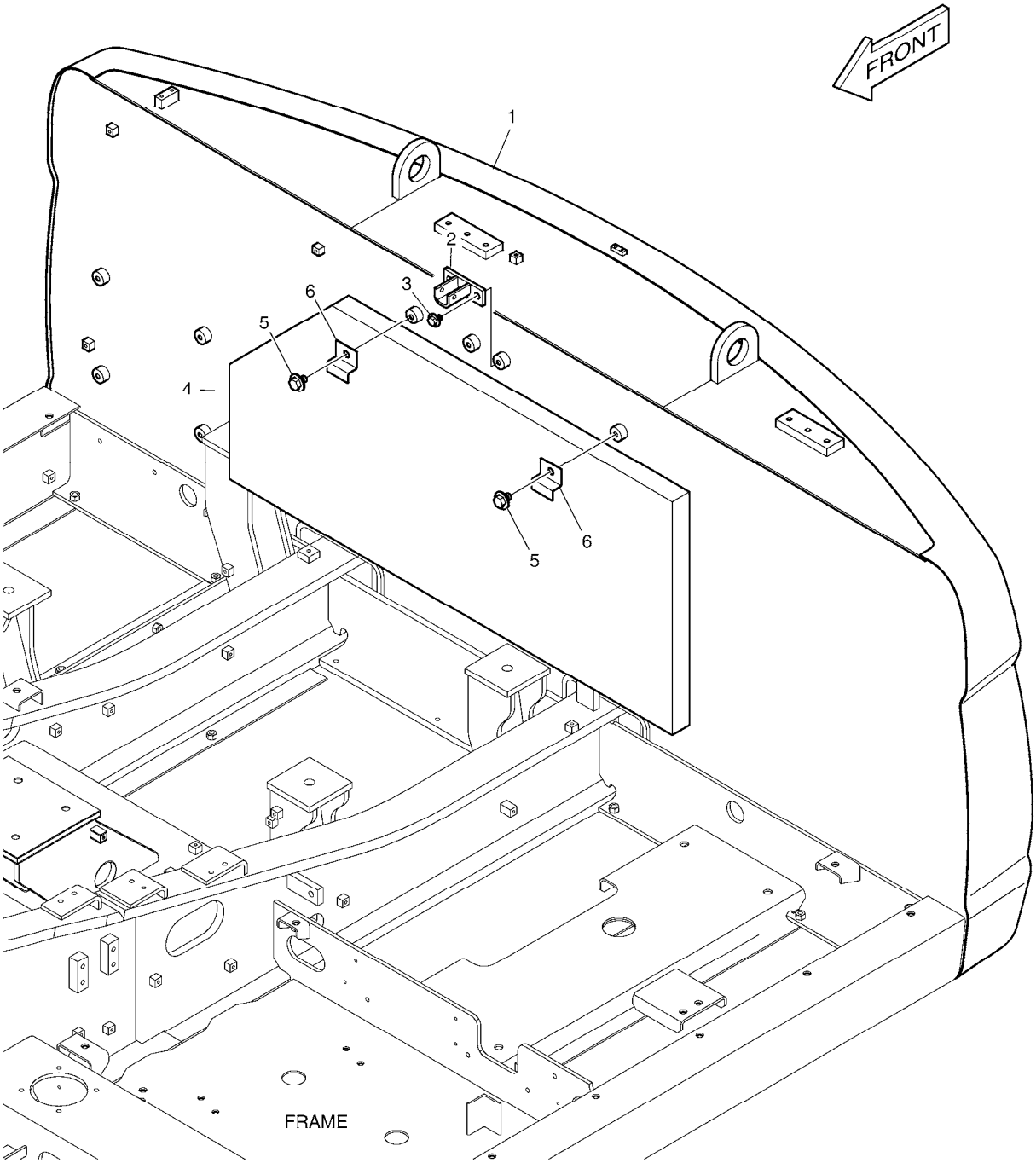

DATE	SEP. 12, 2012
4th EDITION	

Fig. 7190 ACOUSTIC FOAM - NOISE KIT
MOUSSE ACOUSTIQUE - KIT DE BRUIT

Serial No. ;

Key No.	Part No.	Description	Description	Q'ty	S.C	Serial No.	ICA	Replaceable part	
								Part No.	Q'ty
7190 --	K1045676A	COUNTER WEIGHT ASS'Y	MASSE D'EQUILIBRAGE	1		5001-5284	I	K1045676B	1
	K1045676B	COUNTER WEIGHT ASS'Y	MASSE D'EQUILIBRAGE	1		5285-5950	Y	160702-00049	1
	160702-00049	WEIGHT ASSY,COUNTER;4.1ton I	MASSE D'EQUILIBRAGE	1		5951-			
1	K1039183C	COUNTER WEIGHT;4.1ton	MASSE D'EQUILIBRAGE	1		5001-5284	I	K1039183E	1
	K1039183E	COUNTER WEIGHT;4.1ton	MASSE D'EQUILIBRAGE	1		5285-5950	Y	160702-00046	1
	160702-00046	WEIGHT,COUNTER;4.1ton	MASSE D'EQUILIBRAGE	1		5951-			
2	K1002454B	BRACKET	SUPPORT	1					
3	DS0025015	BOLT;SET	BOULON	2					
4	K1011304	FOAM	EPONGE	1					
5	DS0025022	BOLT;SET	BOULON	2					
6	621-01572	PLATE	PLAQUE	2					

DATE	SEP. 12, 2012
4th EDITION	

Fig. 7200 PATTERN CHANGE PIPING(1)
TUYAUTERIE DE CHANGEMENT DE MODELE

Serial No. ;

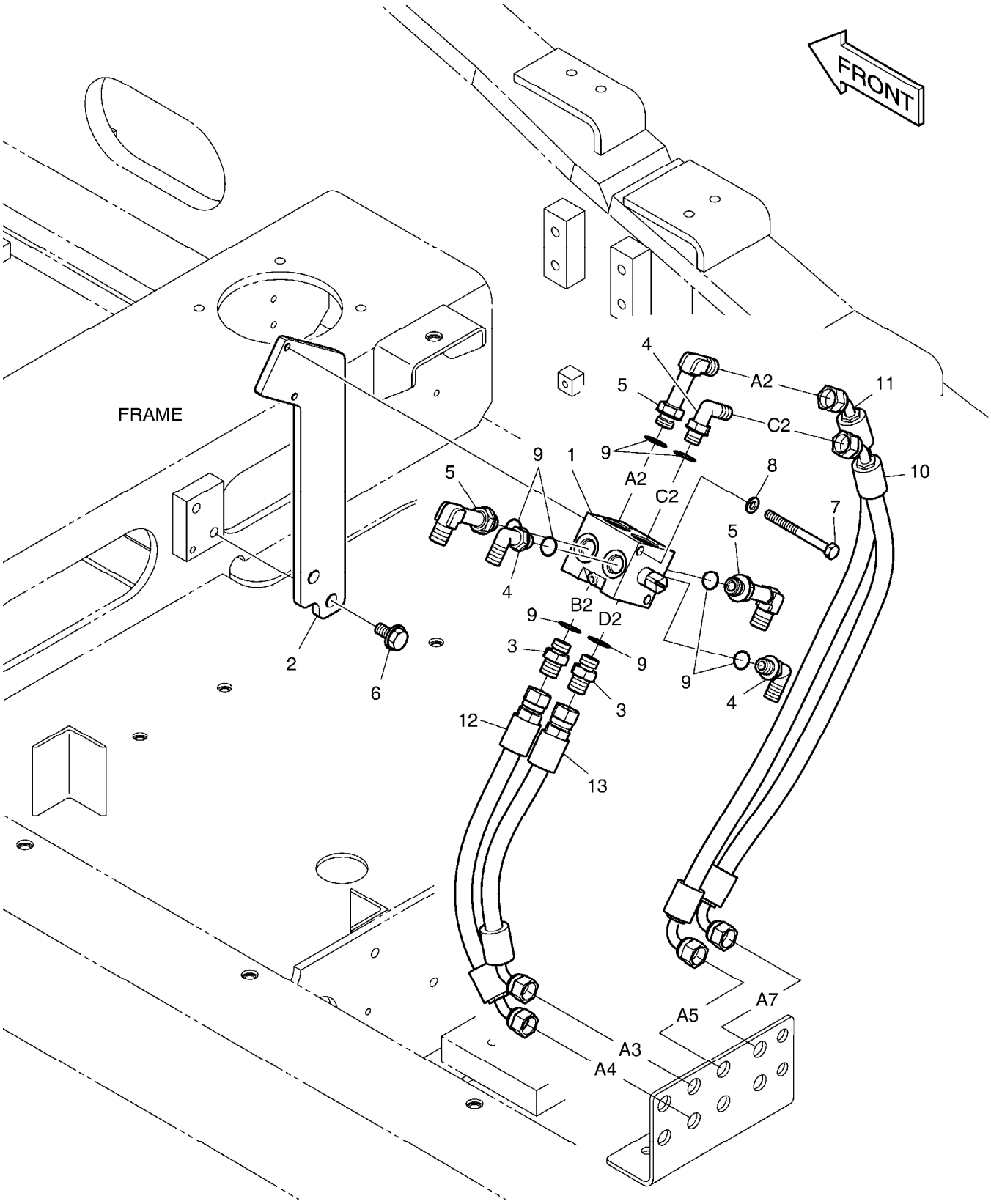

DATE	SEP. 12, 2012
4th EDITION	

Fig. 7200 PATTERN CHANGE PIPING(1)
TUYAUTERIE DE CHANGEMENT DE MODELE

Serial No. ;

Key No.	Part No.	Description	Description	Q'ty	S.C	Serial No.	ICA	Replaceable part	
								Part No.	Q'ty
7200 --	420212-07077	PIPING,PILOT;PATTERN CHANG	TUYAUTERIE DE CHANGEI	-	D				
1	K1014874	VALVE;SELECTOR	VANNE	1					
2	K1015780	BRACKET	SUPPORT	1					
3	2181-1126D7	ADAPTER	ADAPTEUR	2					
4	2181-1702D5	ELBOW	COUDE	3					
5	2181-1702D51	ELBOW	COUDE	3					
6	DS0025018	BOLT;SET	BOULON	2					
7	S0557066	BOLT	BOULON A 6 PANS	2					
8	S5102503	WASHER,SPRING	RONDELLE	2					
9	S8000141	O-RING	JOINT TORIQUE	8					
10	DS2090019	HOSE	TUYAU FLEXIBLE	1					
11	DS2090022	HOSE	TUYAU FLEXIBLE	1					
12	DS2092080	HOSE	TUYAU FLEXIBLE	1					
13	DS2095031	HOSE	TUYAU FLEXIBLE	1					

DATE	SEP. 12, 2012
4th EDITION	

Fig. 7210 PATTERN CHANGE PIPING(2)
TUYAUTERIE DE CHANGEMENT DE MODELE

Serial No. ;

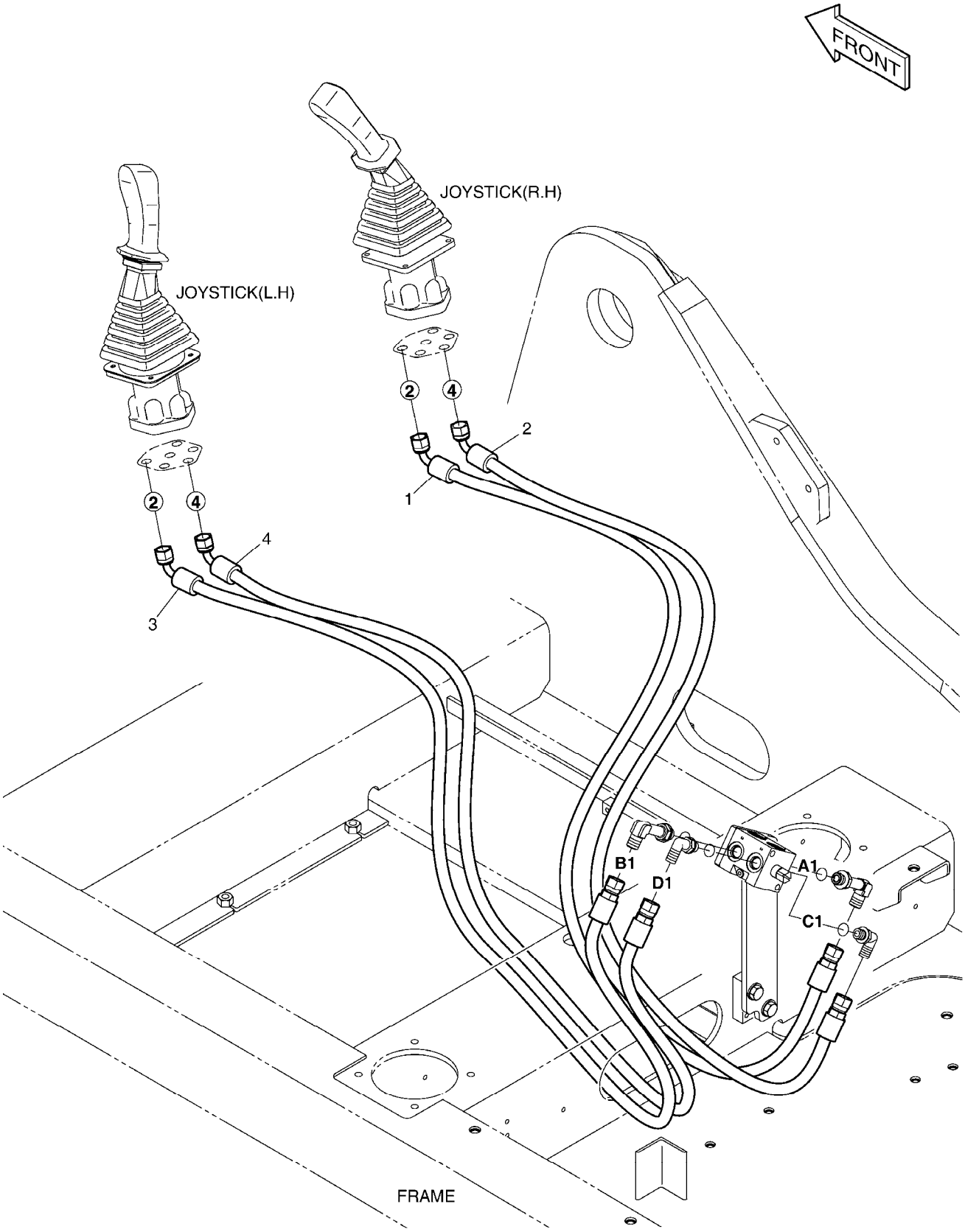

DATE	SEP. 12, 2012
4th EDITION	

Fig. 7210 PATTERN CHANGE PIPING(2)
TUYAUTERIE DE CHANGEMENT DE MODELE

Serial No. ;

Key No.	Part No.	Description	Description	Q'ty	S.C	Serial No.	ICA	Replaceable part	
								Part No.	Q'ty
7210 --	420212-07078	PIPING,PILOT;PATTERN CHANG	TUYAUTERIE DE CHANGEI	-	D				
1	DS2095029	HOSE	TUYAU FLEXIBLE	1					
2	DS2095029	HOSE	TUYAU FLEXIBLE	1					
3	DS2095030	HOSE PF3/8-1970L	TUYAU FLEXIBLE	1					
4	DS2095030	HOSE PF3/8-1970L	TUYAU FLEXIBLE	1					

DATE	SEP. 12, 2012
4th EDITION	

Fig. 7220 COUNTER WEIGHT - 3.8TON(NOISE KIT - DX220A) MASSE D'EQUILIBRAGE

Serial No. ;

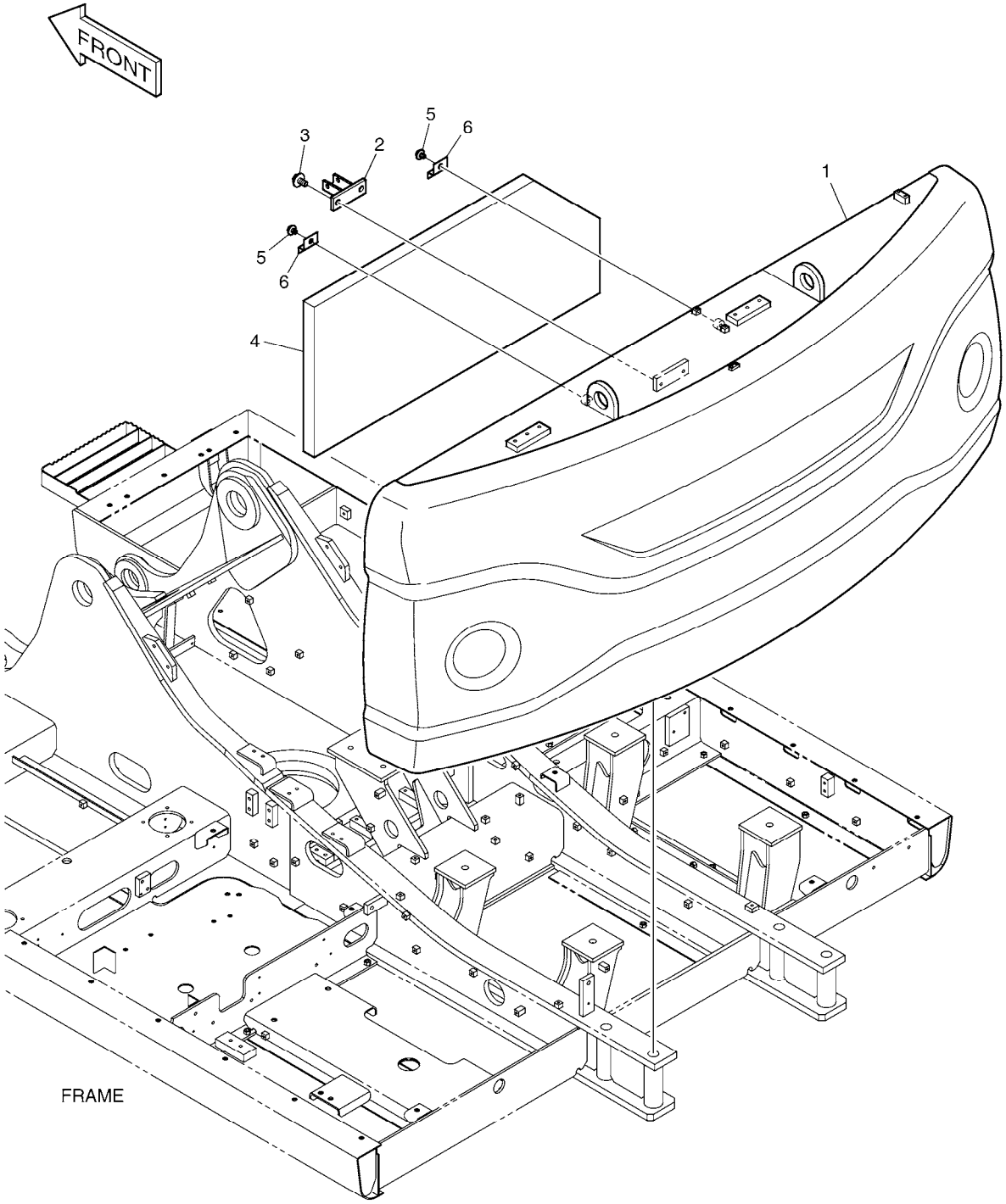

DATE	SEP. 12, 2012
4th EDITION	

Fig. 7220 COUNTER WEIGHT - 3.8TON(NOISE KIT - DX220A) MASSE D'EQUILIBRAGE

Serial No. ;

Key No.	Part No.	Description	Description	Q'ty	S.C	Serial No.	ICA	Replaceable part	
								Part No.	Q'ty
7220 --	160702-00629	WEIGHT ASSY,COUNTER;3.8TON	MASSE D'EQUILIBRAGE	1					
1	-	WEIGHT,COUNTER;3.8TON	MASSE D'EQUILIBRAGE	1	D				
2	K1002454B	BRACKET	SUPPORT	1					
3	DS0025015	BOLT;SET	BOULON	2					
4	K1011304	FOAM	EPONGE	1					
5	DS0025022	BOLT;SET	BOULON	2					
6	621-01572	PLATE	PLAQUE	2					

DATE	SEP. 12, 2012
4th EDITION	

Fig. 7230 ALTERNATOR - 50A
ALTERNATEUR

Serial No. ;

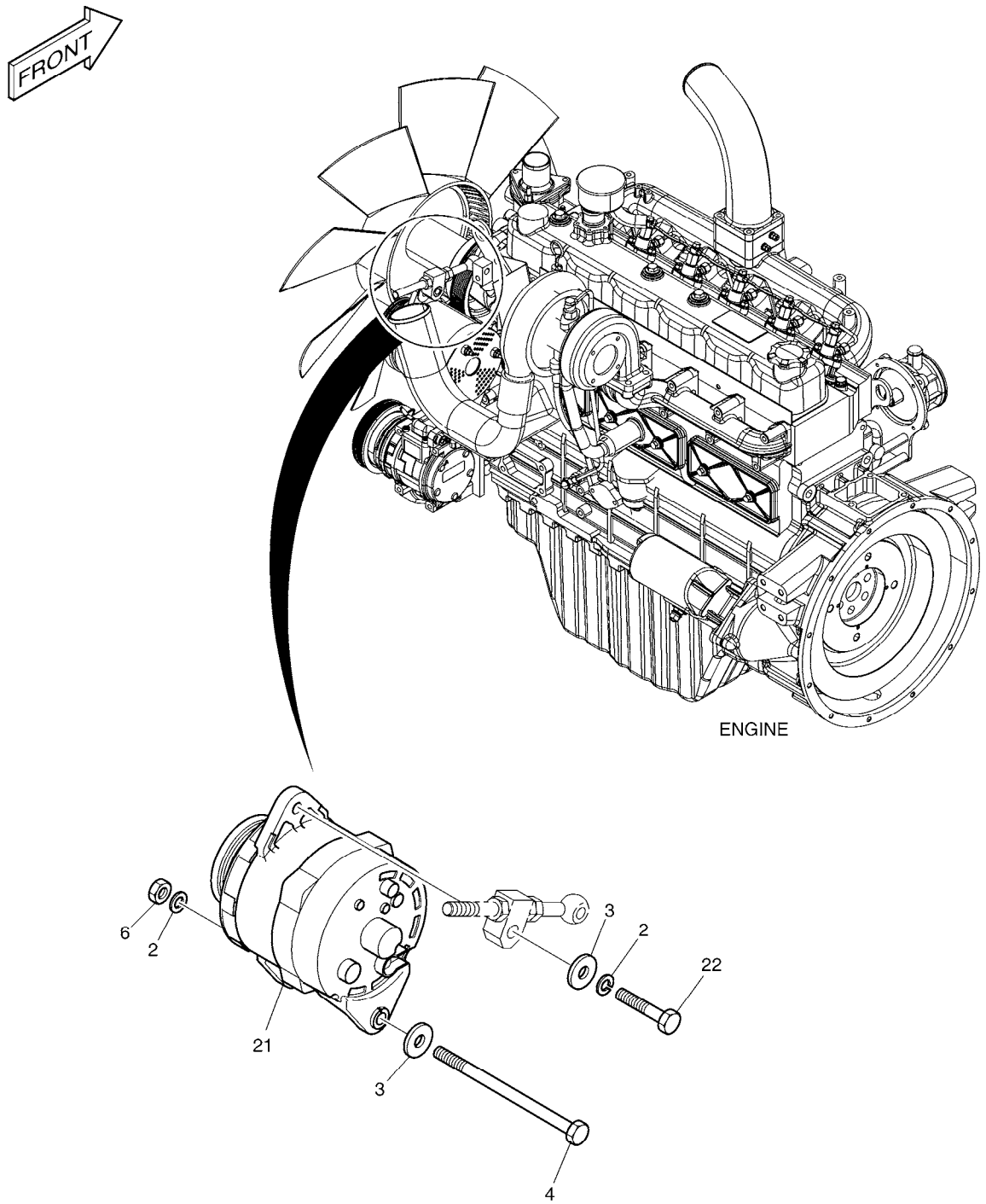

DATE	SEP. 12, 2012
4th EDITION	

Fig. 7230 ALTERNATOR - 50A ALTERNATEUR

Serial No. ;

Key No.	Part No.	Description	Description	Q'ty	S.C	Serial No.	ICA	Replaceable part	
								Part No.	Q'ty
7230 --	300619-01896	ALTERNATOR ASSY;50A	ALTERNATEUR	-	D				
2	S5102703	WASHER;SPRING	RONDELLE	2					
3	DS0401188	WASHER	RONDELLE	2					
4	S0562666	BOLT M12X1.75X160	BOULON	1					
6	S4012733	NUT	ECROU	1					
21	2502-9009	ALTERNATOR 50A	ALTERNATEUR	1					
22	S0786653	BOLT	BOULON A 6 PANS	1					

DATE	SEP. 12, 2012
4th EDITION	

Fig. 7240 ALTERNATOR ALTERNATEUR

Serial No. ;

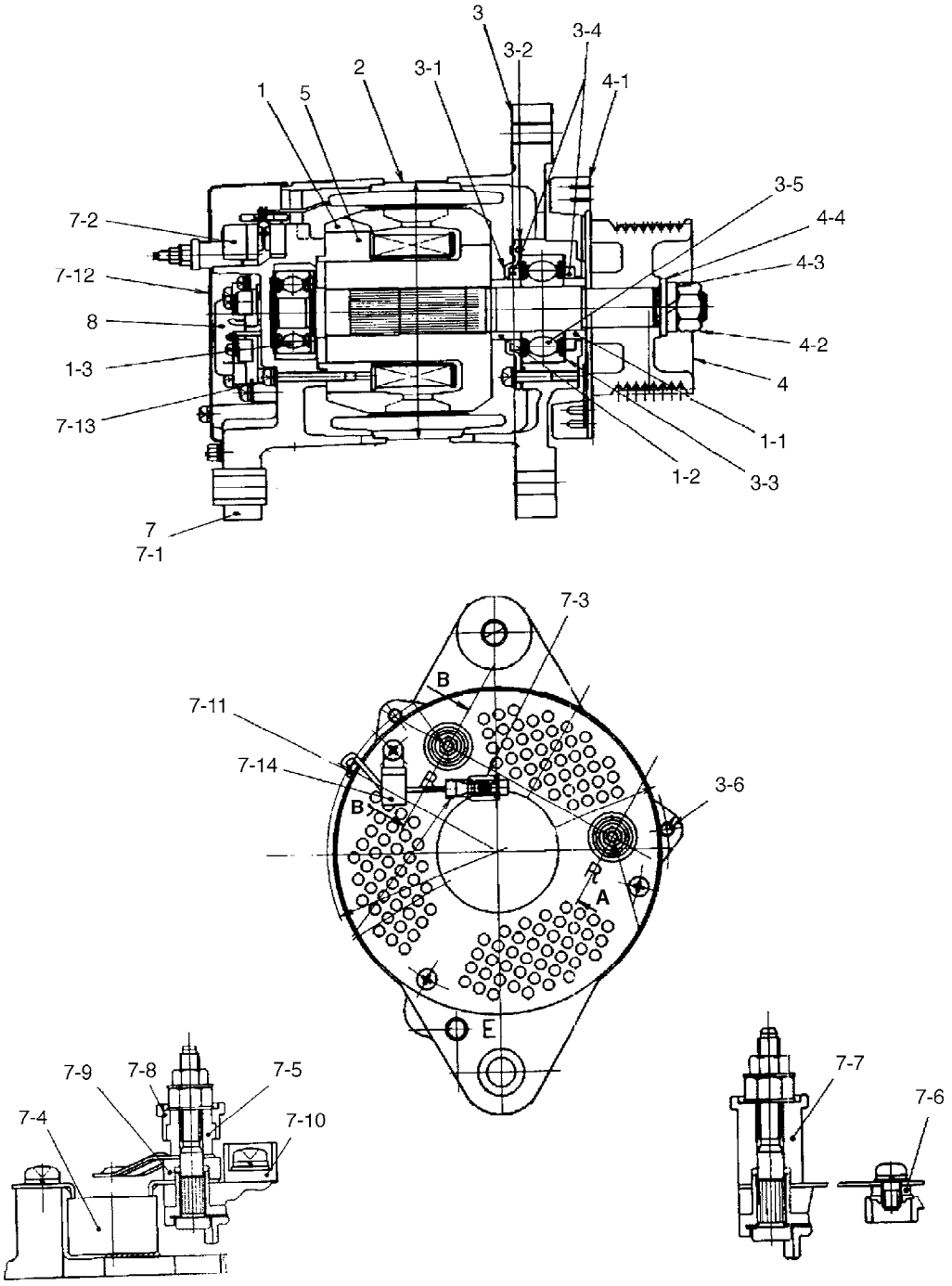

DATE	SEP. 12, 2012
4th EDITION	

Fig. 7240 ALTERNATOR ALTERNATEUR

Serial No. ;

Key No.	Part No.	Description	Description	Q'ty	S.C	Serial No.	ICA	Replaceable part	
								Part No.	Q'ty
7240 --	2502-9009	ALTERNATOR 50A	ALTERNATEUR	1					
1	0-35100-0300	ROTOR ASS`Y	ROTOR	1					
1-1	1-33923-0790	. COLLAR	. BRIDE	1					
1-2	0-35923-0160	. COLLAR	. BAGUE	1					
1-3	0-09201-0980	. BEARING;BALL	. PALIER	1					
2	0-35200-0440	STATOR ASS`Y	STATOR	1					
3	0-35300-0310	F. BRACKET ASS`Y	SUPPORT	1					
3-1	0-35926-0070	. RETAINER	. BAGUE DE SOUTIEN	1					
3-2	0-35926-0090	. RETAINER	. BAGUE DE SOUTIEN	1					
3-3	1-33926-0730	. RETAINER	. BAGUE	1					
3-4	0-35951-0060	. PACKING	. JOINT	2					
3-5	0-09201-1140	. BEARING;BALL	. PALIER	1					
3-6	0-0275-06802	. BOLT	. BOULON A 6 PANS	3					
4	0-35411-0870	PULLEY	POULIE	1					
4-1	0-35421-0170	. FAN	. VENTILATEUR	1					
4-2	0-0280-16022	. NUT	. ECROU	1					
4-3	1-0335-16002	. WASHER;SPRING	. RONDELLE	1					
4-4	1-0330-16012	. WASHER;PLAIN	. RONDELLE	1					
5	0-35120-0230	COIL;FIELD	ENROULEMENT	1					
7	0-35700-0890	R. BRACKET ASS`Y	SUPPORT	1					
7-1	0-35710-1090	. BRACKET;REAR	. SUPPORT	1					
7-2	0-35730-0510	. RECTIFIER ASS`Y	. RECTIFIER	1					
7-3	0-35780-0750	. TERMINAL ASS`Y	. COSSE	1					
7-4	0-09170-2501	. CONDENSER	. CONDENSEUR	1					
7-5	0-35923-0130	. COLLAR	. BAGUE	1					
7-6	0-35923-0200	. COLLAR	. BAGUE	1					
7-7	0-35943-0140	. BUSH;INSULATE	. DOUILLE	1					
7-8	0-35943-0150	. BUSH;INSULATE	. DOUILLE	1					
7-9	0-35943-0160	. BUSH;INSULATE	. DOUILLE	1					
7-10	0-35943-0170	. BUSH;INSULATE	. DOUILLE	1					
7-11	1-33953-0150	. BUSH;GUM	. DOUILLE	1					
7-12	0-35761-0250	. COVER	. COUVERCLE	1					
7-13	0-0056-05302	. SCREW	. VIS	3					
7-14	1-33931-0021	. CLIP	. ATTACHE	1					
8	0-35719-0200	REGULATOR ASS`Y	REGULATEUR	1					

DATE	SEP. 12, 2012
4th EDITION	

Fig. 7250 ELECTRIC PARTS - ENGINE(ALTERNATOR - 50A) PIECES ELECTRIQUES

Serial No. ;

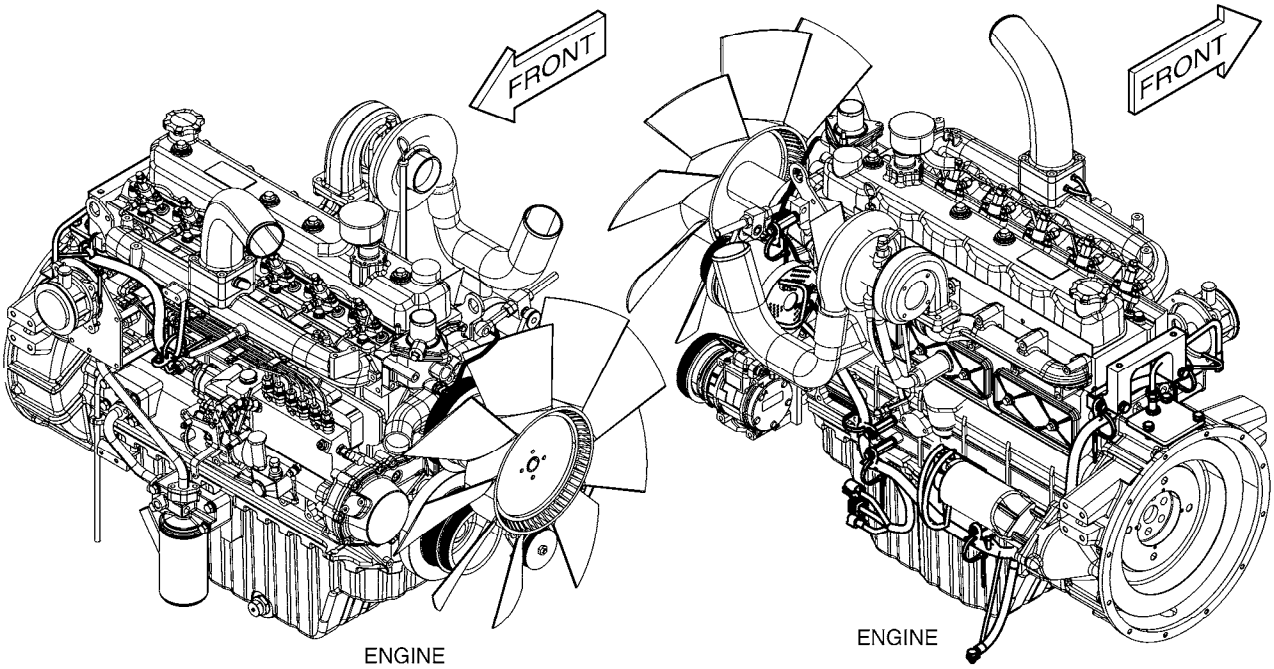

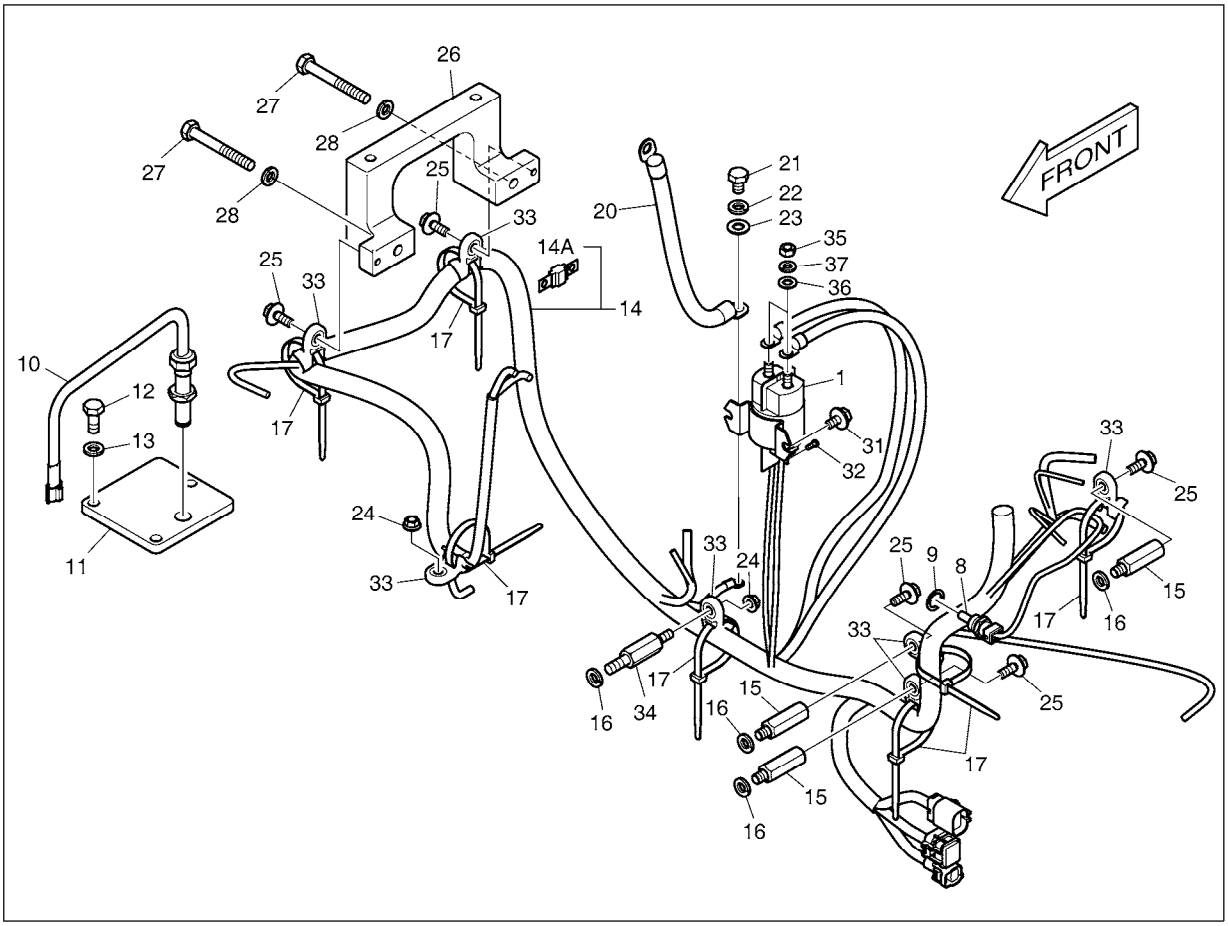

DATE	SEP. 12, 2012
4th EDITION	

Fig. 7250 ELECTRIC PARTS - ENGINE(ALTERNATOR - 50A)
PIECES ELECTRIQUES

Serial No. ;

Key No.	Part No.	Description	Description	Q'ty	S.C	Serial No.	ICA	Replaceable part	
								Part No.	Q'ty
7250 --	300619-01900	ELECTRIC ASSY;ENGINE	PIECES ELECTRIQUES	-	D				
1	301202-00067	RELAY	RELAIS	1					
8	2547-9038B	SENSOR;WATER TEMP	CAPTEUR	1					
9	S8180251	PACKING	RONDELLE D'ETANCHEITE	1					
10	2547-1015	SENSOR;ENG SPEED	CAPTEUR	1					
11	2197-1793	BRACKET;SPEED SENSOR	SUPPORT	1					
12	S0512066	BOLT M10X1.5X25	BOULON	3					
13	S5102603	WASHER,SPRING	RONDELLE	3					
14	310207-02450	HARNESS ASSY,ENGINE	HARNAIS	1					
14A	300803-00086	. FUSE;200A	. FUSIBLE	1					
15	DS0026006	BOLT,STUD	BOULON A 6 PANS	3					
16	S5102603	WASHER,SPRING	RONDELLE	4					
17	310101-00035	TIE,CABLE	CRAVATE	7					
20	553-00001D4	CABLE;E/G EARTH	CABLE	1					
21	S0511653	BOLT	BOULON	1					
22	S5102603	WASHER,SPRING	RONDELLE	1					
23	S5010613	WASHER;PLAIN	RONDELLE	1					
24	2121-1305	NUT	ECROU	2					
25	DS0025049	BOLT	BOULON	5					
26	K1010584	BLOCK	BLOC	1					
27	S0759166	BOLT	BOULON	2					
28	S5102603	WASHER,SPRING	RONDELLE	2					
31	DS0025033	BOLT;SET	BOULON	2					
32	S3450573	SCREW M4X0.7X10	VIS	2					
33	110420-00330	BRACKET	SUPPORT	7					
34	120117-00071	BOLT,STUD	BOULON A 6 PANS	1					
35	S4012533	NUT	ECROU	2					
36	S5010513	WASHER,PLAIN	RONDELLE	2					
37	S5102503	WASHER,SPRING	RONDELLE	2					

Part No.	Fig No.	Key No.	Part No.	Fig No.	Key No.	Part No.	Fig No.	Key No.
0-0056-05302	7240	7-13	06.01913-3114	010	80	06.12172-9314	015	116
0-0275-06802	7240	3-6	06.01913-3115	002	12		016	310
0-0280-16022	7240	4-2		006	404	06.15010-0308	005	204
0-09170-2501	7240	7-4		015	121	06.15010-2311	006	215
0-09201-0980	7240	1-3	06.01913-3119	011	9		010	61
0-09201-1140	7240	3-5	06.01913-3120	002	5		012	9
0-35100-0300	7240	1	06.01913-3122	002	15		014	105
0-35120-0230	7240	5		016	401		014	208
0-35200-0440	7240	2	06.01913-3123	011	10		014	216
0-35300-0310	7240	3	06.01913-3124	016	402	06.15010-2312	016	408
0-35411-0870	7240	4	06.01923-3113	007	17	06.15091-0313	001	18
0-35421-0170	7240	4-1		010	50	06.16044-0211	012	13
0-35700-0890	7240	7	06.01923-3114	007	2	06.16731-2104	005	203
0-35710-1090	7240	7-1		012	6	06.16731-2107	007	5
0-35719-0200	7240	8	06.01923-3115	010	40		008	110
0-35730-0510	7240	7-2	06.01923-3120	008	120		010	62
0-35761-0250	7240	7-12		010	30		012	8
0-35780-0750	7240	7-3	06.01923-3124	014	205		013	207
0-35923-0130	7240	7-5	06.01923-3215	015	205		014	104
0-35923-0160	7240	1-2	06.01923-3222	009	160		014	207
0-35923-0200	7240	7-6	06.01923-3225	009	150		014	215
0-35926-0070	7240	3-1	06.01923-3228	009	140		015	108
0-35926-0090	7240	3-2	06.01943-3213	005	134		016	110
0-35943-0140	7240	7-7		019	5		016	405
0-35943-0150	7240	7-8	06.01943-3217	012	12	06.16731-2108	005	130
0-35943-0160	7240	7-9	06.01943-3218	013	113		013	114
0-35943-0170	7240	7-10		018	3		015	104
0-35951-0060	7240	3-4	06.01943-3222	006	512		016	410
06.01013-9117	008	109	06.01943-3318	019	2		019	7
06.01013-9118	006	214	06.01943-3319	018	14	06.16731-2110	003	8
06.01013-9127	014	213	06.01944-3215	008	122		005	128
06.01013-9130	013	204		018	2	06.16731-2111	004	208
06.01283-7128	016	404	06.01953-3213	016	407	06.22022-3111	002	10
06.01493-4212	013	112	06.01953-3219	009	120		003	10
06.01493-4215	013	111	06.01953-3318	017	7	06.22022-3119	002	4
06.01493-4216	012	11	06.04190-8808	005	202	06.22022-3212	004	105
06.01493-4217	012	10	06.04200-9009	013	110	06.22070-0913	008	113
06.01494-4407	003	5	06.06125-8709	005	118	06.29010-0116	006	213
06.01494-4409	003	6	06.06125-8717	005	117	06.29020-0132	013	105
06.01494-4506	004	207	06.06125-8723	005	123	06.29151-4608	006	402
06.01733-4208	005	131	06.06175-8208	014	103	06.31641-0222	008	116
06.01733-4409	005	129	06.06225-0706	005	116		009	60
06.01733-4410	006	504	06.11024-9202	015	103	06.56017-0303	011	40
06.01913-2911	002	19	06.11063-8214	014	106	06.56021-0102	001	48
06.01913-3110	015	118		014	214		021	4
06.01913-3111	014	221		015	107	06.56021-0106	001	37
06.01913-3113	001	22		016	109		021	1
	001	30	06.11063-9215	016	409	06.56180-0712	016	509
	002	6	06.11063-9217	003	9		020	13
	008	117		018	13		021	30

Part No.	Fig No.	Key No.
06.56180-0714	015	115
	016	307
	016	311
06.56180-0716	017	6
06.56190-0704	001	16
	015	113
06.56190-0706	001	39
06.56190-0709	009	50
	015	112
06.56190-0713	001	45
06.56190-0719	007	23
06.56190-0732	011	4
06.67020-0101	007	19
	007	21
	016	304
06.67020-0105	007	10
06.67020-0106	012	20
	015	123
06.67020-0109	015	203
06.78144-2204	016	503
	016	505
06.78144-2403	015	111
1-0330-16012	7240	4-4
1-0335-16002	7240	4-3
1-33923-0790	7240	1-1
1-33926-0730	7240	3-3
1-33931-0021	7240	7-14
1-33953-0150	7240	7-11
1.109-00026	4150	250
1.109-00124	4100	127
1.109-00134	4130	209
1.110-00068	4300	6
1.110-00169	4200	29
1.114-00009	4130	208
1.114-00012	4200	5
1.114-00286	4130	210
1.115-00032	4300	7
1.115-00171	4110	645
1.115-00204	4230	16
	4240	16
	4310	16
	4320	16
1.115-00366	4110	836
1.120-00219	4230	24
	4240	24
	4250	24
	4260	24
	4280	24
	4290	24
	4300	24

Part No.	Fig No.	Key No.
1.120-00219	4310	24
	4320	24
	4330	24
1.121-00028	4200	23
1.121-00044	4110	630
1.123-00007	4110	874
1.123-00009	4110	887
1.123-00012	4110	875
1.123-00014	4110	876
1.123-00016	4110	897
1.123-00053	4150	242
1.124-00157	4230	38
	4240	38
	4310	35
	4320	35
1.129-00006	4150	30
1.131-00001	4150	66
1.131-00042	4150	261
1.131-00048	4130	211
1.131-00049	4150	213
1.131-00049A	4150	213
1.131-00058	4150	28
1.131-00139	4110	626
1.131-00143	4110	625
1.131-00157	4110	646
1.131-00160	4110	654
1.131-00165	4110	624
1.131-00166	4110	653
1.131-00170	4110	644
1.131-00172	4110	655
1.138-00004	4200	21
1.148-00015	4130	206
1.161-00018	1800	20C
1.161-00019	1800	92C
1.161-00021	4200	25A
1.162-00001	1650	1A
1.178-00004	4200	26
1.180-00117	4300	21
1.180-00144	4160	130
1.180-00277	4230	22
	4240	22
	4310	22
	4320	22
1.180-00278	4260	14
	4280	14
	4290	14
1.180-00415	4300	19
1.180-00447	4220	4A
1.180-00496	4300	11
1.180-00512	4160	102

Part No.	Fig No.	Key No.
1.180-00527	4150	402
1.180-00662	4250	14
	4330	14
1.181-00059	4150	24
1.181-00067	4150	26
1.181-00090	4110	615
1.181-00136	4110	614
1.195-00022	4250	30
	4330	30
1.197-00005	4100	250
1.216-00017	4160	118
1.357-00005	4110	612
1.357-00008	4110	613
1.357-00014	4110	611
1.402-00017	4120	361
1.402-00036	4110	622
1.402-00055	4110	601
1.403-00037	4120	353
1.403-00040	4120	354
1.405-00060	4100	111
1.409-00167	4100	11
1.409-00180	4150	260
1.409-00189	4110	621
1.409-00204	4110	643
1.409-00225	4210	33
1.412-00017	4200	19
1.412-00083	4100	153
1.412-00092	4130	207
1.412-00157	4160	133
1.415-00005	4150	71
1.416-00017	4200	10
1.416-00018	4200	15
1.420-00013	4150	27
1.420-00050	4250	28
	4330	28
1.424-00038	4110	652
1.424-00041	4150	65
1.425-00001	4110	651
1.426-00005	4120	307
1.427-00002	4120	308
1.428-00208	4110	623
1.428-00241A	4270	7
1.430-00017	4110	656
1.430-00212	4100	261
1.451-00060	4100	14
1.451-00063	4100	13
1.471-00001	4150	79
1.471-00001A	4150	79
1.519-00001	4220	3
	6160	1B

Part No.	Fig No.	Key No.	Part No.	Fig No.	Key No.	Part No.	Fig No.	Key No.
1.519-00001	6470	1B	110406-00608	1720	39	110955-00106	6350	2
1.540-00003	4160	106	110406-01141	1731	29	110955-00106B	6350	2
1.540-00006	4150	267	110406-01352	1720	30	110955-00107	6360	2
100201-00158	4100	312	110406-02099	1470	15	110955-00107B	6360	2
100502-00001	4140	20	110420-00330	1731	33		6365	2
100502-00022	4140	51		7250	33	110955-00108	6370	2
100601-00023	1500	49-4	110423-00050	7130	18	110955-00108A	6370	2
100601-00024	1500	49-5	110425-00065	6151	9	110955-00108C	6370	2
101-00006	4100	114	110427-00210	1120	3	110956-00002	1610	3-5
101539-00136	2175	1A	110427-00211	1120	5		1620	2-4
	6365	1-1A	110427-00212	1120	4		7170	1-5
101539-00137	2175	1B	110427-00213	1120	6	110956-00002A	1610	3-5
	6365	1-1B	110502-00025	1590	10		1620	2-4
101540-00012	3110	3	110502-00524	1590	19		7170	1-5
	6570	3	110503-00008A	1630	4-2	110956-00060	4150	C-3
	6640	3	110503-00016A	1630	4	110956-00071	4150	25
	6710	3	110503-00016B	1630	4	110956-00328	1500	53
101540-00028	3110	4	110503-00016C	1630	4	110956-00329	1500	54
	6570	4	110506-00047	1650	1	110958-00014	1590	-
	6640	4	110508-00244	1620	-		1600	-
	6710	4		1630	-	110958-00015	1590	6
101541-00012	6910	2	110508-00675	2100	13	110958-00097	1590	2
104-00047A	4140	25		2105	13	110958-00181	1620	2-1
104-00048	4140	18	110508-00989	4300	5	110958-00181A	1620	2-1
104-00049A	4140	22	110508-01424	2141	6-5	110958-00230	1610	3-1
104-00050	4140	12	110508-04839	1720	37		7170	1-1
105220-649A	016	301A	110508-08802	1640	10	110958-00342	1120	26
107-00005	7180	1	110508-09675	4160	123	110958-01055	1590	6
109-00097	4100	123	110513-00242	2105	12	110958-01083	1120	26
109-00098	4100	124	110517-00364	1460	2	110982-00103	1620	2
109-00162A	2100	2	110517-00370	1460	-	110982-00103A	1620	2
109-00174	4140	8	110910-00038A	1490	121	110982-00103B	1620	2
110-00079	4230	6	110910-00077	1490	122	110982-00103C	1620	2
	4240	6	110910-00265	1460	39	110982-00128	1620	2-2
	4310	6	110911-00126	1200	5	110982-00128A	1620	2-2
	4320	6	110917-00013	2150	7-2	110982-00129	1610	3
110-00081	4250	6	110917-00014	2150	7-3	110982-00129A	1610	3
	4330	6	110921-01181	6340	-	110982-00129B	1610	3
110-00097	4260	6	110921-01181A	6340	-	110982-00130	1610	3-2
	4280	6	110921-01182	6340	1	110982-00130A	1610	3-2
	4290	6	110921-01182A	6340	1	110982-00131	1610	3-3
110-00219	4140	13	110925-00007	1550	1		7170	1-3
110-00242	6910	1B	110935-00069	1530	1	110982-00132	7170	1
110-00243	6910	1C	110935-00083	6310	1	110982-00132A	7170	1
110-00245	6910	2A	110935-00084	6320	1	110982-00133	7170	1-2
110-00249	3110	2A	110935-00085	6330	1	111601-00117	4150	261
	6570	2A	110947-00027	1610	3-28	111601-00354	4150	66
	6640	2A		1620	2-22	114-00228	4100	158
	6710	2A		7170	1-28	114-00411	4190	40
110406-00039	1240	8	110951-00128	6151	33	114-00413	4190	53

Part No.	Fig No.	Key No.
114-00414	4170	57
114-00425	1200	16
	1220	19
	1270	36
	1271	36
114-00527	4140	21
114-00529	1640	34
114-00548	4140	17
114-00590	1420	13
115-00042	4210	19
115-00043	4120	700
115-00050	4230	7
	4240	7
	4310	7
	4320	7
115-00051	4230	12
	4240	12
	4310	12
	4320	12
115-00052	4300	12
115-00055	4260	19
	4280	19
	4290	19
115-00059	4230	11
	4240	11
	4310	11
	4320	11
115-00063	4260	12
	4280	12
	4290	12
115-00073	4250	7
	4330	7
115-00077	4250	11
	4330	11
115-00078	4250	12
	4330	12
115-00079	4250	19
	4330	19
115-00081	4250	26
	4330	26
115-00084	4260	11
	4280	11
	4290	11
115-00087	4230	19
	4240	19
	4310	19
	4320	19
116-00089B	1500	53
116-00090B	1500	54
116-00092A	1520	32-28D

Part No.	Fig No.	Key No.
119-00014AD1	1200	6
119-00025B	1220	13
120-00050B	2110	21
	2115	21
120-00130	4100	954
120-00131	4120	311
120-00144	4140	32
120-00199	4110	925
120-00276	1190	9
120-00317	1240	29
120107-00002	4140	24
120117-00071	1731	34
	7250	34
120312-00134	2175	3
	6365	1-3
120501-00009	4140	23
120501-00130	3110	11
	6570	11
	6640	11
	6710	11
120501-01041	6910	8
120501-01042	6910	9
120501-01052	3110	10
	6570	10
	6640	10
	6710	10
120501-01061	3100	3
	6830	3
	6900	3
120501-01062	3100	6
	6830	6
	6900	6
120501-01063	3110	7
	6570	7
	6640	7
	6710	7
	6910	6
120501-01064	3110	8
	6570	8
	6640	8
	6710	8
120501-01065	3110	9
	6570	9
	6640	9
	6710	9
120501-01066	6910	7
120501-01341	2175	1F
	6365	1-1F
120501-01370	2170	1F
	6350	1-1F

Part No.	Fig No.	Key No.
120501-01370	6360	1-1F
	6370	1-1F
120501-01812	3100	2
	6830	2
	6900	2
120810-00084	2141	6-7
120810-00145	1260	33
120811-00001	4140	31
120816-00001	4140	33
121-00006	1190	6
	3140	18-5
	6850	17-5
	6980	13-5
121-00010D1	1340	177-3
	6150	51-3
	6151	51-3
	6200	22
	6220	8
	6380	5-6
	6390	5-7
	6440	20
	6870	8
	6890	15
	6990	18
121-00010D3	1190	1E
121-00010D7	6150	51-9
	6151	51-9
	6220	13
	6390	5-8
	6870	13
121-00010D8	6450	44
	6690	44
	6760	44
121-00038	4120	312
121-00085	6100	1E
123-00150	4100	530
123-00151	4100	885
123-00409A	3100	3
	6830	3
	6900	3
123-00435A	4140	23
123-00516B	1560	2
	6260	6
123-00523	1490	66
	1560	7
	6260	5
123-00524B	1420	2
124-00010	1520	32-35
124-00052	4250	33
	4330	33

Part No.	Fig No.	Key No.
124-00070	1660	11
124-00088	4230	27
	4240	27
	4310	27
	4320	27
124-00192	1310	63
124-00194	1160	3
124-00199D4	3140	14
	6850	14
	6980	10
124-00208D2	1130	31
	1190	8
	1690	33
	1691	17
	1730	18
	1750	7
	1760	26
	6470	10
124-00208D3	1690	32
	1691	16
	1700	36
	1730	17
	1760	27
	1800	24
124-00208D4	1700	38
	1760	28
	6160	34
	6470	15
124-00208D5	1700	39
	1760	29
	6100	21
124-00208D6	1120	32
	1320	98
	6100	20
	6150	16
	6151	16
	6160	9
124-00208D7	1330	42
	1780	7
124-00208D8	1350	95
124-00208D9	1320	44
124-00209D1	1210	31
	1210	9
	1800	25
	6410	9
124-00209D2	1390	35
124-00209D3	1390	47
124-00209D8	1390	51
124-00218	1271	34
124-00247	1270	82

Part No.	Fig No.	Key No.
124-00298B	1170	2
124-00299A	6490	13
	6500	4
	6630	12
	6700	4
	6770	4
	6880	13
	7000	18
124-00300	3130	13
	6840	1
	6970	16
124-00302	3130	61
	6840	61
	6970	19
	7010	6
124-00303	3130	62
	6840	62
	6970	20
124-00310A	1150	33
124-00344	1520	32-36
124-00367	3130	12
	6180	9
	6840	12
	6860	8
	6970	15
124-00368	3130	15
	6180	7
	6840	2
	6860	6
	6970	17
125-00034A	1610	3-2A
	7170	1-2A
125-00035A	1620	2-2A
125-00071B	1630	4-2A
125-00072	1520	32-11
125-00073B	1500	49-4A
125-00074B	1500	49-5A
125-00075A	1650	13
125-00077	1510	70
125-00078	1510	71
125-00096A	1500	49-4
125-00097A	1500	49-5
129-00043	4210	17
129-00044	4100	157
129-00045	4120	310
129-00062	4130	310
129-00071	4250	29
	4330	29
129-00124	4190	21
129-00125	4190	26

Part No.	Fig No.	Key No.
129-00126	4170	33
129-00127	4190	35
129-00128	4190	39
129-00129	4190	48
129-00130	4190	45
129-00139	4190	98
130422-00001A	4140	9
130424-00001	4140	22
130425-00001	4140	25
130426-00010	1190	1B
	4140	-
130602-00200	4150	260
130702-00065	2141	6-4
130702-00066	2141	6-3
130702-00118	2175	1G
	6365	1-1G
130702-00119	2175	1H
	6365	1-1H
130707-00030	1740	21A
	6240	21A
130707-00042	1740	21A
	6240	21A
130712-00125	2150	7-4
130712-00208	2140	6-2
130712-00293	2141	6-2
130713-01619	2161	8-2
131002-00085	7080	1
	7160	1
131004-00020A	6910	1B
131004-00021A	6910	1C
131008-00064A	3110	1A
	6570	1A
	6640	1A
	6710	1A
	6910	1A
131008-00067A	4230	2
	4230	4
	4240	2
	4240	4
	4260	2
	4260	4
	4280	2
	4280	4
	4290	2
	4290	4
	4310	2
	4310	4
	4320	2
	4320	4
131008-00074A	3100	1A

Part No.	Fig No.	Key No.
131008-00074A	6900	1A
131008-00130	4250	2
	4250	4
	4330	2
	4330	4
131150-2620	016	301B
131424-1520	016	301D
133-00172	1260	7
133-00220E	1520	37
133-00221	1520	32-9
133-00229A	1540	10
133-00230A	1540	11
133-00248	1500	49-4C
	1500	49-5C
136-00002	1220	11
136-00055A	1520	32-12
137-00092	1520	32-10
140-01484B	1271	2
140-01485B	1271	3
140-01601C	1280	4
140-01602C	1280	5
140-01603A	1230	6
140-01604C	1240	4
140-02009A	1250	2
140109-00048	2100	2
	2105	2
140204-00005	2120	5-2B
142-00126A	2100	9
142-00127C	1500	52
142-00128B	1500	51
145-00124A	1520	32-18
148-00012	4210	16
150102-00439	4130	205
150109-00016	7180	-
150109-00018	1120	-
	1130	-
	1150	-
150120-00034	1510	87
150120-00035	1510	86
155-00061	6910	2
156639-8820	016	301E
159-00017	4210	18
159-00227	1260	14
159-00287B	1400	8
	1410	8
159-00290B	1400	7
	1410	7
159-00294C	6270	1
	6280	1
160-00008	4270	5

Part No.	Fig No.	Key No.
160-00020	1190	7
	1680	8
	3110	29
	3140	11
	3160	8
	6570	29
	6590	8
	6640	29
	6660	8
	6710	29
	6730	8
	6850	11
	6910	27
	6980	8
	7020	14
160-00027	1190	12
160-00040	1260	18
160-00061	7080	1
	7160	1
160-00068A	1100	6
160-00069	2180	16
	2185	16
160-00071	1540	5
160-00072	1540	6
160-00073A	1540	26
160-00074A	1490	121
160-00075A	1490	122
160-00080B	1540	7
160-00081	1100	33
160617-00115	2100	1
160617-00115A	2100	1
160617-00115B	2100	1
160617-00115C	2100	1
160617-00115E	2100	1
160617-00290	2105	1
160620-00073	1100	-
160620-00074	1100	1
160620-00074B	1100	1
160620-00074E	1100	1
160620-00074G	1100	1
160620-00074H	1100	1
160620-00074K	1100	1
160620-00074L	1100	1
160620-00074M	1100	1
160702-00046	1110	1
	7190	1
160702-00048	1110	-
160702-00049	7190	-
160702-00055	6920	1
	6930	1

Part No.	Fig No.	Key No.
160702-00056	6920	-
160702-00057	6930	-
160702-00628	1115	-
160702-00629	7220	-
161-00010	1480	1
161-00011	1480	2
161-00080	4210	9
161-00195	1500	34
	1520	34
	6340	8
161-00281	1271	35
	3130	20
	6180	8
	6840	20
	6860	7
	6970	24
161-00381	1540	14
	6170	22
161-00382	1540	15
	6480	27
161-00404	7100	9
161-00548	1120	18
161-00550	1120	19
161-00574	3130	19
	6840	19
	6970	23
	7010	16
161-00580	1630	29
161-00598A	1490	59
161-00599	6260	4
161-00600	6260	8
161-00609E	1510	84
161-00610E	1510	85
161-00613B	1510	90
161-00613C	1510	90
161-00614	1660	15
161-00618B	1500	63
161-00619B	1500	64
161-00620	1520	32-28C
161-00621B	1520	32-28
161-00622	1470	23
161-00623	1520	32-6
161-00624	1470	34
161-00639	6260	13
	6270	8
	6280	6
161-00640A	1490	30
162-00033A	1520	32-3C
162-00034B	1500	7
162-00035A	1490	6

Part No.	Fig No.	Key No.
162-00038	1490	9
162-00039A	1490	8
162-00040A	6270	2
	6280	2
170-00004	1170	11
170301-00111	1190	1
170301-00111A	1190	1
170301-00111B	1190	1
170303-00049	1190	1A
	4130	-
170303-00049B	1190	1A
	4130	-
170401-00039	2110	3
170401-00039A	2110	3
170401-00039B	2110	3
	2115	3
170402-00028	4160	-
170403-00134	4150	-
171-00060A	6260	3
172-00053B	1550	1-1
172-00055A	1510	91
180-00077D3	3110	34
	6570	34
	6640	34
	6710	34
	6910	20
180-00077D5	3110	26
	6570	26
	6640	26
	6710	26
180-00198	4200	18
	4210	22
180-00199	4210	23
180-00211	4120	309
180-00220	4130	307
180-00221	4130	308
180-00276	4260	21
	4280	21
	4290	21
180-00297D3	2100	2A
180-00398	4190	47
180-00400	4190	102
180-00402	4180	66
180-00403	4180	65
180-00441	2175	1I
	6365	1-1I
180-00445	4190	55
180-00463	1100	7
	2100	11
	2105	11

Part No.	Fig No.	Key No.
180102-00743	1500	119
180102-00744	1500	118
181-00008	6410	7
181-00078D1	1340	177-2
	6150	51-2
	6151	51-2
	6200	3
	6440	13
	6890	13
	6990	12
181-00078D5	6220	3
	6870	3
181-00086D1	1340	177-6
	6150	51-6
	6151	51-6
	6380	5-4
	6390	5-5
181-00086D2	1340	177-7
	6150	51-7
	6151	51-7
	6380	5-5
	6390	5-6
181-00103	1190	4
	3140	18-4
	6850	17-4
	6980	13-4
181-00144D5	1340	92
181-00318	4110	496
181-00519	4100	490
181-00525	3140	18-2
	6850	17-2
	6980	13-2
181-00565	4170	71
181-00628	4190	37
181-00630	4190	43
181-00631	4190	52
181-00633	4170	60
181-00646	4180	91
181-00647	4170	92
	4190	92
181-00649	4170	93
181-00698	1190	1D
181-00701	4170	72
	4180	105
	4180	72
181-00779	6150	7
	6151	7
	6160	7
	6470	14
181-00804	7130	3

Part No.	Fig No.	Key No.
181-00809	6100	1C
181-00810	6100	1D
185-00167D3	6100	12
185-00410C	1170	10
186-00017A	1200	9
190-00122	5130	10
190-00522A	5130	15
190-00648A	5130	16
190-00652	5130	4
190-00691A	5130	12
190-00692	5130	13
190-00694	5130	11
190-00695A	5120	10
190-00703	5130	14
190-01172	6100	19
190-01192D2	1690	28
190-01192D24	1691	14
190-01192D26	1691	21
190-01192D29	1691	20
190-01192D7	1690	29
190-01192D8	1690	30
191-02990C	1100	28
191-03166C	1510	17
191-03279A	6260	9
191-03280A	6260	10
191-03283	1520	32-28A
191-03736E	7130	14
193-00912	1170	7
193-00913A	1170	4
195-00163	6220	4
	6440	16
	6870	4
	6890	16
	6990	14
195-00463	4100	251
195-01683A	6170	2
195-01684A	6480	4
195-01805	7100	1
195-02079	1260	10
195-02157	1260	28
195-02465	1120	14
195-02622C	1720	30
195-02623B	1100	31
195-02624C	1630	41
195-02643C	1120	26
195-02662B	6100	2
195-02706C	1630	27
195-02711B	6150	9
195-02716C	1320	8
195-02719C	1520	38

Part No.	Fig No.	Key No.
195-02729	1490	58
195-02739C	1500	49-2
195-02740E	1500	49-3
195-02753C	1400	1
195-02755C	1410	1
195-02768E	1460	14
195-02769E	1460	15
195-02770E	1460	18
195-02771C	1470	14
195-02772G	1470	15
195-02774A	1470	22
195-02775A	7070	2
195-02785E	1470	24
195-02868C	1400	5
195-02883B	1280	23
195-02884B	1280	105
195-02904C	1420	1-2
195-02908E	7050	3
195-02909A	7090	1
195-02910C	7060	1
	7110	1
195-02925A	7100	5
195-02948A	1580	1
195-02949A	1570	1
195-03123E	6200	2
195-03374C	6270	5
195-03434E	1590	8
195-03435B	6110	52
	6130	52
195-03436B	6110	51
	6130	51
195-03437E	6120	3
	6140	3
195-03444	7130	11
198-00016	1320	9
	1390	6
198-00036A	1500	123
198-00053A	1520	32-8
198-00054A	1490	5
2.121-00009	4130	102
2.172-00003	1450	9
200101-00033	2120	5
200102-00052	2120	5-2
200103-00084A	2175	1
	6365	1-1
200103-00102	2170	1
	6350	1-1
	6360	1-1
	6370	1-1
200103-00102A	2170	1

Part No.	Fig No.	Key No.
200103-00102A	6350	1-1
	6360	1-1
	6370	1-1
200104-00021	2150	7
200104-00044	2150	7
200105-00022	2140	6
200105-00025	2141	6
200106-00191	2175	-
200106-00262D1	2175	4
200106-00262D3	6365	1-4
200106-00317	6350	-
200106-00318	6360	-
200106-00319	6370	-
200106-00346	2170	-
200106-00346A	2170	-
200106-00347	6350	1
200106-00347A	6350	1
200106-00348	6360	1
200106-00348A	6360	1
200106-00349	6370	1
200106-00349A	6370	1
200106-00432	6365	1
200106-00440	6365	-
200108-00008A	2115	4
200108-00095	2110	4
200112-00022	2100	9
200112-00073	2100	9
200112-00073A	2100	9
	2105	9
204-00067	1170	1
204-00070	1170	1D
204-00075	1170	1C
2106-1019D10	1800	30
	5110	8
2106-1019D18	7180	2
2107-6006	1800	13
2109-9033	4140	4
2110-1184D7	4210	27
	4270	2-2
2110-1329A	6910	1B
2110-1330A	6910	1C
2110-1366A	6910	2A
2114-1058D10	1320	39
	1390	38
2114-1058D2	1480	4
2114-1058D29	1770	4
	1800	19
2114-1058D30	1610	3-11
	1620	2-12
	7170	1-11

Part No.	Fig No.	Key No.
2114-1058D31	6340	15
2114-1058D45	1610	3-9
	1620	2-10
	7170	1-9
2114-1058D46	1240	54
2114-1058D52	1800	29
2114-1058D54	1630	52
	1650	52
	1740	3
	6240	3
2114-1058D56	1650	23
2114-1058D68	1630	19
2114-1058D72	1240	54
	6100	5
2114-1154	1630	37
2114-1737	1310	64
2114-1813	1200	14
	1220	17
2114-1814	1200	15
	1220	18
2114-1816A	1130	28
	2110	26
	2115	26
2114-1817	1100	92
2114-1831A	3120	9
	6510	6
	6520	6
	6530	6
	6540	6
	6550	6
	6560	6
	6780	9
	6790	9
	6800	9
	6810	9
	6820	9
	6940	9
2114-1848A	3120	4
	6510	1D
	6520	1D
	6530	1D
	6540	1D
	6550	1D
	6560	1D
	6780	4
	6790	4
	6800	4
	6810	4
	6820	4
2114-1856	1520	42

Part No.	Fig No.	Key No.
2114-1859	6940	4
2114-1898D1	1480	7
	1540	4
	1570	3
	1580	3
	6340	12
	7090	2
2114-1898D10	6340	16
2114-1898D13	1490	76
	1510	76
2114-1898D14	1260	31
	1420	1-5
	1420	5
	1460	31
	1470	28
	1490	18
	1500	18
	1520	18
	1540	9
	1560	6
	6260	17
2114-1898D15	1430	4
	1520	23
	1520	32-22
	1525	3
	1550	1-3
2114-1898D17	1420	8
	1540	2
	6290	2
	6300	2-2
	6300	3
	6340	9
2114-1898D18	1420	11
2114-1898D2	1500	49-13
	1520	32-25
	1520	46
	6340	13
2114-1898D3	1490	19
	1500	19
	1500	49-10
	1510	19
	1520	19
	1520	32-29
	1560	3
	6260	14
	7130	12
2114-1898D4	1400	19
2114-1898D5	1460	36
	1470	31
	1510	113

Part No.	Fig No.	Key No.
2114-1898D5	6270	9
	6280	8
2114-1898D6	1500	26
	6270	10
	6280	11
	6340	17
	7050	5
2114-1901A	4140	11
2114-1929	1120	17
2114-1994B	6910	24
2114-1995B	6910	25
2114-2031D1	1510	97
2114-2031D4	1420	6
	1460	33
2114-2031D5	1390	36
2114-6035	2175	1J
	6365	1-1J
2114-9012A	1100	21
	1120	25
	1190	10
	2100	27
	2105	27
2116-1060D6	3100	16
	3110	19
	6570	19
	6640	19
	6710	19
	6830	16
	6900	16
	6910	14
	6910	26
2116-1472A	6900	30
2116-1522	1610	3-4
	1620	2-3
	7170	1-4
2116-1531A	3100	7
	3110	32
	6570	32
	6640	32
	6710	32
	6830	7
	6900	7
2119-1063B	1190	1J
2119-1065	4140	30
2120-1354	1720	13
2120-1413D12	1240	53
2120-2137A	1100	91
2120-2150D1	1520	43
2120-2150D3	1520	28
	1520	32-33

Part No.	Fig No.	Key No.
2120-2165	1170	12
2120-2166D1	1520	32-23
	1520	41
	1540	3
	1570	2
	1580	2
2120-2166D10	1400	10
	1410	10
	1430	3
	1470	26
	1510	14
	6280	10
2120-2166D12	1470	29
	1490	25
	1500	25
	1500	49-12
	1520	25
2120-2166D18	1510	99
2120-2166D2	1480	6
	1550	1-2
2120-2166D23	1460	26
2120-2166D26	1490	77
	1510	77
2120-2166D27	6290	3
	6300	2-3
	6300	4
	6340	10
2120-2166D28	1490	20
	1500	20
	1500	49-11
	1510	20
	1520	20
	1520	32-30
2120-2166D32	6340	23
2120-2166D36	1460	35
	1470	30
2120-2166D37	6270	11
	6280	12
2120-2166D4	1525	2
	1540	16
2120-2166D41	1220	22
2120-2166D5	1260	30
	1420	1-3
	1420	10
	1460	32
	1470	35
	1490	47
	1520	32-24
	1520	47
	6340	22

Part No.	Fig No.	Key No.
2120-2166D52	1400	16
	1410	11
	1460	23
	1500	49-15
	1500	80
	1510	80
	1520	32-31
	6270	6
	6280	9
	6340	25
2120-2166D53	1400	9
	1410	9
	1430	5
	1460	24
	1470	27
	1490	111
	1510	111
	1520	32-37
2120-2166D54	7050	4
2120-2166D55	1540	1
2120-2166D57	1460	38
2120-2166D58	1470	36
2120-2166D7	1490	31
	1510	31
	6260	16
2120-2166D9	1560	4
	7130	13
2120-2187	1800	31
2120-2235	1730	15
2120-6017	2175	2
	6365	1-2
2121-1305	1700	59
	1730	24
	1731	24
	7250	24
2121-1311D1	1420	9
	6340	18
2121-1311D2	1420	7
	6340	14
2121-1311D4	1500	39
	1520	39
	6340	11
2121-9007	1480	5
2122-1002D2	5190	2
	6340	25
2122-1002D4	5130	17
2123-1011	2120	5-2G
	2125	5-2G
2123-1107D7	1100	14
2123-1915A	6900	29

Part No.	Fig No.	Key No.
2123-2180G	3100	2
	6830	2
	6900	2
2123-2185G	3100	5
	6830	5
	6900	5
2123-2187E	3100	6
	6830	6
	6900	6
2123-2192E	3110	10
	6570	10
	6640	10
	6710	10
2123-2247	1520	32-19
2123-4030	1190	13
2123-6060	2175	1E
	6365	1-1E
2123-6119	1520	32-3B
2124-1025D5	1280	33
2124-1025D6	1280	32
2124-1026D1	6880	20
	7030	11
2124-1084D2	6440	15
	6990	13
2124-1353D2	3140	15
	6850	15
	6980	11
2124-1509D1	1260	25
	1750	8
	1760	24
	7070	6
2124-1509D10	1260	21
	1730	19
2124-1509D2	1210	8
2124-1689A	1520	32-20
2125-1095A	1470	16
2125-9055	1520	35
2127-1002A	1520	48
2129-1008	1220	12
2129-1236	2130	6
2129-1393	1220	4
2129-1446	1520	117
213-00029C	1460	13
213-00030B	1460	8
213-00031E	1460	9
213-00032B	1460	10
213-00033B	1460	11
213-00034E	1460	12
213-00035B	1460	7
213-00036B	1470	2

Part No.	Fig No.	Key No.
213-00037B	1470	3
213-00038B	1470	4
213-00039B	1470	5
213-00040A	1470	21
2132-1133B	1540	22
2132-1134B	1540	21
2138-9006B	1260	11
2140-1338	1500	55
	1510	55
2140-1406	4140	29
2142-9005	1520	33
2150-1122	1260	6
2150-1132A	1520	32-14
2150-1133	1510	93
2155-1299B	3110	3
	6570	3
	6640	3
	6710	3
2155-1300B	3110	4
	6570	4
	6640	4
	6710	4
2155-1306B	6910	3
2155-1307B	6910	4
2160-1004D31	1100	38
2160-1004D39	1100	16
2160-1004D48	1100	15
2160-1004D55	1100	27
2160-1201D11	1100	17
2160-1201D12	1100	26
2160-1201D13	1100	25
2160-1212	1760	4
2160-1213	1760	5
2160-1310	1490	21
2160-1336	6100	12C
2160-1345	1570	4
2160-1346	1580	4
2161-2212	1510	72
2161-2487	1540	25
2161-9052	1610	3-5
	1620	2-4
	7170	1-5
2161-9053	1610	3-6
	1620	2-5
	7170	1-6
2172-9021	1520	32-17
2180-1026D19	1270	59
	1271	59
	1280	59
	1290	59

Part No.	Fig No.	Key No.
2180-1026D19	1300	59
	1310	59
	2180	9
	2185	9
	3130	24
	6110	14
	6120	1B
	6130	17
	6130	64
	6140	1B
	6180	5
	6190	4
	6600	3
	6670	4
	6740	4
	6840	13
	6860	4
	6970	29
	7010	10
2180-1026D2	1280	58
	1300	58
	3130	22
	3150	4
	6450	5
	6580	4
	6620	5
	6650	4
	6690	5
	6720	4
	6760	5
	6840	22
	6970	27
	7010	11
2180-1026D24	1240	34
	1250	34
2180-1026D27	1240	35
2180-1026D28	1240	51
2180-1026D30	6490	8
	6500	15
	6630	4
	6700	15
	6770	15
	6880	8
	7000	13
	7030	9
2180-1026D31	1230	37
	1240	37
2180-1106BD14	6910	21
2180-1106BD24	3100	11
	3110	13

Part No.	Fig No.	Key No.
2180-1106BD24	6570	13
	6640	13
	6710	13
	6830	11
	6900	11
	6910	10
2180-1106BD3	6910	11
2180-1106BD4	3110	12
	6570	12
	6640	12
	6710	12
2180-1106BD6	3100	10
	3100	1B
	3110	14
	6570	14
	6640	14
	6710	14
	6830	10
	6830	1B
	6900	10
	6900	1B
2180-1217D109	4170	89
2180-1217D96	4250	15
	4330	15
2180-1254	4140	7
2180-6005	2141	6-11
2180-6086	1800	92A
2180-6088	1800	20A
2180-9005B	2140	6-14
	2141	6-12
2180-9020	2120	5-2E
	2125	5-2E
2180-9098	2150	7-9
2180-9153	5110	11
2181-1110D3	1190	1C
2181-1111D11	3160	10
	6590	10
	6660	10
	6730	10
	7020	24
2181-1116D1	3110	30
	4150	91
	4210	4
	6570	30
	6640	30
	6710	30
	6910	28
2181-1116D10	4150	54
2181-1116D2	2120	5-2H
	2125	5-2H

Part No.	Fig No.	Key No.
2181-1116D2	2140	6-12
	2150	7-7
	2160	8-15
	2161	8-15
	4130	312
	4140	27
	4150	55
	4200	2
2181-1116D3	4250	31
	4330	31
2181-1116D4	4130	311
	4140	28
2181-1126D103	1360	28
2181-1126D115	1230	58
2181-1126D14	1320	25
	1330	139
	1330	25
	1360	25
	1390	29
	2180	13
	2185	13
	6160	3
	6170	10
	6420	3
	6470	3
	6480	23
2181-1126D27	1360	26
	1370	26
	1380	26
2181-1126D28	1370	27
	1380	27
2181-1126D36	1370	84
	1390	55
	6150	3
	6151	3
2181-1126D38	1330	27
2181-1126D6	1230	14
	1250	14
	1320	23
	1330	135
	1330	23
	1360	23
	1390	54
	2180	12
	2185	12
	6460	11
2181-1126D7	1340	24
	1350	24
	1360	24
	1370	83

Part No.	Fig No.	Key No.
2181-1126D7	1380	91
	6200	23
	6410	8
	6430	4
	7200	3
2181-1126D85	6200	5
	6440	10
	6890	10
	6990	10
2181-1159	1780	3
2181-1160A	1780	4
2181-1161A	1780	5
2181-1184	3160	4
	6590	4
	6660	4
	6730	4
	7020	12
2181-1702D10	1360	17
2181-1702D2	1320	19
	6460	22
2181-1702D3	1340	142
	1350	162
	6200	7
2181-1702D34	1360	21
2181-1702D36	1230	58
2181-1702D4	1320	18
	1330	18
	1340	18
	1350	18
	6150	5
	6151	5
	6155	2
	6160	4
	6170	11
	6470	4
	6480	29
2181-1702D5	1380	24
	7200	4
2181-1702D51	7200	5
2181-1702D56	2180	17
	2185	17
2181-1702D73	1250	19
2181-1702D9	1360	96
2181-1890D2	1200	21
	1220	27
	4100	468
	4150	52
2181-1890D4	4150	63
	4160	128
2181-1913D24	1190	1H

Part No.	Fig No.	Key No.
2181-1923D12	3160	13
	6590	13
	6660	13
	6730	13
	7020	21
2181-1925	1680	2
	3140	6
	6850	6
	6980	6
2181-1950D1	1230	83
	1240	101
	1240	20
	1240	92
	1330	137
	4120	466
	4130	110
	4220	5
2181-1950D2	1240	111
	1340	141
	1350	161
	4100	467
2181-1950D3	1230	81
2181-1950D5	4100	466
2181-1950D7	1190	1G
	1210	32
	1220	24
2181-1950D9	1230	82
	1240	91
	1270	77
	1271	77
	6180	13
	6860	12
2181-1951D1	1340	151
	6150	6
	6151	34
	6151	6
	6160	5
2181-1951D16	1340	15
	1350	15
2181-1951D19	1330	99
	6150	30
2181-1951D5	1250	61
2181-1951D6	1320	14
	1360	14
	6170	9
	6480	22
2181-1951D7	6480	12
2181-2104D6	6100	9
2181-2170	6110	23
	6130	30

Part No.	Fig No.	Key No.
2181-2170	6130	62
2181-2218D6	1271	76
2181-2281D10	2180	11
	2185	11
2181-2281D21	1360	16
2181-2293D4	6110	13
	6110	44
	6130	16
	6130	44
	6140	10
2181-2294D2	1230	85
	6460	27
2181-2295D4	6380	4
2181-2337D13	4170	61
2181-2434	4170	88
2181-2527	1680	6
2181-2627D1	1310	38
	6460	20
2181-2627D3	1310	39
2181-2627D5	1240	18
2181-2635	1340	22
2181-2755B	6100	1A
2181-2774	1780	1
2181-2815D1	6120	2
	6140	2
2181-2815D3	6600	41-6
	6600	42-6
	6670	41-6
	6670	42-6
2181-2816D1	6620	31
	6760	7
2181-2816D2	6130	61
	6190	41-3
	6190	42-3
	6740	41-3
	6740	42-3
2181-2816D4	6190	41-6
	6190	42-6
	6500	32
	6630	31
	6700	32
	6740	41-6
	6740	42-6
	6770	32
	7030	52
2181-2817D1	6450	41
	6620	33
	6690	41
	6760	41
2181-2817D2	6190	41-4

Part No.	Fig No.	Key No.
2181-2817D2	6190	42-4
	6600	41-4
	6600	42-4
	6670	41-4
	6670	42-4
	6740	41-4
	6740	42-4
2181-2817D4	6190	41-8
	6190	42-8
	6500	33
	6600	41-8
	6600	42-8
	6630	33
	6670	41-8
	6670	42-8
	6700	33
	6740	41-8
	6740	42-8
	6770	33
	7030	53
2181-2820D1	6230	4
	6610	4
	6680	4
	6750	4
2181-4112	3140	13
	3160	20
	6590	20
	6660	20
	6730	20
	6850	13
	6980	9
	7020	22
2181-4125	2180	15
	2185	15
2181-4133D12	6460	21
2181-4133D3	6460	10
	6500	9
	6630	7
	6700	9
	6770	9
	7030	7
2181-4133D5	1230	15
	6450	11
	6620	12
	6690	12
	6760	12
2181-4133D6	6110	11
	6110	56
	6130	14
	6130	56

Part No.	Fig No.	Key No.
2181-4133D6	6600	41-3
	6600	42-3
	6670	41-3
	6670	42-3
2181-6005	2141	6-10
2181-9078	1271	29
	1290	29
	1300	29
	1310	29
	2180	5
	2185	5
	3130	23
	6110	10
	6130	20
	6130	63
	6180	10
	6190	3
	6600	2
	6670	3
	6740	3
	6840	23
	6860	9
	6970	28
	7010	12
2181-9079	1280	30
	1300	30
	3130	25
	3150	3
	6450	4
	6580	3
	6620	4
	6650	3
	6690	4
	6720	3
	6760	4
	6840	14
	6970	30
	7010	13
2181-9081	1270	28
	1271	28
	2180	6
	2185	6
2181-9083	1290	31
	1300	31
2184-1036D11	3160	2
	6590	2
2184-1036D199	7020	11
2184-1036D293	1250	39
2184-1036D38	7020	10
2184-1036D43	1190	1K

Part No.	Fig No.	Key No.
2184-1045D126	3140	4
2184-1045D177	6151	18
2184-1045D254	3140	5
	6980	5
2184-1046D120	1320	69
2184-1046D169	6151	22
2184-1046D187	1330	132
2184-1046D50	1190	2
2184-1046D68	6151	24
2184-1046D94	1320	68
2184-1060D70	1330	100
2184-1070D49	2185	1
2184-1100D178	3150	2
2184-1100D59	6650	2
2184-1100D78	6190	2
	6600	1
2184-1100D90	6670	2
2184-1197D31	6460	25
2185-1308D5	1770	7
	1770	8
2185-1660	1490	106
2185-1737D8	1230	38
2185-1776D2	1240	12
2190-2480	5120	4
2190-2533A	5130	7
2190-2556D179	5140	1
2190-3297	5120	2
2190-3379A	5130	3
2190-3388	5120	9
2191-3705C	1270	84
2195-1534	1720	22
2195-2394B	1750	2
2195-3500	1760	17
2197-1660	1750	10
	1760	20
2197-1661	1320	3I
	1750	5
	1760	21
	7060	4
	7070	5
	7090	4
	7110	4
2197-1777A	1260	1
2197-1793	1730	11
	1731	11
	7250	11
2197-1798C	1800	5
2197-1802A	1260	19
2199-1004	5100	1-10
2199-1005	5100	1-11

Part No.	Fig No.	Key No.
2199-1063F34A	5100	1
2199-1063F34B	5100	1
2199-1063F34C	5100	1
2199-9007	5100	3
2199-9008	5100	2
2199-9009	5100	1-15
2199-9043	5100	1-1
2199-9058	1510	92
220101-00192A	1490	-
	1500	-
	1510	-
	1520	-
220101-00192B	1490	-
	1500	-
	1510	-
	1520	-
220101-00192G	1490	-
	1500	-
	1510	-
	1520	-
220101-00192H	1490	-
	1500	-
	1510	-
	1520	-
220101-00192K	1490	-
	1500	-
	1510	-
	1520	-
220103-00574	6340	2
220111-00022	1400	-
220111-00023	1410	-
220204-00099	1400	3
220204-00100	1410	4
220205-00024	1500	49
220205-00024B	1500	49
220214-00023B	1490	6
2204-6039A	1800	2
2208-6013B	1800	9
2220-1013	2120	5-2C
	2125	5-2C
229-00025C	1180	2
230104-01198	6940	-
230104-01199	6940	1
230104-01245	3120	-
230104-01246	3120	1
230104-01249	6780	-
230104-01250	6780	1
230104-01251	6790	-
230104-01252	6790	1
230104-01253	6800	-

Part No.	Fig No.	Key No.
230104-01254	6800	1
230104-01255	6810	-
230104-01256	6810	1
230104-01257	6820	-
230104-01258	6820	1
230104-01259	6510	-
230104-01261	6510	1A
230104-01262	6520	-
230104-01264	6520	1A
230104-01266	6530	-
230104-01268	6530	1A
230104-01269	6540	-
230104-01271	6540	1A
230104-01272	6550	-
230104-01274	6550	1A
230104-01275	6560	-
230104-01277	6560	1A
230201-00104	3110	-
230201-00105	6640	-
230201-00106	6570	-
230201-00107	6710	-
230201-00137	6910	-
230204-00067	6910	1
230204-00083A	3110	1
230204-00083B	3110	1
230204-00083E	3110	1
230204-00084A	6640	1
230204-00084C	6640	1
230204-00085A	6570	1
230204-00085C	6570	1
230204-00086A	6710	1
230204-00086C	6710	1
230204-00168B	6910	1
230207-00081	3100	-
230207-00082	6830	-
230207-00127	6900	-
230211-00054A	3100	1
230211-00144A	6900	1
2401-1276KT	6100	1G
2412-1040	4140	3
2415-1018	1720	35
2420-1258	6100	12A
2423-1470	1390	4
2426-1175	1220	6
2426-1237	1320	3D
2460-9057A	1330	4
2471-1133	6150	4
	6151	4
2471-1135	1390	23
2471-1152	6100	12B

Part No.	Fig No.	Key No.
2471-1154	1320	3C
	5110	2
2471-1155A	1320	3E
2472-7003	1320	3B
2474-7009	1180	3B
2474-7009K	1180	3H
2474-9016A	1220	10
250106-00125	1540	-
250106-00125A	1540	-
250106-00126	1540	12
250106-00126A	1540	12
2502-9009	7230	21
	7240	-
250201-00028	1610	3-4
	1620	2-3
	7170	1-4
250201-00795A	1691	1
250201-01934	4130	213
2506-1104	1720	1
2512-1095D1	5110	10
2515-1016D4	1720	25A
	5110	17
	7050	1A
	7060	3A
	7070	7A
	7140	1A
	7150	1A
2515-1021D1	1510	75A
2515-1022D1	1750	1A
	5110	16
2516-1116	1700	32
2523-9016	1260	13
2527-1016	1700	5A
	1700	6A
	5110	19
2527-1017	1700	5B
	1700	6B
	5110	20
2527-1018	1700	5C
	1700	6C
	5110	21
2527-1023A	1720	14
	5110	23
2527-1025	1700	5D
	1700	6D
	5110	22
2527-9004	1720	12
2528-9040	1700	18
2531-1003	1690	8
	1690	9

Part No.	Fig No.	Key No.
2541-9020	1510	81
2543-9015	1690	6
	1691	3
2544-1022	1720	15
2544-9024	1720	8
2544-9033	1690	15
	1690	16
	1690	17
	1690	18
	1690	19
	1690	20
	1690	21
	1690	22
	1690	23
	1691	11
	7040	7
	7130	17
2547-1015	1730	10
	1731	10
	7250	10
2547-9038B	1730	8
	1731	8
	7250	8
2547-9045	7120	3
2548-1027	1760	1A
2549-9112	1340	10
2550-1014D1	1760	2
2550-1014D2	1760	3
2553-1275D39	1760	10
2553-1275D46	1760	14
2553-1275D69	1760	15
2553-1275D7	1760	15
2553-1275D78	1760	6
2553-1275D81	1760	16
2553-1275D88	1760	16
270-00054B	1500	49-6
270-00063B	2120	5-2
	2125	5-2
2705-1020	3120	3
	6510	1C
	6520	1C
	6530	1C
	6540	1C
	6550	1C
	6560	1C
	6780	3
	6790	3
	6800	3
	6810	3
	6820	3

Part No.	Fig No.	Key No.
2705-1022	6940	3
2705-1030	4140	19
2705-9002	1610	3-26
	1620	2-9
	1650	36
	7170	1-26
271-00026	2120	5-2B
	2125	5-2B
2713-1059A	3120	5
	6510	2
	6520	2
	6530	2
	6540	2
	6550	2
	6560	2
	6780	5
	6790	5
	6800	5
	6810	5
	6820	5
2713-1060A	3120	6
	6510	3
	6520	3
	6530	3
	6540	3
	6550	3
	6560	3
	6780	6
	6790	6
	6800	6
	6810	6
	6820	6
2713-1218A	3120	1A
	6510	1AA
	6520	1AA
	6530	1AA
	6540	1AA
	6550	1AA
	6560	1AA
	6780	1A
	6790	1A
	6800	1A
	6810	1A
	6820	1A
2713-1222B	6940	1A
2713-1228A	6940	6
2713-1229A	6940	5
284-00005	4100	30
2891-1311	1520	32-26
300426-00012	1700	1

Part No.	Fig No.	Key No.
300426-00012A	1700	1
300512-00010	1490	73
300516-00003	019	1
300516-00041	019	1
300609-00069	4150	C
300611-00003	1700	54
300611-00042	1690	2
	1691	101
300611-00042A	1691	101
300611-00042B	1691	101
300611-00138	1700	54
300611-00271	1691	4
300612-00001A	1691	5
300619-00056	1700	-
300619-00056A	1700	-
300619-00056B	1700	-
300619-00056C	1700	-
300619-00056E	1700	-
300619-00265	1760	-
300619-00316	1690	-
300619-00514A	1691	-
300619-00514B	1691	-
300619-00793	1710	-
300619-00793A	1710	-
300619-01062	7130	-
300619-01069	7040	-
300619-01893	1740	-
300619-01896	7230	-
300619-01900	7250	-
300637-00009	6250	1
300637-00012	6250	-
300654-00037	6400	1
300654-00039	6400	-
300661-00004	1710	3
300705-00013A	7080	-
300705-00013B	7080	-
300705-00014A	7160	-
300705-00014B	7160	-
300705-00032	7100	-
300705-00032A	7100	-
300705-00037	7080	5
	7100	10
	7160	5
300710-00023	7080	5A
	7100	10A
	7160	5A
300726-00002	1720	26
300726-00003	1720	27
300730-00006	1700	16
300803-00086	1731	14A

Part No.	Fig No.	Key No.
300803-00086	5110	24
	7250	14A
300901-00033	6240	21
300901-00034	1740	21
301202-00042	1691	12
301202-00067	1731	1
	7250	1
301316-00016	1200	18
310101-00035	1731	17
	7250	17
310203-00020	1760	31
310207-00417B	1700	25
310207-00425A	1691	15
310207-00708	1700	28
310207-01044	1731	14
310207-01176	1760	1
310207-01182	1710	9
310207-02450	7250	14
352-00014	4130	305
	4150	216
354-00003	4270	12
359-00021A	1510	87
359-00022A	1510	86
400305-00219	3130	81
	4250	-
	6840	81
	6970	61
400305-00220	4330	-
	6440	3
	6890	3
	6990	1
400309-00341	3130	71
	4230	-
	6840	71
	6970	51
400309-00341A	3130	71
	4230	-
	6840	71
	6970	51
400309-00343	3130	72
	4240	-
	6840	72
	6970	52
400309-00343A	3130	72
	4240	-
	6840	72
	6970	52
400309-00345	4310	-
	6420	1
400309-00345A	4310	-

Part No.	Fig No.	Key No.
400309-00345A	6420	1
400309-00347	4320	-
	6420	2
400309-00347A	4320	-
	6420	2
400310-00214	3150	1
	4260	-
400310-00215	4280	-
	6580	1
	6650	1
400310-00216	4290	-
	6720	1
400315-00026	1630	4-7
400337-00452	4250	3
	4330	3
400337-00453	4260	3
	4280	3
	4290	3
400337-00454	4230	3
	4240	3
	4310	3
	4320	3
400411-00001A	1220	21
400504-00045	1200	5A
400701-00004	4150	200
400826-00011A	2161	8
400908-00004	016	301AA
400909-00073	6100	-
400911-00005	1180	-
400912-00071	016	301
400914-00212	1180	1
	4100	-
401-00449	6100	1
401-00477J	1190	-
401-00502H	1180	-
401002-00739	4160	137
401003-00094	2140	6-6
401003-00145	2141	6-6
401003-00260	6120	1D
	6140	1D
401106-00179	4100	774
401106-00181	4130	302
401107-00751	2100	2A
	2105	2A
401107-01315	6440	4A
	6890	4A
	6990	4A
401107-01330	2161	*
402-00026A	4100	271
402-00036	4270	6

Part No.	Fig No.	Key No.
405-00008	4100	113
407-00001	6100	1F
408-00013	4100	156
409-00003	4100	532
409-00049	4190	95
409-00050	4190	97
410102-00024	4130	400
410113-00021A	1380	2
	4200	-
410113-00022A	1370	1
	4200	-
410114-00154	6440	4
	6890	4
	6990	4
410116-00410	4130	105
410127-00058	4150	400
410127-00058A	4150	400
410127-00095	4130	107
410127-00190	4150	400
410132-00007	6130	1
410132-00008	6130	2
410137-00030A	6190	41
	6740	41
410137-00031A	6190	42
	6740	42
410137-00032A	6600	41
	6670	41
410137-00033A	6600	42
	6670	42
410137-00067	6190	41-1
	6600	41-1
	6670	41-1
	6740	41-1
410137-00069	6190	42-1
	6600	42-1
	6670	42-1
	6740	42-1
410207-00163	4150	23
410207-00163A	4150	23
410207-00175	4200	33
410207-00176	4200	34
410207-00307	4150	23
412-00006	4100	211
412-00011	4130	202
412-00013	4130	306
	4150	215
4132-1138	1520	32-28B
415-00037	4180	63
415-00043B	1470	6
415-00044B	1460	19

Part No.	Fig No.	Key No.
415-00045B	1460	17
415-00046B	1460	16
416-00004	4100	534
416-00005	4100	535
416-00019B	1500	29
4185-1777	1720	34
420-00004A	6440	4
	6890	4
	6990	4
420-00110	4130	400
420-00112	4210	3
420-00127	4100	79
420-00226	6420	6
420-00246	4190	67
420-00258	4170	69
420-00259	4180	70
420-00282	6380	5-2
	6390	5-2
420-00295KT	4170	*
420-00309	4190	94A
420-00314	4190	24A
420-00352D1	1340	177-4
	6150	51-4
	6151	51-4
420-00467A	1390	3
	4210	-
420-00476	6150	51-8
	6151	51-8
	6390	5-3
420102-00239	1800	22
420202-00015	1240	1
420205-00241	3160	14
420205-00241A	3160	14
420205-00283	6660	21
420205-00284	6730	21
420205-00304	6590	14
420207-01840	6180	3
420207-01841	6180	4
420207-01842	6180	14
420207-01846	6860	1
420207-01847	6860	2
420207-01848	6860	3
420207-02037	3160	18
420210-00714	4320	30
420210-00714A	4320	30
420212-00225	1230	-
	1240	-
420212-00266	6390	-
420212-00336	6110	-
420212-00478	6380	-

Part No.	Fig No.	Key No.
420212-00576	1271	-
420212-01713	6190	-
420212-01715	6600	-
420212-01717	6670	-
420212-01719	6740	-
420212-02892	1370	-
	1380	-
	1390	-
420212-02892A	1370	-
	1380	-
	1390	-
420212-02892B	1390	-
420212-03011	6200	-
420212-05309	3160	-
420212-05310	6590	-
420212-05311	6660	-
420212-05312	6730	-
420212-05313	7020	-
420212-05427	3150	-
420212-05428	6580	-
420212-05429	6650	-
420212-05430	6720	-
420212-06762	6180	-
420212-06763	6860	-
420212-07077	7200	-
420212-07078	7210	-
420212-07632	2185	-
420218-00104A	1230	6
420406-01072	4250	1
420406-01073	4330	1
420406-01074	4260	1
420406-01075	4280	1
420406-01076	4290	1
420406-01077	4230	1
	4240	1
	4310	1
	4320	1
422-00055	2100	14
	2105	14
423-00096	4180	1
423-00097	4180	13
423-00193B	6110	2
423-00202	1300	24
424-00042	4210	8
424-00115	4180	6
424-00185	4180	2
424-00199	4180	4
426-00168	4170	32
426-00169	4190	34
426-00170	4190	38

Part No.	Fig No.	Key No.
426-00171	4190	44
426-00172	4190	49
426-00173	4190	51
426-00182	4190	100
426-00247B	6160	1
	6470	1
426-00248A	6130	1
426-00249A	6130	2
426-00266	6150	1
	6151	1
426-00267A	6110	1
426-00267B	6110	1
426-00282	7130	2
426-00284B	6460	1
426-00287	6200	1
429-00004	4210	5
429-00005	4210	7
429-00024	4190	20
430-00033	4180	8
430-00035	4180	12
430-00038	4190	18
430-00040	4190	22
430-00041	4190	24
430-00042	4190	46
430-00045	4190	94
430201-00113	1370	53
	1380	53
430215-00552	4150	C-1
430216-00004	1340	177
430216-00005	6380	5
430216-00006	6150	51
	6151	51
430216-00007	6390	5
430223-00011	1340	101
450103-00131	1200	-
450103-00150	1200	1
450103-00150A	1200	1
450103-00150B	1200	1
452-00020	4130	309
460103-00039	1470	2
471-00030	4120	355
471-00075A	1320	3
471-00105A	1200	4
471-00114	6120	1
	6140	1
471-00119	1490	13
471-00127	1220	21
4713-4004B	6950	2
	6960	2
473-00033	1200	2

Part No.	Fig No.	Key No.
473-00052	1220	7
474-00039	1170	1A
	5110	4
474-00040	1170	1B
	5110	3
474-00044A	1500	49-16
474-00046	6120	1A
	6140	1A
474-00055	1220	5
	5110	1
500-00307A	7080	-
500-00309C	7100	-
507-00006	1490	102
507-00007	7130	8
515-00012A	1700	1A
	5110	15
515-00013	7080	5A
	7100	10A
	7160	5A
516-00011	7040	3
516-00014	1720	26
516-00015	1720	27
520-00004	1800	16
523-00006	1260	12
523-00012	6100	1H
527-00005	1730	1A
	5110	24
527-00006	1700	17
530-00067	6150	27
	6151	27
	6380	3
	6390	3
530-00214A	6100	22-2
530-00236	1320	3H
530-00415E	1710	8
530-00417B	1510	62
530-00418D2	1750	6
530-00430A	7050	2
530-00431	7070	1
530-00432A	6210	2
530-00434B	1700	27
530-00463A	7060	7
	7090	7
	7110	7
	7150	2
530-00464	7080	4
	7160	4
530-00477A	1700	28
534-00062	7080	5
	7100	10

Part No.	Fig No.	Key No.
534-00062	7160	5
534-00064	1750	1
534-00079	1510	75
534-00085	1720	25
	7050	1
	7060	3
	7070	7
	7140	1
	7150	1
534-00117B	6280	-
538-00011	1490	73
538-00012	7130	1
539-00076E	1700	1
541-00015	1490	101
541-00016	7130	7
543-00095	1700	14
543-00096	1700	15
543-00106	1690	7
	1691	4
543-00107	1800	91
544-00007	1730	1
545-00001	1700	16
545-00011	1690	12
	1691	8
547-00023	1700	51
547-00024A	1780	9
547-00026	1200	18
548-00003A	1760	1B
549-00010	6150	26
	6151	26
	6380	1
	6390	1
549-00077	7130	6
549-00086	1500	57
549-00089	1400	5A
549-00090A	1710	6
549-00092	6210	1
549-00093	6100	22-1
549-00095	1240	11
549-00101	7080	20
	7130	4
549-00102	7120	1
549-00103	1700	19
	1700	21
	7040	1
	7050	10
553-00001D4	1730	20
	1731	20
	7250	20
554-00005	1490	60

Part No.	Fig No.	Key No.
600105-00002	1720	42
604-00277H	2100	1
621-01507A	1540	13
621-01572	6930	6
	7190	6
	7220	6
621-02151	1390	5
621-02643C	1720	32
621-02700A	6490	12
	6880	12
621-02726A	1620	2-6
621-02739B	6100	3
621-02798	6490	14
	6880	14
	7000	14
621-02801	1400	17
	1410	14
	1460	27
621-02837A	1490	61
621-02849A	1520	36
621-02849B	1520	36
621-02850B	1310	65
621-02864	1490	12
621-02867A	1520	32-21
621-02869C	1520	32-7
621-02870C	6260	-
621-02871B	6260	1
621-02872	6260	2
621-02873	6260	7
621-02892J	1540	12
621-02894G	1470	1
621-02895C	1420	1-1
621-02896K	1470	-
621-02898G	1410	4
621-02900B	1410	3
621-02901B	1400	2
621-02903C	1460	1
621-02904C	1460	3
621-02905C	1460	2
621-02907B	1470	10
621-02908B	1460	6
621-02909G	1460	4
621-02910C	1510	94
621-02911C	1510	95
621-02912B	1510	96
621-02913C	1470	7
621-02914C	1470	8
621-02915B	1470	9
621-02917C	1470	11
621-02919B	1470	13

Part No.	Fig No.	Key No.	Part No.	Fig No.	Key No.	Part No.	Fig No.	Key No.
621-02920C	1470	19	623-00075B	7170	1-24	65.02120-0002	004	108
621-02925A	1420	1-4	623-00085A	6290	1	65.02122-0001	004	503
621-02926E	1410	2		6300	2-1	65.02301-0245A	004	204
621-02938B	1100	8	623-00086	6290	-	65.02301-5099A	004	201
	2100	10		6300	2	65.02310-0006	004	202
	2105	10	625-00159B	1520	11	65.02401-0163D	004	306
621-02955C	1690	1	65.01101-0030I	001	2	65.02401-6021	004	301
621-02957B	1400	6	65.01101-6079D	001	1	65.02405-0006	004	307
	1410	6	65.01105-1047A	001	5	65.02410-6083B	004	308
621-03005A	1420	4	65.01105-1048A	001	3	65.02410-6124B	004	308
621-03011E	1420	1	65.01110-6090B	001	27	65.02410-6125B	004	308
621-03012G	1400	3	65.01110-6091B	001	27	65.02411-0006A	004	305
621-03014B	1400	4	65.01110-6092B	001	27	65.02501-0416	004	401
	1410	5	65.01112-0021A	001	23	65.02501-0417	004	402
621-03103	6260	12	65.01112-5018	001	24	65.02501-0418	004	403
	6270	7	65.01150-6008	001	28	65.02501-0440	004	400
	6280	7	65.01150-6034A	001	28	65.02501-0443	004	401
621-03113B	1510	67	65.01150-6035A	001	28	65.02501-0444	004	402
621-03114B	1510	68	65.01201-0067	001	31	65.02501-0445	004	403
621-03166	2100	12	65.01201-0068	001	31	65.02502-0082A	004	412
621-03167	2100	13	65.01201-0069	001	31	65.02503-8058	004	404
621-03224B	1480	-	65.01201-0070	001	31	65.02601-5019	004	501
621-03449E	1620	2-2	65.01201-0071	001	31	65.03101-1043C	005	102
621-03642C	1620	5	65.01304-0003C	002	1	65.03101-6071B	005	101
621-03657B	1630	11	65.01305-5074A	002	7	65.03201-1013A	005	104
621-03707	2130	8	65.01307-0002B	002	17	65.03203-1053	005	106
621-03710A	3100	14	65.01401-0119A	003	1	65.03203-1054	005	105
	6830	14	65.01510-0001	002	29	65.03401-6094	005	201
	6900	14		021	5	65.03401-6097B	005	200
621-03724	1500	49-4B	65.01510-0101	003	15	65.03901-0066A	005	125
621-03725	1500	49-5B		021	9		020	1
621-03727B	1560	1	65.01601-5010A	001	46		021	11
621-03732C	1560	-	65.01801-0011	005	206	65.03903-0001	005	205
621-03733C	1400	12	65.01801-5035A	005	223		020	5
	1410	13	65.01801-5100	007	1		021	15
621-03734A	1460	28	65.01810-5011	005	220	65.03905-0002B	020	4
622-00351M	1490	-	65.01840-0008A	007	3		021	14
	1500	-	65.01901-0020	001	36	65.03905-0002C	005	207
	1510	-		021	2	65.03905-0023A	005	211
	1520	-	65.01903-0002C	002	31		020	3
622-00353J	1520	32		021	6		021	13
622-00353K	1520	32	65.01903B0003	002	33	65.04101-0025A	006	102
622-00355A	1520	32-3		021	7	65.04101-0032	006	101
622-00356	1520	32-3A	65.01903B0004	002	34	65.04102-0005	006	103
622-00359K	1500	49		021	8	65.04103-0001B	006	104
622-00426G	1540	-	65.01904-0021	003	16	65.04103-0002	006	105
623-00074B	1610	3-23		021	10	65.04104-0001	006	106
	7170	1-23	65.02101-0045A	004	103	65.04200-6019D	006	201
623-00075B	1610	3-24	65.02101-6018A	004	101	65.04201-5002C	006	202
	1620	2-8	65.02115-0009	004	104	65.04202-0003C	006	211

Part No.	Fig No.	Key No.
65.04202-0009	006	210
65.04203-5008C	006	208
65.04205-0001	006	206
65.04301-0009	006	301
65.04302-5006	006	302
65.04401-0018B	006	401
65.04410-0006C	001	10
65.04410-0007C	001	9
65.04501-0004	006	501
65.04505-5012	006	505
65.04506-0011	006	510
65.04902-0011A	020	2
65.04902-0015	006	107
	021	12
65.05101-7025	008	101
65.05102-0018	008	102
65.05103-0051	008	111
65.05104-0177	008	107
65.05104-6065	008	103
65.05105-0044	008	106
65.05201-0065	008	202
65.05202-0001B	008	204
65.05207-0006	008	203
65.05401-5002F	001	52
65.05401-5023	001	47
65.05501-7084A	009	10
65.05503-5053	009	30
65.05510-5028A	009	20
	5110	5
65.05520-5001	009	100
65.05601-7056E	010	10
65.05604-0013B	010	20
65.05606-5024	010	15
65.05701-5200	016	308
65.05701-5342	015	110
65.05701-5343	015	119
65.05701-5530	010	90
65.05701-5531	010	70
65.05701-5541	007	16
65.05701-5636A	008	119
65.05705-6023	008	108
65.05740-5007	011	11
65.05801-5247	011	1
65.05805-5222A	011	20
65.05806-5102A	011	30
65.05901C0004	009	110
	021	17
65.05902-0025	010	11
65.05902A0005	010	25
	021	18

Part No.	Fig No.	Key No.
65.05903A0001	010	100
	021	19
65.05903A0002	008	121
	021	16
65.05903A0013	001	40
	021	3
65.05904A0002	011	60
	021	20
65.06402-5015	012	4
65.06404-5032	012	1
65.06405-0039	012	5
65.06500-6144A	013	101
65.06501-0214	013	102
65.06504-0033	013	106
65.06506-0085	013	107
65.06512-0016	013	108
65.06520-6007	013	103
65.06601-5070	013	201
65.06606-0039	013	115
65.06611-0132	013	203
65.06901-0035A	013	109
65.06901B0002	013	116
	021	23
65.06904-0003	012	18
	020	6
	021	21
65.06904A0004	012	17
	020	7
	021	22
65.08101-0274	014	101
65.08120-0026	014	220
65.08120-0027	018	15
65.08201-5062	014	201
65.08202-0175	014	202
65.08301-6008	016	305
65.08901-0028	014	107
	020	8
	021	24
65.08902-0034	014	219
	020	9
	021	25
65.09100-7080A	015	101
65.09411-5054	015	201
65.09440-0016	015	204
65.09901-0018A	015	102
	020	15
	021	33
65.09901-0020	015	105
	020	16
	021	34

Part No.	Fig No.	Key No.
65.09904-0008	014	204
	020	10
	021	26
65.10101-7099A	016	101
65.10102-6069	016	102
65.10301-6088	016	201
65.10301-6089	016	202
65.11101-7420A	016	301
65.11108-6006S	016	301C
65.11401-0002C	016	406
65.11596-0001	016	320
65.11596-0002	016	321
65.11902A0001	016	411
	021	29
65.12301-5022	016	501
65.12301-5824	016	507
65.12301-5825	016	510
65.12501-7023B	017	1
65.12503-5016B	017	4
	5110	6
65.12504-5013A	017	2
65.19102-0013B	018	1
65.19103-6010A	018	5
65.19107-0001A	018	11
65.19202-0005	005	133
65.19202-5005	005	124
65.26201-7076B	019	1
65.26201-7076C	019	1
65.26212-0006	019	1A
65.26803-7028B	014	203
65.26815-0002	005	132
65.27441-7006	001	53
65.29101-5001	019	3
65.90001-0139	007	4
65.90001-6013	009	130
65.90020-0049	001	25
65.90020-0066A	001	8
65.90020-0142	014	212
65.90021-0002	005	120
65.90021-0003	005	121
65.90021-0004	005	122
65.90201-0037	012	7
65.90201-0058	001	20
65.90201-0081	006	216
65.90201-0096	015	106
65.90201-0099	016	108
65.90201-0103	010	60
65.90201-0168	019	6
65.90201-0182	001	54
65.90302-0009	001	11

Part No.	Fig No.	Key No.	Part No.	Fig No.	Key No.	Part No.	Fig No.	Key No.
65.90302-0011	005	112	65.96501-0032B	005	224	713-00024A	6550	1B
65.90302-0015	005	107		020	14		6560	1B
65.90302-0017	005	113		021	32	713-00057C	6940	2
65.90302-0019B	005	109	65.96507-0007	001	26	719212KT	4120	*
65.90302-0027	005	111		021	31	850315-00029	5100	1-84
65.90302-0030	005	108	65.96507-0043	016	504	850334-00008	5100	1-85
65.90302-0041	001	12		016	506	900122-00079	4160	105
65.90302-0042	001	13	65.96507-0044B	016	104	900122-00112	2161	8-1
65.90302-0045	005	110		020	11	900131-00014A	1500	49-6
65.90310-0030	001	15		021	27	901-00045	1440	1
65.90310-0036A	009	40	65.96507-0050	016	106		1450	-
65.90310-0122	001	42		020	12	903-00069A	1520	32-2
65.90310-0135	001	38		021	28	903-00070B	1520	32-4
65.90310-0143	017	5	65.96601-0058	008	118	903-00071B	1520	32-5
65.90320-0019	001	17	65.96601-0067	015	120	903-00072A	1490	2
65.90320-0022	001	19		020	17	903-00073A	1490	3
65.90350-0005	009	80		021	35	903-00074	1500	50
65.90441-0009A	018	10	65.96801-0124A	013	209	903-00075	1490	4
65.90501-0006	004	109		5110	31	906-00002A	1460	5
65.90501-0013	006	207	65.96801-0194	7180	2	910-00019	5110	7
65.90501-0028	005	209	65.97401-0089	016	512	920-00127A	1770	1
65.90701-0059	006	503	65.97460-0002	007	11		1790	-
65.90701-0202	005	210		016	513	950205-00527	5210	-
65.90720-0016	006	511	65.97480-0135	015	117	950205-00528	5220	-
65.90815-0007	004	413	65.97480-0223	019	4	950205-00662	5130	2
65.91305-0007	008	114	65.97601-0045	009	70	950205-00663	5130	31
65.91501-0006	004	110	65.97601-0048	006	212	950205-00668	5130	-
65.91605-0001E	001	21	65.97601-0090	008	115	950205-00862	5120	14
65.91615-0011	001	29	65.98112-0009A	006	403	950205-00864	5120	-
65.91701-0029	014	222	65.98125-5022A	011	3	950205-01404C	5210	1
65.91701-0086	011	50	65.98130-0200A	015	109		5220	1
65.91701-0197	007	6	65.98131-0050	016	306	950205-02543	5145	-
65.91701-0199	007	7	65.98131-0119	007	22	950205-02544	5145	1
65.91701-0233	007	8	65.98150-0015B	016	508	950205-02546	5165	-
65.91710-0001	001	7	65.98155-0011	015	114	950205-02547	5165	1
65.91710-0004	005	119		016	309	950209-00348	5190	-
65.91710-0012	008	112	65.99601-8027	021	-	950209-00487	5200	1
65.93020-0015	004	106	65.99605-8020	020	-	950209-00501	5200	-
65.93020-0055	018	12	650103-00002	1470	-	950209-02452A	6340	24
65.93410-0027	013	104	650103-00002A	1470	-	950209-02979	5190	1
65.96301-0045C	012	19	650105-00059	2100	-	950209-03539	5205	-
65.96301-0176	016	511		2141	-	950209-03540	5205	1
65.96301-0279	015	202		2150	-	950209-03552	5170	-
65.96301-0280A	015	122		2161	-	950209-03553	5170	1
65.96301-0386	007	20	650105-00126	2105	-	D913109	1691	2
65.96301-0421	007	9		2125	-	DS0001079	1720	4
65.96301-0422A	007	18	713-00024A	6510	1B	DS0001083	3110	24
65.96341-0100	016	502		6520	1B		6570	24
	016	515		6530	1B		6640	24
65.96401-0007	003	11		6540	1B		6710	24

Part No.	Fig No.	Key No.	Part No.	Fig No.	Key No.	Part No.	Fig No.	Key No.
DS0001084	3110	23	DS0025021	6140	6	DS2013893	6630	2
	6570	23	DS0025022	1590	22	DS2016045	6620	1
	6640	23		1640	51	DS2016055	6110	53
	6710	23		6930	5		6110	54
DS0025013	1720	33		7190	5		6130	53
DS0025014	1160	6		7220	5		6130	54
	1630	25	DS0025023	1100	9	DS2016065	6760	1
DS0025015	1100	32		1160	9	DS2016074	6690	1
	1110	3	DS0025024	1220	20	DS2016092	6450	1
	1115	3	DS0025025	1630	42	DS2018100	1271	73
	1120	38	DS0025027	1630	42		1271	74
	1170	3	DS0025033	1731	31	DS2018201	6130	60
	1590	18		7130	20	DS2018216	6130	60
	1600	18		7250	31	DS2020108	1230	42
	1610	26	DS0025039	1720	9	DS2020128	1230	42
	1620	26	DS0025049	1731	25	DS2026127	1310	15
	1630	26		7250	25	DS2026129	1310	13
	1640	26	DS0026006	1731	15	DS2026145	1310	14
	1650	26		7250	15	DS2026146	1310	12
	1720	41	DS0401164	1630	58	DS2026201	6110	9
	6920	3	DS0401188	1670	13		6130	12
	6930	3		1740	3	DS2038144	1280	18
	7190	3		7230	3		1280	19
	7220	3	DS1001061	1630	4-11	DS2038190	3130	11
DS0025016	1130	35	DS1001088	1650	57	DS2038193	6840	11
	2100	22	DS1003008	6260	11	DS2038222	1280	16
	2105	22	DS1003009	1560	5		1280	17
DS0025017	1330	32	DS2011770	7030	15	DS2038226	6970	14
	1340	32	DS2012070	1230	84	DS2039122	6690	2
	6460	9	DS2012136	1230	42	DS20401141	6650	11
DS0025018	1240	46	DS2012217	6120	4	DS2040368	6580	2
	6120	7		6140	4	DS2040488	6720	2
	6140	7	DS2012300	6110	55	DS2040489	6740	2
	7200	6	DS2012341	6760	3	DS2040543	7010	4
DS0025019	1260	22	DS2012342	6690	3	DS2040544	7010	5
	1650	48	DS2012387	6130	55	DS2040610	3130	10
	1720	31	DS2012392	6460	26	DS2040637	6970	13
	1750	3	DS2012518	6450	3	DS2040638	6840	10
	2100	23	DS20131208	7030	1	DS2040683	1290	101
	2105	23	DS2013220	6120	5	DS2040684	1290	102
	6100	15		6140	5	DS2040685	1290	104
	6110	43	DS2013356	6700	2	DS2040686	1290	103
	6130	43	DS2013387	6500	2	DS2040687	1270	20
	6200	19	DS2013515	6200	12	DS2040709	1270	21
DS0025020	1280	42	DS2013517	6460	4	DS2043108	6620	2
	6110	60	DS2013672	6460	51	DS2043128	6450	2
	6130	59		6460	52	DS2045337	1300	10
DS0025021	1150	52	DS2013700	6770	2	DS2045338	1300	11
	6100	6	DS2013834	6110	41	DS2045406	6760	2
	6120	6		6130	41	DS20531021	6850	3

Part No.	Fig No.	Key No.	Part No.	Fig No.	Key No.	Part No.	Fig No.	Key No.
DS2053833	1390	49	DS2090008	6160	23	DS2093189	1390	43
DS2053849	6220	1	DS2090009	6410	14	DS2093190	1390	45
DS2053854	6870	1	DS2090019	7200	10	DS2093191	1390	44
DS2053864	3140	3	DS2090022	7200	11	DS2093192	1390	46
	6980	3	DS2092045	6160	18	DS2093193	1330	62
DS2053867	6850	5	DS2092046	6480	9		6160	14
DS2053868	6200	41	DS2092080	7200	12	DS2093196	6430	2
DS2053869	6200	42	DS2092087	2185	2	DS2093200	6170	14
DS2053878	6870	2	DS2092177	2180	3	DS2093201	6470	9
DS2053884	6980	4	DS2093001	6200	17	DS2093202	6160	22
DS2053953	6220	2	DS2093003	1320	71		6480	6
DS2053997	6850	4	DS2093017	1330	67	DS2093204	6480	7
DS2054133	1320	74	DS2093021	6150	20	DS2093205	6480	8
DS2054217	2180	4		6151	20	DS2093212	1330	66
DS2054293	6200	13	DS2093022	1350	55	DS2093219	6170	26
DS2054336	1330	134	DS2093026	1350	59	DS2093222	1350	54
	6150	32	DS2093027	6150	19	DS2093240	6430	1
DS2054356	1390	9		6470	7	DS2093256	6160	16
DS2054394	6200	14	DS2093028	6160	17	DS2093300	6200	17
DS20551024	1250	40	DS2093030	1360	79	DS2093391	6155	1
DS2055292	6460	3	DS2093034	1330	84	DS2093438	6410	1
DS2055666	6440	1	DS2093035	6160	13	DS2094004	1360	63
	6440	2	DS2093040	6151	19	DS2094006	1370	81
DS2055672	6890	1		6470	6		1390	7
	6890	2	DS2093044	6150	21	DS2094037	1360	78
DS2055691	6610	3		6151	21	DS2094053	1320	64
DS2055788	6151	23	DS2093074	6470	8	DS2094055	1360	75
DS2055822	6730	2	DS2093080	1330	65	DS2094136	6170	25
DS2055849	3160	1	DS2093090	1340	61	DS2094327	6160	15
	6730	1		6150	24	DS2095001	1370	101
DS2055866	6230	3	DS2093104	6410	2		1370	11
DS2055867	6680	3	DS2093114	6150	23		1380	101
DS2055891	6660	2	DS2093115	6150	18		1380	11
DS2055920	6660	1	DS2093124	6150	22	DS2095002	1380	22
DS2055921	6750	3	DS2093130	1360	77	DS2095003	1370	82
DS2055950	1230	56		6480	5		1380	93
DS2055957	6990	2	DS2093134	1340	145		6170	24
	6990	3		1340	49		6480	10
DS2055976	1250	41	DS2093139	1350	53	DS2095004	1370	19
DS2058279	6590	1	DS2093155	1340	153	DS2095029	7210	1
DS2058331	1230	56	DS2093173	1350	56		7210	2
DS2059383	6420	5	DS2093174	1340	50	DS2095030	7210	3
DS2059593	7020	10	DS2093175	1340	51		7210	4
DS2059595	3160	2	DS2093178	1340	52	DS2095031	7200	13
	6590	2		1350	165	DS2097013	1271	20
DS2059598	6730	2	DS2093180	1320	68	DS2097014	1271	21
DS2059600	6660	2	DS2093181	1330	132	DS2105005	6100	8
DS2059607	7020	10	DS2093182	1320	69	DS2105011	1210	15
DS2079153	6100	8	DS2093184	1340	154	DS2105018	1210	7
DS2079171	6100	11	DS2093185	1360	76	DS2105022	1210	5

Part No.	Fig No.	Key No.
DS2105026	1210	6
DS2105053	1200	22
DS2105146	6100	8
DS2112002	2180	1
DS2112011	2185	4
DS2112012	2185	3
DS2130006	3150	11
DS2130008	6650	11
DS2130011	6580	11
DS2130012	6720	11
DS2213165	1370	25
	1380	25
DS2213167	1250	16
DS2214051	1190	3
DS2225009	3160	3
	6590	3
	6660	3
	6730	3
	7020	17
DS2232107	6110	12
	6130	15
DS2232108	6460	12
	6460	53
DS2242017	6150	25
	6151	25
DS2242029	1270	79
	1271	79
DS2308021	7120	5
DS2338029	6200	8
DS2404024	6200	6
DS2410009	1340	177-5
	6150	51-5
	6151	51-5
	6380	5-3
	6390	5-4
DS2415007	6450	42
	6690	42
	6760	42
DS2802021	1200	7
DS2802023	3160	6
	6590	6
	6660	6
	6730	6
	7020	23
DS2805007	3160	11
	6590	11
	6660	11
	6730	11
	7020	19
DS2805008	3160	19

Part No.	Fig No.	Key No.
DS2805008	6660	19
	6730	19
	7020	15
DS2805009	6220	11
	6440	11
	6870	11
	6890	11
	6990	11
DS2854017	6910	29
DS7601020	1100	36
DS7601021	1100	37
DS7601027	1100	36
DS7601028	1100	37
DS7601046	1100	41
DS7752001	6910	22
DS7752002	6910	23
DS7752006	3110	17
	6570	17
	6640	17
	6710	17
DS7752007	3110	18
	6570	18
	6640	18
	6710	18
DS7752012	3100	13
	3110	15
	6570	15
	6640	15
	6710	15
	6830	13
	6900	13
	6910	12
DS7752013	3100	23
	3110	16
	6570	16
	6640	16
	6710	16
	6830	23
	6900	23
	6910	13
DS7752017	3100	22
	3100	27
	6830	22
	6830	27
	6900	22
	6900	27
DS7752018	3100	12
	6830	12
	6900	12
DS7752025	3100	26

Part No.	Fig No.	Key No.
DS7752025	6830	26
	6900	26
DS7752026	3100	24
	6830	24
	6900	24
DS7752027	3100	25
	6830	25
	6900	25
DS7752028	3100	44
	6830	44
	6900	44
DS7752093	3100	22
	3100	28
	6830	22
	6830	28
	6900	22
	6900	33
ECOEN	7180	3
K1000039A	1120	3
K1000040A	1120	5
K1000041A	1120	4
K1000042A	1120	6
K1000057	6730	9
K1000097E	6140	-
K1000140A	6410	5
K1000266	1190	1I
K1000269A	1220	9
K1000321G	3120	-
K1000322G	3120	1
K1000334A	6190	8
	6600	6
	6670	7
	6740	8
K1000338A	6190	19
	6600	7
	6670	8
	6740	9
K1000351A	6200	18
K1000352A	6460	2
K1000354	1340	177-1
	6150	51-1
	6151	51-1
	6380	5-1
	6390	5-1
K1000356	6220	12
	6870	12
K1000358B	6110	42
	6130	42
K1000378B	6100	-
K1000410	4340	-

Part No.	Fig No.	Key No.
K1000410	6460	23
K1000485A	1660	2
K1000488A	1660	4
K1000489A	1660	5
K1000490A	1660	6
K1000491	1660	7
K1000492A	1660	8
K1000500	1660	10
K1000504	1660	12
K1000555H	1380	2
	4200	-
K1000556H	1370	1
	4200	-
K1000562	1170	8
K1000563B	1130	15
K1000591A	1670	1
K1000592A	1670	2
K1000600B	1670	10
K1000602	1610	3-20
	1620	2-20
	7170	1-20
K1000644B	1240	13
K1000663	1160	7
K1000682	2110	4
K1000695A	6170	3
K1000696B	6170	4
K1000698E	1180	1
	4100	-
K1000698G	1180	1
	4100	-
K1000704A	1160	8
K1000733	3110	1B
	6570	1B
	6640	1B
	6710	1B
K1000734	3110	1C
	6570	1C
	6640	1C
	6710	1C
K1000735	3110	2B
	6570	2B
	6640	2B
	6710	2B
K1000752C	1130	2
	1140	-
K1000789	1720	21
K1000794	1510	56
K1000814	1760	1C
K1000815	1760	1D
K1000816	6160	35

Part No.	Fig No.	Key No.
K1000817	6470	16
K1000840	1400	13
K1000842A	1400	14
K1000852A	1660	13
K1000882A	6860	3
K1000886A	6190	1
K1000911	3110	27
	6570	27
	6640	27
	6710	27
K1000912B	3110	28
	6570	28
	6640	28
	6710	28
K1000965E	1170	-
K1000967A	1120	1
K1000982	6250	1
K1001023	1400	11
	1410	12
K1001029	1120	34
	1130	34
	1150	34
	1200	12
	1210	13
	1260	20
	1320	36
	1330	36
	1390	40
	1660	14
	1690	34
	1691	18
	1700	40
	1730	25
	1750	9
	1760	30
	1780	8
	1800	26
	3140	16
	3160	5
	6100	4
	6150	17
	6151	17
	6160	12
	6220	10
	6410	12
	6470	11
	6590	5
	6660	5
	6730	5
	6850	16

Part No.	Fig No.	Key No.
K1001029	6870	10
	6980	12
	7020	16
	7070	8
K1001048	6490	4
K1001050A	6500	1
K1001052	6230	1
K1001053	6230	2
K1001068	1460	20
K1001252B	6460	24
K1001260A	1610	3-8
	1620	2-7
	7170	1-8
K1001263A	1700	5
	1700	6
K1001277C	1800	20
K1001278C	1800	92
K1001279C	1800	22
K1001280C	1800	93
K1001295B	1470	12
K1001310	1470	20
K1001324E	1690	-
K1001325Q	1700	-
K1001326G	1710	-
K1001328C	1730	-
	1731	-
K1001329A	1750	-
K1001331E	1770	-
K1001332G	1800	-
K1001369C	1690	2
K1001370A	1690	31
K1001371G	1700	25
K1001373C	1710	9
K1001374G	1760	1
K1001398B	1730	14
K1001858A	1710	1
K1001871B	6480	3
K1001873A	6480	1
K1001968	1630	4-7
K1002081B	1530	1
K1002082	1570	-
K1002083	1580	-
K1002084A	1440	-
K1002121	6490	17
	7000	23
K1002130A	3110	8
	6570	8
	6640	8
	6710	8
K1002153	7120	6

Part No.	Fig No.	Key No.
K1002162H	1410	-
K1002202H	1400	-
K1002204C	1420	-
K1002206	1790	1
K1002207	1790	2
K1002208	1790	3
K1002209	1790	4
K1002210	1790	5
K1002211	1790	6
K1002212	1790	7
K1002213	1790	8
K1002214	1790	9
K1002215	1790	10
K1002216	1790	11
K1002217	1790	12
K1002218	1790	13
K1002219	1790	14
K1002229A	1430	-
K1002230A	1430	1
K1002231A	1430	2
K1002294	3110	2
	6570	2
	6640	2
	6710	2
K1002341	1240	9
K1002385	1470	33
K1002406D11	1700	20
K1002406D12	1700	22
K1002406D13	7050	11
K1002406D14	7040	2
K1002406D21	1700	24
K1002406D3	7080	21
K1002406D4	7120	2
K1002406D5	7130	5
K1002454B	1110	2
	1115	2
	6920	2
	6930	2
	7190	2
	7220	2
K1002534A	1710	8
K1002561B	6270	-
K1002574A	6270	3
	6280	4
K1002575A	6270	4
	6280	5
K1002635	1490	104
K1002636	1490	105
K1002637	1520	32-13
K1002641	1510	100

Part No.	Fig No.	Key No.
K1002759A	6300	1
K1002771	6300	-
K1002778	6380	4
	6390	4
K1002811A	6340	1
K1002838	6340	4
K1002839A	6340	5
K1002840	6340	6
K1002841	6340	7
K1002842A	6340	3
K1002846	6340	2
K1002866	7130	9
K1002867D1	7130	10
K1002883A	6340	-
K1002939	6450	13
	6620	14
	6690	14
	6760	14
K1002940	6450	14
	6620	15
	6690	15
	6760	15
K1002943	1640	38
K1003111	1700	54
K1003113D4	1700	58
K1003118	1260	32
K1003284	1500	88
K1003296	1220	28
K1003381	1420	3
K1003427	1490	89
K1003522	1490	109
K1003618	1170	18
K1003638B	6160	35
K1003664D1	1350	97
K1003676B	1510	107
K1003900	1520	32-16
K1003945	1370	52
	1380	52
K1003947A	6170	21
K1003948A	6480	26
K1004006	6220	7
	6440	19
	6870	7
	6890	14
	6990	17
K1004011	6230	7
	6610	7
	6680	7
	6750	7
K1004028	6490	10

Part No.	Fig No.	Key No.
K1004028	6880	10
	7000	15
K1004057	6190	6
	6670	13
	6740	6
K1004061	1490	108
K1004106	4300	2
	4300	4
K1004266	1200	5
K1004272	1550	3
K1004426	1710	10
K1004427	1710	7
K1004487	1120	21
K1004515	1130	22
K1004630	1610	44
	1620	44
	1630	44
	1650	44
K1005007A	1460	30
K1005305A	1630	4-10
K1005344A	1470	17
K1005345A	1470	18
K1005776	6210	3
K1005822	6340	21
K1005823	6340	20
K1005909	5120	3
K1006227	6500	13
	6630	10
	6700	13
	6770	13
	7030	4
K1006228	6500	14
	6630	11
	6700	14
	6770	14
	7030	5
K1006245	1150	9
K1006368	1500	49-18
K1006370	1520	32-38
K1006396B	1271	70
K1006572	1700	23
K1006656	6170	23
	6480	28
K1006663	7140	2
K1006778B	1160	4
K1006780	1130	8
K1006781	1130	7
K1006803A	7160	-
K1006930	7000	8
K1006931	7000	9

Part No.	Fig No.	Key No.	Part No.	Fig No.	Key No.	Part No.	Fig No.	Key No.
K1006933	1510	114	K1008019D22	5150	2	K1011304	7190	4
K1006936	1510	98	K1008100	6740	1		7220	4
K1006995	1410	15	K1008111	6750	1	K1011384	1800	20B
K1007038A	6910	8	K1008112	6750	2	K1011385	1800	92B
K1007044	1660	16	K1008126	1140	1	K1011388	1800	22A
K1007092B	6310	1	K1008128	1140	3		1800	93A
K1007093B	6320	1	K1008129	1140	6	K1011434A	4300	-
K1007094B	6330	1	K1008130	1140	7		7010	1
K1007164B	1271	71	K1008131	1140	8	K1011476E	6780	-
K1007197	1240	10	K1008132	1140	10	K1011477E	6780	1
K1007231A	6340	24	K1008167	5100	1-16	K1011478E	6790	-
K1007253B	3100	4	K1008335	1610	3-25	K1011479E	6790	1
	6830	4		1620	2-21	K1011480E	6800	-
	6900	4		7170	1-25	K1011481E	6800	1
K1007255A	3110	9	K1008715	6240	-	K1011482E	6810	-
	6570	9	K1009605B	1710	1A	K1011483E	6810	1
	6640	9	K1009627	1460	34	K1011484E	6820	-
	6710	9	K1010065	7100	8	K1011485E	6820	1
K1007256A	3110	11	K1010215	6770	1	K1011522	7020	1
	6570	11	K1010218	6730	14	K1011527	7020	5
	6640	11	K1010221	6730	17	K1011645D1	5130	2
	6710	11	K1010271	6660	17	K1011645D2	5180	1
K1007262E	6480	-	K1010304	1460	37	K1011675A	1220	2
K1007293C	6120	-	K1010466	1400	20	K1011743D6	5120	13
K1007342J	5120	-		1410	16	K1012143	1160	10
K1007371	1740	-	K1010584	1730	26	K1012144	1160	1
K1007400B	7040	-		1731	26	K1012192B	1150	12-1
K1007403B	7050	-		7250	26	K1012685A	1220	14
K1007404A	7060	-	K1010702	1740	21	K1013100A	6510	-
K1007405	7070	-	K1010703	6240	21	K1013101A	6510	1
K1007408	7090	-	K1010730	3160	9	K1013102	6510	1A
K1007410A	7110	-		6590	9	K1013103A	6520	-
K1007411	7120	-		6660	9	K1013104A	6520	1
K1007412E	7130	-		7020	20	K1013105	6520	1A
K1007413	6210	-	K1010767A	1140	4	K1013106A	6530	-
K1007416	6250	-	K1010768	1140	9	K1013108A	6530	1
K1007418	7140	-	K1010769	1140	2	K1013109A	6530	1A
K1007419	7150	-	K1010821B	6950	-	K1013110A	6540	-
K1007551	1120	24	K1010822B	6950	1	K1013111A	6540	1
K1007600B	1680	-	K1010823B	6960	-	K1013112	6540	1A
K1007631B	1210	-	K1010824B	6960	1	K1013113A	6550	-
K1007635E	6940	-	K1010839	1510	116	K1013114A	6550	1
K1007636E	6940	1	K1010847	6220	9	K1013115	6550	1A
K1007665B	1680	1		6870	9	K1013117A	6560	-
K1007668	1720	18	K1011000	5130	20	K1013118A	6560	1
K1007669	5100	4	K1011002	5130	22	K1013119	6560	1A
K1007832	5100	-	K1011080	6100	13	K1013251	1210	1
K1007835	1260	24	K1011081	6100	14	K1013266B	1630	15
K1007957	1220	31	K1011211	6970	18	K1013379	6730	-
K1008019D21	5150	1	K1011304	6930	4	K1013382A	6740	-

Part No.	Fig No.	Key No.	Part No.	Fig No.	Key No.	Part No.	Fig No.	Key No.
K1013385	6770	-	K1018714	7020	2	K1030734A	1600	17
K1013389	6750	-	K1018715	7020	3	K1030735A	1600	16
K1013391	6760	-	K1018762	7020	4	K1030750A	1590	4
K1013396A	6590	-	K1018763	7020	6	K1033265	3130	6
K1013397	6590	14	K1018764	7020	7	K1033266	3130	8
K1013398A	6600	-	K1018765	7020	8	K1033267	3130	7
K1013401A	6630	-	K1018766	7020	9	K1033268	3130	9
K1013404A	6610	-	K1023656K	5130	-	K1033269	6180	1
K1013405A	6620	-	K1024144	6100	22	K1033270	6180	2
K1013410A	6660	-	K1024692	1670	3	K1033271	6180	3
K1013411B	6670	-	K1024956	2130	7	K1033272	6180	4
K1013414A	6700	-	K1025246	6670	1	K1033273	3130	4
K1013434A	6680	-	K1025286	6620	17	K1033274	3130	5
K1013436B	6690	-		6690	22	K1033644	6400	1
K1013684	6730	15	K1025336	6620	18	K1033652	6400	-
K1013685	6730	16		6690	23	K1033880	1500	49-8
K1013686	6730	18	K1025391	1270	101	K1033991	1500	49-1
K1013687	6660	21		1271	101	K1034000	5120	1
	6730	21		4170	-	K1036143A	1240	48
K1013713A	2150	7-5		4180	-	K1036299A	1240	49
K1013714	2150	7-6		4190	-	K1036301	1240	1
K1013812	1650	53	K1025402	6880	4	K1036302B	1240	5
K1013825	1180	3	K1025403	6590	15	K1036303B	1240	3
K1013846	1710	3	K1025404	6590	16	K1036331	1500	49-7
K1014759	6450	18	K1025405	6590	17	K1036466	2120	5-2D
	6690	19	K1025406	6590	18		2125	5-2D
	6760	19	K1025407	6630	1	K1036841	7000	4
K1014836	6910	7	K1025408	6610	1	K1036842	7000	5
K1014874	7200	1	K1025409	6610	2	K1036843	7000	6
K1015093	6450	19	K1025450	6880	18	K1036844	7000	7
	6690	20	K1025460	6700	1	K1036967	1500	49-17
	6760	20	K1025462	6680	1	K1037713A	2150	7
K1015739	5130	27	K1025463	6680	2	K1037728	2140	6
K1015780	7200	2	K1025464	6660	14	K1037757	2110	3
K1016430	1150	11	K1025465	6660	15	K1037847A	3100	1A
K1016432	1150	10	K1025466	6660	16		6830	1A
K1017382A	4270	-	K1025467	6660	18		6900	1A
	6170	1	K1026654	1700	91	K1037848A	3110	1A
	6480	2	K1027501	6460	-		6570	1A
K1017764	6900	28	K1027502A	6200	-		6640	1A
K1018109	6970	10	K1027513B	5190	1		6710	1A
K1018590	7020	-	K1027765	1520	32-15		6910	1A
K1018595	1720	7	K1027768	1500	118	K1037849A	3110	1B
K1018659	6970	5	K1027769	1500	119		6570	1B
K1018660	6970	6	K1029257	1220	14B		6640	1B
K1018706	6970	7		5110	25		6710	1B
K1018709	6970	11	K1030506B	1590	7	K1037850A	3110	1C
K1018710	6970	12	K1030529A	1590	6		6570	1C
K1018712	7010	2	K1030731	1600	14		6640	1C
K1018713	7010	3	K1030732A	1600	15		6710	1C

Part No.	Fig No.	Key No.
K1037851A	3110	2B
	6570	2B
	6640	2B
	6710	2B
K1037852A	3110	2A
	6570	2A
	6640	2A
	6710	2A
K1037853A	4230	2
	4230	4
	4240	2
	4240	4
	4260	2
	4260	4
	4280	2
	4280	4
	4290	2
	4290	4
	4310	2
	4310	4
	4320	2
	4320	4
K1037854A	4250	2
	4250	4
	4330	2
	4330	4
K1037857E	3100	1
K1037858E	3100	-
K1037887	3140	18-1
	6850	17-1
	6980	13-1
K1037998C	3110	-
K1037999B	3110	1
K1038003	3140	18
	6850	17
	6980	13
K1038006A	3120	2
	6780	2
	6790	2
	6800	2
	6810	2
	6820	2
K1038009	1660	17
K1038010	1660	18
K1038011	1660	19
K1038032	1330	12
K1038107A	1630	18
K1038110A	1630	17
K1038193	7080	5
	7100	10

Part No.	Fig No.	Key No.
K1038193	7160	5
K1038203	1190	1B
	4140	-
K1038204	4140	20
K1038205	4140	10
K1038206	4140	1
K1038207	4140	2
K1038208	4140	14
K1038210	4140	9
K1038240	1525	-
K1038247	1525	1
K1038365	2170	-
K1038366	2170	1
	6350	1-1
	6360	1-1
	6370	1-1
K1038367	2170	1A
	6350	1-1A
	6360	1-1A
	6370	1-1A
K1038368	2170	1B
	6350	1-1B
	6360	1-1B
	6370	1-1B
K1038369	2170	1E
	6350	1-1E
	6360	1-1E
	6370	1-1E
K1038370	2170	1F
	6350	1-1F
	6360	1-1F
	6370	1-1F
K1038371	2170	1G
	6350	1-1G
	6360	1-1G
	6370	1-1G
K1038372	2170	1H
	6350	1-1H
	6360	1-1H
	6370	1-1H
K1038373	2170	1I
	6350	1-1I
	6360	1-1I
	6370	1-1I
K1038374	2170	1J
	6350	1-1J
	6360	1-1J
	6370	1-1J
K1038376	2170	1K
	6350	1-1K

Part No.	Fig No.	Key No.
K1038376	6360	1-1K
	6370	1-1K
K1038377	2170	2
	6350	1-2
	6360	1-2
	6370	1-2
K1038378	2170	3
	6350	1-3
	6360	1-3
	6370	1-3
K1038379	2170	4
K1038383A	2150	7-2
K1038386A	2150	7-3
K1038387	2150	7-4
K1038389	2140	6-2
K1038390	2140	6-3
K1038391	2140	6-4
K1038392	2140	6-5
K1038393	2140	6-6
K1038394	2140	6-7
K1038409	1130	13
K1038429	2170	1C
	6350	1-1C
	6360	1-1C
	6370	1-1C
K1038430	2170	1D
	6350	1-1D
	6360	1-1D
	6370	1-1D
K1038517	6910	9
K1038559	1160	2
K1038610	6490	1
	6880	1
K1038611	6490	2
	6880	2
K1038612	6490	3
K1038685	4140	5
K1038688C	1650	1
K1038697A	1630	4-2
K1038697B	1630	4-2
K1038790	2160	8
K1038790KT	2160	*
K1038791	2160	8-1
K1038792	2160	8-2
K1038793	2160	8-3
	2161	8-3
K1038794	2160	8-4
	2161	8-4
K1038814	3140	1
	6850	1

Part No.	Fig No.	Key No.
K1038814	6980	1
K1038815	3140	2
	6850	2
	6980	2
K1038864	2130	-
K1038865	2130	1
K1038870B	1650	6
K1038917B	1610	3-1
	7170	1-1
K1038918	1610	3-2
K1038919B	1610	3-3
	7170	1-3
K1038920	1610	3-7
	7170	1-7
K1038922B	1610	3
K1038954B	1590	1
K1038966	1600	23
K1038968	1270	83
K1039014A	1330	7
K1039067B	1630	4
K1039067C	1630	4
K1039068	1720	5
K1039117A	1150	12-3
K1039134	1670	4
K1039137	1670	6
K1039183C	1110	1
	7190	1
K1039183E	1110	1
	7190	1
K1039208A	1640	8
K1039209A	1640	9
K1039212C	1460	22
K1039406A	1230	-
	1240	-
	1250	-
K1039427A	1590	19
K1039430C	1650	12
K1039450	2130	2
K1039451	2130	3
K1039452	2130	4
K1039453	2130	5
K1039456A	1240	8
K1039465	1590	10
K1039468B	1640	10
K1039514	1540	20
K1039515	1540	19
K1039521A	1720	2
K1039697	5130	30
K1039702	2120	5
	2125	5

Part No.	Fig No.	Key No.
K1039703B	2100	-
	2110	-
	2115	-
	2120	-
	2140	-
	2150	-
	2160	-
K1039799B	1610	-
K1039869B	1610	3-22
	7170	1-22
K1040048	1130	54
K1040096	1420	3
K1040606	1550	11
	1630	81
K1041214A	3110	2
	6570	2
	6640	2
	6710	2
K1041218A	3150	1
	4260	-
K1041220B	4310	-
	6420	1
K1041221B	4320	-
	6420	2
K1041222A	4330	-
	6440	3
	6890	3
	6990	1
K1041250	1670	7
K1041251	1670	8
K1041252	1670	9
K1041795	3130	-
K1041817A	3150	-
K1041834	3140	-
K1041835	6180	-
K1041836	6490	-
K1041837	6220	-
K1041838B	6420	-
K1041839A	6440	-
K1041907	6190	-
K1041925	6500	-
K1041933	6230	-
K1041937A	6450	-
K1042074	5130	19
K1042074A	5130	19
K1042763	7000	1
K1042764	7000	2
K1042809	7030	-
K1042810	7030	2
K1042813	7030	3

Part No.	Fig No.	Key No.
K1043726	1470	38
K1043854A	1620	2
K1043855A	1620	2-1
K1044408	1340	177
K1044409	6380	5
K1044576B	2180	-
K1044586B	1270	-
	1280	-
	1290	-
	1300	-
	1310	-
K1044591	6410	41
K1044599	6110	-
K1044602A	6130	-
K1044617	1240	7
K1044664A	1320	-
	1330	-
	1340	-
	1350	-
	1360	-
K1044672	6150	-
K1044672A	6151	-
K1044674C	6160	-
K1044684	6470	-
K1044685	6380	-
K1044690	6410	-
K1044691	6430	-
K1044708	1370	-
	1380	-
	1390	-
K1044710A	6170	-
K1044715A	6155	-
K1044939B	6920	1
	6930	1
K1044939C	6920	1
	6930	1
K1044948A	1200	1
K1044989B	3130	71
	4230	-
	6840	71
	6970	51
K1044990B	3130	72
	4240	-
	6840	72
	6970	52
K1044991A	3130	81
	4250	-
	6840	81
	6970	61
K1044992	6150	51

Part No.	Fig No.	Key No.	Part No.	Fig No.	Key No.	Part No.	Fig No.	Key No.
K1044993	6390	5	K1045916	6860	-	K1046335A	7010	-
K1044995	6390	-	K1045919	1190	1	K1046430	1760	-
K1045023	6160	36	K1045921C	1100	1	K1046733A	1720	-
K1045024	1190	1A	K1045922C	1100	-	K1046831	1220	1
	4130	-	K1045927	6840	4	K1046833	1220	-
K1045318A	1200	-	K1045928	6840	5	K1046927	3110	7
K1045433	7170	1-2	K1045929	1670	5		6570	7
K1045478	6350	1-4	K1045932	1670	-		6640	7
K1045479	6360	1-4	K1045937	6840	6		6710	7
K1045480	6370	1-4	K1045938	6840	7		6910	6
K1045506	6350	1	K1045959	6860	1	K1047156	5180	-
K1045507	6360	1	K1045960	6860	2	K1047299	3160	-
K1045508	6370	1	K1045984	1150	12	K1047301	3160	14
K1045589A	6350	-	K1045986A	1120	-	K1047302	3160	15
K1045590A	6360	-		1130	-	K1047303	3160	16
K1045591A	6370	-		1150	-	K1047304	3160	17
K1045659E	6830	-	K1045987A	1660	-	K1047305	3160	18
K1045661C	6830	1	K1045990B	1590	-	K1047556	6155	4
K1045675A	1110	-		1600	-	K1047557	1330	131
K1045675B	1110	-	K1046013	6880	3		4220	-
K1045676A	7190	-	K1046026	6870	-	K1047774	1130	55
K1045676B	7190	-	K1046041A	6890	-	K1048085	1610	3-21
K1045677A	6920	-	K1046064	7000	3		7170	1-21
K1045677B	6920	-	K1046071C	1620	-	K1048145	1270	41
K1045678A	6930	-		1630	-		1271	41
K1045678B	6930	-		1640	-	K1048688	1460	-
K1045700C	6900	-		1650	-	K1048689	1460	21
K1045701C	6900	1	K1046072	1160	-	K1049011	1600	11
K1045837	6970	-	K1046104	6840	3	K1049153B	5110	-
K1045838	6980	-	K1046113	1260	-	K1049154EF	5110	41
K1045842A	6990	-	K1046113A	1260	-	K1049155E	5110	42
K1045843	7000	-	K1046162	6840	9	K1049167	5170	1
K1045852	6970	1	K1046174A	7170	1	K1049168	5150	-
K1045853	6970	2	K1046175A	7170	-	K1049177	5140	-
K1045854	6970	3	K1046237E	6640	-	K1049178	5170	-
K1045855	6970	4	K1046238E	6570	-	K1049182	5160	-
K1045856	6970	8	K1046239E	6710	-	K1049184	5160	1
K1045857	6970	9	K1046246B	6640	1	K1049826	1600	5
K1045898	1780	-	K1046248B	6570	1	K1049827	1640	7
K1045900	1150	16	K1046250B	6710	1	K1049854	1170	5
K1045901	1150	12-2	K1046272B	6910	-	K1049858	1100	29
K1045902A	1660	9	K1046275B	6910	1	K1050297	1270	81
K1045903A	1590	2	K1046325	6580	-	K1050307	6350	2
K1045907A	1590	3	K1046326	4280	-	K1050308	6360	2
K1045908	1600	13		6580	1	K1050309	6370	2
K1045909	1610	47		6650	1	K1051986	1700	1
K1045910	1160	5	K1046328	6650	-	K1052091A	7180	-
K1045913	6840	-	K1046332	6720	-	K1052729	7180	1
K1045914	6880	-	K1046333	4290	-	K1052773	7170	-
K1045915	6850	-		6720	1	K1052774	7170	1

Part No.	Fig No.	Key No.
K1052775	7170	1-2
K1052808	7170	2
K1053423	1700	17
K1055454	1720	25
K1056987	1500	49-19
K1057605	1720	40
K9000422	1180	3E
K9000998	6420	6A
K9000999	6440	4A
	6890	4A
	6990	4A
K9001001	4200	32
K9001114	4200	1
K9001115	4200	3
K9001116	4200	4
K9001117	4200	6
K9001119	4200	9
K9001121	4200	11
K9001123	4200	13
K9001128	4200	20
K9001129	4200	22
K9001129A	4200	22
K9001130	4200	25
K9001131	4200	25
K9001132	4200	28
K9001133	4200	30
K9001139	4200	37
K9001140	4200	37
K9001141	4210	6
K9001148	4250	18
	4330	18
K9001149	4250	20
	4330	20
K9001158	4250	40
	4300	37
	4330	37
K9001199	4180	50
K9001201	1450	2
K9001202	1450	3
K9001203	1450	4
K9001204	1450	5
K9001206	1450	7
K9001207	1450	8
K9001208	1450	10
K9001209	1450	11
K9001210	1450	12
K9001211	1450	13
K9001212	1450	14
K9001213	1450	15
K9001214	1450	16

Part No.	Fig No.	Key No.
K9001215	1450	17
K9001216	1450	18
K9001217	1450	19
K9001218	1450	20
K9001219	1450	21
K9001220	1450	22
K9001221	1450	23
K9001374	4300	22
K9001375	4300	23
K9001401	4260	7
	4280	7
	4290	7
K9001402	4260	8
	4280	8
	4290	8
K9001403	4260	9
	4280	9
	4290	9
K9001404	4260	10
	4280	10
	4290	10
K9001406	4260	16
	4280	16
	4290	16
K9001410	4260	22
	4280	22
	4290	22
K9001413	4260	34
	4280	34
	4290	34
K9001424	4300	8
K9001425	4300	9
K9001426	4300	10
K9001427	4300	14
K9001428	4300	16
K9001429	4300	17
K9001430	4300	18
K9001431	4300	20
K9001457	4340	*
K9001695	1450	1
K9001752	4300	*
K9001753	4300	1
K9001754A	4300	3
K9001755	4300	26
K9001756	4300	29
K9001757	4300	33
K9001762	4200	7
K9001763	4200	8
K9001766	4200	12
K9001767	4200	14

Part No.	Fig No.	Key No.
K9001768	4200	16
K9001804	4170	68
K9001805	4170	106
K9001807	4180	5
K9001809	4180	16
K9001810	4180	17
K9001811	4120	-
K9001833	4110	-
K9001834	4110	627
K9001835	4110	628
K9001836	4110	629
K9001837	4110	631
K9001838	4110	641
K9001839	4110	898
K9001840	4130	103
K9001841	4130	104
K9001842	4130	112
K9001843	4130	201
K9001845	4130	203
K9001846	4130	205
K9001847	4130	213
K9001849	4100	41
K9001850	4100	42
K9001851	4100	774
K9001852	4100	985
K9001856	4230	5
	4240	5
	4310	5
	4320	5
K9001857	4230	8
	4240	8
	4310	8
	4320	8
K9001858	4230	9
	4240	9
	4310	9
	4320	9
K9001859	4230	14
	4240	14
	4310	14
	4320	14
K9001860	4230	17
	4240	17
	4310	17
	4320	17
K9001861	4230	20
	4240	20
	4310	20
	4320	20
K9001862	4230	23

Part No.	Fig No.	Key No.
K9001862	4240	23
	4260	23
	4280	23
	4290	23
	4310	23
	4320	23
K9001868	4260	1
K9001869A	4260	3
K9001870	4260	5
	4280	5
	4290	5
K9001871	4260	17
	4280	17
	4290	17
K9001872	4260	20
	4280	20
	4290	20
K9001873	4260	26
	4280	26
	4290	26
K9001874	4260	27
	4280	27
	4290	27
K9001875	4260	30
K9001876	4260	37
K9001877	4230	10
	4240	10
	4310	10
	4320	10
K9001878	4230	*
	4240	*
	4310	*
	4320	*
K9001879A	4250	1
K9001880	4250	3
	4330	3
K9001881	4250	5
	4330	5
K9001882	4250	8
	4330	8
K9001883	4250	9
	4330	9
K9001884	4250	10
	4330	10
K9001890	4230	18
	4240	18
	4310	18
	4320	18
K9001891	4260	18
	4280	18

Part No.	Fig No.	Key No.
K9001891	4290	18
K9001892	4260	*
	4280	*
	4290	*
K9001893	4250	16
	4330	16
K9001894	4250	17
	4330	17
K9001895	4250	22
	4330	22
K9001896	4250	23
	4330	23
K9001897	4250	25
	4330	25
K9001898	4250	32
	4330	32
K9001900	4250	36
K9001901	4250	*
	4330	*
K9001902	4100	*
K9001902A	4100	*
K9002044	1210	1A
K9002065	4220	4
K9002934	4270	2
K9002935	4270	8
K9003465	4270	4
K9003467	4280	30
K9003468	4280	37
K9003470	4290	30
K9003471	4290	37
K9003671	4180	3
K9003672	4180	14
K9003673	4180	15
K9003676	4330	1
K9003677	4330	36
K9003878	1140	19
K9003998	4200	33
K9003999	4200	34
K9004000	4200	35
K9004001	4200	36
K9004304	4160	132
K9004447	4150	207
K9004448	4150	208
K9004449	4150	214
K9004453	4150	212
K9005662	1220	14A
K9006399	4130	302
K9006480	4200	35
K9006481	4200	36
K9006860	4210	10

Part No.	Fig No.	Key No.
K9006861	4210	28
K9006862	4210	32
K9006863	4210	51
K9006864	4210	52
K9006865	4210	24
K9006866	4210	26
K9006882	2130	*
K9006883	2160	8-12
	2161	8-12
K9006884	2160	8-11
	2161	8-11
K9006899	4130	105
K9007240	7080	5A
	7100	10A
	7160	5A
K9007358	4230	26
	4240	26
	4310	26
	4320	26
K9007358A	4230	26
	4240	26
	4310	26
	4320	26
K9007359	4240	30
K9007359A	4240	30
K9007360	4230	30
K9007360A	4230	30
K9007361	4230	1
	4240	1
	4310	1
	4320	1
K9007362	4230	3
	4240	3
	4310	3
	4320	3
K9007363	4220	2
	6160	1A
	6470	1A
K9007364	4100	13
K9007365	4100	14
K9007367	4240	34
	4320	31
K9007367A	4240	34
	4320	31
K9007368	4230	34
	4310	31
K9007368A	4230	34
	4310	31
K9007370	4310	30
K9007370A	4310	30

Part No.	Fig No.	Key No.	Part No.	Fig No.	Key No.	Part No.	Fig No.	Key No.
K9007371	4280	3	K9008335	4130	303	S0509366	1260	29
	4290	3	K9008336	4130	*		1800	17
K9007372	4290	1	K9008336A	4130	*	S0511653	1730	21
K9007373	4280	1	K9008337	4140	51		1731	21
K9007382	4150	203	K9008338	4140	52		1760	11
K9007383	4160	101	S0121061	4140	16		1760	7
K9007383A	4160	101	S0504366	1680	4		7250	21
K9007384	4160	105	S0504453	1610	3-15	S0511666	1190	14
K9007385	4160	123		1620	2-16	S0511853	1610	3-10
K9007386	4160	129		1720	16		1620	2-11
K9007386A	4160	129		1720	23		7170	1-10
K9007387	4160	117		1730	2	S0511866	1120	53
K9007388	4160	107		1760	18		3140	19
K9007389	4160	131		7170	1-15		6150	11
K9007390	4160	121	S0504553	1610	3-14		6850	18
K9007391	4160	114		1620	2-15		6980	14
K9007392	4160	113		7170	1-14	S0512053	7090	3
K9007393	4160	108	S0504566	1260	4		7100	6
K9007394	4160	109	S0504666	1800	27	S0512061	2141	6-8
K9007395	4160	136	S0508653	1320	3J	S0512066	1200	10
K9007395A	4160	136		1700	43		1630	4-3
K9007396	4160	112		1700	52		1730	12
K9007397	4150	204		1770	2		1731	12
K9007398	4150	209		7040	4		6170	16
K9007398A	4150	209		7100	4		6450	16
K9007399	4150	23	S0508666	1720	19		6480	21
K9007400	4150	249		1720	28		6690	18
K9007401	4150	232		1800	3		6760	17
K9007402	4160	111	S0508753	1610	3-17		7250	12
K9007403	4160	125		1620	2-18	S0512263	2130	9
K9007404	4160	-		7170	1-17	S0512266	1180	4
K9007405	4150	-	S0508766	6150	12		1210	11
K9007406	4150	205		6151	12		1320	35
K9007406A	4150	205	S0508853	7060	5		1390	39
K9007407	4150	200		7070	3	S0512366	1180	5
K9007408	4150	C-1		7080	3	S0512466	1130	29
K9007408A	4150	C-1		7090	6	S0514666	1220	29
K9007409	4150	C-2		7110	6		1630	59
K9007409A	4150	C-2		7160	3	S0515053	6900	32
K9007410	4150	C	S0508861	2140	6-9	S0515066	6620	3
K9007411	4160	116	S0508866	1650	24		6690	21
K9007412	4160	104		6170	13	S0515166	1630	49
K9007413	4150	400		6230	5	S0515253	2160	8-13
K9007415	4150	202		6480	13		2161	8-13
K9007415A	4150	202		6610	5	S0515266	1640	39
K9008310	4150	*		6680	5		6490	7
K9008333	4130	107		6750	5		6500	5
K9008333A	4130	107	S0508966	1260	15		6630	13
K9008334	4130	301		6460	8		6700	5
K9008334A	4130	301	S0509066	1720	9		6770	5

Part No.	Fig No.	Key No.
S0515266	6880	7
S0515366	1120	36
	2100	15
	2105	15
S0515653	7060	2
	7110	3
S0515766	6340	19
S0515866	1150	44
S0521366	3100	17
	3110	20
	6570	20
	6640	20
	6710	20
	6830	17
	6900	17
	6910	15
S0553766	1320	34
S0556466	6200	20
S0557066	7200	7
S0557166	1800	8
S0558153	4230	29
	4240	29
	4310	29
	4320	29
S0558266	6350	4
	6360	4
	6370	4
S0558466	6490	15
	6880	15
	7000	16
S0558566	6880	19
	7030	14
S0558666	1390	37
S0558766	1390	41
S0558966	6500	11
	6630	8
	6700	11
	6770	11
	7030	13
S0559553	4340	7
S0560466	1670	11
	6350	4
	6360	4
	6365	4
	6370	4
S0560563	4250	35
	4260	29
	4280	29
	4290	29
	4300	28

Part No.	Fig No.	Key No.
S0560563	4330	35
S0560566	1630	33
S0560666	1630	31
	6490	5
	6880	5
	7000	22
S0560866	1280	101
	6151	36
	6490	18
	7000	19
S0561053	4230	40
	4240	40
	4310	37
	4320	37
S0561066	1280	44
	1630	30
	6110	19
	6410	11
S0561266	6110	18
	6130	24
S0561466	6130	23
S0562653	1740	4
	6240	4
S0562666	1740	4
	7230	4
S0562766	1271	45
	3130	17
	3130	51
	6190	18
	6670	12
	6740	12
	6840	17
	6840	51
	6840	82
	6970	21
	6970	62
	7010	14
S0563366	6220	5
	6440	17
	6870	5
	6890	17
	6990	15
S0563466	6450	9
	6620	10
	6690	10
	6760	10
S0563666	6190	10
	6600	8
	6670	10
	6740	10

Part No.	Fig No.	Key No.
S0564166	7000	11
S0565466	1200	13
	1220	16
	1270	46
	1271	46
	2120	5-3
	2125	5-3
	6950	3
	6960	3
S0565666	2110	16
	2115	16
S0566066	1310	68
S0566266	1270	85
S0566766	6910	18
S0567066	3100	8
	3110	33
	6570	33
	6710	33
	6830	8
	6900	8
S0570166	1190	11
S0571166	2100	17
	2105	17
S0571266	1100	5
S0571866	1100	13
S0572166	1100	13
S0574561	6940	7
S0574661	3120	7
	6780	7
	6790	7
	6800	7
	6810	7
	6820	7
S0574861	6510	4
	6520	4
	6530	4
	6540	4
	6550	4
	6560	4
S0711866	1120	49
	1260	2
S0712061	2140	6-8
S0712066	3110	31
	6570	31
	6640	31
	6640	33
	6710	31
S0712153	1800	10
S0712366	1120	40
S0721466	2100	18

Part No.	Fig No.	Key No.
S0721466	2105	18
S0759166	1730	27
	1731	27
	7250	27
S0759853	1800	14
S0760853	1740	22
	6240	1
S0765966	2100	19
	2105	19
S0770266	2100	20
	2105	20
S0771466	1120	27
S0786366	1120	41
S0786653	7230	22
S2201766	1540	23
S2202966	1400	18
S2204861	4110	438
S2204866	4190	78
S2205066	1370	48
	1380	48
S2205261	4110	436
S2208466	1490	110
S2208561	1490	24
	6260	18
S2208866	1420	12
	1440	2
	1540	8
S2208871	4100	406
	4120	435
S2209261	4270	9
S2209266	6160	10
	6470	12
	6500	16
	6630	5
	6700	16
	6770	16
	7030	10
S2209466	6490	9
	6880	9
	7000	21
S2209661	4110	412
S2209666	1330	33
	4120	433
S2209961	4120	434
S2210071	4110	413
	4210	25
S2211866	1540	17
	6170	7
	6480	18
S2212061	4100	986
S2212066	6450	15
	6620	16
	6690	16
	6760	16
S2212266	1271	50
	1280	50
	1290	50
	1300	50
	1310	50
	1390	42
	2180	7
	2185	7
	3150	6
	4160	124
	4180	74
	6170	6
	6450	6
	6460	29
	6480	17
	6580	6
	6600	5
	6620	6
	6650	6
	6690	6
	6720	6
	6760	6
S2212366	3130	26
	3150	5
	6190	13
	6450	12
	6580	5
	6620	13
	6650	5
	6670	6
	6690	13
	6720	5
	6740	13
	6760	13
	6840	15
	6970	31
	7010	7
S2212466	1280	49
	3130	28
	4170	75
	4190	75
	6180	11
	6190	5
	6600	4
	6670	5
	6740	5
S2212466	6840	16
	6860	10
	6970	32
	7010	8
S2212566	3130	21
	6840	21
	6970	25
	7010	9
S2212666	6180	6
	6860	5
	6970	26
S2212761	4230	33
	4230	37
	4240	33
	4240	37
	4260	33
	4260	40
	4280	33
	4280	40
	4290	33
	4290	40
	4300	32
	4300	36
	4310	34
	4320	34
S2212766	4190	73
	6420	8
S2213066	4190	76
S2213166	1300	62
S2213466	4190	101
	6110	22
	6130	29
	6130	65
S2215366	1230	22
	1240	22
	1250	22
S2215466	1270	47
	1271	47
	2180	8
	2185	8
S2215766	1271	51
	6440	5
	6890	5
	6990	5
S2215961	4250	39
S2215966	6190	10
	6440	8
	6600	8
	6670	10
	6740	10

Part No.	Fig No.	Key No.
S2215966	6890	8
	6990	8
S2217066	1271	72
S2217471	4140	24
S2218961	4300	25
S2221471	4150	43
S2221873	4260	36
	4280	36
	4290	36
S2222171	4260	25
	4280	25
	4290	25
S2222272	4230	25
	4240	25
	4250	27
	4310	25
	4320	25
	4330	27
S2223266	4170	77
S2227561	4130	109
S2227866	1180	7
S2229071	4100	401
S3050863	1720	7
S3140025	4100	901
S3450343	1700	30
S3450573	1731	32
	7250	32
S3450583	1710	4
S3450823	1400	15
S3450833	1200	19
	1510	82
	1690	26
	1691	13
	1700	12
	1770	5
	7130	15
S3450863	1690	13
	1691	9
	1700	2
S3450943	1700	34
	6260	15
S3450953	1690	10
	1691	6
	1700	42
S3450983	1691	19
	1700	7
S3450993	1500	78
	1510	78
S3452853	1510	79
S3458843	1510	65

Part No.	Fig No.	Key No.
S3523601	4270	4-4
S3524008	4110	924
S3524403	3140	7
	6850	7
	6980	7
S3527808	4100	953
S3644163	1470	32
S3654523	1460	25
S4012233	1260	26
S4012303	1800	33
S4012333	1520	32-32
	1630	4-12
	1700	55
S4012533	1260	8
	1520	32-27
	1610	3-27
	1630	4-9
	1650	56
	1731	35
	4110	801
	7170	1-27
	7250	35
S4012633	1150	12-5
	1170	13
	1610	3-18
	1620	2-19
	1690	5
	4250	42
	4300	39
	4330	39
	7170	1-18
S4012733	1150	43
	1220	25
	1240	28
	1610	3-12
	1620	2-13
	1630	40
	1740	6
	6240	6
	7170	1-12
	7230	6
S4012833	4200	24
S4012933	3100	9
	3110	22
	4100	806
	6570	22
	6640	22
	6710	22
	6830	9
	6900	9

Part No.	Fig No.	Key No.
S4012933	6910	17
	6950	4
	6960	4
S4013133	1100	39
	2100	28
	2105	28
	4100	808
S4013333	3120	8
	6510	5
	6520	5
	6530	5
	6540	5
	6550	5
	6560	5
	6780	8
	6790	8
	6800	8
	6810	8
	6820	8
	6940	8
S4014633	4270	4-3
S4032633	1120	48
S4032833	3140	18-3
	3160	12
	6590	12
	6660	12
	6730	12
	6850	17-3
	6980	13-3
	7020	18
S4034833	1500	103
S5000113	1540	24
S5000213	1700	4
	1770	6
S5000313	1800	35
S5010303	1800	28
S5010313	1510	115
	1610	3-13
	1620	2-14
	1700	57
	7170	1-13
S5010503	1720	11
S5010513	1260	16
	1610	3-16
	1620	2-17
	1650	46
	1720	36
	1731	36
	1800	6
	7040	5

Part No.	Fig No.	Key No.
S5010513	7100	2
	7170	1-16
	7250	36
S5010613	1150	12-4
	1170	15
	1210	17
	1630	4-4
	1690	3
	1730	23
	1731	23
	1760	13
	1760	9
	1800	12
	7250	23
S5010713	1120	37
	1150	37
	1280	55
	1630	43
	1740	5
	6240	5
	7060	8
	7110	2
S5010913	1130	47
	1270	88
	1310	66
	4170	81
S5011113	1190	1L
S5100003	1700	29
S5100103	1710	5
S5100203	1200	20
	1690	14
	1690	27
	1691	10
	1700	13
	1700	3
	7130	16
S5100603	4230	28
	4230	32
	4230	36
	4240	28
	4240	32
	4240	36
	4250	41
	4260	32
	4260	35
	4260	39
	4280	32
	4280	35
	4280	39
	4290	32

Part No.	Fig No.	Key No.
S5100603	4290	35
	4290	39
	4300	38
	4310	28
	4310	33
	4320	28
	4320	33
	4330	38
	7100	7
S5100703	4230	39
	4240	39
	4250	34
	4250	38
	4260	28
	4280	28
	4290	28
	4300	27
	4300	31
	4300	35
	4310	36
	4320	36
	4330	34
S5102203	1260	27
S5102303	1260	5
	1320	38
	1630	4-13
	1680	5
	1690	11
	1691	7
	1700	33
	1700	41
	1700	56
	1700	8
	1720	17
	1720	24
	1730	3
	1760	19
	1800	34
S5102503	1260	9
	1320	3K
	1630	4-8
	1650	22
	1700	44
	1700	53
	1720	10
	1720	20
	1720	29
	1720	6
	1731	37
	1770	3

Part No.	Fig No.	Key No.
S5102503	1800	18
	1800	32
	1800	4
	1800	7
	2140	6-11
	6150	13
	6151	13
	6170	17
	6200	21
	6230	6
	6460	7
	6480	15
	6610	6
	6680	6
	6750	6
	7040	6
	7060	6
	7070	4
	7080	2
	7090	5
	7100	3
	7110	5
	7160	2
	7200	8
	7250	37
S5102603	1120	39
	1170	14
	1180	6
	1200	11
	1210	16
	1260	3
	1690	4
	1720	3
	1730	13
	1730	16
	1730	22
	1730	28
	1731	13
	1731	16
	1731	22
	1731	28
	1760	12
	1760	8
	1800	11
	1800	15
	2130	11
	2140	6-10
	2141	6-9
	3140	20
	4340	8

Part No.	Fig No.	Key No.
S5102603	6150	10
	6170	15
	6350	5
	6360	5
	6370	5
	6450	17
	6460	30
	6480	14
	6490	16
	6500	12
	6630	9
	6690	17
	6700	12
	6760	18
	6770	12
	6850	19
	6880	16
	6980	15
	7000	17
	7030	12
	7250	13
	7250	16
	7250	22
	7250	28
S5102703	1120	42
	1220	30
	1240	27
	1280	102
	1280	54
	1630	32
	1670	12
	1740	2
	2160	8-14
	2161	8-14
	6110	21
	6130	26
	6240	2
	6350	5
	6360	5
	6365	5
	6370	5
	6410	10
	6490	6
	6500	6
	6620	7
	6630	14
	6690	7
	6700	6
	6770	6
	6880	6

Part No.	Fig No.	Key No.
S5102703	6900	31
	7000	20
	7230	2
S5102803	1271	56
	3130	18
	3130	52
	6190	17
	6220	6
	6440	18
	6450	10
	6600	9
	6620	11
	6670	11
	6690	11
	6740	11
	6760	11
	6840	18
	6840	52
	6840	83
	6870	6
	6890	12
	6970	22
	6970	63
	6990	16
	7000	10
	7010	15
S5102903	1130	30
	1270	87
	1310	67
	2100	25
	2105	25
	2120	5-4
	2125	5-4
	3100	18
	3110	21
	6570	21
	6640	21
	6710	21
	6830	18
	6900	18
	6910	16
S5110503	1330	37
	6160	11
	6470	13
S5110603	1540	18
	6170	5
	6420	7
	6480	20
S5110703	6190	19
	6440	6

Part No.	Fig No.	Key No.
S5110703	6600	9
	6670	14
	6740	14
	6890	6
	6990	6
S5111103	1180	8
S5210303	1520	32-34
S5231090	4140	31
S5700891	4150	41
S5740480	4210	14
S5740600	4210	11
S5740770	4160	122
S5740800	4200	27
S5740870	4100	886
S5740960	4160	110
S5741162	4130	113
S5741200	4140	15
S5741250	2130	10
S6005050	4130	108
S6250182	4150	68
S6500100	4110	814
S6500380	4140	6
S6500400	4100	824
S6500450	4140	26
S6500600	2160	8-5
	2161	8-5
S6500750	4160	115
S6510150	4110	858
S6510180	4120	850
S6510620	4130	212
S6710032	4300	40
S6710041	1190	5
	1680	7
	3110	25
	3140	18-6
	3160	7
	6570	25
	6590	7
	6640	25
	6660	7
	6710	25
	6730	7
	6850	17-6
	6910	19
	6980	13-6
	7020	13
S8000041	4190	42
S8000061	4110	722
	4190	41
S8000081	4100	724

Part No.	Fig No.	Key No.
S8000081	4150	275
	4210	34
S8000085	4110	724
S8000111	1200	8
	1220	26
	1230	90
	1240	102
	1240	60
	1240	94
	1320	30
	1330	138
	1330	140
	1330	30
	1340	143
	1340	152
	1340	30
	1350	163
	1350	30
	1360	30
	1390	34
	2180	14
	2185	14
	4100	725
	4110	725
	4110	755
	4120	725
	4130	111
	4150	74
	4210	35
	6150	14
	6151	14
	6155	3
	6160	2
	6170	12
	6200	9
	6380	2
	6390	2
	6420	4
	6440	9
	6470	2
	6480	16
	6890	9
	6990	9
S8000121	4190	104
S8000141	1240	112
	1270	80
	1271	80
	1320	29
	1340	144
	1340	29

Part No.	Fig No.	Key No.
S8000141	1350	164
	1350	29
	1360	29
	1370	32
	1370	85
	1380	32
	1380	94
	1390	32
	4100	727
	4170	62
	4180	62
	6150	15
	6151	15
	6200	24
	6410	3
	6430	5
	6460	13
	6460	54
	6480	19
	7200	9
S8000161	4110	732
	4120	732
	4150	405
	4190	30
	7120	4
S8000181	1190	1F
	1210	33
	1220	23
	1230	31
	1230	89
	1250	31
	1320	31
	1330	136
	1330	31
	1360	31
	1390	33
	2180	10
	2185	10
	4110	728
	4150	46
	4160	38
	6100	10
	6150	31
	6190	41-7
	6190	42-7
	6460	14
	6500	31
	6500	8
	6600	41-7
	6600	42-7

Part No.	Fig No.	Key No.
S8000181	6630	32
	6630	6
	6670	41-7
	6670	42-7
	6700	31
	6700	8
	6740	41-7
	6740	42-7
	6770	31
	6770	8
	7030	51
	7030	8
S8000185	4100	732
S8000201	4110	733
S8000205	4200	17
S8000221	4110	730
	4150	410
S8000231	1240	50
	1310	61
	6200	11
	6450	8
	6460	16
	6620	32
	6620	9
	6690	9
	6760	9
S8000241	1230	32
	1230	87
	4100	728
	4190	25
	6460	28
S8000251	4300	30
	4300	34
S8000261	4110	756
	4190	23
	4210	12
S8000281	4230	31
	4230	35
	4240	31
	4240	35
	4260	31
	4260	38
	4280	31
	4280	38
	4290	31
	4290	38
	4310	32
	4320	32
	6420	9
S8000291	1230	88

Part No.	Fig No.	Key No.
S8000291	1240	93
	1250	33
	1270	78
	1271	78
	6110	16
	6110	59
	6120	9
	6130	18
	6130	57
	6140	9
	6180	12
	6190	41-2
	6190	42-2
	6460	19
	6600	41-2
	6600	42-2
	6670	41-2
	6670	42-2
	6740	41-2
	6740	42-2
	6860	11
S8000321	4150	36
	4190	36
S8000341	4130	106
	4250	37
	6440	7
	6890	7
	6990	7
S8000801	2161	8-6
S8000901	2160	8-7
S8001050	2160	8-10
	2161	8-10
S8001801	4150	235
S8002101	4150	239
S8002721	4110	735
S8002731	4150	37
S8010250	4190	54
S8010251	4110	734
	4210	21
S8010291	4150	406
S8010351	4110	763
S8010355	4100	702
S8010451	4180	7
S8010600	2150	7-8
S8010650	2140	6-13
S8010651	4230	21
	4240	21
	4310	21
	4320	21
S8010700	2120	5-2F

Part No.	Fig No.	Key No.
S8010700	2125	5-2F
S8010751	6120	1C
	6140	1C
S8010755	4110	708
S8010801	4250	21
	4330	21
S8010901	4300	13
S8010951	4100	710
	4120	710
	4300	15
S8011000	2160	8-9
	2161	8-9
S8011151	4260	13
	4280	13
	4290	13
S8011200	1220	15
S8011201	4230	13
	4240	13
	4260	15
	4280	15
	4290	15
	4310	13
	4320	13
S8011251	4230	15
	4240	15
	4310	15
	4320	15
S8011351	4250	13
	4330	13
S8011450	1200	3
S8011451	4100	717
S8011650	1220	8
S8011850	1220	3
S8012300	4160	126
S8030061	6200	10
S8030081	6190	41-9
	6190	42-9
	6460	15
	6460	55
	6490	11
	6500	3
	6500	34
	6600	41-9
	6600	42-9
	6630	3
	6630	34
	6670	41-9
	6670	42-9
	6700	3
	6700	34

Part No.	Fig No.	Key No.
S8030081	6740	41-9
	6740	42-9
	6770	3
	6770	34
	6880	11
	7000	12
	7030	54
	7030	6
S8030121	1230	36
	1230	86
	1240	36
	1310	60
	6450	43
	6450	7
	6460	18
	6620	34
	6620	8
	6690	43
	6690	8
	6760	43
	6760	8
S8030161	1271	75
	6110	15
	6110	45
	6110	58
	6120	8
	6130	19
	6130	45
	6130	58
	6140	8
	6190	41-5
	6190	42-5
	6600	41-5
	6600	42-5
	6670	41-5
	6670	42-5
	6740	41-5
	6740	42-5
S8060121	4190	103
S8060161	4150	404
	4190	31
S8060181	4100	789
S8060221	4150	411
S8061800	4150	247
S8062100	4150	248
S8090350	4100	792
S8180251	1730	9
	1731	9
	7250	9
S8180321	6100	1B

Part No.	Fig No.	Key No.	Part No.	Fig No.	Key No.	Part No.	Fig No.	Key No.
S8180411	1780	6	T7050003	5100	1-4			
S8450012	1130	45	T7050013	5100	1-5			
	1200	23	T7050021	5100	1-6			
S8450016	1770	10	T7050022	5100	1-7			
	1780	2	T7260057	5100	1-9			
S8470014	1210	10	T7500004	5100	1-8			
	6100	7	Y-3738-04	1320	3F			
S8470032	6100	16	Y-3738-05	1320	3G			
S8470075	1130	46						
S8470165	1100	40						
S8500079	1130	46						
	1240	24						
S8500118	1230	30						
S8510044	1120	50						
S8510092	1170	9						
S8510118	1170	6						
S8510143	1170	17						
T6510018	5100	1-32						
T6510027	5100	1-33						
T6510062	5100	1-23						
T6510066	5100	1-24						
T6510069	5100	1-82						
T6510070	5100	1-25						
T6510072	5100	1-26						
T6510075	5100	1-27						
T6510079	5100	1-40						
T6510081	5100	1-28						
T6510085	5100	1-29						
T6510087	5100	1-43						
T6510089	5100	1-30						
T6510091	5100	1-31						
T6550005	5100	1-17						
T6550006	5100	1-18						
T6550007	5100	1-19						
T6550009	5100	1-20						
T6550011	5100	1-21						
T6550018	5100	1-22						
T6580008	5100	1-2						
T6580020	5100	1-3						
T6600183	5100	1-55						
T6600189	5100	1-56						
T6600191	5100	1-86						
T6600197	5100	1-57						
T6600201	5100	1-58						
T6600211	5100	1-59						
T6600217	5100	1-78						
T6600223	5100	1-60						
T6690012	5100	1-12						
T6690013	5100	1-13						
T6750003	5100	1-14						