https://truckmanualshub.com/

MICHI

Operation Manual

with Maintenance Information

Models SR12C
SR14CJ

NOTICE

Read this manual before operating.

CE

https://truckmanualshub.com/

Serial Number Range: after 711607 - Current
Part Number: FS-342S
January 2009

Copyright

© AICHI CORPORATION. All rights reserved.

No part of this manual may be reproduced in any form, in an electronic retrieval system or otherwise, without the written permission from AICHI, except for personal use or other cases permitted by copyright laws.

Contact us:

Head office
AICHI CORPORATION
1152 Ryoke Ageo Saitama 362-8550 Japan
TEL: +81-48-781-1111
http://www.aichi-corp.co.jp

This machine has been manufactured to conform to European Standard EN280.

https://truckmanualshub.com/

Important Information

Thank you very much for making your purchase from AICHI.
Please operate and use the machine correctly.

- Operation of the machine not in accordance with this manual, incorrect operation, incorrect checking, and incorrect maintenance may lead to injuries, death, and may damage the machine.
- Read, understand and obey this manual before using, checking or maintaining the machine.
- Comply with employer, job site and national safety regulations.
- Use good safety practices, good judgment, safety control, and caution in a commonsense way.
- Only appropriately trained and qualified people may operate the machine. The operator must be certified.
- The machine is designed to lift people and equipment. It is designed for use in assembly and repair work in high places (work on ceilings, roofs, buildings, etc.). It is strictly prohibited to use the machine for other purposes.
- This manual describes only what can be foreseen.
- AICHI does not accept responsibility for direct or indirect losses, damages, or expenses incurred through the abuse, misuse or misapplication of the machine, or through any other cause.
- Replace parts and grease, etc. that have reached the end of their service lives, are worn out, or have suffered wear and tear. Refer to the separate service manual and follow the replacement standards of that manual. Contact AICHI or AICHI's dealer to do the replacement.
- Only AICHI's genuine spare parts must be used for parts important for the safety and stability of the machine.
- It is strictly forbidden to make modifications to the machine without obtaining AICHI's written approval.
- Perform all maintenance described in this manual and in the designated service manual for the machine.
- Constant improvement of its products is AICHI's policy. Therefore, specifications of the machine are subject to change without prior notice.
- The figures illustrate the cautions listed in this manual. The purpose of the figures is to identify important points. In some cases the shapes may be different from those of the product you have purchased.
- This manual must be kept with the machine at all times. Always keep it with the machine, and make sure it is immediately available for use.
- When you transfer the use or ownership of the machine, please attach this manual to the machine for the next user.
- This manual includes optional devices. There is a case that the option is illustrated in figures of this manual.
- This manual is written in English.
  If the machine is to be operated, checked, or maintained by people who do not read English, please translate this manual into a suitable language, and make sure that the users understand this manual. In case of discrepancy between the English manual and the translated manual, the English manual prevails.

https://truckmanualshub.com/

Safety Alert Symbol and Signal Words

This is the safety alert symbol. It is used to alert you to potential personal injury hazards. Obey all safety messages that follow this symbol to avoid possible injury or death.

The signal words, “DANGER,” “WARNING,” and “CAUTION” identify the degree of latent hazard and its level of seriousness.

DANGER

Indicates a hazardous situation which, if not avoided, will result in death or serious injury.

WARNING

Indicates a hazardous situation which, if not avoided, could result in death or serious injury.

CAUTION

Indicates a hazardous situation which, if not avoided, could result in minor or moderate injury.

NOTICE

Indicates a hazardous situation which, if not avoided, could result in property damage. It may also be used to provide special information to assist in the machine operation.

Owner and User Responsibilities

All owners and users of the machine must read, understand, and comply with all applicable regulations. Ultimate compliance to national safety regulations is the responsibility of the user and their employer.

Operator Qualifications

Operator of the machine must receive safety training to ensure safe operations.

Incorrect use of the machine can cause serious injury or death.

All personnel are requested to receive safety training and only trained and authorized personnel are permitted to operate the machine. Use this manual for safety training.

Operator of the machine must not undertake responsibility for the machine operation until enough training has been given by qualified and authorized persons.

https://truckmanualshub.com/

Table of Contens

Chapter 1 **Safety Rules 1**
1. Electrocution Hazards 1
2. Tip Over Hazards 1
3. Fall Hazards 3
4. Collision Hazards 4
5. Damaged Machine Hazards 5
6. Fire Hazards 5
7. Battery Safety 5
8. Engine Safety 5
9. Personal Safety 6
10. Traveling Precautions 6

Chapter 2 **Decals 9**
1. Symbol and Pictorials Definitions 9
2. Safety Signs and Locations 12

Chapter 3 **Safety Systems 15**
1. List of Safety Systems 15
2. Travel Speed Limit System 16
3. Travel Function Limit System 16

Chapter 4 **Part Names 17**
1. Part names 17
2. Upper Controls 18
3. Lower Controls 20

Chapter 5 **Workplace Check 22**

Chapter 6 **Pre-Start Checks 23**
1. Visual Check 23
2. Function Check 23
2–1 Preparation for Function Check 23
2–2 Lower Controls Check 24
2–3 Upper Controls Check 24
2–4 Tilt Warning Check 25
2–5 Limited Travel Speed Check 25
2–6 Last Check 25

Chapter 7 **Maintenance 26**
1. Storage Method 26
2. Daily Maintenance 26
2–1 Refuel the machine 26
2–1–1 Diesel Fuel Specifications 26
2–2 Check the Hydraulic Oil Level 26
2–2–1 Hydraulic Oil Specifications 26
2–3 Check the Battery Fluid Level 27
2–4 Check the Engine Oil Level 27
2–4–1 Engine Oil Viscosity 27
2–5 Check the Cooling System 27
3. Periodic Maintenance 28
3–1 Monthly and Annual Inspection 28
3–2 Crawler Tracks 28
3–2–1 Adjustment Method 28
3–2–2 Adjustment Interval 29
3–3 Engine Maintenance 30
3–3–1 Periodic Maintenance Chart 30

Chapter 8 **Operation 31**
1. Starting the Engine 31
1–1 Starting from Ground 31
1–2 Starting from Platform 33
2. Stopping the Engine 34
3. Upper Controls (from platform) 34
3–1 Foot Switch 35
3–2 Traveling 35
3–2–1 Travel Speed Select 36
3–2–2 Forward and Backward 36
3–2–3 Pivot Turn 36
3–2–4 Spin Turn 37
3–3 Boom Operation 37
3–3–1 Boom Elevating 37
3–3–2 Boom Rotating 37
3–3–3 Boom Telescoping 37
3–3–4 Fly Jib Elevating (If equipped) 37
3–4 Platform Rotating Operation 38
3–5 Horn Operation 38
3–6 System Failure Light 38
4. Lower Controls (from ground) 38
4–1 Enable Switch 38
4–2 Boom Operation 39
4–2–1 Boom Elevating 39
4–2–2 Boom Rotating 39
4–2–3 Boom Telescoping 39
4–2–4 Fly Jib Elevating (If equipped) 39
4–3 Platform Rotating Operation 39
4–4 System Failure Light 39
5. Platform Leveling System 40
5–1 Platform Level Adjustment 40

https://truckmanualshub.com/

5–2 Bleeding Air from Platform Leveling System 40

Chapter 9 **Emergency Operation 41**

1. Emergency Stop 41
2. Emergency Lowering 41

2–1 Upper Controls (from platform) 41

2–2 Lower Controls (from ground) 42

Chapter 10 **Transporting 43**

1. Preparations for Transporting 43
2. Tie Down 44
3. Hoisting the Machine 44
4. Hoisting with Boom Raised 45

Chapter 11 **Storage 46**

Chapter 12 **Specifications 47**

1. General Specifications 47
2. Work Range Diagram 48

2–1 SR12C 48

2–2 SR14CJ 48

https://truckmanualshub.com/

Chapter 1

Safety Rules

1. Electrocution Hazards

⚠ DANGER

- This machine is not electrically insulated. Do not use the machine near electric power lines.
- Keep a safe distance from electric power lines and apparatus. For safe distance, check your national or local regulations. If no national or local regulation is available, use the table below.

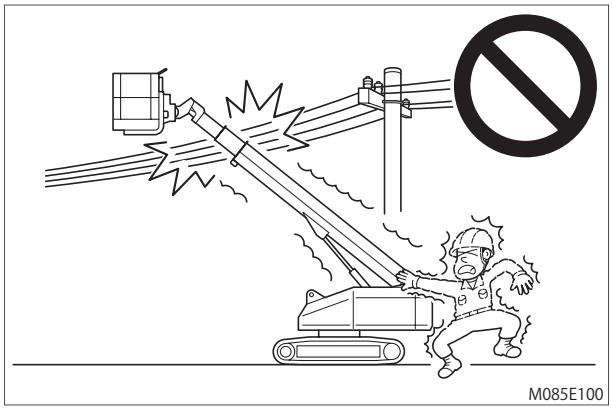

fig. 1–1

Voltage (Phase to Phase)	Minimum Safe Approach Distance
0 to 300 V	Avoid Contact
over 300 V to 50 kV	3.05 m
over 50 kV to 200 kV	4.60 m
over 200 kV to 350 kV	6.10 m
over 350 kV to 500 kV	7.62 m
over 500 kV to 750 kV	10.67 m
over 750 kV to 1000 kV	13.72 m

table 1-1

- Keep away from the machine if it contacts energized power lines. Until energized power lines are shut down, any persons in the platform must not operate the machine and any persons on the ground must not touch the machine.
- Do not use the machine during lightning or storms. Stop operation in bad weather.
- Do not use the machine as a ground for welding.

2. Tip Over Hazards

⚠ DANGER

- Do not exceed the platform capacity as indicated on the serial number plate.

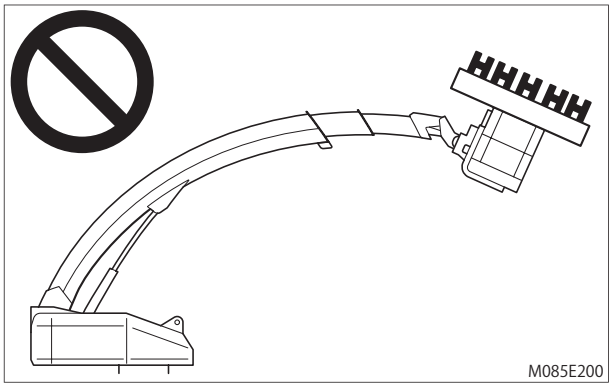

fig. 1–2

- Do not hang or attach loads to the machine. Spread loads evenly on the platform.
- Do not use the machine as a crane or lift.

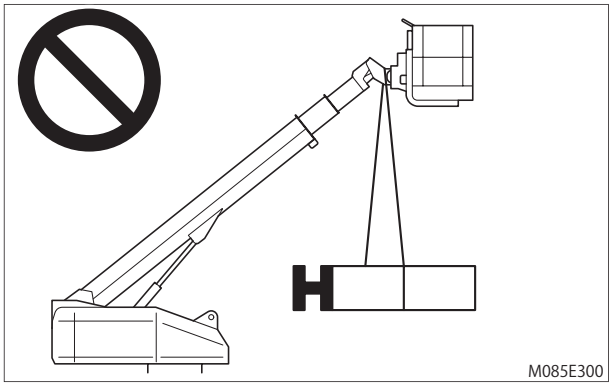

fig. 1–3

https://truckmanualshub.com/

- **Do not elevate the platform on soft or uneven ground.**

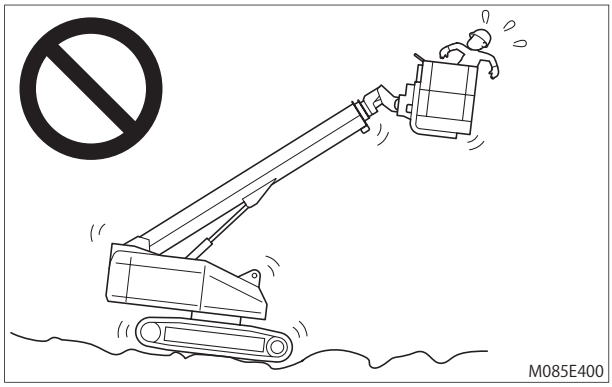

fig. 1–4

- **Do not elevate the platform on a slope.**
- **Do not use the machine on a slope more than the maximum allowable tilt angle. When the machine tilt more than the maximum allowable tilt angle, the tilt alarm buzzer sounds and the tilt warning light goes on. Never continue working after alarm sounds.**
  Maximum allowable tilt angle: 5 °

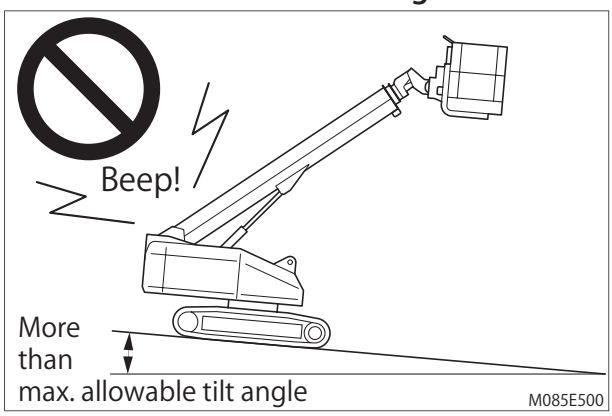

fig. 1–5

- **If traveling on a slope more than maximum allowable tilt angle is unavoidable, make sure to fully retract the boom and lower the boom under the horizontal.**

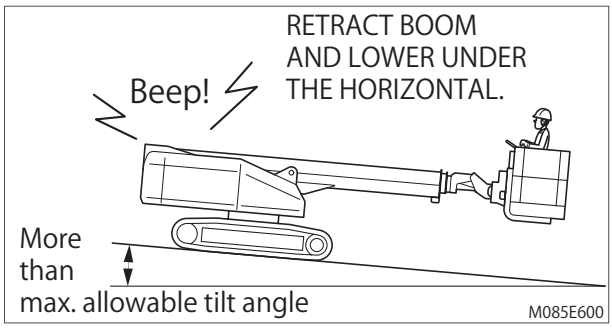

fig. 1–6

- **Do not use the machine on a moving or mobile surface or vehicle.**
- **Do not touch or be attached the platform to any nearby structures.**

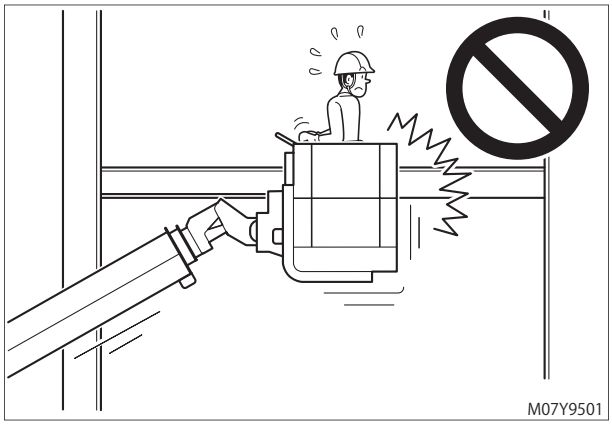

fig. 1–7

- **Do not place things such as steel beams or power lines across the platform, and use the boom to lift them.**

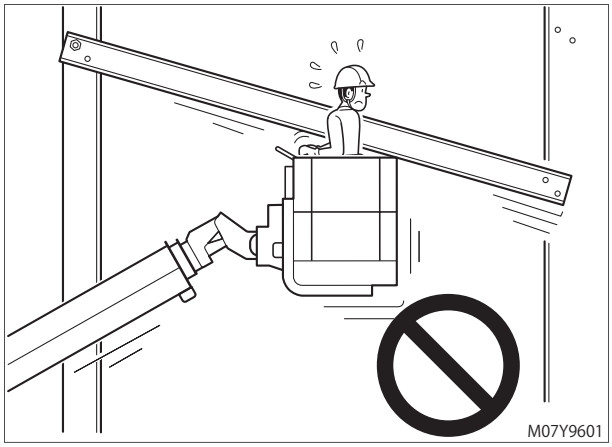

fig. 1–8

- **Do not use the boom or platform to push or pull power lines or other objects.**
- **Do not push or pull any object outside of the platform.**

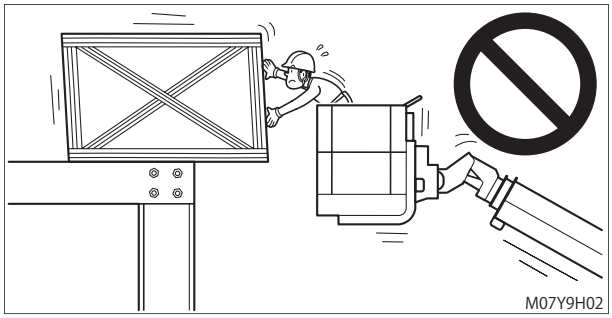

fig. 1–9

- **Do not place ladders, scaffolds or other devices in the platform or against any part of the machine.**
- **Do not place loads outside of the platform.**

https://truckmanualshub.com/

- Do not work by tying down the machine chassis, boom or platform to other structures.

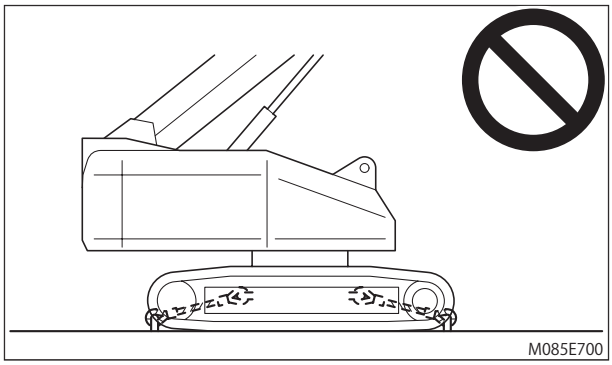

fig. 1–10

- Do not operate the machine where there are strong winds or gusts.
- Do not elevate the platform when wind speeds may exceed 12.5 m/s.
  If wind speeds exceed 12.5 m/s when the platform is elevated, lower the platform and do not continue to operate the machine.
- Do not increase the surface area that can catch wind, such as covering the platform with a sheet. The stability of the machine will decrease.
- Do not use on a slippery or icy surface. If it is unavoidable, be sure to use nonskid gears such as tire chains.
- Do not disable or alter the switch.
- The machine is not allowed to travel on public highways.

3. Fall Hazards

⚠ DANGER

- Do not use a ladder or step in the platform.

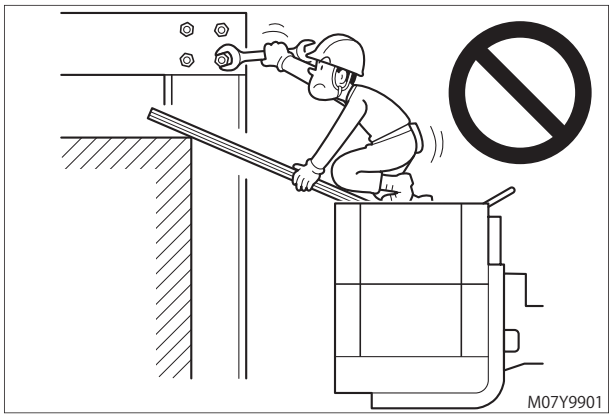

fig. 1–11

- Do not sit, stand or climb on the guardrails, or jump from the platform to another structure.

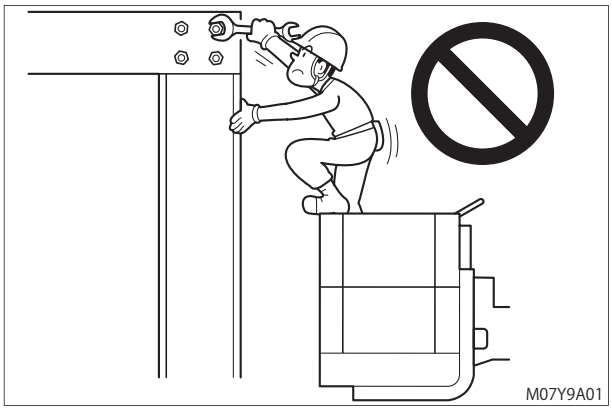

fig. 1–12

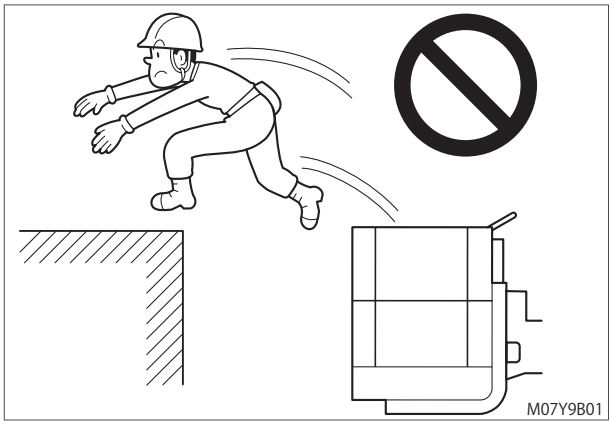

fig. 1–13

- Do not climb up/down from the platform when it is raised.
- After getting on the platform, close the entry gate without fail. Do not operate the machine with gate open.
- Do not operate the machine roughly. The operator may be thrown from the platform.

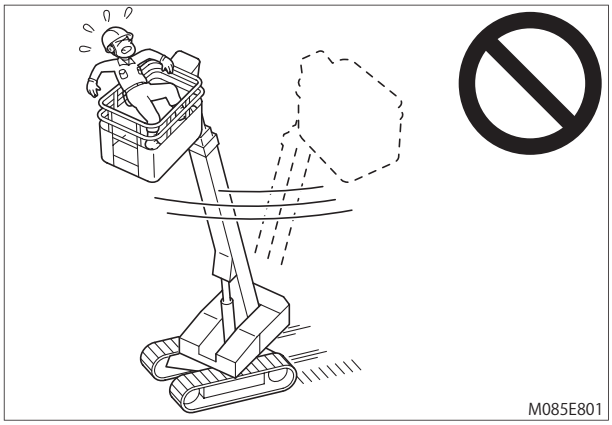

fig. 1–14

- Keep the platform neat and tidy always. To avoid slips, clear the water, oil, snow, ice off the platform.

https://truckmanualshub.com/

4. Collision Hazards

WARNING

- Before traveling, check the arrow decals affixed on the chassis to make sure the traveling direction of the machine.

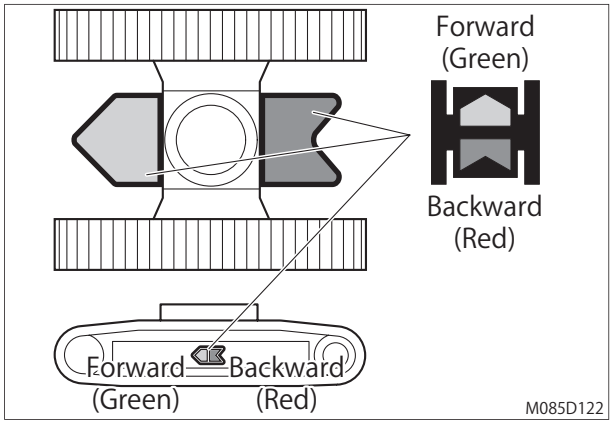

fig. 1–15

- Make sure that no person or obstacle is around the machine. Be aware of blind spots when traveling or operating. If your vision is poor, have a guide to assist you.
- The turntable protrudes 850 mm beyond the width of the chassis when rotating the boom, so watch the turntable movement and make sure that no person or obstacle is around the turntable.

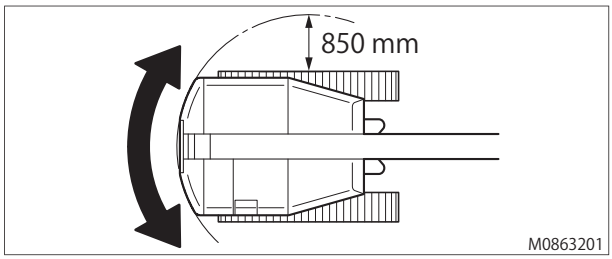

fig. 1–16

- Check the work area for overhead obstacles or other possible hazards.
- Do not hit structures etc. with the platform while traveling.

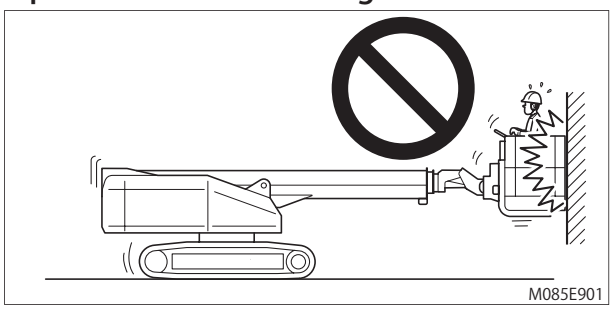

fig. 1–17

- Do not hit the ground with the platform.

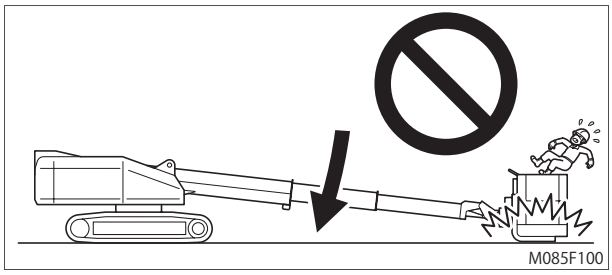

fig. 1–18

- Once the platform is raised, do not allow people or things under the platform.

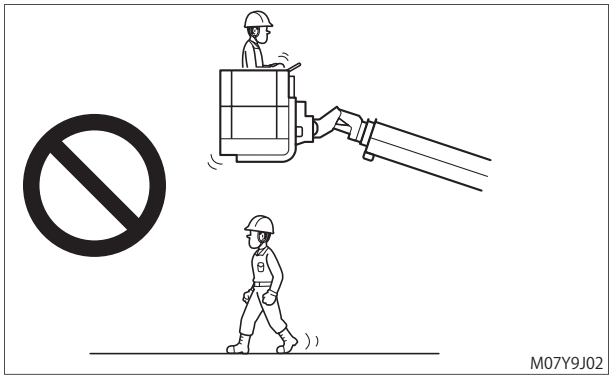

fig. 1–19

- Do not lower the boom unless the area below is clear of persons and obstacles.
- When you are obliged to get under the boom and platform to perform the inspections or repairs, use a safety support to prevent the boom and the platform from unexpected descent.
- Do not drop things from the platform. There is a hazard that falling objects will hit cars, or people that are passing by.

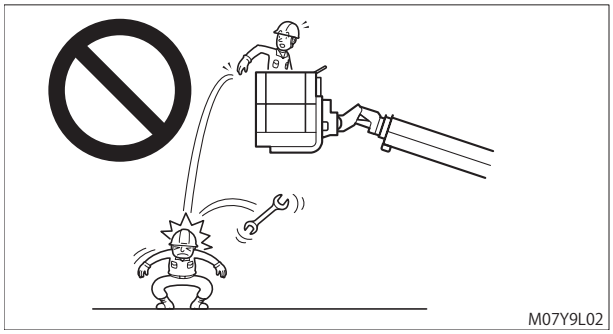

fig. 1–20

- Take care that your hands on the guardrails are not caught in other obstacles.

https://truckmanualshub.com/

5. Damaged Machine Hazards

⚠WARNING

- Do not use a damaged or malfunctioning machine. Have it checked and repaired immediately.
- When operators are changed by work shift, perform the pre-start checks at every change. Perform the pre-start checks on the operator's responsibility.
- Perform the pre-start checks on firm, level surface, with the platform lowered.
- If the pre-start checks reveal any abnormalities, put an "Out of Order" sign on the machine, and cancel the check at that point.
- Perform all maintenance described in this manual and in the designated service manual for the machine.
- Make sure all decals are in place and that no decal has a loss and damage. Any decal loss or damage is one of the machine malfunction.

6. Fire Hazards

⚠WARNING

- When handling flammables (fuel, oil, etc.), be aware of anything that can cause fire.
- Have a first-aid kit and a fire extinguisher ready in case of an accident or fire.
- If the machine is to be used in a location where flammable gas is produced, only use the machine after sufficient ventilation.

7. Battery Safety

⚠WARNING

- The battery fluid contains corrosive acid. When dealing with the battery, always wear appropriate protective clothing and equipment to protect your hands, eyes, face and body, and avoid contacting battery fluid.
- If battery fluid gets on the skin or on clothing, wash it away immediately with cold water. If it gets into the eye, wash immediately with cold water, and seek ophthalmological treatment immediately.
- The battery produces flammable hydrogen gas, and there is a possibility of explosion. Never allow anything that can cause fire close to the battery. Charge the battery only under good ventilation.

8. Engine Safety

Scald Hazards

⚠DANGER

- Never remove the radiator cap if the engine is hot. Steam and hot engine coolant will spurt out and seriously burn you. Allow the engine to cool down before you attempt to remove the radiator cap.
- Tighten the radiator cap securely after you check the radiator. Steam can spurt out during engine operation if the cap is loose.

Fire and Explosion Hazards

⚠WARNING

- Never remove the fuel cap with the engine running.
- Never refuel with the engine running.

Coolant Hazard

⚠WARNING

- Wear eye protector and rubber gloves when you handle long life or extended life engine coolant. If contact with the eyes or skin should occur, flush eyes and wash immediately with clean water.

https://truckmanualshub.com/

9. Personal Safety

Fall Hazards

DANGER

- **Always use a safety harness in the platform. All persons in the platform must comply with employer, work area, and local and national safety regulations regarding the use of personal protective equipment. All personal protective equipment must comply with applicable regulations, and must be inspected and used in accordance with their manufacturer's instructions.**
- **All personal fall protective equipment must be attached to only the authorized lanyard anchorage points provided in the platform.**

Exposure Hazards

WARNING

- **Wear personal protective equipment such as gloves, work shoes, eye and hearing protection as required by the task at hand.**
- **Never wear jewelry, unbuttoned cuffs, ties or loose-fitting clothing when you are working near moving / rotating parts such as the cooling fan or flywheel.**
- **Always tie back long hair when you are working near moving / rotating parts such as a cooling fan or flywheel.**
- **Never operate the machine while wearing a headset to listen to music or radio because it will be difficult to hear the alert signals.**

Alcohol and Drug Hazards

WARNING

- **Never operate the machine while you are under the influence of alcohol or drugs.**
- **Never operate the machine when you are feeling ill.**

10. Traveling Precautions

- **Surfaces on which you must avoid traveling or working.**

DANGER

Never travel or work on the following surfaces. Doing so is very dangerous and may cause the machine to tip over or the platform to collide with building structures.

(1) Do not travel or work on soft or uneven surfaces with level differences. In particular, ground foundations are unstable on earth fills, around dug out trenches, and on the shoulder of roads, and may give way due to the weight or vibration of the machine. Particular caution is necessary after rain which may cause soil foundations to become loose.

fig. 1–21

(2) If the machine leans slightly to one side when traveling over small trenches or steps on surfaces, this will cause an extremely large vibration to the platform if the boom is extended. When traveling, fully retract the boom and lower the boom angle near to horizontal.

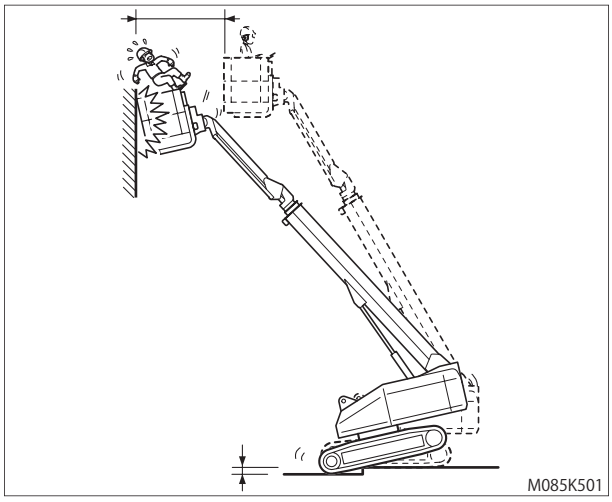

fig. 1–22

https://truckmanualshub.com/

- **When the machine must travel to a particular location and there is no other option but to travel on uneven surfaces, up and down steps, or on slopes exceeding the maximum allowable tilt angle, obey and observe as follows:**

(1) Do not travel the machine on a slope exceeding the machine gradeability. Failure to follow instruction could tip over the machine. The machine gradeability: refer to Chapter 12.

(2) Traveling on slopes
   (i) Climb perpendicular to the slope face with the counterweight facing uphill.
   (ii) Do not change direction or turn to the side while climbing a slope face. Change direction after reaching level surface.

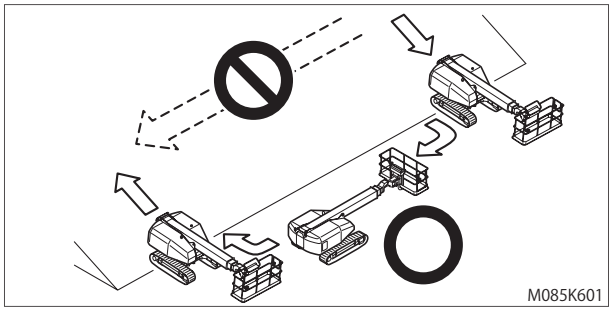

fig. 1–23

   (iii) Descend perpendicular to the slope face with the counterweight facing uphill.
   (iv) Do not park on the slope. If the machine must park or stop on a slope, chock to keep the machine from moving.
   (v) Retract the boom fully and raise the boom to the horizontal.
   Rotate the boom to rear or front center of the machine.
   Adjust the boom rotation to become parallel to the traveling direction.
   (vi) Do not rotate the boom while traveling on a slope.
   (vii) Set the travel speed select switch to "LOW" and travel at low speed.
   (viii) Slopes that are wet, slopes with sand or gravel, and slopes with grass or fallen leaves may cause the machine to slip even on a slight gradient. On such slopes, exercise extra caution so that the machine does not turn on its side.

(3) Climbing up and down steps, traveling on uneven surfaces, reaching the peak of slopes, and at the start of climbs.

⚠ DANGER

- **Irrespective of how much the boom is extended, never raise the boom angle to a position greater than horizontal while traveling as the machine will incline on even minor bumps, steps, and slopes. The machine will become unstable and the machine may tip over. This may result in serious accidents in which the worker on the platform may become sandwiched between a building or structures.**
- **Pay adequate attention when you have no other option but to drive the machine for the purpose of moving it to a different location.**
   (i) Travel with the boom fully retracted and the boom angle at less than horizontal.
   (ii) Travel with the travel speed select switch set to "LOW."
   (iii) The machine may suddenly incline when climbing up and over a top step. Pay attention to buildings and structures located above and below the platform.

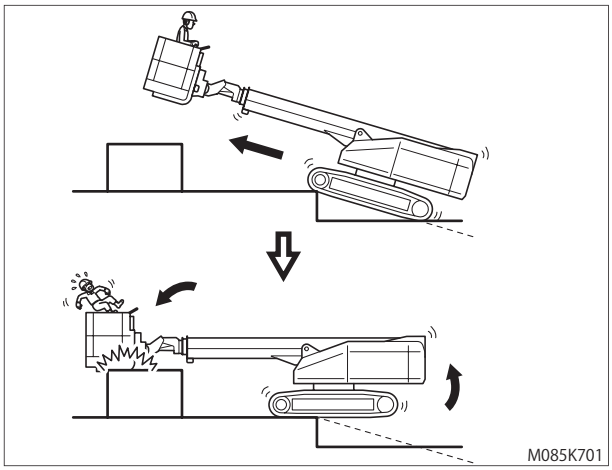

fig. 1–24

https://truckmanualshub.com/

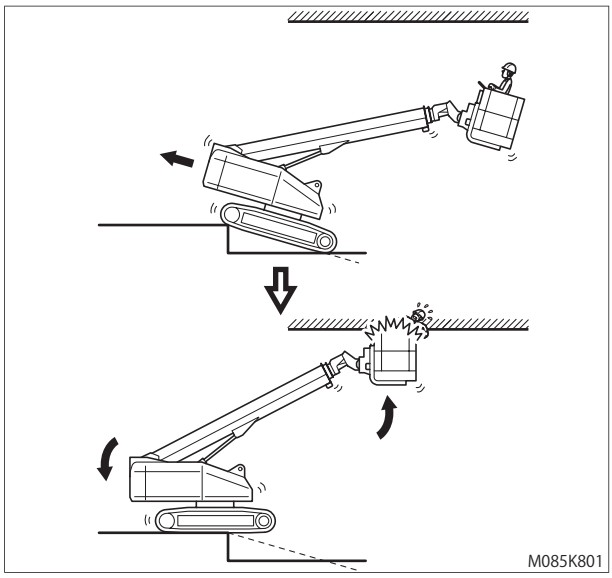

fig. 1–25

(iv) The machine may suddenly incline when climbing down and over a top step. Pay attention to buildings and structures located above and below the platform.

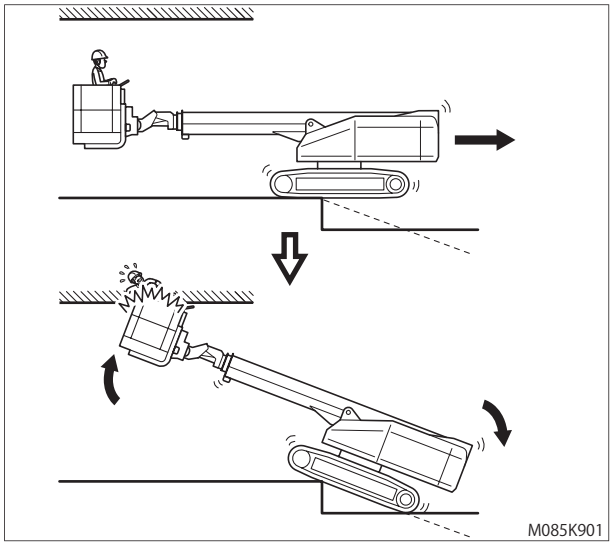

fig. 1–26

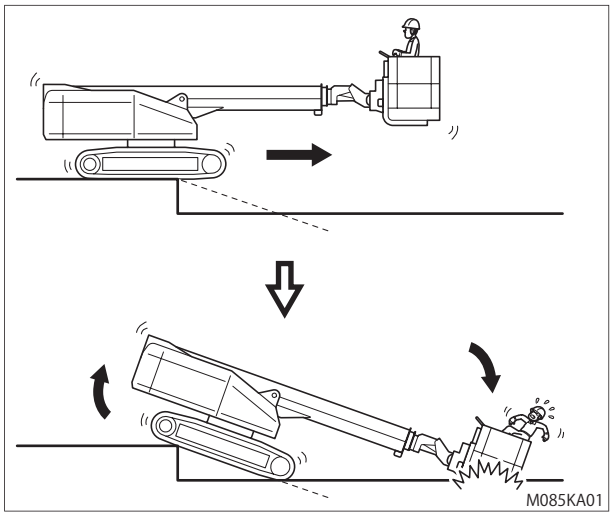

fig. 1–27

(v) Never travel with the boom raised. This may cause the machine to tip over when traveling on even slight uneven surfaces, steps, or climbing inclines.

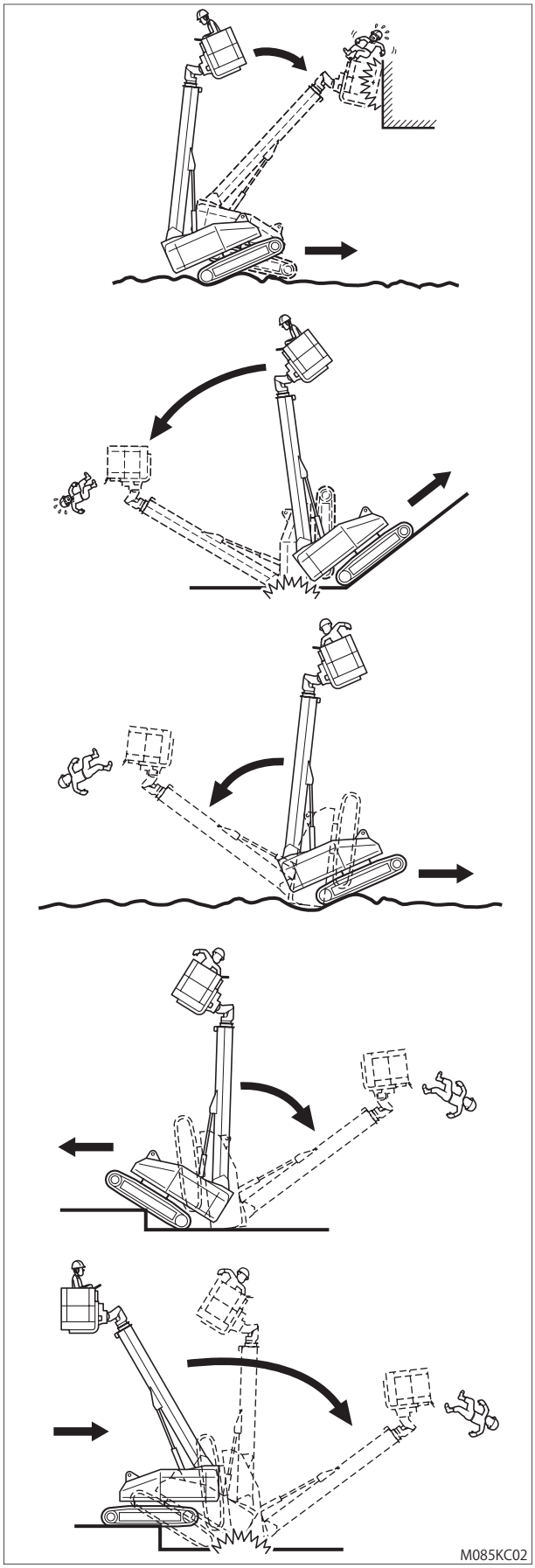

fig. 1–28

https://truckmanualshub.com/

Chapter 2
Decals

1. Symbol and Pictorials Definitions

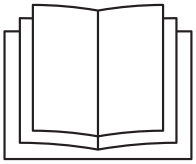 Read operation manual.	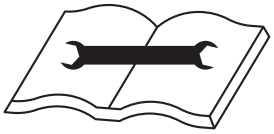 Read service manual.	Crush Hazard	Crush Hazard
Burn Hazard	Body Injury Hazard	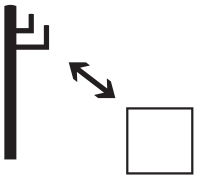 Maintain required clearance.	Do not lift.
Do not wash by high pressure.	Keep away. Do not touch.	Do not step. Keep off.	No open flame.
No smoking.	Do not contact power lines; do not touch energized machine.	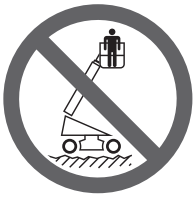 Do not travel elevated on/near soft or uneven surfaces.	Do not elevate platform unless machine is on firm level surface.
Sound power level in decibels	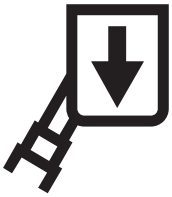 Platform Capacity	Maximum Manual Force	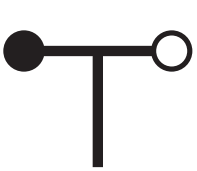 Maximum Wind Speed

M07Y0421

https://truckmanualshub.com/

Symbol and Pictorials Definitions (Continued)

Loads (personnel and tools)	Maximum Wheel Load	Platform Over Load	System Failure
Outreach limit	Tilt Warning	Lanyard Anchorage Point	Lift Point
Tie-down Point	ON and OFF	Enable Switch	Pre-start Check
Horn	Fast	Slow	High Torque
Engine Pre Heat	Oil Pressure	Water Temperature	Air Filter
Engine Start	Engine Failure	Emergency Pump	Generator

M07Y0522

https://truckmanualshub.com/

Symbol and Pictorials Definitions (Continued)

Hydraulic Oil	Oil level: High	Oil level: Low	Battery
Fuel	Diesel Fuel	LPG Fuel	Fuel Level
Beacon	Working Light	Head Light	
Boom Rotation	Boom Telescope	Boom Elevation	Platform Rotation
Fly-jib Elevation	Horizontal / Vertical Movements	Platform Level Adjust	Platform Contact
Travel: Left	Travel: Right	Upper control / Off / Lower control Selection	

M07Y0821

https://truckmanualshub.com/

2. Safety Signs and Locations

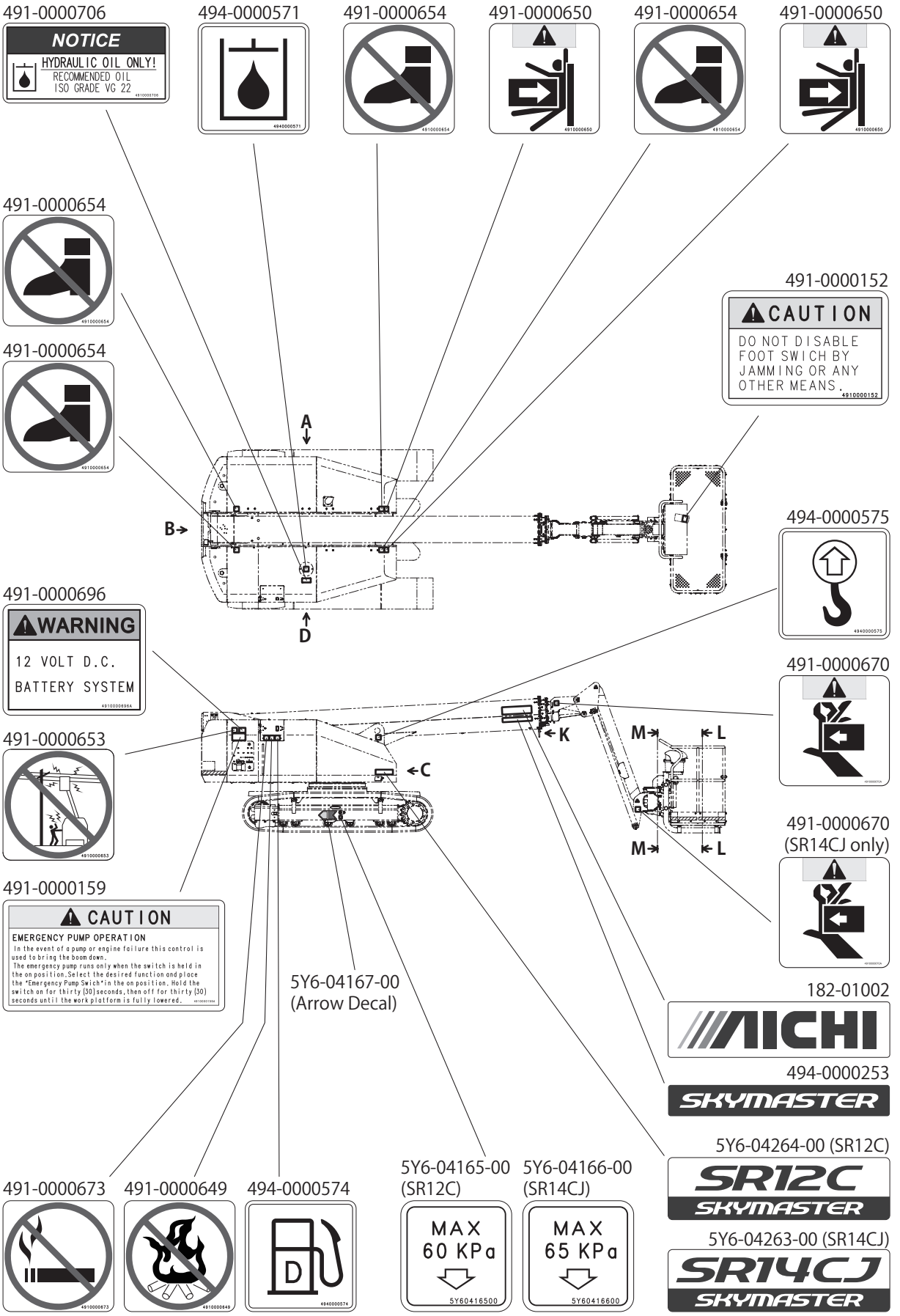

https://truckmanualshub.com/

Safety Signs and Locations (Continued)

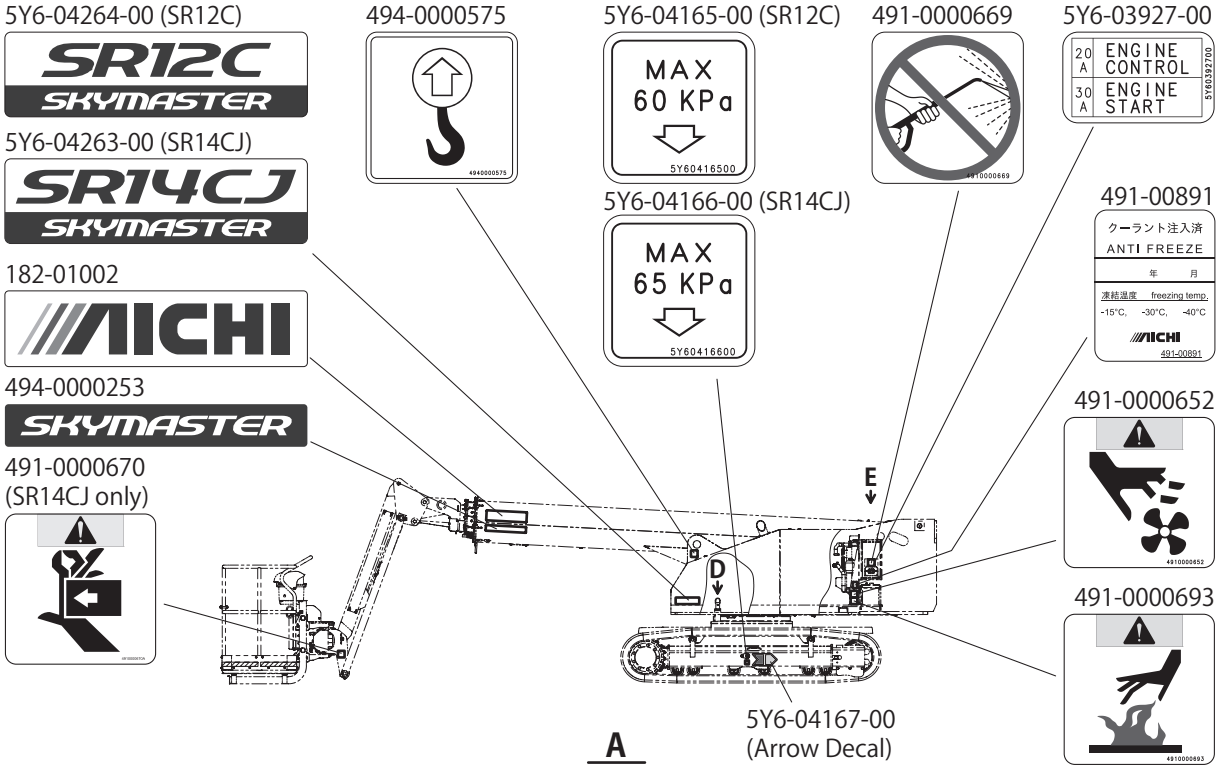

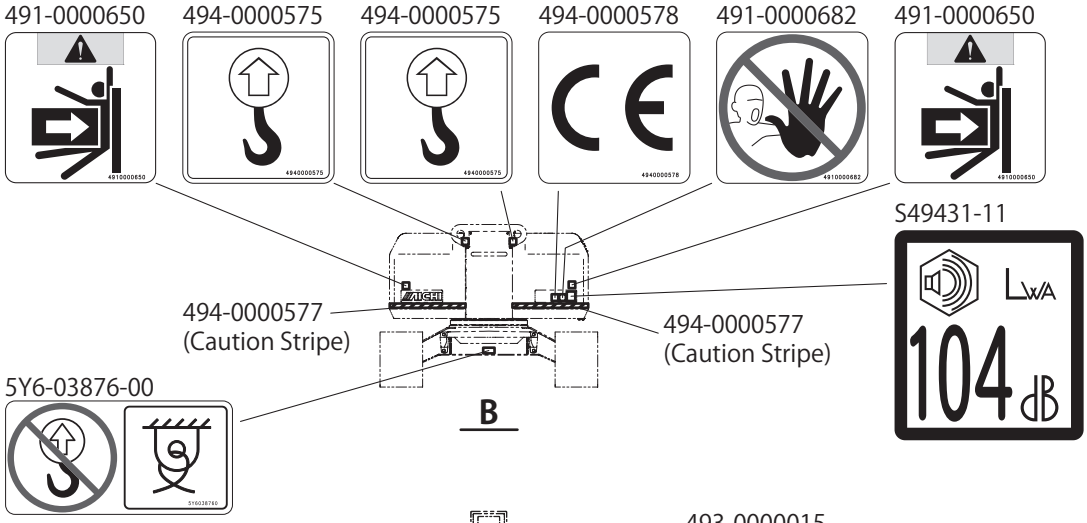

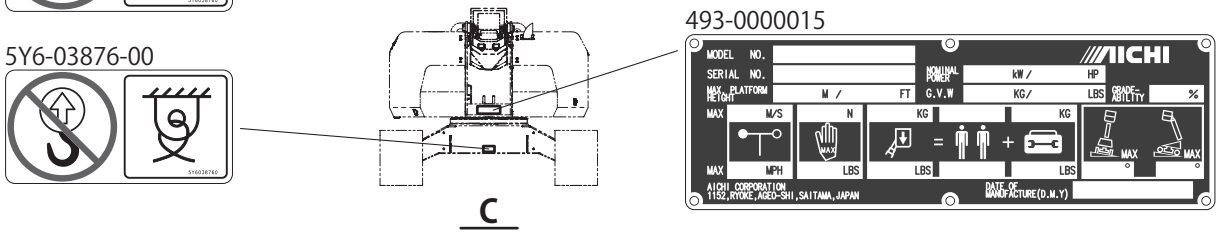

M085G622

https://truckmanualshub.com/

Safety Signs and Locations (Continued)

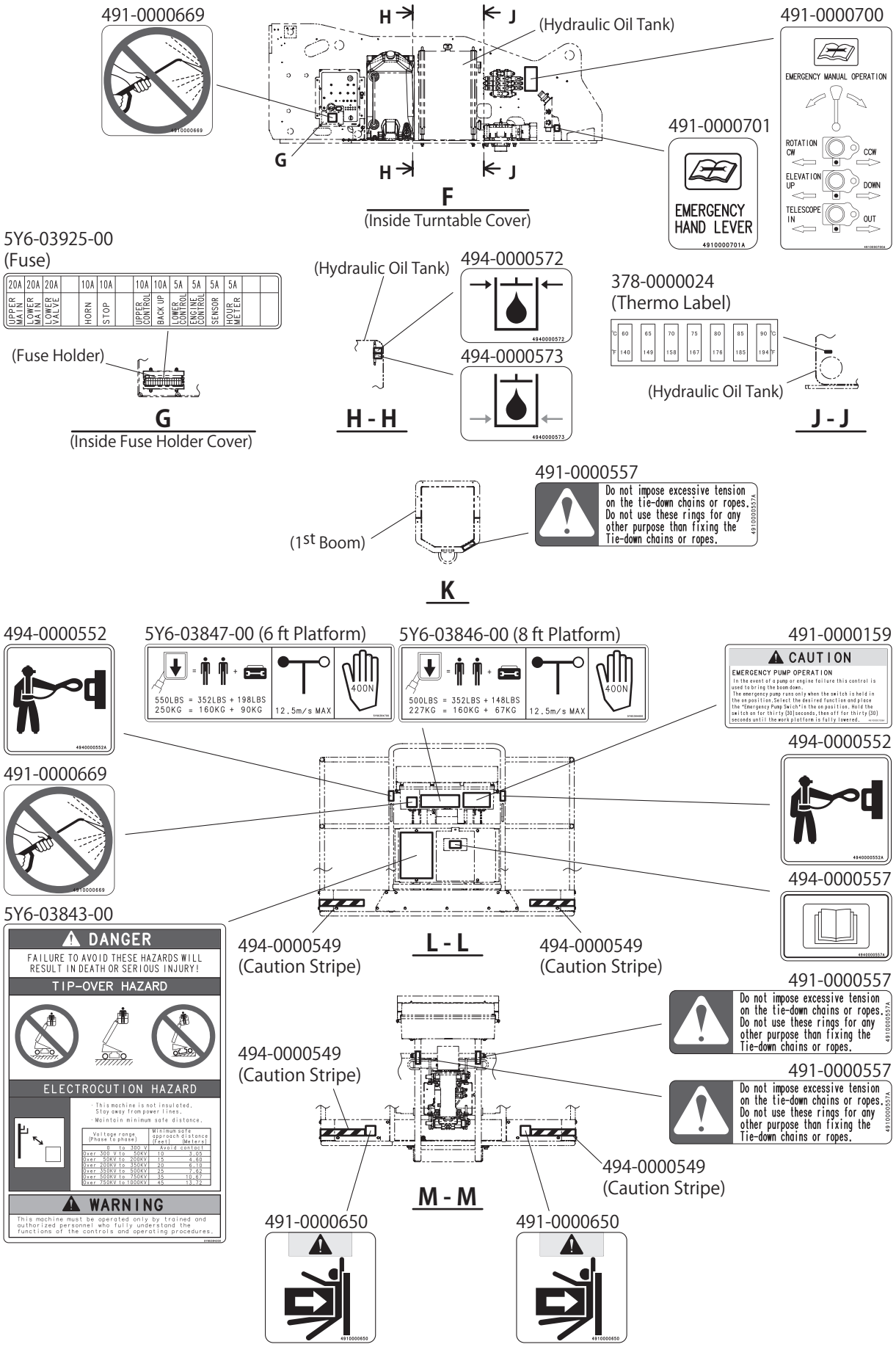

M085G722

https://truckmanualshub.com/

Chapter 3
Safety Systems

1. List of Safety Systems

Relief valve

Protect the hydraulic components by relieving abnormally high pressure in the hydraulic system.

Single holding valve on Boom elevation cylinder

Prevents the boom from natural descent in the event of hydraulic hose breakage.

Double holding valve on Boom telescope cylinder

Prevents the boom from natural descent in the event of hydraulic hose breakage.

Double holding valve on Upper leveling cylinder

Maintains the platform level in the event of hydraulic hose breakage.

Double holding valve on Fly jib cylinder (if equipped)

Prevents the fly jib from natural descent in the event of hydraulic hose breakage.

Foot switch

The boom, fly jib (if equipped), platform and traveling functions are disabled unless the foot switch is depressed.

Foot switch cancel system

This system cancel the foot switch / enable switch if any of the boom, fly jib (if equipped), platform and traveling function is not operated more than 20 seconds, then the power indicator light blinks. Release the switch once and the power indicator light turn on, then operate again to enable the functions.

Enable switch (Lower control)

The boom, fly jib (if equipped) and platform functions from the lower controls are disabled unless the enable switch is operated.

Emergency stop button

Stops all of the movements of the machine when this button is pushed in.

Tilt alarm buzzer

The tilt alarm buzzer sounds when the machine tilts more than 5° .

If the tilt alarm buzzer sounds when the platform is elevated, immediately retract the boom, and lower the boom under the horizontal, and move to a firm, level surface.

Travel speed limit system

This system automatically limits the travel speed corresponding to various boom statuses.

For the specific function of this system, see the section “2. Travel speed limit system.”

Travel function limit system

This system automatically disables the travel function corresponding to the boom status and the tilt angle of the machine.

For the specific function of this system, see the section “3. Travel function limit system.”

Rotation lock pin

Fixes the turntable to the chassis to prevent the turntable from being rotated when transporting the machine.

Emergency pump

Auxiliary hydraulic pump driven by the battery. And used to lower the platform in the event of engine or main pump failure.

Lanyard anchorage point

The lanyard anchorage point is to hook the safety harness to, in order to prevent falls.

Guardrail

There are guardrails on all sides of the platform to prevent persons in the platform from falling off the platform.

The entry gate is part of the guardrail system and must be securely fastened after entering the platform.

Overload sensing system

This system disables all of the functions, Overload warning light blinks and Overload buzzer sounds when the platform is overloaded.

https://truckmanualshub.com/

Boom / Travel function interlock system

This system stops all of the functions when the travel and boom operations are conducted simultaneously.

Boom wire rope failure detecting system

This system disables the boom extending functions in the event of the boom extension wire rope failure.

2. Travel Speed Limit System

This system automatically limits the travel speed corresponding to the boom status as follows.

Area	Boom Status	Travel speed select switch	Travel Speed
A	Elevation: ≧ 15 ° Telescope: Min～Max	Regardless	0.8 km/h
B	Elevation: < 15 ° Telescope: Not fully retracted		
C	Elevation: < 15 ° Telescope: Fully retracted	"LOW SPEED"	
		"HIGH SPEED"	2.6 km/h

table 3–1

3. Travel Function Limit System

This system disables the travel function corresponding to the boom status and the machine tilt angle as follows.

Area	Boom Status	Machine Tilt Angle	Travel Function
A	Elevation: ≧ 15 ° Telescope: Min～Max	≧ 5 °	Disable
		< 5 °	Available
B	Elevation: < 15 ° Telescope: Not fully retracted	≧ 5 °	Disable
		< 5 °	Available
C	Elevation: < 15 ° Telescope: Fully retracted	Regardless (within the gradeability)	Available

table 3–2

Boom status of travel speed/travel function limit system

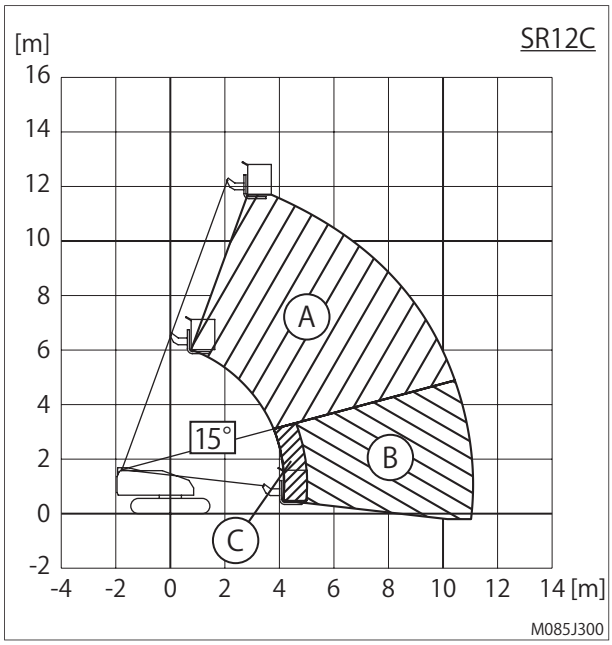

fig. 3–1

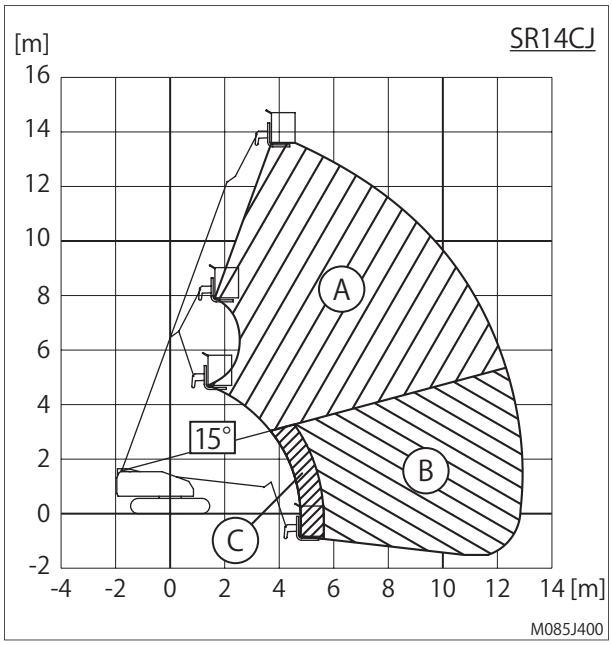

fig. 3–2

https://truckmanualshub.com/

Chapter 4
Part Names

1. Part names

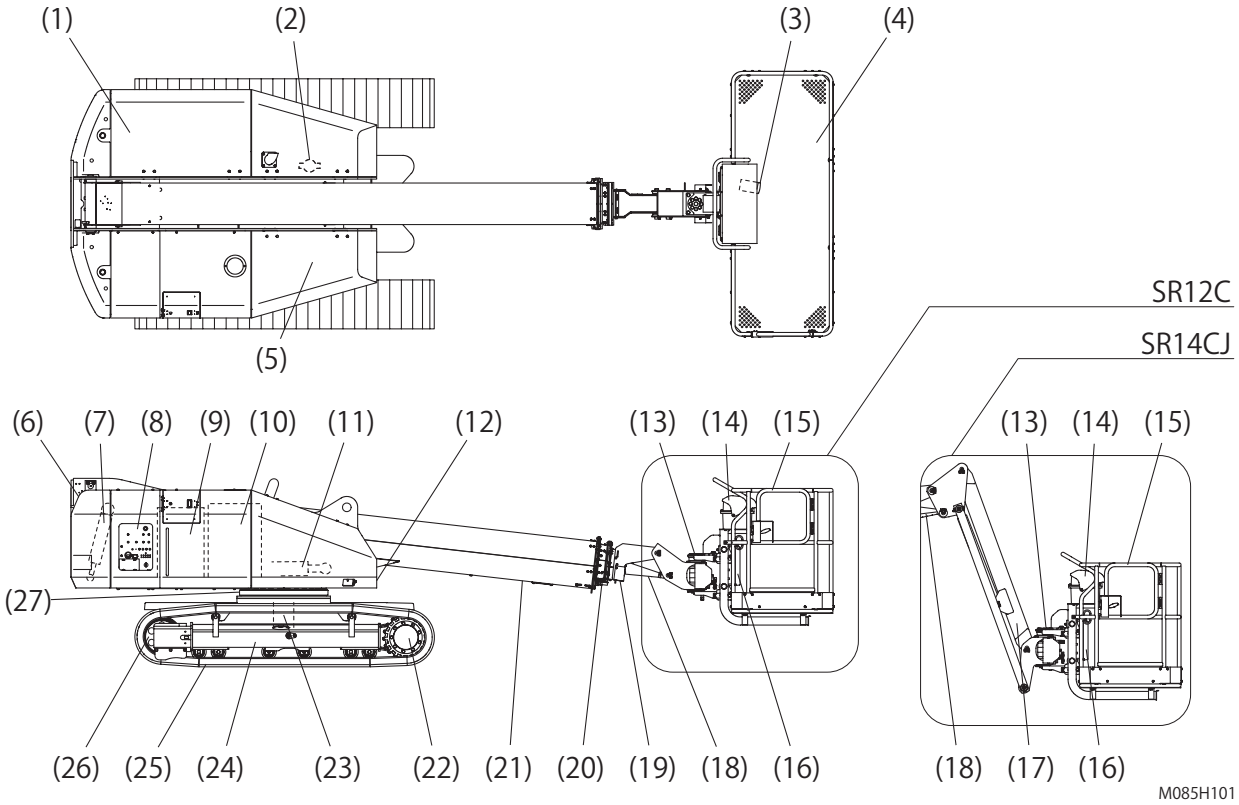

fig. 4–1

(1) Engine
(2) Rotation Lock Pin
(3) Foot Switch
(4) Platform
(5) Rotation Gear Box
(6) Turntable
(7) Platform Leveling Cylinder, Lower
(8) Lower Controls
(9) Fuel Tank
(10) Hydraulic Oil Tank
(11) Elevation Cylinder
(12) Serial Number Plate
(13) Rotary Actuator
(14) Upper Controls
(15) Entry Gate
(16) Manual Holder
(17) Fly Jib (If equipped)
(18) Platform Leveling Cylinder, Upper
(19) 3rd Boom Section
(20) 2nd Boom Section
(21) 1st Boom Section
(22) Travel Motor
(23) Swivel Joint
(24) Chassis
(25) Track
(26) Idler Wheel
(27) Turntable Bearing

https://truckmanualshub.com/

2. Upper Controls

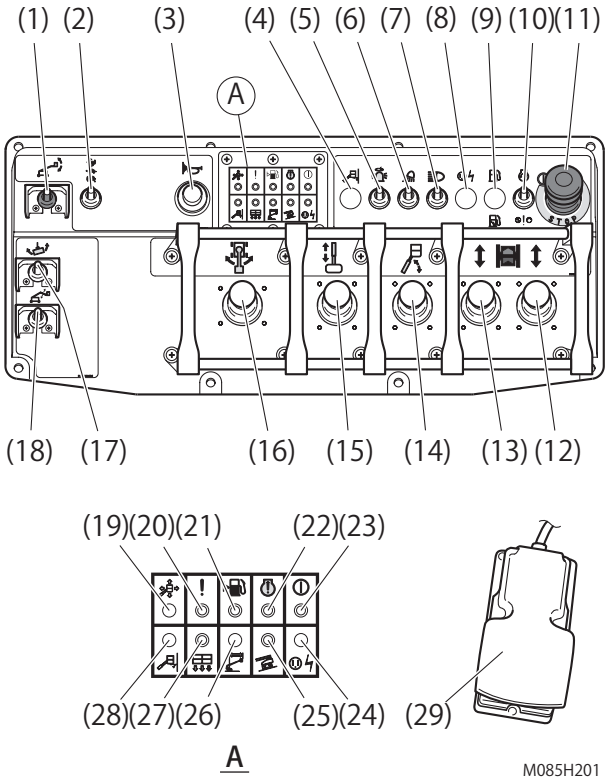

fig. 4–2

(1) Platform Level Adjust Switch

Operate this switch up and the platform level will tilt up. Operate this switch down and the platform level will tilt down.

(2) Travel Speed Select Switch

- Select "RABBIT" for a high speed traveling.
- Select "TURTLE" for a low speed traveling.
- Select "ELEPHANT" for a high torque when traveling on a slope.

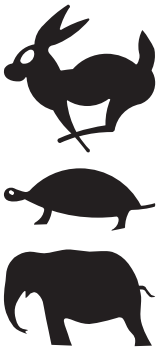

(3) Horn Button

Push the horn button and the alarm horn will sound. Release the horn button and the alarm horn will stop.
Before moving the machine, sound the horn to warn the personnel around the machine.

(4) Not used

(5) Rotating Beacon Switch (Option)

Turn on this switch and the rotating beacon will light on.

(6) Work Light Switch (Option)

Turn on this switch and the work light will light on.

(7) Head Light Switch (Option)

Turn on this switch and the head light will light on.

(8) Not used

(9) Not used

(10) Engine Start Switch / Emergency Pump Switch

- Operate this switch up without pressing the foot switch and the engine will start.
- Hold this switch down to operate the machine with emergency pump. (Refer to Chapter 9 for details)

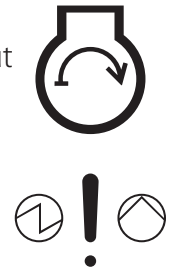

(11) Emergency Stop Button

Push in this button to "OFF" and all functions will stop. Pull out this button to "ON" and the machine will operate.

(12) Travel Control Lever (Right)

(13) Travel Control Lever (Left)

Operate both levers up, and the machine will travel forward (green direction).
Operate both levers down, and the machine will travel backward (red direction).

Operate one of levers, and the machine will pivot.

Operate both levers in each opposite direction, and the machine will spin.

(14) Boom Elevation Control Lever

Operate this lever up and the boom will raise. Operate this lever down and the boom will lower.

(15) Boom Telescope Control Lever

Operate this lever up and the boom will extend. Operate this lever down and the boom will retract.

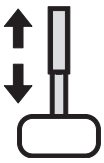

(16) Boom Rotation Control Lever

Operate this lever to the left and the boom will rotate clockwise. Operate this lever to the right and the boom will rotate counterclockwise.

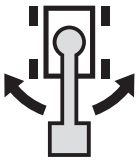

https://truckmanualshub.com/

(17) Platform Rotation Switch

Operate this switch to the left and the platform will rotate clockwise. Operate this switch to the right and the platform will rotate counterclockwise.

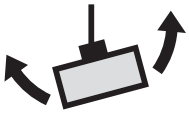

(18) Fly Jib Switch (If equipped)

Operate this switch up and the fly jib will raise. Operate this switch down and the fly jib will lower.

(19) Not used

(20) System Failure Light

This light will go on or blink in the event of a computer control system failure.

⚠CAUTION

Stop using the machine and contact AICHI or AICHI's dealer for inspections, if this light goes on or blinks.

(21) Fuel Level Light

This light will go on when the fuel level is low. Refill the fuel.

(22) Engine Failure Light

This light will go on in the event of an engine failure, e.g., failed charging system, abnormally low oil pressure, and abnormally high cooling water temperature. Check the indicator lights on the lower controls to identify the cause.

(23) Power Indicator Light

This light will go on when the key switch on the lower controls turns to "UPPER CONTROL."

(24) Not used

(25) Tilt Light

This light will go on and the alarm buzzer will sound when the machine tilts more than max allowable tilt angle.

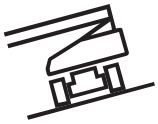

(26) Not used

(27) Overload Warning Light

When the platform is overloaded, this light will blink, the alarm buzzer will sound and all of the functions will be disabled.

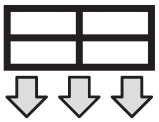

(28) Not used

(29) Foot Switch

Depress this switch to operate the machine on the platform.

The foot switch is canceled if any of boom, fly jib (if equipped), platform and traveling function is not operated more than 20 seconds after depressing the foot switch, then the power indicator light blinks. Release the switch once and the power indicator light turns on, then operate again to enable the functions.

https://truckmanualshub.com/

3. Lower Controls

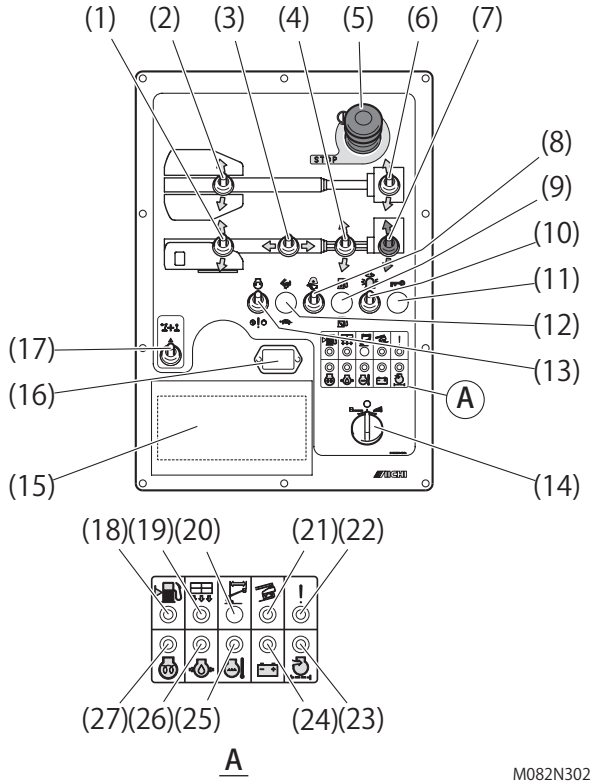

fig. 4–3

(1) Boom Elevation Switch

Operate this switch up and the boom will raise. Operate this switch down and the boom will lower.

(2) Boom Rotation Switch

Operate this switch up and the boom will rotate counterclockwise. Operate this switch down and the boom will rotate clockwise.

(3) Boom Telescope Switch

Operate this switch to the left and the boom will retract. Operate this switch to the right and the boom will extend.

(4) Fly Jib Switch (If equipped)

Operate this switch up and the fly jib will raise. Operate this switch down and the fly jib will lower.

(5) Emergency Stop Button

Push in this button to "OFF" and all functions will stop. Pull out this button to "ON" and the machine will operate.

(6) Platform Rotation Switch

Operate this switch up and the platform will rotate counterclockwise. Operate this switch down and the platform will rotate clockwise.

(7) Platform Level Adjust Switch

Operate this switch up and the platform level will tilt up. Operate this switch down and the platform level will tilt down.

(8) Pre-start Check Switch

Follow the instruction and hold this switch up when the pre-start check is performed.

(9) Not use

(10) Rotating Beacon Switch (Option)

Turn on this switch and the rotating beacon will light on.

(11) Not use

(12) Function Speed Select Switch

- Select "RABBIT" for a high speed function.
- Select "TURTLE" for a low speed function.

(13) Engine Start Switch / Emergency Pump Switch

- Operate this switch up without operating the enable switch and the engine will start.
- Hold this switch down to operate the machine with emergency pump. (Refer to Chapter 9 for details)

(14) Key Switch for Upper Control / Off / Lower Control Selection

Turn the key switch to the left and the upper controls will operate.

Turn the key switch to center position and the machine will be off.

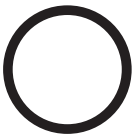

Turn the key switch to the right and the lower controls will operate.

(15) Fuse Holder

(16) Hour Meter

The hour meter works only when the engine is in motion.

https://truckmanualshub.com/

(17) Enable Switch

Hold this switch up to operate the machine on the ground.

The enable switch is canceled if any of boom, fly jib (if equipped) and platform function is not operate more than 20 seconds after holding up the enable switch to "ON," then the power indicator light blinks. Release the switch once and the power indicator light turns on, then operate again to enable the functions.

(18) Fuel Level Light

This light goes on when the fuel level is low. Refill the fuel.

(19) Overload Warning Light

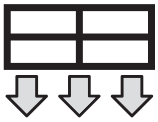

When the platform is overloaded, this light blinks, the alarm buzzer sounds and all of the functions are disabled.

(20) Not used

(21) Tilt Light

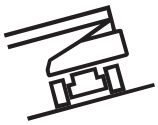

This light goes on and the alarm buzzer sounds when the machine tilts more than max. allowable tilt angle.

(22) System Failure Light

This light goes on or blinks in the event of a computer control system failure.

⚠CAUTION

Stop using the machine and contact AICHI or AICHI's dealer for inspections, if this light goes on or blinks.

(23) Air Filter Clog Light

This light goes on when the air filter is clogged.

If this light goes on while the engine is in motion, clean or replace the air filter element.

(24) Charge Light

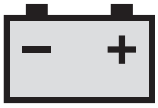

After starting the engine, this light goes off.

If this light goes on while the engine is in motion, check the charging system, e.g. alternator and fan belt.

(25) Water Temperature Light

When the engine cooling water temperature goes up abnormally, the engine stops and this light goes on to protect the engine from overheat.

⚠CAUTION

If this light goes on during operations, stop using the machine and check the engine cooling system, e.g., shortage of cooling water and broken fan belt.

⚠DANGER

When the engine is overheated, do not remove the radiator cap, as the heated water will splash out, resulting in scald.

(26) Oil Pressure Light

After starting the engine, this light goes off. Check the engine lubrication system, e.g., shortage of engine oil, if this light goes on while the engine is in motion.

(27) Preheat Light

This light goes on when the key switch is turned to "LOWER CONTROL" or "UPPER CONTROL" and goes off when the preheating is completed.

https://truckmanualshub.com/

Chapter 5
Workplace Check

WARNING

Do not move the machine to the workplace until the workplace check is performed.

- Make sure to check the workplace before starting operation. Make sure there are no following hazards:
  - near electric power lines and apparatus
  - drop-offs or holes
  - sloped surfaces
  - slippery or icy surfaces
  - inadequate surface support to withstand all load forces imposed by the machine
  - bumps and floor obstructions
  - curbs
  - debris
  - overhead obstructions
  - hazardous locations
  - wind and weather conditions
  - presence of unauthorized persons
  - other possible unsafe conditions

- Remove the hazards, if any, after the workplace check. If it is not possible to remove them, do not move the machine to the workplace.
- The machine can be used only on surfaces which are firm and for which all 4 wheels can maintain contact evenly with the ground.

https://truckmanualshub.com/

Chapter 6

Pre-Start Checks

WARNING

- **Do not operate the machine before pre-start checks described in this manual.**
- **Perform the pre-start checks on firm, level surface. Begin the checks with the platform lowered.**
- **If the pre-start checks reveal any abnormalities, put an "Out of Order" sign on the machine, and have it repaired immediately at the nearest designated service agent. If you use the machine without repairing it, it may cause a serious accident.**
- **If there is damage, such as cracks, on the welds of the platform guardrail, or on the guardrail pipes, change the guardrail immediately.**
- **Damage and stains to the decals will obstruct correct handling. Immediately remove the stain, or change the decals.**
- **Make sure to perform the checks with no load on the platform, because if there is a load on the platform, the checks will not be exact.**

NOTICE

While the machine is being moved, or the platform is being raised or lowered, the motion alarm buzzer produces a warning sound for personnel to stand away from the machine.

1. Visual Check

Step 1

Circle the machine once and check visually that there are no oil leaks, and no damage to the decals or to the machine.

Step 2

Make sure all decals are in place, legible and no damage. Replace any lost or damaged decals. Use mild soap and water to clean the decals if dirty. Refer to section 2 of chapter 2 for decals and their locations.

Step 3

Check the fuel, engine oil, coolant, and hydraulic oil levels. (Refer to chapter 7 for details)

Step 4

Check for cracks, or breaks in the boom, platform, and other parts. Check for loose bolts, and open covers. Check all the guardrails are attached properly.

Step 5

Check that greasing points are lubricated sufficiently.

2. Function Check

2–1 Preparation for Function Check

Step 6

Make sure the rotation lock pin is unlocked.

NOTICE

Operating with rotation locked will result in machine damage.

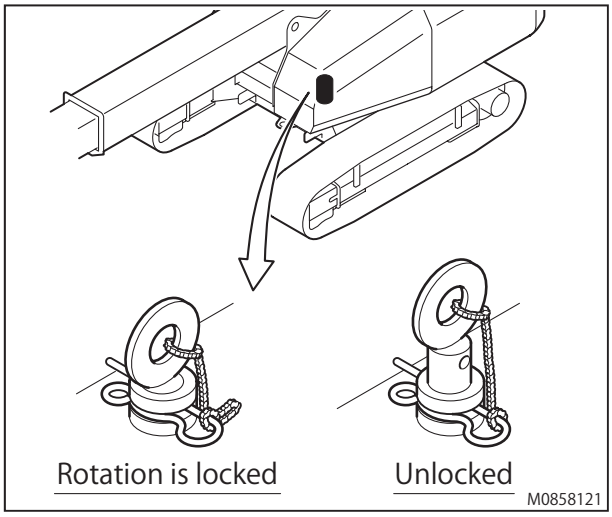

fig. 6–1

https://truckmanualshub.com/

Step 7

Make sure that all compartment covers are in place and latched.

Step 8

Set up the machine in the following state:

– Put the machine on a firm, level surface.
– Platform position: center
– Platform load: 0 kg
– Fly jib angle: horizontal (if equipped)
– Boom elevation: minimum
– Boom rotation: rear center

2–2 Lower Controls Check

Do the checks first with the lower controls, then with the upper controls.

Step 9

Turn the key switch to "LOWER CONTROL" and make sure that the alarm buzzer sounds for about 3 seconds, just after turning on.

DANGER

If the buzzer does not sound properly, the machine is faulty. Do not use the faulty machine.

Step 10

Hold the pre-start check switch up.

Make sure the alarm buzzer sounds for about 3 seconds after the pre-start check switch has been held up.

NOTICE

If the buzzer does not stop sounding , the boom functions are disabled.

Step 11

Start the engine and, idle the engine for warming up.

Step 12

Make sure there are no strange sounds come from any part.

Step 13

Check that all safety systems are functioning properly.

– Emergency stop: push the emergency stop button while operating the boom, and make sure that both the boom operation and the engine stop.
– Emergency pump: Make sure that the boom can be operated while the emergency pump is being operated.

Step 14

Check that no oil is leaking from the hydraulic components, hoses and pipes.

Step 15

Check the boom telescoping wire ropes for any damages.

– No wobble or unsteady movements when telescoping the boom.
– No damage at the wire rope ends.

Step 16

Leave the machine for a few minutes with the boom fully extended, and fully raised. Check visually that the boom does not descend on its own.

2–3 Upper Controls Check

Step 17

Turn the key switch to "UPPER CONTROL."

Step 18

Wear the safety harness and get on the platform and close gate.

After getting on the platform, immediately hook the safety harness to the lanyard anchorage point.

Step 19

Start the engine.

Step 20

Rotate the platform and make sure that the platform rotates smoothly without excessive free play.

Step 21

Check that all safety systems are functioning properly.

– Emergency stop: push the emergency stop button while operating the boom, and make sure that both the boom operation and the engine stop.
– Foot switch: while operating the boom, release the foot switch, and make sure the boom operation stops.
– Emergency pump: Make sure that the boom can be operated while the emergency pump is being operated.

https://truckmanualshub.com/

If no abnormalities are revealed in steps 1～21, check the following using the upper controls:

⚠ DANGER

- **Retract the boom fully and raise the boom to the horizontal before checking.**
- **Close and lock the doors of the covers securely before operating. Doors opening suddenly through the movements of the machine is hazardous.**

2–4 Tilt Warning Check

Step 22

Retract the boom fully and raise the boom to the horizontal.

Step 23

Raise the fly jib to the horizontal. (if equipped)

Step 24

Make sure the tilt light goes on and alarm buzzer sounds when the machine tilts more than 5 °, e.g. by traveling up onto a slope more than 5 ° (within the gradeability).

2–5 Limited Travel Speed Check

Step 25

(1) Put the machine on a firm, level surface.
(2) Extract the boom approx. 1 m and lower the boom below the horizontal.
(3) Select the travel speed select switch to "HIGH SPEED" and attempt to travel at high speed.
(4) Make sure the machine travels at low speed.

2–6 Last Check

Step 26

Retract and lower the boom fully and turn the key switch to "OFF" to shut down the engine.

Step 27

Circle the machine and check visually that there are no oil leaks.

https://truckmanualshub.com/

Chapter 7
Maintenance

1. Storage Method

After each use, store the machine as follows:

(1) Park the machine on a firm, level surface.
(2) Take all tools and materials from the platform.
(3) Retract and lower the boom fully.
(4) Shut down the engine by turning off the key switch, remove the key to prevent using the machine without permission, and store it suitably.
(5) Chock the wheels.
(6) Perform the daily maintenance.

2. Daily Maintenance

Only daily maintenance items that specified in this manual shall be performed by the operator.

2–1 Refuel the machine

⚠WARNING

- **Ensure the machine only in a well ventilated area away from open frame and other sources of ignition.**
- **Never remove the fuel cap with the engine running.**
- **Never refuel with the engine running.**

Before using the machine ensure there is enough fuel for expected use.

(1) Make sure the engine and all systems are turned off and the emergency stop buttons are depressed.
(2) Remove the fuel cap.
(3) Pour fuel into the fuel tank carefully.
(4) Tighten the fuel cap securely.

2–1–1 Diesel Fuel Specifications

Diesel fuel should comply with the following specifications. The table lists several worldwide specifications for diesel fuels. (See table 7–1)

Diesel Fuel Specification	Location
ASTM D975 No. 1D S15, S500 No. 2D S15, S500	USA
EN590:96	European Union
ISO 8217 DMX	International
BS 2869-A1 or A2	United Kingdom
JIS K2204 Grade No.2	Japan
KSM-2610	Korea
GB252	China

table 7–1

2–2 Check the Hydraulic Oil Level

Maintaining the hydraulic oil at sufficient level is very important for the machine operation. Deficient of the hydraulic oil level can damage hydraulic parts. Daily checks from the oil level gauge (fig. 7–1) can confirm the change of the hydraulic oil level that might show the hydraulic system problems.

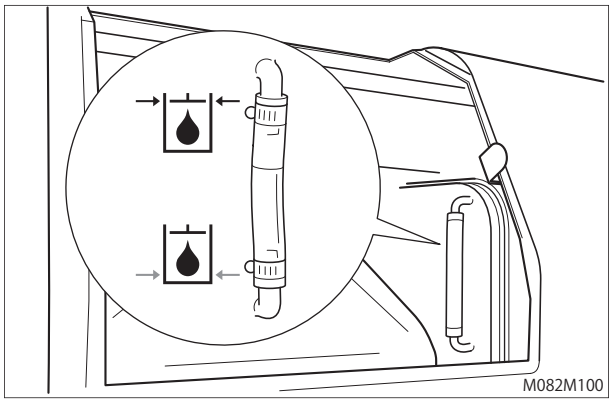

fig. 7–1

(1) Make sure the machine is level.
(2) Make sure the boom is retracted and lowered fully.
(3) Check the oil level gauge located on the side of the hydraulic oil tank.
(4) Add the hydraulic oil if necessary.

2–2–1 Hydraulic Oil Specifications

Manufacturers	Hydraulic oil
Shell oil	Tellus oil T22
Esso oil	Uni power XL22
Mobil oil	Hydraulic oil K22

table 7–2

https://truckmanualshub.com/

2–3 Check the Battery Fluid Level

WARNING

The battery fluid contains corrosive acid. When dealing with the battery, always wear appropriate protective clothing and equipment to protect your hands, eyes, face and body, and avoid contacting battery fluid.

(1) Check the battery fluid levels every day (especially when using the machine in warm and dry climates).

(2) When the battery fluid level has dropped more than 10 mm, add only distilled water until the battery fluid level is 2 mm below the bottom of the fill well. (fig. 7–2)

NOTICE

Do not add anything other than distilled water. Failure to obey this instruction could shorten the battery life.

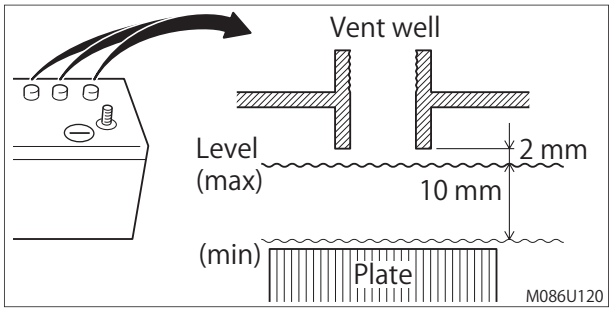

fig. 7–2

(3) Keep the terminals and the upper surface of the battery clean.

2–4 Check the Engine Oil Level

Daily checking is important to keep the engine in good operating condition.

WARNING

- **Stop the engine and cool down before checking the engine oil level.**
- **Never leave the key in the key switch when checking the engine oil level. Someone may accidentally start the engine without realizing it while checking the engine oil level. Such accidents could result in a serious injury.**

(1) Make sure the machine is level.

(2) Make sure the engine and all systems are turned off and the emergency stop buttons are depressed.

(3) Remove dipstick (fig. 7–3, 1) and wipe with clean cloth.

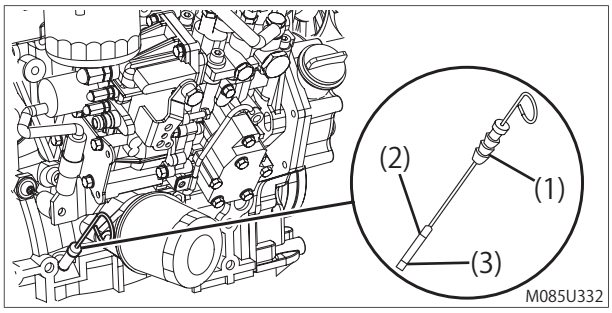

fig. 7–3

(4) Fully reinsert dipstick.

(5) Remove dipstick. The oil level should be between upper (fig. 7–3, 2) and lower (fig. 7–3, 3) lines on the dipstick.

(6) Fully reinsert dipstick.

(7) Add the engine oil if necessary.

2–4–1 Engine Oil Viscosity

Select the appropriate engine oil viscosity based on the ambient temperature and use the SAE Service Grade Viscosity Chart in fig. 7–4.

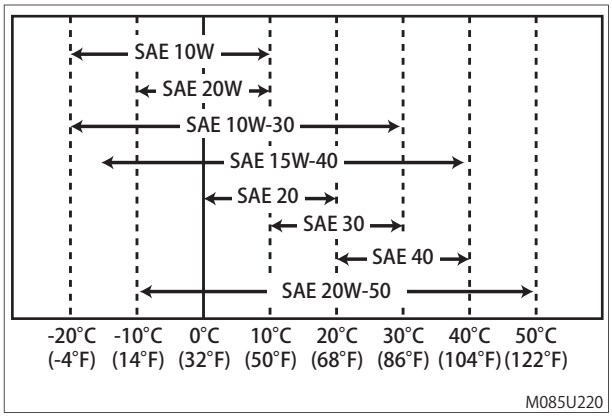

fig. 7–4

2–5 Check the Cooling System

WARNING

- **Stop the engine and cool down before checking the cooling system.**
- **Never leave the key in the key switch when checking the cooling system. Someone may accidentally start the engine without realizing it while checking the cooling system. Such accidents could result in a serious injury.**

https://truckmanualshub.com/

⚠CAUTION

Wear eye protector and rubber gloves when handling the engine coolant. If contact with the eyes or skin should occur, flush eyes and wash immediately with clean water.

NOTICE

Do not remove the radiator cap.

(1) Make sure the machine is level.

(2) Make sure the engine and all systems are turned off and the emergency stop buttons are depressed.

(3) Check the level of engine coolant in the reserve tank (fig. 7–5, 1). When the engine is cold, the coolant level in the tank should be at or slightly above the "LOW" (COLD) mark (fig. 7–5, 2) on the coolant reserve tank. If the coolant level is at the "FULL" (HOT) mark (fig. 7–5, 3) when the engine is cold, the coolant will expand when it becomes hot and possibly spray out of the overflow hose.

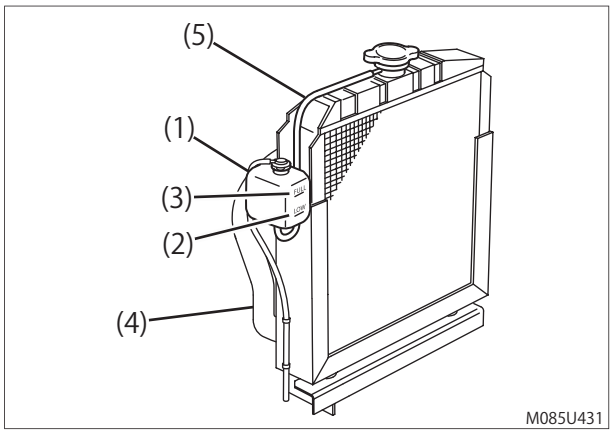

fig. 7–5

(4) Add additional engine coolant to the reserve tank if necessary.

(5) Check the radiator hoses (fig. 7–5, 4) for cracks, abrasions, cuts or other damage. Replace as necessary.

(6) Check the hose (fig. 7–5, 5) that connects the reserve tank (fig. 7–5, 1) to the radiator. Be sure it is securely connected and there are no cracks or damage. If the hose is damaged, engine coolant will leak out instead of going into the reserve tank.

3. Periodic Maintenance

⚠WARNING

Periodic maintenance shall be performed by qualified service technicians.

3–1 Monthly and Annual Inspection

- Perform a monthly and annual inspection referring to the separate service manual.
  - Depending on the laws of the country in which the machine is being used, keep the records of the checks for the required number of years.
  - For any doubts you may have about handling, inspection or spare parts, contact AICHI or AICHI's dealer.
  - Refer to the separate service manual for what must be checked regularly.
- If the machine has not been used for over one month, make sure to perform the monthly inspection before use.

3–2 Crawler Tracks

As slack will form on the crawler tracks due to friction etc., periodically adjust the tension of the tracks. If the tension is not appropriate, track detachment may occur.

⚠WARNING

- **Do not get on the platform while adjusting the tracks. Failure to avoid this hazard could result in a fall accident and serious injury.**
- **Do not enter under the platform, boom, tracks, and chassis while adjusting the tracks. Failure to avoid these hazards could result in crush accidents and serious injury.**

3–2–1 Adjustment Method

Step 1

Set up the machine on a firm level surface, retract the boom fully.

Step 2

Rotate the boom to the right or left side so that it is at right angles with the chassis.

https://truckmanualshub.com/

Step 3

Set the boom stand (fig. 7–6, B) and the wood block (fig. 7–6, A) to prop up the first boom end. Use the wood block that is wider than the width of first boom end.

Avoid the tie-down ring (fig. 7–6, C), and center the first boom end on the wood block.

Make sure the stand is stable.

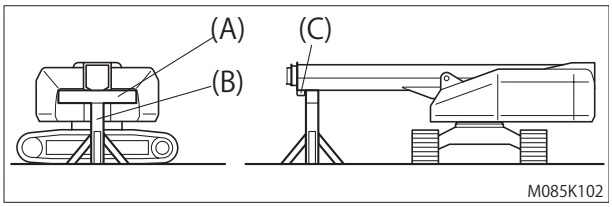

fig. 7–6

⚠WARNING

Fixate the stand with brace members so that the stand does not fall over during operation.

Step 4

Using the lower controls, lower the boom to lift up the track 30～50 mm above the ground. (fig. 7–7)

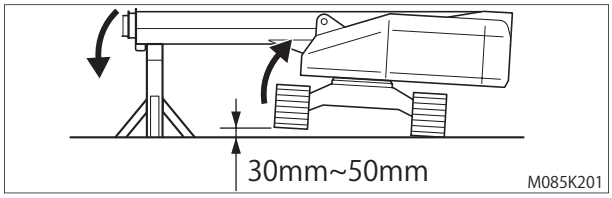

fig. 7–7

⚠WARNING

Do not lift up the track more than 50mm above the ground. Lifting up the track more than needed could cause the machine to become unstable. Death or serious injury could result.

Step 5

Push in the emergency stop button to stop the engine. Turn the key switch to "OFF" and remove the key.

⚠WARNING

Never leave the key in the key switch when adjusting the tension of the tracks. Someone may accidentally start the engine without realizing it while adjusting the tension of the tracks. Such accidents could result in a serious injury.

Step 6

A grease fitting (fig. 7–8, A) is located on the right and left sides of the chassis frame. Supply grease to the grease cylinder through the grease fitting to adjust the tension of the track. Adjust the tension of the track so that there is 115～125 mm of slack between the chassis frame and track link. (fig. 7–9)

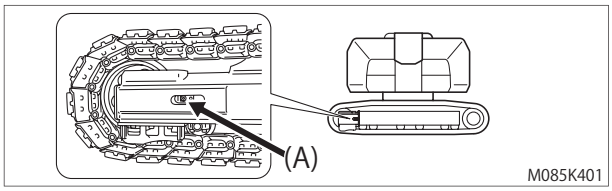

fig. 7–8

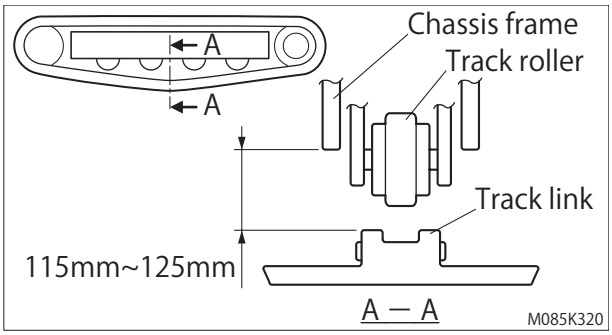

fig. 7–9

Step 7

After adjusting one side, rotate the boom 180 ° and adjust the other side in the same manner.

NOTICE

It is important to adjust the tension of left and right tracks equally.

3–2–2 Adjustment Interval

Adjust the tension of the tracks at the following time intervals.

	Interval
First time on new machine	After 10 ～ 20 hours
Thereafter	Every 800 hours or 6 months

table 7–3

NOTICE

Confirm the number of hours in service by the hour meter.

https://truckmanualshub.com/

3–3 Engine Maintenance

Daily and periodic maintenance are important to keep the engine in good operating condition. The following is a summary of maintenance items by periodic maintenance intervals. Periodic maintenance intervals vary depending on engine application, loads, diesel fuel and engine oil used and are hard to establish definitively. The following should be treated only as a general guideline.

3–3–1 Periodic Maintenance Chart

○ : Check ◇ : Replace

System	Check Item	Daily	Periodic Maintenance Interval	
			Every 50 hours	Every 250 hours
Cooling System	Check and Refill Engine Coolant	○		
Electrical Equipment	Check Indicators	○		
Engine Oil	Check Engine Oil Level	○		
	Drain and Fill Engine Oil		◇ 1st time	◇ 2nd and after
	Replace Engine Oil Filter			
Fuel	Check and Refill Fuel Tank Level	○		
	Check Fuel Filter / Water Separator	○		

table 7–4

NOTICE

Contact AICHI or AICHI's dealer for the maintenance items other than the table above.

https://truckmanualshub.com/

Chapter 8

Operation

NOTICE

The motion alarm buzzer sounds when the machine is in motion to warn the people nearby.

1. Starting the Engine

1–1 Starting from Ground

Do the following to start the engine from the lower control panel.

Step 1

Turn the key switch to "LOWER CONTROL," and then, make sure that both of the oil pressure and charge lights go on.

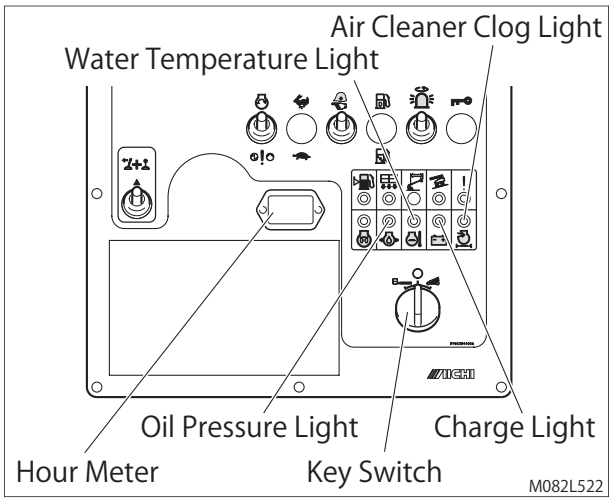

fig. 8–1

WARNING

When the engine is overheated, do not remove the radiator cap, as the heated water will splash out, resulting in scald.

NOTICE

If any of the lights below are lit while operating, stop using the machine, and, following the separate service manual, check the problem.

(a) Charge light

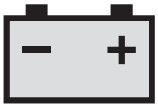

After starting the engine, the charge light goes off. If the light goes on whilst the engine is in motion, it is because of a charging system failure

(b) Oil pressure light

After starting the engine, the oil pressure light goes off. If the light goes on whilst the engine is in motion, it is because of an engine lubrication system failure.

If this light goes on whilst the engine is in motion, check the engine lubrication system, e.g., shortage or leakage of engine oil or oil filter clogging.

(c) Water temperature light

When the engine cooling water temperature goes up abnormally, the engine stops and this light goes on to protect the engine from overheat. This light stays off when the key switch is just turned to "ON."

If this light goes on during operations, stop using the machine and check the engine cooling system, e.g., shortage of cooling water and broken fan belt.

(d) Air cleaner clog light

This light goes on when the air filter is clogged. Clean or change the air filter element, if this light goes on whilst the engine is in motion.

(e) Hour meter

The hour meter indicates the usage time of the machine. The hour meter is usually read when doing checks, maintenance, refueling, etc.

https://truckmanualshub.com/

NOTICE

Before operating the machine for the first time at the start of work, or during checks, make sure that the rotation lock pin is unlocked. (See fig. 8–2)

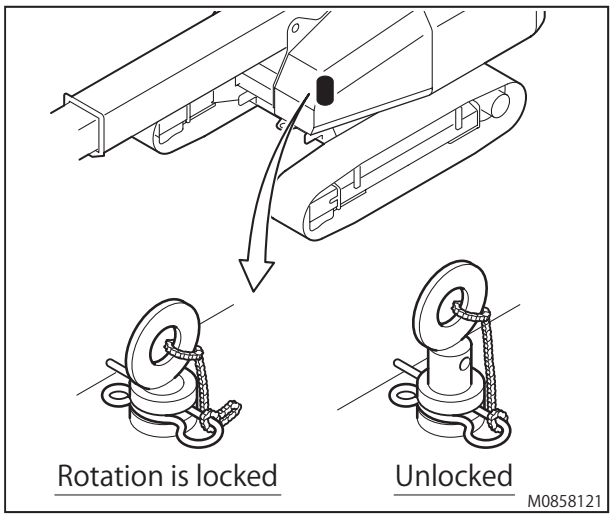

fig. 8–2

Step 2

Make sure both of the upper and lower emergency stop button are pulled out to "ON."

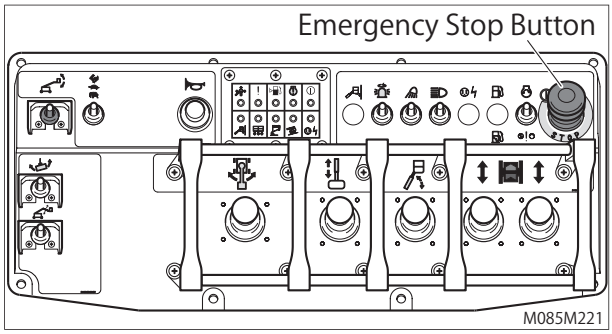

fig. 8–3

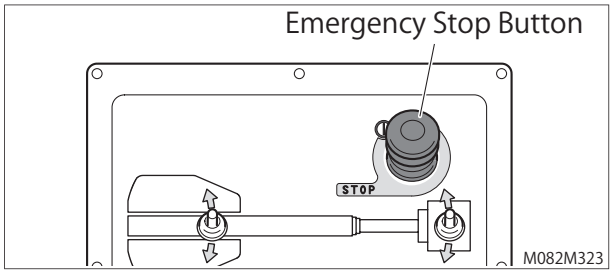

fig. 8–4

Step 3

Operate the engine start switch up to "ENGINE START" without operating the enable switch to start the engine.

Immediately release your hand from the engine start switch once the engine has started.

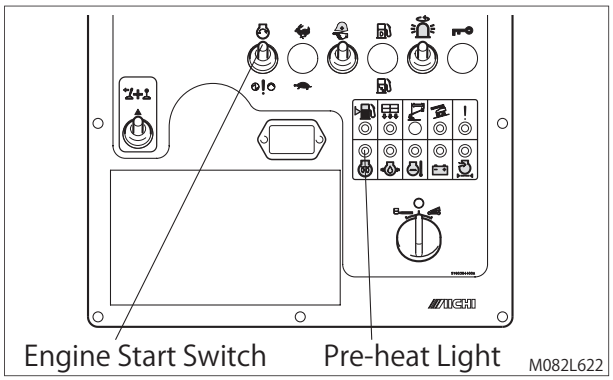

fig. 8–5

NOTICE

- **Do not hold the engine start switch up for 15 seconds or more. Failure to release your hand could result in damage to the starter motor.**
- **Take the interval of 30 seconds or more before re-starting the engine to prevent damaging the engine.**

Step 4

If the engine does not start easily because of the cold, start the engine after the pre-heat light has gone off.

Step 5

After starting engine, idle the engine for about 5 minutes for warming up.

NOTICE

If the outside air temperature is below the temperature range for the hydraulic oil used in the machine, travel the machine in a warm place until the hydraulic oil is warm enough, and then do the outside work.

Step 6

Check the fuel level light.

When there is little fuel remaining, this light will be lit. On a level surface, it lights at about 30 liters.

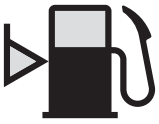

If the fuel level light is on, add fuel (Refer to Chapter 12 for details).

https://truckmanualshub.com/

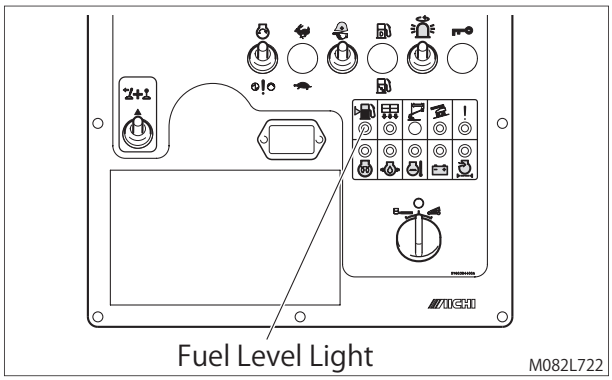

fig. 8–6

NOTICE

The capacity of the fuel tank is 120 liters.

1–2 Starting from Platform

Do the following to start the engine from the upper controls.

Step 1

Turn the key switch to "UPPER CONTROL," and then, make sure the engine failure light goes on.

NOTICE

- **Engine failure light**
  After the engine starts, rotations will increase, and the engine failure light will go off. If it lights while traveling, there is an engine-related problem.
- **Concerning engine-related problems, the defective part can be identified using the indicator lights on the lower panel. Refer to section 1–1 for details.**

Step 2

Operate the engine start switch up to "ENGINE START" without depressing the foot switch to start the engine.

Immediately release your hand from the engine start switch once the engine has started.

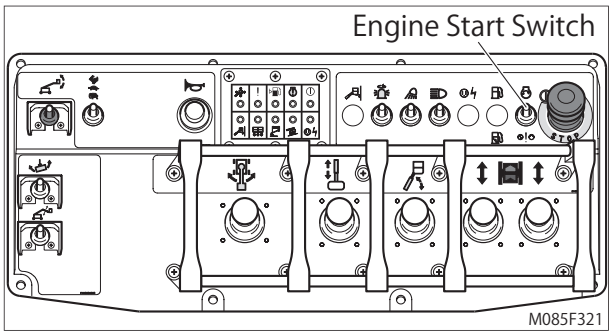

fig. 8–7

NOTICE

- **Do not hold the engine start switch up for 15 seconds or more. Failure to release your hand could result in damage to the starter motor.**
- **Take the interval of 30 seconds or more before re-starting the engine to prevent damaging the engine.**

Step 3

After starting engine, idle the engine for about 5 minutes for warming up.

NOTICE

If the outside air temperature is below the temperature range for the hydraulic oil used in the machine, travel the machine in a warm place until the hydraulic oil is warm enough, and then do the outside work.

Step 4

Check the fuel level light.

When there is little fuel remaining, this light will be lit. On a level surface, it lights at about 30 liters.

If the fuel level light is on, add fuel (Refer to Chapter 12 for details).

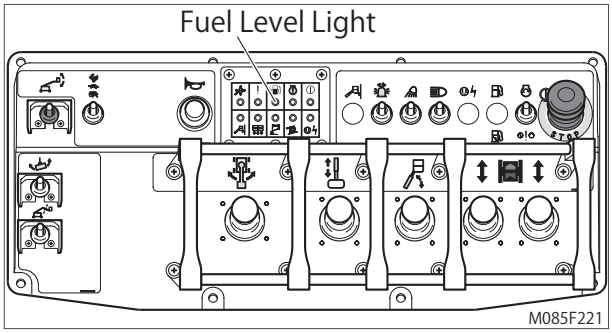

fig. 8–8

https://truckmanualshub.com/

2. Stopping the Engine

Push in either of the upper or lower emergency stop button to "OFF," or turn the key switch to "OFF" to stop all functions and turn the engine off.

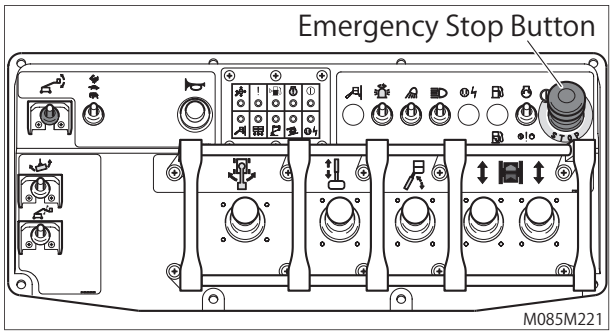

fig. 8–9

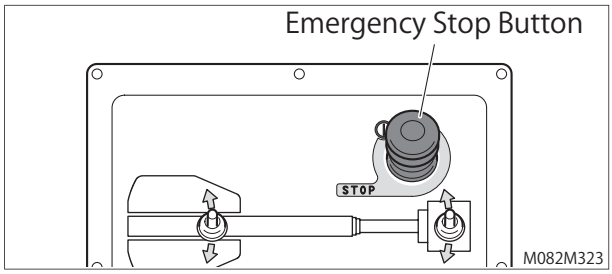

fig. 8–10

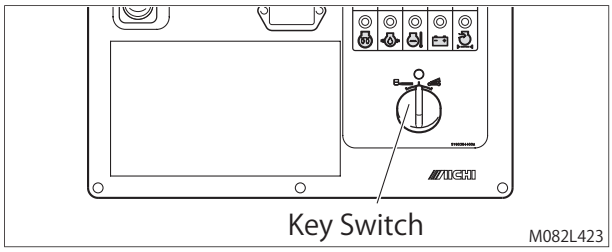

fig. 8–11

3. Upper Controls (from platform)

DANGER

When using the upper controls, make sure to wear a safety harness, and put the hook of the safety harness through the lanyard anchorage point. Do not hook to any other place.

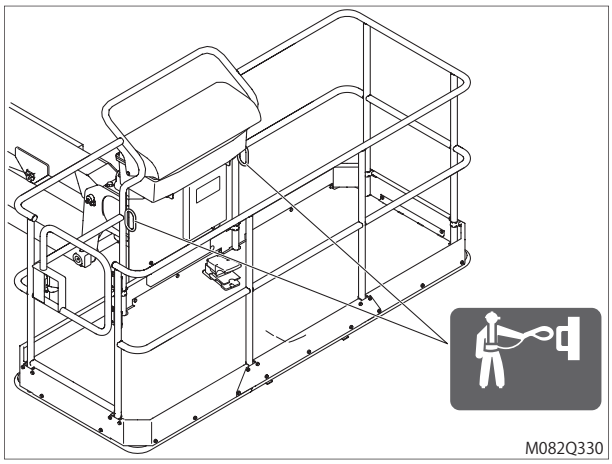

fig. 8–12

WARNING

- **Do your work while standing firmly on the platform.**
  If your feet separate from the platform, by climbing on the guardrails, e.g., there is a possibility you will lose your balance, and fall.
- **Before rotating the boom, make sure that no person or obstacle is around the turntable. If the boom cannot be raised and the rear of the turntable cannot be seen, have a guide to assist you.**

CAUTION

- **Before operation, make sure the platform is level.**
  If the platform is tilted, adjust the platform level by referring to the platform level adjustment method. (Refer to section 5–1)
- **To avoid slips and falls while working on the platform, organize the floor of the platform carefully, and clear the platform of water, oil, snow, freeze, etc.**
- **Be especially careful when rotating the boom.**
  Check that there are no obstacles in the way before rotating.
- **Do not place small objects near the control levers. They may catch the control levers and cause misoperation.**

https://truckmanualshub.com/

NOTICE

When painting, make sure to close the cover of the upper control panel after the platform has been put in position, and keep the decal clean.

3–1 Foot Switch

WARNING

Do not disable the foot switch in any way e.g. by binding.

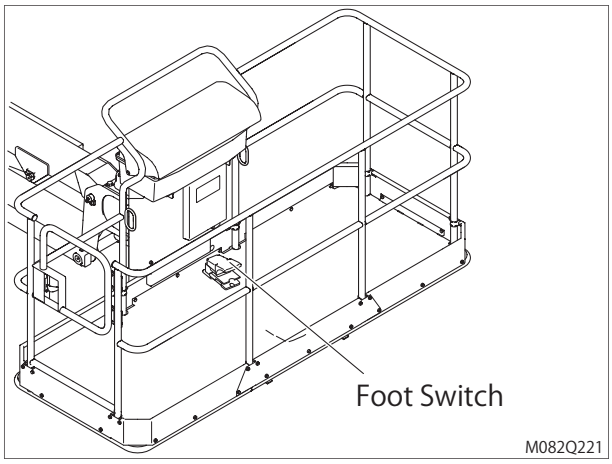

fig. 8–13

Except for those listed here, you must depress the foot switch on the platform while performing all operations.

- Engine start
- Emergency stop (Stopping the engine)
- Using the horn
- Operating the work light (option)
- Operating the head light (option)

3–2 Traveling

Use the travel control levers and the travel speed select switch to travel the machine.

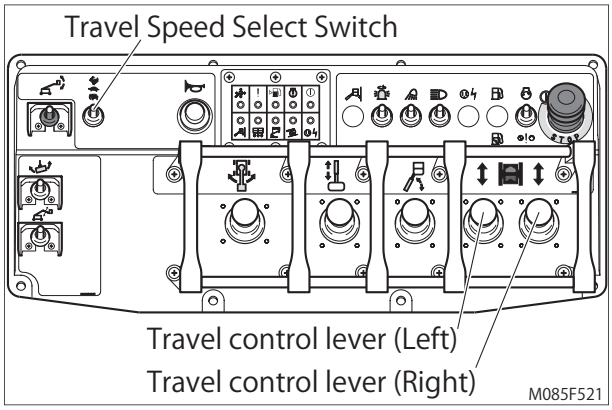

fig. 8–14

WARNING

- **If the turntable has been rotated 180°, the traveling direction will be opposite to the lever movements, so be careful. Make sure to check the direction of the arrow on the decal and on the chassis when traveling.**

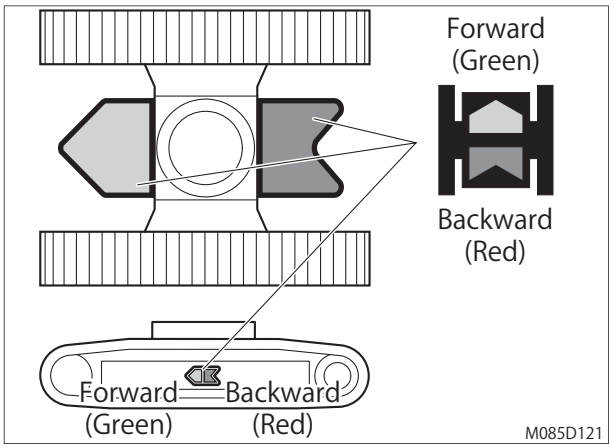

fig. 8–15

- **Before traveling, make sure that no person or obstacle is in the traveling direction.**

CAUTION

- **When traveling on rough terrain or on slope, retract the boom fully and set the boom under the horizontal.**
- **When you start traveling, make sure to turn the lever gradually, and to start slowly. It is dangerous to start abruptly.**
- **Adjust the traveling speed by turning the travel control lever.**
- **All persons in the platform must comply with employer, work area, and local and national safety regulations regarding the use of personal protective equipment. Always use a safety harness in the platform. Attach the lanyard to the authorized lanyard anchorage point provided in the platform.**
- **Do not change course abruptly.**
- **When traveling, raise the boom so it is almost horizontal, make sure you can see to the front, and make sure you travel safely.**

https://truckmanualshub.com/

- **When traveling, make sure there is enough distance between the traveling surface and bottom of the platform, or the tip of the boom. If there is not enough distance, depending on the unevenness of the traveling surface, the bottom of the platform or the tip of the boom may come in contact with the traveling surface, and may be damaged. In particular, if the fly jib is attached, fully raise the fly jib before traveling.**

3–2–1 Travel Speed Select

⚠DANGER

Steer straight while traveling at high speeds. Switch to "LOW SPEED" before turning.
The platform will swing widely, and there is a possibility the operator will be thrown from the platform.

⚠CAUTION

- **Do high-speed traveling only when the traveling surface is flat, you have a good forward view, and you have to travel for a long distance.**
- **Under normal circumstances, keep the travel speed select switch on "LOW SPEED."**

- **Engine rotations become high automatically when high-speed traveling. Avoid changing your traveling speed because doing so creates a big shock.**
- **High-speed traveling is only possible when the boom is fully retracted and the boom angle is under the horizontal. In all other situations, even if you turn the travel speed select on "HIGH SPEED," you will be able to travel only at low speeds.**

The high and low traveling speeds are available. Set the travel speed select switch to select "HIGH SPEED" or "LOW SPEED."

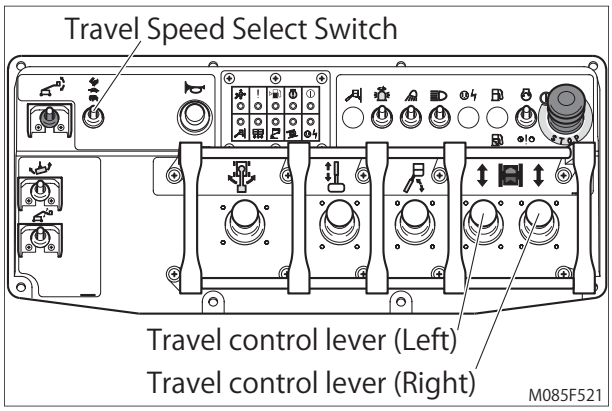

fig. 8–16

3–2–2 Forward and Backward

Depress the foot switch and operate both the travel control levers to the traveling direction.

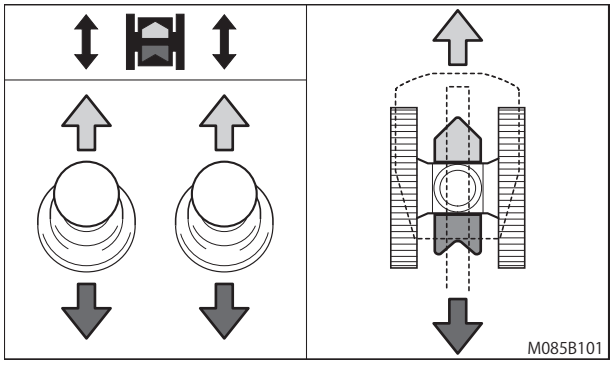

fig. 8–17

3–2–3 Pivot Turn

Depress the foot switch and operate one of the travel control levers as shown in the figures below.

(1) Forward / Backward left turns

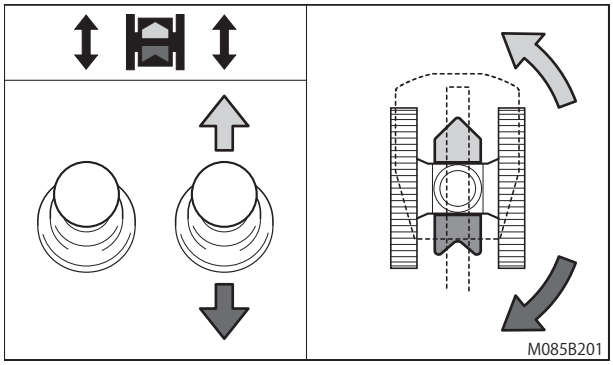

fig. 8–18

https://truckmanualshub.com/

(2) Forward / Backward right turns

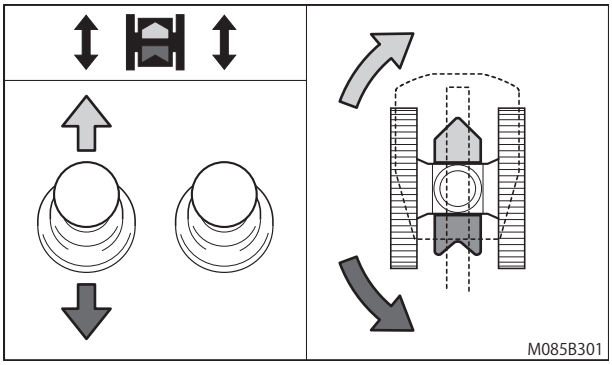

fig. 8–19

NOTICE

If the direction of travel cannot be changed due to road surface conditions, first adjust the position of the machine by traveling forward or backward, then change course.

3–2–4 Spin Turn

Depress the foot switch and operate the travel control levers as shown in the figure below to make the CW (clockwise) or CCW spin turn (counter clockwise).

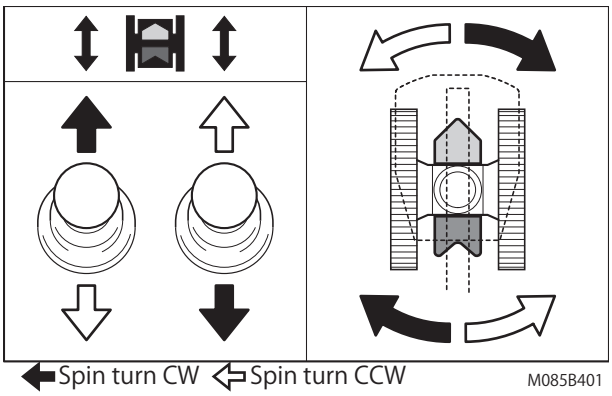

fig. 8–20

3–3 Boom Operation

WARNING

Make sure that no person or obstacle is around the machine before operating the boom. The turntable protrudes 850 mm beyond the width of the chassis when rotating the boom.
If your vision is poor, have a guide to assist you.

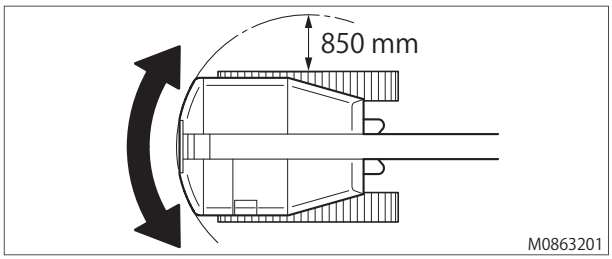

fig. 8–21

NOTICE

- **Before rotating the boom, make sure the rotation lock pin has been unlocked.**
- **The boom may not rotate smoothly when the machine tilts.**

Use the three control levers for the boom elevation, telescope and rotation to operate the boom.
And use the fly jib switch to operate the fly jib elevation. (If equipped)

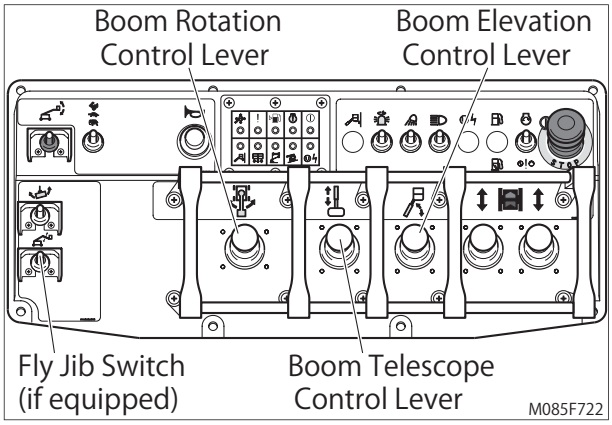

fig. 8–22

3–3–1 Boom Elevating

Depress the foot switch and operate the boom elevation control lever to raise or lower the boom.

3–3–2 Boom Rotating

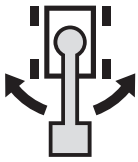

Depress the foot switch and operate the boom rotation control lever to rotate the boom.

3–3–3 Boom Telescoping

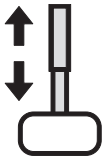

Depress the foot switch and operate the boom telescope control lever to extend or retract the boom.

3–3–4 Fly Jib Elevating (If equipped)

Depress the foot switch and operate the fly jib switch to raise or lower the fly jib.

https://truckmanualshub.com/

3–4 Platform Rotating Operation

⚠CAUTION

- **Keep the platform straight while traveling.**
- **Before rotating the platform, stop the machine movement and make sure that no person or obstacle is around the machine.**

Depress the foot switch and operate the platform rotation switch to rotate the platform.

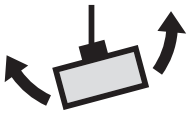

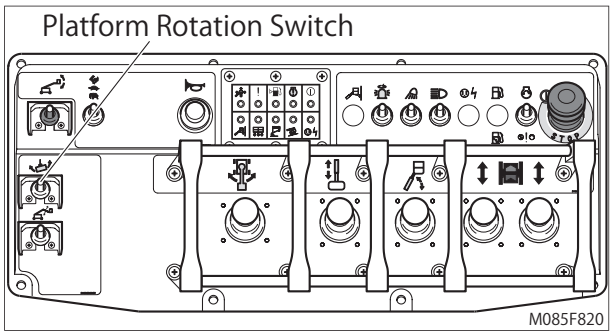

fig. 8–23

3–5 Horn Operation

Use the horn button.

While pressing the horn button, an alarm will sound.

Press the horn button before starting work to alert surrounding personnel.

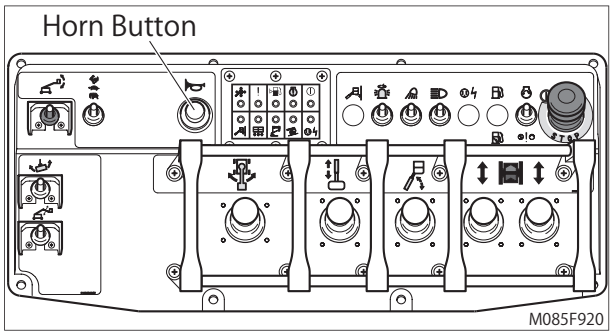

fig. 8–24

3–6 System Failure Light

The system failure light turns on when there is a problem with the electrical system.

⚠CAUTION

If the system failure light blinks, there is a problem with the electrical system. Quickly and fully retract the boom, stop the operation, and have the machine checked immediately.

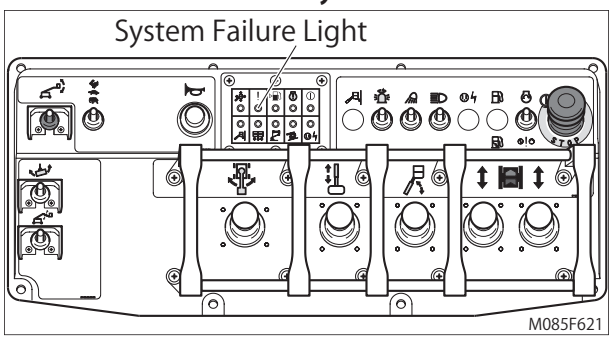

fig. 8–25

4. Lower Controls (from ground)

⚠CAUTION

- **Do not push the boom or platform to the ground, or use them to crash into objects, or push things up.**
- **Check that there are no obstacles in the way before rotating.**
- **If the boom is rotated while the machine leans, the rotation may be rough.**

4–1 Enable Switch

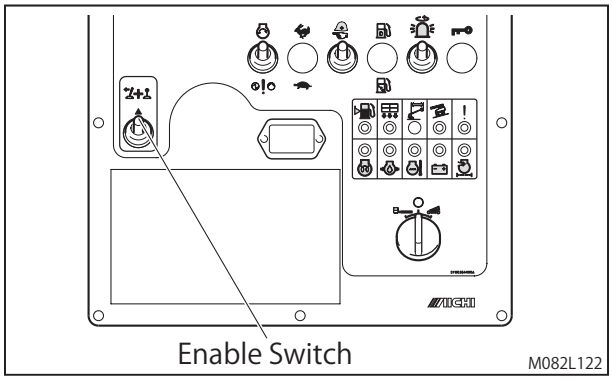

fig. 8–26

(1) When using the lower control panel to operate the machine, turn the key switch to "LOWER CONTROL."

(2) Hold the enable switch up to "ON" while operating the boom or platform from the lower control panel.

https://truckmanualshub.com/

(3) In case of the following, turn the key switch to "LOWER CONTROL."
- If you are not able to do the operation from the upper control panel.
- If you want to operate the boom from the lower control panel.
- If you want to perform the pre-start checks.

NOTICE

- **If you are using the emergency pump, stopping an operation, or starting the engine from the lower control panel, you can operate the machine without turning the enable switch.**
- **If you want to use the lower control panel, make sure to check it during the pre-start check.**

4–2 Boom Operation

Use the four control switches for the boom elevation, telescope and rotation to operate the boom.

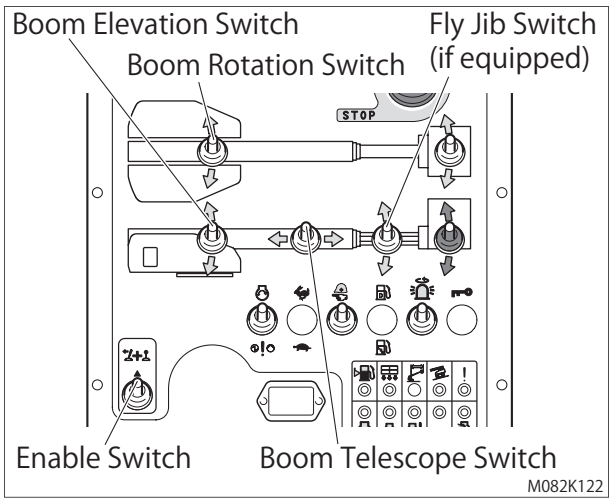

fig. 8–27

4–2–1 Boom Elevating

Hold the enable switch up to "ON" and operate the boom elevation switch to raise or lower the boom.

4–2–2 Boom Rotating

Hold the enable switch up to "ON" and operate the boom rotation switch to rotate the boom.

4–2–3 Boom Telescoping

Hold the enable switch up to "ON" and operate the boom telescope switch to extend or retract the boom.

4–2–4 Fly Jib Elevating (If equipped)

Hold the enable switch up to "ON" and operate the fly jib switch to raise or lower the fly jib.

4–3 Platform Rotating Operation

Hold the enable switch up to "ON" and operate the platform rotation switch to rotate the platform.

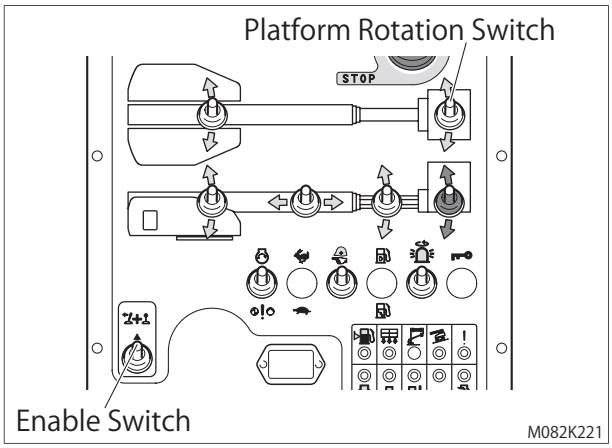

fig. 8–28

4–4 System Failure Light

The system failure light turns on when there is a problem with the electrical system.

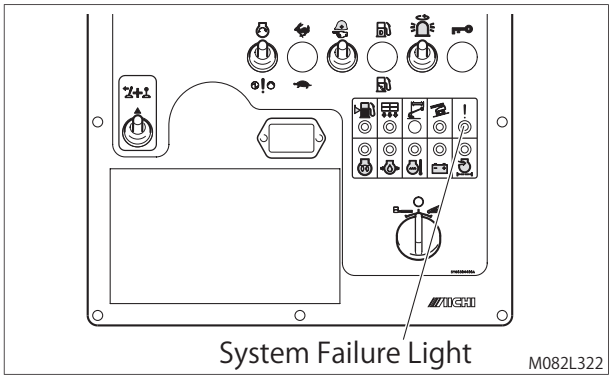

fig. 8–29

WARNING

Stop using the machine and contact AICHI or AICHI's dealer for inspections, if this light goes on or blinks. Immediately, retract and lower the boom fully, stop the operation, and have the machine checked.

NOTICE

This light also blinks when the machine tilts excessively, but this is not a failure.

https://truckmanualshub.com/

5. Platform Leveling System

5–1 Platform Level Adjustment

If the pre-start check reveals that the platform is tilted (front-back tilt of about 3° or more), adjust it as follows.

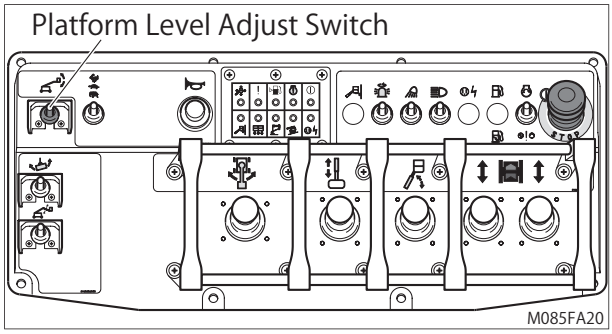

fig. 8–30

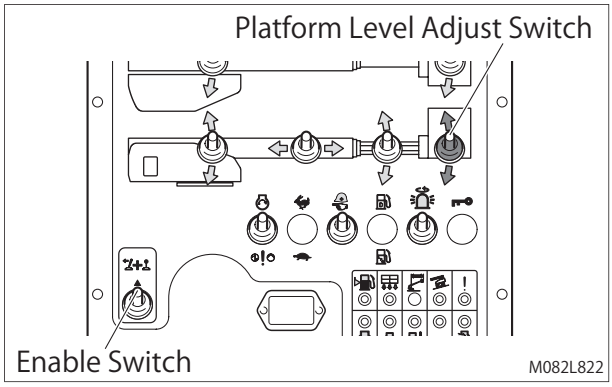

fig. 8–31

NOTICE

Even if the platform tilt is under 3°, adjust it if the tilt makes work hard.

Step 1

Put the machine on a firm, level surface.

Step 2

Move the boom to a position where it is easy to adjust.

Step 3

Hold the enable switch up to "ON" or depress the foot switch. Operate the platform level adjust switch to adjust the level of the platform.

5–2 Bleeding Air from Platform Leveling System

If the platform does not stay level after adjustment, air may have entered the platform leveling system. In this case, bleed air from the platform leveling system in the following way.

DANGER

Do not allow any person or object on the platform when bleeding air. Use lower control panel to bleed air from the platform leveling system.

Step 1

Put the machine on a firm, level surface.

Step 2

Move the boom to a position where it is easy to adjust.

Step 3

Hold the enable switch up to "ON". Operate the platform level adjust switch on the lower controls to fully tilt the platform forward and backward several times.

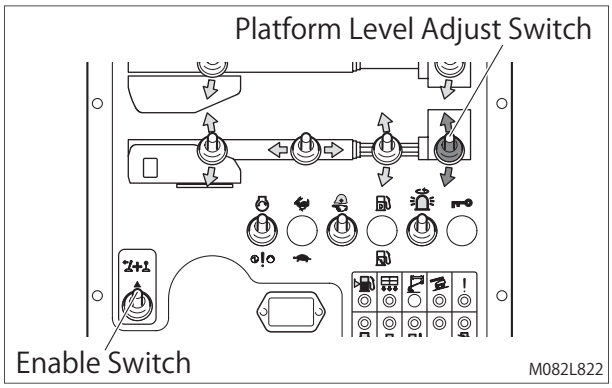

fig. 8–32

Step 4

Adjust the platform so it becomes level.

Step 5

Repeat the boom raising, lowering and telescoping operations several times and make sure that the platform stays level.

https://truckmanualshub.com/

Chapter 9

Emergency Operation

NOTICE

If the emergency operation was done because of a malfunction, immediately stop the operation, and have the machine checked and repaired.

1. Emergency Stop

Use the emergency stop button. When this button is pushed in, the engine stops and all of the functions are disabled.

Push in the emergency stop button in the following cases;

(1) When a person in the platform stops all of the machine movements to avoid hazards.

(2) When a person on the ground judges that the operation from the platform is unsafe.

(3) When the machine is uncontrollable due to malfunction.

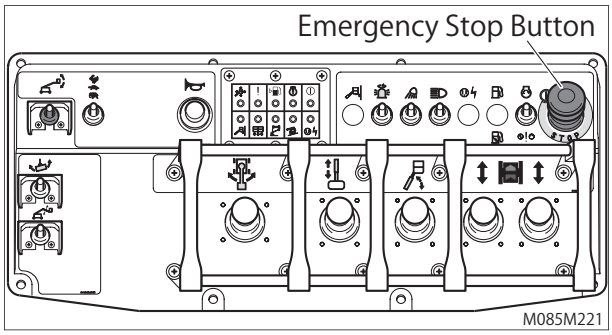

fig. 9–1

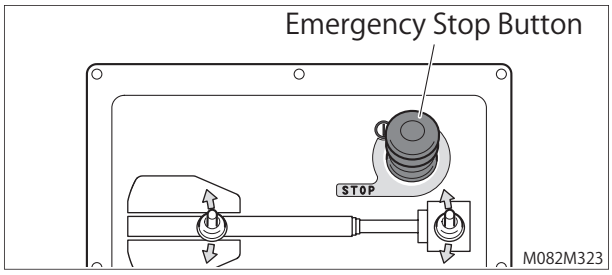

fig. 9–2

2. Emergency Lowering

If the engine or main pump fails, use the emergency pump to lower the platform.

NOTICE

- **Operate the emergency pump every other 30 seconds. The continuous operation in excess of 30 seconds may cause the damaged emergency pump.**

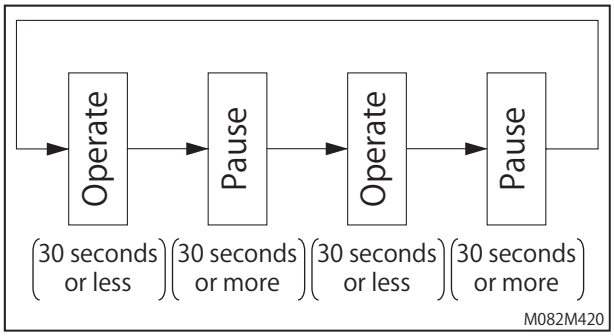

fig. 9–3

- **Traveling operation is not possible when operating with the emergency pump.**
- **The emergency pump runs off the battery.**

2–1 Upper Controls (from platform)

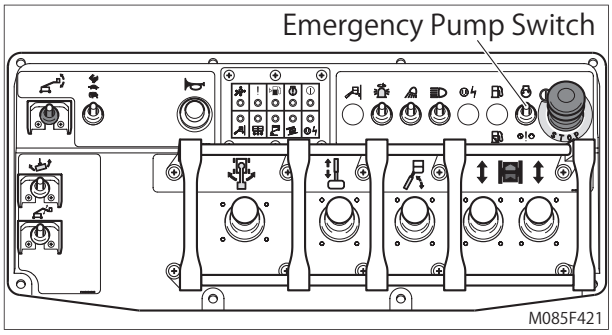

fig. 9–4

https://truckmanualshub.com/

NOTICE

When the upper or lower emergency stop button is pushed in or the key switch is turned to "LOWER CONTROL," operating with the emergency pump from the upper control is not possible.

Step 1

Pull out the emergency stop button to "ON."

Step 2

Depress the foot switch.

Step 3

Hold the emergency pump switch down, and activate each function at the same time.

The emergency pump will turn on when both the emergency pump switch and the operation switch are turned on.

2–2 Lower Controls (from ground)

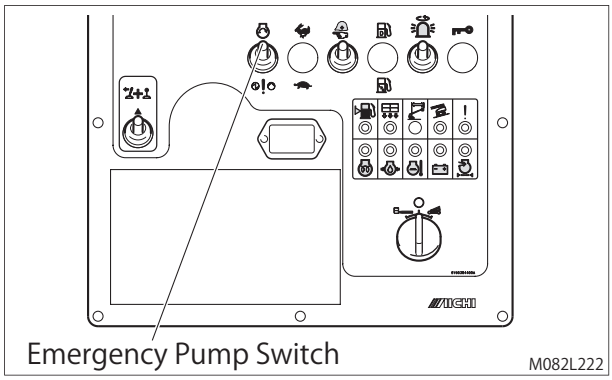

fig. 9–5

Step 1

Turn the key switch to "UPPER CONTROL" or "LOWER CONTROL."

Step 2

Pull out the emergency stop button to "ON."

Step 3

Hold the emergency pump switch down, and activate each function at the same time.

The emergency pump will turn on when both the emergency pump switch and the operation switch are turned on.

https://truckmanualshub.com/

Chapter 10

Transporting

NOTICE

- **This information about transporting is offered as a recommendation.**
- **Only the qualified persons shall operate the transport vehicle, crane, forklift, and the machine.**
- **All persons on transportation must comply with employer, work area, and local and national safety regulations regarding the use of these machinery.**
- **Each machinery must comply with all applicable regulations, and must be inspected and used in accordance with their manufacturer's instructions.**

⚠WARNING

Make sure the transport vehicle capacity, crane capacity, loading surfaces, sling chains and wire ropes are strong enough to withstand the machine weight. See the serial number plate for the machine weight.

1. Preparations for Transporting

When transporting the machine using a transport vehicle, observe the following items:

⚠DANGER

- **Do not travel the machine on a slope that exceeds the machine gradeability.**
  The tracks of the machine may fall off, if the transport vehicle or the loading ramps incline excessively.
- **Make sure to select the low traveling speed before transporting.**
- **When loading/unloading, be sure to have a guide assist you so that the tracks do not fall off the ramps and the transport vehicle bed.**
- **Use a winch for loading/unloading, if the ramp is too steep or slippery.**
- **Failure to avoid these fall hazards could result in death or serious injury.**

Step 1

Park the transport vehicle on a firm, level surface.

Step 2

Chock the wheels of the transport vehicle.

Step 3

Lock the turntable with the turntable lock pin and prevent the turntable from being rotated during the transportation.

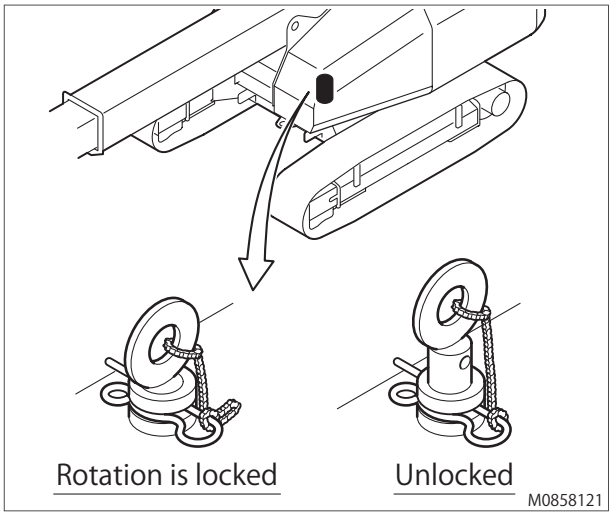

fig. 10–1

NOTICE

Make sure to lock the turntable with the turntable lock pin before transporting. Make sure to unlock the turntable before operating.

Step 4

Close and latch all doors and covers of the machine securely.

Step 5

Remove all lose items from the machine and transport vehicle bed.

https://truckmanualshub.com/

2. Tie Down

Step 1

Tie down the chassis of the machine to the transport vehicle bed securely. Place pads on the crawler tracks to protect it. (fig. 10–2, A)

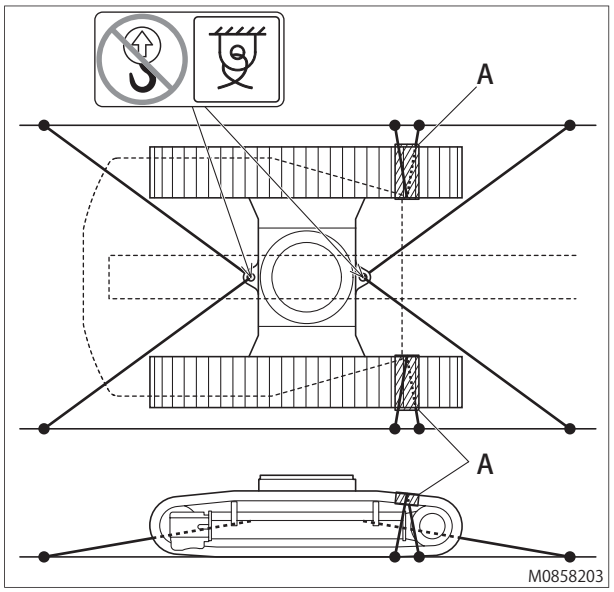

fig. 10–2

Step 2

Tie down the boom and platform so that it is not swung during the transportation. At this time, be sure to allow the clearance between the bottom of the platform and the transport vehicle bed.

If equipped with the fly jib, tie down the platform with placing a wood block under the platform to prevent the platform from bouncing during the transportation.

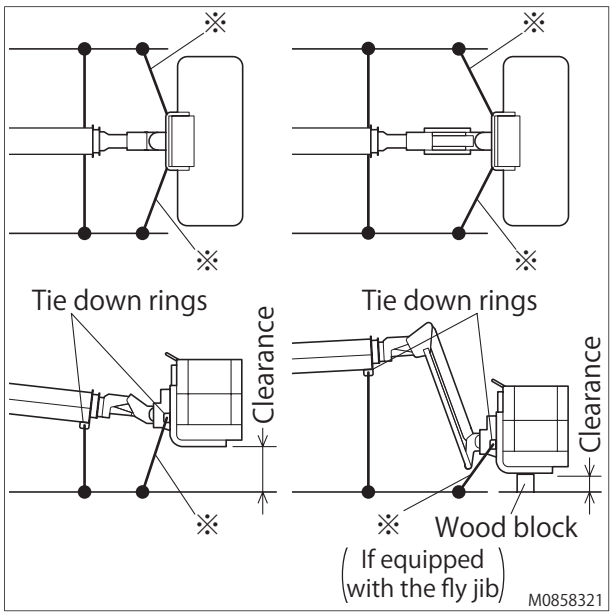

fig. 10–3

NOTICE

Do not tighten the tie down chains or wire ropes marked "※" too much. Tighten them just so that the platform is not swung or bounced during the transportation.

3. Hoisting the Machine

⚠WARNING

- **Do not allow any person to get under the machine while hoisting.**
- **Do not pass the sling chains or wire ropes except designated rings.**
- **Failure to heed warnings could result in breaking, falling, or other hazards leading to death or serious injury.**

Step 1

Retract and lower the boom fully, and position the fly jib to horizontal if equipped.

Step 2

Pass the sling chains or wire ropes through the hoisting rings located on the turntable as shown in the fig. 10–4.

Step 3

Adjust the rigging to prevent damage to the machine and to keep the machine level.

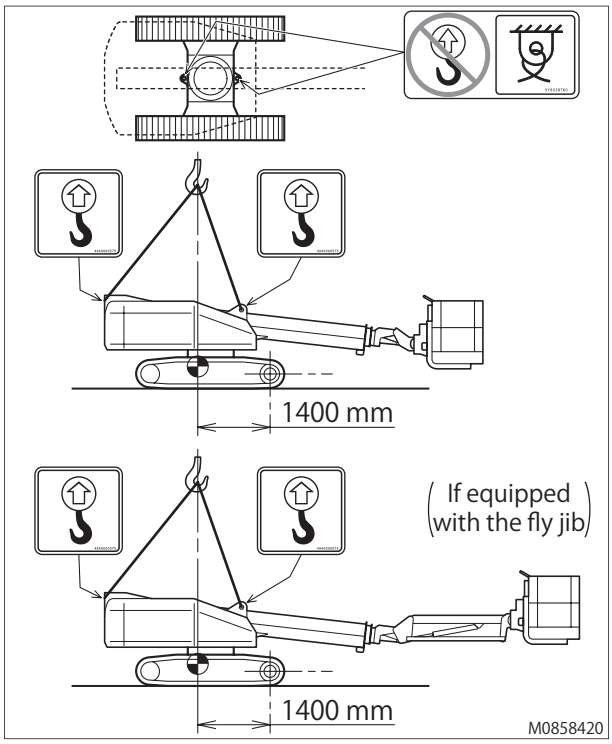

fig. 10–4

https://truckmanualshub.com/

4. Hoisting with Boom Raised

When you are working in a cramped location, you may not have enough room to lower the boom prior to hoisting. In such cases, it is permissible to hoist the machine while the boom is still up. Proceed as follows.

- Sling chains or wire ropes used for hoisting should be at least 10 meters long.
- Set the boom angle to 60° or lower (that is, at least 10° below the maximum raise angle of 70°).
- If sling chains or wire ropes contact the boom, place pads on the boom to protect it.

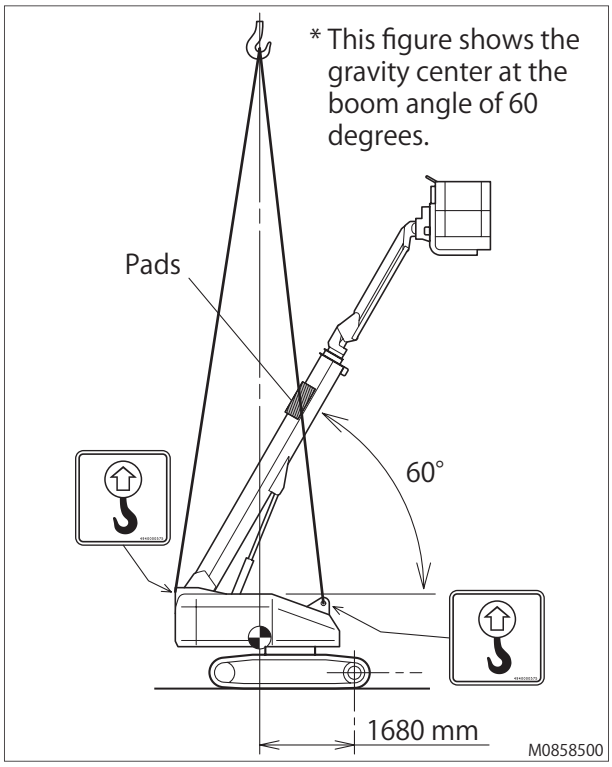

https://truckmanualshub.com/

Chapter 11

Storage

(1) Clean all part of the machine.

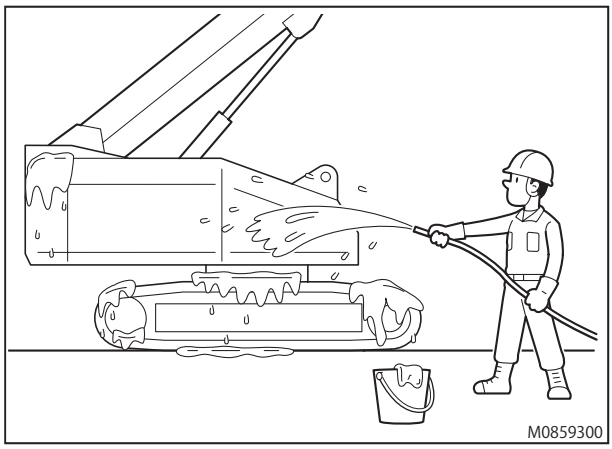

fig. 11–1

(2) Lubricate in accordance with the lubrication instructions.

(3) If storing for a long period of time, proceed as follows.

– Coat the cylinder rods with a sufficient quantity of antirust oil.

– Start the engine and check operation once every month, so as to ensure that the oil film on lubricated parts remains intact.

– Before checking the operation, remove the coating of antirust oil from the oil cylinder rod.

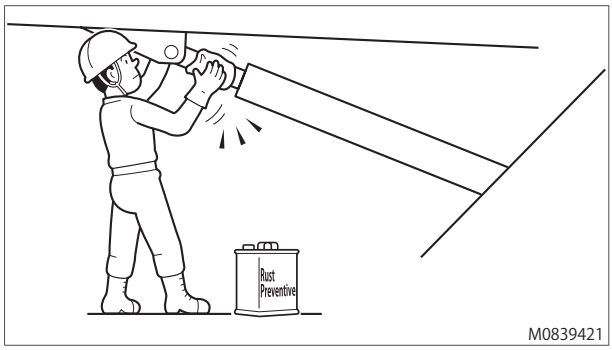

fig. 11–2

NOTICE

- **Do not use high-pressure washing.**
- **If working in winter, be careful to avoid ice formation.**
- **Rusting may occur if antirust oil is not applied.**

(4) Store the machine in a dry indoor area. If it is necessary to store the machine out of doors, park it in a flat area.

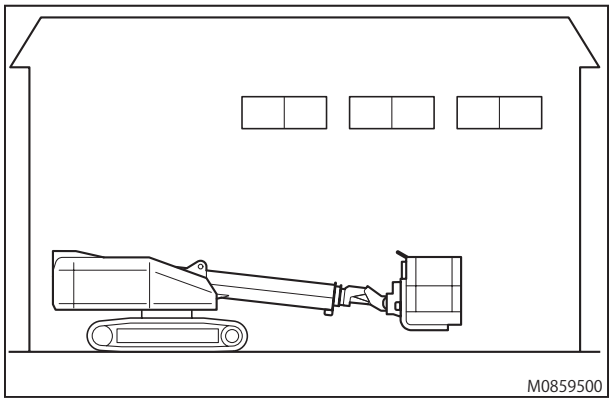

fig. 11–3

(5) Periodically operate the boom, so as to maintain the oil film on its lubricated parts.

(6) If the boom is left extended or raised while the hydraulic oil temperature is high, the boom may retract or lower somewhat. This is caused by the contraction of the hydraulic oil confined in the hydraulic cylinders due to a change in the hydraulic oil temperature.

NOTICE

If the hydraulic oil temperature drops 10°C with the boom fully extended and raised, the boom will retract approx. 30 mm.

This value, however, varies depending on the boom length and the boom angle.

https://truckmanualshub.com/

Chapter 12

Specifications

1. General Specifications

Model			SR12C	SR14CJ
Performance	Platform Height Maximum		11.7 m	13.6 m
	Horizontal Outreach Maximum		10.9 m	12.7 m
	Platform Load Capacity (Evenly Distributed)	6 ft Platform	250 kg or 2 persons + tools: 90 kg	
		8 ft Platform	227 kg or 2 persons + tools: 67 kg	
	Platform Rotation		180 °	
	Turntable Rotation		360 ° (Continuos)	
	Turntable Tail Swing		850 mm	
	Gradeability (Stowed)		58 % (30 °)	
	Max. Allowable Tilt Angle		5 °	
	Max. Allowable Manual Side Force		400 N (41 kg)	
	Turning Radius		0 m	
	Max. Allowable Wind Speed		12.5 m/s	
Measurements	Overall Length	6 ft Platform	6.86 m	7.56 m
		8 ft Platform	7.02 m	7.72 m
	Overall Width	6 ft Platform	2.30 m	
		8 ft Platform	2.45 m	
	Overall Height		1.72 m	
	Inside Diameter of Platform	6 ft Platform	1.76 × 0.72 × 1.1 m	
		8 ft Platform	2.36 × 0.86 × 1.1 m	
	Ground Clearance		335 mm	
Weight	Gross Weight		7,675 kg	8,510 kg
	Max. Ground Contact Pressure		60 kPa	65 kPa
Power source	Engine		YANMER 4TNV88 (4 Cylinder Diesel)	
	Auxiliary Power Unit		12V–DC	
	Fuel Type		Diesel fuel (Low sulfur or Ultra low sulfur–limited)	
	Fuel Tank Capacity		120 L	
	Recommended Hydraulic Oil		Shell Tellus oil T22	
	Hydraulic Tank Capacity		190 L	
Function speed	Elevation	Up	39 ~ 51 s / -7 ~ 70 °	
		Down	39 ~ 51 s / -7 ~ 70 °	
	Telescope	Out	24 ~ 36 s / 6.05 m	
		In	19 ~ 31 s / 6.05 m	
	Turntable Rotation (Stowed)		120 ~ 150 s / 360 °	
	Fly Jib Elevation	Up	–	20 ~ 30 s / -70 ~ 60 °
		Down	–	15 ~ 25 s / -70 ~ 60 °
	Platform Rotation		10 ~ 20 s / -90 ~ 90 °	
	Max. Travel Speed (Level Surface)	Stowed	2.6 km/h	
		Elevated	0.8 km/h	

* The machine is designed for both indoor and outdoor use.
* For the allowance which is not specified otherwise is in accordance with AICHI's own standards.
* Function speeds and gradeability assume there is 1 person on the machine.
* Travel speed and gradeability depends on the condition of the traveling surface.
* Specification is approximate and does not incorporate different option configurations.
* Advisable atmospheric temperature range: -20 ℃ ~ +40 ℃

https://truckmanualshub.com/

2. Work Range Diagram

2–1 SR12C

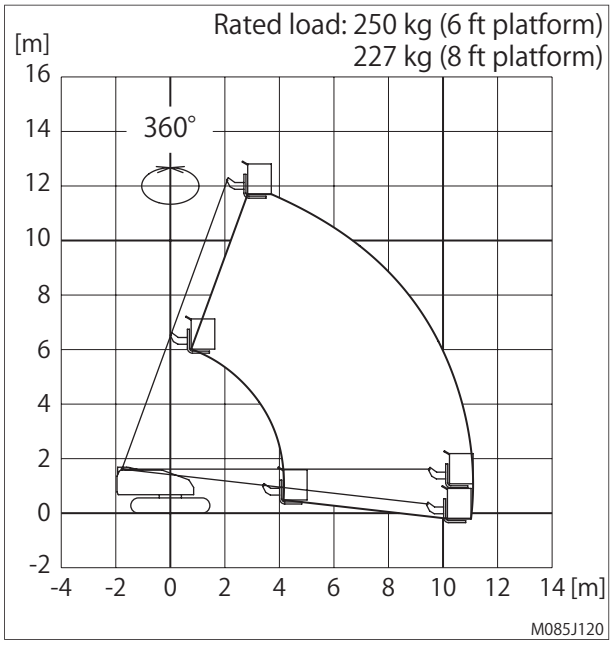

fig. 12–1

2–2 SR14CJ

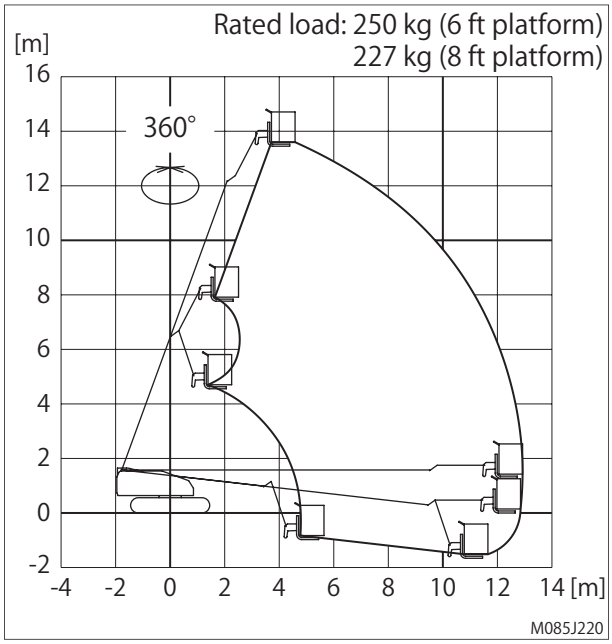

fig. 12–2

1. The boom deflection is not taken into account in the above working range diagram.
2. The working range is the same in any boom-rotated directions.
3. The working range indicated in the graph is a reference measured on level firm ground.
4. The counter weight should be attached to the specified point.

https://truckmanualshub.com/

https://truckmanualshub.com/

MICHI