https://truckmanualshub.com/

Kubota

COMPACT EXCAVATOR

GB

MODEL

KX027-4
KX030-4

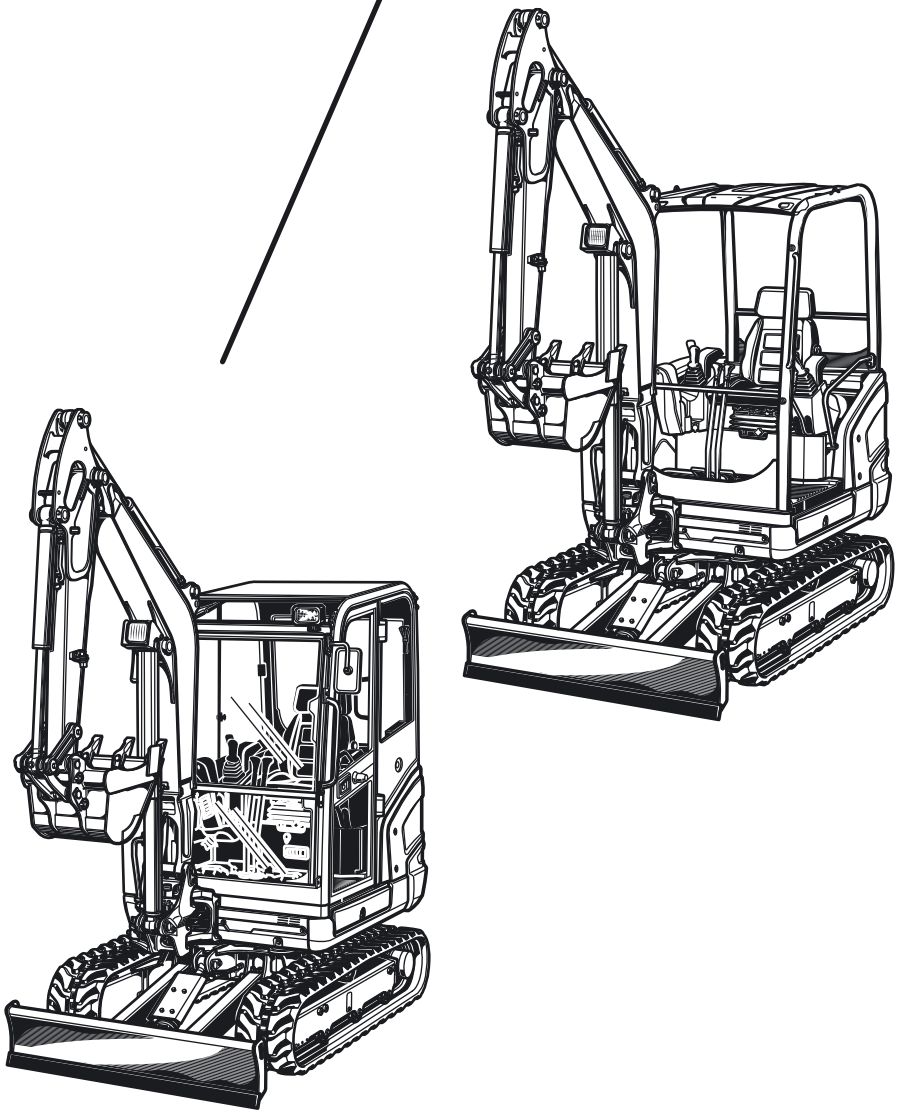

KX027-4 - Valid from serial no. 52158
KX030-4 - Valid from serial no. 50740

CE

OPERATING INSTRUCTIONS

RG268-8135-6 - Original - 01/2019

https://truckmanualshub.com/

Kubota

Dear valued customer,

please fill in the form below. Your information will help us to help you.

Type:
Year of construction:
Serial #:
Shipment date:

Please contact your KUBOTA dealer for any additional information or troubleshooting procedures not mentioned in these operating instructions.

We would also like to point out that the contents of these operating instructions are not part of any previously existing agreement, commitment or legal relationship nor do they constitute an amendment this. All responsibilities are taken from the respective sales contract, which contains the complete and exclusively valid contractual warranty, refer to the "Duties, liability and warranty" section (page 13). This documentation neither extends nor restricts the contractual warranty.

KUBOTA Baumaschinen GmbH reserves the right to change the information contained in this document with respect to future technical development without altering the basic characteristics of the excavators described herein and without amending this document.

Distribution and reproduction of this documentation and disclosure of its content are not allowed unless express consent is given by the manufacturer. Violators of the above terms are liable for compensation for damages.

https://truckmanualshub.com/

CONTENTS

Abbreviations **7**
General symbols **8**

GENERAL INFORMATION **9**
Foreword **9**
EC Declaration of Conformity **10**
Date of issue of the operating instructions **10**
Operating personnel **10**
Location of the operating instructions **11**
Spare parts **12**

SAFETY RULES **13**
Basic safety instructions **13**
Duties, liability and warranty **13**
Safety symbols **14**
Approved use **15**
Unapproved use **15**
Special duties of the owner **16**
Noise emission and vibration **17**
Danger, warning and safety labels on the machine **17**
Safety devices **26**
Locking the controls 26
Engine stop knob 26
Protective structure canopy and cab 27
Emergency hammer 28
Hazards coming from the hydraulic system **28**
Fire protection **29**

RECOVERY, LOADING AND TRANSPORT **31**
Safety rules for recovery **31**
Safety rules while loading with a crane **31**
Safety rules for transport **32**
Recovery **33**
Hoisting the excavator with a crane **33**
Transport on a flat bed trailer **35**

DESCRIPTION OF THE EXCAVATOR **37**
Dimensions **37**
Specifications **39**
Identification of the excavator **44**
Serial # of the machine 44
Identification of the engine 44
Standard equipment **45**

ASSEMBLY AND FUNCTIONS **47**
Component overview **47**
Operator's place **48**
Left control console 48
Drive levers and control pedals 49
Right control console 50
Display and control unit 51
Other equipment at the operator's place **53**
Interior lighting (cab version) 53
Fuse box 53
Tool compartment 54
Cup holder 54
12-V socket 54

https://truckmanualshub.com/

Other equipment to be found on the machine **55**
Main battery 55
Battery isolator 55
Return change valve for direct return flow 55
Tank filler neck and fill level monitor 56
Main fuses 56
Rear view mirror 56
Heating and ventilation (cab version) 57
Hydraulic oil tank 58
Coolant radiator and hydraulic oil radiator 58
Engine compartment **59**

OPERATION **61**
Safety rules for operation **61**
Safety for children 62
Guiding the operator 62
Working in the vicinity of overhead power lines 63
Working in the vicinity of underground power lines 63
Initial operation **63**
Getting on the excavator 64
Explanation of the display indications 64
Setting the clock 65
Running in the excavator 66
Special maintenance instructions 66
Pre-operational services **66**
Walk-around inspection 66
Dust valve - cleaning 67
Engine oil level - check 67
Coolant level - check 67
Coolant radiator and oil cooler - check 68
V-belt - check 68
Exhaust system leakage - check 69
Hydraulic oil level - check 69
Water separator - check 69
Bucket bolt and bucket linkage bolt - grease 70
Swing bracket - grease 70
Other greasing points - grease 71
Fuel level - check 72
Washer system liquid level (cab version) - check 72
Electrical instrumentation - check 72
Setting up the workplace **73**
Opening and closing the cab door (cab version) 73
Opening and closing the windows (cab version) 74
Adjusting the operator's seat 75
Rear view mirrors adjustment 76
Seat belt 76
Operating the excavator **77**
Safety instructions for starting the engine 77
Starting the engine 77
Stopping the engine 79
Observation of the displays after starting and during operation 79
Driving with the excavator 82
Driving uphill and downhill 86
Stopping on gradients 86
Notes for rubber crawler operation 87
Operating the controls during excavation work 88
Note on using wider and deeper buckets 88
Operating the dozer 89
Overview of control lever functions 89

https://truckmanualshub.com/

Operating the boom ... 90
Operating the arm ... 91
Operating the bucket ... 92
Swivelling the swivel frame ... 93
Swinging the boom ... 93
Operating the auxiliary port ... 94
One way hold operation (KX027-4 HI, KX030-4 HI) ... 97
Operating modes (KX027-4 HI, KX030-4 HI) ... 98
Setting the flow rate (KX027-4 HI, KX030-4 HI) ... 99
Return change valve for direct return flow ... 103
Relieving pressure from the hydraulic system ... 104
Releasing pressure from the auxiliary ports (KX027-4 HI, KX030-4 HI) ... 105
Placing out of operation ... 107
Operating other equipment at the operator's place ... 108
Operating the heating system (cab version) ... 108
Operating the wiper/washer system (cab version) ... 110
Operating the interior light (cab version) ... 111
Operating the rotary beacon (accessories) ... 111
Operating the 12 V plug ... 111
Operating the working lights ... 112
Operating the battery isolator ... 112
Cold weather operation ... 113
Necessary preparations prior to the winter season ... 113
Operation during the winter season ... 113
Jump-starting the excavator ... 114
Operating in emergency situations ... 115
Engine stop knob ... 115
Manual lowering of the front attachments ... 115
Maintenance ... 116
Filling up the washer system ... 116
Checking the antifreeze strength of the coolant ... 116
Refilling the coolant ... 117
Refuelling the excavator ... 118
Fill level monitor when refuelling ... 118
Bleeding the fuel system ... 119
Replacing the fuses ... 119
Fuse layout of the fuse box ... 120
Main fuses ... 121
Cleaning the excavator ... 121
Replacing the bucket ... 122
Anti-theft system ... 122
Black (individual) key ... 123
Red key (for registering) ... 123
The key system ... 123
Registering a black key for the machine ... 124

TROUBLESHOOTING ... 127
Safety rules for troubleshooting ... 127
Troubleshooting: Before operation ... 127
Troubleshooting: Operation ... 128
Troubleshooting: Display indications ... 130

MAINTENANCE ... 135
Safety rules for maintenance ... 135
Personnel requirements ... 136
Repair work on the machine ... 136
Maintenance intervals ... 136
Maintenance interval display ... 136
Operator maintenance chart ... 138

https://truckmanualshub.com/

Skilled personnel maintenance chart 140
Recommended lubricants 142
Make the maintenance points accessible 144
Opening/closing the engine compartment cover 144
Opening/closing the side cover 144
Opening and closing the left service cover 145
Opening/closing the right ventilation grille 145
Maintenance work for the operator 146
Every 50 hours of operation 146
Fuel tank - drain 146
Battery service 147
Battery - check 147
Battery - load 147
Battery - change 148
Swivel gear - grease 149
Crawler tension - check/adjust 149
Crawler tension - check 150
Crawler tension - adjust 151
Water separator - cleaning 151
Every 200 hours of operation 153
Swivel bearing - grease 153
Fresh air filter - check/clean 153
Air filter element - check/clean 154
Coolant hoses and hose clamps - check 155
Fuel lines and air intake hoses - check 155
Servicing by skilled personnel 156
Every 250 hours of operation 156
V-belt - adjust 156
Pilot valve - grease 156
Every 500 hours of operation 157
Engine oil and oil filter - change 157
Engine oil - drain 157
Engine oil filter - change 157
Engine oil - fill 158
Drive unit oil - change 158
Fuel filter cartridge - change 159
Return filter - change 160
Every 1000 hours of operation 161
Hydraulic oil - fill/change 161
Hydraulic oil - drain 161
Hydraulic oil - fill 162
Suction filter - change 163
Heating pipes and hoses - check 163
In-line filter - change 164
Fresh air filter - change 164
Air filter element - change 165
Pilot circuit filter - change 165
Every 2 years 167
Coolant - change 167
Bolted joints - check 169
Tightening torque for screws 169
Tightening torque for hose clamps 169
Tightening torque for hydraulic hoses 170
Tightening torque for hydraulic pipes 170
Tightening torque for hydraulic adapters 170

https://truckmanualshub.com/

SAFETY INSPECTION 171

TAKING OUT OF SERVICE AND STORAGE 173
- Safety rules for taking out of service and storage 173
- Storage conditions 173
- Measures before taking out of service 173
- Measures during taking out of service 173
- Start-up after taking out of service 174

LIFTING CAPACITY OF THE EXCAVATOR 175
- Constructive calculation of lifting capacity 175
- Lifting attachment 176
- Load suspension device 177
- Max. lifting capacity when rotating up to 360° 179

ACCESSORIES 189
- KUBOTA rotary beacon 189
- KUBOTA pipe safety valve 189
- KUBOTA overload warning system 190
- KUBOTA quick coupling systems and attachments 190
- KUBOTA bucket accessories 190

https://truckmanualshub.com/

https://truckmanualshub.com/

Abbreviations

1/min	revolutions per minute
%	percent
°	degrees
°C	Degrees Celsius
A	Ampere
acc.	according
API	American Petroleum Institute
approx.	approximately
ASTM	American Society for Testing and Materials
bar	Bar
CECE	Committee for European Construction Equipment
CO_2	carbon dioxide
dB	decibel
DIN	Deutsches Institut für Normung (German Institute for Standards)
e.g.	for example
EMC	electromagnetic compatibility
EN	Europäische Norm (European standard)
GL	Ground level
h	Hour
incl.	including
ISO	International Organisation for Standardisation
kg	kilogramme
km/h	kilometre per hour
kN	kilonewton
kV	kilovolt
kW	kilowatt
l	litre
l/min	litres per minute
LpA	noise level operator's place
LwA	measured sound power level
m	metre
m/s^2	metre per square second
m^3	cubic metre
max.	maximum
MIL	Military Standards
mm	millimetre
MPa	Megapascal
N	Newton
OPG	Operator Protective Guard
resp.	respectively
RMS	Root Mean Square
ROPS	Roll-Over Protective Structure (Roll-over protection)
s	second
SAE	Society of Automotive Engineers
t	ton
TOPS	Tipping Over Protective Structure
V	Volt

https://truckmanualshub.com/

General symbols

Warning light	Swivel boom (left)
Fuel indicator	Swivel boom (right)
Engine oil indicator	Dozer up
Charge indicator	Dozer down
Glow indicator	Lever direction
Hydraulic oil	Control lever direction
Travel speed	Rotary beacon
Low speed	Display selector switch
Forward travel	Auxiliary port indicator
Backward travel	Working lights
Raise boom	Horn
Lower boom	Bolted
Arm dump	Released
Arm crowd	Fan
Bucket crowd	Menu button
Bucket dump	Insert key
Indicator coolant temperature	Pull out Key
Service interval indicator	Indirect return flow
Set clock indicator	Direct return flow

https://truckmanualshub.com/

GENERAL INFORMATION

Foreword

These operating instructions only apply to KUBOTA excavators KX027-4 and KX030-4, which comply with the following EC declaration of conformity (page 10).

The safety instructions and the rules and regulations for the use of excavators given in these operating instructions apply to the excavators mentioned in this documentation.

It is the responsibility of the owner(s):

- To ensure that local, regional and national regulations are observed,
- To observe the bodies of rules (laws, regulations, guidelines, etc.) stated in the operating instructions to ensure safe handling of the equipment,
- To ensure that the operating instructions are available to the operating personnel at all times and that the information, such as notes, warnings and safety rules and regulations, are followed in all points.

The data in the operating instructions apply for all models. Information pertaining solely to the equipment variant high-spec is labelled with (KX027-4 HI or KX030-4 HI). Information pertaining to optional equipment is labelled with (optional). Differences are highlighted (e.g. cab version or KX027-4, KX030-4)

The terms "front" and "direction of travel" refer to the view of the operator when seated on the operator's seat. Forward direction of travel means that the dozer is at the front when driving forwards as shown in the figure.

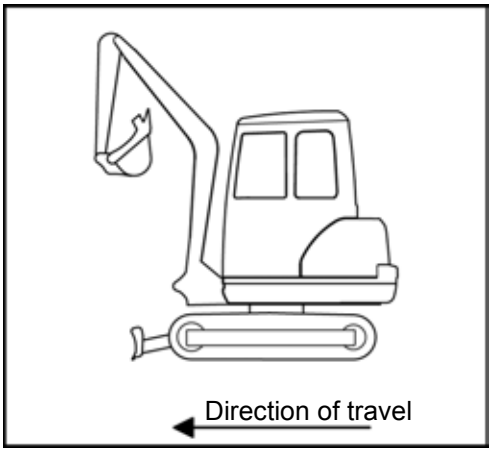

The symbols for operating and safety instructions are listed under "Safety symbols" (page 14).

https://truckmanualshub.com/

EC Declaration of Conformity

With the EC Declaration of Conformity, KUBOTA Baumaschinen GmbH certifies that the excavator complies with any applicable standards and regulations valid at the time it was placed on the market. The CE conformity marking is located on the type plate and indicates compliance with the regulations.

If the excavator is modified or retrofitted without the approval of the manufacturer, the safety of the excavator may be affected, thus rendering the EC declaration of conformity invalid.

The EC declaration of conformity is attached to the operating instructions upon delivery of the excavator.

Keep the EC declaration of conformity in a safe place and show it, if requested, to the responsible authorities.

Should the EC declaration of conformity be lost, please contact your KUBOTA dealer.

Hereby, ASAHI DENSO CO., LTD. declares that the radio equipment type [CZ106] is in compliance with Directive 2014/53/EU. The full text of the EU declaration of conformity is available at the following internet address: http://en.ad-asahidenso.co.jp/euro-compliance/

Date of issue of the operating instructions

The date of issue of the operating instructions is printed on the bottom right of the front page of the book.

Operating personnel

The duties of personnel with respect to operation, servicing, repairs and safety inspections must be clearly defined by the owner.

Personnel in training are only allowed to work on or with the excavator under the supervision of an experienced operator.

Operator

According to industrial safety regulations, only persons who have completed 18 years of age, were instructed in the operation of the excavator, who have proven their qualification to the owner (employer) and who can be expected to perform their duties in a reliable way are allowed to operate the excavator independently.

Only instructed personnel are allowed to start the excavator and operate the controls.

Trained personnel

Trained personnel are skilled persons with a technical qualification who are able to determine damage to the excavator and perform repairs in their area of qualification (e.g. hydraulic or electrical engineering).

Only trained and instructed personnel are allowed to work on the machine.

Qualified personnel

Based on their technical training and experience in their field, qualified personnel should have sufficient knowledge about the technology used in this machine and be familiar with the applicable national work safety regulations, accident prevention regulations and the generally accepted technical rules so that they can assess the sound operating condition of the machine.

https://truckmanualshub.com/

Location of the operating instructions

The operating instructions must always be kept on the excavator. If the operating instructions have become illegible due to continuous use, the owner (operator) must order a replacement from the manufacturer.

A tray (1) for the operating instructions is located on the front side of the seat console below the cover plate.

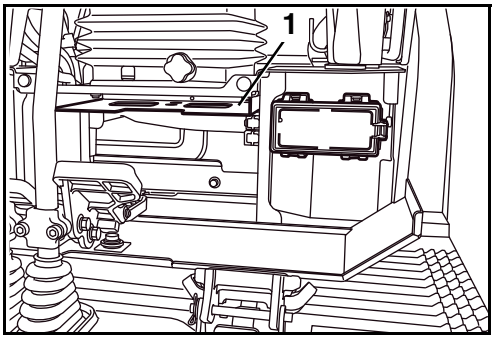

https://truckmanualshub.com/

Spare parts

When ordering spare parts, please always provide the following information:

- Serial # of the excavator and year of construction (see type plate)
- Designation/type of spare part (see original KUBOTA spare parts catalogue)
- Part number of the spare part (see original KUBOTA spare parts catalogue)
- Quantity
- Customer number

For written orders, please provide this information exactly, or for telephone orders, please have this information ready before calling. This makes the process easier for us and for you, and prevents errors and incorrect orders or deliveries.

Please place your order with your KUBOTA dealer.

https://truckmanualshub.com/

SAFETY RULES

Basic safety instructions

- The EC Use of Work Equipment Directive (2009/104/EC) from 16/09/2009 applies to the operation of the aforementioned excavator.
- The information in these operating instructions applies for maintenance and repairs.
- National rules and regulations apply where applicable.

Duties, liability and warranty

A basic prerequisite for the safe handling and problem-free operation of the excavator is the knowledge of the safety instructions and safety regulations.

These operating instructions, in particular the safety instructions, must be followed by all persons working near or with the excavator. Above and beyond this, the safety rules and regulations applicable for the site must also be observed.

Hazards occurring during the handling of the excavator:

- The excavators are manufactured according to the state of technology and the recognised safety rules. Nevertheless, danger to life and limb of the operator or a third party, or damage to the excavator or other property, can occur. The excavator(s) may only be used

  → for its approved use and

  → in a completely safe operating condition.

  Malfunctions that can impair safety must be repaired immediately.

Warranty and liability

The scope, period and form of the warranty are set forth in the sales and delivery conditions of the manufacturer. The operating instructions valid at the time of delivery shall be the basis for any warranty claims arising from errors in the documentation, see the date of issue of the operating instructions (page 10). The following applies above and beyond the sales and delivery conditions: No warranty or liability shall be assumed for personnel and property damages resulting from one or more of the following reasons:

- Unapproved use of the excavator
- Improper starting, operation and maintenance of the excavator
- Operation of the excavator with defective safety devices or improperly installed or non-operational safety and protective devices
- Ignorance or non-observance of these operating instructions
- Insufficiently qualified or insufficiently instructed operating personnel
- Improperly performed repairs
- Unauthorised engineering changes to the excavator
- Poor surveillance of machine parts subject to wear
- Catastrophes caused by the effect of foreign objects or force majeure

https://truckmanualshub.com/

It is the responsibility of the owner to ensure that

- The safety rules are observed (page 13)
- Unapproved use (page 15) and unauthorised operation are prevented
- The excavator is used properly (page 15) and is operated in accordance with the contractual conditions of use.

Safety symbols

The following terms and hazard symbols are used in these operating instructions:

Identifies important operating procedure information that may not be immediately evident to the operator.

Identifies operating procedures that must be followed exactly to prevent damage to the excavator or other property.

Identifies operating procedures that must be followed exactly to prevent danger to persons.

Identifies possible hazards in the handling of batteries.

Identifies possible hazards from caustic materials (battery acid).

Identifies possible hazards from explosive materials.

Prohibits the use of fire, ignition sources, and smoking.

Prohibits the spraying of water.

Identifies operating procedures for the proper disposal and storage of ensuing waste materials.

https://truckmanualshub.com/

Approved use

The excavators specified in these operating instructions may only be used for loosening, excavating, lifting, transporting and dumping soils, rocks and other materials, as well as for work with the dozer or with a breaker. The load may be transported largely without driving the excavator. Do not exceed the maximum lifting capacity.

Approved use also includes:

- Observation of all notes in these operating instructions
- Regular servicing
- Regular safety inspections

Unapproved use

Any improper use – i.e. any deviation from the information in the “Approved use” section (page 15) of the excavators documented in these operating instructions – is considered unapproved use. This also applies to the failure to observe the standards and guidelines listed in these operating instructions.

Hazards can occur as a result of improper use. Such improper uses include:

- Using the excavator to lift loads without the proper equipment for lifting operations,
- Using the excavator in contaminated environments
- Using the excavator in enclosed spaces without sufficient ventilation
- Using the excavator under conditions of extreme temperatures (extreme heat or cold)
- Using the excavator for underground work
- Using the excavator to transport persons in the bucket
- Using the excavator for demolition work, with the danger of falling objects (e.g. tearing down walls).

https://truckmanualshub.com/

Special duties of the owner

The owner of the excavator in the context of these operating instructions is any person or company that uses the excavator itself or on whose order it is used. In special cases (e.g. leasing, rental), the owner is the person who must perform the duties arising from operation according to the conditions of the contract between owner and user of the excavator.

The owner must ensure that the excavator is only used properly and that any danger to the life and health of the user or others who are in the proximity of the user are eliminated. Furthermore, observance of the safety rules and regulations as well as the operating, maintenance and repair regulations must be ensured. The owner must make sure that all operators and users have read and understood these operating instructions.

The operator must provide persons who work with or on the excavator with suitable personal protective equipment (PPE) and those persons must use that equipment where applicable, for example: suitable working clothes, safety shoes, safety helmets, eye protection, ear protection and breathing masks. The owner/employer bears the main responsibility for the PPE, which is specified by the safety rules for particular types of activity.

Waste such as old oil, fuel, hydraulic fluid, coolant and batteries comes under the category of toxic waste and can be a hazard to the environment, people and animals.

Disposal must be undertaken in an appropriate way, according to legally prescribed pollution control and safety regulations.

If you have questions about the proper disposal or storage of refuse and toxic waste, contact your KUBOTA dealer or a local waste management contractor.

https://truckmanualshub.com/

Noise emission and vibration

The values specified in these operating instructions were identified during the test cycle on an identical machine and are valid for a machine with the standard equipment. The determined values are specified in the Technical Data (page 39).

Noise emission

The noise levels were determined using the method for determining the guaranteed sound pressure level of ISO 4871 based on directive 2000/14/EC, Appendix VI.

The noise levels indicated are not applicable for the determination of additional workplace noise emissions. The actual noise levels may need to be determined directly at the workplaces, subject to actually existing conditions (other noise sources, special operating conditions, sound reflections).

Depending on the actual noise emissions, the owner must provide the operator with the necessary personal protective equipment (ear protection).

Noises at a noise level of more than 85 dB (A) can cause hearing damage.
At a noise level of 80 dB (A) and up, the use of ear protection is recommended.
At a noise level of 85 dB (A) and up, the operator must wear ear protection.

Vibrations

The vibrations on the machine have been determined using an identical machine.

The vibration stress on the operator over a longer period of time must be determined by the owner at the operating site, in compliance with directive 2002/44/ EC in order to consider individual magnitudes of influence.

Danger, warning and safety labels on the machine

Care of danger, warning and safety labels

- Keep danger, warning and safety labels clean and free from interfering objects.
- Clean danger, warning and safety labels with soap and water and dry with a soft, clean cloth.
- Replace damaged or missing danger, warning and safety labels with new ones from your KUBOTA dealer.
- If a component with glued-on danger, warning and safety labels is replaced with a new part, make sure that the new labels are affixed to the same location as the replaced component.
- Danger, warning and safety labels should be stuck only on clean and dry surfaces. Press any air bubbles into the outer edge of the sticker.

The positioning of the danger, warning and safety instructions is illustrated in the following figures.

https://truckmanualshub.com/

1) Code #: RG158-5727-0
Mortal danger by crushing!
Low safe distance to the excavator and to obstacles can prevent an emergency exit from the danger zone. Crushing by excavator results in severe injury or death.
- Do not enter the manoeuvring area.
- Ensure safe distance to obstacles and sufficient freedom of movement.

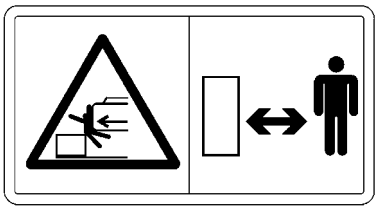

2) Code #: RG268-5724-0
Risk of burns from hot components!
Surfaces can be hot and lead to burns.
- Do not touch hot components.
- Before working on the engine, please read the operating instructions.

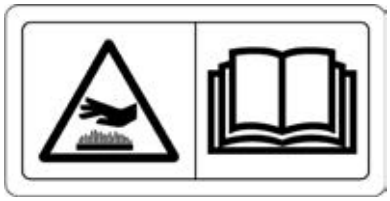

3) Code #: R2491-5736-0
Risk of fire from inflammable diesel fuel!
Inflammatory vapours can occur in the fuel tank, which may go up in flames as a result of an ignition source.
- Do not use open flames in the vicinity of the fuel tank.

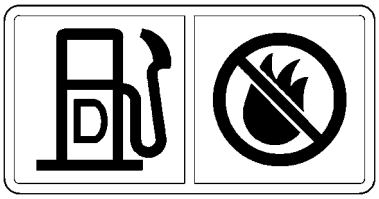

4) Code #: RG138-5791-0
Danger of injury from components under pressure!
In the case of improper operating of the crawler tensioner, grease or the pressure valve can splash out under high pressure and lead to injury.
- Before working on the crawler tensioner, please read the operating instructions!

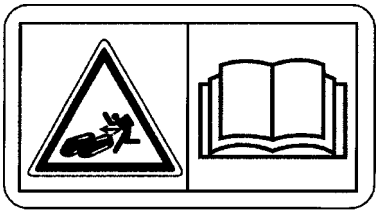

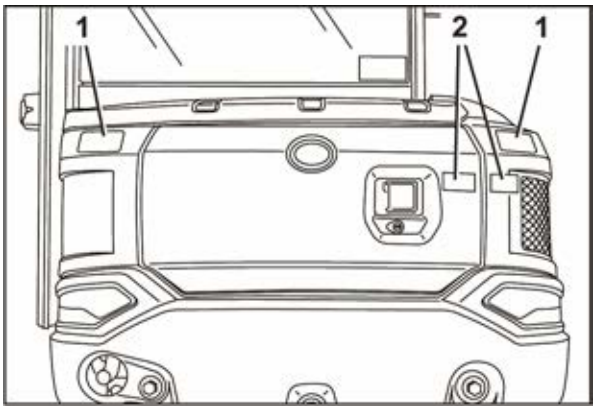

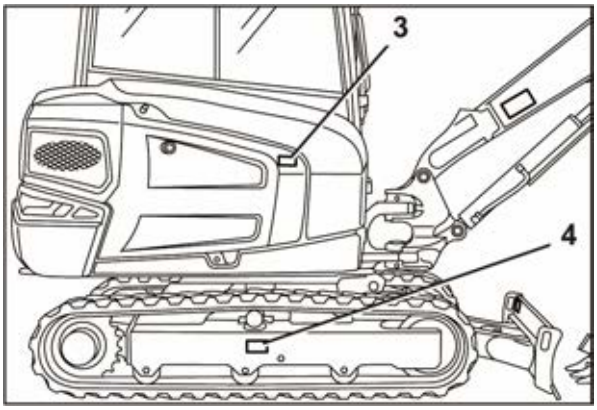

https://truckmanualshub.com/

1) Code #: RG158-5785-0
Risk of burns from hot components!
Surfaces can be hot and lead to burns.
- Do not touch hot parts, such as exhaust muffler, etc.

2) Code #: RG158-5754-0
Risk of fire from hot components!
Escaping liquids can get onto hot components and catch fire.
- Before working on the engine, please read the operating instructions.

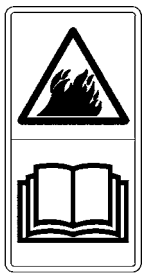

3) Code #: RG158-5789-0
Danger of cutting from rotating components!
The rotary fan can cut into the extremities.
Danger of crushing from rotating components!
The rotary belt drive can draw in limbs and crush them.
- Do not reach into rotating components.

4) Code #: RG158-5723-0
Mortal danger from moving excavator!
When staying in the danger zone and in the case of a suddenly starting excavator, there is the danger of being run over by the excavator.
- Only start the machine from the operator's seat.
- Do not start the machine by bypassing the starter poles.

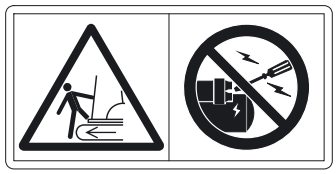

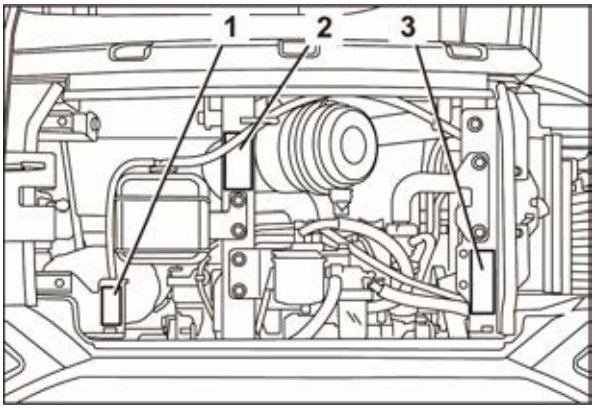

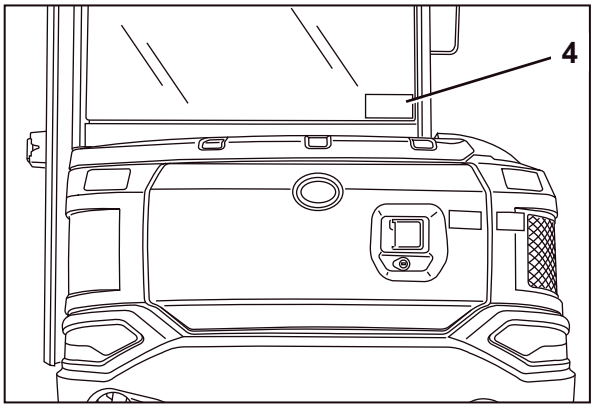

https://truckmanualshub.com/

1) Code #: RG158-5722-0
Mortal danger from moving excavator!
A low safe distance to the boom can impede an emergency exit from the danger zone. Being crushed by the boom can result in severe injury or death.
- Do not remain within the swinging range of the boom.
- Ensure safe distance to obstacles and sufficient freedom of movement.

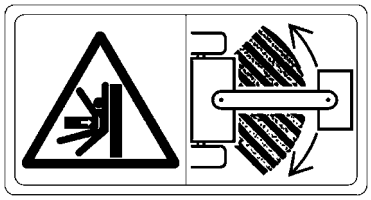

2) Code #: R2491-5796-0
Attachment point for lifting gear.

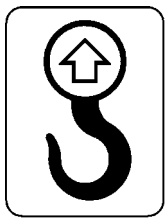

3) Code #: RG268-5789-0
Mortal danger by crushing!
A low safe distance to the arm can impede an emergency exit from the danger zone. Being crushed by the arm can result in severe injury or death.
- Do not stand in the working area of the arm.
- Ensure safe distance to obstacles and sufficient freedom of movement.

4) Code #: RG268-5788-0
Danger due to electric current!
When working in the vicinity of overhead power lines without a sufficient safe distance between them and the machine, the electricity can jump onto the machine.
- Maintain a safe distance from overhead power lines.

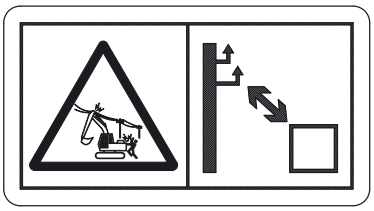

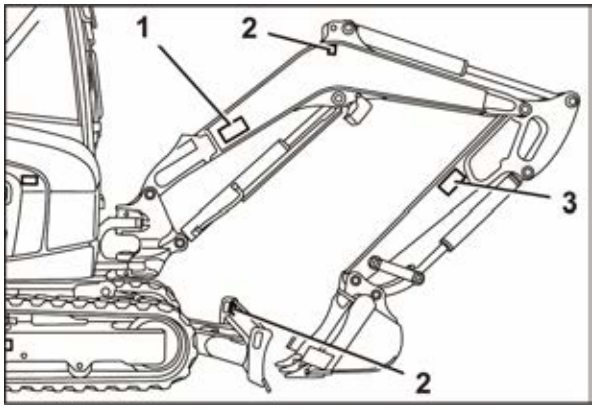

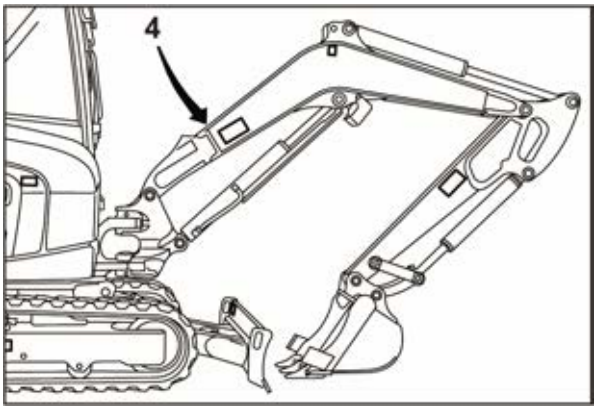

https://truckmanualshub.com/

1) Code #: RG268-5749-0
Max. lifting capacity when rotating up to 360°
KX027-4 (cab)

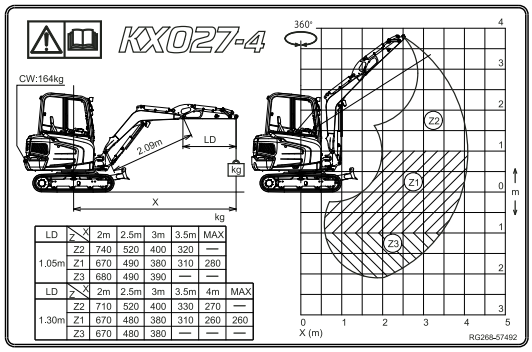

LD	X / Z	2m	2.5m	3m	3.5m	MAX
1.05m	Z2	740	520	400	320	—
	Z1	670	490	380	310	280
	Z3	680	490	390	—	—

LD	X / Z	2m	2.5m	3m	3.5m	4m	MAX
1.30m	Z2	710	520	400	330	270	—
	Z1	670	480	380	310	260	260
	Z3	670	480	380	—	—	—

Code #: RG468-5749-0
Max. lifting capacity when rotating up to 360°
KX030-4 (cab)

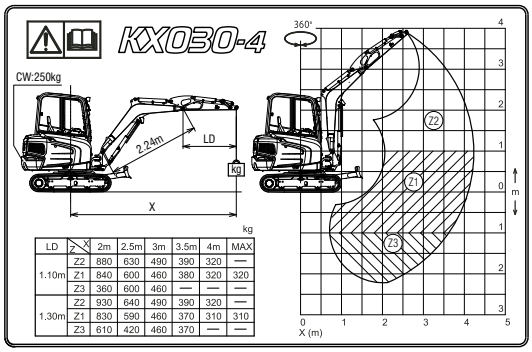

LD	X / Z	2m	2.5m	3m	3.5m	4m	MAX
1.10m	Z2	880	630	490	390	320	—
	Z1	840	600	460	380	320	320
	Z3	360	600	460	—	—	—
1.30m	Z2	930	640	490	390	320	—
	Z1	830	590	460	370	310	310
	Z3	610	420	460	370	—	—

2) Code #: RG268-5748-0
Max. lifting capacity when rotating up to 360°
KX027-4 (canopy)

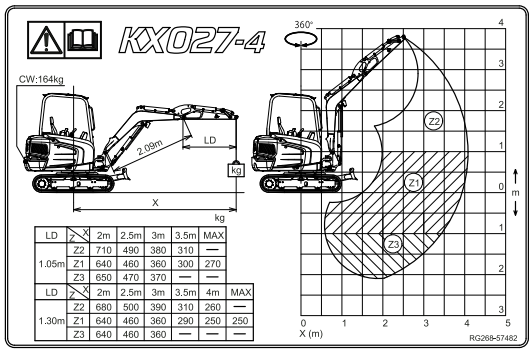

LD	X / Z	2m	2.5m	3m	3.5m	MAX
1.05m	Z2	710	490	380	310	—
	Z1	640	460	360	300	270
	Z3	650	470	370	—	—

LD	X / Z	2m	2.5m	3m	3.5m	4m	MAX
1.30m	Z2	680	500	390	310	260	—
	Z1	640	460	360	290	250	250
	Z3	640	460	360	—	—	—

Code #: RG468-5748-0
Max. lifting capacity when rotating up to 360°
KX030-4 (canopy)

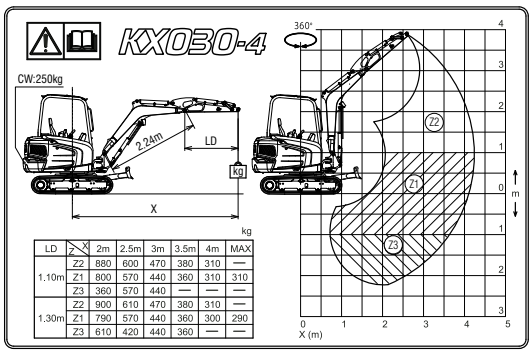

LD	X / Z	2m	2.5m	3m	3.5m	4m	MAX
1.10m	Z2	880	600	470	380	310	—
	Z1	800	570	440	360	310	310
	Z3	360	570	440	—	—	—
1.30m	Z2	900	610	470	380	310	—
	Z1	790	570	440	360	300	290
	Z3	610	420	440	360	—	—

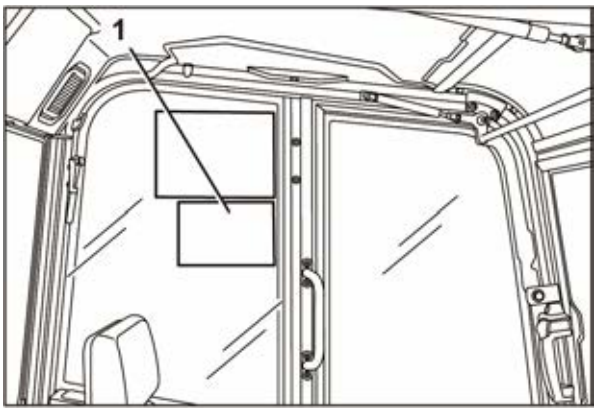

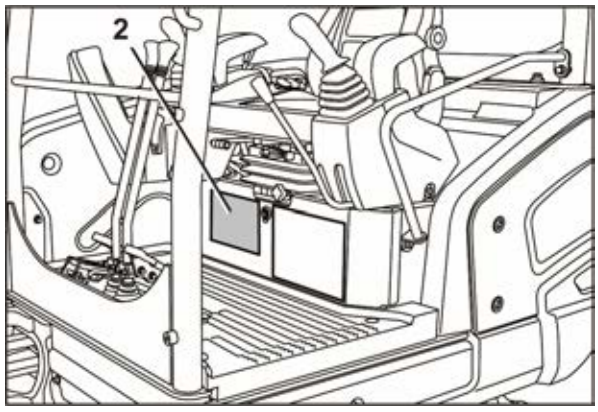

https://truckmanualshub.com/

1) Code #: RG268-5717-0
Caution! Risk of component damage!
When using a wider or deeper bucket, take good care when swinging or retracting the front attachments to make sure that the bucket does not hit the cab.
- Read the Operating Instructions for the attachment.

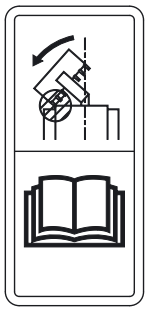

2) Code #: RG268-5783-0
Mortal danger by crushing!
Low safe distance to the excavator and to obstacles can prevent an emergency exit from the danger zone. Crushing by excavator results in severe injury or death.
- Before leaving the machine, lower bucket to the ground.
- Lift the control lever lock, turn the starter switch to the STOP position and remove the key.

3) Code #: RG268-5743-0
Risk of personal injury!
- Always buckle up.

4) Code #: RG268-5729-0
Risk of injury from falling front window!
If the front window has been pushed up and not is properly bolted, there is a risk that the front window will close automatically and hit the operator in the head.
- Always lock front window securely.

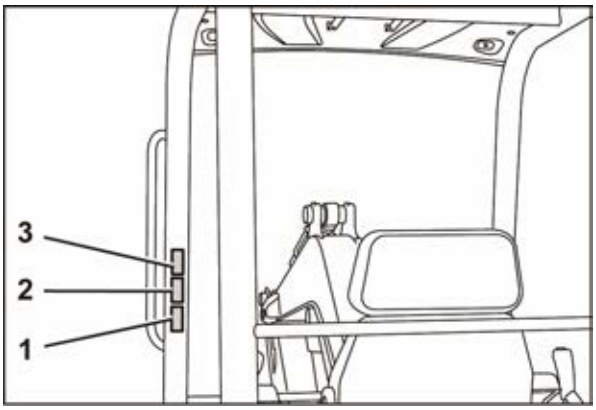

https://truckmanualshub.com/

1) Code #: RG308-5702-0
Risk of accidents due to incorrect operation!
Improper operating can lead to damage to the excavator, to serious accidents with a high risk of injury and death as a result.
- Please read the operating instructions before commissioning.

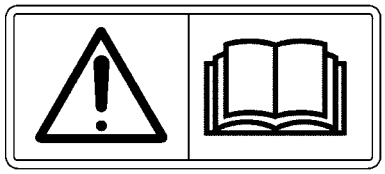

2) Code #: RG158-5724-0
Danger of injury from liquids under pressure!
Escaping hydraulic oil under pressure can penetrate into the skin.
Risk of burns from hot components!
Surfaces can be hot and lead to burns.
- Apertures, e.g., ventilation systems, and hot components, must not be covered with hands.

3) Code #: RG268-5724-0
Risk of burns from hot components!
Surfaces can be hot and lead to burns.
- Do not touch hot components.
- Before working on the engine, please read the operating instructions.

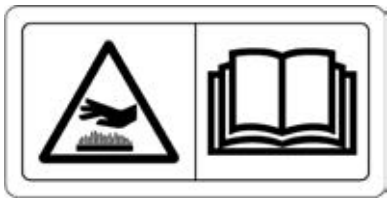

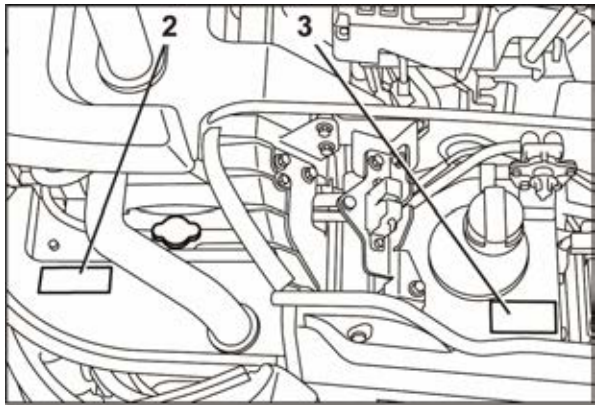

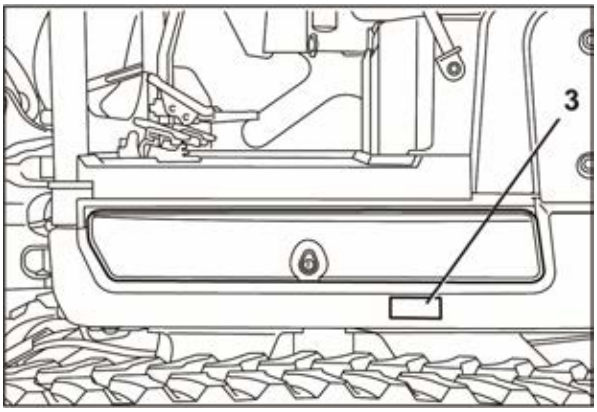

https://truckmanualshub.com/

1) Code #: RG158-5734-0
Risk of injury when entering or leaving the machine!
When entering or leaving the machine without a secure halt, you can slip and fall down.
- Do not jump up or down on the excavator.
- Always hold the hand rail tightly with one hand.
- Make sure that you have a secure footing.

2) Code #: RG109-5796-0
Not an attachment point for lifting gear.

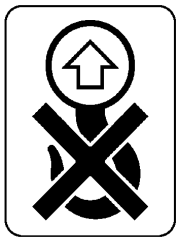

3) Code #: RG268-5738-0
Danger of cutting and crushing through rotating parts!
The rotating fans can cut into limbs and the rotating belt drive can pull in and crush limbs.
- Switch off the engine before working in the engine room.
- Ensure that the engine and all the engine parts have come to a complete standstill.
- Do not reach into rotating components.

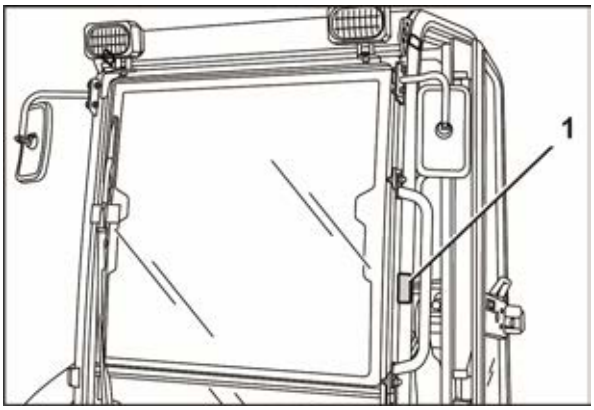

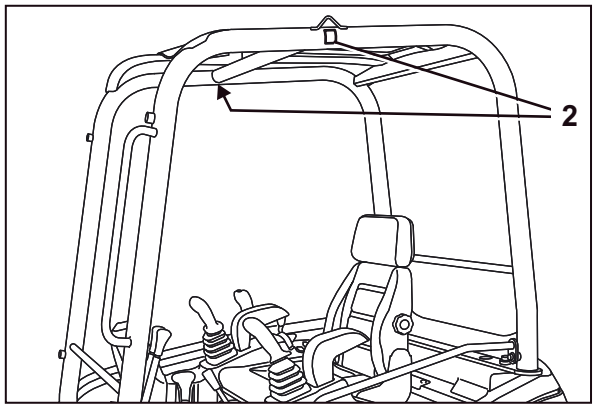

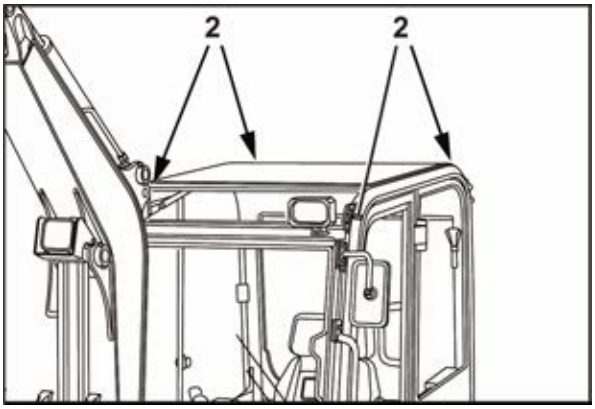

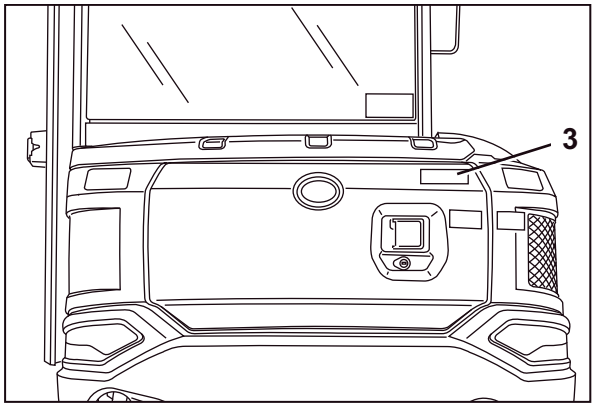

https://truckmanualshub.com/

1) Code #: RG268-5786-0
Danger due to electric current!
Excess voltage can cause injuries while working on the electrical system.
- Before working on the electrical system, disconnect it from the power supply.
- Wear personal protective equipment.
- Before working on the electrical system, please read the operating instructions!

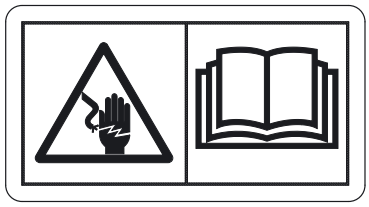

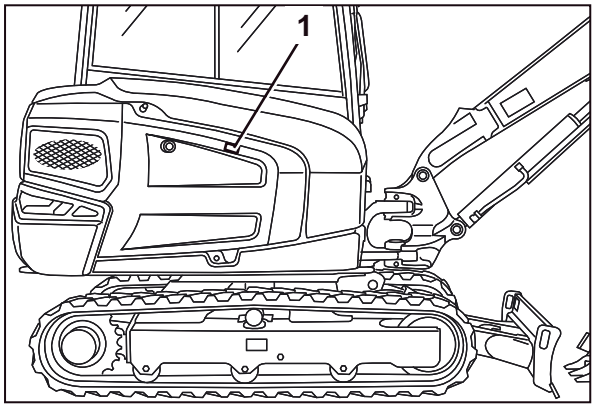

https://truckmanualshub.com/

Safety devices

Before starting the machine, all safety devices must be installed properly and operational. Before starting the machine, all safety devices must be installed properly and operational. Manipulating the safety devices is prohibited.

Protective devices may only be removed once

- the excavator is standing still and the engine is stopped
- and secured against restarting (starter switch in STOP position and key removed).

Locking the controls

If the left control console (2) is raised completely with the control lever lock (1), then the hydraulic functions of the following controls will be locked:

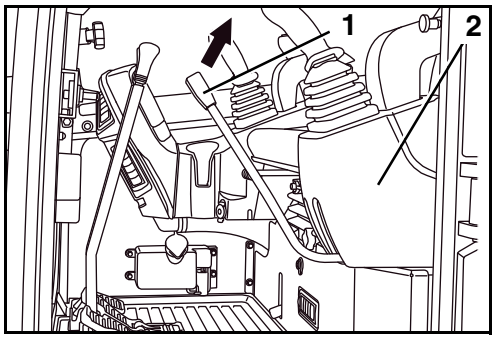

Function	KX027-4 KX030-4	KX027-4 HI KX030-4 HI
Auxiliary port pedal	●	
Boom swing pedal	●	●
Drive lever	●	●
Dozer control lever	●	●
Right control lever	●	●
Left control lever	●	●

- To unlock the hydraulic functions, lower the control console completely using the control lever lock.

Engine stop knob

The engine turns off when the starter switch (2) is switched to the STOP position.

If the engine cannot be turned off, please operate the engine stop knob switch in order to turn off the engine.

To stop the engine:

- Pull the knob (1) until the engine stops.
- After the engine has stopped, push in the knob.

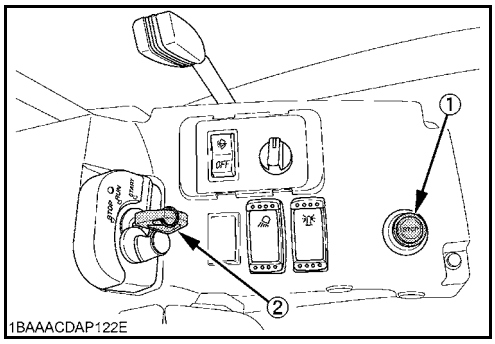

https://truckmanualshub.com/

Protective structure canopy and cab

The excavator is equipped with a protective structure that protects the operator from severe injury or death if the excavator falls over or overturns and in the case of falling objects.

Canopy and cab were constructed in accordance with current safety standards and tested for verification as:

Roll-over protection	ROPS (Roll Over Protective Structure)
Tipping-over protective structure	TOPS (Tipping Over Protective Structure)
Driver protection	OPG (Operator Protective Guard)

To ensure greatest protection by means of this protective structure, the following applies:

- The seat belt must be fastened while the excavator is being operated.
- Do not make any structural changes to the protective structure.
- In the event of damage, please contact your KUBOTA dealer. (Do not repair!)
- Never operate the excavator without the protective structure.

When using a hydraulic hammer or other attachment for demolition work where material (e.g. asphalt) is removed and can uncontrollably sputter away, a gravel guard is recommended for protection.

If a front protective grid is required, a KUBOTA gravel guard (accessory) can be mounted.

https://truckmanualshub.com/

Emergency hammer

In case of an accident where the excavator cab door and windows can not be opened, the operator can break the window panes with the emergency hammer (1).

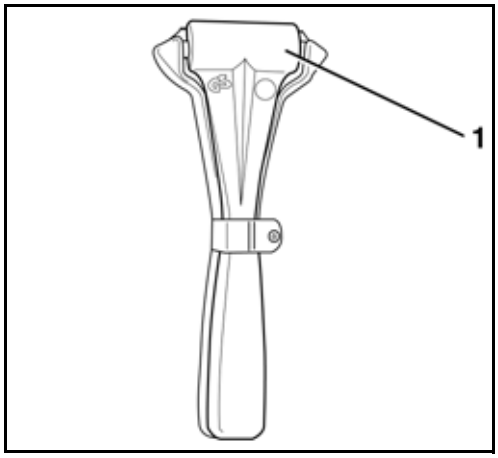

STOP

When breaking the window pane, close your eyes and cover them with an arm.

Hazards coming from the hydraulic system

If hydraulic oil gets into the eyes, rinse them immediately with clear water and subsequently seek medical aid.

Do not allow hydraulic oil to come into contact with skin or clothing. Skin parts that may have come into contact with hydraulic oil must be washed with water and soap immediately, if possible. Do this thoroughly and repeatedly, otherwise there is a risk of damage to the skin.

Immediately take off any clothes dirtied or soaked with hydraulic oil.

Persons who have inhaled hydraulic oil vapours (mist) should be taken to a doctor immediately.

If leaks have occurred in the hydraulic system, the excavator may not be placed into operation or, if in operation, operation must cease at once.

Do not use the naked hand to search for leaks; always use a piece of wood or cardboard. Protective clothing (eye protection and gloves) must be worn when seeking leaks.

Leaking hydraulic oil must be bound immediately with an oil binding agent. The contaminated oil binding agent must be stored in suitable containers and in accordance with the valid regulations.

https://truckmanualshub.com/

Fire protection

The excavator components and attachments (in particular the engine and the exhaust system) reach high temperatures even under normal working conditions. An electric installation that is damaged or not properly serviced may lead to flashovers and/or electric arcs. The following fire protection guidelines may help you ensure the maintenance and efficiency of your equipment and minimise fire hazards.

- Remove any accumulated dirt adjacent to hot components, e.g. engine, muffler, exhaust manifold/tubes, etc. If the machine is being used at full capacity, cleaning should be performed more frequently.
- Accumulated residues from plants and trees, or any other flammable materials, should be removed from the machine. This must be observed in particular in the proximity of the engine and the exhaust system, but also in the swivel frame, the track frame, and the boom.
- Check the condition and wear of all fuel lines and hydraulic hoses. Any defective parts should be replaced immediately in order to avoid leaks.
- Electric cables and connections must be checked regularly for signs of damage. Damaged components and lines must be replaced or repaired before starting up the machine. All electric connections must be kept clean and tight.
- Exhaust pipes and mufflers must be checked daily for leaks, damage and any loose or missing joints. Leaking or damaged exhaust system components must be replaced or repaired before starting up the machine.
- Always keep a multi-purpose fire extinguisher on or close to the machine. Familiarise yourself with the operation of the fire extinguisher. In the event of a fire in the electrical or hydraulic system, use a CO_2 fire extinguisher to put it out.
- For the attachment of a fire extinguisher (1), two threads (2) have been inserted in the cab construction on the left side behind the operator's seat.

A fire extinguisher is not included in the standard equipment of the machine.

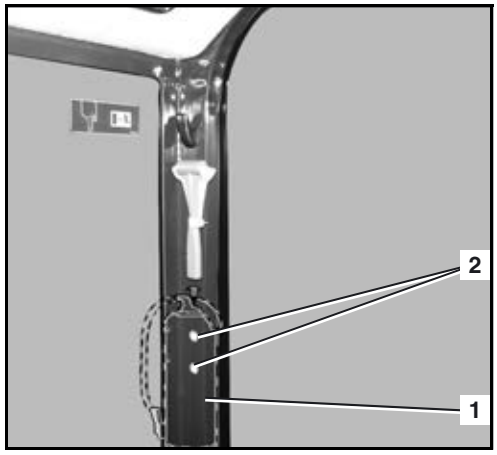

https://truckmanualshub.com/

https://truckmanualshub.com/

RECOVERY, LOADING AND TRANSPORT

Safety rules for recovery

- For recovery of the excavator, a towing vehicle of at least the same weight class as the excavator must be used.
- A tow bar must be used for the recovery. If a tow rope is used, an additional vehicle must also be attached to brake the excavator. The tow bar or tow rope must be suitable for the recovery of the excavator with regard to the towed load. Do not use damaged recovery aids.
- Do not step into the danger zone between the vehicles during the recovery procedure. If a tow rope is used, keep a distance of at least 1.5 times the length of the rope.
- Use the towing eye on the track frame for the recovery.
- The above safety rules also apply if the excavator is used as the towing or recovery vehicle.
- Observe the admissible values for the towed load and the vertical load during recovery, see "Technical data" (page 39).

Safety rules while loading with a crane

- Crane and lifting gear must be suited for carrying the load to be lifted and be approved.
- Before using the crane and the lifting gear, make sure that the specified safety inspections have been carried out regularly and that the crane and lifting gear are in good working order and sound condition.
- The excavator may only be lifted at the provided attachment points. Do not attach the lifting gear to the cab roof as this can lead to substantial damage.
- Never attach a crane hook to the lower edge of the dozer! The crane hook can slip off sideways while lifting and the excavator may fall off.
- Always adhere to the valid safety regulations for the lifting of loads.
- The excavator must be secured with a holding rope when it is being lifted.
- The crane operator is responsible for the observance of these safety rules.

https://truckmanualshub.com/

Safety rules for transport

- The ramps must have a sufficient load-bearing capacity for bearing the weight of the excavator. They must be placed securely on the transport vehicle and fastened.
- Support the loading area at the rear of the transport vehicle with sufficiently dimensioned supports.
- The ramps must be wider than the track of the excavator and have footboards on the sides.
- The transport vehicle must be designed for the load of the excavator.
- Position the left and the right ramp so that the centre line of the transport vehicle is aligned with the centre line of the excavator to be loaded.
- Do not drive the excavator onto the transport vehicle without ramps and with the boom.
- In the transport vehicle, pull the parking brake and secure the individual wheels of the transport vehicle both at the front and rear with chocks.
- Secure the excavator against sliding on the transport vehicle with chocks or chains or with suitable tie-down straps. The chocks must be secured at the crawlers and on the transport vehicle with suitable devices. The operator of the transport vehicle is responsible for securely fastening the excavator onto the vehicle.
- A guide is required for driving the excavator onto and off of the transport vehicle. The guide is responsible for the safe loading. The excavator may only be moved on instruction of the guide; the operator and guide must always maintain eye contact. If this is not possible, the operator must stop the excavator immediately.
- When driving with an excavator loaded, always keep a clearance of 1.0 m to overhead power lines. Observe the applicable traffic rules and regulations.

https://truckmanualshub.com/

Recovery

Adhere to the “Safety rules” chapter (page 13) and the “Safety rules for recovery” section (page 31).

A recovery is only allowed over a short distance and at walking speed (0.5 m/s ~ 1.0 m/s).

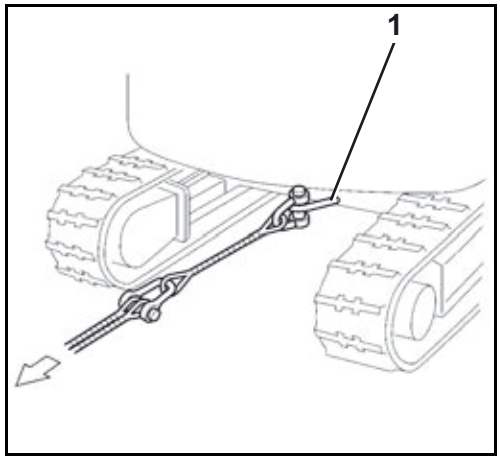

- Attach the tow bar or tow rope to the attachment point (1) on the excavator and to the towing vehicle.
- If the attachment point of the excavator is not accessible, a tow rope can also be fastened around the centre of the dozer.
- During the recovery procedure, the operator must be seated on the operator's place.
- Drive slowly with the towing vehicle to avoid abrupt impacts.

Hoisting the excavator with a crane

Adhere to the “Safety rules” chapter (page 13) and the “Safety rules for hoisting the excavator with a crane” section (page 31).

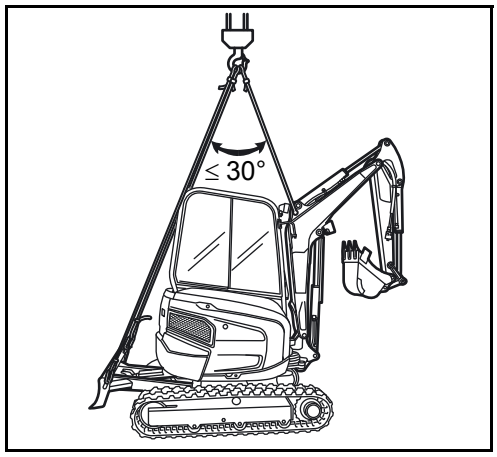

- Bring the excavator to the lifting position (see figure) on level ground.
- Lift the dozer until the dozer cylinders are fully retracted. Also see the “Operating the controls during excavation work” section (page 88).
- Bring the boom in line with the longitudinal axis of the swivel frame.
- Bucket cylinders and arm cylinders, respectively, must be extended to the stop position.
- Boom cylinders must be extended to the stop position.
- Rotate the swivel frame so that the dozer is located at the rear.
- Close and lock the door and covers.

The excavator may only be lifted at the provided attachment points. Do not attach the lifting gear to any other eyes or areas as this can lead to substantial damage.

https://truckmanualshub.com/

- Attach the lifting gear with shackles to the lifting eyes (1) on each side of the dozer.

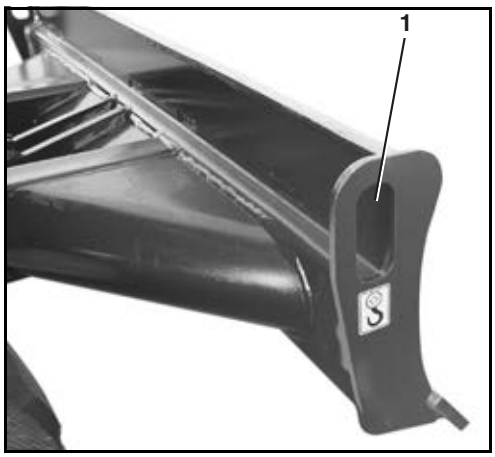

- Attach the lifting gear with shackles to the lifting eyes (1) on each side of the boom.

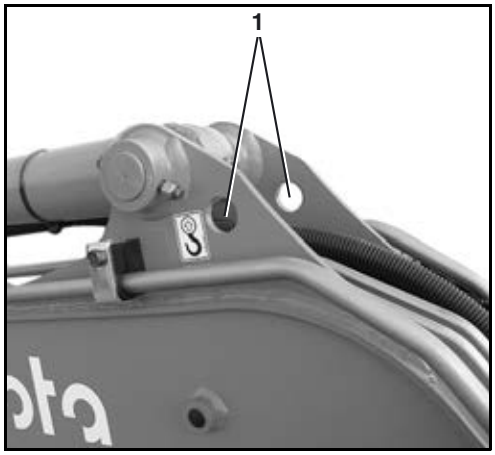

- As soon as the lifting gear is attached to the excavator, press towels between the lifting gear and the excavator to protect the excavator.
- Always keep the machine level. Be sure that the centre line of the crane hook is aligned as exactly as possible with the centre line of the excavator and that the lifting angle is as specified. Lift the excavator.

https://truckmanualshub.com/

Transport on a flat bed trailer

Adhere to the “Safety rules” chapter (page 13) and the “Safety rules for transport” section (page 32).

Do not turn or steer while driving up the ramps; if necessary, reverse the excavator and drive up again after realigning it.

Caution! Danger!
Nobody is allowed to stand in the loading area during swivelling. Danger of crushing.

Take care during swivel operations. The front attachments could hit the transport vehicle. This could damage the transport vehicle and the excavator.

For securing the vehicle, tie down the points as shown in the figure.

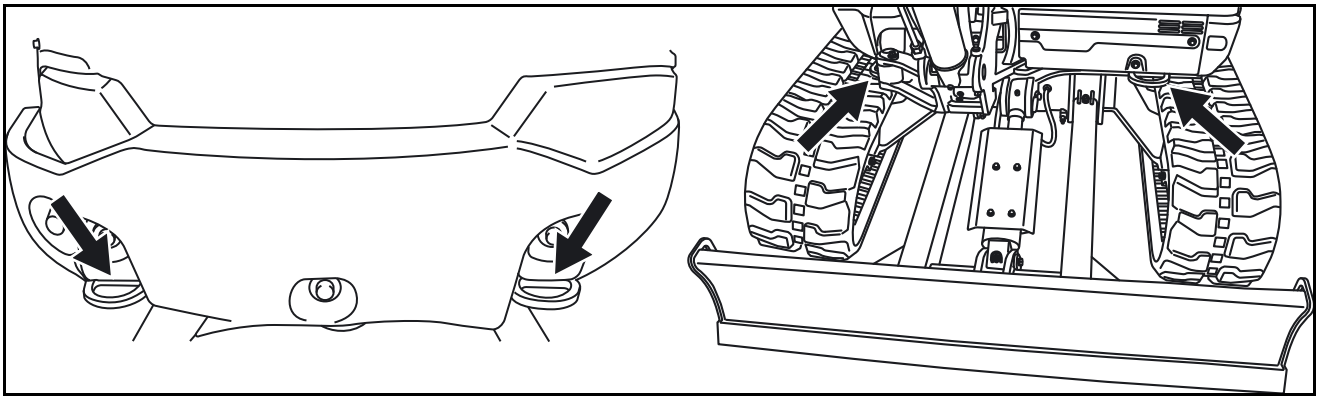

- Place the loading ramps on the transport vehicle at an angle between 10° and 15°. Observe the track width.
- Safely attach the ramps to the transport vehicle to make sure they cannot slide while driving upwards.
- Bring the excavator exactly in line with the ramps and drive up straight. Lower the dozer onto the loading area.

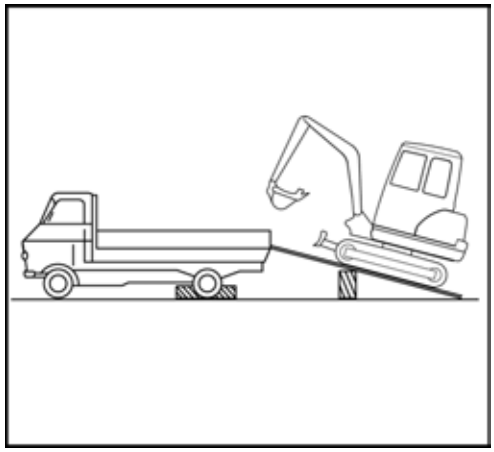

https://truckmanualshub.com/

- Rotate swivel frame 180° until the front attachments face the rear of the transport vehicle.
- For safe attachment, fully retract the arm and bucket and lower the boom until the bucket linkages touch the loading area.
- Secure the chains and the dozer with wooden beams (2).
- Secure the excavator against sliding on the transport vehicle using suitable chocks or chains (1). Note the machine weight (page 39).
- Lock the excavator after hoisting.

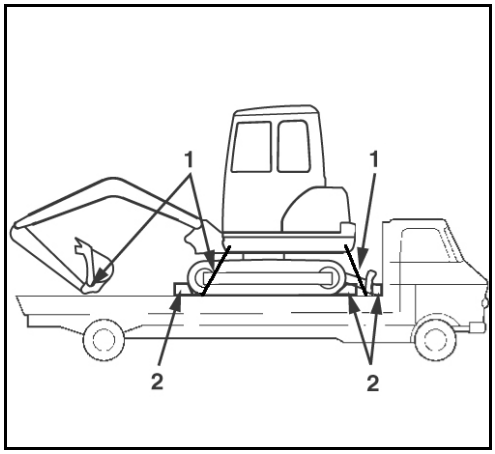

https://truckmanualshub.com/

DESCRIPTION OF THE EXCAVATOR

Dimensions

The dimensions of the models KX027-4 and KX030-4 can be found in the following figures and tables.

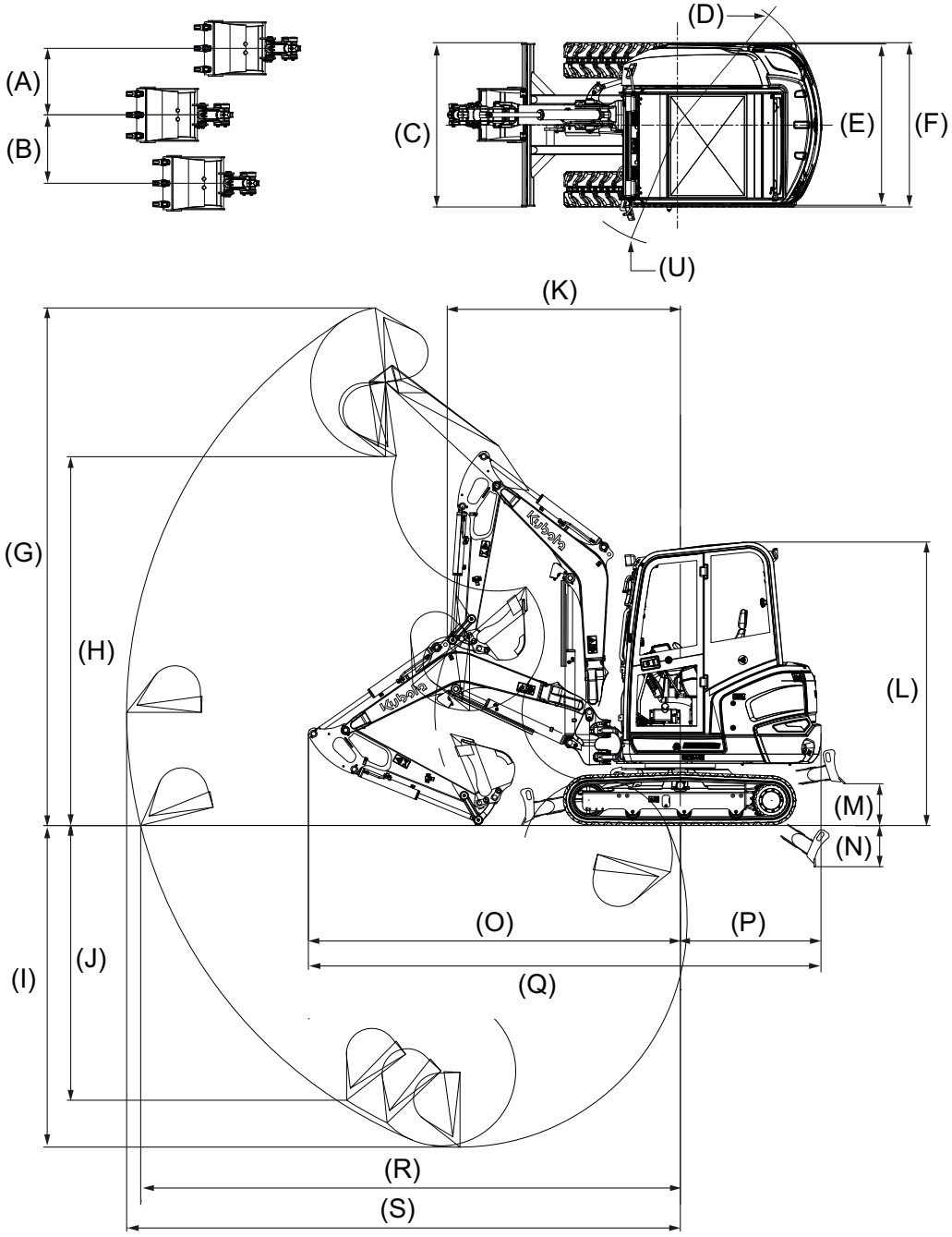

https://truckmanualshub.com/

Canopy

KX027-4	A	B	C	D	E	F	G	H	I	J	K	L	M	N	O	P	Q	R	S	U
1*	570	580	1400	1200	1380	1400	4420	2970	2490	2100	1943	2420	360	350	3140	1200	4340	4360	4480	860
3*	570	580	1400	1200	1380	1400	4410	3140	2740	2340	1990	2420	360	350	3170	1200	4370	4600	4720	860

KX030-4	A	B	C	D	E	F	G	H	I	J	K	L	M	N	O	P	Q	R	S	U
2*	570	580	1500	1200	1380	1500	4430	3110	2670	2260	1920	2420	350	350	3350	1200	4550	4570	4690	860
3*	570	580	1500	1200	1380	1500	4560	3240	2870	2460	1950	2420	350	350	3370	1200	4570	4760	4880	860

Cab

KX027-4	A	B	C	D	E	F	G	H	I	J	K	L	M	N	O	P	Q	R	S	U
1*	570	580	1400	1200	1380	1400	4420	2970	2490	2100	1943	2420	360	350	3140	1200	4340	4360	4480	930
3*	570	580	1400	1200	1380	1400	4410	3140	2740	2340	1990	2420	360	350	3170	1200	4370	4600	4720	930

KX030-4	A	B	C	D	E	F	G	H	I	J	K	L	M	N	O	P	Q	R	S	U
2*	570	580	1500	1200	1380	1500	4430	3110	2670	2260	1920	2420	350	350	3350	1200	4550	4570	4690	930
3*	570	580	1500	1200	1380	1500	4560	3240	2870	2460	1950	2420	350	350	3370	1200	4570	4760	4880	930

Arm version

*	Name	Type	
1	Arm 1050 mm	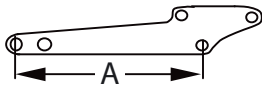	A = 1050 mm
2	Arm 1100 mm	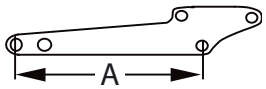	A = 1100 mm
3	Arm 1300 mm	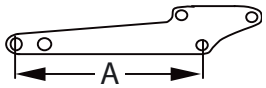	A = 1300 mm

All dimensions in mm with original KUBOTA bucket and rubber crawlers.
Subject to technical changes.

https://truckmanualshub.com/

Specifications

				KUBOTA Excavator	
Model name				KX027-4	
Type				Canopy	
				Rubber crawler	Steel crawler
Machine weight*			kg	2520	2635
Operating weight**			kg	2595	2710
Bucket		Capacity (CECE)	m³	0.060	
		Width with teeth (without teeth)	mm	500 (450)	
Engine		Type		Water-cooled four-cylinder diesel engine	
		Model name		V1505-E4-BH-2EU	
		Displacement	cm³	1498	
		Engine performance (ISO 9249)	kW	17.5	
		Rated speed	1/min	2250	
		CO_2 emission*** (Engine family HKBXL01.5BCB)	g/kWh	1018.0	
Performance		Swivel speed Swivel frame	1/min	9.8	
		Vehicle speed	Travel speed km/h	4.6	
			Low speed km/h	2.7	
		Ground pressure (without operator)	kPa (kgf/cm²)	24.0 (0.24)	25.1 (0.25)
		Climbing performance	% (degrees)	36 (20)	
		Max. lateral sway	% (degrees)	27 (15)	
Dozer		width x height	mm	1400 x 300	
Swing angle of the boom		Left	rad (degrees)	1.34 (77)	
		Right	rad (degrees)	0.99 (57)	
Auxiliary port connector 1		Max. flow rate (theoretical)	l/min	47.3	
		Max. pressure	MPa (bar)	22.5 (225)	
Auxiliary port connector 2****		Max. flow rate (theoretical)	l/min	18.0	
		Max. pressure	MPa (bar)	17.2 (172)	
Fuel tank capacity			l	48	
Pulling capacity at the towing eyes			N	70500	
Vertical load at the towing eyes			N	7200	
Noise level		LpA	dB (A)	76.5	
		LwA (2000/14/EC)	dB (A)	93	
Vibration*****	Hand arm system (ISO 5349-2:2001)	Digging	m/s² RMS	< 2.5	
		Levelling	m/s² RMS	< 2.5	
		Driving	m/s² RMS	< 2.5	
		Idling	m/s² RMS	< 2.5	
	Whole body (ISO 2631-1:1997)	Digging	m/s² RMS	< 0.5	
		Levelling	m/s² RMS	< 0.5	
		Driving	m/s² RMS	< 0.5	
		Idling	m/s² RMS	< 0.5	

* Prepared for operation with Original-KUBOTA-Löffel 55 kg.

** Machine weight, incl. operator 75 kg.

*** The CO_2 measurement is based on the check carried out for an engine representative of the engine family, using a designated check cycle under laboratory conditions. The specifications do not implicate or guarantee the performance of a given engine.

**** Only for equipment variant KX027-4 HI.

https://truckmanualshub.com/

***** These values are measured under specific conditions at maximum engine speed and can deviate, depending on the operating situation.

https://truckmanualshub.com/

				KUBOTA Excavator	
Model name				KX027-4	
Type				Cab	
				Rubber crawler	Steel crawler
Machine weight*			kg	2590	2705
Operating weight**			kg	2665	2780
Bucket		Capacity (CECE)	m³	0.060	
		Width with teeth (without teeth)	mm	500 (450)	
Engine		Type		Water-cooled four-cylinder diesel engine	
		Model name		V1505-E4-BH-2EU	
		Displacement	cm³	1498	
		Engine performance (ISO 9249)	kW	17.5	
		Rated speed	1/min	2250	
		CO_2 emission*** (Engine family HKBXL01.5BCB)	g/kWh	1018.0	
Performance		Swivel speed Swivel frame	1/min	9.8	
		Vehicle speed	Travel speed km/h	4.6	
			Low speed km/h	2.7	
		Ground pressure (without operator)	kPa (kgf/cm²)	24.7 (0.25)	25.8 (0.26)
		Climbing performance	% (degrees)	36 (20)	
		Max. lateral sway	% (degrees)	27 (15)	
Dozer		width x height	mm	1400 x 300	
Swing angle of the boom		Left	rad (degrees)	1.34 (77)	
		Right	rad (degrees)	0.99 (57)	
Auxiliary port connector 1		Max. flow rate (theoretical)	l/min	47.3	
		Max. pressure	MPa (bar)	22.5 (225)	
Auxiliary port connector 2****		Max. flow rate (theoretical)	l/min	18.0	
		Max. pressure	MPa (bar)	17.2 (172)	
Fuel tank capacity			l	48	
Pulling capacity at the towing eyes			N	70500	
Vertical load at the towing eyes			N	7200	
Noise level		LpA	dB (A)	76.5	
		LwA (2000/14/EC)	dB (A)	93	
Vibration*****	Hand arm system (ISO 5349-2:2001)	Digging	m/s² RMS	< 2.5	
		Levelling	m/s² RMS	< 2.5	
		Driving	m/s² RMS	< 2.5	
		Idling	m/s² RMS	< 2.5	
	Whole body (ISO 2631-1:1997)	Digging	m/s² RMS	< 0.5	
		Levelling	m/s² RMS	< 0.5	
		Driving	m/s² RMS	< 0.5	
		Idling	m/s² RMS	< 0.5	

* Prepared for operation with Original-KUBOTA-Löffel 55 kg.

** Machine weight, incl. operator 75 kg.

*** The CO_2 measurement is based on the check carried out for an engine representative of the engine family, using a designated check cycle under laboratory conditions. The specifications do not implicate or guarantee the performance of a given engine.

**** Only for equipment variant KX027-4 HI.

***** These values are measured under specific conditions at maximum engine speed and can deviate, depending on the operating situation.

https://truckmanualshub.com/

				KUBOTA Excavator	
Model name				KX030-4	
Type				Canopy	
				Rubber crawler	Steel crawler
Machine weight*			kg	2720	2825
Operating weight**			kg	2795	2900
Bucket	Capacity (CECE)		m³	0,059	
	Width with teeth (without teeth)		mm	505 (480)	
Engine	Type			Water-cooled four-cylinder diesel engine	
	Model name			V1505-E4-BH-3EU	
	Displacement		cm³	1498	
	Engine performance (ISO 9249)		kW	17,7	
	Rated speed		1/min	2250	
	CO_2 emission*** (Engine family HKBXL01.5BCB)		g/kWh	1018.0	
Performance	Swivel speed Swivel frame		1/min	9,5	
	Vehicle speed	Travel speed	km/h	4,5	
		Low speed	km/h	2,9	
	Ground pressure (without operator)		kPa (kgf/cm²)	25,9 (0,26)	26,9 (0,27)
	Climbing performance		% (degrees)	36 (20)	
	Max. lateral sway		% (degrees)	27 (15)	
Dozer	width x height		mm	1500 x 300	
Swing angle of the boom	Left		rad (degrees)	1,34 (77)	
	Right		rad (degrees)	0,99 (57)	
Auxiliary port connector 1	Max. flow rate (theoretical)		l/min	49,5	
	Max. pressure		MPa (bar)	23,5 (235)	
Auxiliary port connector 2****	Max. flow rate (theoretical)		l/min	18,0	
	Max. pressure		MPa (bar)	19,6 (196)	
Fuel tank capacity			l	48	
Pulling capacity at the towing eyes			N	70500	
Vertical load at the towing eyes			N	7200	
Noise level	LpA		dB (A)	76.5	
	LwA (2000/14/EC)		dB (A)	93	
Vibration*****	Hand arm system (ISO 5349-2:2001)	Digging	m/s² RMS	< 2.5	
		Levelling	m/s² RMS	< 2.5	
		Driving	m/s² RMS	< 2.5	
		Idling	m/s² RMS	< 2.5	
	Whole body (ISO 2631-1:1997)	Digging	m/s² RMS	< 0.5	
		Levelling	m/s² RMS	< 0.5	
		Driving	m/s² RMS	< 0.5	
		Idling	m/s² RMS	< 0.5	

* Prepared for operation with Original-KUBOTA-Löffel 65 kg.

** Machine weight, incl. operator 75 kg.

*** The CO_2 measurement is based on the check carried out for an engine representative of the engine family, using a designated check cycle under laboratory conditions. The specifications do not implicate or guarantee the performance of a given engine.

**** Only for equipment variant KX030-4 HI.

***** These values are measured under specific conditions at maximum engine speed and can deviate, depending on the operating situation.

https://truckmanualshub.com/

				KUBOTA Excavator	
Model name				KX030-4	
Type				Cab	
				Rubber crawler	Steel crawler
Machine weight*			kg	2790	2895
Operating weight**			kg	2865	2970
Bucket		Capacity (CECE)	m³	0,059	
		Width with teeth (without teeth)	mm	505 (480)	
Engine		Type		Water-cooled four-cylinder diesel engine	
		Model name		V1505-E4-BH-3EU	
		Displacement	cm³	1498	
		Engine performance (ISO 9249)	kW	17,7	
		Rated speed	1/min	2250	
		CO_2 emission*** (Engine family HKBXL01.5BCB)	g/kWh	1018.0	
Performance		Swivel speed Swivel frame	1/min	9,5	
		Vehicle speed	Travel speed km/h	4,5	
			Low speed km/h	2,9	
		Ground pressure (without operator)	kPa (kgf/cm²)	26,6 (0,27)	27,6 (0,28)
		Climbing performance	% (degrees)	36 (20)	
		Max. lateral sway	% (degrees)	27 (15)	
Dozer		width x height	mm	1500 x 300	
Swing angle of the boom		Left	rad (degrees)	1,34 (77)	
		Right	rad (degrees)	0,99 (57)	
Auxiliary port connector 1		Max. flow rate (theoretical)	l/min	49,5	
		Max. pressure	MPa (bar)	23,5 (235)	
Auxiliary port connector 2****		Max. flow rate (theoretical)	l/min	18,0	
		Max. pressure	MPa (bar)	19,6 (196)	
Fuel tank capacity			l	48	
Pulling capacity at the towing eyes			N	70500	
Vertical load at the towing eyes			N	7200	
Noise level		LpA	dB (A)	76.5	
		LwA (2000/14/EC)	dB (A)	93	
Vibration*****	Hand arm system (ISO 5349-2:2001)	Digging	m/s² RMS	< 2.5	
		Levelling	m/s² RMS	< 2.5	
		Driving	m/s² RMS	< 2.5	
		Idling	m/s² RMS	< 2.5	
	Whole body (ISO 2631-1:1997)	Digging	m/s² RMS	< 0.5	
		Levelling	m/s² RMS	< 0.5	
		Driving	m/s² RMS	< 0.5	
		Idling	m/s² RMS	< 0.5	

* Prepared for operation with Original-KUBOTA-Löffel 65 kg.

** Machine weight, incl. operator 75 kg.

*** The CO_2 measurement is based on the check carried out for an engine representative of the engine family, using a designated check cycle under laboratory conditions. The specifications do not implicate or guarantee the performance of a given engine.

**** Only for equipment variant KX030-4 HI.

***** These values are measured under specific conditions at maximum engine speed and can deviate, depending on the operating situation.

https://truckmanualshub.com/

Identification of the excavator

The type plate of the excavator is located at the front of the swivel frame. The owner should enter the stamped data in the field on the back of the front cover.

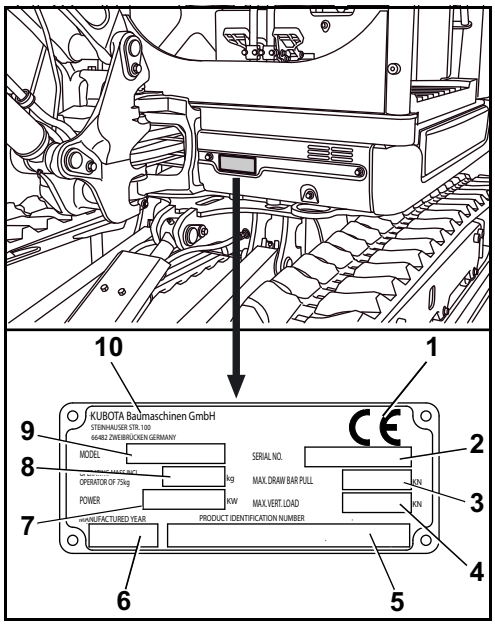

1. CE label
2. Serial #
3. Max. pulling capacity at the towing eyes
4. Max. vertical load at the towing eyes
5. Product ID number PIN
6. Year of construction
7. Engine performance
8. Operating weight
9. Model name
10. Manufacturer

The product ID number PIN (5) can be used to identify the standard equipment KX027-4 and KX030-4 or the equipment variants KX027-4 HI and KX030-4 HI:

Product ID number PIN	
KX027-4	WKF RGJ11 00Z0
KX027-4 HI	WKF RGJ15 00Z0
KX030-4	WKF RGN11 00Z0
KX030-4 HI	WKF RGN15 00Z0

Serial # of the machine

The machine's serial number (1) is stamped on the swivel frame near the swing bracket.

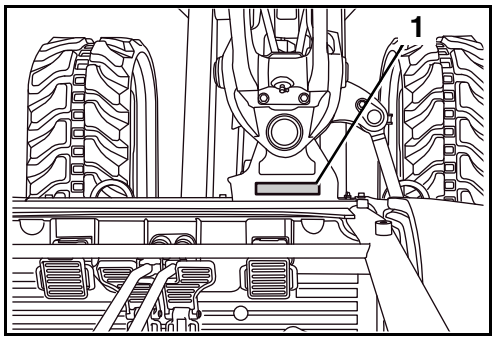

Identification of the engine

The engine can be identified based on the engine number and the numbers for the engine family and engine type.
The numbers are affixed to the engine's valve cover:

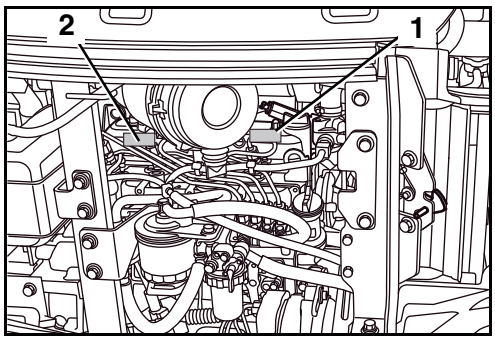

1. Engine number
2. Engine family and engine type

https://truckmanualshub.com/

Standard equipment

This model includes the following standard equipment:

- Operating instructions
- Spare parts catalogue
- Protective cover
- Filter wrench
- Spare fuse (2x50 A)
- Guarantee

Spare parts catalogue and guarantee can be kept together with the operating instructions(page 11).

The filter wrench must be stowed in the tool compartment (1) below the seat.

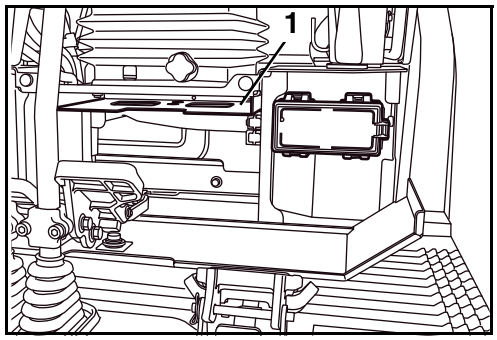

A grease gun can be stowed in the repository (1) behind the left service cover on the swivel frame.

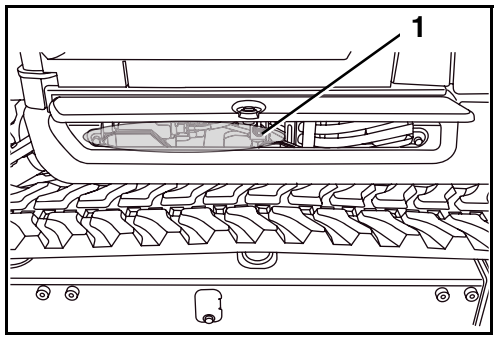

https://truckmanualshub.com/

https://truckmanualshub.com/

ASSEMBLY AND FUNCTIONS

Component overview

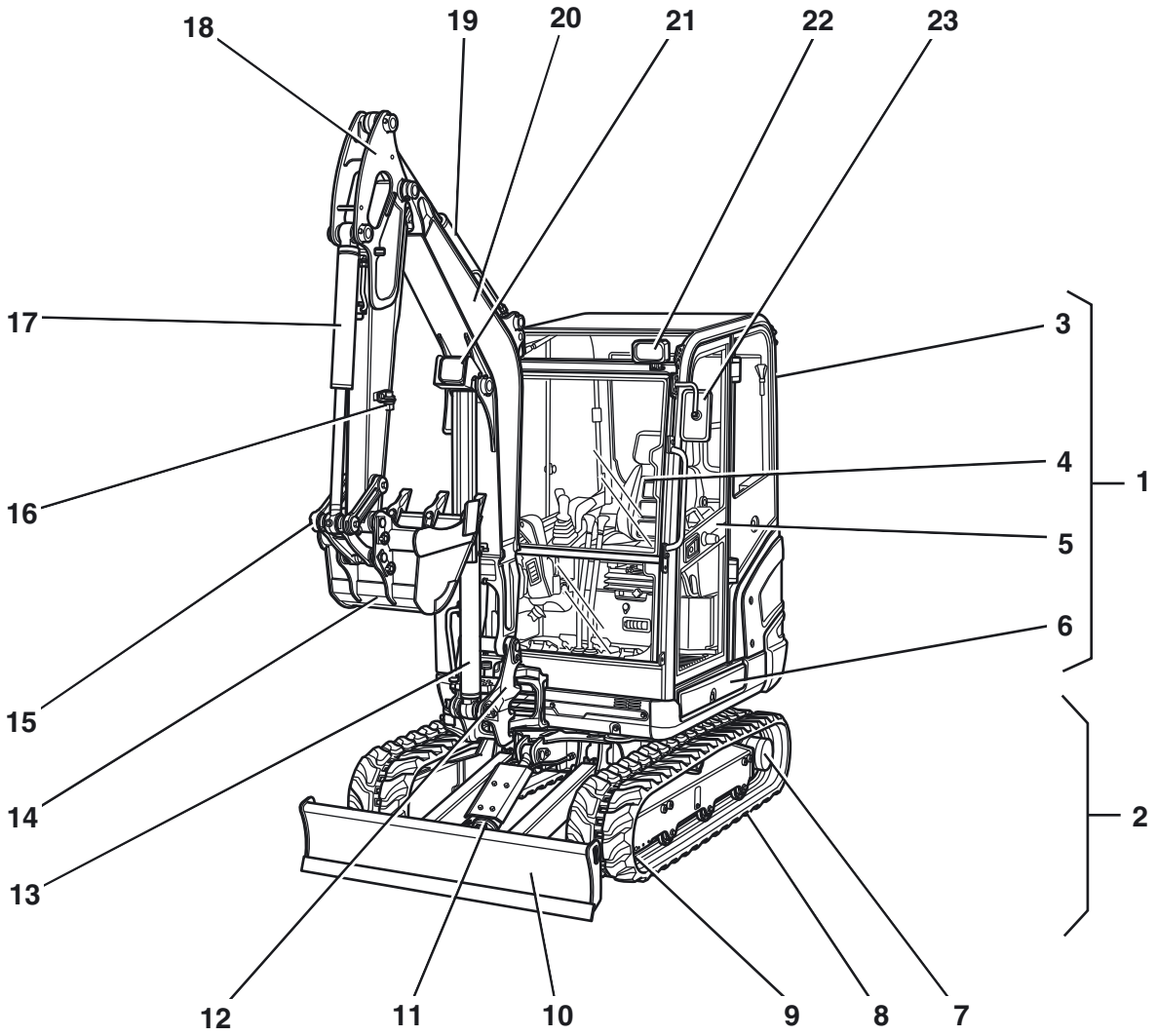

1. Swivel frame
2. Track frame
3. Cab
4. Operator's place
5. Cab door
6. Left service cover
7. Drive sprocket
8. Crawler
9. Idler
10. Dozer
11. Dozer cylinder
12. Swing block
13. Boom cylinder
14. Bucket
15. Bucket linkage
16. Auxiliary port connectors
17. Bucket cylinder
18. Arm
19. Arm cylinder
20. Boom
21. Working light (boom)
22. Working lights (cab)
23. Rear view mirror

https://truckmanualshub.com/

Operator's place

The operator's place is located in the middle of the machine. It includes the following control elements:

1. Left control console
2. Drive levers and control pedals
3. Right control console
4. Operator's seat

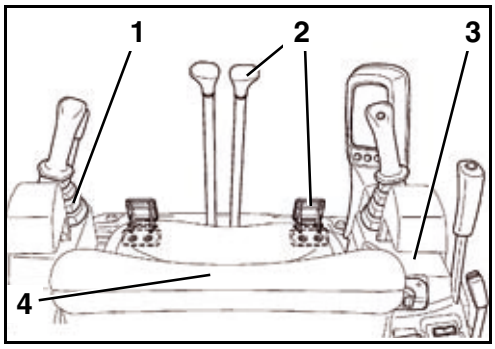

Left control console

The left control console includes the following components:

1. Control lever lock
2. Wrist rest
3. Left control lever
4. Reserve button (KX027-4 HI, KX030-4 HI)
5. Reserve button (KX027-4 HI, KX030-4 HI)
6. Rocker switch for auxiliary port 2 (KX027-4 HI, KX030-4 HI)

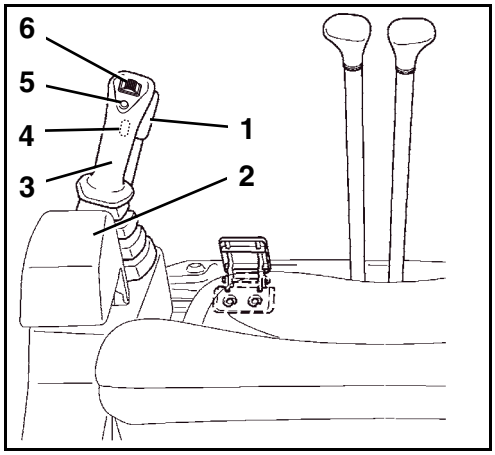

Description of the components of the left control console

1. Control lever lock
To enter and leave the cab, the console must be raised by pulling up the control lever lock. The engine can only be started if the console is raised. The control levers, the drive levers, the boom swing pedal, and the dozer control lever are only operational when the console is lowered and the control lever lock is in the "down" position.

2. Wrist rest
The wrist rest allows fatigue-free operation of the control lever.

https://truckmanualshub.com/

3. **Left control lever**
   The left control lever is used to move the swivel frame and the arm.

   The figure, in conjunction with the following table, shows the functions of the left control lever.

Position of control lever	Movement
1	Arm dump
2	Arm crowd
3	Swivel frame to the left
4	Swivel frame to the right

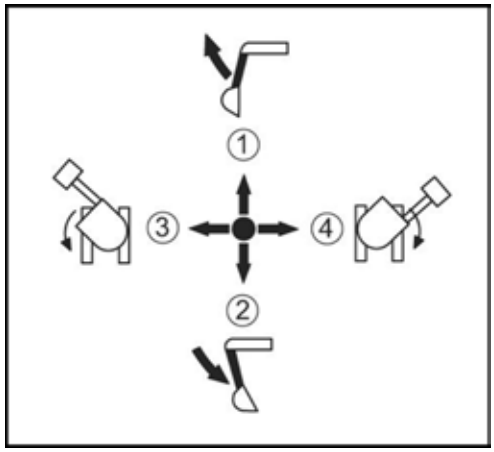

4. **Reserve button (KX027-4 HI, KX030-4 HI)**
   This button does not have a function, but can however be activated in order to control other accessories.

5. **Reserve button (KX027-4 HI, KX030-4 HI)**
   This button does not have a function, but can however be activated in order to control other accessories.

6. **Rocker switch for auxiliary port 2 (KX027-4 HI, KX030-4 HI)**
   The rocker switch for auxiliary port 2 controls the oil flow to auxiliary port 2. Auxiliary port 2 can be controlled proportionally (infinitely variable)

Drive levers and control pedals

Drive levers and control pedals include the following components:

1. Left and right drive levers
2. Boom swing pedal
3. Auxiliary port pedal (KX027-4, KX030-4)

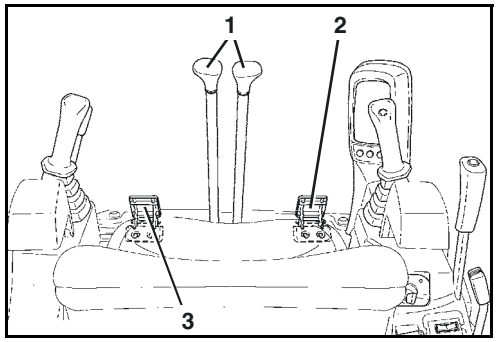

Drive levers and control pedals – description

1. **Left and right drive levers**
   With the drive levers the excavator can be driven forwards and backwards and also turned. The left drive lever controls the left track and the right drive lever controls the right track.

2. **Boom swing pedal**
   This pedal is used to swing the boom right and left.

3. **Auxiliary port pedal (KX027-4, KX030-4)**
   The auxiliary port pedal can be used to operate an attachment.

https://truckmanualshub.com/

Right control console

The right-hand control console contains the following components:

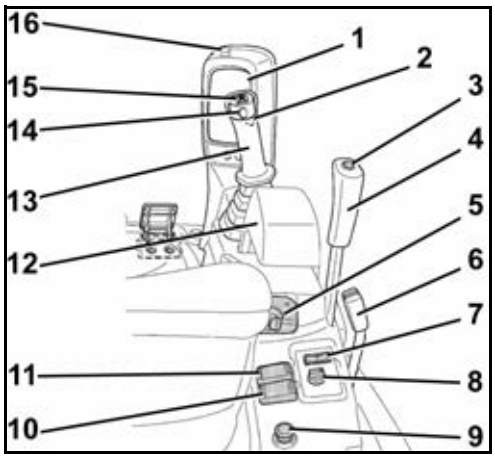

1. Display and control unit
2. One way hold switch (KX027-4 HI, KX030-4 HI)
3. Travel speed button
4. Dozer control lever
5. Starter switch
6. Throttle lever
7. Wiper/washer switch (cab version)
8. Blower switch (cab version)
9. Engine stop knob
10. Rotary beacon button
11. Working light button
12. Wrist rest
13. Right control lever
14. Horn switch
15. Rocker switch for auxiliary port 1 (KX027-4 HI, KX030-4 HI)
16. Potentiometer for auxiliary port 2 (KX027-4 HI, KX030-4 HI)

Description of the components of the right control console

1. Display and control unit
The functions of the display and control unit are described in the "Display and control unit - description" section (page 51).

2. One way hold switch (KX027-4 HI, KX030-4 HI)
Actuating the one way hold switch activates a continuous oil flow to auxiliary port connector 1 on the left-hand side of the arm. When you operate it again, the oil flow discontinues. You can therefore operate an attachment without having to continuously hold down the button.

3. Travel speed button
The travel speed button switches the travel speed mode on and off.

4. Dozer control lever
The dozer control lever is used to raise or lower the dozer. Pushing the lever forward lowers the dozer and pulling it back raises it.

5. Starter switch
The starter switch serves as the master switch for the entire machine and as the switch for pre-glowing and starting the engine.

6. Throttle lever
Using the throttle lever, the operator can adjust the engine speed in an infinitely variable manner.

7. Wiper/washer switch (cab version)
The wiper/washer switch switches on the wiper for the front window and/or the washer system.

8. Blower switch (cab version)
The fan is switched on with the blower switch. The air flow can be set to HIGH (HI) or LOW (LO).

9. Engine stop knob
Using this device, the operator can switch off the engine manually.

10. Rotary beacon button
This switch activates and deactivates the rotary beacon (accessory).

https://truckmanualshub.com/

11. Working light button
Switches the working lights on or off.

12. Wrist rest
The wrist rest allows fatigue-free operation of the control lever.

13. Right control lever
The right control lever is used to move the boom and the bucket.

The figure, in conjunction with the following table, shows the functions of the right control lever.

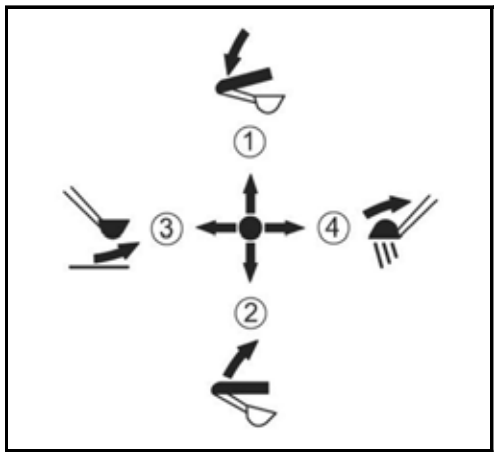

Position of control lever	Movement
1	Lower boom
2	Raise boom
3	Bucket crowd
4	Bucket dump

14. Horn switch
Depressing the horn switch activates the horn.

15. Rocker switch for auxiliary port 1 (KX027-4 HI, KX030-4 HI)
The rocker switch for auxiliary port 1 controls the oil flow to auxiliary port connector 1. Auxiliary port 1 can be controlled proportionally (infinitely variable).

16. Potentiometer for auxiliary port 2 (KX027-4 HI, KX030-4 HI)
The potentiometer can be used to variably adjust the flow rate on auxiliary port 2 as desired.

Display and control unit

The display and control unit contains the following displays, buttons and indicators:

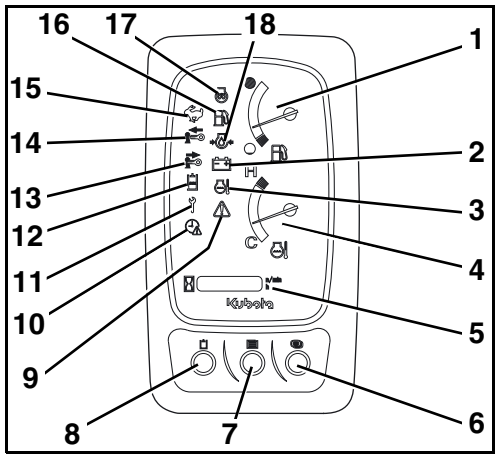

1. Fuel gauge
2. Charge indicator
3. Coolant temperature indicator
4. Coolant temperature gauge
5. Display
6. Display selector switch
7. Menu button
8. Auxiliary port switch (KX027-4 HI, KX030-4 HI)
9. Warning light
10. Set clock indicator
11. Servicing indicator
12. Auxiliary port indicator 1 (KX027-4 HI, KX030-4 HI)
13. Pull out key indicator
14. Insert key indicator
15. Travel speed indicator
16. Fuel stock indicator
17. Pre-glowing indicator
18. Engine oil pressure indicator

https://truckmanualshub.com/

The display and control unit's buttons are multifunctional and are also used to navigate the display menu. You will find detailed descriptions of the individual functions in the respective chapters.

Display and control unit - description

1. **Fuel gauge**
   The fuel gauge indicates the relative amount of fuel in the tank.

2. **Charge indicator**
   The charge indicator lights up when the charging circuit voltage is too low.

3. **Coolant temperature indicator**
   The coolant temperature indicator lights up if the temperature in the cooling circuit is elevated.

4. **Coolant temperature gauge**
   The coolant temperature gauge indicates the temperature in the cooling circuit of the engine.

5. **Display**
   The display can indicate time, engine speed, hours of operation and encoded system information.

6. **Display selector switch**
   The display selector switch changes what is shown on the display.

7. **Menu button**
   The menu button is used to switch the menu guide on the display on or off.

8. **Auxiliary port switch (KX027-4 HI, KX030-4 HI)**
   The auxiliary port switch can be used to enable the hydraulic functions for the auxiliary ports and to switch between operating modes on auxiliary port 1.

9. **Warning light**
   The warning light flashes red when a system fault or technical malfunction occurs. The warning light flashes yellow when the system issues a warning.

10. **Set clock indicator**
    If the clock needs adjustment (e.g. after disconnecting the battery for servicing purposes), the set clock indicator will flash.

11. **Servicing indicator**
    The maintenance indicator lights up when a service period is due.

12. **Auxiliary port indicator 1 (KX027-4 HI, KX030-4 HI)**
    Depending on the operating mode, auxiliary port indicator 1 lights up or flashes if auxiliary port function 1 is switched on.

13. **Pull out key indicator**
    The pull out key indicator lights up if the ignition key should be pulled out.

14. **Insert key indicator**
    The insert key indicator lights up if the ignition key should to be inserted.

15. **Travel speed indicator**
    The travel speed indicator lights up when the travel speed mode is activated.

16. **Fuel stock indicator**
    The fuel level indicator lights up in the event of low fuel and requests refuelling.

https://truckmanualshub.com/

17. **Pre-glowing indicator**
    The pre-glowing indicator lights up when switching the starter switch to the RUN position. When the indicator goes off, it is possible to start the engine.

18. **Engine oil pressure indicator**
    The engine oil pressure indicator lights up when the oil pressure is below the reference value.

Other equipment at the operator's place

Other equipment located at and around the operator's place is described below.

Interior lighting (cab version)

An interior light (1) is located to the right of the cab roof. Use the switch (2) to turn it on and off.

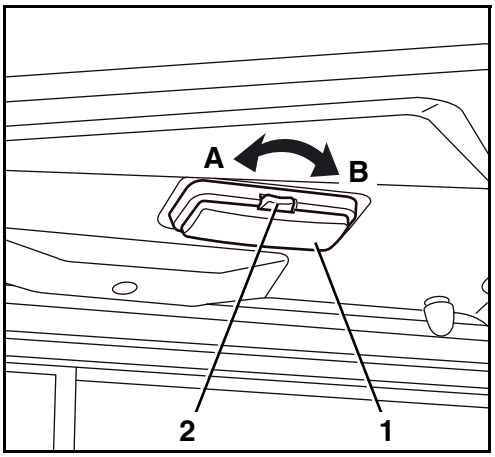

Fuse box

The fuse box (1) is located below the operator's seat behind a cover.

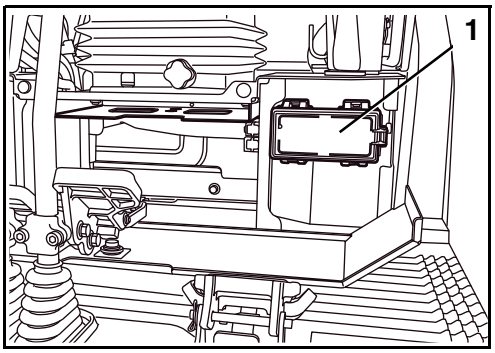

https://truckmanualshub.com/

Tool compartment

The tool compartment (1) is located below the operator's seat behind a cover plate.

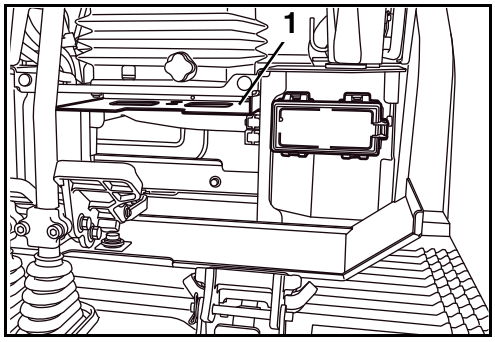

Cup holder

There is a cup holder (1) in the right control console.

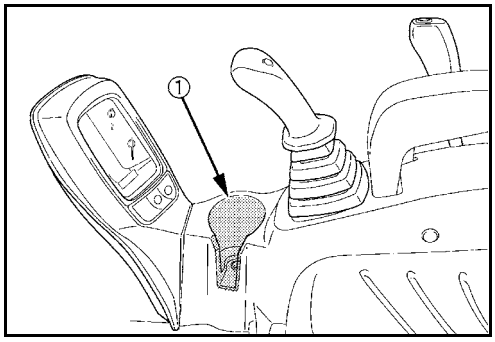

12-V socket

A 12-V electrical outlet (1) is located on the right-hand control console for the purpose of connecting an external electric device.

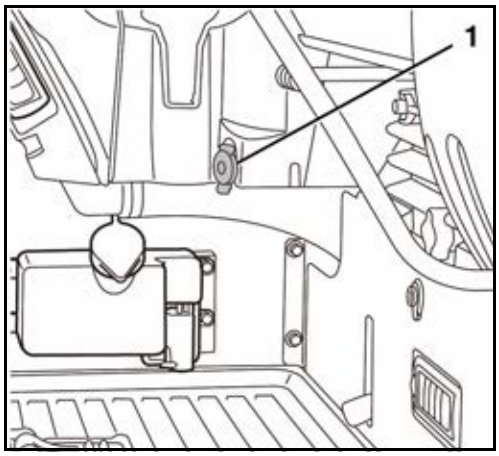

https://truckmanualshub.com/

Other equipment to be found on the machine

Other equipment located on and around the machine is described below.

Main battery

The main battery (1) is located on the right side of the vehicle under the side cover.

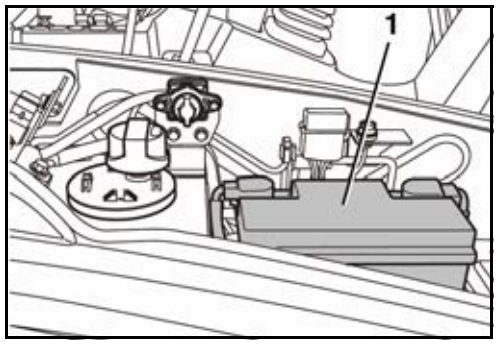

Battery isolator

The battery isolator (1) can be used to cut off the main power circuit. The battery isolator is on the right vehicle side under the side cover.

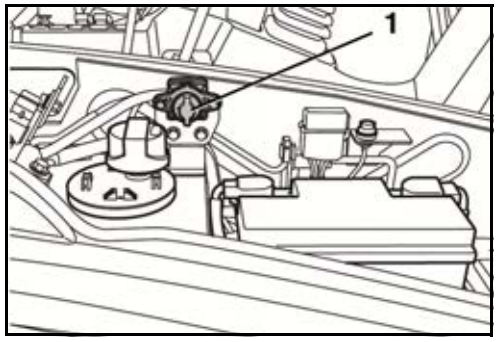

Return change valve for direct return flow

Depending on the mode of operation of a given attachment, the return flow of the hydraulic oil must occur either via the control valve (indirect return flow) or directly to the hydraulic oil tank (direct return flow).

The return change valve for direct return flow (1) is used to toggle the setting between "indirect return flow" and "direct return flow".

The return change valve for direct return flow is located behind the left service cover on the swivel frame.

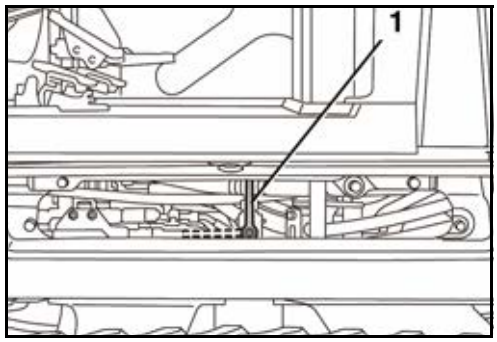

https://truckmanualshub.com/

Tank filler neck and fill level monitor

The tank filler neck (2) is located under the side cover on the right of the machine.

The fill level monitor (1) is located to the left of the tank filler neck and it indicates the fuel level when refuelling.

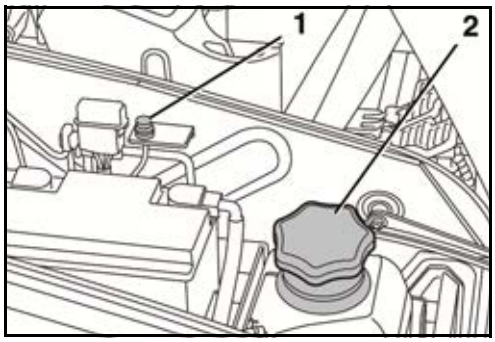

Main fuses

The main fuses (1) of the excavator are situated above the battery.

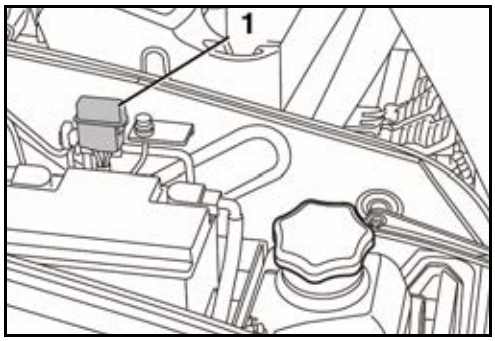

Rear view mirror

The rear-view mirrors (1) allow the operator to see behind the vehicle. The rear-view mirrors can be adjusted for optimum visibility of the respective areas.

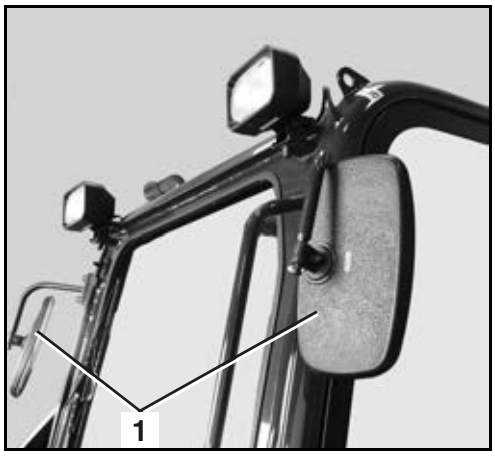

https://truckmanualshub.com/

Heating and ventilation (cab version)

Turning on and switching off of the heater fan and the air volume control is via the blower switch (1) on the right control console.

Using the blower switch, air volume can be adjusted at two levels LO and HI, where level HI stands for max. blower output.

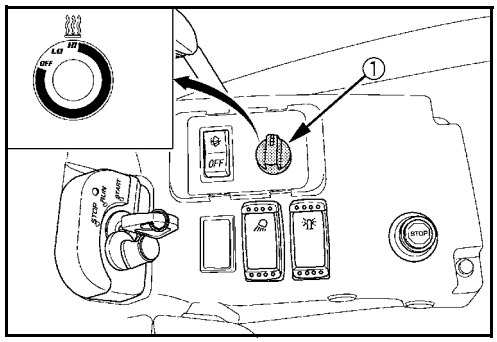

The air is drawn in as fresh air from the right cab wall or recirculates within the cab.

With the lever (1) the air intake can be switched between recirculated air (A) and fresh air (B).

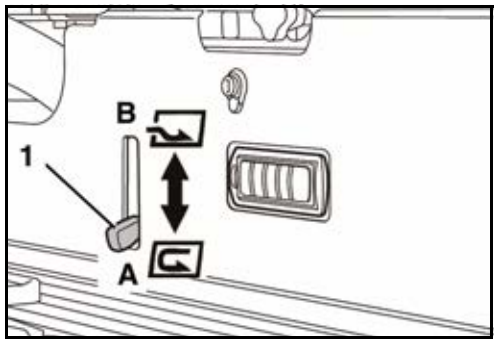

The air is guided to the air nozzles (1) via the heat exchanger.

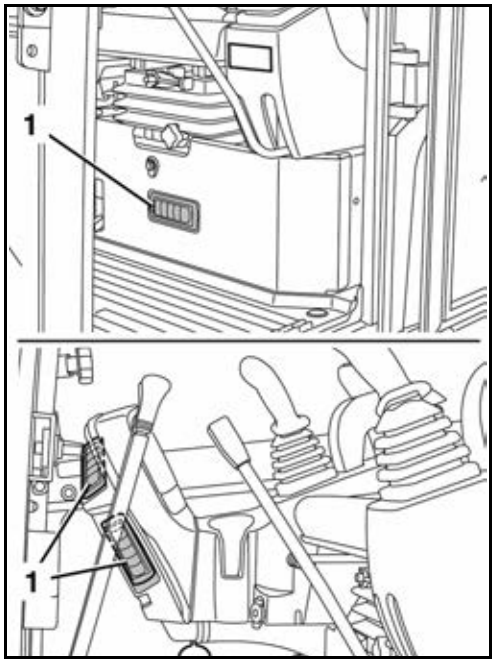

https://truckmanualshub.com/

The heater valve (1) in the engine compartment regulates the supply of hot water to the heat exchanger from the cooling cycle.

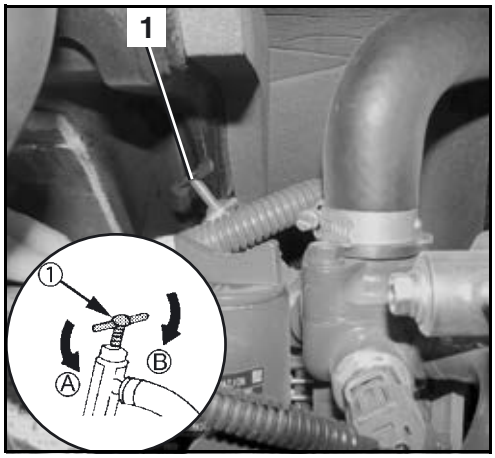

Hydraulic oil tank

The hydraulic oil tank contains the suction filter and the return filter.

1. Oil fill opening for hydraulic oil
2. Breather filter
3. Hydraulic oil tank
4. Sight glass for hydraulic oil level

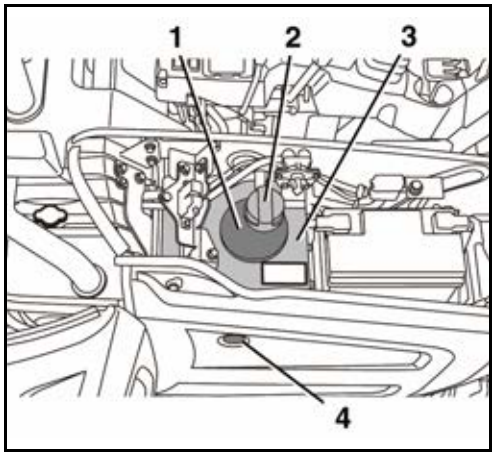

Coolant radiator and hydraulic oil radiator

To the rear of the right ventilation grille at the rear of the excavator, are the coolant radiator and hydraulic oil radiator.

1. Coolant radiator
2. Hydraulic oil radiator

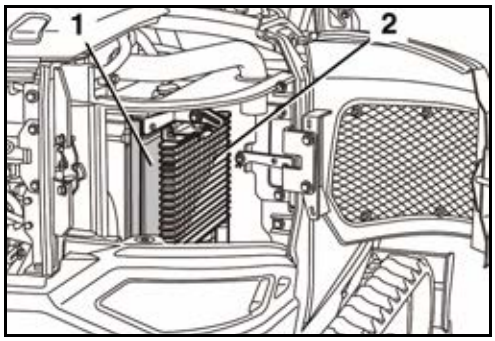

https://truckmanualshub.com/

Engine compartment

The engine compartment (figure below) is positioned at the rear of the swivel frame; it is covered by a lockable hinged cover.

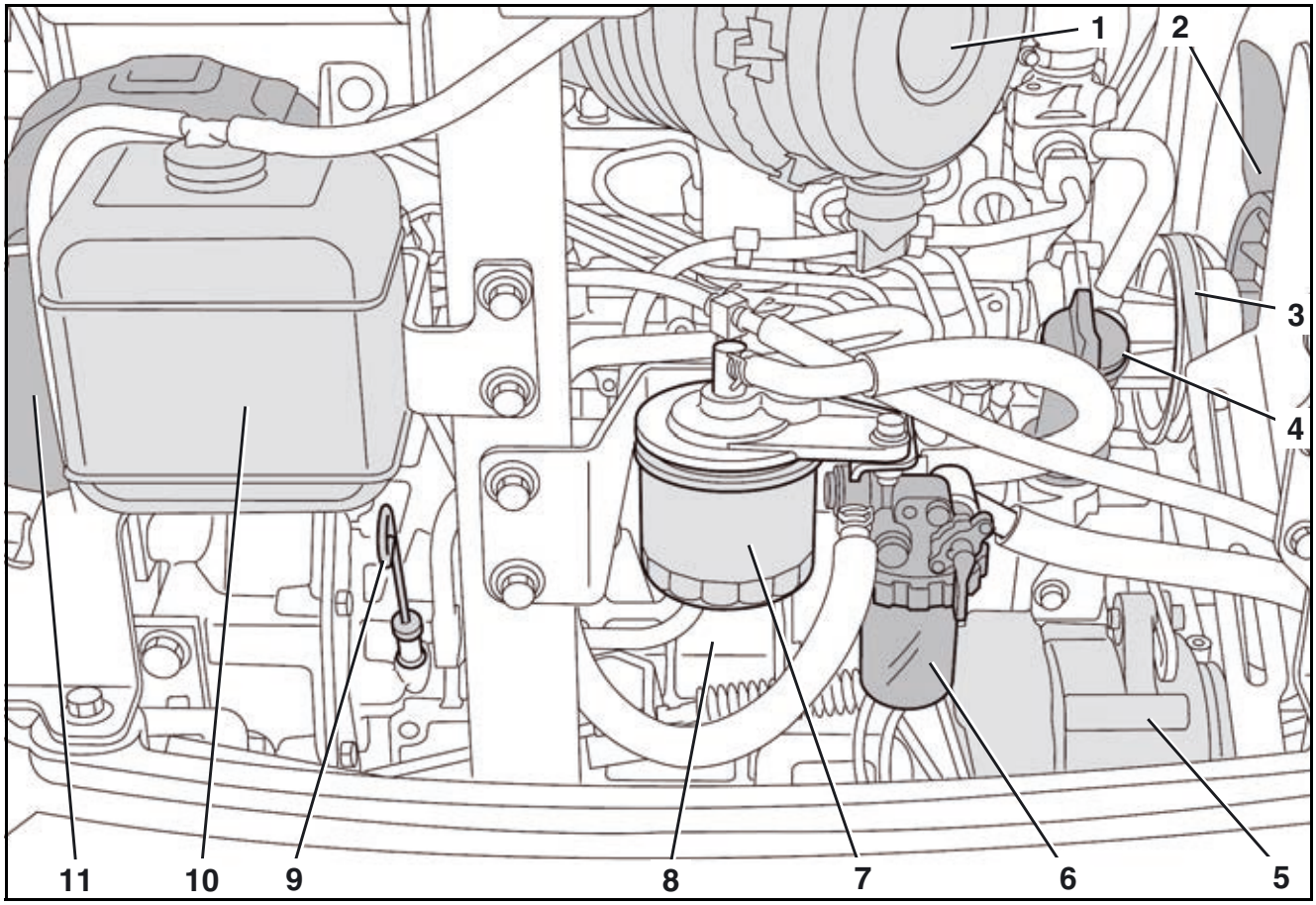

1. Air filter
2. Cooling fan
3. V-belt
4. Oil filler opening
5. Alternator
6. Water separator
7. Fuel filter
8. Engine
9. Oil dipstick
10. Muffler
11. Coolant expansion reservoir

https://truckmanualshub.com/

https://truckmanualshub.com/

OPERATION

Safety rules for operation

- The safety instructions (page 13) must be followed.
- The excavator may only be operated in accordance with the “Approved use” section (page 15).
- The machine may only be operated by instructed or trained personnel (page 10).
- Do not operate the excavator when under the influence of drugs, medication or alcohol. Stop operation when getting tired. The operator must be physically capable of operating the excavator safely.
- The excavator should only be operated if all protective devices are fully operational.
- Before starting or working with the excavator, make sure that there is no danger for any person nearby.
- Before starting the excavator, it must be checked for external damage and operability, and the pre-start checks must be carried out. If defects are detected, the excavator should only be taken into operation after the defects have been repaired.
- Wear tight-fitting working clothes in accordance with the trade association regulations.
- During the operation of the excavator, nobody except the operator is allowed to be inside the cab or get on the excavator.
- For getting on and off, the swivel frame should be positioned in an angle that allows the operator to use the crawler or the step (if applicable) to enter the cab.
- Always stop the engine when leaving the cab. In exceptional cases, e.g. for troubleshooting, the cab can also be left with the engine running. The operator must make sure that the left control console remains in an upright position. The controls may only be used while the operator is sitting on the operator's seat.
- During operation, it is forbidden to stretch any part of the body out of the window or cab door, such as arms, legs, or the body.
- If the operator leaves the excavator (e.g. for breaks or at the end of work), the engine must be stopped and the excavator must be secured against restarting by removing the key. The cab door must be locked. Before leaving the excavator, park the machine so that it cannot move.
- Whenever work is interrupted, the bucket must always be lowered to the ground.
- Do not allow the engine to run indoors, unless the room is equipped with an exhaust gas extraction system or otherwise well ventilated. The exhaust gas contains carbon monoxide, a colourless, odourless, and lethal gas.
- Never crawl under the excavator before the engine is stopped, the key is removed and the excavator is secured against moving.
- Never crawl under the excavator if it is only raised with the bucket or the dozer. Always use suitable supports.
- To increase the machine’s stability, we recommend lowering the bulldozer blade onto the ground. The dozer may only be used if the dozer cylinder is equipped with a pipe safety valve.

https://truckmanualshub.com/

Safety for children

Children are normally attracted to machines and their operation. If children are in the vicinity of the machine and are not at a suitable distance and in the field of vision of the operator, this can lead to serious accidents or even death of the children.

Always observe the following rules of conduct:

- Never assume that children will remain where you last saw them.
- Keep children far away from the working area and always under the supervision of other responsible adults.
- Be vigilant and switch the machine off when children enter the working area.
- Never let children drive with you on your machine, there is no safe place for passengers. Children could fall off the machine and be run over or affect the control of the machine.
- Children must never operate the machine, even under the supervision of an adult.
- Never let children play on the machine or attachments.
- Be particularly careful when manoeuvring. Look behind and down below on the machine and ensure that there are no children in the manoeuvring area.
- Before leaving the machine, park it so that it cannot move. When leaving the machine (e.g. for breaks or at the end of work), stop the engine, remove the key and close the cab door, if present.

Guiding the operator

- If the operator's working and driving area is obscured, the operator must be supported by a guide.
- The guide must be capable of performing this kind of work.
- Before starting work, the guide and the operator must agree on the necessary signals.
- The guide's position must be clearly visible to the operator.
- The operator must stop the excavator immediately if eye contact with the guide is interrupted.
  → As a rule, either the excavator or the guide may move, never both at once!

https://truckmanualshub.com/

Working in the vicinity of overhead power lines

When working with the excavator in the vicinity of overhead power lines and tram lines, a minimum distance as specified in the following table must be maintained between the excavator and its attachments and the power line.

Rated voltage [V]		Safe distance [m]
	up to 1 kV	1.0 m
over 1 kV	up to 110 kV	3.0 m
over 110 kV	up to 220 kV	4.0 m
over 220 kV	up to 380 kV or when rated voltage is unknown	5.0 m

If safe distances cannot be maintained, the power lines must be switched off in coordination with their owner or provider and secured against turning on again.

When approaching overhead power lines, any possible movements of the excavator must be taken into consideration.

Unevenness of the ground or sloping the excavator can reduce the safe distance.

Wind can cause the overhead power lines to sway, thus reducing the safe distance.

In case of a power cross-over, leave the danger zone with the excavator, if possible, by taking suitable measures. If this is not possible, do not leave the operator's place, warn any approaching persons of the danger, and have the power switched off.

Working in the vicinity of underground power lines

Before starting with excavation work, the owner of the excavator or the person responsible for the work must check if there are any underground power lines in the proposed working area.

If there are underground power lines present, the position and routing of the power lines must be determined together with the owners or operators and the required safety measures must be determined.

If power lines are encountered or accidentally damaged, the operator must stop working immediately and inform the responsible person.

Initial operation

Before initial operation, the excavator must first be checked visually for external transit damages and checked if the shipped equipment is complete as ordered.

- Check fluid levels as described in the "Maintenance" section (page 135).
- For a description of all operating features, refer to the "Operating the excavator" section (page 77) as well as the following sections.

If defects are detected, please inform your dealer immediately.

https://truckmanualshub.com/

Getting on the excavator

Risk of injury when entering or leaving the machine!
When entering or leaving the machine without a secure halt, you can slip and fall down.
- *Do not jump onto or off of the excavator*
- *Always hold the hand rail tightly with one hand*
- *Pay attention to stepping safely*

- Move the left control console (2) up as far as possible by pulling the control lever lock (1) up.

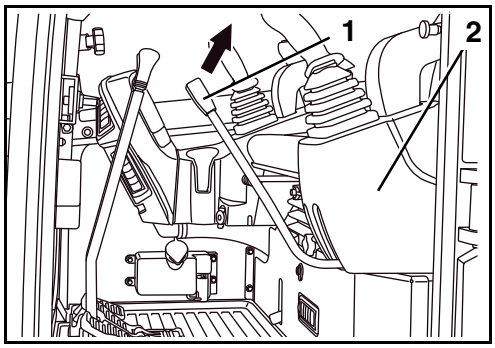

The control console must remain in this position until the engine is started, as the engine can only be started in this position.

- Get into the excavator, use the chain as a stepping aid.
- Sit down on the operator's seat.

Explanation of the display indications

If the starter switch is switched to the RUN position, the time (3), the engine speed (4) and the hours of operation (5) can be indicated on the display (2).

For the selection of the display indication, press the display selector switch (1) until the desired indicator appears on the display.

The following function can be carried out when the key is not in the starter switch.

- Press the display selector switch (1).

On the display, the hours of operation are indicated for about 10 seconds.

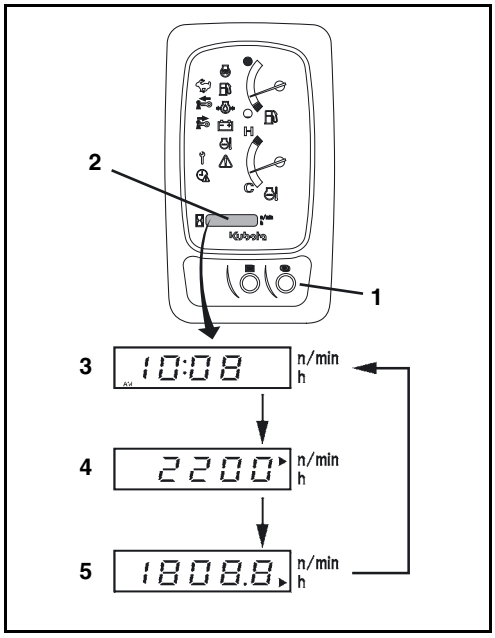

https://truckmanualshub.com/

Setting the clock

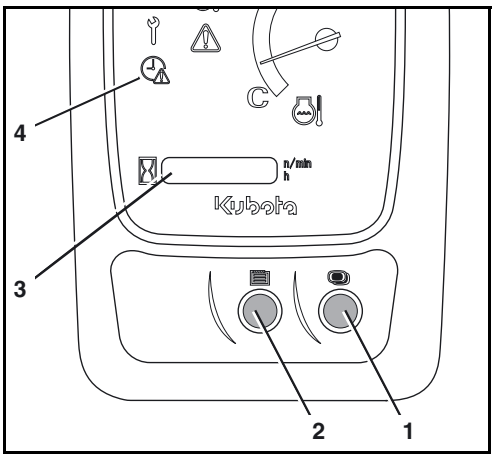

- Turn the starter switch to the RUN position.
- Press menu button (2).
- Press display selector switch (1) until the clock is selected on the display (3).

By pressing and holding of the display selector switch (1) the following are selected in this order: year, month, day, 12 or 24 hour indicator, hours and minutes for adjusting.

- Press display selector switch (1) and hold down.

When carrying out the setting process, the value to be adjusted will flash on the display and the indicator (4) on the display and control unit.

- Press menu button (2) to reduce the numerical value.
- Press display selector switch (1) to increase the numerical value.
- To store the setting of the clock and to finish, press the display selector switch (1) once more and hold it down.

If the battery is separated from the electricity network, the clock settings are deleted. After recommissioning the indicator, "Set clock" blinks and requests the renewed setting of the clock.

https://truckmanualshub.com/

Running in the excavator

During the first 50 hours of operation, the following points should be adhered to in all cases:

- Warm up the excavator at an average engine speed and with a low load; do not let it warm up at idling position.
- Do not overload the excavator.

Special maintenance instructions

Damage to equipment due to contaminated grease!
The grease plays a particular and important role in the running-in of the excavator. The movable components are not yet broken in and generate many fine particles in the initial hours of operation that drop into the grease. Changing the oil in due time removes the abraded metal particles, prevents damage to equipment and preserves the service life of the components.

- *Observe and adhere to oil change intervals!*

- Change the oil in the final drives after the first 50 service hours.
- The hydraulic system's return filter should be changed after the first 250 service hours.

Pre-operational services

For the performance of the services, the excavator must be parked on level ground. The engine must be turned off. The left control console must be raised.

- Open the engine compartment cover (page 144). Close engine compartment cover after completion of the activities.
- Open the side cover (page 144). Always close the side cover after the work is done.
- Open the right ventilation grille (page 145). Close the ventilation grille after completing the tasks.

Walk-around inspection

- Check the excavator for visible damage, loose nuts and screws, and leaks.
- Check for any accumulated dirt adjacent to hot components, e.g. engine, muffler, exhaust manifold/tubes and remove if necessary.
- Check for accumulated residues from leaves, straw, pine needles, twigs, bark and other flammable materials and remove if necessary.
- Check the danger, warning and safety labels on the machine. They must be complete and legible (page 17).
- Ensure that the emergency hammer is present for the cab version (page 28).

https://truckmanualshub.com/

Dust valve - cleaning

- Empty the dust valve (1) on the air filter cover (2) by pressing it together several times.
- If it is very dirty, remove the air filter and clean it (page 154).

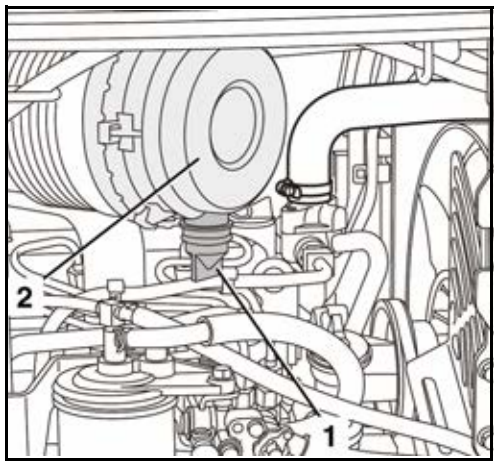

Engine oil level - check

- Pull out the oil dipstick (1) and wipe it with a clean cloth.
- Insert the oil dipstick completely and pull it out again. The oil level should be in the "A" area. If the oil level is too low, add engine oil (page 158).

If the oil level is too high or too low, the engine might become damaged during operation.

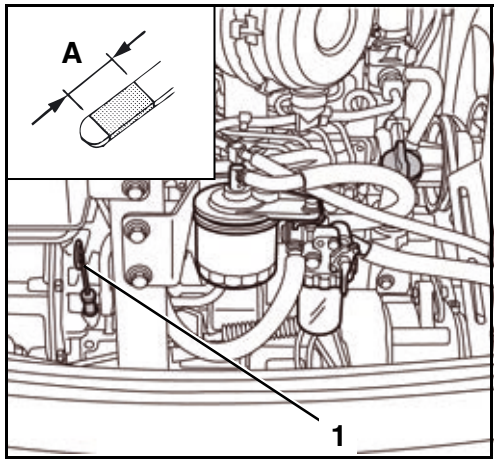

Coolant level - check

- Check the level of the coolant in the expansion tank (1).

The fluid level must be between FULL (A) and LOW (B).

If the coolant level is below the LOW mark, refill coolant (page 117).

If the coolant level is below the LOW mark a short time after adding coolant, then the cooling system is leaky. The excavator may only be started again after the fault is repaired.

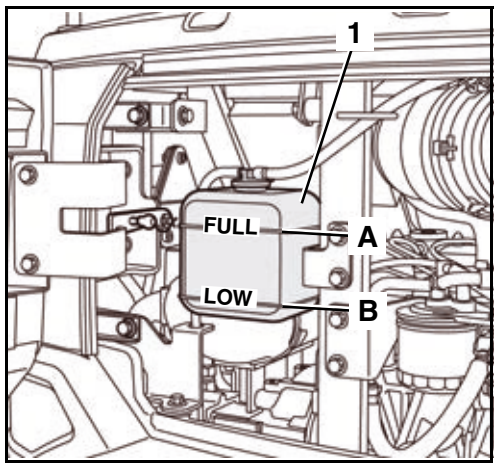

https://truckmanualshub.com/

Coolant radiator and oil cooler - check

- Walk-around inspection of coolant radiator (1) and oil cooler (2) for tightness and dirt.

If there is any dirt etc. on the radiators:

- Clean coolant radiator (1) and hydraulic oil radiators (2) from the engine with a water jet or a compressed air gun. Do not use high-pressure cleaners.

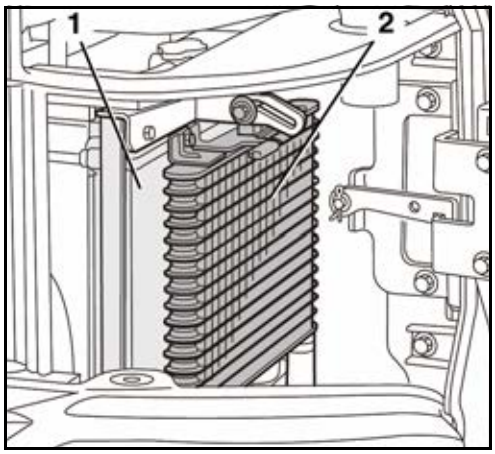

- Remove the screw (1) and pull on the handle (2) of the oil cooler (3) to fold it away from the coolant radiator.
- Particular care must be devoted to the space between the radiators because foliage often collects at this point.
- After cleaning, check coolant radiator and hydraulic oil radiator for damage.
- Finally, fold the oil cooler (3) back and tighten the screw (1).

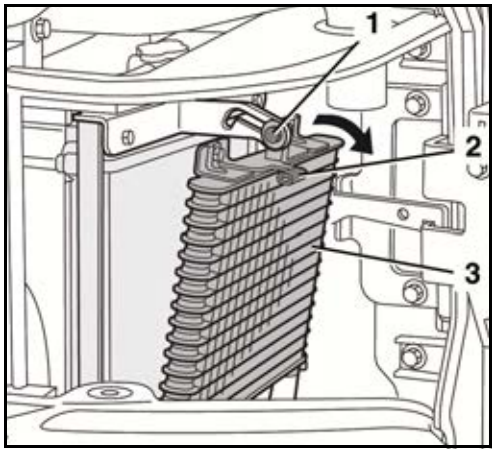

V-belt - check

STOP

The engine must be switched off and the key removed! Do not attempt to grasp rotating or moving parts.

- Press in the V-belt (1) at position "A". The V-belt must give way for approx. 7-9 mm (pressure: 6-7 kg). Adjust the V-belts if necessary (page 156).
- Check condition of the V-belt, it must not have any cracks or other damage. Replace the V-belts if necessary.

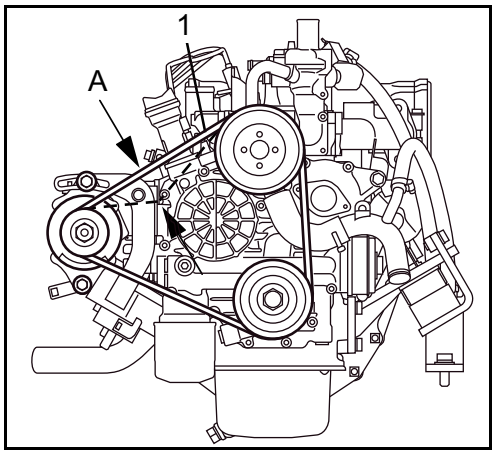

https://truckmanualshub.com/

Exhaust system leakage - check

- Check the exhaust system for leaks and tightness (formation of cracks).

If the inspection is carried out when the engine is warm, there is a risk of burns in the exhaust system.

- If the exhaust system is leaky or loose, the excavator may only be taken into operation after the defects are eliminated.

Hydraulic oil level - check

The following conditions must be met in order to determine the exact hydraulic oil level.

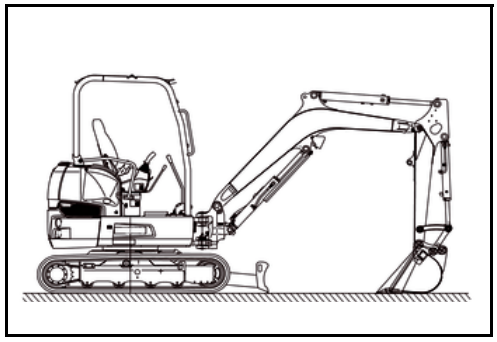

– The temperature of the hydraulic oil is between 10 °C and 30 °C.
– The hydraulic cylinders for the boom, arm and bucket are extended halfway.
– Boom swing mechanism is in the centre position.
– Dozer is lowered to the ground.

- Check the oil level in the sight glass (1).

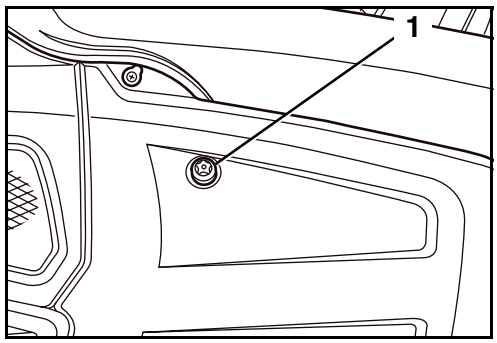

The oil level should be 1/2 to 3/4 of the way up the sight glass. Carefully check the position of the hydraulic cylinders again before topping up the oil.

Water separator - check

A red plastic ring in the water separator (1) floats up with the water level. If the ring is floating up, clean the water separator (page 154).

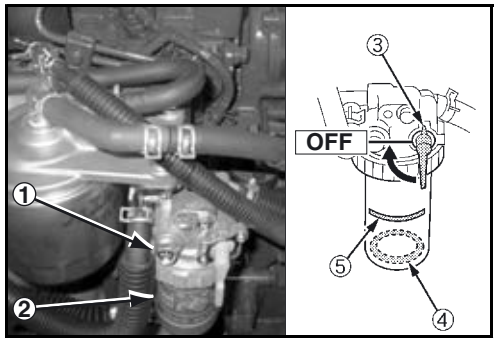

https://truckmanualshub.com/

Bucket bolt and bucket linkage bolt - grease

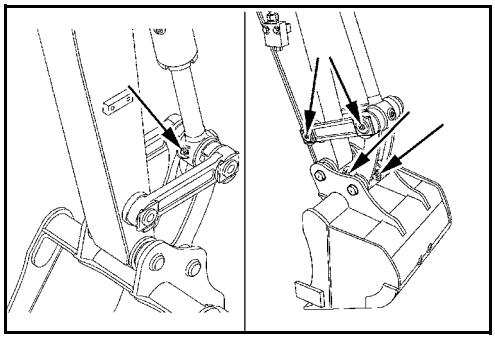

- Start the engine (page 77).
- Position arm and bucket as shown in the figure.
- Stop the engine (page 79).
- Lubricate all greasing points (see figure to the right) – see the "Recommended lubricants" section (page 142) – by applying grease until fresh grease emerges.

Wipe emerged grease off immediately and store dirty cleaning cloths in the containers provided for disposal.

Swing bracket - grease

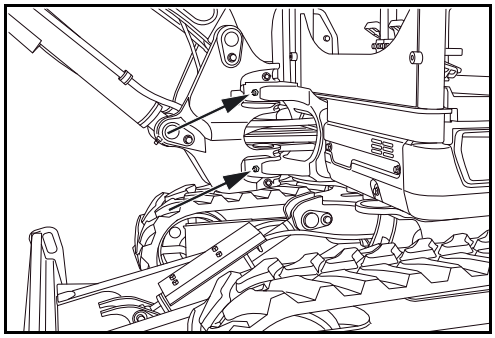

- Lubricate both greasing points (see figure to the right) – see the "Recommended lubricants" section (page 142) – by applying grease until fresh grease emerges.

Wipe emerged grease off immediately and store dirty cleaning cloths in the containers provided for disposal.

https://truckmanualshub.com/

Other greasing points - grease

- Start the engine (page 77).
- Lower the bucket and the dozer onto the ground. Stop the engine, remove the key. Refer to the "Operating the controls during excavation work" section (page 88).

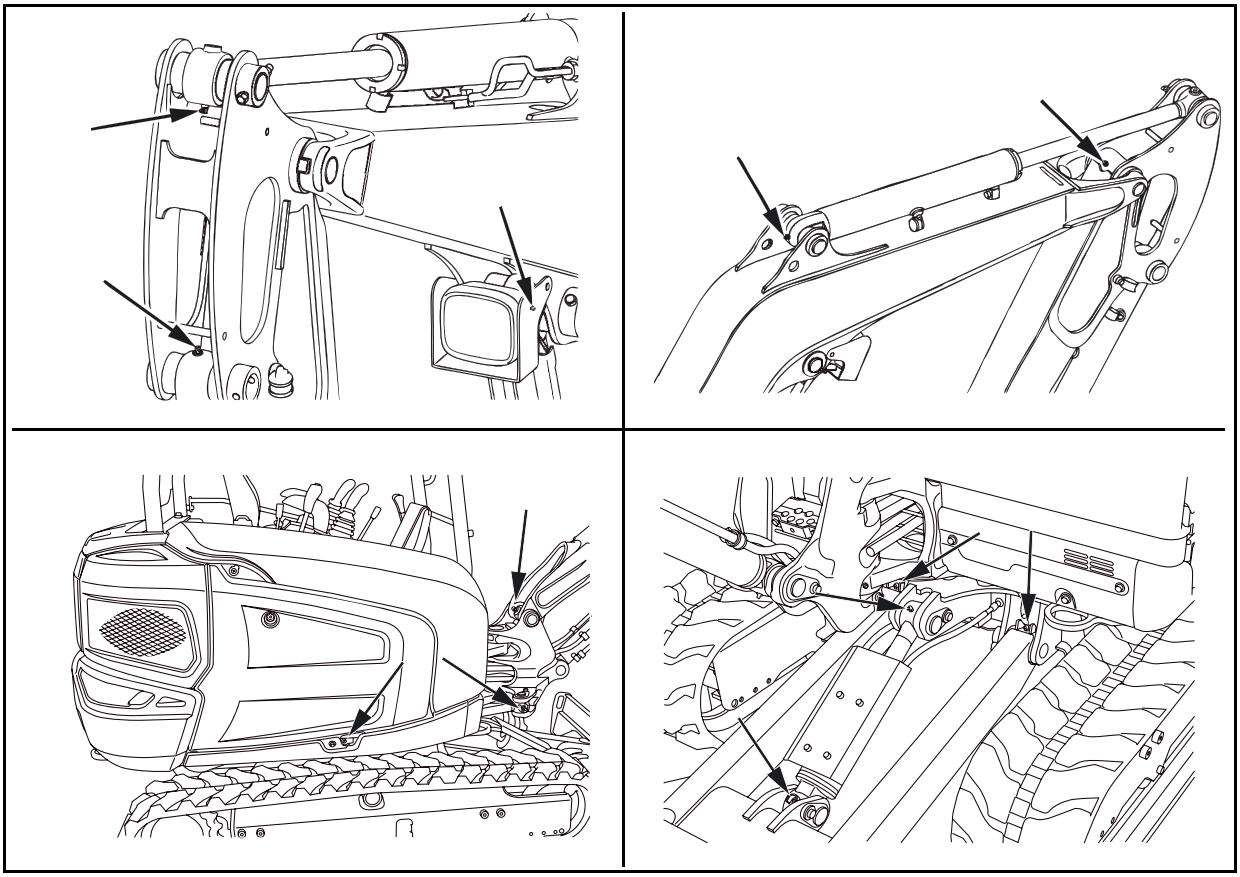

- Lubricate all greasing points with grease – see the "Recommended lubricants" section (page 142) – until fresh grease emerges.

Wipe emerged grease off immediately and store dirty cleaning cloths in the containers provided for disposal.

https://truckmanualshub.com/

Fuel level - check

The fuel gauge (1) indicates the relative amount of fuel in the tank. The less fuel that is left in the fuel tank, the lower the needle of the gauge.

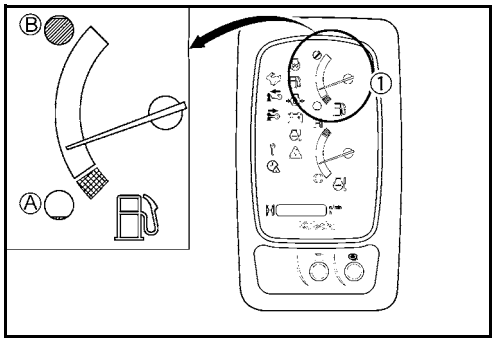

- Turn the starter switch to the RUN position.
- Check fuel situation by looking at the fuel gauge on the display and control unit.
- Refuel excavator if there is too little fuel left (page 118).

Ensure that the fuel tank is not running on empty. Otherwise, air will get into the fuel system. The fuel system must then be bled.

Washer system liquid level (cab version) - check

Do not operate the washer system if its reservoir (1) is empty as running dry could damage the pump.

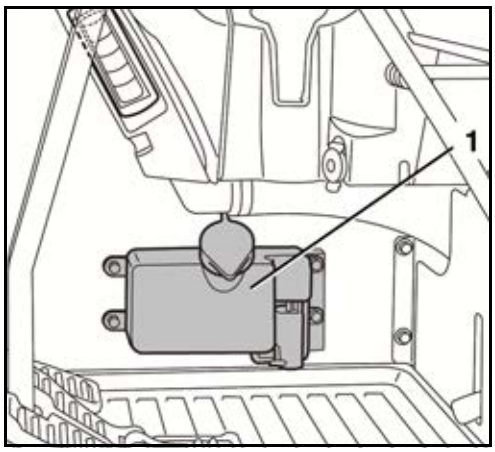

- Check whether the liquid reservoir is full enough.

If the filling capacity is too low, fill washer system reservoir (page 116).

Electrical instrumentation - check

- Check the function of the interior light (page 111).
- Check the function of the working light (page 112).
- Check the function of the rotary beacon (accessories) (page 111).
- Check the function of the ventilation fan. For the subsequent heating operation, ensure that the heater valve is open in the engine compartment (page 108).
- Check the function of the washer system (page 110).
- Check all accessible electric cables, connectors and connections for condition and tightness.
- Repair or replace damaged parts.
- Check the fuse box and fuse holders for oxidation and dirt, clean if necessary.

https://truckmanualshub.com/

Setting up the workplace

Opening and closing the cab door (cab version)

Opening the cab door from outside

- Unlock the cab door at the door lock (3).
- Open the cab door by pulling at the door handle (1) and lock the door by attaching the hook (2) at the cab wall.

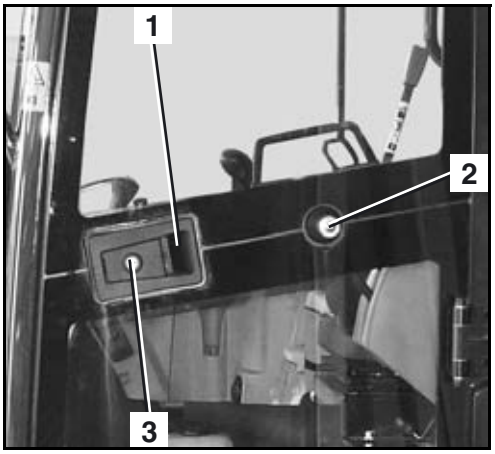

Closing the cab door

- Pull out release lever (1) and pull cab door shut until it latches.

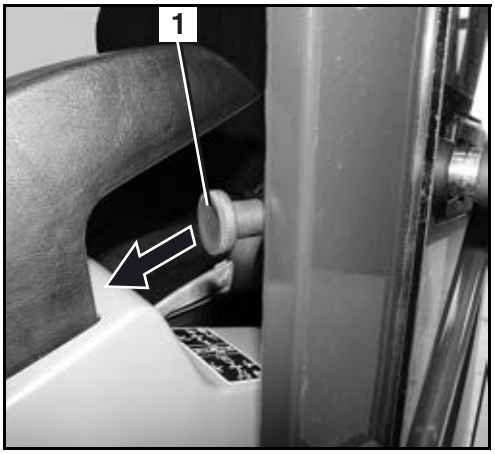

Opening the cab door from the inside

- Pull the release lever (1) and open the door. If the cab door is not closed again right away, lock the door at the cab wall.

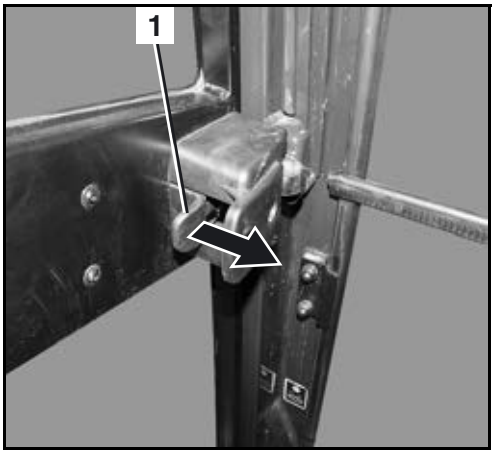

https://truckmanualshub.com/

Opening and closing the windows (cab version)

Front window

Always lock the front window. Do not stay in the cab and operate the excavator with the front window unlocked. When opening the window, always keep both hands on the grips (2) to prevent injury by pinching or crushing.

The front window is opened and closed from the operator's seat.

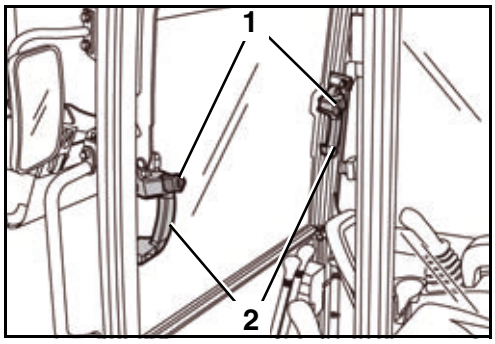

Opening

- Press the right and left lock bars (figure above/1) inwards simultaneously and push the front window upward at both grips (figure above/2) in the guide rails as far as the stopper. Lock the front window at the endpoint. Check that the front window is locked.

Do not release the handles when raising the window as the front window could suddenly rise in an uncontrolled way and strike the operator's head. Please follow the safety instructions on the side window.

Closing

- Press the right and left lock bars (figure above/1) simultaneously and, using both grips (figure above/2), push the front window forward within the guide rails up to the stopper. Lock the front window at the stopper by releasing the lock bars. Check that the front window is locked.

Side window

- Pull the grip (1) to release the lock and pull side window open to the rear or to the front.
- To close the side window, slide it forward or backward until the lock snaps in at the window frame.

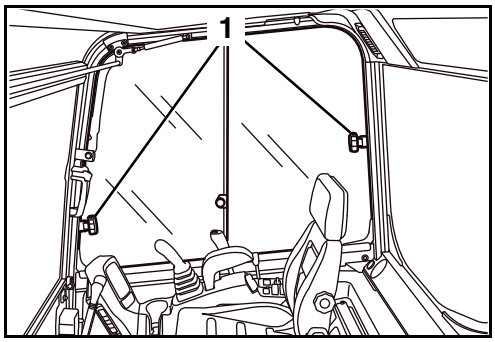

The front side window cannot be opened when the rear side window is completely open.

https://truckmanualshub.com/

Adjusting the operator's seat

Adjust the operator's seat so that fatigue-free and comfortable working is possible. It should be possible to operate all controls safely.

Horizontal seat adjustment (seat stand-off)

- Pull the horizontal seat adjustment lever (5) up and move the seat to the desired position by moving it forward or back, then release the lever.

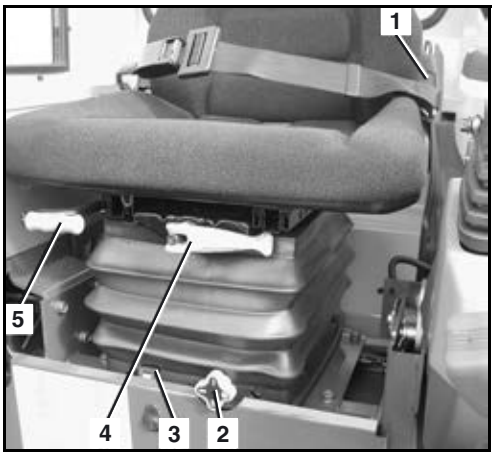

STOP

Check that the seat is locked in place.

Spring adjustment (operator's weight)

- The seat can be set to the weight of the operator using the toggle (figure above, position/4). Refer to the weight indicator (figure above, position/3) when choosing your setting.
- Turning the grip clockwise increases spring tension (heavier operator), turning the grip anticlockwise reduces spring tension (lighter operator).
- Adjust the seat so that a comfortable cushioning is achieved.

Seat height adjustment (knee height)

- To adjust the seat height, turn the rotary knob (figure above, position/2). The seat height depends on the setting of the level (0, I, II, III), where level 0 is the lowest option. Adjust the seat height in relation to its horizontal position so that the foot controls can be operated safely.

Backrest adjustment

- Take the load off the backrest and pull up the backrest adjustment lever (figure above, position/1). Set the backrest to the desired sitting position and release the lever. The backrest should be adjusted so that the operator can safely operate the control levers with the back resting completely on the backrest.

https://truckmanualshub.com/

Rear view mirrors adjustment

Check that the rear-view mirrors (1) are positioned properly and, if necessary, adjust the mirrors until optimum visibility is ensured.

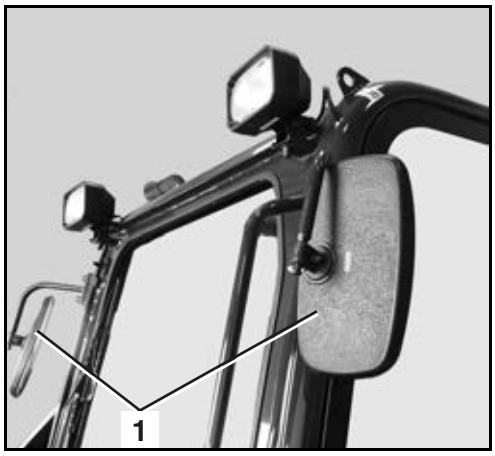

Seat belt

- Buckle up the seat belt (1).
- Check that the seat belt is fastened tightly.

Do not operate the excavator without the seat belt fastened.

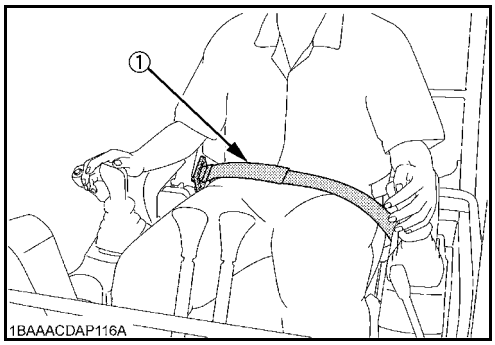

https://truckmanualshub.com/

Operating the excavator

To operate the excavator safely, see the following sections.

Safety instructions for starting the engine

The excavator is equipped with an anti-theft system (page 122).

When starting the excavator for the first time on a work day, carry out the pre-operational services (page 66).

The safety rules for operation (page 61) are to be observed by all means!

Make sure that there are no persons within the excavator's working area. It is essential to warn persons in the vicinity of the excavator by briefly honking the horn.

Make sure that all operational controls are in the neutral position.

Starting the excavator is only allowed when the operator is sitting on the operator's seat.

Before starting the engine, make the necessary operator station adjustments (page 73).

If the engine does not start immediately, cease the starting procedure. Wait a short time before reattempting a start. If the engine does not start after several attempts, contact skilled personnel. If the battery is uncharged, jump-start the excavator (page 114).

Do not use start pilot or similar substances as a starting aid.

Starting the engine

- Push throttle lever (1) in the following direction .
- Insert the key into the starter switch (2) and turn it to the RUN position.

The excavator is equipped with an anti-theft system. If the excavator is started with the wrong key, the indicator "Pull out key" (figure below/6) lights up on the display and control unit.

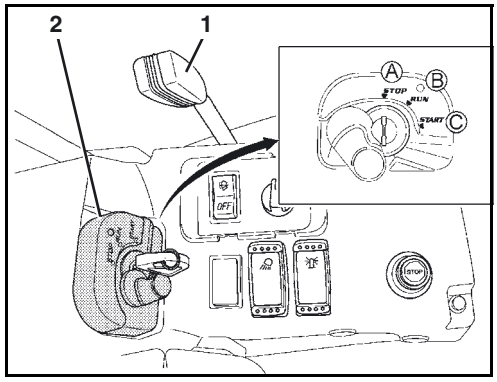

https://truckmanualshub.com/

If the bunch of keys contains metal parts, such as key rings or other keys, the engine might fail to start.

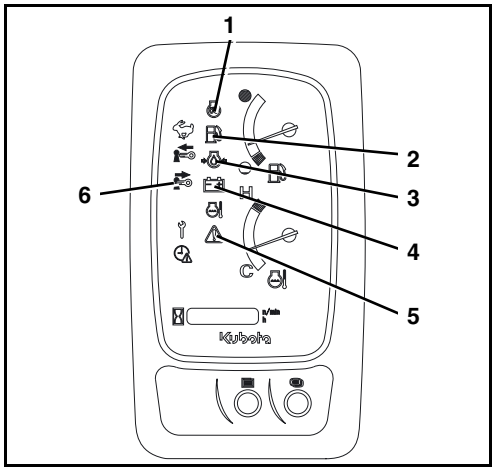

If the control lever lock is not raised, the warning light (5) lights up yellow, the engine cannot be started.

The pre-glowing indicator (1) lights up briefly. The engine can be started after it goes off.

The engine oil pressure indicator (3) lights up and goes out after the engine has been started.

The charge indicator (4) lights up and goes out after the engine has been started.

If the indicators do not light up when the starter switch is in the RUN position, remove the key and contact suitably skilled personnel.

If the fuel reserve indicator (2) flashes yellow, there is only a little fuel left in the tank, refuel excavator (page 118).

- Raise the control lever lock.
- Turn the starter switch to the START position and hold it there until the engine has started. Release the starter switch.
- Lower the left control console and make sure that the control lever lock engages.
- Let the engine run at middle speed until the operating temperature has been reached.

After the engine has reached its operating temperature, set the engine speed required for operation:

- Pull throttle lever in the direction of until the required revolutions per minute have been reached.

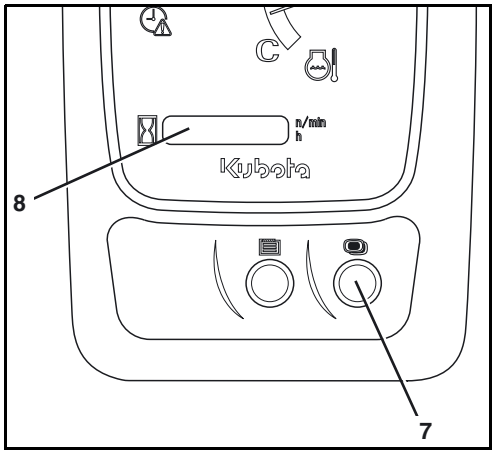

The display selector switch (7) allows you to switch between the indication of time, engine speed or hours of operation on the display (8).

https://truckmanualshub.com/

The time (1) indicates the current time of day in hours and minutes.

The speed indicator display indication (2) indicates the current engine speed.

The hour of operation indicator (3) indicates the hours of operation of the excavator performed up to now, regardless of the engine speed.

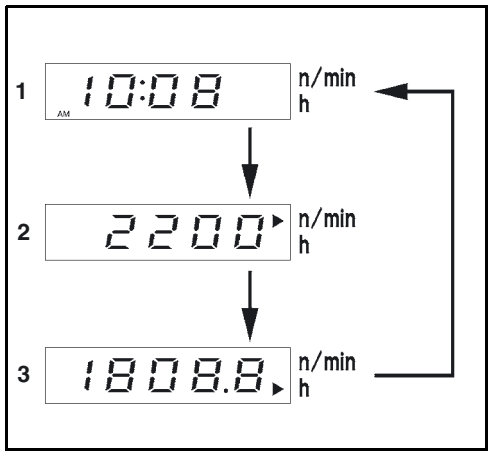

Check the displays and indicators during operation (page 79).

Stopping the engine

If the engine is to be stopped to take the excavator out of operation, the services for taking the excavator out of operation (page 107) must be carried out.

- Push throttle lever in the following direction .
- Raise the left control console.
- Turn the starter switch to the STOP position and remove the key.

If the engine cannot be turned off, please enable the engine stop knob (page 26).

Observation of the displays after starting and during operation

The operator must observe the display indicators and displays after starting and during operation.

The warning light (1) flashes red when a system fault or technical malfunction occurs. Stop the engine immediately! The warning light flashes yellow when the system issues a warning. Additionally, the display may show an error as in the figure on the right.

Clear the messages by taking appropriate steps, see Troubleshooting: Display indications (page 130), or contact skilled personnel if necessary.

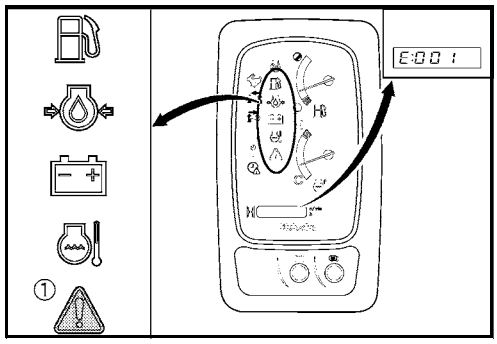

https://truckmanualshub.com/

If the engine oil pressure becomes too low during operation, the engine must be stopped immediately. The engine oil pressure indicator (1) lights up, the warning light (2) flashes red and the display message appears as in the figure on the right.

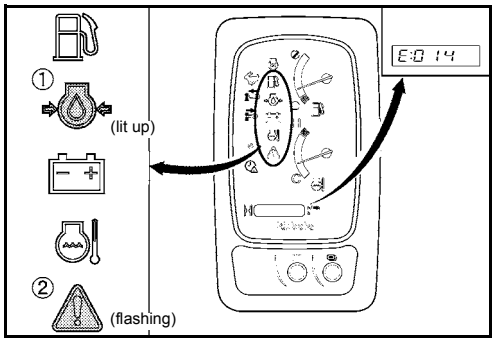

If a fault occurs in the charging system during operation, the engine must be stopped immediately. The charge indicator (1) lights up, the warning light (2) flashes red and the display message appears as in the figure on the right.

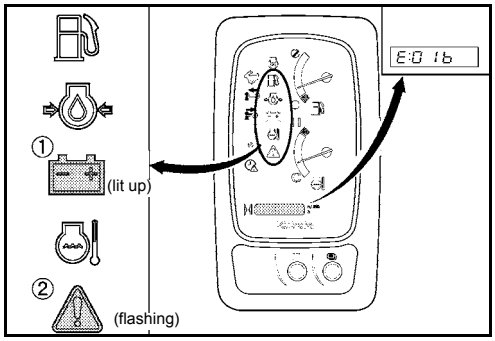

The needle of the coolant temperature gauge (1) should be in the area between "C" (cold) and "H" (warm). If the needle rises up to range "H" (Red), cool down the engine by changing into idle.

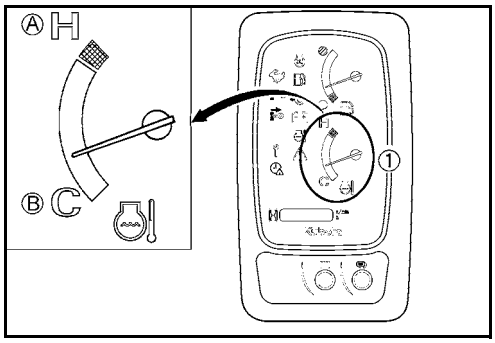

Allow the machine to idle for five minutes before switching off the engine!

- Check the level of the coolant in the expansion tank.

STOP

Do not open the radiator cap → Risk of scalding.

- Check the cooling system for leaks; if necessary, contact skilled personnel.
- Check if the V-belt is very loose or broken; if necessary, contact skilled personnel.
- Check if the air intake in the side panel, the radiator, and the oil cooler are very dirty. If necessary: Clean the radiator (page 68).

When the machine is being operated at or close to full capacity, the temperature of the coolant can rise a little higher than normal. The coolant temperature indicator (1) flashes and the message appears on the display as shown in the figure on the right.

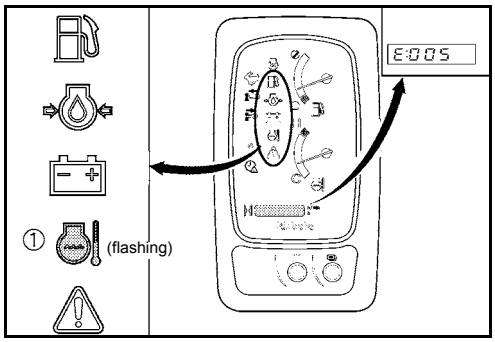

The message fades out after a short time and the coolant temperature indicator flashes as long as the temperature remains elevated.

Operate the machine only with reduced loads until the operating temperature is normal again.

https://truckmanualshub.com/

If the coolant temperature is too high, cool down the engine by changing into idle. The display message appears as in the figure on the right.

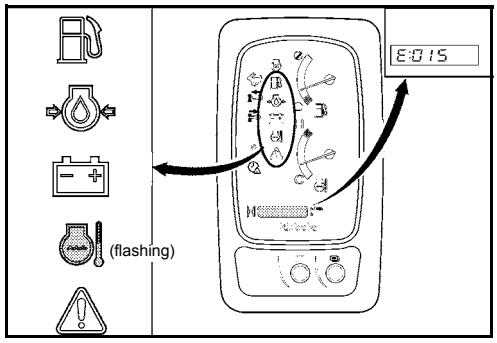

Allow the machine to idle for five minutes before switching off the engine!

- Check the level of the coolant in the expansion tank.

Do not open the radiator cap → Risk of scalding.

- If the water level is below the "LOW" mark, let the engine cool completely and add coolant (page 117).
- Check the cooling system for leaks; if necessary, contact skilled personnel.
- Check if the V-belt is very loose or broken; if necessary, contact skilled personnel.
- Check if the air intake in the side panel, the radiator, and the oil cooler are very dirty. If necessary: Clean the radiator (page 68).
- Watch the fuel gauge (1).

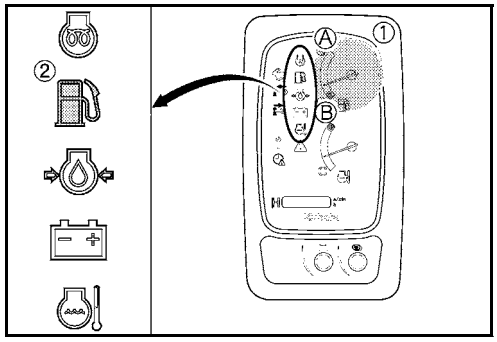

The needle indicates the relative amount of fuel in the tank. As fuel is used up during operation, the needle slowly descends.

When the fuel tank is full, the needle points to the top (A).

When the fuel tank is empty, the needle points to the bottom (B).

When the fuel reserve indicator (2) is lit, there is only a little fuel is left in the tank, refuel excavator (page 118).

When operating the excavator on a slope, the fuel is displaced to one side of the fuel tank. In this situation, when the fuel level is low, the fuel pump may not deliver enough fuel, causing the engine to stall. The machine must be refuelled and the fuel system bled.

When the fuel tank is empty, the machine cannot be operated. The machine must be refuelled and the fuel system bled.

Also stop the engine immediately if

- The engine speed rises or drops suddenly
- Abnormal noises are heard
- The excavating devices do not respond to the control lever as expected
- The exhaust fumes are black or white When the engine is still cold, white smoke for a short time is normal.

https://truckmanualshub.com/

Driving with the excavator

Models KX027-4 HI and KX030-4 HI are equipped with an automatic switching mechanism controlled by the torque, which automatically shifts the drive engines from travel speed into the more comfortable low speed, when driving at slower speeds with a heavy load or when turning, for example. However, for safety reasons, shifting back up into travel speed must always be done manually using the travel speed button.

- Adhere to the general safety rules (page 13) and the safety rules for operation (page 61).
- Carry out the pre-operational services (page 66).
- Start the engine (page 77).
- Observe the displays and indicators (page 79).

Ensure that the boom and the dozer are in the direction of travel as shown in the figure.

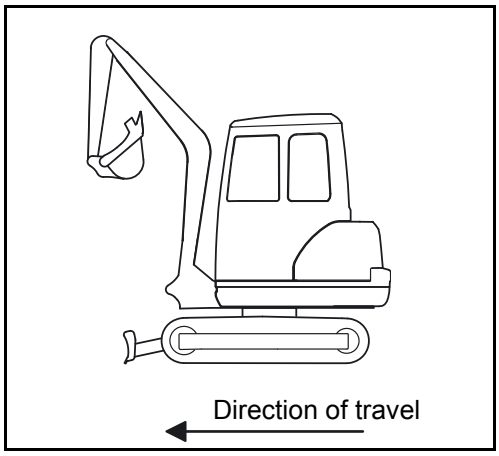

STOP

When driving with the excavator, always observe the following safety instructions.

When working on slopes, observe the tilt of the excavator (see figure).

Climbing performance → 36 % or 20°

Max. lateral sway → 27 % or 15°

- Keep the bucket as low as possible when driving.
- Check the ground for stability, and verify whether there are holes or other potential obstacles.

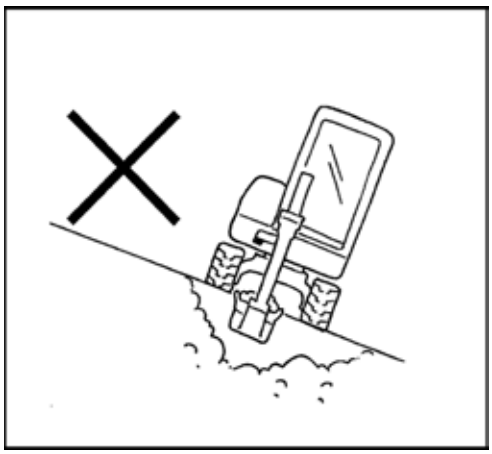

https://truckmanualshub.com/

- Approach overhangs and edges of ditches carefully as they could cave in.
- Drive slowly downhill, do not allow the vehicle speed to increase uncontrollably.
- Close the cab door (cab version).
- When driving, the bucket should be approx. 200 to 400 mm (A) above the ground (see figure).
- Raise the dozer to the top position.
- Select an appropriate engine speed.

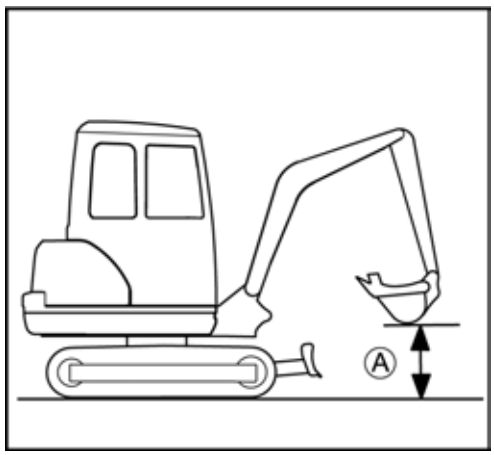

https://truckmanualshub.com/

Driving

- Push both drive levers forward simultaneously to drive the excavator straight ahead. Releasing the drive levers stops the excavator immediately.
  To reverse the excavator, pull both drive levers back simultaneously.

(A) Forward
(B) Reverse
(C) Straight ahead

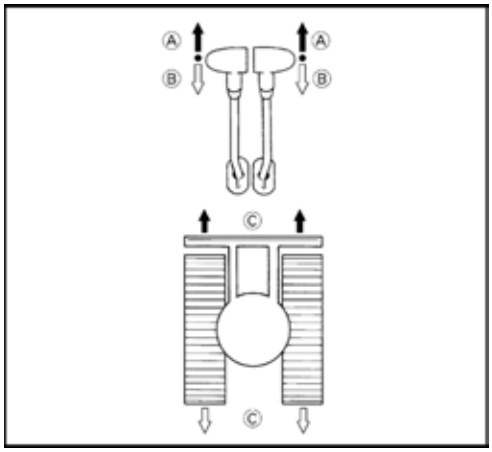

STOP

If the dozer is not in the front, as shown in the figure, but in the rear, the operation of the drive levers is exactly opposite. Drive lever forward → The excavator reverses.

- To drive faster, press the travel speed button (1).

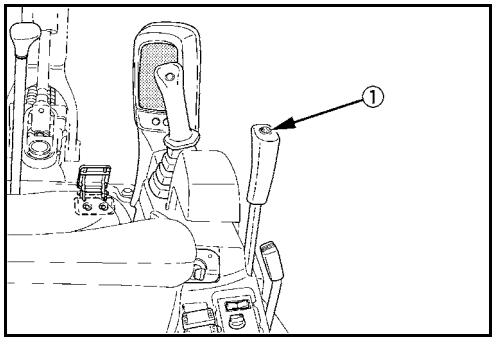

A tone sounds and the indicator (1) lights up. Renewed operating of the push button travel speed switches back to normal speed. Besides, audible signal sounds and the indicator goes out.

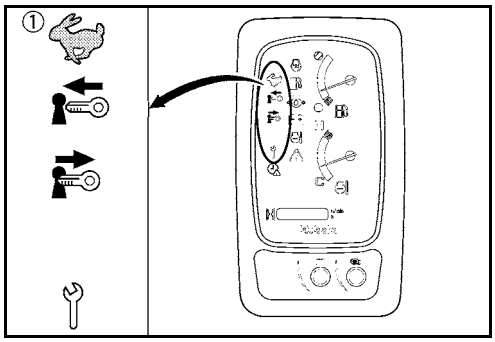

STOP

Do not drive fast on muddy or uneven terrain, also if another control is operated (e.g. turning the swivel frame).

https://truckmanualshub.com/

Turning

Turns are described for the forward direction of travel with the dozer at the front. If the dozer is positioned at the rear, the steering movements should be in the opposite direction.

When making turns, be sure nobody is standing within the swing area of the excavator.

During driving

- Pull the left drive lever to neutral, leave the right drive lever pushed forward.

(A) The excavator makes a left turn.

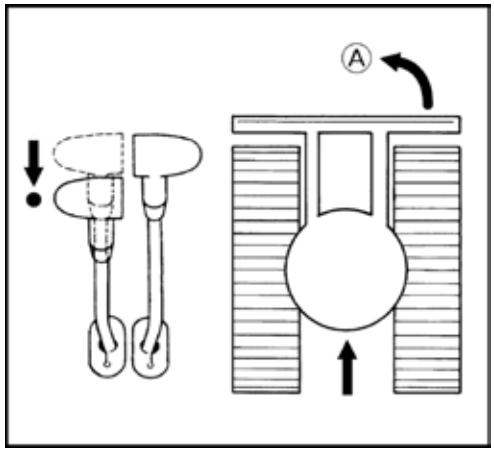

From a standing position

- Leave the right drive lever in neutral, push the left drive lever forward. In this case, the turning radius is determined by the right track.

(A) The excavator makes a right turn.

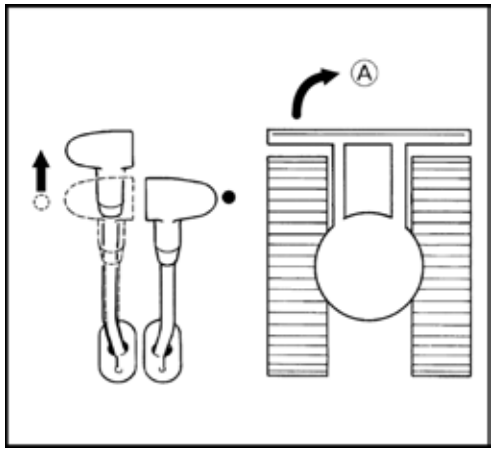

Turning on the spot

Do not make a turn on the spot with the travel speed button actuated.

- Move the drive levers in opposite directions. The tracks will turn in opposite directions. The centre of the vehicle is its vertical axis.

(A) Turning on the spot to the right.

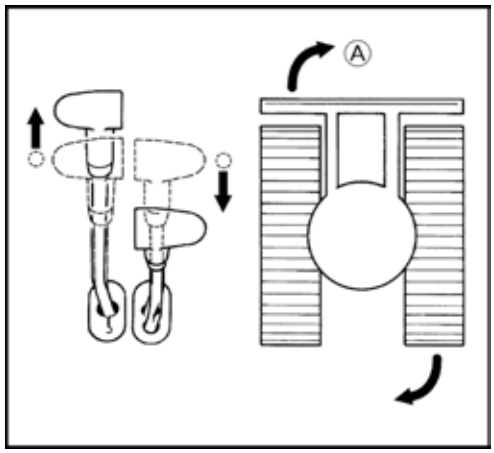

https://truckmanualshub.com/

Driving uphill and downhill

Exercise extreme caution when driving up and down a slope. Do not use the travel speed button.

- When driving on gradients, raise the bucket approx. 200 to 400 mm (A) above the ground (see figure).

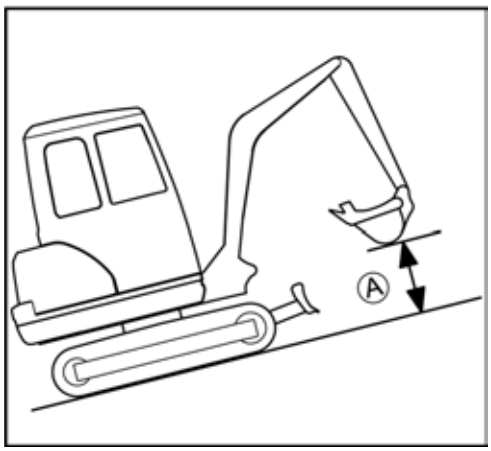

- When driving on gradients, let the bucket slide over the ground if the terrain allows it.

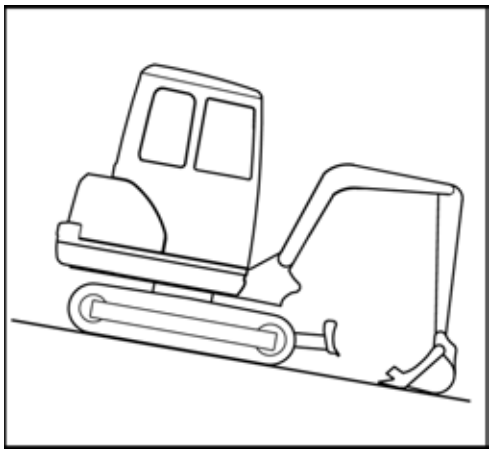

Stopping on gradients

Danger due to moving excavator!
If the excavator is stopped on a slope, park it so that it cannot move. Otherwise, there is a risk of being run over due to the moving excavator.

To securely park the excavator on gradients:

- Lower the dozer onto the ground.
- Dig the bucket as far as possible into the ground, or lower it onto the ground.
- Put the controls into neutral position.
- Secure the excavator from moving using wedges (1).

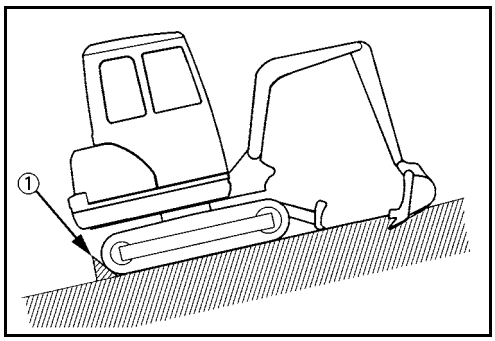

https://truckmanualshub.com/

Notes for rubber crawler operation

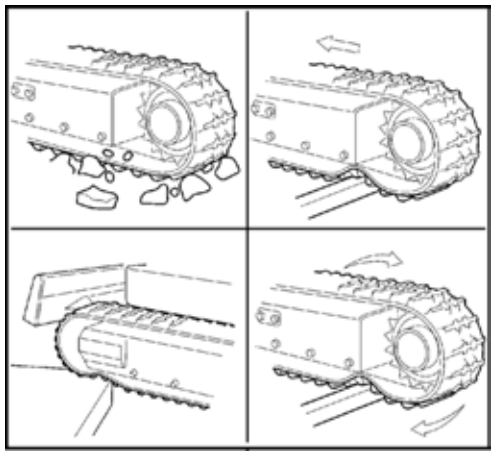

- Driving or turning on sharp objects or over steps causes excessive wear on the rubber crawlers and will lead to breaking of the rubber crawler or cause the crawler running surface and the steel inserts to be cut.
- Make sure that no foreign objects get stuck in the rubber crawler. Foreign objects lead to excessive crawler wear and can cause it to break.
- The crawler can become blocked due to too much dirt and sand. In this case, reverse the machine a short distance in order to loosen dirt and sand.
- Keep oil products away from the rubber crawlers.
- Remove any fuel or hydraulic oil spilled on the rubber crawlers.

Making sharp turns

- Do not make sharp turns on streets with a high-friction tarmac, e.g. concrete.

Protecting the crawler against salt

- Do not work with the machine on the seashore. (The salt will cause the steel insert to corrode.)

https://truckmanualshub.com/

Operating the controls during excavation work

Always observe the following safety instructions when working with the excavator.

- Breaking concrete or rocks with the bucket is prohibited.
- Do not use the dropping action of the bucket for excavation.
- Never fully extend the cylinders. Always keep a certain safety margin, especially when operating with a breaker (accessory).
- Never use the bucket as a hammer to drive posts into the ground.
- Do not drive or dig with the bucket teeth rammed into the ground.
- When loading soil, do not dig the bucket deeply into the ground. Instead, make relatively shallow slices with the bucket out as far as possible. This technique reduces the stress on the bucket.
- When working in water, the water should only reach up to the lower edge of the swivel frame.
- After using the machine in water, always grease the pins on the bucket and arm with grease until the old lubricating grease emerges.
- When digging in reverse, make sure that the boom does not come into contact with the dozer.
- Adhering soil can be shaken off when the bucket is being emptied by moving the cylinder to the end of the stroke. Should this not suffice, dump the arm as far as possible and swing the bucket back and forth.
- To increase the machine's stability, we recommend lowering the bulldozer blade onto the ground. The dozer may only be used if the dozer cylinder is equipped with a pipe safety valve.

Note on using wider and deeper buckets

When using a wider or deeper bucket, take good care when swinging or retracting the front attachments to make sure that the bucket does not hit the cab.

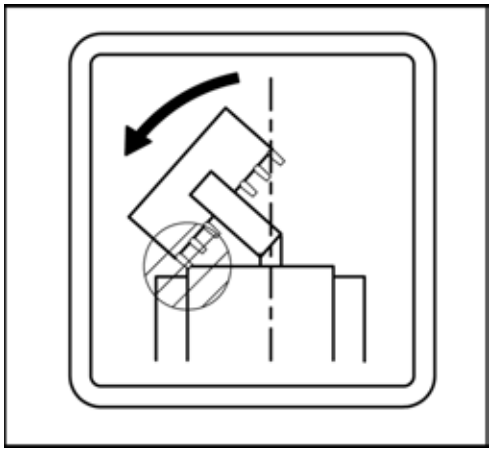

https://truckmanualshub.com/

Operating the dozer

When working with the dozer, operate both drive levers with the left hand and the dozer control lever with the right hand.

- To lift the dozer, pull the dozer control lever (1) back.
- To lower the dozer, push the dozer control lever forward.

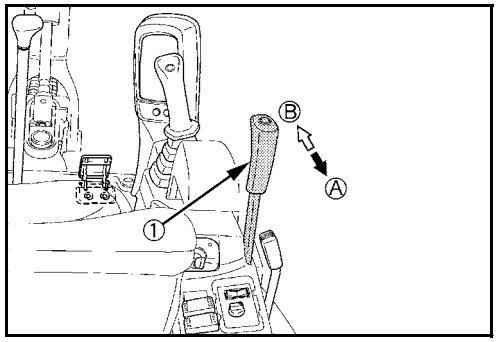

(A) Dozer up.

(B) Dozer down.

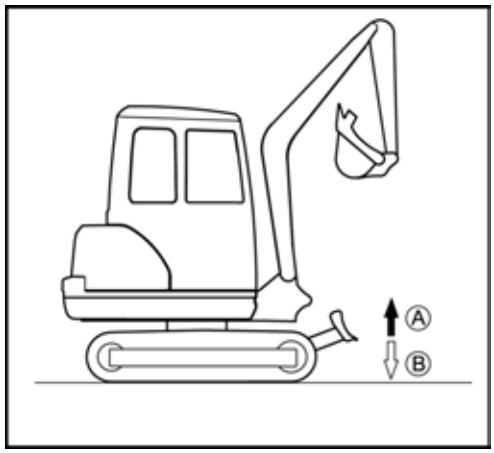

Overview of control lever functions

The figure shows, in connection with the following table, the functions of the left and right control levers.

Control lever		Movement
Right control lever	1	Lower boom
	2	Raise boom
	3	Bucket crowd
	4	Bucket dump
Left control lever	A	Arm dump
	B	Arm crowd
	C	Swivel frame to the left
	D	Swivel frame to the right

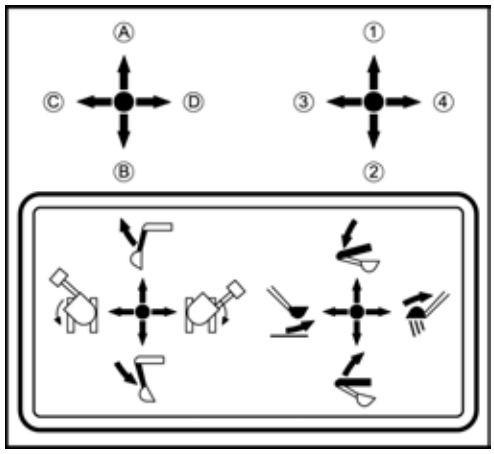

https://truckmanualshub.com/

Operating the boom

If the excavator is overloaded, the boom must be lowered until the load rests on the ground. To prevent personal injuries and damage to equipment, do not operate any other functions (e.g. moving the swivel frame).

- To raise the boom, pull the right control lever back (figure/⇩).

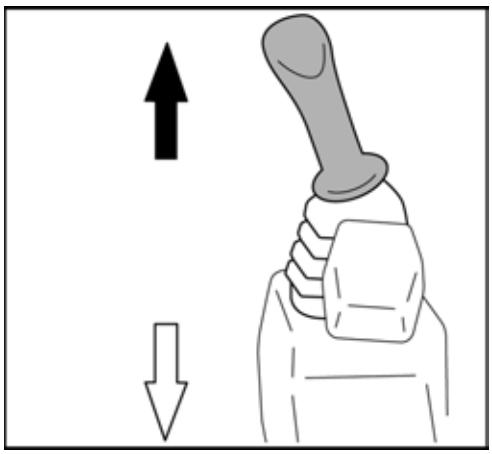

The hydraulic cylinder of the boom is equipped with a cushioning function, which prevents the excavated material in the bucket from falling out. When the hydraulic system operating temperature is low, the cushioning is delayed by approx. 3 to 5 s. This delay is due to the viscosity of the hydraulic oil and is not a malfunction.

- To lower the boom, push the right control lever forward (figure/⇧).

Watch the boom during lowering, so that the boom or the bucket teeth do not hit the dozer.

The boom moves as shown in the figure.

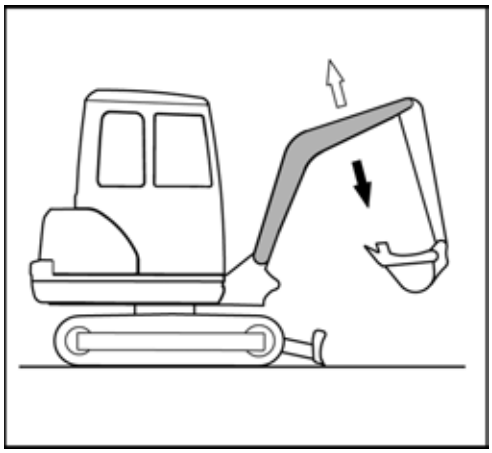

https://truckmanualshub.com/

Operating the arm

- To dump the arm, push the left control lever forward (figure/↑).
- To crowd the arm, pull the left control lever back (figure/⇩).

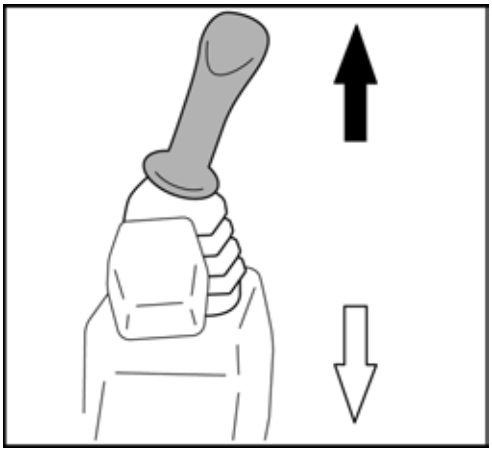

The arm moves as shown in the figure.

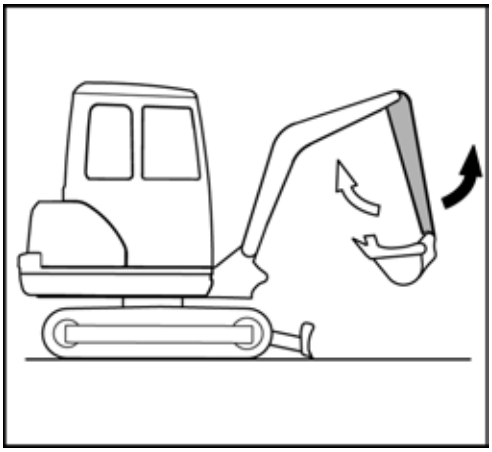

https://truckmanualshub.com/

Operating the bucket

- To crowd (digging) the bucket, move the right control lever to the left (figure/⇦).
- To dump (empty) the bucket, move the right control lever to the right (figure/➔).

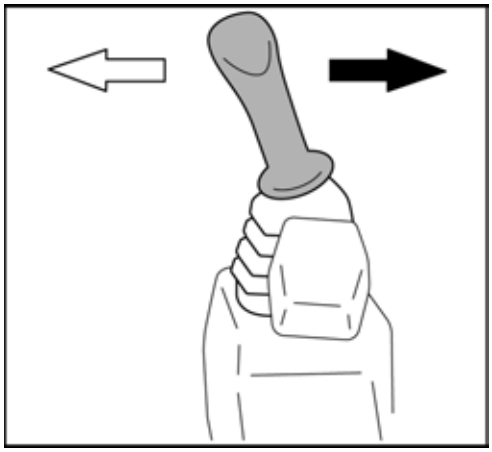

When crowding the bucket, take care that the teeth do not hit the dozer.

The bucket moves as shown in the figure.

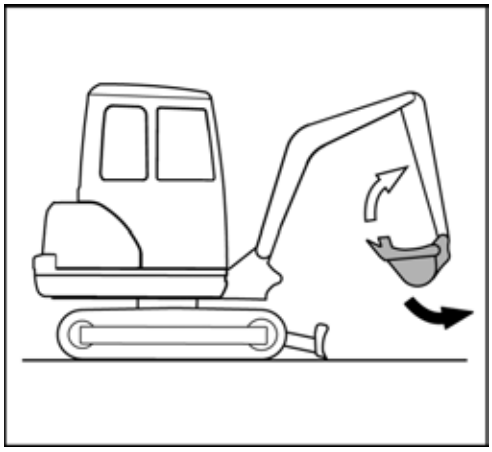

https://truckmanualshub.com/

Swivelling the swivel frame

No person is allowed to stand in the swivel area during the movement.

Swivel carefully to avoid any contact of the front attachments with adjacent objects.

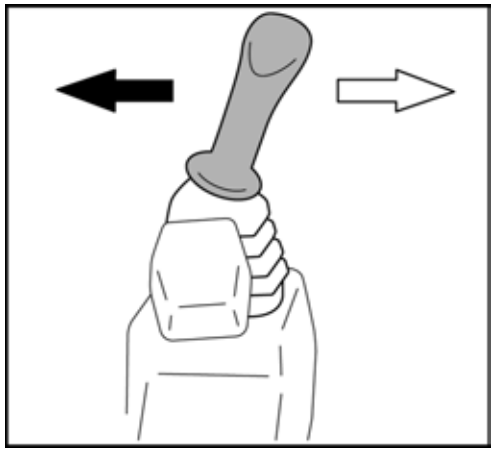

- To turn anticlockwise, move the left control lever to the left (figure/🡐).
- To turn clockwise, move the left control lever to the right (figure/⇨).

The turning operation takes place as shown in the figure.

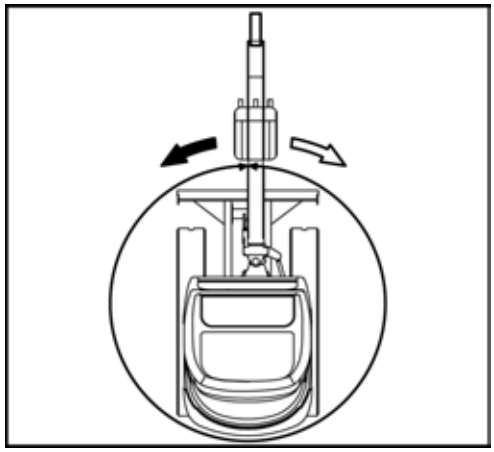

Swinging the boom

No person is allowed to stand in the swing area during the movement.

Swing carefully to avoid any contact of the front attachments with adjacent objects.

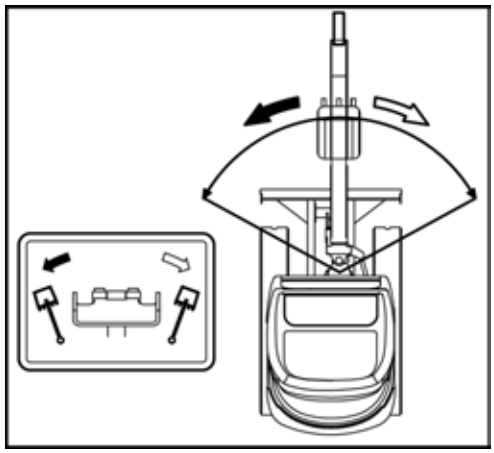

- To swing the boom to the left, press down on the left-hand side of the boom swing pedal (figure/🡐).
- To swing the boom to the right, press down on the right-hand side of the boom swing pedal (figure/⇨).

The figure details the swing movement.

The boom swing control pedal can be secured against inadvertent operation by lowering the locking flap. Fold the locking flap when the boom swing pedal is not in use.

https://truckmanualshub.com/

Operating the auxiliary port

The auxiliary port serves for operating attachments.

Only attachments approved by KUBOTA may be used. The attachments must be operated in accordance with the operating instructions supplied with them.

When using a breaker or other attachment for demolition work where material (e.g. asphalt) is removed and can uncontrollably sputter away, personal protective equipment is to be worn at all times (safety shoes, safety helmet, eye protection, ear protection and, if necessary, a breathing mask). The use of a gravel guard (front protective grid) is recommended. For excavation work with a cab, the front window must be closed, in addition.

The performance data for the auxiliary port can be found in the "Technical data" section (page 39).

Make sure that, before carrying out the activities in the auxiliary port connectors, the hydraulic system (page 104) has been depressurised. Depending on the operation setting, the return change valve has to be set to the appropriate position (page 103).

The auxiliary ports may only be activated when an implement is attached.

If the auxiliary port has not been used for a long period of time, dirt particles could have accumulated on the connectors of the conduits. Before installing the attachment, drain approx. 0.1 L of hydraulic oil at each port.

Collect the drained hydraulic oil in a container and discard it in accordance with the valid environmental regulations.

Models KX027-4 and KX030-4 are equipped with a hydraulic auxiliary port. An auxiliary port connector (1) is located on both the left and right side of the arm. The auxiliary port function is controlled with the auxiliary port pedal.

Models KX027-4 HI and KX030-4 HI are equipped with two hydraulic auxiliary ports. One connector each for auxiliary port 1 (2) and auxiliary port 2 (3) is located on the right and left side of the arm. The auxiliary port functions are each controlled with the rocker switch for auxiliary port 1 and the rocker switch for auxiliary port 2.

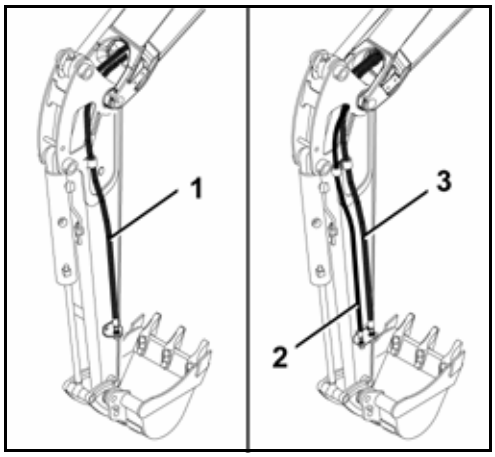

- Start the engine (page 77) and idle it until the operating temperature has been reached.

The auxiliary ports can only be switched off by turning the key switch to the STOP position or by lifting the control lever lock!

https://truckmanualshub.com/

Operating the auxiliary port (KX027-4, KX030-4)

The auxiliary port pedal (1) can be protected against unintentional operating by turning the locking flap (2). If the auxiliary port pedal is not used, the locking flap must be folded in.

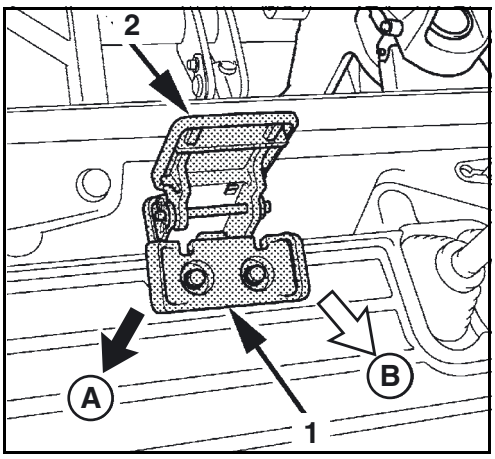

- When operating the right pedal part (figure/⇩) there is an oil flow at the connector B (figure below).
- When operating the left pedal part (figure/↓) there is an oil flow at the connector A (figure below).

(A) Connector for left pedal part
(B) Connector for right pedal part

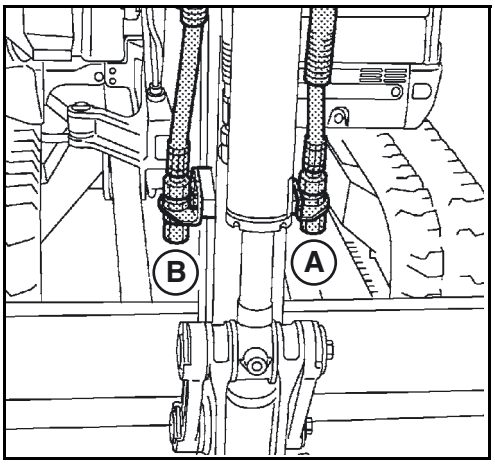

https://truckmanualshub.com/

Activating the auxiliary port function (KX027-4 HI, KX030-4 HI)

The auxiliary port is used for hydraulic implements, such as a breaker. You can set the flow rate prior to operating the auxiliary port. See the “Flow rate setting” section (page 99) for details.

The auxiliary ports are switched on using the auxiliary port switch (1). This switch is active when the left control console is lowered and the starter switch is in the RUN position. When auxiliary port 1 is switched on, auxiliary port indicator 1 (2) lights up or flashes.

Using this switch, you can also set the operation settings.

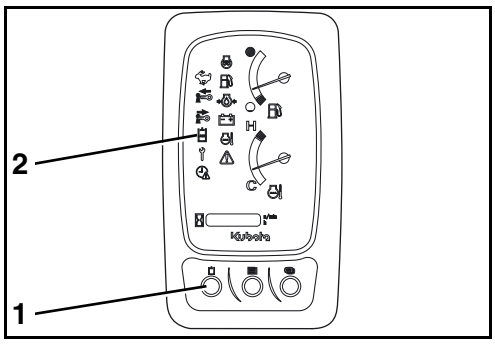

Operating auxiliary port 1 (KX027-4 HI, KX030-4 HI)

The proportional control enables you to smoothly control the implement speed. Example: If you press the rocker switch halfway to the left, the implement moves at approximately half speed.

The connectors for auxiliary port 1 and the rocker switch for auxiliary port 1 (3) are illustrated in the figure.

- Switch on the auxiliary port on the display and control unit.
- Press rocker switch for auxiliary port 1 in the direction ➔.

The oil flows to the right connector (1) of the arm.

- Press rocker switch for auxiliary port 1 in the direction ⇦.

The oil flows to the left connector (2) of the arm.

- To deactivate auxiliary port 1, turn the key switch to the STOP position or lift the control lever lock.

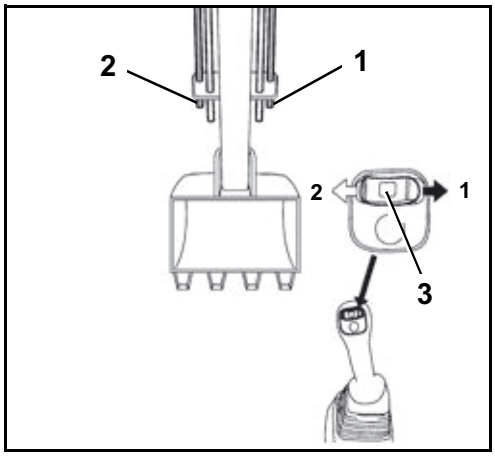

https://truckmanualshub.com/

Operating auxiliary port 2 (KX027-4 HI, KX030-4 HI)

The proportional control enables you to smoothly control the implement speed. Example: If you press the rocker switch halfway to the left, the implement moves at approximately half speed.

The connectors for auxiliary port 2 and the rocker switch for auxiliary port 2 (5) are illustrated in the figure.

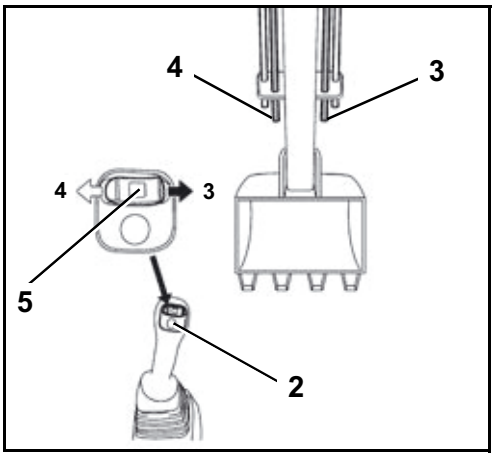

- Switch on the auxiliary port on the display and control unit.
- Press rocker switch for auxiliary port 2 in the direction ➔.

The oil flows to the right connector (3) of the arm.

- Press rocker switch for auxiliary port 2 in the direction ⇦.

The oil flows to the left connector (4) of the arm.

- To deactivate auxiliary port 2, turn the key switch to the STOP position or lift the control lever lock.

One way hold operation (KX027-4 HI, KX030-4 HI)

For one way hold operation, the return change valve has to be set to the direct return flow position (page 103).

Switching on

- Briefly push the one-way hold switch (1).

The oil flows on one side to auxiliary port 1 (B) on the left-hand side of the arm.

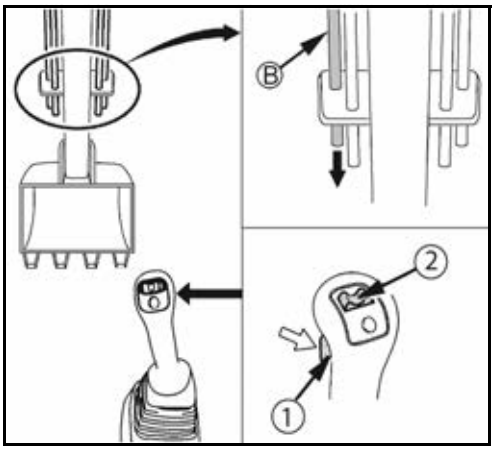

Switching off

- Briefly push the one-way hold switch again or briefly push the rocker switch for auxiliary port 1 (2) to the right or left.

The oil flow is shut off.

https://truckmanualshub.com/

Operating modes (KX027-4 HI, KX030-4 HI)

Auxiliary port 1 is preset at the factory to allow four operating modes to be selected. Up to six operating modes can be preset.

Whenever the auxiliary port button is pressed the operating mode changes by one level.

When the starter switch is turned to the RUN position, the most-recently used setting is activated.

Select the mode of operation

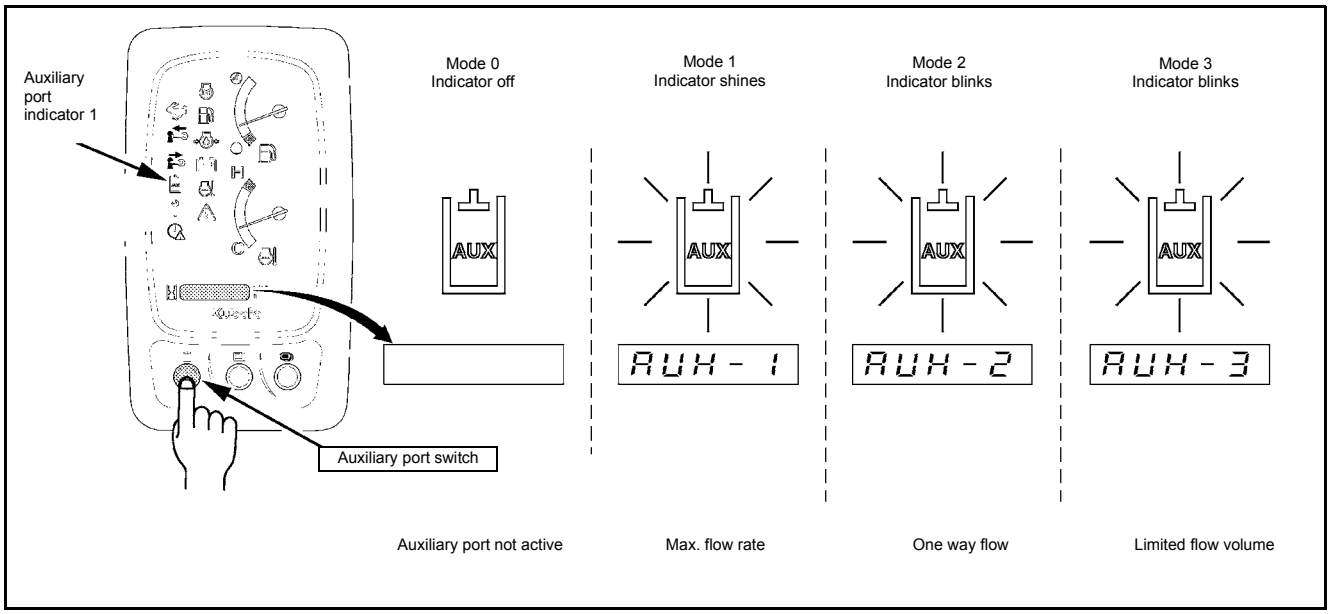

If auxiliary port 1 is enabled on the display and control unit and an operating mode has been selected, pressing the display selector switch (1) shows the configured flow rate on the right auxiliary port connector and then on the left auxiliary port connector for few seconds on the display (2).

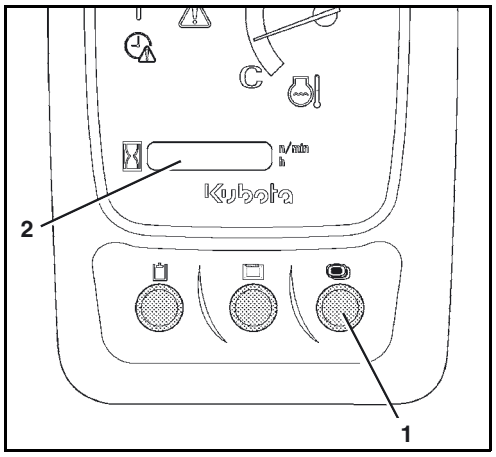

https://truckmanualshub.com/

Ⓐ Selected operating mode

Ⓑ Right auxiliary port connector

Ⓒ Selected flow rate level

Ⓓ Left auxiliary port connector

After the indication of the flow rates the selected mode of operation is indicated in the display once more.

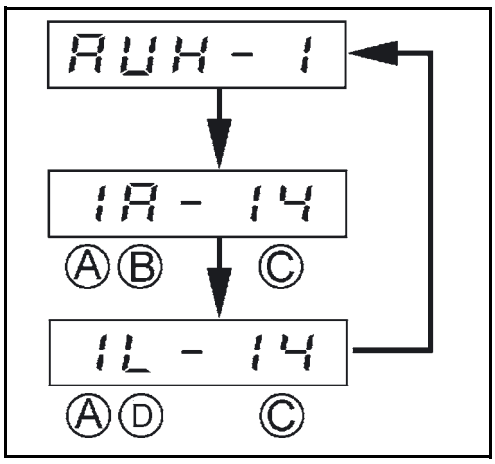

Setting the flow rate (KX027-4 HI, KX030-4 HI)

Suppose the same implement has to be attached to a different excavator. Even when using identical flow rate settings for the other excavator, the working speed may differ. For each excavator, you need to individually adjust the flow rate settings. Upon changing the implement, you need to determine and adjust the optimum flow rates for the new implement.

Malfunctions possible!
If the flow rate is set to minimum on one of the auxiliary ports, then that auxiliary port will not be able to carry out any functions.

The flow rate can be set for each individual auxiliary port. It is recommended to adjust this setting during the operation of the implement.

Setting auxiliary port 2

- Press the auxiliary port switch (2) and turn on the auxiliary port function.
- Turn the potentiometer (1) anticlockwise to reduce the flow rate.
- Turn the potentiometer (1) clockwise to increase the flow rate.

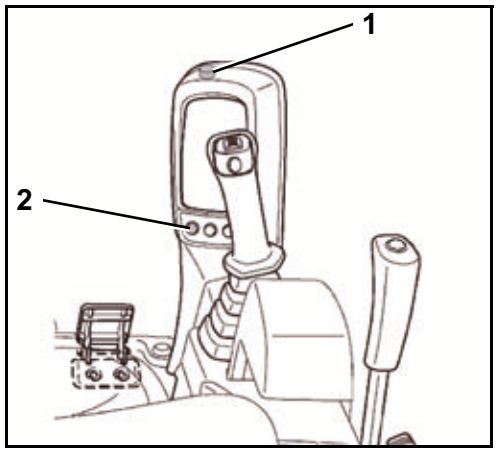

https://truckmanualshub.com/

Setting auxiliary port 1

- Turn the starter switch to the RUN position.
- Press menu button (2).
- The display message appears as in the figure on the right.
- Press display selector switch (1) until AUX is shown in the display.
- To toggle between the operating modes, press and hold the display selector switch (1) again.

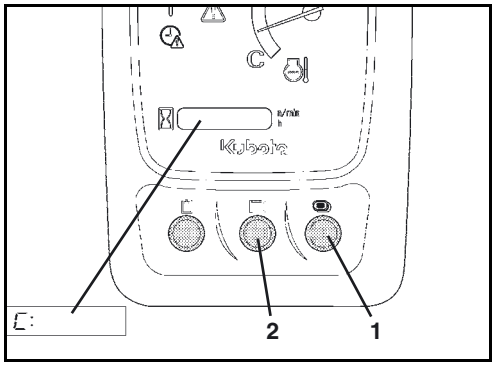

- Press the display selector switch (1) repeatedly until the desired indicator appears in the display.
- Press and hold the display selector switch until the selected operating mode's flow rate is shown on the display.

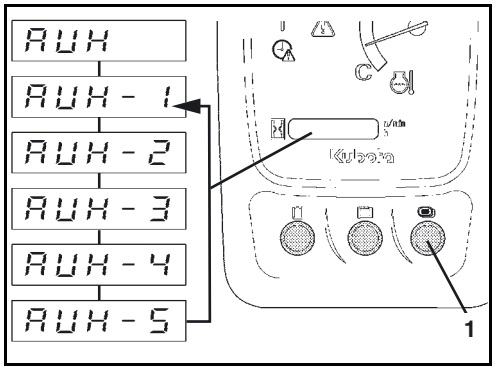

When the selected flow rate is shown on the display, you can use the display selector switch (1) and the menu button (2) to increase or decrease the flow rate.

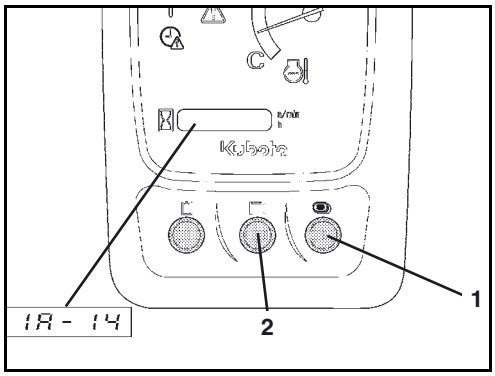

- Press the menu button (2) to decrease the flow rate.
- Press the display selector switch (1) to increase the flow rate.

The flow rate can be increased or decreased in 14 steps.

→ At the highest step, the flow rate reaches its maximum level.

→ If the flow rate is at the lowest level, flow is blocked and there is no oil flow.

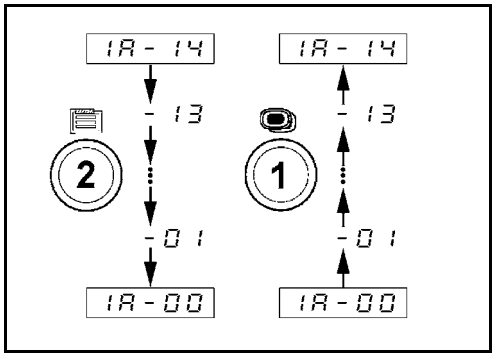

https://truckmanualshub.com/

- Press and hold the display selector switch (1) until the flow rate setting changes to left AUX port.

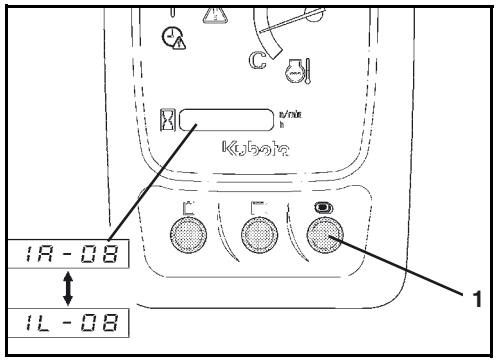

You can switch continuously between the left and right AUX port flow rate settings.

After setting the flow rate for the operating mode selected, you can either switch to the next operating mode or exit the settings screen.

To change the operating mode:
- To toggle between the operating modes, press and hold the menu button (2).
- Press the display selector switch (1) to select the next operating mode.
- Set the flow rate for the next operating mode selected.

To finish the flow rate setting:
- To toggle between the operating modes, press and hold the menu button (2).
- Press and hold the display selector switch (1) to finish the flow rate setting.
- Press the menu button (2) again to return to the normal display screen.

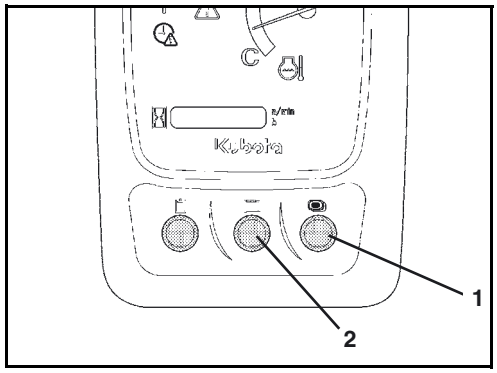

When the flow rate setting value is set to Zero for both AUX ports in a certain operating mode, this operating mode will not be indicated when pressing the auxiliary port enable switch (figure below, position/1). During operation of the excavator, only those modes with a flow rate greater than Zero will be available.

The example in the adjacent graphics shows that only mode 1 and mode 2 have been assigned a flow rate. Each time the auxiliary port enable switch (1) is pressed, the display screen toggles between mode 1 and mode 2 and the default display screen.

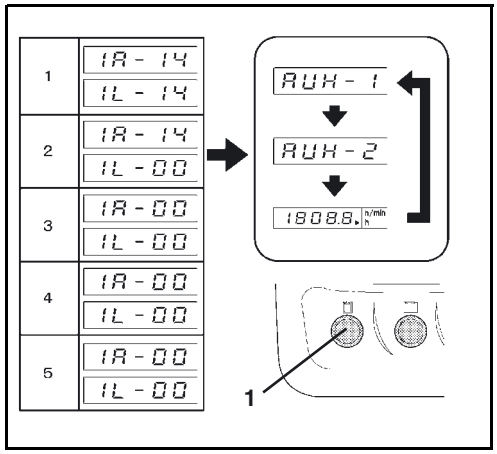

https://truckmanualshub.com/

Setting the maximum flow rate

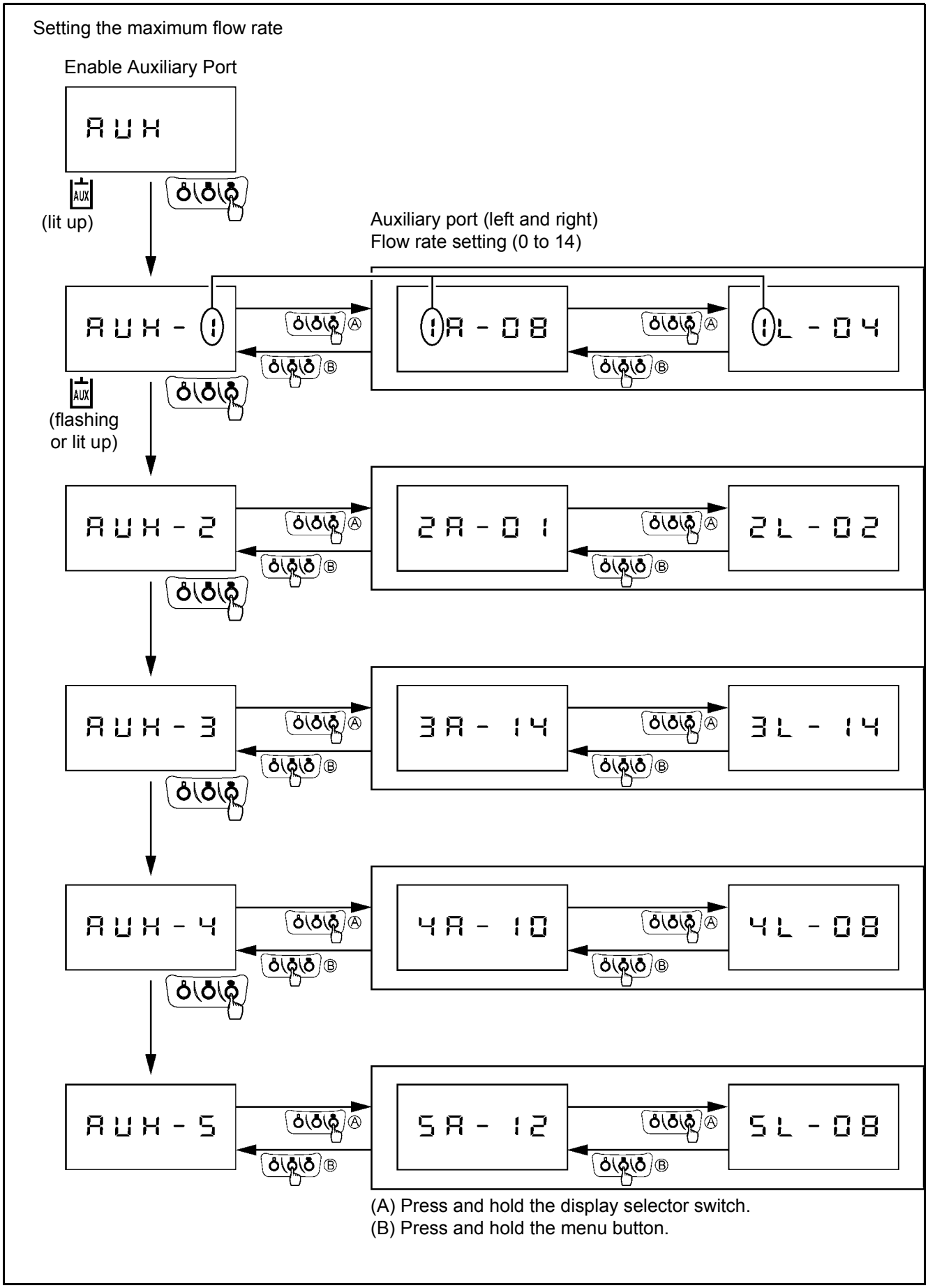

(A) Press and hold the display selector switch.
(B) Press and hold the menu button.

https://truckmanualshub.com/

Return change valve for direct return flow

According to the mode of operation of a given attachment, the return flow of the hydraulic oil must occur either via the control valve (indirect return flow) or directly to the hydraulic oil tank (direct return flow). The return flow is mechanically switched by the change valve (see Figure 2 below).

The change valve has two settings:

The "direct return flow" switch position is used for hammering attachments, such as a hydraulic hammer.

The "indirect return flow" switch position is used for rotating attachments, such as a rotary gripper, an auger, etc.

When "direct return flow" is enabled, the return flow is directed from the implement to the hydraulic oil tank via the return filter. The return flow only occurs via the right auxiliary port 1 connector on the arm (depending on whether the one-way hold switch was pressed).

- Flip lever (1) to the vertical position (A).

The direct return flow is enabled.

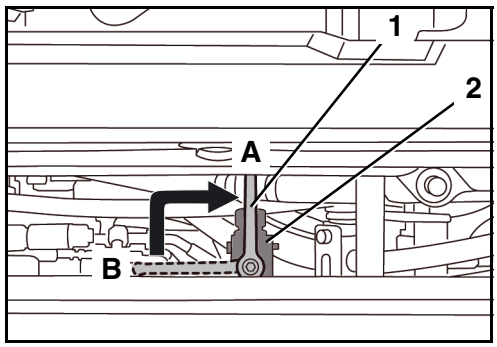

When "indirect return flow" is enabled, the return flow is directed from the implement to the return filter via the control valve and then to the hydraulic oil tank. In this case, return flow can occur via the left or right auxiliary port 1 connector of the arm (depending on the position of the auxiliary port pedal and/or the rocker switch for auxiliary port 1).

- Flip lever (1) to the horizontal position (B).

The indirect return flow is enabled.

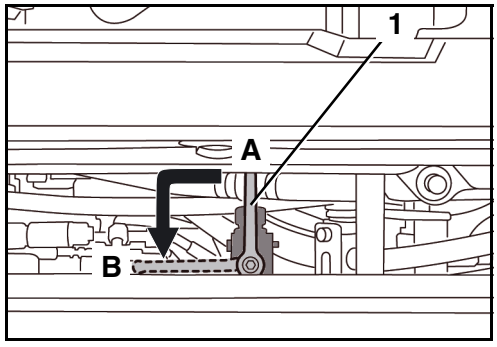

Move the change valve to the required position depending on the mechanism of the attachment being used (rotary or breaking).

STOP

If the change valve is in position "direct return flow", although an attachment with indirect return flow has been mounted, the return flow to the hydraulic tank remains open!
This can lead to sudden movements or falling down of the attachment, even if the machine has been switched off.

- *Make sure that the change valve is switched according to the attachment.*

https://truckmanualshub.com/

Relieving pressure from the hydraulic system

- Lower front attachments and dozer completely.
- Turn the starter switch to the STOP position.
- Wait until the engine has come to a standstill.
- Turn the starter switch to the RUN position.

Do not start the engine!

- Lower the left control console (1) and make sure that the control lever lock (2) engages.
- Move control levers (3 and 4) several times to limit stop in all directions.
- Press down on the auxiliary port pedal (KX027-4, KX030-4) several times in both directions until you reach the limit stop.

The hydraulic system has been depressurised.

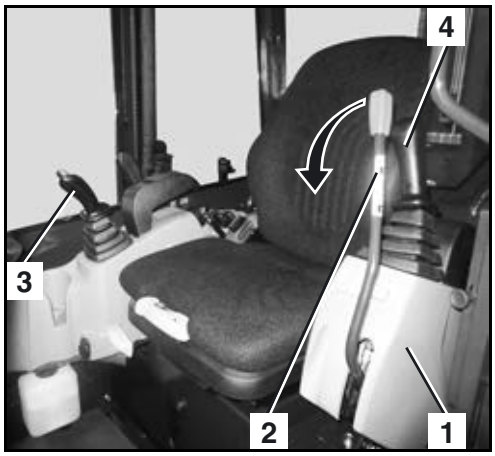

https://truckmanualshub.com/

Releasing pressure from the auxiliary ports (KX027-4 HI, KX030-4 HI)

- Lower front attachments and dozer completely.
- Turn the starter switch to the STOP position.
- Wait until the engine has come to a standstill.
- Turn the starter switch to the RUN position.

Do not start the engine!

- Lower the left control console (1) and make sure that the control lever lock (2) engages.

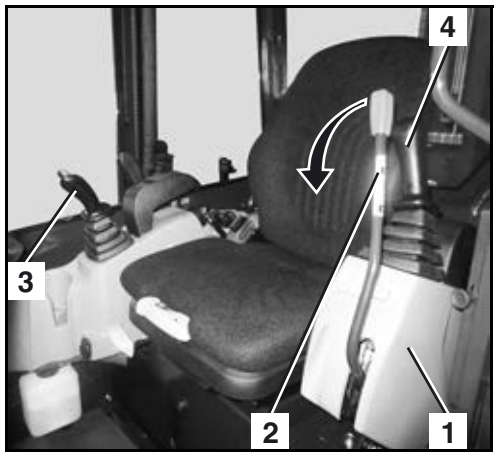

- Press the auxiliary port enable switch (1) and turn on the auxiliary port function.

Auxiliary port indicator 1 (2) lights up or flashes.

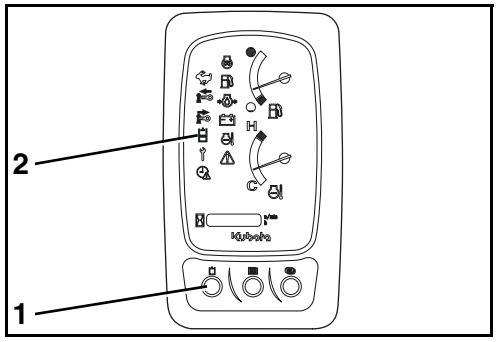

Releasing pressure from auxiliary port 1

The set flow rate in the right auxiliary port connector and then in the left auxiliary port connector is indicated for few seconds in the display by pressing the display selector switch (1).

If the flow rate is at the lowest level (zero), flow is blocked and there is no oil flow.

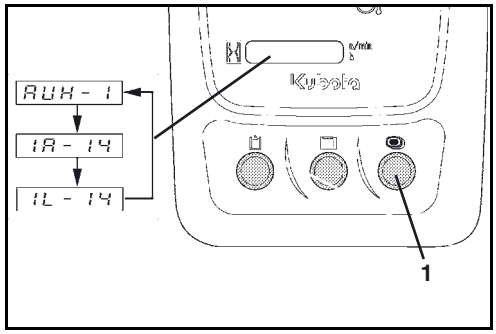

If the flow is blocked, the pressure cannot be relieved completely The hydraulic couplings at the auxiliary port connectors can jam as a result. Then connection or separation of the hydraulic cables of attachments is not possible.
\ Switch to a different mode, if available (page 98), or increase the flow rate (page 99).

- Make sure that the flow rates are not set to the lowest level.

https://truckmanualshub.com/

Releasing pressure from auxiliary port 2

- Rotate potentiometer (1) clockwise and set to maximum flow volume.
- Press the rocker switch for auxiliary port 2 several times in both directions.

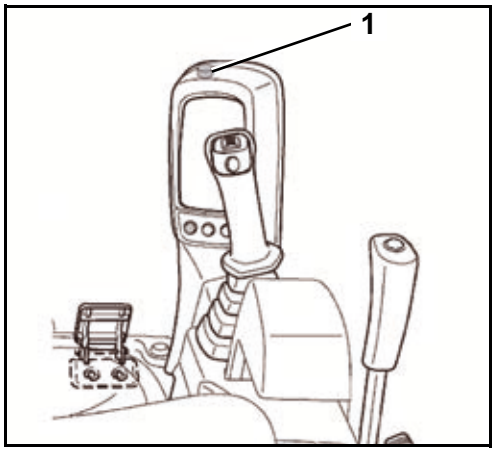

The auxiliary ports have been depressurised.

https://truckmanualshub.com/

Placing out of operation

Canopy and cab version

Park the excavator in such a way that it cannot move and is secured against unauthorised use.

- Drive the excavator onto level ground.
- Extend the hydraulic cylinders as follows:

Boom:	Half-extended
Arm:	Half-extended
Bucket:	Half-extended
Dozer:	Lowered to the ground
Swing mechanism:	Front attachments lowered centrally to the ground

- Stop the engine (page 79).
- Remove the key.
- Unbuckle the seat belt and lift the left control console.
- Refuel the excavator, if necessary (page 118).
- Close and lock all covers.
- Check the excavator for external damage and for leaks. Any defects must be repaired before the next start.
- In case of a heavy accumulation of dirt in the area of the tracks and the hinges on the front attachments, clean the excavator (page 121).

Cab version

- Close and lock all windows.
- Close and lock the cab door.

https://truckmanualshub.com/

Operating other equipment at the operator's place

Operating the heating system (cab version)

- Open the engine compartment cover (page 144).
- Open heater valve (1) by turning against the clock.

The heater valve should be always closed in summer.

- Close the engine compartment cover.

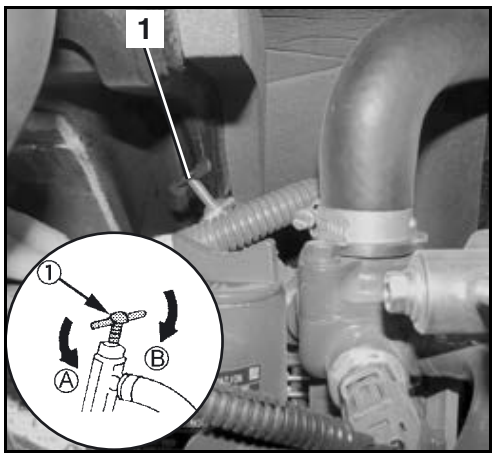

All activities described below and required for operating the heater must be carried out with engine running.

To avoid accumulated heat and damage to the ventilation system, do not cover air nozzles with objects (e.g. bags or clothes) when the heater is on.

- Start the engine (page 77).
- Set the blower switch to position LO or HI.

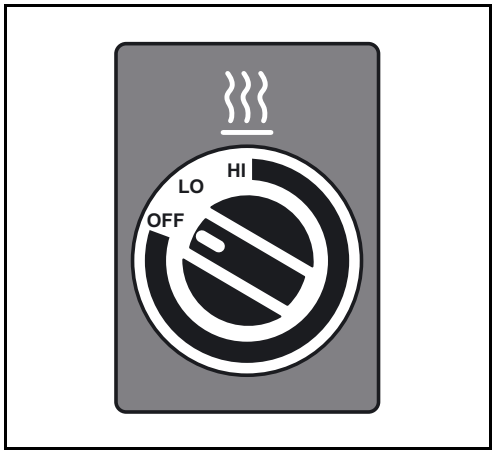

- To heat the cab faster, switch the air intake to the “circulating air” position (A) with lever (1).

No cold outside air will follow and the circulating inside air heats faster.

To prevent the windows from steaming up while operating the heater for extended periods of time, the air intake should be switched back to the “fresh air” position (A) after the cab has warmed up.

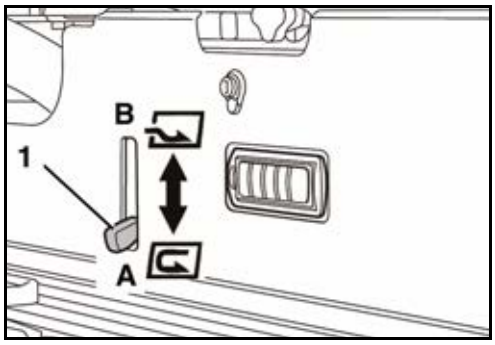

https://truckmanualshub.com/

In dusty surroundings, the fresh air supply should be switched on in order to increase the air pressure inside the cab. This contributes to the fact that no dust penetrates into the cab.

Lasting circulating air mode leads to overtiring of the operator! Circulating air mode for a longer period of time can lead to lack of oxygen and overheating inside the cab. No cool fresh air flows in from the outside. The operator therefore overtires quickly.

With operation-warm engine, the heater air flows out of the air nozzles (1).

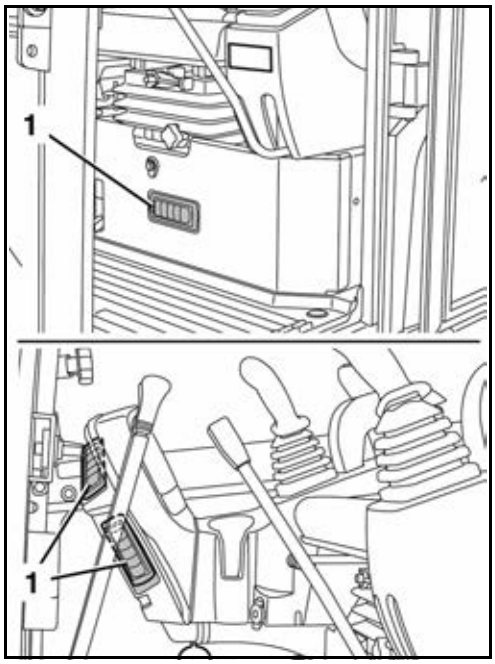

https://truckmanualshub.com/

Operating the wiper/washer system (cab version)

All cab models are equipped with a wiper/washer system.

Risk of personal injury!
When you turn the wiper on while the windscreen is opened, it slides out of the mounting on the cabin frame and can cause impact inside the cab. There is a risk of injury when the wiper thereby hits the operator's face.

- *Do not turn on the wiper switch while the windscreen is open.*

Switching on the windscreen wiper

- The starter switch is in the RUN position.
- Press the switch (1) to the WIPER/WASHER position.

The wiper operates as long as the switch remains in this position.

- To switch off, press the switch (1) to the OFF position.

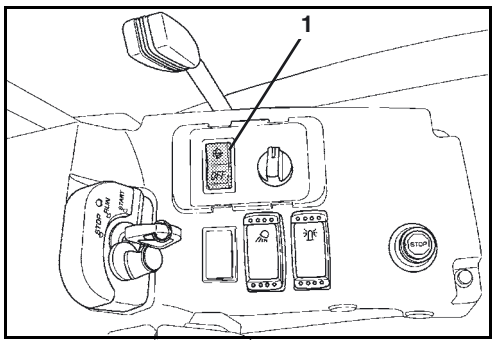

In extremely cold weather conditions, make sure the wiper rubber does not stick to the window. This can damage the wiper rubber or the wiper motor.

Only switch on the wiper when the window glass is wet. If necessary, switch on the washer system first.

To turn on the washer system

The washer system can be operated irrespective of whether the wiper is on or off.

If the wiper is on:
- Press the switch (1) to the WIPER/WASHER position again and hold it down.

If the wiper is off:
- Press the switch (1) to the OFF position and hold it down.

The washer system runs for as long as the switch is held down.

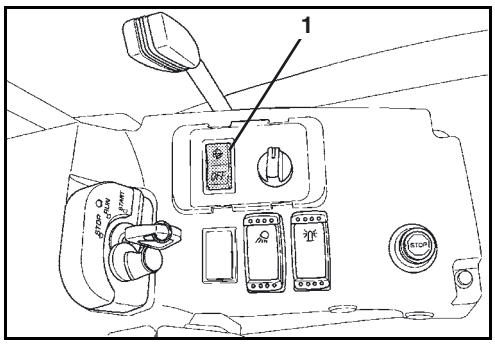

Do not operate the washer system if its reservoir is empty as running dry could damage the pump.

https://truckmanualshub.com/

Operating the interior light (cab version)

- Press the switch (2) to the ON position (B).

The interior light (1) is illuminated as long as the switch remains in this position.

- To switch off, press the switch (2) to the OFF position (A).

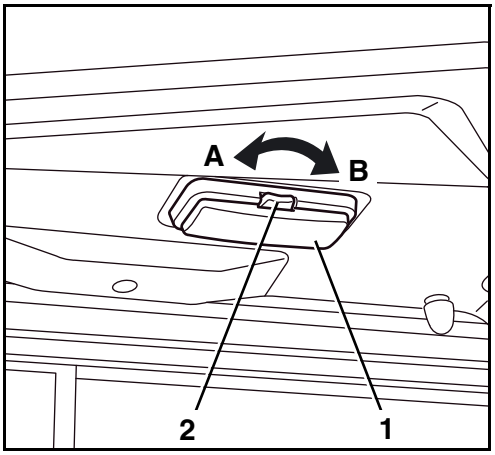

Operating the rotary beacon (accessories)

- The starter switch is in the RUN position.
- Press the rotary beacon switch (1) to the ON position.

The rotary beacon operates as long as the switch remains in this position.

- To switch off the rotary beacon, press the switch to the OFF position.

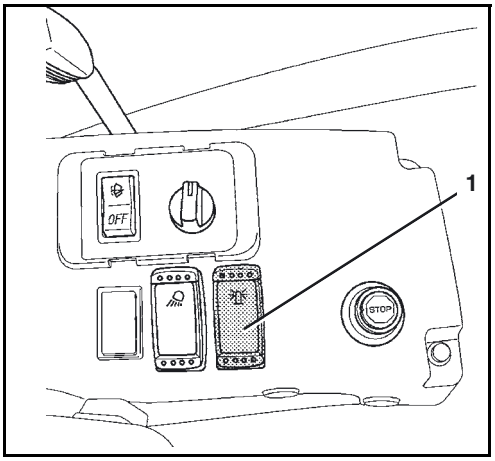

Operating the 12 V plug

- Open the cover cap (1) and put the load into the 12 V plug.

The rated current of the connected load must not exceed 10 A.

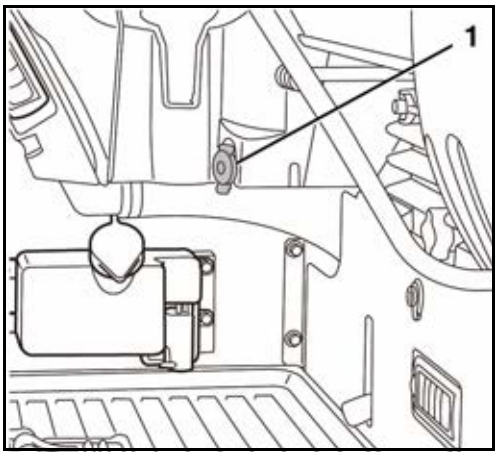

https://truckmanualshub.com/

Operating the working lights

- The starter switch is in the RUN position.
- Press the working light button (1) to the ON position. The working lights on the cab are turned on.
- To switch off the working lights, press the button to the OFF position.

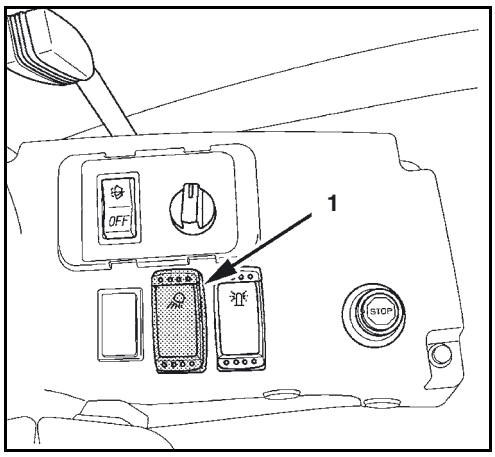

While working on public roads, other road users must not be blinded.

Operating the battery isolator

In order for the excavator to be operated, the battery isolator (1) must be in the ON position.
A → ON
B → OFF

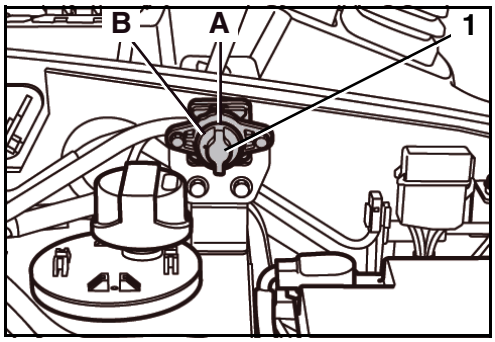

If the battery isolator is in the OFF position, most of the electrically powered functions will be turned off (e.g. horn, working lights, etc.).

The user settings for the display and control unit are saved, and the battery discharges itself only minimally.

https://truckmanualshub.com/

Cold weather operation

Operating the excavator at an ambient temperature below 5 °C is considered cold weather operation.

Necessary preparations prior to the winter season

- If necessary, replace the engine oil and hydraulic oil with those of the viscosities specified for winter.
- Only use regular diesel fuel with winter additives. Do not mix petrol and diesel fuel.
- Check the battery's state of charge. In case of extremely low temperatures, it may be necessary to remove the battery after work and store it in a heated room.
- Check the fluid level and the antifreeze strength of the cooling system (page 116). The antifreeze strength should be between -25 °C and -40 °C.
- Apply talcum powder or silicone oil to all rubber seals at the windows, the cab door and the side window guide rails.
- Lubricate all locks, except the starter switch, with graphite lubricant.
- Grease the hinges on the cab door.
- Fill the washer system with an antifreeze window cleaner (page 116).

Operation during the winter season

- The excavator must be cleaned after work is finished (page 121); Special attention must be paid to the crawlers, the front attachments and the piston rods of the hydraulic cylinders. If the excavator is cleaned with a water jet, it must then be parked in a dry, frost-free and well-ventilated enclosed space.
- If necessary, park the excavator on boards or mats in order to prevent freezing to the ground.
- Before starting, check if the piston rods of the hydraulic cylinders are free of ice to avoid damage. Also check if the crawlers are frozen to the ground. If so, do not take the excavator into operation.

Be careful when getting on and off, the crawler could be slippery.

- Start the engine (page 77) and let it idle until the engine has adapted to the outside temperature. Before you start working with the front attachments, warm up the excavator until the operating temperature has been reached.

https://truckmanualshub.com/

Jump-starting the excavator

Only a vehicle or starting device with a 12 V power supply may be used. A voltage > 12 Volts leads to serious damage to the excavator electronic system.

When servicing a battery, always wear suitable protective gloves and eye protection.

The operator must remain seated on the operator's place, the battery jumper cables must be connected by a second person.

- Make the battery accessible, and remove the positive terminal cover.
- Position the other vehicle or starting machine beside the excavator.

Only use cables with an appropriate cross section as jumper cables.

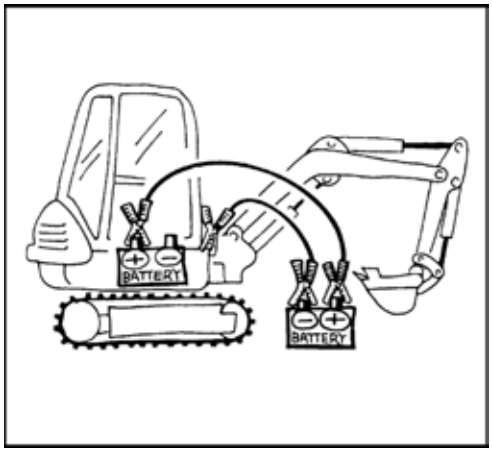

- Connect the positive terminal of the excavator battery to the positive terminal of the helping vehicle (see figure).
- Connect the negative terminal of the helping vehicle to the frame of the excavator. Do not use the negative terminal of the excavator battery. The connecting point on the frame must be blank and clean.
- Start the helping vehicle and let it run at a higher idle speed.
- Start the engine (page 77) and let it idle. Check if the charge lamp turns off after starting.
- Disconnect the jumper cable on the frame of the excavator first, and then on the negative terminal of the helping vehicle.
- Disconnect the second jumper cable from the positive terminal of the excavator battery first, and then from the positive terminal of the helping vehicle.
- Place the positive terminal cover onto the excavator battery.
- If the jumper cables will be required for the next start of the excavator, check the battery and the alternator's charging circuit, contact skilled personnel, if necessary.

https://truckmanualshub.com/

Operating in emergency situations

In case of emergency, you can switch off the engine and lower the boom manually.

Engine stop knob

If the engine cannot be stopped with the key, it can be stopped manually.

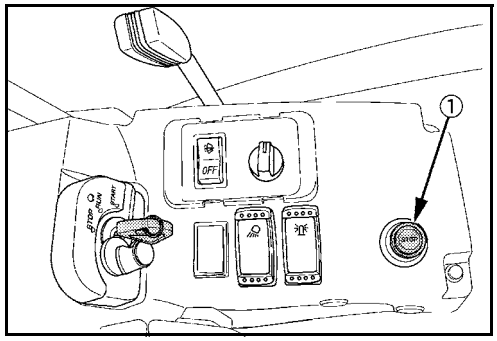

- To stop the engine, pull the knob (1) until the engine stops.
- After the engine has stopped, push in the knob.

STOP *The excavator may only be taken back into operation after the malfunction has been eliminated.*

Manual lowering of the front attachments

STOP *Make sure nobody is standing in the lowering area before starting the emergency lowering procedure.*

The lowering function is available only for a short time, as it is controlled by the accumulator in the hydraulic system. The cylinders extend or retract by force of gravity.

The boom and arm can be lowered in case of an engine failure or if malfunctions occur in the hydraulic system.

- Turn the starter switch to the RUN position.
- If necessary, lower the boom and the arm with the control levers as described in the "Operating the controls during excavation work" section (page 88).

https://truckmanualshub.com/

Maintenance

Filling up the washer system

- Open the cap (1) of the washer system reservoir (2) and add water or a cleaning agent.

In winter, use a cleaning agent with antifreeze.

- Close the washer system reservoir cap.

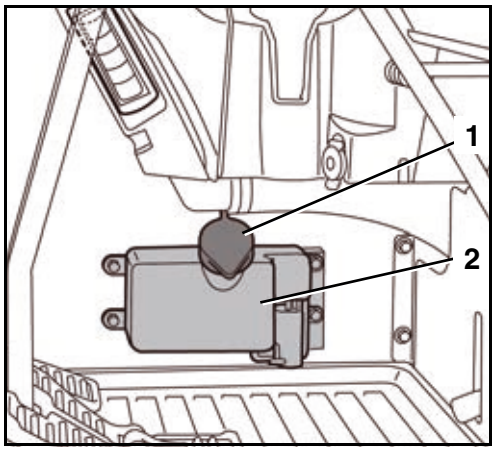

Checking the antifreeze strength of the coolant

- Open the engine compartment cover (page 144).
- Open cover (2) of the coolant expansion reservoir (1) after engine has cooled down.
- The antifreeze strength of the coolant must be checked by an antifreeze tester.

The antifreeze strength must be between -25 °C and -40 °C.

- If the antifreeze strength is too low, supplement with additional antifreeze.

The antifreeze portion of the coolant should not exceed 50 %.

- Close the expansion tank cover.
- Close the engine compartment cover.

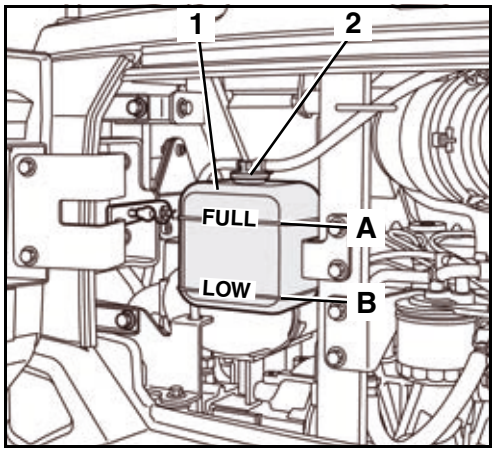

https://truckmanualshub.com/

Refilling the coolant

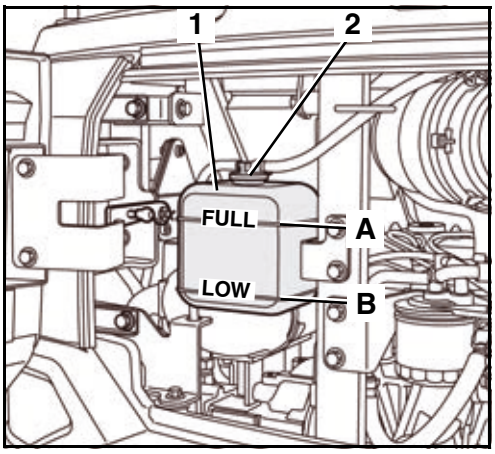

- Open the engine compartment cover (page 144).
- Open cover (2) of the coolant expansion reservoir (1) after engine has cooled down.
- Mix coolant, see “Recommended lubricants” section (page 142).

Do not operate the cooling system with pure water (even in summer). The antifreeze also contains a corrosion inhibitor.

- Fill mixed coolant up to the FULL mark (A).
- Close the expansion tank cover.

If the coolant expansion reservoir was completely emptied, check the fluid level in the radiator as follows.

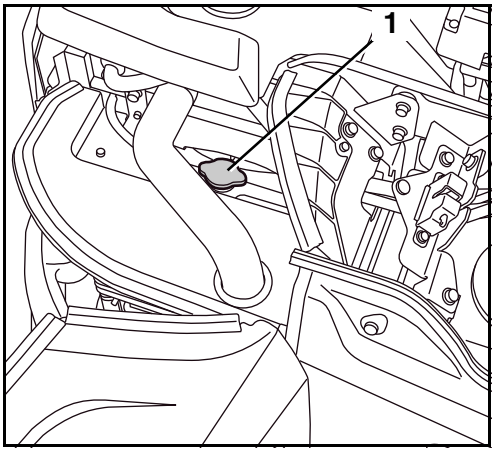

- Open the side cover (page 144).

STOP

Do not open the radiator cap while the engine is still hot, risk of scalding.

- Remove the radiator cap (1) by turning it anticlockwise.
- The coolant level should be at the lower edge of the filler plug; if not, add coolant.
- Close the radiator cap.
- Close the side cover.
- Close the engine compartment cover.

https://truckmanualshub.com/

Refuelling the excavator

When refuelling the excavator, smoking, an open flame, or other sources of ignition are not allowed. The danger zone has to be clearly marked with signs. A fire extinguisher must be kept at hand in the danger zone.

Spilled fuel must be bound immediately with an oil binding agent. The contaminated oil binding agent must be disposed of in accordance with the applicable environmental regulations.

If no pumping station is available, the diesel fuel may only be stored in approved canisters.

Refuel the excavator in time so that the fuel tank is not running on empty. Air in the fuel system can damage the fuel injection pump.

To prevent the formation of condensate water in the fuel tank when the excavator is stopped for long periods of time, fill diesel fuel up to the lower edge of the filler neck.

- Stop the engine.
- Open the side cover (page 144).
- Remove the filler cap (1) by turning it anticlockwise.
- Fill diesel fuel up to the base of the filler neck.
- Screw on the filler cap and close the side cover.

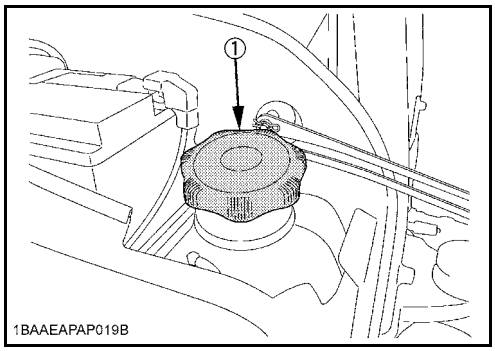

Fill level monitor when refuelling

The momentary fill level during refuelling can be determined by means of an acoustic signal. For this, the starter switch must be in the STOP position.

The switch (1) for the fill level monitor is located to the left of the tank filler neck (2).

- Ensure that the starter switch is switched to the STOP position.
- Press switch (1) to activate fill level monitoring.

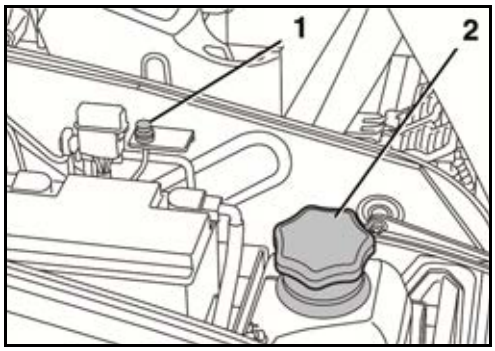

https://truckmanualshub.com/

The following signals are output:

Interrupted signal	→ Tank is empty
Periodic signal	→ Tank is being filled
Continuous signal	→ Tank is full

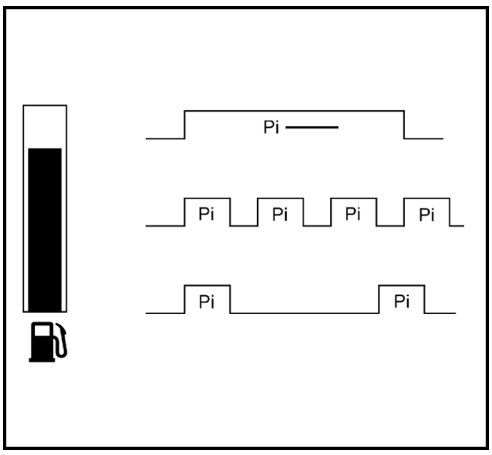

The signal breaks off completely if the flow rate is too low. As soon as there is enough fuel in the tank, the signal restarts.

- After refuelling, press the switch (1).

The fill level monitor turns off.

Bleeding the fuel system

If the fuel tank was run empty or if work was performed on the fuel system, then the fuel system has to be bled.

- Ensure that there is sufficient diesel fuel in the fuel tank. Otherwise, refuel the excavator.
- To bleed the fuel system, move the starter switch to the RUN position.

The electrical fuel pump will bleed the fuel system automatically within approx. 60 s.

- If the bleeding was insufficient, the engine will stop again. In this case repeat the procedure.

Replacing the fuses

Defective fuses may only be replaced with fuses of the same type and same rating.

The bypassing of fuses, for example with a wire, is not allowed.

If the malfunction cannot be remedied by replacing the fuse, or if the fuse blows again when starting, contact skilled personnel.

The main fuses (page 121) of the excavator are situated next to the battery.

https://truckmanualshub.com/

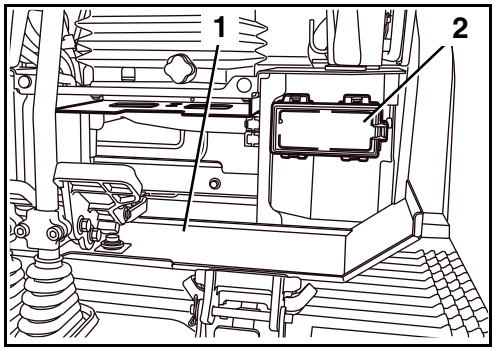

- Unlock and fold down the cover plate (1).
- Remove the cover from the fuse box (2).
- Remove the defective fuse from the fuse box and replace it.

Observe the following fuse box layout!

- Check the component function after replacing the fuse. If the fault persists, contact your KUBOTA specialist dealer.
- After finishing the work, install the cover on the fuse box and close the cover plate.

Fuse layout of the fuse box

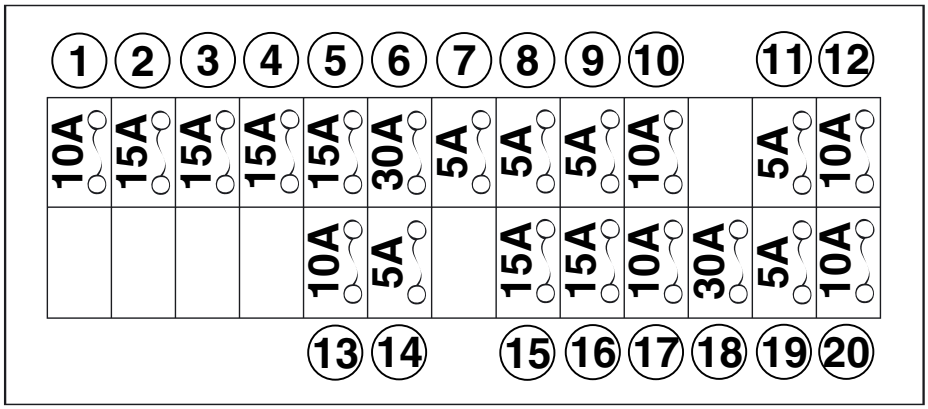

1	Fan motor	**11**	Control lever lock
2	Electrical connection	**12**	Alternator
3	Wiper/washer system	**13**	Control unit (+B)
4	Radio (AC)	**14**	Interior lighting
5	12-V socket	**15**	Rotary beacon
6	Starter	**16**	Working lights
7	Starter (signal)	**17**	Horn
8	Fuel pump	**18**	Engine cut-off switch
9	Relay supply circuit	**19**	Horn switch
10	Control unit (AC)	**20**	Display and control unit (+B)

https://truckmanualshub.com/

Main fuses

- Disconnect negative terminal of battery.
- Open cover (1) of the main fuse box.
- Take out defective main fuse and replace.

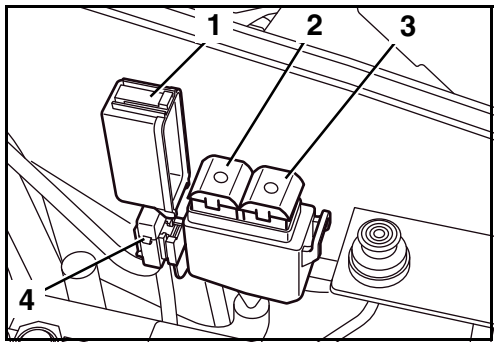

Fuse layout:
2 → Main fuse (50 A)
3 → Main fuse (50 A)
4 → Fuse (10 A)

After completing the work, close the cover once more.

Cleaning the excavator

Before cleaning, shut down the engine and secure it against starting.

If a steam cleaner is used for cleaning the excavator, do not direct the steam jet at electric components.

Do not direct a water jet into the intake opening of the air filter.

Do not clean the excavator with inflammable liquids.

The excavator may only be washed at suitable places (using oil and grease separators).

The excavator can be cleaned with water and a commercial cleaning agent. Make sure no water gets into the electrical system.

Use a plastic cleaner for plastic parts.

https://truckmanualshub.com/

Replacing the bucket

When replacing the bucket, make sure to wear eye protection, a helmet and protective gloves.

During attaching and detaching, chippings and burrs may appear on the bolts or bushings. These may cause severe injuries.

Never use your fingers for the alignment of the components (linkage, bucket, arm). The components may sever your fingers by uncontrolled movements.

Anti-theft system

The excavator is equipped with an anti-theft system that restricts the engine to only being started using a registered key. If a registered key gets lost or stolen, you can invalidate it. This will prevent the engine from being started with this key, thus protecting the vehicle against theft. The anti-theft system makes it difficult to steal the machine. However, it cannot prevent theft completely.

If the starter switch is set to STOP, the indicator light (1) is illuminated, indicating the activation of the anti-theft system.

Make sure that the indicator light is illuminated when leaving the machine.

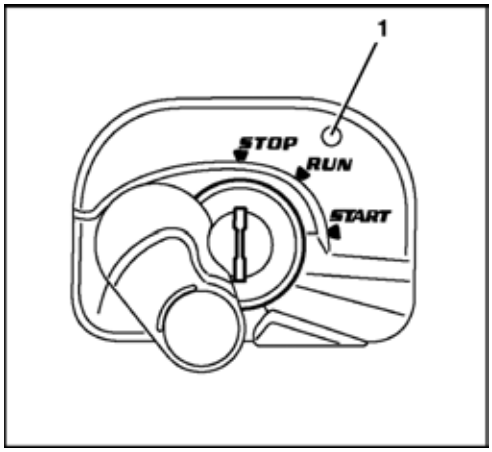

https://truckmanualshub.com/

The vehicle comes with two different types of keys:

Black (individual) key

- This key is used to start the engine.
- The engine can be started by inserting the key and turning it to the START position.
- To be able to start the engine with a black key, it must be registered using the red key.

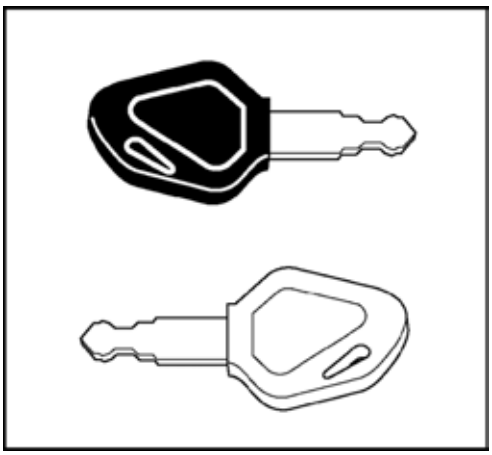

The engine can be started only with a key that was registered for that particular vehicle.
The scope of delivery includes two black keys, among them a spare key. The two black keys have already been registered. Up to four keys can be registered.

Red key (for registering)

- If one of the black keys is lost, another black key can be registered using the red key (page 124).
- The engine cannot be started with the red key.

The key system

- If a registered key is lost, the second and new black key must be re-registered. This procedure locks the lost or stolen black key, which can no longer be used to start the engine.
- If the red key is lost, the black keys can no longer be re-registered. Be sure to keep the red key in a secure location (such as a safe in the office). Never leave the key inside the machine. If it should get lost nevertheless, please contact your authorised dealer immediately.
- If six attempts are made within one minute to turn the starter switch to the START position with an incorrect or unregistered key, an acoustic signal will sound for 30 seconds. The signal will continue to sound even if the starter switch is turned to the STOP position again or the key is removed within this time period. When a key registered for this machine is inserted into the starter switch, the acoustic signal will be turned off.
- Do not use several of these keys in a bunch. This could lead to electrical interfering frequencies which might prevent the motor from starting.
- Only use the special KUBOTA key ring. Other key rings can lead to signal failures between the key and starter switch, and the engine can possibly not start or a key registration cannot be performed.
- After receiving the set of keys, separate them from each other. Always make sure the keys are not part of a bunch. If one of the black keys, for example, is inserted into the starter switch, the red key might be detected by the electronic system. This might lead to a failure of the electronic system.
- If any machine malfunctions occur, please contact your KUBOTA dealer immediately in order to have the malfunction localised and fixed.

https://truckmanualshub.com/

Registering a black key for the machine

Register a black key only under the following conditions:
Make sure that there are no persons within the excavator's working area. It is essential to warn persons in the vicinity of the excavator by briefly honking the horn.

Make sure that all operational controls are in the neutral position.

Starting the excavator is only allowed when the operator is sitting on the operator's seat.

Do not allow the engine to run indoors, unless the room is equipped with an exhaust gas extraction system or otherwise well ventilated. The exhaust gas contains carbon monoxide, a colourless, odourless, and lethal gas.

1. Insert red key into the starter switch.

Do not turn the key at this point. If the key is in the RUN position, turn it back to the STOP position.

2. Press the display selector switch.

3. The pull out key indicator blinks.

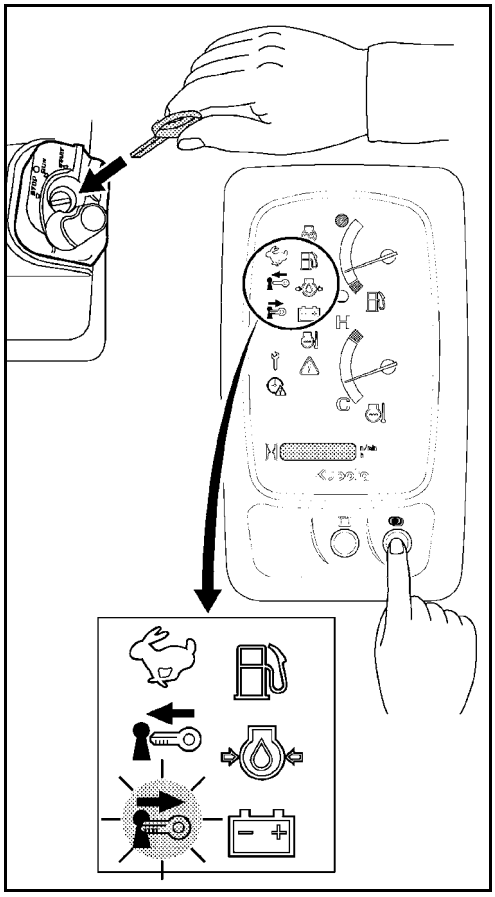

https://truckmanualshub.com/

4. Pull out the red key.

5. The insert key indicator blinks.

6. Insert black key into the starter switch.

Do not turn the key at this point. If the key is in the RUN position, turn it back to the STOP position.

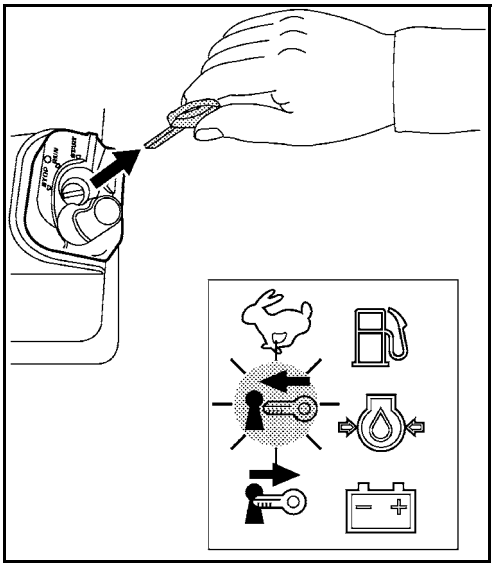

7. After a short moment, the pull out key indicator blinks. This points out the fact that the black key has been registered for this vehicle.

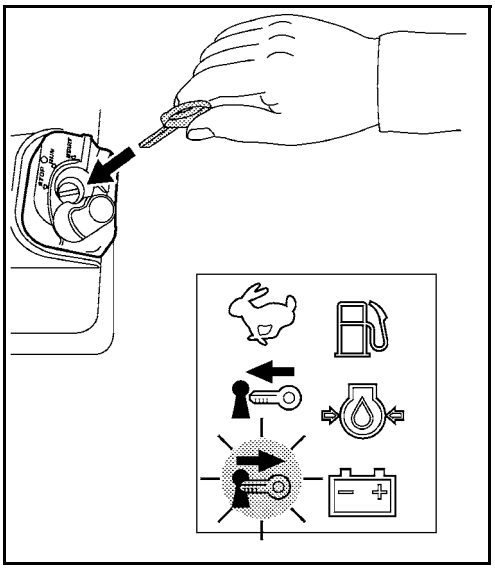

8. Turn key into RUN position to complete the registration process.

9. One after the other, insert all registered black keys into the starter switch and check whether the engine can be started using these keys.

If a registered black key is lost, the other black keys must be re-registered. This procedure locks the lost or stolen black key, which can no longer be used to start the engine.

https://truckmanualshub.com/

https://truckmanualshub.com/

TROUBLESHOOTING

The troubleshooting section includes malfunctions and incorrect operations, which according to the maintenance chart must either be remedied by the operator or by skilled personnel. Any other malfunctions may only be resolved by trained personnel. The troubleshooting must be performed with the aid of the troubleshooting table. In order to locate a malfunction, first look in the MALFUNCTION column for the corresponding excavator malfunction. In the POSSIBLE CAUSE column you will find the possible causes for the malfunction. The REPAIR column indicates the required remedial measure. If the malfunction cannot be fixed by the measure indicated in the REPAIR column, please consult your KUBOTA dealer.

Safety rules for troubleshooting

Adhere to the general safety rules (page 13) and the safety rules for operation (page 61).

The operator is not allowed to open the electrical and hydraulic system. These services are reserved for trained personnel.

During troubleshooting, the safety on and around the excavator must always be ensured.

If troubleshooting of the excavator calls for the bucket to be raised, the operator may not stand in the area of the front attachments unless the front attachments are secured against inadvertent lowering by suitable measures.

Troubleshooting: Before operation

MALFUNCTION	POSSIBLE CAUSE	REPAIR
No function available when the starter switch is turned to the RUN position.	Main fuse at battery defective	Replace the main fuse (page 121).
Indicator lights do not come on as expected when the starter switch is turned to the RUN position.	Defective fuse	Replace the fuses (page 119).
Starter does not turn when the starter switch is turned to the START position.	Drain battery	Charge the battery (page 147). Jump-starting the excavator (page 114).
	Engine stop knob pulled	Push the engine stop knob (page 26).
	Control lever lock not raised	Raise the control lever lock.
Engine does not start when the starter switch is turned to the START position, but starter turns.	Air in the fuel system	Check the fuel system for leaks and bleed it (page 155).
	Water in the fuel system	Check the water separator for water content, drain if necessary (page 69).
	Fuel is too viscous	Check fuel tank and fuel filter; remove contamination and water; replace fuel filter if necessary.
Engine runs sluggishly during winter time.	Oil viscosity is too high	Warm up the radiator, e.g. pour hot water on it.

https://truckmanualshub.com/

Troubleshooting: Operation

MALFUNCTION	POSSIBLE CAUSE	REPAIR
Insufficient engine power	Air filter restricted	Check, clean and replace the air filter (page 154).
	Fuel filter restricted or water in fuel system	Check the water separator for water content. Drain it (page 69) and renew the fuel filter (page 159), if necessary.
	Fuel shortage	Check the fuel level (page 72). If necessary, refuel the excavator (page 118) and ventilate it (page 119).
No hydraulic function of the drive unit, the swing mechanism and the front attachments.	Control lever lock is raised.	Lower the control lever lock.
Power of hydraulic functions is too low or disruptive.	Hydraulic oil level too low	Check the hydraulic oil level, add hydraulic oil (page 69).
	Suction filter restricted	Change the suction filter in the hydraulic oil tank (page 163).
	Hydraulic hoses or connections are leaking	Must be replaced. Inform your KUBOTA dealer.
Auxiliary port 1 (KX027-4 HI, KX030-4 HI) is not working	Auxiliary port function is not enabled	Switch on auxiliary port function (page 96).
	Display and control unit is set to minimum flow rate	Set higher flow rate (page 100)
Auxiliary port 2 (KX027-4 HI, KX030-4 HI) is not working	Auxiliary port function is not enabled	Switch on auxiliary port function (page 96).
	Potentiometer is set to minimum flow rate	Set higher flow rate (page 99)
The one-way hold switch cannot be used.	Change valve is switched to indirect return flow	Switch change valve to the direct return flow position (page 103)
Travel speed button does not work.	Fuse in fuse box defective	Replace the fuses (page 119).
Heater fan, wiper/washer system, interior light, horn, working light not operating.	Fuse in fuse box defective	Replace the fuses (page 119).

https://truckmanualshub.com/

MALFUNCTION	POSSIBLE CAUSE	REPAIR
Coolant temperature is too high.	Coolant is mixed with rust from the cylinder head or crankshaft housing.	Change coolant and add corrosion inhibitor.
	V-belt is damaged or very loose	Replace and/or tension it (page 156).
	Thermo switch is defective	Must be replaced. Inform your KUBOTA dealer.
	Coolant level too low	Refill coolant (page 117).
	Leaky cooling system components	Check the cooling system for leaks, see the "Changing the Coolant" section (page 167).
	Dirty radiator	Clean radiator (page 68).
	Radiator cap (venting) is defective	Replace it; consult your KUBOTA dealer if necessary.
	Engine oil level is too low	Check the engine oil level, add engine oil if necessary (page 158).
	Fuel quality is low	Use fuel according to EN 590 or ASTM D975.
	Coolant lines corroded	Must be replaced. Inform your KUBOTA dealer.
	Constant operation at full capacity.	Operate the machine only with reduced loads until the temperature is normal again.
Exhaust gas colour very black.	Fuel quality is low	Use fuel according to EN 590 or ASTM D975.
	Engine oil level is too high	Check engine oil level, drain engine oil down to specified level if necessary.
	Air filter restricted	Check, clean and replace the air filter (page 154).
The engine stops suddenly.	Fuel shortage	Check the fuel level; refuel and bleed if necessary.
Deviation in driving direction of excavator.	Crawler tension adjusted incorrectly	Check and adjust the crawler tension, if necessary (page 150).
	Blocked by stones	Remove the stones.

https://truckmanualshub.com/

Troubleshooting: Display indications

If the machine develops a fault, one of the following messages will appear on the display. In the event of problems. please inform your KUBOTA dealer immediately.

In order to resolve malfunctions related to the operation, use or maintenance of the exhaust purification system, implement the measures immediately in accordance with the troubleshooting table.

No.	Display	Indicator	Problem/Malfunction	Preliminary measure	Solution
1.	CAN system error E: 001		The Controller Area Network (CAN) has developed a fault. Measured values may be incorrect and switches may not function.	The machine can be started and driven. Do not perform any work with the machine.	Inform your KUBOTA dealer immediately.
2.	Refuel No display		This message appears when the fuel level is low and prompts the operator to refuel.	-	Refuel the excavator.
3.	Maintenance required soon (notice) No display		This message means that regular maintenance is due shortly.	Operate the machine as usual.	Ask your KUBOTA dealer about the relevant parts. Run the maintenance procedure.
4.	Maintenance due (warning) No display		This message means that the regular maintenance is due.	The machine can be operated but service must be carried out urgently.	Ask your KUBOTA dealer about the relevant parts. Run the maintenance procedure.
5.	Water temperature rising E: 005		The temperature of the coolant is higher than normal.	Operate the machine only with reduced loads until the temperature is normal again.	-
6.	-	-	-	-	-
7.	Wrong key, unable to start No display		The machine cannot be started because the wrong key has been inserted.	Use the correct key.	-
8.	RED registration key, unable to start No display		Try starting the engine with the red key (for registration).	Use the correct key.	-
9.	Power failure, set clock No display		Power was interrupted and the clock now has to be set again.	To adjust the clock, press the display selector switch.	-
10.	-	-	-	-	-

https://truckmanualshub.com/

No.	Display	Indicator	Problem/Malfunction	Preliminary measure	Solution
11.	Raise control lever lock No display	(yellow)	This message indicates a step in a procedure.	Raise the control lever lock; the indicator goes out.	-
12.	Remove key No display		The key must be pulled out.	Pull out key.	-
13.	Lower control lever lock No display	(yellow)	This message indicates a step in a procedure.	Lower the control lever lock; the indicator goes out.	-
14.	Oil pressure too low E: 014	(red) +	The engine oil pressure is too low.	Stop the engine immediately. The engine may have developed a fault.	Inform your KUBOTA dealer immediately.
15.	Overheating E: 015		The machine is overheated and must cool off by idling.	Allow the machine to cool off by idling. Do not switch the engine off as the coolant could then boil over.	Clean the radiator and check the coolant, top up if necessary. Check the hydraulic system for leaks; if necessary, inform your KUBOTA dealer.
16.	Charging system error E: 016	(red) +	The charging system has developed a fault.	Check the V-belt. If the V-belt is OK, let the engine run until indicator goes out.	If the indicator does not go out, inform your KUBOTA dealer immediately.
17.	Fuel sensor error E: 017	(red)	The fuel sensor has developed a fault; the fuel gauge does not appear on the display.	Press the display selector switch to return to the default display.	Inform your KUBOTA dealer immediately.
18.	Water temperature sensor system error E: 018	(red)	The coolant temperature sensor has developed a fault; the coolant temperature gauge does not appear on the display.	Press the display selector switch to return to the default display. The functions of the machine are stable but overheating cannot be excluded.	Inform your KUBOTA dealer immediately.
19.	-	-	-	-	-

https://truckmanualshub.com/

No.	Display	Indicator	Problem/Malfunction	Preliminary measure	Solution
20.	Lever lock system error E: 020	(red)	The electrical system in the control lever lock has developed a fault.	The engine can be started but the machine cannot be set in motion.	Inform your KUBOTA dealer immediately.
21.	Travel speed system error E: 021	(red)	The electrical system in the travel speed has developed a fault.	The machine can only be set in motion at a low speed.	Inform your KUBOTA dealer immediately.
22.	Versatile operating switch system error E: 022	(red)	The multifunctional switch has developed a system fault.	The machine can be operated but the auxiliary port will not function.	Inform your KUBOTA dealer immediately.
23.	Auxiliary port 1 system error E: 023	(red)	Auxiliary port 1 has developed a fault.	The machine can be operated but auxiliary port 1 will not function.	Inform your KUBOTA dealer immediately.
24.	Auxiliary port 2 system error E: 024	(red)	Auxiliary port 2 has developed a fault.	The machine can be operated but auxiliary port 2 will not function.	Inform your KUBOTA dealer immediately.
25.	Overvoltage E: 025	(red)	This is a warning that a higher voltage (from a 24-V battery, for example) is being applied to the electric circuit, or that there is a problem with the alternator.	Switch the engine off immediately and check the battery and the alternator. Restart the engine.	If the indicator lights up again after restarting, inform your KUBOTA dealer immediately.
26.	-	-	-	-	-
27.	System error 5-V external E: 027	(red)	The 5-V sensor supply line has developed a system fault. The main functions are not available.	The machine can be started and driven. Do not perform any work with the machine.	Inform your KUBOTA dealer immediately.
28.	System error 12-V external E: 028	(red)	The 12-V sensor supply line has developed a system fault. The main functions are not available.	The machine can be started and driven. Do not perform any work with the machine.	Inform your KUBOTA dealer immediately.
29.	Start engine E: 029	(yellow)	This message indicates a step in a procedure.	Start the engine; the indicator goes out.	-

https://truckmanualshub.com/

https://truckmanualshub.com/

https://truckmanualshub.com/

MAINTENANCE

The maintenance section includes all care and maintenance tasks to be performed on the excavator.

Careful maintenance of the excavator will guarantee functional safety and a longer service life.

Failure to perform the servicing will void the warranty and any liability on the part of KUBOTA.

Only use spare parts that are recommended by the manufacturer. Non-approved spare parts of inferior quality or wrong classification result in an increased risk of accidents. Operators using non-approved spare parts are fully responsible for any damage arising as a consequence.

The machine's engine features an exhaust purification system. In order to maintain the emission performance, operate, use and service the engine according to the following provisions:

- Use the fuel recommended in these operating instructions.
- Use the engine oil recommended in these operating instructions.
- Service the engine according to the service intervals defined in these operating instructions.
- Replace the components associated with the engine in accordance with the intervals defined in these operating instructions.

Safety rules for maintenance

- The operator must provide persons who work with or on the excavator with suitable personal protective equipment (PPE) and those persons must use that equipment where applicable, for example: suitable working clothes, safety shoes, safety helmets, eye protection, ear protection and breathing masks. The owner/employer bears the main responsibility for the PPE, which is specified by the safety rules for particular types of activity.
- Maintenance, cleaning and care activities may only be carried out if the excavator is fully shut down. The excavator must be secured against restarting by removing the ignition key.
- The bucket must always be lowered to the ground for servicing.
- When defects are detected during servicing or maintenance, the excavator may only be operated after the defects have been remedied. Repairs may only be carried out by trained personnel.
- When carrying out maintenance and care activities, always make sure that the excavator is secured and stable.
- When working on the fuel system, smoking, open flames and the operation of other ignition sources are not allowed. The danger zone has to be clearly marked with signs. A fire extinguisher must be kept at hand in the danger zone.
- All waste materials must be discarded in accordance with environmental protection regulations.
- Use the maintenance and care materials listed in the "Recommended lubricants" (page 142) section.
- When working on the electrical system, disconnect it from the voltage source before starting the work. The work may only be carried out by technicians with electrical training.
- Always use a ladder or a scaffold if the work cannot be reached by the operator.
- The controls may only be used while the operator is sitting on the operator's seat.

https://truckmanualshub.com/

Personnel requirements

- The operator may only carry out cleaning and care activities.
- The servicing may only be performed by trained personnel.

Repair work on the machine

Repairs on the machine may only be carried out by trained personnel.

If repairs are carried out on load-bearing parts, for example welding on frame parts, the work has to be checked by a qualified person.

After repairs, the machine should be operated only if it is functioning properly. For this check, particular attention must be paid to the repaired parts and the safety devices.

Maintenance intervals

Maintenance interval display

10 hours before a certain service interval is due, the respective maintenance interval is already indicated on the display.

No.	Maintenance point	Elapsed hours of operation							Interval
		50	100	250	500	600	750	1000	
1	Engine oil change				❍			❍	500 h
2	Hydraulic oil change							❍	1000 h
3	Replace the air filter elements							❍	1000 h
4	Replace the drive unit oil	●			❍			❍	500 h
5	Engine oil filter change				❍			❍	500 h
6	Replace the return filter				❍			❍	500 h
7	Suction filter change							❍	1000 h

The servicing identified with ● must be carried out once the specified hours of operation after initial commissioning have been reached.

In addition to the indicator on the display, the maintenance indicator will light up (1).

The maintenance indicator automatically goes out after approx. 10 seconds and lights up again when the next maintenance interval has been reached.
The maintenance interval indicator can only be reset by hand.

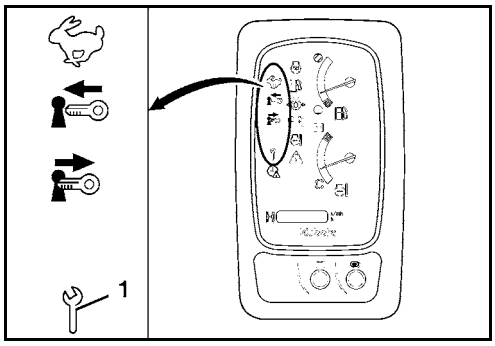

If the maintenance interval indicator has to be replaced because of a defect, the meter is set back to "0". Ask your KUBOTA dealer about this.

https://truckmanualshub.com/

https://truckmanualshub.com/

Operator maintenance chart

Check item		Tasks	Hours of operation indicator										Maintenance intervals	Page
			50	100	150	200	250	300	350	400	450	500		
Walk-around inspection		Check											Daily	66
Dust valve		Cleaning											Daily	67
Engine oil level		Check											Daily	67
Coolant level		Check											Daily	67
Coolant radiator and oil cooler		Check											Daily	68
V-belt		Check											Daily	68
Exhaust system leakage		Check											Daily	69
Hydraulic oil level		Check											Daily	69
Water separator		Check											Daily	69
Bucket bolt and bucket linkage bolt		Grease											Daily	70
Lubricate the front-end attachments	Swing bracket	Grease											Daily	70
	Other greasing points	Grease											Daily	71
Fuel level		Check											Daily	72
Fluid level of the wiper/washer system (cab version)		Check											Daily	72
Electrical equipment		Check											Daily	72
Fuel tank		Drain	❍	❍	❍	❍	❍	❍	❍	❍	❍	❍	50 h	146
Battery		Check	❍	❍	❍	❍	❍	❍	❍	❍	❍	❍	50 h	147
Swivel gear		Grease	❍	❍	❍	❍	❍	❍	❍	❍	❍	❍	50 h	149
Crawler tension		Check	❍	❍	❍	❍	❍	❍	❍	❍	❍	❍	50 h	150
		Setting	❍	❍	❍	❍	❍	❍	❍	❍	❍	❍	50 h	151
Water separator		Cleaning	❍	❍	❍	❍	❍	❍	❍	❍	❍	❍	50 h	151
Swivel bearing		Grease				❍				❍			200 h	153
Fresh air filter 1.)		Check				❍				❍			200 h	153
		Cleaning				❍				❍			200 h	153
Air filter 1.)		Check				❍				❍			200 h	154
		Cleaning				❍				❍			200 h	154
Coolant hoses and hose clamps		Check				❍				❍			200 h	155
Fuel lines and air intake hoses		Check				❍				❍			200 h	155

1.) If there is a lot of dust, the air filters and the fresh air filters must be cleaned and/or replaced more often.

https://truckmanualshub.com/

Check item		Tasks	Hours of operation indicator										Maintenance intervals	Page
			550	600	650	700	750	800	850	900	950	1000		
Walk-around inspection		Check											Daily	66
Dust valve		Cleaning											Daily	67
Engine oil level		Check											Daily	67
Coolant level		Check											Daily	67
Coolant radiator and oil cooler		Check											Daily	68
V-belt		Check											Daily	68
Exhaust system leakage		Check											Daily	69
Hydraulic oil level		Check											Daily	69
Water separator		Check											Daily	69
Bucket bolt and bucket linkage bolt		Grease											Daily	70
Lubricate the front-end attachments	Swing bracket	Grease											Daily	70
	Other greasing points	Grease											Daily	71
Fuel level		Check											Daily	72
Fluid level of the wiper/washer system (cab version)		Check											Daily	72
Electrical equipment		Check											Daily	72
Fuel tank		Drain	❍	❍	❍	❍	❍	❍	❍	❍	❍	❍	50 h	146
Battery		Check	❍	❍	❍	❍	❍	❍	❍	❍	❍	❍	50 h	147
Swivel gear		Grease	❍	❍	❍	❍	❍	❍	❍	❍	❍	❍	50 h	149
Crawler tension		Check	❍	❍	❍	❍	❍	❍	❍	❍	❍	❍	50 h	150
		Setting	❍	❍	❍	❍	❍	❍	❍	❍	❍	❍	50 h	151
Water separator		Cleaning	❍	❍	❍	❍	❍	❍	❍	❍	❍	❍	50 h	151
Swivel bearing		Grease		❍				❍				❍	200 h	153
Fresh air filter 1.)		Check		❍				❍				❍	200 h	153
		Cleaning		❍				❍				❍	200 h	153
Air filter 1.)		Check		❍				❍				❍	200 h	154
		Cleaning		❍				❍				❍	200 h	154
Coolant hoses and hose clamps		Check		❍				❍				❍	200 h	155
Fuel lines and air intake hoses		Check		❍				❍				❍	200 h	155

1.) If there is a lot of dust, the air filters and the fresh air filters must be cleaned and/or replaced more often.

https://truckmanualshub.com/

Skilled personnel maintenance chart

Carry out for each maintenance of the "Pre-operational services" (page 66).

Servicing	Tasks	Hours of operation indicator *										Maintenance intervals	Page
		50	100	150	200	250	300	350	400	450	500		
V-belt	Setting					❍					❍	250 h	156
Pilot valve linkage	Grease					❍					❍	250 h	156
Engine oil and oil filter	Change										❍	500 h	157
Drive unit oil 3.)	Change	●									❍	500 h	158
Fuel filter	Change										❍	500 h	159
Return filter 2.)	Change					●					❍	500 h	160
In-line filter	Change											1000 h	164
Hydraulic oil and suction filter 2.)	Change											1000 h	163
Fresh air filter 1.)	Change											1000 h	164
Air filter 1.)	Change											1000 h	165
Pilot circuit filter	Change											1000 h	165
Fuel injection - fuel injector pressure	Check	Please contact your KUBOTA dealer.										1500 h	--
Oil in idler and track roller	Change	Please contact your KUBOTA dealer.										2000 h	--
Alternator and starter motor	Check	Please contact your KUBOTA dealer.										2000 h	--
Fuel injection pump	Check	Please contact your KUBOTA dealer.										3000 h	--
Safety inspection 4.)	Check											Annually	171
Coolant hoses and hose clamps	Change	Please contact your KUBOTA dealer.										Every 2 years	--
Fuel lines and air intake hoses	Change	Please contact your KUBOTA dealer.										Every 2 years	--
Coolant	Change											Every 2 years	167
Hydraulic hoses	Change	Please contact your KUBOTA dealer.										Every 6 years	--

* The servicing identified with ● must be carried out once the specified hours of operation after initial commissioning have been reached.

1.) If there is a lot of dust, the air filters and the fresh air filters must be cleaned and/or replaced more often.
2.) When using a breaker over 20 % → every 800 h.
When using a breaker over 40 % → every 400 h.
When using a breaker over 60 % → every 300 h.
When using a breaker over 80 % → every 200 h.
3.) Earlier if necessary.
4.) At least annually.

https://truckmanualshub.com/

Servicing	Tasks	Hours of operation indicator *										Mainte-nance in-tervals	Page
		550	600	650	700	750	800	850	900	950	1000		
V-belt	Setting					❍					❍	250 h	156
Pilot valve linkage	Grease					❍					❍	250 h	156
Engine oil and oil filter	Change										❍	500 h	157
Drive unit oil 3.)	Change										❍	500 h	158
Fuel filter	Change										❍	500 h	159
Return filter 2.)	Change										❍	500 h	160
In-line filter	Change										❍	1000 h	164
Hydraulic oil and suction filter 2.)	Change										❍	1000 h	163
Fresh air filter 1.)	Change										❍	1000 h	164
Air filter 1.)	Change										❍	1000 h	165
Pilot circuit filter	Change										❍	1000 h	165
Fuel injection - fuel injector pressure	Check	Please contact your KUBOTA dealer.										1500 h	--
Oil in idler and track roller	Change	Please contact your KUBOTA dealer.										2000 h	--
Alternator and starter motor	Check	Please contact your KUBOTA dealer.										2000 h	--
Fuel injection pump	Check	Please contact your KUBOTA dealer.										3000 h	--
Safety inspection 4.)	Check											Annually	171
Coolant hoses and hose clamps	Change	Please contact your KUBOTA dealer.										Every 2 years	--
Fuel lines and air intake hoses	Change	Please contact your KUBOTA dealer.										Every 2 years	--
Coolant	Change											Every 2 years	167
Hydraulic hoses	Change	Please contact your KUBOTA dealer.										Every 6 years	--

* The servicing identified with ● must be carried out once the specified hours of operation after initial commissioning have been reached.

1.) If there is a lot of dust, the air filters and the fresh air filters must be cleaned and/or replaced more often.
2.) When using a breaker over 20 % → every 800 h.
When using a breaker over 40 % → every 400 h.
When using a breaker over 60 % → every 300 h.
When using a breaker over 80 % → every 200 h.
3.) Earlier if necessary.
4.) At least annually.

https://truckmanualshub.com/

Recommended lubricants

	Recommendation			Filled at the factory		Note
	Ambient temperature conditions	Viscosity	Quality standard	Brand	Type	
Engine oil	In winter and/or at low temperatures	SAE 10W SAE 20W	API CF* API CI-4 API CJ-4			When diesel fuel with a high sulfur content (between 0.50 % and 1.00 %) is used, the engine oil and engine oil filter must be replaced at shorter intervals. Never use diesel fuel with a sulphur content exceeding 1.00 %.
	In summer and/or at high ambient temperatures	SAE 30 SAE 40 SAE 50				
	All-weather	15W-40*		Shell	Rimula R4L*	
Coolant			SAE J1034* MB 325.0* ASTM D3306* D4985	ROWE	Hightec Antifreeze AN G48* (-37 °C)*	Always use distilled water to mix with antifreeze. Always follow the recommendations of the coolant manufacturer for the mixing ratio. Do not mix with other coolants.
Grease		NLGI-2*	DIN 51825 KP2K-30*	Mobil	Mobilux EP2*	
		NLGI-1		WEICON	Antiseize Standard	Only use during the first 50 working hours (on all greasing points around the swing block).
Hydraulic oil	In winter and/or at low temperatures	ISO 32 ISO 46*		Shell	Tellus S2M46*	
	In summer and/or at high ambient temperatures	ISO 46 ISO 68				
Gear oil	In winter and/or at low temperatures	SAE 75 SAE 80	MIL-L-2105C*			
	In summer and/or at high ambient temperatures	SAE 90 SAE 140				
	All-weather	80W-90*		Shell	Spirax MA80W*	

https://truckmanualshub.com/

	Recommendation			Filled at the factory		Note
	Ambient temperature conditions	Viscosity	Quality standard	Brand	Type	
Fuel**			EN 590 ASTM D975			For preparing the excavator for use in winter, fill the fuel tank with winter diesel and allow the engine to run for a few minutes. Never use diesel fuel with a sulphur content exceeding 1.00 %.

* These lubricants are used by the manufacturer for the initial filling.

** Only use fuels with a maximum sulphur content of 10 mg/kg (20 mg/kg at the last distribution point to the end user), a minimum cetane rating of 45, and a maximum share of 7 % fatty acid methyl ester (FAME).

https://truckmanualshub.com/

Make the maintenance points accessible

Opening/closing the engine compartment cover

- Insert the key in the lock (1) of the engine compartment cover (3) and turn it clockwise.
- Pull the handle (2) and swing the engine compartment cover completely to the left.

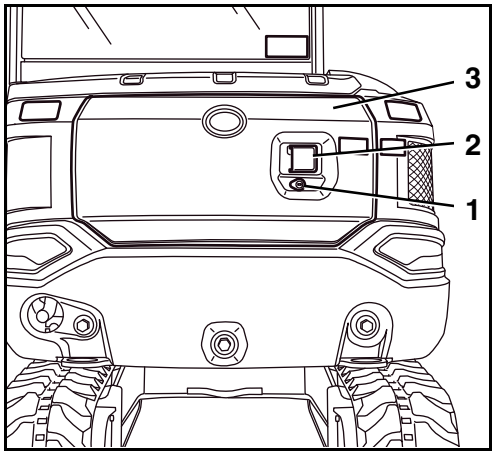

STOP

If the cover is unexpectedly slammed shut, e.g. by another person or by the wind, this could lead to serious injury!

- *Ensure that the locking mechanism (1) is correctly engaged in the recess (2).*

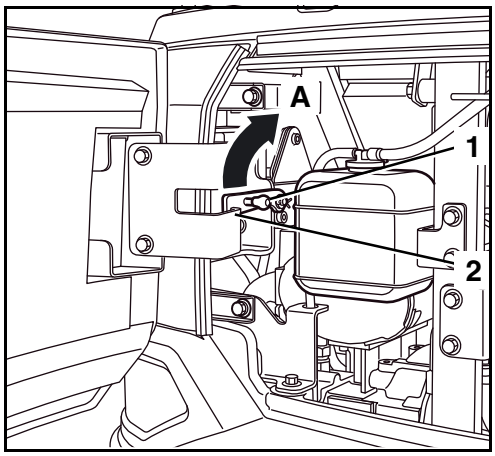

- To close the engine compartment cover, lift (A) the stop plate (1) until the locking pin is released.
- Close the engine compartment cover and press it into the lock.
- Turn the key anticlockwise to lock the engine compartment cover.
- Pull out the key.

Make sure that the engine compartment cover is correctly closed.

Opening/closing the side cover

- Insert the key into the lock (3) on the side cover (1) and turn it clockwise.
- Take hold of the side cover on the recessed grip (2) and pivot it all the way forwards.

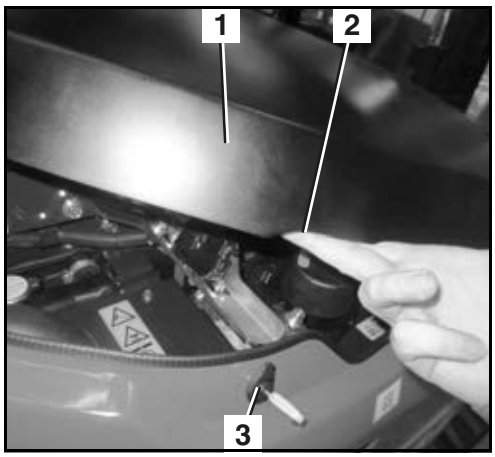

https://truckmanualshub.com/

Make sure that the catch (1) has snapped into place properly. If the engine cover is unexpectedly slammed shut, for example by another person or by the wind, serious injury could result.

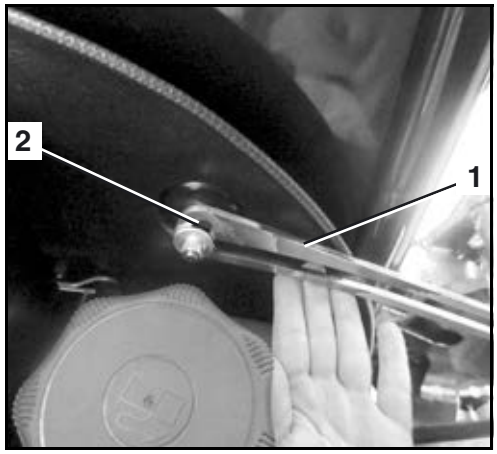

- To close, lift the catch (1) out of the locking mechanism (2) and pivot the side cover to the rear.
- Press the side cover into the lock and remove the key.

Make sure that the lock has properly engaged.

Opening and closing the left service cover

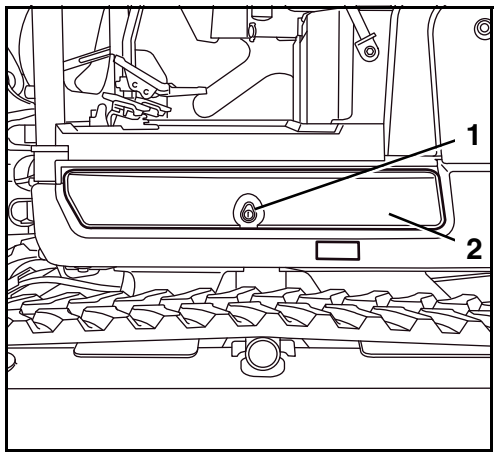

- Insert the key in the lock (1) of the cover (2) and turn it clockwise.
- To open, raise the cover.

The cover has no catch! The cover falls off upon release, which can lead to hand injuries during clamping.

- To lock the cover, lower it again and turn the key anticlockwise.
- Pull out the key.

Opening/closing the right ventilation grille

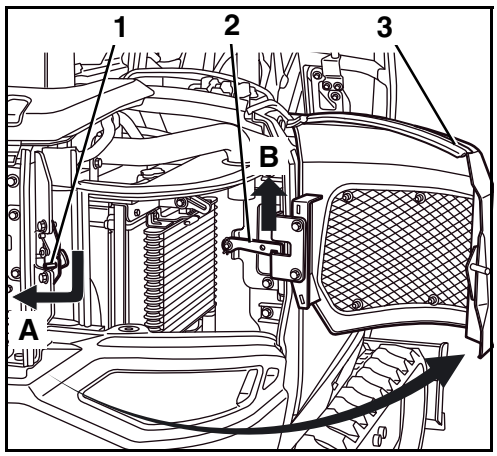

- Open the engine compartment cover (page 144).
- Press down on catch lever (1) (A).
- Swivel the ventilation grille (3) to the right.
- To close, lift the locking device (2) out of the locking mechanism (B) and swivel the ventilation grill to the left.
- Make sure that the ventilation grill is engaged in the catch lever (1).
- Close the engine compartment cover.

https://truckmanualshub.com/

Maintenance work for the operator

Adhere to the instructions for regular servicing to keep the excavator in good condition.

Every 50 hours of operation

Fuel tank - drain

The drain valve (1) for draining the fuel tank is located underneath the swivel frame, at the back right.

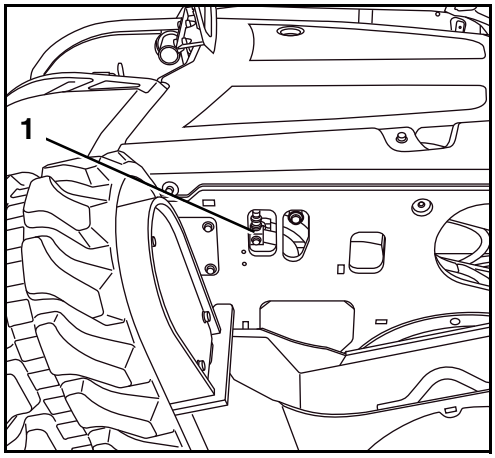

To perform the following tasks, the dozer must be facing forwards in the direction of travel and the swivel frame turned to the right by 45°.

- Place a container with a minimum capacity of 50 litres under the fuel drain plug.

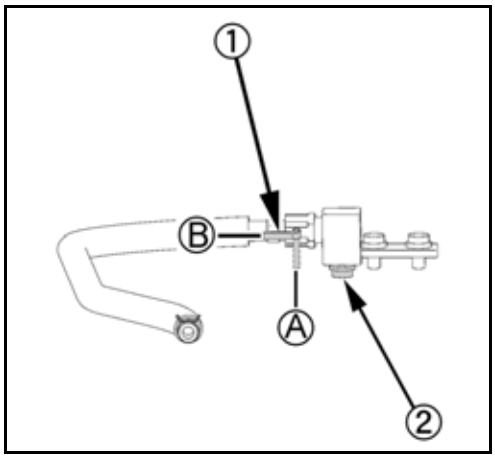

- Close drain valve (1) (A).
- Unscrew the plug (2)
- Open drain valve (B) and drain the water.
- Close the drain valve.
- Install the plug using a new seal.

Dispose of fluid in the container according to the applicable environmental protection regulations.

https://truckmanualshub.com/

Battery service

The battery can become damaged or may explode if the following instructions are not observed. Regular maintenance can extend the life cycle of the battery considerably.
- *Never charge or use the battery when the battery electrolyte level is below the minimum mark.*
- *Check the battery regularly.*

Regular maintenance can extend the life cycle of the battery considerably.

Battery - check

- Open the side cover (page 144).

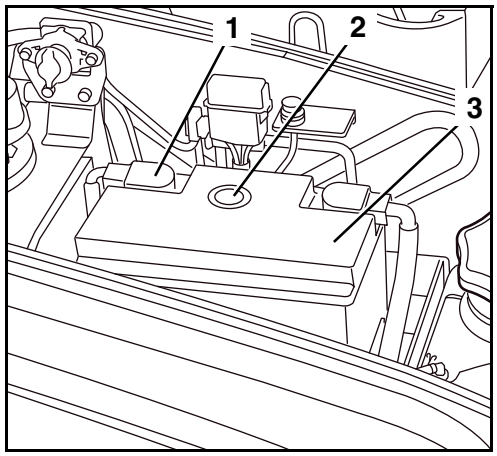

Be careful when cleaning the positive terminal (1) - risk of short circuit! Do not use metal tools.

- The battery charge must be checked on the charge indicator (2) according to the operating instructions of the battery manufacturer.

Do not open maintenance-free batteries!

- Check battery (3) for tight fit, if necessary screw tight.
- Check battery poles for cleanness, if necessary clean and grease with petroleum jelly.
- Close the side cover.

Battery - load

Battery acid is very caustic. Avoid contact with battery acid under all circumstances. If clothing, skin or eyes have come into contact with battery acid, rinse the affected parts immediately with water. If the eyes are affected, immediately seek medical attention! Neutralise spilled battery acid immediately.

When servicing a battery, always wear suitable protective gloves and eye protection.

Charge batteries only in sufficiently ventilated rooms. Smoking, uncovered lights or fire are not allowed in these rooms.

Explosive gas is created when charging batteries. Open flames can cause an explosion.

Remove the plugs when charging batteries that are virtually empty. If the batteries are merely being recharged, the plugs can be left in the batteries.

The battery can only be charged if the starter switch is in the STOP position and the key removed.

https://truckmanualshub.com/

- Make the battery accessible.
- Check the electrolyte level in the battery, adding distilled water if required.

When disconnecting and connecting the battery, always observe the specified order → Risk of short circuit.

- Remove the negative terminal cover and take off the cable clamp. Move the clamp to the side so as to avoid contact with the negative terminal.
- Remove the positive terminal cover.
- Connect the battery charger to the battery according to the instructions of the charger manufacturer. Choose the normal (gentle) charging method.
- Clean the battery after charging and replenish the electrolyte, if necessary.
- Check the acid density with a hydrometer. The acid density should be between 1.24 and 1.28 kg/l. If the acid density differs considerably among the individual cells of a battery, the battery probably has a defect. Check the affected battery with a battery tester and contact trained personnel.

Battery - change

When disconnecting and connecting the battery, always observe the specified order → Risk of short circuit.

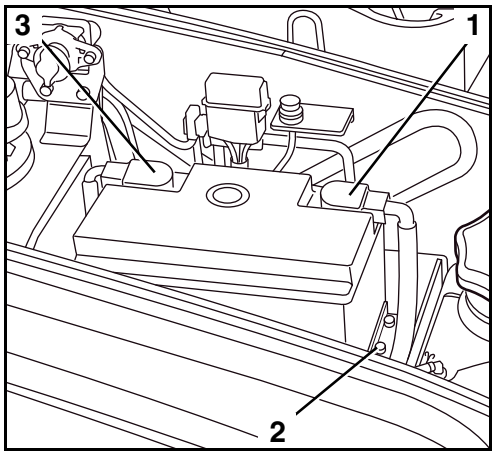

- Open the side cover (page 144).
- Remove the negative terminal cover and take off the cable clamp (1). Move the clamp to the side so as to avoid contact with the negative terminal.
- Remove the positive terminal cover and take off the cable clamp (3). Move the clamp to the side so as to avoid contact with the positive terminal.
- Remove the battery retainer (2) and lift the battery out of the swivel frame.

When replacing the battery, always install a battery of the same type with the same power rating and the same dimensions.

- Before installation, cover the battery terminals and cable clamps with petroleum jelly.
- Install the battery in the swivel frame and fasten it with the battery retainer. Make sure that the battery is installed tightly → Do not operate the excavator with a loose battery.
- Connect the positive cable clamp to the positive terminal (+) of the battery, install the positive terminal cover.
- Connect the negative terminal (-) of the battery, install the negative terminal cover.

https://truckmanualshub.com/

Swivel gear - grease

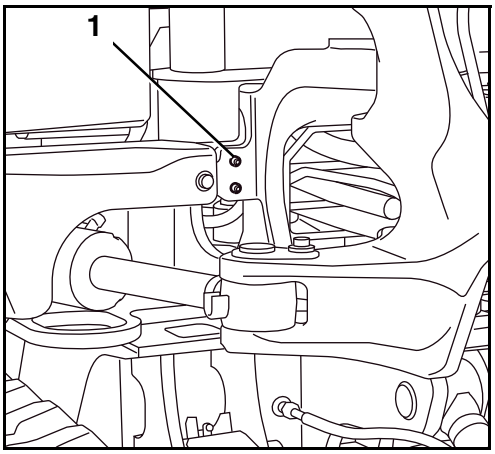

- Fill grease through the grease nipple (1) with a grease gun.

Grease at each 90° position of the swivel gear. Fill a total of approx. 50 g of grease (approx. 20 shots with the grease gun). Refer to the "Recommended lubricants" section (page 142).

When moving the swivel frame, make sure no person or material is in the swivel area. Turn the starter switch to the STOP position and remove the key before the next greasing procedure.

- Operate the excavator and swivel the swivel frame by 90° several times. After greasing, swivel the swivel frame 360° several times to distribute the grease evenly.

Crawler tension - check/adjust

When parking an excavator with rubber crawlers, ensure that the seam (∞) is on top, half way between the two sliders (see figure/1, "Crawler tension - check", page 150).

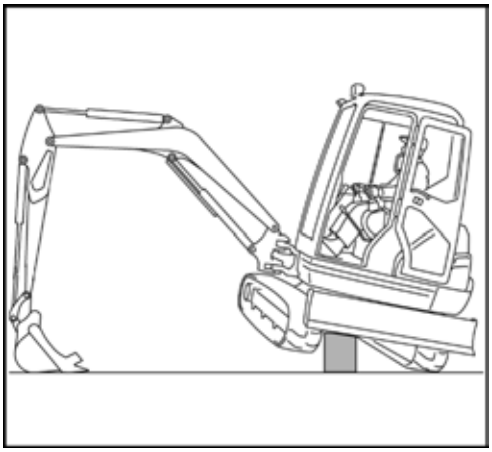

- Clean all parts of the running gear, paying particular attention to stones between the crawler and sprocket or idler. Clean the area of the crawler tensioning cylinder.
- Swivel the swivel frame 90° to the direction of travel as shown in the figure.
- Lower the front attachments on the ground and raise the excavator approx. 200 mm off the ground on one side.

Working under the lifted excavator poses a danger!
For your own safety, do not use any hydraulic supports. They can lower due to loss of pressure, tip over or be lowered by mistake.
- *Never work under the lifted excavator.*
- *Do not work with hydraulic supports.*
- *Have a guide supervise the procedure.*

- Support the excavator with appropriate backing material, observing the vehicle weight.

https://truckmanualshub.com/

Crawler tension - check

If the crawlers are too tight, wear is increased.

If the crawlers are too loose, wear is increased and the crawlers may come off.

- The crawler seam (1) is half way between the idler and sprocket.
- Check the crawler sag as shown in the figure.

Crawler sag "A" 10-15 mm

- If the crawler sag is more than 15 mm, adjust the crawler.
- If necessary, tighten or loosen the crawler.
- Start the engine and rotate the lifted crawler briefly.

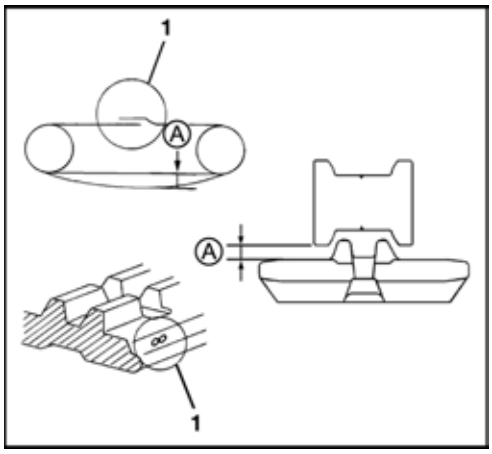

Caution: The area around the rotating crawler must be free of persons. Turn the starter switch to the STOP position after turning and remove the key.

- Recheck the crawler tension, readjusting it if necessary.
- Perform the procedures on the second crawler.

Checking the crawler tension (steel)

- Check the crawler sag as shown in the figure.

Crawler sag "A" 80-85 mm

- If the crawler sag is more than 85 mm, adjust the crawler.
- If necessary, tighten or loosen the crawler.
- Start the excavator and rotate the lifted crawler briefly.

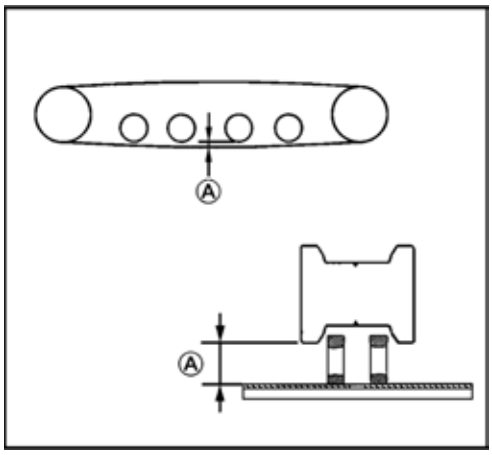

Caution: The area around the rotating crawler must be free of persons. Turn the starter switch to the STOP position after turning and remove the key.

- Recheck the crawler tension, readjusting it if necessary.
- Perform the procedures on the second crawler.

https://truckmanualshub.com/

Crawler tension - adjust

Tightening the crawlers

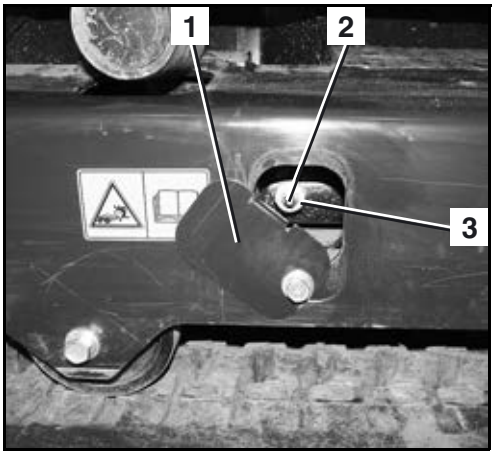

- Remove the crawler tensioner cover (1).
- Position the grease gun on the grease nipple (2).
- Pump the grease gun until the specified crawler tension is obtained.

Loosening the crawlers

- Loosen the pressure valve (3) carefully.

STOP

Do not unscrew the pressure valve too quickly or completely. Otherwise grease can squirt out at high pressure from the opening of the clamping cylinder.

- If the grease is emitted from the pressure valve in a controlled way, start the engine and rotate the lifted crawler briefly.
- Screw in the pressure valve and torque to 98-108 Nm.
- Check and adjust the crawler tension, if necessary.

Water separator - cleaning

Water and impurities in the fuel settle in the water separator. A red plastic ring (4) in the water separator floats on the water. If such substances have deposited or the plastic ring has come up to the mark (5), the water separator must be emptied.

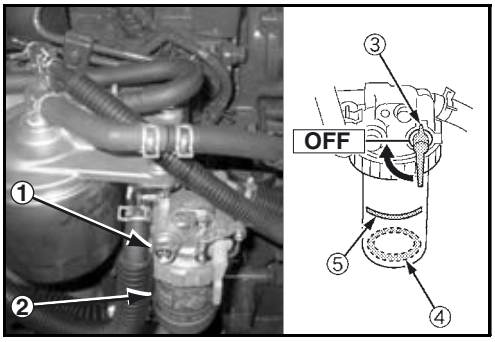

- Open the engine compartment cover (page 144).

Place a cleaning cloth under the water separator to prevent fuel from running onto the ground.

- Turn the cock (3) to the “OFF” position.
- Unscrew retainer (1) while holding on to the cup (2).
- Remove the cup.

https://truckmanualshub.com/

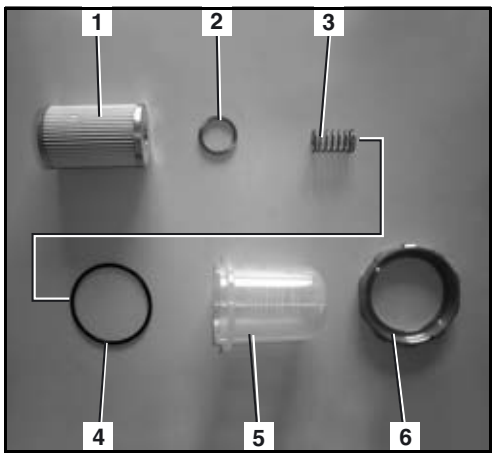

- Empty the cup (5) and clean with clean diesel fuel.
- Check filter (1) for excessive dirt; replace it if necessary.
- Replace the oil ring (4) and lubricate it with diesel fuel.
- Assemble the components 1 to 6 in this exact order.

Do not forget the red plastic ring (2) and the compression spring (3).

- Tighten retainer (6) manually, do not use tools.
- Switch the shutoff-valve to the “ON” position.
- Bleed the fuel system (page 119).
- Check the water separator for leaks.

Dispose of cleaning cloths according to the applicable environmental protection regulations.

- Close the engine compartment cover.

https://truckmanualshub.com/

Every 200 hours of operation

Swivel bearing - grease

- Fill grease through the grease nipple (1) with a grease gun.

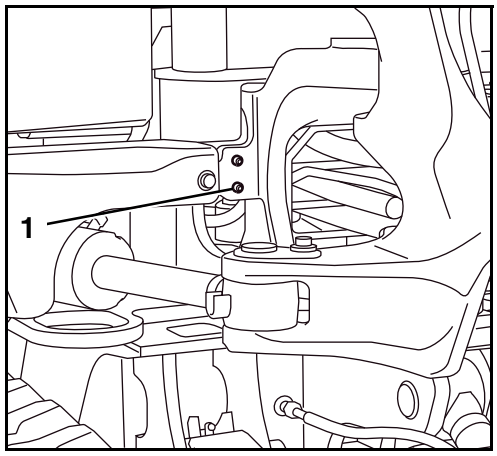

Grease at each 90° position of the swivel bearing. Using the grease gun, apply 5 shots at every position. Refer to the "Recommended lubricants" section (page 142).

When moving the swivel frame, make sure no person or material is in the swivel area. Turn the starter switch to the STOP position and remove the key before the next greasing procedure.

- Operate the excavator and swivel the swivel frame by 90° several times. After greasing, swivel the swivel frame 360° several times to distribute the grease evenly.

Fresh air filter - check/clean

If the excavator is used in especially dusty surroundings, the fresh air filters must be checked more often.

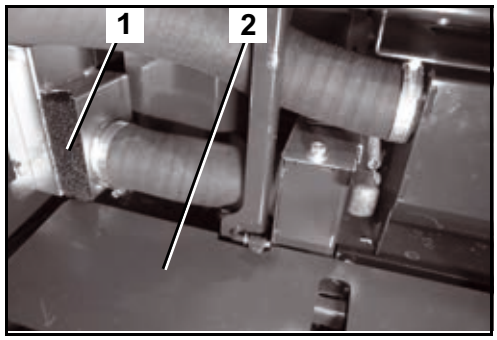

- Unlock and unfold the cover plate (2).
- Carefully remove the fresh air filter (1) from the support.

Check

- Check fresh air filter for soiling and damage. If there is too much soiling or damage, the fresh air filter must be replaced (page 164).

Cleaning

Clean only with filtered air at max. 2 bar pressure.

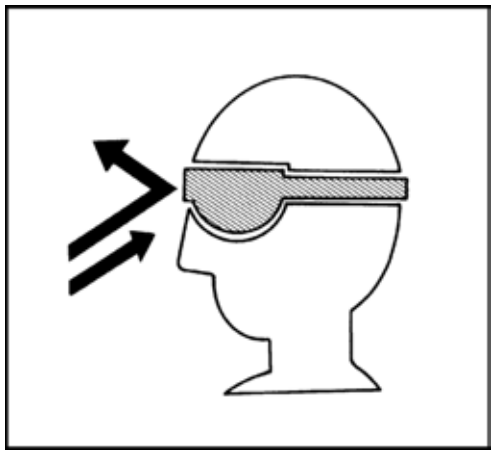

Always wear eye protection when working with compressed air.

https://truckmanualshub.com/

- Clean the filter (1) with compressed air in direction "A", opposite the normal direction of flow.

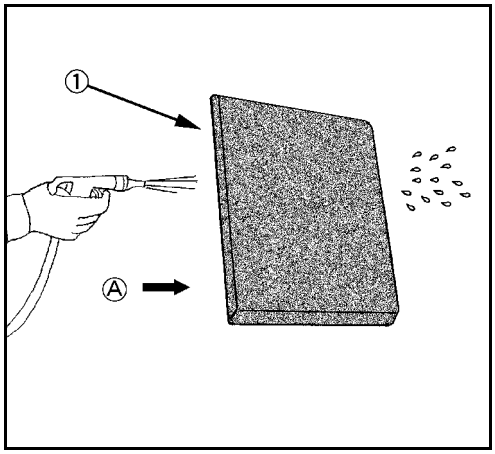

Take care not to damage the filter when installing it. When using a damaged filter, dirt will get into the heater assembly and lead to considerable damage there.

- Insert fresh air filter.
- Close the cover.

Air filter element - check/clean

If the excavator is operated in a particularly dusty environment, the air filter must be checked more often.

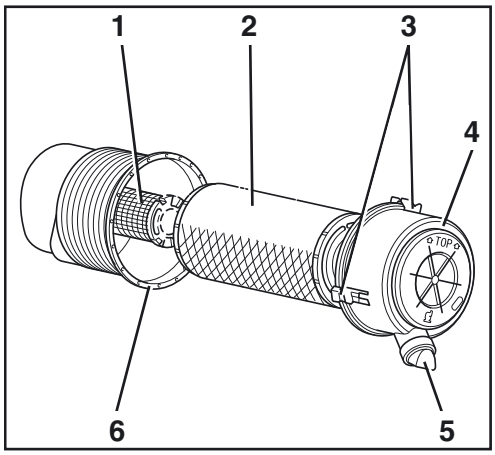

- Open the engine compartment cover (page 144).
- Open the clips (3) and remove the cover (4).
- Pull the outer filter element (2) out of the air filter case (6) and check it for dirt.
- Clean the air filter case and cover without removing the inner filter element (1). Remove the inner filter element only when replacing it.
- Clean the dust valve (5).
- Replace the filter elements if they are damaged or very dirty (page 165).

The internal filter element must only be replaced by skilled personnel in the framework of the corresponding service period.

STOP *Do not clean the filter element with fluids. Never operate the engine without the air filter elements.*

STOP *Always wear eye protection when working with compressed air.*

- Clean the outer filter element with compressed air (max. 5 bar) from the inside out without damaging the filter element. Wear eye protection for this service.
- Insert the outer air filter element and the cover with the TOP mark facing up. Then lock the braces.
- Close the engine compartment cover.

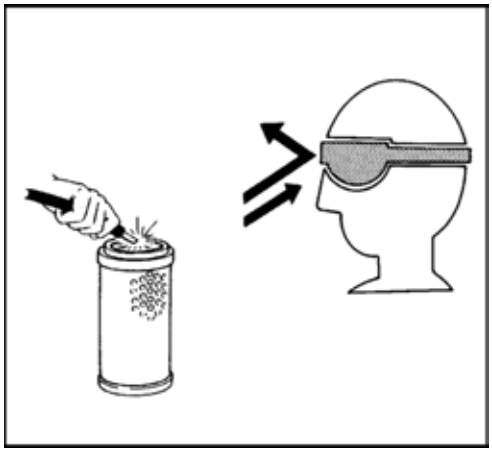

https://truckmanualshub.com/

Coolant hoses and hose clamps - check

Only carry out inspections when engine is cold, otherwise there is a risk of burns!

- Open the engine compartment cover (page 144).
- Inspect all coolant hoses (1) on the engine and to the radiator or to the heater fan (cab version) for condition (cracks, bulges, hard spots), tightness, and firm seating of the clamps (2). If necessary, have the hoses replaced by trained personnel.
- Close the engine compartment cover.

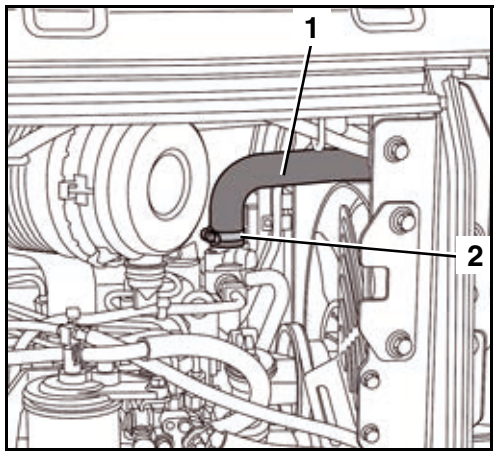

Fuel lines and air intake hoses - check

- Open the engine compartment cover (page 144).
- Check all accessible fuel lines (1) and clamps (2) for damage and tightness.

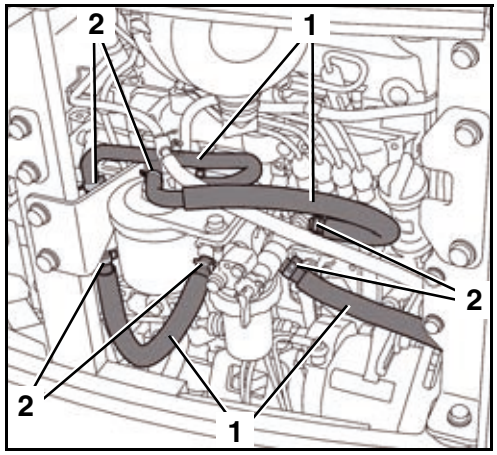

- Check all accessible air intake hoses (1) and clamps (2) for damage and ensure they are securely fastened.
- Repair or replace damaged parts.
- Close the engine compartment cover.

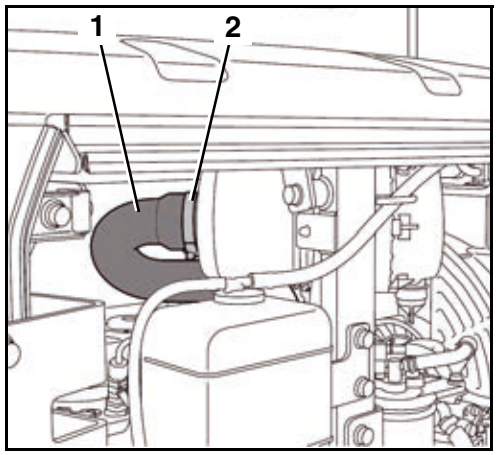

https://truckmanualshub.com/

Servicing by skilled personnel

Every 250 hours of operation

V-belt - adjust

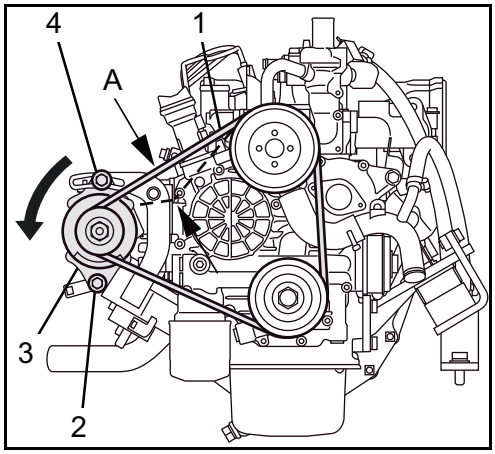

- Open the engine compartment cover (page 144).
- Check the V-belt (1) (page 68).

The V-belt tension is set as follows:

- Loosen the fastening screw (2).
- Loosen the fastening screw (4).
- Tighten the V-belt (1) by swinging the alternator (3).
- Tighten the fastening screw (4).
- Press in the V-belt at position "A". The V-belt must give way for approx. 7-9 mm (pressure: 6-7 kg).
- Tighten the fastening screw (2).
- Close the engine compartment cover.

Pilot valve - grease

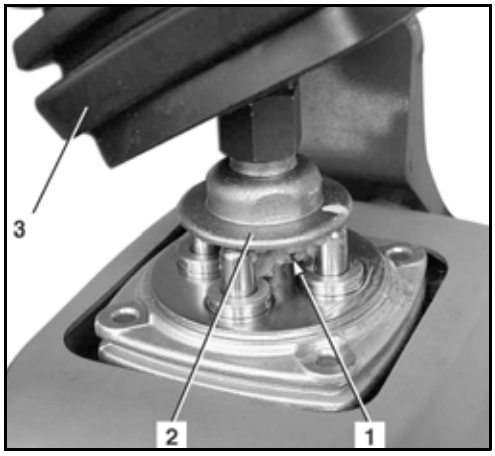

- Pull up the rubber boot on the control lever (3).
- Lubricate the hinge (1) underneath the disc (2) with grease. See "Recommended lubricants" section (page 142).
- Insert the bellows into the console.
- Perform the same service on the second control lever.

https://truckmanualshub.com/

Every 500 hours of operation

Engine oil and oil filter - change

To perform the following tasks, the dozer and boom must be positioned in the forward direction of travel.

The engine oil change must be carried out while the engine is warm.

Caution: the engine oil and the oil filter are very hot → Risk of scalding.

Place an oil pan with a capacity of approx. 15 litres under the engine oil drain. The engine oil should not be allowed to seep into the soil and it must be discarded like the oil filter in accordance with the applicable environmental protection regulations.

- Open the engine compartment cover (page 144).

Engine oil - drain

- Remove the oil drain plug (1) and let the engine oil drain into the drain pan.
- Install the oil drain plug using a new seal.

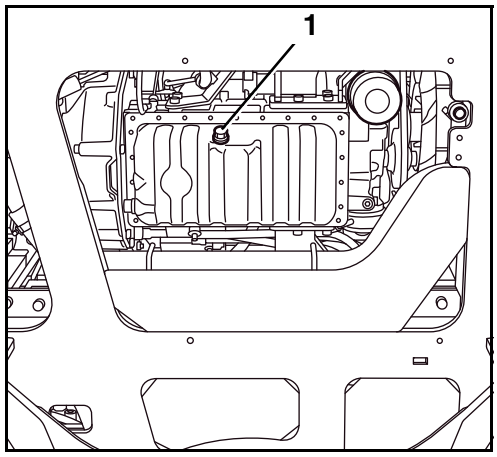

Engine oil filter - change

- Place an oil pan under the oil filter (1). Remove the oil filter using a filter wrench (turn anticlockwise).
- Coat the sealing ring of the new oil filter with engine oil.
- Install and tighten the oil filter by hand. Do not use the filter wrench.

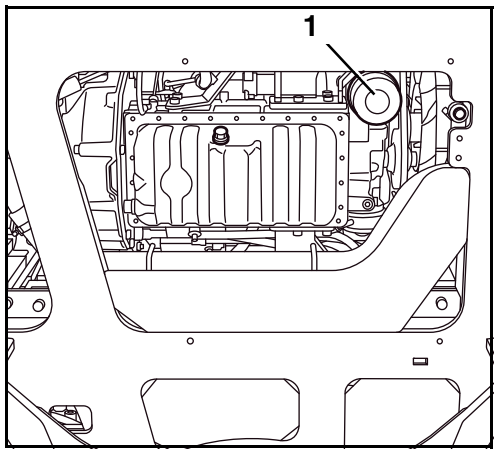

https://truckmanualshub.com/

Engine oil - fill

Filling capacity (with oil filter): 4.5 litres

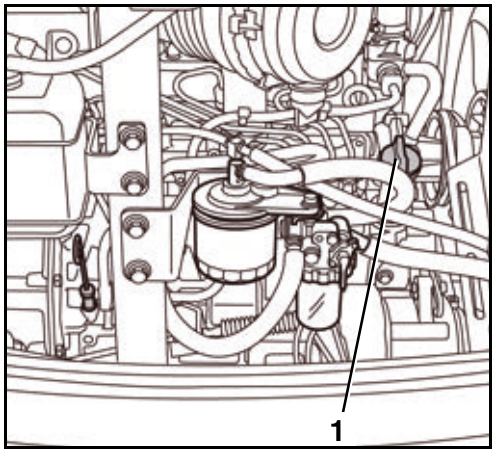

- Remove the oil filler cap (1) and top up engine oil. See the "Recommended lubricants" section (page 142).
- Screw in the oil filler cap.
- Start the engine (page 77). The engine oil pressure indicator must go out as soon as the engine has started. If this does not happen, switch the engine off immediately and contact trained personnel.
- Let the engine run at idle speed to warm up, then stop it (page 79). Check the oil level after 5 minutes.
- Pull out the oil dipstick (1) and wipe it with a clean cloth.
- Insert the oil dipstick completely and pull it out again. The oil level should be in the "A" area. If the oil level is too low, add engine oil.

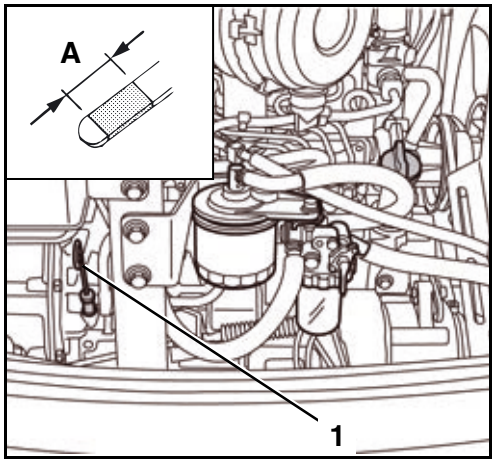

If the oil level is too high or too low, the engine might become damaged during operation.

- When changing the engine oil, fill engine oil up to the MAX mark.
- Close the engine compartment cover.

Drive unit oil - change

Only change the oil when the drive unit is warm to the hand; if not, drive the excavator until it is warm.

- Park the excavator on level ground so that the drain plug (figure below, position 2) is positioned at the bottom.
- Place a catch tray with a minimum capacity of 2 litres under the drain plug.

https://truckmanualshub.com/

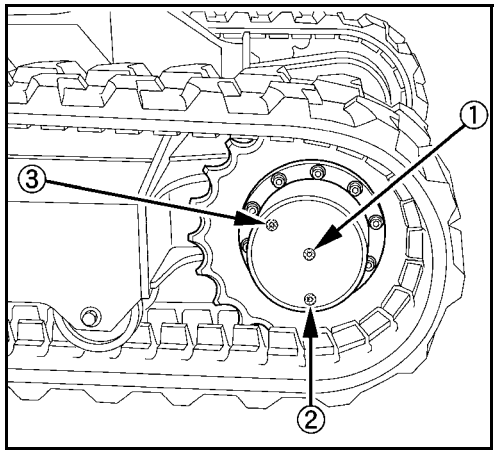

- Remove the drain plug (2) and let the oil drain out completely. Install the drain plug with a new sealing ring on it.
- Remove the oil filler plug (3) and oil level screw (1).
- Top up oil as described in the "Recommended lubricants" section (page 142). The oil level is the lower edge of the thread (1).

Capacity:	KX027-4	0.35 litres
	KX030-4	0.60 litres

- Refit the oil filler plug and the set screw with a new sealing ring and tighten it.
- Perform the same service on the second drive unit.

Dispose of cleaning cloths and old oil in accordance with applicable environmental protection regulations.

Fuel filter cartridge - change

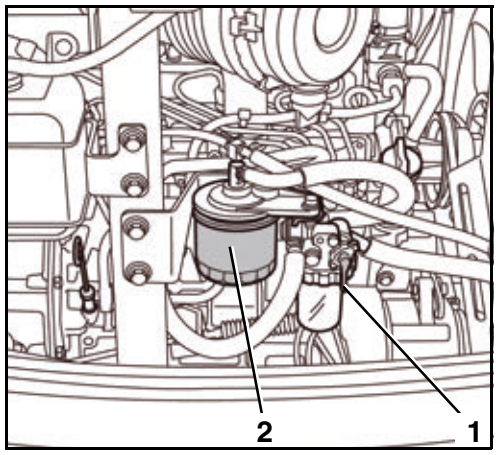

- Open the engine compartment cover (page 144).

Place a cleaning cloth under the fuel filter to prevent fuel from spilling onto the ground.

- Turn the cock (1) at the water separator to the OFF position.
- Remove the fuel filter (2).
- Wet the rubber seal of the new filter with fuel.
- Install a new filter and tighten it by hand.
- Switch the shutoff-valve to the “ON” position.
- Bleed the fuel system (page 119).
- Check the fuel filter for leaks.

Dispose of cleaning cloths and the old filter element in accordance with applicable environmental protection regulations.

- Close the engine compartment cover.

https://truckmanualshub.com/

Return filter - change

Pay attention to utmost cleanliness when servicing the hydraulic system.

This service may only be carried out after the hydraulic oil has cooled down.

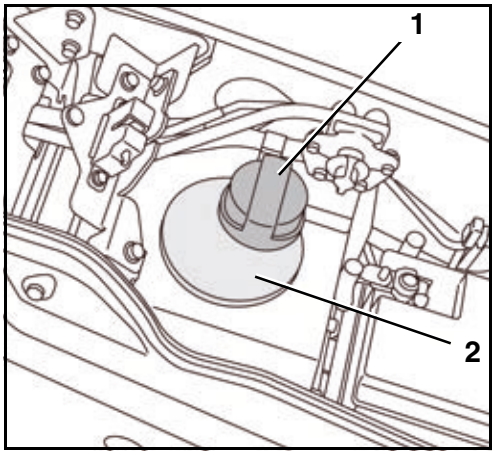

- Open the side cover (page 145).
- Unscrew the breather filter (1) from the cap (2).
- Unscrew the cap (2).

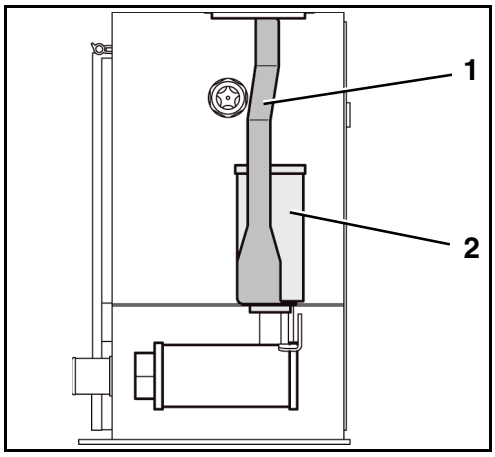

- Pull out the filter support (1) together with the return filter (2) from the hydraulic oil tank.
- Loosen the lock nut and unscrew the return filter from the filter support.

Dispose of cleaning cloths and the old filter element in accordance with applicable environmental protection regulations.

- Screw a new return filter onto the filter support, tighten the lock nut.
- Insert the return filter and support assembly into the hydraulic oil tank over the return pipe.
- Check the condition of the sealing ring on the cap; change it if necessary.
- Insert the cap with the guide into the filter support and tighten.
- Check the hydraulic oil level, add oil if necessary.
- Screw the breather filter into the cap tightly by hand.
- Close the side cover.

https://truckmanualshub.com/

Every 1000 hours of operation

Hydraulic oil - fill/change

Pay attention to utmost cleanliness when servicing the hydraulic system.

This service may only be carried out after the hydraulic oil has cooled down. The temperature of the hydraulic oil should be between 10 °C and 30 °C.

The suction filter must be changed along with the hydraulic oil.

The hydraulic oil drain plug (1) is located underneath the right side of the swivel frame. To drain the hydraulic oil, the hydraulic oil drain plug must be located between the two chains.

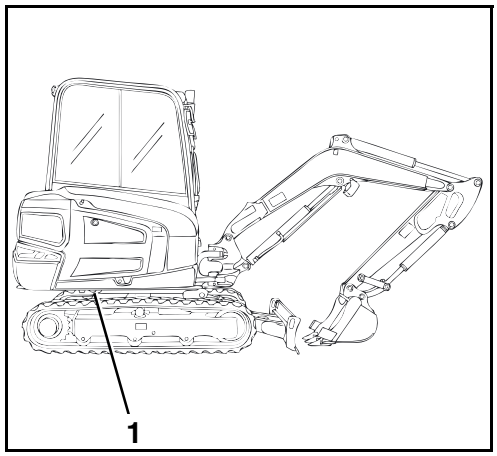

- Face the swivel frame forwards in the direction of travel and rotate it another 45° to the right.
- Operate the boom, arm, bucket and boom swing mechanism so that all hydraulic cylinders are extended half way.
- Lower the dozer onto the ground.
- Open the side cover (page 144).

Hydraulic oil - drain

- Place a container with a minimum capacity of 50 l under the hydraulic oil drain plug.
- Remove the drain plug (1) and drain the hydraulic oil.
- Install the drain plug with a new sealing ring on it.

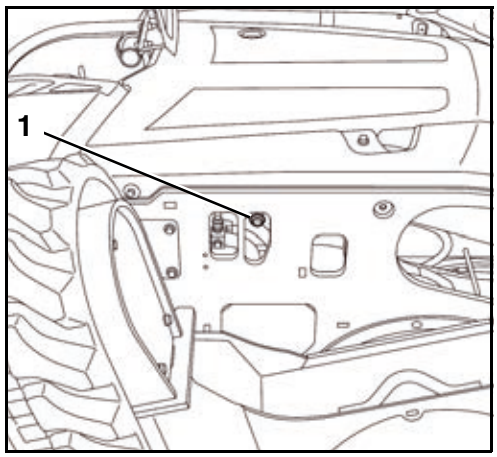

Dispose of cleaning cloths and old oil in accordance with applicable environmental protection regulations.

https://truckmanualshub.com/

Hydraulic oil - fill

Filling quantity with oil change: approx. 34 l

Total hydraulic system capacity: 42 l

- Unscrew the breather filter (1) from the cap (3).
- Insert a clean funnel with a strainer into the fill opening (2).
- Add hydraulic oil up to the centre of the sight glass (figure below, position/1).
- Screw the breather filter into the cap tightly by hand.
- Start the excavator and operate all control functions.
- Extend the hydraulic cylinders for the boom, arm and bucket halfway.

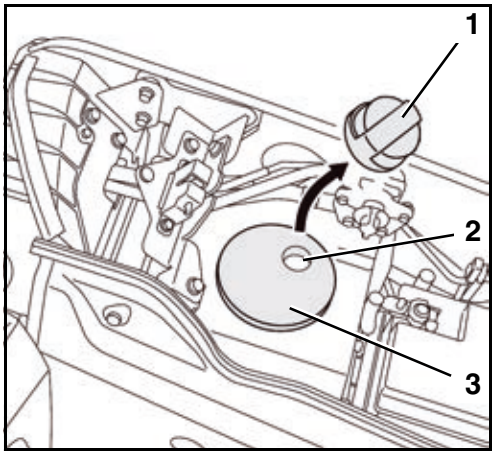

- Extend the boom swing mechanism to the centre position.
- Lower the dozer onto the ground.
- Check the oil level in the sight glass (1).

The oil level should be 1/2 to 3/4 of the way up the sight glass.

- Carefully check the position of the hydraulic cylinders again before topping up the oil..
- Close the side cover.

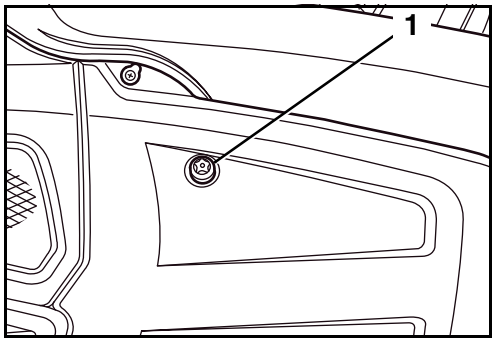

https://truckmanualshub.com/

Suction filter - change

Pay attention to utmost cleanliness when servicing the hydraulic system.

This service may only be carried out after the hydraulic oil has cooled down.

The suction filter must be replaced along with the hydraulic oil.

- Drain the hydraulic oil (page 161).
- Remove the return filter from the hydraulic oil tank (page 160).
- Remove the suction filter (1).
- If necessary, remove any residues with a clean, lint-free cloth.

Dispose of cleaning cloths and the old filter element in accordance with applicable environmental protection regulations.

- Install a new suction filter and tighten it by hand.
- Install the return filter (page 160).
- Fill hydraulic oil (page 162).

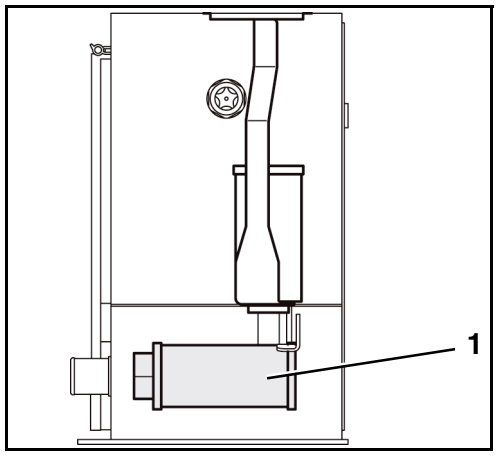

Heating pipes and hoses - check

Carry out the inspection while the engine is cold.

- Open the engine compartment cover (page 144).
- Open the side cover (page 144).
- All pipe and hose lines of the heater must be checked for condition (cracks, bulging, hard spots) and tight fit. If any defects are found during the inspection, please consult your KUBOTA dealer. Only trained personnel may work on the heater.
- Close the engine compartment and side cover.

https://truckmanualshub.com/

In-line filter - change

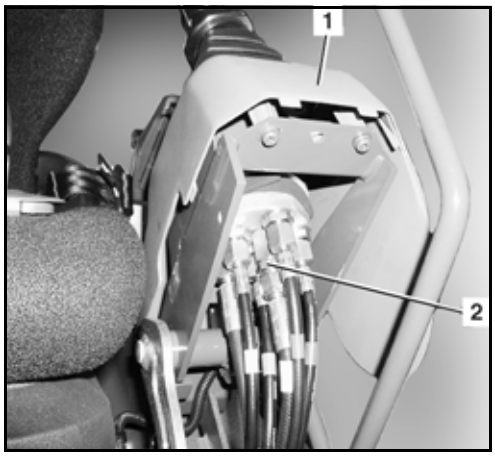

Pay attention to utmost cleanliness when servicing the hydraulic system.

The replacement procedures are explained with the LH control lever as an example; the RH control lever filter replacement should be performed in the same manner.

- Put cleaning cloths in the working area under the control console.
- Depressurise hydraulic system (page 104).
- Raise the left control console (1).
- Remove the lower trim panels.
- Remove the hydraulic line (white).
- Unscrew the in-line filter (2).
- Screw in a new filter.
- Reconnect the hydraulic line.
- Reinstall the trim panels.
- Change the RH control lever in-line filter.

Dispose of cleaning cloths and the old filter element in accordance with applicable environmental protection regulations.

Fresh air filter - change

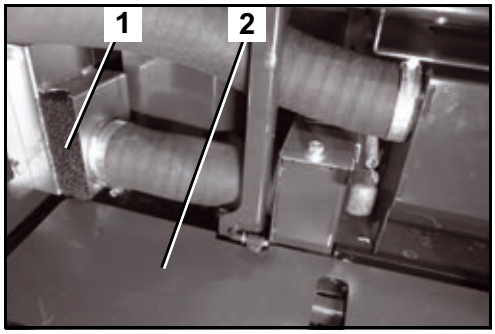

- Unlock and unfold the cover plate (2).
- Remove the fresh air filter (1) from the support.

Take care not to damage the filter when installing it. When using a damaged filter, dirt will get into the heater assembly and lead to considerable damage there.

- Insert a new fresh air filter.
- Close the cover.

Dispose of the old filter element according to the applicable environmental protection regulations.

https://truckmanualshub.com/

Air filter element - change

Risk of engine damage!
The interior filter element (1) must remain installed while cleaning the air filter case (6). Otherwise, particles of dirt could enter the air intake duct while cleaning and damage parts of the injection system and engine.

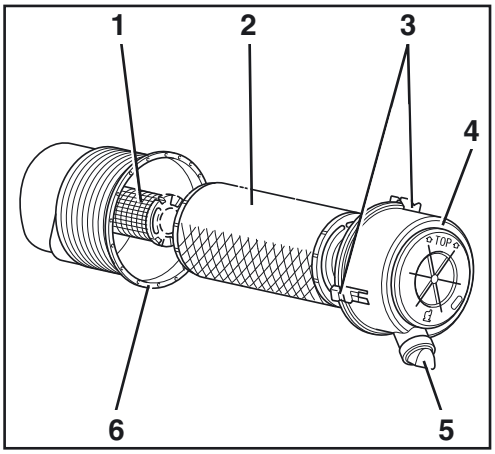

- Open the engine compartment cover (page 144).
- Open the clips (3) and remove the cover (4).
- Clean cover and dust valve (5).
- Pull the outer filter element (2) out of the air filter case (6).
- Clean the air filter case without removing the inner filter element (1).
- Remove inner filter element after cleaning the air filter case and immediately insert a new filter element.
- Insert new outer filter element.
- Close the cover with the TOP mark facing up. Then lock the braces.
- Close the engine compartment cover.

Dispose of old filter elements according to the applicable environmental protection regulations.

Pilot circuit filter - change

Pay attention to utmost cleanliness when servicing the hydraulic system.

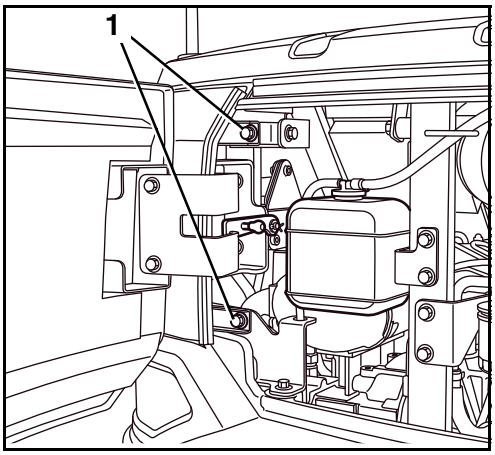

- Open the engine compartment cover.
- Remove the screws (1).

https://truckmanualshub.com/

- Remove the screws (2).
- Remove the LH side cover (1).

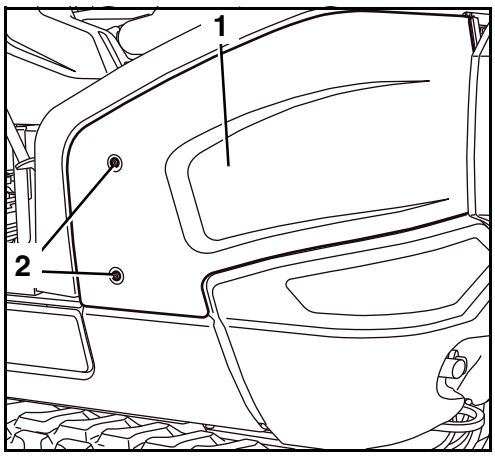

- Put cleaning cloths in the working area under the pilot circuit filter.

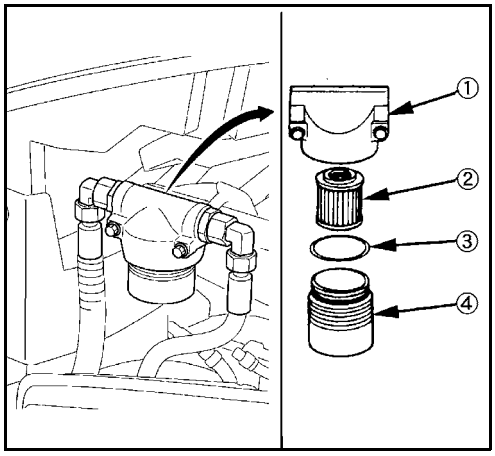

- Remove the filter cup (4) from the filter head (1).
- Remove the filter element (2) from the filter head.
- Replace the sealing ring (3) with a new one.
- Lubricate the new sealing ring with clean hydraulic oil and insert it carefully so as not to damage the sealing ring.
- Insert a new filter element.
- Screw in the filter cup and tighten it by hand.
- Start the engine. Let the engine run at idle speed to warm up, then stop it.
- Check the hydraulic oil level, add oil if necessary.
- Install the LH side cover.
- Close the engine compartment cover.

Dispose of cleaning cloths and the old filter element in accordance with applicable environmental protection regulations.

https://truckmanualshub.com/

Every 2 years

Coolant - change

To perform the following tasks, the dozer and boom must be positioned in the forward direction of travel.

Drain only when engine is cold, otherwise there is a risk of scalding!

Filling capacity	Canopy	Cab
Radiator	2.4 litres	2.6 litres
Expansion reservoir	0.6 litres	0.6 litres

- Open the engine compartment and side cover (page 144).
- Place a container with a minimum capacity of 5 litres under the coolant drain plug.
- Remove the radiator cap (1) by turning it anticlockwise.

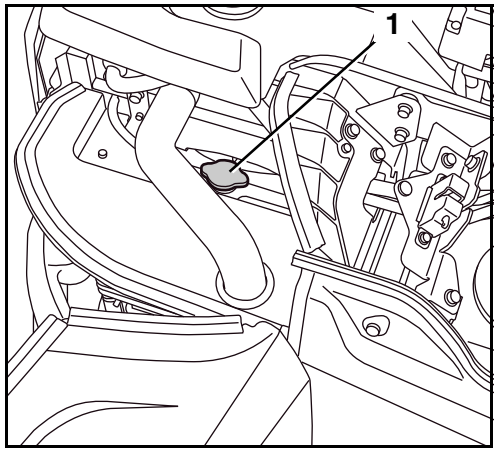

- Open the central coolant drain plug (1) and drain the coolant completely.

Flush out the cooling system if the coolant is very dirty. To do this, spray water without additives into the cooling system with a hose through the filler opening until clear water emerges from the outlet.

- Close the central drain.

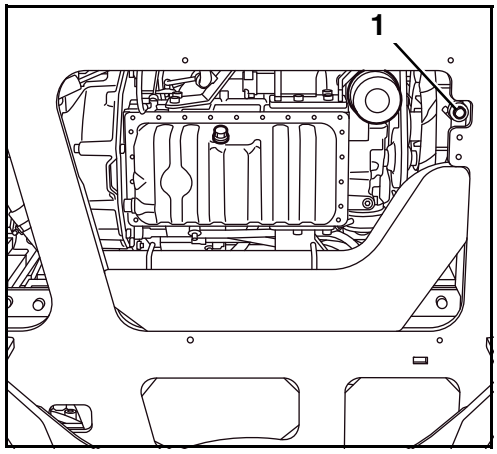

https://truckmanualshub.com/

- Remove the coolant expansion reservoir (1) and drain it, cleaning it if necessary. Refit the reservoir.

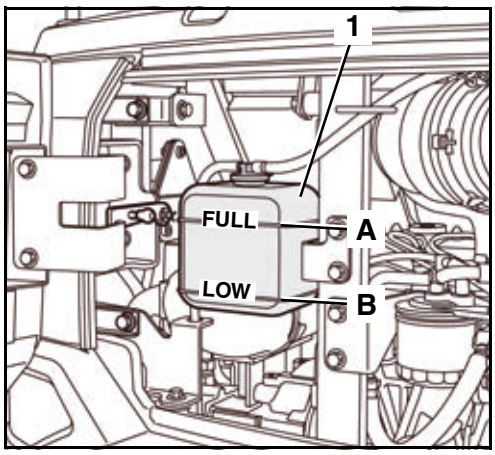

Dispose of old coolant according to the applicable environmental protection regulations.

Do not operate the cooling system with pure water (even in summer). The antifreeze also contains a corrosion inhibitor.

- Mix the coolant.

The antifreeze strength must be between -25 °C and -40 °C.

The antifreeze portion of the coolant should not exceed 50 %.

- Fill the premixed coolant into the radiator and expansion reservoir.
- Close the expansion tank cover.
- Close the radiator cap.
- Start the engine and let it idle to warm up.
- Stop the engine.
- Check the coolant level, top up if necessary.
- Close the side cover.
- Close the engine compartment cover.

https://truckmanualshub.com/

Bolted joints - check

The table below contains the torques for nuts and bolts. These may only be tightened with a torque wrench. Missing values can be requested from KUBOTA.

Tightening torque for screws

Nm (kgf•m)

	4 T (4.6)	7 T (8.8)	9 T (9.8-10.9)
M 6	7.8~9.3 (0.8~0.95)	9.8~11.3 (1.0~1.15)	12.3~14.2 (1.25~1.45)
M 8	17.7~20.6 (1.8~2.1)	23.5~27.5 (2.4~2.8)	29.4~34.3 (3.0~3.5)
M 10	39.2~45.1 (4.0~4.6)	48.1~55.9 (4.9~5.7)	60.8~70.6 (6.2~7.2)
M 12	62.8~72.6 (6.4~7.4)	77.5~90.2 (7.9~9.2)	103.0~117.7 (10.5~12.0)
M 14	107.9~125.5 (11.0~12.8)	123.6~147.1 (12.6~15.0)	166.7~196.1 (17.0~20.0)
M 16	166.7~191.2 (17.0~19.5)	196.1~225.6 (20.0~23.0)	259.9~304.0 (26.5~31.0)
M 20	333.4~392.3 (34.0~40.0)	367.7~431.5 (37.5~44.0)	519.8~568.8 (53.0~58.0)

Note: Use screws 9 T for canopy assembly, but tighten with torque indicated for screws 7 T.

The maximum torque of the plastic trim bolted connections between the operator's place and the engine compartment may not exceed 21 Nm. When tightening the screws with a torque higher than 21 Nm, the plastic trim helicoil inserts will be loosened or destroyed.

Tightening torque for hose clamps

Size	Part number	Hydraulic oil	Water	Air
10-16	69741-7287-0	4.0 Nm	3.0 Nm	2.5 Nm
13-20	69481-1116-0	4.0 Nm	3.0 Nm	2.5 Nm
16-25	69741-7281-0	4.0 Nm	4.5 Nm	2.5 Nm
22-32	69741-7284-0	4.0 Nm	4.5 Nm	2.5 Nm
25-40	69741-7282-0	4.0 Nm	4.5 Nm	2.5 Nm
40-60	69481-1518-0	4.0 Nm	4.5 Nm	2.5 Nm
32-50	69741-7283-0	4.0 Nm	4.5 Nm	2.5 Nm
50-70	69741-7285-0	4.0 Nm	4.5 Nm	2.5 Nm

https://truckmanualshub.com/

Tightening torque for hydraulic hoses

Wrench size	Torque in Nm	Hose size	Thread
14	15-20	DN 4-1/8"	M12x1.5
17	15-20	DN 6-1/4"	M14x1.5
19	30-35	DN 8-5/16"	M16x1.5
22	40-45	DN 10-3/8"	M18x1.5
27	50-55	DN 13-1/2"	M22x1.5

Are also valid for adaptor with premounted nut.

Tightening torque for hydraulic pipes

Wrench size	Torque in Nm	Pipe size	Thread
17	30-35	6x1	M12x1.5
17	30-35	8x1	M14x1.5
19	40-45	10x1.5	M16x1.5
22	60-65	12x1.5	M18x1.5
27	75-80	15x1.5	M22x1.5
30	90-100	16x2	M24x1.5
32	110-120	18x2	M26x1.5
36	130-140	22x2	M30x2
41	140-160	25x2.5	M36x2
27	60-65	15x1.5	M22x1.5 for ED-2 only

Tightening torque for hydraulic adapters

Thread	Wrench size	Torque in Nm	Pipe size	Thread
1/8"	14	15-20	4x1	M10x1.0
1/8"	17	25-35	6x1	M12x1.5
1/4"	19	34-45	8x1	M14x1.5
1/4"	19-22	40-55	10x1.5	M16x1.5
3/8"	22-24	45-65	12x1.5	M18x1.5
1/2"	27	70-80	15x1.5	M22x1.5
1/2"	27-30	80-90	16x2	M24x1.5
3/4"	32	100-120	18x2	M26x1.5
1"	36	120-140	22x2	M30x2.0

https://truckmanualshub.com/

SAFETY INSPECTION

All safety inspections are based on the national worker's protection regulations, safety regulations and technical specifications applicable to the country in which the machine is operated.

The owner (operator) (page 13) should arrange for the safety inspections to be performed at specified intervals according to national rules and regulations.

Based on their technical training and experience, the qualified personnel should have sufficient knowledge in the domain of the machine described here and be familiar with the applicable national work safety regulations, accident prevention regulations and the generally accepted technical rules so that they can assess the sound operating condition of the machine.

The qualified person must keep his appraisal and evaluation neutral and must not be influenced by personal, economic or operational interests. The inspection is a visual and functional check of all components for condition and completeness and of the effectiveness of the safety devices.

The performance of the inspection must be documented in the form of an inspection report containing at least the following information:

- Date and scope of the inspection indicating all pending checks,
- Result of the inspection with a report of the determined faults,
- Assessment with respect to commencing or continuing operation,
- Information on necessary follow-up inspections and
- Name, address and signature of the inspector.

The owner/employer (company) is responsible for the observance of the inspection intervals. The acknowledgement and the elimination of the determined faults must be confirmed by the owner/employer in writing, along with the date, in the inspection report.

The inspection report must be kept on file at least until the next inspection.

https://truckmanualshub.com/

https://truckmanualshub.com/

TAKING OUT OF SERVICE AND STORAGE

If the excavator is taken out of service for up to six months, the measures before, during and after taking it out of service must be carried out as described below. If the vehicle is to be taken out of service for a period of over six months, contact the manufacturer for additional measures.

Safety rules for taking out of service and storage

The general safety rules (page 13), the safety rules for operation (page 61) and the safety rules for maintenance (page 135) apply.

When taking the excavator out of service, secure it against unauthorised use.

Storage conditions

The storage place must have a sufficient load-bearing capacity for the weight of the excavator.

The storage place must be frost-free, dry and well ventilated.

Measures before taking out of service

- Clean and dry the excavator thoroughly (page 121).
- Check the hydraulic oil level, top up if necessary (page 69).
- Change the engine oil and oil filter (page 157).
- Drive the excavator to the storage place.
- Remove the battery (page 148) and store it in a dry and frost-protected room. If necessary, connect it to a trickle charger.
- Grease the swivel gear (page 149).
- Grease the swivel bearing (page 153).
- Grease all other greasing points (page 71).
- Grease the swing bracket (page 70).
- Grease the bucket bolt and bucket linkage bolt (page 70).
- Check the antifreeze content of the coolant, add coolant if necessary (page 116).
- Grease the hydraulic cylinder piston rods.

Measures during taking out of service

- Charge the battery regularly (page 147).

https://truckmanualshub.com/

Start-up after taking out of service

- If necessary, clean the excavator thoroughly (page 121).
- Check the hydraulic oil for condensate water. Replace the oil if necessary (page 161).
- Remove the grease from the piston rods of the hydraulic cylinders.
- Install the battery (page 148).
- Check the safety devices for proper operation.
- Carry out the pre-operational services (page 66). If defects are detected during start-up, repair the defects before proceeding.
- If the safety inspection is due while the vehicle has been taken out of service, the inspection must be performed before start-up.
- Start the engine (page 77). Run the excavator at idle and check all functions.

https://truckmanualshub.com/

LIFTING CAPACITY OF THE EXCAVATOR

Constructive calculation of lifting capacity

- The lifting capacity of the excavator is based on ISO 10567 and does not exceed 75 % of the static tipping load or 87 % of the hydraulic lifting capacity of the machine.
- The lifting capacity is measured at the front bolt of the arm with the arm fully extended. The arm is fully in the dump position. The boom cylinder is the operating cylinder.
- The lifting conditions are:

1. Swivel up to 360°, dozer up and down

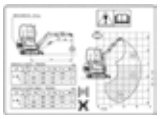

The position of the dozer is not relevant to the maximum lifting capacity when swivelling up to 360°.
The illustration on the label is representative of both states: Dozer up and down.

2. Over front end, dozer down

3. Over front end, dozer up

- As well as the lifting conditions, the length of the arm also affects the permitted lifting capacities and the stability of the machine. Compare the dimensions of the machine arm with the details given in the lifting capacity tables, in order to use the correct lifting capacity table for your machine.

Dimensions for the arm, see "Arm version" table in the "Dimensions" section (page 37).

https://truckmanualshub.com/

Lifting attachment

- The lifting operation is only permitted when the excavator is equipped with the following safety systems as per EN 474-5:
  - Pipe safety valve on the boom cylinder (page 189)
  - Pipe safety valve on the arm cylinder (page 189)
  - Overload warning system (page 190)

- If the dozer is being used to increase the machine's stability, an additional pipe safety valve must be installed in accordance with EN 474-1 (page 189).

- The lifting attachment is to be fastened to the attachment or to other parts of the excavator in such a manner as to exclude the possibility of the lifting rope accidentally unhooking.

- The installation on the attachment or the equipment must be such as to guarantee the optimum field of vision between the operator and the guide [the person who fastens the lifting rope to the lifting attachment].

- The lifting attachment is to be positioned so that the lifting rope is not deflected from its vertical direction of tension by other parts of the machine.

- The lifting attachment must be formed and positioned in such a manner as to exclude the possibility of the lifting rope accidentally slipping.

- Care must be taken when positioning the lifting attachment that there is no risk of restriction (e.g. becoming caught on something) during normal operation of the excavator or when working on any particular object.

- Load suspensions (e.g. hooks) may only be welded on by suitably skilled personnel. For this type of work, please contact your KUBOTA dealer.

- At every point of the implement or the boom, the lifting attachment must withstand a load of two-and-a-half-times its rated lifting load.

https://truckmanualshub.com/

Load suspension device

A load suspension device with all the characteristics listed below is required:

- The system must withstand a load two-and-a-half times its rated lifting load, regardless of the point at which that load is applied.
- The system must be designed in such a way as to practically prevent any objects that have been lifted from falling from the lifting attachment, for example by means of a protective attachment designed for this purpose.
- The system must not allow the lifting attachment to slip from the attachment being lifted.

STOP *Do not lift loads that exceed the values indicated in the lifting capacity tables.*

STOP *Always observe the maximum permissible lifting capacity of the hoisting gear (e.g. load hooks). Lifting loads over the maximum permissible lifting capacity is not allowed.*

STOP *The values indicated in the tables only apply to level and hard grounds. When working on soft ground, the machine can tip over easily, as the load is concentrated on one side only and the crawler or the dozer can dig into the ground.*

STOP *The values indicated in the tables only apply for loads without a bucket. If a bucket is used, the weight of the bucket must be subtracted from the values in the tables. The weight of mounted accessories (e.g. grapple kit, quick coupler, etc.) must be subtracted from the lifting capacity.*

STOP *During lifting operations, the boom may not be swivelled to the left or right. The entire machine could tilt! In order to avoid inadvertent actuation, lower the locking flap for the boom swing pedal.*

STOP *During lifting operations the driving/moving of the crawler chassis is not permitted.*

Use utmost care to avoid any risk of tipping, slipping, or other potential risks implied when lifting loads.
The operator must

- pick up the load at the centre,
- avoid sudden steering movements,
- make sure the load does not swing.

https://truckmanualshub.com/

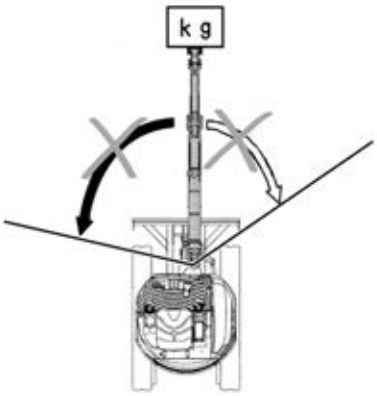

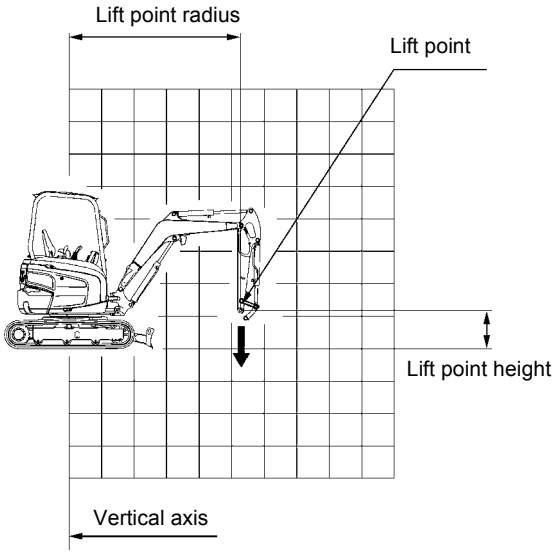

Max. lifting capacity when rotating up to 360°

KX027-4 (canopy) / arm 1050 mm and arm 1300 mm

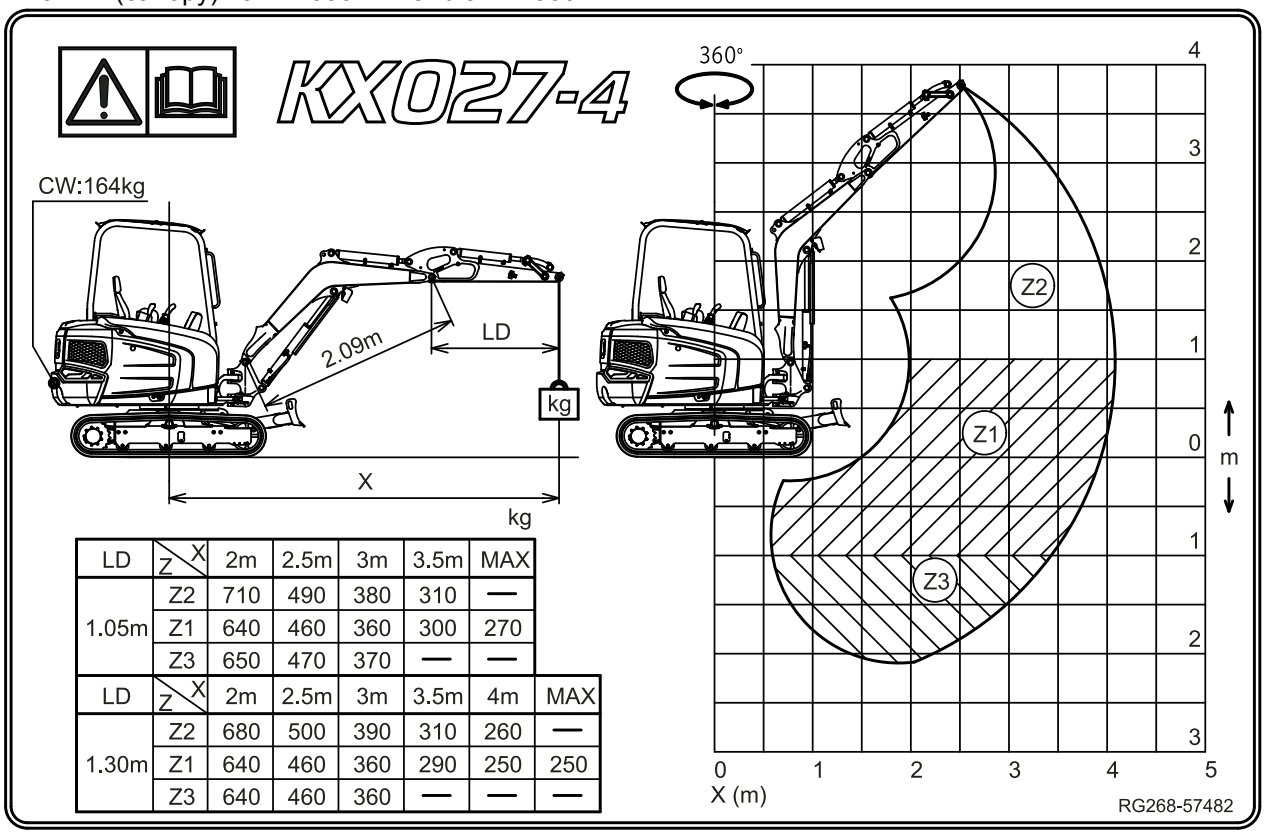

LD	Z \ X	2m	2.5m	3m	3.5m	MAX
1.05m	Z2	710	490	380	310	—
	Z1	640	460	360	300	270
	Z3	650	470	370	—	—

LD	Z \ X	2m	2.5m	3m	3.5m	4m	MAX
1.30m	Z2	680	500	390	310	260	—
	Z1	640	460	360	290	250	250
	Z3	640	460	360	—	—	—

https://truckmanualshub.com/

KX027-4 (cab) / arm 1050 mm and arm 1300 mm

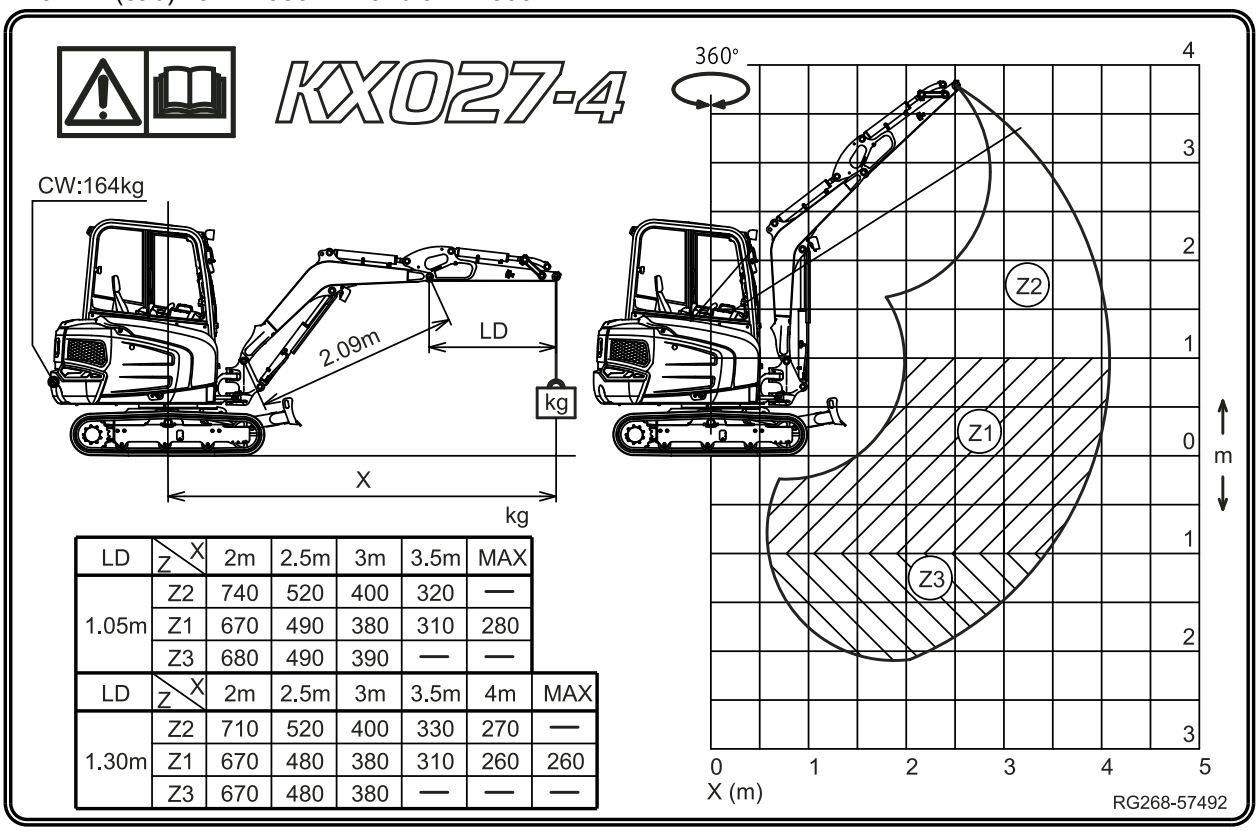

LD	Z \ X	2m	2.5m	3m	3.5m	MAX
1.05m	Z2	740	520	400	320	—
	Z1	670	490	380	310	280
	Z3	680	490	390	—	—

LD	Z \ X	2m	2.5m	3m	3.5m	4m	MAX
1.30m	Z2	710	520	400	330	270	—
	Z1	670	480	380	310	260	260
	Z3	670	480	380	—	—	—

KX030-4 (canopy) / arm 1100 mm and arm 1300 mm

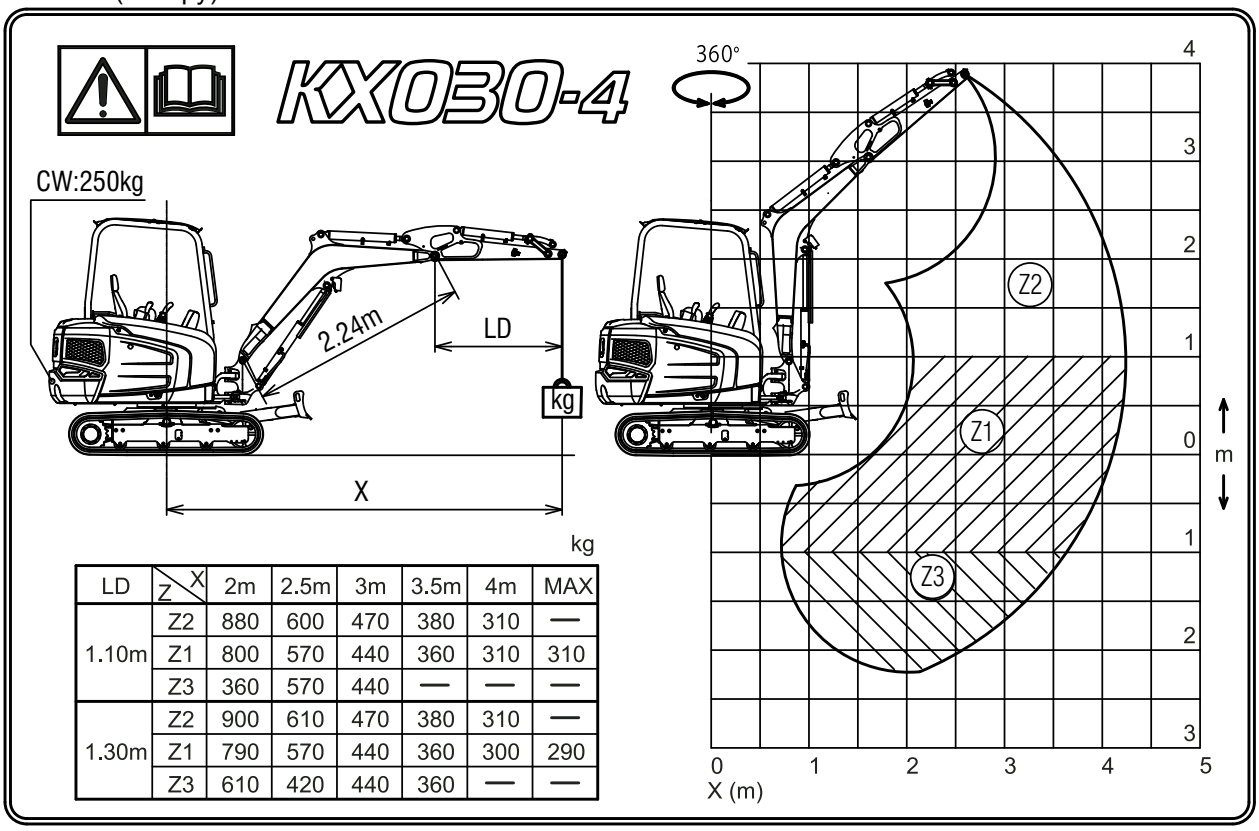

LD	Z \ X	2m	2.5m	3m	3.5m	4m	MAX
1.10m	Z2	880	600	470	380	310	—
	Z1	800	570	440	360	310	310
	Z3	360	570	440	—	—	—
1.30m	Z2	900	610	470	380	310	—
	Z1	790	570	440	360	300	290
	Z3	610	420	440	360	—	—

https://truckmanualshub.com/

KX030-4 (cab) / arm 1100 mm and arm 1300 mm

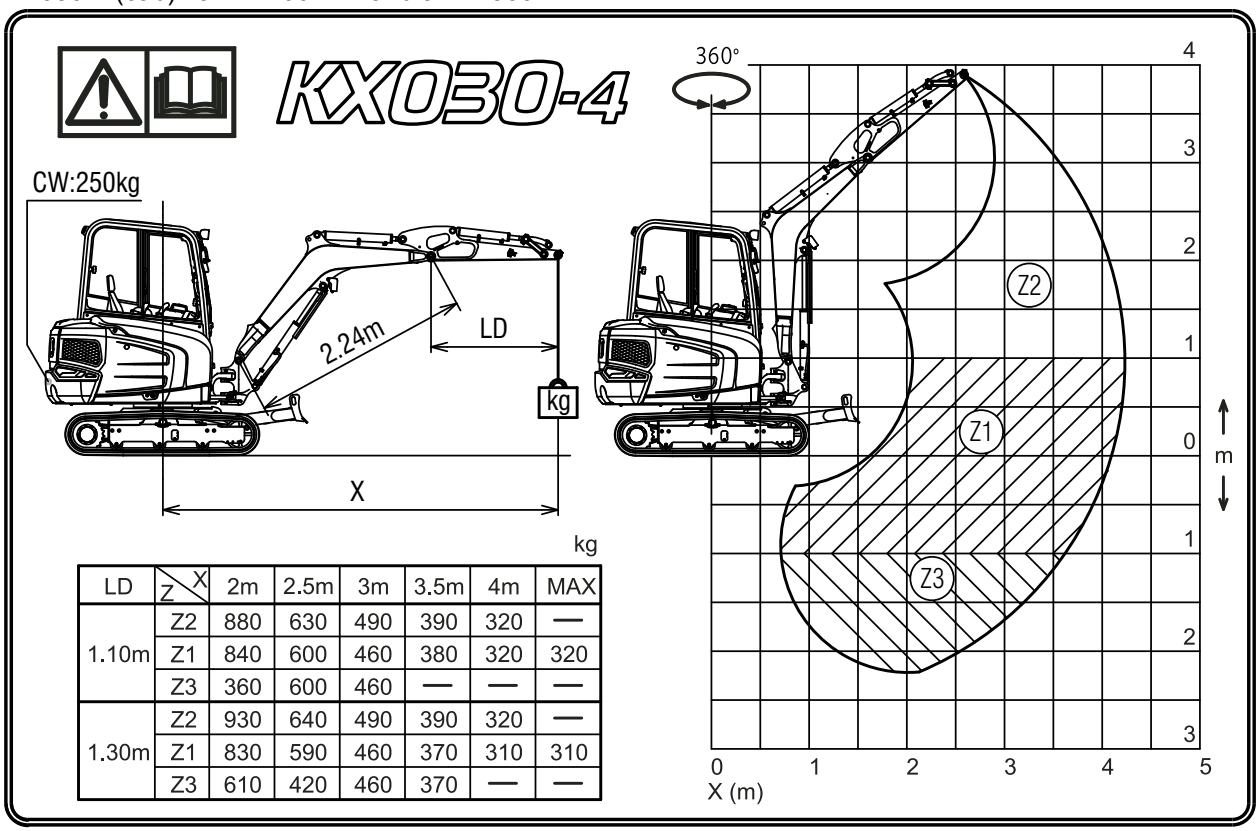

kg

LD	Z \ X	2m	2.5m	3m	3.5m	4m	MAX
1.10m	Z2	880	630	490	390	320	—
	Z1	840	600	460	380	320	320
	Z3	360	600	460	—	—	—
1.30m	Z2	930	640	490	390	320	—
	Z1	830	590	460	370	310	310
	Z3	610	420	460	370	—	—

Lifting capacity over front end, dozer down, only with pipe safety valve on the dozer cylinder

MODEL	KX027-4

SPECIFICATION	CANOPY VERSION
	ARM 1050 mm

kN (t)

LIFT POINT HEIGHT [mm]		LIFT POINT RADIUS (mm)											
				Mini-mum	1500	2000	2500	3000	3500	Maxi-mum			
	4000												
	3500						6.2 (0.64)						
	3000							5.7 (0.58)					
	2500							5.5 (0.56)					
	2000						6.5 (0.67)	5.9 (0.60)	5.5 (0.56)				
	1500					10.9 (1.11)	7.8 (0.80)	6.5 (0.66)	5.8 (0.59)				
	1000						9.1 (0.93)	7.1 (0.73)	6.1 (0.62)	5.5 (0.57)			
	500						9.8 (1.00)	7.6 (0.77)	6.2 (0.64)				
GL	0					13.7 (1.40)	9.9 (1.01)	7.7 (0.78)	6.2 (0.63)				
	-500			11.8 (1.20)	14.2 (1.44)	12.6 (1.29)	9.4 (0.96)	7.3 (0.75)					
	-1000			17.7 (1.81)	14.8 (1.51)	10.8 (1.10)	8.2 (0.84)	6.1 (0.63)					
	-1500				10.1 (1.03)	7.7 (0.79)	5.5 (0.56)						
	-2000												
	-2500												

https://truckmanualshub.com/

Lifting capacity over front end, dozer up

MODEL	KX027-4

SPECIFICATION	CANOPY VERSION
	ARM 1050 mm

kN (t)

LIFT POINT HEIGHT [mm]		LIFT POINT RADIUS (mm)											
				Mini-mum	1500	2000	2500	3000	3500	Maxi-mum			
	4000												
	3500	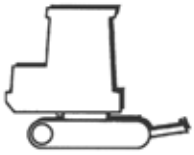					6.2 (0.64)						
	3000							5.3 (0.54)					
	2500							5.3 (0.54)					
	2000						6.5 (0.67)	5.2 (0.53)	4.1 (0.42)				
	1500					9.6 (0.98)	6.7 (0.68)	5.1 (0.52)	4.0 (0.41)				
	1000						6.4 (0.66)	4.9 (0.50)	3.9 (0.40)	3.4 (0.35)			
	500						6.3 (0.64)	4.8 (0.49)	3.9 (0.40)				
GL	0					8.7 (0.89)	6.2 (0.63)	4.7 (0.48)	3.8 (0.39)				
	-500			11.8 (1.20)	14.2 (1.44)	8.8 (0.89)	6.1 (0.63)	4.7 (0.48)					
	-1000			17.7 (1.81)	14.8 (1.51)	8.8 (0.90)	6.2 (0.63)	4.8 (0.48)					
	-1500				10.1 (1.03)	7.7 (0.79)	5.5 (0.56)						
	-2000												
	-2500												

Please note the model name and operating weight on the type plate (page 44).

Lifting capacity over front end, dozer down, only with pipe safety valve on the dozer cylinder

MODEL	KX027-4

SPECIFICATION	CAB VERSION
	ARM 1050 mm

kN (t)

LIFT POINT HEIGHT [mm]		LIFT POINT RADIUS (mm)											
				Mini-mum	1500	2000	2500	3000	3500	Maxi-mum			
	4000												
	3500	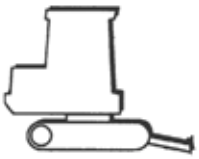					6.2 (0.64)						
	3000							5.7 (0.58)					
	2500							5.5 (0.56)					
	2000						6.5 (0.67)	5.9 (0.60)	5.5 (0.56)				
	1500					10.9 (1.11)	7.8 (0.80)	6.5 (0.66)	5.8 (0.59)				
	1000						9.1 (0.93)	7.1 (0.73)	6.1 (0.62)	5.5 (0.57)			
	500						9.8 (1.00)	7.6 (0.77)	6.2 (0.64)				
GL	0					13.7 (1.40)	9.9 (1.01)	7.7 (0.78)	6.2 (0.63)				
	-500			11.8 (1.20)	14.2 (1.44)	12.6 (1.29)	9.4 (0.96)	7.3 (0.75)					
	-1000			17.7 (1.81)	14.8 (1.51)	10.8 (1.10)	8.2 (0.84)	6.1 (0.63)					
	-1500				10.1 (1.03)	7.7 (0.79)	5.5 (0.56)						
	-2000												
	-2500												

https://truckmanualshub.com/

Lifting capacity over front end, dozer up

MODEL	KX027-4

SPECIFICATION	CAB VERSION
	ARM 1050 mm

kN (t)

LIFT POINT HEIGHT [mm]		LIFT POINT RADIUS (mm)											
				Mini-mum	1500	2000	2500	3000	3500	Maxi-mum			
	4000												
	3500	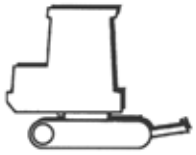					6.2 (0.64)						
	3000							5.5 (0.56)					
	2500							5.5 (0.56)					
	2000						6.5 (0.67)	5.4 (0.55)	4.3 (0.44)				
	1500					10,.0 (1.02)	7.0 (0.71)	5.3 (0.54)	4.2 (0.43)				
	1000						6.7 (0.69)	5.1 (0.53)	4.1 (0.42)	3.6 (0.37)			
	500						6.5 (0.67)	5.0 (0.51)	4.0 (0.41)				
GL	0					9.1 (0.93)	6.4 (0.66)	5.0 (0.51)	4.0 (0.41)				
	-500			11.8 (1.20)	14.2 (1.44)	9.2 (0.93)	6.4 (0.65)	4.9 (0.50)					
	-1000			17.7 (1.81)	14.8 (1.51)	9.2 (0.94)	6.4 (0.66)	5.0 (0.51)					
	-1500				10.1 (1.03)	7.7 (0.79)	5.5 (0.56)						
	-2000												
	-2500												

Please note the model name and operating weight on the type plate (page 44).

Lifting capacity over front end, dozer down, only with pipe safety valve on the dozer cylinder

MODEL	KX027-4

SPECIFICATION	CANOPY VERSION
	ARM 1300 mm

kN (t)

LIFT POINT HEIGHT [mm]		LIFT POINT RADIUS (mm)											
				Mini-mum	1500	2000	2500	3000	3500	4000	Maxi-mum		
	4000												
	3500												
	3000							3.8 (0.39)					
	2500							3.8 (0.39)	4.0 (0.41)				
	2000							4.2 (0.43)	4.1 (0.42)				
	1500					7.3 (0.74)	5.6 (0.57)	4.9 (0.50)	4.4 (0.45)	4.2 (0.43)			
	1000					10.2 (1.04)	7.0 (0.71)	5.6 (0.57)	4.8 (0.49)	4.3 (0.44)	4.2 (0.43)		
	500					11.5 (1.18)	8.0 (0.82)	6.2 (0.63)	5.1 (0.52)	4.4 (0.45)			
GL	0					12.3 (1.25)	8.5 (0.87)	6.5 (0.67)	5.3 (0.54)				
	-500			8.0 (0.82)	10.0 (1.02)	11.9 (1.21)	8.5 (0.87)	6.5 (0.67)	5.2 (0.53)				
	-1000			11.8 (1.20)	14.8 (1.51)	10.8 (1.10)	7.9 (0.81)	6.1 (0.62)					
	-1500			16.4 (1.68)	13.1 (1.34)	9.0 (0.92)	6.6 (0.68)	4.7 (0.48)					
	-2000				7.9 (0.80)	5.6 (0.57)							
	-2500												

https://truckmanualshub.com/

Lifting capacity over front end, dozer up

MODEL	KX027-4

SPECIFICATION	CANOPY VERSION
	ARM 1300 mm

kN (t)

LIFT POINT HEIGHT [mm]		LIFT POINT RADIUS (mm)											
				Mini-mum	1500	2000	2500	3000	3500	4000	Maxi-mum		
	4000												
	3500	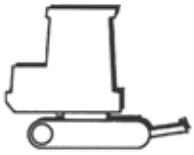											
	3000							3.8 (0.39)					
	2500							3.8 (0.39)	3.5 (0.36)				
	2000							4.2 (0.43)	3.5 (0.36)				
	1500					7.3 (0.74)	5.6 (0.57)	4.4 (0.45)	3.5 (0.36)	2.8 (0.29)			
	1000					8.0 (0.82)	5.6 (0.57)	4.3 (0.44)	3.4 (0.35)	2.8 (0.28)	2.7 (0.28)		
	500					7.8 (0.79)	5.5 (0.56)	4.2 (0.43)	3.3 (0.34)	2.8 (0.28)			
GL	0					7.7 (0.78)	5.4 (0.55)	4.1 (0.42)	3.3 (0.34)				
	-500			8.0 (0.82)	10.0 (1.02)	7.6 (0.78)	5.3 (0.54)	4.1 (0.42)	3.3 (0.34)				
	-1000			11.8 (1.20)	13.4 (1.36)	7.7 (0.78)	5.3 (0.54)	4.1 (0.42)					
	-1500			16.4 (1.68)	13.1 (1.34)	7.8 (0.79)	5.4 (0.55)	4.2 (0.42)					
	-2000				7.9 (0.80)	5.6 (0.57)							
	-2500												

Please note the model name and operating weight on the type plate (page 44).

Lifting capacity over front end, dozer down, only with pipe safety valve on the dozer cylinder

MODEL	KX027-4

SPECIFICATION	CAB VERSION
	ARM 1300 mm

kN (t)

LIFT POINT HEIGHT [mm]		LIFT POINT RADIUS (mm)											
				Mini-mum	1500	2000	2500	3000	3500	4000	Maxi-mum		
	4000												
	3500	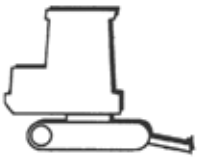											
	3000							3.8 (0.39)					
	2500							3.8 (0.39)	4.0 (0.41)				
	2000							4.2 (0.43)	4.1 (0.42)				
	1500					7.3 (0.74)	5.6 (0.57)	4.9 (0.50)	4.4 (0.45)	4.2 (0.43)			
	1000					10.2 (1.04)	7.0 (0.71)	5.6 (0.57)	4.8 (0.49)	4.3 (0.44)	4.2 (0.43)		
	500					11.5 (1.18)	8.0 (0.82)	6.2 (0.63)	5.1 (0.52)	4.4 (0.45)			
GL	0					12.3 (1.25)	8.5 (0.87)	6.5 (0.67)	5.3 (0.54)				
	-500			8.0 (0.82)	10.0 (1.02)	11.9 (1.21)	8.5 (0.87)	6.5 (0.67)	5.2 (0.53)				
	-1000			11.8 (1.20)	14.8 (1.51)	10.8 (1.10)	7.9 (0.81)	6.1 (0.62)					
	-1500			16.4 (1.68)	13.1 (1.34)	9.0 (0.92)	6.6 (0.68)	4.7 (0.48)					
	-2000				7.9 (0.80)	5.6 (0.57)							
	-2500												

https://truckmanualshub.com/

Lifting capacity over front end, dozer up

MODEL	KX027-4

SPECIFICATION	CAB VERSION
	ARM 1300 mm

kN (t)

LIFT POINT HEIGHT [mm]		LIFT POINT RADIUS (mm)											
				Mini-mum	1500	2000	2500	3000	3500	4000	Maxi-mum		
	4000												
	3500	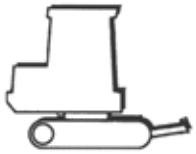											
	3000							3.8 (0.39)					
	2500							3.8 (0.39)	3.7 (0.38)				
	2000							4.2 (0.43)	3.7 (0.38)				
	1500					7.3 (0.74)	5.6 (0.57)	4.6 (0.47)	3.7 (0.37)	3.0 (0.30)			
	1000					8.4 (0.86)	5.9 (0.61)	4.5 (0.46)	3.6 (0.37)	2.9 (0.30)	2.9 (0.29)		
	500					8.2 (0.83)	5.8 (0.59)	4.4 (0.45)	3.5 (0.36)	2.9 (0.30)			
GL	0					8.1 (0.82)	5.7 (0.58)	4.3 (0.44)	3.5 (0.36)				
	-500			8.0 (0.82)	10.0 (1.02)	8.1 (0.82)	5.6 (0.58)	4.3 (0.44)	3.5 (0.35)				
	-1000			11.8 (1.20)	14.1 (1.44)	8.1 (0.83)	5.7 (0.58)	4.3 (0.44)					
	-1500			16.4 (1.68)	13.1 (1.34)	8.2 (0.84)	5.7 (0.58)	4.4 (0.45)					
	-2000				7.9 (0.80)	5.6 (0.57)							
	-2500												

Please note the model name and operating weight on the type plate (page 44).

https://truckmanualshub.com/

Lifting capacity over front end, dozer down, only with pipe safety valve on the dozer cylinder

MODEL	KX030-4	SPECIFICATION	CANOPY VERSION
			ARM 1100 mm

kN (t)

LIFT POINT HEIGHT [mm]		LIFT POINT RADIUS (mm)											
				Mini-mum	1500	2000	2500	3000	3500	4000	Maxi-mum		
	4000												
	3500	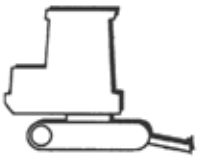											
	3000							5.4 (0.55)					
	2500							5.5 (0.56)	5.3 (0.54)				
	2000					8.6 (0.88)	6.9 (0.70)	6.0 (0.61)	5.5 (0.56)				
	1500						8.3 (0.84)	6.7 (0.68)	5.8 (0.59)				
	1000						9.5 (0.97)	7.3 (0.75)	6.1 (0.62)	5.4 (0.55)	5.3 (0.54)		
	500						10.2 (1.04)	7.8 (0.79)	6.3 (0.65)				
GL	0					13.8 (1.41)	10.2 (1.04)	7.9 (0.80)	6.3 (0.65)				
	-500			13.4 (1.37)	15.1 (1.54)	12.7 (1.30)	9.6 (0.98)	7.5 (0.77)	5.9 (0.61)				
	-1000			19.2 (1.96)	14.7 (1.50)	11.0 (1.12)	8.5 (0.87)	6.6 (0.68)					
	-1500				10.8 (1.10)	8.4 (0.86)	6.5 (0.66)						
	-2000					3.5 (0.36)							
	-2500												

Lifting capacity over front end, dozer up

MODEL	KX030-4	SPECIFICATION	CANOPY VERSION
			ARM 1100 mm

kN (t)

LIFT POINT HEIGHT [mm]		LIFT POINT RADIUS (mm)											
				Mini-mum	1500	2000	2500	3000	3500	4000	Maxi-mum		
	4000												
	3500	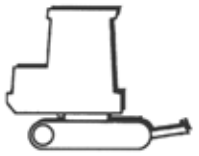											
	3000							5.4 (0.55)					
	2500							5.5 (0.56)	4.6 (0.46)				
	2000					8.6 (0.88)	6.9 (0.70)	5.7 (0.58)	4.5 (0.46)				
	1500						7.3 (0.75)	5.6 (0.57)	4.4 (0.45)				
	1000						7.0 (0.72)	5.4 (0.55)	4.3 (0.44)	3.5 (0.36)	3.5 (0.36)		
	500						6.8 (0.70)	5.3 (0.54)	4.2 (0.43)				
GL	0					9.6 (0.98)	6.7 (0.69)	5.2 (0.53)	4.2 (0.42)				
	-500			13.4 (1.37)	15.1 (1.54)	9.6 (0.98)	6.7 (0.68)	5.1 (0.52)	4.1 (0.42)				
	-1000			19.2 (1.96)	14.7 (1.50)	9.7 (0.99)	6.7 (0.69)	5.1 (0.52)					
	-1500				10.8 (1.10)	8.4 (0.86)	6.5 (0.66)						
	-2000					3.5 (0.36)							
	-2500												

Please note the model name and operating weight on the type plate (page 44).

https://truckmanualshub.com/

Lifting capacity over front end, dozer down, only with pipe safety valve on the dozer cylinder

MODEL	KX030-4	SPECIFICATION	CAB VERSION
			ARM 1100 mm

kN (t)

LIFT POINT HEIGHT [mm]		LIFT POINT RADIUS (mm)											
				Mini-mum	1500	2000	2500	3000	3500	4000	Maxi-mum		
	4000												
	3500												
	3000							5.4 (0.55)					
	2500							5.5 (0.56)	5.3 (0.54)				
	2000					8.6 (0.88)	6.9 (0.70)	6.0 (0.61)	5.5 (0.56)				
	1500						8.3 (0.84)	6.7 (0.68)	5.8 (0.59)				
	1000						9.5 (0.97)	7.3 (0.75)	6.1 (0.62)	5.4 (0.55)	5.3 (0.54)		
	500						10.2 (1.04)	7.8 (0.79)	6.3 (0.65)				
GL	0					13.8 (1.41)	10.2 (1.04)	7.9 (0.80)	6.3 (0.65)				
	-500			13.4 (1.37)	15.1 (1.54)	12.7 (1.30)	9.6 (0.98)	7.5 (0.77)	5.9 (0.61)				
	-1000			19.2 (1.96)	14.7 (1.50)	11.0 (1.12)	8.5 (0.87)	6.6 (0.68)					
	-1500				10.8 (1.10)	8.4 (0.86)	6.5 (0.66)						
	-2000					3.5 (0.36)							
	-2500												

Lifting capacity over front end, dozer up

MODEL	KX030-4	SPECIFICATION	CAB VERSION
			ARM 1100 mm

kN (t)

LIFT POINT HEIGHT [mm]		LIFT POINT RADIUS (mm)											
				Mini-mum	1500	2000	2500	3000	3500	4000	Maxi-mum		
	4000												
	3500	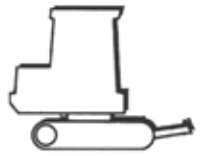											
	3000							5.4 (0.55)					
	2500							5.5 (0.56)	4.7 (0.48)				
	2000					8.6 (0.88)	6.9 (0.70)	5.9 (0.61)	4.7 (0.48)				
	1500						7.6 (0.78)	5.8 (0.59)	4.6 (0.47)				
	1000						7.3 (0.75)	5.6 (0.57)	4.5 (0.46)	3.7 (0.38)	3.7 (0.37)		
	500						7.1 (0.73)	5.5 (0.56)	4.4 (0.45)				
GL	0					10.0 (1.02)	7.0 (0.72)	5.4 (0.55)	4.3 (0.44)				
	-500			13.4 (1.37)	15.1 (1.54)	10.0 (1.02)	7.0 (0.71)	5.4 (0.55)	4.3 (0.44)				
	-1000			19.2 (1.96)	14.7 (1.50)	10.1 (1.03)	7.0 (0.72)	5.4 (0.55)					
	-1500				10.8 (1.10)	8.4 (0.86)	6.5 (0.66)						
	-2000					3.5 (0.36)							
	-2500												

Please note the model name and operating weight on the type plate (page 44).

https://truckmanualshub.com/

Lifting capacity over front end, dozer down, only with pipe safety valve on the dozer cylinder

MODEL	KX030-4	SPECIFICATION	CANOPY VERSION
			ARM 1300 mm

kN (t)

LIFT POINT HEIGHT [mm]		LIFT POINT RADIUS (mm)											
				Mini-mum	1500	2000	2500	3000	3500	4000	Maxi-mum		
	4000												
	3500	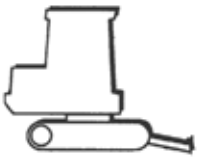						5,2 (0,53)					
	3000							4,8 (0,49)	5,0 (0,51)				
	2500							5,0 (0,51)	4,9 (0,50)				
	2000						6,2 (0,63)	5,5 (0,56)	5,1 (0,52)	4,9 (0,50)			
	1500					10,5 (1,07)	7,6 (0,78)	6,3 (0,64)	5,5 (0,56)	5,0 (0,51)			
	1000						9,0 (0,92)	7,0 (0,71)	5,9 (0,60)	5,2 (0,53)	4,9 (0,50)		
	500					12,9 (1,32)	9,9 (1,01)	7,6 (0,77)	6,2 (0,63)	5,3 (0,54)			
GL	0					14,3 (1,46)	10,2 (1,04)	7,8 (0,80)	6,3 (0,65)	5,2 (0,53)			
	-500			11,6 (1,18)	13,7 (1,40)	13,4 (1,37)	9,9 (1,01)	7,7 (0,78)	6,1 (0,63)				
	-1000			16,3 (1,67)	17,0 (1,73)	11,9 (1,22)	9,0 (0,92)	7,0 (0,72)	5,4 (0,55)				
	-1500			22,1 (2,25)	13,3 (1,36)	9,7 (0,99)	7,4 (0,76)	5,6 (0,57)					
	-2000				7,6 (0,77)	6,0 (0,61)	4,1 (0,42)						
	-2500												

Lifting capacity over front end, dozer up

MODEL	KX030-4	SPECIFICATION	CANOPY VERSION
			ARM 1300 mm

kN (t)

LIFT POINT HEIGHT [mm]		LIFT POINT RADIUS (mm)											
				Mini-mum	1500	2000	2500	3000	3500	4000	Maxi-mum		
	4000												
	3500	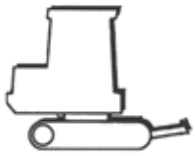						5,2 (0,53)					
	3000							4,8 (0,49)	4,6 (0,47)				
	2500							5,0 (0,51)	4,6 (0,47)				
	2000						6,2 (0,63)	5,5 (0,56)	4,5 (0,46)	3,6 (0,37)			
	1500					10,5 (1,07)	7,4 (0,76)	5,6 (0,57)	4,4 (0,45)	3,6 (0,37)			
	1000						7,1 (0,72)	5,4 (0,55)	4,3 (0,44)	3,5 (0,36)	3,4 (0,34)		
	500					9,7 (0,99)	6,9 (0,70)	5,3 (0,54)	4,2 (0,43)	3,5 (0,35)			
GL	0					9,6 (0,98)	6,7 (0,69)	5,1 (0,53)	4,1 (0,42)	3,4 (0,35)			
	-500			11,6 (1,18)	13,7 (1,40)	9,5 (0,97)	6,7 (0,68)	5,1 (0,52)	4,1 (0,42)				
	-1000			16,3 (1,67)	16,7 (1,70)	9,6 (0,98)	6,7 (0,68)	5,1 (0,52)	4,1 (0,42)				
	-1500			22,1 (2,25)	13,3 (1,36)	9,7 (0,99)	6,7 (0,68)	5,1 (0,52)					
	-2000				7,6 (0,77)	6,0 (0,61)	4,1 (0,42)						
	-2500												

Please note the model name and operating weight on the type plate (page 44).

https://truckmanualshub.com/

Lifting capacity over front end, dozer down, only with pipe safety valve on the dozer cylinder

MODEL	KX030-4	SPECIFICATION	CAB VERSION
			ARM 1300 mm

kN (t)

LIFT POINT HEIGHT [mm]		LIFT POINT RADIUS (mm)											
				Mini-mum	1500	2000	2500	3000	3500	4000	Maxi-mum		
	4000												
	3500							5,2 (0,53)					
	3000							4,8 (0,49)	5,0 (0,51)				
	2500							5,0 (0,51)	4,9 (0,50)				
	2000						6,2 (0,63)	5,5 (0,56)	5,1 (0,52)	4,9 (0,50)			
	1500					10,5 (1,07)	7,6 (0,78)	6,3 (0,64)	5,5 (0,56)	5,0 (0,51)			
	1000						9,0 (0,92)	7,0 (0,71)	5,9 (0,60)	5,2 (0,53)	4,9 (0,50)		
	500					12,9 (1,32)	9,9 (1,01)	7,6 (0,77)	6,2 (0,63)	5,3 (0,54)			
GL	0					14,3 (1,46)	10,2 (1,04)	7,8 (0,80)	6,3 (0,65)	5,2 (0,53)			
	-500			11,6 (1,18)	13,7 (1,40)	13,4 (1,37)	9,9 (1,01)	7,7 (0,78)	6,1 (0,63)				
	-1000			16,3 (1,67)	17,0 (1,73)	11,9 (1,22)	9,0 (0,92)	7,0 (0,72)	5,4 (0,55)				
	-1500			22,1 (2,25)	13,3 (1,36)	9,7 (0,99)	7,4 (0,76)	5,6 (0,57)					
	-2000				7,6 (0,77)	6,0 (0,61)	4,1 (0,42)						
	-2500												

Lifting capacity over front end, dozer up

MODEL	KX030-4	SPECIFICATION	CAB VERSION
			ARM 1300 mm

kN (t)

LIFT POINT HEIGHT [mm]		LIFT POINT RADIUS (mm)											
				Mini-mum	1500	2000	2500	3000	3500	4000	Maxi-mum		
	4000												
	3500	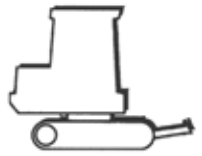						5,2 (0,53)					
	3000							4,8 (0,49)	4,8 (0,49)				
	2500							5,0 (0,51)	4,8 (0,49)				
	2000						6,2 (0,63)	5,5 (0,56)	4,7 (0,48)	3,8 (0,39)			
	1500					10,5 (1,07)	7,6 (0,78)	5,8 (0,59)	4,6 (0,47)	3,8 (0,38)			
	1000						7,4 (0,75)	5,6 (0,58)	4,5 (0,46)	3,7 (0,38)	3,5 (0,36)		
	500					10,1 (1,03)	7,2 (0,73)	5,5 (0,56)	4,4 (0,45)	3,6 (0,37)			
GL	0					10,0 (1,02)	7,0 (0,72)	5,4 (0,55)	4,3 (0,44)	3,6 (0,37)			
	-500			11,6 (1,18)	13,7 (1,40)	10,0 (1,02)	7,0 (0,71)	5,3 (0,54)	4,3 (0,44)				
	-1000			16,3 (1,67)	17,0 (1,73)	10,0 (1,02)	6,9 (0,71)	5,3 (0,54)	4,3 (0,44)				
	-1500			22,1 (2,25)	13,3 (1,36)	9,7 (0,99)	7,0 (0,72)	5,4 (0,55)					
	-2000				7,6 (0,77)	6,0 (0,61)	4,1 (0,42)						
	-2500												

Please note the model name and operating weight on the type plate (page 44).

https://truckmanualshub.com/

ACCESSORIES

The accessories approved for this excavator by the respective countries are described in the following segments. For further accessories, please contact your KUBOTA dealer or authorised retailer.

Accessories from other manufacturers may only be fitted after prior written approval from KUBOTA. Also see the "Approved use" section (page 15).

KUBOTA rotary beacon

An optional rotary beacon (1) is available as an accessory. The beacon is mounted at the rear end of the canopy and/or cab roof with a clip-on pedestal (2).

The rotary beacon is switched on and off with the rotary beacon switch. See the "Right control console" section (page 50) for details.

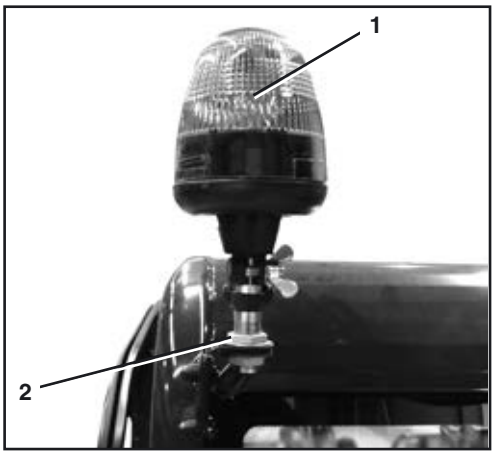

KUBOTA pipe safety valve

A pipe safety valve prevents the sudden loss of oil in the connected hydraulic cylinder in the event of a pipe or hose bursting in the hydraulic circuit. This prevents, for example, the load or attachment from suddenly falling or the machine from tipping precariously when using the dozer to increase stability.

A pipe safety valve is located on the hydraulic port of the boom cylinder (2) and arm cylinder (1), respectively.

Additionally, a pipe safety valve can be mounted onto the hydraulic port of the dozer cylinder (3).

Excavators that will be used in the lifting operation, must be equipped with at least a pipe safety valve on the boom and arm, together with an overload warning function according to EN 474-5.
If the dozer is being used to increase the machine's stability, an additional pipe safety valve must be installed in accordance with EN 474-1.

To acquire the proper equipment for your excavator, please contact your KUBOTA dealer.

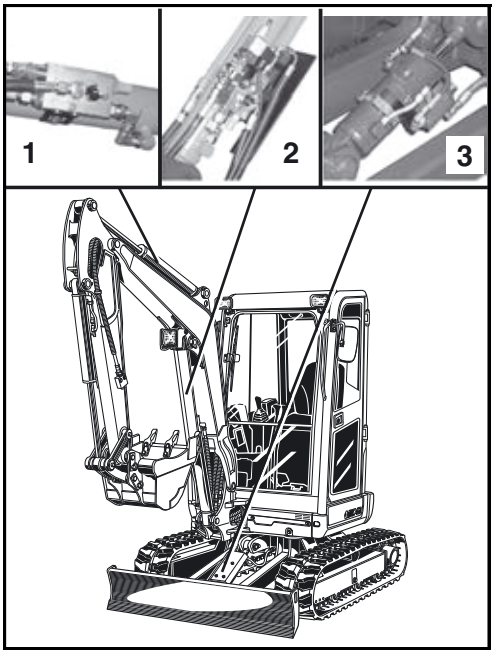

The pipe safety valve is adjusted in the factory on the particular excavator.

https://truckmanualshub.com/

Manipulating the pipe safety valve will void the warranty.

Any manipulation can result in substantial personal injuries, even death, and is therefore strictly prohibited.

Manipulating and repairing the pipe safety valves is prohibited. They may only be replaced by your KUBOTA dealer as a set.

Note on use

- Check the pipe safety valve lead seal before using the excavator. Do not carry out any excavating work if the lead seal is missing and/or the pipe safety valve is damaged.
- Swinging the boom is not permitted during the lifting operation.

KUBOTA overload warning system

An overload warning function informs the operator immediately if there is an overload. The warning system is controlled by the pressure switch at the pipe safety valve. The load is measured by the pressure at the base of the cylinder. Any overpressure triggers the warning device.

Excavators used for lifting operations must be equipped with at least one pipe safety valve on the boom and arm, together with an overload warning device in accordance with EN 474-5.
If the dozer is being used to increase the machine’s stability, an additional pipe safety valve must be installed in accordance with EN 474-1.

To acquire lifting equipment for your excavator, contact your KUBOTA specialist dealer.

When changing from rubber crawlers to steel crawlers, or from steel crawlers to rubber crawlers, or when modifying the length of the arm, please contact your KUBOTA dealer.

The overload warning function must be enabled during any lifting operation to prevent personal injuries and damage to equipment.

KUBOTA quick coupling systems and attachments

The quick coupling system is designed to be mounted with pins on the arm and the bucket linkage.
It is solely intended to accommodate KUBOTA bucket accessories.

The related operating instructions are attached to the excavator's operating instructions.

For further information, please contact your KUBOTA dealer or authorised retailer.

The size, weight and arm bracket of the excavator are important factors in the selection of attachments. These factors must be made known to the attachment manufacturer when ordering attachments, and be observed by the operator when operating the excavator. Various attachments are nevertheless of limited use only.

KUBOTA bucket accessories

For further bucket accessories, please contact your KUBOTA dealer or authorised retailer.

https://truckmanualshub.com/

https://truckmanualshub.com/

Kubota

U.S.A : **KUBOTA TRACTOR CORPORATION**
1000 Kubota Drive, Grapevine, TX 76051
Telephone: 888-4KUBOTA

Canada : **KUBOTA CANADA LTD.**
5900 14th Avenue, Markham, Ontario, L3S 4K4, Canada
Telephone: (905)294-7477

France : **KUBOTA EUROPE S.A.S.**
19-25, Rue Jules Vercruysse, Z.I. BP88, 95101 Argenteuil Cedex, France
Telephone: (33)1-3426-3434

Italy : **KUBOTA EUROPE S.A.S. Italy Branch**
Via Grandi, 29 20068 Peschiera Borrome (MI) Italy
Telephone: (39)02-51650377

Germany : **KUBOTA BAUMASCHINEN GmbH**
Steinhauser Str. 100, 66482 Zweibrücken Germany
Telephone: (49)6332-4870100

U.K. : **KUBOTA (U.K.) LTD.**
Dormer Road, Thame, Oxfordshire, OX9 3UN, U.K.
Telephone: (44)1844-214500

Australia : **KUBOTA TRACTOR AUSTRALIA PTY LTD.**
25-29 Permas Way, Truganina, VIC 3029, Australia
Telephone: (61)-3-9394-4400

Malaysia : **SIME KUBOTA SDN. BHD.**
No.3 Jalan Sepadu 25/123 Taman Perindustrian Axis,
Seksyen 25, 40400 Shah Alam, Selangor Darul Ehsan Malaysia
Telephone: (60)3-736-1388

Philippines : **KUBOTA PHILIPPINES, INC.**
232 Quirino Highway, Baesa, Quezon City 1106, Philippines
Telephone: (63)2-422-3500

Taiwan : **SHIN TAIWAN AGRICULTURAL MACHINERY CO., LTD.**
16, Fengping 2nd Rd, Taliao Shiang Kachsiung 83107, Taiwan R.O.C.
Telephone: (886)7-702-2333

Thailand : **SIAM KUBOTA CORPORATION CO., LTD.**
101/19-24 Moo 20, Navanakorn Industrial Estate, Tambon Khlongnueng,
Amphur Khlongluang, Pathumthani 12120, Thailand
Telephone: (66)2-909-0300

Japan : **KUBOTA CORPORATION**
Farm & Industrial Machinery International Operations Headquarters
2-47, Shikitsuhigashi 1-chome, Naniwa-ku, Osaka, Japan 556-8601