https://truckmanualshub.com/

# WSM

## WORKSHOP MANUAL
## TRACTOR

# B2301,B2601

Kubota

KiSC issued 11, 2014 A

https://truckmanualshub.com/

# TO THE READER

This Workshop Manual tells the servicing personnel about the mechanism, servicing and maintenance of the B2301 and B2601. It contains 4 parts: **"Information"**, **"General"**, **"Mechanism"** and **"Servicing"**.

## ■ Information

This section primarily contains information below.

- Safety First
- Safety Decal
- Specifications
- Dimensions

## ■ General

This section primarily contains information below.

- Engine Identification
- Model Identification
- General Precautions
- Maintenance Check List
- Check and Maintenance
- Special Tools

## ■ Mechanism

This section contains information on the structure and the function of the unit. Before you continue with the subsequent sections, make sure that you read this section.

Refer to the latest version of Workshop Manual (Code No. 9Y021-01870 / 9Y021-18200) for the diesel engine / tractor mechanism that this workshop manual does not include.

## ■ Servicing

This section primarily contains information below.

- Troubleshooting
- Servicing Specifications
- Tightening Torques
- Checking, Disassembling and Servicing

All illustrations, photographs and specifications contained in this manual are of the newest information available at the time of publication.

KUBOTA reserves the right to change all information at any time without notice.

Since this manual includes many models, information or illustrations and photographs can show more than one model.

**November, 2014**

**© KUBOTA Corporation 2014**

https://truckmanualshub.com/

# I INFORMATION

https://truckmanualshub.com/

# INFORMATION

## CONTENTS

1. SAFETY FIRST ..... I-1
2. SAFETY DECALS ..... I-4
3. SPECIFICATIONS ..... I-7
4. TRAVELING SPEEDS ..... I-8
5. DIMENSIONS ..... I-9

https://truckmanualshub.com/


# 1. SAFETY FIRST

## SAFETY FIRST

- **This symbol, the industry's "Safety Alert Symbol", is used throughout this manual and on labels on the machine itself to warn of the possibility of personal injury. Read these instructions carefully.**
- **It is essential that you read the instructions and safety regulations before you try to repair or use this unit.**

**DANGER**
- **Indicates an imminently hazardous situation which, if not avoided, will result in death or serious injury.**

**WARNING**
- **Indicates a potentially hazardous situation which, if not avoided, could result in death or serious injury.**

**CAUTION**
- **Indicates a potentially hazardous situation which, if not avoided, may result in minor or moderate injury.**

■ **IMPORTANT**
- **Indicates that equipment or property damage could result if instructions are not followed.**

■ **NOTE**
- **Gives helpful information.**

WSM000001INI0001US1

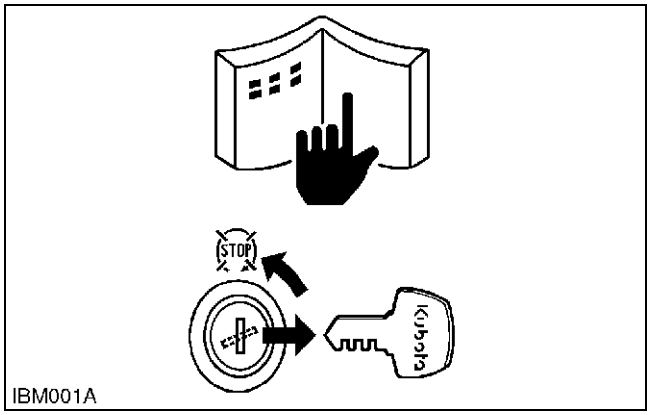

IBM001A

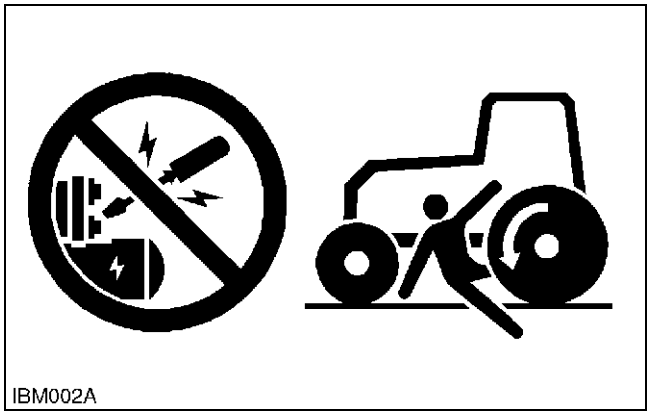
IBM002A

### BEFORE YOU START SERVICE

- Read all instructions and safety instructions in this manual and on your machine safety decals.
- Clean the work area and machine.
- Park the machine on a stable and level ground, and set the parking brake.
- Lower the implement to the ground.
- Stop the engine, then remove the key.
- Disconnect the battery negative cable.
- Hang a **"DO NOT OPERATE"** tag in the operator station.

WSM000001INI0010US0

### START SAFELY

- Do not do the procedures below when you start the engine.
  - short across starter terminals
  - bypass the safety start switch
- Do not alter or remove any part of machine safety system.
- Before you start the engine, make sure that all shift levers are in neutral positions or in disengaged positions.
- Do not start the engine when you stay on the ground. Start the engine only from operator's seat.

WSM000001INI0015US0

https://truckmanualshub.com/


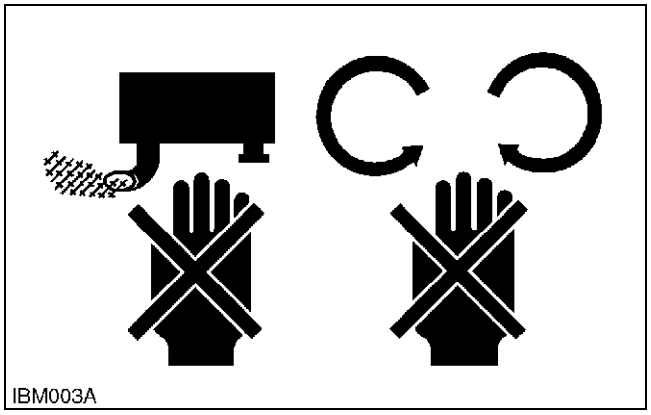
IBM003A

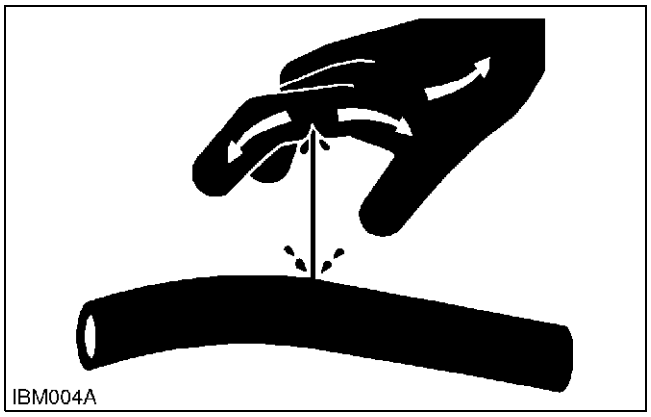
IBM004A

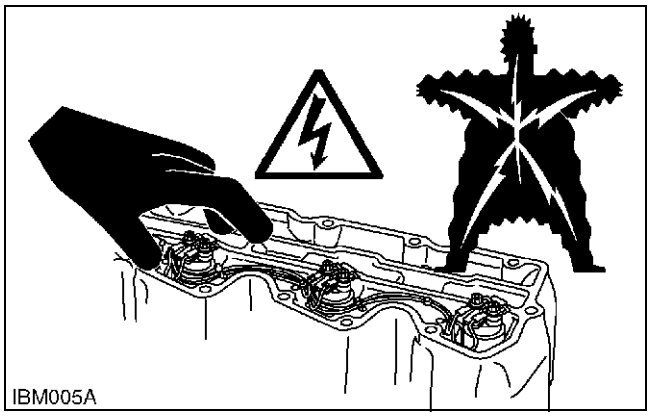
IBM005A

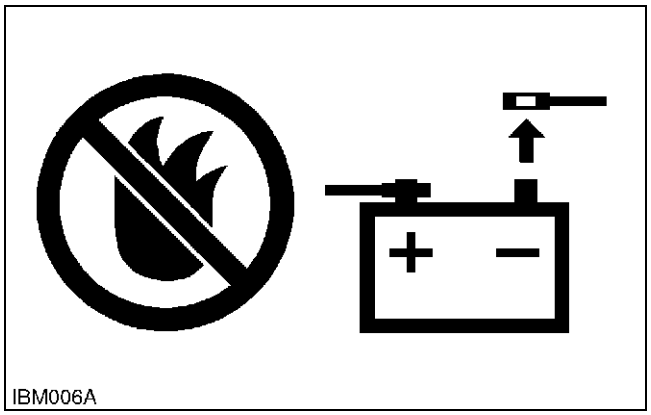
IBM006A

## OPERATE SAFELY

- Do not use the machine after you consume alcohol or medication or when you are tired.
- Put on applicable clothing and safety equipment.
- Use applicable tools only. Do not use alternative tools or parts.
- When 2 or more persons do servicing, make sure that you do it safely.
- Do not operate below the machine that only a jack holds. Always use a safety stand to hold the machine.
- Do not touch the hot parts or parts that turn when the engine operates.
- Do not remove the radiator cap when the engine operates, or immediately after it stops. If not, hot water can spout out from the radiator. Only remove the radiator cap when it is at a sufficiently low temperature to touch with bare hands. Slowly loosen the cap to release the pressure before you remove it fully.
- Released fluid (fuel or hydraulic oil) under pressure can cause damage to the skin and cause serious injury. Release the pressure before you disconnect hydraulic or fuel lines. Tighten all connections before you apply the pressure.
- Do not open a fuel system under high pressure.
  The fluid under high pressure that stays in fuel lines can cause serious injury. Do not disconnect or repair the fuel lines, sensors, or any other components between the fuel pump and injectors on engines with a common rail fuel system under high pressure.
- Put on an applicable ear protective device (earmuffs or earplugs) to prevent injury against loud noises.
- Be careful about electric shock. The engine generates a high voltage of more than DC100 V in the ECU and is applied to the injector.

WSM000001INI0012US0

## PREVENT A FIRE

- Fuel is very flammable and explosive under some conditions. Do not smoke or let flames or sparks in your work area.
- To prevent sparks from an accidental short circuit, always disconnect the battery negative cable first and connect it last.
- The battery gas can cause an explosion. Keep the sparks and open flame away from the top of battery, especially when you charge the battery.
- Make sure that you do not spill fuel on the engine.

WSM000001INI0005US0

https://truckmanualshub.com/


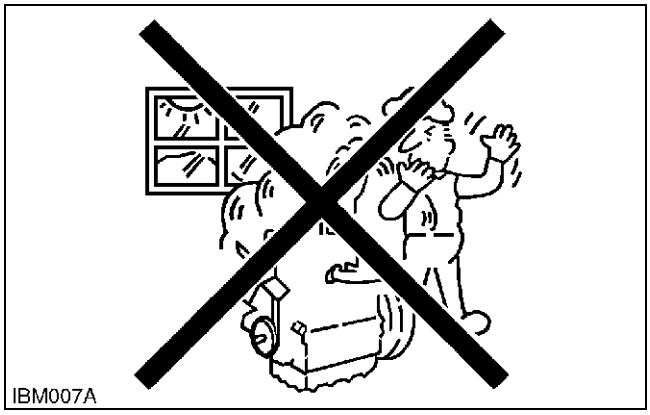
IBM007A

## KEEP A GOOD AIRFLOW IN THE WORK AREA

- If the engine is in operation, make sure that the area has good airflow. Do not operate the engine in a closed area. The exhaust gas contains poisonous carbon monoxide.

WSM000001INI0006US0

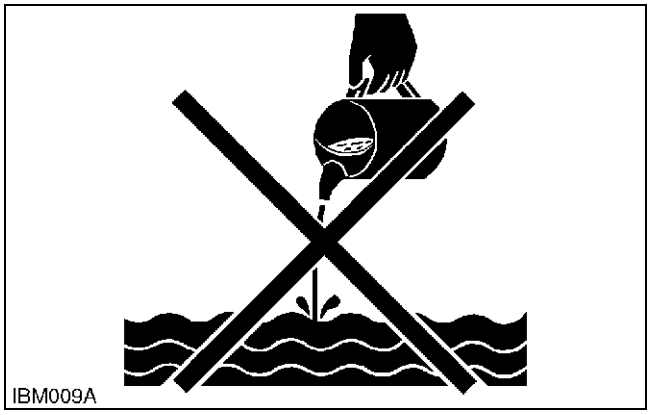
IBM009A

## DISCARD FLUIDS CORRECTLY

- Do not discard fluids on the ground, down the drain, into a stream, pond, or lake. Obey related environmental protection regulations when you discard oil, fuel, coolant, electrolyte and other dangerous waste.

WSM000001INI0007US0

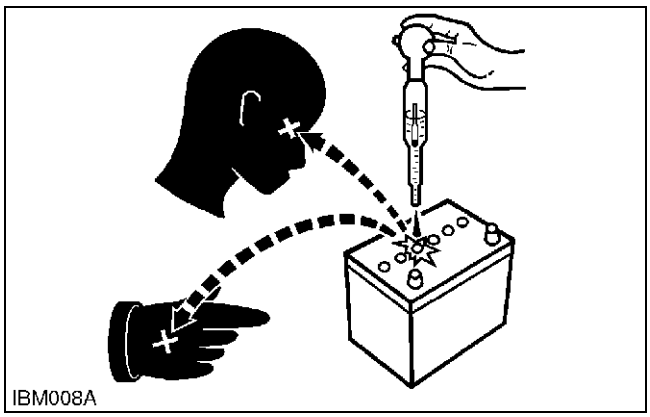
IBM008A

## PREVENT ACID BURNS

- Keep electrolyte away from your eyes, hands and clothing. Sulfuric acid in battery electrolyte is poisonous and it can burn your skin and clothing and cause blindness. If you spill electrolyte on yourself, clean yourself with water, and get medical aid immediately.

WSM000001INI0008US0

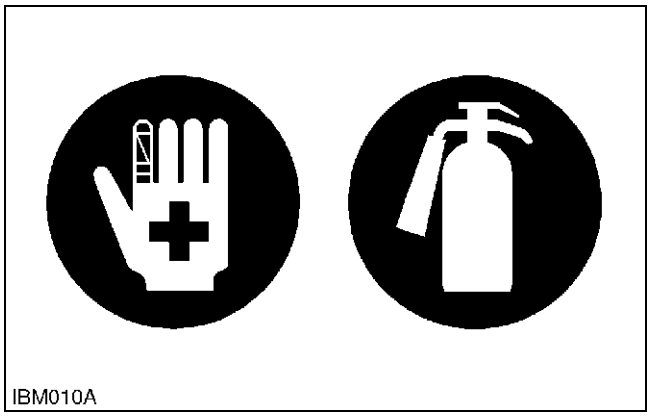
IBM010A

## PREPARE FOR EMERGENCIES

- Keep a first aid kit and fire extinguisher ready at all times.
- Keep the emergency contact telephone numbers near your telephone at all times.

WSM000001INI0009US0

https://truckmanualshub.com/


# 2. SAFETY DECALS

**The following safety decals are installed on the machine. If a decal becomes damaged, illegible or is not on the machine, replace it. The decal part number is listed in the parts list.**

WSM000001INI0013US0

(1) Part No. TA240-9848-2

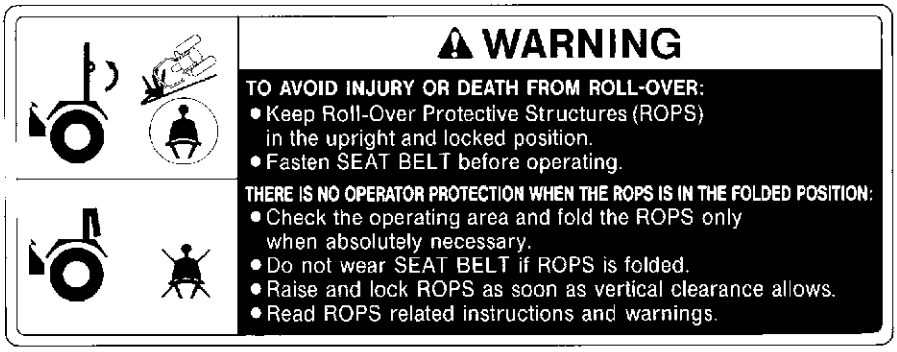


1AGAEBMAP071E

(2) Part No. TC420-4956-1
Diesel fuel only No fire

1AGAIDHAP154E

(3) Part No. 6C090-4958-2
Do not get your hands close to engine fan and fan belt.

1AGAIAZAP110A

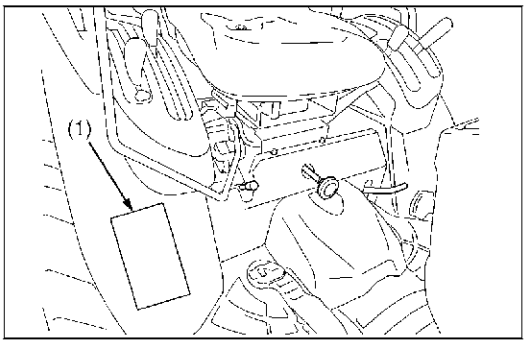


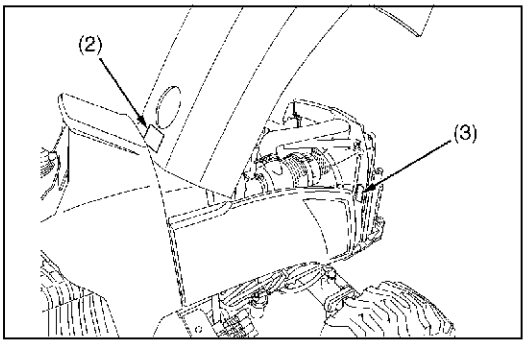


9Y1211156ICI001US

9Y1211156INI0004US0

https://truckmanualshub.com/


(1) Part No. 6C200-4959-1

**⚠WARNING**

**TO AVOID PERSONAL INJURY:**
1. Attach pulled or towed loads to the drawbar only.
2. Use the 3-point hitch only with equipment designed for 3-point hitch usage.

**⚠ WARNING**

**TO AVOID PERSONAL INJURY:**
1. Keep PTO shield in place at all times.
2. Do not operate the PTO at speeds faster than the speed recommended by the Implement manufacturer.
3. For trailing PTO-driven implements, set drawbar at towing position. (see operator's manual)

1AGAECEAP013E

(2) Part No. 6C540-9554-1

**⚠ WARNING**

Never modify or repair a ROPS because welding, grinding, drilling or cutting any portion may weaken the structure.

**⚠ WARNING**

**TO AVOID PERSONAL INJURY OR DEATH WHEN RAISING OR FOLDING ROPS:**
- Set parking brake and stop engine.
- Remove any obstruction that may prevent raising or folding of the ROPS.
- Do not allow any bystanders.
- Always perform function from a stable position at the rear of the tractor.
- Hold the top of the ROPS securely when raising or folding.
- Make sure all pins are installed and locked.

1AGAEEIAP036A

(3) Part No. 6C430-4965-1

**⚠ DANGER**

**TO AVOID POSSIBLE INJURY OR DEATH FROM A MACHINE RUNAWAY.**
1. Do not start engine by shorting across starter terminals or bypassing the safety start switch. Machine may start in gear and move if normal starting circuitry is bypassed.
2. Start engine only from operator's seat with transmission and PTO OFF. Never start engine while standing on the ground.

1AGAEEAAP003A

(4) Part No. 6C430-4959-1
Do not touch hot surface like muffler, etc.

1AGAEEAAP002A

(5) Part No. 6C090-4958-2
Do not get your hands close to engine fan and fan belt.

1AGAIAZAP110A

(6) Part No. 6C300-4744-1

**⚠WARNING**

Operation of this equipment may create sparks that can start fires around dry vegetation.
A spark arrester may be required.
The operator should contact local fire agencies for laws or regulations relating to fire prevention requirements.

1AGAIHFAP069A

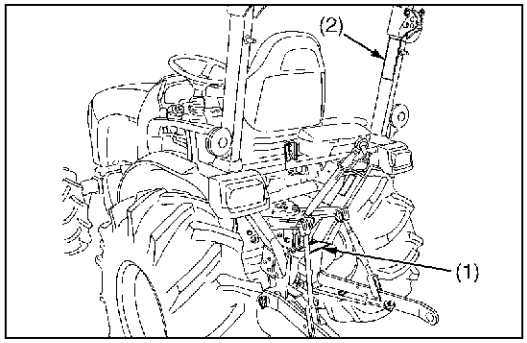


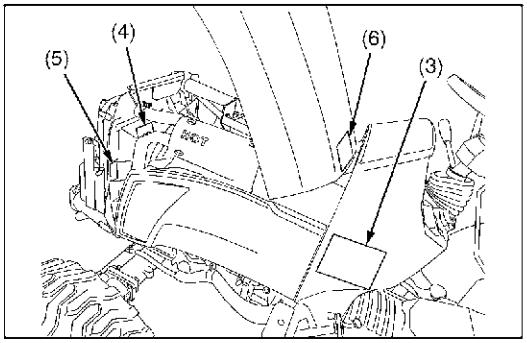


9Y1211156ICI002US

9Y1211156INI0005US0

https://truckmanualshub.com/


(1) Part No. 6C300-3012-2

1AGAEBQAP107A

(2) Part No. 6C540-4742-1

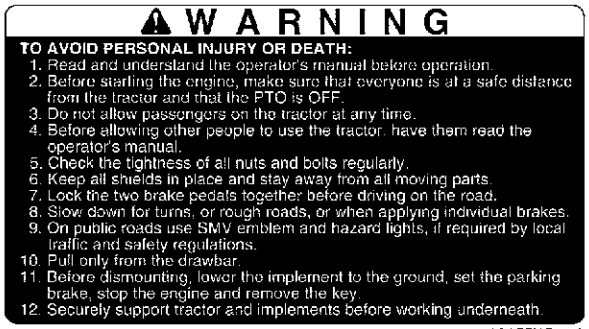


1AGAEEIAP035A

(3) Part No. 6C150-4743-1

1AGAEBMAP069E

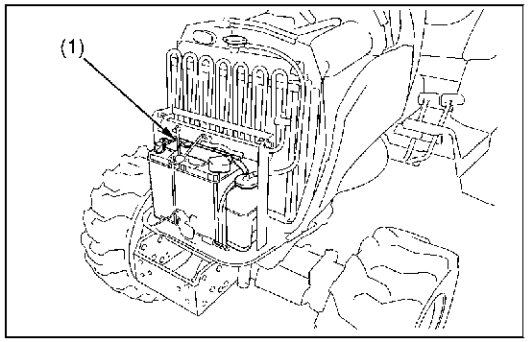


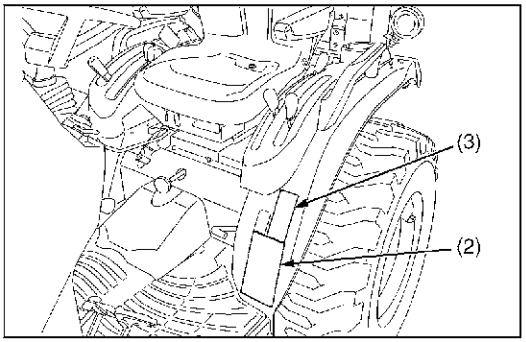


9Y1211156ICI003US

9Y1211156INI0006US0

## CARE OF DANGER, WARNING AND CAUTION LABELS

1. Keep danger, warning and caution labels clean and free from obstructing material.
2. Clean danger, warning and caution labels with soap and water, dry with a soft cloth.
3. Replace damaged or missing danger, warning and caution labels with new labels.
4. If a component with danger, warning and caution label(s) affixed is replaced with new part, make sure new label(s) is (are) attached in the same location(s) as the replace component.
5. Mount new danger, warning and caution labels by applying on a clean dry surface and pressing any bubbles to outside edge.

9Y1211156INI0007US0

https://truckmanualshub.com/


# 3. SPECIFICATIONS

| Model | | | B2301 | B2601 |
|---|---|---|---|---|
| PTO power *1 | | | 17.5 kW (13.0 HP) | 19.5 kW (14.5 HP) |
| Engine | Maker | | KUBOTA | |
| | Model | | D1005-E4-D32 | D1105-E4-D32 |
| | Type | | E-TVCS. Liquid-cooled, 3-cylinder diesel | |
| | Number of cylinders | | 3 | |
| | Bore and stroke | | 76 × 73.6 mm (3.0 × 2.9 in.) | 78 × 78.4 mm (3.1 × 3.1 in.) |
| | Total displacement | | 1001 cc (61.1 cu.in.) | 1123 cc (68.5 cu.in.) |
| | Engine gross power *1 | | 22 kW (16.4 HP) | 25.5 kW (19.0 HP) |
| | Rated revolution | | 2800 $min^{-1}$ (rpm) | |
| | Low idling revolution | | 1000 to 1100 $min^{-1}$ (rpm) | |
| | Maximum torque | | 60 N·m (6.1 kgf·m, 44 lbf·ft) | 71 N·m (7.2 kgf·m, 52 lbf·ft) |
| | Battery | | 12 V, RC: 80 min, CCD: 430 A | |
| Capacities | Fuel tank | | 23 L (6.1 U.S.gals, 5.1 Imp.gals) | |
| | Engine crankcase (with filter) | | 3.1 L (3.3 U.S.qts, 2.7 Imp.qts) | |
| | Engine coolant | | 3.8 L (4.0 U.S.qts, 3.3 Imp.qts) | |
| | Transmission case | | 15 L (4.0 U.S.gals, 3.3 Imp.gals) | |
| Dimensions | Overall length (without 3P) | | 2380 mm (93.7 in.) | 2410 mm (94.9 in.) |
| | Overall width (min. tread) | | 1150 mm (45.3 in.) | 1245 mm (49.0 in.) |
| | Overall height | | 2130 mm (83.9 in.) | 2160 mm (85.0 in.) |
| | Wheel base | | 1560 mm (61.4 in.) | |
| | Minimum ground clearance | | 305 mm (12.0 in.) | 325 mm (12.8 in.) |
| | Tread | Front | 800 mm (31.5 in.) | 815 mm (32.1 in.) |
| | | Rear | 900 mm (35.5 in.) | 950 mm (37.4 in.) |
| Weight | | | 710 kg (1566 lbs) | 740 kg (1632 lbs) |
| Clutch | | | Not applicable | |
| Traveling system | Tires | Front | 6-12 | 7-12 |
| | | Rear | 9.5-16 | 11.2-16 |
| | Steering | | Hydraulic type power steering | |
| | Transmission | | HST (3 range) | |
| | Brake | | Wet disk type | |
| | Minimum turning radius (with brake) | | 2.1 m (6.9 feet) | |
| Hydraulic unit | Hydraulic control system | | Position Control Valve | |
| | Pump capacity | | 31.4 L/min (8.3 gals/min) | |
| | 3-point hitch | | SAE Category 1 | |
| | Max. lift force | At lift points | 820 kg (1808 lbs) | |
| | | 24 in. behind lift point | 640 kg (1411 lbs) | |
| PTO | Rear-PTO | | SAE 1-3/8, 6 splines | |
| | | PTO / Engine speed | 540 $min^{-1}$ (rpm) / 2768 $min^{-1}$ (rpm) | |
| | Mid-PTO | | USA No.5 (KUBOTA 10-tooth) involute spline | |
| | | PTO / Engine speed | 2500 $min^{-1}$ (rpm) / 2753 $min^{-1}$ (rpm) | |

■ **NOTE**

- *** Manufacturer's estimate**
  **The company reserves the right to change the specifications without notice.**

9Y1211156INI0001US0

https://truckmanualshub.com/


# 4. TRAVELING SPEEDS

(At rated engine rpm)

| Model | | B2301HSD |
|---|---|---|
| Tire size (Rear) | | 9.5-16 Farm / 33 × 12.5-15 Turf / 12-16.5 Industry |
| | Range gear shift lever | km/h (mile/h) |
| Forward | Low | 0 to 5.6 (0 to 3.5) |
| | Middle | 0 to 8.8 (0 to 5.5) |
| | High | 0 to 19.1 (0 to 11.8) |
| Reverse | Low | 0 to 4.2 (0 to 2.6) |
| | Middle | 0 to 6.6 (0 to 4.1) |
| | High | 0 to 14.3 (0 to 8.9) |

| Model | | B2601HSD | |
|---|---|---|---|
| Tire size (Rear) | | 11.2-16 Farm | 33 × 12.5-15 Turf / 12-16.5 Industry |
| | Range gear shift lever | km/h (mile/h) | |
| Forward | Low | 0 to 6.0 (0 to 3.7) | 0 to 5.6 (0 to 3.5) |
| | Middle | 0 to 9.5 (0 to 5.9) | 0 to 8.8 (0 to 5.5) |
| | High | 0 to 20.4 (0 to 12.7) | 0 to 19.1 (0 to 11.8) |
| Reverse | Low | 0 to 4.5 (0 to 2.8) | 0 to 4.2 (0 to 2.6) |
| | Middle | 0 to 7.1 (0 to 4.4) | 0 to 6.6 (0 to 4.1) |
| | High | 0 to 15.3 (0 to 9.5) | 0 to 14.3 (0 to 8.9) |

The company reserves the right to change the specification without notice.

9Y1211156INI0002US0

https://truckmanualshub.com/


# 5. DIMENSIONS

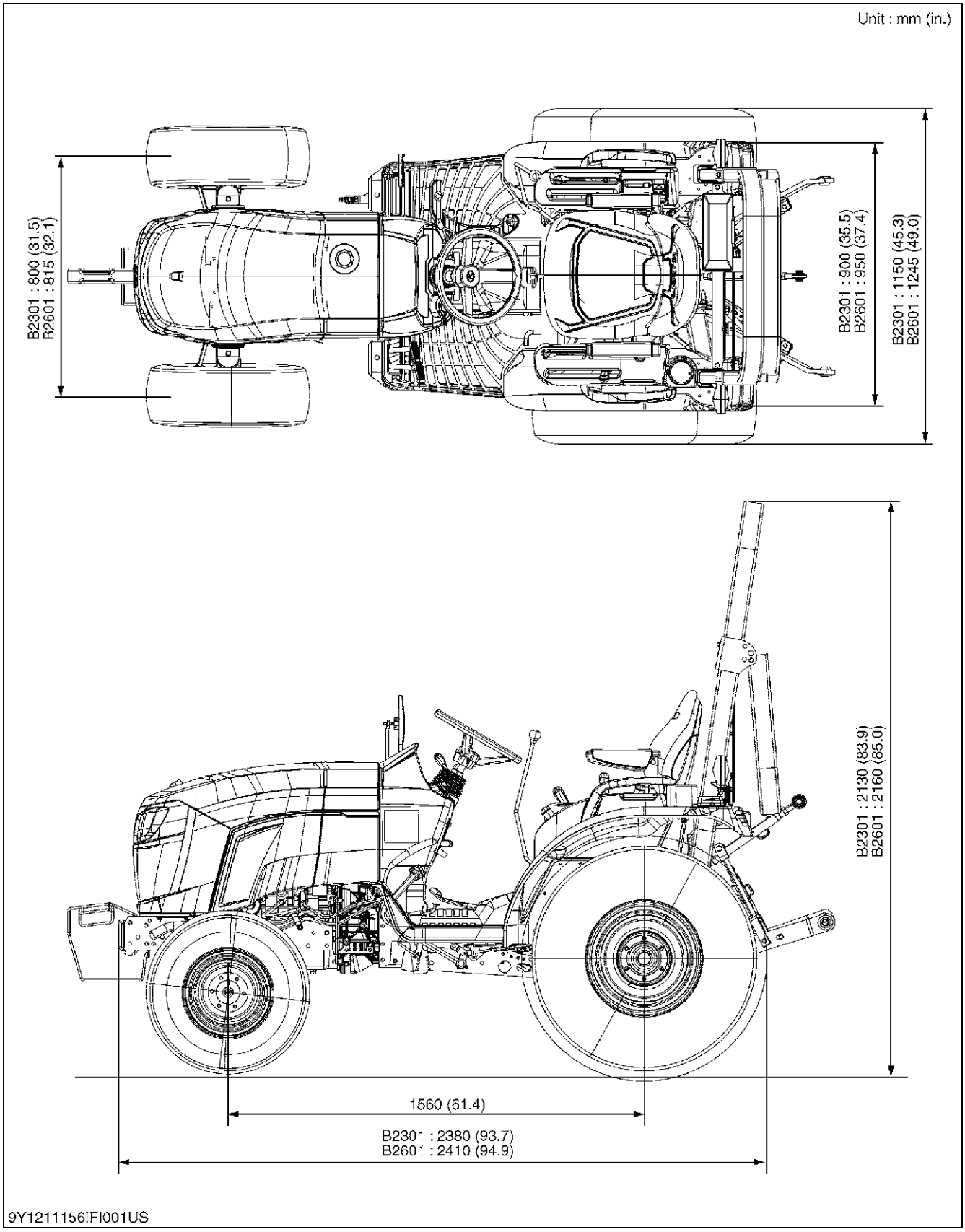


9Y1211156INI0003US0

https://truckmanualshub.com/

# G GENERAL

https://truckmanualshub.com/

# GENERAL

## CONTENTS


1. TRACTOR IDENTIFICATION ..... G-1
2. GENERAL PRECAUTIONS ..... G-2
3. HANDLING PRECAUTIONS FOR ELECTRICAL PARTS AND WIRING ..... G-3
   [1] WIRING ..... G-3
   [2] BATTERY ..... G-5
   [3] FUSE ..... G-5
   [4] CONNECTOR ..... G-5
   [5] HANDLING OF CIRCUIT TESTER ..... G-6
   [6] COLOR OF WIRING ..... G-7
4. LUBRICANTS, FUEL AND COOLANT ..... G-8
5. TIGHTENING TORQUES ..... G-11
   [1] GENERAL USE SCREWS, BOLTS AND NUTS ..... G-11
   [2] STUD BOLTS ..... G-11
   [3] METRIC SCREWS, BOLTS AND NUTS ..... G-12
   [4] AMERICAN STANDARD SCREWS, BOLTS AND NUTS WITH UNC OR UNF THREADS ..... G-12
   [5] PLUGS ..... G-12
6. MAINTENANCE CHECK LIST ..... G-13
7. CHECK AND MAINTENANCE ..... G-15
   [1] DAILY CHECK ..... G-15
   [2] CHECK POINTS OF EVERY 50 HOURS ..... G-19
   [3] CHECK POINTS OF EVERY 100 HOURS ..... G-21
   [4] CHECK POINTS OF EVERY 200 HOURS ..... G-25
   [5] CHECK POINTS OF EVERY 400 HOURS ..... G-28
   [6] CHECK POINT OF EVERY 800 HOURS ..... G-30
   [7] CHECK POINT OF EVERY 1500 HOURS ..... G-30
   [8] CHECK POINT OF EVERY 3000 HOURS ..... G-30
   [9] CHECK POINT OF EVERY 1 YEAR ..... G-30
   [10] CHECK POINTS OF EVERY 2 YEARS ..... G-31
   [11] OTHERS ..... G-33
8. SPECIAL TOOLS ..... G-35
   [1] SPECIAL TOOLS FOR ENGINE ..... G-35
   [2] SPECIAL TOOLS FOR TRACTOR ..... G-42
9. TIRES ..... G-45
   [1] TIRE PRESSURE ..... G-45
   [2] WHEEL ADJUSTMENT ..... G-46
      (1) Front Wheels ..... G-46
      (2) Rear Wheels ..... G-48
   [3] BALLAST ..... G-50
10. IMPLEMENT LIMITATIONS ..... G-52

https://truckmanualshub.com/


# 1. TRACTOR IDENTIFICATION

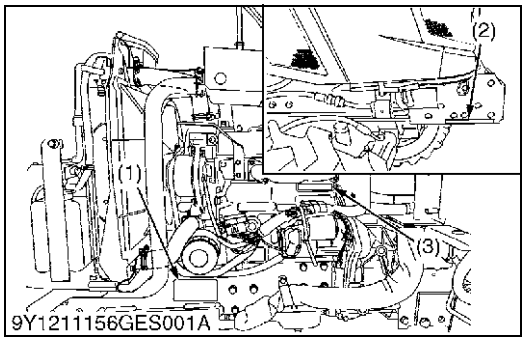


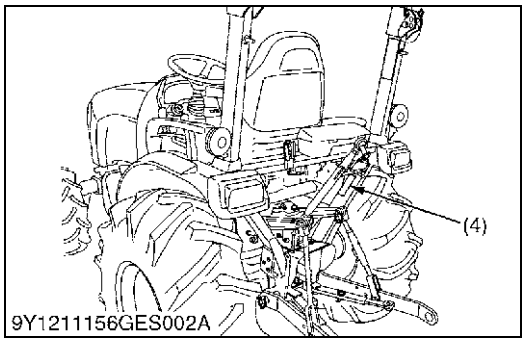


When contacting your local KUBOTA distributor, always specify engine serial number, tractor serial number and hour meter reading.

(1) Tractor Identification Plate
(2) Tractor Serial Number
(3) Engine Serial Number
(4) ROPS Identification Plate (ROPS Serial Number)

9Y1211156GEG0001US0

https://truckmanualshub.com/


# 2. GENERAL PRECAUTIONS

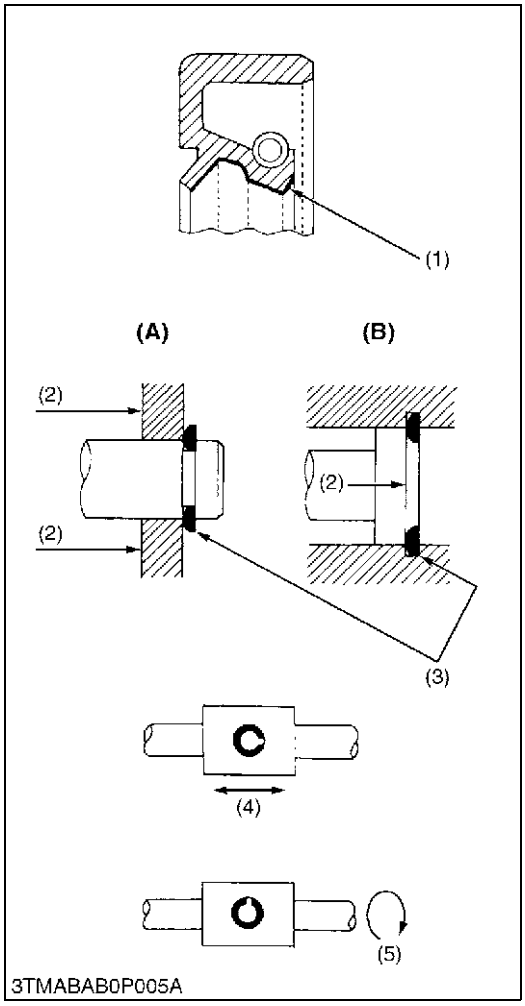


- When you disassemble, carefully put the parts in a clean area to make it easy to find the parts. You must install the screws, bolts and nuts in their initial position to prevent the reassembly errors.
- When it is necessary to use special tools, use KUBOTA special tools. Refer to the drawings when you make special tools that you do not use frequently.
- Before you disassemble or repair machine, make sure that you always disconnect the ground cable from the battery first.
- Remove oil and dirt from parts before you measure.
- Use only KUBOTA genuine parts for replacement to keep the machine performance and to make sure of safety.
- You must replace the gaskets and O-rings when you assemble again. Apply grease **(1)** to new O-rings or oil seals before you assemble.
- When you assemble the external or internal snap rings, make sure that the sharp edge **(3)** faces against the direction from which force **(2)** is applied.
- When inserting spring pins, their splits must face the direction from which a force is applied. See the figure left side.
- To prevent damage to the hydraulic system, use only specified fluid or equivalent.
- Clean the parts before you measure them.
- Tighten the fittings to the specified torque. Too much torque can cause damage to the hydraulic units or the fittings. Not sufficient torque can cause oil leakage.
- When you use a new hose or pipe, tighten the nuts to the specified torque. Then loosen (approx. by 45 °) and let them be stable before you tighten to the specified torque (This is not applied to the parts with seal tape).
- When you remove the two ends of a pipe, remove the lower end first.
- Use two pliers in removal and installation. One to hold the stable side, and the other to turn the side you remove to prevent twists.
- Make sure that the sleeves of flared connectors and tapers of hoses are free of dust and scratches.
- After you tighten the fittings, clean the joint and apply the maximum operation pressure 2 to 3 times to check oil leakage.

(1) Grease
(2) Force
(3) Sharp Edge
(4) Axial Force
(5) Rotating Movement

**(A) External Circlip**
**(B) Internal Circlip**

WSM000001GEG0106US0

https://truckmanualshub.com/


# 3. HANDLING PRECAUTIONS FOR ELECTRICAL PARTS AND WIRING

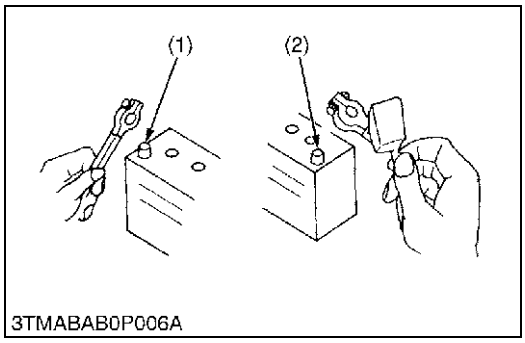


To ensure safety and prevent damage to the machine and surrounding equipment, obey the following precautions in handling electrical parts and wiring.

■ **IMPORTANT**

- **Check electrical wiring for damage and loosened connection every year. To this end, educate the customer to do his or her own check and at the same time recommend the dealer to perform periodic check for a fee.**
- **Do not try to modify or remodel any electrical parts and wiring.**
- **When removing the battery cables, disconnect the negative cable first. When installing the battery cables, connect the positive cable first.**

(1) Negative Terminal (2) Positive Terminal

WSM000001GEG0062US0

## [1] WIRING

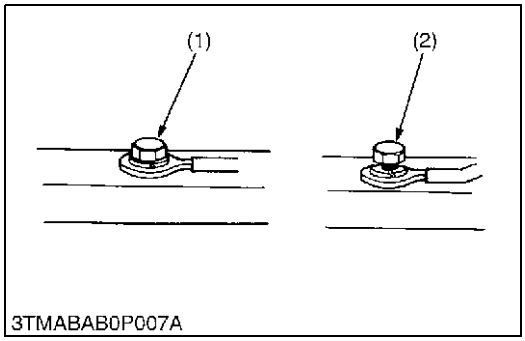


- Securely tighten wiring terminals.

(1) Correct (Securely Tighten) (2) Incorrect (Loosening Leads to Faulty Contact)

WSM000001GEG0063US0

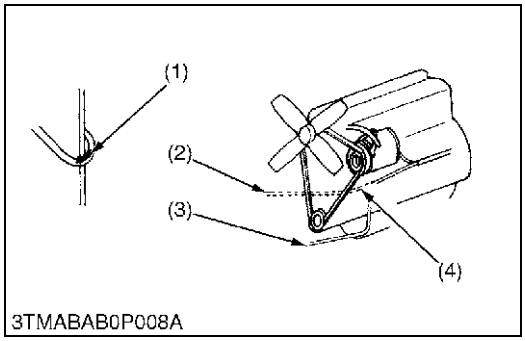


- Do not let wiring contact dangerous part.

(1) Dangerous Part (Sharp Edge) (3) Wiring (Correct)
(2) Wiring (Incorrect) (4) Dangerous Part

WSM000001GEG0064US0

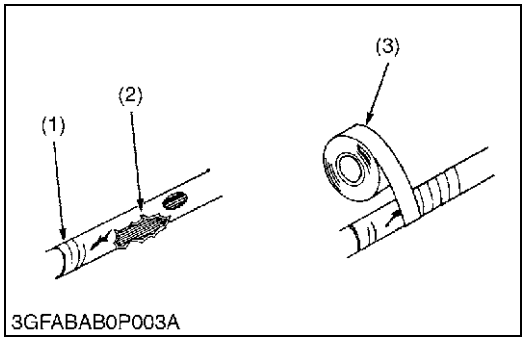


- Repair or change torn or aged wiring immediately.

(1) Aged (3) Insulating Vinyl Tape
(2) Torn

WSM000001GEG0065US0

https://truckmanualshub.com/


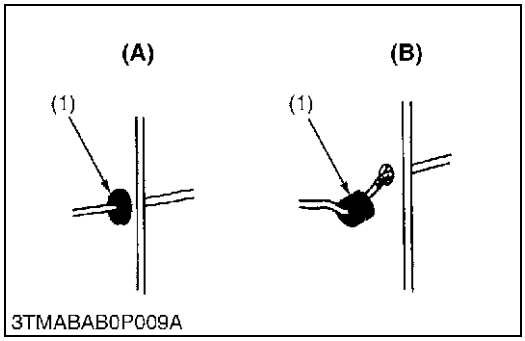


- Securely insert grommet.

(1) Grommet

**(A) Correct**
**(B) Incorrect**

WSM000001GEG0066US0

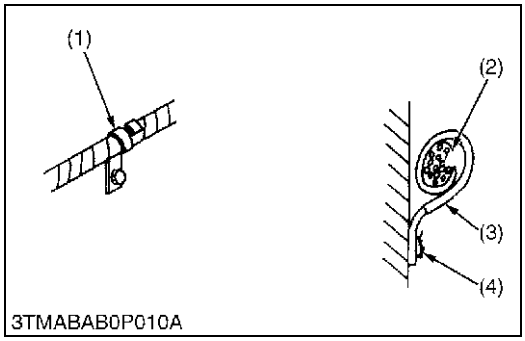


- Securely clamp, being careful not to damage wiring.

(1) Clamp
(Wind Clamp Spirally)
(2) Wire Harness
(3) Clamp
(4) Welding Dent

WSM000001GEG0067US0

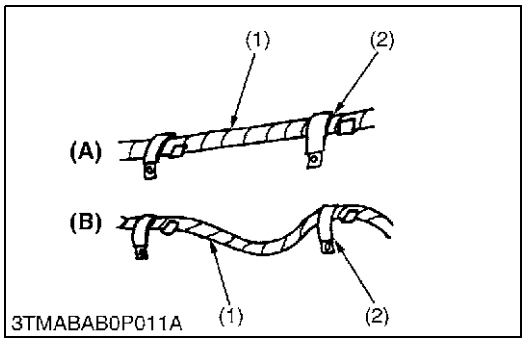


- Clamp wiring so that there is no twist, unnecessary sag, or excessive tension, except for movable part, where sag be required.

(1) Wiring
(2) Clamp

**(A) Correct**
**(B) Incorrect**

WSM000001GEG0068US0

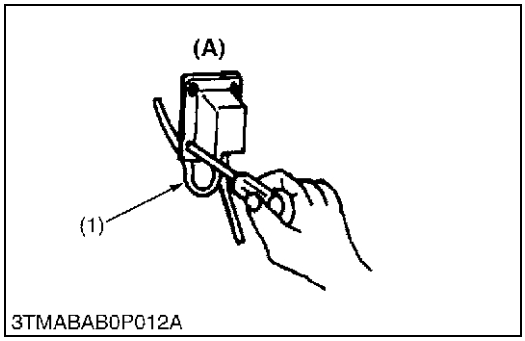


- In installing a part, be careful not to get wiring caught by it.

(1) Wiring

**(A) Incorrect**

WSM000001GEG0069US0

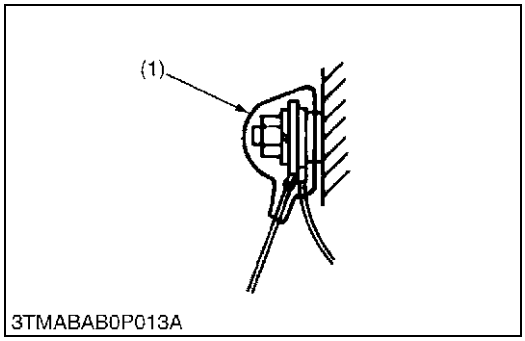


- After installing wiring, check protection of terminals and clamped condition of wiring.

(1) Cover
(Securely Install Cover)

WSM000001GEG0070US0

https://truckmanualshub.com/


# [2] BATTERY

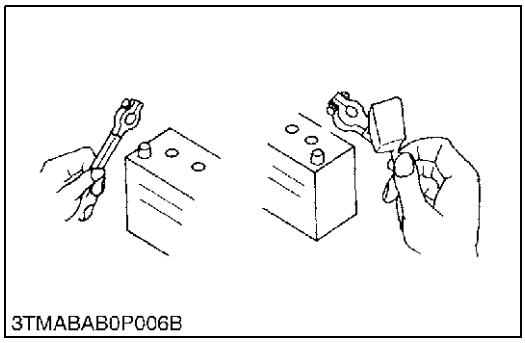
3TMABAB0P006B

- Be careful not to confuse positive and negative terminal posts.
- When you remove battery cables, disconnect negative cable first. When you install battery cables, check for polarity and connect positive cable first.
- Do not install any battery with capacity other than is specified (Ah).
- After you connect cables to battery terminal posts, apply high temperature grease to them and securely install terminal covers on them.
- Do not allow dirt and dust to collect on battery.

**DANGER**

**To avoid serious injury or death:**

- **Be careful not to let battery liquid spill on your skin and clothes. If contaminated, wash it off with water immediately.**
- **Before you recharge the battery, remove it from the machine.**
- **Before you recharge, remove cell caps.**
- **Recharge in a well-ventilated place where there is no open flame nearby, as hydrogen gas and oxygen are formed.**

WSM000001GEG0071US0

# [3] FUSE

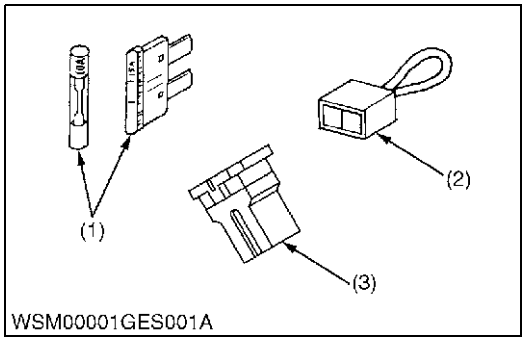

WSM00001GES001A

- Use fuses with specified capacity.
  Neither too large nor small capacity fuse is acceptable.
- Never use steel nor copper wire in place of fuse.
- Do not install working light, radio set, etc. on machine which is not provided with reserve power supply.
- Do not install accessories if fuse capacity of reserve power supply is exceeded.

(1) Fuse
(2) Fusible Link
(3) Slow Blow Fuse

WSM000001GEG0072US0

# [4] CONNECTOR

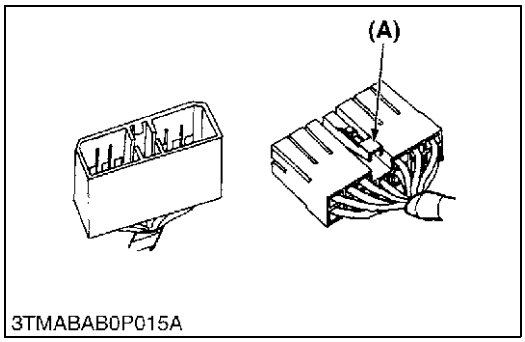

3TMABAB0P015A

- For connector with lock, push lock to separate.

**(A) Push**

WSM000001GEG0073US0

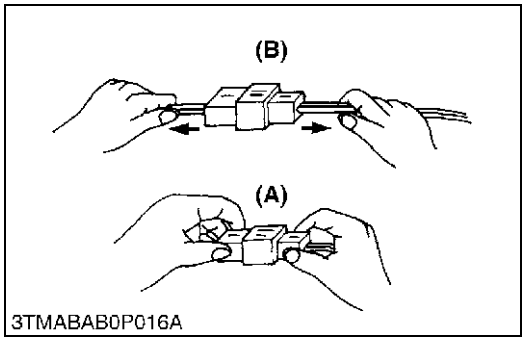

3TMABAB0P016A

- In separating connectors, do not pull wire harnesses.
- Hold connector bodies to separate.

**(A) Correct**
**(B) Incorrect**

WSM000001GEG0074US0

https://truckmanualshub.com/


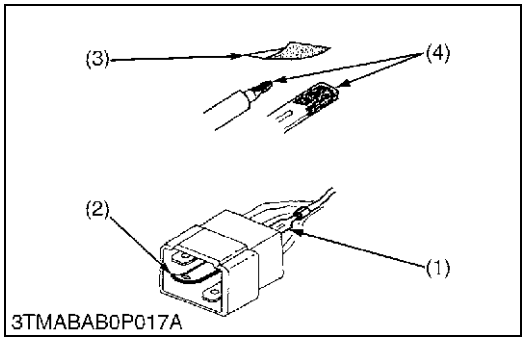


- Use sandpaper to remove rust from terminals.
- Repair deformed terminal. Make sure that there is no terminal being exposed or displaced.

(1) Exposed Terminal
(2) Deformed Terminal
(3) Sandpaper
(4) Rust

WSM000001GEG0075US0

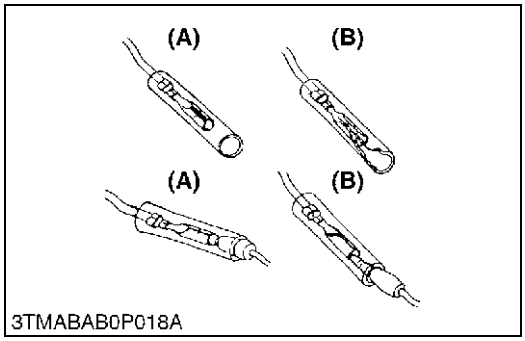


- Make sure that there is no female connector being too open.

**(A) Correct**
**(B) Incorrect**

WSM000001GEG0076US0

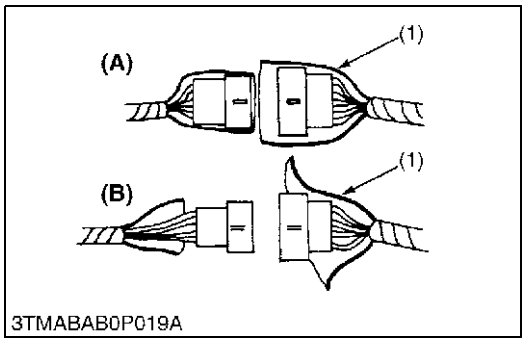


- Make sure that plastic cover is large enough to cover whole connector.

(1) Cover

**(A) Correct**
**(B) Incorrect**

WSM000001GEG0077US0

# [5] HANDLING OF CIRCUIT TESTER

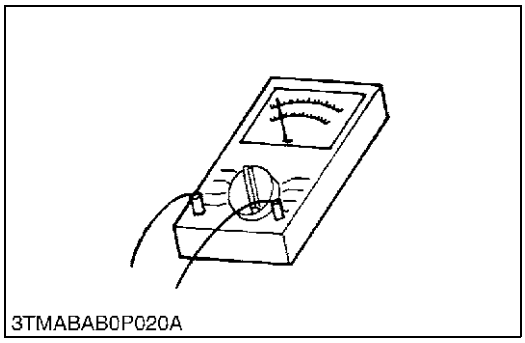


- Use tester correctly following manual provided with tester.
- Check for polarity and range.

WSM000001GEG0078US0

https://truckmanualshub.com/


# [6] COLOR OF WIRING

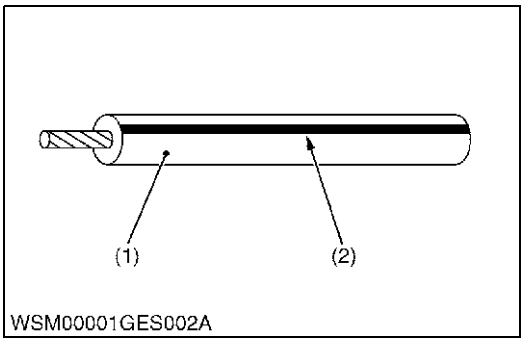


- Colors of wire are specified to the color codes.
- This symbol of "/" shows color with stripe(s).

**(An example)**

Red stripe on white color: W/R

| Color of wiring | Color code |
|---|---|
| Black | B |
| Brown | Br |
| Green | G |
| Gray | Gy or Gr |
| Blue | L |
| Light Green | Lg |
| Orange | Or |
| Pink | P |
| Purple | Pu or V |
| Red | R |
| Sky Blue | Sb |
| White | W |
| Yellow | Y |

(1) Wire Color (2) Stripe

WSM000001GEG0079US0

https://truckmanualshub.com/


# 4. LUBRICANTS, FUEL AND COOLANT

| No. | Place | Capacity | | Lubricants, fuel and coolant |
|---|---|---|---|---|
| | | B2301 | B2601 | |
| 1 | Fuel tank | 23 L<br>6.1 U.S.gals<br>5.1 Imp.gals | | • No. 2-D diesel fuel<br>• No. 1-D diesel fuel if temperature is below –10 °C (14 °F) |
| 2 | Coolant (with recovery tank) | 3.8 L<br>4.0 U.S.qts<br>3.3 Imp.qts | | Fresh clean soft water with anti-freeze |
| 3 | Engine crankcase (with filter) | 3.1 L<br>3.3 U.S.qts<br>2.7 Imp.qts | | Engine oil: Refer to next page<br>• Above 25 °C (77 °F)<br>SAE30, SAE10W-30 or 15W-40<br>• −10 to 25 °C<br>(14 to 77 °F)<br>SAE20, SAE10W-30 or 15W-40<br>• Below −10 °C (14 °F)<br>SAE10W-30 |
| 4 | Transmission case | 15 L<br>4.0 U.S.gals<br>3.3 Imp.gals | | KUBOTA SUPER UDT-2 fluid* |
| 5 | Front axle case | 3.5 L<br>3.7 U.S.qts<br>3.1 Imp.qts | | KUBOTA SUPER UDT-2 fluid* or SAE80 - SAE90 gear oil |

| | Greasing | No. of greasing point | Capacity | Type of grease |
|---|---|---|---|---|
| 6 | Top link | 1 | Until grease overflows | Multipurpose type grease NLGI-2 or NLGI-1 (GC-LB) |
| | Lift rod [RH] | 1 | | |
| | Brake pedal | 1 | | |
| | Battery terminal | 2 | Moderate amount | |

■ **NOTE**
- ***KUBOTA UDT or SUPER UDT fluid --- KUBOTA original transmission hydraulic fluid**

9Y1211156GEG0002US0

https://truckmanualshub.com/


■ **NOTE**

**<For North American market>**

**Engine Oil**

- **Oil used in the engine should have an American Petroleum Institute (API) service classification and Proper SAE Engine Oil according to the ambient temperatures as shown above :**
- **Refer to the following table for the suitable API classification engine oil according to the engine type (with internal EGR, external EGR or non-EGR) and the fuel (low-sulfur or high-sulfur fuel).**

| Fuel used | Engine oil classification (API classification) | |
|---|---|---|
| | Oil class of engines except external EGR | Oil class of engines with external EGR |
| Ultra Low Sulfur Fuel [< 0.0015 % (15 ppm)] | **CF**, **CF-4**, **CG-4**, **CH-4** or **CI-4** | **CF** or **CI-4** (Class CF-4, CG-4 and CH-4 engine oils cannot be used on EGR type engines) |

EGR: Exhaust Gas Re-circulation

- **The CJ-4 engine oil is intended for DPF (Diesel Particulate Filter) type engines, and cannot be used on this tractor.**

| | except external EGR | With external EGR |
|---|---|---|
| Models | B2301 / B2601 | – |

**Fuel**

- **Cetane number of 45 minimum. Cetane number greater then 50 is preferred, especially for temperatures below −20 °C (−4 °F) or elevations above 1500 m (5000 ft).**
- **Diesel fuels specified to EN 590 or ASTM D975 are recommended.**
- **No.2-D is a distillate fuel of lower volatility for engine in industrial and heavy mobile service. (SAE J313 JUN87)**

**Transmission oil**

- **KUBOTA Super UDT-2: For an enhanced ownership experience, we highly recommend Super UDT-2 to be used instead of standard hydraulic/transmission fluid.**
  **Super UDT-2 is a proprietary KUBOTA formulation that delivers superior performance and protection in all operating conditions.**
  **Regular UDT is also permitted for use in this machine.**

■ **Indicated capacities of water and oil are manufacturer's estimate.**

https://truckmanualshub.com/


**<For other than North American market>**

**Engine Oil**

- **Oil used in the engine should have an American Petroleum Institute (API) service classification and Proper SAE Engine Oil according to the ambient temperatures as shown above :**
- **With the emission control now in effect, the CF-4 and CG-4 lubricating oils have been developed for use of a low-sulfur fuel on on-road vehicle engines. When an off-road vehicle engine runs on a high-sulfur fuel, it is advisable to employ the "CF or better" lubricating oil with a high Total Base Number (TBN of 10 minimum).**
- **Refer to the following table for the suitable API classification engine oil according to the engine type (with internal EGR, external EGR or non-EGR) and the fuel (low-sulfur or high-sulfur fuel).**

| Fuel used | Engine oil classification (API classification) | |
|---|---|---|
| | Oil class of engines except external EGR | Oil class of engines with external EGR |
| High Sulfur Fuel [≥ 0.05 % (500 ppm)] | **CF** (If the "CF-4, CG-4, CH-4, or CI-4" lubricating oil is used with a high-sulfur fuel, change the lubricating oil at shorter intervals. (approximately half)) | – |
| Low Sulfur Fuel [(< 0.05 % (500 ppm)] or Ultra Low Sulfur Fuel [< 0.0015 % (15 ppm)] | **CF**, **CF-4**, **CG-4**, **CH-4** or **CI-4** | **CF** or **CI-4** (Class CF-4, CG-4 and CH-4 engine oils cannot be used on EGR type engines) |

EGR: Exhaust Gas Re-circulation

- **The CJ-4 engine oil is intended for DPF (Diesel Particulate Filter) type engines, and cannot be used on this tractor.**

| | except external EGR | With external EGR |
|---|---|---|
| Models | B2301 / B2601 | – |

**Fuel**

- **Cetane number of 45 minimum. Cetane number greater then 50 is preferred, especially for temperatures below −20 °C (−4 °F) or elevations above 1500 m (5000 ft).**
- **If diesel fuel with sulfur content greater than 0.5 % (5000 ppm) sulfur content in used, reduce the service interval for engine oil and filter by 50 %.**
- **NEVER use diesel fuel with sulfur content greater than 0.05 % (500 ppm) for EXTERNAL EGR type engine.**
- **DO NOT use diesel fuel with sulfur content greater than 1.0 % (10000 ppm).**
- **Diesel fuels specified to EN 590 or ASTM D975 are recommended.**
- **No.2-D is a distillate fuel of lower volatility for engine in industrial and heavy mobile service. (SAE J313 JUN87)**

**Transmission oil**

- **The oil used to lubricate the transmission is also used as hydraulic fluid. To insure proper operation of the hydraulic system and to complete lubrication of the transmission, it is important that a multi-grade transmission fluid is used in this system. We recommend the use of KUBOTA UDT or SUPER UDT fluid for optimum protection and performance.**
  **Do not mix different brands together.**

■ **Indicated capacities of water and oil are manufacturer's estimate.**

9Y1211156GEG0003US0

https://truckmanualshub.com/


# 5. TIGHTENING TORQUES

**Tighten screws, bolts and nuts whose tightening torques are not specified in this Workshop Manual according to the table below.**

WSM000001GEG0116US0

## [1] GENERAL USE SCREWS, BOLTS AND NUTS

| Indication on top of bolt | 4 No-grade or 4T | | | | | | 7 7T | | | | | | 9 9T | | |
|---|---|---|---|---|---|---|---|---|---|---|---|---|---|---|---|
| Indication on top of nut | No-grade or 4T | | | | | | | | | | | | 6T | | |
| Material of opponent part | Ordinariness | | | Aluminum | | | Ordinariness | | | Aluminum | | | Ordinariness | | |
| Unit | N·m | kgf·m | lbf·ft | N·m | kgf·m | lbf·ft | N·m | kgf·m | lbf·ft | N·m | kgf·m | lbf·ft | N·m | kgf·m | lbf·ft |
| M6 | 7.9 to 9.3 | 0.80 to 0.95 | 5.8 to 6.8 | 7.9 to 8.8 | 0.80 to 0.90 | 5.8 to 6.5 | 9.81 to 11.2 | 1.00 to 1.15 | 7.24 to 8.31 | 7.9 to 8.8 | 0.80 to 0.90 | 5.8 to 6.5 | 12.3 to 14.2 | 1.25 to 1.45 | 9.05 to 10.4 |
| M8 | 18 to 20 | 1.8 to 2.1 | 13 to 15 | 17 to 19 | 1.7 to 2.0 | 13 to 14 | 24 to 27 | 2.4 to 2.8 | 18 to 20 | 18 to 20 | 1.8 to 2.1 | 13 to 15 | 30 to 34 | 3.0 to 3.5 | 22 to 25 |
| M10 | 40 to 45 | 4.0 to 4.6 | 29 to 33 | 32 to 34 | 3.2 to 3.5 | 24 to 25 | 48 to 55 | 4.9 to 5.7 | 36 to 41 | 40 to 44 | 4.0 to 4.5 | 29 to 32 | 61 to 70 | 6.2 to 7.2 | 45 to 52 |
| M12 | 63 to 72 | 6.4 to 7.4 | 47 to 53 | – | – | – | 78 to 90 | 7.9 to 9.2 | 58 to 66 | 63 to 72 | 6.4 to 7.4 | 47 to 53 | 103 to 117 | 10.5 to 12.0 | 76.0 to 86.7 |
| M14 | 108 to 125 | 11.0 to 12.8 | 79.6 to 92.5 | – | – | – | 124 to 147 | 12.6 to 15.0 | 91.2 to 108 | – | – | – | 167 to 196 | 17.0 to 20.0 | 123 to 144 |
| M16 | 167 to 191 | 17.0 to 19.5 | 123 to 141 | – | – | – | 197 to 225 | 20.0 to 23.0 | 145 to 166 | – | – | – | 260 to 304 | 26.5 to 31.0 | 192 to 224 |
| M18 | 246 to 284 | 25.0 to 29.0 | 181 to 209 | – | – | – | 275 to 318 | 28.0 to 32.5 | 203 to 235 | – | – | – | 344 to 402 | 35.0 to 41.0 | 254 to 296 |
| M20 | 334 to 392 | 34.0 to 40.0 | 246 to 289 | – | – | – | 368 to 431 | 37.5 to 44.0 | 272 to 318 | – | – | – | 491 to 568 | 50.0 to 58.0 | 362 to 419 |

WSM000001GEG0117US0

## [2] STUD BOLTS

| Material of opponent part | Ordinariness | | | Aluminum | | |
|---|---|---|---|---|---|---|
| Unit | N·m | kgf·m | lbf·ft | N·m | kgf·m | lbf·ft |
| M8 | 12 to 15 | 1.2 to 1.6 | 8.7 to 11 | 8.9 to 11 | 0.90 to 1.2 | 6.5 to 8.6 |
| M10 | 25 to 31 | 2.5 to 3.2 | 18 to 23 | 20 to 25 | 2.0 to 2.6 | 15 to 18 |
| M12 | 30 to 49 | 3.0 to 5.0 | 22 to 36 | 31 | 3.2 | 23 |
| M14 | 62 to 73 | 6.3 to 7.5 | 46 to 54 | – | – | – |
| M16 | 98.1 to 112 | 10.0 to 11.5 | 72.4 to 83.1 | – | – | – |
| M18 | 172 to 201 | 17.5 to 20.5 | 127 to 148 | – | – | – |

WSM000001GEG0002US0

https://truckmanualshub.com/


# [3] METRIC SCREWS, BOLTS AND NUTS

| Grade | 8.8 Property class 8.8 | | | 10.9 Property class 10.9 | | |
|---|---|---|---|---|---|---|
| Unit | N·m | kgf·m | lbf·ft | N·m | kgf·m | lbf·ft |
| M8 | 24 to 27 | 2.4 to 2.8 | 18 to 20 | 30 to 34 | 3.0 to 3.5 | 22 to 25 |
| M10 | 48 to 55 | 4.9 to 5.7 | 36 to 41 | 61 to 70 | 6.2 to 7.2 | 45 to 52 |
| M12 | 78 to 90 | 7.9 to 9.2 | 58 to 66 | 103 to 117 | 10.5 to 12.0 | 76.0 to 86.7 |
| M14 | 124 to 147 | 12.6 to 15.0 | 91.2 to 108 | 167 to 196 | 17.0 to 20.0 | 123 to 144 |
| M16 | 197 to 225 | 20.0 to 23.0 | 145 to 166 | 260 to 304 | 26.5 to 31.0 | 192 to 224 |

WSM000001GEG0003US0

# [4] AMERICAN STANDARD SCREWS, BOLTS AND NUTS WITH UNC OR UNF THREADS

| Grade | SAE GR.5 | | | SAE GR.8 | | |
|---|---|---|---|---|---|---|
| Unit | N·m | kgf·m | lbf·ft | N·m | kgf·m | lbf·ft |
| 1/4 | 11.7 to 15.7 | 1.20 to 1.60 | 8.63 to 11.5 | 16.3 to 19.7 | 1.67 to 2.00 | 12.0 to 14.6 |
| 5/16 | 23.1 to 27.7 | 2.36 to 2.82 | 17.0 to 20.5 | 33 to 39 | 3.4 to 3.9 | 25 to 28 |
| 3/8 | 48 to 56 | 4.9 to 5.7 | 36 to 41 | 61 to 73 | 6.3 to 7.4 | 45 to 53 |
| 1/2 | 110 to 130 | 11.3 to 13.2 | 81.2 to 95.8 | 150 to 178 | 15.3 to 18.1 | 111 to 131 |
| 9/16 | 150 to 178 | 15.3 to 18.1 | 111 to 131 | 217 to 260 | 22.2 to 26.5 | 160 to 191 |
| 5/8 | 204 to 244 | 20.8 to 24.8 | 151 to 179 | 299 to 357 | 30.5 to 36.4 | 221 to 263 |

WSM000001GEG0008US0

# [5] PLUGS

| Shape | Size | Material of opponent part | | | | | |
|---|---|---|---|---|---|---|---|
| | | Ordinariness | | | Aluminum | | |
| | | N·m | kgf·m | lbf·ft | N·m | kgf·m | lbf·ft |
| Tapered screw 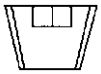 | R1/8 | 13 to 21 | 1.3 to 2.2 | 9.4 to 15 | 13 to 19 | 1.3 to 2.0 | 9.4 to 14 |
| | R1/4 | 25 to 44 | 2.5 to 4.5 | 18 to 32 | 25 to 34 | 2.5 to 3.5 | 18 to 25 |
| | R3/8 | 49 to 88 | 5.0 to 9.0 | 37 to 65 | 49 to 58 | 5.0 to 6.0 | 37 to 43 |
| | R1/2 | 58.9 to 107 | 6.00 to 11.0 | 43.4 to 79.5 | 59 to 78 | 6.0 to 8.0 | 44 to 57 |
| Straight screw | G1/4 | 25 to 34 | 2.5 to 3.5 | 18 to 25 | – | – | – |
| | G3/8 | 62 to 82 | 6.3 to 8.4 | 46 to 60 | – | – | – |
| | G1/2 | 49 to 88 | 5.0 to 9.0 | 37 to 65 | – | – | – |

WSM000001GEG0005US0

https://truckmanualshub.com/


# 6. MAINTENANCE CHECK LIST

| No. | Item | | Indication on hour meter | | | | | | | | | | | | | | | Interval | Reference page | | |
|---|---|---|---|---|---|---|---|---|---|---|---|---|---|---|---|---|---|---|---|---|---|
| | | | 50 | 100 | 150 | 200 | 250 | 300 | 350 | 400 | 450 | 500 | 550 | 600 | 650 | 700 | 800 | | | | |
| 1 | Engine oil | Change | ★ | | | ☆ | | | | ☆ | | | | ☆ | | | ☆ | every 200 Hr | G-26 | | |
| 2 | Engine oil filter | Replace | ★ | | | ☆ | | | | ☆ | | | | ☆ | | | ☆ | every 200 Hr | G-25 | | |
| 3 | Transmission oil filters [HST] | Replace | ★ | | | ☆ | | | | ☆ | | | | ☆ | | | ☆ | every 200 Hr | G-26 | | |
| 4 | Hydraulic oil filter | Replace | ★ | | | | | | | ☆ | | | | | | | ☆ | every 400 Hr | G-29 | | |
| 5 | Transmission fluid | Change | | | | | | | | ☆ | | | | | | | ☆ | every 400 Hr | G-28 | | |
| 6 | Front axle case oil | Change | | | | | | | | ☆ | | | | | | | ☆ | every 400 Hr | G-29 | | |
| 7 | Front axle pivot | Adjust | | | | | | | | ☆ | | | | | | | ☆ | every 400 Hr | G-30 | | |
| 8 | Engine start system | Check | ☆ | ☆ | ☆ | ☆ | ☆ | ☆ | ☆ | ☆ | ☆ | ☆ | ☆ | ☆ | ☆ | ☆ | ☆ | every 50 Hr | G-19 | | |
| 9 | Greasing | – | ☆ | ☆ | ☆ | ☆ | ☆ | ☆ | ☆ | ☆ | ☆ | ☆ | ☆ | ☆ | ☆ | ☆ | ☆ | every 50 Hr | G-20 | | |
| 10 | Wheel bolt torque | Check | ☆ | ☆ | ☆ | ☆ | ☆ | ☆ | ☆ | ☆ | ☆ | ☆ | ☆ | ☆ | ☆ | ☆ | ☆ | every 50 Hr | G-20 | | |
| 11 | Battery condition | Check | | ☆ | | ☆ | | ☆ | | ☆ | | ☆ | | ☆ | | ☆ | ☆ | every 100 Hr | G-21 | *4 | |
| 12 | Air cleaner element [Double element type] Primary element | Clean | | ☆ | | ☆ | | ☆ | | ☆ | | ☆ | | ☆ | | ☆ | ☆ | every 100 Hr | G-23 | *1 | @ |
| | | Replace | | | | | | | | | | | | | | | | every 1 year | G-30 | *2 | |
| | Air cleaner element [Double element type] Secondary element | Replace | | | | | | | | | | | | | | | | every 1 year | G-30 | | |
| 13 | Fuel filter element | Clean | | ☆ | | ☆ | | ☆ | | ☆ | | ☆ | | ☆ | | ☆ | ☆ | every 100 Hr | G-24 | | @ |
| | | Replace | | | | | | | | ☆ | | | | | | | ☆ | every 400 Hr | G-30 | | |
| 14 | Fan belt | Adjust | | ☆ | | ☆ | | ☆ | | ☆ | | ☆ | | ☆ | | ☆ | ☆ | every 100 Hr | G-24 | | |
| 15 | Brake | Adjust | | ☆ | | ☆ | | ☆ | | ☆ | | ☆ | | ☆ | | ☆ | ☆ | every 100 Hr | G-25 | | |
| 16 | Radiator hose and clamp | Check | | | | ☆ | | | | ☆ | | | | ☆ | | | ☆ | every 200 Hr | G-27 | | |
| | | Replace | | | | | | | | | | | | | | | | every 2 years | G-33 | | |
| 17 | Fuel line | Check | | ☆ | | ☆ | | ☆ | | ☆ | | ☆ | | ☆ | | ☆ | ☆ | every 100 Hr | G-25 | | @ |
| | | Replace | | | | | | | | | | | | | | | | every 2 years | G-33 | *3 | |
| 18 | Intake air line | Check | | | | ☆ | | | | ☆ | | | | ☆ | | | ☆ | every 200 Hr | G-27 | | @ |
| | | Replace | | | | | | | | | | | | | | | | every 2 years | G-33 | *3 | |
| 19 | Toe-in | Adjust | | | | ☆ | | | | ☆ | | | | ☆ | | | ☆ | every 200 Hr | G-28 | | |
| 20 | Engine valve clearance | Adjust | | | | | | | | | | | | | | | ☆ | every 800 Hr | G-30 | | |
| 21 | Fuel injection nozzle injection pressure | Check | | | | | | | | | | | | | | | | every 1500 Hr | G-30 | | @ |
| 22 | Injection pump | Check | | | | | | | | | | | | | | | | every 3000 Hr | G-30 | | @ |
| 23 | Cooling system | Flush | | | | | | | | | | | | | | | | every 2 years | G-31 | | |

https://truckmanualshub.com/


| No. | Item | | Indication on hour meter | | | | | | | | | | | | | | | Interval | Reference page | | |
|---|---|---|---|---|---|---|---|---|---|---|---|---|---|---|---|---|---|---|---|---|---|
| | | | 50 | 100 | 150 | 200 | 250 | 300 | 350 | 400 | 450 | 500 | 550 | 600 | 650 | 700 | 800 | | | | |
| 24 | Coolant | Change | | | | | | | | | | | | | | | | every 2 years | G-31 | | |
| 25 | Fuel system | Bleed | | | | | | | | | | | | | | | | Service as required | G-33 | | |
| 26 | Clutch housing water | Drain | | | | | | | | | | | | | | | | | G-33 | | |
| 27 | Fuse | Replace | | | | | | | | | | | | | | | | | G-34 | | |
| 28 | Light bulb | Replace | | | | | | | | | | | | | | | | | G-34 | | |

■ **IMPORTANT**

- **The jobs indicated by ★ must be done after the first 50 hours of operation.**
  ***1 Air cleaner should be cleaned more often in severe dusty conditions.**
  ***2 Every year or after 6 cleanings.**
  ***3 Replace only if necessary.**
  ***4 When the battery is used for less than 100 hours per year, check the fluid level annually.**
- **The items listed above (@ marked) are registered as emission related critical parts by KUBOTA in the U.S.EPA nonroad emission regulation. As the engine owner, you are responsible for the performance of the required maintenance on the engine according to the above instruction.**
  **Please see the Warranty Statement in detail.**

9Y1211156GEG0004US0

https://truckmanualshub.com/


# 7. CHECK AND MAINTENANCE

## [1] DAILY CHECK

**WARNING**
**To avoid personal injury or death:**
**Take the following precautions when checking the tractor.**
- **Park the machine on firm and level ground.**
- **Set the parking brake.**
- **Lower the implement to the ground.**
- **All residual pressure of the hydraulic system released.**
- **Stop the engine and remove the key.**

9Y1211156GEG0005US0

**Walk Around Inspection**

1. Look around and under the tractor for such items as loose bolts, trash build-up, oil or coolant leaks, broken or worn parts.

9Y1211156GEG0006US0

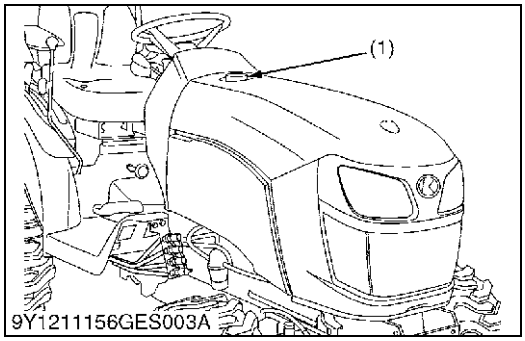


**Checking and Refueling**

**WARNING**
**To avoid personal injury or death:**
- **Do not smoke while refueling.**
- **Be sure to stop the engine before refueling.**

1. Turn the key switch to **"ON"**, check the amount of fuel by fuel gauge.
2. Fill fuel tank when fuel gauge shows 1/4 or less fuel in tank.
3. Use grade No.2-Diesel fuel at temperatures above −10 °C (14 °F).
   Use grade No.1-Diesel fuel at temperatures below −10 °C (14 °F).

■ **IMPORTANT**
- **Do not permit dirt or trash to get into the fuel system.**
- **Be careful not to let the fuel tank become empty, otherwise air will enter the fuel system, necessitating bleeding before next engine start.**
- **Be careful not to spill during refueling. If you should spill, wipe it off at once, or it may cause a fire.**
- **To prevent condensation (water) accumulation in the fuel tank, fill the tank before parking overnight.**

| | |
|---|---|
| Fuel tank capacity | 23 L<br>6.1 U.S.gals<br>5.1 Imp.gals |

(1) Fuel Tank Cap

9Y1211156GEG0007US0

https://truckmanualshub.com/


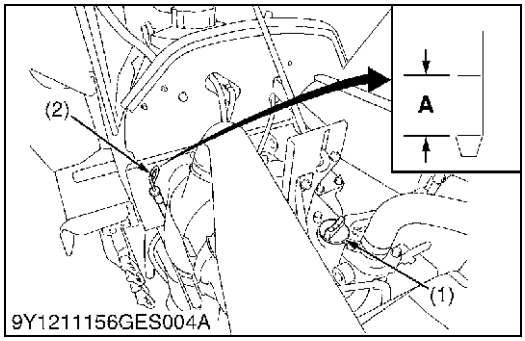


## Checking Engine Oil Level

**WARNING**

**To avoid personal injury:**

- **Be sure to stop the engine before checking the oil level.**

1. Park the machine on a flat surface.
2. Check engine oil before starting the engine or 5 minutes or more after the engine has stopped.
3. To check the oil level, draw out the dipstick, wipe it clean, replace it, and draw it out again. Check to see that the oil level lies between the two notches.
   If the level is too low, add new oil to the prescribed level at the oil inlet.

■ **IMPORTANT**

- **When using an oil of different maker or viscosity from the previous one, remove all of the old oil.**
  **Never mix two different types of oil.**
- **If oil level is low, do not run engine.**

(1) Oil Inlet
(2) Dipstick

**A: Oil level is acceptable within this range.**

9Y1211156GEG0008US0

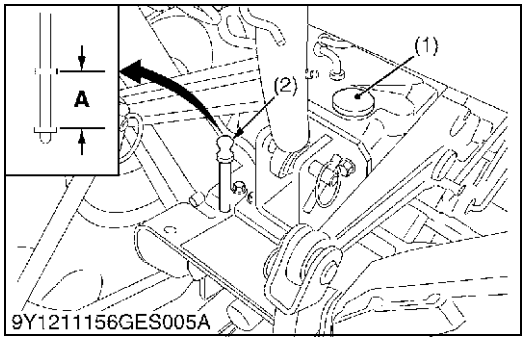


## Checking Transmission Fluid Level

1. Park the machine on a flat surface, lower the implement and shut off engine.
2. To check the oil level, draw out the dipstick, wipe it clean, replace it, and draw it out again. check to see that the oil level lies within the cross hatched area.
   If the level it too low, add new oil to the prescribed level at the oil inlet.

■ **IMPORTANT**

- **If oil level is low, do not run engine.**

(1) Oil Inlet
(2) Dipstick

**A: Oil level is acceptable within this range.**

9Y1211156GEG0009US0

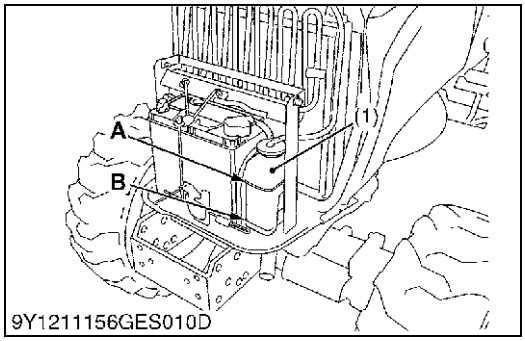


## Checking Coolant Level

**WARNING**

**To avoid personal injury or death:**

- **Do not remove radiator cap while coolant is hot. When cool, slowly rotate cap to the first stop and allow sufficient time for excess pressure to escape before removing the cap completely.**

1. Check to see that the coolant level is between the "FULL" and "LOW" makes of recovery tank.
2. When the coolant level drops due to evaporation, add soft water only up to the full level.
   In case of leakage, add anti-freeze and soft water in the specified mixing ratio up to the full level.

■ **IMPORTANT**

- **If the radiator cap has to be removed, follow the caution above and securely retighten the cap.**
- **Use clean, fresh soft water and anti-freeze to fill the recovery tank.**

(1) Recovery Tank

**A: "FULL"**
**B: "LOW"**

9Y1211156GEG0010US0

https://truckmanualshub.com/


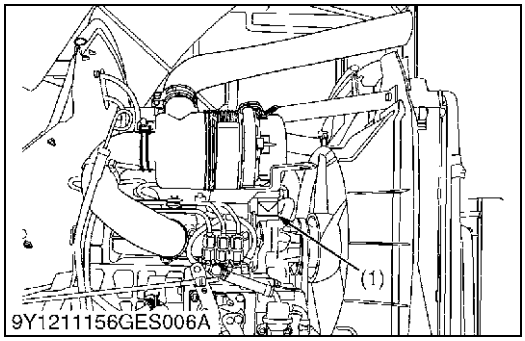


## Cleaning Evacuator Valve

1. Open the evacuator valve to get rid of large particles of dust and dirt.

(1) Evacuator Valve

9Y1211156GEG0011US0

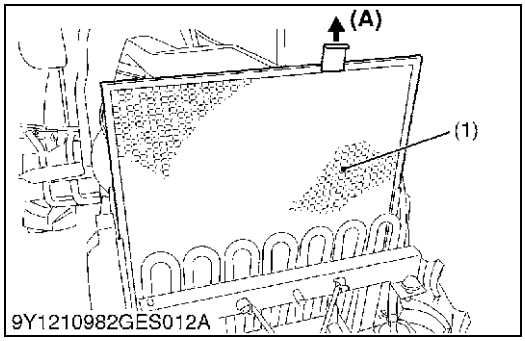


## Cleaning Grill and Radiator Screen

**WARNING**

**To avoid personal injury or death:**

- **Be sure to stop the engine and remove the key before removing the screen.**

1. Check front grill and side screens to be sure they are clean of debris.
2. Detach the screen and remove all foreign material and clean the front of radiator completely.

■ **IMPORTANT**

- **Grill and screen must be clean from debris to prevent engine from overheating and to allow good air intake for the air cleaner.**

(1) Radiator Screen **(A) "DETACH"**

9Y1211156GEG0012US0

## Checking Brake Pedal

1. Inspect the brake pedals for free travel, and smooth operation.
2. Adjust if incorrect measurement is found.

9Y1211156GEG0013US0

## Checking Gauges, Meter and Easy Checker™

1. Inspect the instrument panel for broken gauge(s), meter(s) and Easy Checker™.
2. Replace if broken.

9Y1211156GEG0014US0

## Checking Head Light, Hazard Light etc.

1. Inspect the light for broken bulbs and lenses.
2. Replace if broken.

9Y1211156GEG0015US0

## Checking Seat Belt and ROPS

1. Always check condition of seat belt and ROPS attaching hardware before operating tractor.
2. Replace if damaged.

9Y1211156GEG0016US0

https://truckmanualshub.com/


## Checking and Cleaning of Electrical Wiring and Battery Cables

**WARNING**

**To avoid personal injury or death:**

- **A loosened terminal or connector, or damaged wire may affect the performance of electrical components or cause short circuits. Leakage of electricity could result in a fire hazard, a dead battery or damage to electrical components.**
- **Replace damaged wires or connections promptly.**
- **If a fuse blows soon after replacement, DO NOT USE A LARGER THAN RECOMMENDED FUSE OR BYPASS THE FUSE SYSTEM.**
- **Many wiring connections are protected by waterproof plugs, plug and unplug these connections carefully and make sure they are sealed correctly after assembly.**
- **Accumulation of dust, chaff or spilled fuel deposits around the battery, electrical wiring, engine or exhaust system are a fire hazard.**
  **CLEAN THESE AREAS BEFORE STARTING WORK.**
  **To avoid premature electrical malfunctions DO NOT APPLY high pressure water directly to battery, wiring, connectors, electrical components or instrument panel.**

**Inspect the following regularly:**

1. Check wiring for chafed or cracked insulation.
2. Check wiring harness clamps. Replace if necessary.
3. Check connectors and terminals for looseness, contamination or overheated (discolored) connectors.
4. Check instrument panel for correct operation of switches and gauges.

9Y1211156GEG0017US0

## Checking Movable Parts

1. If any of the movable parts, such as levers and pedals, is not smoothly moved because of rust or anything sticky, do not attempt to force it into motion.
   In the above case, remove the rust or sticky thing, and apply oil lor grease on the relevant spot.
   Otherwise, the machine may get damaged.

9Y1211156GEG0018US0

https://truckmanualshub.com/


# [2] CHECK POINTS OF EVERY 50 HOURS

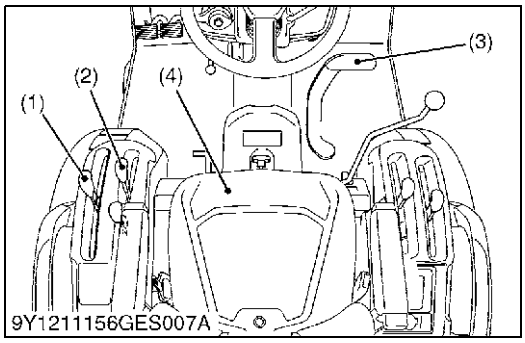


**Checking Engine Start System**

**WARNING**

**To avoid personal injury or death:**

- **Do not allow anyone near the tractor while testing.**
- **If the tractor does not pass the test do not operate the tractor.**
- **Detach an implement before testing.**

■ **Preparation before testing.**

1. Sit on operator's seat.
2. Set the parking brake and stop the engine.
3. Shift the range gear shift lever to **"NEUTRAL"** position.
4. Place the speed control pedal in **"NEUTRAL"** position.
5. Shift the PTO clutch lever to **"OFF"** position.

■ **Test: Switch for the speed control pedal.**

1. Depress the speed control pedal.
2. Turn the key to **"START"** position.
3. The engine must not crank.

■ **Test: Switch for the PTO clutch lever.**

1. Place the speed control pedal in **"NEUTRAL"** position.
2. Shift the PTO clutch lever to **"ON"** position.
3. Turn the key to **"START"** position.
4. The engine must not crank.

■ **Test: Switches for the operator's seat and the PTO clutch lever.**

1. Sit on the operator's seat.
2. Start the engine.
3. Shift the PTO clutch lever to **"ON"** position.
4. Release the parking brake.
5. Stand up. (Do not get off the machine.)
6. The engine must shut off after approximately 1 second.

(1) Range Gear Shift Lever
(2) PTO Clutch Lever
(3) Speed Control Pedal
(4) Operator's Seat

9Y1211156GEG0019US0

https://truckmanualshub.com/


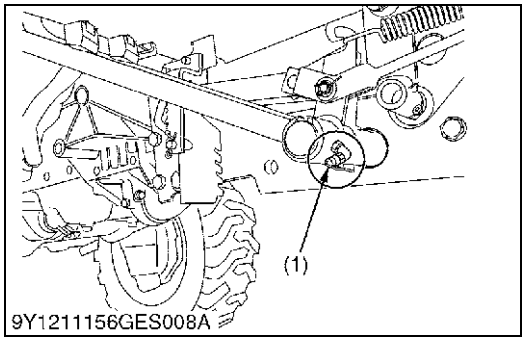


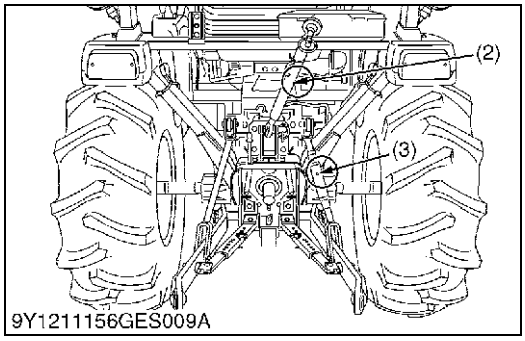


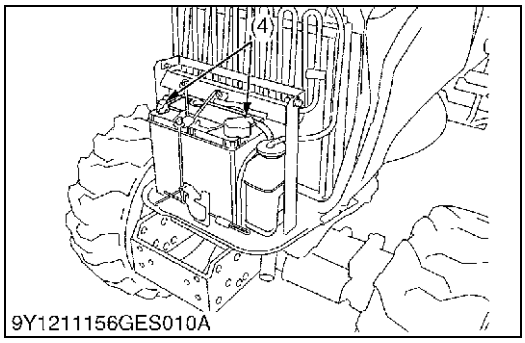


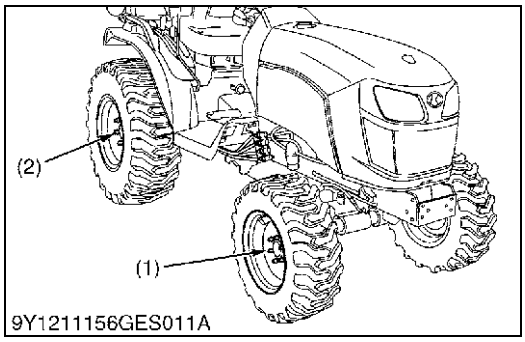


## Lubricating Grease Fittings

1. Apply a small amount of multipurpose grease to the following points every 50 hours:
   If you operated the machine in extremely wet and muddy conditions, lubricate grease fittings more often.

(1) Grease Fitting (Brake Pedals)
(2) Grease Fitting (Top Link)
(3) Grease Fitting (Lifting Rod, Right)
(4) Battery Terminals

9Y1211156GEG0020US0

## Checking Wheel Mounting Nuts Tightening Torque

**WARNING**

**To avoid personal injury or death:**

- **Never operate tractor with a loose rim, wheel or axle.**
- **Any time bolts and nuts are loosened, retighten to specified torque.**
- **Check all bolts and nuts frequently and keep them tight.**

1. Check wheel bolts and nuts regularly especially when new. If they are loose, tighten them as follows.

| | | |
|---|---|---|
| Tightening torque | Front wheel mounting nut | 78 to 90 N·m<br>8.0 to 9.1 kgf·m<br>58 to 66 lbf·ft |
| | Rear wheel mounting nut | 145 to 150 N·m<br>14.8 to 15.2 kgf·m<br>107 to 110 lbf·ft |

(1) Front Wheel Mounting Nut
(2) Rear Wheel Mounting Nut and Bolt

9Y1211156GEG0021US0

https://truckmanualshub.com/


# [3] CHECK POINTS OF EVERY 100 HOURS

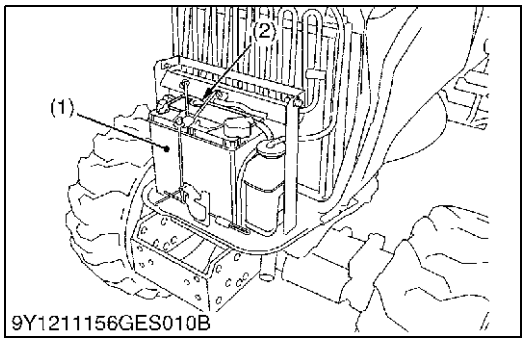


**Checking Battery Condition**

**DANGER**

**To avoid the possibility or battery explosion:**
**For the refillable type battery, follow the instructions below.**

- **Do not use or charge the refillable type battery if the fluid level is below the LOWER (lower limit level) mark. Otherwise, the battery component parts may prematurely deteriorate, which may shorten the battery's service life or cause an explosion. check the fluid level regularly and add distilled water as required so that the fluid level is between the UPPER and LOWER levels.**

**WARNING**

**To avoid personal injury or death:**

- **Never remove the battery cap while the engine is running.**
- **Keep electrolyte away from eyes, hands and clothes. If you are spattered with it, wash it away completely with water immediately and get medical attention.**
- **Keep open sparks and flames away from the battery at all times. Hydrogen gas mixed with oxygen becomes very explosive.**
- **Wear eye protection and rubber gloves when working around battery.**

**The factory-installed battery is of non-refillable type. If the indicator turns white, do not charge the battery but replace it with new one.**

1. Mishandling the battery shortens the service life and adds to maintenance costs.
2. The original battery is maintenance free, but needs some servicing.
3. If the battery is weak, the engine will be difficult to start and the lights will be dim. It is important to check the battery periodically.

■ **How to read the indicator**
Check the battery condition by reading the indicator.

| State of indicator display | |
|---|---|
| Green | Specific gravity of electrolyte and quality of electrolyte are both in good condition. |
| Black | Needs charging battery. |
| White | Needs replacing battery. |

(1) Battery (2) Indicator

9Y1211156GEG0022US0

https://truckmanualshub.com/


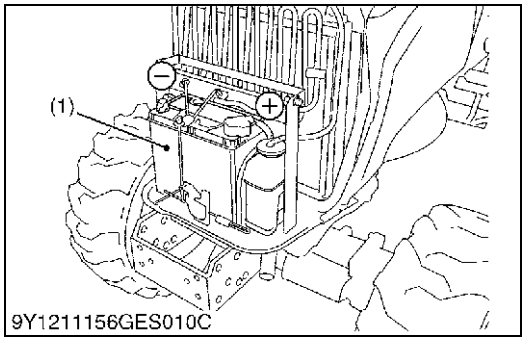


**Battery Charging**

**WARNING**

**To avoid personal injury or death:**

- **When the battery is being activated, hydrogen and oxygen gases in the battery are extremely explosive. Keep open sparks and flames away from the battery at all times, especially when charging the battery.**
- **When charging the battery, ensure the vent caps are securely in place. (if equipped)**
- **When disconnecting the cable from the battery, start with the negative terminal first.**
  **When connecting the cable to the battery, start with the positive terminal first.**
- **Never check battery charge by placing a metal object across the posts.**
  **Use a voltmeter or hydrometer.**

1. To slow charge the battery, connect the battery positive terminal to the charger positive terminal and the negative to the negative, then recharge in the standard fashion.
2. A boost charge is only for emergencies. It will partially charge the battery at a high rate and in a short time.
   When using a boost-charged battery, it is necessary to recharge the battery as early as possible.
   Failure to do this will shorten the battery's service life.
3. The battery is charged if the indicator display turns green from black.
4. When exchanging an old battery into new one, use battery of equal specification shown in table 1.

**Table 1**

| Battery Type | Volt (V) | Capacity at 5 H.R. | Reserve at (min.) | Cold Cranking Amps (A) | Normal Charging Rate (A) |
|---|---|---|---|---|---|
| 55B24L (S)-MF | 12 | 36 | 80 | 430 | 4.5 |

## ■ Direction for Storage

1. When storing the tractor for long periods of time, remove the battery from tractor, adjust the electrolyte to the proper level and store in a dry place out of direct sunlight.
2. The battery self-discharges while it is stored.
   Recharge it once every three months in hot seasons and once every six months in cold seasons.

(1) Battery

9Y1211156GEG0023US0

https://truckmanualshub.com/


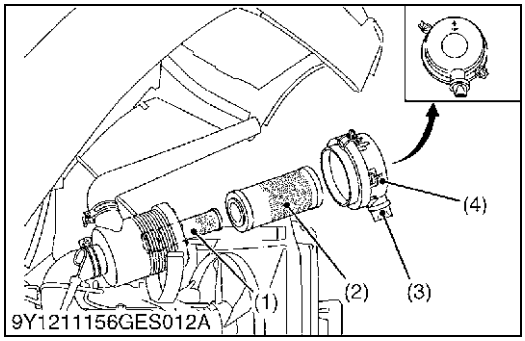


## Cleaning Air Cleaner Primary Element [Double Element Type]

**WARNING**

**To avoid personal injury or death:**

- **Be sure to stop the engine and remove the key before cleaning air filter element.**

1. Remove the air cleaner cover and primary element.
2. Clean the primary element:
   a) When dry dust adheres to the element, blow compressed air from the inside, turning the element. Pressure of compressed air must be under 205 kPa (2.1 kgf/cm$^2$, 30 psi).
   b) When carbon or oil adheres to the element, soak the element in detergent for 15 minutes then wash it several times in water, rinse with clean water and dry it naturally. After element is fully dried, inspect inside of the element with a light and check if it is damaged or not.
3. Replace air cleaner primary element:
   Once yearly or after every sixth cleaning, whichever comes first.

■ **NOTE**

- **Check to see if the evacuator valve is blocked with dust.**

■ **IMPORTANT**

- **The air cleaner uses a dry element, never apply oil.**
- **Do not run the engine with filter element removed.**
- **Be sure to refit the cover with the arrow ↑ (on the cover) upright. If the cover is improperly fitted, evacuator valve will not function and dust will adhere to the element.**
- **Do not touch the secondary element except in cases where replacing is required.**
  **(See "Replacing Air Cleaner Primary Element and Secondary Element" in "EVERY 1 YEAR".)**

■ **Evacuator Valve**

Open the evacuator valve once a week under ordinary conditions - or daily when used in a dusty place - to get rid of large particles of dust and dirt.

(1) Secondary (Safety) Element
(2) Primary Element
(3) Cover
(4) Evacuator Valve

9Y1211156GEG0025US0

https://truckmanualshub.com/


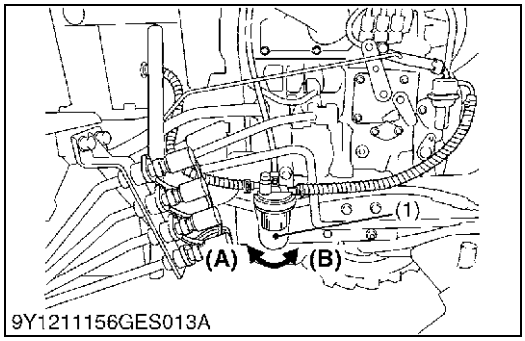


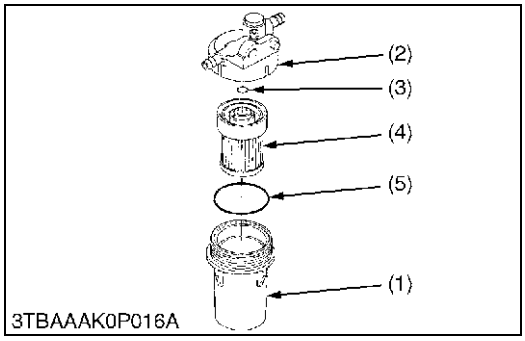


## Cleaning Fuel Filter

**WARNING**

**To avoid personal injury or death:**

- **Stop the engine and remove the key before checking fuel lines and fuel filter.**
- **Check the fuel lines periodically. The fuel lines are subject to wear and aging. Fuel may leak out onto the running engine, causing a fire.**
- **Protect your hands when using kerosene to clean components.**

  This job should not be done in the field, but in a clean place.

1. Loosen and remove the filter bowl, and rinse the inside with kerosene.
2. Take out the element and dip it in the kerosene to rinse.
3. After cleaning, reassemble the fuel filter, keeping out dust and dirt.
4. Bleed the fuel system. (See "SERVICE AS REQUIRED".)

■ **IMPORTANT**

- **When the fuel filter bowl has been removed, fuel stops flowing from the fuel tank. If the fuel tank is almost full, however, the fuel will flow back from the fuel return pipe to the fuel filter. Before checking, make sure the fuel tank is less than half-full.**
- **If dust, dirt or water enters the fuel system, the fuel pump and injection nozzles are subject to premature wear. To prevent this, be sure to clean the fuel filter bowl and element periodically.**

(1) Fuel Filter Bowl
(2) Filter Bracket
(3) O-ring
(4) FIlter Element
(5) O-ring

**(A) Loosen**
**(B) Tighten**

9Y1211156GEG0026US0

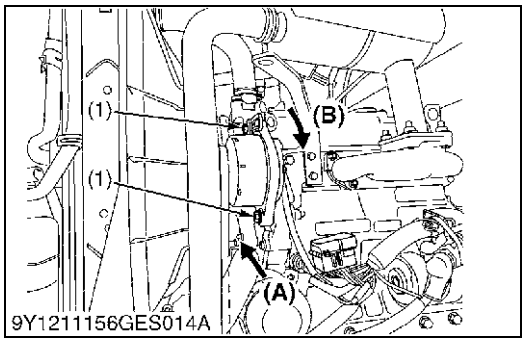


## Adjusting Fan Belt Tension

**WARNING**

**To avoid personal injury or death:**

- **Be sure to stop engine before checking belt tension.**

1. Stop the engine and remove the key.
2. Apply moderate thumb pressure to belt between pulleys.
3. If tension in incorrect, loosen the dynamo mounting bolts and, using a lever placed between the dynamo and the engine block, pull the dynamo out until the deflection of the belt falls within acceptable limits.
4. Replace fan belt if it is damaged.

| | | |
|---|---|---|
| Fan belt tension | Factory specification | A deflection of between 7.0 to 9.0 mm (0.28 to 0.35 in.) when the belt is pressed in the middle of the span. |

(1) Bolt

**(A) Check the belt tension**
**(B) To Tighten**

9Y1211156GEG0027US0

https://truckmanualshub.com/


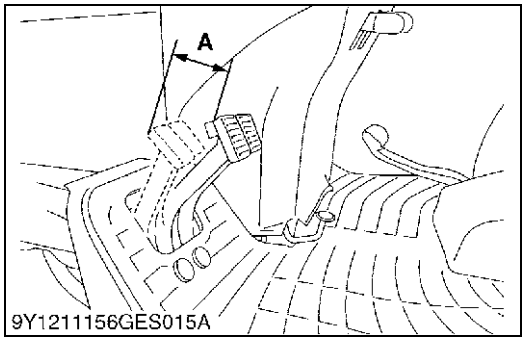


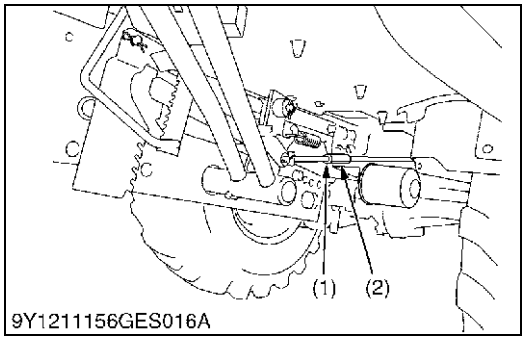


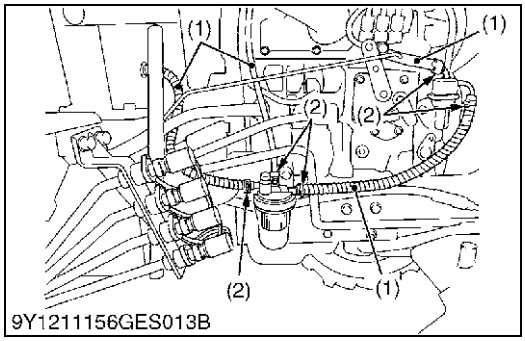


### Adjusting Brake Pedal

**WARNING**

**To avoid personal injury or death:**

- **Stop the engine and chock the wheels before checking brake pedal.**

1. Release the parking brake.
2. Slightly depress the right and left brake pedals and measure free travel at the top of pedal stroke.
3. If adjustment is needed, turn the lock nut and adjust nut, adjust free travel.
4. Retighten the lock nut.

| | |
|---|---|
| Proper brake pedal free travel | 30 to 40 mm (1.2 to 1.5 in.) on the pedal<br>Keep the free travel in the right and left brake pedals equal. |

(1) Lock Nut (Both Sides)
(2) Turnbuckle (Both Sides)

**A: Free Travel**

9Y1211156GEG0028US0

### Checking Fuel Line

1. Check to see that all line and hose clamps are tight and not damaged.
2. If hoses and clamps are found worn or damaged, replace or repair them at once.

■ **NOTE**

- **If the fuel line is removed, be sure to properly bleed the fuel system.**

(1) Fuel Hoses (2) Hose Clamps

9Y1211156GEG0029US0

## [4] CHECK POINTS OF EVERY 200 HOURS

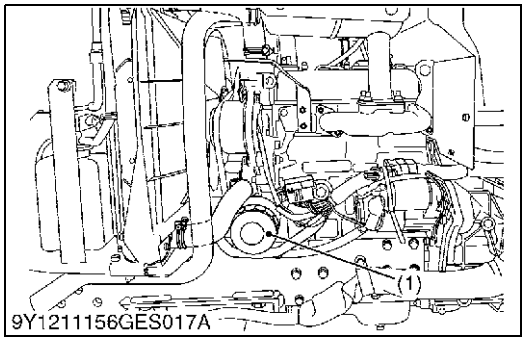


### Replacing Engine Oil Filter

**WARNING**

**To avoid personal injury or death:**

- **Be sure to stop the engine before changing the oil filter cartridge.**
- **Allow engine to cool down sufficiently, oil can be hot and can burn.**

1. Remove the oil filter.
2. Put a film of clean engine oil on the rubber seal of the new filter.
3. Tighten the filter quickly until it contacts the mounting surface. Tighten filter by hand an additional 1/2 turn only.
4. After the new filter has been replaced, the engine oil normally decreases a little. Make sure that the engine oil does not leak through the seal and be sure to check the oil level on the dipstick. Then, replenish the engine oil up to the prescribed level.

■ **IMPORTANT**

- **To prevent serious damage to the engine, use only a KUBOTA genuine filter.**

(1) Engine Oil Filter

9Y1211156GEG0030US0

https://truckmanualshub.com/


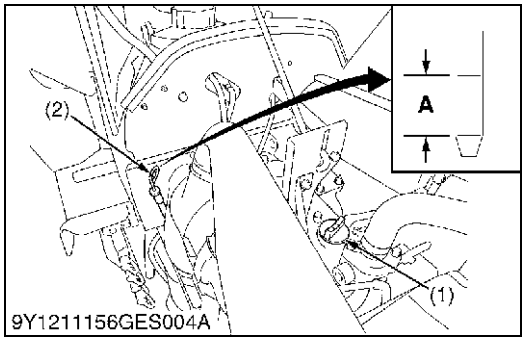


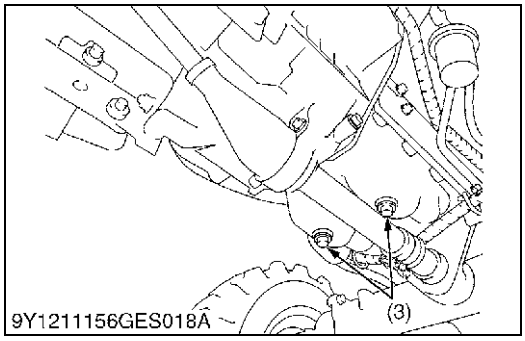


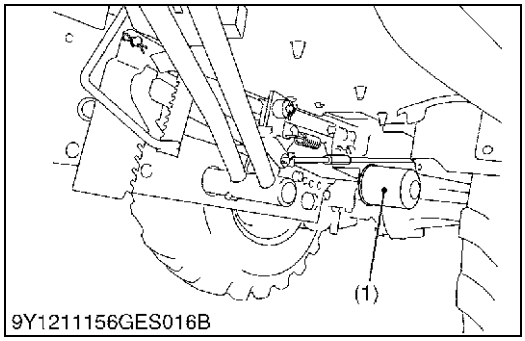


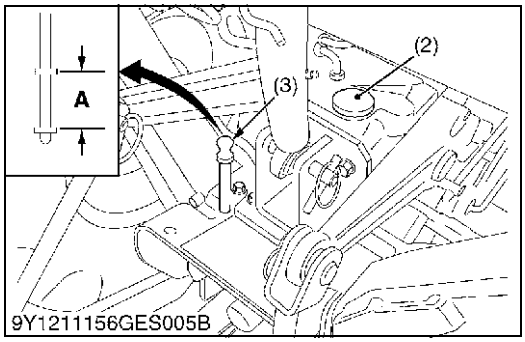


## Changing Engine Oil

**WARNING**

**To avoid personal injury or death:**

- **Be sure to stop the engine before changing the oil.**
- **Allow engine to cool down sufficiently, oil can be hot and can burn.**

1. To drain the used oil, remove the drain plug at the bottom of the engine and drain the oil completely into the oil pan.
   All the used oil can be drained out easily when the engine is still warm.
2. After draining reinstall the drain plug.
3. Fill with the new oil up to the upper notch on the dipstick.

| | |
|---|---|
| Oil capacity with filter | 3.1 L<br>3.3 U.S.qts<br>2.7 Imp.qts |

(1) Oil Inlet
(2) Dipstick
(3) Drain Plug (Both Sides)

**A: Oil level is acceptable within this range**

9Y1211156GEG0031US0

## Replacing Transmission Oil Filter [HST]

**WARNING**

**To avoid personal injury or death:**

- **Be sure to stop the engine before changing the oil filter cartridge.**
- **Allow engine to cool down sufficiently, oil can be hot and can burn.**

1. Place the oil pan underneath the transmission oil filter and remove the filter.
   Do not remove the hydraulic oil filter. Otherwise, the oil comes out.
2. Put a film of clean transmission oil on the rubber seal of the new filter.
3. Quickly tighten the filter until it contacts the mounting surface, then, with a filter wrench, tighten it an additional 1 turn only.
4. After the new filter has been replaced, fill the transmission oil up to the upper limit on the dipstick.
5. After running the engine for a few minutes, stop the engine and check the oil level again, add oil to the prescribed level.
6. Make sure that the transmission fluid doesn't leak past the seal on the filter.

■ **IMPORTANT**

- **To prevent serious damage to the hydraulic system, use only a KUBOTA genuine filter.**
- **Do not operate the tractor immediately after changing the transmission fluid.**
  **Run the engine at medium speed for a few minutes to prevent damage to the transmission.**

(1) Transmission Oil Filter [HST]
(2) Oil Inlet
(3) Dipstick

**A: Oil level is acceptable within this range**

9Y1211156GEG0032US0

https://truckmanualshub.com/


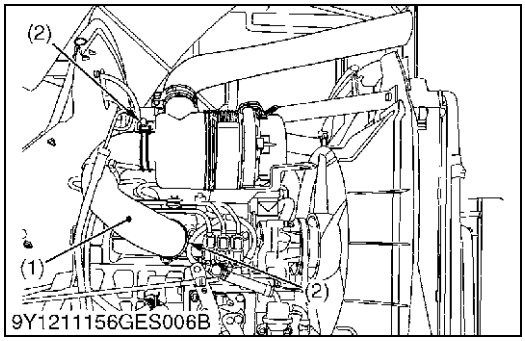


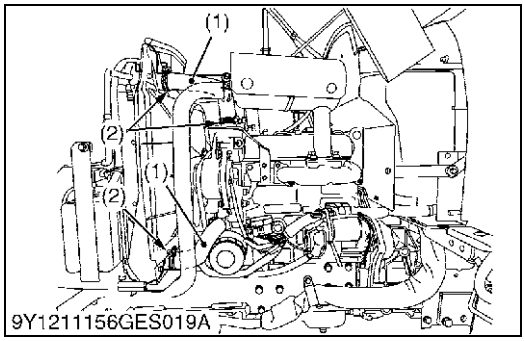


## Checking Intake Air Line

1. Check to see that hoses and hose clamps are tight and not damaged.
2. If hoses and clamps are found worn or damaged, replace or repair them at once.

(1) Hose (2) Hose Clamp

9Y1211156GEG0033US0

## Checking Radiator Hose and Hose Clamp

**WARNING**

**To avoid personal injury or death:**

- **Be sure to stop the engine and remove the key before checking radiator hose and clamp.**
- **Allow engine and coolant to cool down sufficiently before checking.**

Check to see if radiator hoses are properly fixed every 200 hours of operation or six months, whichever comes first.

1. If hose clamps are loose or water leaks, tighten bands securely.
2. Replace hoses and tighten hose clamps securely, if radiator hoses are swollen, hardened or cracked. Replace hoses and hose clamps every 2 years or earlier if checked and found that hoses are swollen, hardened or cracked.

■ **Precaution at Overheating**

Take the following actions in the event the coolant temperature is nearly or more than the boiling point, what is called "Overheating".

1. Stop the machine operation in a safe place and keep the engine unloaded idling.
2. Don't stop the engine suddenly, but stop it after about 5 minutes of unloaded idling.
3. Keep yourself well away from the machine for further 10 minutes or while the steam blown out.
4. Checking that there gets on danger such as burn, get rid of the causes of overheating according to the manual, see "Troubleshooting" section, and then, start again the engine.

(1) Radiator Hose (2 Hoses) (2) Clamp (4 Clamps)

9Y1211156GEG0034US0

https://truckmanualshub.com/


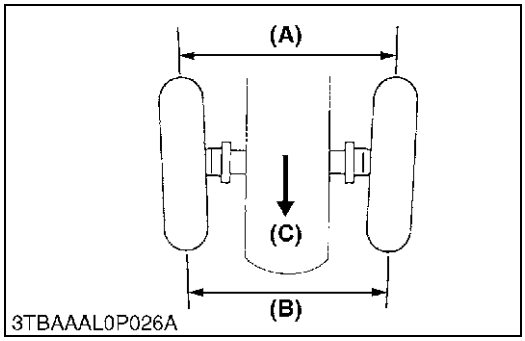


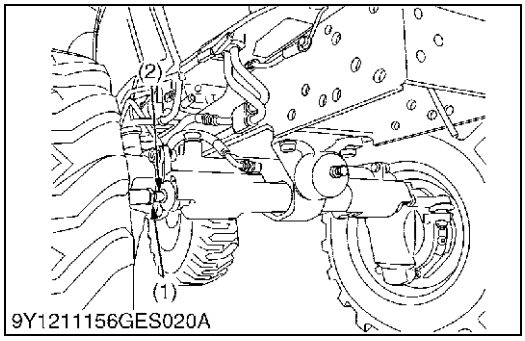


**Adjusting Toe-in**

1. Park tractor on a flat place.
2. Turn steering wheel so front wheels are in the straight ahead position.
3. Lower the implement, lock the park brake and stop the engine.
4. Measure distance between tire beads at front of tire, hub height.
5. Measure distance between tire beads at rear of tire, hub height.
6. Front distance should be 0 to 10 mm (0 to 0.39in.) less than rear distance. If not, adjust tie-rod length.

■ **Adjusting procedures**

1. Loosen the tie-rod nut.
2. Turn the tie-rod to adjust the rod length until the proper toe-in measurement is obtained.
3. Retighten the tie-rod nut.

(1) Tie-rod Nut
(2) Tie-rod

**(A) Wheel-to-wheel distance at rear**
**(B) Wheel-to-wheel distance at front**
**(C) "FRONT"**

9Y1211156GEG0035US0

# [5] CHECK POINTS OF EVERY 400 HOURS

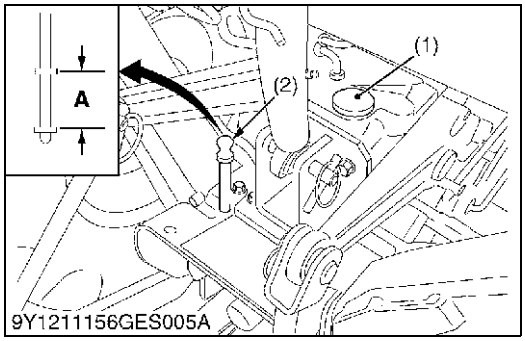


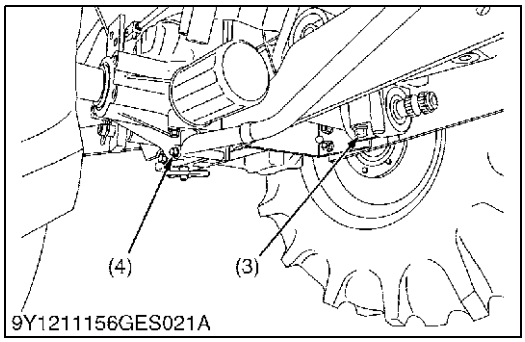


**Changing Transmission Fluid**

**WARNING**

**To avoid personal injury or death:**

- **Allow engine to cool down sufficiently, oil can be hot and can burn.**

1. To drain the used oil, remove the drain plug at the bottom of the transmission case and drain the oil completely into the oil pan.
2. After draining reinstall the drain plug.
3. Fill with new KUBOTA SUPER UDT fluid up to the upper notch on the dipstick.
4. After running the engine for a few minutes, stop it and check the oil level again; add oil to prescribed level.
5. Properly dispose of used oil.

| | |
|---|---|
| Oil capacity | 15 L<br>4.0 U.S.gals<br>3.3 Imp.gals |

■ **IMPORTANT**

- **If the 3-point hitch can not be raised by setting the hydraulic control lever to the UP position after long term storage or when changing the transmission oil, turn steering wheel to the right and left several times to bleed air from the system.**
- **Do not operate the tractor immediately after changing the transmission fluid.**

(1) Oil Inlet
(2) Dipstick
(3) Drain Plug
(4) Drain Plug (Both Sides)

**A: Oil level is acceptable within this range**

9Y1211156GEG0037US0

https://truckmanualshub.com/


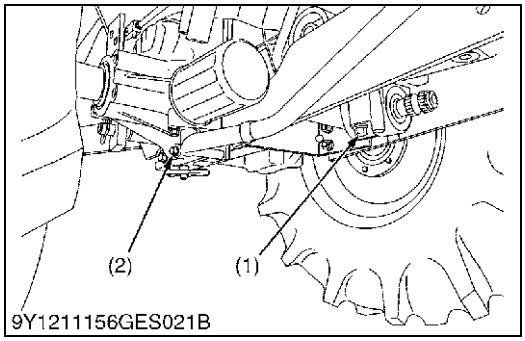


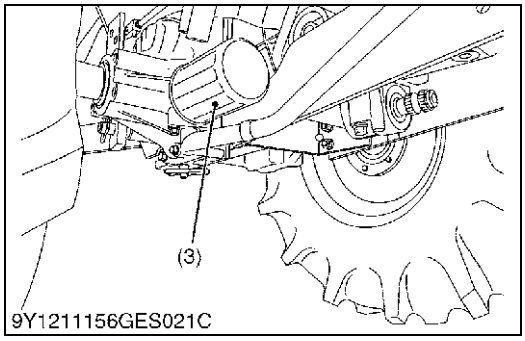


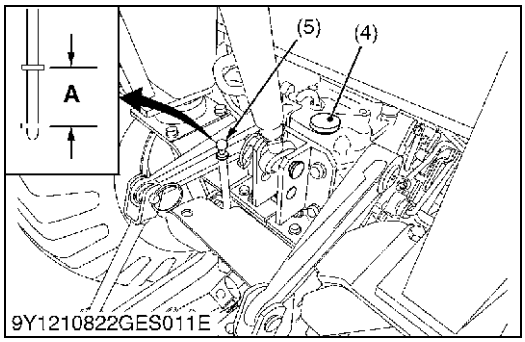


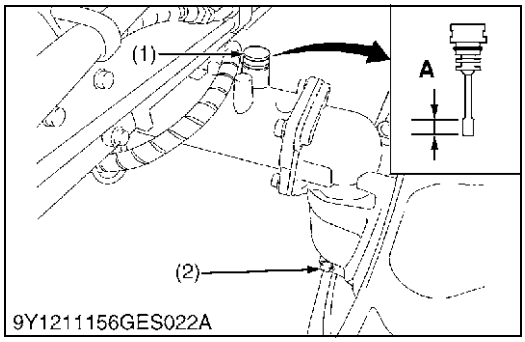


## Replacing Hydraulic Oil Filter

**WARNING**

**To avoid personal injury or death:**

- **Be sure to stop the engine before changing the oil filter cartridge.**
- **Allow engine to cool down sufficiently, oil can be hot and can burn.**

1. Remove the drain plugs at the bottom of the transmission case and drain the oil completely into the oil pan.
2. After draining reinstall the drain plugs.
3. Remove the oil filter.
4. Put a film of clean transmission oil on the rubber seal of the new filter.
5. Quickly tighten the filter until it contacts the mounting surface, then tighten it by hand an additional 1/2 turn only.
6. After the new filters have been replaced, fill the transmission oil up to the upper notch on the dipstick.
7. After running the engine for a few minutes, stop the engine and check the oil level again, add oil to the prescribed level.
8. Make sure that the transmission fluid does not leak past the seal on the filter.

**■ IMPORTANT**

- **To prevent serious damage to the hydraulic system, use only a KUBOTA genuine filter.**

(1) Drain Plug
(2) Drain Plug (Both Sides)
(3) Transmission Oil Filter
(4) Oil Inlet
(5) Dipstick

**A: Oil level is acceptable within this range.**

9Y1211156GEG0038US0

## Changing Front Axle Case Oil

1. Park the tractor on a firm, flat and level surface.
2. To drain the used oil, remove the right and left drain plugs and filling plug at the front axle case and drain the oil completely into the oil pan.
3. After draining, reinstall the drain plugs.
4. Fill with new oil up to the upper notch on the dipstick.

**■ IMPORTANT**

- **After ten minutes, check the oil level again; add oil to prescribed level.**

5. After filling, reinstall the filling plug.
6. Properly dispose of used oil.

| | |
|---|---|
| Oil capacity | 3.5 L<br>3.7 U.S.qts<br>3.1 Imp.qts |

(1) Filling Plug with Dipstick
(2) Drain Plug

**A: Oil level is acceptable within this range.**

9Y1211156GEG0039US0

https://truckmanualshub.com/


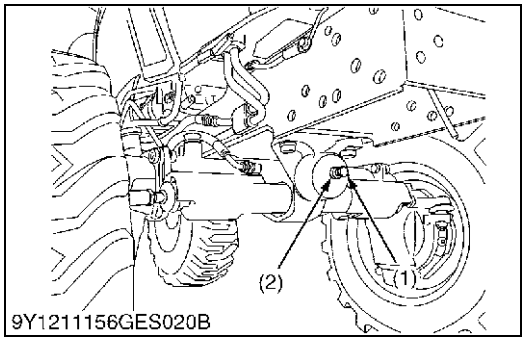


**Adjusting Front Axle Pivot [4WD]**

**WARNING**

**To avoid personal injury or death:**

- **Park the tractor on a flat place.**
- **Lower the implement, lock the parking brake and stop the engine.**

1. If the front axle pivot pin adjustment is not correct, front wheel vibration can occur causing vibration in the steering wheel.

■ **Adjusting procedure**

1. Loosen the lock nut, and tighten the adjusting screw so that the oscillating load is 50 to 100 N (5.1 to 10.2 kgf, 11.2 to 22.5 lbf). (If the adjusting screw is tightened, loosened and retightened, apply liquid gasket to its tip.)
2. Retighten the lock nut.

(1) Adjusting Screw (2) Lock Nut

9Y1211156GEG0040US0

**Replacing Fuel Filter Element**

- See page G-24.

9Y1211156GEG0041US0

# [6] CHECK POINT OF EVERY 800 HOURS

**Adjusting Engine Valve Clearance**

- See page 1-S13.

9Y1211156GEG0042US0

# [7] CHECK POINT OF EVERY 1500 HOURS

**Checking Fuel Injection Nozzle Injection Pressure**

- See page 1-S19.

9Y1211156GEG0043US0

# [8] CHECK POINT OF EVERY 3000 HOURS

**Checking Injection Pump**

- See page 1-S30.

9Y1211156GEG0044US0

# [9] CHECK POINT OF EVERY 1 YEAR

**Replacing Air Cleaner Primary Element and Secondary Element**

- See page G-23.

■ **IMPORTANT**

- **To prevent serious damage to the engine, use only a KUBOTA genuine filter.**

9Y1211156GEG0046US0

https://truckmanualshub.com/


# [10] CHECK POINTS OF EVERY 2 YEARS

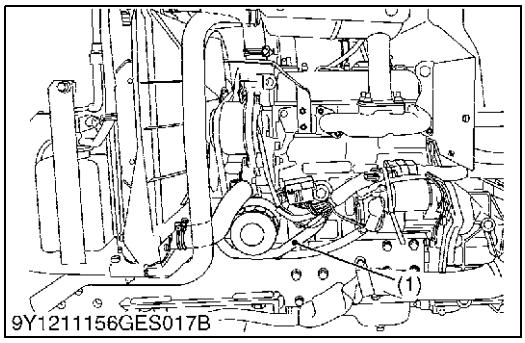


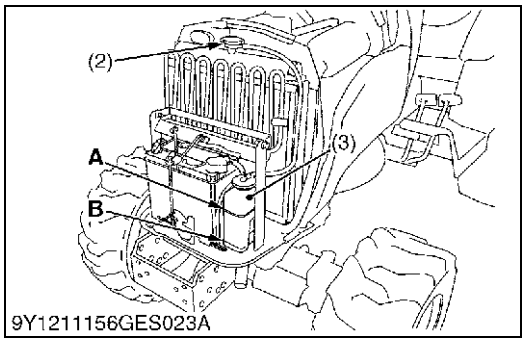


**Flushing Cooling System and Changing Coolant**

**WARNING**

**To avoid personal injury or death:**

- **Do not remove radiator cap while coolant is hot. When cool, slowly rotate cap to the first stop and allow sufficient time for excess pressure to escape before removing the cap completely.**

1. Stop the engine, remove the key and let it cool down.
2. To drain the coolant, disconnect the radiator hose (engine side) and remove the radiator cap. The radiator cap must be removed to completely drain the coolant.
3. After all coolant is drained, close the drain plug.
4. Fill with clean water and cooling system cleaner.
5. Follow directions of the cleaner instruction.
6. After flushing, fill with clean water and anti-freeze until the coolant level is just below the radiator cap. Install the radiator cap securely.
7. Fill with coolant up to the **"FULL"** mark on the recovery tank.
8. Start and operate the engine for few minutes.
9. Stop the engine, remove the key and let cool.
10. Check coolant level of recovery tank and add coolant if necessary.
11. Properly dispose of used coolant.

■ **IMPORTANT**

- **Do not start engine without coolant.**
- **Use clean, fresh water and anti-freeze to fill the radiator and recovery tank.**
- **When the anti-freeze is mixed with water, the anti-freeze mixing ratio must be less than 50 %.**
- **Securely tighten radiator cap. If the cap is loose or improperly fitted, water may leak out and the engine could overheat.**

| | |
|---|---|
| Coolant capacity (with recover tank) | 3.8 L<br>4.0 U.S.qts<br>3.3 Imp.qts |

(1) Radiator Hose
(2) Radiator Cap
(3) Recovery Tank

**A: FULL**
**B: LOW**

**(To be continued)**

https://truckmanualshub.com/


**(Continued)**

■ **Anti-Freeze**

**WARNING**

**To avoid personal injury or death:**

- **When using antifreeze, put on some protection such as rubber gloves (Antifreeze contains poison.).**
- **If it is swallowed, seek immediate medical help.**
  **Do NOT make a person throw up unless told to do so by poison control or a health care professional. Use standard first aid and CPR for signs of shock or cardiac arrest. Call your local Poison Control Center or your local emergency number for further assistance.**
- **When antifreeze comes in contact with the skin or clothing, wash it off immediately.**
- **Do not mix different types of Antifreeze.**
  **The mixture can produce chemical reaction causing harmful substances.**
- **Antifreeze is extremely flammable and explosive under certain conditions. Keep fire and children away from antifreeze.**
- **When draining fluids from the engine, place some container underneath the engine body.**
- **Do not pour waste onto the grounds, down a drain, or into any water source.**
- **Also, observe the relevant environmental protection regulations when disposing of antifreeze.**

Always use a 50/50 mix of long-life coolant and clean soft water in KUBOTA engines.

1. Long-life coolant (hereafter LLC) comes in several types. Use ethylene glycol (EG) type for this engine.
2. Before employing LLC-mixed cooling water, fill the radiator with fresh water and empty it again.
   Repeat this procedure 2 or 3 times to clean up the inside.
3. Mixing the LLC
   Premix 50 % LLC with 50 % clean soft water. When mixing, stir it up well, and then fill into the radiator.
4. The procedure for the mixing of water and antifreeze differs according to the make of the antifreeze and the ambient temperature. Refer to SAE J1034 standard, more specifically also to SAE J814c.

| Vol % Anti-freeze | Freezing Point | | Boiling Point* | |
|---|---|---|---|---|
| | °C | °F | °C | °F |
| 50 | −37 | −34 | 108 | 226 |

*At $1.013 \times 10^5$ Pa (760 mmHg) pressure (atmospheric). A higher boiling points is obtained by using a radiator pressure cap which permits the development of pressure within the cooling system.

**(To be continued)**

https://truckmanualshub.com/


**(Continued)**

5. Adding the LLC
   a) Add only water if the mixture reduces in amount by evaporation.
   b) If there is a mixture leak, add the LLC of the same manufacture and type in the same mixture percentage.
   *Never add any long-life coolant of different manufacture. (Different brands may have different additive components, and the engine may fail to perform as specified.)
6. When the LLC is mixed, do not employ any radiator cleaning agent. The LLC contains anticorrosive agent. If mixed with the cleaning agent, sludge may build up, adversely affecting the engine parts.
7. Kubota's genuine long-life coolant has a service life of 2 years. Be sure to change the coolant every 2 years.

■ **NOTE**
- **The above data represent industry standards that necessitate a minimum glycol content in the concentrated anti-freeze.**

9Y1211156GEG0047US0

**Replacing Radiator Hoses (Water Pipes)**

- See page G-27.

9Y1211156GEG0048US0

**Replacing Fuel Hoses**

- See page G-25.

9Y1211156GEG0049US0

**Replacing Intake Air Hoses**

- See page G-27.

9Y1211156GEG0050US0

# [11] OTHERS

**Bleeding Fuel System**

**Air must be removed:**
1. When the fuel filter or lines are removed.
2. When the tank is completely empty.
3. After the tractor has not been used for a long period of time.

**Bleeding procedure is as follows.**
1. Fill the fuel tank with fuel.
2. Start the engine and run for about 30 seconds, and then stop the engine.

9Y1211156GEG0052US0

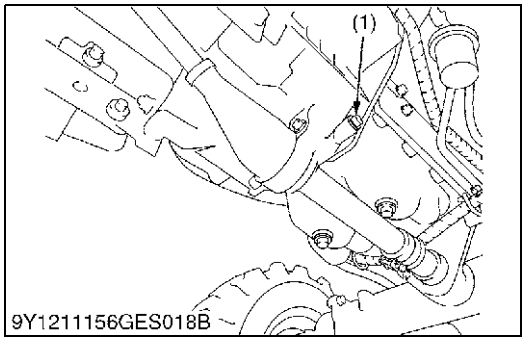


**Draining Clutch Housing Water**

■ **NOTE**
- **The tractor is equipped with a water drain plug (1) under the clutch housing.**
- **After operating in rain, snow or tractor has been washed, water may get into the clutch housing.**

1. Remove the drain plug and drain the water, then install the plug again.

(1) Water Drain Plug

9Y1211156GEG0053US0

https://truckmanualshub.com/


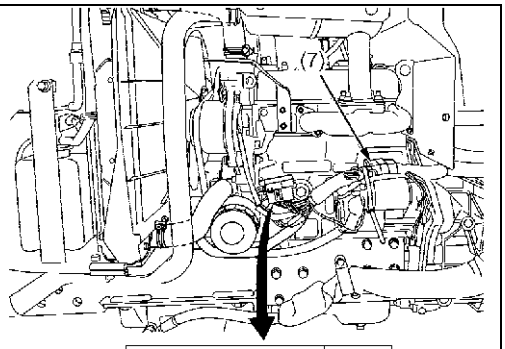


| | | |
|---|---|---|
| FLASHER HAZARD | 10A | (1) |
| SOLENOID | 30A | (2) |
| OUTLET (RIGHT SIDE) (MAX. 120W) | 10A | (3) |
| HEAD LIGHT PANEL | 10A | (4) |
| WORK LIGHT (MAX. 35W) | 5A | (5) |
| GLOW PLUG | 5A | (6) |

9Y1211156GES024A

## Replacing Fuse

1. The tractor electrical system is protected from potential damage by fuses.
   A blown fuse indicates that there is an overload or short somewhere in the electrical system.
2. If any of the fuses should blow, replace with a new one of the same capacity.

■ **IMPORTANT**

- **Before replacing a blown fuse, determine why the fuse blew and make any necessary repairs. Failure to follow this procedure may result in serious damage to the tractor electrical system.**

**Protected circuit**

| Fuse No. | Capacity (A) | Protected circuit |
|---|---|---|
| (1) | 15 | Flasher / Hazard |
| (2) | 30 | Solenoid |
| (3) | 10 | Outlet (Right side) |
| (4) | 10 | Head light / Panel |
| (5) | 5 | Work light |
| (6) | 5 | Glow lamp |
| (7) | Slow blow fuse | Check circuit against wrong battery connection |

9Y1211156GEG0054US0

## Replacing Light Bulb

1. Head lights:
   Take the bulb out of the light body and replace with a new one.
2. Other lights:
   Detach the lens and replace the bulb.

| Light | Capacity |
|---|---|
| Head light | 23 W |
| Tail light / Turn signal | 21 W / 5 W |
| Hazard light / Turn signal | 32 CP |

9Y1211156GEG0055US0

https://truckmanualshub.com/


# 8. SPECIAL TOOLS

## [1] SPECIAL TOOLS FOR ENGINE

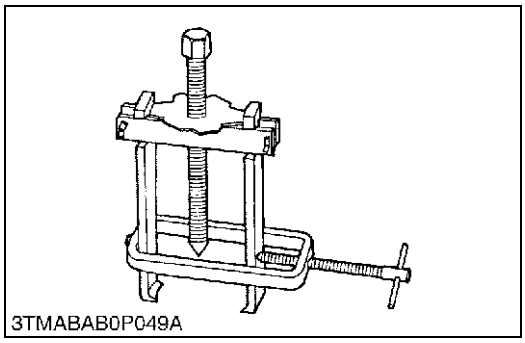
3TMABAB0P049A

**Special Use Puller Set**

**Code No.**
- 07916-09032

**Application**
- Use exclusively to pull out bearing, gears and other parts with ease.

WSM000001GEG0011US0

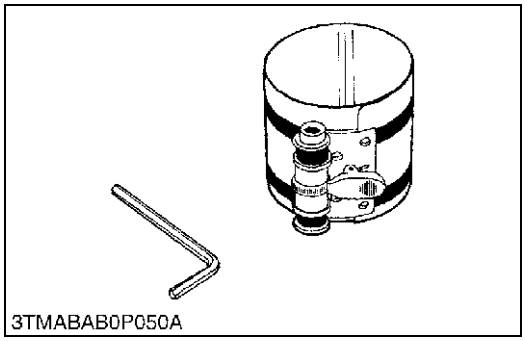
3TMABAB0P050A

**Piston Ring Compressor**

**Code No.**
- 07909-32111

**Application**
- Use exclusively to push in the piston with piston rings into the cylinder.

WSM000001GEG0012US0

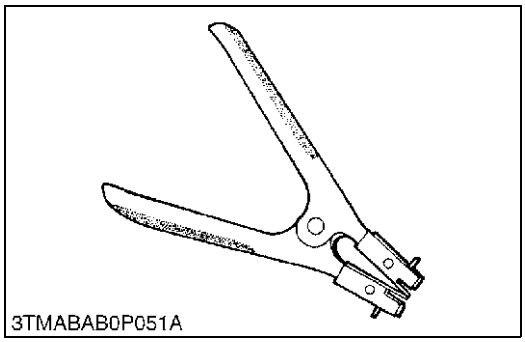
3TMABAB0P051A

**Piston Ring Tool**

**Code No.**
- 07909-32121

**Application**
- Use exclusively to remove or install the piston ring with ease.

WSM000001GEG0013US0

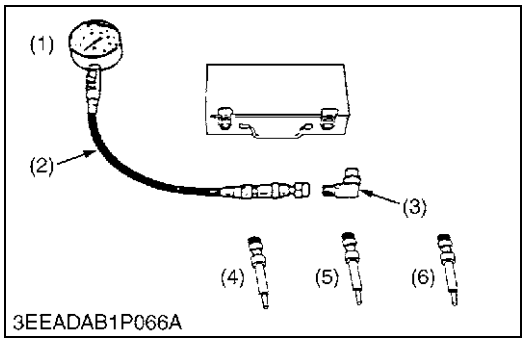

3EEADAB1P066A

**Diesel Engine Compression Tester (for Glow Plug)**

**Code No.**
- 07909-39081 (Assembly)
- 07909-31291 (**K**)
- 07909-31301 (**L**)
- 07909-31311 (**M**)

**Application**
- Use to measure diesel engine compression and diagnosis of need for major overhaul.

| | | | |
|---|---|---|---|
| (1) | Gauge | (4) | Adaptor **K** |
| (2) | Hose Assembly | (5) | Adaptor **L** |
| (3) | **L** Joint | (6) | Adaptor **M** |

WSM000001GEG0096US0

https://truckmanualshub.com/


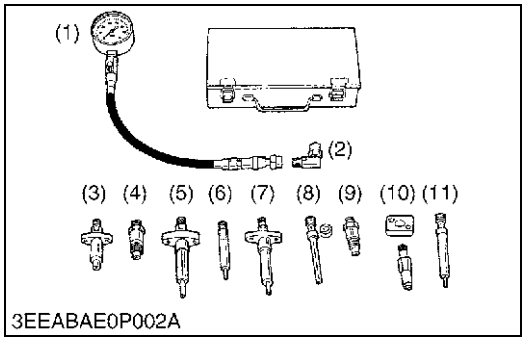


## Diesel Engine Compression Tester (for Injection Nozzle)

**Code No.**
- 07909-30208 (Assembly)
- 07909-30934 (**A** to **F**)
- 07909-31211 (**E** and **F**)
- 07909-31231 (**H**)
- 07909-31251 (**G**)
- 07909-31271 (**I**)
- 07909-31281 (**J**)

**Application**
- Use to measure diesel engine compression and diagnostics of need for major overhaul.

(1) Gauge
(2) **L** Joint
(3) Adaptor **A**
(4) Adaptor **B**
(5) Adaptor **C**
(6) Adaptor **E**
(7) Adaptor **F**
(8) Adaptor **G**
(9) Adaptor **H**
(10) Adaptor **I**
(11) Adaptor **J**

WSM000001GEG0014US0

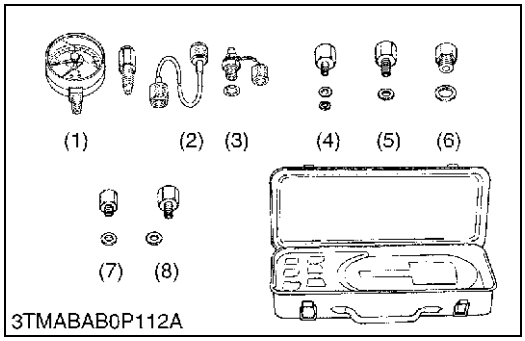


## Oil Pressure Tester

**Code No.**
- 07916-32032

**Application**
- Use to measure lubricating oil pressure.

(1) Gauge
(2) Cable
(3) Threaded Joint
(4) Adaptor **1**
(5) Adaptor **2**
(6) Adaptor **3**
(7) Adaptor **4**
(8) Adaptor **5**

WSM000001GEG0015US0

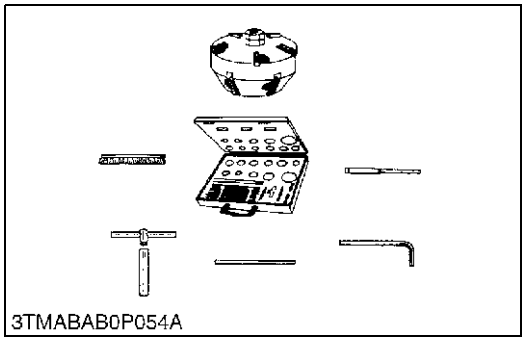


## Valve Seat Cutter

**Code No.**
- 07909-33102

**Application**
- Use to reseat valves.

**Angle**
- 0.79 rad (45 °)
- 0.26 rad (15 °)

**Diameter**
- 28.6 mm (1.13 in.)
- 31.6 mm (1.24 in.)
- 35.0 mm (1.38 in.)
- 38.0 mm (1.50 in.)
- 41.3 mm (1.63 in.)
- 50.8 mm (2.00 in.)

WSM000001GEG0016US0

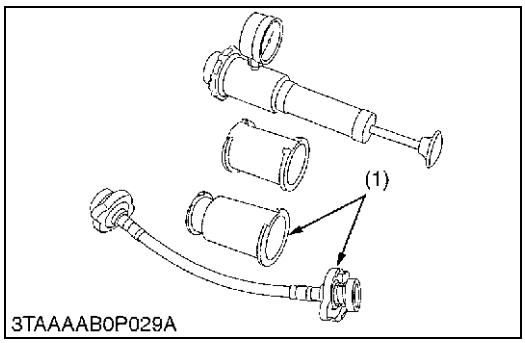


## Radiator Tester

**Code No.**
- 07909-31551

**Application**
- Use to check of radiator cap pressure, and leaks from cooling system.

**Remarks**
- Adaptor (1) BANZAI Code No. RCT-2A-30S.

(1) Adaptor

WSM000001GEG0017US0

https://truckmanualshub.com/


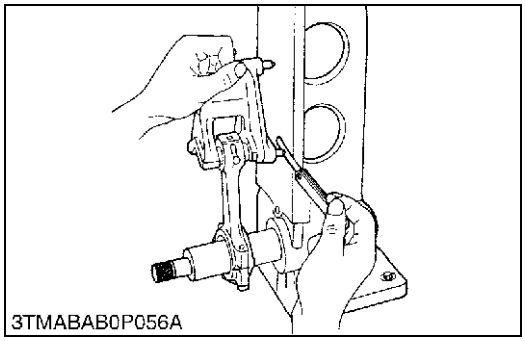
3TMABAB0P056A

## Connecting Rod Alignment Tool

**Code No.**
- 07909-31661

**Application**
- Use to check the connecting rod alignment.

**Applicable range**
- Connecting rod big end I.D.
  30 to 75 mm dia. (1.2 to 2.9 in. dia.)
- Connecting rod length
  65.0 to 300 mm (2.56 to 11.8 in.)

WSM000001GEG0020US0

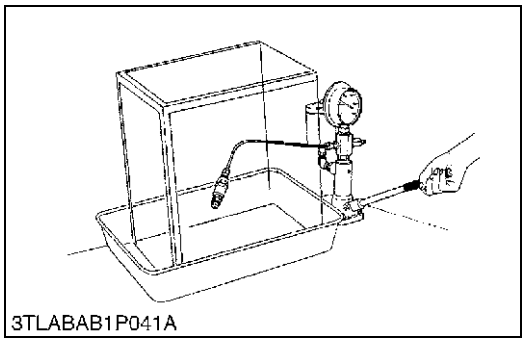
3TLABAB1P041A

## Nozzle Tester

**Code No.**
- 07909-31361

**Application**
- Use to check the fuel injection pressure and spray pattern of nozzle.

**Measuring range**
- 0 to 50 MPa (0 to 500 kgf/cm$^2$, 0 to 7200 psi)

WSM000001GEG0021US0

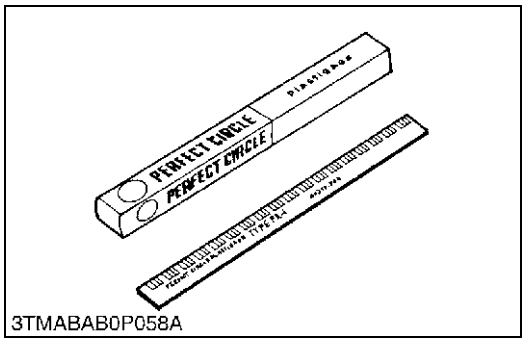

3TMABAB0P058A

## Plastigauge

**Code No.**
- 07909-30241

**Application**
- Use to check the oil clearance between crankshaft and bearing, etc..

**Measuring range**
- Green: 0.03 to 0.07 mm (0.001 to 0.003 in.)
- Red: 0.05 to 0.1 mm (0.002 to 0.006 in.)
- Blue: 0.1 to 0.2 mm (0.004 to 0.009 in.)

WSM000001GEG0022US0

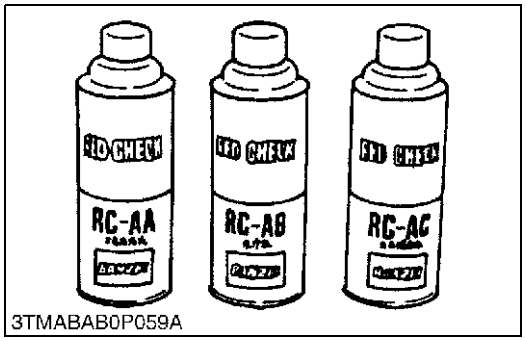

3TMABAB0P059A

## Red Check

**Code No.**
- 07909-31371

**Application**
- Use to check cracks on cylinder head, cylinder block, etc..

WSM000001GEG0023US0

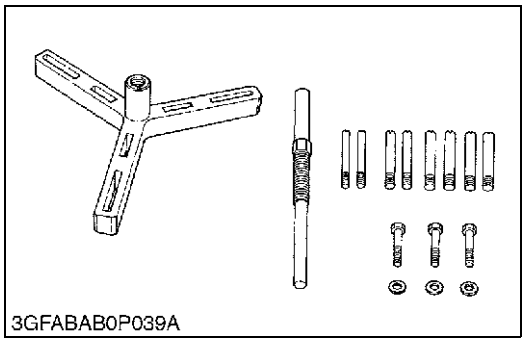
3GFABAB0P039A

## Flywheel Puller

**Code No.**
- 07916-32011

**Application**
- Use exclusively to remove the flywheel with ease.

WSM000001GEG0018US0

https://truckmanualshub.com/


■ **NOTE**
- **The following special tools are not provided, so make them referring to the figure.**

WSM000001GEG0026US0

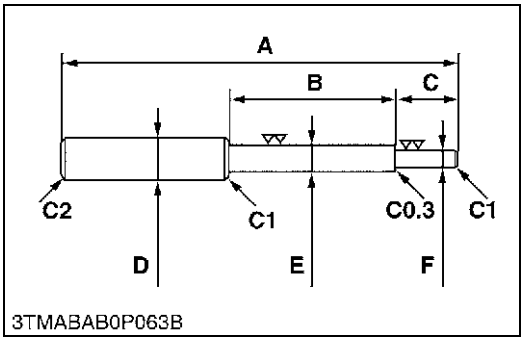


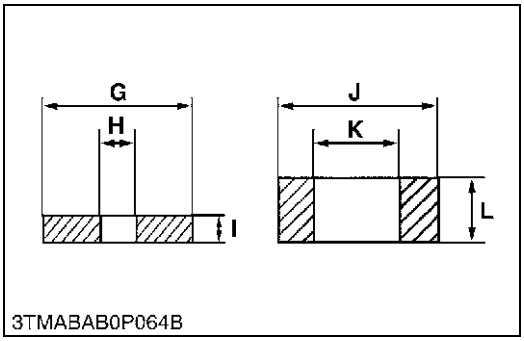


## Valve Guide Replacing Tool

### Application
- Use to press out and press fit the valve guide.

■ **NOTE**
- **The following special tools are not provided, so make them referring to the figure.**

| | |
|---|---|
| **A** | 225 mm (8.86 in.) |
| **B** | 70 mm (2.8 in.) |
| **C** | 45 mm (1.8 in.) |
| **D** | 20 mm dia. (0.79 in. dia.) |
| **E** | 11.7 to 11.9 mm dia. (0.461 to 0.469 in. dia.) |
| **F** | 6.50 to 6.60 mm dia. (0.256 to 0.260 in. dia.) |
| **G** | 25 mm (0.98 in.) |
| **H** | 6.70 to 7.00 mm dia. (0.264 to 0.276 in. dia.) |
| **I** | 5 mm (0.2 in.) |
| **J** | 20 mm dia. (0.79 in. dia.) |
| **K** | 12.5 to 12.8 mm dia. (0.493 to 0.503 in. dia.) |
| **L** | 8.90 to 9.10 mm (0.351 to 0.358 in.) |
| **C1** | Chamfer 1.0 mm (0.039 in.) |
| **C2** | Chamfer 2.0 mm (0.079 in.) |
| **C0.3** | Chamfer 0.3 mm (0.01 in.) |

9Y1211156GEG0056US0

https://truckmanualshub.com/


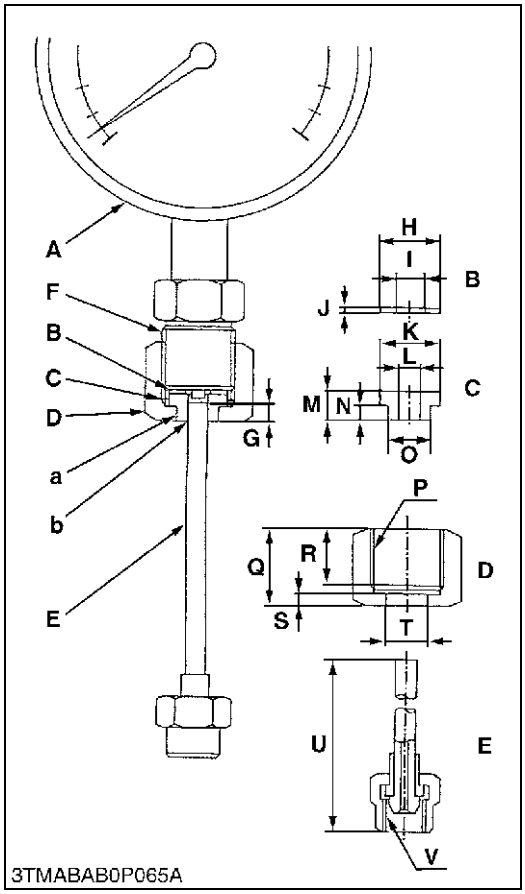


## Injection Pump Pressure Tester

### Application

- Use to check fuel tightness of injection pumps.

■ **NOTE**

- **The following special tools are not provided, so make them referring to the figure.**

| | |
|---|---|
| **A** | Pressure gauge full scale: More than 29.4 MPa (300 kgf/cm$^2$, 4267 psi) |
| **B** | Copper gasket |
| **C** | Flange (Material: Steel) |
| **D** | Hex. nut 27 mm (1.1 in.) across the plat |
| **E** | Injection pipe |
| **F** | PF 1/2 |
| **G** | 5 mm (0.2 in.) |
| **H** | 17 mm dia. (0.67 in. dia.) |
| **I** | 8 mm dia. (0.3 in. dia.) |
| **J** | 1.0 mm (0.039 in.) |
| **K** | 17 mm dia. (0.67 in. dia.) |
| **L** | 6.10 to 6.20 mm dia. (0.241 to 0.244 in. dia.) |
| **M** | 8 mm (0.3 in.) |
| **N** | 4 mm (0.2 in.) |
| **O** | 11.97 to 11.99 mm dia. (0.4713 to 0.4720 in. dia.) |
| **P** | PF 1/2 |
| **Q** | 23 mm (0.91 in.) |
| **R** | 17 mm (0.67 in.) |
| **S** | 4 mm (0.2 in.) |
| **T** | 12.00 to 12.02 mm dia. (0.4725 to 0.4732 in. dia.) |
| **U** | 100 mm (3.94 in.) |
| **V** | M12 × 1.5 |
| **a** | Adhesive application |
| **b** | Fillet welding on the enter circumference |

9Y1211156GEG0057US0

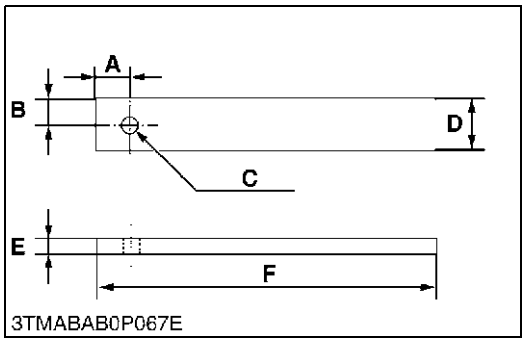


## Flywheel Stopper

### Application

- Use to loosen and tighten the flywheel screw.

■ **NOTE**

- **The following special tools are not provided, so make them referring to the figure.**

| | |
|---|---|
| **A** | 20 mm (0.79 in.) |
| **B** | 15 mm (0.59 in.) |
| **C** | 10 mm dia. (0.39 in. dia.) |
| **D** | 30 mm (1.2 in.) |
| **E** | 8 mm (0.3 in.) |
| **F** | 200 mm (7.87 in.) |

9Y1211156GEG0058US0

https://truckmanualshub.com/


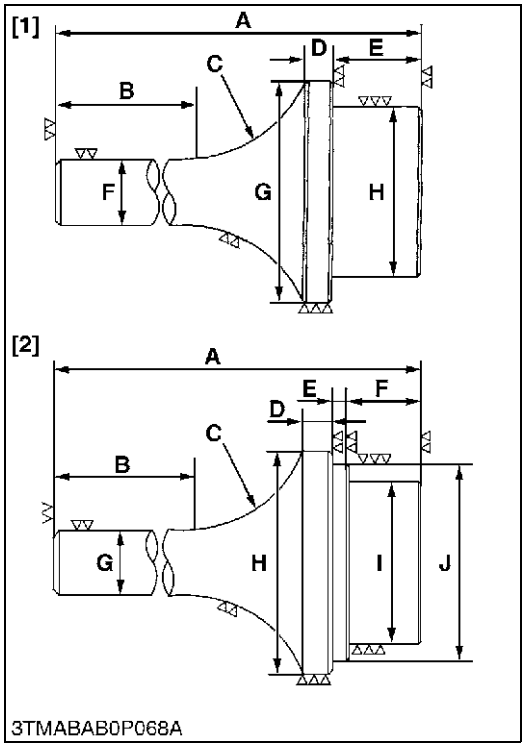


## Crankshaft Bearing 1 Replacing Tool

### Application

- Use to press out and press fit the crankshaft bearing 1.

■ **NOTE**

- **The following special tools are not provided, so make them referring to the figure.**

**[1] Extracting tool**

| | |
|---|---|
| **A** | 135 mm (5.31 in.) |
| **B** | 72 mm (2.8 in.) |
| **C** | 40 mm radius (1.6 in. radius) |
| **D** | 10 mm (0.39 in.) |
| **E** | 20 mm (0.79 in.) |
| **F** | 20 mm dia. (0.79 in. dia.) |
| **G** | 56.80 to 56.90 mm dia. (2.237 to 2.240 in. dia.) |
| **H** | 51.80 to 51.90 mm dia. (2.040 to 2.043 in. dia.) |

**[2] Inserting tool**

| | |
|---|---|
| **A** | 130 mm (5.12 in.) |
| **B** | 72 mm (2.8 in.) |
| **C** | 40 mm radius (1.6 in. radius) |
| **D** | 9 mm (0.4 in.) |
| **E** | 24 mm (0.2 in.) |
| **F** | 20 mm (0.79 in.) |
| **G** | 20 mm dia. (0.79 in. dia.) |
| **H** | 68 mm dia. (2.7 in. dia.) |
| **I** | 51.80 to 51.90 mm dia. (2.040 to 2.043 in. dia.) |
| **J** | 56.80 to 56.90 mm dia. (2.237 to 2.240 in. dia.) |

9Y1211156GEG0059US0

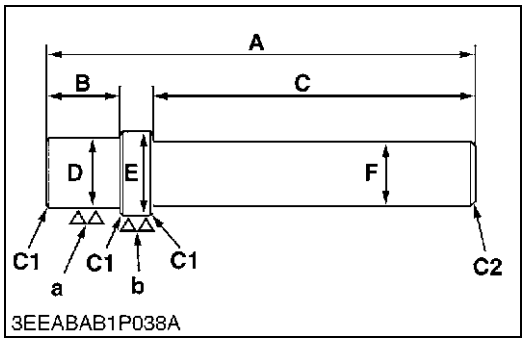


## Bushing Replacing Tool

### Application

- Use to press out and press in the bushing.

1. For small end bushing

| | |
|---|---|
| **A** | 157 mm (6.18 in.) |
| **B** | 24 mm (0.94 in.) |
| **C** | 120 mm (4.72 in.) |
| **D** | 21.8 to 21.9 mm dia. (0.859 to 0.862 in. dia.) |
| **E** | 24.8 to 24.9 mm dia. (0.977 to 0.980 in. dia.) |
| **F** | 20 mm dia. (0.79 in. dia.) |
| **a** | 6.3 µm (250 µin.) |
| **b** | 6.3 µm (250 µin.) |

2. For idle gear bushing

| | |
|---|---|
| **A** | 196 mm (7.72 in.) |
| **B** | 26 mm (1.0 in.) |
| **C** | 150 mm (5.91 in.) |
| **D** | 25.80 to 25.90 mm dia. (1.016 to 1.019 in. dia.) |
| **E** | 28.80 to 28.90 mm dia. (1.134 to 1.137 in. dia.) |
| **F** | 20 mm dia. (0.79 in. dia.) |
| **a** | 6.3 µm (250 µin.) |
| **b** | 6.3 µm (250 µin.) |

9Y1211156GEG0060US0

https://truckmanualshub.com/


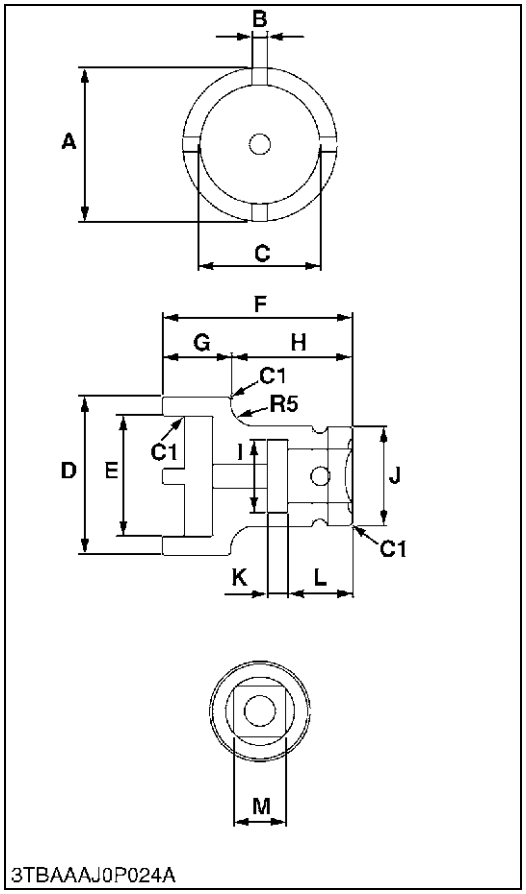


## Socket

### Application

- Use to loosen and tighten the idle gear 2 bearing lock nut.

■ **NOTE**

- **The following special tools are not provided, so make them referring to the figure.**

| | |
|---|---|
| **A** | 28.5 to 28.8 mm (1.12 to 1.13 in.) |
| **B** | 3.5 to 3.7 mm (0.14 to 0.15 in.) |
| **C** | 28.5 to 28.8 mm (0.12 to 1.13 in.) |
| **D** | 38 mm dia. (1.50 in. dia.) |
| **E** | 28.5 to 29.0 mm dia. (1.12 to 1.14 in. dia.) |
| **F** | 47.5 mm (1.87 in.) |
| **G** | 17.5 mm (0.69 in.) |
| **H** | 30 mm (1.18 in.) |
| **I** | 18 mm dia. (0.71 in. dia.) |
| **J** | 24.5 mm dia. (0.96 in. dia.) |
| **K** | 5.0 mm (0.21 in.) |
| **L** | 16 mm (0.63 in.) |
| **M** | 12.8 to 13.0 mm (0.50 to 0.51 in.) |
| **C1** | Chamfer 1.0 mm (0.039 in.) |
| **R5** | 5.0 mm radius (0.20 in. radius) |

9Y1211156GEG0061US0

https://truckmanualshub.com/


# [2] SPECIAL TOOLS FOR TRACTOR

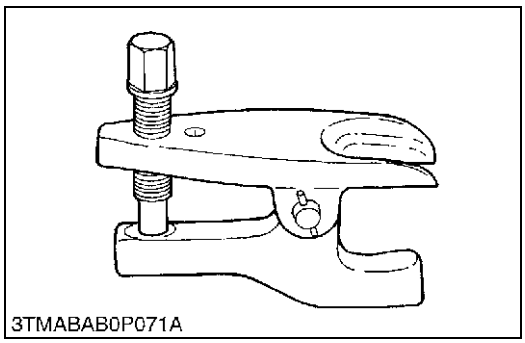
3TMABAB0P071A

**Tie-rod End Lifter**

**Code No.**
- 07909-39051

**Application**
- Use to remove the tie-rod end with ease.

WSM000001GEG0029US0

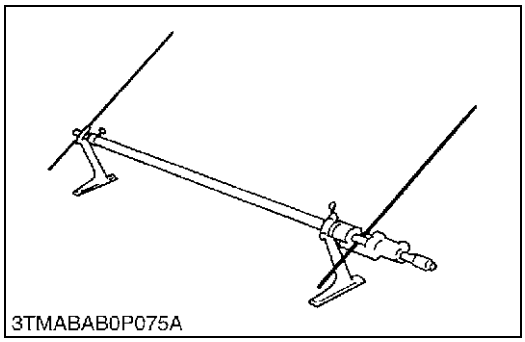
3TMABAB0P075A

**Toe-in Gauge**

**Code No.**
- 07909-31681

**Application**
- This allows easy measurement of toe-in for all machine models.

WSM000001GEG0034US0

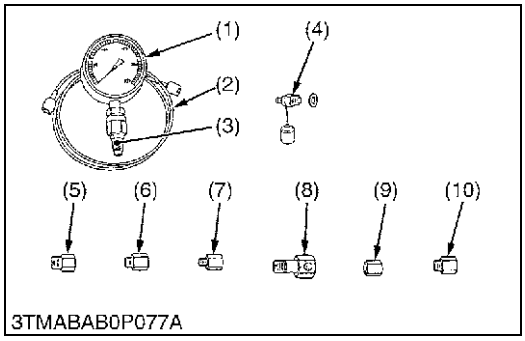

3TMABAB0P077A

**Relief Valve Pressure Tester**

**Code No.**
- 07916-50045

**Application**
- This allows easy measurement of relief set pressure.

(1) Gauge (07916-50322)
(2) Cable (07916-50331)
(3) Threaded Joint (07916-50401)
(4) Threaded Joint (07916-50341)
(5) Adaptor **B** (M18 × P1.5) (07916-50361)
(6) Adaptor **C** (PS3/8) (07916-50371)
(7) Adaptor **D** (PT1/8) (07916-50381)
(8) Adaptor **E** (PS3/8) (07916-50392)
(9) Adaptor **F** (PF1/2) (07916-62601)
(10) Adaptor **58** (PT1/4) (07916-52391)

WSM000001GEG0027US0

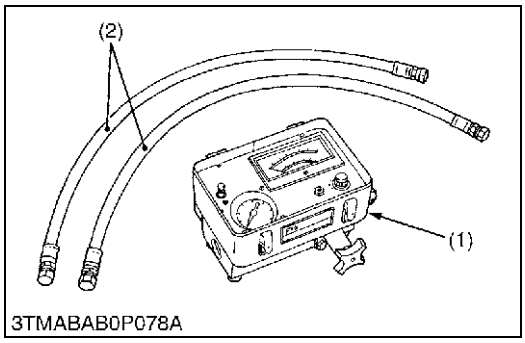

3TMABAB0P078A

**Flow Meter**

**Code No.**
- 07916-52791 (Flow Meter)
- 07916-52651 (Hydraulic Test Hose)

**Application**
- This allows easy testing of hydraulic system.

(1) Flow Meter
(2) Hydraulic Test Hose

WSM000001GEG0036US0

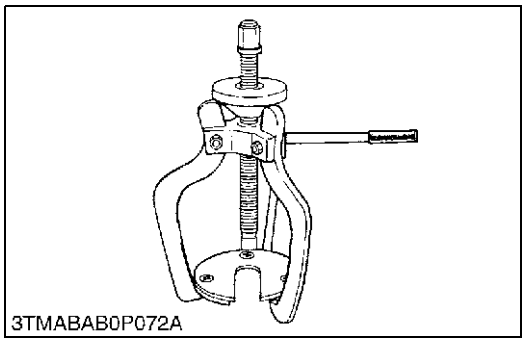
3TMABAB0P072A

**Steering Wheel Puller**

**Code No.**
- 07916-51090

**Application**
- Use to remove the steering wheel without damage to the steering shaft.

WSM000001GEG0030US0

https://truckmanualshub.com/


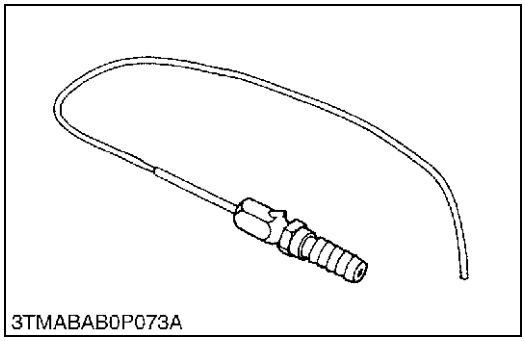
3TMABAB0P073A

## Injector CH3

**Code No.**
- 07916-52501

**Application**
- Use to put calcium chloride solution into a rear wheel and to remove it.

WSM000001GEG0031US0

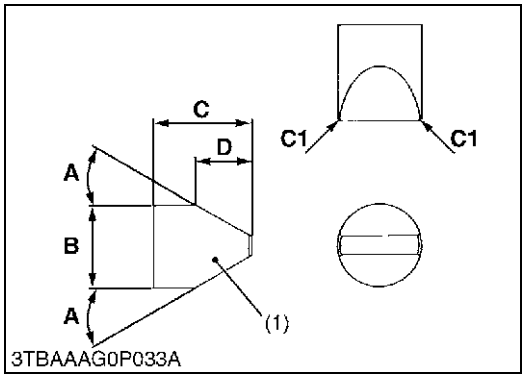

3TBAAAG0P033A

## PTO Shift Arm Ball Guide

**Application**
- Use for compressing the ball and spring into the transmission case.

| | |
|---|---|
| **A** | 0.51 rad (30 °) |
| **B** | 29.95 to 29.98 mm dia. (1.179 to 1.180 in. dia.) |
| **C** | 35 mm (1.38 in.) |
| **D** | 20 mm (0.79 in.) |
| **C1** | Chamfer 1 mm (0.039 in.) |

(1) PTO Shift Arm Ball Guide

9Y1211156GEG0062US0

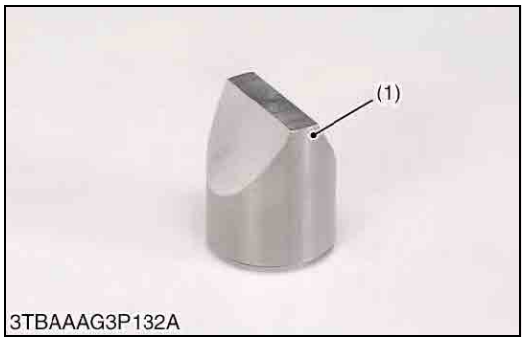

3TBAAAG3P132A

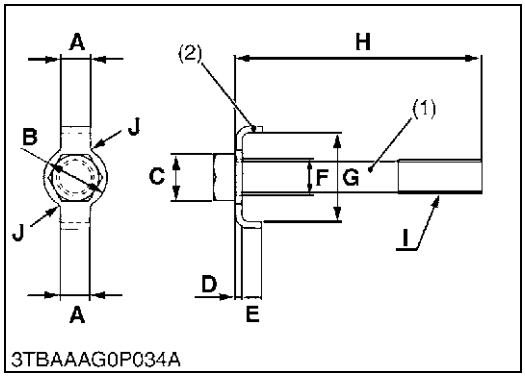

3TBAAAG0P034A

## Independent PTO Clutch Spring Compression Tool

**Application**
- Use for compressing the spring into the spline boss.

| | |
|---|---|
| **A** | 12 mm (0.47 in.) |
| **B** | 25.4 mm (1.00 in.) |
| **C** | 19 mm radius (0.75 in.) Hex. |
| **D** | 2.7 mm (0.11 in.) |
| **E** | 8 mm (0.3 in.) |
| **F** | 15 mm dia. (0.59 in. dia.) |
| **G** | 37 mm (1.5 in.) |
| **H** | 70 mm (2.76 in.) |
| **I** | M14 ×1.5 |
| **J** | R 3.0 mm (0.12 in.) |
| **K** | 30 mm (1.18 in.) |
| **L** | 17 mm (0.67 in.) |
| **M** | 38 mm (1.50 in.) |

9Y1211156GEG0063US0

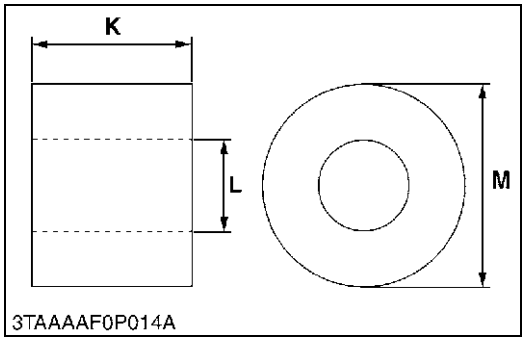

3TAAAAF0P014A

https://truckmanualshub.com/


## Check and High Pressure Relief Valve Assembly Tool

### Application

- Use for readjusting relief valve pressure.

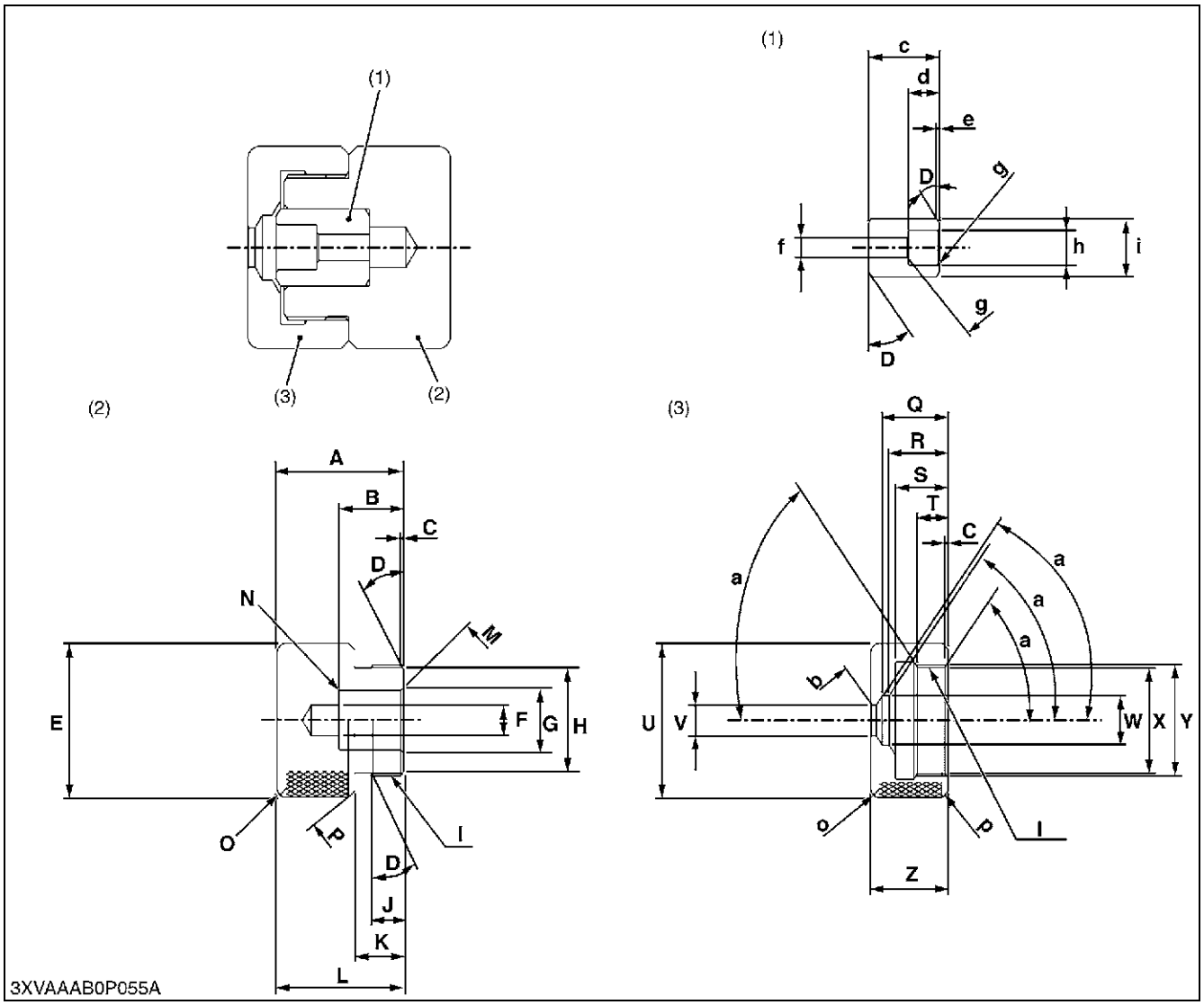


| | | | | | |
|---|---|---|---|---|---|
| **A** | 30.0 mm (1.18 in.) | **N** | Chamfer 0.4 mm (0.12 in.) | **a** | 1.05 rad (60.0 °) |
| **B** | 21.0 mm (0.827 in.) | **O** | Chamfer 3.0 mm (0.12 in.) | **b** | Chamfer 0.3 mm (0.01 in.) |
| **C** | 1 mm (0.04 in.) | **P** | Chamfer 2.0 mm (0.079 in.) | **c** | 23.0 mm (0.906 in.) |
| **D** | 0.52 rad (30 °) | **Q** | 21.4 mm (0.843 in.) | **d** | 10.0 mm (0.394 in.) |
| **E** | 50.0 mm dia. (1.97 in. dia.) | **R** | 19.0 mm (0.748 in.) | **e** | 1 mm (0.039 in.) |
| **F** | 10.0 mm dia. (0.39 in. dia.) | **S** | 17.0 mm (0.669 in.) | **f** | 6.5 mm (0.26 in.) |
| **G** | 9.10 to 9.30 mm dia. (0.359 to 0.366 in.) | **T** | 10.0 mm (0.394 in.) | **g** | Chamfer 0.5 mm (0.02 in.) |
| **H** | 34.0 mm dia. (1.34 in. dia.) | **U** | 50.0 mm dia. (1.97 in. dia.) | **h** | 11.1 to 11.3 mm (0.437 to 0.444 in.) |
| **I** | M36 x 1.5 mm Pitch | **V** | 9.8 mm dia. (0.39 in. dia.) | **i** | 18.8 to 19.0 mm (0.741 to 0.748 in.) |
| **J** | 10.0 mm (0.39 in.) | **W** | 16.0 mm dia. (0.630 in. dia.) | | |
| **K** | 16.0 mm (0.63 in.) | **X** | 34.5 mm dia. (1.36 in. dia.) | (1) | Spacer |
| **L** | 41.0 mm (1.61 in.) | **Y** | 38.0 mm dia. (1.50 in. dia.) | (2) | Block |
| **M** | Chamfer 1 mm (0.04 in.) | **Z** | 25.0 mm (0.984 in.) | (3) | Cap |

9Y1211156GEG0064US0

https://truckmanualshub.com/


# 9. TIRES

## [1] TIRE PRESSURE

**WARNING**

**To avoid personal injury or death:**

- **Do not attempt to mount a tire on a rim. This should be done by a qualified person with the proper equipment.**
- **Always maintain the correct tire pressure. Do not inflate tires above the recommended pressure shown in the operator's manual.**

■ **IMPORTANT**

- **Do not use tires other than those approved by KUBOTA.**

Though the tire pressure is factory-set to the prescribed level, it naturally drops slowly in the course of time. Thus, check it everyday and inflate as necessary.

| | Tire sizes | Inflation Pressure |
|---|---|---|
| Rear | 9.5-16, 4PR | 140 kPa (1.4 kgf/cm$^2$, 20 psi) |
| | 9.5-18, 4PR | 160 kPa (1.6 kgf/cm$^2$, 23 psi) |
| | 315/75D-15, 4PR | 100 kPa (1.0 kgf/cm$^2$, 14 psi) |
| | 11.2-16, 4PR | 130 kPa (1.3 kgf/cm$^2$, 18 psi) |
| | 12-16.5, 4PR | 270 kPa (2.7 kgf/cm$^2$, 40 psi) |
| | 31 × 13.5-15, 4PR | 140 kPa (1.4 kgf/cm$^2$, 20 psi) |
| | 31 × 15.5-15, 4PR | 140 kPa (1.4 kgf/cm$^2$, 20 psi) |
| | 33 × 12.5-15, 4PR | 140 kPa (1.4 kgf/cm$^2$, 20 psi) |
| Front | 6-12, 4PR | 200 kPa (2.0 kgf/cm$^2$, 28 psi) |
| | 7-12, 4PR | 170 kPa (1.7 kgf/cm$^2$, 24 psi) |
| | 21 × 8.00-10, 4PR | 160 kPa (1.6 kgf/cm$^2$, 23 psi) |
| | 22 × 8.50-12, 4PR | 160 kPa (1.6 kgf/cm$^2$, 23 psi) |
| | 23 × 8.50-12 Turf, 4PR | 150 kPa (1.5 kgf/cm$^2$, 22 psi) |
| | 23 × 8.50-12 Ind., 4PR | 250 kPa (2.5 kgf/cm$^2$, 35 psi) |
| | 24 × 8.50-12., 4PR | 160 kPa (1.6 kgf/cm$^2$, 23 psi) |

■ **Dual Tires**

Dual tires are not approved.

9Y1211156GEG0065US0

https://truckmanualshub.com/


# [2] WHEEL ADJUSTMENT

**WARNING**

**To avoid personal injury or death:**

- **When working on slopes or when working with trailer, set the wheel tread as wide as practical for maximum stability.**
- **Support tractor securely on stands before removing a wheel.**
- **Do not work under any hydraulically supported devices. They can settle, suddenly leak down, or be accidentally lowered. If necessary to work under tractor or any machine elements for servicing or adjustment, securely support them with stands or suitable blocking beforehand.**
- **Never operate tractor with a loose rim, wheel, or axle.**

9Y1211156GEG0066US0

## (1) Front Wheels

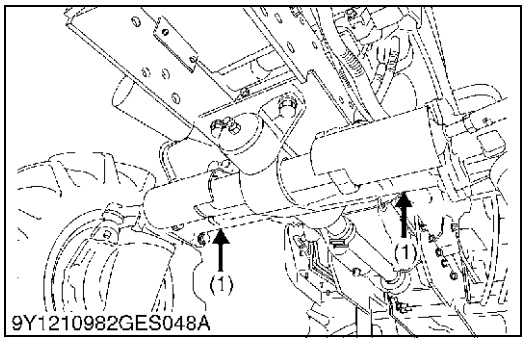


**Front Wheels**

Front tread width can not be adjusted.

■ **IMPORTANT**

- **Do not turn front discs to obtain wider tread. In setting up the front wheels, make sure that the inflation valve stem of the tires face outward.**
- **When re-fitting or adjusting a wheel, tighten the bolts to the following torques then recheck after driving the tractor 200 m (200 yards) and 10 times of shuttle movement by 5 m (5 yards), and thereafter according to service interval. (See "MAINTENANCE" section.)**

**WARNING**

**To avoid personal injury or death:**

- **Before jacking up the tractor, park it on a firm and level ground and chock the rear wheels.**
- **Fix the front axle to keep it from swinging.**
- **Select jacks that withstand the machine weight and set them up as shown below.**

(1) Jack Point

9Y1211156GEG0067US0

https://truckmanualshub.com/


## Front Wheels Treads

### [USA Models]

| Model | B2301 | B2601 | B2301, B2601 | | B2301, B2601 |
|---|---|---|---|---|---|
| Tires | 6-12 Farm | 7-12 Farm | 23 × 8.50-12 Turf | 23 × 8.50-12 Ind. | 21 × 8.00-10 Bar |
| | 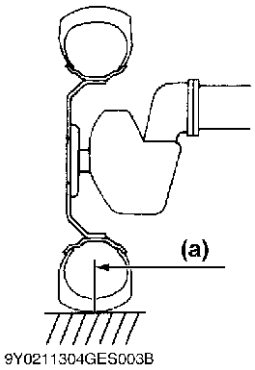 | 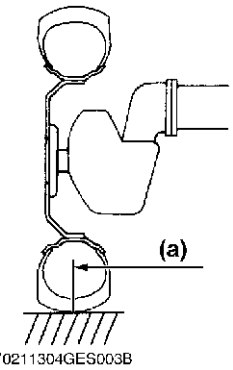 | 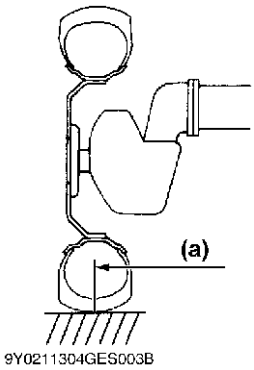 | | 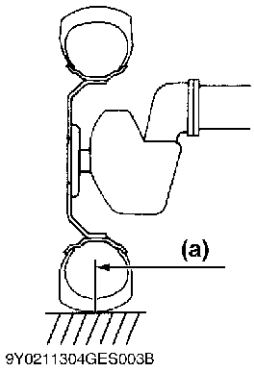 |
| Tread **(a)** | 800 mm (31.5 in.) | 815 mm (32.1 in.) | 835 mm (32.9 in.) | | 905 mm (35.6 in.) |

### [Except USA Models]

| Model | B2301 | B2601 | B2301 | B2601 |
|---|---|---|---|---|
| Tires | 6-12 Farm | 7-12 Farm | 22 × 8.50-12 Turf | 24 × 8.50-12 Turf |
| | 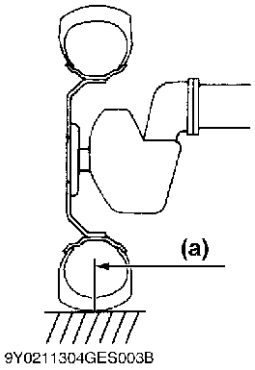 | 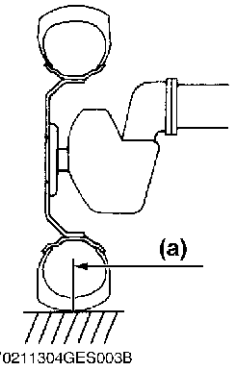 | 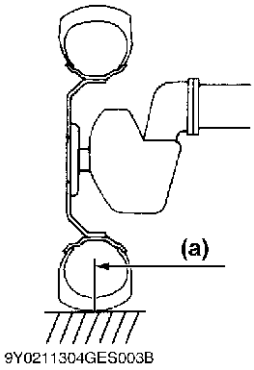 | 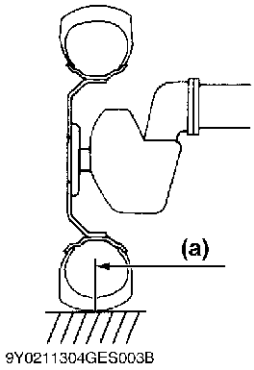 |
| Tread **(a)** | 795 mm (31.3 in.) | 815 mm (32.1 in.) | 835 mm (32.9 in.) | 835 mm (32.9 in.) |

9Y1211156GEG0068US0

https://truckmanualshub.com/


## (2) Rear Wheels

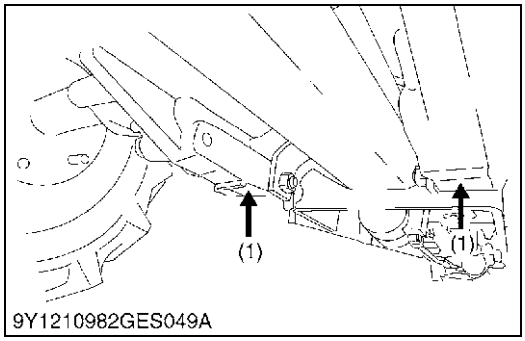


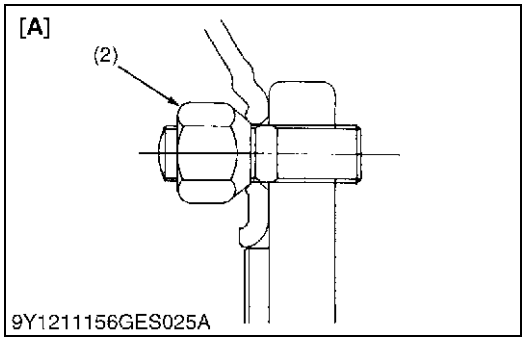


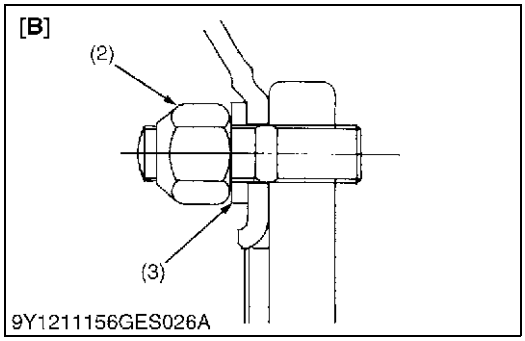


**Rear Wheels**

Rear tread width can not be adjusted.

■ **IMPORTANT**
- **Always attach tires as shown in the drawings.**
- **If not attached as illustrated, transmission parts may be damaged.**
- **When re-fitting or adjusting a wheel, tighten the bolts to the following torques then recheck after driving the tractor 200 m (200 yards) and 10 times of shuttle movement by 5 m (5 yards), and thereafter according to service interval. (See "MAINTENANCE" section.)**

**WARNING**

**To avoid personal injury or death:**
- **Before jacking up the tractor, park it on a firm and level ground and chock the front wheels.**
- **Fix the front axle to keep it from swinging.**
- **Select jacks that withstand the machine weight and set them up as shown below.**

**[A] Wheels with beveled or tapered holes**

Use the tapered side of lug nut.

**[B] Wheels without beveled or tapered holes**

Use the flat side of lug nut. Make sure to apply the spring washer.

(1) Jack Point
(2) Lug Nut
(3) Spring Washer

9Y1211156GEG0069US0

https://truckmanualshub.com/


## Rear Wheels Tread

### [USA Models]

| Model | B2301 | B2601 | B2301, B2601 |
|---|---|---|---|
| Tires | 9.5-16 Farm | 11.2-16 Farm | 33 × 12.5-15 Turf<br>31 × 15.5-15 Bar<br>12-16.5 Ind. |
| | 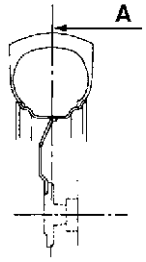 <br>9Y1210982GES050A | 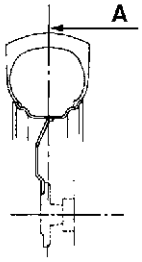 <br>9Y1210982GES050A | 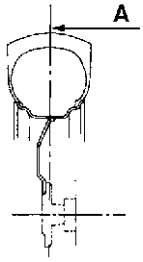 <br>9Y1210982GES050A |
| Tread **A** | 900 mm (35.4 in.) | 950 mm (37.4 in.) | 950 mm (37.4 in.) |

### [Except USA Models]

| Model | B2301 | B2601 | B2301 | B2601 |
|---|---|---|---|---|
| Tires | 9.5-16 Farm | 9.5-18 Farm | 31 × 13.5-15 Turf | 315/75D-15 Turf |
| | 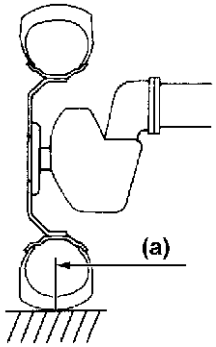 <br>9Y0211304GES003B | 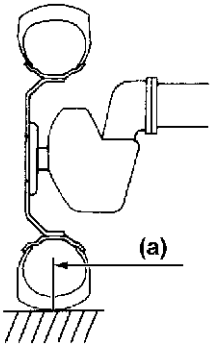 <br>9Y0211304GES003B | 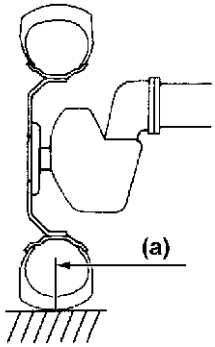 <br>9Y0211304GES003B | 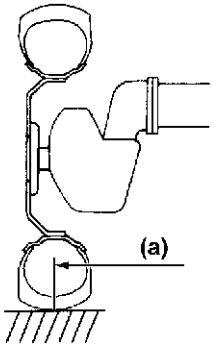 <br>9Y0211304GES003B |
| Tread **(a)** | 900 mm (35.4 in.) | 920 mm (36.2 in.) | 970 mm (38.2 in.) | 970 mm (38.2 in.) |

9Y1211156GEG0070US0

https://truckmanualshub.com/


# [3] BALLAST

**WARNING**

**To avoid personal injury or death:**

- **Additional ballast will be needed for transporting heavy implements. When the implement is raised, drive slowly over rough ground, regardless of how much ballast is used.**
- **Do not fill the front wheels with liquid.**

9Y1211156GEG0071US0

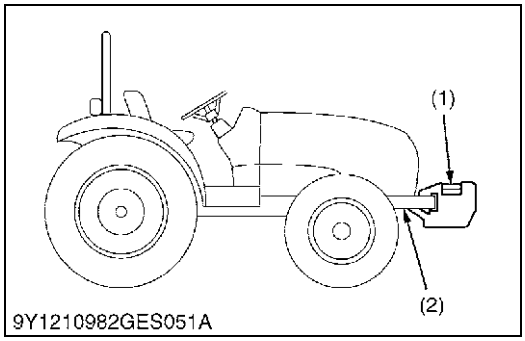


**Front Ballast**

Add weights if needed for stability and improving traction.

Heavy pulling and heavy rear mounted implements tend to lift front wheels. Add enough ballast to maintain steering control and prevent tip over.

Remove weight when no longer needed.

■ **Front End Weights (option)**

The front end weights can be attached to the bumper.

■ **NOTE**

**[For installation of up to 3 weights]**

- **Besides the weight, mounting bolt kit(s) are required for mounting the weight.**

**[For installation of up to 5 weights]**

- **Besides the weight, a front weight bracket and mounting bolt kit(s) are required for mounting the weight.**

■ **IMPORTANT**

- **Do not overload tires.**
- **Add no more weight than indicated in chart.**

| | |
|---|---|
| Maximum weight | 25 kg (55 lbs) x 5 pieces<br>[125 kg (276 lbs)] |

(1) Front End Weights (2) Front Weight Bracket (Option)

9Y1211156GEG0072US0

https://truckmanualshub.com/


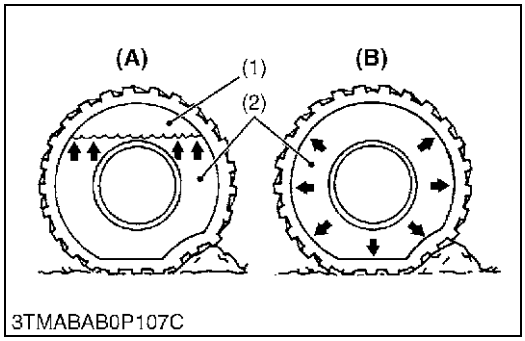


## Rear Ballast

Add weight to rear wheels if needed to improve traction or for stability. The amount of rear ballast should be matched to job and the ballast should be removed when it is not needed.

The weight should be added to the tractor in the form of liquid ballast.

### ■ Liquid Ballast in Rear Tires

Water and calcium chloride solution provides safe economical ballast. Used properly, it will not damage tires, tubes or rims. The addition of calcium chloride is recommended to prevent the water from freezing. Use of this method of weighting the wheels has the full approval of the tire companies.

**Liquid weight per tire (75 Percent filled)**

| Tire sizes | 9.5-16 | 11.2-16 |
|---|---|---|
| Slush free at −10 °C (14 °F)<br>Solid at −30 °C (−22 °F)<br>[Approx. 1 kg (2 lbs) $CaCl_2$ per 4 L (1 gal) of water] | 54 kg<br>(120 lbs) | 70 kg<br>(150 lbs) |
| Slush free at −24 °C (−11 °F)<br>Solid at −47 °C (−53 °F)<br>[Approx. 1.5 kg (3.3 lbs) $CaCl_2$ per 4 L (1 gal) of water] | 57 kg<br>(130 lbs) | 74 kg<br>(160 lbs) |
| Slush free at −47 °C (−53 °F)<br>Solid at −52 °C (−62 °F)<br>[Approx. 2.25 kg (4.96 lbs) $CaCl_2$ per 4 L (1 gal) of water] | 60 kg<br>(130 lbs) | 78 kg<br>(170 lbs) |

### ■ IMPORTANT

- **Do not fill tires with water or solution more than 75 % of full capacity (to the level of valve stem at 12 o'clock position).**

(1) Air
(2) Water

**(A) Correct: 75 % Full**
**Air compresses like a cushion**
**(B) Incorrect: 100 % Full**
**Water can not be compressed**

9Y1211156GEG0073US0

https://truckmanualshub.com/


# 10. IMPLEMENT LIMITATIONS

The KUBOTA Tractor has been thoroughly tested for proper performance with implements sold or approved by KUBOTA. Use with implements which are not sold or approved by KUBOTA and which exceed the maximum specifications listed below, or which are otherwise unfit for use with the KUBOTA Tractor may result in malfunctions or failures of the tractor, damage to other property and injury to the operator or others. [Any malfunctions or failures of the tractor resulting from use with improper implements are not covered by the warranty.]

9Y1211156GEG0074US0

| | Tread (max. width) with farm tires | | Lower link end max. loading weight **W0** |
|---|---|---|---|
| | Front | Rear | |
| B2301HSD | 800 mm (31.5 in.) | 900 mm (35.4 in.) | 300 kg (660 lbs) |
| B2601HSD | 815 mm (32.1 in.) | 950 mm (37.4 in.) | |

| | Actual figures | | |
|---|---|---|---|
| | Implement weight **W1** and / or size | Max. drawbar load **W2** | Trailer loading weight **W3** Max. capacity |
| B2301<br>B2601 | As in the following list<br>(Shown on the next page) | 300 kg (660 lbs) | 1000 kg (2210 lbs) |

Lower link end max. hydraulic lifting capacity **W0**
The max. allowable load which can be put on the lower link end
Implement weight **W1**: The implement's weight which can be put on the lower link
Max. drawbar load **W2**
Trailer loading weight **W3**: The max. loading weight for trailer (without trailer's weight)

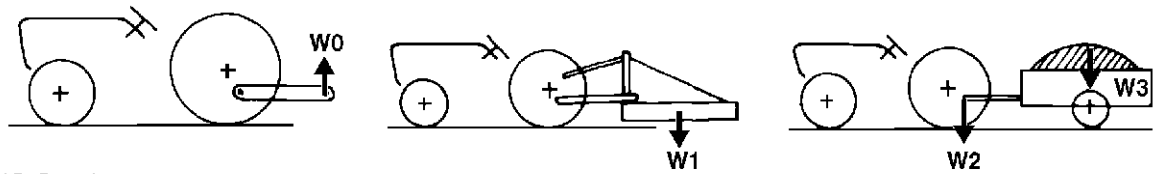


3TMABAB0P109A

■ **NOTE**
- **Implement size may vary depending on soil operating conditions.**

9Y1211156GEG0075US0

https://truckmanualshub.com/


| No. | Implement | | Remarks | B2301 | B2601 |
|---|---|---|---|---|---|
| 1 | Mower | Mid-mount | Max. cutting width | 152 cm (60 in.) | |
| | | | Max. load capacity | 140 kg (300 lbs) | |
| | | Rotary cutter (1 Blade) | Max. cutting width | 122 cm (48 in.) | |
| | | | Max. load capacity | 204 kg (450 lbs) | |
| | | Rear-mount (2 or 3 Blade) | Max. cutting width | 152 cm (60 in.) | |
| | | | Max. load capacity | 227 kg (500 lbs) | |
| | | Flail-mower | Max. cutting width | 122 cm (48 in.) | |
| | | Sickle bar | Max. cutting width | 152 cm (60 in.) | |
| 2 | Rotary tiller | | Max. cutting width | 127 cm (50 in.) | |
| | | | Max. load capacity | 213 kg (470 lbs) | |
| | | | | Necessary | |
| 3 | Bottom plow | | Max. size | 36 cm (14 in.) × 1 | |
| 4 | Disc plow | | Max. size | 56 cm (22 in.) × 1 | |
| 5 | Cultivator | | Max. size | 137 cm (54 in.)<br>1 Row | |
| 6 | Disc harrow | | Max. harrowing width | 152 cm (60 in.) | |
| | | | Max. weight | 190 kg (420 lbs) | |
| 7 | Sprayer | | Max. tank capacity | 190 L (50 U.S.gals) | |
| 8 | Front blade | | Max. cutting width | 152 cm (60 in.) | |
| | | | Sub frame | Necessary | |
| 9 | Rear blade | | Max. cutting width | 152 cm (60 in.) | |
| | | | Max. weight | 160 kg (350 lbs) | |
| 10 | Front loader | | Max. lifting capacity (Bucket center) | 360 kg (794 lbs) | |
| | | | Max. width | 127 cm (50 in.) | |
| | | | Sub frame | Necessary | |
| 11 | Box blade | | Max. cutting width | 137 cm (54 in.) | |
| | | | Max. weight | 227 kg (500 lbs) | |
| 12 | Back hoe | | Max. digging depth | 198 cm (78 in.) | |
| | | | Max. weight | 320 kg (705 lbs) | |
| | | | Sub frame | Necessary | |
| 13 | Snow blower | | Max. digging depth | 152 cm (60 in.) | |
| | | | Max. weight | 200 kg (450 lbs) | |
| | | | Sub frame | Necessary | |
| 14 | Trailer | | Max. load capacity | 1000 kg (2200 lbs) | |
| | | | Max. drawbar load | 300 kg (660 lbs) | |

■ **NOTE**

- **Implement size may vary depending on soil operating conditions.**

9Y1211156GEG0076US0

https://truckmanualshub.com/

# 1 ENGINE

https://truckmanualshub.com/

# MECHANISM

## CONTENTS

1. ENGINE BODY ..... 1-M1
[1] CLOSED BREATHER ..... 1-M1
[2] GOVERNOR ..... 1-M2

https://truckmanualshub.com/


# 1. ENGINE BODY

## [1] CLOSED BREATHER

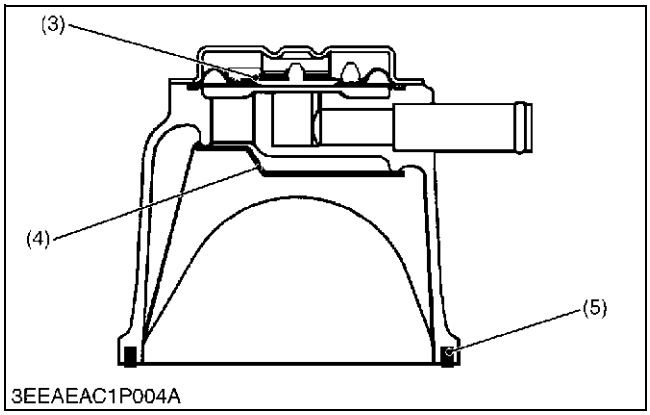


Closed breather system has been adopted to prevent the release of blow-by gas into the atmosphere.

After its oil content is filtered by oil shield (4), the blow by gas in fed back to the intake manifold through breather valve (3) to be used for re-combustion.

(1) Breather Tube
(2) Cylinder Head Cover
(3) Breather Valve
(4) Oil Shield
(5) Rubber Packing

9Y1211156ENM0001US0

https://truckmanualshub.com/


# [2] GOVERNOR

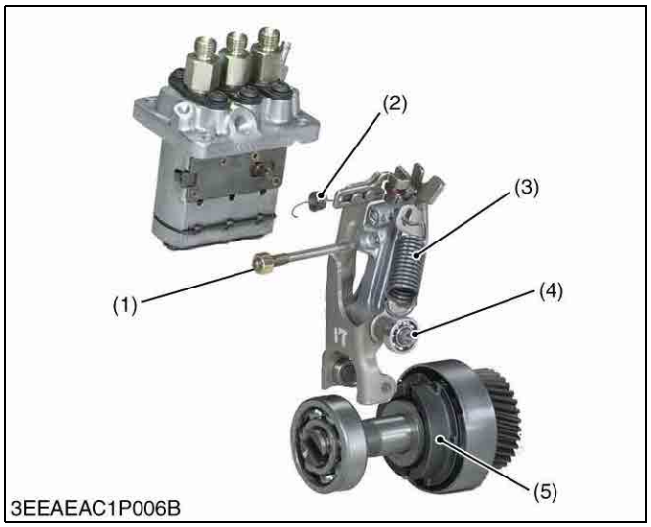

3EEAEAC1P006B

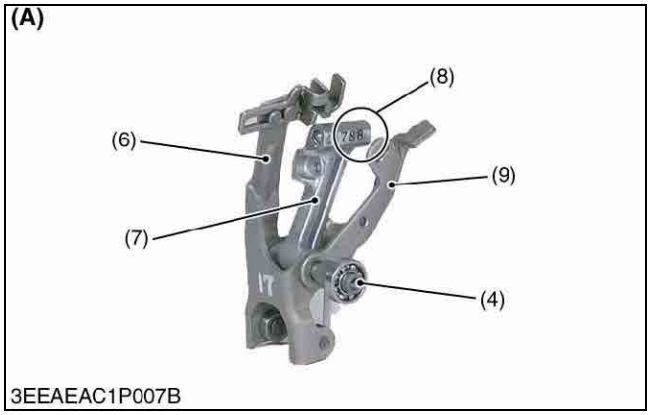

3EEAEAC1P007B

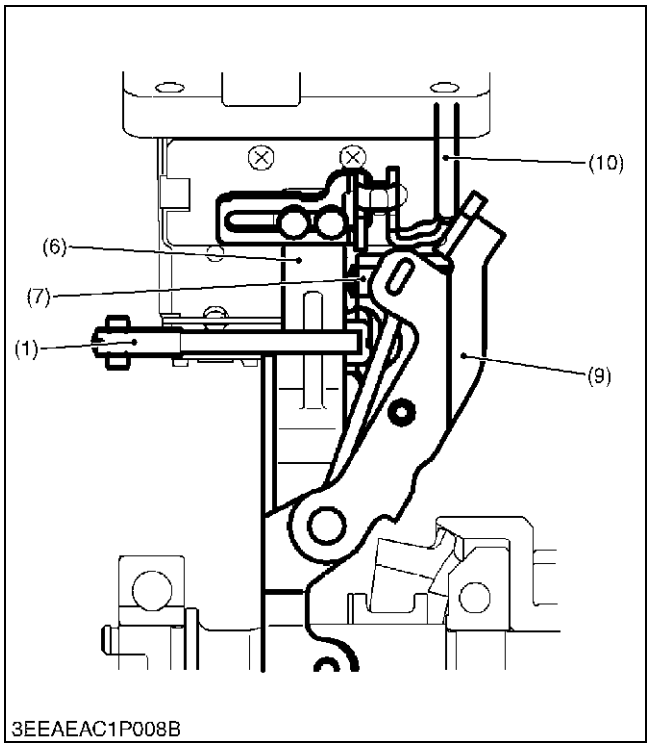

3EEAEAC1P008B

**Three Lever Type Fork Lever**

The governor system is a mechanical governor that used the flyweight (5).

The flyweight (5) is mounted on the governor shaft that rotates at the same speed as the crankshaft.

Because the feature of this mechanism takes out the engine speed directly as a centrifugal force of weight, the speed control that the change in the engine rotational speed is sensitively transmitted to fork lever assembly **(A)** and accuracy is high is enabled.

The fork lever assembly of this engine consists of fork lever 1 (6), for lever 2 (9), and the floating lever (7). A slide plate is installed in fork lever 1. The governor spring (3) is hooked to fork lever 2 (9).

The floating lever (7) installs the torque pin (8) of the output drop prevention at the overload. The start spring (2) is hooked to a slide plate, and holds the control rack in the direction of the full fuel position.

Fork lever 2 (9) and the floating lever are installed in fork lever 1 (6) with the fork lever shaft (4). The max torque limitation (1) device limits the amount of the fuel injection at the overload with the torque pin.

(1) Max Torque Limiter
(2) Start Spring
(3) Governor Spring
(4) Fork Lever Shaft
(5) Flyweight
(6) Fork Lever 1
(7) Floating Lever
(8) Torque Pin
(9) Fork Lever 2
**(A) Fork Lever Assembly**

9Y1211156ENM0002US0

**(At Rated Operation)**

When the engine operates, the fork lever 2 (9) and the floating lever (7) are moving with the fork lever 1 (6) due to the tension of the governor spring (3).

During the time, the torque pin (8) is pressed into the floating lever by centrifugal force of the governor weight (5).

The fork lever 2 (9) comes in contact with the fuel limitation bolt (10), and the fuel injection pump supplies a fuel necessary for rated operation.

(1) Max Torque Limiter
(6) Fork Lever 1
(7) Floating Lever
(9) Fork Lever 2
(10) Fuel Limitation Bolt

9Y1211156ENM0003US0

https://truckmanualshub.com/


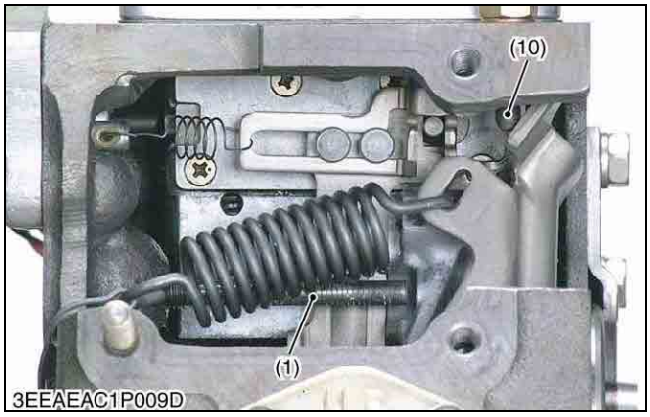


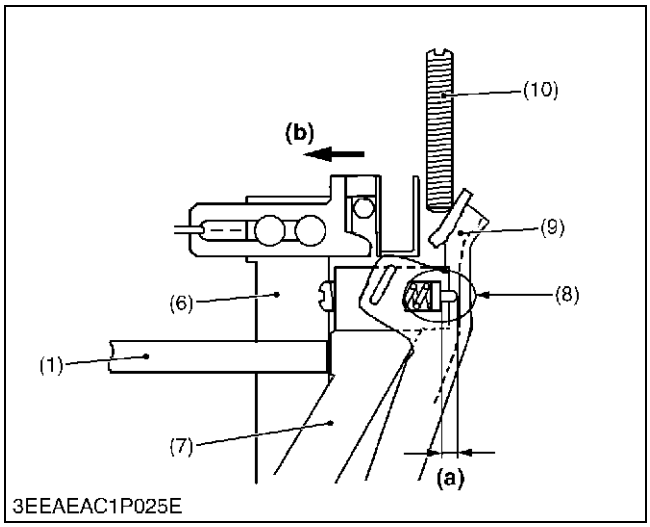


**(Overloaded Operation)**

The amount of the movement of the fork lever assembly is limited with the fuel limitation bolt (10) and can not be moved in the direction of the fuel increase.

As overload reduces the centrifugal force of the governor weight, which is pressing the torque pin (8) into the floating lever (7), the floating lever pushes the fork lever 1 (6) in the way to increase the fuel supply with the help of the torque spring tension.

The fuel supply increases **(b)** in relation to the degree of the torque pin motion, thus preventing the engine speed from dropping.

At the time, the maximum torque limiter (1) prevents superfluous fuel supply and suppresses the generation of black smoke.

(1) Max Torque Limiter
(6) Fork Lever 1
(7) Floating Lever
(8) Torque Pin
(9) Fork Lever 2
(10) Fuel Limitation Bolt

**(a) Distance to which torque pin (8) pushes fork lever 1 (6) out**
**(b) Increase of fuel**

9Y1211156ENM0004US0

https://truckmanualshub.com/

# SERVICING

## CONTENTS


1. TROUBLESHOOTING ..... 1-S1
2. SERVICING SPECIFICATIONS ..... 1-S5
3. TIGHTENING TORQUES ..... 1-S11
   [1] TRACTOR SECTION ..... 1-S11
   [2] ENGINE SECTION ..... 1-S11
4. CHECKING, DISASSEMBLING AND SERVICING ..... 1-S12
   [1] CHECKING AND ADJUSTING ..... 1-S12
      (1) Engine Body ..... 1-S12
      (2) Lubricating System ..... 1-S14
      (3) Cooling System ..... 1-S14
      (4) Fuel System ..... 1-S17
   [2] PREPARATION ..... 1-S21
      (1) Draining Lubricants and Coolant ..... 1-S21
      (2) Separating Engine from Clutch Housing ..... 1-S23
      (3) Separating Engine from Front Axle Frame ..... 1-S24
   [3] DISASSEMBLING AND ASSEMBLING ..... 1-S25
      (1) External Components ..... 1-S25
      (2) Cylinder Head and Valve and Oil Pan ..... 1-S25
      (3) Gear Case ..... 1-S28
      (4) Piston and Connecting Rod ..... 1-S32
      (5) Crankshaft ..... 1-S35
   [4] SERVICING ..... 1-S37
      (1) Cylinder Head and Valves ..... 1-S37
      (2) Idle Gear and Camshaft ..... 1-S42
      (3) Piston and Connecting Rod ..... 1-S44
      (4) Crankshaft ..... 1-S47
      (5) Cylinder ..... 1-S51
      (6) Oil Pump ..... 1-S51

https://truckmanualshub.com/


# 1. TROUBLESHOOTING

| Symptom | Probable Cause and Checking Procedure | Solution | Reference Page |
|---|---|---|---|
| **Engine Does Not Start** | 1. No fuel | Check fuel | G-8 |
| | 2. Air in the fuel system | Bleed air | G-33 |
| | 3. Water in the fuel system | Solution order<br>1. Repair or replace fuel system | 1-S17 |
| | | 2. Change fuel | G-8 |
| | 4. Fuel hose clogged | Clean or replace fuel hose | G-25 |
| | 5. Fuel filter clogged | Solution order<br>1. Replace fuel filter | G-24 |
| | | 2. Check or change fuel | G-8 |
| | 6. Excessively high viscosity of fuel or engine oil at low temperature | Check fuel or engine oil | G-8 |
| | 7. Fuel with low cetane number | Check fuel | G-8 |
| | 8. Fuel leak due to loose injection pipe retaining nut | Repair retaining nut | 1-S26 |
| | 9. Incorrect injection timing | Solution order<br>1. Check injection timing | 1-S17 |
| | | 2. Adjust injection timing | |
| | 10. Fuel camshaft worn | Solution order<br>1. Inspect camshaft | 1-S31 |
| | | 2. Replace camshaft | |
| | 11. Injection nozzle clogged | Solution order<br>1. Inspect injection nozzle | 1-S17 |
| | | 2. Replace or clean injection nozzle | |
| | 12. Injection pump malfunctioning | Repair or replace injection pump | 1-S30 |
| | 13. Seizure of crankshaft, camshaft, piston, cylinder or bearing | Solution order<br>1. Inspect crankshaft, camshaft, piston, cylinder or bearing | 1-S43 to 1-S51 |
| | | 2. Replace crankshaft, camshaft, piston, cylinder or bearing | 1-S31 to 1-S36 |
| | 14. Compression leak from cylinder | Solution order<br>1. Check compression pressure | 1-S12 |
| | | 2. Inspect or replace head gasket | 1-S27 |
| | | 3. Inspect or replace piston or piston ring | 1-S34, 1-S46 |
| | | 4. Inspect or replace cylinder | 1-S51 |
| | 15. Improper valve timing | Check or replace timing gear | 1-S31 |
| | 16. Piston ring and cylinder worn | Solution order<br>1. Inspect piston ring and cylinder | 1-S46, 1-S51 |
| | | 2. Replace piston ring or cylinder | 1-S34, 1-S51 |
| | 17. Excessive valve clearance | Solution order<br>1. Check and adjust valve clearance | 1-S13 |

https://truckmanualshub.com/


| Symptom | Probable Cause and Checking Procedure | Solution | Reference Page |
|---|---|---|---|
| **Engine Does Not Start** | 18. Stop solenoid malfunctioning | Solution order<br>1. Check or replace stop solenoid | 8-S15 |
| | | 2. Check or repair wire harness | 8-M1 |
| **Starter Does Not Operate** | 1. Battery discharged | Charge battery | 8-S10 |
| | 2. Starter malfunctioning | Solution order<br>1. Check or replace starter | 8-S15 |
| | 3. Key switch malfunctioning | Check or replace key switch | 8-S13 |
| **Engine Revolution Is Not Smooth** | 1. Fuel filter clogged or dirty | Solution order<br>1. Replace fuel filter | G-24 |
| | | 2. Check or change fuel | G-8 |
| | 2. Air cleaner clogged | Clean or change air cleaner | G-23 |
| | 3. Fuel leak due to loose injection pipe retaining nut | Repair retaining nut | 1-S26 |
| | 4. Injection pump malfunctioning | Replace injection pump | 1-S30 |
| | 5. Incorrect nozzle injection pressure | Solution order<br>1. Check injection pressure | 1-S19 |
| | | 2. Repair or clean injection nozzle | 1-S20 |
| | 6. Injection nozzle stuck or clogged | Solution order<br>1. Check injection pressure | 1-S19 |
| | | 2. Repair or clean injection nozzle | 1-S20 |
| | 7. Governor malfunctioning | Solution order<br>1. Check governor spring or fuel cam shaft | 1-S30 |
| | | 2. Replace governor spring or fuel cam shaft | 1-S30 |
| **Either White or Blue Exhaust Gas Is Observed** | 1. Excessive engine oil | Reduce to specified level | G-8 |
| | 2. Piston ring and cylinder worn or stuck | Solution order<br>1. Inspect piston ring and cylinder | 1-S46, 1-S51 |
| | | 2. Replace piston ring or cylinder | 1-S34, 1-S51 |
| | 3. Incorrect injection timing | Solution order<br>1. Check injection timing | 1-S17 |
| | | 2. Adjust injection timing | |
| | 4. Deficient compression | Solution order<br>1. Check compression pressure | 1-S12 |
| | | 2. Inspect or replace head gasket | 1-S27 |
| | | 3. Inspect or replace piston or piston ring | 1-S34, 1-S46 |
| | | 4. Inspect or replace cylinder | 1-S51 |
| **Oil Leak into Suction Pipe** | 1. Waste oil pipe clogged or deformed | Repair or replace pipe | 1-S25 |
| | 2. Piston ring seal is damaged | Replace piston ring | 1-S34 |

https://truckmanualshub.com/


| Symptom | Probable Cause and Checking Procedure | Solution | Reference Page |
|---|---|---|---|
| **Either Black or Dark Gray Exhaust Gas Is Observed** | 1. Low grade fuel used | Check fuel | G-8 |
| | 2. Fuel filter clogged | Solution order<br>1. Replace fuel filter | G-24 |
| | | 2. Check or change fuel | G-8 |
| | 3. Air cleaner clogged | Clean or change air cleaner | G-23 |
| | 4. Deficient nozzle injection | Solution order<br>1. Inspect injection nozzle | 1-S27 |
| | | 2. Replace or clean injection nozzle | |
| **Deficient Output** | 1. Incorrect injection timing | Solution order<br>1. Check injection timing | 1-S17 |
| | | 2. Adjust injection timing | |
| | 2. Injection pump malfunctioning | Replace injection pump | 1-S30 |
| | 3. Uneven fuel injection | Replace injection pump | 1-S30 |
| | 4. Deficient nozzle injection | Solution order<br>1. Inspect injection nozzle | 1-S17 |
| | | 2. Replace or clean injection nozzle | |
| | 5. Compression leak | Solution order<br>1. Check compression pressure | 1-S12 |
| | | 2. Check or replace head gasket | 1-S27 |
| | | 3. Inspect or replace piston or piston ring | 1-S34,<br>1-S46 |
| | | 4. Inspect or replace cylinder | 1-S51 |
| | 6. Gas leak from exhaust system | Repair or replace exhaust system | 1-S25 |
| | 7. Air cleaner dirty or clogged | Clean or change air cleaner | G-23 |
| **Excessive Lubricant Oil Consumption** | 1. Piston ring's gap facing the same direction | Repair piston ring gap | 1-S46 |
| | 2. Oil ring worn or stuck | Solution order<br>1. Inspect piston ring and cylinder | 1-S46,<br>1-S51 |
| | | 2. Replace piston ring or cylinder | 1-S34,<br>1-S51 |
| | 3. Piston ring groove worn | Replace piston | 1-S44 |
| | 4. Valve stem and valve guide worn | Inspect or replace valve stem and valve guide | 1-S38 |
| | 5. Crankshaft bearing and crank pin bearing worn | Inspect or replace crankshaft and crank pin | 1-S47 |
| **Fuel Mixed into Lubricant Oil** | 1. Injection pump's plunger worn | Repair or replace injection pump | 1-S30 |
| | 2. Deficient nozzle injection | Repair or replace nozzle | 1-S20 |
| | 3. Injection pump broken | Replace injection pump | 1-S30 |
| **Water Mixed into Lubricant Oil** | 1. Head gasket damaged | Replace head gasket | 1-S27 |
| | 2. Cylinder block or cylinder head flawed | Replace cylinder head | 1-S27 |

https://truckmanualshub.com/


| Symptom | Probable Cause and Checking Procedure | Solution | Reference Page |
|---|---|---|---|
| **Low Oil Pressure** | 1. Engine oil insufficient | Check engine oil | G-8 |
| | 2. Oil filter cartridge clogged | Replace oil filter cartridge | G-25 |
| | 3. Oil pump damaged | Replace oil pump | 1-S51 |
| | 4. Excessive oil clearance of crankshaft bearing | Inspect or replace crankshaft bearing | 1-S49, 1-S50 |
| | 5. Excessive oil clearance of crankpin bearing | Inspect or replace crankshaft | 1-S47 |
| **High Oil Pressure** | 1. Different type of oil | Check engine oil | G-8 |
| **Engine Overheated** | 1. Engine oil insufficient | Check engine oil | G-8 |
| | 2. Fan belt broken or elongated | Adjust or replace fan belt | 1-S25 |
| | 3. Coolant insufficient | Check coolant | G-8 |
| | 4. Radiator net and radiator fin clogged with dust | Clean radiator net and fin | G-17 |
| | 5. Inside of radiator corroded | Clean or replace radiator | G-17 |
| | 6. Coolant flow route corroded | Clean coolant flow route | G-31 |
| | 7. Radiator cap damaged | Inspect or replace radiator cap | 1-S16 |
| | 8. Radiator hose damaged | Check or replace radiator hose | G-27 |
| | 9. Thermostat valve damaged | Inspect or replace thermostat | 1-S15 |
| | 10. Unsuitable fuel used | Check fuel | G-8 |
| | 11. Head gasket damaged | Replace head gasket | 1-S27 |
| | 12. Incorrect injection timing | Solution order<br>1. Check injection timing | 1-S17 |
| | | 2. Adjust injection timing | |
| **Battery Quickly Discharged** | 1. Battery electrolyte insufficient | Check or charge battery | 8-S10 |
| | 2. Fan belt slips | Adjust or replace fan belt | 1-S25 |
| | 3. Dynamo damaged | Solution order<br>1. Check dynamo | 8-S17 |
| | | 2. Replace dynamo | 8-S24 |

9Y1211156ENS0001US0

https://truckmanualshub.com/


# 2. SERVICING SPECIFICATIONS

**ENGINE BODY**

| Item | | Factory Specification | Allowable Limit |
|---|---|---|---|
| Compression Pressure | | 3.73 to 4.11 MPa<br>38.0 to 42.0 kgf/cm$^2$<br>541 to 597 psi | 2.26 MPa<br>23.0 kgf/cm$^2$<br>327 psi |
| • Variance Among Cylinders | | – | 10 % or less |
| Valve Clearance (Cold) | | 0.145 to 0.185 mm<br>0.0057 to 0.0073 in. | – |
| Top Clearance | | 0.55 to 0.75 mm<br>0.022 to 0.029 in. | – |
| Cylinder Head Surface | Flatness | – | 0.05 mm<br>0.002 in. |
| Valve Recessing | Intake and Exhaust | 0.050 to 0.25 mm<br>0.0020 to 0.0098 in. | 0.40 mm<br>0.016 in. |
| Valve Stem to Valve Guide | Clearance | 0.035 to 0.065 mm<br>0.0014 to 0.0025 in. | 0.10 mm<br>0.0039 in. |
| • Valve Stem | O.D. | 6.960 to 6.975 mm<br>0.2741 to 0.2746 in. | – |
| • Valve Guide | I.D. | 7.010 to 7.025 mm<br>0.2760 to 0.2765 in. | – |
| Valve Guide<br>(Intake and Exhaust) | | 7.010 to 7.025 mm<br>0.2760 to 0.2765 in. | – |
| Valve Face | Angle (Intake) | 1.0 rad<br>60 ° | – |
| | Angle (Exhaust) | 0.79 rad<br>45 ° | – |
| Valve Seat | Angle (Intake) | 1.0 rad<br>60 ° | – |
| | Angle (Exhaust) | 0.79 rad<br>45 ° | – |
| | Width | 2.12 mm<br>0.0835 in. | – |
| Valve Spring | Free Length | 37.0 to 37.5 mm<br>1.46 to 1.47 in. | 36.5 mm<br>1.44 in. |
| | Tilt | – | 1.0 mm<br>0.039 in. |
| | Setting Load | 117.4 N / 31.0 mm<br>11.97 kgf / 31.0 mm<br>26.39 lbf / 1.22 in. | 100.0 N / 31.0 mm<br>10.20 kgf / 31.0 mm<br>22.48 lbf / 1.22 in. |

https://truckmanualshub.com/


| Item | | Factory Specification | Allowable Limit |
|---|---|---|---|
| Rocker Arm Shaft to Rocker Arm | Clearance | 0.016 to 0.045 mm<br>0.00063 to 0.0017 in. | 0.10 mm<br>0.0039 in. |
| • Rocker Arm Shaft | O.D. | 11.973 to 11.984 mm<br>0.47138 to 0.47181 in. | – |
| • Rocker Arm | I.D. | 12.000 to 12.018 mm<br>0.47244 to 0.47314 in. | – |
| Push Rod | Alignment | – | 0.25 mm<br>0.0098 in. |
| Tappet to Tappet Guide Bore | Clearance | 0.020 to 0.062 mm<br>0.00079 to 0.0024 in. | 0.07 mm<br>0.003 in. |
| • Tappet | O.D. | 19.959 to 19.980 mm<br>0.78579 to 0.78661 in. | – |
| • Tappet Guide | I.D. | 20.000 to 20.021 mm<br>0.78740 to 0.78822 in. | – |
| Idle Gear<br>• Crank Gear to Idle Gear 1 | Backlash | 0.0320 to 0.115 mm<br>0.00126 to 0.00452 in. | 0.15 mm<br>0.0059 in. |
| • Idle Gear 1 to Cam Gear | Backlash | 0.0360 to 0.114 mm<br>0.00142 to 0.00448 in. | 0.15 mm<br>0.0059 in. |
| • Idle Gear 1 to Injection Pump Gear | Backlash | 0.0340 to 0.116 mm<br>0.00134 to 0.00456 in. | 0.15 mm<br>0.0059 in. |
| • Idle Gear 1 to Idle Gear 2 | Backlash | 0.0330 to 0.117 mm<br>0.00130 to 0.00460 in. | 0.15 mm<br>0.0059 in. |
| Idle Gear<br>• Idle Gear 1 | Side Clearance | 0.20 to 0.51 mm<br>0.0079 to 0.020 in. | 0.80 mm<br>0.031 in. |
| • Idle Gear 2 | Side Clearance | 0.20 to 0.51 mm<br>0.0079 to 0.020 in. | 0.80 mm<br>0.031 in. |
| Camshaft | Side Clearance | 0.070 to 0.22 mm<br>0.0028 to 0.0086 in. | 0.30 mm<br>0.012 in. |
| | Alignment | – | 0.01 mm<br>0.0004 in. |
| Cam Height | Intake | 28.80 mm<br>1.134 in. | 28.75 mm<br>1.132 in. |
| | Exhaust | 29.00 mm<br>1.142 in. | 28.95 mm<br>1.140 in. |
| Camshaft Journal to Cylinder Block Bore | Oil Clearance | 0.050 to 0.091 mm<br>0.0020 to 0.0035 in. | 0.15 mm<br>0.0059 in. |
| • Camshaft Journal | O.D. | 35.934 to 35.950 mm<br>1.4147 to 1.4153 in. | – |
| • Cylinder Block Bore | I.D. | 36.000 to 36.025 mm<br>1.4173 to 1.4183 in. | – |

https://truckmanualshub.com/


| Item | | Factory Specification | Allowable Limit |
|---|---|---|---|
| Piston Pin Bore | I.D. | 22.000 to 22.013 mm<br>0.86615 to 0.86665 in. | 22.03 mm<br>0.8673 in. |
| Piston Pin to Small End Bushing | Clearance | 0.014 to 0.038 mm<br>0.00055 to 0.0014 in. | 0.15 mm<br>0.0059 in. |
| • Piston Pin | O.D. | 22.002 to 22.011 mm<br>0.86622 to 0.86657 in. | – |
| • Small End Bushing | I.D. | 22.025 to 22.040 mm<br>0.86713 to 0.86771 in. | – |
| Piston Pin to Small End Bushing (Spare Parts) | Clearance | 0.014 to 0.038 mm<br>0.00056 to 0.0014 in. | 0.15 mm<br>0.0059 in. |
| • Small End Bushing | I.D. | 22.025 to 22.040 mm<br>0.86713 to 0.86771 in. | – |
| Piston Ring Gap [D1005] | | | |
| • Top Ring | | 0.30 to 0.45 mm<br>0.012 to 0.017 in. | 1.25 mm<br>0.0492 in. |
| • Second Ring | | 0.30 to 0.45 mm<br>0.012 to 0.017 in. | 1.25 mm<br>0.0492 in. |
| • Oil Ring | | 0.25 to 0.45 mm<br>0.0099 to 0.017 in. | 1.25 mm<br>0.0492 in. |
| Piston Ring Gap [D1105] | | | |
| • Top Ring | | 0.15 to 0.25 mm<br>0.0059 to 0.0098 in. | 1.20 mm<br>0.0472 in. |
| • Second Ring | | 0.40 to 0.55 mm<br>0.016 to 0.021 in. | 1.20 mm<br>0.0472 in. |
| • Oil Ring | | 0.25 to 0.45 mm<br>0.0091 to 0.017 in. | 1.25 mm<br>0.0492 in. |
| Piston Ring to Piston Ring Groove | | | |
| • Second Ring | Clearance | 0.0950 to 0.122 mm<br>0.00374 to 0.00480 in. | 0.2 mm<br>0.008 in. |
| • Oil Ring | Clearance | 0.020 to 0.060 mm<br>0.00079 to 0.0023 in. | 0.15 mm<br>0.0059 in. |
| Connecting Rod | Alignment | – | 0.05 mm<br>0.002 in. |
| Crankshaft | Side Clearance | 0.15 to 0.31 mm<br>0.0059 to 0.012 in. | 0.50 mm<br>0.020 in. |
| | Alignment | – | 0.02 mm<br>0.0008 in. |
| Crankpin to Crankpin Bearing | Oil Clearance | 0.029 to 0.091 mm<br>0.0011 to 0.0036 in. | 0.20 mm<br>0.0079 in. |
| • Crankpin | O.D. | 39.959 to 39.975 mm<br>1.5732 to 1.5738 in. | – |
| • Crankpin Bearing | I.D. | 40.040 to 40.050 mm<br>1.5750 to 1.5767 in. | – |

https://truckmanualshub.com/


| Item | | Factory Specification | Allowable Limit |
|---|---|---|---|
| Crankshaft to Crankshaft Bearing 1 | Oil Clearance | 0.0340 to 0.114 mm<br>0.00134 to 0.00448 in. | 0.20 mm<br>0.0079 in. |
| • Crankshaft | O.D. | 47.934 to 47.950 mm<br>1.8872 to 1.8877 in. | – |
| • Crankshaft Bearing 1 | I.D. | 47.984 to 48.048 mm<br>1.8892 to 1.8916 in. | – |
| Crankshaft to Crankshaft Bearing 2 | Oil Clearance | 0.034 to 0.095 mm<br>0.0014 to 0.0037 in. | 0.20 mm<br>0.0079 in. |
| • Crankshaft Journal | O.D. | 47.934 to 47.950 mm<br>1.8872 to 1.8877 in. | – |
| • Crankshaft Bearing 2 | I.D. | 47.984 to 48.029 mm<br>1.8892 to 1.8909 in. | – |
| Crankshaft to Crankshaft Bearing 3 | Oil Clearance | 0.034 to 0.103 mm<br>0.00134 to 0.00405 in. | 0.20 mm<br>0.0079 in. |
| • Crankshaft Journal | O.D. | 51.921 to 51.940 mm<br>2.0442 to 2.0448 in. | – |
| • Crankshaft Bearing 3 | I.D. | 51.974 to 52.024 mm<br>2.0463 to 2.0481 in. | – |
| Cylinder<br>[D1005] | I.D. | 76.000 to 76.019 mm<br>2.9922 to 2.9929 in. | 76.15 mm<br>2.998 in. |
| [D1105] | I.D. | 78.000 to 78.019 mm<br>3.0709 to 3.0716 in. | 78.15 mm<br>3.077 in. |
| Cylinder Liner (Oversized)<br>[D1005] | I.D. | 76.500 to 76.519 mm<br>3.0119 to 3.0125 in. | 76.65 mm<br>3.018 in. |
| [D1105] | I.D. | 78.500 to 78.519 mm<br>3.0906 to 3.0912 in. | 78.65 mm<br>3.096 in. |

https://truckmanualshub.com/


**LUBRICATING SYSTEM**

| Item | | Factory Specification | Allowable Limit |
|---|---|---|---|
| Engine Oil Pressure | At Idle Speed | – | 49 kPa<br>0.5 kgf/cm$^2$<br>7 psi |
| | At Rated Speed | 196 to 441 kPa<br>2.0 to 4.5 kgf/cm$^2$<br>28.5 to 64 psi | 147 kPa<br>1.5 kgf/cm$^2$<br>21.3 psi |
| Inner Rotor to Outer Rotor | Clearance | 0.060 to 0.18 mm<br>0.0024 to 0.0071 in. | – |
| Outer Rotor to Pump Body | Clearance | 0.100 to 0.180 mm<br>0.00394 to 0.00708 in. | – |
| Inner Rotor to Cover | Clearance | 0.025 to 0.075 mm<br>0.00099 to 0.0029 in. | – |

**COOLING SYSTEM**

| Item | | Factory Specification | Allowable Limit |
|---|---|---|---|
| Fan Belt | Tension | 7.0 to 9.0 mm<br>0.28 to 0.35 in. | – |
| Thermostat | Valve Opening Temperature (At Beginning) | 69.5 to 72.5 °C<br>157.1 to 162.5 °F | – |
| | Valve Opening Temperature (Opened Completely) | 85 °C<br>185 °F | – |
| Radiator Cap | Pressure Falling Time | More than 10 seconds for pressure fall from 88 to 59 kPa (from 0.89 to 0.61 kgf/cm$^2$, from 12 to 8.6 psi) | – |
| Radiator | Water Leakage Test Pressure | 137 kPa<br>1.4 kgf/cm$^2$<br>20 psi | – |

https://truckmanualshub.com/


**FUEL SYSTEM**

| Item | | Factory Specification | Allowable Limit |
|---|---|---|---|
| Injection Pump | Injection Timing [D1005] | 0.2837 to 0.3097 rad (16.25 to 17.75 °) after T.D.C. | – |
| | Injection Timing [D1105] | 0.2662 to 0.3272 rad (17.25 to 18.75 °) before T.D.C. | – |
| Pump Element | Fuel Tightness | – | 13.73 MPa<br>140 kgf/cm$^2$<br>1991 psi |
| Delivery Valve | Fuel Tightness | 10 seconds<br>13.73 → 12.75 MPa<br>140 → 130 kgf/cm$^2$<br>1991 → 1849 psi | 5 seconds<br>13.73 → 12.75 MPa<br>140 → 130 kgf/cm$^2$<br>1991 → 1849 psi |
| Injection Nozzle | Injection Pressure | 13.73 to 14.71 MPa<br>140 to 150 kgf/cm$^2$<br>1990 to 2130 psi | – |
| Injection Nozzle Valve Seat | Valve Seat Tightness | No fuel leak at<br>12.75 MPa<br>130 kgf/cm$^2$<br>1849 psi | – |

9Y1211156ENS0002US0

https://truckmanualshub.com/


# 3. TIGHTENING TORQUES

Tightening torque of screws, bolts and nuts on the table below are specially specified. (For general use screws, bolts and nuts: Refer to "5. TIGHTENING TORQUES" on page G-11.)

■ **NOTE**

- **In removing and applying the bolts and nuts marked with "*", a pneumatic wrench or similar pneumatic tool, if employed, must be used with enough care not to get them seized.**
- **For "*" marked screws, bolts and nuts on the table, apply engine oil to their threads and seats before tightening.**
- **The letter "M" in Size × Pitch means that the screw, bolt or nut dimension stands for metric. The size is the nominal outside diameter in mm of the threads. The pitch is the nominal distance in mm between two threads.**

9Y1211156ENS0003US0

## [1] TRACTOR SECTION

| Item | N·m | kgf·m | lbf·ft |
|---|---|---|---|
| Power steering hose 2 | 24 to 28 | 2.5 to 2.8 | 18 to 20 |
| Engine mounting screw | 59 to 69 | 6.1 to 7.0 | 44 to 50 |

9Y1211156ENS0004US0

## [2] ENGINE SECTION

| Item | Size × Pitch | N·m | kgf·m | lbf·ft |
|---|---|---|---|---|
| Oil pressure switch | – | 15 to 19 | 1.5 to 2.0 | 11 to 14 |
| Nozzle holder | – | 35 to 39 | 3.5 to 4.0 | 26 to 28 |
| Overflow pipe nut | – | 35 to 39 | 3.5 to 4.0 | 26 to 28 |
| Nozzle holder assembly | – | 49 to 68 | 5.0 to 7.0 | 36 to 50 |
| *Cylinder head cover nuts | M7 × 1.0 | 7 to 8 | 0.7 to 0.9 | 5 to 6 |
| Injection pipe retaining nuts | M12 × 1.5 | 25 to 34 | 2.5 to 3.5 | 18 to 25 |
| *Rocker arm bracket nuts | M7 × 1.0 | 22 to 26 | 2.2 to 2.7 | 16 to 19 |
| *Cylinder head screw | M10 × 1.25 | 64 to 68 | 6.5 to 7.0 | 47 to 50 |
| *Fan drive pulley screw | M14 × 1.5 | 236 to 245 | 24.0 to 25.0 | 174 to 180 |
| *Connecting rod screw | M8 × 1.0 | 42 to 46 | 4.2 to 4.7 | 31 to 33 |
| *Flywheel screw | M10 × 1.25 | 53.9 to 58.8 | 5.5 to 6.0 | 39.8 to 43.4 |
| *Bearing case cover screws | M6 × 1.0 | 10.8 to 12.2 | 1.10 to 1.25 | 7.96 to 9.04 |
| *Main bearing case screw 2 | M9 × 1.25 | 49 to 53 | 5.0 to 5.5 | 37 to 39 |
| *Main bearing case screw 1 | M8 × 1.25 | 30 to 34 | 3.0 to 3.5 | 22 to 25 |

9Y1211156ENS0005US0

https://truckmanualshub.com/


# 4. CHECKING, DISASSEMBLING AND SERVICING

## [1] CHECKING AND ADJUSTING

### (1) Engine Body

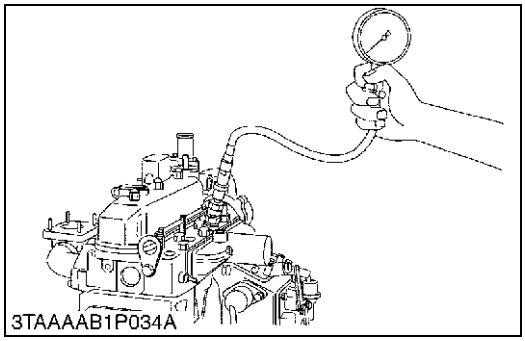


**Compression Pressure**

1. Operate the engine until it is warmed up.
2. Stop the engine.
3. Remove the air cleaner, the muffler and all glow plugs (or nozzles).
4. Set a compression tester with the adaptor to the glow plug hole (or nozzle hole).
   Nozzle Hole: Adaptor **H**
   Glow Plug Hole: Adaptor **L**
5. After making sure that the stop lever is set at the stop position (non-injection), operate the engine with the starter and measure the compression pressure.
6. Repeat steps 4 and 5 for each cylinder.
7. If the measurement is below the allowable limit, apply a small amount of oil to the cylinder wall through the glow plug hole (or nozzle hole) and measure the compression pressure again.
8. If the compression pressure is still less than the allowable limit, check the top clearance, valve clearance and cylinder head.
9. If the compression pressure increases after applying oil, check the cylinder wall and piston rings.

■ **NOTE**

- **Check the compression pressure with the specified valve clearance.**
- **Always use a fully charged battery for performing this test.**
- **Variances in cylinder compression values should be under 10 %.**

| | | |
|---|---|---|
| Compression pressure | Factory specification | 3.73 to 4.11 MPa<br>38.0 to 42.0 kgf/cm$^2$<br>541 to 597 psi |
| | Allowable limit | 2.26 MPa<br>23.0 kgf/cm$^2$<br>327 psi |

9Y1211156ENS0006US0

https://truckmanualshub.com/


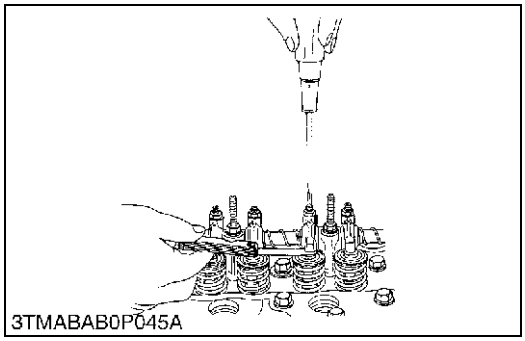


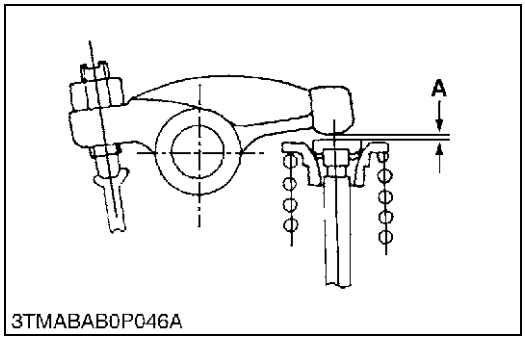


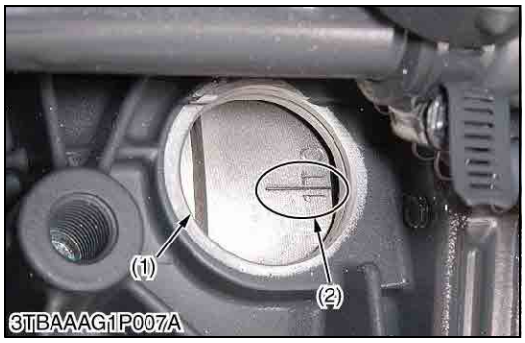


## Valve Clearance 1

■ **IMPORTANT**

- **Valve clearance must be checked and adjusted when engine is cold.**

1. Remove the head cover, the glow plugs and the timing window cover on the clutch housing.
2. Align the **"1TC"** mark line on the flywheel and center of timing window so that the No. 1 piston comes to the compression top dead center.
3. Check the following valve clearance marked with "☆" using a feeler gauge.
4. If the clearance is not within the factory specifications, adjust with the adjusting screw.

| | | |
|---|---|---|
| Valve clearance | Factory specification | 0.145 to 0.185 mm<br>0.0057 to 0.0073 in. |

■ **NOTE**

- **The "TC" marking line on the flywheel is just for No. 1 cylinder. There is no "TC" marking for the other cylinders.**
- **No. 1 piston comes to the T.D.C. position when the "TC" marking line is aligned with center of timing window on front case. Turn the flywheel 0.26 rad (15 °) clockwise and counterclockwise to see if the piston is at the compression top dead center or the overlap position. Now referring to the table below, readjust the valve clearance. (The piston is at the compression top dead center when both the IN. and EX. valves do not move; it is at the overlap position when both the valves move.)**
- **Finally turn the flywheel 6.28 rad (360 °) and align the "TC" marking line and the center of timing window. Adjust all the other valve clearance as required.**
- **After turning the flywheel counterclockwise twice or three times, recheck the valve clearance, firmly tighten the lock nut of the adjusting screw.**

| **Adjustable cylinder location of piston** | | **Number of cylinders Valve arrangement** | | | |
|---|---|---|---|---|---|
| | | **3-cylinder** | | **4-cylinder** | |
| | | **IN.** | **EX.** | **IN.** | **EX.** |
| When No. 1 piston comes to compression top dead center | No. 1 | ☆ | ☆ | ☆ | ☆ |
| | No. 2 | | ☆ | ☆ | |
| | No. 3 | ☆ | | | ☆ |
| | No. 4 | | | | |
| When No. 1 piston comes to overlap position | No. 1 | | | | |
| | No. 2 | ☆ | | | ☆ |
| | No. 3 | | ☆ | ☆ | |
| | No. 4 | | | ☆ | ☆ |

☆: Valve clearance is adjustable.

(1) Timing Window
(2) TC Mark Line

**A: Valve Clearance**

9Y1211156ENS0007US0

https://truckmanualshub.com/


## (2) Lubricating System

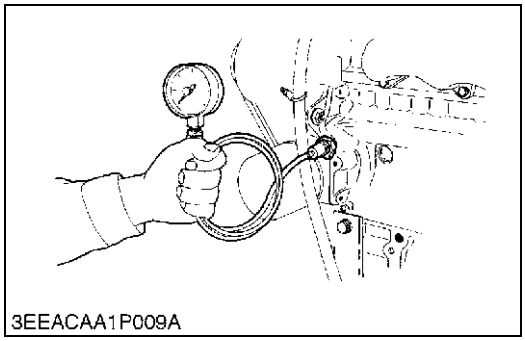
3EEACAA1P009A

**Engine Oil Pressure**

1. Remove the engine oil pressure switch, and set an oil pressure tester.
2. Start the engine. After warming up, measure the oil pressure of both idling and rated speeds.
3. If the oil pressure is less than the allowable limit, check the following.
   - Engine oil insufficient
   - Oil pump damaged
   - Oil strainer clogged
   - Oil filter cartridge clogged
   - Oil gallery clogged
   - Excessive oil clearance
   - Foreign matter in the relief valve

| | | | |
|---|---|---|---|
| Engine oil pressure | At idle speed | Allowable limit | 49 kPa<br>0.5 kgf/cm$^2$<br>7 psi |
| | At rated speed | Factory specification | 196 to 441 kPa<br>2.0 to 4.5 kgf/cm$^2$<br>28.5 to 64 psi |
| | | Allowable limit | 147 kPa<br>1.5 kgf/cm$^2$<br>21.3 psi |

**(When reassembling)**

- After checking the engine oil pressure, tighten the engine oil pressure switch to the specified torque.

| | | |
|---|---|---|
| Tightening torque | Oil pressure switch | 15 to 19 N·m<br>1.5 to 2.0 kgf·m<br>11 to 14 lbf·ft |

9Y1211156ENS0008US0

## (3) Cooling System

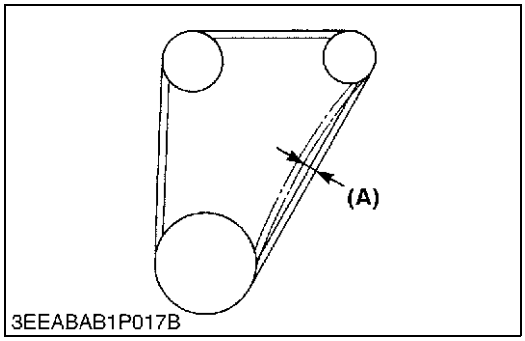

3EEABAB1P017B

**Fan Belt Tension**

1. Measure the deflection **(A)**, depressing the belt halfway between the fan drive pulley and dynamo pulley at specified force (98 N, 10 kgf, 22 lbf).
2. If the measurement is not within the factory specifications, loosen the dynamo mounting screws and relocate the dynamo to adjust.

| | | |
|---|---|---|
| Deflection **(A)** | Factory specification | 7.0 to 9.0 mm<br>0.28 to 0.35 in. |

9Y1211156ENS0009US0

https://truckmanualshub.com/


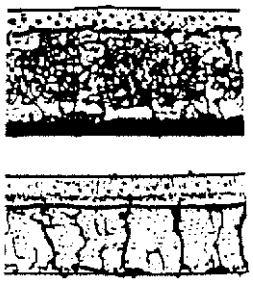
3EEABAB1P019A

## Fan Belt Damage and Wear

1. Check the fan belt for damage.
2. If the fan belt is damaged, replace it.
3. Check if the fan belt is worn and sunk in the pulley groove.
4. If the fan belt is nearly worn out and deeply sunk in the pulley groove, replace it.

**(A) Good** **(B) Bad**

9Y1211156ENS0010US0

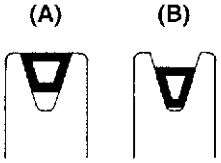

3EEABAB1P018A

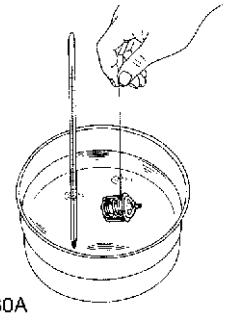
3EEABAB1P160A

## Thermostat Valve Opening Temperature

1. Suspend the thermostat in the water by a string with its end inserted between the valve and seat.
2. Heating the water gradually, read the temperature when the valve opens and leaves the string.
3. Continue heating and read the temperature when the valve opens approx. 8 mm (0.3 in.).
4. If the measurement is not within the factory specifications, replace the thermostat.

| | | |
|---|---|---|
| Thermostat's valve opening temperature | Factory specification | 69.5 to 72.5 °C<br>157.1 to 162.5 °F |
| Temperature at which thermostat completely open | Factory specification | 85 °C<br>185 °F |

9Y1211156ENS0011US0

https://truckmanualshub.com/


**CAUTION**

- **When removing the radiator cap, wait at least ten minutes after the engine has stopped and cooled down. Otherwise, hot water may gush out, scalding nearby people.**

9Y1211156ENS0012US0

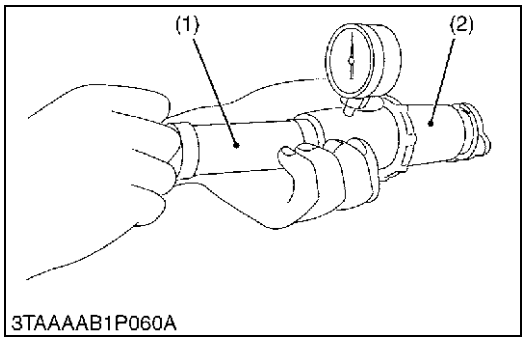


## Radiator Cap Air Leakage

1. Set a radiator tester (1) and adaptor (2) on the radiator cap.
2. Apply the specified pressure 88 kPa (0.89 kgf/cm$^2$, 12 psi), and measure the time for the pressure to fall to 59 kPa (0.61 kgf/cm$^2$, 8.6 psi).
3. If the measurement is less than the factory specification, replace the radiator cap.

| | | |
|---|---|---|
| Pressure falling time | Factory specification | More than 10 seconds for pressure fall from 88 to 59 kPa (from 0.89 to 0.61 kgf/cm$^2$, from 12 to 8.6 psi) |

(1) Radiator Tester (2) Adaptor

9Y1211156ENS0013US0

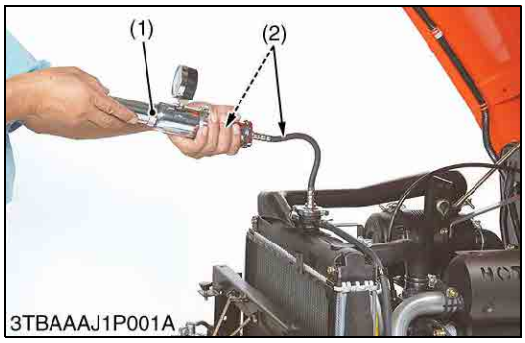


## Radiator Water Leakage

1. Pour a specified amount of water into the radiator.
2. Set a radiator tester (1) and an adaptor (2) and raise the water pressure to the specified pressure.
3. Check the radiator for water leaks.
4. For water leak from the pinhole, repair with the radiator cement. When water leak is excessive, replace the radiator.

| | | |
|---|---|---|
| Radiator water leakage test pressure | Factory specification | 137 kPa<br>1.4 kgf/cm$^2$<br>20 psi |

(1) Radiator Tester (2) Adaptor

9Y1211156ENS0014US0

https://truckmanualshub.com/


# (4) Fuel System

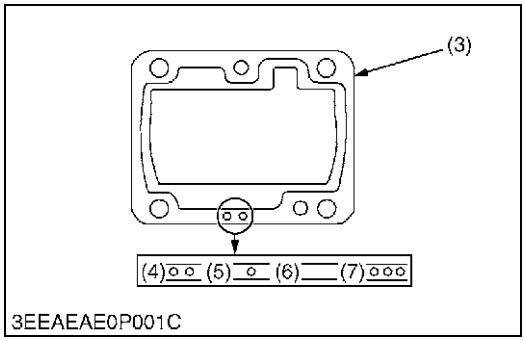


**Injection Timing**

1. Remove the injection pipes.
2. Remove the engine stop solenoid.
3. Turn the flywheel counterclockwise (facing the flywheel) until fuel flows from the delivery valve holder.
4. Continue to turn the flywheel slowly, and stop it as soon as the fuel level at the tip of the delivery valve holder begins to increase.
5. Check to see if the timing angle lines on the flywheel is aligned with the alignment mark (2).
6. If the injection timing is out of adjustment, readjust the timing with shims.

| | | |
|---|---|---|
| Injection timing [D1005] | Factory specification | 0.2837 to 0.3097 rad (16.25 to 17.75 °) after T.D.C. |
| Injection timing [D1105] | Factory specification | 0.2662 to 0.3272 rad (17.25 to 18.75 °) before T.D.C. |

■ **NOTE**

- **The sealant is applied to both sides of the shim (soft metal gasket shim). The liquid gasket is not required for assembling.**
- **Shims are available in thickness of 0.20 mm (0.0079 in.), 0.25 mm (0.0098 in.), 0.30 mm (0.012 in.), 0.35 mm (0.014 in.) and 0.175 mm (0.00689 in.). Combine these shims for adjustments.**
- **Addition or reduction of shim (0.025 mm, 0.00098 in.) delays or advances the injection timing by approx. 0.0044 rad (0.25 °).**
- **In disassembling and replacing the injection pump, be sure to use the same number of new shims with the same thickness.**
- **Refer to figure below to check the thickness of the shims.**

(1) Timing Line
(2) Alignment Mark
(3) Shim (Soft Metal Gasket Shim)
(4) Two-holes: 0.20 mm (0.0079 in.)
Two-holes: 0.175 mm (0.00689 in.)
(5) One-hole: 0.25 mm (0.0098 in.)
(6) Without hole: 0.30 mm (0.012 in.)
(7) Three-holes: 0.35 mm (0.014 in.)

**(A) Engine mounted on the tractor**
**(B) Engine only**

9Y1211156ENS0015US0

https://truckmanualshub.com/


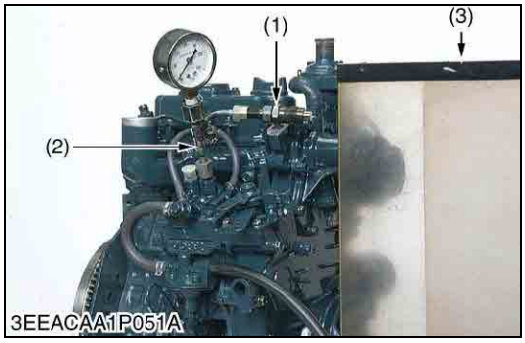


## Fuel Tightness of Pump Element

1. Remove the engine stop solenoid.
2. Remove the injection pipes and glow plugs.
3. Install the injection pump pressure tester to the injection pump.
4. Install the injection nozzle (1) jetted with the proper injection pressure to the injection pump pressure tester (2). (Refer to the photo.).
5. Set the speed control lever to the maximum speed position.
6. Operate the starter to increase the pressure.
7. If the pressure can not reach the allowable limit, replace the pump with new one or repair with a Kubota-authorized pump service shop.

| | | |
|---|---|---|
| Fuel tightness of pump element | Allowable limit | 13.73 MPa<br>140 kgf/cm$^2$<br>1991 psi |

■ **NOTE**
- **Never try to disassemble the injection pump assembly. For repairs, you are strongly requested to contact a Kubota-authorized pump service shop.**

(1) Injection Nozzle
(2) Injection Pump Pressure Tester
(3) Protection Cover for Jetted Fuel

9Y1211156ENS0016US0

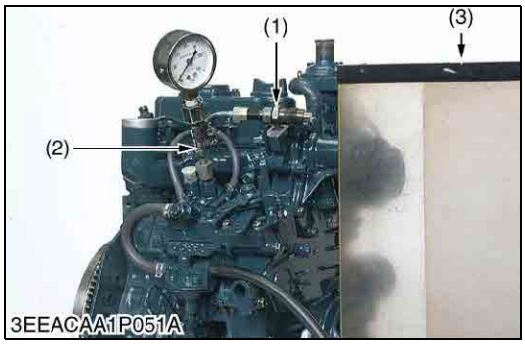


## Fuel Tightness of Delivery Valve

1. Remove the engine stop solenoid.
2. Remove the injection pipes and glow plugs.
3. Set a pressure tester to the fuel injection pump.
4. Install the injection nozzle (1) jetted with the proper injection pressure to the injection pump pressure tester (2).
5. Operate the starter to increase the pressure.
6. Stop the starter when the fuel jets from the injection nozzle. After that, turn the flywheel by the hand and raise the pressure to approx. 13.73 MPa (140 kgf/cm$^2$, 1991 psi).
7. Now turn the flywheel back about half a turn (to keep the plunger free). Keep the flywheel at this position and clock the time taken for the pressure to drop from 13.73 to 12.75 MPa (from 140 to 130 kgf/cm$^2$, from 1991 to 1849 psi).
8. Measure the time needed to decrease the pressure from 13.73 to 12.75 MPa (from 140 to 130 kgf/cm$^2$, from 1991 to 1849 psi).
9. If the measurement is less than allowable limit, replace the pump with new one or repair with a Kubota-authorized pump service shop.

| | | |
|---|---|---|
| Fuel tightness of delivery valve | Factory specification | 10 seconds<br>13.73 → 12.75 MPa<br>140 → 130 kgf/cm$^2$<br>1991 → 1849 psi |
| | Allowable limit | 5 seconds<br>13.73 → 12.75 MPa<br>140 → 130 kgf/cm$^2$<br>1991 → 1849 psi |

■ **NOTE**
- **Never try to disassemble the injection pump assembly. For repairs, you are strongly requested to contact a Kubota-authorized pump service shop.**

(1) Injection Nozzle
(2) Injection Pump Pressure Tester
(3) Protection Cover for Jetted Fuel

9Y1211156ENS0017US0

https://truckmanualshub.com/


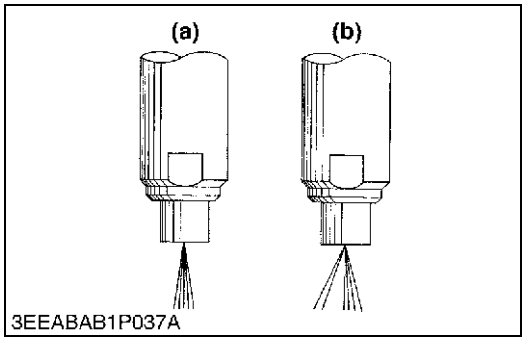

3EEABAB1P037A

## Nozzle Spraying Condition

**CAUTION**

- **Check the injection pressure and condition after you make sure that there is nobody standing in the direction the fume goes.**
- **If the fume from the nozzle directly injects the human body, cells may be destroyed and blood poisoning may be caused.**
- **Use eyes protector on eyes before inspecting the high pressure fuel from the fuel injection nozzle temporarily.**
- **Set the protection board for jetted fuel near the tractor before inspecting the high pressure fuel from the injection nozzle temporarily.**
- **Use face protector on face before inspecting the high pressure fuel from the fuel injection nozzle temporarily.**
- **Use leather gloves or protector on hands, arm covers on arms and protector on body before inspecting the high pressure fuel from the fuel injection nozzle temporarily.**

1. Set the injection nozzle to a nozzle tester, and check the nozzle spraying condition.
2. If the spraying condition is damaged, replace the nozzle piece.

**(a) Good** **(b) Bad**

9Y1211156ENS0018US0

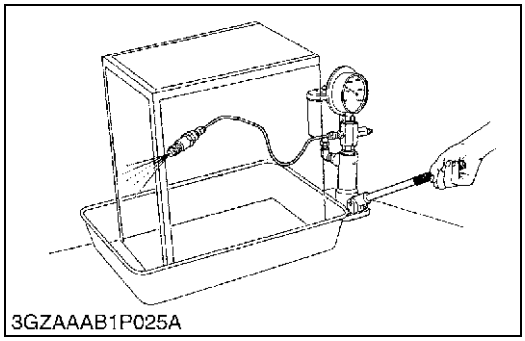
3GZAAAB1P025A

## Fuel Injection Pressure

1. Set the injection nozzle to a nozzle tester.
2. Slowly move the tester handle to measure the pressure at which fuel begins jetting out from the nozzle.
3. If the measurement is not within the factory specifications, replace the adjusting washer (1) in the nozzle holder to adjust it.

| | | |
|---|---|---|
| Fuel injection pressure | Factory specification | 13.73 to 14.71 MPa<br>140 to 150 kgf/cm$^2$<br>1990 to 2130 psi |

**(Reference)**

- Pressure variation with 0.01 mm (0.0004 in.) difference of adjusting washer thickness:
  Approx. 235 kPa (2.4 kgf/cm$^2$, 34 psi)

(1) Adjusting Washer

9Y1211156ENS0019US0

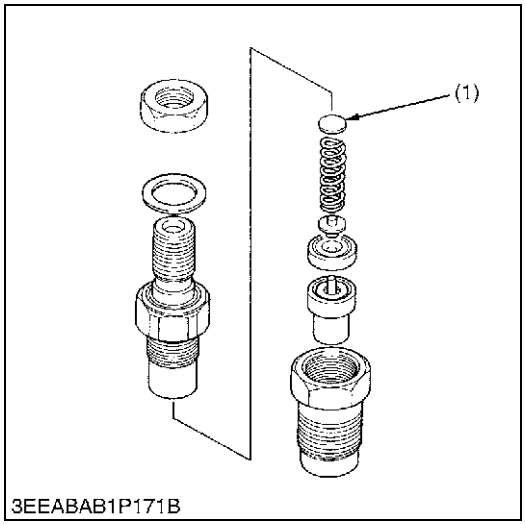

3EEABAB1P171B

https://truckmanualshub.com/


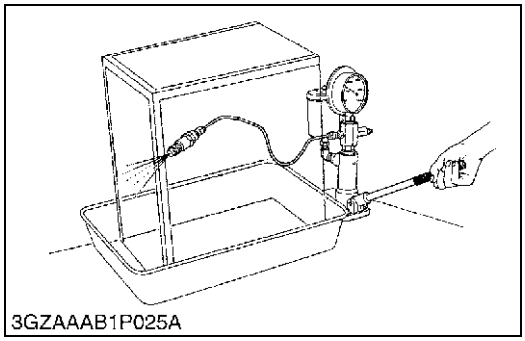
3GZAAAB1P025A

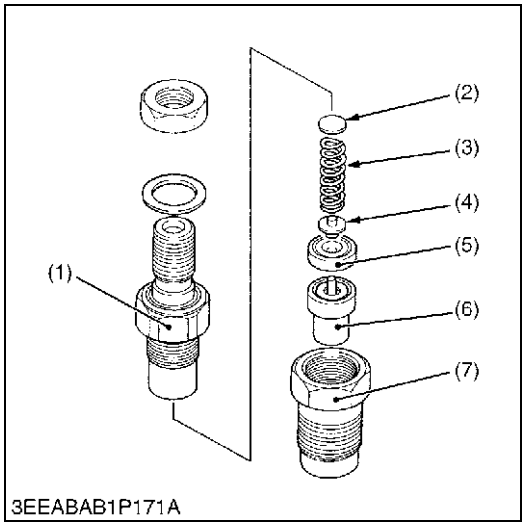

3EEABAB1P171A

## Valve Seat Tightness

1. Set the injection nozzle to a nozzle tester.
2. Raise the fuel pressure, and keep at 12.75 MPa (130 kgf/cm$^2$, 1849 psi) for 10 seconds.
3. If any fuel leak is found, replace the nozzle piece.

| | | |
|---|---|---|
| Valve seat tightness | Factory specification | No fuel leak at<br>12.75 MPa<br>130 kgf/cm$^2$<br>1849 psi |

9Y1211156ENS0020US0

## Nozzle Holder

1. Secure the nozzle retaining nut (7) with a vise.
2. Remove the nozzle holder (1), and remove parts inside.

**(When reassembling)**

- Assemble the nozzle in clean fuel oil.
- Install the push rod (4), noting its direction.
- After assembling the nozzle, be sure to adjust the fuel injection pressure.

| | | |
|---|---|---|
| Tightening torque | Nozzle holder | 35 to 39 N·m<br>3.5 to 4.0 kgf·m<br>26 to 28 lbf·ft |
| | Overflow pipe nut | 35 to 39 N·m<br>3.5 to 4.0 kgf·m<br>26 to 28 lbf·ft |
| | Nozzle holder assembly | 49 to 68 N·m<br>5.0 to 7.0 kgf·m<br>36 to 50 lbf·ft |

(1) Nozzle Holder
(2) Adjusting Washer
(3) Nozzle Spring
(4) Push Rod
(5) Distance Piece
(6) Nozzle Piece
(7) Nozzle Retaining Nut

9Y1211156ENS0021US0

https://truckmanualshub.com/


# [2] PREPARATION

## (1) Draining Lubricants and Coolant

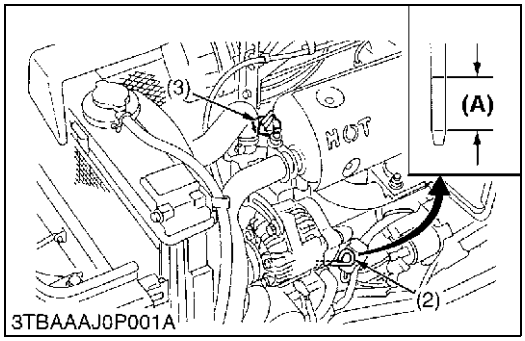


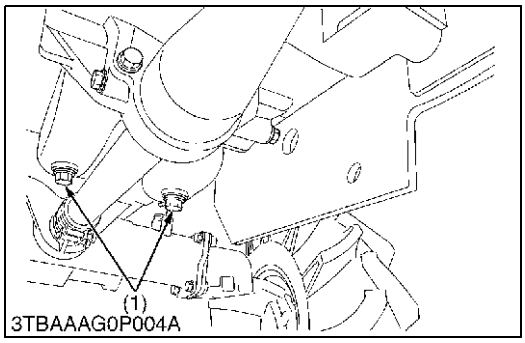


**Draining Engine Oil**

**CAUTION**

- **Before changing oil, be sure to stop the engine.**

1. Start and warm up the engine for approx. 5 minutes.
2. Place an oil pan underneath the engine.
3. To drain the used oil, remove the drain plug (1) at the bottom of the engine and drain the oil completely.
4. Screw in the drain plug (1).
5. Fill new oil up to upper line on the dipstick (2).

■ **IMPORTANT**

- **When using an oil of different manufacture or viscosity from the previous one, remove all of the old oil.**
- **Never mix two different types of oil.**
- **Use the proper SAE Engine Oil according to ambient temperatures.**
  **Refer to "4. LUBRICANTS, FUEL AND COOLANT" on page G-8.**

| | |
|---|---|
| Engine oil capacity | 3.1 L<br>3.3 U.S.qts<br>2.8 Imp.qts |

(1) Drain Plug
(2) Dipstick
(3) Oil Inlet Plug

**(A) Oil level is acceptable within this range.**

9Y1211156ENS0022US0

https://truckmanualshub.com/


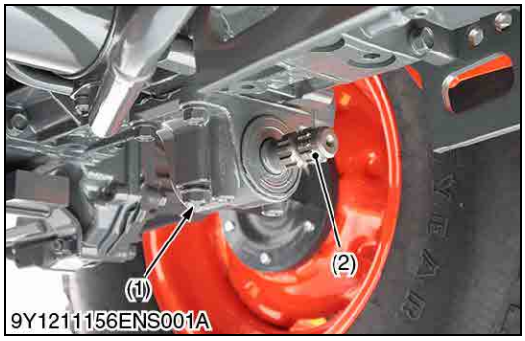


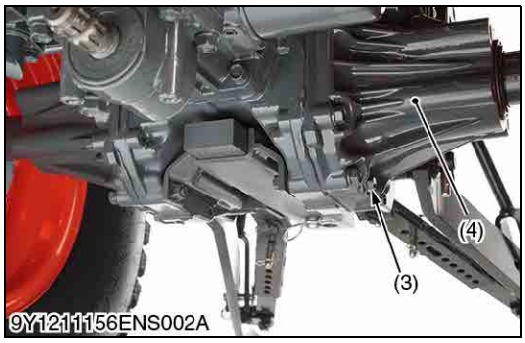


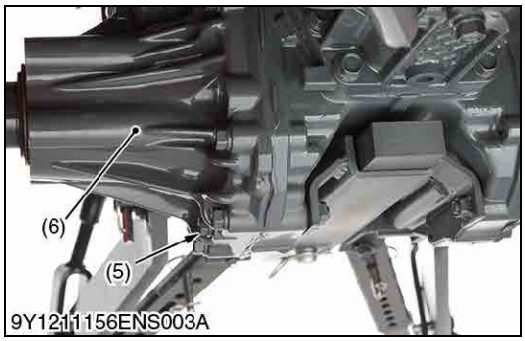


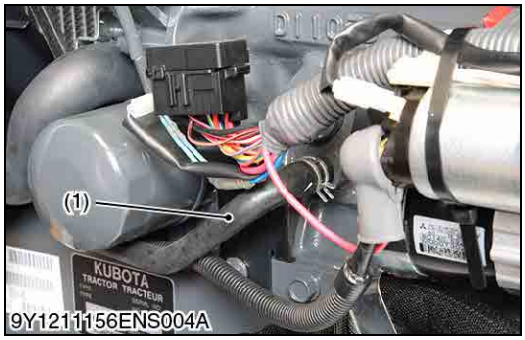


## Draining Transmission Fluid

**CAUTION**

- **Stop the engine before checking and changing the transmission fluid.**

1. Place the oil pan under the tractor.
2. Remove the drain plugs (1), (3), (5) at the mid-PTO shaft and at the bottom of the rear axle cases (4), (6).
3. Drain the transmission fluid.
4. After draining the transmission fluid, reinstall the drain plugs (1), (3), (5).

**IMPORTANT**

- **Use only KUBOTA UDT oil. Use of other oils may damage the transmission or hydraulic system.**
  **Refer to "4. LUBRICANTS, FUEL AND COOLANT" on page G-8.**
- **Never work the tractor immediately after changing the transmission oil. Keep the engine at medium speed for a few minutes to prevents damage to the transmission.**
- **Do not mix different brands oil together.**

| | |
|---|---|
| Transmission fluid capacity | 15 L<br>4.0 U.S.gals<br>3.3 Imp.gals |

(1) Drain Plug
(2) Mid-PTO Shaft
(3) Drain Plug
(4) Rear Axle Case (L.H.)
(5) Drain Plug
(6) Rear Axle Case (R.H.)

9Y1211156ENS0023US0

## Draining Coolant

**CAUTION**

- **Never remove the radiator cap until coolant temperature is well below its boiling point. Then loosen cap slightly to the stop to relieve any excess pressure before removing cap completely.**

1. Stop the engine and let cool down.
2. Disconnect the radiator hose (1) at the engine side.
3. Remove the radiator cap to completely drain the coolant.
4. After all coolant is drained, connect the radiator hose (1).

**(When reassembling)**

| | | |
|---|---|---|
| Coolant | Capacity | 3.8 L<br>4.0 U.S.qts<br>3.3 Imp.qts |

(1) Radiator Hose

9Y1211156ENS0024US0

https://truckmanualshub.com/


## (2) Separating Engine from Clutch Housing

### Bonnet, Side Cover and Battery Cord

1. Open the bonnet (1).
2. Disconnect the battery negative cord.
3. Disconnect the head light connectors and remove the bonnet (1) side covers (2).

■ **NOTE**

- **When disconnecting the battery cords, disconnect the grounding cord first. When connecting, positive cord first.**

(1) Bonnet
(2) Side Cover
(3) Battery

9Y1211156ENS0025US0

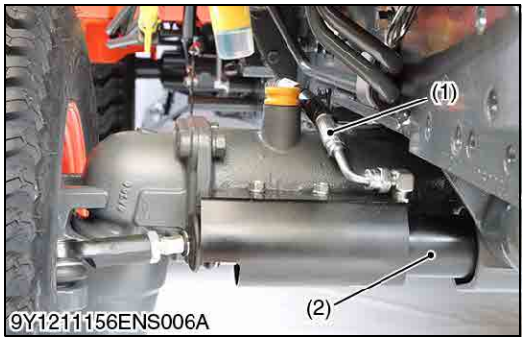


### Hydraulic Hoses from Power Steering Cylinder

1. Disconnect the hydraulic hoses (1), (3) from the power steering cylinder (2).

(1) Hydraulic Hose (R.H.)
(2) Power Steering Cylinder
(3) Hydraulic Hose (L.H.)

9Y1211156ENS0026US0

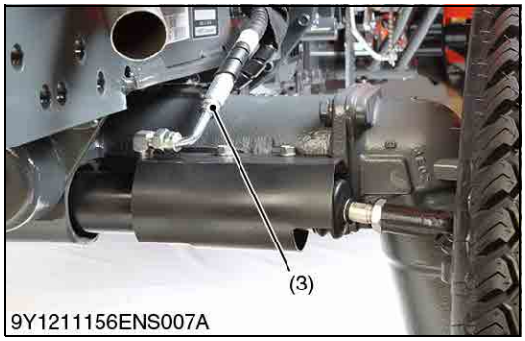


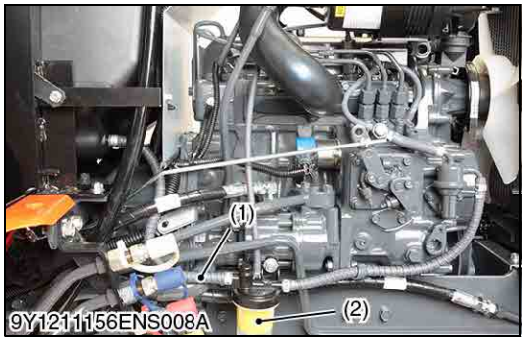


### Fuel

1. Disconnect the fuel hose (1) from the fuel filter (2).
2. Drain the fuel to the fuel tank completely.

(1) Fuel Hose (from Fuel Tank)
(2) Fuel Filter

9Y1211156ENS0027US0

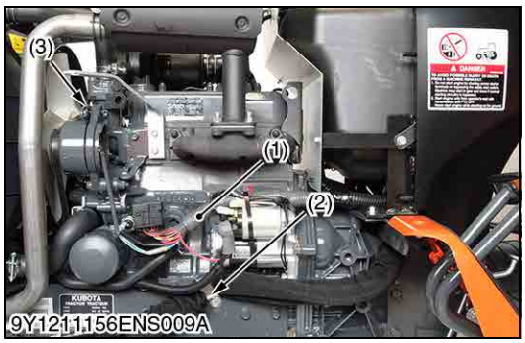


### Wiring Harness, Hour Meter Cable and Clamp (Left Side)

1. Disconnect the wiring harness (1) from battery, dynamo, engine and starter.
2. Remove the clamp (2).
3. Loosen the dynamo mounting bolts and remove the hour meter cable (3).

(1) Wiring Harness
(2) Clamp
(3) Hour Meter Cable

9Y1211156ENS0028US0

https://truckmanualshub.com/

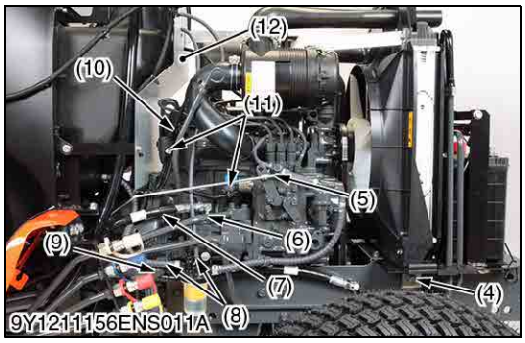


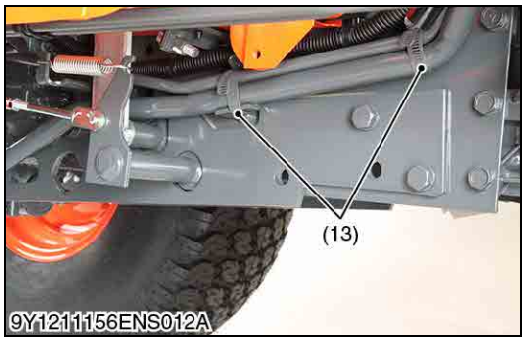


**Accelerator Rod, Power Steering Hose, Fuel Hoses, Connectors and Others (Right Side)**

1. Remove the spring plates (1), oil cooler mounting bolts (2) and oil cooler (3).
2. Remove the clamp (4) and the accelerator rod (5).
3. Disconnect the power steering hose (7), hydraulic delivery pipe (6) and hydraulic inlet hose (9).
4. Disconnect the fuel hoses (8).
5. Disconnect the connectors (11) and glow plug harness (10).
6. Remove the shuttle plate (12).
7. Disconnect the clamp (13).

| | | |
|---|---|---|
| Tightening torque | Power steering hose 2 | 24 to 28 N·m<br>2.5 to 2.8 kgf·m<br>18 to 20 lbf·ft |

(1) Spring Plate
(2) Bolt
(3) Oil Cooler
(4) Clamp
(5) Accelerator Rod
(6) Hydraulic Delivery Pipe
(7) Power Steering Hose
(8) Fuel Hose
(9) Hydraulic Inlet Hose
(10) Glow Plug Harness
(11) Connector
(12) Shuttle Plate
(13) Clamp

9Y1211156ENS0029US0

**Separating Clutch Housing**

1. Support the transmission with a disassembling stand.
2. Hook the engine with a hoist.
3. Remove the docking bolts and nuts between the engine and the front case.

**(When reassembling)**

- Align the spline between the front wheel drive shaft and the coupling securely.
- Tighten the docking bolts between the engine and the front case securely.
- Apply liquid gasket (Three Bond 1206D or equivalent) to the joint face of the engine and the front case.

9Y1211156ENS0030US0

## (3) Separating Engine from Front Axle Frame

**Separating Engine from Front Axle Frame**

■ **NOTE**

- **When you replace the engine with new one, please record the serial number of new engine and the parts number which is incorporate with its new engine.**

1. Remove the engine and front axle frame mounting screw and separate the engine from the front axle frame.

| | | |
|---|---|---|
| Tightening torque | Engine mounting screw | 59 to 69 N·m<br>6.1 to 7.0 kgf·m<br>44 to 50 lbf·ft |

9Y1211156ENS0031US0

https://truckmanualshub.com/


# [3] DISASSEMBLING AND ASSEMBLING

## (1) External Components

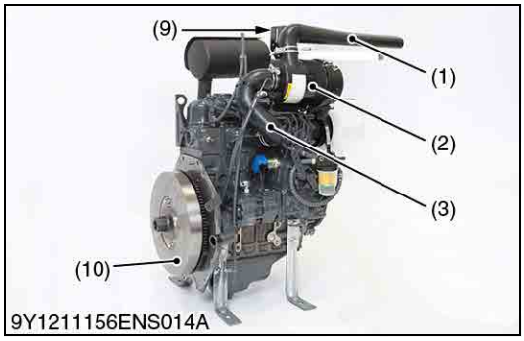


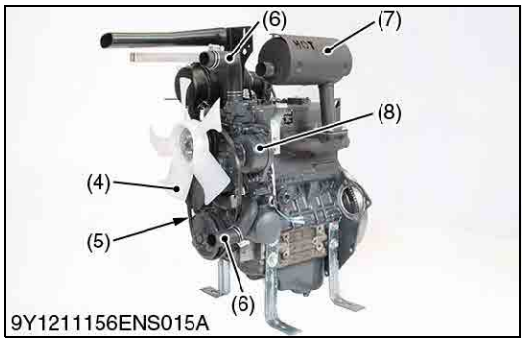


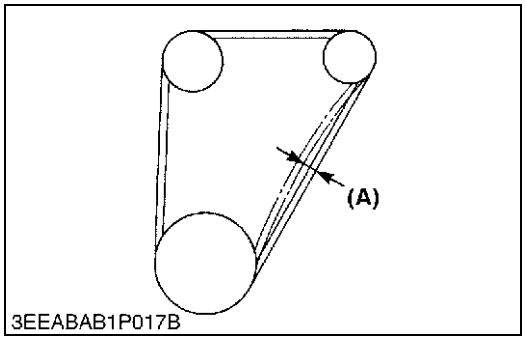


**Fan, Water Hose, Fan Belt, Dynamo, Muffler, Air Cleaner, Air Cleaner Bracket, Inlet Hose and etc.**

1. Remove the external components as shown in the picture.

**(When reassembling)**

- Check to see that there are no crack on the fan belt surface.

■ **IMPORTANT**

- **When installing the fan belt (5), be sure to adjust the fan belt tension.**

| | | |
|---|---|---|
| Fan belt deflection **(A)** | Factory specification | 7.0 to 9.0 mm<br>0.28 to 0.35 in. |

■ **NOTE**

- **When remove the compressor, condenser and receiver, be careful not to damage the hose bind.**

(1) Inlet Hose
(2) Air Cleaner
(3) Inlet Hose
(4) Fan
(5) Fan Belt
(6) Water Hose
(7) Muffler
(8) Dynamo
(9) Air Cleaner Bracket
(10) Steel Plate

**(A) Deflection**

9Y1211156ENS0032US0

## (2) Cylinder Head and Valve and Oil Pan

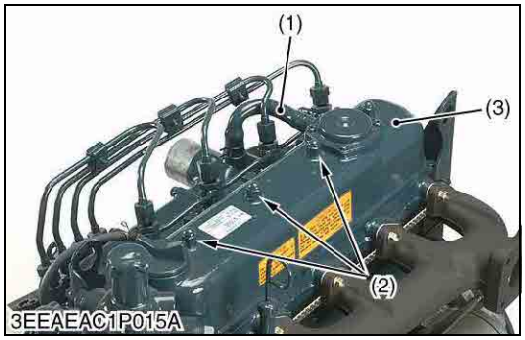


**Cylinder Head Cover**

1. Disconnect the breather hose (1).
2. Remove the head cover nut (2).
3. Remove the cylinder head cover (3).

**(When reassembling)**

- Check to see if the cylinder head cover gasket is not damaged.

| | | |
|---|---|---|
| Tightening torque | Cylinder head cover nut | 7 to 8 N·m<br>0.7 to 0.9 kgf·m<br>5 to 6 lbf·ft |

(1) Breather Hose
(2) Head Cover Nut
(3) Cylinder Head Cover

9Y1211156ENS0033US0

https://truckmanualshub.com/


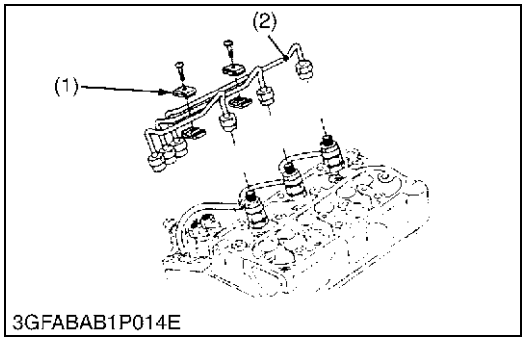


## Injection Pipes

1. Loosen the screws on the pipe clamp (1).
2. Remove the injection pipes (2).

**(When reassembling)**

- Sent compressed air into the pipes to blow out dust. Then, reassemble the pipes in the reverse order.

| | | |
|---|---|---|
| Tightening torque | Injection pipe retaining nut | 25 to 34 N·m<br>2.5 to 3.5 kgf·m<br>18 to 25 lbf·ft |

(1) Pipe Clamp (2) Injection Pipe

9Y1211156ENS0034US0

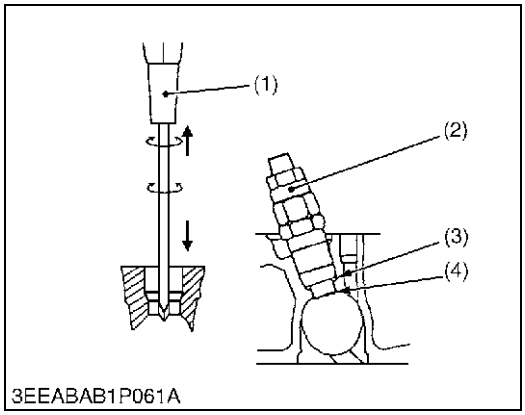


## Nozzle Heat Seal Service Removal Procedure

■ **IMPORTANT**

- **Use a plus (phillips head) screw driver that has a Dia. which is bigger than the heat seal hole (Approx. 6 mm (1/4 in.)).**

1. Drive screw driver lightly into the heat seal hole.
2. Turn screw driver three or four times each way.
3. While turning the screw driver, slowly pull the heat seal out together with the injection nozzle gasket.

If the heat seal drops, repeat the above procedure. Heat seal and injection nozzle gasket must be changed when the injection nozzle is removed for cleaning or for service.

(1) Plus Screw Driver (3) Injection Nozzle Packin
(2) Injection Nozzle (4) Heat Seal

9Y1211156ENS0035US0

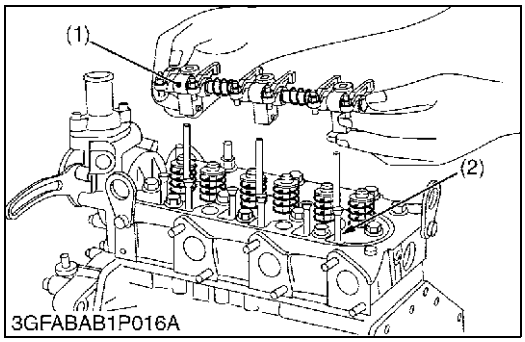


## Rocker Arm and Push Rod

1. Remove the rocker arm bracket nut.
2. Remove the rocker arm assembly (1).
3. Remove the push rods (2).

**(When reassembling)**

- When putting the push rods (2) onto the tappets (3), check to see if their ends are properly engaged with the dimples.

■ **IMPORTANT**

- **After installing the rocker arm, be sure to adjust the valve clearance.**

| | | |
|---|---|---|
| Tightening torque | Rocker arm bracket nut | 22 to 26 N·m<br>2.2 to 2.7 kgf·m<br>16 to 19 lbf·ft |

(1) Rocker Arm Assembly (3) Tappet
(2) Push Rod

9Y1211156ENS0036US0

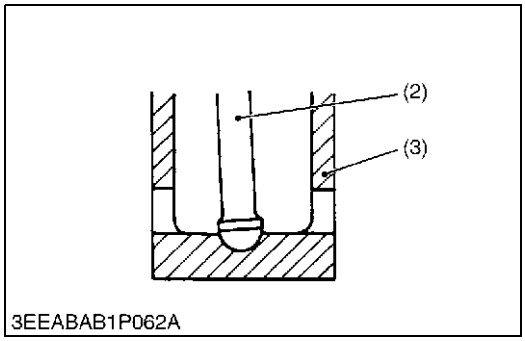

https://truckmanualshub.com/


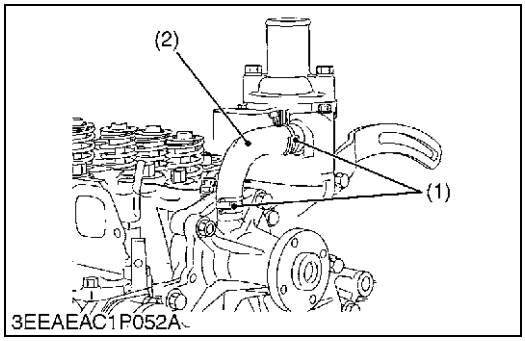


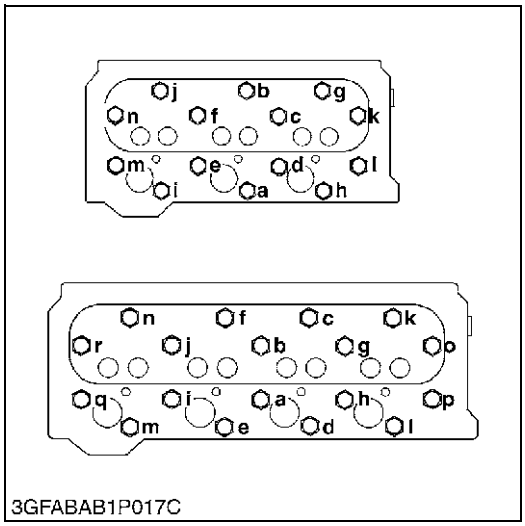


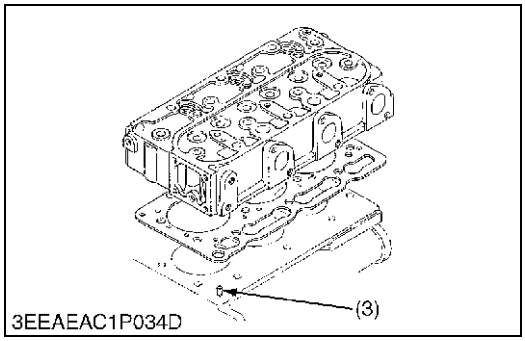


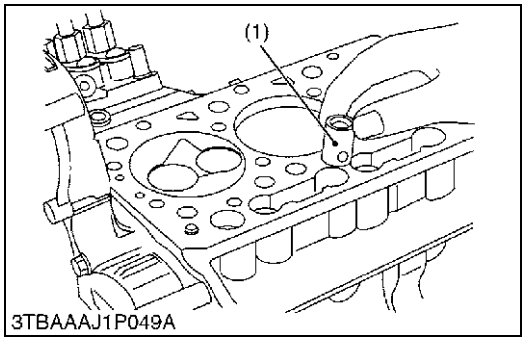


## Cylinder Head

1. Loosen the hose clamps (1), and remove the water return hose (2).
2. Remove the cylinder head screw in the order of (**n** or **r**) to (**a**).
3. Lift up the cylinder head to remove.
4. Remove the cylinder head gasket.

**(When reassembling)**

- Replace the cylinder head gasket with new one.
- When mounting the gasket, set it to the pin pipe holes. Be careful not to mount it reversely.
- The cylinder head should be free of scratches and dust.
- Install the cylinder head, using care not to damage the gasket.
- After applying engine oil to the thread of screws, tighten them in several steps and specified sequence (**a**) to (**n** or **r**).

■ **NOTE**

- **Do not use O-ring on the pin pipe.**
- **It is not necessary to retighten the cylinder head screw and to readjust valve clearance after engine warmed up.**

| | | |
|---|---|---|
| Tightening torque | Cylinder head screw | 64 to 68 N·m<br>6.5 to 7.0 kgf·m<br>47 to 50 lbf·ft |

(1) Pipe Clamp
(2) Water Return Pipe
(3) Pin Pipe

**(n or r) to (a):To Loosen**
**(a) to (n or r):To Tighten**

9Y1211156ENS0037US0

## Tappets

1. Remove the tappets (1) from the crankcase.

**(When reassembling)**

- Visually check the contact between tappets and cams for proper rotation. If problem is found, replace tappets.
- Before installing the tappets, apply engine oil thinly around them.

■ **IMPORTANT**

- **Do not change the combination of tappet and tappet guide.**

(1) Tappet

9Y1211156ENS0038US0

https://truckmanualshub.com/


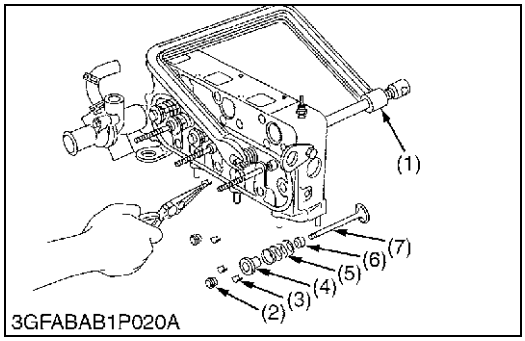


**Valves**

1. Remove the valve caps (2).
2. Remove the valve spring collet (3), pushing the valve spring retainer (4) by valve spring replacer (1).
3. Remove the valve spring retainer (4), valve spring (5) and valve stem seal (6).
4. Remove the valve (7).

**(When reassembling)**

- Wash the valve stem seal and valve guide hole, and apply engine oil sufficiently.
- After installing the valve spring collets, lightly tap the stem to assure proper fit with a plastic hammer.

■ **IMPORTANT**

- **Do not change the combination of valve and valve guide.**

(1) Valve Spring Replacer
(2) Valve Cap
(3) Valve Spring Collet
(4) Valve Spring Retainer
(5) Valve Spring
(6) Valve Stem Seal
(7) Valve

9Y1211156ENS0039US0

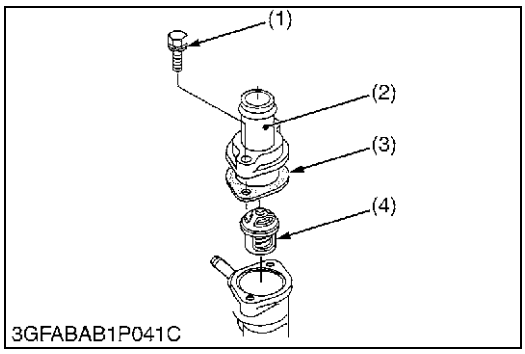


**Thermostat Assembly**

1. Remove the thermostat cover mounting screws (1), and remove the thermostat cover (2).
2. Remove the thermostat assembly (4).

**(When reassembling)**

- Apply a liquid gasket (Three Bond 1215 or equivalent) only at the thermostat cover side of the gasket (3).

(1) Thermostat Cover Mounting Screw
(2) Thermostat Cover
(3) Thermostat Cover Gasket
(4) Thermostat Assembly

9Y1211156ENS0040US0

## (3) Gear Case

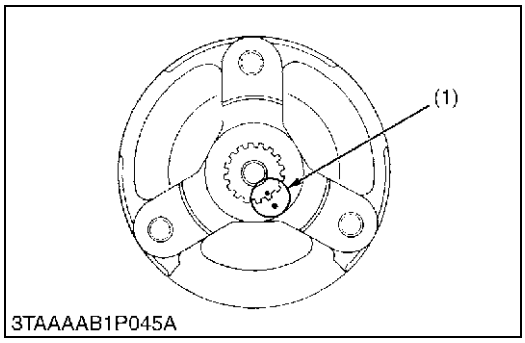


**Fan Drive Pulley**

1. Secure the flywheel to keep it from turning.
2. Remove the fan drive pulley screw.
3. Draw out the fan drive pulley with a puller.

**(When reassembling)**

- Install the pulley to the crankshaft, aligning the mark (1) on them.
- Apply engine oil to the fan drive pulley retaining screws. And tighten them.

| | | |
|---|---|---|
| Tightening torque | Fan drive pulley screw | 236 to 245 N·m<br>24.0 to 25.0 kgf·m<br>174 to 180 lbf·ft |

(1) Alignment Mark

9Y1211156ENS0041US0

https://truckmanualshub.com/


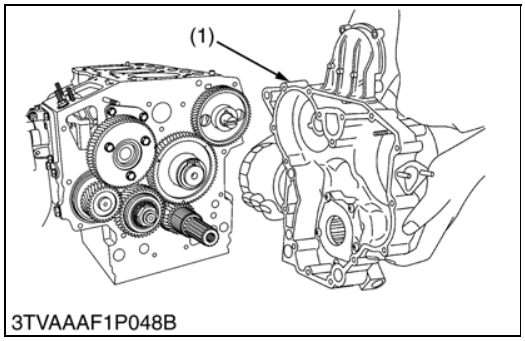


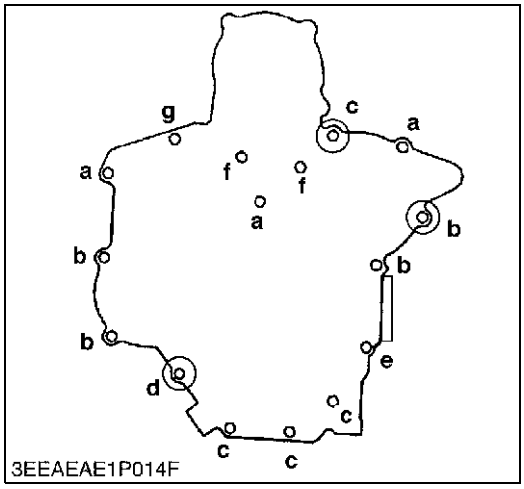


## Gear Case

1. Remove the gear case (1).

**(When reassembling)**

- Grease thinly to the oil seal, and install it, ensuring the lip does not come off.

(1) Gear Case

**a: Bolt Length = 45 mm (1.8 in.)**
**b: Bolt Length = 50 mm (2.0 in.)**
**c: Bolt Length = 55 mm (2.2 in.)**
**d: Bolt Length = 65 mm (2.6 in.)**
**e: Bolt Length = 68 mm (2.7 in.)**
**f: Bolt Length = 85 mm (3.3 in.)**
**g: Nut**

9Y1211156ENS0042US0

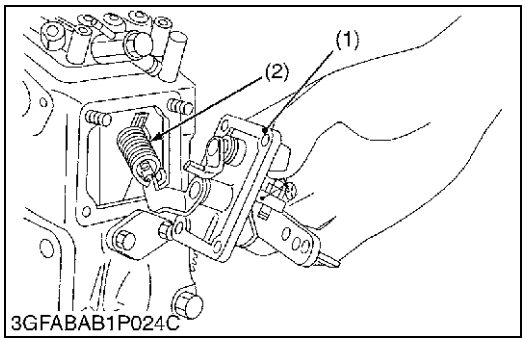


## Engine Stop Solenoid and Speed Control Plate

1. Remove the engine stop solenoid.
2. Disconnect the governor spring (2) from the speed control plate (1).
3. Remove the speed control plate.

**(When reassembling)**

- Apply a liquid gasket (Three Bond 1215 or equivalent) to both sides of the solenoid cover gasket and control plate gasket.
- Be careful not to drop the governor springs into the crankcase.

(1) Speed Control Plate
(2) Governor Spring

9Y1211156ENS0043US0

https://truckmanualshub.com/


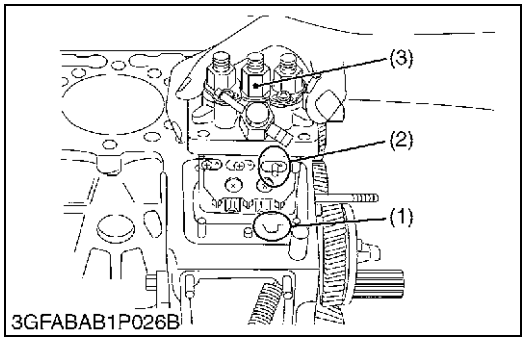

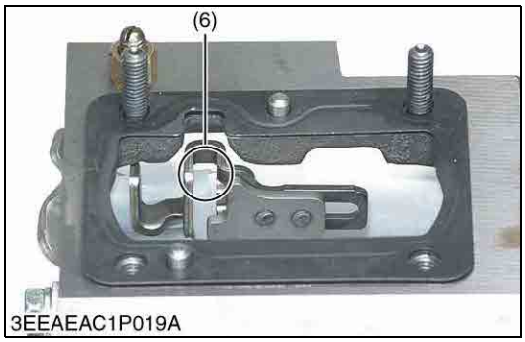


## Injection Pump

1. Disconnect the starter spring (4) on the thrust lever side (5).
2. Align the control rack pin (2) with the notch (1) on the crankcase, and remove the injection pump (3).
3. Remove the injection pump shims.
4. In principle, the injection pump should not be disassembled.

**(When reassembling)**

- When installing the injection pump, insert the control rack pin (2) firmly into the groove (6) of the thrust lever of fork lever.

■ **NOTE**

- **The sealant is applied to both sides of the soft metal gasket shim. The liquid gasket is not required for assembling.**
- **Addition or reduction of shim (0.05 mm, 0.002 in.) delays or advances the injection timing by approx. 0.0087 rad (0.5 °).**
- **In disassembling and replacing, be sure to use the same number or new gasket shims with the same thickness.**

| | | | |
|---|---|---|---|
| (1) | Notch | (4) | Start Spring |
| (2) | Control Rack Pin | (5) | Thrust Lever |
| (3) | Injection Pump | (6) | Groove |

9Y1211156ENS0044US0

https://truckmanualshub.com/


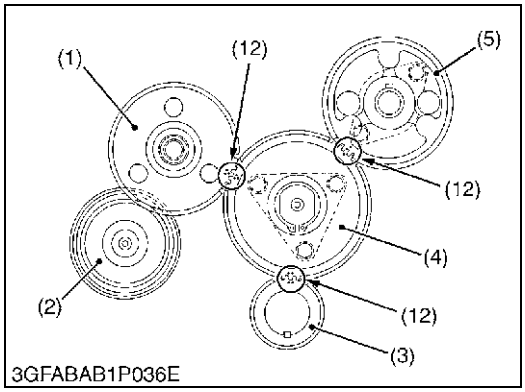

3GFABAB1P036E

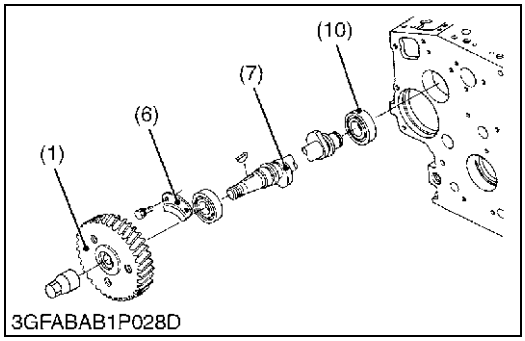

3GFABAB1P028D

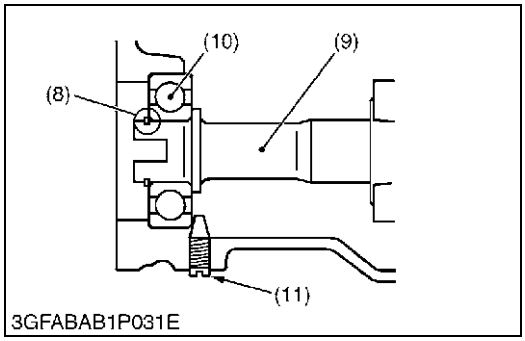

3GFABAB1P031E

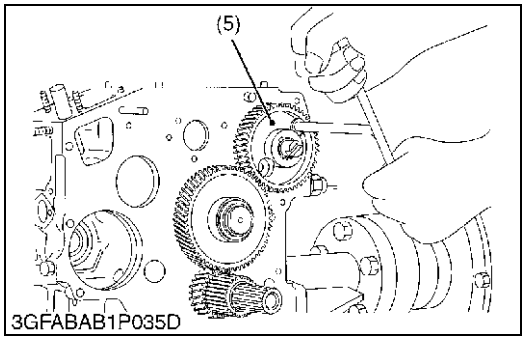

3GFABAB1P035D

## Cam Gear, Idle Gear 1 and Governor Gear

1. Remove the idle gear 1 (4).
2. Remove the fuel camshaft stopper (6).
3. Draw out the fuel cam gear (1) with fuel camshaft (7).
4. Remove the camshaft stopper bolt.
5. Remove the cam gear (5) with camshaft.
6. Remove the external snap ring (8) from the governor shaft (9).
7. Remove the governor gear (2) with governor shaft (9).

■ **NOTE**

- **Three-lever type fork lever**
  **To remove the governor shaft (9), follow the procedures in 5, 6 above and never remove fork lever and the max torque limiter.**

**(When reassembling)**

- Apply engine oil thinly to the fuel camshaft (7) before installation.
- Make sure to assemble the external snap ring (8) of the governor shaft (9).
- Check the governor shaft (9) for smooth rotation.

■ **IMPORTANT**

- **When replacing the ball bearing of governor shaft, securely fit the ball bearing (10) to the crankcase, apply an adhesive (Three Bond 1324B or equivalent) to the set screw (11), and tighten the screw until its tapered part contacts the circumferential end of the ball bearing.**
- **When installing the idle gear, be sure to align the alignment marks (12) on each gears.**

| | | | |
|---|---|---|---|
| (1) | Fuel Cam Gear | (7) | Fuel Camshaft |
| (2) | Governor Gear | (8) | External Snap Ring |
| (3) | Crank Gear | (9) | Governor Shaft |
| (4) | Idle Gear 1 | (10) | Ball Bearing |
| (5) | Cam Gear | (11) | Set Screw |
| (6) | Fuel Camshaft Stopper | (12) | Alignment Mark |

9Y1211156ENS0045US0

https://truckmanualshub.com/


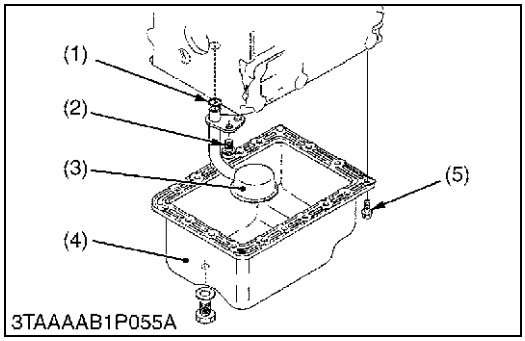


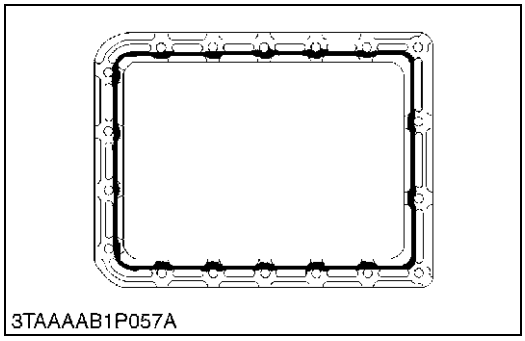


**Oil Pan and Oil Strainer**

1. Remove the oil pan mounting screws (5).
2. Remove the oil pan (4).
3. Remove the oil strainer (3).

**(When reassembling)**

- After cleaning the oil strainer, check to see that the filter mesh is clean, and install it.
- Visually check the O-ring (1), apply engine oil, and install it.
- Securely fit the O-ring to the oil strain.
- To avoid uneven tightening, tighten oil pan mounting screws in diagonal order from the center.

■ **IMPORTANT**

- **Scrape off the old adhesive completely. Wipe the sealing surface clean using waste cloth soaked with gasoline. Now apply new adhesive 3 to 5 mm (0.12 to 0.20 in.) thick all over the contact surface. Apply the adhesive also on the center of the flange as well as on the inner wall of each screw hole.**
- **Cut the nozzle of the "liquid gasket" container at its second notch. Apply "liquid gasket" about 5 mm (0.2 in.) thick. Within 20 minutes after the application of fluid sealant, reassemble the components. Wait then for about 30 minutes, and pour oil in the crankcase.**

(1) O-ring
(2) Screw
(3) Oil Strainer
(4) Oil Pan
(5) Oil Pan Mounting Screws

9Y1211156ENS0046US0

## (4) Piston and Connecting Rod

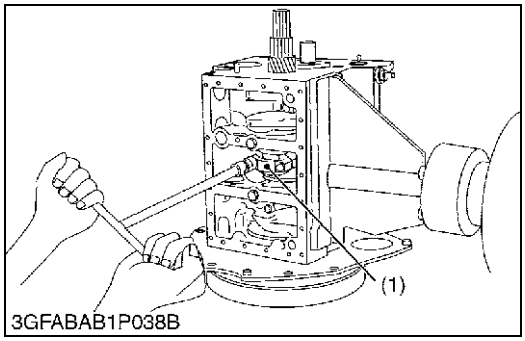


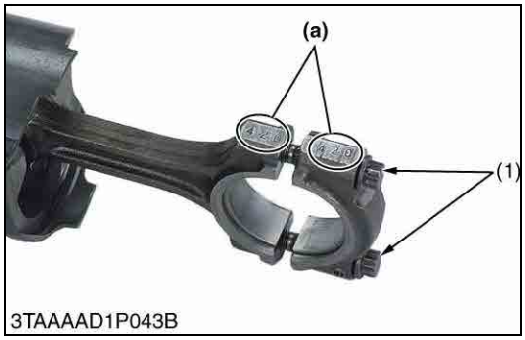


**Connecting Rod**

1. Remove the connecting rod cap.

**(When reassembling)**

- Align the marks **(a)** with each other. (Face the marks toward the injection pump.)
- Apply engine oil to the connecting rod screws (1) and lightly screw it in by hand, then tighten it to the specified torque.
  If the connecting rod screw won't be screwed in smoothly, clean the threads.
  If the connecting rod screw (1) is still hard to screw in, replace it.

| | | |
|---|---|---|
| Tightening torque | Connecting rod screw | 42 to 46 N·m<br>4.2 to 4.7 kgf·m<br>31 to 33 lbf·ft |

(1) Connecting Rod Screw
**(a) Mark**

9Y1211156ENS0047US0

https://truckmanualshub.com/


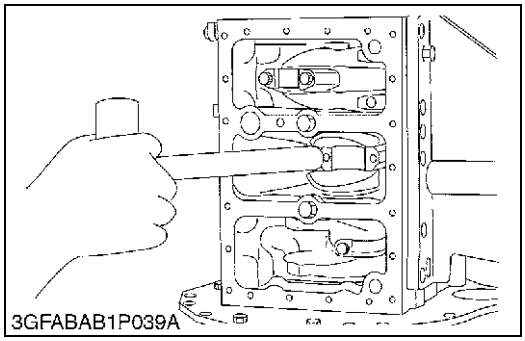


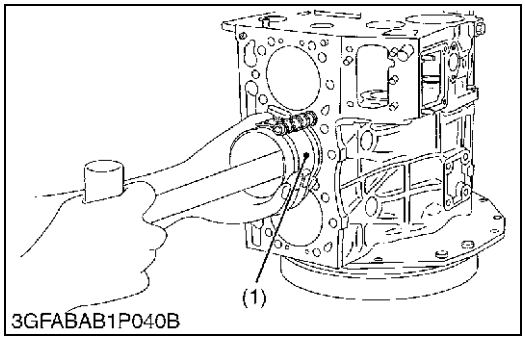


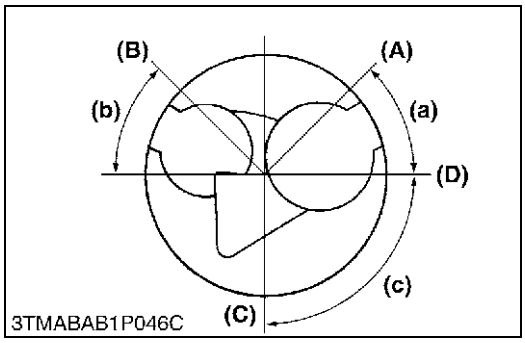


## Piston

1. Turn the flywheel and bring the piston to top dead center.
2. Draw out the piston upward by lightly tapping it from the bottom of the crankcase with the grip of a hammer.
3. Draw out the other piston in the same method as above.

**(When reassembling)**

- Before inserting the piston into the cylinder, apply enough engine oil to the piston.
- When inserting the piston into the cylinder, face the mark on the connecting rod to the injection pump.

■ **IMPORTANT**

- **Do not change the combination of cylinder and piston. Make sure of the position of each piston by marking. For example, mark "1" on the No.1 piston.**
- **When installing the piston into the cylinder, place the gaps of all the piston rings as shown in the figure.**
- **Carefully insert the piston using a piston ring compressor (1). Otherwise, their chrome-plated section may be scratched, causing trouble inside the cylinder.**

(1) Piston Ring Compressor

**(A) Top Ring Gap**
**(B) Second Ring Gap**
**(C) Oil Ring Gap**
**(D) Piston Pin Hole**

**(a) 0.79 rad (45 °)**
**(b) 0.79 rad (45 °)**
**(c) 1.6 rad (90 °)**

9Y1211156ENS0048US0

https://truckmanualshub.com/


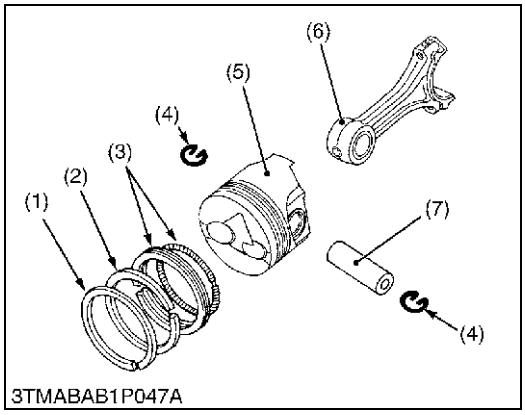

3TMABAB1P047A

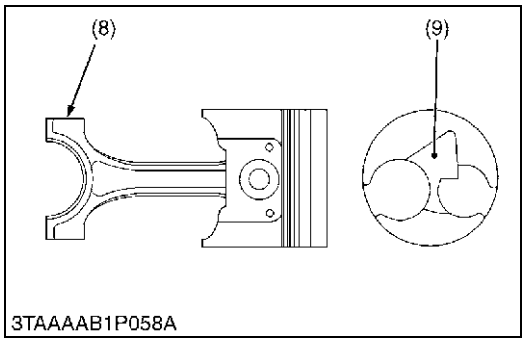

3TAAAAB1P058A

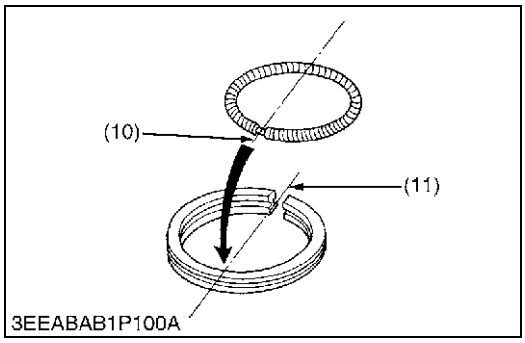

3EEABAB1P100A

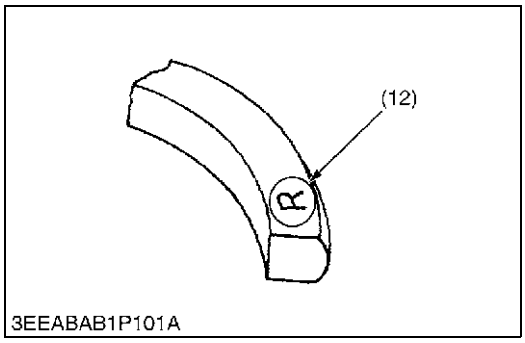

3EEABAB1P101A

## Piston Ring and Connecting Rod

1. Remove the piston rings using a piston ring tool.
2. Remove the piston pin (7), and separate the connecting rod (6) from the piston (5).

**(When reassembling)**

- Install the rings so that the manufacturer's mark (12) near the gap faces the top of the piston.
- When installing the oil ring onto the piston, place the expander joint (10) on the opposite side of the oil ring gap (11).
- Apply engine oil to the piston pin.
- When installing the connecting rod to the piston, immerse the piston in 80 °C (176 °F) oil for 10 to 15 minutes and insert the piston pin to the piston.
- When installing the connecting rod to the piston, align the mark (8) on the connecting rod to the fan-shaped concave (9).

■ **NOTE**

- **Mark the same number on the connecting rod and the piston so as not to change the combination.**

(1) Top Ring
(2) Second Ring
(3) Oil Ring
(4) Piston Pin Snap Ring
(5) Piston
(6) Connecting Rod
(7) Piston Pin
(8) Mark
(9) Fan-Shaped Concave
(10) Expander Joint
(11) Oil Ring Gap
(12) Manufacturer's Mark

9Y1211156ENS0049US0

https://truckmanualshub.com/


# (5) Crankshaft

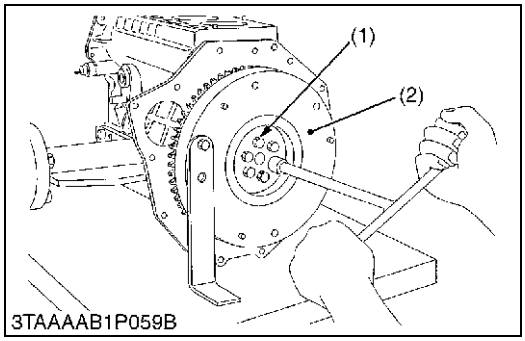


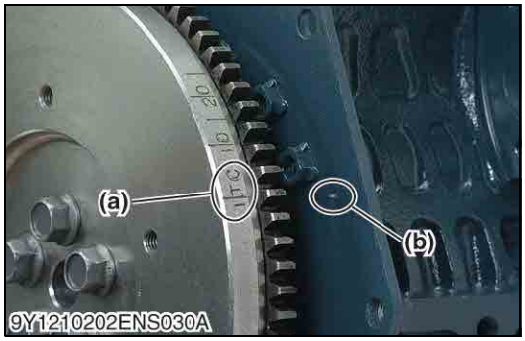


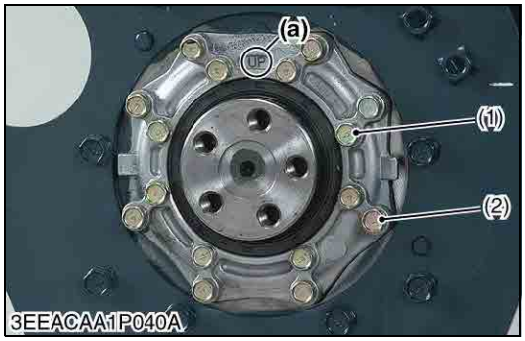


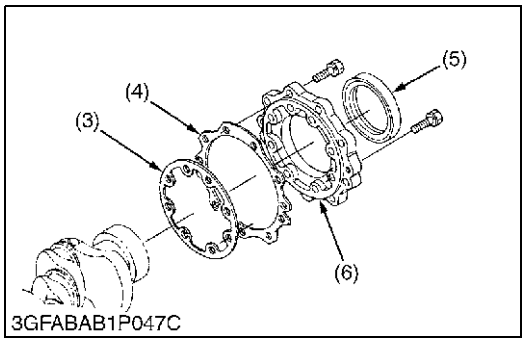


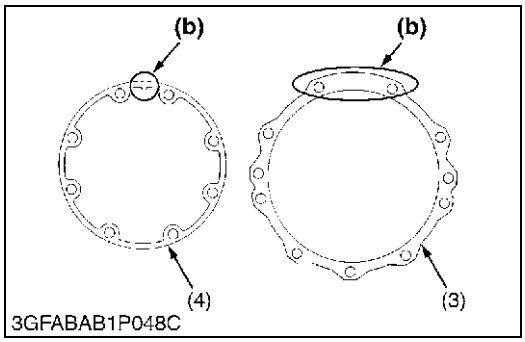


## Flywheel

1. Secure the flywheel to keep it from turning, using a flywheel stopper.
2. Remove all flywheel screws (1) and then remove the flywheel (2).

**(When reassembling)**

- Align the **"1TC"** mark **(a)** on the the outer surface of the flywheel horizontally with the alignment mark **(b)** on the rear end plate. Now fit the flywheel in position.
- Apply engine oil to the threads and the undercut surface of the flywheel screw and fit the screw.

| | | |
|---|---|---|
| Tightening torque | Flywheel screw | 53.9 to 58.8 N·m<br>5.5 to 6.0 kgf·m<br>39.8 to 43.4 lbf·ft |

(1) Flywheel Screw
(2) Flywheel
**(a) 1TC Mark**
**(b) Alignment Mark**

9Y1211156ENS0050US0

## Bearing Case Cover

1. Remove the bearing case cover mounting screws.
2. Remove the bearing case cover (6).

■ **IMPORTANT**

- **The length of inside screws (1) and outside screws (2) are difference. Do not take a mistake using inside screws and outside screws.**

**(When reassembling)**

- Fit the bearing case gasket (3) and the bearing case cover gasket (4) with correct directions.
- Install the bearing case cover (6) to position the casting mark **"UP" (a)** on it upward.
- Apply engine oil to the oil seal (5) lip and be careful that it is not rolled when installing.
- Tighten the bearing case cover mounting screws with even force on the diagonal line.

| | | |
|---|---|---|
| Tightening torque | Bearing case cover screw | 10.8 to 12.2 N·m<br>1.10 to 1.25 kgf·m<br>7.96 to 9.04 lbf·ft |

(1) Bearing Case Cover Mounting Screw (Inside)
(2) Bearing Case Cover Mounting Screw (Outside)
(3) Bearing Case Gasket
(4) Bearing Case Cover Gasket
(5) Oil Seal
(6) Bearing Case Cover
**(a) Top Mark "UP"**
**(b) Upside**

9Y1211156ENS0051US0

https://truckmanualshub.com/


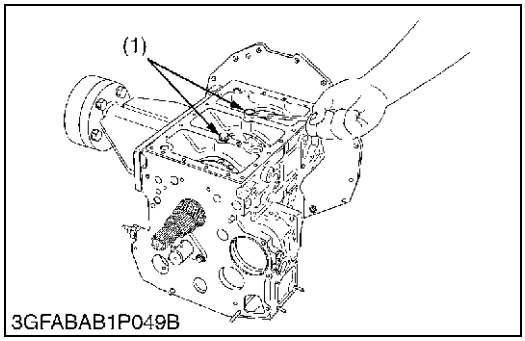


## Crankshaft Assembly

1. Remove the main bearing case screw 2 (1).
2. Pull out the crankshaft assembly.

■ **IMPORTANT**

- **Be careful to protect crankshaft bearing 1 from scratches, caused by the crank gear, etc.. (Wrap the gear in vinyl tape, etc.).**

**(When reassembling)**

- Clean the oil passage of the crankshaft with compressed air.
- Apply oil to the main bearing case screw 2 (1).
- Install the crankshaft assembly, aligning the screw hole of main bearing case with the screw hole of crankcase.
- Clean the oil passage of the crankshaft with compressed air.

| | | |
|---|---|---|
| Tightening torque | Main bearing case screw 2 | 49 to 53 N·m<br>5.0 to 5.5 kgf·m<br>37 to 39 lbf·ft |

(1) Main Bearing Case Screw 2

9Y1211156ENS0052US0

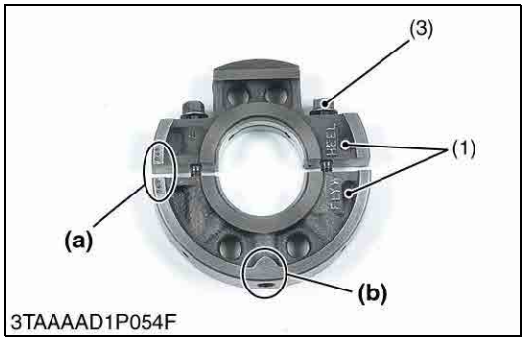


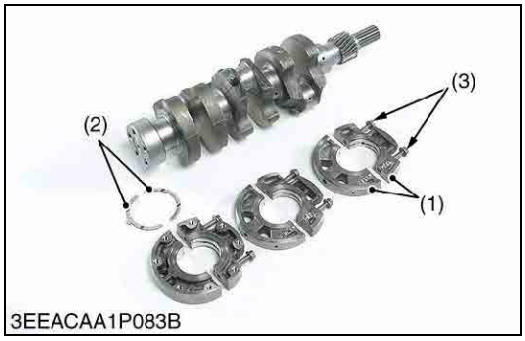


## Main Bearing Case Assembly

1. Remove the two main bearing case screws 1 (3) of each main bearing cases.
2. Remove the main bearing case from crankshaft.

**(When reassembling)**

- Clean the oil passage in the main bearing cases.
- Apply clean engine oil on the bearings.
- Install the main bearing case assemblies in original positions. Since diameters of main bearing cases vary, install them in order to marking **(b)** (**A**, **B**, **C**) from the gear case side.
- Match the alignment numbers **(a)** on the main bearing case assembly 1.
- When installing the main bearing case 1 and 2, face the mark **"FLYWHEEL"** to the flywheel.
- Install the thrust bearing (2) with its oil groove facing outward.
- Make sure that the main bearing case moves smoothly after tightening the main bearing case screw 1 to the specified torque.

| | | |
|---|---|---|
| Tightening torque | Main bearing case screw 1 | 30 to 34 N·m<br>3.0 to 3.5 kgf·m<br>22 to 25 lbf·ft |

(1) Main Bearing Case Assembly 1
(2) Thrust Bearing
(3) Main Bearing Case Screw 1
**(a) Alignment Number**
**(b) Marking (A, B, C)**

9Y1211156ENS0053US0

https://truckmanualshub.com/


# [4] SERVICING

## (1) Cylinder Head and Valves

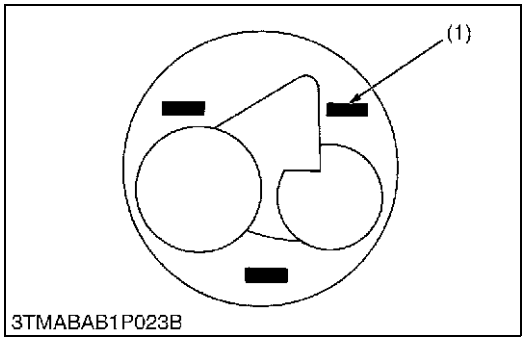


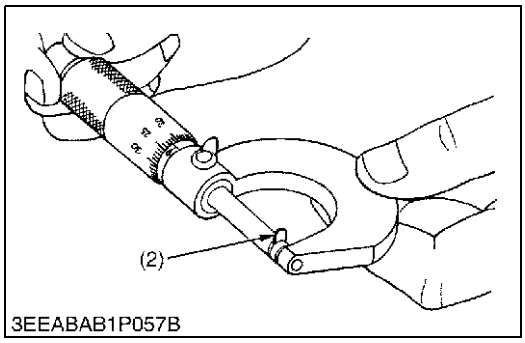


### Top Clearance

1. Remove the cylinder head. (Do not try to remove the cylinder head gasket.)
2. Move the piston up and stick a strip of fuse [1.5 mm dia. (0.059 in. dia.), 5.0 to 7.0 mm long (0.20 to 0.27 in. long)] on the piston head at three positions with grease so as to avoid the intake valve and the exhaust valve and the combustion chamber ports.
3. Lower the piston, and install the cylinder head and tighten the cylinder head screws to the specified torque.
4. Turn the flywheel until the piston exceeds top dead center.
5. Remove the cylinder head, and measure the thickness of the squeezed fuses.
6. If the measurement is not within the factory specifications, check the oil clearance between the crankpin and the crankpin bearing and between the piston pin and the small end bushing.

■ **NOTE**

- **After checking the top clearance, be sure to assemble the cylinder head with a new cylinder head gasket.**

| | | |
|---|---|---|
| Top clearance | Factory specification | 0.55 to 0.75 mm<br>0.022 to 0.029 in. |

| | | |
|---|---|---|
| Tightening torque | Cylinder head screws | 64 to 68 N·m<br>6.5 to 7.0 kgf·m<br>47 to 50 lbf·ft |

(1) Fuse (2) Fuse

9Y1211156ENS0054US0

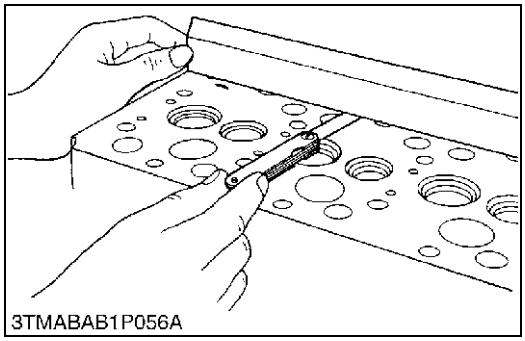


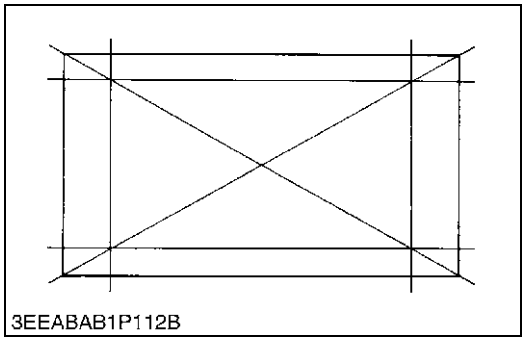


### Cylinder Head Surface Flatness

1. Clean the cylinder head surface.
2. Place a straightedge on the cylinder head's four sides and two diagonal as shown in the figure.
3. Measure the clearance with a thickness gauge.
4. If the measurement exceeds the allowable limit, correct it with a surface grinder.

■ **IMPORTANT**

- **Do not place the straightedge on the combustion chamber.**
- **Be sure to check the valve recessing after correcting.**

| | | |
|---|---|---|
| Cylinder head surface flatness | Allowable limit | 0.05 mm<br>0.002 in. |

9Y1211156ENS0055US0

https://truckmanualshub.com/


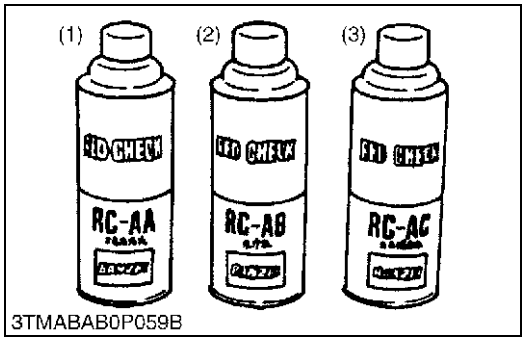

3TMABAB0P059B

## Cylinder Head Flaw

1. Prepare an air spray red check.
2. Clean the surface of the cylinder head with detergent (2).
3. Spray the cylinder head surface with the red permeative liquid (1). Leave it five to ten minutes after spraying.
4. Wash away the read permeative liquid on the cylinder head surface with the detergent (2).
5. Spray the cylinder head surface with white developer (3).
6. If flawed, it can be identified as red marks.

(1) Red Permeative Liquid
(2) Detergent
(3) White Developer

9Y1211156ENS0056US0

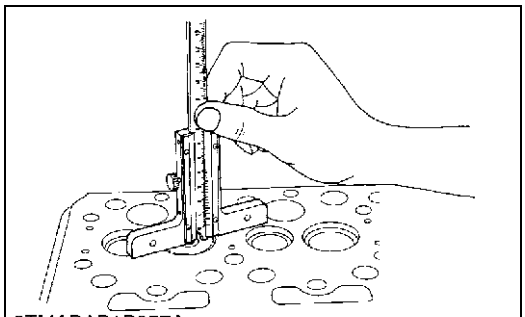
3TMABAB1P057A

## Valve Recessing

1. Clean the cylinder head surface, the valve face and the valve seat.
2. Insert the valve into the valve guide.
3. Measure the valve recessing with a depth gauge.
4. If the measurement exceeds the allowable limit, replace the valve.
5. If it still exceeds the allowable limit after replacing the valve, replace the cylinder head.

| | | |
|---|---|---|
| Valve recessing | Factory specification | 0.050 (protrusion) to 0.25 (recessing) mm<br>0.0020 (protrusion) to 0.0098 (recessing) in. |
| | Allowable limit | 0.40 (recessing) mm<br>0.016 (recessing) in. |

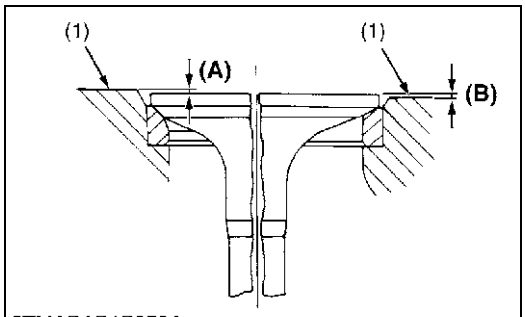

3TMABAB1P058A

(1) Cylinder Head Surface
**(A) Recessing**
**(B) Protrusion**

9Y1211156ENS0057US0

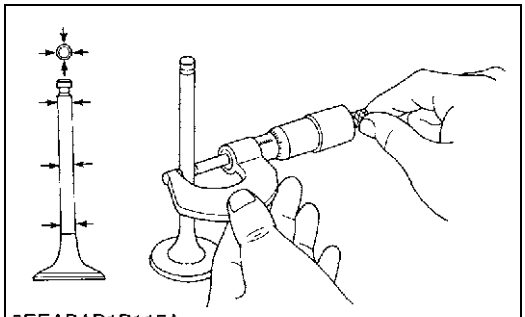
3EEABAB1P115A

## Clearance between Valve Stem and Valve Guide

1. Remove carbon from the valve guide section.
2. Measure the valve stem O.D. with an outside micrometer.
3. Measure the valve guide I.D. with a small hole gauge, and calculate the clearance.
4. If the clearance exceeds the allowable limit, replace the valves. If it still exceeds the allowable limit, replace the valve guide.

| | | |
|---|---|---|
| Clearance between valve stem and valve guide | Factory specification | 0.035 to 0.065 mm<br>0.0014 to 0.0025 in. |
| | Allowable limit | 0.10 mm<br>0.0039 in. |

| | | |
|---|---|---|
| Valve stem O.D. | Factory specification | 6.960 to 6.975 mm<br>0.2741 to 0.2746 in. |
| Valve guide I.D. | Factory specification | 7.010 to 7.025 mm<br>0.2760 to 0.2765 in. |

9Y1211156ENS0058US0

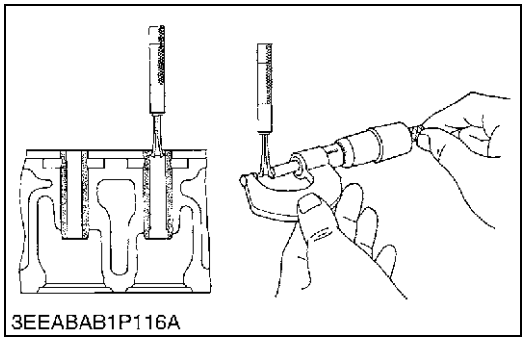
3EEABAB1P116A

https://truckmanualshub.com/


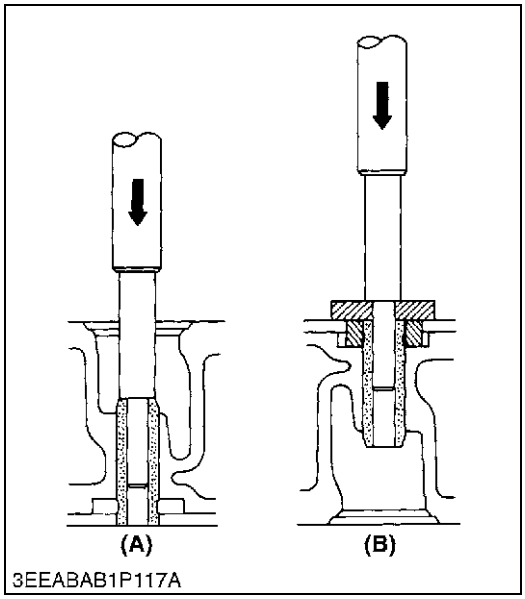


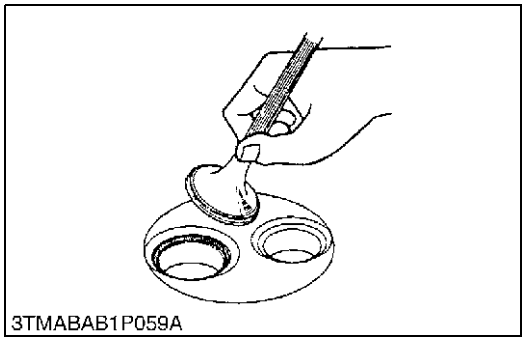


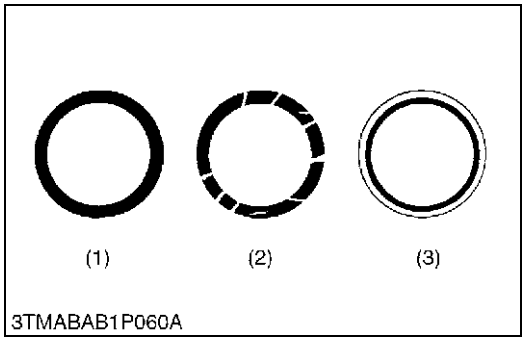


## Replacing Valve Guide

**(When removing)**

1. Press out the used valve guide using a valve guide replacing tool. (See page "SPECIAL TOOLS".)

**(When installing)**

1. Clean a new valve guide and valve guide bore, and apply engine oil to them.
2. Press in a new valve guide using a valve guide replacing tool.
3. Ream precisely the I.D. of the valve guide to the specified dimension.

| | | |
|---|---|---|
| Valve guide I.D.<br>(Intake and exhaust) | Factory specification | 7.010 to 7.025 mm<br>0.2760 to 0.2765 in. |

■ **IMPORTANT**

- **Do not hit the valve guide with a hammer during replacement.**

**(A) When Removing** **(B) When Installing**

9Y1211156ENS0059US0

## Valve Seating

1. Coat the valve face lightly with prussian blue and put the valve on its seat to check the contact.
2. If the valve does not seat all the way around the valve seat or the valve contact is less than 70 %, correct the valve seating as follows.
3. If the valve contact does not comply with the reference value, replace the valve or correct the contact of valve seating.

| | | |
|---|---|---|
| Valve seat width | Factory specification | 2.12 mm<br>0.0835 in. |

(1) Correct
(2) Incorrect
(3) Incorrect

9Y1211156ENS0060US0

https://truckmanualshub.com/


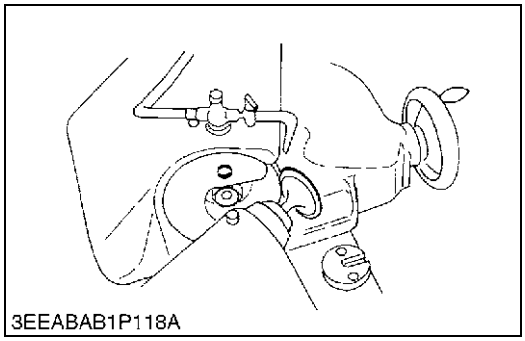
3EEABAB1P118A

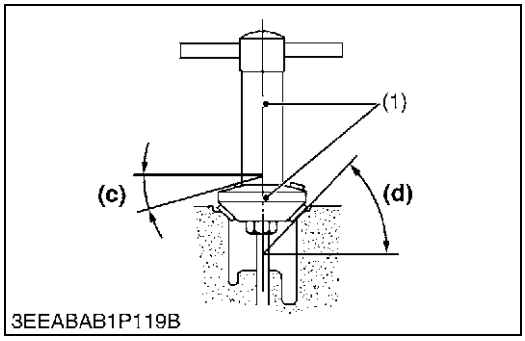

3EEABAB1P119B

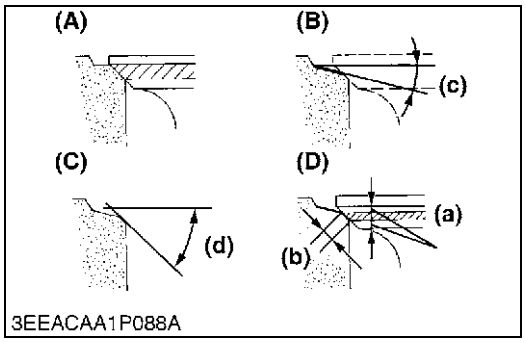

3EEACAA1P088A

## Correcting Valve and Valve Seat

■ **NOTE**
- **Before correcting the valve and the seat, check the valve stem and the I.D. of valve guide section, and repair them if necessary.**
- **After correcting the valve seat, be sure to check the valve recessing.**

**1) Correcting Valve**

1. Correct the valve with a valve refacer.

| | | | |
|---|---|---|---|
| Valve face angle | Factory specification | IN. | 1.0 rad<br>60 ° |
| | | EX. | 0.79 rad<br>45 ° |

**2) Correcting Valve Seat**

1. Slightly correct the seat surface with a 0.79 rad (45 °) / 1.0 rad (60 °) valve seat cutter.
2. Fitting the valve, check the contact position of the valve face and seat surface with prussian blue. (Visual check) [If the valve has been used for a long period, the seat tends to come in contact with the upper side of the valve face.]
3. Grind the upper surface of the seat with a 0.52 rad (30 °) valve seat cutter until the valve seat touches to the center of the valve face (so that **(a)** equals **(b)** as shown in the figure).
4. Grind the seat with a 0.26 rad (15 °) valve seat cutter again, and visually recheck the contact between the valve and the seat.
5. Repeat steps 3 and 4 until the correct contact is achieved.
6. Continue lapping until the seated rate becomes more than 70 % of the total contact area.

| | | | |
|---|---|---|---|
| Valve seat angle | Factory specification | IN. | 1.0 rad<br>60 ° |
| | | EX. | 0.79 rad<br>45 ° |

(1) Valve Seat Width

**(A) Check Contact**
**(B) Correct Seat Width**
**(C) Correct Seat Surface**
**(D) Check Contact**

**(a) Identical Dimensions**
**(b) Valve Seat Width**
**(c) 0.26 rad (15 °) or 0.52 rad (30 °)**
**(d) 0.79 rad (45 °) or 1.0 rad (60 °)**

9Y1211156ENS0061US0

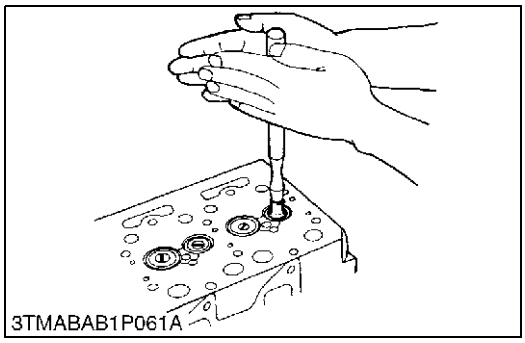
3TMABAB1P061A

## Valve Lapping

1. Apply compound evenly to the valve lapping surface.
2. Insert the valve into the valve guide. Lap the valve onto its seat with a valve flapper or screwdriver.
3. After lapping the valve, wash the compound away and apply oil, then repeat valve lapping with oil.
4. Apply prussian blue to the contact surface to check the seated rate. If it is less than 70 %, repeat valve lapping again.

■ **IMPORTANT**
- **When valve lapping is performed, be sure to check the valve recessing and adjust the valve clearance after assembling the valve.**

9Y1211156ENS0062US0

https://truckmanualshub.com/


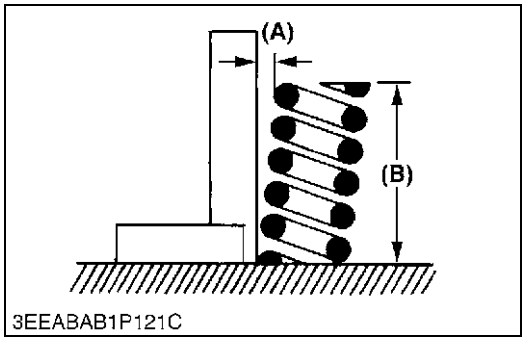

3EEABAB1P121C

## Free Length and Tilt of Valve Spring

1. Measure the free length **(B)** of valve spring with vernier calipers. If the measurement is less than the allowable limit, replace it.
2. Put the valve spring on a surface plate, place a square on the side of the valve spring.
3. Check to see if the entire side is in contact with the square. Rotate the valve spring and measure the maximum tilt **(A)**. If the measurement exceeds the allowable limit, replace it.
4. Check the entire surface of the valve spring for scratches.If there is any problem, replace it.

| | | |
|---|---|---|
| Tilt **(A)** | Allowable limit | 1.0 mm<br>0.039 in. |

| | | |
|---|---|---|
| Free length **(B)** | Factory specification | 37.0 to 37.5 mm<br>1.46 to 1.47 in. |
| | Allowable limit | 36.5 mm<br>1.44 in. |

**(A) Tilt** **(B) Free Length**

9Y1211156ENS0063US0

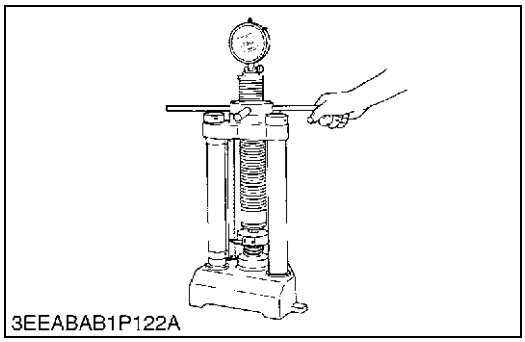
3EEABAB1P122A

## Valve Spring Setting Load

1. Place the valve spring on a tester and compress it to the same length it is actually compressed in the engine.
2. Read the compression load on the gauge.
3. If the measurement is less than the allowable limit, replace it.

| | | |
|---|---|---|
| Setting load / Setting length | Factory specification | 117.4 N / 31.0 mm<br>11.97 kgf / 31.0 mm<br>26.39 lbf / 1.22 in. |
| | Allowable limit | 100.0 N / 31.0 mm<br>10.20 kgf / 31.0 mm<br>22.48 lbf / 1.22 in. |

9Y1211156ENS0064US0

3TAAAAD1P060A

## Oil Clearance between Rocker Arm and Rocker Arm Shaft

1. Measure the rocker arm shaft O.D. with an outside micrometer.
2. Measure the rocker arm I.D. with an inside micrometer, and then calculate the oil clearance.
3. If the oil clearance exceeds the allowable limit, replace the rocker arm and measure the oil clearance again. If it still exceeds the allowable limit, replace also the rocker arm shaft.

| | | |
|---|---|---|
| Oil clearance between rocker arm and rocker arm shaft | Factory specification | 0.016 to 0.045 mm<br>0.00063 to 0.0017 in. |
| | Allowable limit | 0.10 mm<br>0.0039 in. |

| | | |
|---|---|---|
| Rocker arm shaft O.D. | Factory specification | 11.973 to 11.984 mm<br>0.47138 to 0.47181 in. |
| Rocker arm I.D. | Factory specification | 12.000 to 12.018 mm<br>0.47244 to 0.47314 in. |

9Y1211156ENS0065US0

https://truckmanualshub.com/


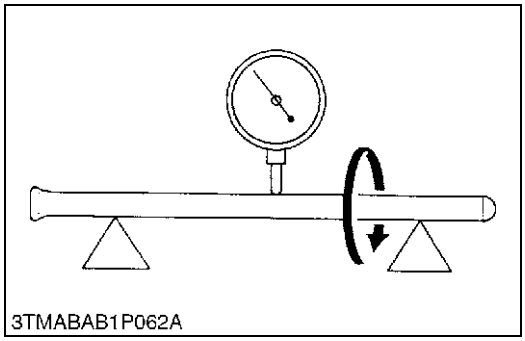
3TMABAB1P062A

### Push Rod Alignment

1. Place the push rod on V blocks.
2. Measure the push rod alignment.
3. If the measurement exceeds the allowable limit, replace the push rod.

| | | |
|---|---|---|
| Push rod alignment | Allowable limit | 0.25 mm<br>0.0098 in. |

9Y1211156ENS0066US0

3TAAAAD1P061A

### Oil Clearance between Tappet and Tappet Guide Bore

1. Measure the tappet O.D. with an outside micrometer.
2. Measure the I.D. of the tappet guide bore with a cylinder gauge, and calculate the oil clearance.
3. If the oil clearance exceeds the allowable limit or the tappet is damaged, replace the tappet.

| | | |
|---|---|---|
| Oil Clearance between tappet and tappet guide bore | Factory specification | 0.020 to 0.062 mm<br>0.00079 to 0.0024 in. |
| | Allowable limit | 0.07 mm<br>0.003 in. |

| | | |
|---|---|---|
| Tappet O.D. | Factory specification | 19.959 to 19.980 mm<br>0.78579 to 0.78661 in. |
| Tappet guide bore I.D. | Factory specification | 20.000 to 20.021 mm<br>0.78740 to 0.78822 in. |

9Y1211156ENS0067US0

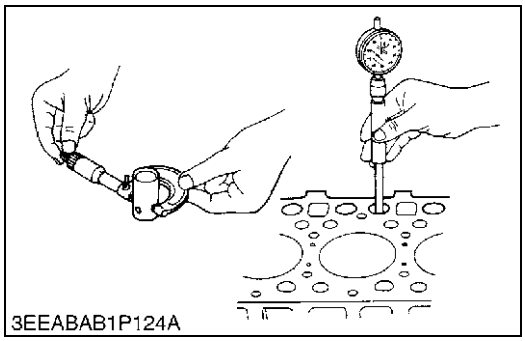
3EEABAB1P124A

## (2) Idle Gear and Camshaft

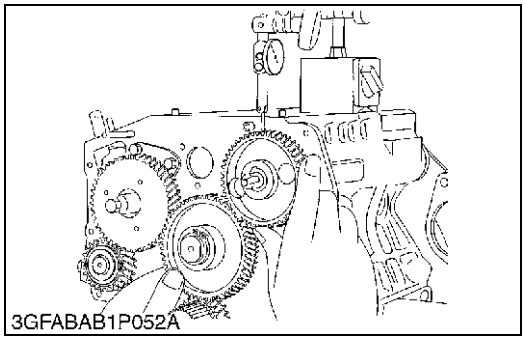
3GFABAB1P052A

### Timing Gear Backlash

1. Set a dial indicator (lever type) with its tip on the gear tooth.
2. Move the gear to measure the backlash, holding its mating gear.
3. If the backlash exceeds the allowable limit, check the oil clearance of the shafts and the gear.
4. If the oil clearance is proper, replace the gear.

| | | |
|---|---|---|
| Backlash between idle gear 1 and crank gear | Factory specification | 0.0320 to 0.115 mm<br>0.00126 to 0.00452 in. |
| | Allowable limit | 0.15 mm<br>0.0059 in. |

| | | |
|---|---|---|
| Backlash between idle gear 1 and cam gear | Factory specification | 0.0360 to 0.114 mm<br>0.00142 to 0.00448 in. |
| | Allowable limit | 0.15 mm<br>0.0059 in. |

| | | |
|---|---|---|
| Backlash between idle gear 1 and injection pump gear | Factory specification | 0.0340 to 0.116 mm<br>0.00134 to 0.00456 in. |
| | Allowable limit | 0.15 mm<br>0.0059 in. |

| | | |
|---|---|---|
| Idle gear 1 and idle gear 2 | Factory specification | 0.0330 to 0.117 mm<br>0.00130 to 0.00460 in. |
| | Allowable limit | 0.15 mm<br>0.0059 in. |

9Y1211156ENS0068US0

https://truckmanualshub.com/


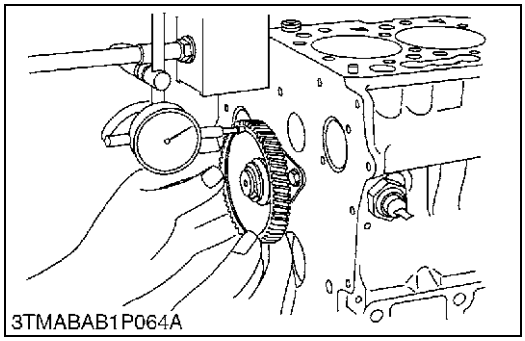
3TMABAB1P064A

## Idle Gear 1 and 2 Side Clearance

1. Set a dial indicator with its tip on the idle gear.
2. Measure the side clearance by moving the idle gear to the front and rear.
3. If the measurement exceeds the allowable limit, replace the idle gear collar.

| | | |
|---|---|---|
| Idle gear 1 and 2 side clearance | Factory specification | 0.20 to 0.51 mm<br>0.0079 to 0.020 in. |
| | Allowable limit | 0.8 mm<br>0.031 in. |

9Y1211156ENS0069US0

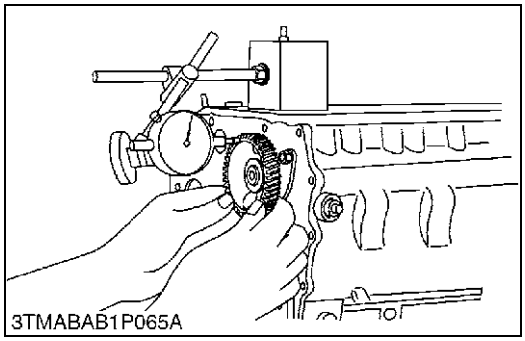
3TMABAB1P065A

## Camshaft Side Clearance

1. Set a dial indicator with its tip on the camshaft.
2. Measure the side clearance by moving the cam gear to the front to rear.
3. If the measurement exceeds the allowable limit, replace the camshaft stopper.

| | | |
|---|---|---|
| Camshaft side clearance | Factory specification | 0.070 to 0.22 mm<br>0.0028 to 0.0086 in. |
| | Allowable limit | 0.30 mm<br>0.012 in. |

9Y1211156ENS0070US0

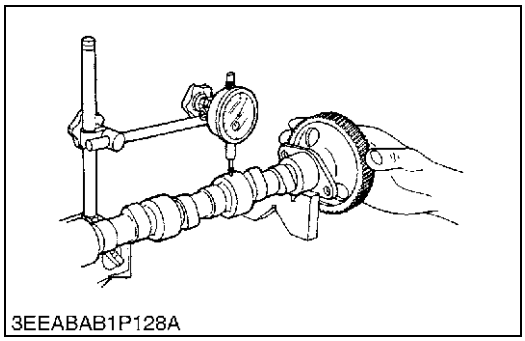
3EEABAB1P128A

## Camshaft Alignment

1. Support the camshaft with V blocks on the surface plate at both end journals.
2. Set a dial indicator with its tip on the intermediate journal.
3. Measure the camshaft alignment.
4. If the measurement exceeds the allowable limit, replace the camshaft.

| | | |
|---|---|---|
| Camshaft alignment | Allowable limit | 0.01 mm<br>0.0004 in. |

9Y1211156ENS0071US0

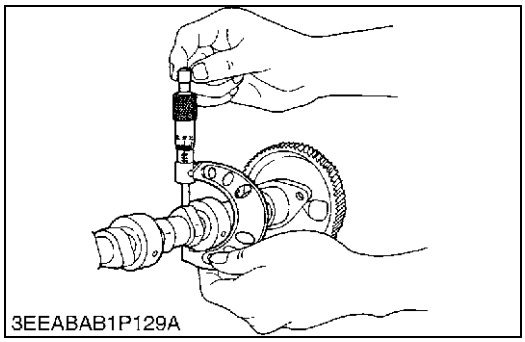
3EEABAB1P129A

## Cam Height

1. Measure the height of the cam at its highest point with an outside micrometer.
2. If the measurement is less than the allowable limit, replace the camshaft.

| | | |
|---|---|---|
| Cam height of intake | Factory specification | 28.80 mm<br>1.134 in. |
| | Allowable limit | 28.75 mm<br>1.132 in. |

| | | |
|---|---|---|
| Cam height of exhaust | Factory specification | 29.00 mm<br>1.142 in. |
| | Allowable limit | 28.95 mm<br>1.140 in. |

9Y1211156ENS0072US0

https://truckmanualshub.com/


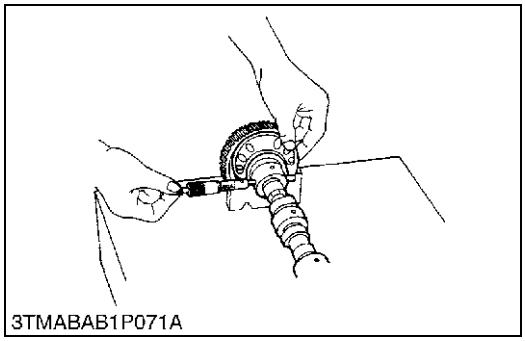
3TMABAB1P071A

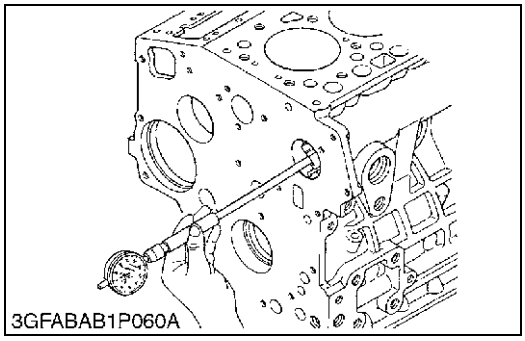
3GFABAB1P060A

**Oil Clearance of Camshaft Journal**

1. Measure the camshaft journal O.D. with an outside micrometer.
2. Measure the cylinder block bore I.D. for camshaft with a cylinder gauge, and calculate the oil clearance.
3. If the oil clearance exceeds the allowable limit, replace the camshaft.

| | | |
|---|---|---|
| Oil clearance of camshaft journal | Factory specification | 0.050 to 0.091 mm<br>0.0020 to 0.0035 in. |
| | Allowable limit | 0.15 mm<br>0.0059 in. |

| | | |
|---|---|---|
| Camshaft journal O.D. | Factory specification | 35.934 to 35.950 mm<br>1.4147 to 1.4153 in. |
| Camshaft bearing I.D.<br>(Cylinder block bore I.D.) | Factory specification | 36.000 to 36.025 mm<br>1.4173 to 1.4183 in. |

9Y1211156ENS0073US0

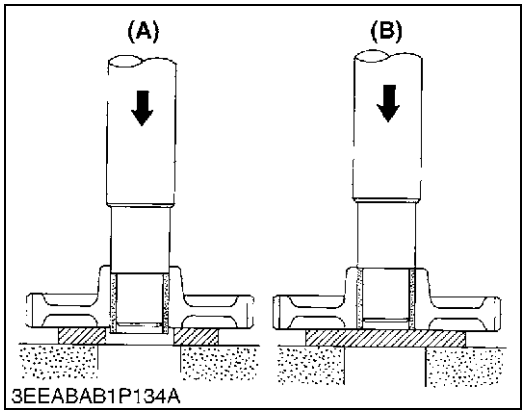

3EEABAB1P134A

**Replacing Idle Gear Bushing**

**(When removing)**

1. Press out the used idle gear bushing using an idle gear bushing replacing tool. (See page "SPECIAL TOOLS".)

**(When installing)**

1. Clean a new idle gear bushing and idle gear bore, and apply engine oil to them.
2. Press in a new bushing using an idle gear bushing replacing tool, until it is flush with the end of the idle gear.

**(A) When Removing** **(B) When Installing**

9Y1211156ENS0074US0

## (3) Piston and Connecting Rod

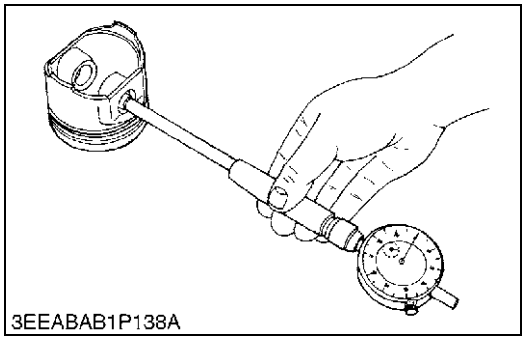
3EEABAB1P138A

**Piston Pin Bore I.D.**

1. Measure the piston pin bore I.D. in both the horizontal and vertical directions with a cylinder gauge.
2. If the measurement exceeds the allowable limit, replace the piston.

| | | |
|---|---|---|
| Piston pin bore I.D. | Factory specification | 22.000 to 22.013 mm<br>0.86615 to 0.86665 in. |
| | Allowable limit | 22.03 mm<br>0.8673 in. |

9Y1211156ENS0075US0

https://truckmanualshub.com/


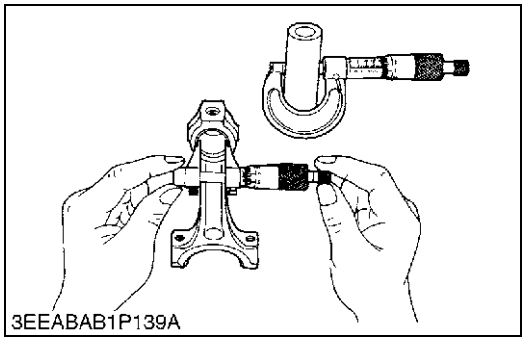


## Oil Clearance between Piston Pin and Small End Bushing

1. Measure the piston pin O.D. where it contacts the bushing with an outside micrometer.
2. Measure the small end bushing I.D. with an inside micrometer, and calculate the oil clearance.
3. If the oil clearance exceeds the allowable limit, replace the bushing. If it still exceeds the allowable limit, replace the piston pin.

| | | |
|---|---|---|
| Oil clearance between piston pin and small end bushing | Factory specification | 0.014 to 0.038 mm<br>0.00055 to 0.0014 in. |
| | Allowable limit | 0.15 mm<br>0.0059 in. |

| | | |
|---|---|---|
| Piston pin O.D. | Factory specification | 22.002 to 22.011 mm<br>0.86622 to 0.86657 in. |
| Small end bushing I.D. | Factory specification | 22.025 to 22.040 mm<br>0.86713 to 0.86771 in. |

9Y1211156ENS0076US0

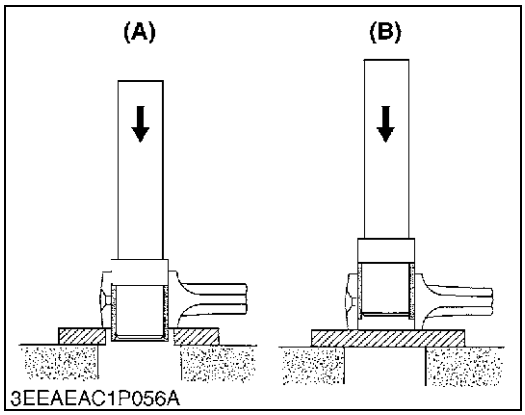


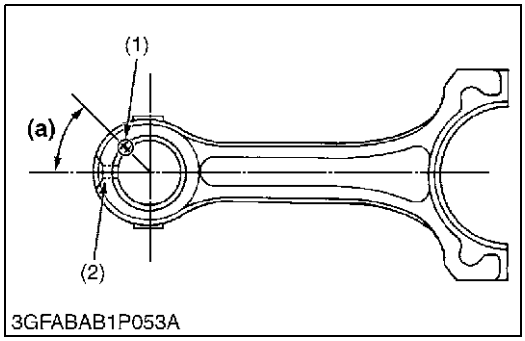


## Replacing Small End Bushing

**(When removing)**

1. Press out the used bushing using a small end bushing replacing tool. (See page "SPECIAL TOOLS".)

**(When installing)**

1. Clean a new small end bushing and bore, and apply engine oil to them.
2. Using a small end bushing replacing tool, press in a new bushing (service parts) taking care to see that the connecting rod oil hole matches the bushing hole.

| | | |
|---|---|---|
| Oil clearance between piston pin and small end bushing (Spare parts) | Factory specification | 0.014 to 0.038 mm<br>0.00056 to 0.0014 in. |
| | Allowable limit | 0.15 mm<br>0.0059 in. |

| | | |
|---|---|---|
| Small end bushing I.D. (Spare parts) | Factory specification | 22.025 to 22.040 mm<br>0.86713 to 0.86771 in. |

(1) Seam
(2) Oil Hole

**(A) When Removing**
**(B) When Installing**
**(a) 0.785 rad (45 °)**

9Y1211156ENS0077US0

https://truckmanualshub.com/


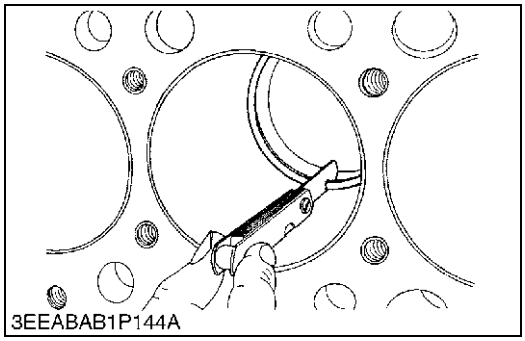
3EEABAB1P144A

## Piston Ring Gap

1. Insert the piston ring into the lower part of the cylinder (the least worn out part) with a piston.
2. Measure the ring gap with a thickness gauge.
3. If the measurement exceeds the allowable limit, replace the piston ring.

| | | | |
|---|---|---|---|
| Piston ring gap **[D1005]** | Top ring | Factory specification | 0.30 to 0.45 mm<br>0.012 to 0.017 in. |
| | | Allowable limit | 1.25 mm<br>0.0492 in. |
| | Second ring | Factory specification | 0.30 to 0.45 mm<br>0.012 to 0.017 in. |
| | | Allowable limit | 1.25 mm<br>0.0492 in. |
| | Oil ring | Factory specification | 0.25 to 0.45 mm<br>0.0099 to 0.017 in. |
| | | Allowable limit | 1.25 mm<br>0.0492 in. |

| | | | |
|---|---|---|---|
| Piston ring gap **[D1105]** | Top ring | Factory specification | 0.15 to 0.25 mm<br>0.0059 to 0.0098 in. |
| | | Allowable limit | 1.20 mm<br>0.0472 in. |
| | Second ring | Factory specification | 0.40 to 0.55 mm<br>0.016 to 0.021 in. |
| | | Allowable limit | 1.20 mm<br>0.0472 in. |
| | Oil ring | Factory specification | 0.25 to 0.45 mm<br>0.0091 to 0.017 in. |
| | | Allowable limit | 1.25 mm<br>0.0492 in. |

9Y1211156ENS0078US0

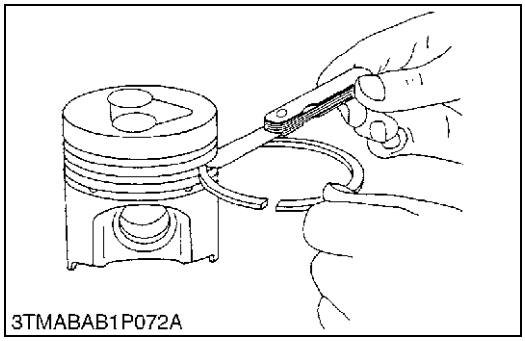
3TMABAB1P072A

## Clearance between Piston ring and Piston Ring Groove

1. Clean the rings and the ring grooves, and install each ring in its groove.
2. Measure the clearance between the ring and the groove with a feeler gauge or depth gauge.
3. If the clearance exceeds the allowable limit, replace the piston ring.
4. If the clearance still exceeds the allowable limit with new ring, replace the piston.

| | | | |
|---|---|---|---|
| Clearance between piston ring and piston ring groove | Second ring | Factory specification | 0.0950 to 0.122 mm<br>0.00374 to 0.00480 in. |
| | | Allowable limit | 0.2 mm<br>0.008 in. |
| | Oil ring | Factory specification | 0.020 to 0.060 mm<br>0.00079 to 0.0023 in. |
| | | Allowable limit | 0.15 mm<br>0.0059 in. |

9Y1211156ENS0079US0

https://truckmanualshub.com/


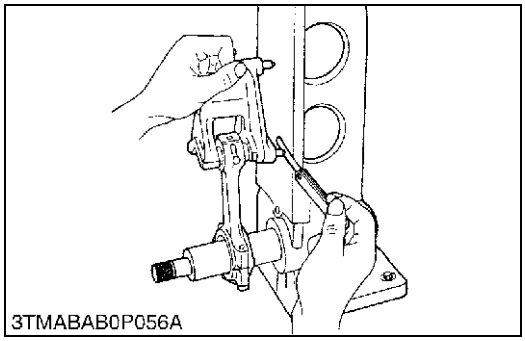
3TMABAB0P056A

**Connecting Rod Alignment**

1. Remove the crankpin bearing, and install the connecting rod cap.
2. Install the piston pin in the connecting rod.
3. Install the connecting rod on the connecting rod alignment tool.
4. Put a gauge over the piston pin, and move it against the face plate.
5. If the gauge does not fit squarely against the face plate, measure the space between the pin of the gauge and the face plate.
6. If the measurement exceeds the allowable limit, replace the connecting rod.

| | | |
|---|---|---|
| Space between gauge pin face plate | Allowable limit | 0.05 mm<br>0.002 in. |

9Y1211156ENS0080US0

## (4) Crankshaft

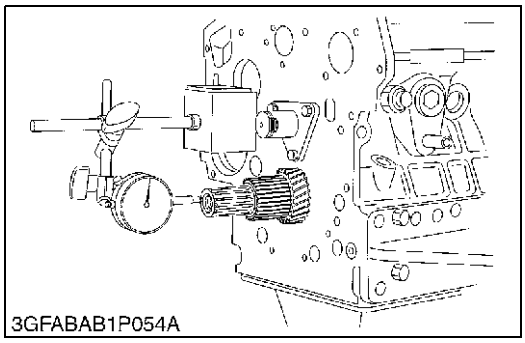
3GFABAB1P054A

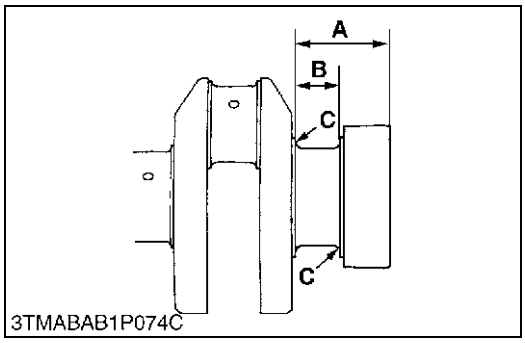

3TMABAB1P074C

**Crankshaft Side Clearance**

1. Set a dial indicator with its tip on the end of the crankshaft.
2. Measure the side clearance by moving the crankshaft to the front and rear.
3. If the measurement exceeds the allowable limit, replace the thrust bearings.
4. If the same size bearing is useless because of the crankshaft journal wear, replace it with an oversize one referring to the table and figure.

| | | |
|---|---|---|
| Crankshaft side clearance | Factory specification | 0.15 to 0.31 mm<br>0.0059 to 0.012 in. |
| | Allowable limit | 0.50 mm<br>0.020 in. |

**(Reference)**

- Oversize dimensions of crankshaft journal

| **Oversize** | **0.20 mm<br>0.0079 in.** | **0.40 mm<br>0.016 in.** |
|---|---|---|
| Dimension **A** | 51.50 to 51.70 mm<br>2.028 to 2.035 in. | 51.60 to 51.80 mm<br>2.032 to 2.039 in. |
| Dimension **B** | 28.20 to 28.25 mm<br>1.111 to 1.112 in. | 28.40 to 28.45 mm<br>1.119 to 1.120 in. |
| Dimension **C** | 2.3 to 2.7 mm radius<br>0.091 to 0.10 in. radius | 2.3 to 3.7 mm radius<br>0.091 to 0.10 in. radius |
| The crankshaft journal must be fine-finished to higher than Rmax = 0.8S. | | |

9Y1211156ENS0081US0

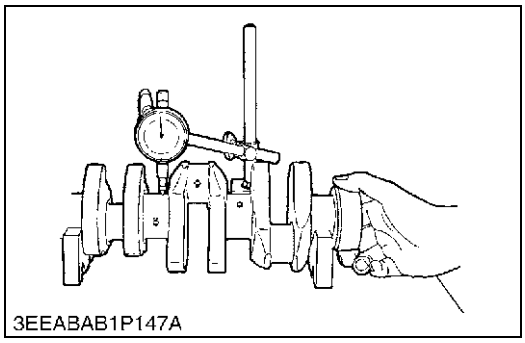
3EEABAB1P147A

**Crankshaft Alignment**

1. Support the crankshaft with V blocks on the surface plate at both end journals.
2. Set a dial indicator with its tip on the intermediate journal.
3. Measure the crankshaft alignment.
4. If the measurement exceeds the allowable limit, replace the crankshaft.

| | | |
|---|---|---|
| Crankshaft alignment | Allowable limit | 0.02 mm<br>0.0008 in. |

9Y1211156ENS0082US0

https://truckmanualshub.com/


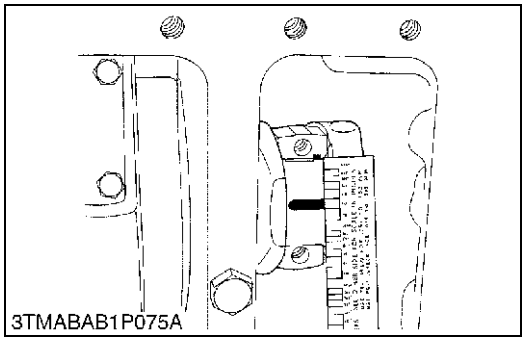
3TMABAB1P075A

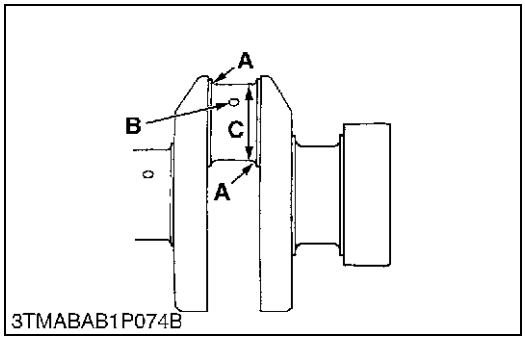

3TMABAB1P074B

## Oil Clearance between Crankpin and Crankpin Bearing

1. Clean the crankpin and crankpin bearing.
2. Put a strip of plastigauge on the center of the crankpin.
3. Install the connecting rod cap and tighten the connecting rod screws to the specified torque, and remove the cap again.
4. Measure the amount of the flattening with the scale, and get the oil clearance.
5. If the oil clearance exceeds the allowable limit, replace the crankpin bearing.
6. If the same size bearing is useless because of the crankpin wear, replace it with an undersize one referring to the table and figure.

■ **NOTE**
- **Never insert the plastigauge into the crankpin oil hole.**
- **Be sure not to move the crankshaft while the connecting rod screws are tightened.**

| | | |
|---|---|---|
| Oil clearance between crankpin and crankpin bearing | Factory specification | 0.029 to 0.091 mm<br>0.0011 to 0.0036 in. |
| | Allowable limit | 0.20 mm<br>0.0079 in. |

| | | |
|---|---|---|
| Crankpin O.D. | Factory specification | 39.959 to 39.975 mm<br>1.5732 to 1.5738 in. |
| Crankpin bearing I.D. | Factory specification | 40.040 to 40.050 mm<br>1.5750 to 1.5767 in. |

**(Reference)**
- Undersize dimensions of crankpin

| **Undersize** | **0.20 mm<br>0.0079 in.** | **0.40 mm<br>0.016 in.** |
|---|---|---|
| Dimension **A** | 2.8 to 3.2 mm radius<br>0.11 to 0.12 in. radius | 2.8 to 3.2 mm radius<br>0.11 to 0.12 in. radius |
| *Dimension **B** | 1.0 to 1.5 mm relief<br>0.040 to 0.059 in. relief | 1.0 to 1.5 mm relief<br>0.040 to 0.059 in. relief |
| Dimension **C** | 39.759 to 39.775 mm dia.<br>1.5654 to 1.5659 in. dia. | 39.559 to 39.575 mm dia.<br>1.5575 to 1.5580 in. dia. |
| The crankpin must be fine-finished to higher than Rmax = 0.8S.<br>*Holes to be de-burred and edges rounded with 1.0 to 1.5 mm (0.040 to 0.059 in.) relief. | | |

9Y1211156ENS0083US0

https://truckmanualshub.com/


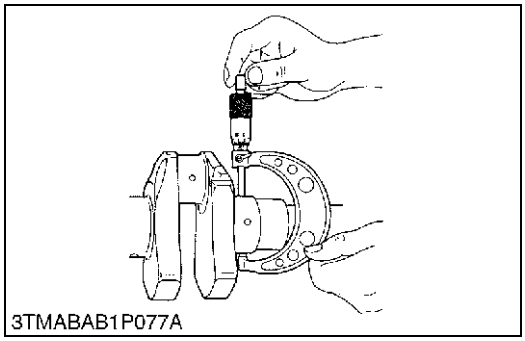
3TMABAB1P077A

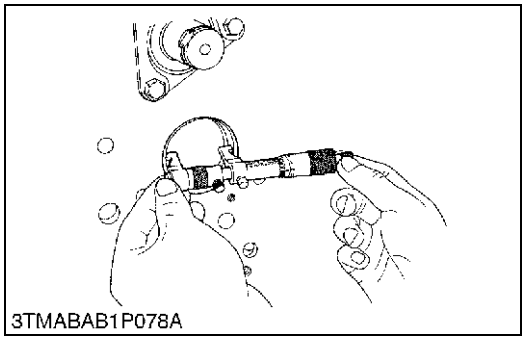
3TMABAB1P078A

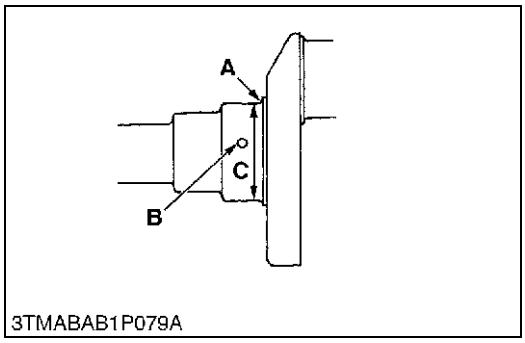

3TMABAB1P079A

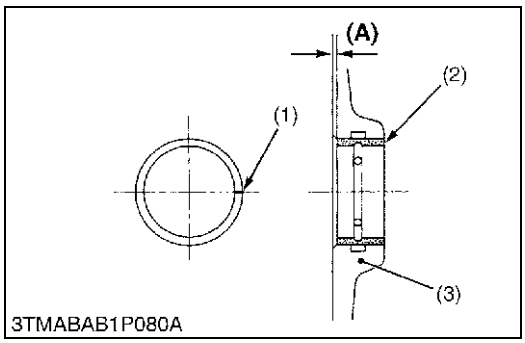

3TMABAB1P080A

## Oil Clearance between Crankshaft Journal and Crankshaft Bearing 1

1. Measure the O.D. of the crankshaft front journal with an outside micrometer.
2. Measure the I.D. of the crankshaft bearing 1 with an inside micrometer, and calculate the oil clearance.
3. If the clearance exceeds the allowable limit, replace the crankshaft bearing 1.
4. If the same size bearing is useless because of the crankshaft journal wear, replace it with an undersize one referring to the table and figure.

| | | |
|---|---|---|
| Oil clearance between crankshaft journal and crankshaft bearing 1 | Factory specification | 0.0340 to 0.114 mm<br>0.00134 to 0.00448 in. |
| | Allowable limit | 0.20 mm<br>0.0079 in. |

| | | |
|---|---|---|
| Crankshaft journal O.D. | Factory specification | 47.934 to 47.950 mm<br>1.8872 to 1.8877 in. |
| Crankshaft bearing 1 I.D. | Factory specification | 47.984 to 48.048 mm<br>1.8892 to 1.8916 in. |

**(Reference)**

- Undersize dimensions of crankshaft journal

| **Undersize** | **0.20 mm<br>0.0079 in.** | **0.40 mm<br>0.016 in.** |
|---|---|---|
| Dimension **A** | 2.3 to 2.7 mm radius<br>0.091 to 0.10 in. radius | 2.3 to 2.7 mm radius<br>0.091 to 0.10 in. radius |
| *Dimension **B** | 1.0 to 1.5 mm relief<br>0.040 to 0.059 in. relief | 1.0 to 1.5 mm relief<br>0.040 to 0.059 in. relief |
| Dimension **C** | 47.734 to 47.750 mm dia.<br>1.8793 to 1.8799 in. dia. | 47.534 to 47.550 mm dia.<br>1.8715 to 1.8720 in. dia. |
| The crankshaft journal must be fine-finished to higher than Rmax = 0.8S.<br>*Holes to be de-burred and edges rounded with 1.0 to 1.5 mm (0.040 to 0.059 in.) relief. | | |

9Y1211156ENS0084US0

## Replacing Crankshaft Bearing 1

**(When removing)**

1. Press out the used crankshaft bearing 1 using a crankshaft bearing 1 replacing tool. (See page "SPECIAL TOOLS".)

**(When installing)**

1. Clean a new crankshaft bearing 1 and crankshaft journal bore, and apply engine oil to them.
2. Using a crankshaft bearing 1 replacing tool, press in a new bearing 1 (2) so that its seam (1) directs toward the exhaust manifold side. (See figure.)

| | | |
|---|---|---|
| Dimension **(A)** | Factory specification | 0 to 0.3 mm<br>0 to 0.01 in. |

(1) Seam
(2) Crankshaft Bearing 1
(3) Cylinder Block
**(A) Dimension**

9Y1211156ENS0085US0

https://truckmanualshub.com/


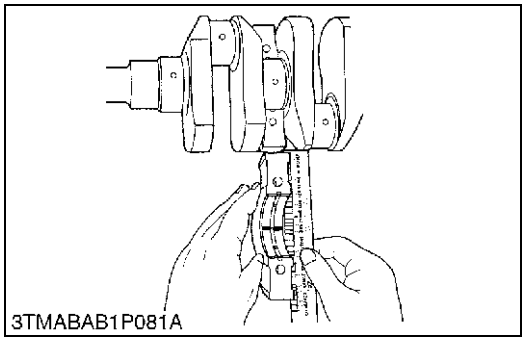
3TMABAB1P081A

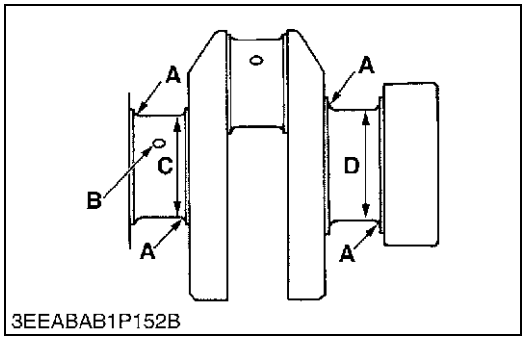

3EEABAB1P152B

**Oil Clearance between Crankshaft Journal and Crankshaft Bearing 2 (Crankshaft Bearing 3)**

1. Put a strip of plastigauge on the center of the journal.
2. Install the bearing case and tighten the baring case screws 1 to the specified torque, and remove the bearing case again.
3. Measure the amount of the flattening with the scale and get the oil clearance.
4. If the clearance exceeds the allowable limit, replace the crankshaft bearing 2 (1) and crankshaft bearing (3).
5. If the same size bearing is useless because of the crankshaft journal wear, replace it with an undersize one referring to the table and figure.

■ **NOTE**

- **Be sure not to move the crankshaft while the bearing case screws are tightened.**

| | | |
|---|---|---|
| Oil clearance between crankshaft journal and crankshaft bearing 2 | Factory specification | 0.034 to 0.095 mm<br>0.0014 to 0.0037 in. |
| | Allowable limit | 0.20 mm<br>0.0079 in. |

| | | |
|---|---|---|
| Crankshaft journal O.D. (Intermediate) | Factory specification | 47.934 to 47.950 mm<br>1.8872 to 1.8877 in. |
| Crankshaft bearing 2 I.D. | Factory specification | 47.984 to 48.029 mm<br>1.8892 to 1.8909 in. |

| | | |
|---|---|---|
| Oil clearance between crankshaft journal and crankshaft bearing 3 | Factory specification | 0.0340 to 0.103 mm<br>0.00134 to 0.00405 in. |
| | Allowable limit | 0.20 mm<br>0.0079 in. |

| | | |
|---|---|---|
| Crankshaft journal O.D. (Flywheel side) | Factory specification | 51.921 to 51.940 mm<br>2.0442 to 2.0448 in. |
| Crankshaft bearing 3 I.D. | Factory specification | 51.974 to 52.024 mm<br>2.0463 to 2.0481 in. |

**(Reference)**

- Undersize dimensions of crankshaft journal

| **Undersize** | **0.020 mm<br>0.0079 in.** | **0.40 mm<br>0.016 in.** |
|---|---|---|
| Dimension **A** | 2.3 to 2.7 mm radius<br>0.091 to 0.10 in. radius | 2.3 to 2.7 mm radius<br>0.091 to 0.10 in. radius |
| *Dimension **B** | 1.0 to 1.5 mm relief<br>0.040 to 0.0591 in. relief | 1.0 to 1.5 mm relief<br>0.040 to 0.0591 in. relief |
| Dimension **C** | 47.734 to 47.750 mm dia.<br>1.8793 to 1.8799 in. dia. | 47.534 to 47.550 mm dia.<br>1.8715 to 1.8720 in. dia. |
| Dimension **D** | 51.721 to 51.740 mm dia.<br>2.0363 to 2.0370 in. dia. | 51.521 to 51.540 mm dia.<br>2.0284 to 2.0291 in. dia. |
| The crankshaft journal must be fine-finished to higher than Rmax = 0.8S<br>*Holes to be de-burred and edges rounded with 1.0 to 1.5 mm<br>(0.040 to 0.059 in.) relief. | | |

9Y1211156ENS0086US0

https://truckmanualshub.com/


## (5) Cylinder

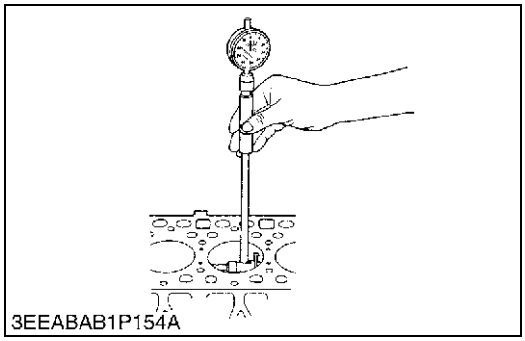
3EEABAB1P154A

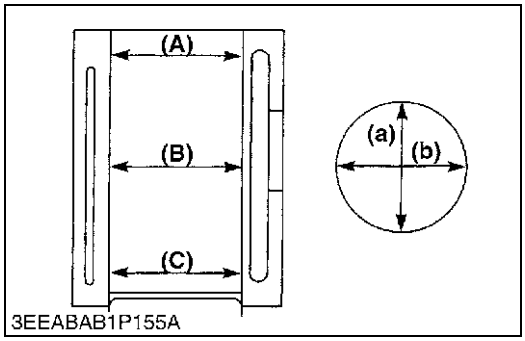

3EEABAB1P155A

### Cylinder Wear

1. Measure the I.D. of the cylinder at the six positions (see figure) with a cylinder gauge to find the maximum and minimum I.D.'s.
2. Get the difference (Maximum wear) between the maximum and the minimum I.D.'s.
3. If the wear exceeds the allowable limit, bore and hone to the oversize dimension. (Refer to "Correcting Cylinder".)
4. Visually check the cylinder wall for scratches. If deep scratches are found, the cylinder should be bored. (Refer to "Correcting Cylinder".)

| | | | |
|---|---|---|---|
| Cylinder I.D. | Factory specification | D1005 | 76.000 to 76.019 mm<br>2.9922 to 2.9929 in. |
| | | D1105 | 78.000 to 78.019 mm<br>3.0709 to 3.0716 in. |
| | Allowable limit | D1005 | 76.15 mm<br>2.998 in. |
| | | D1105 | 78.15 mm<br>3.077 in. |

**(A) Top**
**(B) Middle**
**(C) Bottom (Skirt)**
**(a) Right-angled to Piston Pin**
**(b) Piston Pin Direction**

9Y1211156ENS0087US0

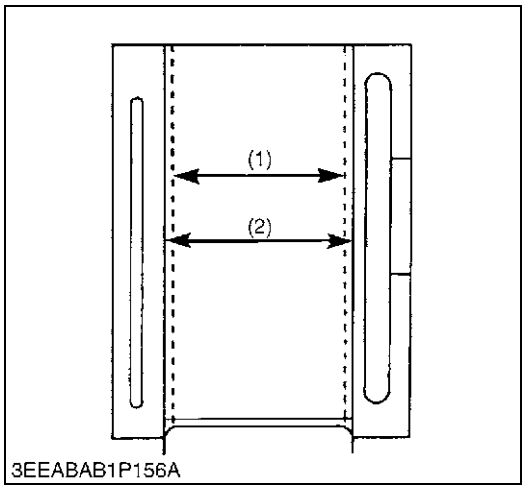

3EEABAB1P156A

### Correcting Cylinder

1. When the cylinder is worn beyond the allowable limit, bore and hone it to the specified dimension.

| | | | |
|---|---|---|---|
| Oversized cylinder liner I.D. | Factory specification | D1005 | 76.500 to 76.519 mm<br>3.0119 to 3.0125 in. |
| | | D1105 | 78.500 to 78.519 mm<br>3.0906 to 3.0912 in. |
| | Allowable limit | D1005 | 76.65 mm<br>3.018 in. |
| | | D1105 | 78.65 mm<br>3.096 in. |
| Finishing | Finishing<br>Hone to 1.2 to 2.0 mm μR max.<br>(48 to 78 in. μR max.) | | |

2. Replace the piston and piston rings with oversize ones. Oversize: 0.5 mm (0.02 in.)

■ **NOTE**
- **When the oversize cylinder is worn beyond the allowable limit, replace the cylinder block with a new one.**

(1) Cylinder I.D. (Before Correction) (2) Cylinder I.D. (Oversize)

9Y1211156ENS0088US0

## (6) Oil Pump

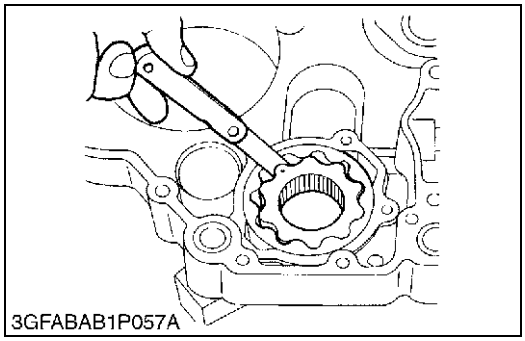
3GFABAB1P057A

### Rotor Lobe Clearance

1. Measure the clearance between lobes of the inner rotor and the outer rotor with a feeler gauge.
2. If the clearance exceeds the factory specifications, replace the oil pump rotor assembly.

| | | |
|---|---|---|
| Rotor lobe clearance | Factory specification | 0.060 to 0.18 mm<br>0.0024 to 0.0071 in. |

9Y1211156ENS0089US0

https://truckmanualshub.com/


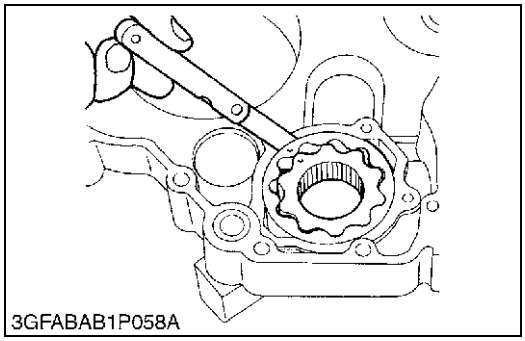
3GFABAB1P058A

## Clearance between Outer Rotor and Pump Body

1. Measure the clearance between the outer rotor and the pump body with a feeler gauge.
2. If the clearance exceeds the factory specifications, replace the oil pump rotor assembly.

| | | |
|---|---|---|
| Clearance between outer rotor and pump body | Factory specification | 0.100 to 0.180 mm<br>0.00394 to 0.00708 in. |

9Y1211156ENS0090US0

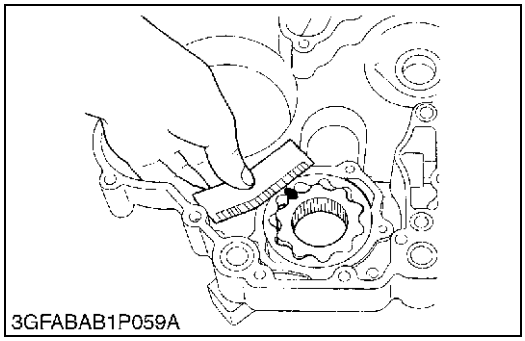
3GFABAB1P059A

## Clearance between Rotor and Cover

1. Put a strip of plastigauge onto the rotor face with grease.
2. Install the cover and tighten the screws.
3. Remove the cover carefully, and measure the amount of the flattening with the scale and get the clearance.
4. If the clearance exceeds the factory specifications, replace the oil pump rotor assembly.

| | | |
|---|---|---|
| Clearance between rotor and cover | Factory specification | 0.025 to 0.075 mm<br>0.00099 to 0.0029 in. |

9Y1211156ENS0091US0

https://truckmanualshub.com/

# 2 TRANSMISSION

https://truckmanualshub.com/

# MECHANISM

## CONTENTS


1. STRUCTURE ..... 2-M1
2. FRONT CASE ..... 2-M2
3. HYDROSTATIC TRANSMISSION ..... 2-M3
   [1] STRUCTURE ..... 2-M3
   [2] PUMP AND MOTOR ..... 2-M5
   [3] OIL FLOW AND VALVES ..... 2-M6
   [4] CONTROL LINKAGE ..... 2-M13
4. SPEED SET DEVICE ..... 2-M14
   [1] SPEED SET LINKAGE ..... 2-M14
      (1) Speed Set ..... 2-M14
      (2) Speed Set Release ..... 2-M15
5. RANGE GEAR SHIFT SECTION ..... 2-M16
6. FRONT WHEEL DRIVE SECTION ..... 2-M17
7. PTO SYSTEM ..... 2-M18
   [1] STRUCTURE ..... 2-M18
   [2] REAR PTO SECTION ..... 2-M19
   [3] REAR PTO / MID-PTO SECTION ..... 2-M20
   [4] MID-PTO SECTION ..... 2-M21
   [5] INDEPENDENT PTO ..... 2-M22
      (1) Hydraulic Circuit ..... 2-M22
      (2) Independent PTO Control Valve ..... 2-M22
      (3) Independent PTO Clutch ..... 2-M23
      (4) Independent PTO Lever "Engaged" ..... 2-M24
      (5) Independent PTO Lever "Disengaged" ..... 2-M25
8. DIFFERENTIAL GEAR SYSTEM ..... 2-M26
   [1] DIFFERENTIAL FUNCTION ..... 2-M26
   [2] DIFFERENTIAL LOCK ..... 2-M27

https://truckmanualshub.com/


# 1. STRUCTURE

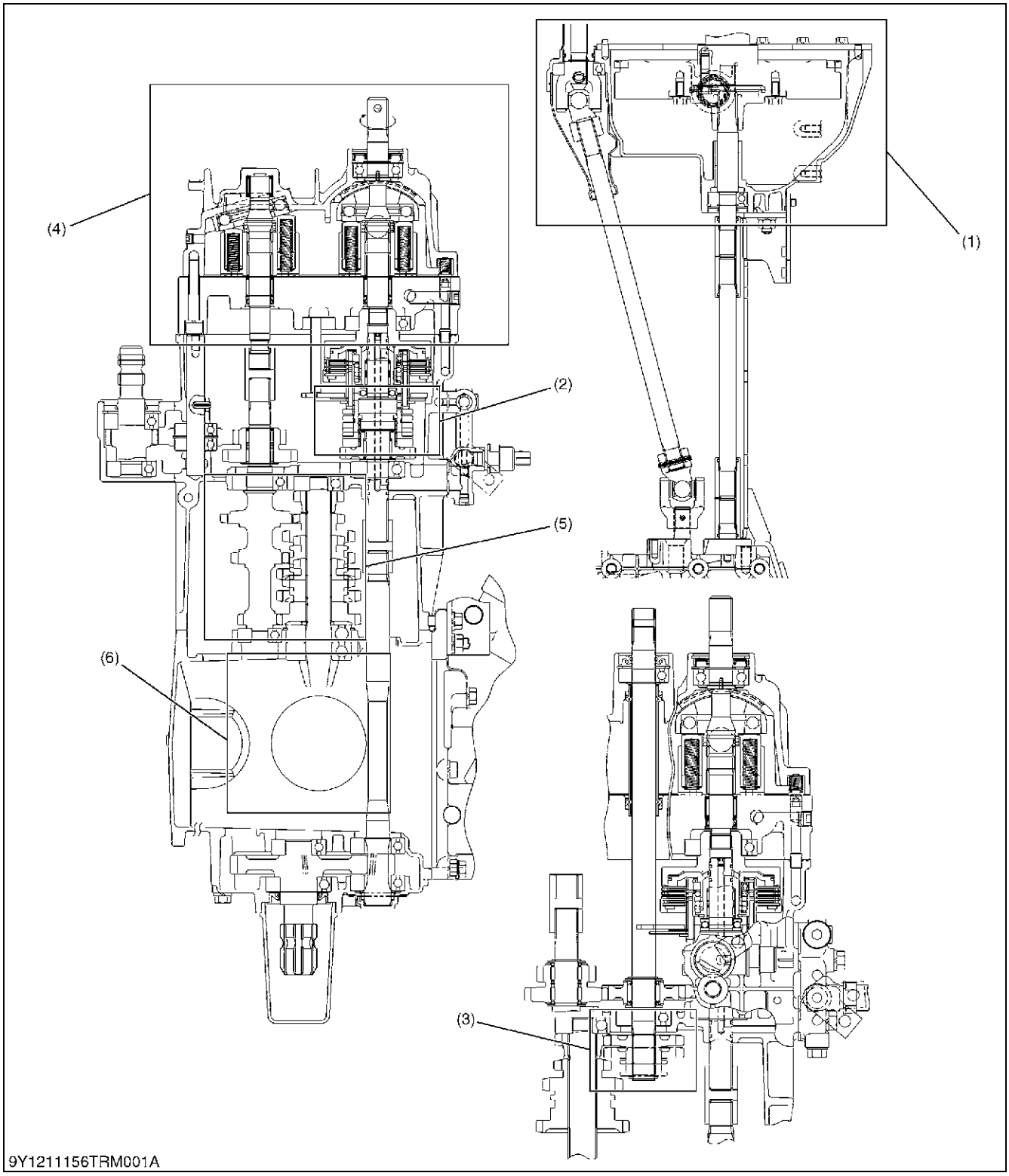


(1) Front Case Section
(2) Rear PTO and Mid PTO Shift Section
(3) Front Wheel Drive Section
(4) Hydrostatic Transmission Section
(5) Range Gear Shift Section
(6) Differential Gear Section

9Y1211156TRM0001US0

https://truckmanualshub.com/


# 2. FRONT CASE

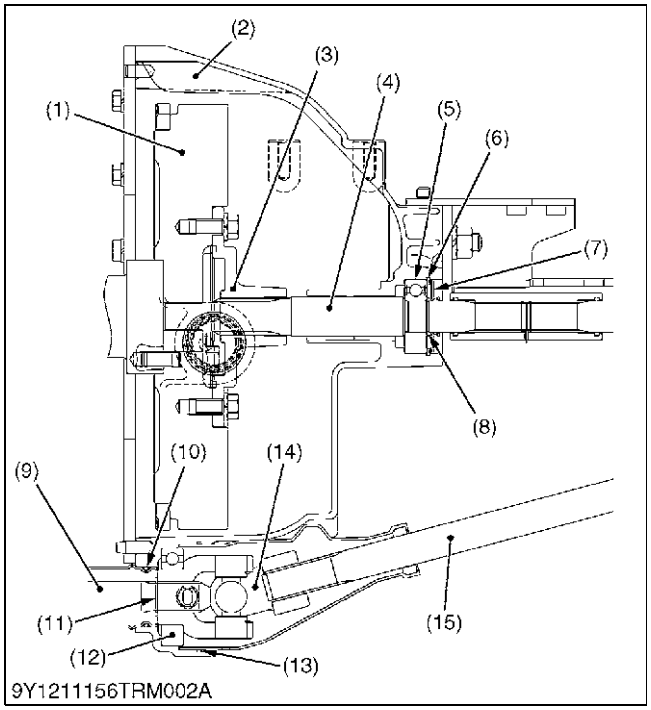


In this tractor, clutch disc is not installed.

The input flange (3) is installed on the clutch shaft (4).

Power from the engine is transmitted through the input flange (3) to the clutch shaft (4) and HST pump shaft.

(1) Flywheel
(2) Clutch Housing
(3) Input Flange
(4) Clutch Shaft
(5) Ball Bearing
(6) Circlip
(7) Oil Seal
(8) Circlip
(9) Front Drive Shaft
(10) O-ring
(11) Circlip
(12) Ball Bearing
(13) O-ring
(14) Universal Joint
(15) Rear Drive Shaft

9Y1211156TRM0002US0

https://truckmanualshub.com/


# 3. HYDROSTATIC TRANSMISSION

## [1] STRUCTURE

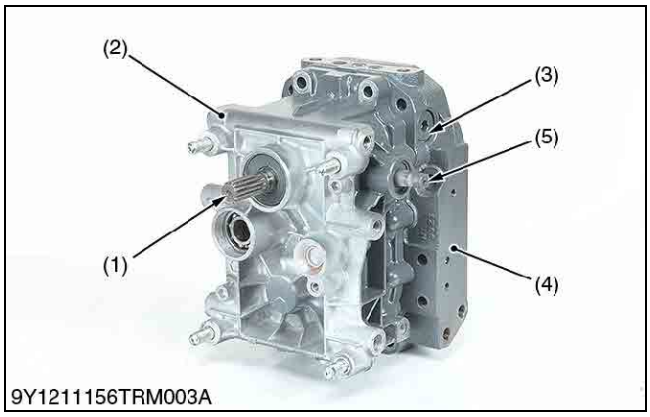

9Y1211156TRM003A

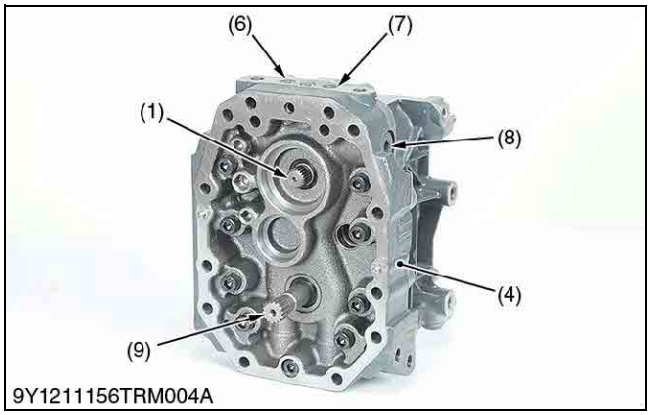

9Y1211156TRM004A

Hydrostatic transmission consists of variable displacement piston pump, fixed displacement piston motor and valve system.

(1) Input Shaft (Pump Shaft)
(2) Housing
(3) Check and High Pressure Relief Valve (Reverse)
(4) Center Section
(5) Trunnion Shaft
(6) Check Port
(7) Check Port
(8) Check and High Pressure Relief Valve (Forward)
(9) Output Shaft (Motor Shaft)

9Y1211156TRM0003US0

https://truckmanualshub.com/


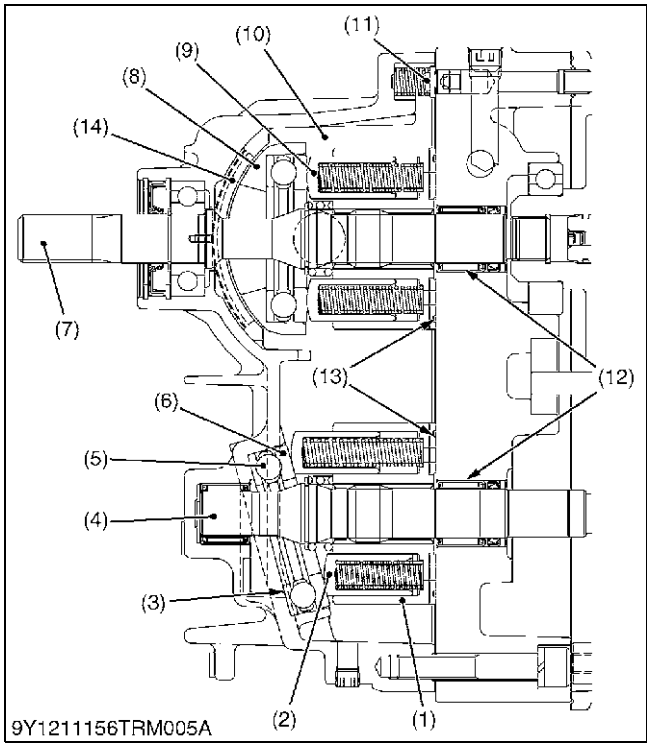


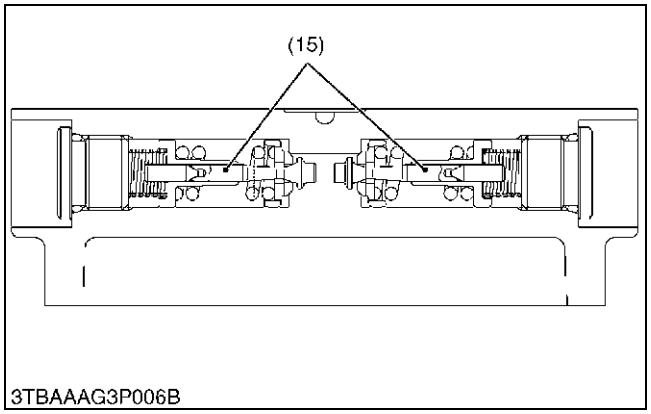


(1) Cylinder Block (Motor)
(2) Piston
(3) Thrust Collar
(4) Motor Shaft
(5) Thrust Ball Bearing
(6) Thrust Collar
(7) Pump Shaft
(8) Swashplate
(9) Piston
(10) Cylinder Block (Pump)
(11) Charge Relief Valve
(12) Needle Bearing
(13) Valve Plate
(14) Cradle Bearing
(15) Check and High Pressure Relief Valve

9Y1211156TRM0004US0

https://truckmanualshub.com/


# [2] PUMP AND MOTOR

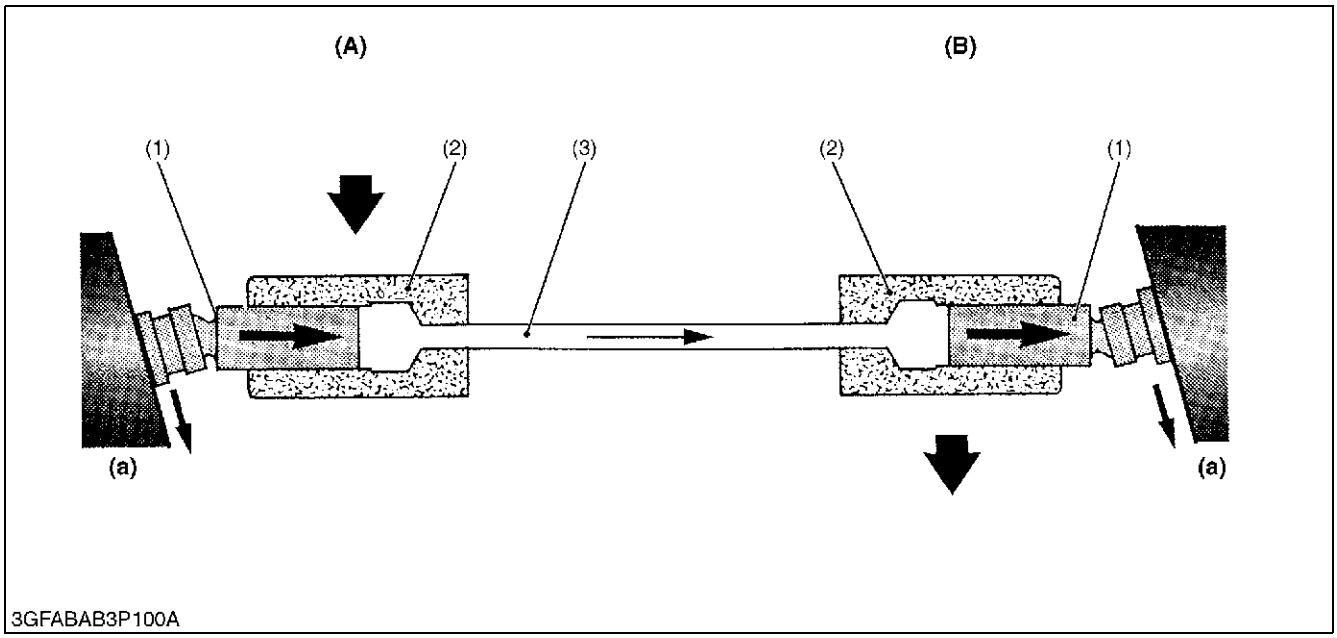


| | | | |
|---|---|---|---|
| (1) Piston | (3) Oil | **(A) Pump** | **(a) Swashplate** |
| (2) Cylinder | | **(B) Motor** | |

Pump and motor cylinder, each containing pistons, are connected by lines. Cylinders and lines are filled with oil Piston ride against swashplates located in pump and motor.

In the pump, as the cylinder rotates, pistons move across the sloping face of swashplate and slide in or out of their cylinder bores. The oil forced out by the pump pistons, causes the motor pistons to slide out of their cylinder bores.

In the motor, sliding out of the cylinder and moving across the sloping face of swashplate, the pistons rotate the cylinder.

9Y1211156TRM0005US0

https://truckmanualshub.com/


# [3] OIL FLOW AND VALVES

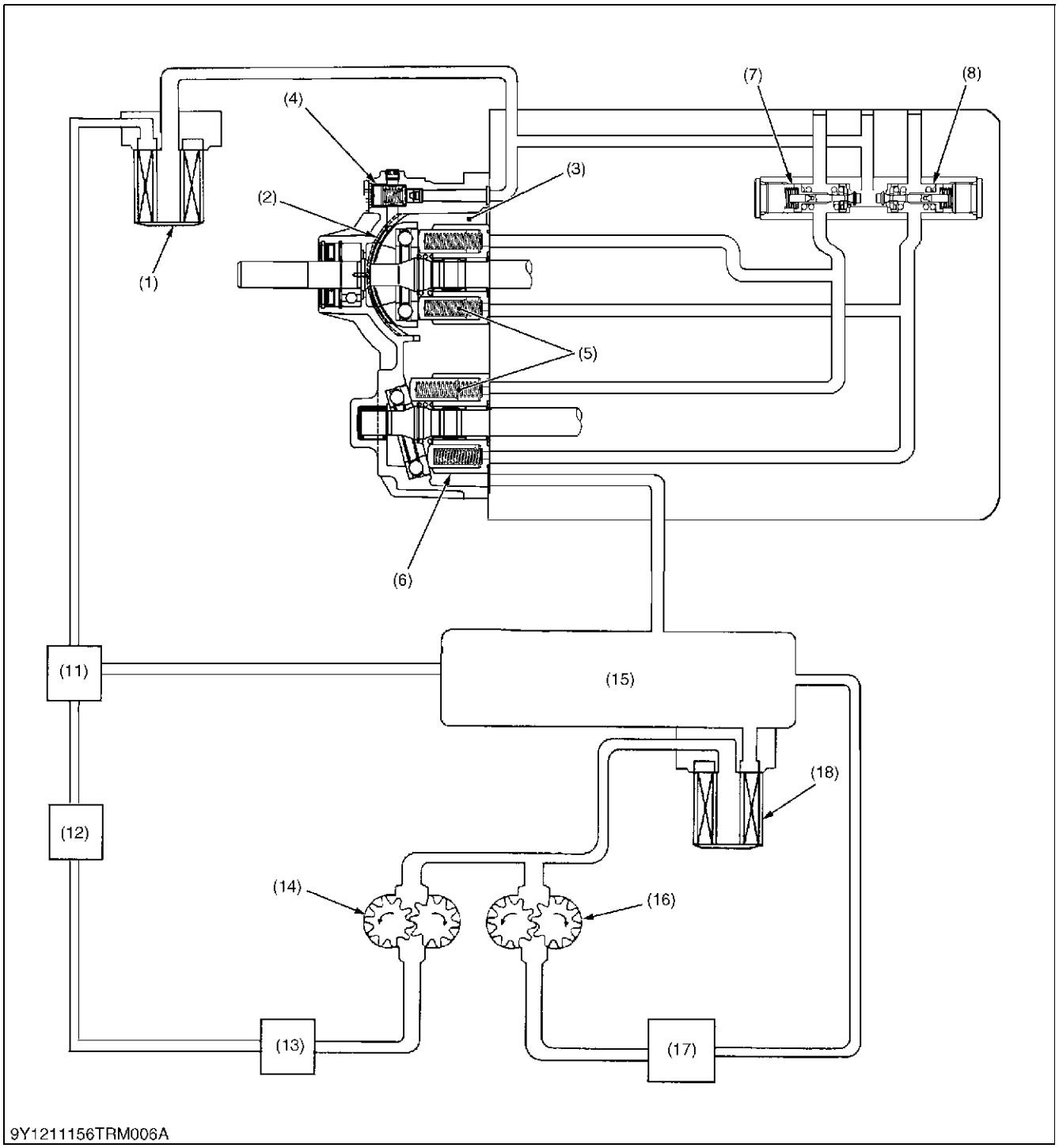


(1) Oil Filter Cartridge (for HST)
(2) Swashplate
(3) Cylinder Block (for Pump)
(4) Charge Relief Valve
(5) Piston
(6) Cylinder Block (for Motor)
(7) Check and High Pressure Relief Valve (for Forward)
(8) Check and High Pressure Relief Valve (for Reverse)
(9) Neutral Valve (for Forward)
(10) Neutral Valve (for Reverse)
(11) Independent PTO Control Valve
(12) Oil Cooler
(13) Power Steering
(14) Hydraulic Pump (for Power Steering, Independent PTO, HST)
(15) Oil Tank
(16) Hydraulic Pump (for 3-points Hitch)
(17) Hydraulic Control Valve (for 3-points Hitch)
(18) Oil Filter Cartridge

**(To be continued)**

https://truckmanualshub.com/


**(Continued)**

The pump and the motor are joined in a closed hydraulic circuit. Most of oil circulates with in the main oil circuit. A little oil lubricates and oozes out from the clearance between the moving parts in the case. Then oil in the main oil circuit of the HST needs to be supplied a want.

So all of oil fed from hydraulic pump flow to hydraulic transmission for charging and cooling.

The charge oil aids smooth operation of pistons for pump and motor. The charge oil passed to charge relief valve port. The rest of oil passed through the charge relief valve into the HST housing. And overflow oil from HST housing return to the transmission case.

9Y1211156TRM0006US0

https://truckmanualshub.com/


## Neutral

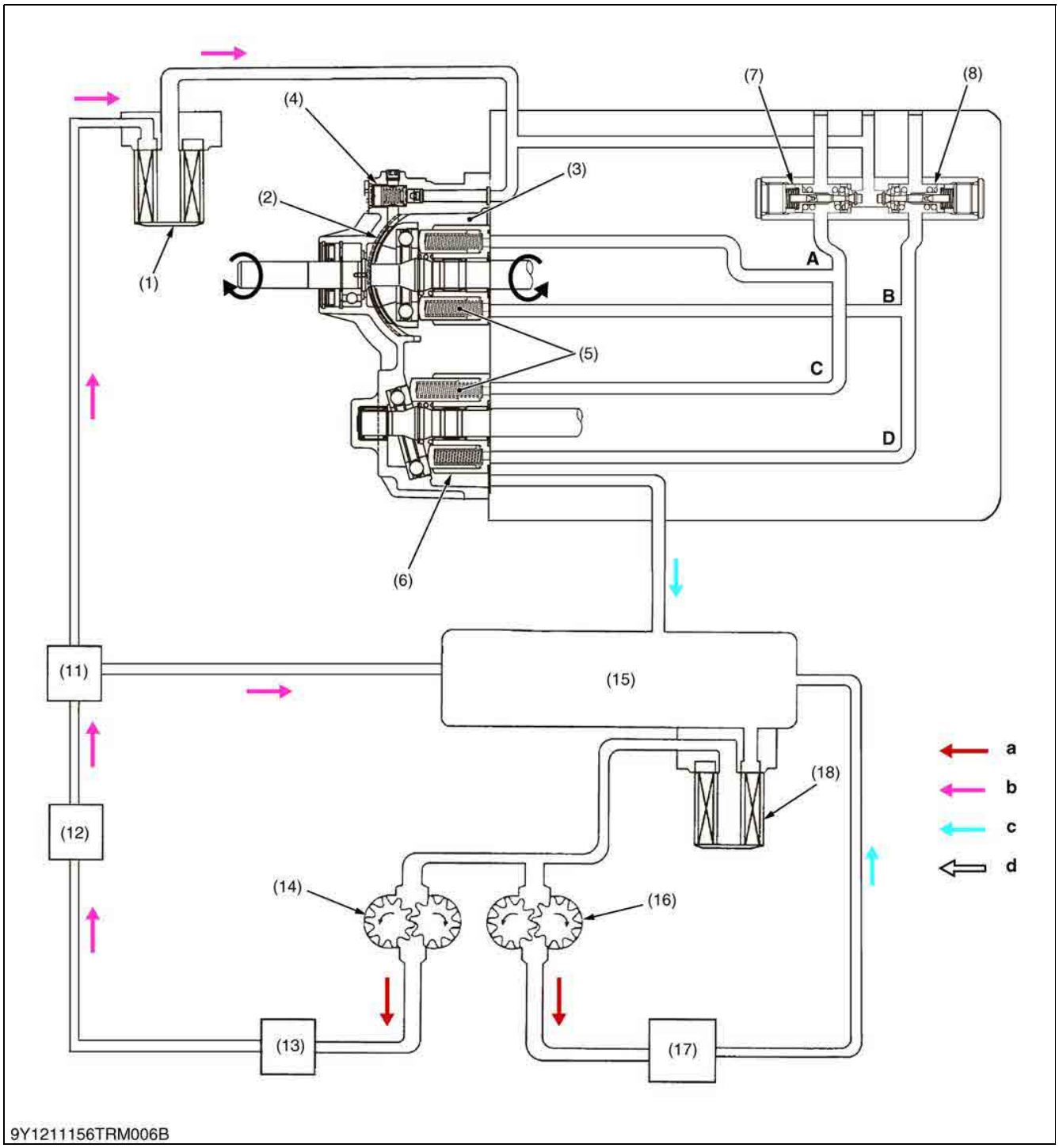


(1) Oil Filter Cartridge (for HST)
(2) Swashplate
(3) Cylinder Block (for Pump)
(4) Charge Relief Valve
(5) Piston
(6) Cylinder Block (for Motor)
(7) Check and High Pressure Relief Valve (for Forward)
(8) Check and High Pressure Relief Valve (for Reverse)
(9) Neutral Valve (for Forward)
(10) Neutral Valve (for Reverse)
(11) Independent PTO Control Valve
(12) Oil Cooler
(13) Power Steering
(14) Hydraulic Pump (for Power Steering, Independent PTO, HST)
(15) Oil Tank
(16) Hydraulic Pump (for 3-points Hitch)
(17) Hydraulic Control Valve (for 3-points Hitch)
(18) Oil Filter Cartridge

**A: Pump A Port**
**B: Pump B Port**
**C: Motor C Port**
**D: Motor D Port**

**a: High Pressure Oil**
**b: Low Pressure Oil**
**c: Free Oil**
**d: Suction Oil**

**(To be continued)**

https://truckmanualshub.com/


**(Continued)**

When the speed control pedal is in **"NEUTRAL"**, the variable swashplate is right-angles to the pump pistons. And the pump pistons only rotate with cylinder block (pump) without reciprocating.

Since the oil is not being pumped to the motor, the cylinder block (motor) is stationary. And the output shaft does not rotate.

9Y1211156TRM0007US0

https://truckmanualshub.com/


**Forward**

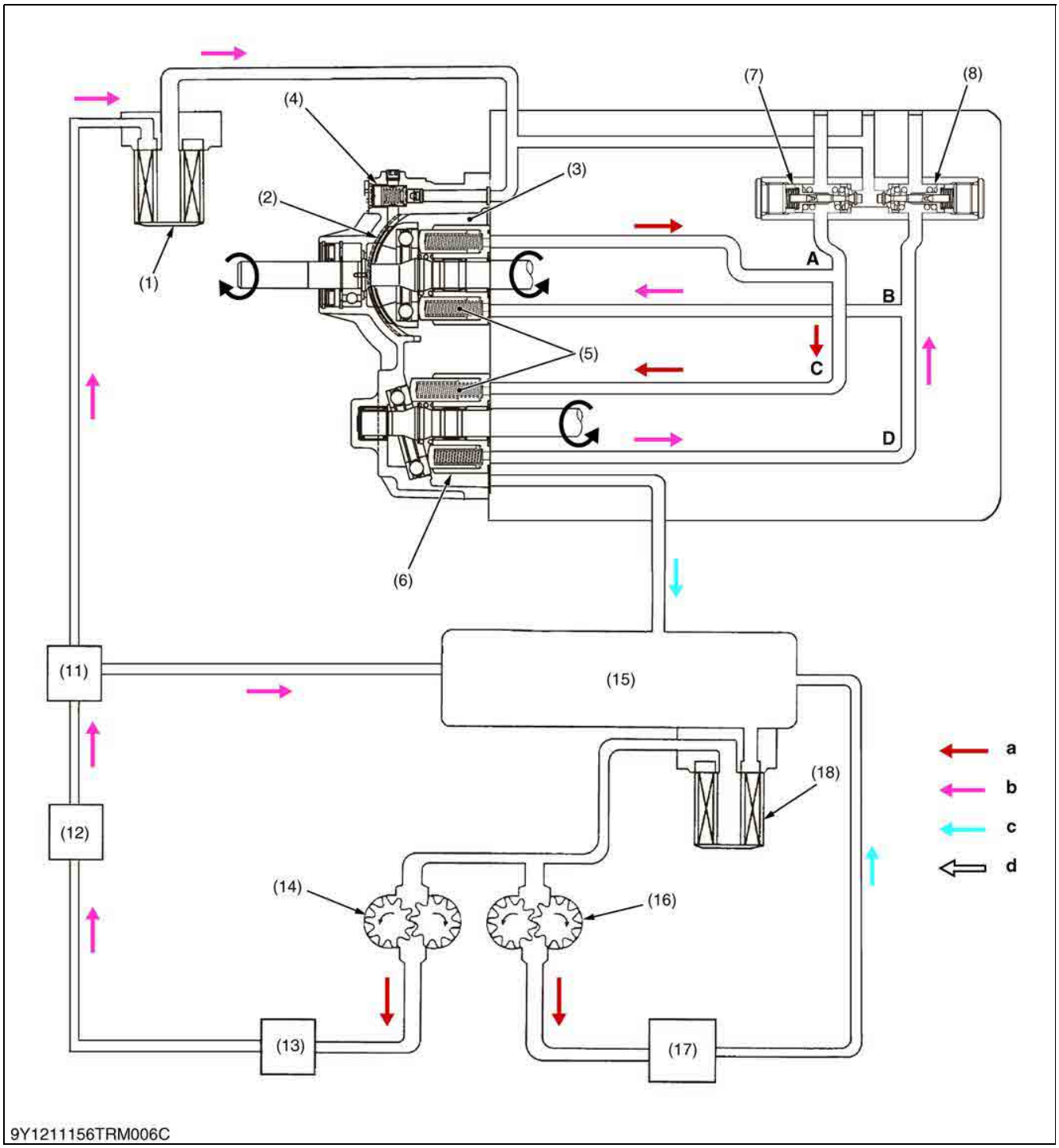


(1) Oil Filter Cartridge (for HST)
(2) Swashplate
(3) Cylinder Block (for Pump)
(4) Charge Relief Valve
(5) Piston
(6) Cylinder Block (for Motor)
(7) Check and High Pressure Relief Valve (for Forward)
(8) Check and High Pressure Relief Valve (for Reverse)
(9) Neutral Valve (for Forward)
(10) Neutral Valve (for Reverse)
(11) Independent PTO Control Valve
(12) Oil Cooler
(13) Power Steering
(14) Hydraulic Pump (for Power Steering, Independent PTO, HST)
(15) Oil Tank
(16) Hydraulic Pump (for 3-points Hitch)
(17) Hydraulic Control Valve (for 3-points Hitch)
(18) Oil Filter Cartridge

**A: Pump A Port**
**B: Pump B Port**
**C: Motor C Port**
**D: Motor D Port**

**a: High Pressure Oil**
**b: Low Pressure Oil**
**c: Free Oil**
**d: Suction Oil**

**(To be continued)**

https://truckmanualshub.com/


**(Continued)**

When the speed control pedal is stepped on and set to **"FORWARD"**, the variable swashplate is tilted as shown in figure above.

As the pump cylinder block rotates with the input shaft, oil is forced out of pump port **A** at high pressure. As pressure oil from the pump cylinder block enters to motor port **C**, the pistons, which align with port **C**, are pushed against the swashplate and slide down the inclined surface.

Then the output shaft rotates with the motor cylinder block. This drives the machine forward and the angle of pump swashplate determines the output speed.

As the motor cylinder block continues to rotate, oil is forced out of motor port **D** at low pressure and retunes to the pump port **B**.

9Y1211156TRM0008US0

https://truckmanualshub.com/


## Reverse

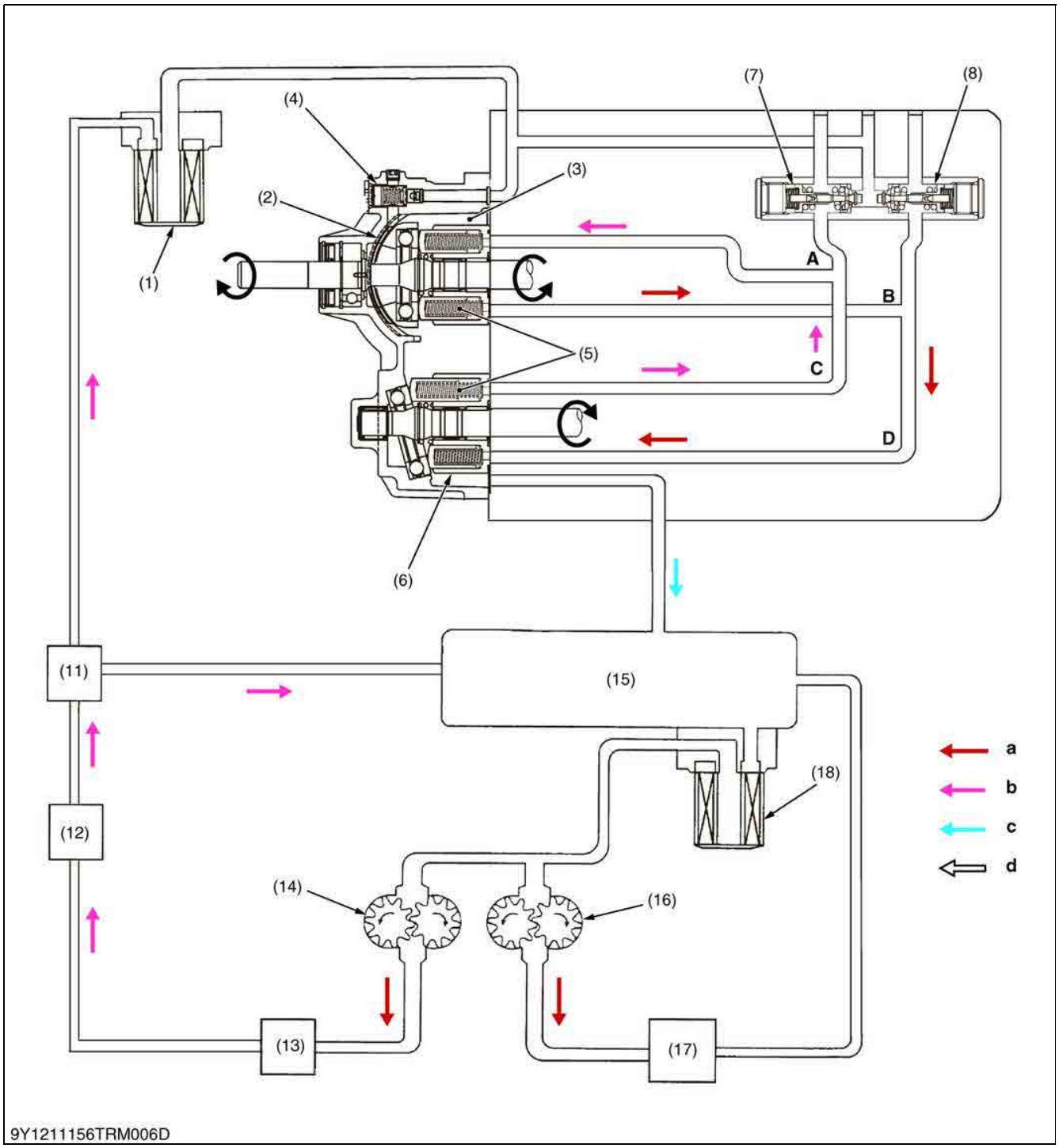


(1) Oil Filter Cartridge (for HST)
(2) Swashplate
(3) Cylinder Block (for Pump)
(4) Charge Relief Valve
(5) Piston
(6) Cylinder Block (for Motor)
(7) Check and High Pressure Relief Valve (for Forward)
(8) Check and High Pressure Relief Valve (for Reverse)
(9) Neutral Valve (for Forward)
(10) Neutral Valve (for Reverse)
(11) Independent PTO Control Valve
(12) Oil Cooler
(13) Power Steering
(14) Hydraulic Pump (for Power Steering, Independent PTO, HST)
(15) Oil Tank
(16) Hydraulic Pump (for 3-points Hitch)
(17) Hydraulic Control Valve (for 3-points Hitch)
(18) Oil Filter Cartridge

**A: Pump A Port**
**B: Pump B Port**
**C Motor C Port**
**D: Motor D Port**

**a: High Pressure Oil**
**b: Low Pressure Oil**
**c: Free Oil**
**d: Suction Oil**

**(To be continued)**

https://truckmanualshub.com/


**(Continued)**

When the speed control pedal is stepped on and set to **"REVERSE"**, the variable swashplate is tilted as shown in figure above.

As the pump cylinder block rotates with the input shaft, oil is forced out of pump port **B** at high pressure. As pressure oil from the pump cylinder block enters to motor port **D**, the pistons, which align with port **D**, are pushed against the swashplate and slide down the inclined surface.

Then the output shaft rotates with the motor cylinder block. This drives the machine reward and the angle of pump swashplate determines the output speed.

As the motor cylinder block continues to rotate, oil is forced out of motor port **C** at low pressure and retunes to the pump port **A**.

9Y1211156TRM0009US0

# [4] CONTROL LINKAGE

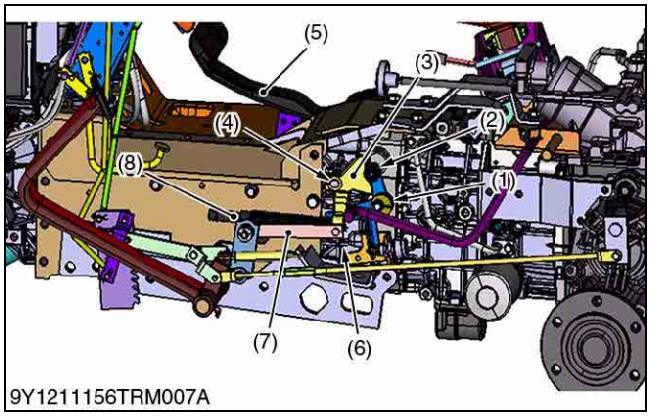


The HST pedal (5) and trunnion shaft (4) of swashplate are linked with the HST plate (7) and the neutral holder (3). As the front footrest of the pedal is depressed, the swashplate rotates and forward traveling speed increases. Depressing the rear footrest increases reverse traveling speed.

The roller (2) on the neutral holder arm (1) is held with spring seats and the detent of the neutral holder (3) so that the neutral holder (3) returns to neutral. When the pedal is releases, the swashplate is returned to neutral with the neutral holder (3). The damper (8) connected to the HST plate (7) restricts the movement of the linkage to prevent abrupt operation or reversing.

| | | | |
|---|---|---|---|
| (1) | Neutral Arm | (5) | HST Pedal |
| (2) | Roller | (6) | Spring |
| (3) | Neutral Holder | (7) | HST Plate |
| (4) | Trunnion Shaft | (8) | Damper |

9Y1211156TRM0010US0

https://truckmanualshub.com/


# 4. SPEED SET DEVICE

## [1] SPEED SET LINKAGE

### (1) Speed Set

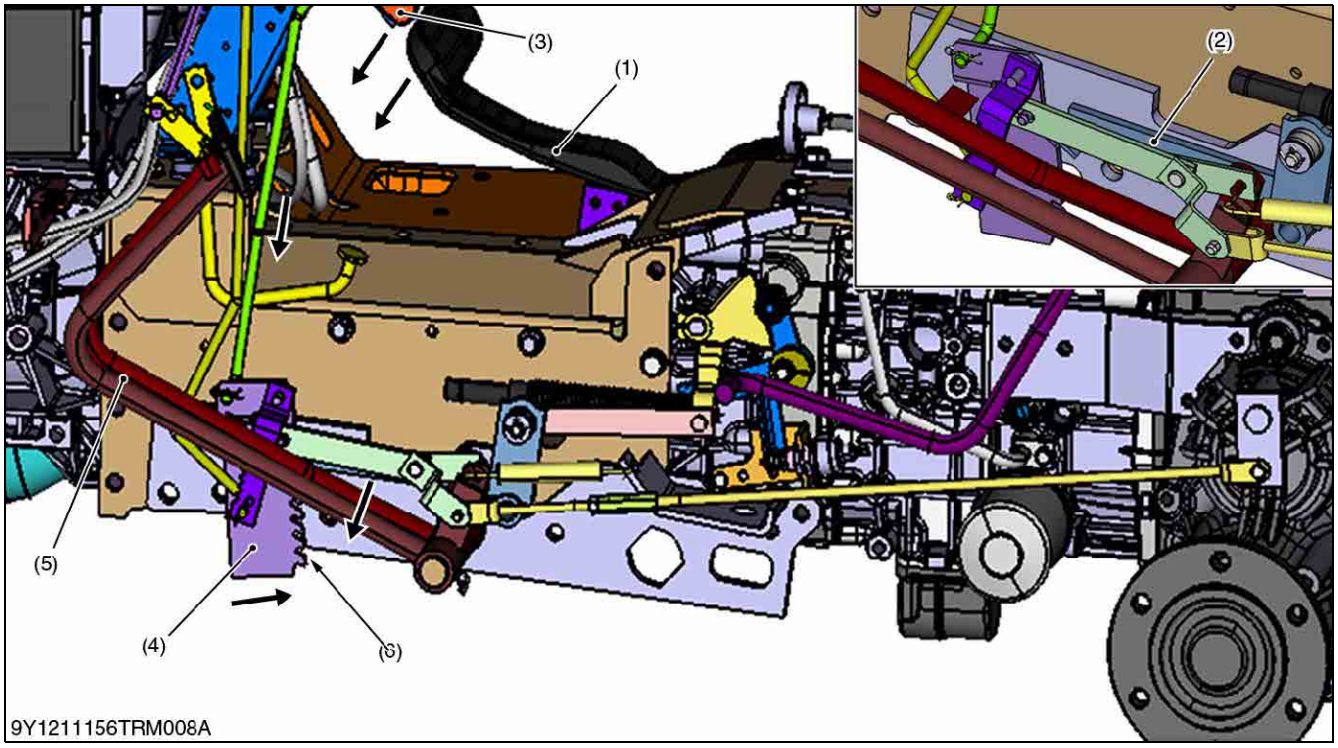


(1) HST pedal
(2) Lever
(3) Speed Set Lever
(4) Speed Set Holder
(5) Brake Pedal
(6) Tooth

The speed set device mainly consists of HST pedal holding section and HST pedal releasing section.
When the HST pedal (1) is see to the desired position, the lever (2) turns counter clockwise.
The speed set lever (3) to the **"ON"** position.
The speed set holder (4) turns counter clockwise.
On the other hand, sine lever engage with tooth (6) of speed set holder (4), the HST pedal (1) is held at the desired set position until the brake pedals (5) will be depressed by an operator.

9Y1211156TRM0011US0

https://truckmanualshub.com/


## (2) Speed Set Release

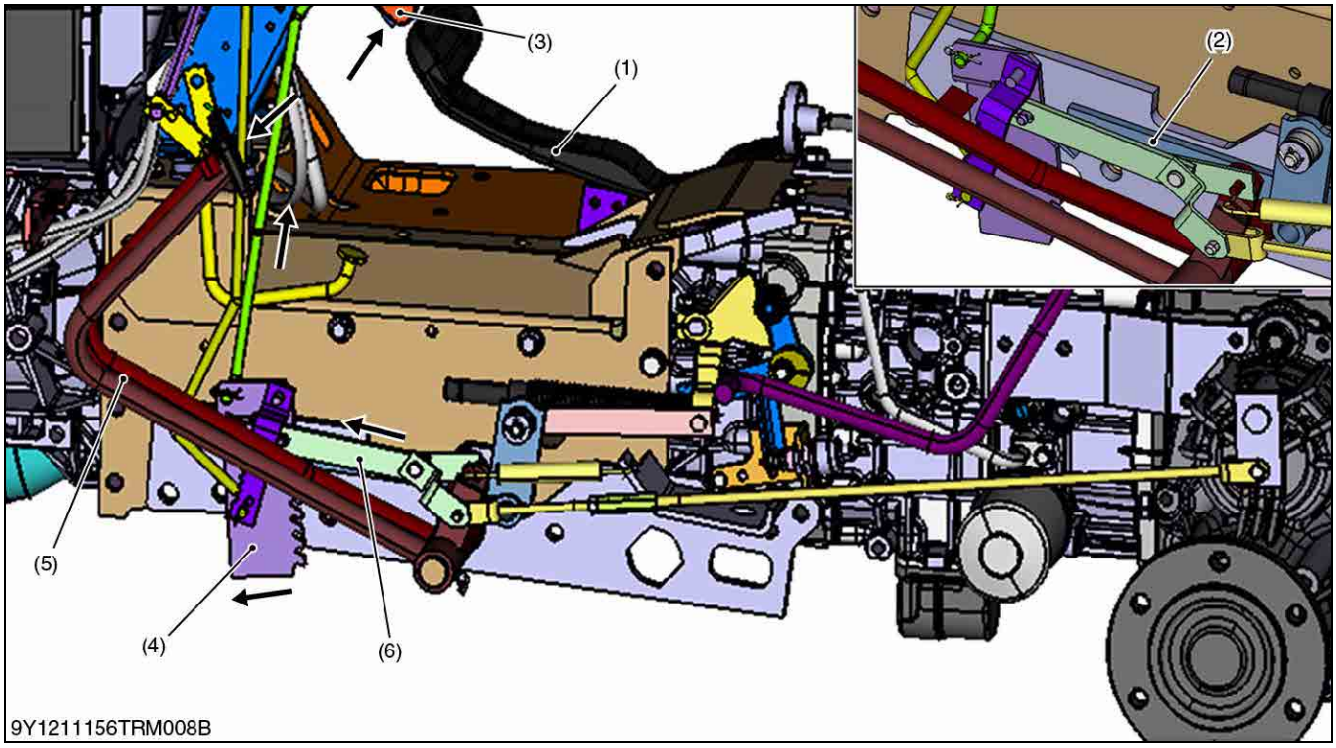


(1) HST pedal
(2) Lever
(3) Speed Set Lever
(4) Speed Set Holder
(5) Brake Pedal
(6) Brake Link

The speed set release is done by depressing the brake pedals (5).
When an operator depresses the brake pedal (5), the brake link (6) is pushed by the brake pedals (5).
When brake link (6) is pressed, the speed set holder (4) is released.
If you step on the HST pedal on the forward acceleration side, the speed set device will disengage.

9Y1211156TRM0012US0

https://truckmanualshub.com/


# 5. RANGE GEAR SHIFT SECTION

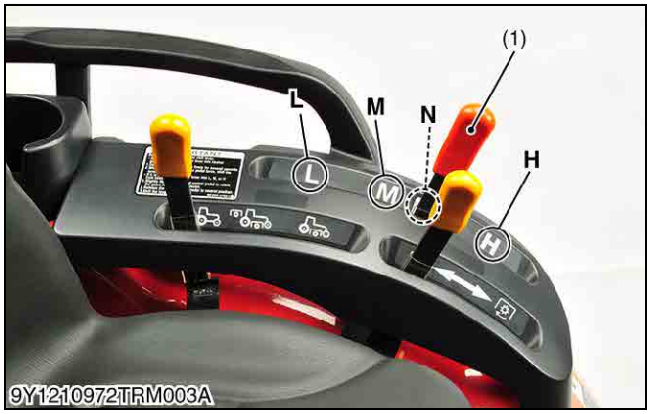


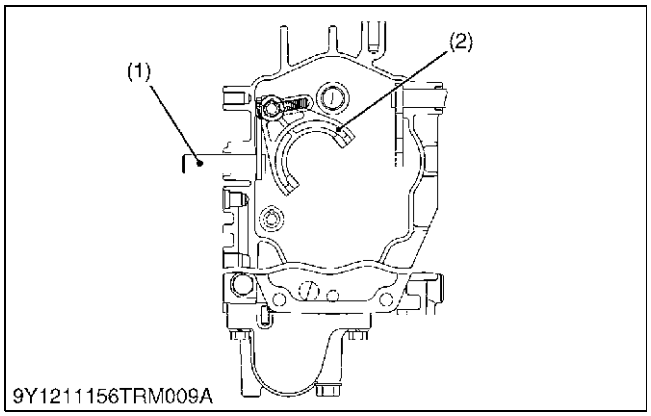


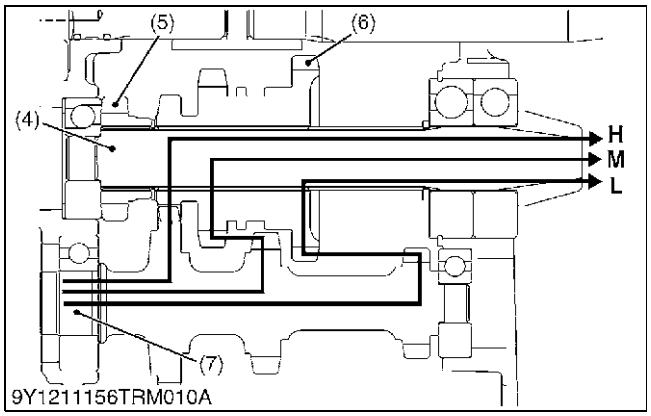


Range gear shift lever (1) is located at left side fender.

Range gear shift lever (1) can select three speed range, low speed, mid speed and high speed.

Range gear shift lever (1) and 14T-21T-29T gear (6) are linked with range shift arm (3) and range shift fork (2) etc..

Three range gear shifts are selected by shifting the 14T-21T-29T gear (6) on 6T bevel pinion shaft to 23T-16T-14T sub shaft (7).

■ **Low Speed Position**

14T of 23T-16T-14T Sub Shaft (7) → 29T of 14T-21T-29T Gear (6) → 6T Bevel Pinion Shaft (4)

■ **Middle Speed Position**

16T of 23T-16T-14T Sub Shaft (7) → 21T of 14T-21T-29T Gear (6) → 6T Bevel Pinion Shaft (4)

■ **High Speed Position**

23T of 23T-16T-14T Sub Shaft (7) → 14T of 14T-21T-29T Gear (6) → 6T Bevel Pinion Shaft (4)

| | | | |
|---|---|---|---|
| (1) | Range Gear Shift Lever | **L:** | **"LOW" Range** |
| (2) | Range Shift Fork | **M:** | **"MID" Range** |
| (3) | Range Shift Arm | **N:** | **"NEUTRAL" Position** |
| (4) | 6T Bevel Pinion Shaft | **H:** | **"HIGH" Range** |
| (5) | 13T Gear (for Front Wheel Drive) | | |
| (6) | 14T-21T-29T Gear | | |
| (7) | 23T-16T-14T Sub Shaft | | |

9Y1211156TRM0013US0

https://truckmanualshub.com/


# 6. FRONT WHEEL DRIVE SECTION

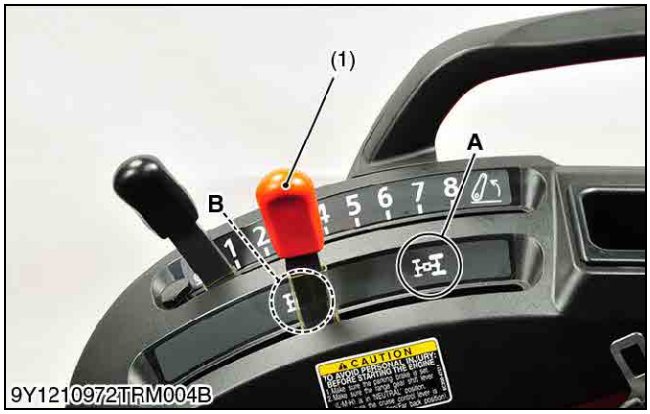


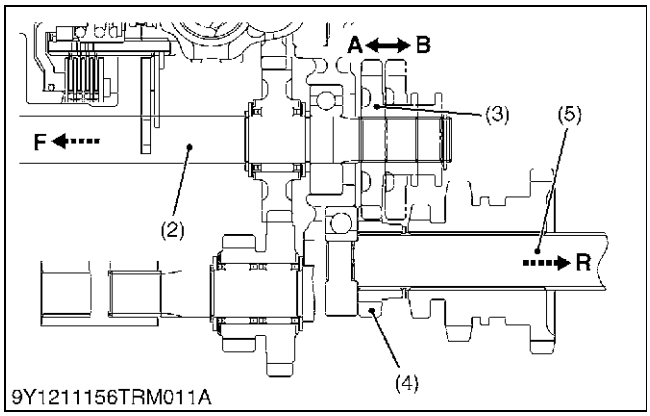


Front wheel drive lever (1) is located at the right side fender.

Front wheel drive lever (1) and shifter are linked.

20T shifter gear (3) is located on the front wheel drive shifter (2).

2-wheel drive or 4-wheel drive is selected by changing the position of 20T shifter gear (3) reverse or forward.

When the font wheel drive lever (1) is set to **"4 Wheel Drive"** position, 20T shifter gear (3) slides forward, meshes the 13T gear (4) on the 6T bevel pinion shaft (5).

In this state, power from the 6T bevel pinion shaft (5) is transmitted through 20T shifter gear (3) to the front wheel drive shaft (2) and the front wheels.

| | | | |
|---|---|---|---|
| (1) | Front Wheel Drive Lever | **A:** | **"4 Wheel Drive" Position** |
| (2) | Front Wheel Drive Shaft | **B:** | **"2 Wheel Drive" Position** |
| (3) | 20T Shifter Gear | **F:** | **Power to Front Wheels** |
| (4) | 13T Gear | **R:** | **Power to Rear Wheels** |
| (5) | 6T Bevel Pinion Shaft | | |

9Y1211156TRM0014US0

https://truckmanualshub.com/


# 7. PTO SYSTEM

## [1] STRUCTURE

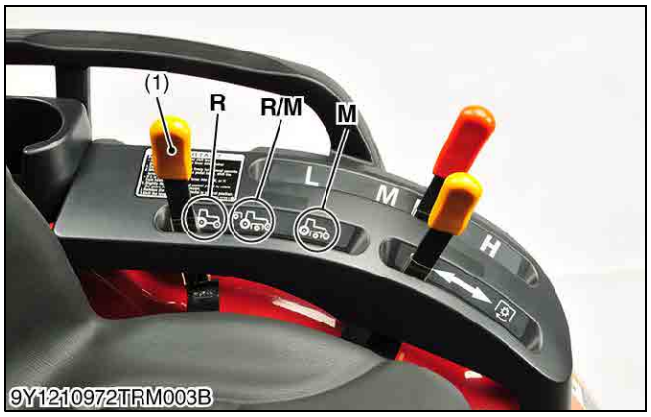


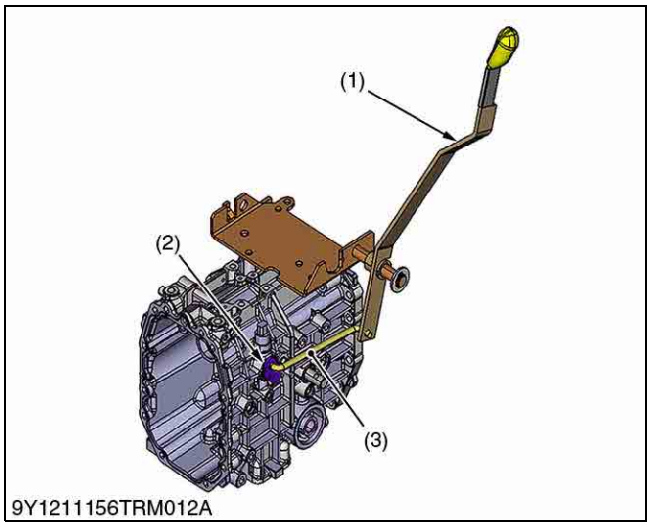


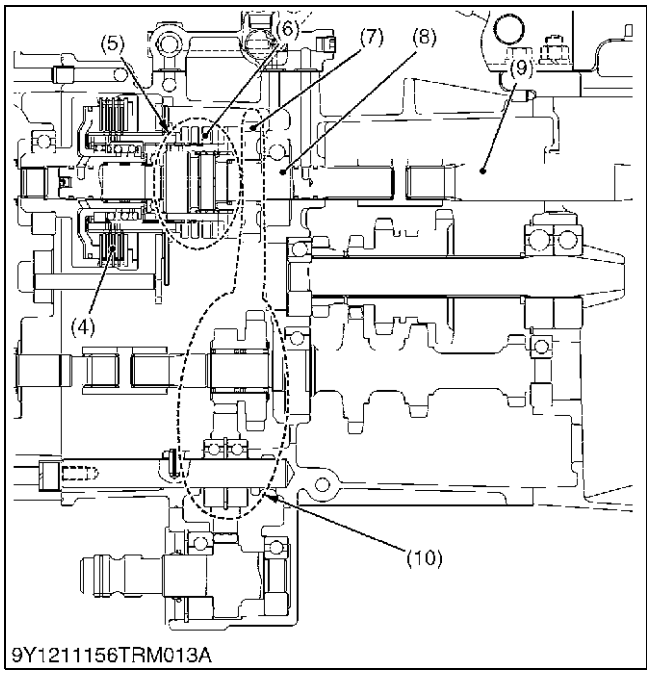


The PTO shift lever (1) is located at left side fender. The PTO shift lever (1) and the PTO shift arm (2) are linked with the control rod (3).

The PTO shift arm (2) shifts the PTO shifter (6).

PTO gear section consists of three sections.

The first section is independent PTO section.

The second section is PTO position selection section (5).

The third section is mid-PTO selection section (10).

In this section, when the PTO shift lever is set to **"Mid-PTO"** shifter slides to the front side and shifter meshes to the housing.

The rear PTO shift does not rotate at this **"Mid-PTO"** position.

(1) PTO Shift Lever
(2) PTO Shift Arm
(3) Control Rod
(4) Independent PTO Clutch
(5) PTO Position Selection Section
(6) PTO shifter
(7) 25T Mid Gear
(8) PTO Clutch Shaft
(9) 8T Rear PTO Shaft
(10) Mid PTO Selection Section

**R: "Rear PTO" Position**
**R/M: "Rear PTO / Mid PTO" Position**
**M: "Mid PTO" Position**

9Y1211156TRM0015US0

https://truckmanualshub.com/


# [2] REAR PTO SECTION

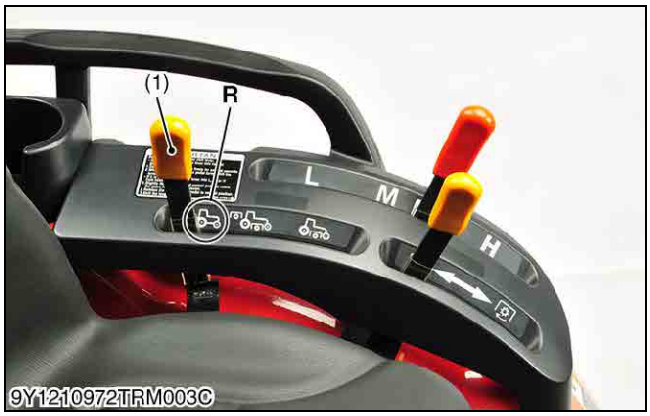


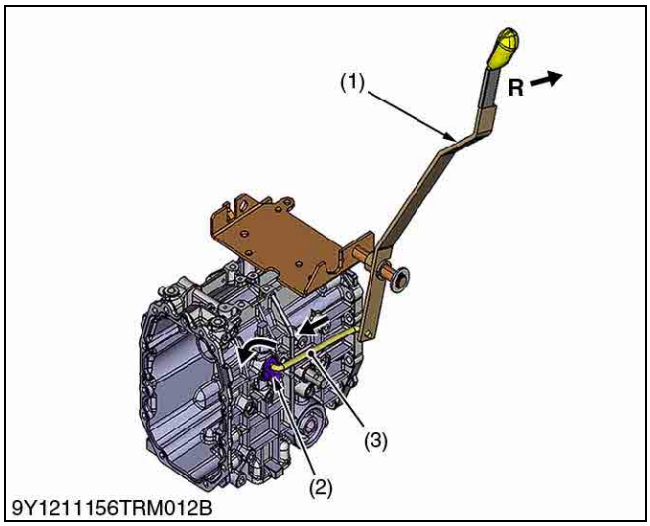


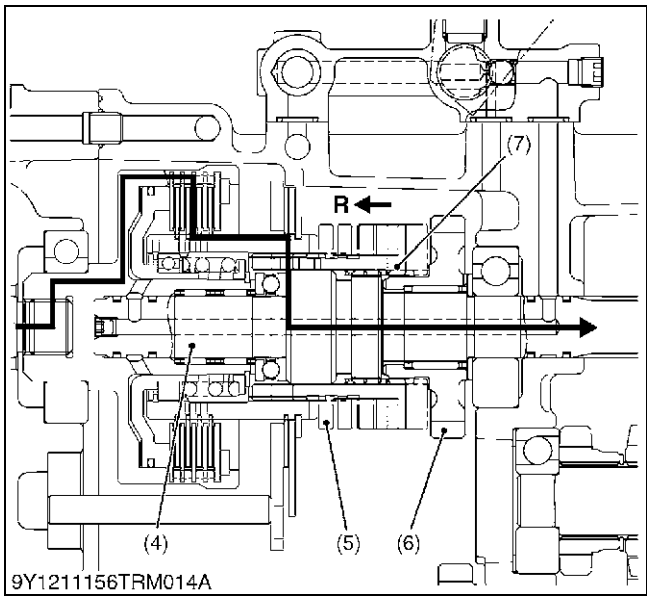


When the PTO shift lever (1) is set to **"Rear PTO"** (**R**) position, the PTO shift lever (1) pushes the control rod (3).

The control rod (3) pushes the PTO shift arm (2). In this state, the PTO shift arm (2) shifts the PTO shifter (5) forward. The inner spline of the PTO shifter (5) meshes the independent PTO shaft spline.

Power is transmitted from the independent PTO clutch to the rear PTO shaft as follows.

Independent PTO Clutch → PTO Shifter (5) → Independent PTO Shaft (4) → Rear PTO Shaft

(1) PTO Shift Lever
(2) PTO Shift Arm
(3) Control Rod
(4) Independent PTO Shaft
(5) PTO Shifter
(6) 25T Mid Gear
(7) 20T Mid Gear Spline

**R: "Rear PTO" Position**
**R/M: "Rear PTO / Mid PTO" Position**
**M: "Mid PTO" Position**

9Y1211156TRM0016US0

https://truckmanualshub.com/


# [3] REAR PTO / MID-PTO SECTION

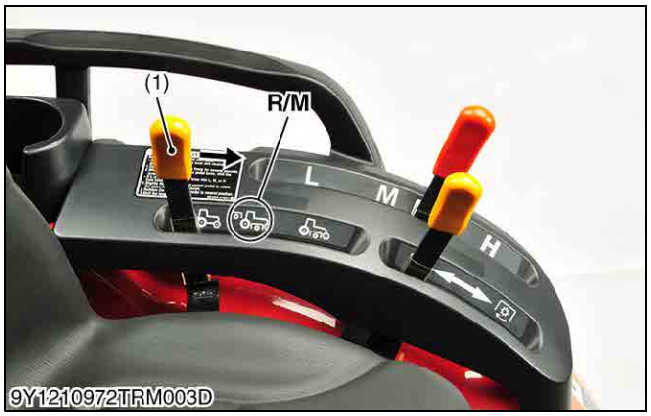


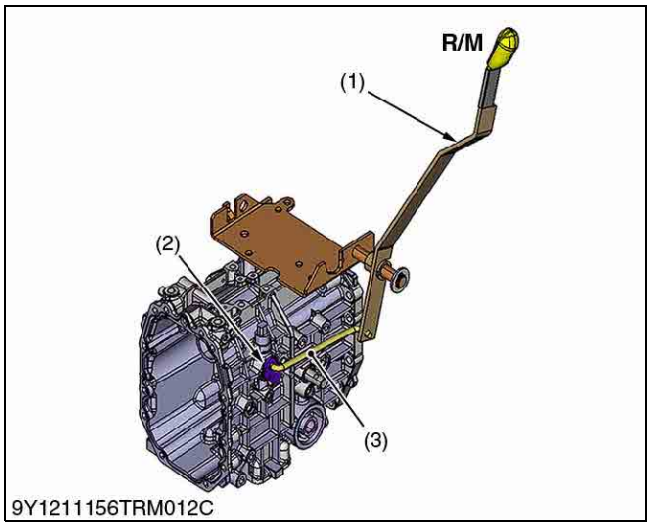


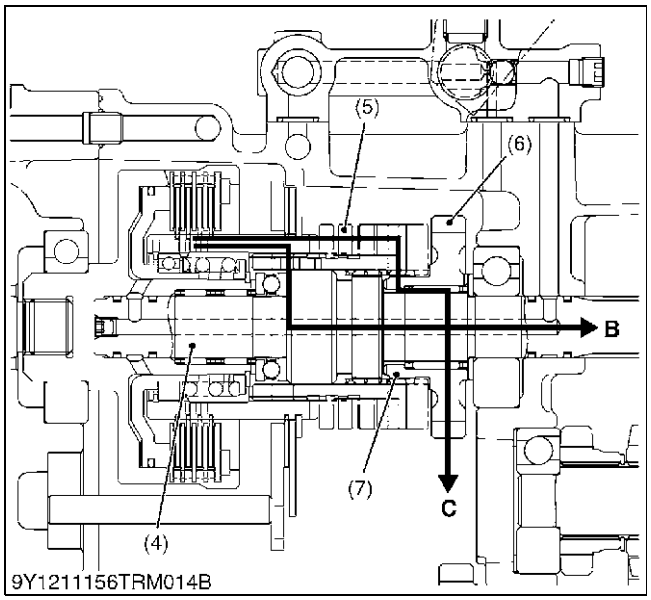


When the PTO shift lever (1) is set to **"Rear PTO / Mid PTO"** (**R/M**) position, the PTO shift lever (1) pulls the control rod.

The control rod (3) pulls the PTO shift arm (2).

In this state, the PTO shifter (5) keeps its position between the independent PTO shaft spline and the 20T mid gear spline (7).

In this position, the inner spline of the PTO shifter (5) meshes both independent PTO shaft spline and the 20T mid gear spline (7).

Power is transmitted from the independent PTO clutch to both the rear PTO shaft and the mid PTO shaft as follows.

■ **Rear PTO Section**

Independent PTO Clutch → PTO Shifter (5) → Independent PTO Shaft (4) → Rear PTO Shaft

■ **Mid PTO Section**

Independent PTO Clutch → PTO Shifter (5) → 25T Mid Gear → 26T Gear on Front Wheel Drive Shaft → 17T-26T Mid Gear → 30T Gear → 18T Mid PTO Shaft

(1) PTO Shift Lever
(2) PTO Shift Arm
(3) Control Rod
(4) Independent PTO Shaft
(5) PTO Shifter
(6) 25T Mid Gear
(7) 20T Mid Gear Spline

**B: To Rear PTO Shaft**
**C: To Mid PTO Shaft**
**R: "Rear PTO" Position**
**R/M: "Rear PTO / Mid PTO" Position**
**M: Mid PTO Position**

9Y1211156TRM0017US0

https://truckmanualshub.com/


# [4] MID-PTO SECTION

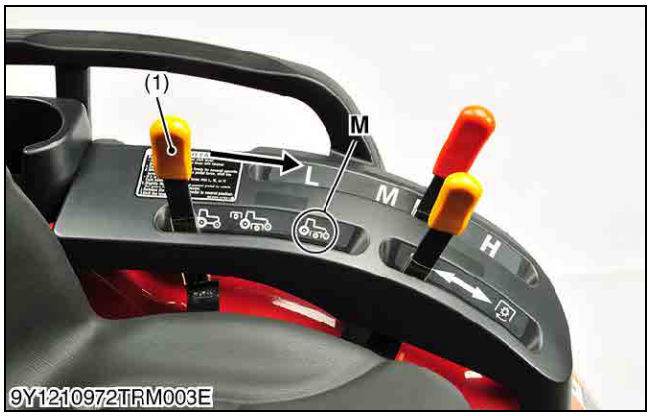


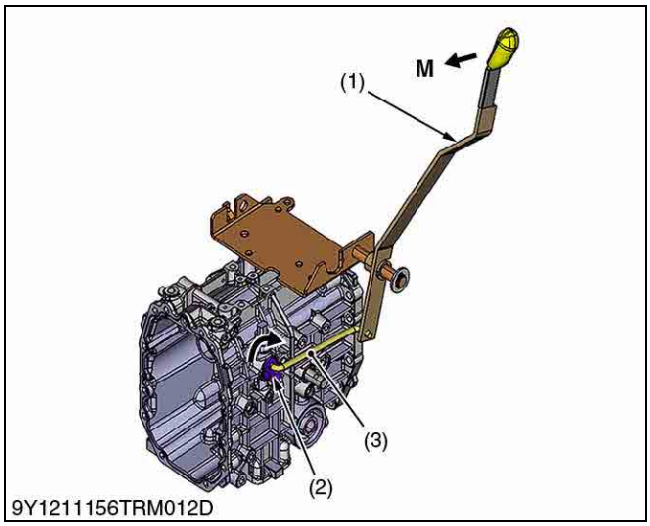


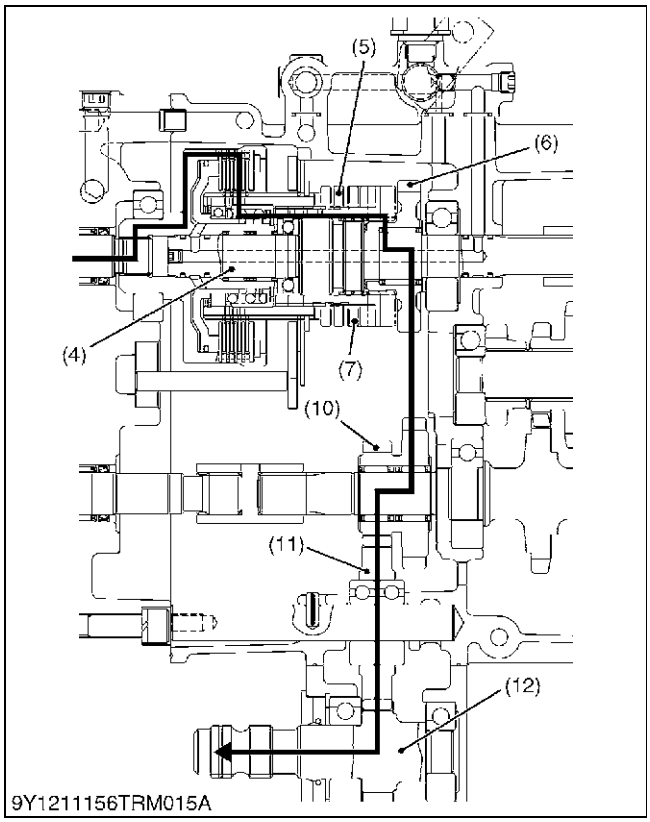


When the PTO shift lever (1) is set to **"Mid PTO"** (**M**) position, the PTO shift lever pulls the control rod (3). The control rod (3) pulls the PTO shift arm (2).

In this state, the PTO shift arm (2) shifts the PTO shifter (5) reverse. The inner spline of the PTO shifter (5) meshes the 20T Mid PTO gear spline (7).

Power is transmitted from the independent PTO clutch to the Mid PTO shaft as follows.

Independent PTO Clutch → PTO Shifter (5) → 25T Mid Gear (6) → 26T Gear (8) → 17T-26T Mid Gear (10) → 30T Gear (11) → Mid PTO Shaft (12)

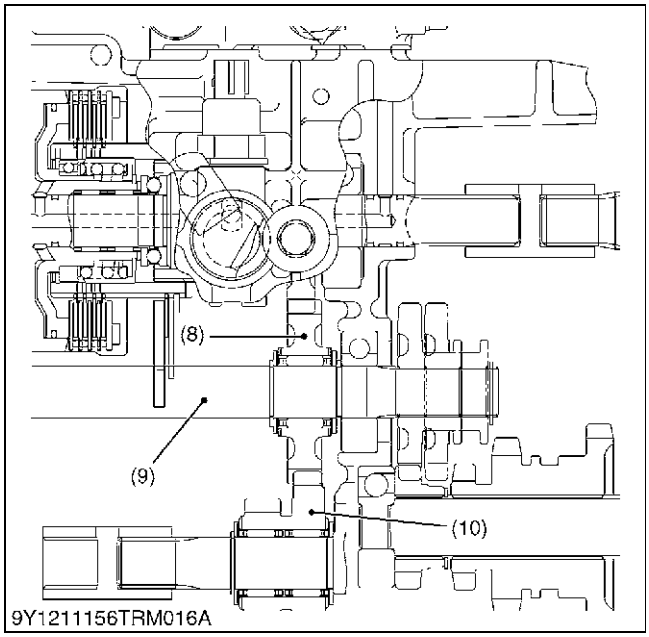


(1) PTO Shift Lever
(2) PTO Shift Arm
(3) Control Rod
(4) Independent PTO Shaft
(5) PTO shifter
(6) 25T Mid Gear
(7) 20T Mid Gear Spline
(8) 26T Gear
(9) Front Wheel Drive Shaft
(10) 17T-26T Mid Gear
(11) 30T Gear
(12) 17T Mid PTO Shaft

**R: "Rear PTO" Position**
**R/M: "Rear PTO / Mid PTO" Position**
**M: Mid PTO Position**

9Y1211156TRM0018US0

https://truckmanualshub.com/


# [5] INDEPENDENT PTO

## (1) Hydraulic Circuit

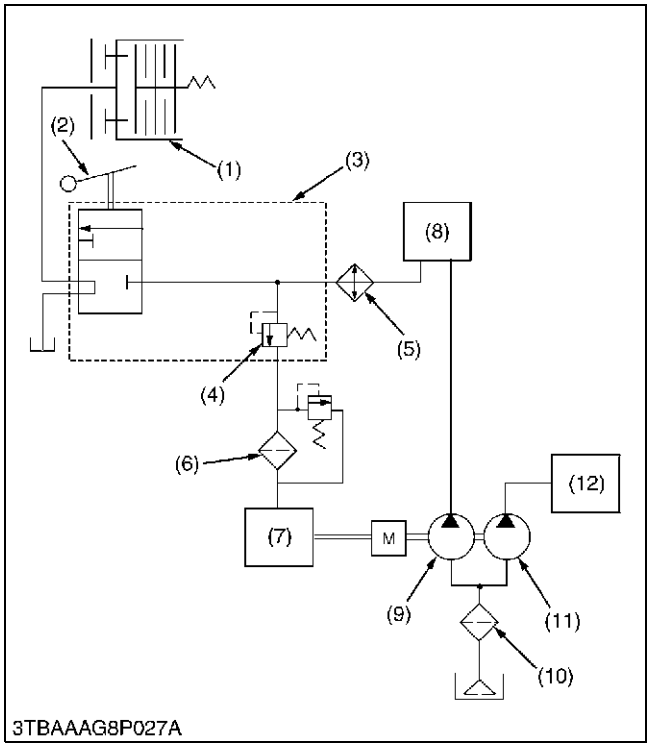


(1) PTO Clutch
(2) Independent PTO Lever
(3) Independent PTO Control Valve
(4) Relief Valve
(5) Oil Cooler
(6) Oil Filter Cartridge (for HST)
(7) HST
(8) Power Steering
(9) Hydraulic Pump (for HST, Power Steering and Independent PTO)
(10) Oil Filter Cartridge
(11) Hydraulic Pump (3-Points Hitch)
(12) 3-Points Hitch

9Y1211156TRM0019US0

## (2) Independent PTO Control Valve

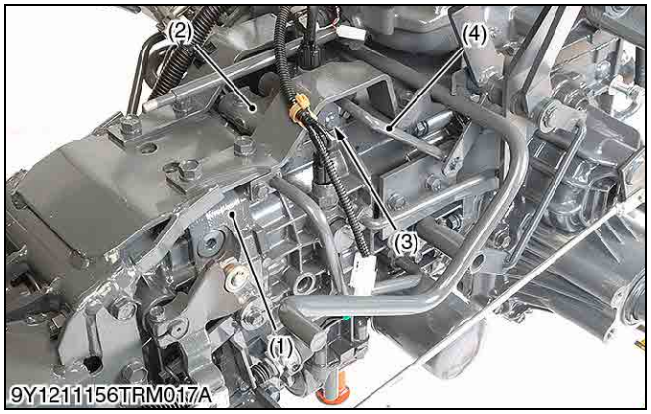


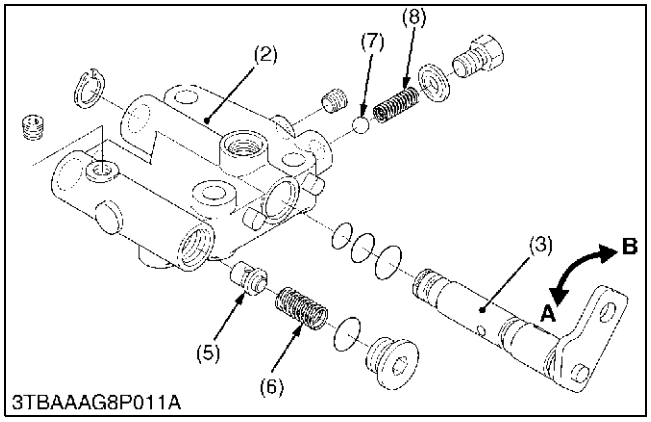


Independent PTO control valve (2) is located at transmission case (1).

The independent PTO control valve (2) consists of PTO arm (3), poppet (5), ball (7) and etc..

The PTO arm (3) is connected to control rod (4) and the independent PTO lever.

The PTO arm (3) is moved to **"OFF"** or **"ON"** position by the independent PTO lever.

Oil passage in the PTO arm (3) is turned by the independent PTO lever.

When the PTO arm (3) is moved to **"OFF"** position, oil in the independent PTO control valve does not flow to the oil passage.

When the PTO arm (3) is moved to **"ON"** position, oil in the independent PTO control valve flow to the oil passage.

Poppet (5) and spring (6) operate as a relief valve.

(1) Transmission Case
(2) Independent PTO Control Valve
(3) PTO Arm
(4) Control Rod
(5) Poppet
(6) Spring
(7) Ball
(8) Spring

**A: PTO arm "OFF" position**
**B: PTO arm "ON" position**

9Y1211156TRM0020US0

https://truckmanualshub.com/


## (3) Independent PTO Clutch

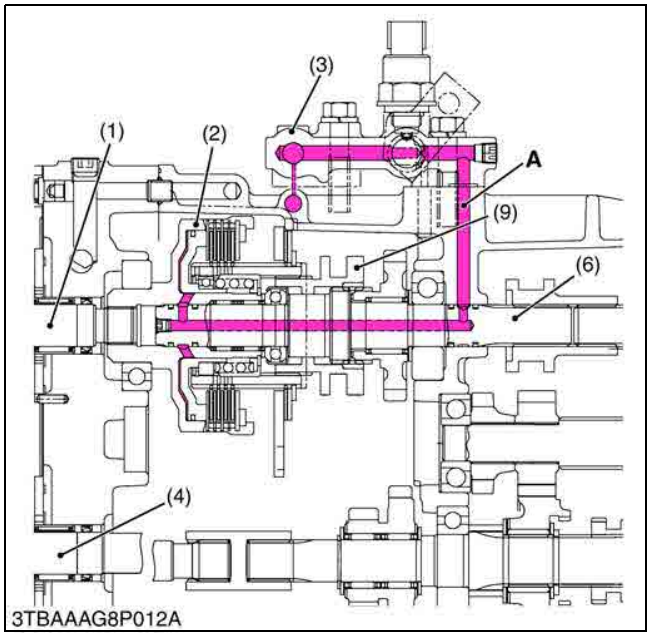


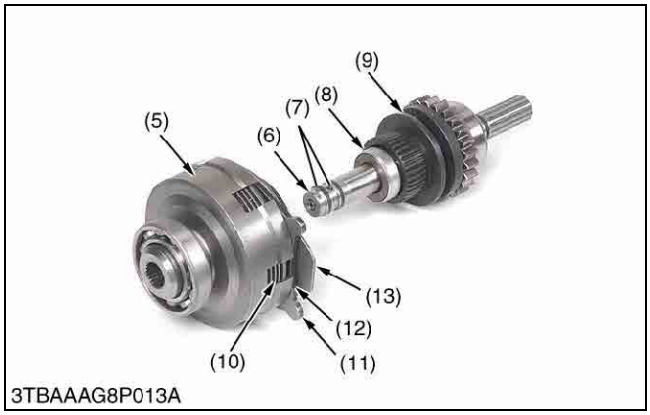


Independent PTO clutch (2) is located behind the HST pump shaft (1) in the transmission case.

Independent PTO clutch (2) is operated with pressured hydraulic oil forced from the independent PTO control valve (3).

When independent PTO lever is shifted to **"ENGAGED"** position, hydraulic oil is forced through the transmission case inner passage (**A**) and PTO clutch shaft (6) to PTO clutch. In this state, power from HST pump shaft is transmitted through independent PTO clutch (2) to independent PTO clutch shaft (6).

When independent PTO lever is shifted to **"DISENGAGED"** position, hydraulic oil is not forced to the PTO clutch. In this state, power from HST pump shaft (1) is not transmitted to independent PTO clutch shaft (6).

(1) HST Pump Shaft
(2) Independent PTO Clutch
(3) Independent PTO Control Valve
(4) HST Motor Shaft
(5) Case
(6) PTO Clutch Shaft
(7) Seal
(8) Bearing
(9) Shifter
(10) Clutch Discs and Plates
(11) Brake Plate 4
(12) Brake Disc
(13) Brake Plate 2

9Y1211156TRM0021US0

https://truckmanualshub.com/


## (4) Independent PTO Lever "Engaged"

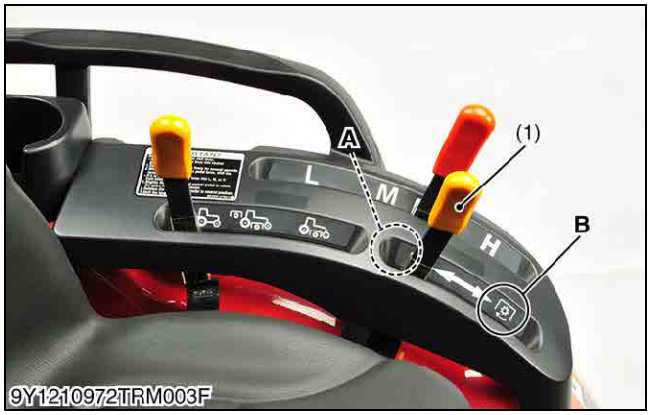


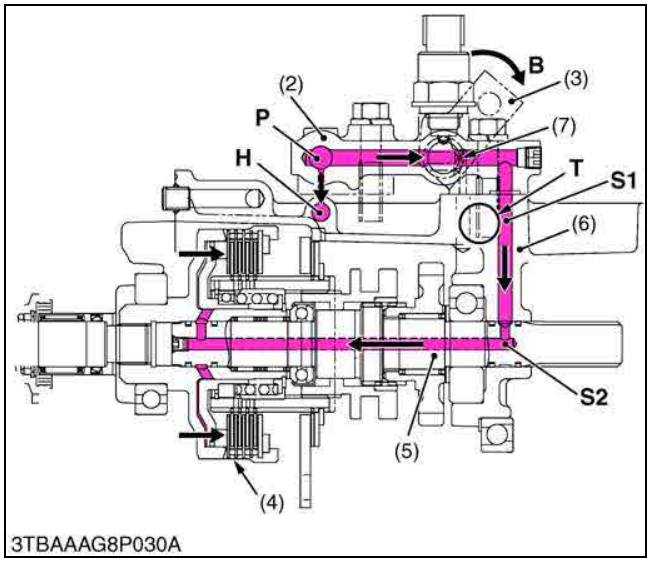


When the independent PTO lever (1) is shifted to the **"ENGAGED"** position, the PTO arm (3) is turned to **"ON"** position.

Hydraulic oil from **P** port flows through oil passage (7) of the PTO arm (3), oil passage **S1** in the transmission case (6) and oil passage **S2** in the PTO clutch shaft (5) to the PTO clutch (4).

Since the piston of the PTO clutch (4) is pushed by pressurized oil, clutch discs and clutch plates are pushed, and the PTO clutch (4) is engaged.

(1) Independent PTO Lever
(2) Independent PTO Control Valve
(3) PTO Arm
(4) PTO Clutch
(5) PTO Clutch Shaft
(6) Transmission Case
(7) Oil Passage (in the PTO Arm)

**A: "DISENGAGED" Position**
**B: "ENGAGED" Position**
**P: Pump Port**
**H: HST Port**
**T: Tank Port**
**S1: Oil Passage (in the Transmission Case)**
**S2: Oil Passage (in the PTO Clutch Shaft)**

9Y1211156TRM0022US0

https://truckmanualshub.com/


## (5) Independent PTO Lever "Disengaged"

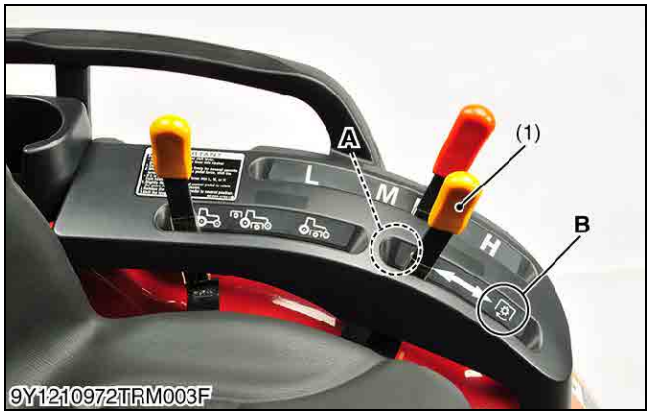


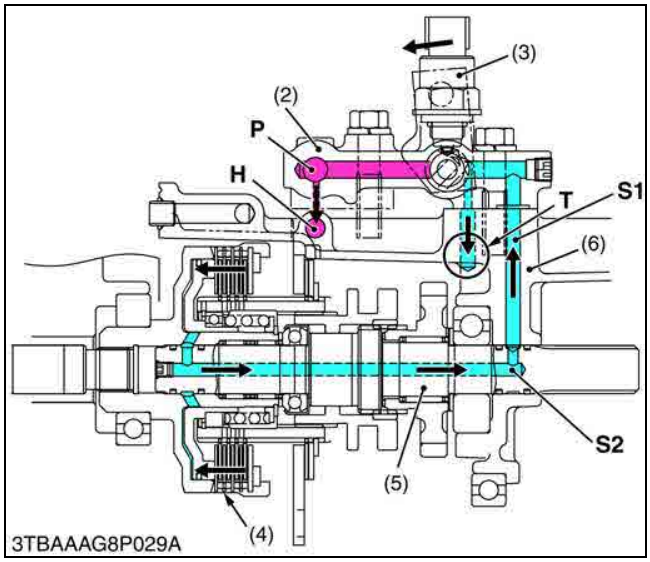


When the independent PTO lever (1) is shifted to the **"DISENGAGED"** position, the PTO arm (3) is turned to **"OFF"** position.

Hydraulic oil is stopped at the PTO arm (3).

This oil flows to the HST port.

Oil in the PTO clutch (4) and the PTO clutch shaft (5) drains through oil passage **S2**, **S1** and **T** port to the transmission case.

(1) Independent PTO Lever
(2) Independent PTO Control Valve
(3) PTO Arm
(4) PTO Clutch
(5) PTO Clutch Shaft
(6) Transmission Case

**A: "DISENGAGED" Position**
**B: "ENGAGED" Position**
**P: Pump Port**
**H: HST Port**
**T: Tank Port**
**S1: Oil Passage (in the Transmission Case)**
**S2: Oil Passage (in the PTO Clutch Shaft)**

9Y1211156TRM0023US0

https://truckmanualshub.com/


# 8. DIFFERENTIAL GEAR SYSTEM

## [1] DIFFERENTIAL FUNCTION

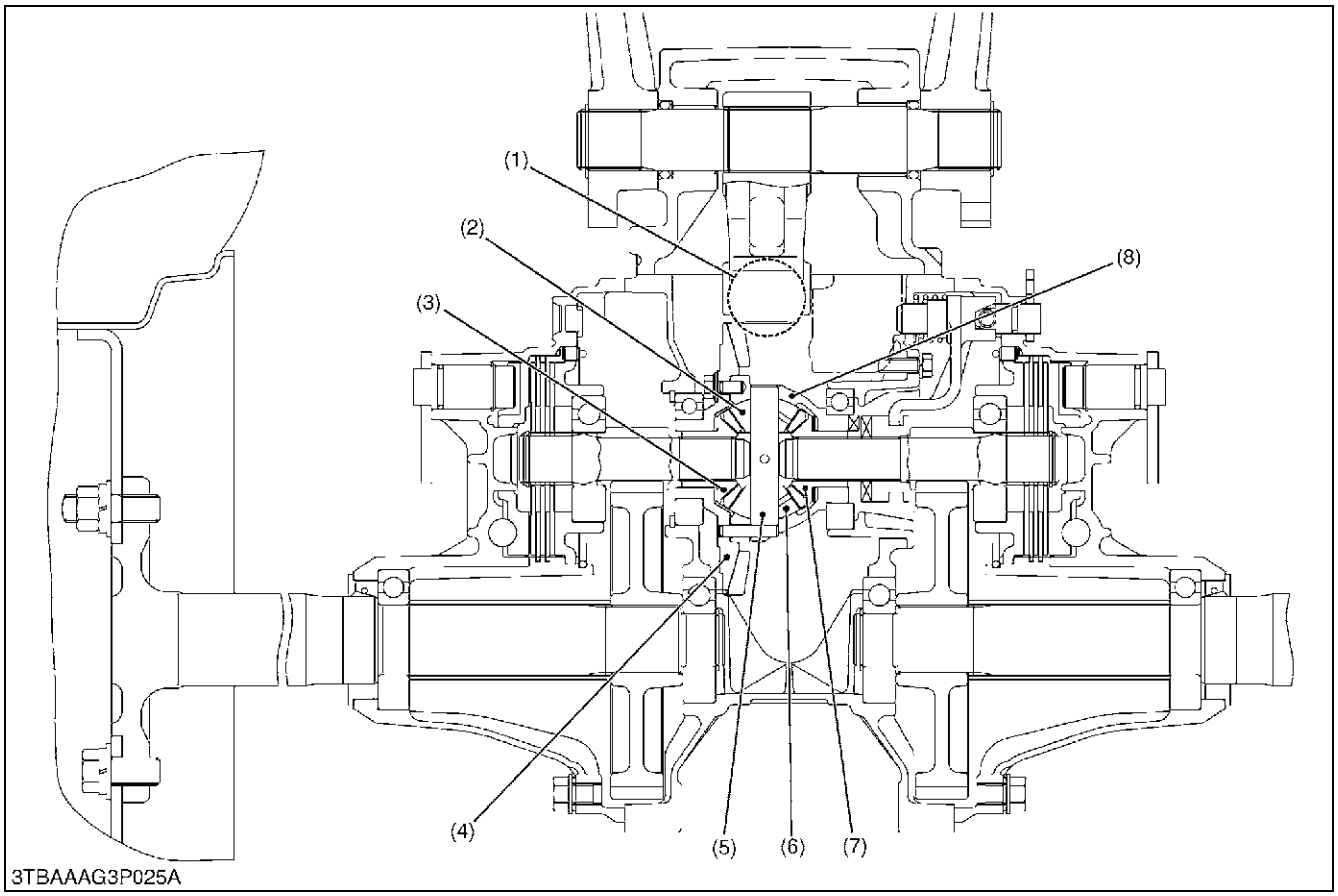


| | | | |
|---|---|---|---|
| (1) Spiral Bevel Pinion | (3) Differential Side Gear | (5) Differential Pinion Shaft | (7) Differential Side Gear |
| (2) Differential Pinion | (4) Spiral Bevel Gear | (6) Differential Pinion | (8) Differential Case |

■ **During Straight Running**

Rotation of the spiral bevel pinion (1) is transmitted to the spiral bevel gear (4) and differential case (8). When road resistance to the right and left wheels are equal, differential pinions (2), (6) and differential side gears (3), (7) are all rotate as a unit. Both rear axles received equal input, and both wheels turn at the same speed, allowing the tractor to straight ahead. At this time, differential pinions (2), (6) does not rotate around the differential pinion shaft (5).

■ **During Turning**

When the tractor turns, the road resistance to the inside tire increases (as if braking is applied to that side only).

In other words, if one of tires slows down, revolution difference is generated in the differential side gears (3), (7). When rotation of one differential side gear becomes lower than the other, differential pinions (2), (6) begin rotating around differential pinion shaft (5). The other differential side gear is increased in speed by the speed increment of differential pinion shaft (5). This means that rotation of one rear axle is slowed down and that of the other rear axle is increased. Thus, the tractor turns smoothly without power loss.

The combined number of revolutions of the right and left differential side gears is always twice that of the spiral bevel gear (4). When spiral bevel gear revolution is 100 $min^{-1}$ (rpm), and if one of the differential side gears stops moving, the revolution of the other differential side gear becomes 200 $min^{-1}$ (rpm) and if one rotates at 50 $min^{-1}$ (rpm), the other rotates at 150 $min^{-1}$ (rpm).

9Y1211156TRM0024US0

https://truckmanualshub.com/


# [2] DIFFERENTIAL LOCK

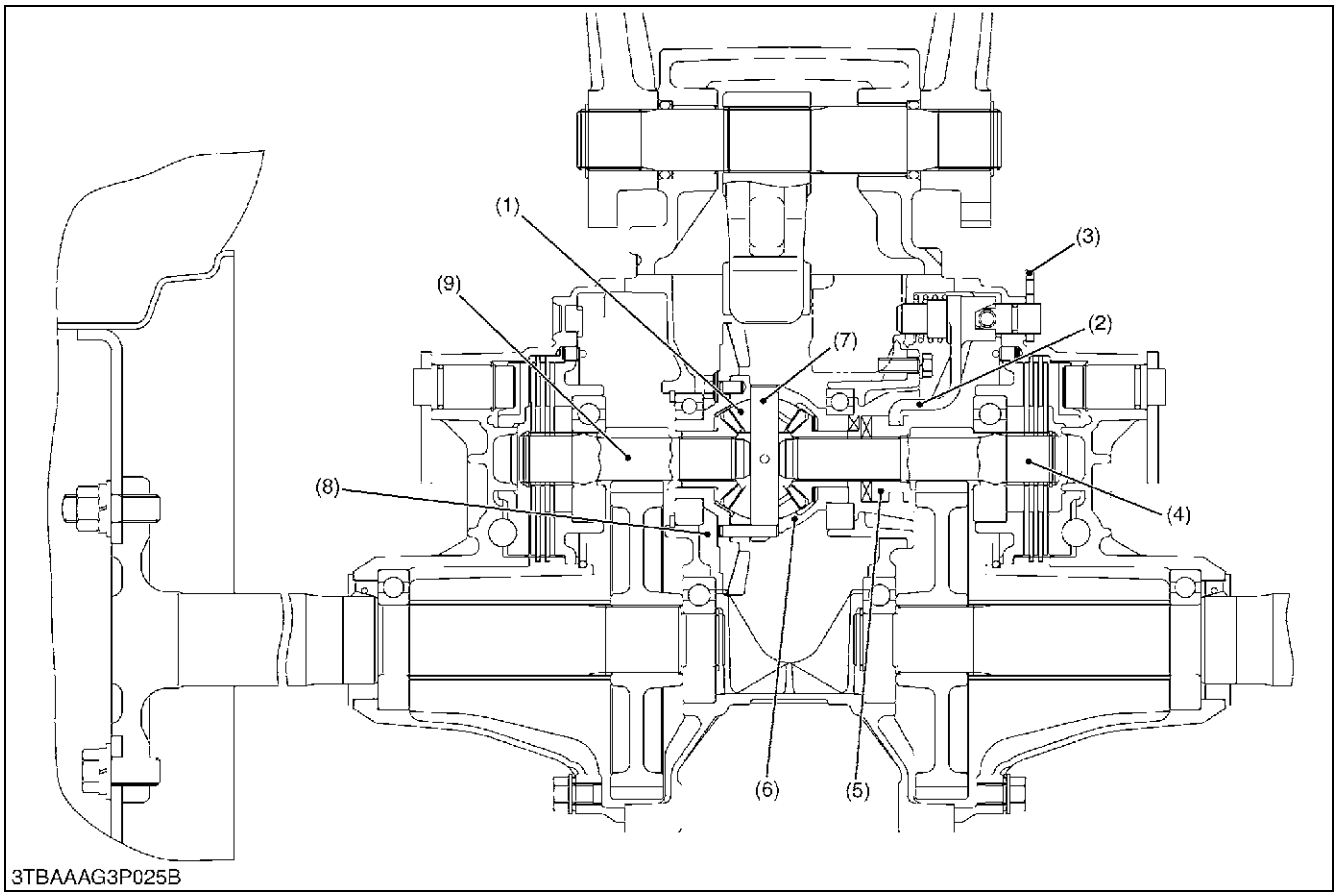


(1) Differential Pinion
(2) Shift Fork
(3) Differential Lock Lever
(4) Differential Gear Shaft (Right)
(5) Differential Lock Clutch
(6) Differential Case
(7) Differential Pinion Shaft
(8) Spiral Bevel Pinion
(9) Differential Gear Shaft (Left)

When resistance to the right and the left tires are greatly different due to ground conditions or type of work, the tire with less resistance slips and prevents the tractor from moving ahead. To compensate for this drawback, the differential lock restricts the differential action and causes both rear axles to rotate as a unit.

When the differential lock pedal is stepped on, it causes the differential lock lever (3) to rotate. The differential lock lever (3) will move the shift fork (2) and the differential lock clutch (5) toward the spiral bevel pinion (8). The differential lock clutch (5) engages with the teeth of the differential case (6) to make the differential case (6) and the differential lock clutch (5) to rotate together as a unit.

Therefore, the differential pinions (1) are unable to rotate around the differential pinion shaft (7) and differential revolutions are transmitted to the right and the left differential gear shaft (4), (9).

9Y1211156TRM0025US0

https://truckmanualshub.com/

# SERVICING

## CONTENTS

1. TROUBLESHOOTING....2-S1
2. SERVICING SPECIFICATIONS....2-S5
3. TIGHTENING TORQUES....2-S7
4. CHECKING, DISASSEMBLING AND SERVICING....2-S8
   [1] CHECKING AND ADJUSTING....2-S8
      (1) HST....2-S8
      (2) Independent PTO Control Valve....2-S13
   [2] PREPARATION....2-S14
      (1) Dismounting the Step and Floor Seat....2-S14
   [3] DISASSEMBLING AND ASSEMBLING....2-S20
      (1) Separating Engine and Clutch Housing....2-S20
      (2) Front Case....2-S20
      (3) Hydraulic Transmission (HST)....2-S21
      (4) PTO Clutch Case....2-S25
      (5) Bevel Pinion Shaft....2-S25
      (6) Sub Gear Shaft....2-S26
      (7) Front Wheel Drive Shaft....2-S27
      (8) Independent PTO Clutch Shifter....2-S29
      (9) Independent PTO Clutch....2-S30
      (10)Mid-PTO Section....2-S34
      (11)Differential Gear Section....2-S36
   [4] SERVICING....2-S38
      (1) HST....2-S38
      (2) Independent PTO Clutch....2-S40
      (3) Transmission Case....2-S41
      (4) Differential Gear....2-S42

https://truckmanualshub.com/


# 1. TROUBLESHOOTING

**HYDROSTATIC TRANSMISSION**

| Symptom | Probable Cause and Checking Procedure | Solution | Reference Page |
|---|---|---|---|
| **System Will Not Operate in Either Direction** | 1. Oil level is low | Check oil level or fill oil to proper level | G-28 |
| | 2. Speed control pedal linkage damaged | Repair linkage | 2-M13 |
| | 3. Charge pressure is too low | Solution order<br>1. Replace oil filter cartridge | G-26, G-29 |
| | | 2. Check charge pressure | 2-S8 |
| | | 3. Inspect or flush charge relief valve | 2-S24 |
| | 4. Check and high pressure relief valve does not move smoothly | Inspect or replace check and high pressure relief valve | 2-S23 |
| | 5. Component parts damaged | Replace hydrostatic transmission assembly | 2-S20 |
| **Vibration and Noise** | 1. Oil level is too low | Check oil level or fill oil to proper level | G-28 |
| | 2. Speed control pedal linkage damaged | Repair linkage | 2-M13 |
| | 3. Charge pressure is too low | Solution order<br>1. Replace oil filter cartridge | G-26, G-29 |
| | | 2. Check charge pressure | 2-S8 |
| | | 3. Inspect or flush charge relief valve | 2-S24 |
| | 4. Check and high pressure relief valve does not move smoothly | Inspect or replace check and high pressure relief valve | 2-S23 |
| | 5. Component part is damaged | Replace hydrostatic transmission assembly | 2-S20 |
| **Loss of Power** | 1. Oil level is low | Check oil level or fill oil to proper level | G-28 |
| | 2. Speed control pedal linkage damaged | Repair linkage | 2-M13 |
| | 3. Charge pressure is too low | Solution order<br>1. Replace oil filter cartridge | G-26, G-29 |
| | | 2. Check charge pressure | 2-S8 |
| | | 3. Inspect or flush charge relief valve | 2-S24 |
| | 4. Check and high pressure relief valve does not move smoothly | Inspect or replace check and high pressure relief valve | 2-S23 |
| | 5. Component parts damaged | Replace hydrostatic transmission assembly | 2-S20 |
| **Transmission Oil Over Heats** | 1. Low transmission oil level | Fill transmission oil level up to proper level | G-28 |
| | 2. Radiator net clogged | Clean radiator net | G-17 |
| | 3. Improper charge pressure | Solution order<br>1. Check high relief pressure | 2-S9 |
| | | 2. Replace transmission oil filter cartridge | G-29 |
| | | 3. Replace check and high pressure relief valve | 2-S23 |
| | | 4. Inspect and replace charge relief valve | 2-S24 |

https://truckmanualshub.com/


| Symptom | Probable Cause and Checking Procedure | Solution | Reference Page |
|---|---|---|---|
| **Machine Will Not Stop in Neutral Position** | 1. Speed control linkage is out of adjustment or sticking | Solution order<br>1. Repair or replace linkage | 2-M13 |
| | | 2. Adjust neutral adjuster | 2-S12 |
| **System Operates in One Direction Only** | 1. Speed control linkage damaged | Repair or replace linkage | 2-M13 |
| | 2. Check and high pressure relief valve damaged | Replace check and high pressure relief valve | 2-S23 |

**FRONT CASE**

| Symptom | Probable Cause | Solution | Reference Page |
|---|---|---|---|
| **Noise From Front Case** | 1. Clutch shaft spline worn | Replace clutch shaft | 2-S21 |
| | 2. Bearing Worn | Inspect or replace bearing | 2-S21 |

**TRANSMISSION CASE SECTION**

| Symptom | Probable Cause | Solution | Reference Page |
|---|---|---|---|
| **Noise From Front Transmission** | 1. Transmission oil insufficient | Check transmission oil | G-8 |
| | 2. Gear worn or broken | Replace transmission gear | 2-S20 |
| | 3. Improper backlash between spiral bevel pinon and bevel gear | Inspect or adjust backlash | 2-S44 |
| | 4. Improper backlash between differential pinion and differential side gear | Inspect or adjust backlash | 2-S43 |
| | 5. Bearings worn | Inspect or replace bearing | 2-S41 |
| | 6. PTO clutch damaged | Solution order<br>1. Check PTO control valve setting pressure | 2-S13 |
| | | 2. Inspect clutch disc or plate | 2-S31 |
| | | 3. Replace PTO clutch or other parts | 2-S30 |

https://truckmanualshub.com/


**INDEPENDENT PTO**

| Symptom | Probable Cause | Solution | Reference Page |
|---|---|---|---|
| **PTO Clutch Slip** | 1. Operating pressure is low | Solution order<br>1. Check PTO control valve setting pressure | 2-S13 |
| | | 2. Inspect clutch disc or plate | 2-S31 |
| | | 3. Replace PTO clutch or other parts | 2-S30 |
| | 2. Independent PTO control valve malfunctioning | Solution order<br>1. Check PTO control valve setting pressure | 2-S13 |
| | | 2. Inspect or replace poppet or PTO control valve | 2-S13 |
| | 3. Clutch disc or drive plate excessively worn | Solution order<br>1. Check PTO control valve setting pressure | 2-S13 |
| | | 2. Inspect or replace clutch disc or plate | 2-S31 |
| | 4. Deformation of piston or return plate | Solution order<br>1. Inspect return plate or piston | 2-S41 |
| | | 2. Replace return plate or piston | 2-S31 |
| **PTO Shaft Does Not Rotate** | 1. PTO clutch malfunctioning | Solution order<br>1. Check PTO control valve setting pressure | 2-S13 |
| | | 2. Replace PTO clutch or other parts | 2-S30 |
| **PTO Clutch Operating Pressure is Low** | 1. Transmission oil improper or insufficient | Check transmission oil | G-8 |
| | 2. Relief valve malfunctioning | Solution order<br>1. Check PTO control valve setting pressure | 2-S13 |
| | | 2. Replace poppet | 2-S13 |
| **PTO Clutch Drags** | 1. Brake plate excessively worn | Replace brake plate | 2-S31 |
| | 2. Return spring weaken or broken | Inspect or replace return spring | 2-S41 |

https://truckmanualshub.com/


**DIFFERENTIAL CASE SECTION**

| Symptom | Probable Cause | Solution | Reference Page |
|---|---|---|---|
| **Excessive or Unusual Noise at All Time** | 1. Insufficient or improper type of transmission fluid used | Check transmission oil | G-8 |
| | 2. Improper backlash between spiral bevel pinion and bevel gear | Inspect or adjust backlash | 2-S44 |
| | 3. Improper backlash between differential pinion and differential side gear | Inspect or adjust backlash | 2-S43 |
| | 4. Bearing worn | Inspect or replace bearing | 2-S41 |
| **Noise while Turning** | 1. Differential pinions or differential side gears worn or damaged | Inspect or replace differential pinion or differential side gear | 2-S38 |
| | 2. Differential lock binding (does not disengage) | Repair or replace differential lock shifter | 3-S4 |
| | 3. Bearing worn | Inspect or replace bearing | 2-S21 |
| **Differential Lock Can Not Be Set** | 1. Differential lock shift fork damaged | Replace differential shift fork | 3-S4 |
| | 2. Differential lock shifter mounting pin damaged | Replace differential lock shifter | 3-S4 |
| **Differential Lock Pedal Does Not Return** | 1. Differential lock fork shaft rusted | Repair or replace differential lock fork shaft | 3-S4 |
| | 2. Differential lock pedal return spring weakened or damaged | Replace return spring | 2-S41 |

9Y1211156TRS0001US0

https://truckmanualshub.com/


# 2. SERVICING SPECIFICATIONS

**HYDROSTATIC TRANSMISSION (HST)**

| Item | | Factory Specification | Allowable Limit |
|---|---|---|---|
| Charge Relief Valve | Setting Pressure | 0.4 to 0.6 MPa<br>4 to 6 kgf/cm$^2$<br>60 to 80 psi | – |
| Check and High Pressure Relief Valve | Setting Pressure [Relief Valve] | 23 to 25 MPa<br>240 to 250 kgf/cm$^2$<br>3400 to 3600 psi | – |
| Relief Valve | Readjusting Pressure | 23 to 25 MPa<br>240 to 250 kgf/cm$^2$<br>3400 to 3600 psi | – |
| Piston to Cylinder Block Bore (HST) | Clearance | 0.02 to 0.03 mm<br>0.0008 to 0.001 in. | 0.04 mm<br>0.0016 in. |

**INDEPENDENT PTO CLUTCH**

| Item | | Factory Specification | Allowable Limit |
|---|---|---|---|
| Clutch Disc | Thickness | 1.70 to 1.90 mm<br>0.067 to 0.075 in. | 1.55 mm<br>0.061 in. |
| Clutch Plate | Thickness | 1.15 to 1.25 mm<br>0.045 to 0.049 in. | 1.10 mm<br>0.043 in. |
| Pressure Plate | Thickness | 1.95 to 2.05 mm<br>0.0768 to 0.0807 in. | 1.8 mm<br>0.071 in. |
| Piston Return Spring | Free Length | 44.0 mm<br>1.73 in. | – |
| | Load / Length | 638.7 N / 26 mm<br>65.13 kgf / 26 mm<br>143.6 lbf / 1.02 in. | 539.4 N / 26 mm<br>55 kgf / 26 mm<br>121.3 lbf / 1.02 in. |

https://truckmanualshub.com/


**TRANSMISSION CASE AND DIFFERENTIAL GEAR**

| Item | | Factory Specification | Allowable Limit |
|---|---|---|---|
| Shift Fork to Shifter Groove | Clearance | 0.10 to 0.35 mm<br>0.004 to 0.014 in. | 0.5 mm<br>0.020 in. |
| Differential case to Differential Side Gear | Clearance | 0.025 to 0.066 mm<br>0.0010 to 0.0026 in. | 0.30 mm<br>0.0118 in. |
| • Differential Case (Spiral Bevel Gear) | I.D. | 32.000 to 32.025 mm<br>1.2598 to 1.2608 in. | – |
| • Differential Side Gear Boss | O.D. | 31.959 to 31.975 mm<br>1.2582 to 1.2589 in. | – |
| Differential Pinion to Differential Pinion Shaft | Clearance | 0.048 to 0.084 mm<br>0.0019 to 0.0033 in. | 0.30 mm<br>0.0118 in. |
| • Differential Pinion | I.D. | 16.032 to 16.050 mm<br>0.63119 to 0.63188 in. | – |
| • Differential Pinion Shaft | O.D. | 15.966 to 15.984 mm<br>0.62859 to 0.62929 in. | – |
| Differential Pinion to Differential Side Gear | Backlash | 0.1 to 0.3 mm<br>0.004 to 0.012 in. | 0.4 mm<br>0.016 in. |
| Spiral Bevel Pinion Shaft | Movements at Shaft Directions | Approximately<br>0 mm<br>0 in. | – |
| Spiral Bevel Pinion to Spiral Bevel Gear | Backlash | 0.10 to 0.30 mm<br>0.0039 to 0.012 in. | – |

9Y1211156TRS0002US0

https://truckmanualshub.com/


# 3. TIGHTENING TORQUES

Tightening torques of screws, bolts and nuts on the table below are especially specified.
(For general use screws, bolts and nuts: Refer to "5. TIGHTENING TORQUES" on page G-11.)

| Item | N·m | kgf·m | lbf·ft |
|---|---|---|---|
| Checking port plug | 29 to 44 | 3.0 to 4.5 | 21.7 to 32.5 |
| Hex. socket head screw | 24.5 to 29.5 | 2.5 to 3.0 | 18.1 to 21.7 |
| Steering wheel mounting nut | 20 to 40 | 2.1 to 4.0 | 15 to 29 |
| 3-point hitch shaft setting screw | 15 to 20 | 1.6 to 2.0 | 11 to 14 |
| 3-point hitch shaft setting screw lock nut | 43 to 47 | 4.4 to 4.7 | 32 to 34 |
| ROPS mounting bolt (M12) | 83.4 to 93.2 | 8.5 to 9.5 | 61 to 69 |
| ROPS mounting bolt (SEMS bolt) | 47.1 to 56.9 | 4.8 to 5.8 | 34.7 to 42 |
| Front loader valve pipe joint bolt | 48 to 70 | 4.9 to 7.1 | 36 to 51 |
| 3-point hitch delivery pipe joint bolt | 48 to 70 | 4.9 to 7.1 | 36 to 51 |
| Frame support plate mounting bolt (M12) | 64 to 74 | 6.6 to 7.5 | 48 to 54 |
| Sub frame mounting bolt (M12) | 80 to 90 | 8.2 to 9.1 | 59 to 66 |
| Sub frame mounting bolt (M14) | 126 to 150 | 12.9 to 15.2 | 93.0 to 110 |
| Sub frame mounting bolt (M10) | 40 to 45 | 4.1 to 4.7 | 30 to 34 |
| Front case mounting nut for aluminum material (M8) | 17.7 to 20.5 | 1.8 to 2.1 | 13.1 to 15.1 |
| Front case mounting bolt for aluminum material (M10) | 39.3 to 44.1 | 4.0 to 4.5 | 29.0 to 32.5 |
| HST assembly mounting bolt (M10, aluminum) | 39.3 to 44.1 | 4.0 to 4.5 | 29.0 to 32.5 |
| Center section mounting hex. bolt (M10, aluminum) | 49 to 59 | 5.0 to 6.0 | 37 to 43 |
| Check and high pressure relief valve plug | 59 to 78 | 6.1 to 7.9 | 44 to 57 |
| Transmission case mounting bolt (M10) and nut | 39.3 to 44.1 | 4.0 to 4.5 | 29.0 to 32.5 |
| Hydraulic cylinder mounting bolt (M10) and nut | 39.3 to 44.1 | 4.0 to 4.5 | 29.0 to 32.5 |
| Rear axle case (LH and RH) mounting bolt for aluminum material (M10) | 39.3 to 44.1 | 4.0 to 4.5 | 29.0 to 32.5 |
| Rear PTO cover mounting bolt for aluminum material (M10) | 39.3 to 44.1 | 4.0 to 4.5 | 29.0 to 32.5 |
| Differential bearing holder mounting bolt for aluminum material (M8) | 17.7 to 20.5 | 1.8 to 2.1 | 13.1 to 15.1 |
| Spiral bevel gear UBS screw | 37.5 to 42.5 | 3.83 to 4.33 | 27.7 to 31.3 |
| Screw (M3) | 1.5 | 0.15 | 1.1 |
| Valve plug | 59 to 78 | 6.1 to 7.9 | 44 to 57 |

9Y1211156TRS0003US0

https://truckmanualshub.com/


# 4. CHECKING, DISASSEMBLING AND SERVICING

## [1] CHECKING AND ADJUSTING

### (1) HST

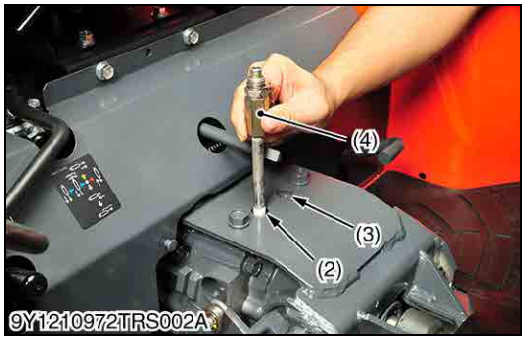


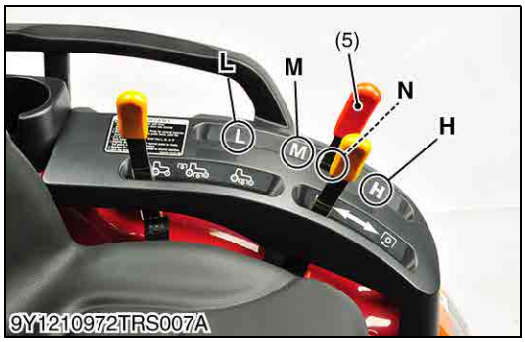

**Charge Relief Pressure**

**CAUTION**

- **When checking, park the tractor on flat ground and fully engage the parking brake.**

1. Remove the cover (1).
2. Remove the plug from **P1** port (reverse) (2) or **P2** port (forward) (3).

**NOTE**

- **If the plug is tight to remove, warm up the plug by a hair drier etc..**

3. Install the adaptor (4) to **P1** port (2) or **P2** port (3).
4. Install the cable (7) and low pressure gauge to the adaptor (4).

| Engine speed | Rated speed |
|---|---|
| Range gear shift position | Neutral |
| HST pedal | Neutral |

5. Start the engine and warm the oil before testing.
6. Change the range gear shift lever (5) to **"NEUTRAL"** position.
7. Operate the engine at the rated speed.
8. Release the foot from the HST pedal (6).
9. Read the low pressure gauge to measure the charge relief pressure.
10. If the measurement is not same as factory specification, check the charge relief valve and the related hydraulic components.

| | | |
|---|---|---|
| Charge pressure | Factory specification | 0.4 to 0.6 MPa<br>4 to 6 kgf/cm$^2$<br>60 to 80 psi |

**NOTE**

- **Low pressure gauge is 2.9 MPa (30 kgf/cm$^2$, 427 psi) full scale.**

**(When reassembling)**

- Apply liquid lock (Three Bond 1324B or its equivalent) to the plug.

| | | |
|---|---|---|
| Tightening torque | Checking port plug | 29 to 44 N·m<br>3.0 to 4.5 kgf·m<br>21.7 to 32.5 lbf·ft |

(1) Cover
(2) **P1** port (reverse)
(3) **P2** port (forward)
(4) Adaptor
(5) Range Gear Shift Lever
(6) HST Pedal
(7) Cable

**L: Low speed position**
**M: Medium speed position**
**N: Neutral position**
**H: High speed position**

9Y1211156TRS0004US0

https://truckmanualshub.com/

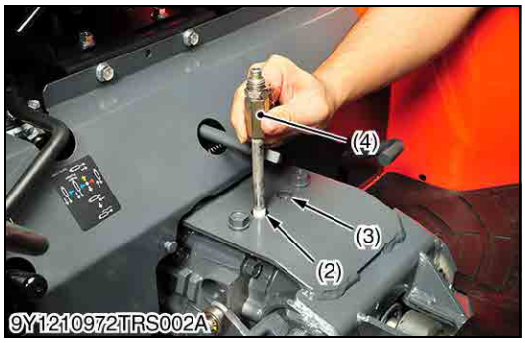


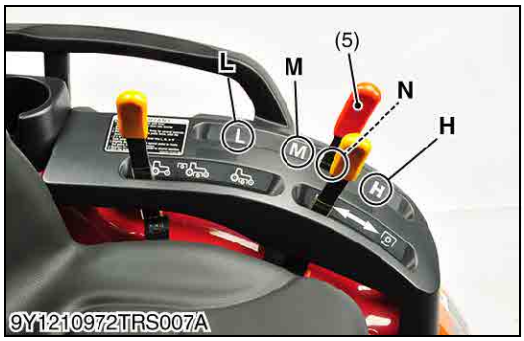

## High Pressure Relief Valve (Reverse)

**CAUTION**

- **When checking, park the tractor on flat ground and fully engage the parking brake.**

1. Remove the cover (1).
2. Remove the plug from **P1** port (reverse) (2).

**NOTE**

- **If the plug is tight to remove, warm up the plug by a hair drier etc..**

3. Install the adaptor (4) to **P1** port (2).
4. Install the cable (7) and high pressure gauge.

| Engine speed | Rated speed |
|---|---|
| Range gear shift position | High |
| HST pedal | Reverse |
| Brake pedal | Depressed |

5. Start the engine and warm the oil before testing. Check to see that parking brake is applied.
6. Place the range gear shift lever (5) to **"HIGH"** position.
7. Operate the engine at the rated speed.
8. Depress the rear side pedal of the HST pedal (6).
9. Read the high pressure gauge to measure the high pressure relief valve pressure.
10. If the measurement is not the same as factory specification, check the check and high pressure relief valve assembly.

| | | |
|---|---|---|
| Check and high relief pressure<br>(Oil temperature at 50 °C (122 °F)) | Factory specification | 23 to 25 MPa<br>240 to 250 kgf/cm$^2$<br>3400 to 3600 psi |

**IMPORTANT**

- **Measure quickly so that the relief valve may not be in operation more than 10 seconds.**

**NOTE**

- **High pressure gauge is 40 MPa (400 kgf/cm$^2$, 5800 psi) full scale.**
- **Engine speed: Rated speed**
- **Oil temperature: 50 °C (122 °F)**

**(When reassembling)**

- Apply liquid lock (Three Bond 1324B or its equivalent) to the plug.

| | | |
|---|---|---|
| Tightening torque | Checking port plug | 29 to 44 N·m<br>3.0 to 4.5 kgf·m<br>21.7 to 32.5 lbf·ft |

(1) Cover
(2) **P1** port (reverse)
(3) **P2** port (forward)
(4) Adaptor
(5) Range Gear Shift Lever
(6) HST Pedal
(7) Cable

**L: Low speed position**
**M: Medium speed position**
**N: Neutral position**
**H: High speed position**

9Y1211156TRS0005US0

https://truckmanualshub.com/

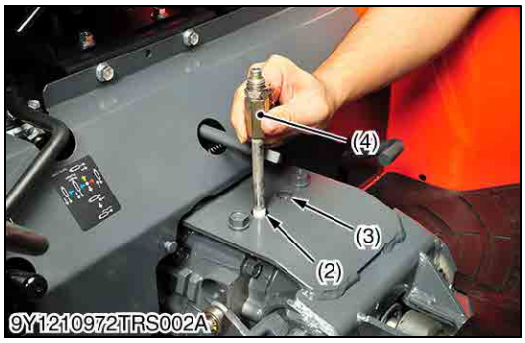


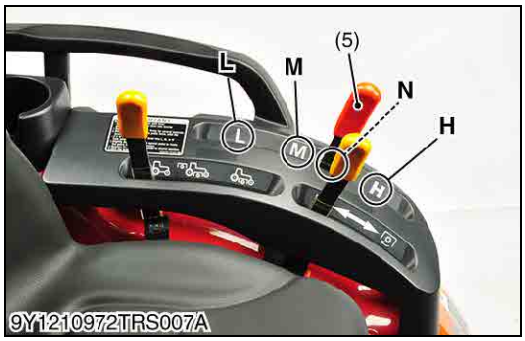

## High Pressure Relief Valve (Forward)

**CAUTION**

- **When checking, park the tractor on flat ground and fully engage the parking brake.**

1. Remove the cover (1).
2. Remove the plug from **P2** port (forward) (3).

**NOTE**

- **If the plug is tight to remove, warm up the plug by a hair drier etc..**

3. Install the adaptor (4) to **P2** port (3).
4. Install the cable (7) and high pressure gauge.

| Engine speed | Rated speed |
|---|---|
| Range gear shift position | High |
| HST pedal | Forward |
| Brake pedal | Depressed |

5. Start the engine and warm the oil before testing. Check to see that parking brake is applied.
6. Place the range gear shift lever (5) to **"HIGH"** position.
7. Operate the engine at the rated speed.
8. Depress the front side pedal of the HST pedal (6).
9. Read the high pressure gauge to measure the high pressure relief valve pressure.
10. If the measurement is not same as factory specification, check the check and high pressure relief valve assembly.

| | | |
|---|---|---|
| Check and high relief pressure<br>(Oil temperature at 50 °C (122 °F)) | Factory specification | 23 to 25 MPa<br>240 to 250 kgf/cm$^2$<br>3400 to 3600 psi |

**IMPORTANT**

- **Measure quickly so that the relief valve may not be in operation more than 10 seconds.**

**NOTE**

- **High pressure gauge is 40 MPa (400 kgf/cm$^2$, 5800 psi) full scale.**
- **Engine speed: Rated speed**
- **Oil temperature: 50 °C (122 °F)**

**(When reassembling)**

- Apply liquid lock (Three Bond 1324B or its equivalent) to the plug.

| | | |
|---|---|---|
| Tightening torque | Checking port plug | 29 to 44 N·m<br>3.0 to 4.5 kgf·m<br>21.7 to 32.5 lbf·ft |

(1) Cover
(2) **P1** port (reverse)
(3) **P2** port (forward)
(4) Adaptor
(5) Range Gear Shift Lever
(6) HST Pedal
(7) Cable

**L: Low speed position**
**M: Medium speed position**
**N: Neutral position**
**H: High speed position**

9Y1211156TRS0006US0

https://truckmanualshub.com/


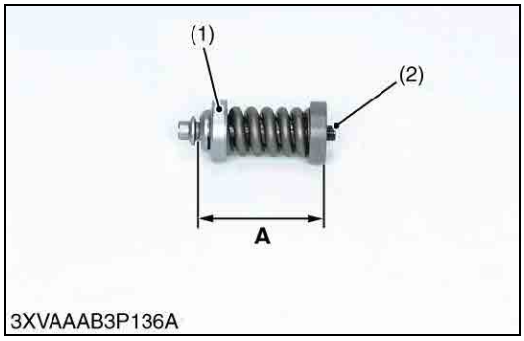

3XVAAAB3P136A

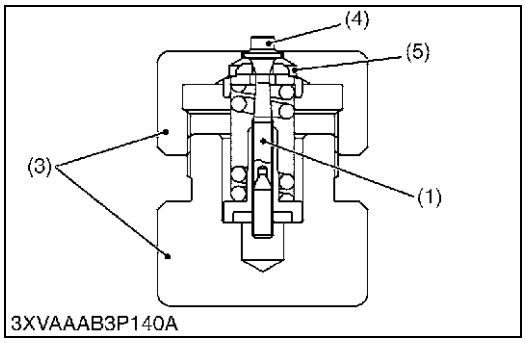

3XVAAAB3P140A

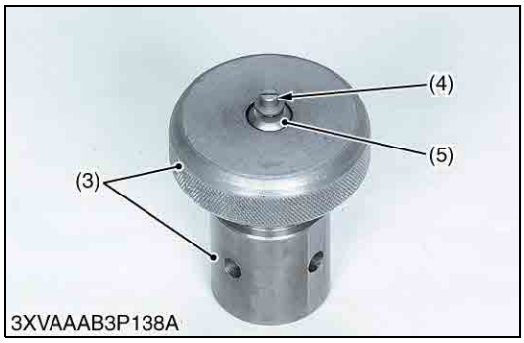

3XVAAAB3P138A

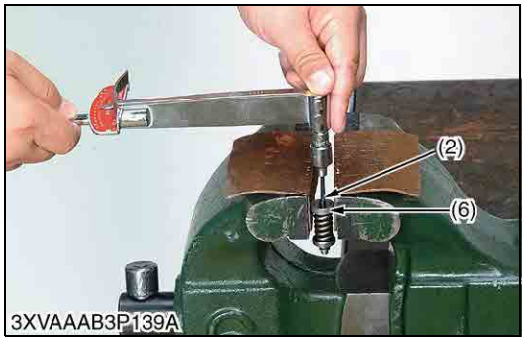

3XVAAAB3P139A

**Readjustment of Relief Valve (When the HST does not work due to its loose hexagon socket head screw)**

■ **IMPORTANT**
- **The KUBOTA does not recommend the readjustment of relief valve. And KUBOTA will recommend to replace with genuine parts.**
- **As the HST may be damaged if the pressure is set to higher by mistake, be careful when adjusting it.**

■ **NOTE**
- **The relief pressure is set in between 23 to 25 MPa (240 to 250 kgf/cm$^2$, 3400 to 3600 psi) when shipped from the factory.**

1. Measure the pre-adjustment distance **"A"**.
2. Compress the spring of the relief valve with a relief valve assembling tool (3).
3. Then, find the distance **"A"** by turning the poppet (4) with a screwdriver.
   Reference: The distance **"A"** changes by about 0.5 mm (0.0197 in.) per one turn of the poppet (4).
4. Repeat the same operation a few times to find the distance **"A"** as it is difficult to acquire at the first time.
5. After finding the distance **"A"**, hold the setscrew (6) to a vice and fasten the hexagon socket head screw (2) with specified torque.
   On this occasion, use a copper plate, etc. for the vice jaws not to damage the setscrew (6).
6. Install the relief valve in the HST.
7. Check the relief pressure as indicated in page 7-S9.
   The distance **"A"** is for refresh only. Make sure to check the relief pressure after readjustment.
8. If the relief pressure does not fall within the readjustment pressure range, repeat the processes of the above item 1 onward.

| | | |
|---|---|---|
| Tightening torque | Hex. socket head screw | 24.5 to 29.5 N·m<br>2.5 to 3.0 kgf·m<br>18.1 to 21.7 lbf·ft |

| | | |
|---|---|---|
| Relief valve readjusting pressure | Factory specification | 23 to 25 MPa<br>240 to 250 kgf/cm$^2$<br>3400 to 3600 psi |

| | | |
|---|---|---|
| Distance **"A"** | Reference value | 38.5 to 38.6 mm<br>1.516 to 1.519 in. |

(1) Relief Valve Assembly
(2) Hexagon Socket Head Screw
(3) Relief Valve Assembling Tool
(4) Poppet
(5) Valve Seat
(6) Setscrew

9Y1211156TRS0007US0

https://truckmanualshub.com/


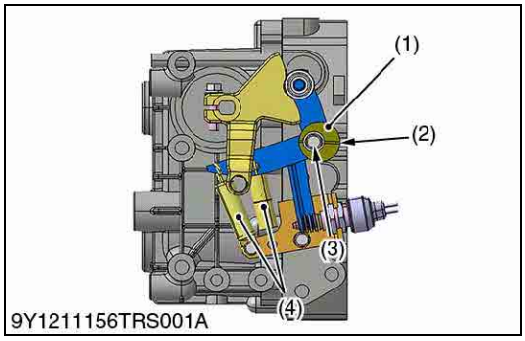


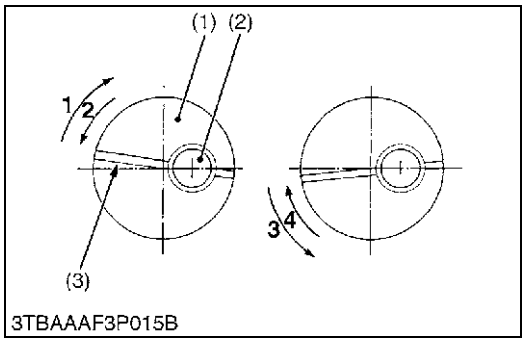


## Adjusting Neutral

1. Disengage the front wheel drive lever. (Drive only rear wheels.)
2. Lift the rear of the tractor so that the rear wheels are off the ground and operate the engine at low idling and drive only rear wheels.
3. Slightly loosen the neutral adjuster setting screw (2).
4. Rotate the neutral adjuster (1) clockwise so the rear wheels turn reverse.
5. Then rotate it counterclockwise until wheels stop completely.
6. Put a mark on the center frame aligning the groove (3) on neutral adjuster.
7. Rotate the neutral adjuster (1) counterclockwise so the rear wheels turn forward.
8. Then rotate it clockwise until wheels stop completely.
9. Put a mark on the center frame aligning the groove (3) on neutral adjuster.
10. Hold the neutral adjuster so its groove is at the middle of the marks and tighten the setting screw (2).

■ **NOTE**

- **When the wheels tend to turn forward, rotate neutral adjuster clockwise.**
- **When the wheels tend to turn reverse, rotate neutral adjuster counterclockwise.**

| | | | |
|---|---|---|---|
| (1) | Neutral Adjuster | **1:** | **Neutral Adjustment Stage 1** |
| (2) | Neutral Adjuster Setting Screw | **2:** | **Neutral Adjustment Stage 2** |
| (3) | Groove | **3:** | **Neutral Adjustment Stage 3** |
| (4) | Neutral Spring | **4:** | **Neutral Adjustment Stage 4** |

9Y1211156TRS0008US0

https://truckmanualshub.com/


# (2) Independent PTO Control Valve

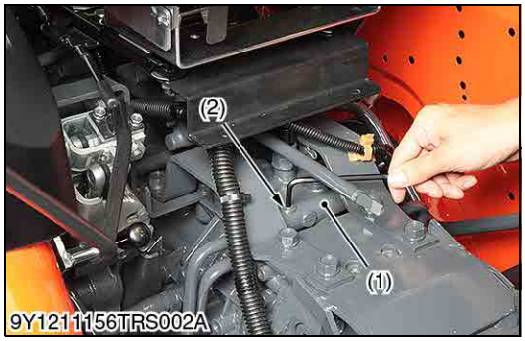

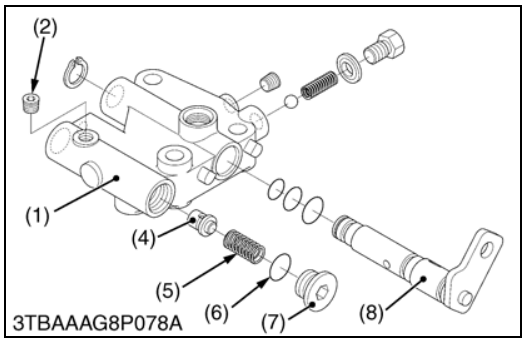

## Independent PTO Control Valve Setting Pressure

1. Remove the plug (2) with a hexagon wrench.
2. Install the adapter (3) to the independent PTO control valve (1).
3. Connect the cable and the pressure gauge to the adapter (3).
4. Start the engine and set at the maximum speed. (Pressure at **"ENGAGED"** position)
5. Move the independent PTO lever (9) to **"ENGAGED"** position **A**.
6. Measure the pressure. (Pressure at **"DISENGAGED"** position)
7. Move the independent PTO lever (9) to position **B**.
8. Measure the pressure.
9. If the pressure is not the factory specifications, adjust setting pressure with (the adjusting) shims.

| | | |
|---|---|---|
| Independent PTO valve setting pressure | Independent PTO lever **"ENGAGED"** position | 1.1 to 1.5 MPa<br>11.2 to 15.3 kgf/cm$^2$<br>160 to 218 psi |
| | Independent PTO lever **"DISENGAGED"** position | 0 MPa<br>0 kgf/cm$^2$<br>0 psi |

**Condition**

- Engine speed: 2900 min$^{-1}$ (rpm)
- Oil temperature: 50 °C (122 °F)

(1) Independent PTO Control Valve
(2) Plug
(3) Adapter
(4) Poppet
(5) Spring
(6) O-ring
(7) Plug
(8) PTO Arm
(9) Independent PTO Lever

**A: ENGAGED Position**
**B: DISENGAGED Position**

9Y1211156TRS0009US0

https://truckmanualshub.com/


# [2] PREPARATION

## (1) Dismounting the Step and Floor Seat

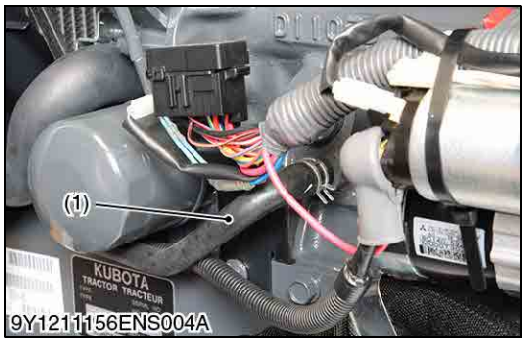


### Battery Cable

1. Open the bonnet.
2. Disconnect the battery negative cable (1).

■ **NOTE**

- **When disconnecting the battery cables, disconnect the grounding cable first. When connecting, the positive cable first.**

(1) Battery Negative Cable

9Y1211156TRS0010US0

### Draining Coolant

**CAUTION**

- **Never remove the radiator cap until coolant temperature is well below its boiling point. Then loosen cap slightly to the stop to relieve any excess pressure before removing cap completely.**

1. Stop the engine and let cool down.
2. Disconnect the radiator hose (1) at the engine side.
3. Remove the radiator cap to completely drain the coolant.
4. After all coolant is drained, connect the radiator hose (1).

**(When reassembling)**

| | | |
|---|---|---|
| Coolant | Capacity | 3.8 L<br>4.0 U.S.qts<br>3.3 Imp.qts |

(1) Radiator Hose

9Y1211156ENS0024US0

https://truckmanualshub.com/


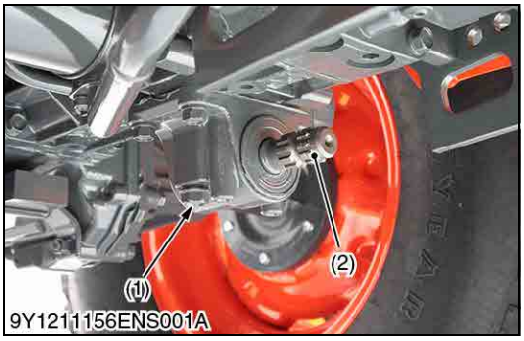


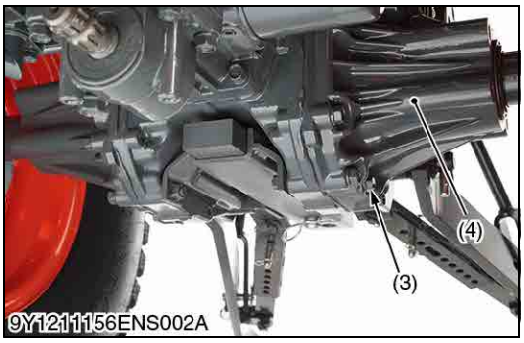


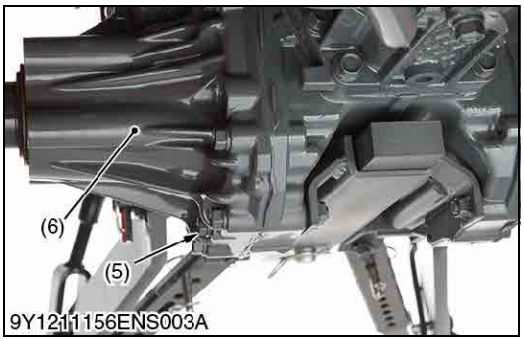


## Draining Transmission Fluid

**CAUTION**

- **Stop the engine before checking and changing the transmission fluid.**

1. Place the oil pan under the tractor.
2. Remove the drain plugs (1), (3), (5) at the mid-PTO shaft and at the bottom of the rear axle cases (4), (6).
3. Drain the transmission fluid.
4. After draining the transmission fluid, reinstall the drain plugs (1), (3), (5).

**IMPORTANT**

- **Use only KUBOTA UDT oil. Use of other oils may damage the transmission or hydraulic system.**
  **Refer to "4. LUBRICANTS, FUEL AND COOLANT" on page G-8.**
- **Never work the tractor immediately after changing the transmission oil. Keep the engine at medium speed for a few minutes to prevents damage to the transmission.**
- **Do not mix different brands oil together.**

| | |
|---|---|
| Transmission fluid capacity | 15 L<br>4.0 U.S.gals<br>3.3 Imp.gals |

(1) Drain Plug
(2) Mid-PTO Shaft
(3) Drain Plug
(4) Rear Axle Case (L.H.)
(5) Drain Plug
(6) Rear Axle Case (R.H.)

9Y1211156ENS0023US0

## Bonnet and Side Cover

1. Open the bonnet (1).
2. Disconnect the connector for head light and remove the clamp (2).
3. Remove the snap pin and bonnet (1).
4. Remove the side covers (3).

(1) Bonnet
(2) Clamp
(3) Side Cover

9Y1211156TRS0011US0

## Steering Wheel

1. Remove the steering wheel cap.
2. Remove the steering wheel mounting nut and remove the steering wheel (1) with a steering wheel puller (2).

**(When reassembling)**

| | | |
|---|---|---|
| Tightening torque | Steering wheel mounting nut | 20 to 40 N·m<br>2.1 to 4.0 kgf·m<br>15 to 29 lbf·ft |

(1) Steering Wheel
(2) Steering Wheel Puller

9Y1211156TRS0012US0

https://truckmanualshub.com/

## Panel Lower Cover

1. Remove the panel lower cover mounting bolts and disconnect the key switch connector.
2. Remove the panel lower cover (1).

(1) Panel Lower Cover

9Y1211156TRS0013US0

## HST Pedal, Floor Mat and Front Cover

1. Remove the HST pedal mounting bolts (2).
2. Remove the HST pedal (1).
3. Remove the lower adjusting knob (3).
4. Remove the front cover (4), (5).
5. Remove the floor mat (6).

(1) HST Pedal
(2) Bolt
(3) Lower Adjusting Knob
(4) Front Cover
(5) Front Cover
(6) Floor Mat

9Y1211156TRS0014US0

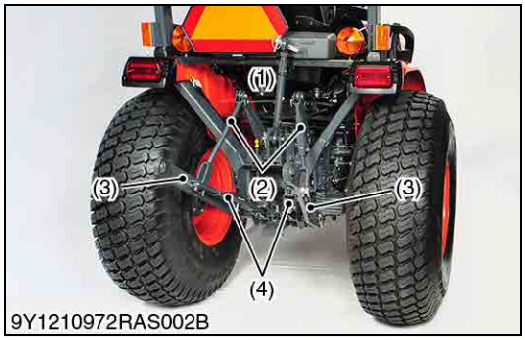


## 3-Point Linkage

1. Remove the top link (1), lift rods (2), lower links (3) and stabilizers (4).
2. Remove the collars (5), stabilizer bracket (6) and 3-point hitch shaft (7).

**(When reassembling)**

| | | |
|---|---|---|
| Tightening torque | 3-point hitch shaft setting screw | 15 to 20 N·m<br>1.6 to 2.0 kgf·m<br>11 to 14 lbf·ft |
| | 3-point hitch shaft setting screw lock nut | 43 to 47 N·m<br>4.4 to 4.7 kgf·m<br>32 to 34 lbf·ft |

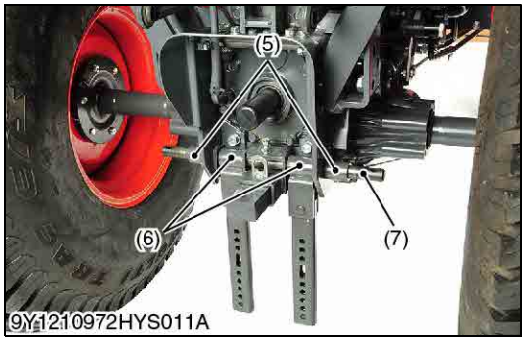


(1) Top Link
(2) Lift Rod
(3) Lower Link
(4) Stabilizer
(5) Collar
(6) Stabilizer Bracket
(7) 3-Point Hitch Shaft

9Y1211156TRS0015US0

https://truckmanualshub.com/


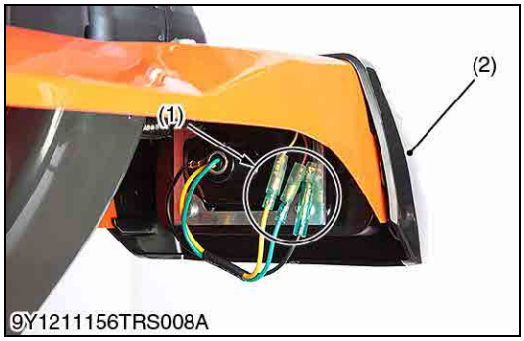


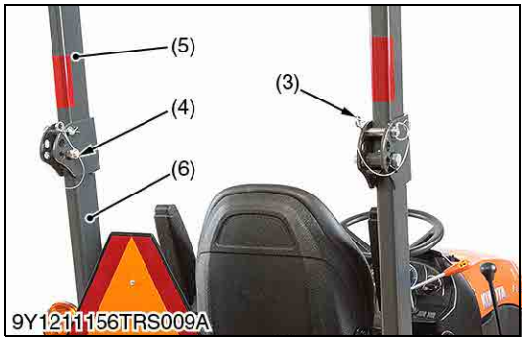


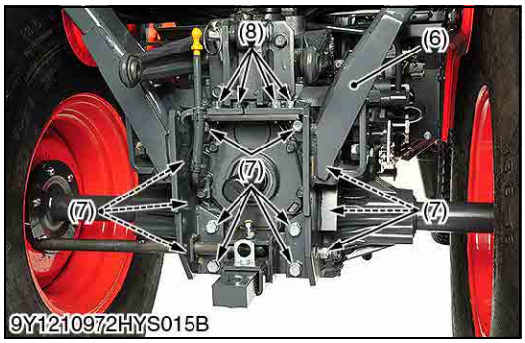


## ROPS

1. Disconnect the tail light connectors (1) and turn signal light connectors.
2. Remove the tail lights (2).
3. Remove the spring pins (3).
4. Remove the bolt (4).
5. Remove the upper frame (5) from lower frames (6).
6. Remove the ROPS mounting bolts (7), (8) and the lower frames (6).

**(When reassembling)**

- Split the split pin (3) securely as shown in the photo.

■ **NOTE**

- **Do not firmly tighten all screws until most components are attached.**

| | | |
|---|---|---|
| Tightening torque | ROPS mounting bolt (M12) | 83.4 to 93.2 N·m<br>8.5 to 9.5 kgf·m<br>61 to 69 lbf·ft |
| | ROPS mounting bolt (SEMS Bolt) | 47.1 to 56.9 N·m<br>4.8 to 5.8 kgf·m<br>34.7 to 42 lbf·ft |

(1) Tail Light Connector
(2) Tail Light
(3) Spring Pin
(4) Bolt
(5) Upper Frame
(6) Lower Frame
(7) Bolt
(8) SEMS Bolt

9Y1211156TRS0016US0

https://truckmanualshub.com/

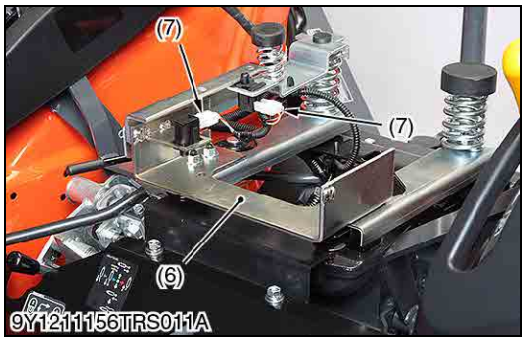


## Seat and Fenders

1. Remove the seat (1) and the lever grips (2).
2. Disconnect the electrical socket connector (5).
3. Remove the fender LH (3).
4. Remove the fender RH (4).
5. Remove the both side steps and seat under cover (8).
6. Disconnect the seat switch connector (7).
7. Remove the seat support (6).

| | | | |
|---|---|---|---|
| (1) | Seat | (5) | Electrical Socket Connector |
| (2) | Lever Grip | (6) | Seat Support |
| (3) | Fender LH | (7) | Seat Switch Connector |
| (4) | Fender RH | (8) | Seat Under Cover |

9Y1211156TRS0017US0

https://truckmanualshub.com/


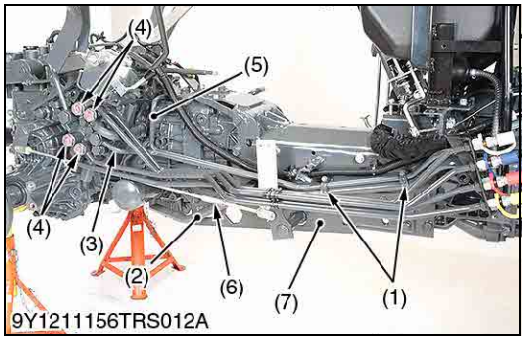


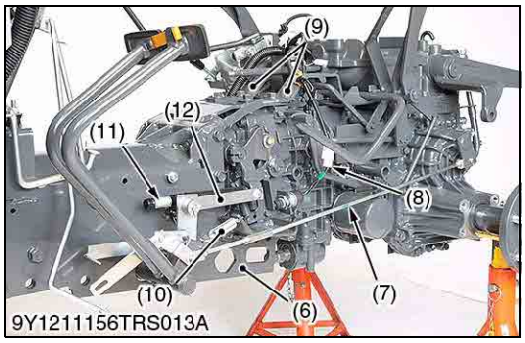

## Hydraulic Pipes and Others

1. Remove the clamps (1).
2. Disconnect the suction pipe (2) and delivery pipe (3).
3. Disconnect the loader valve pipes (4).
4. Disconnect the independent PTO pipe (5).
5. Remove the right side brake rod (6) and sub frame (7).
6. Remove the left side brake rod (6) and sub frame (7).
7. Disconnect the HST pedal switch connector (8).
8. Remove the frame support plate (9) and spring (10).
9. Remove the HST damper (11) and plate (12).

| | | |
|---|---|---|
| Tightening torque | Front loader valve pipe joint | 48 to 70 N·m<br>4.9 to 7.1 kgf·m<br>36 to 51 lbf·ft |
| | 3-point hitch delivery pipe joint bolt | 48 to 70 N·m<br>4.9 to 7.1 kgf·m<br>36 to 51 lbf·ft |
| | Frame support plate mounting bolt (M12) | 64 to 74 N·m<br>6.6 to 7.5 kgf·m<br>48 to 54 lbf·ft |
| | Sub frame mounting bolt (M12) | 80 to 90 N·m<br>8.2 to 9.1 kgf·m<br>59 to 66 lbf·ft |
| | Sub frame mounting bolt (M14) | 126 to 150 N·m<br>12.9 to 15.2 kgf·m<br>93.0 to 110 lbf·ft |
| | Sub frame mounting bolt (M10) | 40 to 45 N·m<br>4.1 to 4.7 kgf·m<br>30 to 34 lbf·ft |

(1) Clamp
(2) Suction Pipe
(3) Delivery Pipe
(4) Front Loader Valve Pipe Joint
(5) Independent PTO Pipe
(6) Brake Rod
(7) Sub Frame
(8) HST Pedal Switch Connector
(9) Plate
(10) Spring
(11) HST Damper
(12) HST Plate

9Y1211156TRS0018US0

https://truckmanualshub.com/


# [3] DISASSEMBLING AND ASSEMBLING

## (1) Separating Engine and Clutch Housing

- See page 1-S23.

9Y1211156TRS0019US0

## (2) Front Case

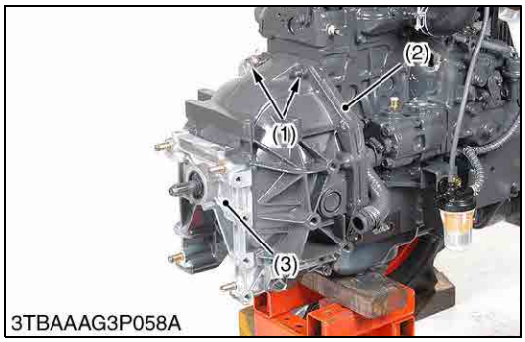


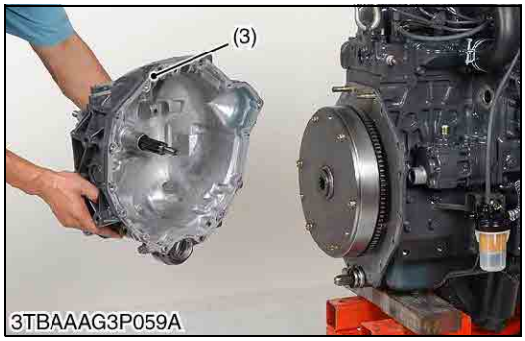


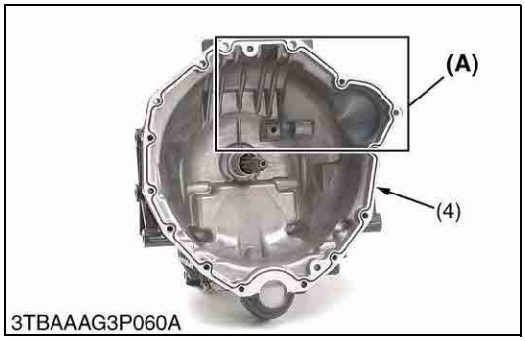


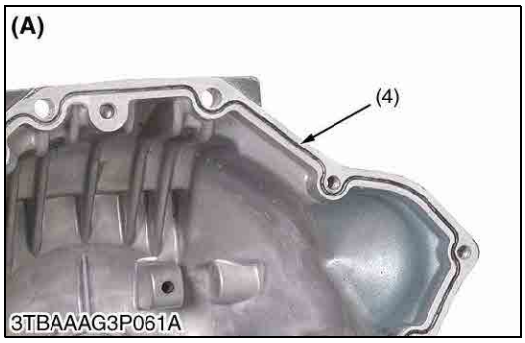


**Clutch Housing**

1. Support the engine securely.
2. Remove the front case mounting bolts (1).
3. Remove the front case (3) from the engine.

**(When reassembling)**

- Apply liquid gasket (Three Bond 1206D or equivalent) to the joint face of the engine and the front case.

| | | |
|---|---|---|
| Tightening torque | Front case mounting nut for aluminum material (M8) | 17.7 to 20.5 N·m<br>1.8 to 2.1 kgf·m<br>13.1 to 15.1 lbf·ft |
| | Front case mounting bolt for aluminum material (M10) | 39.3 to 44.1 N·m<br>4.0 to 4.5 kgf·m<br>29.0 to 32.5 lbf·ft |

(1) Bolt
(2) Engine Rear-End Plate
(3) Front Case
(4) Groove (for liquid gasket)

**(A) Front Case Corner**

9Y1211156TRS0020US0

https://truckmanualshub.com/


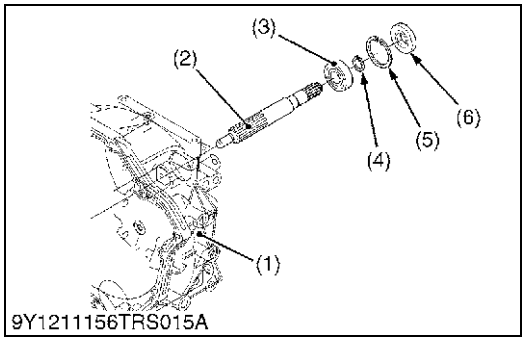


**Clutch Shaft and Ball Bearing**

1. Remove the oil seal (6).
2. Remove the circlip (4), (5).
3. Remove the clutch shaft (2) from the front case (1).

| | | | |
|---|---|---|---|
| (1) | Front Case | (4) | External Circlip |
| (2) | Clutch Shaft | (5) | Internal Circlip |
| (3) | Ball Bearing | (6) | Oil Seal |

9Y1211156TRS0021US0

## (3) Hydraulic Transmission (HST)

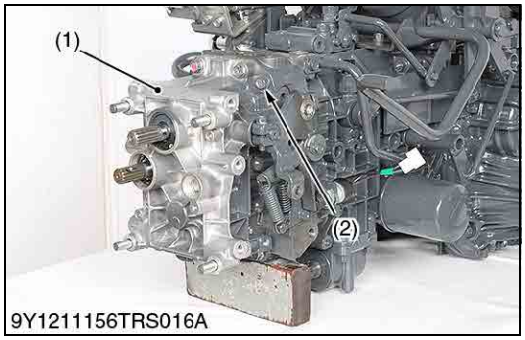


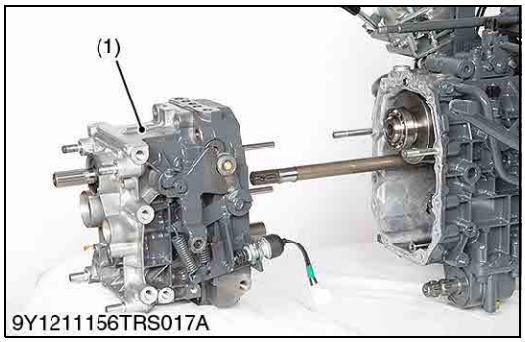


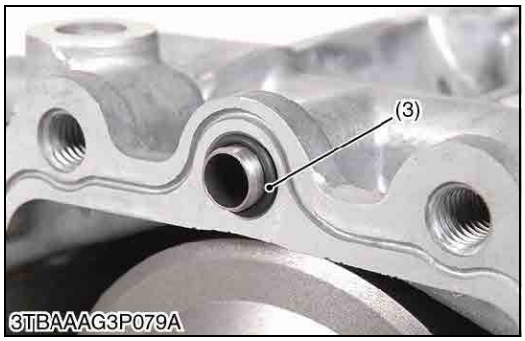


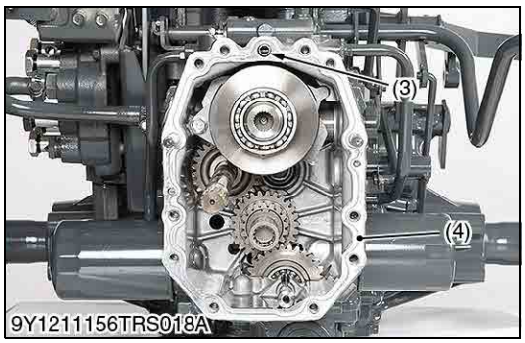


**HST Assembly**

1. Remove the HST mounting bolts (2).
2. Separate the HST assembly (1) from the transmission.

**(When reassembling)**

- Install the O-ring (3) to the transmission case.
- Apply liquid gasket (Three Bond 1206D or equivalent) to the groove (4) of the transmission case.

| | | |
|---|---|---|
| Tightening torque | HST assembly mounting bolt (M10, aluminum) | 39.3 to 44.1 N·m<br>4.0 to 4.5 kgf·m<br>29.0 to 32.5 lbf·ft |

| | | | |
|---|---|---|---|
| (1) | HST Assembly | (3) | O-ring |
| (2) | HST Assembly Mounting Bolt | (4) | Groove (for Liquid Gasket) |

9Y1211156TRS0022US0

https://truckmanualshub.com/


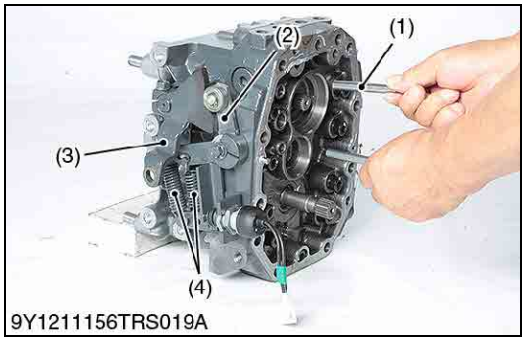

9Y1211156TRS019A

## Plate Push Rod, Neutral Arm and Neutral Holder

1. Remove the plate push rod (1).
2. Remove the spring (4).
3. Remove the neutral arm mounting bolt.
4. Loosen the bolt of the neutral holder (3).
5. Remove the neutral holder (3).

(1) Plate Push Rod
(2) Neutral Arm
(3) Neutral Holder
(4) Spring

9Y1211156TRS0023US0

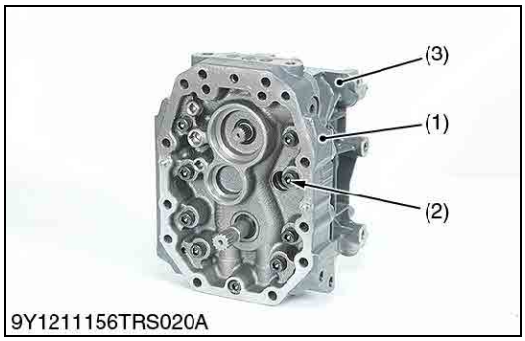

9Y1211156TRS020A

## Center Section 1

1. Remove the center section mounting hex. bolts (2).
2. Separate the HST housing (3) from the center section (1).

**(When reassembling)**

- Use a new gasket.
- Install the poppet to the center section (1). Do not drop the spring (5).
- Check the knock pin.
- Hold the gasket with the hex. bolts (2) not to drop the gasket (4).

| | | |
|---|---|---|
| Tightening torque | Center section mounting hex. bolt (M10, aluminum) | 49 to 59 N·m<br>5.0 to 6.0 kgf·m<br>37 to 43 lbf·ft |

(1) Center Section
(2) Hex. Bolt
(3) HST Housing
(4) Gasket
(5) Spring
(6) Poppet

9Y1211156TRS0024US0

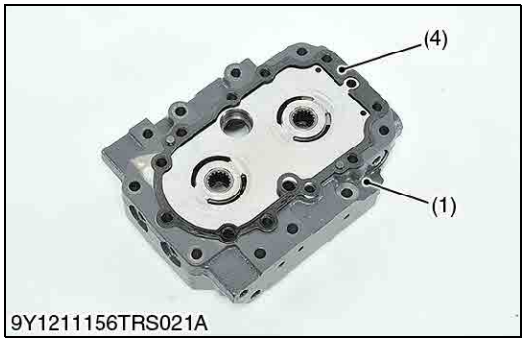

9Y1211156TRS021A

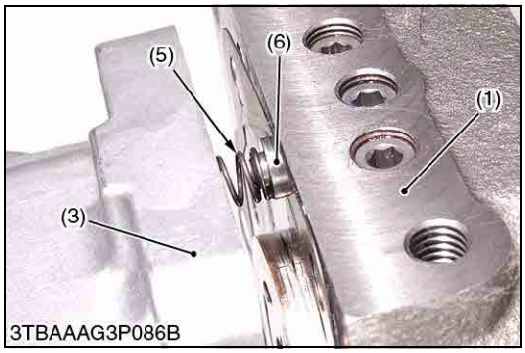

3TBAAAG3P086B

## Oil Seals and Needle Bearings

1. Remove the needle bearing (2).
2. Remove the oil seals (1).

**(When reassembling)**

- After checking or changing the oil seals, apply the bearing with hydrostatic transmission oil and the oil seal with grease.

(1) Oil Seal
(2) Needle Bearing

9Y1211156TRS0025US0

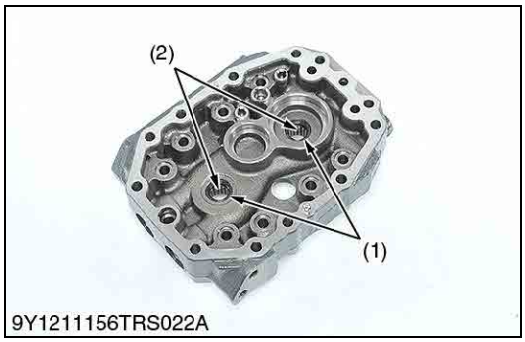

9Y1211156TRS022A

https://truckmanualshub.com/


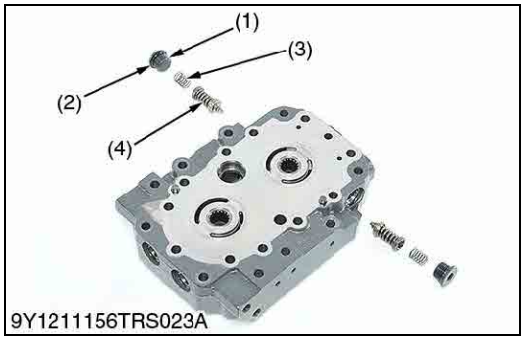


## Check and High Pressure Relief Valve

1. Remove the valve plug (1) with a hex. wrench.
2. Remove the spring (3) and the valve (4).

**(When reassembling)**

| | | |
|---|---|---|
| Tightening torque | Check and high pressure relief valve plug | 59 to 78 N·m<br>6.1 to 7.9 kgf·m<br>44 to 57 lbf·ft |

(1) Valve Plug
(2) O-ring
(3) Spring
(4) Valve

9Y1211156TRS0026US0

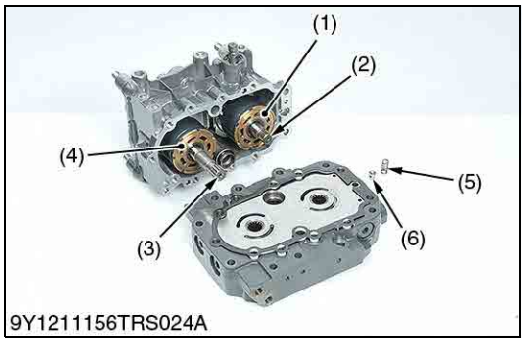


## HST Housing Case Cylinder Blocks

1. Remove the cylinder blocks (1), (4) from the pump shaft (2) and the motor shaft (3).

**(When reassembling)**

- Install the poppet (6) to the center section, not to drop it.
- Install the spring (5) to the HST housing side.

(1) Cylinder Block (Pump)
(2) Pump Shaft
(3) Motor Shaft
(4) Cylinder Block (Motor)
(5) Spring
(6) Poppet

9Y1211156TRS0027US0

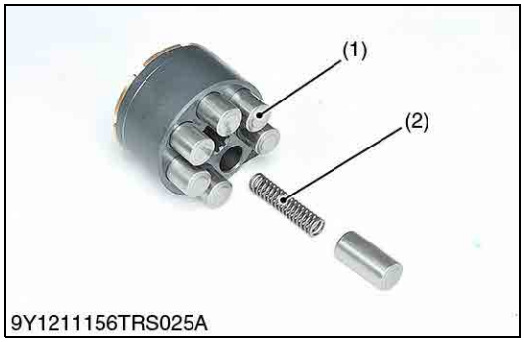


## Piston and Spring

1. Remove the pistons (1) with the spring (2).

**(When reassembling)**

- Install the piston to its original position of the cylinder block.

(1) Piston
(2) Spring

9Y1211156TRS0028US0

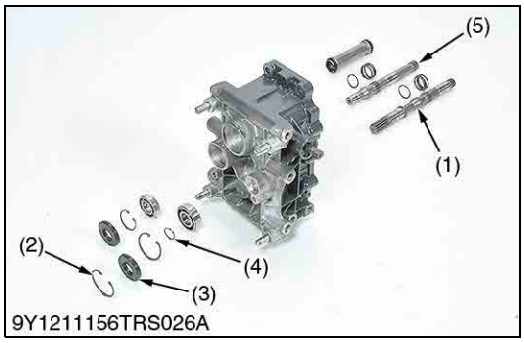


## Motor Shaft and Pump Shaft

1. Remove the circlip (2) and oil seal (3) from the HST housing.
2. Remove the circlip (4) from the pump shaft (1).
3. Remove the pump shaft (1).
4. Remove the motor shaft (5).

**(When reassembling)**

- Replace the used oil seal with a new one.

(1) Pump Shaft
(2) Circlip
(3) Oil Seal
(4) Circlip
(5) Motor Shaft

9Y1211156TRS0029US0

https://truckmanualshub.com/


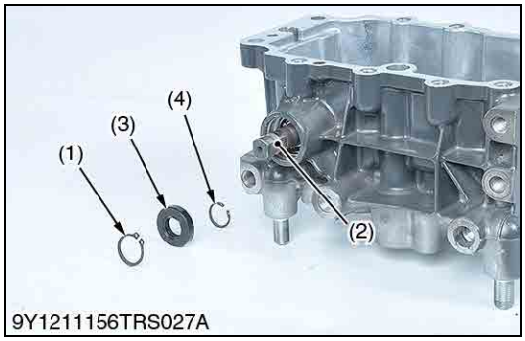


## Trunnion Shaft

1. Remove the circlip (1) and oil seal (3) from the HST housing.
2. Remove the circlip (4) from the trunnion shaft (2).
3. Remove the swash plate (5).
4. Strike out the trunnion shaft (2) slightly with a plastic hammer and remove the trunnion shaft (2).

(1) Circlip
(2) Trunnion Shaft
(3) Oil Seal
(4) Circlip
(5) Swash Plate

9Y1211156TRS0030US0

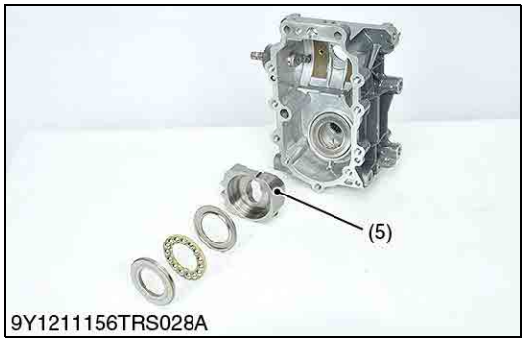


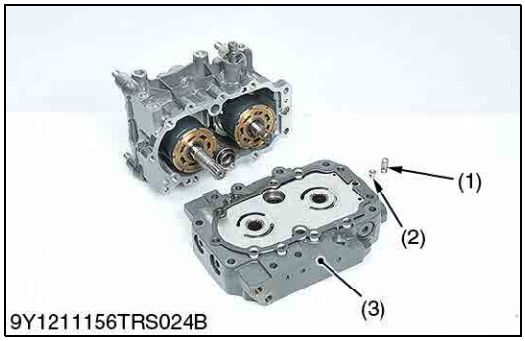


## Charge Relief Valve

1. Remove the spring (1) and poppet (2).

**(When reassembling)**

- Check the spring for breakage and wear.

(1) Spring
(2) Poppet
(3) Center Section

9Y1211156TRS0031US0

https://truckmanualshub.com/


## (4) PTO Clutch Case

3TBAAAG3P112A

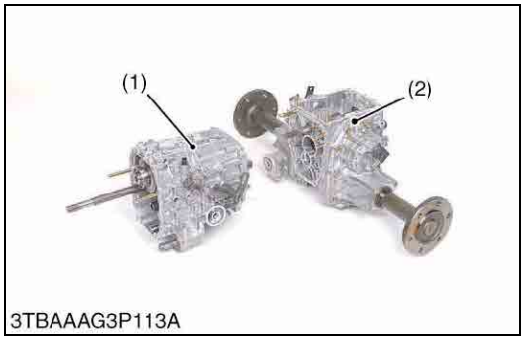

3TBAAAG3P113A

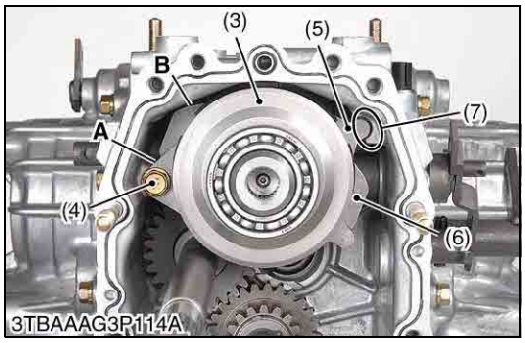

3TBAAAG3P114A

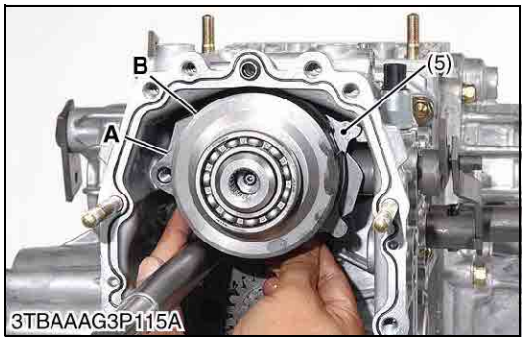

3TBAAAG3P115A

**Separating Transmission Case and PTO Clutch Case**

1. Remove the transmission case mounting bolts.
2. Separate the transmission case (1) from the differential case (2).
3. Remove the PTO brake plate 4 mounting bolt (4).

**(When reassembling)**

- Install the PTO brake plate 4 (5) to the transmission case groove (7) securely as shown in the picture.
- Place the PTO brake plate 2 (6) between **"A"** and **"B"**.

| | | |
|---|---|---|
| Tightening torque | Transmission case mounting bolt (M10) and nut | 39.3 to 44.1 N·m<br>4.0 to 4.5 kgf·m<br>29.0 to 32.5 lbf·ft |
| | Hydraulic cylinder mounting bolt (M10) and nut | 39.3 to 44.1 N·m<br>4.0 to 4.5 kgf·m<br>29.0 to 32.5 lbf·ft |

(1) Transmission Case
(2) Differential Case
(3) PTO Clutch Case
(4) PTO Brake Plate 4 Mounting Bolt
(5) PTO Brake Plate 4
(6) PTO Brake Plate 2
(7) Transmission Case Groove

**A: Position**
**B: Position**

9Y1211156TRS0032US0

## (5) Bevel Pinion Shaft

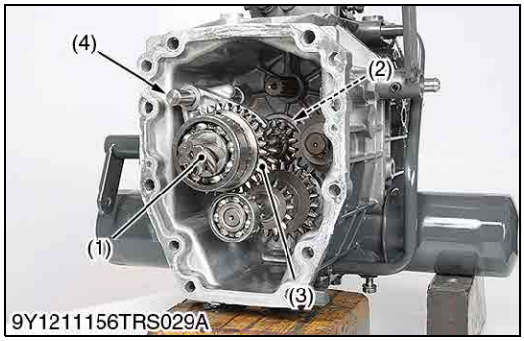

9Y1211156TRS029A

**Bevel Pinion Shaft**

1. Remove the bevel pinion shaft assembly (1) and range gear shaft assembly (4) from the transmission case.
2. Remove the spacer (2).

**(When reassembling)**

- Install the spacer (2) to the transmission case.
- Install the bevel pinion shaft assembly (1) and range gear shaft assembly (4).

(1) Bevel Pinion Shaft Assembly
(2) Spacer
(3) 14T-21T-29T Gear
(4) Range Gear Shaft Assembly

9Y1211156TRS0033US0

https://truckmanualshub.com/


# (6) Sub Gear Shaft

**Sub Gear Shaft Assembly**

1. Remove the circlip (1) from the sub gear shaft (2).
2. Remove the sub gear shaft assembly (3) from the transmission case.

(1) Circlip
(2) Sub Gear Shaft
(3) Sub Gear Shaft Assembly

9Y1211156TRS0034US0

https://truckmanualshub.com/


# (7) Front Wheel Drive Shaft

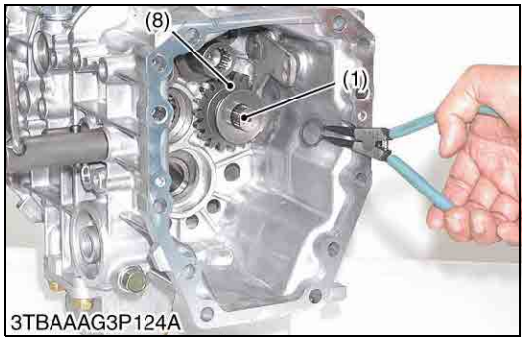

3TBAAAG3P124A

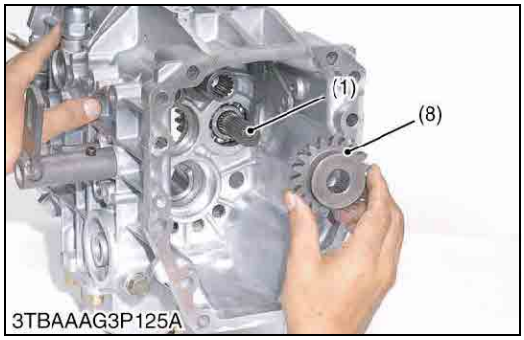

3TBAAAG3P125A

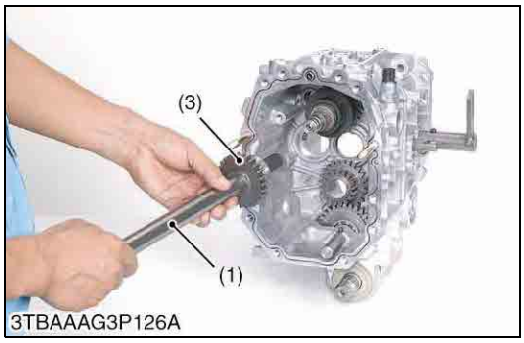

3TBAAAG3P126A

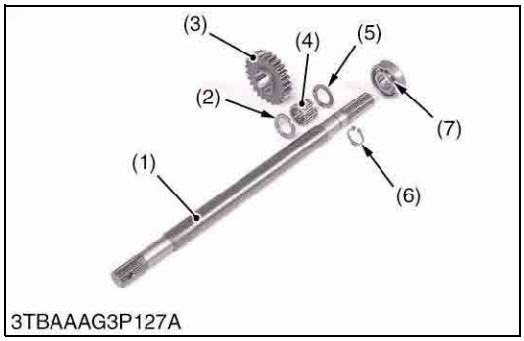

3TBAAAG3P127A

**4WD Shaft**

1. Remove the circlip from the 4WD shaft (1).
2. Remove the 4WD gear (8) from the 4WD shaft (1).
3. Remove the 4WD shaft (1) with the 26T gear (3).
4. Remove the 26T gear (3) and the ball bearing (7).

| | | | |
|---|---|---|---|
| (1) | 4WD Shaft | (5) | Collar |
| (2) | Collar | (6) | Circlip |
| (3) | 26T Gear | (7) | Ball Bearing |
| (4) | Needle Bearing | (8) | 4WD Gear (20T) |

9Y1211156TRS0035US0

https://truckmanualshub.com/


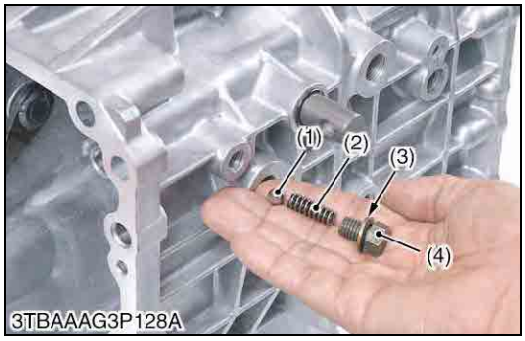


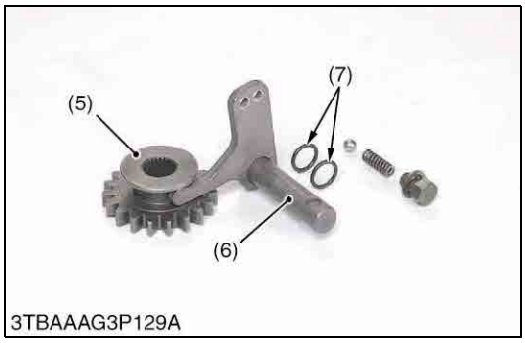


## 4WD Shift Lever

1. Remove the bolt (4) and the washer with rubber (3).

**(When reassembling)**

- Install the 4WD gear (5) to the 4WD shaft.
- Install the 4WD shaft arm (6) to the 4WD gear (5).
- Install the O-rings to the 4WD shift arm (6).

(1) Ball
(2) Spring
(3) Washer with Rubber
(4) Bolt
(5) 4WD Gear (19T)
(6) 4WD Shift Arm
(7) O-ring

9Y1211156TRS0036US0

https://truckmanualshub.com/


# (8) Independent PTO Clutch Shifter

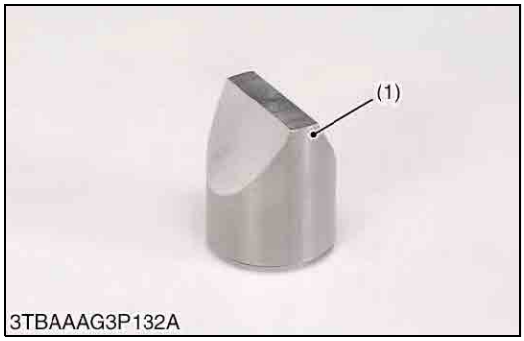

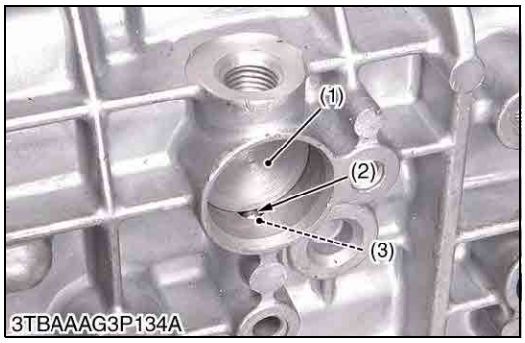


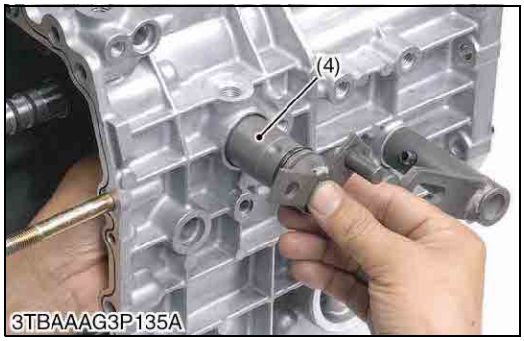


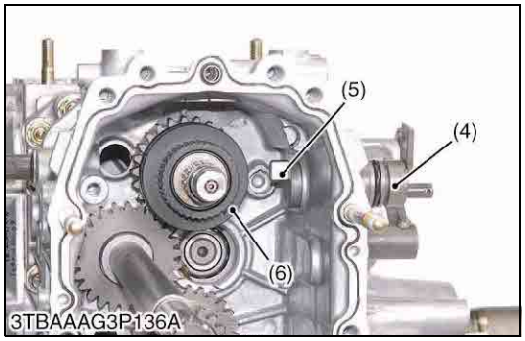


**Installing PTO Shifter**

1. Install the spring (3) and the ball (2) to the transmission.
2. Push the ball (2) by finger from the inside of the transmission case.
3. Push the PTO shift arm ball guide (1) into the transmission case as shown in the picture.
4. Push the PTO shift arm ball guide (1) with the PTO shift arm (4).
5. Install the PTO cotter (5) to the PTO shift arm (4).
6. Align the PTO cotter to the groove of the PTO shifter (6).

| | | | |
|---|---|---|---|
| (1) | PTO Shift Arm Ball Guide | (4) | PTO Shift Arm |
| (2) | Ball | (5) | PTO Cotter |
| (3) | Spring | (6) | PTO Shifter |

9Y1211156TRS0037US0

https://truckmanualshub.com/


# (9) Independent PTO Clutch

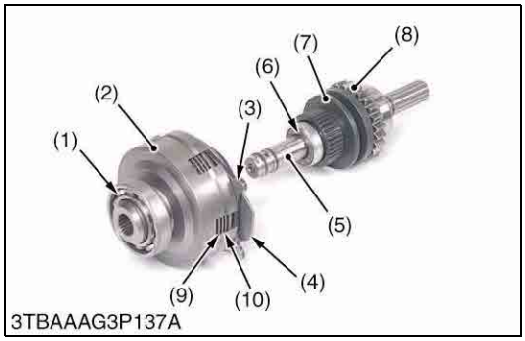

3TBAAAG3P137A

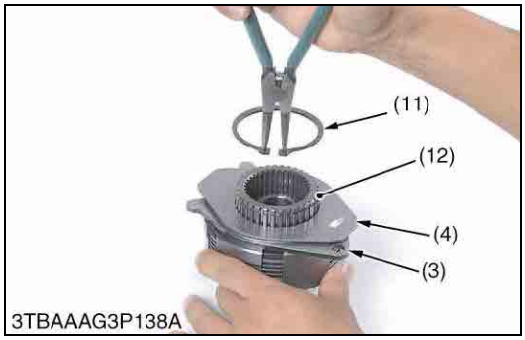

3TBAAAG3P138A

3TBAAAG3P139A

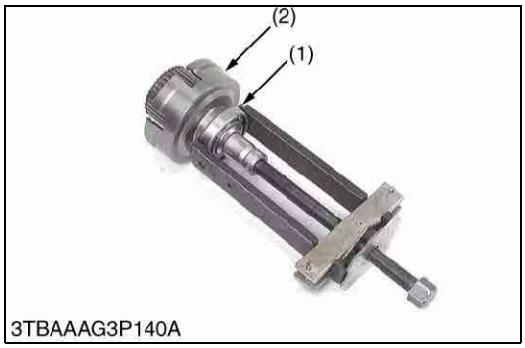

3TBAAAG3P140A

**PTO Clutch Case**

1. Remove the external circlip (11) from the spline boss (12).
2. Remove the internal circlip (13) from the PTO clutch case (2).
3. Remove the clutch discs (9) and the clutch plates (10) from the PTO clutch case (2).
4. Remove the ball bearing (1) from the PTO clutch case (2) with a puller.

■ **NOTE**

- **When removing the circlip, use an adequate size circlip pliers.**

(1) Ball Bearing
(2) PTO Clutch Case
(3) Brake Plate 4
(4) Brake Plate 2
(5) PTO Clutch Shaft
(6) Thrust Bearing
(7) PTO Shifter
(8) 25T Mid PTO-gear
(9) Clutch Disc
(10) Clutch Plate
(11) External Circlip
(12) Spline Boss
(13) Internal Circlip

9Y1211156TRS0038US0

https://truckmanualshub.com/


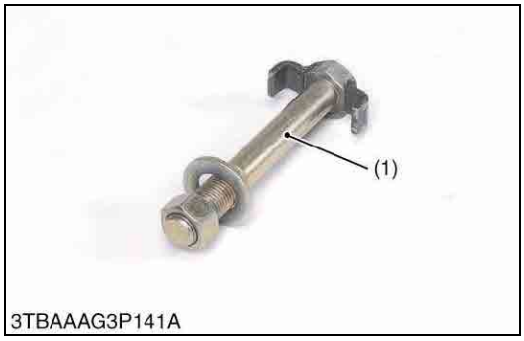

3TBAAAG3P141A

## PTO Clutch Spring

1. Set the PTO clutch spring compressor (1) to the PTO clutch case (2).
2. Tighten the nut and remove the external circlip (3).
3. Remove the spring collar (4) and the PTO clutch spring (5).

(1) PTO Clutch Spring Compressor
(2) PTO Clutch Case
(3) External Circlip
(4) Spring Collar
(5) PTO Clutch Spring

9Y1211156TRS0039US0

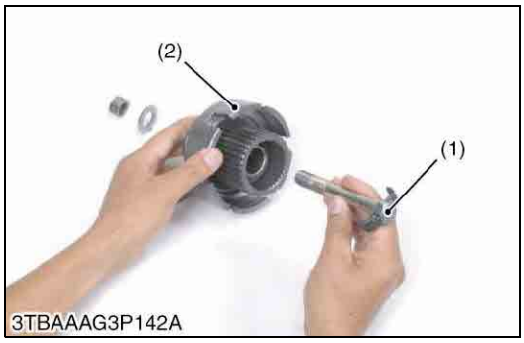

3TBAAAG3P142A

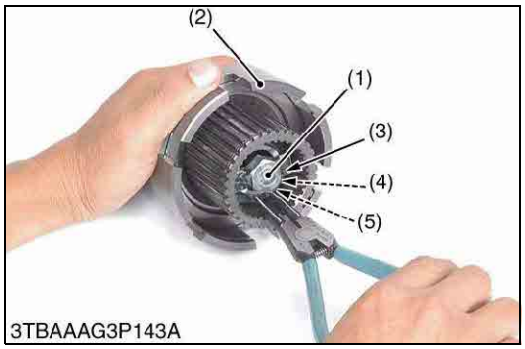

3TBAAAG3P143A

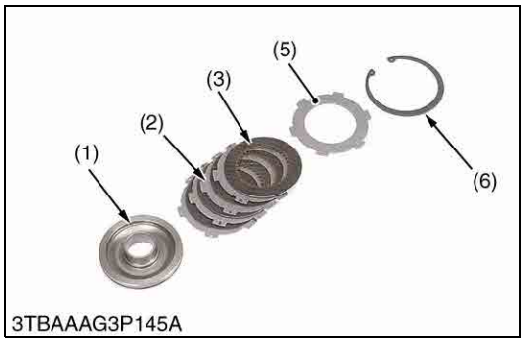

3TBAAAG3P145A

## PTO Clutch Discs and Brake

1. After removing the inner circlip (6) from the PTO clutch case (10), remove the pressure plate (5).
2. Remove the clutch discs (3) and clutch plates (2).
3. Remove the external circlip (16) from the spline boss (4).
4. Remove the brake plate (15), the brake discs (14) and the brake plate (13).
5. After removing the external circlip (8) and the spring (18).

**(When reassembling)**

- Install the parts to the original positions.

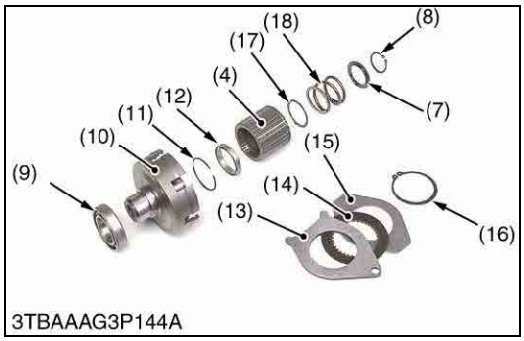

3TBAAAG3P144A

(1) Clutch Piston
(2) Clutch Plate
(3) Clutch Disc
(4) Spline Boss
(5) Pressure Plate
(6) Internal Circlip
(7) Spring Collar
(8) External Circlip
(9) Ball Bearing
(10) PTO Clutch Case
(11) Circlip
(12) Ball Bearing
(13) Brake Plate
(14) PTO Brake Disc
(15) Brake Plate
(16) External Circlip
(17) Bearing Collar
(18) Spring

9Y1211156TRS0040US0

https://truckmanualshub.com/


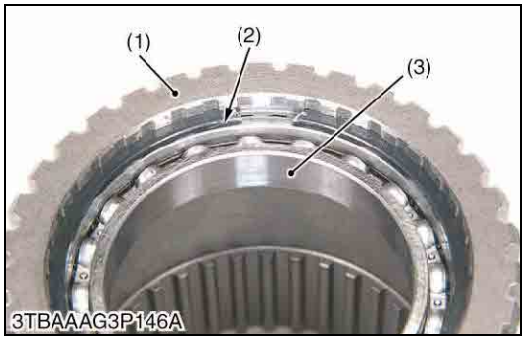

## Spline Boss Circlip

1. Push the circlip with a small screw driver through the small hole of the spline boss (1).
2. Lift the circlip (2) with a screw driver not to damage it.

**(When reassembling)**

- Install the circlip (2) holding it by hands.

(1) Spline Boss
(2) Circlip
(3) Ball Bearing

9Y1211156TRS0041US0

https://truckmanualshub.com/


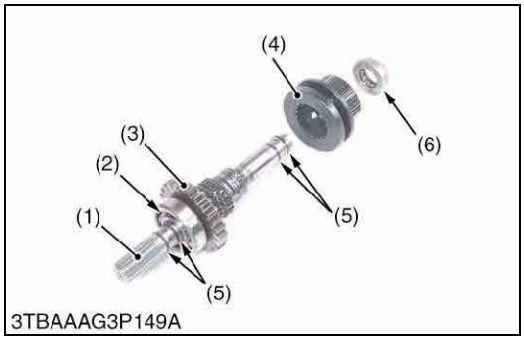

3TBAAAG3P149A

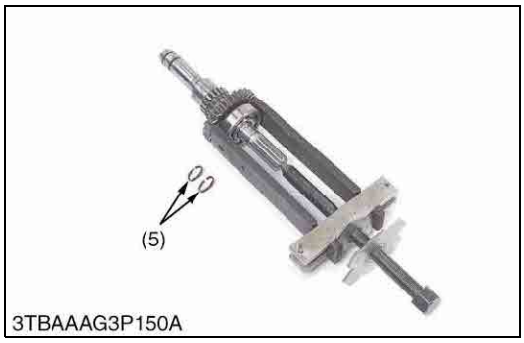

3TBAAAG3P150A

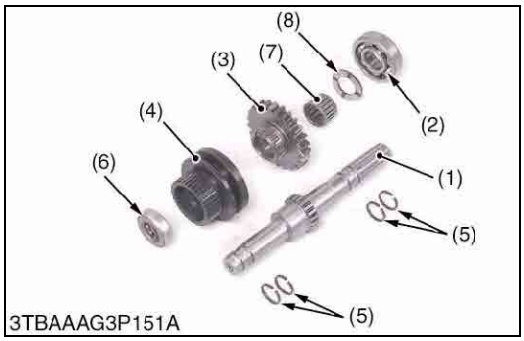

3TBAAAG3P151A

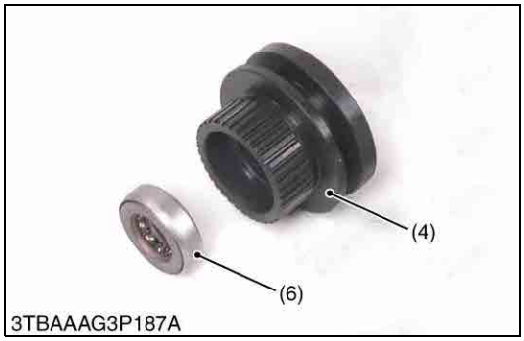

3TBAAAG3P187A

## PTO Shaft

1. Remove the thrust bearing (6) and the PTO shifter (4) not to damage the seal rings (5) located at the PTO shaft front side.
2. Remove the seal rings (5) located at the PTO shaft rear side.
3. Remove the ball bearing (2) with a puller.

**(When reassembling)**

- Check all seal rings (5).
- If the seal ring (5) is damaged, replace it.
- Check the direction of the thrust bearing (6) and install the thrust bearing (6) as shown in the picture.

| | | | |
|---|---|---|---|
| (1) | PTO Clutch Shaft | (5) | Seal Ring |
| (2) | Ball Bearing | (6) | Thrust Bearing |
| (3) | 26T Mid-gear | (7) | Needle Bearing |
| (4) | PTO Shifter | (8) | Collar |

9Y1211156TRS0042US0

https://truckmanualshub.com/


# (10) Mid-PTO Section

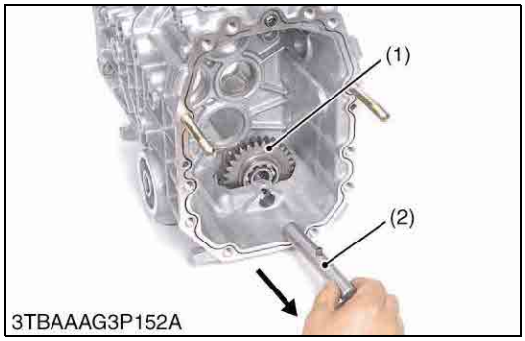


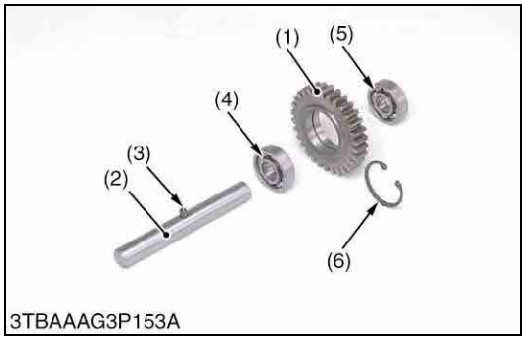


**Mid-Gear and Idle Shaft**

1. Remove the idle shaft (2) from the transmission case using a screw driver.
2. Remove the mid-gear (1) from the transmission case.
3. Remove the ball bearings (4), (5) and the internal circlip (6) from the mid-gear (1).

**(When reassembling)**

- Install the internal circlip (6) to the inner groove of the mid-gear (1) securely.

| | | | |
|---|---|---|---|
| (1) | 30T Mid-Gear | (4) | Ball Bearing |
| (2) | Idle Shaft | (5) | Ball Bearing |
| (3) | Spring Pin | (6) | Internal Circlip |

9Y1211156TRS0043US0

https://truckmanualshub.com/


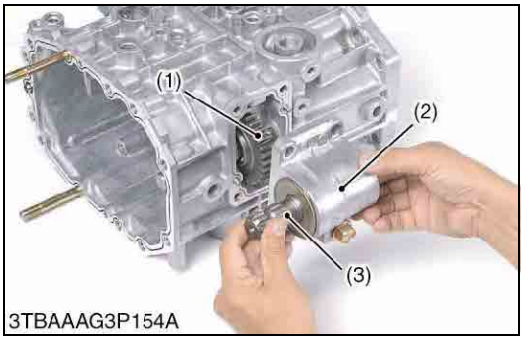

3TBAAAG3P154A

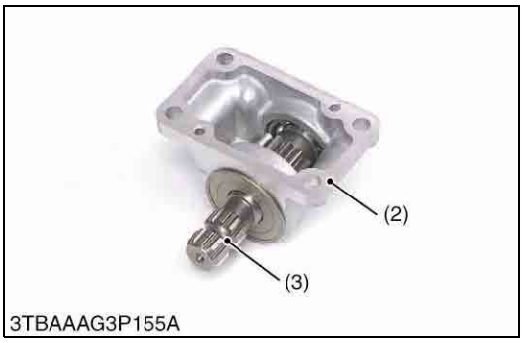

3TBAAAG3P155A

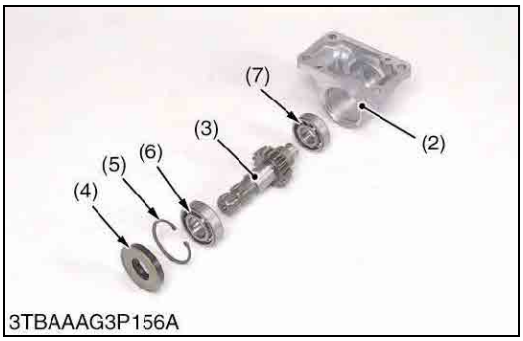

3TBAAAG3P156A

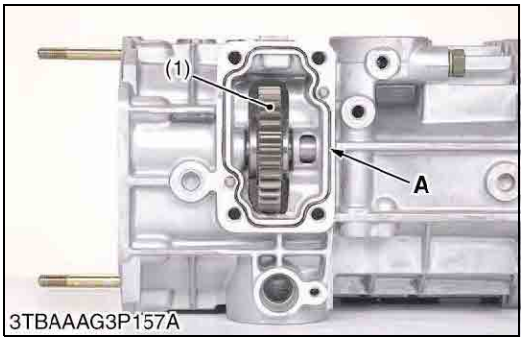

3TBAAAG3P157A

## Mid-PTO Case and Mid-Gear Shaft

1. Remove the mid-PTO case mounting bolts.
2. Remove the mid-PTO case from the transmission case.
3. Remove the mid-PTO oil seal (4) from the mid-PTO case (2) using a screw driver not to damage it.
4. Remove the internal circlip (5).
5. Remove the mid-gear shaft (3) with the ball bearings (6), (7).
6. Remove the bearing (6), (7) from the mid-gear shaft (3).

**(When reassembling)**

- If the mid-PTO oil seal (4) is damaged, worn or scratched, replace it.
- Apply grease to the lip and the outer of the mid-PTO oil seal (4).
- After installing the mid-gear (1), apply liquid gasket (Three Bond 1206D or equivalent) to the joint surface of transmission case and the mid-PTO case (2).

(1) 30T Mid-Gear
(2) Mid-PTO Case
(3) Mid-Gear Shaft (18T)
(4) Mid-PTO Oil Seal
(5) Internal Circlip
(6) Ball Bearing
(7) Ball Bearing

**A: Joint Surface, Apply liquid gasket**

9Y1211156TRS0044US0

https://truckmanualshub.com/


# (11) Differential Gear Section

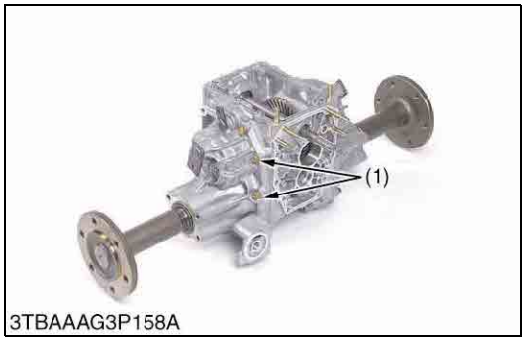

3TBAAAG3P158A

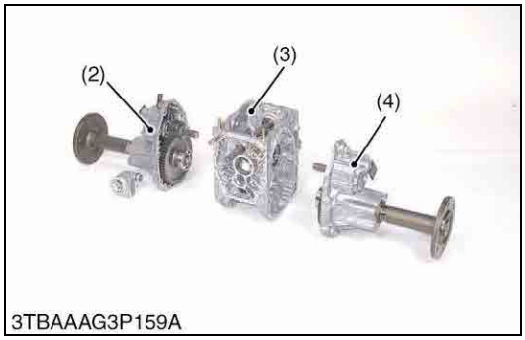

3TBAAAG3P159A

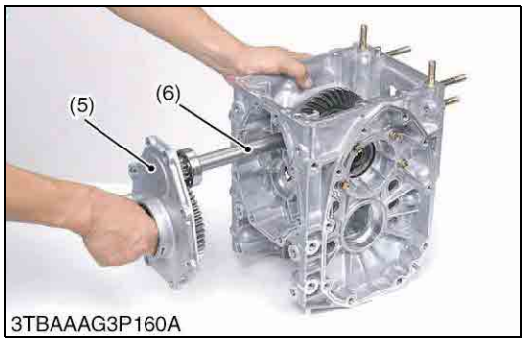

3TBAAAG3P160A

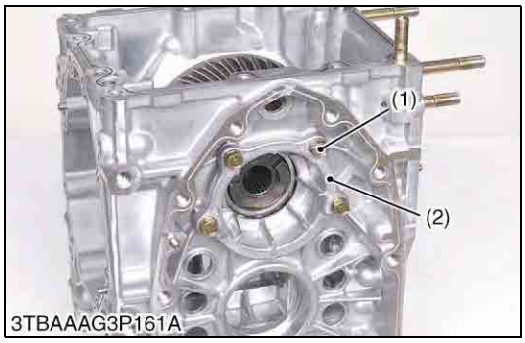

3TBAAAG3P161A

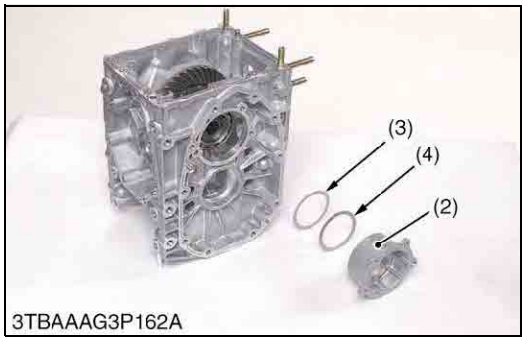

3TBAAAG3P162A

## Rear Axle Case and Rear PTO Cover

1. Remove the rear axle mounting bolts.
2. Remove the left rear axle case (4) and the right rear axle case (2) from the differential case (3).
3. Remove the rear PTO cover mounting bolts and the rear PTO cover (5).

**(When reassembling)**

- Apply liquid gasket (Three Bond 1206D or equivalent) to the joint surface of the rear axles cases and the rear PTO cover.

| | | |
|---|---|---|
| Tightening torque | Rear axle case (LH and RH) mounting bolt for aluminum material (M10) | 39.3 to 44.1 N·m<br>4.0 to 4.5 kgf·m<br>29.0 to 32.5 lbf·ft |
| | Rear PTO cover mounting bolt for aluminum material (M10) | 39.3 to 44.1 N·m<br>4.0 to 4.5 kgf·m<br>29.0 to 32.5 lbf·ft |

(1) Rear Axle Case Mounting Bolt
(2) Right Rear Axle Case
(3) Differential Case
(4) Left Rear Axle Case
(5) Rear PTO Cover
(6) PTO Drive Shaft

9Y1211156TRS0045US0

## Differential Bearing Holder (RH)

1. Remove the differential holder mounting bolts (1).
2. Remove the differential holder (2) and shims (3), (4).

**(When reassembling)**

- 0.2 mm (0.008 in.) shim
- 0.5 mm (0.020 in.) shim

| | | |
|---|---|---|
| Tightening torque | Differential bearing holder mounting bolt for aluminum material (M8) | 17.7 to 20.5 N·m<br>1.8 to 2.1 kgf·m<br>13.1 to 15.1 lbf·ft |

(1) Differential Bearing Holder Mounting Bolt
(2) Differential Bearing Holder
(3) Shim
(4) Shim

9Y1211156TRS0046US0

https://truckmanualshub.com/


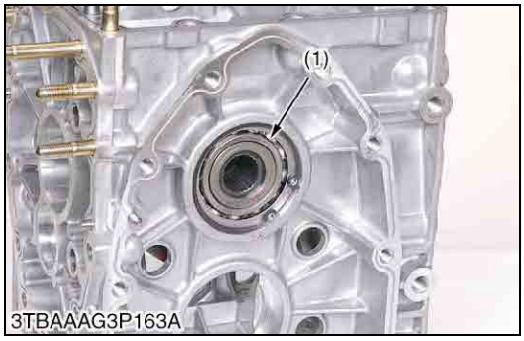


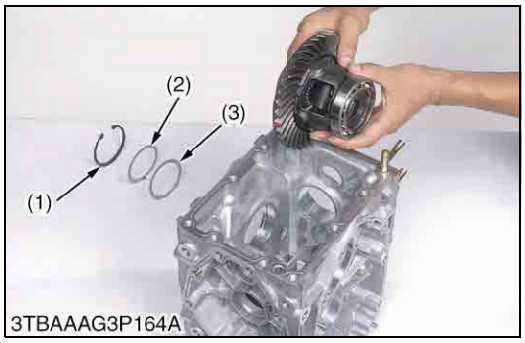


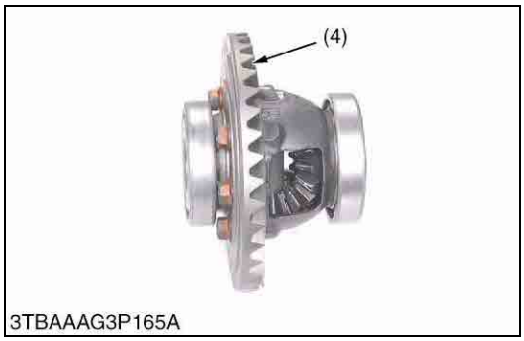


## Differential Gear Assembly

1. Remove the internal circlip (1) from the differential case.
2. Remove the shims (2), (3).
3. Remove the differential gear assembly (4) from the differential case.

**(When reassembling)**

- 0.5 mm (0.020 in.) shim.
- 0.6 mm (0.024 in.) shim.
- 0.7 mm (0.028 in.) shim.
- 0.8 mm (0.031 in.) shim.

(1) Internal Circlip
(2) Shim
(3) Shim
(4) Differential Gear Assembly

9Y1211156TRS0047US0

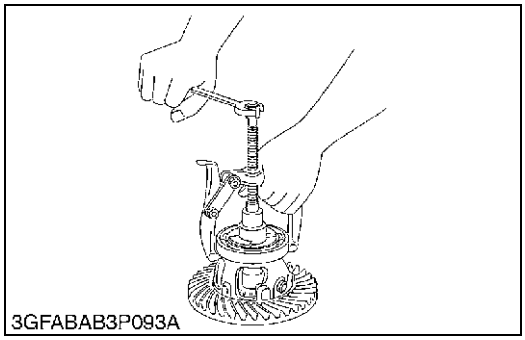


## Bearings

1. Remove the right and left bearings from the differential case.

9Y1211156TRS0048US0

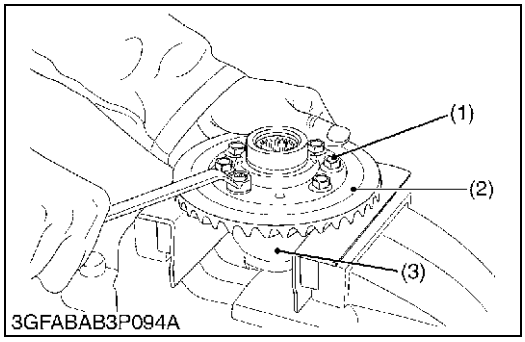


## Spiral Bevel Gear

1. Remove the spiral bevel gear UBS screws (1).
2. Remove the spiral bevel gear (2) from differential case (3).

**(When reassembling)**

- Apply liquid lock (Three Bond 1324B or its equivalent) to the spiral bevel gear UBS screws.

| | | |
|---|---|---|
| Tightening torque | Spiral bevel gear UBS screw | 37.5 to 42.5 N·m<br>3.83 to 4.33 kgf·m<br>27.7 to 31.3 lbf·ft |

(1) Spiral Bevel Gear UBS Screw
(2) Spiral Bevel Gear
(3) Differential Case

9Y1211156TRS0049US0

https://truckmanualshub.com/


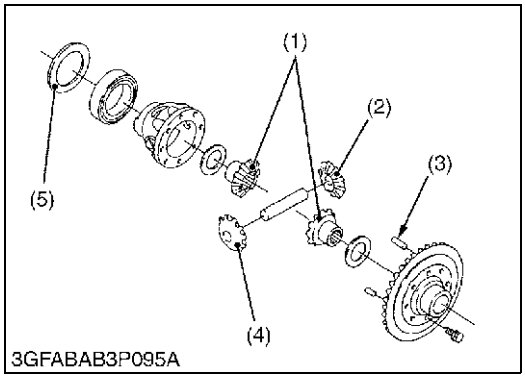


**Differential Side Gear and Differential Pinion**

1. Put parting marks on the differential pinion (1) and the differential side gear (2).
2. Tap out the dowel pin (3).
3. Remove the differential pinion shaft.
4. Remove the differential pinion (4), differential side gear (2) and shim (5).

**(When reassembling)**

- Install the differential pinion and differential side gear, aligning the parting marks.

(1) Differential Pinion
(2) Differential Side Gear
(3) Dowel Pin
(4) Differential Pinion
(5) Shim

9Y1211156TRS0050US0

# [4] SERVICING

## (1) HST

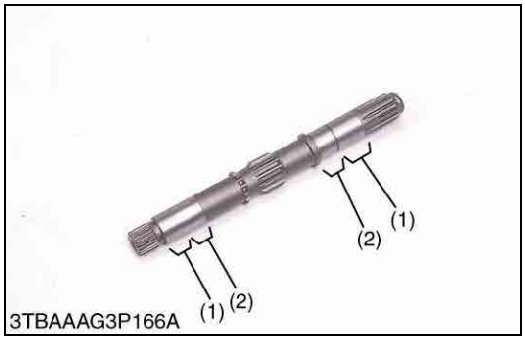


**Pump Shaft**

1. Pull out the pump shaft from the HST housing case.
2. Check the oil seal surface (1), the bearing surface (2) and the bearing.
3. If the shaft is rough or grooved, replace it.
4. If the bearing is worn, replace it.

(1) Oil Seal Surface
(2) Bearing Surface

9Y1211156TRS0051US0

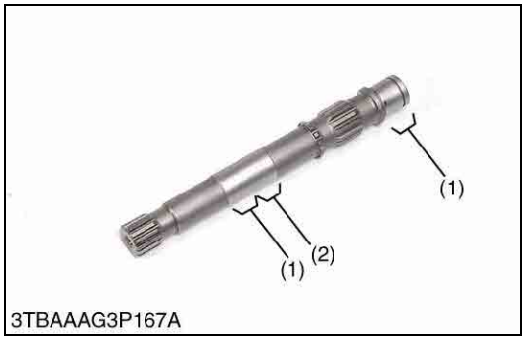


**Motor Shaft**

1. Pull out the motor shaft from the HST housing case.
2. Check the oil seal surface (1), the bearing surface (2) and the bearing.
3. If the shaft is rough or grooved, replace it.
4. If the bearing is worn, replace it.

(1) Oil Seal Surface
(2) Bearing Surface

9Y1211156TRS0052US0

**Cylinder Block Face**

1. Check the polished face (1) of cylinder block for scoring.
2. If scored, replace cylinder block assembly.

(1) Polished Face

9Y1211156TRS0053US0

https://truckmanualshub.com/

## Valve Swash Plate Bearing Face

1. Check the swash plate bearing (1) for scratches and excessive wear.
2. If worn or scored, replace it.

**(When reassembling)**

- Apply liquid lock (Three Bond 1360F or its equivalent) to the screw.

| | | |
|---|---|---|
| Tightening torque | Screw (M3) | 1.5 N·m<br>0.15 kgf·m<br>1.1 lbf·ft |

(1) Swash Plate Bearing (2) Screw

9Y1211156TRS0054US0

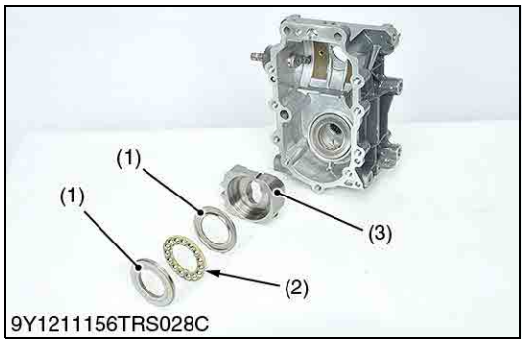


## Thrust Collars, Thrust Ball Bearing and Swash Plate Surface

1. Check the thrust collar (1) for scratches and excessive wear.
2. If worn or scored, replace it.
3. Check the thrust ball bearing surface (2) for scratches and excessive wear.
4. If worn or scored, replace it.
5. Check the swash plate (3) for scratches and excessive wear.
6. If worn or scored, replace it.

(1) Thrust Collar (3) Swash Plate
(2) Thrust Ball Bearing

9Y1211156TRS0055US0

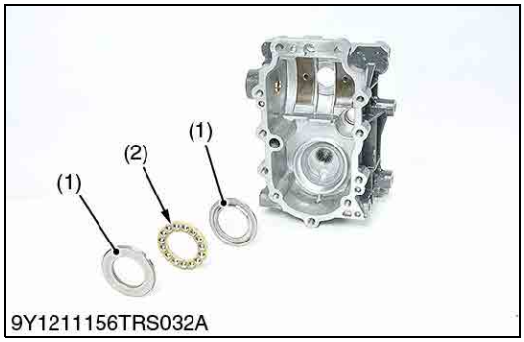


## Thrust collars and Thrust Ball Bearing (Motor Side)

1. Check the thrust collars (1) for scratches and excessive wear.
2. If worn or scored, replace it.
3. Check the thrust ball bearing (2) for scratches and excessive wear.
4. If worn or scored, replace it.

(1) Thrust Collar (2) Thrust Ball Bearing

9Y1211156TRS0056US0

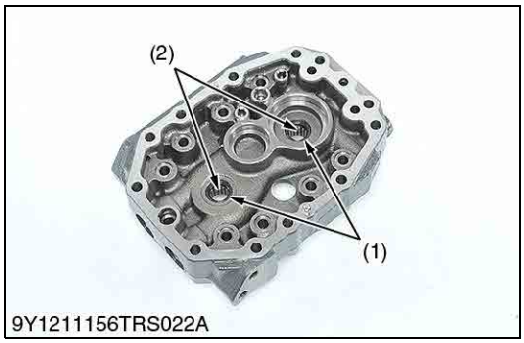


## Center Section Oil Seals and Bearings

1. Check the oil seals (1) for damage.
2. Check the needle bearings (2) for wear.
3. If the needle bearings (2) and oil seals (1) are worn, replace all seals and needle bearings.

■ **NOTE**

- **After checking, coat the bearing with hydrostatic transmission oil and the oil seal lip with grease.**

(1) Oil Seal (2) Needle Bearing

9Y1211156TRS0057US0

https://truckmanualshub.com/


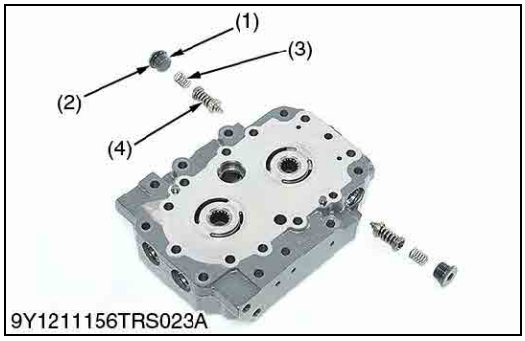


### Check and High Pressure Relief Valve

1. Check the valve plug (4) and valve (1) for scratches and damage.
2. Check the valve seat in the port block for damage.
3. Check the spring (2) for breakage and wear.
4. If anything unusual, replace the check and high pressure relief valve assembly.

| | | |
|---|---|---|
| Tightening torque | Valve plug | 59 to 78 N·m<br>6.1 to 7.9 kgf·m<br>44 to 57 lbf·ft |

(1) Valve
(2) Spring
(3) O-ring
(4) Valve Plug

9Y1211156TRS0058US0

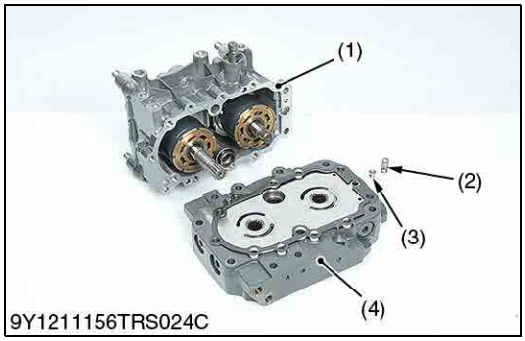


### Charge Relief Valve

1. Check the spring (2) for breakage and wear.
2. If it is unusual, replace it.

(1) HST Housing
(2) Spring
(3) Poppet
(4) Center Section

9Y1211156TRS0059US0

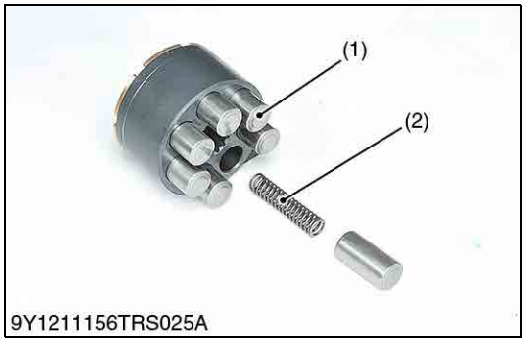


### Cylinder Block Bore and Pistons

1. Check the pistons for their free movement in the cylinder block bores.
2. If the piston or the cylinder block bore is scored, replace cylinder block assembly.

■ **IMPORTANT**

- **Do not interchange pistons between pump and motor cylinder block. Pistons and cylinder blocks are matched.**

| | | |
|---|---|---|
| Clearance between piston and bore | Factory specification | 0.02 to 0.03 mm<br>0.0008 to 0.001 in. |
| | Allowable limit | 0.04 mm<br>0.0016 in. |

(1) Retainer Plate

9Y1211156TRS0060US0

## (2) Independent PTO Clutch

### Checking Bearing

1. Hold the inner race, and push and pull the outer race in all directions to check for wear and roughness.
2. Apply transmission fluid to the bearing, and hold the inner race. Then, turn the outer race to check rotation.
3. If there is any problem, replace it.

9Y1211156TRS0061US0

https://truckmanualshub.com/


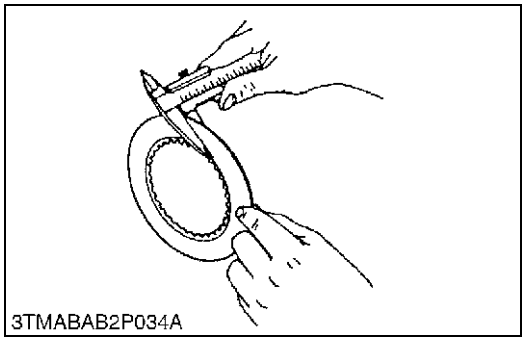
3TMABAB2P034A

### Clutch Disc Wear

1. Measure the clutch disc thickness with vernier calipers.
2. If the thickness is less than the allowable limit, replace it.

| | | |
|---|---|---|
| Clutch disc wear | Factory specification | 1.70 to 1.90 mm<br>0.067 to 0.075 in. |
| | Allowable limit | 1.55 mm<br>0.061 in. |

9Y1211156TRS0062US0

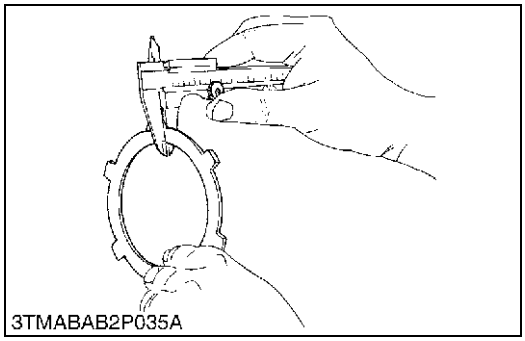
3TMABAB2P035A

### Steel Plate and Pressure Plate Wear

1. Measure the steel plate thickness with vernier calipers.
2. Measure the pressure plate thickness with vernier calipers.
3. If the thickness is less than the allowable limit, replace.

| | | |
|---|---|---|
| Steel plate wear | Factory specification | 1.15 to 1.25 mm<br>0.045 to 0.049 in. |
| | Allowable limit | 1.10 mm<br>0.043 in. |

| | | |
|---|---|---|
| Pressure plate wear | Factory specification | 1.95 to 2.05 mm<br>0.0768 to 0.0807 in. |
| | Allowable limit | 1.8 mm<br>0.071 in. |

9Y1211156TRS0063US0

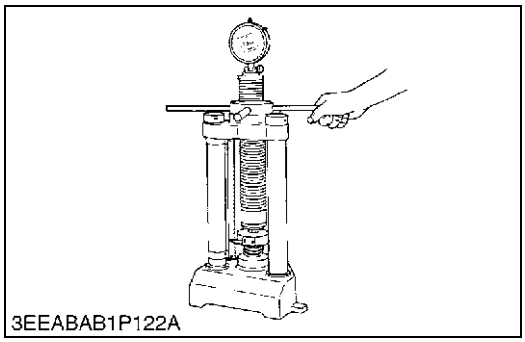
3EEABAB1P122A

### Piston Return Spring Free Length and Tension

1. Measure the free length of the piston return spring with vernier calipers.
2. Place the piston return spring on a spring compression tester and compress to the specified length, and read the gauge.
3. If the measurement is less than the allowable limit, replace.

| | | |
|---|---|---|
| Piston / return spring free length | Factory specification | 44.0 mm<br>1.73 in. |

| | | |
|---|---|---|
| Piston return spring tension | Factory specification | 638.7 N / 26 mm<br>65.13 kgf / 26 mm<br>143.6 lbf / 1.02 in. |
| | Allowable limit | 539.4 N / 26 mm<br>55 kgf / 26 mm<br>121.3 lbf / 1.02 in. |

9Y1211156TRS0064US0

## (3) Transmission Case

3TBAAAG3P174A

### Checking Bearing

1. Hold the inner race, and push and pull the outer race in all directions to check for wear and roughness.
2. Apply transmission fluid to the bearing, and hold the inner race. Then, turn the outer race to check rotation.
3. If there is any problem, replace it.

9Y1211156TRS0065US0

https://truckmanualshub.com/


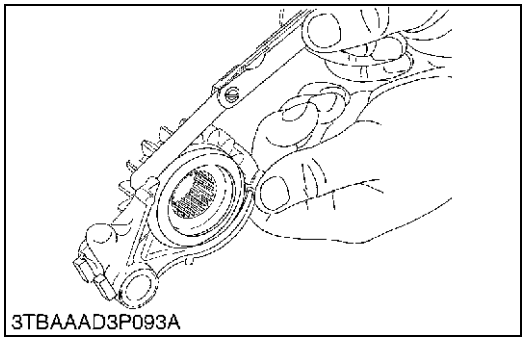
3TBAAAD3P093A

**Clearance between Shift Fork and Shift Gear Groove**

1. Insert the fork into the shift gear groove and measure the clearance with a feeler gauge.
2. If the clearance exceeds the allowable limit, replace it.

| | | |
|---|---|---|
| Clearance between shift fork and shift gear groove | Factory specification | 0.10 to 0.35 mm<br>0.004 to 0.014 in. |
| | Allowable limit | 0.5 mm<br>0.020 in. |

9Y1211156TRS0066US0

## (4) Differential Gear

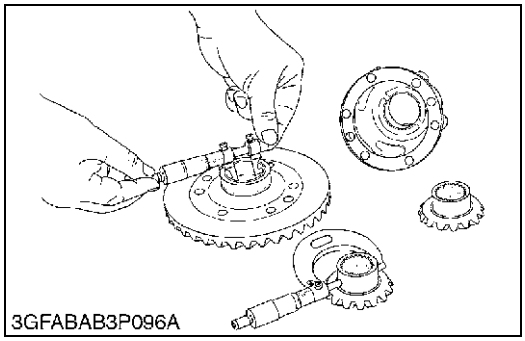
3GFABAB3P096A

**Clearance between Differential Case (Spiral Bevel Gear) and Differential Side Gear**

1. Measure the differential side gear boss O.D. with an outside micrometer.
2. Measure the differential case I.D. and the spiral bevel gear I.D. with an inside micrometer, and calculate the clearance.
3. If the clearance exceeds the allowable limit, replace damage parts.

| | | |
|---|---|---|
| Clearance between differential case (spiral bevel gear) and differential side gear | Factory specification | 0.025 to 0.066 mm<br>0.0010 to 0.0026 in. |
| | Allowable limit | 0.30 mm<br>0.0118 in. |

| | | |
|---|---|---|
| Differential case I.D. | Factory specification | 32.000 to 32.025 mm<br>1.2598 to 1.2608 in. |
| Spiral bevel gear I.D. | Factory specification | 32.000 to 32.025 mm<br>1.2598 to 1.2608 in. |
| Differential side gear O.D. | Factory specification | 31.959 to 31.975 mm<br>1.2582 to 1.2589 in. |

9Y1211156TRS0067US0

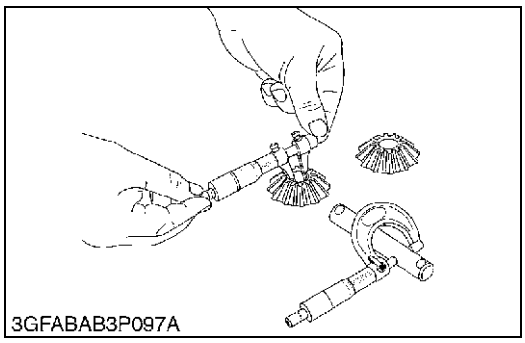
3GFABAB3P097A

**Clearance between Differential Pinion Shaft and Differential Pinion**

1. Measure the differential pinion shaft O.D. with an outside micrometer.
2. Measure the differential pinion I.D. with an inside micrometer, and calculate the clearance.
3. If the clearance exceeds the allowable limit, replace damage parts.

| | | |
|---|---|---|
| Clearance between differential pinion shaft and differential pinion | Factory specification | 0.048 to 0.084 mm<br>0.0019 to 0.0033 in. |
| | Allowable limit | 0.30 mm<br>0.0118 in. |

| | | |
|---|---|---|
| Differential pinion I.D. | Factory specification | 16.032 to 16.050 mm<br>0.63119 to 0.63188 in. |
| Differential pinion shaft O.D. | Factory specification | 15.966 to 15.984 mm<br>0.62859 to 0.62929 in. |

9Y1211156TRS0068US0

https://truckmanualshub.com/


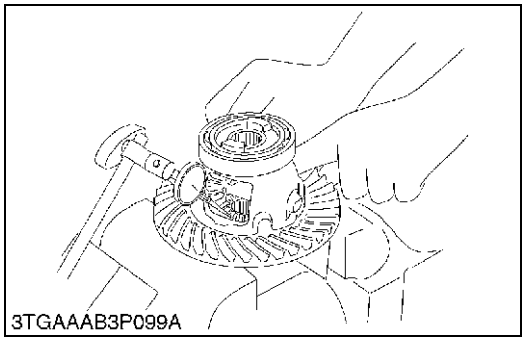


**Backlash between Differential Pinion and Differential Side Gear**

1. Secure the differential case with a vise.
2. Set the dial indicator (lever type) with its finger on the tooth of the differential side gear.
3. Press differential pinion and side gear against the differential case.
4. Hold the differential pinion and move the differential side gear to measure the backlash.
5. If the backlash exceeds the allowable limit, adjust with differential side gear shims.

| | | |
|---|---|---|
| Backlash between differential pinion and differential side gear | Factory specification | 0.1 to 0.3 mm<br>0.004 to 0.0012 in. |
| | Allowable limit | 0.4 mm<br>0.016 in. |

■ **NOTE**

- **Thickness of shims:**
  **0.80 mm (0.0315 in.)**
  **1.00 mm (0.0394 in.)**
  **1.20 mm (0.0472 in.)**

9Y1211156TRS0069US0

https://truckmanualshub.com/


## Backlash between Spiral Bevel Pinion and Spiral Bevel Gear

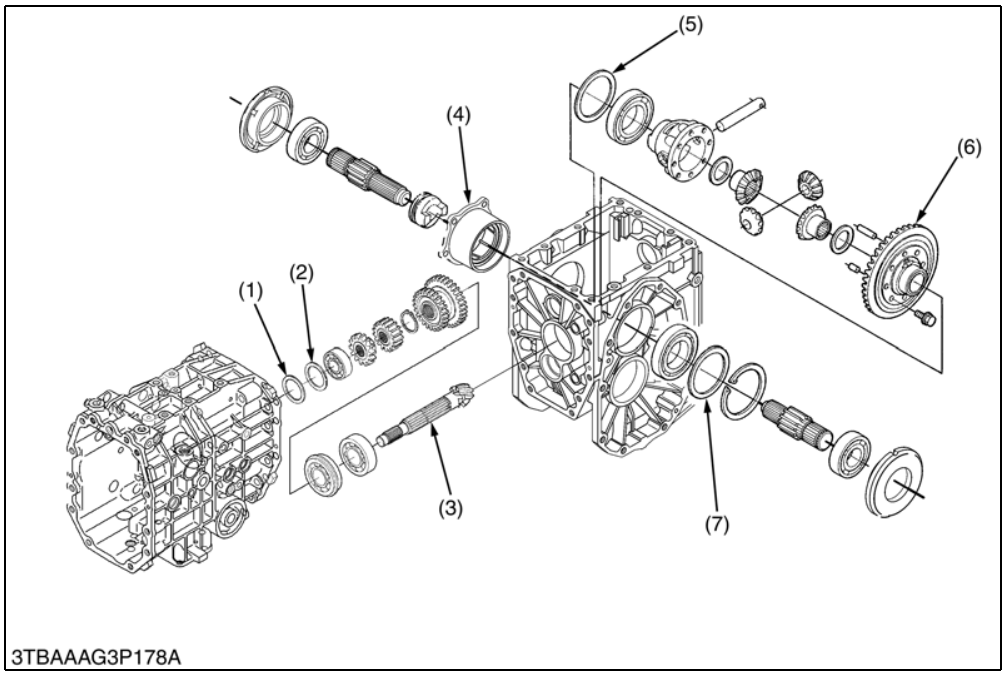


(1) Shim
(2) Spacer
(3) Spiral Bevel Pinion
(4) Bearing Holder
(5) Shim
(6) Spiral Bevel Gear
(7) Shim

1. Set the dial indicator (lever type) with its finger on the end of spiral bevel pinion (3).
2. Move the spiral bevel pinion back and forth to each end and measure the side clearance.
3. If the side clearance exceeds the factory specifications, adjust with the shims (1) at front end of spiral bevel pinion.
4. Set the dial indicator (lever type) with its finger on the tooth surface of bevel gear.
5. Measure the backlash by fixing the spiral bevel pinion (3) and moving bevel gear (6) by hand.
6. If the backlash exceeds the factory specifications, adjust with the shims (1), (7) at bearing holder (4) and differential case.
7. Adjust the backlash properly by repeating the above procedure.

**(When adjusting)**

| | | |
|---|---|---|
| Movement of spiral bevel pinion shaft at shaft directions | Factory specification | Approx<br>0 mm<br>0 in. |
| Backlash between spiral bevel pinion and spiral bevel gear | Factory specification | 0.10 to 0.30 mm<br>0.0039 to 0.0012 in. |

**(Reference)**

- Thickness of shims (1):
  0.2 mm (0.008 in.)
  1.4 mm (0.056 in.)
  1.8 mm (0.070 in.)
- Thickness of shims (5):
  0.2 mm (0.008 in.)
  0.5 mm (0.01 in.)
- Thickness of shims (7):
  0.5 mm (0.01 in.)
  0.6 mm (0.024 in.)
  0.7 mm (0.027 in.)
  0.8 mm (0.03 in.)

9Y1211156TRS0070US0

https://truckmanualshub.com/

# 3 REAR AXLE

https://truckmanualshub.com/

# MECHANISM

## CONTENTS

1. STRUCTURE..... 3-M1

https://truckmanualshub.com/


# 1. STRUCTURE

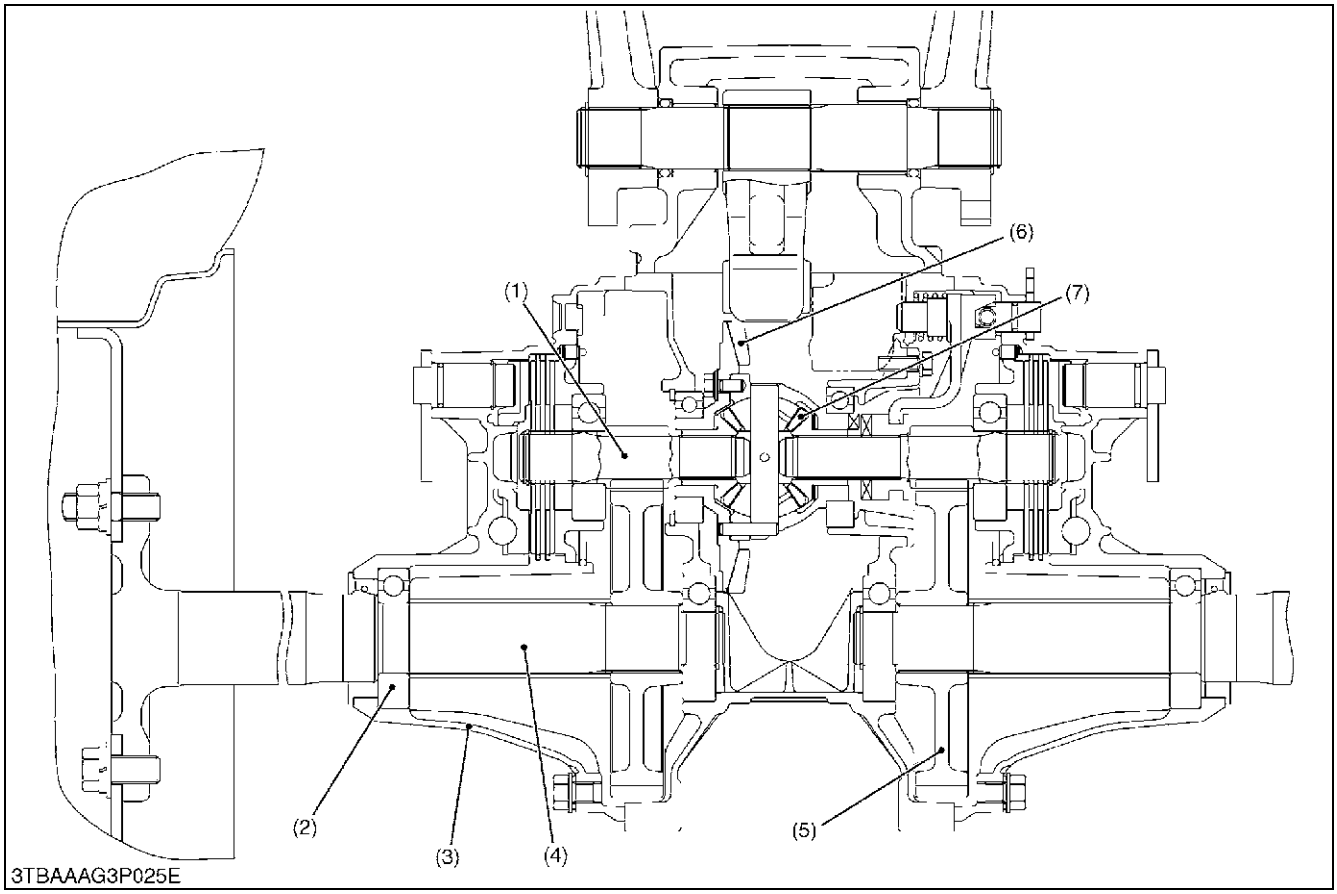


| | | | |
|---|---|---|---|
| (1) Differential Gear Shaft | (3) Rear Axle Case | (5) Spur Gear | (7) Differential Gear |
| (2) Ball Bearing | (4) Rear Axle | (6) Spiral Bevel Gear | |

The rear axles are the semi floating type with ball bearing (2) between the rear axle (4) and the rear axle case (3), which supports the rear wheel load as well as transmitting power to the rear wheels.

The differential gears (7) automatically control the revolution of right and left wheels when the rear wheels encounter unequal resistance during turning.

9Y1211156RAM0001US0

https://truckmanualshub.com/

# SERVICING

## CONTENTS

1. TROUBLESHOOTING....3-S1
2. TIGHTENING TORQUES....3-S2
3. DIASSEMBLING AND SERVICING....3-S3
   [1] DIASSEMBLING AND ASSEMBLING....3-S3
      (1) Separating Rear Axle Case....3-S3
      (2) Disassembling Rear Axle Case....3-S4
   [2] SERVICING....3-S5

https://truckmanualshub.com/


# 1. TROUBLESHOOTING

| Symptom | Probable Cause and Checking Procedure | Solution | Reference Page |
|---|---|---|---|
| **Excessive or Unusual Noise at All Time** | 1. Improper backlash between differential gear shaft and final reduction gear | Inspect or adjust backlash | 2-S42 |
| | 2. Bearing worn | Inspect or replace bearing | 3-S5 |
| | 3. Insufficient or improper type of transmission fluid used | Check transmission oil | G-8 |
| **Noise while Turning** | 1. Brake shaft and gear and internal gear worn or damaged | Replace brake shaft or gear | 3-S5 |

9Y1211156RAS0001US0

https://truckmanualshub.com/


# 2. TIGHTENING TORQUES

Tightening torques of screws, bolts and nuts on the table below are especially specified.
(For general use screws, bolts and nuts: Refer to "5. TIGHTENING TORQUES" on page G-11.)

| Item | N·m | kgf·m | lbf·ft |
|---|---|---|---|
| Rear wheel mounting nut and screw | 145 to 150 | 14.8 to 15.2 | 107 to 110 |
| Front loader valve pipe joint bolt | 48 to 70 | 4.9 to 7.1 | 36 to 51 |
| 3-point hitch delivery pipe 1 joint bolt | 48 to 70 | 4.9 to 7.1 | 36 to 51 |
| 3-point hitch delivery pipe 2 joint bolt (Front loader valve side) | 48 to 70 | 4.9 to 7.1 | 36 to 51 |
| 3-point hitch delivery pipe 2 joint bolt (Hydraulic cylinder case side) | 50 to 60 | 5.1 to 6.1 | 37 to 44 |
| Rear axle case mounting screw | 40 to 44 | 4.0 to 4.5 | 29 to 32 |

9Y1211156RAS0002US0

https://truckmanualshub.com/


# 3. DIASSEMBLING AND SERVICING

## [1] DIASSEMBLING AND ASSEMBLING

### (1) Separating Rear Axle Case

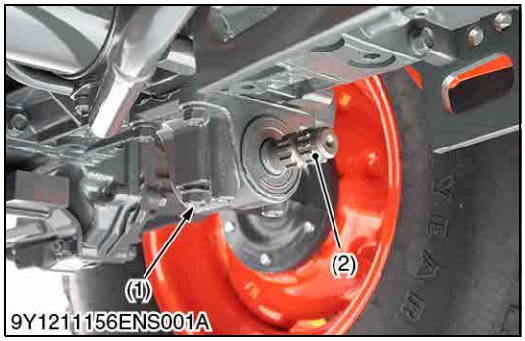


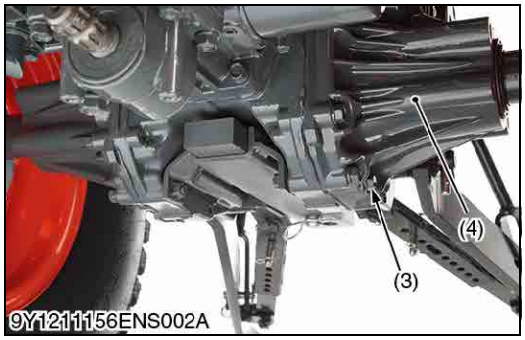


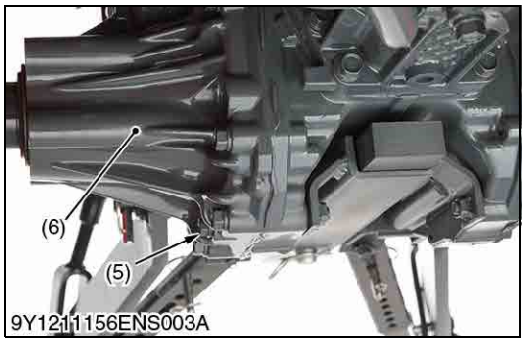

**Draining Transmission Fluid**

**CAUTION**

- **Stop the engine before checking and changing the transmission fluid.**

1. Place the oil pan under the tractor.
2. Remove the drain plugs (1), (3), (5) at the mid-PTO shaft and at the bottom of the rear axle cases (4), (6).
3. Drain the transmission fluid.
4. After draining the transmission fluid, reinstall the drain plugs (1), (3), (5).

■ **IMPORTANT**

- **Use only KUBOTA UDT oil. Use of other oils may damage the transmission or hydraulic system.**
  **Refer to "4. LUBRICANTS, FUEL AND COOLANT" on page G-8.**
- **Never work the tractor immediately after changing the transmission oil. Keep the engine at medium speed for a few minutes to prevents damage to the transmission.**
- **Do not mix different brands oil together.**

| | |
|---|---|
| Transmission fluid capacity | 15 L<br>4.0 U.S.gals<br>3.3 Imp.gals |

(1) Drain Plug
(2) Mid-PTO Shaft
(3) Drain Plug
(4) Rear Axle Case (L.H.)
(5) Drain Plug
(6) Rear Axle Case (R.H.)

9Y1211156ENS0023US0

**Battery Cable**

1. Open the bonnet and remove the side cover.
2. Disconnect the battery negative cable (1).

■ **NOTE**

- **When disconnecting the battery cables, disconnect the grounding cable first. When connecting, the positive cable first.**

(1) Battery Negative Cable

9Y1211156RAS0003US0

**Rear Wheel**

1. Place the disassembling stand under the transmission case.
2. Remove the rear wheel (1).

| | | |
|---|---|---|
| Tightening torque | Rear wheel mounting nut and screw | 145 to 150 N·m<br>14.8 to 15.2 kgf·m<br>107 to 110 lbf·ft |

(1) Rear Wheel

9Y1211156RAS0004US0

https://truckmanualshub.com/

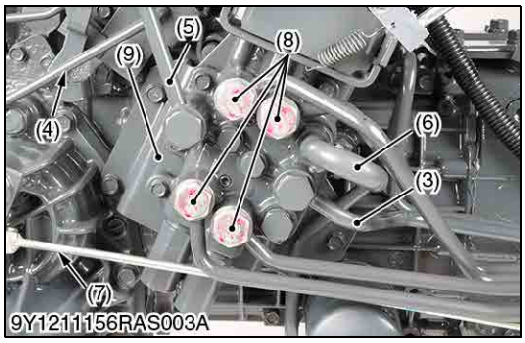


**Rear Axle Case**

1. Remove the brake rod (7) and right side fender (2).
2. Remove the 3-point hitch delivery pipe 2 (5) and return hose (6).
3. Remove the pipe clamps and 3-point hitch delivery pipe 1 (3).
4. Remove the front loader valve pipes (8).
5. Remove the loader valve assembly (9).
6. Remove the rear axle case (1).

**(When reassembling)**

- Do not damage the O-rings of front loader valve pipes and delivery pipes.
- Apply liquid gasket (Three Bond 1206D or equivalent) to joint face of the rear axle case and differential gear case after eliminating the water and oil.

| | | |
|---|---|---|
| Tightening torque | Front loader valve pipe joint bolt | 48 to 70 N·m<br>4.9 to 7.1 kgf·m<br>36 to 51 lbf·ft |
| | 3-point hitch delivery pipe 1 joint bolt | 48 to 70 N·m<br>4.9 to 7.1 kgf·m<br>36 to 51 lbf·ft |
| | 3-point hitch delivery pipe 2 joint bolt (Front loader valve side) | 48 to 70 N·m<br>4.9 to 7.1 kgf·m<br>36 to 51 lbf·ft |
| | 3-point hitch delivery pipe 2 joint bolt (Hydraulic cylinder case side) | 50 to 60 N·m<br>5.1 to 6.1 kgf·m<br>37 to 44 lbf·ft |
| | Rear axle case mounting screw | 40 to 44 N·m<br>4.0 to 4.5 kgf·m<br>29 to 32 lbf·ft |

(1) Rear Axle Case
(2) Fender
(3) 3-Point Hitch Delivery Pipe 1
(4) Differential Lock Rod
(5) 3-Point Hitch Delivery Pipe 2
(6) Return Hose
(7) Brake Rod
(8) Front Loader Valve Pipe
(9) Loader Valve Assembly

9Y1211156RAS0005US0

## (2) Disassembling Rear Axle Case

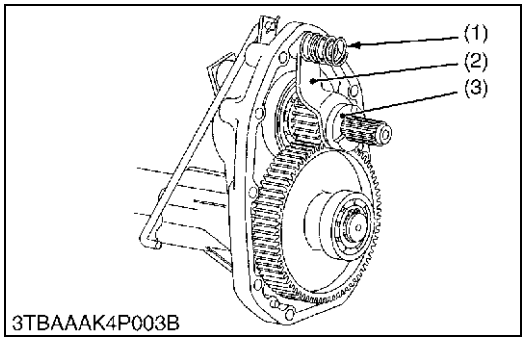


**Differential Lock Shift Fork, Differential Lock Clutch (Right Side Only)**

1. Remove the spring (1).
2. Draw out the differential lock shift fork (2) and differential lock clutch (3).

(1) Spring
(2) Differential Lock Shift Fork
(3) Differential Lock Clutch

9Y1211156RAS0006US0

https://truckmanualshub.com/


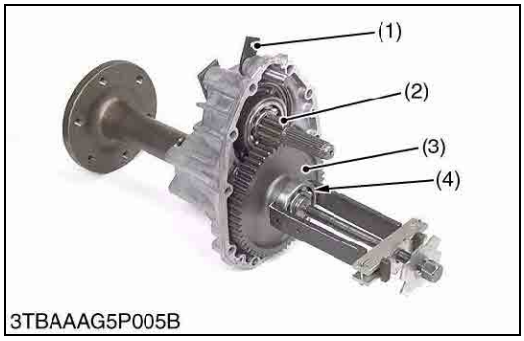

3TBAAAG5P005B

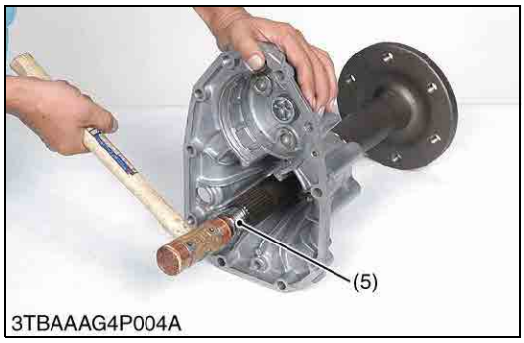

3TBAAAG4P004A

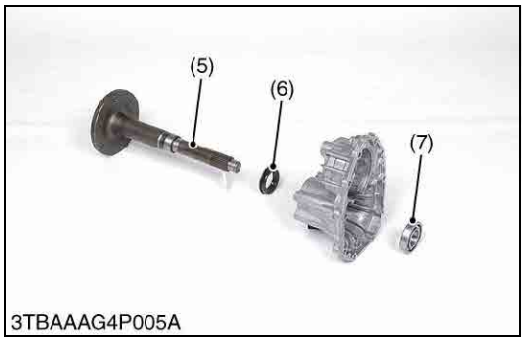

3TBAAAG4P005A

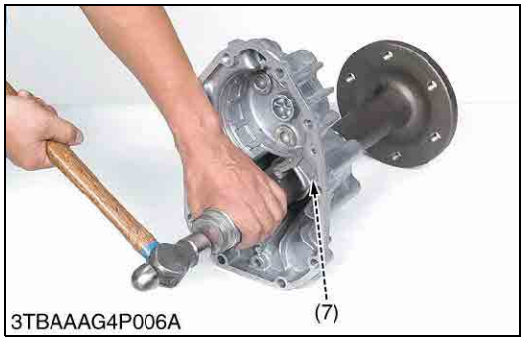

3TBAAAG4P006A

**Rear Axle Shaft**

1. Remove the fork rod (1).
2. Remove the ball bearing (4) with a puller.
3. Remove the gear (3).
4. Remove the brake shaft assembly (2).
5. Tap out the rear axle shaft (5) with a rubber hammer to the outside.

**(When reassembling)**

- Tap in the bearing to the rear axle case.

(1) Fork Rod
(2) Brake Shaft Assembly
(3) 57T Gear
(4) Ball Bearing
(5) Rear Axle Shaft
(6) Oil Seal
(7) Ball Bearing

9Y1211156RAS0007US0

# [2] SERVICING

3TBAAAG4P007A

**Checking Ball Bearing**

1. Hold the inner race, and push and pull the outer race in all directions to check for wear and roughness.
2. Apply transmission fluid to the bearing, and hold the inner race. Then, turn the outer race to check rotation.
3. If there is any problem, replace it.

9Y1211156RAS0008US0

https://truckmanualshub.com/

# 4 BRAKES

https://truckmanualshub.com/

# MECHANISM

## CONTENTS

1. LINKAGE ..... 4-M1
2. OPERATION ..... 4-M2

https://truckmanualshub.com/


# 1. LINKAGE

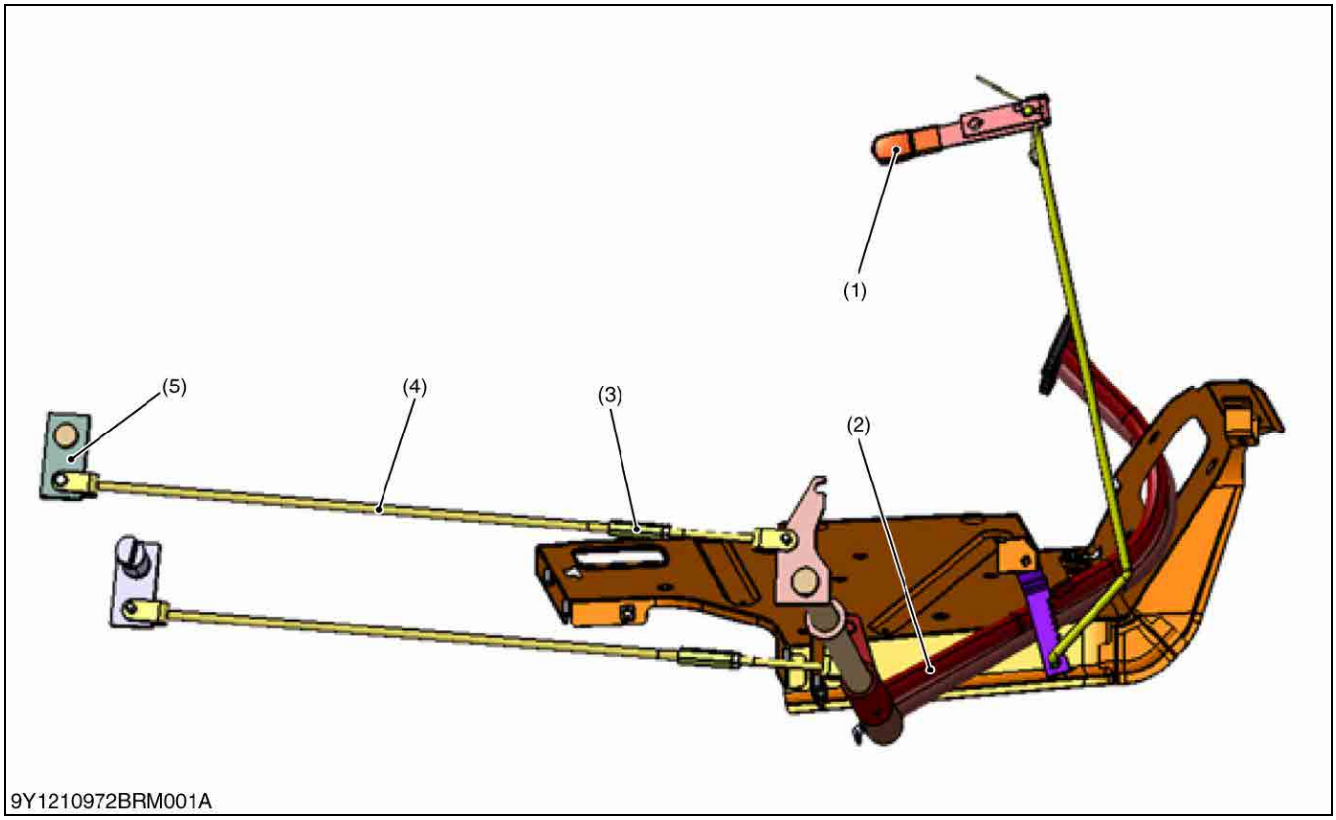


(1) Parking Brake Lever
(2) Brake Pedal
(3) Turnbuckle
(4) Brake Rod
(5) Brake Cam Lever

Independent mechanical wet disc brakes are used for the right and left traveling brakes. They are operated by the brake pedals through the mechanical linkages and provide stable braking and require little adjustment.

The parking brake is a mechanical type which is designed to actuate the traveling brakes through the linkages. Pulling the parking brake lever (1) results in the same state as the obtained when the brake pedals are depressed.

9Y1211156BRM0001US0

https://truckmanualshub.com/


# 2. OPERATION

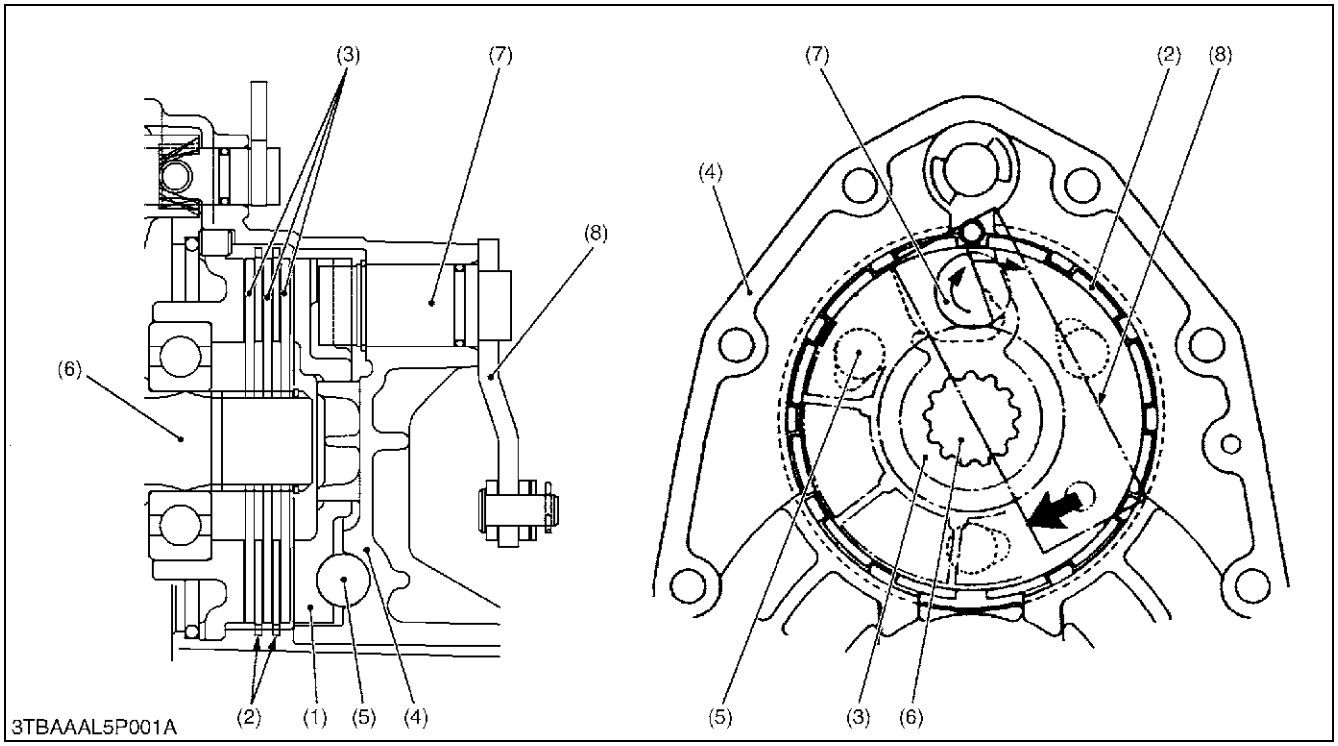


(1) Cam Plate
(2) Friction Plate
(3) Brake Disc
(4) Rear Axle Case
(5) Steel Ball
(6) Brake Shaft (Differential Gear Shaft)
(7) Brake Cam
(8) Brake Cam Lever

The brake body is incorporated in the rear axle case (4) filled with transmission oil and is designed to brake when the brake disc (3) splinted with the differential gear shaft (6) is pressed against the cam plate (1) by means of the cam mechanism incorporating steel balls (5).

For greater braking force, two brake discs are provided at the right and left sides respectively, and the friction plate (2) fixed to the rear axle case is arranged between the brake discs.

■ **During Braking**

When the brake pedal is pressed, the linage causes the brake cam lever (8) and brake cam (7) to turn into the direction of arrow shown in the above figure.

Therefore, the cam plate (1) also moves the direction of arrow. At this time, since the cam plate (1) rides on the steel balls (5) set in the grooves of the rear axle case to press the brake disc (3), the differential gear shaft (6) is braked by the frictional force generated by the cam plate (1) and brake disc (3).

9Y1211156BRM0002US0

https://truckmanualshub.com/

# SERVICING

## CONTENTS

1. TROUBLESHOOTING....4-S1
2. SERVICING SPECIFICATIONS....4-S2
3. TIGHTENING TORQUES....4-S3
4. CHECKING, DISASSEMBLING AND SERVICING....4-S4
   [1] CHECKING AND ADJUSTING....4-S4
   [2] DISASSEMBLING AND ASSEMBLING....4-S4
      (1) Separating Rear Axle Case....4-S5
      (2) Disassembling Rear Axle Case....4-S6
   [3] SERVICING....4-S7

https://truckmanualshub.com/


# 1. TROUBLESHOOTING

| Symptom | Probable Cause and Checking Procedure | Solution | Reference Page |
|---|---|---|---|
| **Uneven Braking Force** | 1. Brake pedal free travel unevenly adjusted | Check or adjust brake pedal free travel | 4-S4 |
| | 2. Brake disc worn | Replace brake disc | 4-S7 |
| | 3. Cam plate warped | Replace cam plate | 4-S7 |
| **Brake Drags** | 1. Brake pedal free travel too small | Check or adjust brake pedal free travel | 4-S4 |
| | 2. Ball holes of cam plate for uneven wear | Inspect or replace brake cam plate | 4-S7 |
| | 3. Brake cam rusted | Repair or replace brake cam | 4-S7 |
| **Poor Braking Force** | 1. Brake pedal free travel excessive | Check or adjust brake pedal free travel | 4-S4 |
| | 2. Transmission fluid improper | Check transmission oil | G-8 |
| | 3. Brake cam or lever damaged | Repair or replace brake cam or lever | 4-S7 |
| | 4. Cam plate warped | Inspect or replace cam plate | 4-S7 |
| | 5. Brake disc worn | Replace brake disc | 4-S7 |

9Y1211156BRS0001US0

https://truckmanualshub.com/


# 2. SERVICING SPECIFICATIONS

| Item | | Factory Specification | Allowable Limit |
|---|---|---|---|
| Brake Pedal | Free Travel | 30 to 40 mm<br>1.18 to 1.57 in. | – |
| | Difference of Stroke (RH and LH) | – | 0 to 5 mm<br>0 to 0.1 in. |
| Cam Plate and Bearing Holder | Flatness | – | 0.30 mm<br>0.012 in. |
| Cam Plate and Ball | Height | 22.89 to 22.99 mm<br>0.9012 to 0.9051 in. | 22.40 mm<br>0.8819 in. |
| Brake Disc | Thickness | 3.30 to 3.50 mm<br>0.130 to 0.137 in. | 3.0 mm<br>0.12 in. |
| Friction Plate | Thickness | 1.92 to 2.08 mm<br>0.0756 to 0.0818 in. | 1.52 mm<br>0.0598 in. |

9Y1211156BRS0002US0

https://truckmanualshub.com/


# 3. TIGHTENING TORQUES

Tightening torques of screws, bolts and nuts on the table below are especially specified.
(For general use screws, bolts and nuts: Refer to "5. TIGHTENING TORQUES" on page G-11.)

| Item | N·m | kgf·m | lbf·ft |
|---|---|---|---|
| Rear wheel mounting nut and screw | 145 to 150 | 14.8 to 15.2 | 107 to 110 |
| Front loader valve pipe joint bolt | 48 to 70 | 4.9 to 7.1 | 36 to 51 |
| 3-point hitch delivery pipe 1 joint bolt | 48 to 70 | 4.9 to 7.1 | 36 to 51 |
| 3-point hitch delivery pipe 2 joint bolt (Front loader valve side) | 48 to 70 | 4.9 to 7.1 | 36 to 51 |
| 3-point hitch delivery pipe 2 joint bolt (Hydraulic cylinder case side) | 50 to 60 | 5.1 to 6.1 | 37 to 44 |
| Rear axle case mounting screw | 40 to 44 | 4.0 to 4.5 | 29 to 32 |

9Y1211156BRS0003US0

https://truckmanualshub.com/


# 4. CHECKING, DISASSEMBLING AND SERVICING

## [1] CHECKING AND ADJUSTING

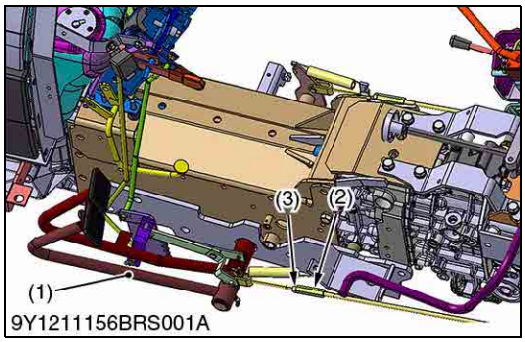


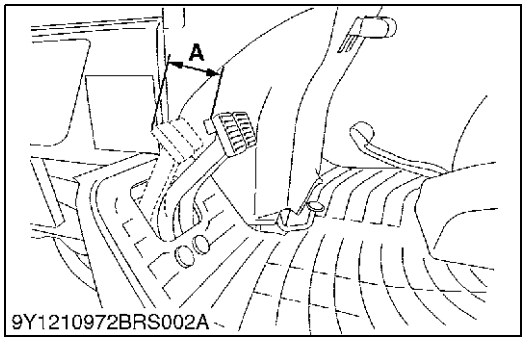


### Adjusting Brake Pedal Free Travel and Difference of Stroke

**CAUTION**

- **Stop the engine and chock the wheels before checking brake pedal.**
  **• The difference between the right and left pedal plays must be less than 5 mm (0.1 in.).**

1. Release the parking brake.
2. Slightly depress the brake pedals and measure free travel at top of pedal stroke.
3. If the measurement is not within the factory specifications, loosen the lock nut and turn the turnbuckles to adjust the brake rod length.
4. Retighten the lock nut securely.
   Keep the free travel in the right and left brake pedals equal.

| | | |
|---|---|---|
| Brake pedal free travel | Factory specification | 30 to 40 mm<br>1.18 to 1.57 in. |
| Brake pedal difference of stroke (RH and LH) | Allowable limit | 0 to 5 mm<br>0 to 0.1 in. |

**NOTE**

- **After checking brake pedal free play, be sure to engage the parking brake lever fully and check to see that the brake pedals are securely locked.**

(1) Brake Pedal
(2) Turnbuckle
(3) Lock Nut

**A: Brake Pedal Free Travel**

9Y1211156BRS0004US0

## [2] DISASSEMBLING AND ASSEMBLING

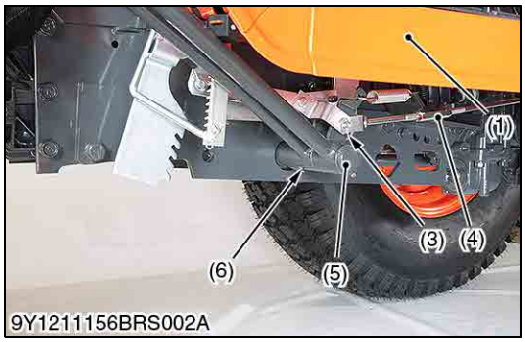


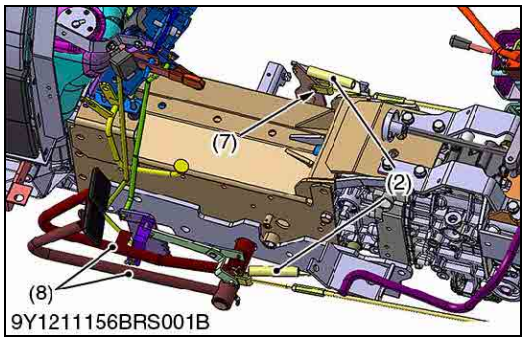


### Separating Brake Pedal

1. Remove the left side step (1).
2. Remove the return springs (2).
3. Remove the pin (3) and disconnect brake rod (4) from brake pedal (8).
4. Remove the external circlip (5) and pin (6) from the brake pedal shaft (7).
5. Top out the brake pedal shaft (7) from the brake pedals (8).

**(When reassembling)**

- Apply grease to the brake pedal shaft.
- Be sure to adjust the brake pedal free travel.

(1) Step
(2) Return Spring
(3) Pin
(4) Brake Rod
(5) External Circlip
(6) Pin
(7) Brake Pedal Shaft
(8) Brake Pedal

9Y1211156BRS0005US0

https://truckmanualshub.com/


# (1) Separating Rear Axle Case

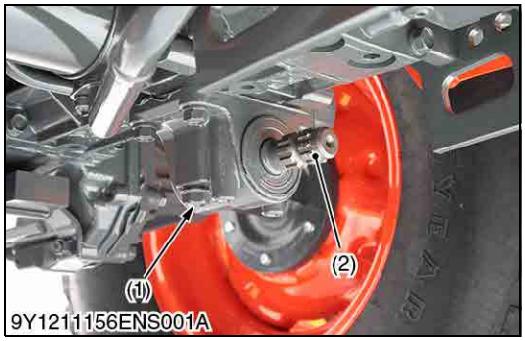


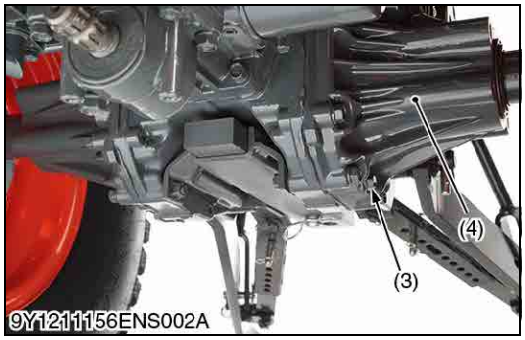


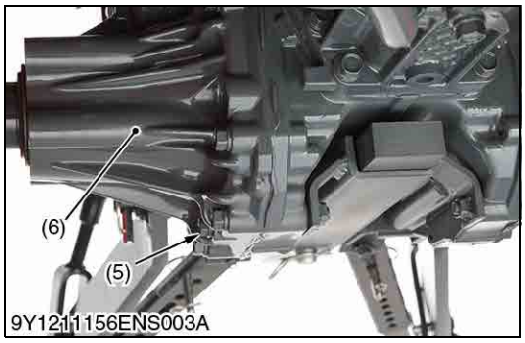

## Draining Transmission Fluid

**CAUTION**

- **Stop the engine before checking and changing the transmission fluid.**

1. Place the oil pan under the tractor.
2. Remove the drain plugs (1), (3), (5) at the mid-PTO shaft and at the bottom of the rear axle cases (4), (6).
3. Drain the transmission fluid.
4. After draining the transmission fluid, reinstall the drain plugs (1), (3), (5).

**IMPORTANT**

- **Use only KUBOTA UDT oil. Use of other oils may damage the transmission or hydraulic system.**
  **Refer to "4. LUBRICANTS, FUEL AND COOLANT" on page G-8.**
- **Never work the tractor immediately after changing the transmission oil. Keep the engine at medium speed for a few minutes to prevents damage to the transmission.**
- **Do not mix different brands oil together.**

| | |
|---|---|
| Transmission fluid capacity | 15 L<br>4.0 U.S.gals<br>3.3 Imp.gals |

(1) Drain Plug
(2) Mid-PTO Shaft
(3) Drain Plug
(4) Rear Axle Case (L.H.)
(5) Drain Plug
(6) Rear Axle Case (R.H.)

9Y1211156ENS0023US0

## Rear Wheel

1. Place the disassembling stand under the transmission case.
2. Remove the rear wheel (1).

| | | |
|---|---|---|
| Tightening torque | Rear wheel mounting nut and screw | 145 to 150 N·m<br>14.8 to 15.2 kgf·m<br>107 to 110 lbf·ft |

(1) Rear Wheel

9Y1211156BRS0006US0

https://truckmanualshub.com/

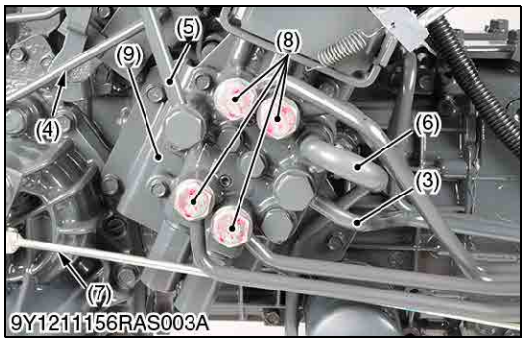


**Rear Axle Case**

1. Remove the brake rod (7) and right side fender (2).
2. Remove the 3-point hitch delivery pipe 2 (5) and return hose (6).
3. Remove the pipe clamps and 3-point hitch delivery pipe 1 (3).
4. Remove the front loader valve pipes (8).
5. Remove the loader valve assembly (9).
6. Remove the rear axle case (1).

**(When reassembling)**

- Do not damage the O-rings of front loader valve pipes and delivery pipes.
- Apply liquid gasket (Three Bond 1206D or equivalent) to joint face of the rear axle case and differential gear case after eliminating the water and oil.

| | | |
|---|---|---|
| Tightening torque | Front loader valve pipe joint bolt | 48 to 70 N·m<br>4.9 to 7.1 kgf·m<br>36 to 51 lbf·ft |
| | 3-point hitch delivery pipe 1 joint bolt | 48 to 70 N·m<br>4.9 to 7.1 kgf·m<br>36 to 51 lbf·ft |
| | 3-point hitch delivery pipe 2 joint bolt (Front loader valve side) | 48 to 70 N·m<br>4.9 to 7.1 kgf·m<br>36 to 51 lbf·ft |
| | 3-point hitch delivery pipe 2 joint bolt (Hydraulic cylinder case side) | 50 to 60 N·m<br>5.1 to 6.1 kgf·m<br>37 to 44 lbf·ft |
| | Rear axle case mounting screw | 40 to 44 N·m<br>4.0 to 4.5 kgf·m<br>29 to 32 lbf·ft |

(1) Rear Axle Case
(2) Fender
(3) 3-Point Hitch Delivery Pipe 1
(4) Differential Lock Rod
(5) 3-Point Hitch Delivery Pipe 2
(6) Return Hose
(7) Brake Rod
(8) Front Loader Valve Pipe
(9) Loader Valve Assembly

9Y1211156RAS0005US0

## (2) Disassembling Rear Axle Case

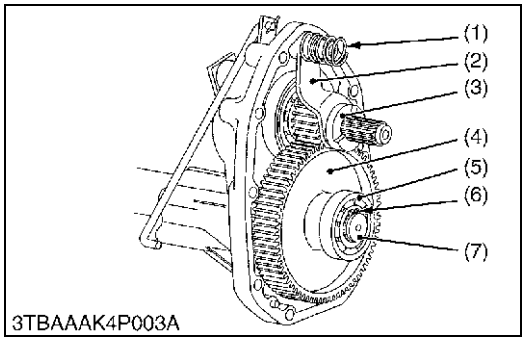


**Differential Lock Shift Fork, Differential Lock Clutch (Right Side Only), 57T Gear and Rear Axle**

1. Remove the spring (1).
2. Draw out the differential lock shift fork (2) and differential lock clutch (3).
3. Remove the external snap ring (6) and remove the bearing (5).
4. Draw out the 57T gear (4) from the rear axle (7).
5. Tap out the rear axle (7) to the outside of the rear axle case.

(1) Spring
(2) Differential Lock Shift Fork
(3) Differential Lock Clutch
(4) 57T Gear
(5) Bearing
(6) External Snap Ring
(7) Rear Axle

9Y1211156BRS0007US0

https://truckmanualshub.com/


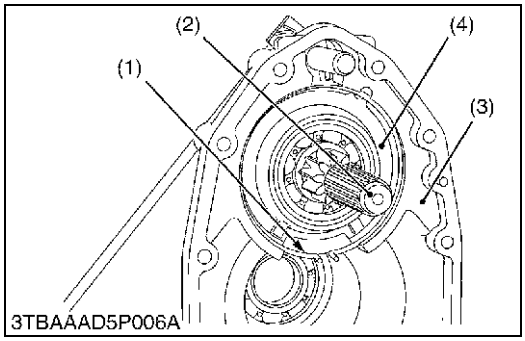


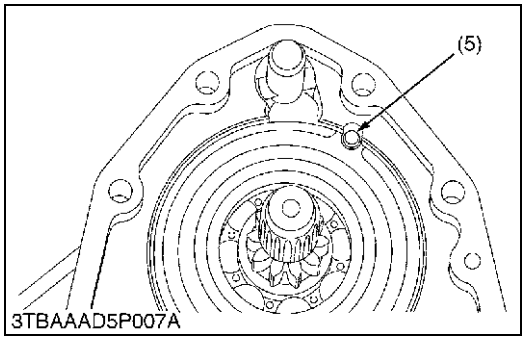


**Brake Assembly**

1. Remove the internal snap ring (1).
2. Remove the brake shaft (2) with brake discs.

**(When reassembling)**

- When installing the internal snap ring (1) to rear axle case (3) as shown in the figure.
- When installing the bearing holder (4) to the rear axle case (3), do not forget to install the straight pin (5).

(1) Internal Snap Ring
(2) Brake Shaft
(3) Rear Axle Case
(4) Bearing Holder
(5) Straight Pin

9Y1211156BRS0008US0

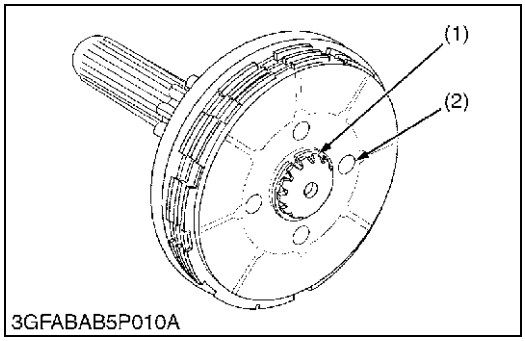


**Brake Discs and Friction Plate**

1. Remove the external snap ring (1), and remove the brake discs and friction plate.
2. Remove the cam plate and balls.
3. Remove the external snap ring and pull out the brake cam lever.

**(When reassembling)**

- Install the brake discs with their holes (2) deviation at less than 1/3 of the total hole area.

(1) External Snap Ring
(2) Hole

9Y1211156BRS0009US0

# [3] SERVICING

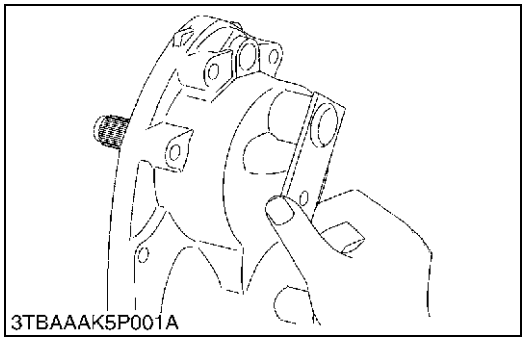


**Brake Cam Lever Movement**

1. Move the brake cam lever by hand to check the movement.
2. If the movement is heavy, refine the brake cam with emery paper.

9Y1211156BRS0010US0

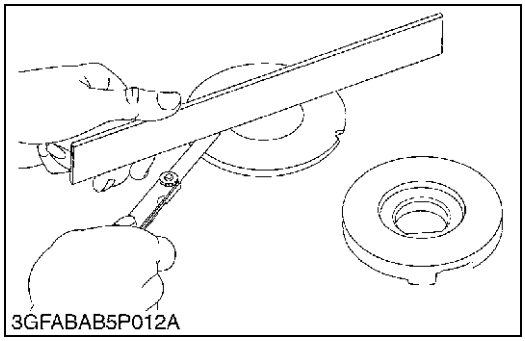


**Cam Plate Flatness and Bearing Holder Wear**

1. Place a straightedge of 150 mm (5.91 in.) or more in length on the contacting surface of the cam plate and the bearing holder.
2. Inspect the friction surface of the cam plate and the bearing holder with the straightedge, and determine if a 0.30 mm (0.012 in.) feeler gauge will fit on the part of wear.
3. If it will fit, resurface.

| | | |
|---|---|---|
| Flatness of cam plate and bearing holder | Allowable limit | 0.30 mm<br>0.012 in. |

9Y1211156BRS0011US0

https://truckmanualshub.com/


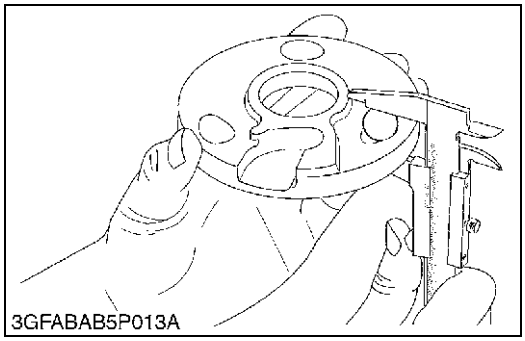


## Height of Cam Plate and Ball

1. Measure the dimensions of the cam plate with the ball installed.
2. If the measurement is less than the allowable limit, replace the cam plate and balls.
3. Inspect the ball holes of cam plate for uneven wear.
4. If the uneven wear is found, replace it.

| | | |
|---|---|---|
| Height of cam plate and ball | Factory specification | 22.89 to 22.99 mm<br>0.9012 to 0.9051 in. |
| | Allowable limit | 22.40 mm<br>0.8819 in. |

9Y1211156BRS0012US0

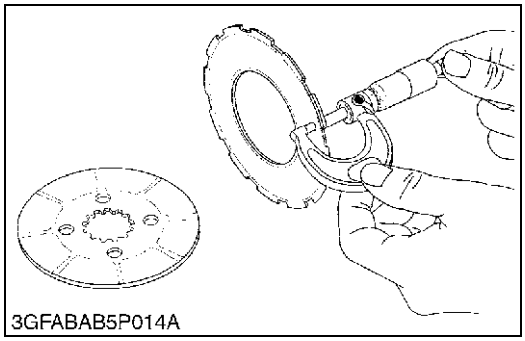


## Brake Disc and Friction Plate Wear

1. Measure the brake disc thickness and the friction plate thickness with an outside micrometer.
2. If the thickness is less than the allowable limit, replace it.

| | | |
|---|---|---|
| Brake disc thickness | Factory specification | 3.30 to 3.50 mm<br>0.130 to 0.137 in. |
| | Allowable limit | 3.0 mm<br>0.12 in. |

| | | |
|---|---|---|
| Friction plate thickness | Factory specification | 1.92 to 2.08 mm<br>0.0756 to 0.0818 in. |
| | Allowable limit | 1.52 mm<br>0.0598 in. |

9Y1211156BRS0013US0

https://truckmanualshub.com/

# 5 FRONT AXLE

https://truckmanualshub.com/

# MECHANISM

## CONTENTS

1. STRUCTURE ..... 5-M1
[1] 4 WHEEL DRIVE MODEL ..... 5-M1

https://truckmanualshub.com/


# 1. STRUCTURE

## [1] 4 WHEEL DRIVE MODEL

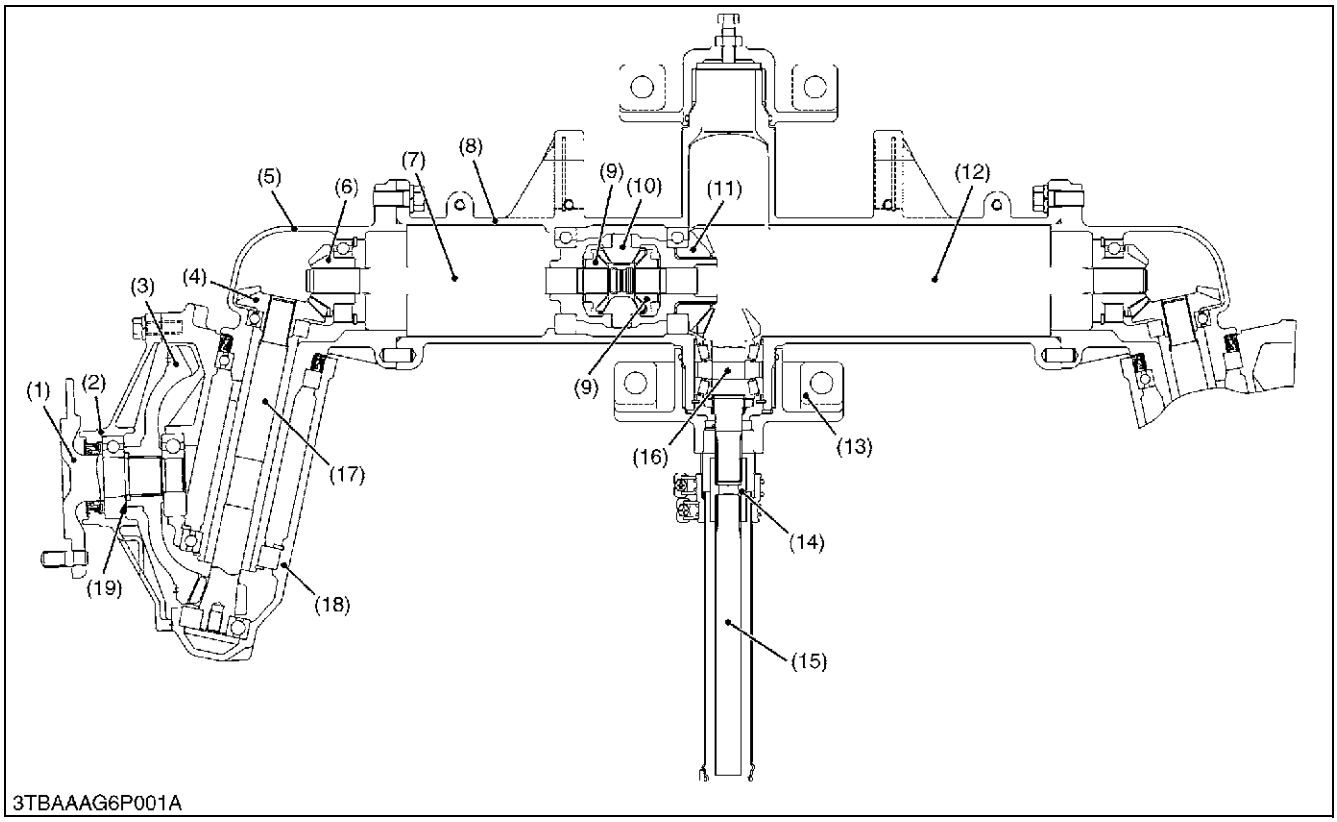


| | | | |
|---|---|---|---|
| (1) Axle | (6) Bevel Gear | (11) Spiral Bevel Gear | (16) Spiral Bevel Pinion Shaft |
| (2) Axle Flange | (7) Differential Yoke Shaft, L.H. | (12) Differential Yoke Shaft, R.H. | (17) Bevel Gear Shaft |
| (3) Bevel Gear | (8) Front Axle Case | (13) Front Axle Bracket, Rear | (18) Front Gear Case |
| (4) Bevel Gear | (9) Differential Side Gear (14T) | (14) Coupling | (19) Collar |
| (5) Bevel Gear Case | (10) Differential Pinion Gear (10T) | (15) Propeller Shaft | |

The front axle of the 4WD is constructed as shown above. Power is transmitted from the transmission through the propeller shaft (15) to the spiral bevel pinion shaft (16), then to the spiral bevel gear (11) and to the differential side gear (9).

The power through the differential side gear (9) is transmitted to the differential yoke shaft (7), (12), and to the bevel gear shaft (17) through the bevel gears (4), (6) in the bevel gear case (5).

The revolution is greatly reduced by the bevel gears (3), then the power is transmitted to the axle (1).

The differential system allows each wheel to rotate at a different speed to make turning easier.

9Y1211156FAM0001US0

https://truckmanualshub.com/

# SERVICING

## CONTENTS

1. TROUBLESHOOTING.....5-S1
2. SERVICING SPECIFICATIONS.....5-S2
3. TIGHTENING TORQUES.....5-S3
4. CHECKING, DISASSEMBLING AND SERVICING.....5-S4
   [1] CHECKING AND ADJUSTING.....5-S4
   [2] DISASSEMBLING AND ASSEMBLING.....5-S5
      (1) Separating Front Axle Assembly.....5-S5
      (2) Disassembling Front Axle Assembly.....5-S6
   [3] SERVICING.....5-S12

https://truckmanualshub.com/


# 1. TROUBLESHOOTING

| Symptom | Probable Cause and Checking Procedure | Solution | Reference Page |
|---|---|---|---|
| **Front Wheels Wander to Right or Left** | 1. Tire pressure uneven | Adjust tire pressure | G-45 |
| | 2. Improper toe-in adjustment (improper alignment) | Adjust toe-in | 5-S4 |
| | 3. Clearance between front axle case boss and front axle bracket bushing (front, rear) excessive | Replace bracket bush | 5-S15 |
| | 4. Front axle rocking force too small | Adjust front axle rocking force | 5-S4 |
| | 5. Tie-rod end loose | Tighten tie-rod slotted nut | 5-S6 |
| **Front Wheels Can Not Be Driven** | 1. Front wheel driving gears in front axle gear case broken | Replace drive gear (front axle gear case side) | 5-S7 |
| | 2. Front wheel drive gears in transmission broken | Replace drive gear (transmission side) | 2-S27 |
| | 3. Front differential gear broken | Replace front differential gear | 5-S11 |
| **Noise** | 1. Gear backlash excessive | Inspect or adjust backlash | 5-S13 |
| | 2. Oil insufficient | Check front axle case oil | 5-S5 |
| | 3. Bearings damaged or broken | Replace bearing | 5-S11 |
| | 4. Gears damaged or broken | Replace gear | 5-S6 |
| | 5. Spiral bevel pinion shaft turning torque improper | Inspect or repair spiral bevel pinion | 5-S11, 5-S12 |

9Y1211156FAS0001US0

https://truckmanualshub.com/


# 2. SERVICING SPECIFICATIONS

| Item | | Factory Specification | Allowable Limit |
|---|---|---|---|
| Front Wheel Alignment | Toe-in | 0 to 10 mm<br>0 to 0.39 in. | – |
| Front Axle | Rocking Force | 50.0 to 100.0 N<br>5.1 to 10.2 kgf<br>12.8 to 22.4 lbf | – |
| Differential Pinion to Differential Case | Clearance | 0.032 to 0.068 mm<br>0.0013 to 0.0026 in. | 0.2 mm<br>0.008 in. |
| • Differential Case Bore | I.D. | 15.000 to 15.018 mm<br>0.59056 to 0.59125 in. | – |
| • Differential Pinion | O.D. | 14.9509 to 14.968 mm<br>0.58859 to 0.58829 in. | – |
| Yoke Shaft to Differential Case | Clearance | 0.020 to 0.051 mm<br>0.00079 to 0.0020 in. | 0.2 mm<br>0.008 in. |
| • Differential Case Bore | I.D. | 20.000 to 20.018 mm<br>0.78741 to 0.78811 in. | – |
| • Yoke Shaft | O.D. | 19.967 to 19.980 mm<br>0.78611 to 0.78661 in. | – |
| Spiral Bevel Pinion Shaft | Turning Torque | 0.8 to 1.0 N·m<br>0.08 to 0.10 kgf·m<br>0.59 to 0.73 lbf·ft | – |
| Spiral Bevel Pinion Shaft to Spiral Bevel Gear | Backlash | 0.10 to 0.30 mm<br>0.0040 to 0.011 in. | – |
| Bevel Gear to 16T Bevel Gear | Backlash | 0.10 to 0.30 mm<br>0.0040 to 0.011 in. | – |
| Front Axle Case Boss to Bracket Bushing (Front) | Clearance | 0.125 to 0.285 mm<br>0.00493 to 0.0112 in. | 0.45 mm<br>0.018 in. |
| • Front Axle Case Boss | O.D. | 54.94 to 54.97 mm<br>2.163 to 2.164 in. | – |
| • Bracket Bushing | I.D. | 55.095 to 55.225 mm<br>2.1691 to 2.1742 in. | – |
| Front Axle Case Boss to Bracket Bushing (Rear) | Clearance | 0.120 to 0.300 mm<br>0.00473 to 0.0118 in. | 0.45 mm<br>0.018 in. |
| • Front Axle Case Boss | O.D. | 65.005 to 65.035 mm<br>2.5593 to 2.5604 in. | – |
| • Bracket Bushing | I.D. | 65.155 to 65.305 mm<br>2.5652 to 2.5710 in. | – |

9Y1211156FAS0002US0

https://truckmanualshub.com/


# 3. TIGHTENING TORQUES

Tightening torques of screws, bolts and nuts on the table below are especially specified.
(For general use screws, bolts and nuts: Refer to "5. TIGHTENING TORQUES" on page G-11.)

| Item | N·m | kgf·m | lbf·ft |
|---|---|---|---|
| Front wheel mounting bolt and nut | 77.0 to 90.0 | 7.9 to 9.2 | 57.0 to 67.0 |
| Delivery hose retaining nut | 24 to 28 | 2.5 to 2.9 | 17.7 to 20.7 |
| Front axle holder mounting bolt | 200 to 230 | 20.4 to 23.5 | 147.5 to 169.6 |
| Tie-rod slotted nut | 18 to 35 | 1.8 to 3.5 | 14 to 25 |
| Tie-rod joint | 74 to 84 | 7.5 to 8.6 | 54.4 to 61.9 |
| Bevel gear case mounting screw | 77.5 to 90.1 | 7.9 to 9.2 | 57.1 to 66.5 |
| Axle flange mounting bolt | 48.1 to 55.9 | 4.9 to 5.7 | 35.5 to 41.2 |

9Y1211156FAS0003US0

https://truckmanualshub.com/


# 4. CHECKING, DISASSEMBLING AND SERVICING

## [1] CHECKING AND ADJUSTING

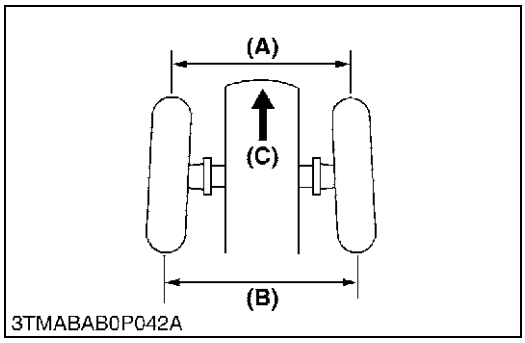


### Toe-in

1. Inflate the tires to the specified pressure.
2. Turn the front wheels straight ahead.
3. Measure the toe-in (**(B)** - **(A)**).
4. If the measurement is not within the factory specifications, adjust the tie-rod length.

| | | |
|---|---|---|
| Toe-in **(B)** - **(A)** | Factory specification | 0 to 10 mm<br>0 to 0.39 in. |

**(A) Wheel to Wheel Distance at front** **(C) Front**
**(B) Wheel to Wheel Distance at rear**

9Y1211156FAS0004US0

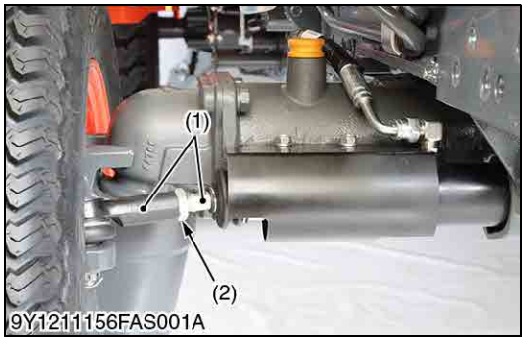


### Toe-in Adjusting

1. Loosen the lock nut (2).
2. Turn the tie-rod end (1) to adjust the rod length until the proper toe-in measurement is obtained.
3. Retighten the lock nut (2).

(1) Tie-rod End (2) Lock Nut

9Y1211156FAS0005US0

### Front Axle Rocking Force

1. Jack up the front side of tractor.
2. Set a spring balance to the front axle flange.
3. Measure the front axle rocking force.
4. If the measurement is not within the factory specifications, adjust with the adjusting screw (2). After applying liquid gasket (Three Bond 1206D or equivalent) to the thread portion of the adjusting screw (2) to prevent front axle oil from leaking out of the front axle holder (3).
5. Tighten the lock nut (1) firmly.

| | | |
|---|---|---|
| Front axle rocking force | Factory specification | 50.0 to 100.0 N<br>5.1 to 10.2 kgf<br>12.8 to 22.4 lbf |

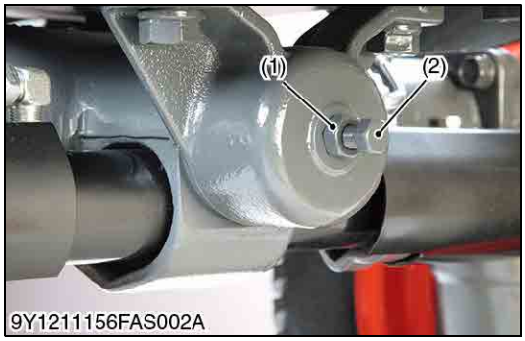


(1) Lock Nut
(2) Adjusting Screw
(3) Holder
(4) Thrust Collar
(5) Front Axle Case

**A: Thread Portion**

9Y1211156FAS0006US0

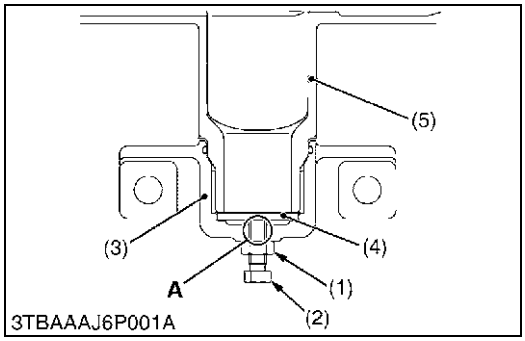

https://truckmanualshub.com/


# [2] DISASSEMBLING AND ASSEMBLING

## (1) Separating Front Axle Assembly

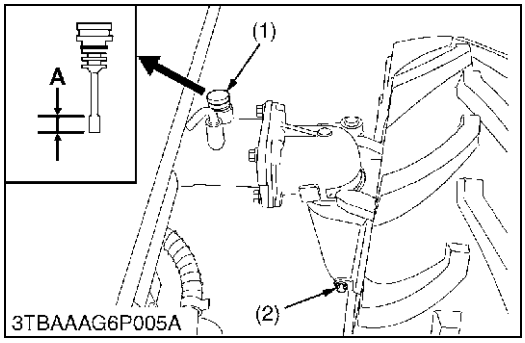


### Draining Front Axle Case Oil

1. Place the oil pans underneath the front axle case.
2. Remove the both right and left hand side drain plugs (2) and filling plug (1) to drain the front axle case oil.
3. After draining, reinstall the drain plugs (2).
4. Fill with new oil up to the upper notch on the dipstick.

■ **NOTE**
- **After ten minutes, check the oil level again, add oil to prescribed level.**
- **Use KUBOTA SUPER UDT fluid or SAE 80, 90 gear oil. Refer to "4. LUBRICANTS, FUEL AND COOLANT" on page G-8.**

| | |
|---|---|
| Front axle case oil capacity | 3.5 L<br>3.7 U.S.qts<br>3.1 Imp.qts |

(1) Filling Plug with Dipstick
(2) Drain Plug
**A: Oil level is acceptable within this range**

9Y1211156FAS0007US0

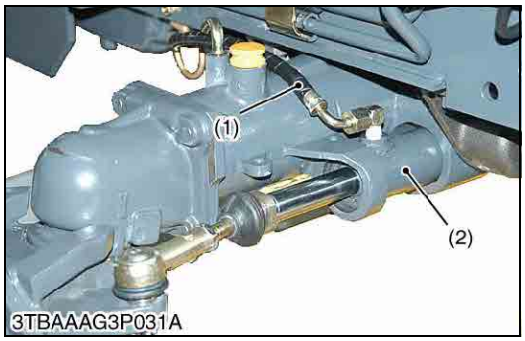


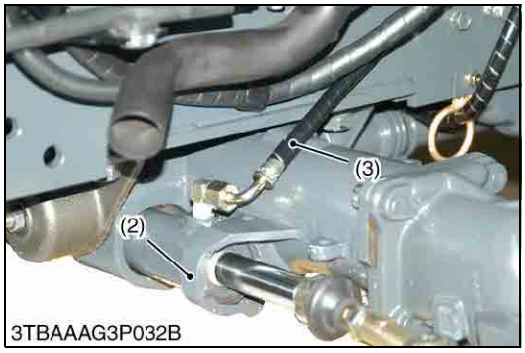


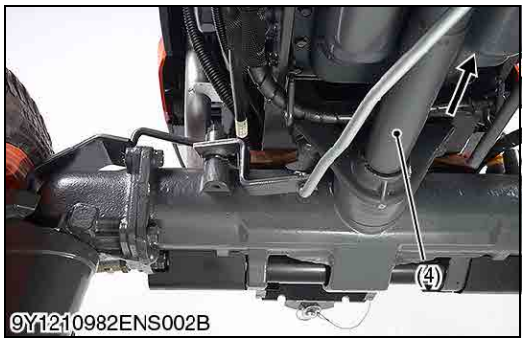


### Front Wheels and Steering Cylinder Hoses

1. Disconnect the delivery hoses (1), (3).
2. Lift up the tractor front side.
3. Slide the front cover (4).
4. Remove the front wheels.

■ **NOTE**
- **After disconnecting the delivery hoses, do not steer the front axle so that the steering oil may come out from the delivery hoses.**

■ **IMPORTANT**
- **Connect the delivery hoses to the original position.**

**(When reassembling)**
- Be sure to assemble the delivery hose R.H. and L.H. as shown in figure.

**(Bleeding air in power steering circuit)**
- Start the engine.
- Turn the steering wheel slowly in bolt directions all the way alternately several times, and stop the engine.

| | | |
|---|---|---|
| Tightening torque | Front wheel mounting bolt and nut | 78 to 90 N·m<br>8.0 to 9.1 kgf·m<br>58 to 66 lbf·ft |
| | Delivery hose retaining nut | 24 to 28 N·m<br>2.5 to 2.9 kgf·m<br>17.7 to 20.7 lbf·ft |

(1) Delivery Hose (R.H.)
(2) Steering Cylinder
(3) Delivery Hose (L.H.)
(4) Front Cover

9Y1211156FAS0008US0

https://truckmanualshub.com/


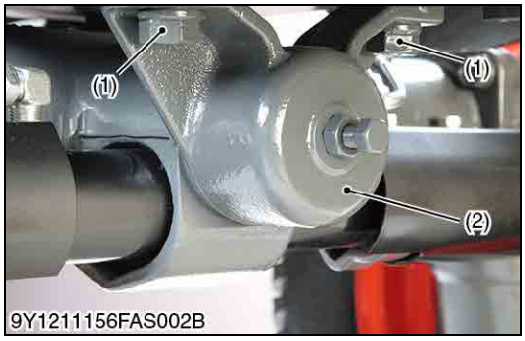

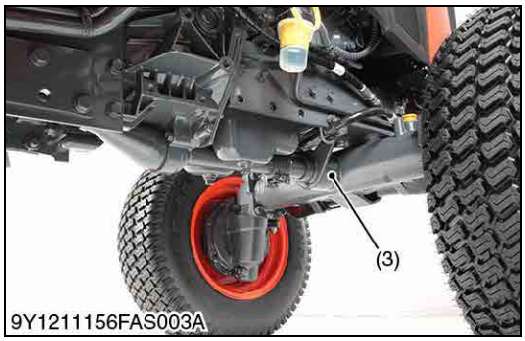


**Front Axle Holder and Front Axle**

1. Place the disassembling stand under the front axle.
2. Remove the front axle holder mounting bolts (1).
3. Separate the front axle holders (2), (3).
4. Separate the front axle from the front axle frame.

**(When reassembling)**

- Slide the coupling and the front cover to the front drive shaft.
- Align the front axle holders to the front axle frame, and align the coupling to the bevel pinion shaft spline.

| | | |
|---|---|---|
| Tightening torque | Front axle holder mounting bolt | 200 to 230 N·m<br>20.4 to 23.5 kgf·m<br>147.5 to 169.6 lbf·ft |

(1) Front Axle Holder Mounting Bolt
(2) Front Axle Holder (Front)
(3) Front Axle Holder (Rear)

9Y1211156FAS0009US0

## (2) Disassembling Front Axle Assembly

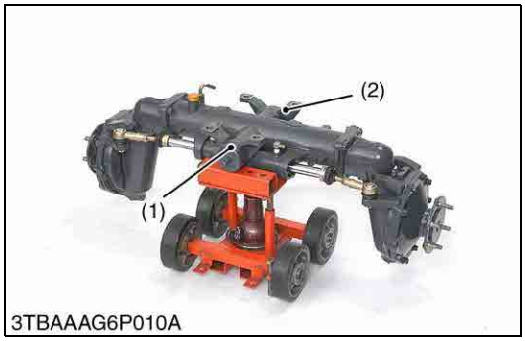


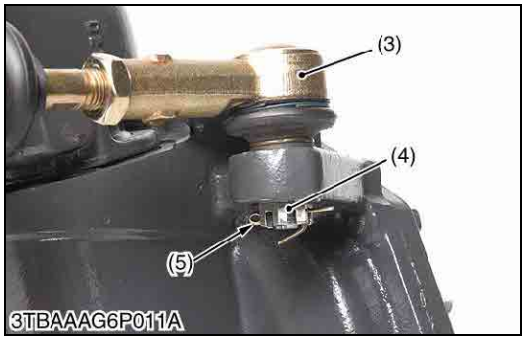


**Front Axle Brackets and Tie-rod Ends**

1. Remove the slotted nut (4) and remove the tie-rod end (3).
2. Remove the front axle brackets (1), (2).

**(When reassembling)**

- Apply grease to the thrust collar of front axle bracket.
- Apply grease to the O-ring and be careful not to damage it.
- After tightening the slotted nut, install cotter pin as shown in the figure.

| | | |
|---|---|---|
| Tightening torque | Tie-rod slotted nut | 18 to 35 N·m<br>1.8 to 3.5 kgf·m<br>14 to 25 lbf·ft |
| | Tie-rod joint | 74 to 84 N·m<br>7.5 to 8.6 kgf·m<br>54.4 to 61.9 lbf·ft |

(1) Front Axle Bracket (Front)
(2) Front Axle Bracket (Rear)
(3) Tie-rod End
(4) Slotted Nut
(5) Cotter Pin

9Y1211156FAS0010US0

https://truckmanualshub.com/


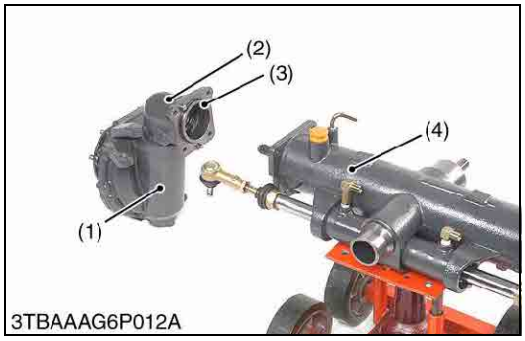


## Bevel Gear Case

1. Remove the bevel gear case mounting screws.
2. Remove the bevel gear case (2) and front gear case (1) as a unit from the front axle case (4).

**(When reassembling)**

- Apply grease to the O-ring (3) and be careful not to damage it.
- Do not interchange right and left bevel gear case assemblies and right and left gear case assemblies.

| | | |
|---|---|---|
| Tightening torque | Bevel gear case mounting screw | 77.5 to 90.1 N·m<br>7.9 to 9.2 kgf·m<br>57.1 to 66.5 lbf·ft |

(1) Front Gear Case
(2) Bevel Gear Case
(3) O-ring
(4) Front Axle Case

9Y1211156FAS0011US0

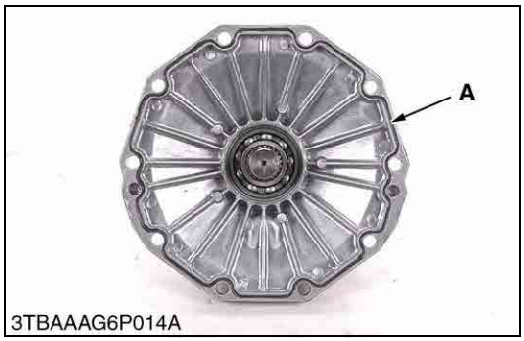


## Front Gear Case and Axle Flange

1. Remove the axle flange mounting bolts.
2. Remove the axle flange (2).

**(When reassembling)**

- Apply liquid gasket (Three Bond 1206D or equivalent) to joint face of the axle flange (2) and the front gear case (1) after eliminating the water, oil and stuck liquid gasket.
- Tighten the axle flange bolts and nuts diagonally in several steps.

| | | |
|---|---|---|
| Tightening torque | Axle flange mounting bolt | 48.1 to 55.9 N·m<br>4.9 to 5.7 kgf·m<br>35.5 to 41.2 lbf·ft |

(1) Front Gear Case
(2) Axle Flange

**A: Portion to apply liquid gasket**

9Y1211156FAS0012US0

https://truckmanualshub.com/

3TBAAAG6P015A

3TBAAAG6P016A

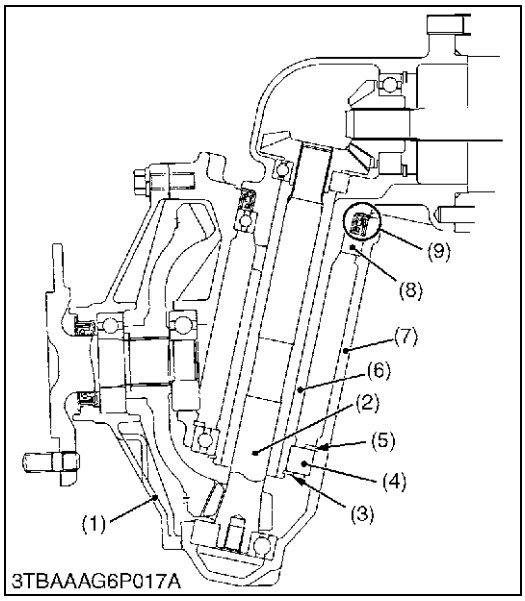

3TBAAAG6P017A

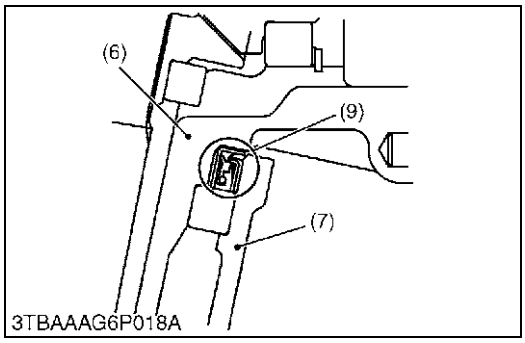

3TBAAAG6P018A

## Bevel Gear Shaft and Bevel Gear Case Oil Seal

1. Remove the external cir-clip (3).
2. Remove the bevel gear case (6) from the front gear case (7).
3. Remove the oil seal (9).
4. Remove the ball bearing (8).
5. Remove the internal cir-clip (5) and remove the ball bearing (4).
6. Remove the bevel gear shaft (2) with the bearing.

**(When reassembling)**

- Install the oil seal (9) of the bevel gear case, noting its direction as shown in the figure.

(1) Axle Flange
(2) Bevel Gear Shaft
(3) External Cir-clip
(4) Ball Bearing
(5) Internal Cir-clip
(6) Bevel Gear Case
(7) Front Gear Case
(8) Ball Bearing
(9) Bevel Gear Case Oil Seal

9Y1211156FAS0013US0

https://truckmanualshub.com/


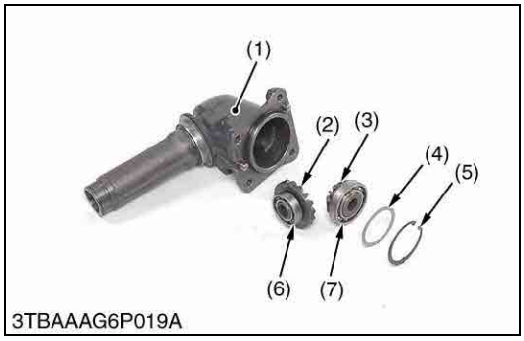


**Bevel Gear Case Gears**

1. Remove the internal snap ring (5).
2. Remove the bevel gears (3), (2) with ball bearings (7), (6) and shims (4).

**(When reassembling)**

- Install the shim (4) to their original position.

**(Reference)**

- Thickness of adjusting shims:
  1.0 mm (0.039 in.)
  0.8 mm (0.031 in.)
  1.2 mm (0.047 in.)
  1.4 mm (0.055 in.)

(1) Bevel Gear Case
(2) Bevel Gear
(3) Bevel Gear
(4) Shim
(5) Internal Cir-clip
(6) Ball Bearing
(7) Ball Bearing

9Y1211156FAS0014US0

https://truckmanualshub.com/


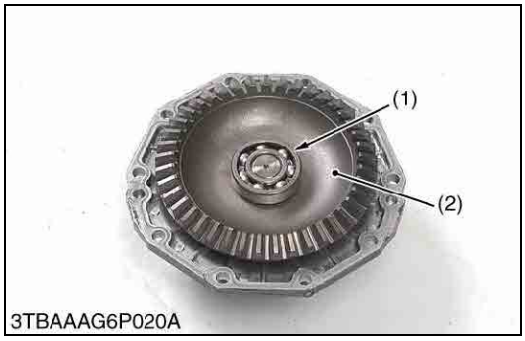

3TBAAAG6P020A

3TBAAAG6P021A

3TBAAAG6P022A

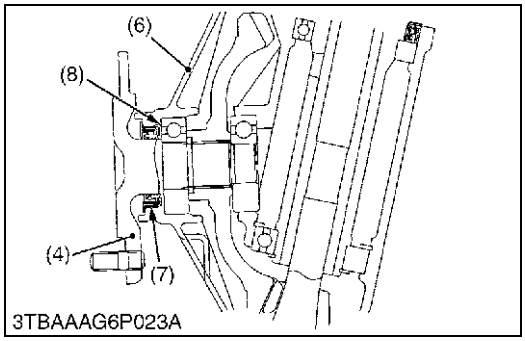

3TBAAAG6P023A

## Axle

1. Remove the bearing (1).
2. Remove the bevel gear (2).
3. Remove the collar (3).
4. Tap out the axle (4).

**(When reassembling)**

- Install the oil seal (7) of axle flange (6), noting its direction as shown in the figure.
- Install the shims (8) to their original position.

**(Reference)**

- Thickness of adjusting shims:
  0.8 mm (0.03 in.): Parts No. 6C040-5714-0
  1.0 mm (0.04 in.): Parts No. 6C040-5713-0
  1.2 mm (0.05 in.): Parts No. 6C040-5715-0
  1.4 mm (0.06 in.): Parts No. 6C040-5716-0

| | | | |
|---|---|---|---|
| (1) | Ball Bearing | (5) | Ball Bearing |
| (2) | Bevel Gear | (6) | Axle Flange |
| (3) | Collar | (7) | Oil Seal |
| (4) | Axle | (8) | Shim |

9Y1211156FAS0015US0

https://truckmanualshub.com/


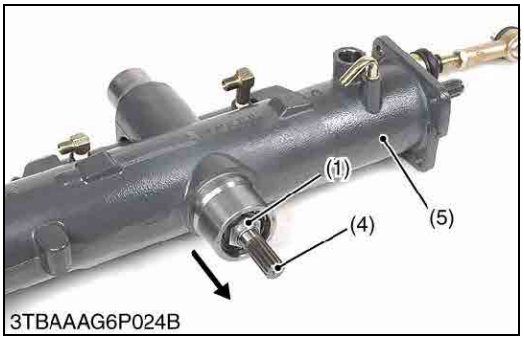

3TBAAAG6P024B

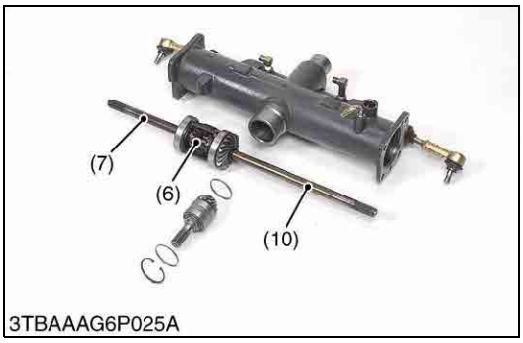

3TBAAAG6P025A

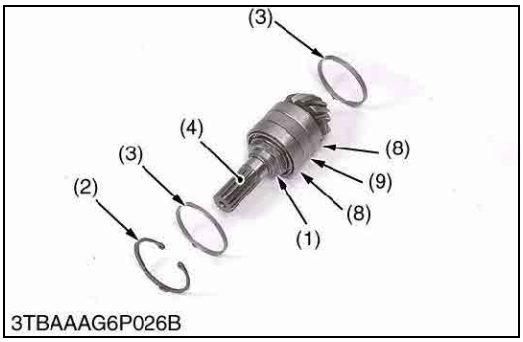

3TBAAAG6P026B

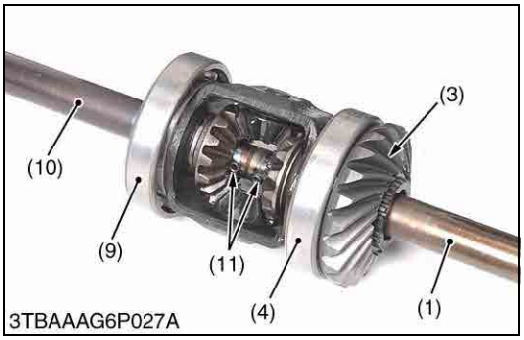

3TBAAAG6P027A

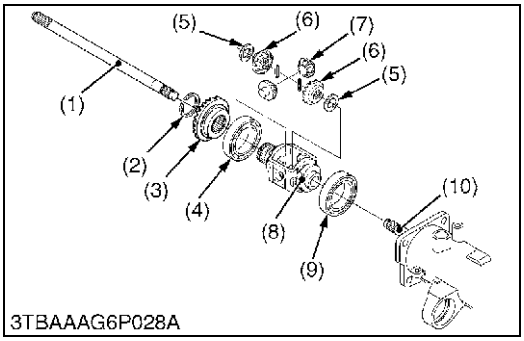

3TBAAAG6P028A

## Spiral Bevel Pinion Shaft and Differential Gear Assembly

1. Remove the oil seal from the front axle case (5).
2. Remove the internal cir-clip (2) and the collar (3).
3. Tap out the spiral bevel pinion shaft (4) to the rear side.
4. Remove the differential gear assembly (6) from the right side of the front axle case.
5. Remove the nut (1) from the spiral bevel pinion shaft (4).
6. Remove the taper roller bearings (8).

**(When reassembling)**

- Replace the oil seal and the nut (1) with new one.
- Apply grease to the oil seal.
- Tighten up the nut (1) until the turning torque of the spiral bevel pinion shaft reaches the factory specifications. (See page 5-S12.)
- Install the same shims and collars before they are removed.
- Install the taper roller bearing correctly, noting their direction, and apply gear oil to them.
- Stake the lock nut firmly.

(1) Nut
(2) Internal Cir-clip
(3) Collar
(4) Spiral Bevel Pinion Shaft
(5) Front axle Case
(6) Differential Gear Assembly
(7) Differential Yoke Shaft (L.H.)
(8) Taper Roller Bearing
(9) Collar
(10) Differential Yoke Shaft (R.H.)

9Y1211156FAS0016US0

## Differential Gear

1. Remove the external cir-clip (2) from the differential case (8).
2. Tap out the spring pins (11) from the differential yoke shafts (1), (10).
3. Remove the differential yoke shafts (1), (10) from the differential case (8).
4. Remove the bevel gears (6) and the collars (5) from the differential case (8).
5. Remove the spiral bevel gear (3) and the ball bearings (4) from the differential case (8).

■ **NOTE**

- **Arrange the parts to know their original position.**

**(When reassembling)**

- Apply molybdenum disulfide (Three Bond 1901 or equivalent) to the inner circumferential surface of the differential bevel gears (6) and differential pinion (7).

(1) Differential Yoke Shaft (R.H.)
(2) External Cir-clip
(3) Spiral Bevel Gear
(4) Ball Bearing
(5) Collar
(6) Bevel Gear
(7) Differential Pinion
(8) Differential Case
(9) Ball Bearing
(10) Differential Yoke Shaft (L.H.)
(11) Spring Pin

9Y1211156FAS0017US0

https://truckmanualshub.com/


# [3] SERVICING

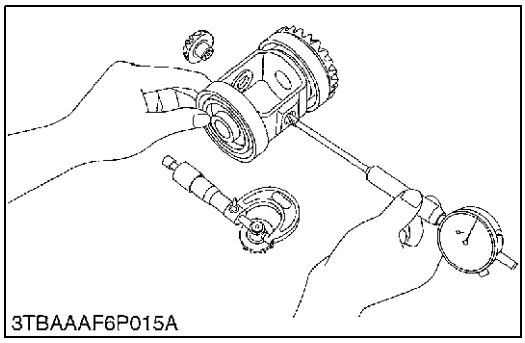


### Clearance between Differential Case and Differential Pinion

1. Measure the differential pinion boss O.D. with an outside micrometer.
2. Measure the differential case bore I.D. with a cylinder gauge, and calculate the clearance.
3. If the clearance exceeds the allowable limit, replace damage parts.

| | | |
|---|---|---|
| Clearance between differential case and differential pinion | Factory specification | 0.032 to 0.068 mm<br>0.0013 to 0.0026 in. |
| | Allowable limit | 0.2 mm<br>0.008 in. |

| | | |
|---|---|---|
| Differential case bore I.D. | Factory specification | 15.000 to 15.018 mm<br>0.59056 to 0.59125 in. |
| Differential pinion O.D. | Factory specification | 14.9509 to 14.968 mm<br>0.58859 to 0.58829 in. |

9Y1211156FAS0018US0

### Clearance between Differential Case and Yoke Shaft

1. Measure the yoke shaft O.D. with an outside micrometer.
2. Measure the differential case bore I.D. with a cylinder gauge, and calculate the clearance.
3. If the clearance exceeds the allowable limit, replace damage parts.

| | | |
|---|---|---|
| Clearance between differential case and yoke shaft | Factory specification | 0.020 to 0.051 mm<br>0.00079 to 0.0020 in. |
| | Allowable limit | 0.2 mm<br>0.008 in. |

| | | |
|---|---|---|
| Differential pinion shaft I.D. | Factory specification | 20.000 to 20.018 mm<br>0.78741 to 0.78811 in. |
| Yoke shaft O.D. | Factory specification | 19.967 to 19.980 mm<br>0.78611 to 0.78661 in. |

9Y1211156FAS0019US0

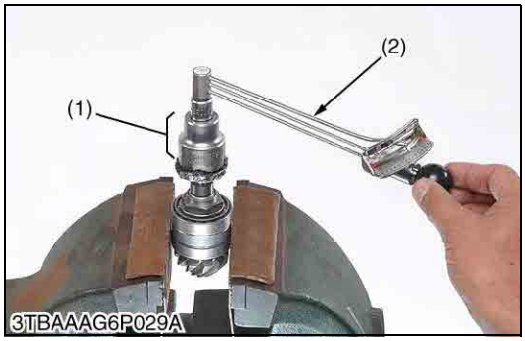


### Turning Torque of Spiral Bevel Pinion Shaft

1. Cramp the spiral bevel pinion shaft assembly to the vise and tighten the staking nut.
2. Measure the turning torque of bevel pinion shaft.
3. If the turning torque is not within the factory specifications, adjust with the lock nut.

| | | |
|---|---|---|
| Turning torque | Factory specification | 0.8 to 1.0 N·m<br>0.08 to 0.10 kgf·m<br>0.59 to 0.73 lbf·ft |

■ **NOTE**

- **After turning force adjustment, be sure to stake the lock nut.**

(1) Adaptor (2) Torque Wrench

9Y1211156FAS0020US0

https://truckmanualshub.com/


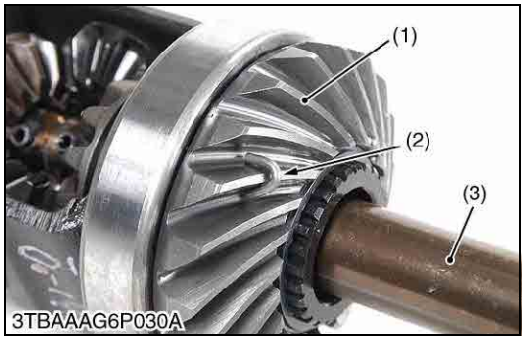


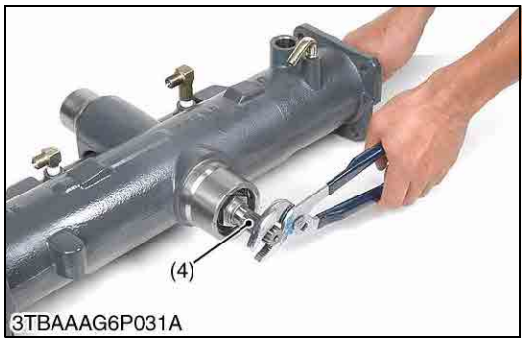

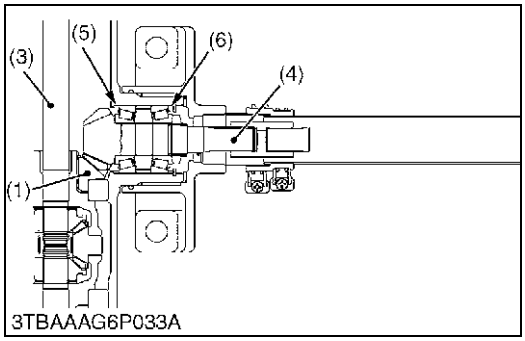


**Backlash between Spiral Bevel Pinion Shaft and Spiral Bevel Gear**

1. Place the solder wire (2) on the gear tooth of the spiral bevel gear (1).
2. Install the spiral bevel gear (1) and the differential yoke shaft (3) into the front axle case.
3. Install the spiral bevel pinion shaft (4) to the front axle case. Install the internal cir-clip to the front axle case.
4. Turn the spiral bevel pinion shaft (4) holding the differential yoke shaft (3) by hand lightly.
5. Remove the solder wire (2). And measure the solder wire (2).
6. If the backlash is not within the factory specifications, change the adjusting collars (5), (6). For example change the adjusting collar (6) to 0.1 mm (0.004 in.) smaller size, and change the adjusting collar (5) to 0.1 mm (0.004 in.) larger size.
7. Adjust the backlash properly by repeating the above procedures.

| | | |
|---|---|---|
| Backlash between spiral bevel pinion shaft and spiral bevel gear | Factory specification | 0.10 to 0.30 mm<br>0.0040 to 0.011 in. |

**(Reference)**

- Above factory specification should be measured on the tooth of spiral bevel pinion. When measuring the backlash on the spline of its shaft, factory specification will be 0.0571 to 0.1714 mm (0.00225 to 0.00675 in.).
- Thickness of adjusting collars (5), (6):
  3.4 mm (0.134 in.)
  3.6 mm (0.142 in.)
  3.8 mm (0.150 in.)
  4.0 mm (0.157 in.)
  4.1 mm (0.161 in.)
  4.2 mm (0.165 in.)
  4.4 mm (0.173 in.)
  4.6 mm (0.181 in.)

(1) Spiral Bevel Gear
(2) Solder Wire
(3) Differential Yoke Shaft (RH)
(4) Spiral Bevel Pinion Shaft
(5) Adjusting Collar
(6) Adjusting Collar

9Y1211156FAS0021US0

https://truckmanualshub.com/


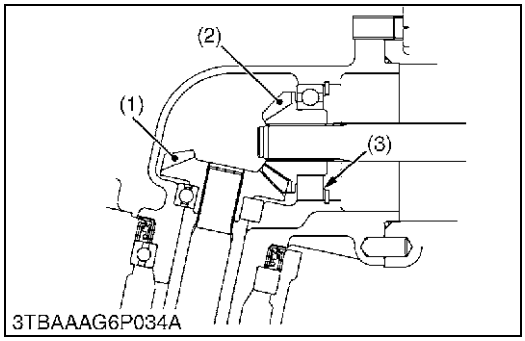


**Backlash between 10T or 11T Bevel Gear and 16T Bevel Gear**

1. Stick a strip of fuse to three spots on the 16T bevel gear (1) with grease.
2. Fix the front axle case, bevel gear case and front gear case.
3. Turn the axle.
4. Remove the bevel gear case from front axle case and measure the thickness of the fuses with an outside micrometer.
5. If the backlash is not within the factory specifications, adjust with shim (3).

| | | |
|---|---|---|
| Backlash between bevel gear and bevel gear (16T) | Factory specification | 0.10 to 0.30 mm<br>0.0040 to 0.011 in. |

**(Reference)**

- Thickness of adjusting shims (3):
  0.8 mm (0.031 in.)
  1.0 mm (0.039 in.)
  1.2 mm (0.047 in.)
  1.4 mm (0.055 in.)
- Tooth contact: More than 35 %

(1) Bevel Gear
(2) Bevel Gear
(3) Shim

9Y1211156FAS0022US0

https://truckmanualshub.com/

3TBAAAG6P035A

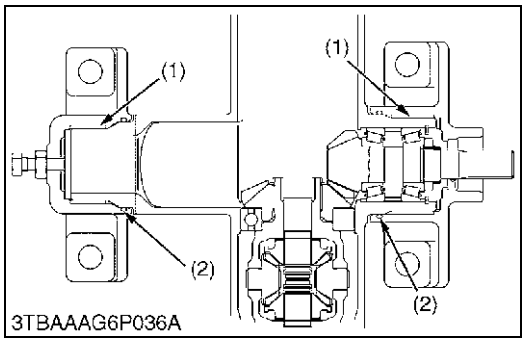

3TBAAAG6P036A

**Clearance between Front Axle Case Bosses and Bracket Bushing**

1. Measure the front axle case bosses O.D. with an outside micrometer.
2. Measure the bracket Bushing I.D. with a cylinder gauge, and calculate the clearance.
3. If the clearance exceeds the allowable limit, replace the bracket bushing.
4. If the clearance still exceeds the allowable limit, replace the front axle case.

| | | |
|---|---|---|
| Clearance between front axle case boss (front) and bracket bushing (front) | Factory specification | 0.125 to 0.285 mm<br>0.00493 to 0.0112 in. |
| | Allowable limit | 0.45 mm<br>0.018 in. |

| | | |
|---|---|---|
| Front axle case boss (front) O.D. | Factory specification | 54.94 to 54.97 mm<br>2.163 to 2.164 in. |
| Bracket bushing (front) I.D. | Factory specification | 55.095 to 55.225 mm<br>2.1691 to 2.1742 in. |

| | | |
|---|---|---|
| Clearance between front axle case boss (rear) and bracket bushing (rear) | Factory specification | 0.120 to 0.300 mm<br>0.00473 to 0.0118 in. |
| | Allowable limit | 0.45 mm<br>0.018 in. |

| | | |
|---|---|---|
| Front axle case boss (rear) O.D. | Factory specification | 65.005 to 65.035 mm<br>2.5593 to 2.5604in. |
| Bracket bushing (rear) I.D. | Factory specification | 65.155 to 65.305 mm<br>2.5652 to 2.5710 in. |

■ **Press-fitting Bushing**

- When replacing the bushings (1), press-fit it until bushing contact to inside of the front axle bracket holder.
- Apply grease to the O-rings (2) and be careful not to damage it.

■ **NOTE**

- **After replacing the bushing, be sure to adjust the front axle rocking force. (See page 5-S4.)**

(1) Bushing (2) O-ring

9Y1211156FAS0023US0

https://truckmanualshub.com/

# 6 STEERING

https://truckmanualshub.com/

# MECHANISM

## CONTENTS

1. HYDRAULIC CIRCUIT ..... 6-M1
2. STEERING CONTROLLER ..... 6-M2
3. STEERING CYLINDER ..... 6-M3
4. HYDRAULIC PUMP ..... 6-M4

https://truckmanualshub.com/


# 1. HYDRAULIC CIRCUIT

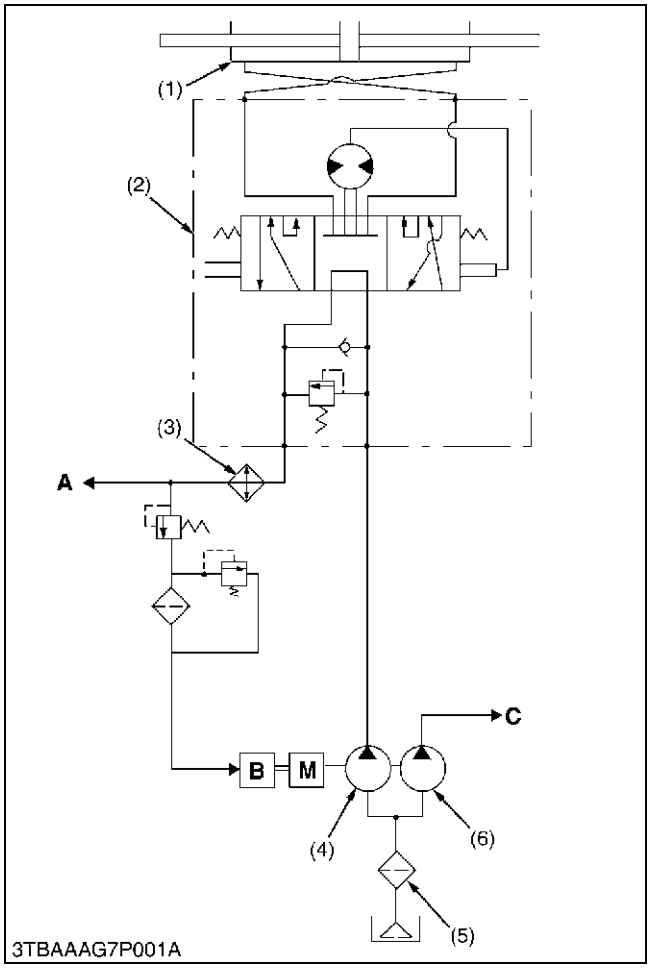


The model is provided with a full hydrostatic power steering.

In the hydrostatic power steering, the steering control is connected to the steering cylinder with only the hydraulic piping. Accordingly, it does not have mechanical transmitting parts such as steering gear, pitman arm, drag link, etc.. Therefore, it is simple in construction. This steering system consists of oil filter cartridge (5), hydraulic pump (4), steering controller (2), steering cylinder (1), etc..

By operating the power steering body, the required amount of oil is fed to the steering cylinder (1).

(1) Power Steering Cylinder
(2) Power Steering Controller
(3) Oil Cooler
(4) Hydraulic Pump (for Power Steering, Independent PTO and HST)
(5) Oil Filter Cartridge
(6) Hydraulic Pump (for 3-Points Hitch)

**A: Independent PTO Control Valve**
**B: HST**
**C: To 3-Points Hitch**

9Y1211156STM0001US0

https://truckmanualshub.com/


# 2. STEERING CONTROLLER

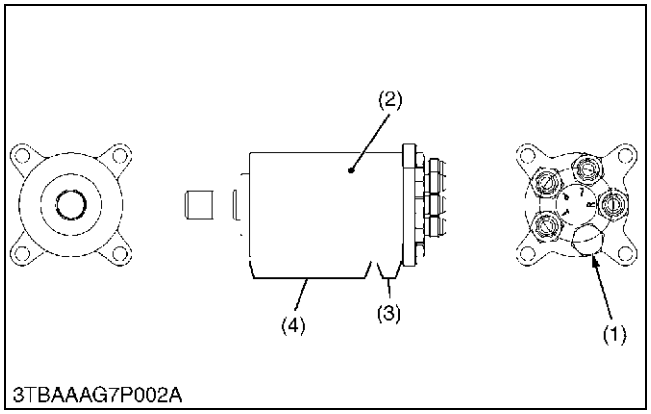


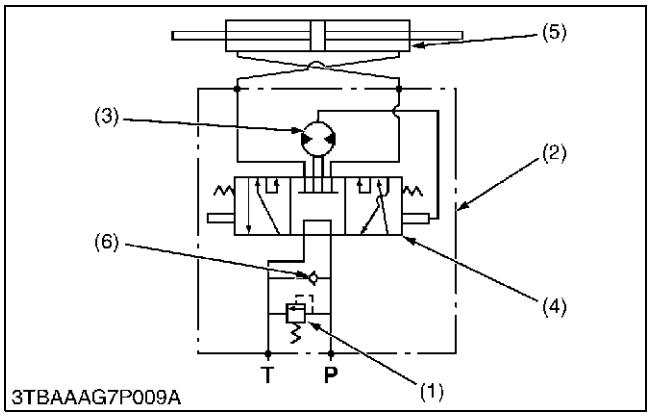


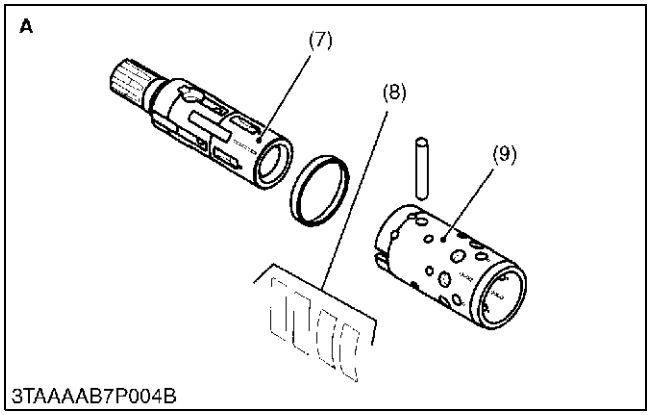


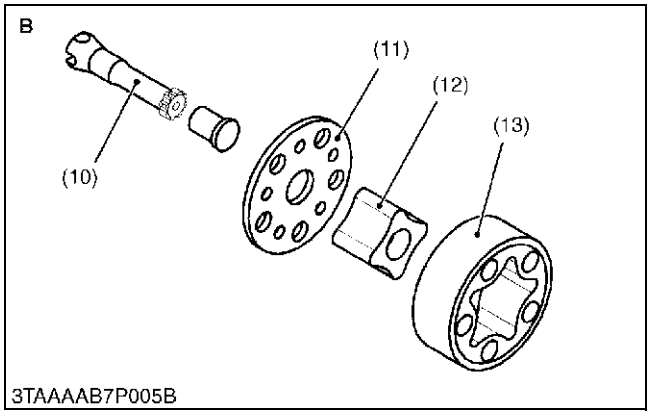


The steering controller consists of a control valve (4) and a metering device (3).

■ **Control Valve**

The control valve is a rotating spool type. When the steering wheel is not turned, the position of the spool (7) and sleeve (9) is kept neutral by the centering spring (8). This causes the forming of a "Neutral" oil circuit. When the steering wheel is turned either clockwise or counterclockwise, the position of the spool and sleeve changes in relation to the centering spring. This allows the forming of a "Right Turning" or "Left Turning" oil circuit. At the same time, the gear pump (Metering device) rotates with the spool and sends the oil to the cylinder corresponding to the rotation of the steering wheel.

■ **Metering Device**

An oil, sent from the hydraulic pump to the steering cylinder, passes through the metering device (3). Namely, when the rotor is driven, two chambers suck in oil due to volumetric change in the pump chambers formed between the rotor (12) and the stator (13), while oil is discharged from other two chambers. On the other hand, rotation of the steering wheel is directly transmitted to the rotor through the spool (7), drive shaft (10), etc. Accordingly, the metering device serves to supply the steering cylinder with oil, amount of which corresponds to the rotation of the steering wheel. The wheels are thus turned by the angle corresponding to the rotation of the steering wheel. When the engine stops or the hydraulic pump malfunctions, the metering device functions as a manual trochoid pump, which makes manual steering possible.

■ **Relief Valve**

The relief valve (1) is located in the steering controller. It controls the maximum pressure of the power steering system.

Its setting pressure is as follows

11.5 to 12.5 MPa

118 to 127 kgf/cm$^2$

1670 to 1810 psi

(1) Relief Valve
(2) Steering Controller
(3) Metering Device
(4) Control Valve
(5) Steering Cylinder
(6) Check Valve
(7) Spool
(8) Centering Spring
(9) Sleeve
(10) Drive Shaft
(11) Distributor Plate
(12) Rotor
(13) Stator

**A: Control Valve**
**B: Metering Device**
**P: P Port (from Hydraulic Pump)**
**T: T Port (to Independent PTO Clutch Valve and HST Circuit)**

9Y1211156STM0002US0

https://truckmanualshub.com/


# 3. STEERING CYLINDER

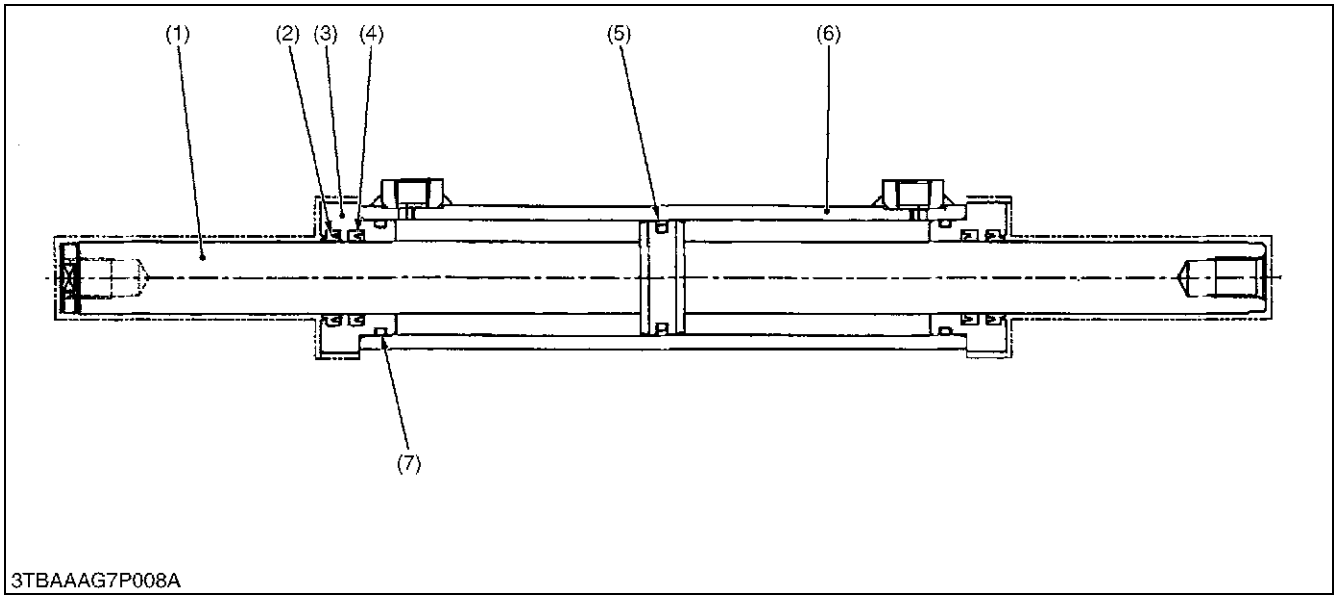


| | | | | | | | |
|---|---|---|---|---|---|---|---|
| (1) | Rod | (3) | Rod Cover | (5) | Piston Seal | (7) | O-ring |
| (2) | Dust Seal | (4) | U gasket | (6) | Cylinder Tube | | |

The steering cylinder is single piston both rod double-acting type. This steering cylinder is installed parallel to the front axle and connected to tie-rods.

The tie-rods connected to both knuckle arm guarantees equal steering movement to both front wheels.

The steering cylinder provide force in both directions. Depending upon direction the steering wheel is turned pressure oil enters at one end of the cylinder to extend, or the other end to retract it, thereby turning front wheel of the tractor.

9Y1211156STM0003US0

https://truckmanualshub.com/


# 4. HYDRAULIC PUMP

• See page 7-M2.

9Y1211156STM0004US0

https://truckmanualshub.com/

# SERVICING

## CONTENTS

1. TROUBLESHOOTING....6-S1
2. SERVICING SPECIFICATIONS....6-S3
3. TIGHTENING TORQUES....6-S4
4. CHECKING, DISASSEMBLING AND SERVICING....6-S5
   [1] CHECKING....6-S5
      (1) Relief Valve....6-S5
      (2) Hydraulic Pump for Power Steering....6-S5
   [2] DISASSEMBLING....6-S6
      (1) Separating Power Steering Controller....6-S6
      (2) Power Steering Controller....6-S6
      (3) Power Steering Cylinder....6-S7
   [3] SERVICING....6-S9
      (1) Power Steering Cylinder....6-S9

https://truckmanualshub.com/


# 1. TROUBLESHOOTING

| Symptom | Probable Cause and Checking Procedure | Solution | Reference Page |
|---|---|---|---|
| **Cannot Be Steered** | 1. Steering controller malfunctioning | Replace steering controller | 6-S6 |
| **Hard Steering** | 1. Tire air pressure of the tires is incorrect | Check air pressure | G-45 |
| | 2. Oil leak from pipe joint | Check hose joint | 6-S6 |
| | 3. Hydraulic pump malfunctioning | Solution order<br>1. Check hydraulic flow test | 7-S6 |
| | | 2. Replace hydraulic pump | 7-S9 |
| | 4. Improper relief valve pressure | Solution order<br>1. Check system pressure | 6-S5 |
| | | 2. Replace steering controller | 6-S6 |
| | 5. Steering controller malfunctioning | Solution order<br>1. Check system pressure | 6-S5 |
| | | 2. Replace steering controller | 6-S6 |
| **Steering Force Fluctuates** | 1. Air sucked in pump due to lack of oil | Check transmission oil | G-8 |
| | 2. Air sucked in pump from suction circuit | Bleed air | 6-S6 |
| | 3. Steering controller malfunctioning | Solution order<br>1. Check system pressure | 6-S5 |
| | | 2. Replace steering controller | 6-S6 |
| **Steering Wheel Turns Spontaneously When Released** | 1. Steering controller malfunctioning | Solution order<br>1. Check system pressure | 6-S5 |
| | | 2. Replace steering controller | 6-S6 |
| **Low Operating Pressure** | 1. Oil leak from pipe | Check or replace pipe | 6-S6 |
| | 2. Pipe or hose broken | Replace pipe or hose | 6-S6 |
| | 3. Hydraulic pump malfunctioning | Solution order<br>1. Check hydraulic flow test | 7-S6 |
| | | 2. Replace hydraulic pump | 7-S9 |
| | 4. Improper relief valve adjustment | Solution order<br>1. Check system pressure | 6-S5 |
| | | 2. Replace steering controller | 6-S6 |
| | 5. Relief Valve malfunctioning | Solution order<br>1. Check system pressure | 6-S5 |
| | | 2. Replace steering controller | 6-S6 |

https://truckmanualshub.com/


| Symptom | Probable Cause and Checking Procedure | Solution | Reference Page |
|---|---|---|---|
| **Front Wheels Wander to Right and Left** | 1. Tire air pressure of the tires is incorrect | Check air pressure | G-45 |
| | 2. Improper toe-in adjustment | Adjust toe-in | 5-S4 |
| | 3. Insufficient bleeding | Bleed air | 6-S6 |
| | 4. Air sucked in pump due to lack of oil | Check transmission oil | G-8 |
| | 5. Air sucked in pump from suction circuit | Bleed air | 6-S6 |
| | 6. Steering controller malfunctioning | Solution order<br>1. Check system pressure | 6-S5 |
| | | 2. Replace steering controller | 6-S6 |
| **Wheels Are Turned to a Direction Opposite to Steering Direction** | 1. Cylinder piping connected in reverse | Repair steering cylinder hose | 6-S6 |
| **Steering Wheel Turns Idle in Manual Steering** | 1. Insufficient bleeding | Bleed air | 6-S6 |
| | 2. Air sucked in due to lack of oil | Check transmission oil | G-8 |
| **Noise** | 1. Air sucked in pump due to lack of oil | Check transmission oil | G-8 |
| | 2. Air sucked in pump from suction circuit | Bleed air | 6-S6 |
| | 3. Hose deformed | Replace hose | 6-S6 |
| **Oil Temperature Increases Rapidly** | 1. Steering controller (relief valve) malfunctioning | Solution order<br>1. Check system pressure | 6-S5 |
| | | 2. Replace steering controller | 6-S6 |

9Y1211156STS0001US0

https://truckmanualshub.com/


# 2. SERVICING SPECIFICATIONS

**POWER STEERING BODY**

| Item | | Factory Specification | Allowable Limit |
|---|---|---|---|
| Relief Valve | Setting Pressure | 11.5 to 12.5 MPa<br>118 to 127 kgf/cm$^2$<br>1670 to 1810 psi | – |

**POWER STEERING CYLINDER**

| Item | | Factory Specification | Allowable Limit |
|---|---|---|---|
| Steering Cylinder | I.D. | 40.000 to 40.062 mm<br>1.57480 to 1.57724 in. | 40.100 mm<br>1.57874 in. |
| Piston Rod to Guide | Clearance | 0.020 to 0.070 mm<br>0.00079 to 0.00276 in. | 0.200 mm<br>0.00787 in. |

9Y1211156STS0002US0

https://truckmanualshub.com/


# 3. TIGHTENING TORQUES

Tightening torques of screws, bolts and nuts on the table below are especially specified.
(For general use screws, bolts and nuts: Refer to "5. TIGHTENING TORQUES" on page G-11.)

| Item | N·m | kgf·m | lbf·ft |
|---|---|---|---|
| Power steering hose for power steering cylinder | 24 to 28 | 2.5 to 2.9 | 18 to 20 |
| Power steering controller for pipes and hoses | 24 to 28 | 2.5 to 2.9 | 18 to 20 |
| Universal joint mounting bolt | 24 to 28 | 2.5 to 2.9 | 18 to 20 |
| Tie-rod slotted nut | 18 to 35 | 1.9 to 3.5 | 14 to 25 |
| Tie-rod joint | 74 to 84 | 7.5 to 8.5 | 55 to 61 |

9Y1211156STS0003US0

https://truckmanualshub.com/


# 4. CHECKING, DISASSEMBLING AND SERVICING

## [1] CHECKING

### (1) Relief Valve

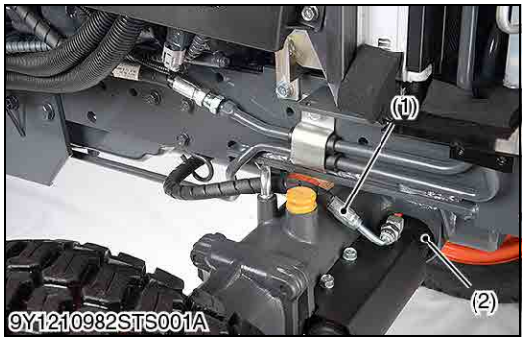

**Relief Valve Operating Pressure**

1. Disconnect the power steering hose L.H. (or R.H.) from steering the power steering cylinder, and set a pressure gauge and cable.

**(Reference)**

- Hose and adaptor size: 9/16-18UNF, 37 ° flare.

2. Start the engine and set at maximum speed.
3. Fully turn the steering wheel to the left (or right) to check the feeling which the steering wheel lightly locks. Read the relief valve operating pressure when the steering wheel to the above-mentioned lock position by operation force at approximately 9.8 N (1 kgf, 2.2 lbf) of outer.

■ **NOTE**

- **After set a pressure gauge, be sure to bleed air.**
- **Note that the pressure value changes by the pump action of the power steering controller when the steering operation is continued after the steering wheel is lightly locked and accurate relief valve pressure cannot be measured.**

**(Bleeding air in power steering circuit)**

- Start the engine.
- Turn the steering wheel slowly in both directions all the way alternately several times, and stop the engine.

| | | |
|---|---|---|
| Relief valve operating pressure | Factory specification | 11.5 to 12.5 MPa<br>118 to 127 kgf/cm$^2$<br>1670 to 1810 psi |

| | | |
|---|---|---|
| Tightening torque | Power steering hose for power steering cylinder | 24 to 28 N·m<br>2.5 to 2.9 kgf·m<br>18 to 20 lbf·ft |

(1) Power Steering Hose (R.H.)
(2) Power Steering Cylinder
(3) Power Steering Hose (L.H.)

9Y1211156STS0004US0

### (2) Hydraulic Pump for Power Steering

- See page 7-S6.

9Y1211156STS0005US0

https://truckmanualshub.com/


# [2] DISASSEMBLING

## (1) Separating Power Steering Controller

**Steering Wheel, Meter Panel Bonnet and Fuel Tank**

- See page 1-S23.

9Y1211156STS0006US0

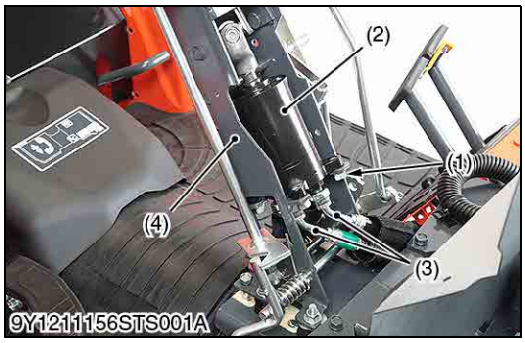


**Steering Post Assembly**

1. Remove the steering post mounting bolts.
2. Disconnect the power steering hoses (3) from the power steering controller (2).
3. Remove the steering post assembly (4) from the main frame.

**(When reassembling)**

- Connect the power steering hoses (3) to the power steering controller (2) securely.

| | | |
|---|---|---|
| Tightening torque | Power steering controller for pipes and hoses | 24 to 28 N·m<br>2.5 to 2.9 kgf·m<br>18 to 20 lbf·ft |

(1) Bolt
(2) Power Steering Controller
(3) Power Steering Hose
(4) Steering Post Assembly

9Y1211156STS0007US0

## (2) Power Steering Controller

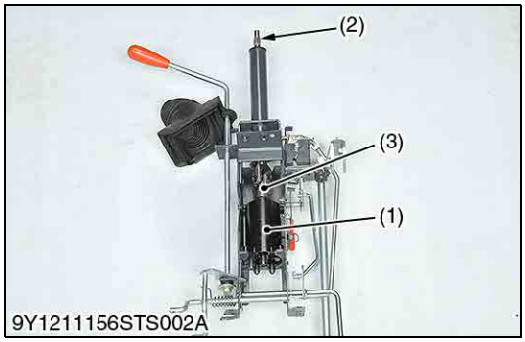


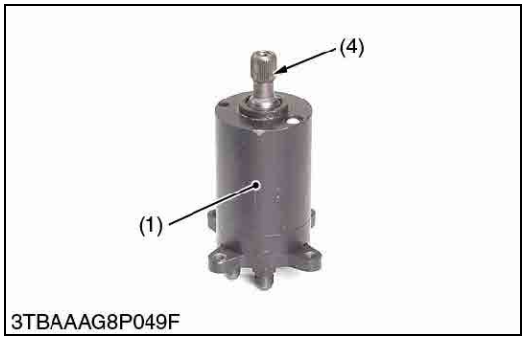


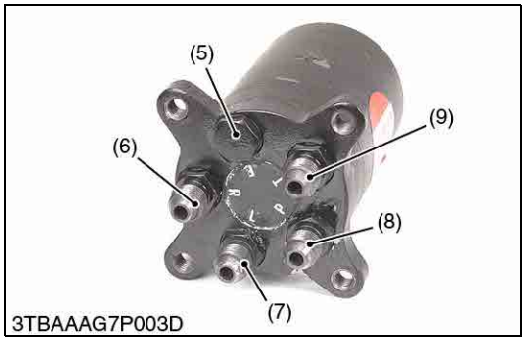


**Power Steering Controller**

1. Remove the bolt from the universal joint (3).
2. Remove the power steering controller (1) from the steering post.

**(When reassembling)**

- If oil leaking from the power steering controller (1) is found, replace the power steering controller (1). O-ring in the power steering controller (1) is not supplied as a spare part.
- Align the power steering controller shaft (4) to the universal joint (3) securely.

| | | |
|---|---|---|
| Tightening torque | Universal joint mounting bolt | 24 to 28 N·m<br>2.5 to 2.8 kgf·m<br>18 to 20 lbf·ft |

(1) Power Steering Controller
(2) Steering Shaft
(3) Universal Joint
(4) Power Steering Controller Shaft
(5) Relief Valve
(6) Adaptor (to Right Cylinder)
(7) Adaptor (to Left Cylinder)
(8) Adaptor (to Hydraulic Pump)
(9) Adaptor (to Oil Cooler)

9Y1211156STS0008US0

https://truckmanualshub.com/


# (3) Power Steering Cylinder

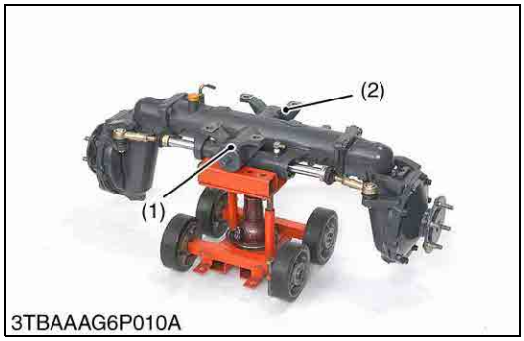


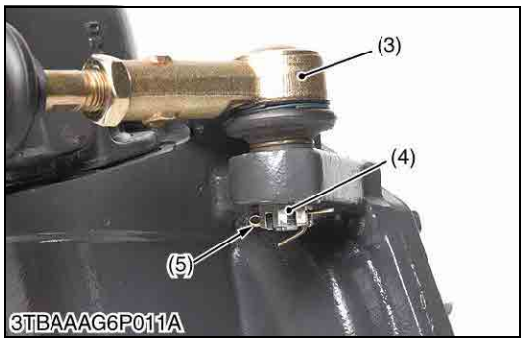


**Front Wheels**

- See page 5-S5.

9Y1211156STS0009US0

**Tie-rod Joint**

1. Remove the slotted nut (4) and remove the tie-rod end (3).
2. Remove the front axle brackets (1), (2).

**(When reassembling)**

- Apply grease to the thrust collar of front axle bracket.
- Apply grease to the O-ring and be careful not to damage it.
- After tightening the slotted nut, install cotter pin as shown in the figure.

**(Bleeding air in power steering circuit)**

- Start the engine.
- Turn the steering wheel slowly in both directions all the way alternately several times, and stop the engine.

| | | |
|---|---|---|
| Tightening torque | Tie-rod slotted nut | 18 to 35 N·m<br>1.9 to 3.5 kgf·m<br>14 to 25 lbf·ft |
| | Tie-rod joint | 74 to 84 N·m<br>7.6 to 8.5 kgf·m<br>55 to 61 lbf·ft |

(1) Front Axle Bracket (Front)
(2) Front Axle Bracket (Rear)
(3) Tie-rod End
(4) Slotted Nut
(5) Cotter Pin

9Y1211156STS0010US0

https://truckmanualshub.com/


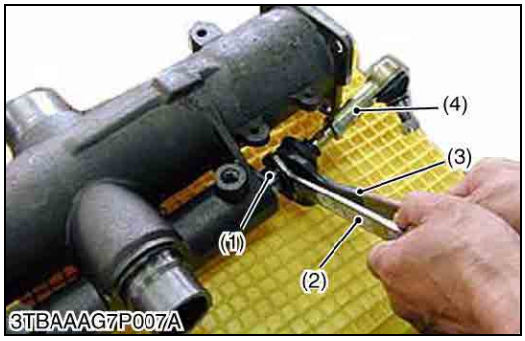


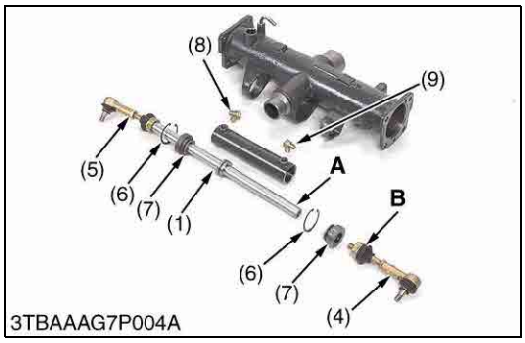


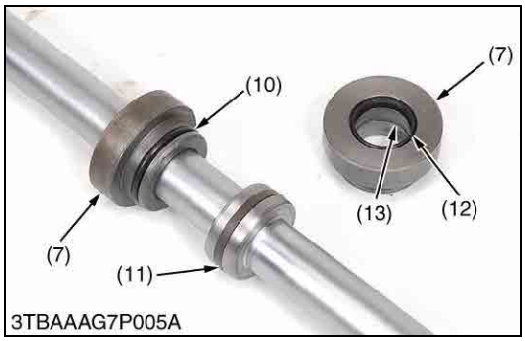


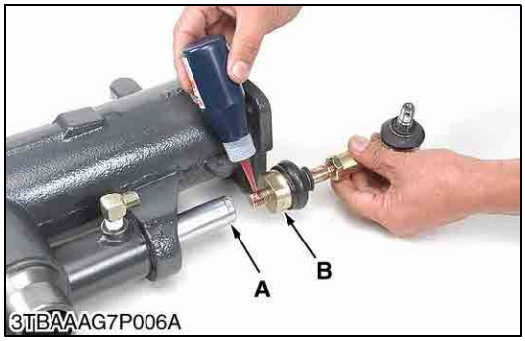


## Power Steering Cylinder

**CAUTION**

- **Since power steering cylinder is full of high-pressured steering oil, high-pressured oil is injected out from hose adopters by pushing piston rods.**
- **This injected oil can penetrate the skin or eyes causing serious injury.**
- **Use appropriate protective wear to prevent serious injury.**
- **Use waste to cover the adopters.**
- **Before disassembling drain steering oil from power steering cylinder.**

1. Remove the tie-rod end (4) from the rod (1) using spanners (2), (3).
2. Remove the adaptors (8), (9).
3. Remove the rod cover (7).
4. Tap out the rod (1) to the right front wheel side.

**(When reassembling)**

- Apply the liquid lock (Three Bond 1375N or equivalent) to the tie-rod ends (4), (5).

| | | |
|---|---|---|
| Tightening torque | Tie-rod joint | 74 to 84 N·m<br>7.5 to 8.6 kgf·m<br>55 to 61 lbf·ft |

(1) Rod
(2) Thin Spanner
(3) Standard Spanner
(4) Tie-rod End (L.H.)
(5) Tie-rod End (R.H.)
(6) Internal Cir-clip
(7) Rod Cover
(8) Adaptor (R.H.)
(9) Adaptor (L.H.)
(10) O-ring
(11) Gasket
(12) Dust Seal
(13) U Gasket

**A: Position for thin thickness spanner**
**B: Position for standard thickness spanner**

9Y1211156STS0011US0

https://truckmanualshub.com/


# [3] SERVICING

## (1) Power Steering Cylinder

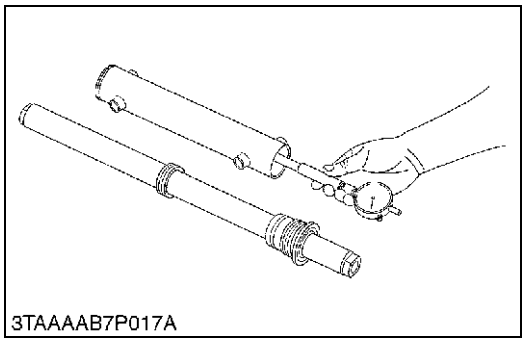
3TAAAAB7P017A

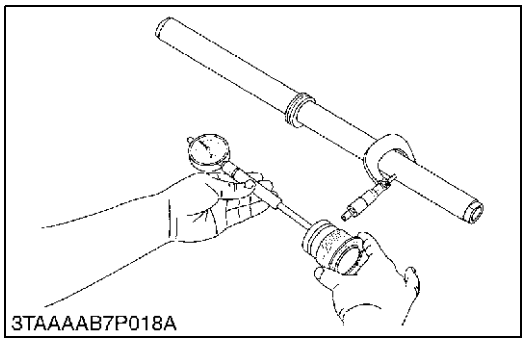
3TAAAAB7P018A

**Steering Cylinder I.D.**

1. Measure the steering cylinder I.D. with a cylinder gauge.
2. If the cylinder I.D. exceed the allowable limit, replace the cylinder barrel.

| | | |
|---|---|---|
| Steering cylinder I.D. | Factory specification | 40.000 to 40.062 mm<br>1.57480 to 1.57724 in. |
| | Allowable limit | 40.100 mm<br>1.57874 in. |

9Y1211156STS0012US0

**Clearance between Rod and Guide**

1. Measure the rod guide I.D. with a cylinder gauge.
2. Measure the rod O.D. with an outside micrometer, and calculate the clearance.
3. If the clearance exceeds the allowable limit, replace as a unit.

| | | |
|---|---|---|
| Clearance between rod and guide | Factory specification | 0.020 to 0.070 mm<br>0.00079 to 0.00276 in. |
| | Allowable limit | 0.200 mm<br>0.00787 in. |

9Y1211156STS0013US0

https://truckmanualshub.com/

# 7 HYDRAULIC SYSTEM

https://truckmanualshub.com/

# MECHANISM

## CONTENTS

1. HYDRAULIC CIRCUIT ..... 7-M1
2. HYDRAULIC PUMP ..... 7-M2
3. HYDRAULIC CIRCUIT ..... 7-M3
   [1] HYDRAULIC CIRCUIT ..... 7-M3
   [2] RELIEF VALVE ..... 7-M4
   [3] POSITION CONTROL VALVE ..... 7-M5
      (1) Structure ..... 7-M5
      (2) Operation ..... 7-M6
   [4] FEEDBACK LINKAGE FOR POSITION CONTROL ..... 7-M8
4. FRONT LOADER CONTROL VALVE ..... 7-M9
   [1] STRUCTURE ..... 7-M9
   [2] OPERATION ..... 7-M10
5. REMOTE CONTROL VALVE (IF EQUIPPED) ..... 7-M17
6. HYDRAULIC OUTLET ..... 7-M18

https://truckmanualshub.com/


# 1. HYDRAULIC CIRCUIT

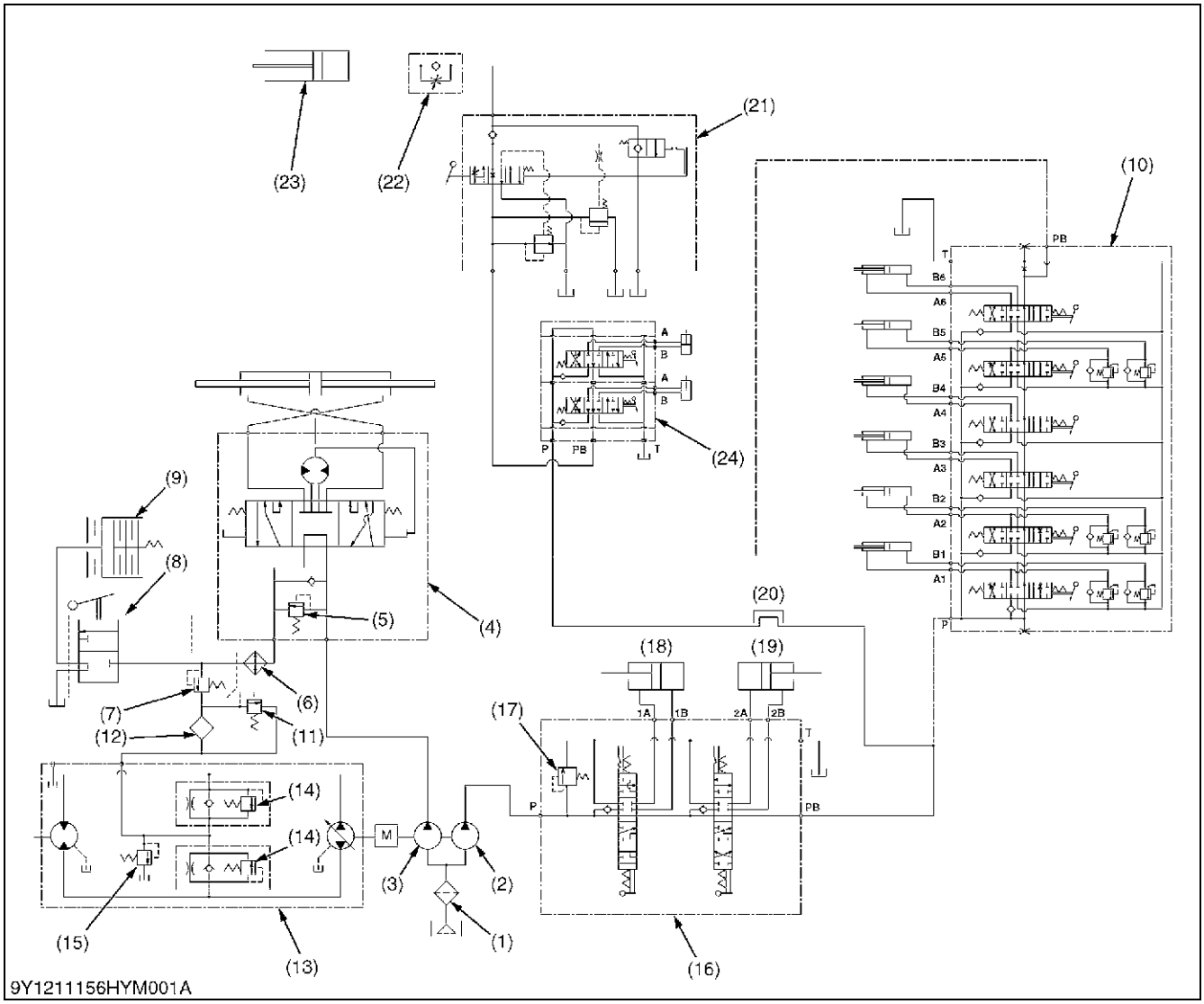


(1) Oil Filter
(2) Hydraulic Pump (For 3-point Hitch)
(3) Hydraulic Pump (For Power Steering)
(4) Power Steering
(5) Relief Valve (Power Steering Controller)
(6) Oil Cooler
(7) Regulating Valve (For Independent PTO Clutch)
(8) Control Valve for Independent PTO
(9) Independent PTO Clutch
(10) Control Valve for Backhoe BH70
(11) Relief Valve for Oil Filter
(12) Oil Filter
(13) HST
(14) Check and High Pressure Relief Valve
(15) Charge Relief Valve
(16) Front Loader Control Valve
(17) Relief Valve (For 3-point Hitch System and Front Loader System)
(18) Boom Cylinder
(19) Bucket Cylinder
(20) Rear Hydraulic Outlet
(21) Position Control Valve
(22) Lowering Speed Adjusting Valve
(23) Hydraulic Cylinder
(24) Aux Hydraulic Valve Kit

## Operating Pressure

| | | | |
|---|---|---|---|
| (2) | Hydraulic Pump (For 3-point Hitch)<br>Above 21.0 L/min. (5.55 U.S. gals/min., 4.62 Imp. gals/min.) | (14) | Check and High Pressure Relief Valve (For HST)<br>23 to 25 MPa (240 to 250 kgf/cm$^2$, 3400 to 3600 psi) |
| (3) | Hydraulic Pump (For Power Steering)<br>Above 15.8 L/min. (4.17 U.S. gals/min., 3.48 Imp. gals/min.) | (15) | Charge Relief Valve (For HST)<br>0.4 to 0.6 MPa (4.1 to 6.1 kgf/cm$^2$, 60 to 80 psi) |
| (5) | Relief Valve (For Power Steering Controller)<br>11.5 to 12.5 MPa (118 to 127 kgf/cm$^2$, 1670 to 1810 psi) | (17) | Relief Valve (3-point Hitch System and Front Loader System)<br>13.0 to 13.8 MPa (133 to 140 kgf/cm$^2$, 1890 to 2000 psi) |
| (7) | Regulating Valve (For Independent PTO)<br>1.1 to 1.5 MPa (11.2 to 15.3 kgf/cm$^2$, 160 to 210 psi) | | |

9Y1211156HYM0001US0

https://truckmanualshub.com/


# 2. HYDRAULIC PUMP

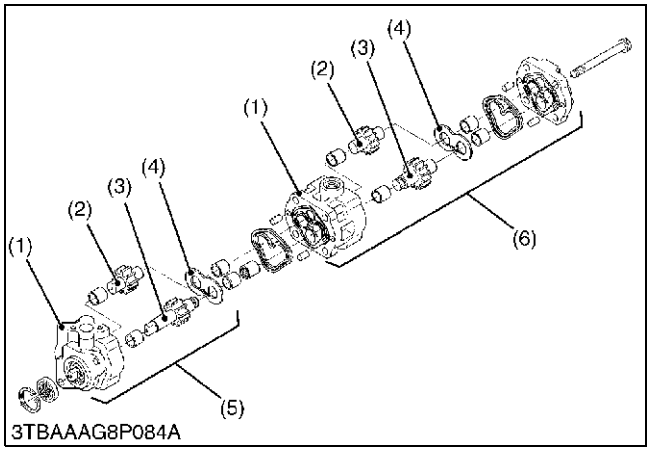


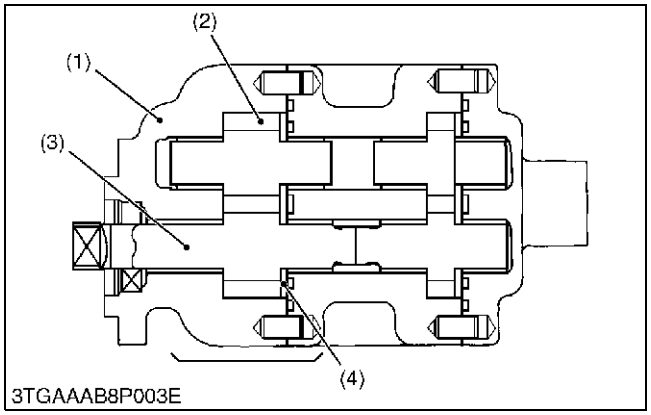


The hydraulic pump consists of the casing (1), side plate (4), and two spur gears (drive gear (3) and driven gear (2)) that are in mesh.

Hydraulic pump is driven by the fuel camshaft.

Maximum displacement is as follows.

**Hydraulic Pump (for 3-points Hitch)**

| Displacement | Engine speed | Condition |
|---|---|---|
| 21.0 L/min.<br>5.55 U.S.gals/min.<br>4.62 Imp.gals/min. | At 2800 $min^{-1}$ (rpm) | at no load |

**Hydraulic Pump (for Power Steering)**

| Displacement | Engine speed | Condition |
|---|---|---|
| 15.8 L/min.<br>4.17 U.S.gals/min.<br>3.48 Imp.gals/min. | At 2800 $min^{-1}$ (rpm) | at no load |

(1) Casing
(2) Driven Gear
(3) Drive Gear
(4) Side Plate
(5) Hydraulic Pump (for 3-Points Hitch)
(6) Hydraulic Pump (for Power Steering)

9Y1211156HYM0002US0

https://truckmanualshub.com/


# 3. HYDRAULIC CIRCUIT

## [1] HYDRAULIC CIRCUIT

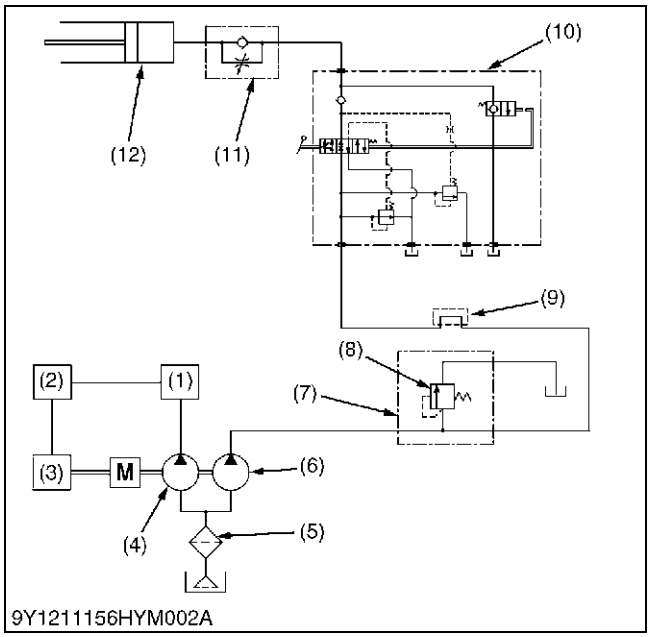


Two hydraulic pumps (4), (6) are installed in this series of machines.

Hydraulic oil is forced from hydraulic pump (6) to the loader control valve (7), relief valve (8), hydraulic outlet (9) and position control valve (10).

Three point hydraulic oil pressure is controlled by the relief valve (8).

(1) Power Steering Controller
(2) Independent PTO
(3) HST
(4) Hydraulic Pump (for Power Steering, Independent PTO and HST)
(5) Oil Filter Cartridge
(6) Hydraulic Pump (for 3-Points Hitch)
(7) Front Loader Control Valve
(8) Relief Valve
(9) Hydraulic Outlet
(10) Position Control Valve
(11) Lowering Speed Adjusting Valve
(12) Hydraulic Cylinder

9Y1211156HYM0003US0

https://truckmanualshub.com/


# [2] RELIEF VALVE

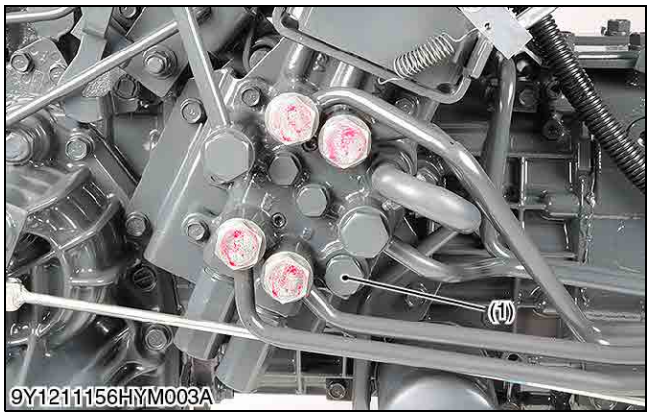


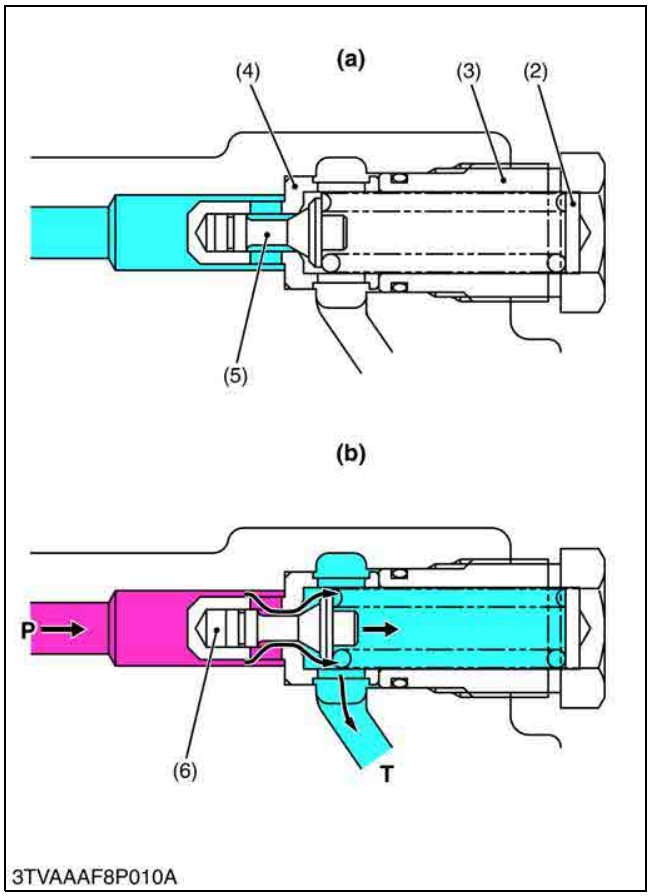


The hydraulic raising and lowering circuit is fitted with a relief valve to control the maximum pressure.

This is a guide piston relief valve with damper, a direct acting relief valve suitable for relatively high pressure and capacity, and constructed so as to prevent chattering and other unstableness associated with direct acting relief valves. As shown in the diagram, poppet (5) has a guide, and there is a valve chamber called a damping chamber (6) in the base of this guide piston. The valve inlet is connected to this chamber through the clearance between the guide surface and the seat so that the chamber provides a damping effect, controlling valve vibration.

When the pressure in the circuit rises, the pressure in the damping chamber also rises, and when it exceeds the relief pressure setting the spring is compressed, making a clearance between the poppet and the seat. The hydraulic oil can escape to the transmission case through this clearance, controlling the pressure rise.

**(Reference)**

- Relief valve setting pressure
  13.0 to 13.8 MPa
  133 to 140 kgf/cm$^2$
  1890 to 2000 psi

**Condition**

- Engine speed
  Approx. 2800 min$^{-1}$ (rpm)
- Oil temperature
  50 °C (122 °F)

| | | | |
|---|---|---|---|
| (1) | Relief Valve | **(a)** | **Normal State** |
| (2) | Shim | **(b)** | **Active State** |
| (3) | Plug | **T:** | **T Port (To Transmission Case)** |
| (4) | Seat | | |
| (5) | Poppet | **P:** | **P Port (From Pump)** |
| (6) | Damping Chamber | | |

9Y1211156HYM0004US0

https://truckmanualshub.com/


# [3] POSITION CONTROL VALVE

## (1) Structure

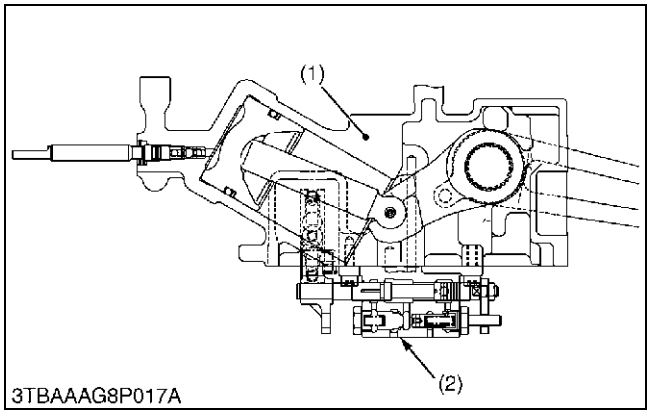


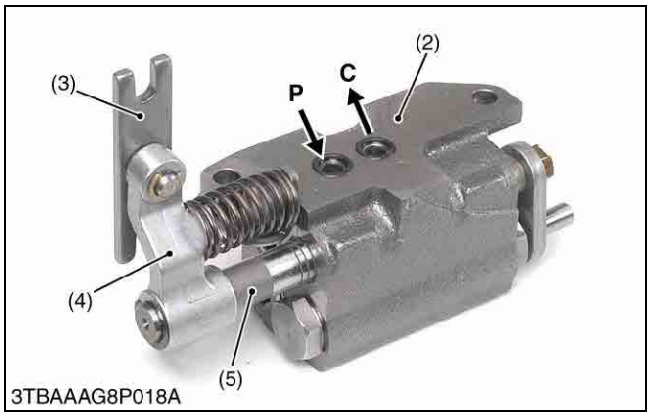


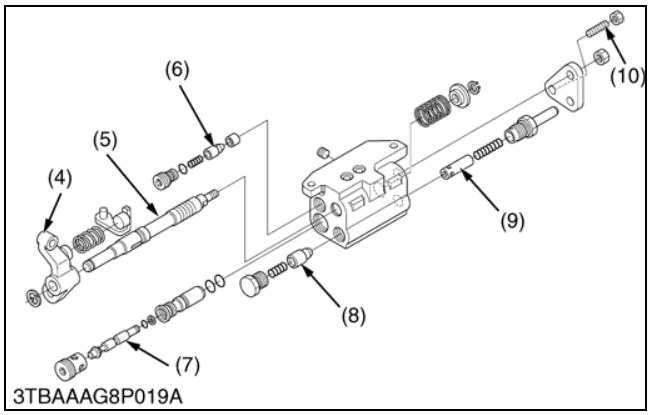


This position control valve (2) is located under the hydraulic cylinder block (1).

This control valve is mechanically connected to the position control lever with linkage.

This control valve is also mechanically connected to the lift arm with a feed back rod.

This control valve controls the oil flow forced from hydraulic pump and the oil returned back from the hydraulic cylinder.

(1) Hydraulic Cylinder Block
(2) Position Control Valve
(3) Link
(4) Lever
(5) Spool
(6) Poppet
(7) Poppet
(8) Poppet
(9) Poppet
(10) Set Screw

**P: Pump Port**
**C: Cylinder Port**

9Y1211156HYM0005US0

https://truckmanualshub.com/


## (2) Operation

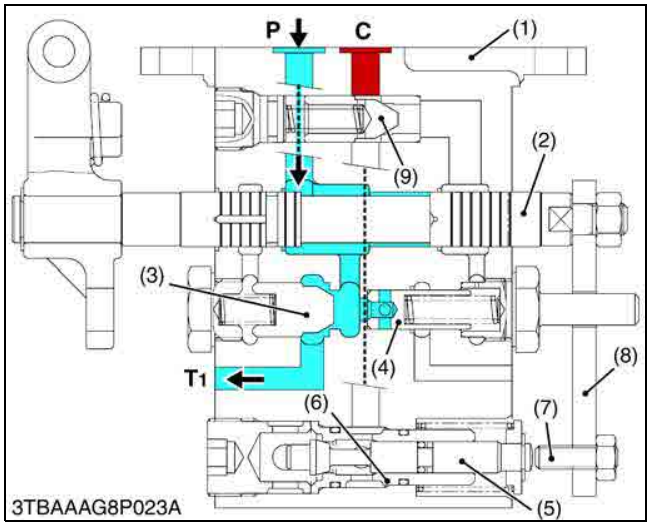


**Neutral**

Oil forced into the control valve through **P** port pushes and opens the unload valve (3), and opens the unload valve (3), and then returns to the transmission case through **T1** port.

Oil behind the unload valve (3) returns to the transmission case through the groove of the spool (2).

Since the check valve (9) and the poppet 2 (5) are closed, oil in the hydraulic cylinder does not flow to the transmission case. Thus, the implement remains at its fixed position.

(1) Valve Body
(2) Spool
(3) Unload Valve
(4) Unload Poppet
(5) Poppet 2
(6) Sleeve
(7) Adjusting Bolt
(8) Connecting Plate
(9) Check Valve

**P: Pump Port**
**C: Cylinder Port**
**T1: Tank Port**

9Y1211156HYM0006US0

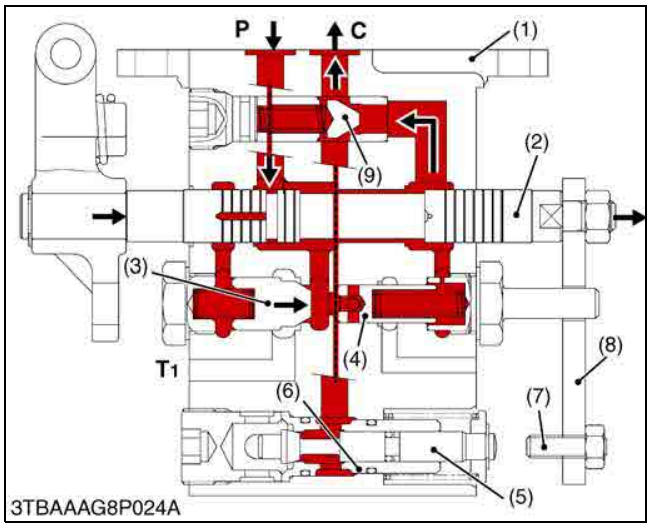


**Lift**

When the position control lever is set to **"LIFT"** position, the spool (2) is pushed into the valve body (1).

The oil forced into the control valve body (1) through **P** port flows to two oil circuits.

The first circuit is oil flowing to the back of the unload valve (3) to close it.

The second oil circuit is oil flowing to the check valve (9) and the hydraulic cylinder through **C** port to lift the implement.

(1) Valve Body
(2) Spool
(3) Unload Valve
(4) Unload Poppet
(5) Poppet 2
(6) Sleeve
(7) Adjusting Bolt
(8) Connecting Plate
(9) Check Valve

**P: Pump Port**
**C: Cylinder Port**
**T1: Tank Port**

9Y1211156HYM0007US0

https://truckmanualshub.com/


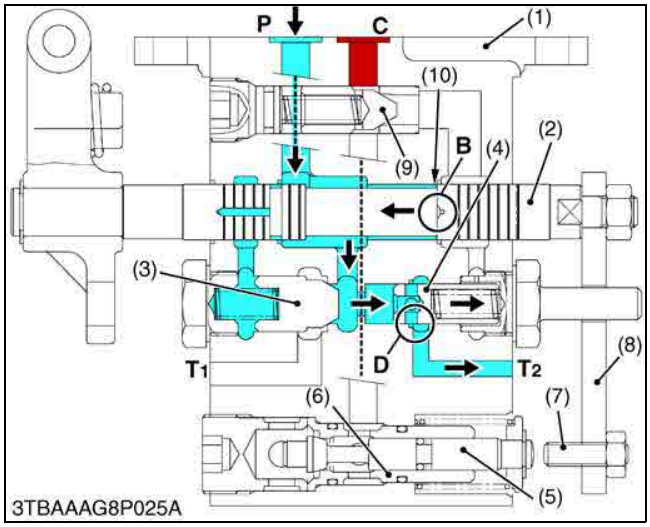


## Shockless mechanism operating (Lift to Neutral)

When the implement begins to lift up, the feedback rod connected to the lift arm pushes back the spool (2) to near **"NEUTRAL"** position.

When the implement lifts up near the **"NEUTRAL"** position, quantity of oil passing through the orifice (10) is reduced.

It causes oil pressure difference between portion **B** and unload poppet (4).

Since oil pressure at unload poppet (4) is higher than oil pressure at portion **D**, oil forced from **P** port pushes and opens unload poppet (4), and oil drains through **T2** port to transmission case.

Quantity of oil flowing through portion **B** is less.

Quantity of oil flowing to unload poppet (4) is greater.

It causes oil pressure increase at portion **D** of the unload poppet (4).

While the implement is coming to **"NEUTRAL"** position, quantity of oil flowing to spool (2) is reduced at portion **B**. And then, oil drains through unload poppet (4) to transmission case.

It causes implement's smooth stopping at **"NEUTRAL"** position without shock.

(1) Valve Body
(2) Spool
(3) Unload Valve
(4) Unload Poppet
(5) Poppet 2
(6) Sleeve
(7) Adjusting Bolt
(8) Connecting Plate
(9) Check Valve
(10) Orifice

**P: Pump Port**
**B: Portion B**
**C: Cylinder Port**
**D: Portion D**
**T1: Tank Port**

9Y1211156HYM0008US0

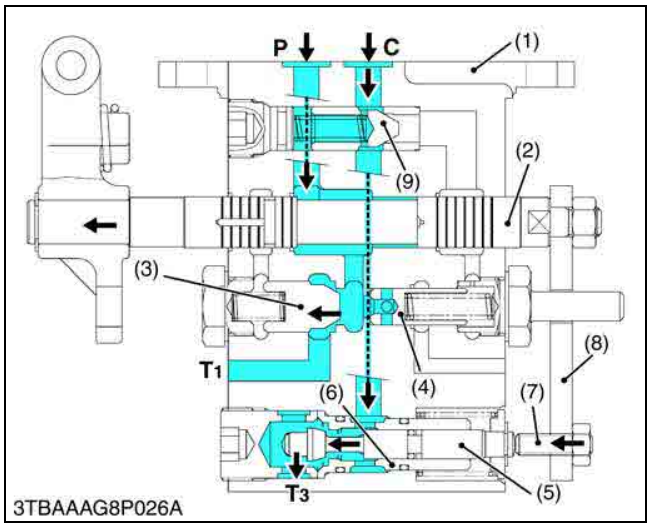


## Down

When the position control lever is set to **"DOWN"** position, the spool (2) is pulled out from the control valve body (1).

At the same time, the adjust bolt (7) connected to the connecting plate (8) pushes the poppet 2 (5) into the control valve body (1). And then the poppet 2 (5) is opened.

Oil in the hydraulic cylinder is forced out from C port through and goes valve body (1) to transmission case by the weight of the implement, causing the implement to lower.

Oil forced into the control valve through **P** port pushes and opens the unload valve (3) and returns to the transmission case through **T1** port.

(1) Valve Body
(2) Spool
(3) Unload Valve
(4) Unload Poppet
(5) Poppet 2
(6) Sleeve
(7) Adjusting Bolt
(8) Connecting Plate
(9) Check Valve

**P: Pump Port**
**C: Cylinder Port**
**T1: Tank Port**
**T3: Tank Port**
**T4: Tank Port**

9Y1211156HYM0009US0

https://truckmanualshub.com/


# [4] FEEDBACK LINKAGE FOR POSITION CONTROL

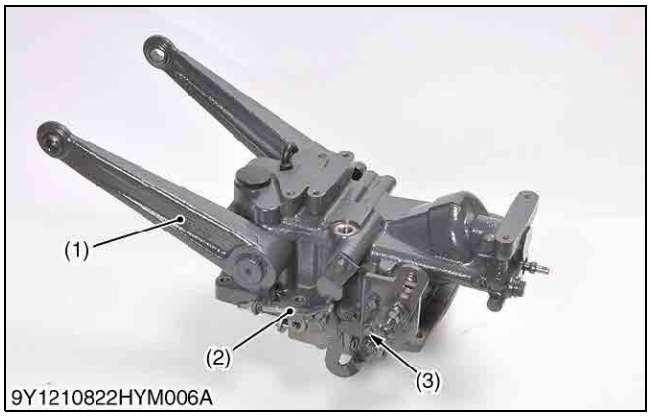

9Y1210822HYM006A

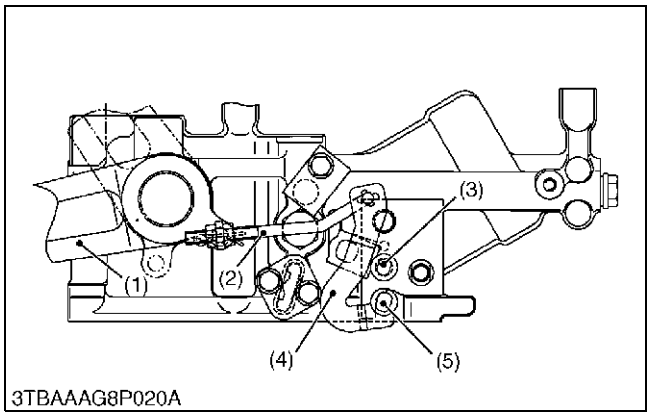

3TBAAAG8P020A

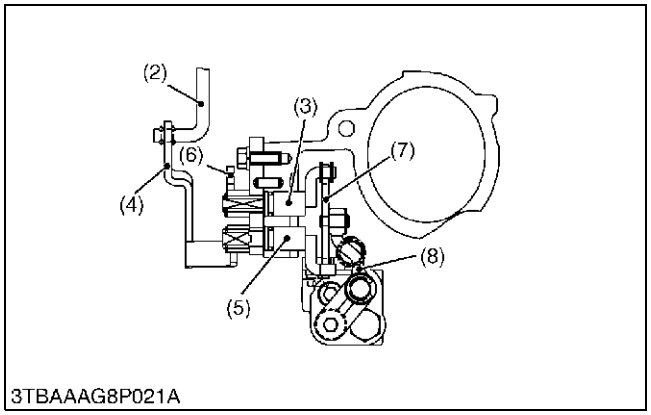

3TBAAAG8P021A

When the position control lever is moved to rearward to lift the implement, the spool of the position control valve is pushed in to form a lifting circuit by the motions of the control lever arm, the control lever shaft (3), the connecting arm (7) and the lever (8). After the lift arm (1) moves upward, the spool is pulled out and returns to form a neutral circuit by the motions of the feedback rod (2), the feedback arm (4), the feedback arm shaft (5), the connecting arm (7) and the lever (8).

As a result, the implement height can be easily determined in proportion to the set position of the position control lever.

(1) Lift Arm
(2) Feedback Rod
(3) Control Lever Shaft
(4) Feedback Arm
(5) Feedback Arm Shaft
(6) Control Lever Arm
(7) Connecting Arm
(8) Lever

9Y1211156HYM0010US0

https://truckmanualshub.com/


# 4. FRONT LOADER CONTROL VALVE

## [1] STRUCTURE

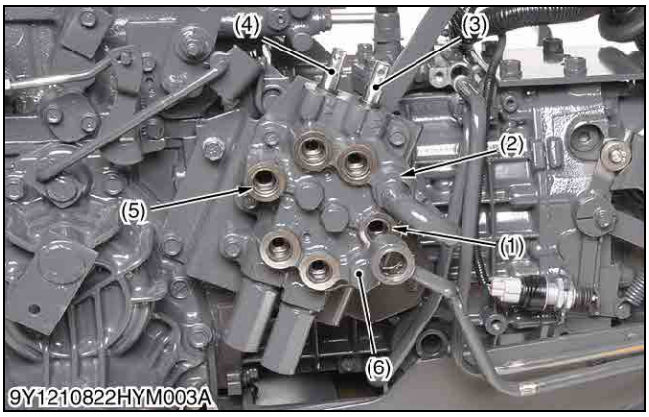


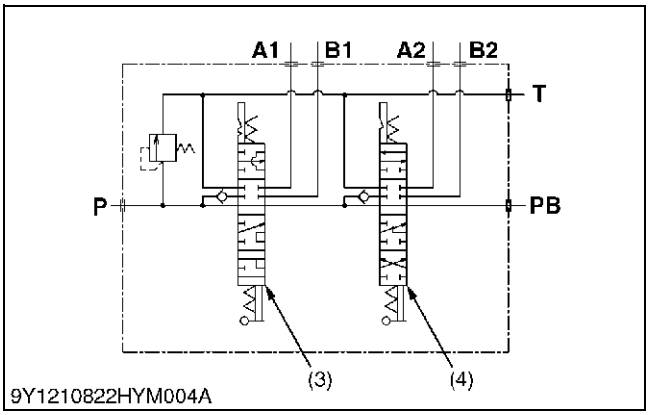


The control valve assembly consists of one casting block and four major section as shown above.

**1) Inlet and Outlet Section**

This section has **P** and **T** ports.

The **P** port is connected to the **OUTLET** port of hydraulic block by the hydraulic hose.

The **T** port is connected to the **TANK** port of hydraulic block by the hydraulic hose.

**2) Boom Control Section**

The boom control valve is consists of 4-position, 6-connection, detent, spring center type, consisting of a mono block valve housing, spool, load check valve, etc. This valve has **A1** and **B1** ports and controls oil flow to the boom cylinder.

**3) Bucket Control Section**

The bucket control valve is consists of 4-position, 6-connection, no detent, spring center type, consisting of a mono block valve housing, spool, load check valve, etc. This valve has **A2** and **B2** ports and controls oil flow to the bucket cylinder.

**4) Power Beyond**

This section has **PB** port which is connected to the **INLET** port of hydraulic block by the hydraulic hose, and feeds oil to the 3-point hitch hydraulic control valve.

| | | | |
|---|---|---|---|
| (1) | Pump Port | **P:** | **P Port** |
| (2) | Tank Port | **T:** | **T Port** |
| (3) | Boom Control Spool | **A1:** | **A1 Port** |
| (4) | Bucket Control Spool | **A2:** | **A2 Port** |
| (5) | Power Beyond Port | **B1:** | **B1 Port** |
| (6) | Loader Valve Assembly | **B2:** | **B2 Port** |
| | | **PB:** | **PB Port** |

9Y1211156HYM0011US0

https://truckmanualshub.com/


# [2] OPERATION

## Neutral

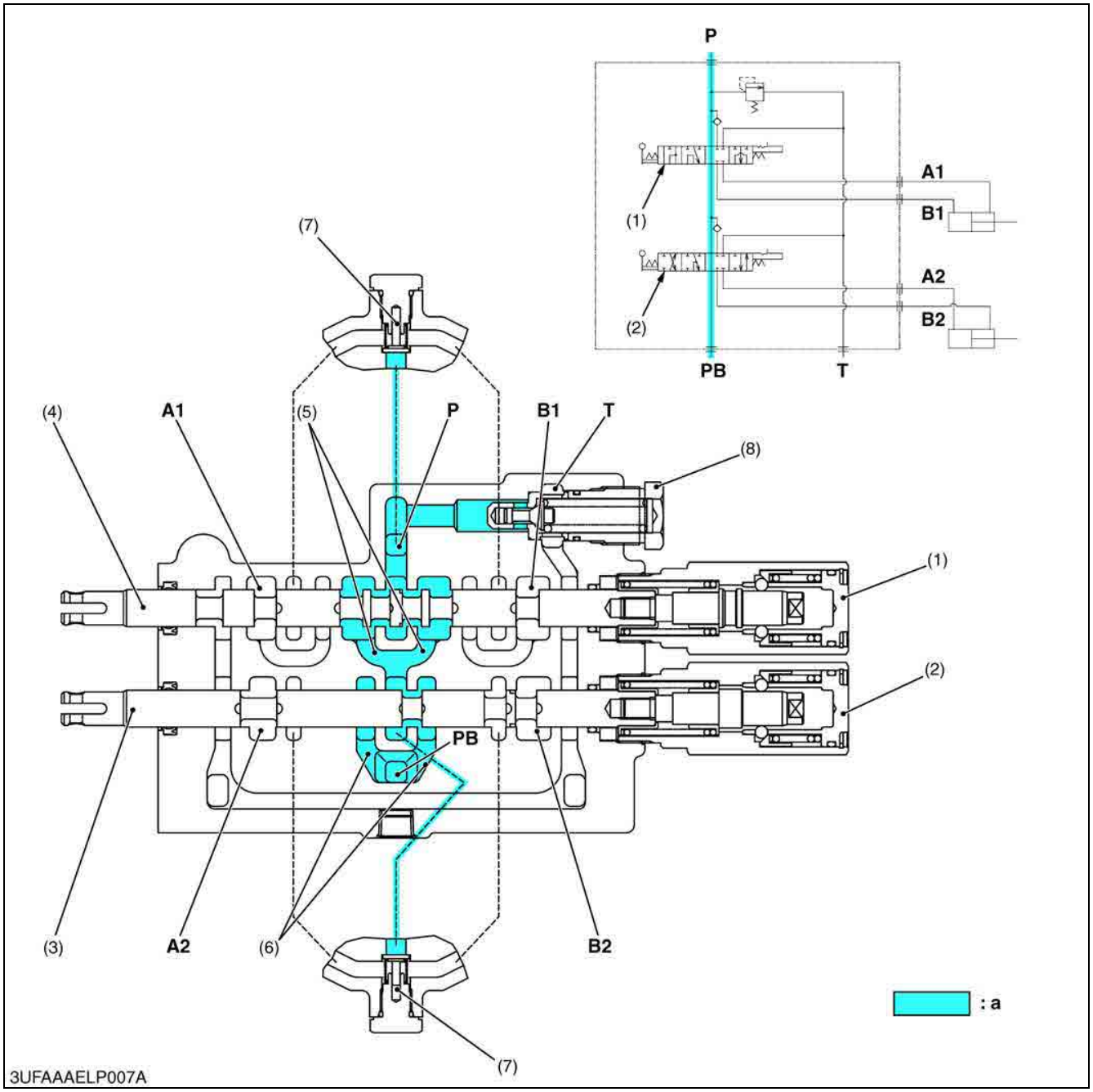


| | | | |
|---|---|---|---|
| (1) Boom Control Section | (5) **PB** Passage 1 | **T: T Port** | **B1: B1 Port** |
| (2) Bucket Control Section | (6) **PB** Passage 2 | **P: P Port** | **B2: B2 Port** |
| (3) Spool | (7) Load Check Valve | **A1: A1 Port** | **PB: PB Port** |
| (4) Spool | (8) Relief Valve | **A2: A2 Port** | **a: Low Pressure** |

9Y1211156HYM0012US0

https://truckmanualshub.com/


## Up

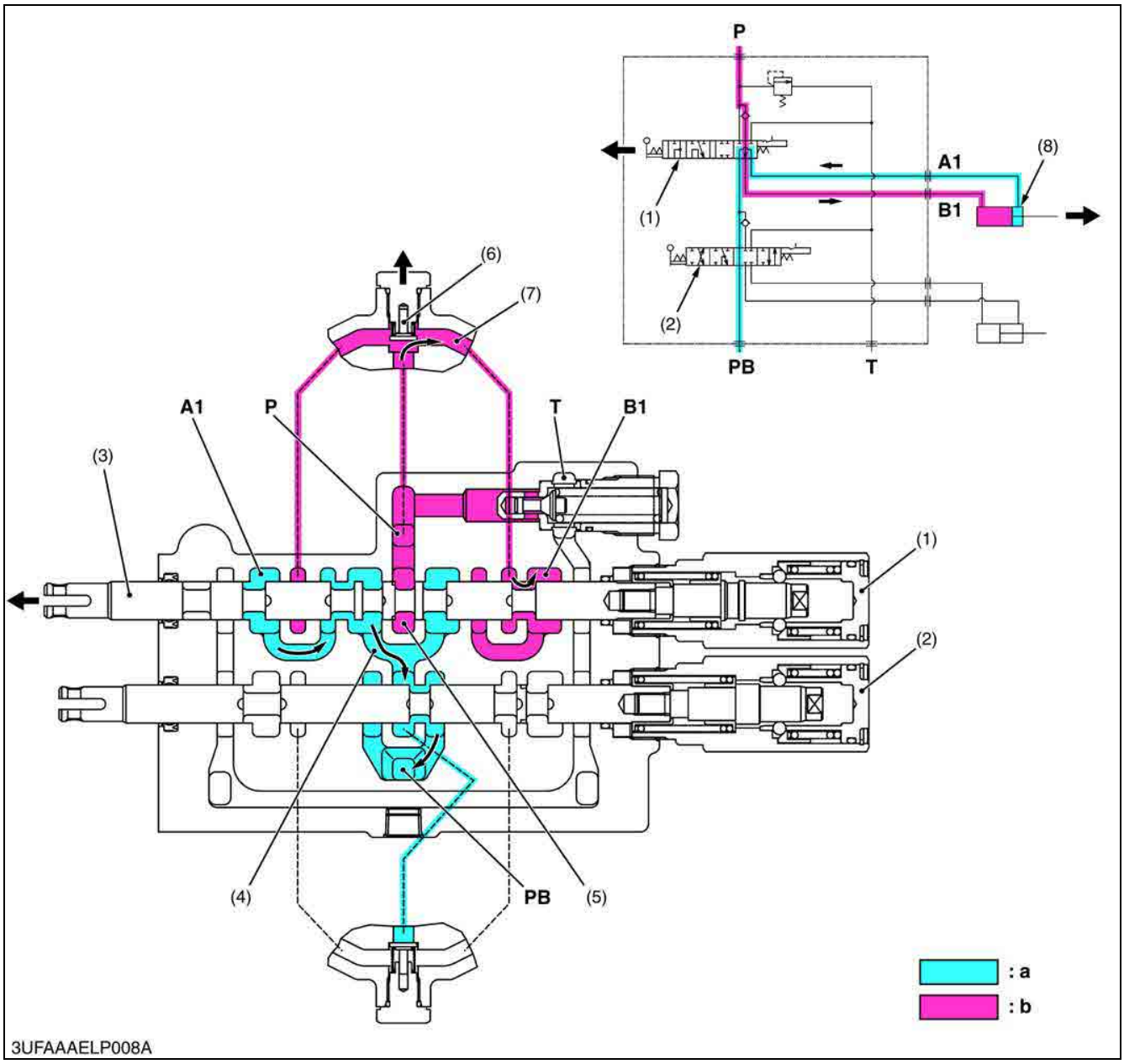


| | | | | | | | |
|---|---|---|---|---|---|---|---|
| (1) | Boom Control Section | (5) | Neutral Passage 1 | **P:** | **P Port** | **A1:** | **A1 Port (From Boom Cylinder)** |
| (2) | Bucket Control Section | (6) | Load Check Valve | **T:** | **T Port** | **B1:** | **B1 Port (To Boom Cylinder)** |
| (3) | Spool | (7) | Passage 1 | | | **PB:** | **PB Port** |
| (4) | **PB** Passage 1 | (8) | Boom Cylinder | | | **a:** | **Low Pressure** |
| | | | | | | **b:** | **High Pressure** |

1. When the hydraulic control lever is set to the **"UP"** position, the spool (3) of the boom control section (1) moves to the left, which forms oil passages between passage 1 (7) and **B1** port, and between **A1** port and **PB** passage 1 (4).
2. As the oil passage from the neutral passage 1 (5) to the **PB** passage 1 (4) is closed by the spool (3), the pressure-fed oil from the **P** port opens the load check valve (6) and flows through the notched section of the spool (3) and **B1** port to extend the boom cylinder (8).
3. Return oil from the boom cylinder (8) flows from the **A1** port through the passage in the spool (3) and **PB** passage 1 (4) to the bucket control section (2).

9Y1211156HYM0013US0

https://truckmanualshub.com/


**Down**

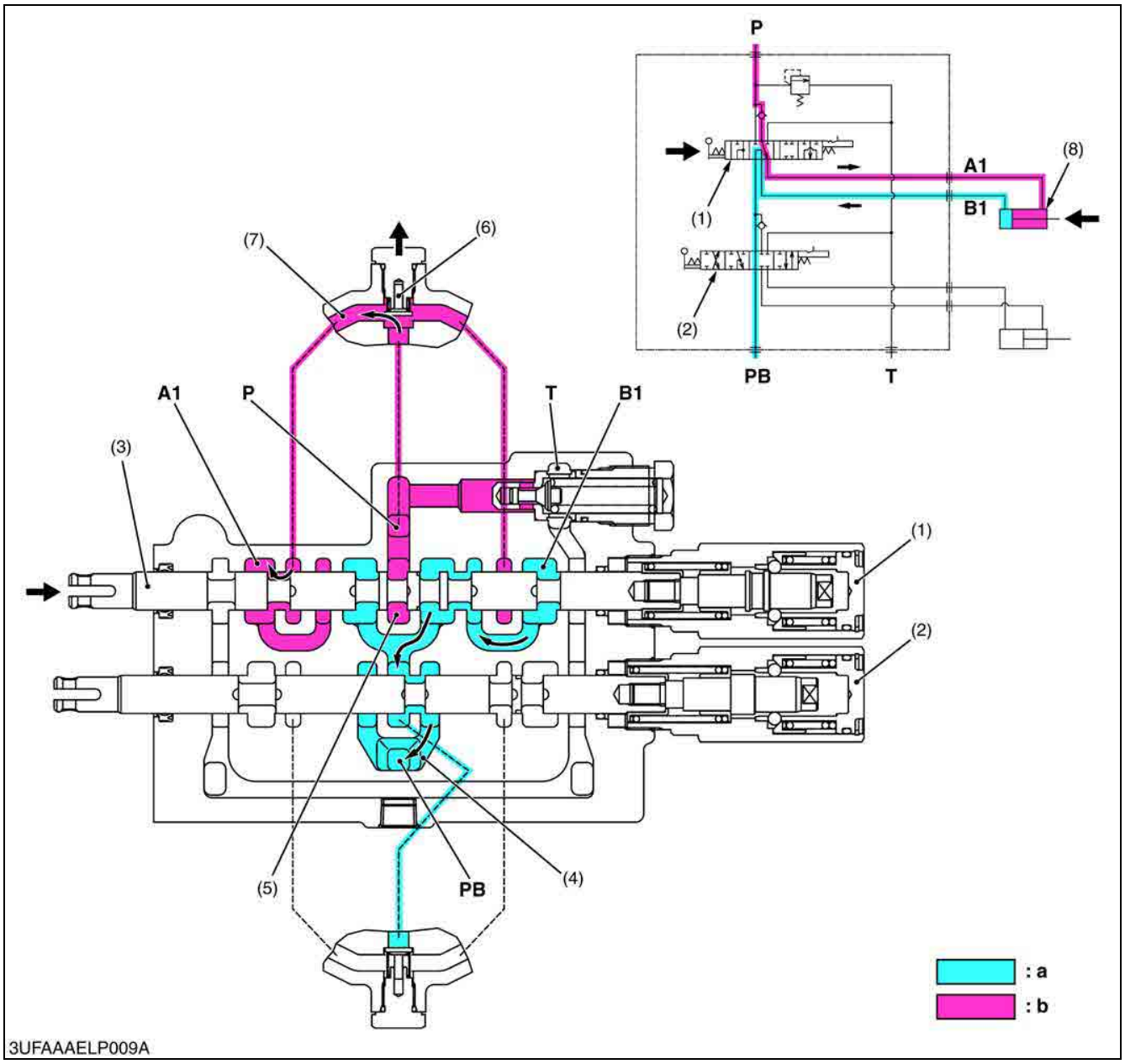


| | | | |
|---|---|---|---|
| (1) Boom Control Section | (5) Neutral Passage 1 | **P: P Port** | **A1: A1 Port (To Boom Cylinder)** |
| (2) Bucket Control Section | (6) Load Check Valve | **T: T Port** | **B1: B1 Port (From Boom Cylinder)** |
| (3) Spool | (7) Passage 1 | | **PB: PB Port** |
| (4) **PB** Passage 1 | (8) Boom Cylinder | | **a: Low Pressure** |
| | | | **b: High Pressure** |

1. When the hydraulic control lever is set to the **"DOWN"** position, the spool (3) moves to the right, which forms oil passages between passage 1 (7) and **A1** port, and between **B1** port and **PB** passage 1 (4).
2. As the oil passage from the neutral passage 1 (5) to the **PB** passage 1 (4) is closed by the spool (3), the pressure-fed oil from the **P** port opens the load check valve (6) and flows through the notched section of the spool (3) and **A1** port to retract the boom cylinder (8).
3. Return oil from the boom cylinder (8) flows from the **B1** port through the passage in the spool (3) and **PB** passage 1 (4) to the bucket control section (2).

9Y1211156HYM0014US0

https://truckmanualshub.com/


## Floating

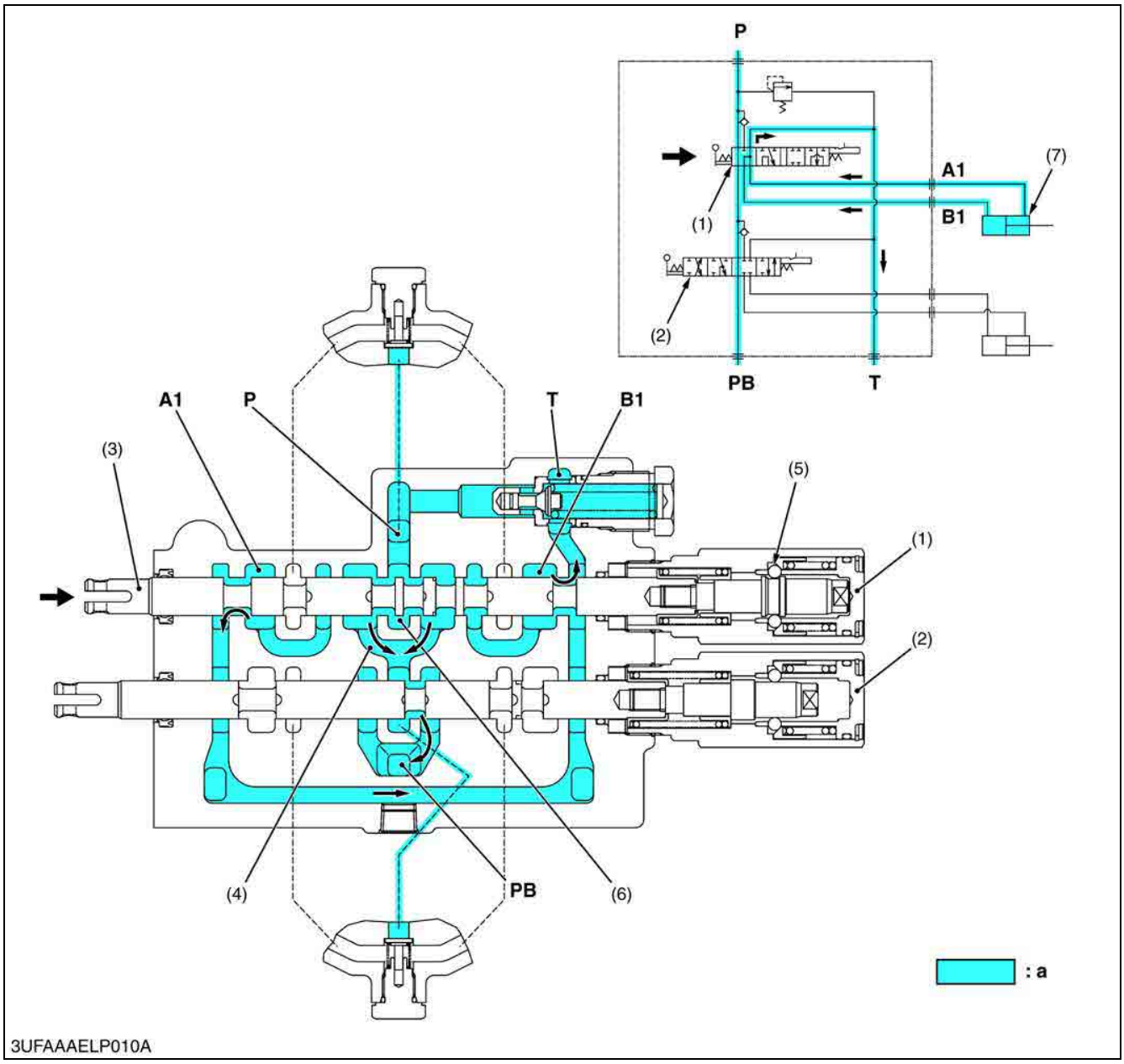


| | | | |
|---|---|---|---|
| (1) Boom Control Section | (5) Detent Mechanism | **P: P Port** | **A1: A1 Port** |
| (2) Bucket Control Section | (6) Neutral Passage 1 | **T: T Port** | **B1: B1 Port** |
| (3) Spool | (7) Boom Cylinder | | **PB: PB Port** |
| (4) **PB** Passage 1 | | | **a: Low Pressure** |

1. When the hydraulic control lever is set to the **"FLOAT"** position, the spool (3) moves further to the right from the **"DOWN"** position and is retained by the detent mechanism (5).
2. This forms oil passages among the **A1** port, **B1** port and **T** port. As a result, oil in the boom cylinder (7) flows freely from the **A1** port and **B1** port through the **T** port to the transmission case.
3. Oil entering the **P** port flows to the bucket control section (2) through the neutral passage 1 (6) and **PB** passage 1 (4).

9Y1211156HYM0015US0

https://truckmanualshub.com/


## Roll-back

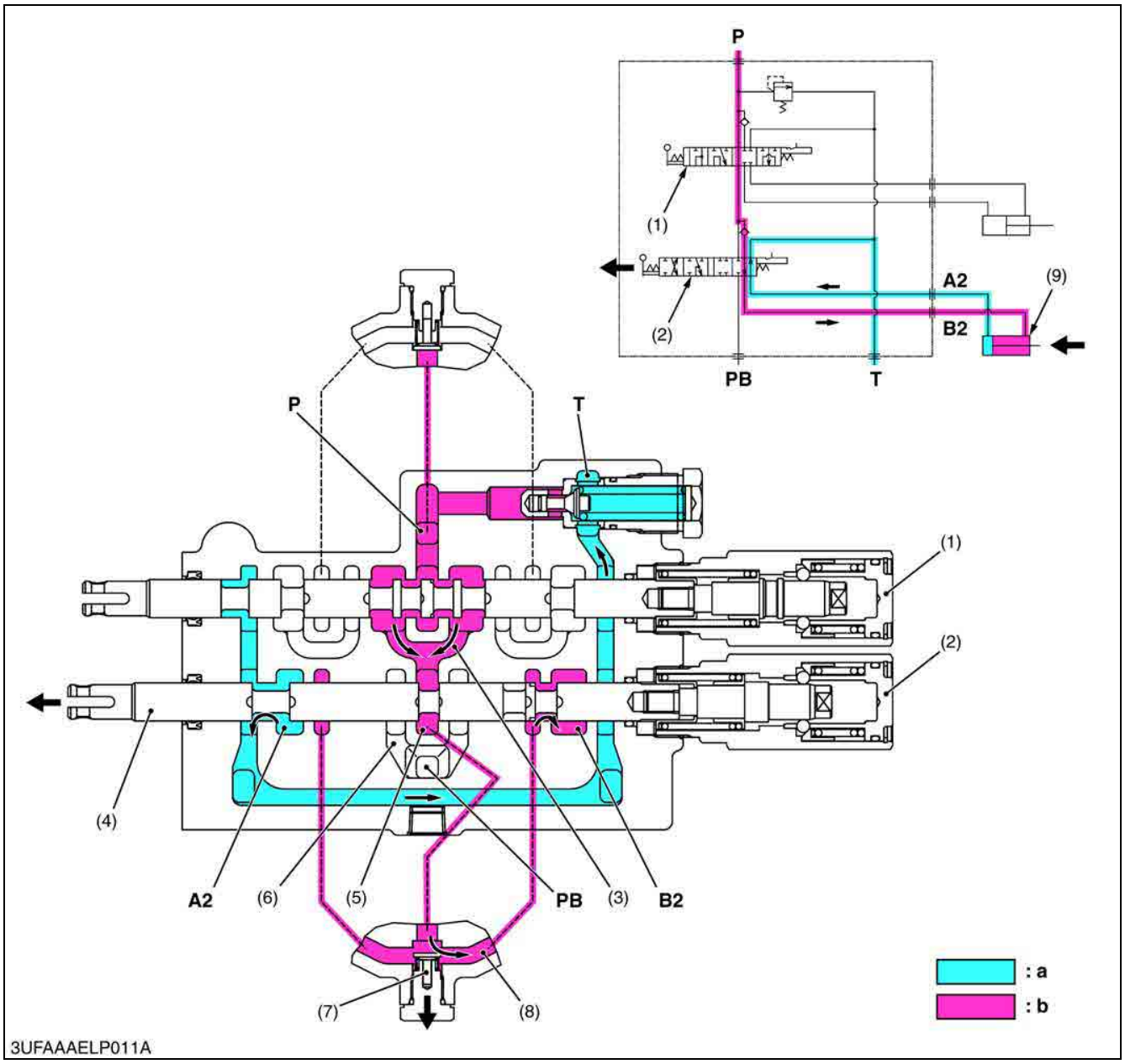


| | | | |
|---|---|---|---|
| (1) Boom Control Section | (6) **PB** Passage 2 | **P: P Port** | **B2: B2 Port (To Bucket Cylinder)** |
| (2) Bucket Control Section | (7) Load Check Valve | **T: T Port** | **a: Low Pressure** |
| (3) **PB** Passage 1 | (8) Passage 2 | **PB: PB Port** | **b: High Pressure** |
| (4) Spool | (9) Bucket Cylinder | **A2: A2 Port (From Bucket Cylinder)** | |
| (5) Neutral Passage 2 | | | |

1. When the hydraulic control lever is set to the **"ROLL-BACK"** position, the spool (4) of the bucket control section (2) moves to the left, which forms oil passages between passage 2 (8) and **B2** port, and between **A2** port and **T** port.
2. The pressure-fed oil from the **P** port flows to the neutral passage 2 (5) through the boom control section (1) and **PB** passage 1 (3). As the oil passage from the neutral passage 2 (5) to the **PB** passage 2 (6) is closed by the spool (4), this oil opens the load check valve (7), and flows through the notched section of the spool (4) and **B2** port to retract the bucket cylinder (9).
3. Return oil from the bucket cylinder (9) flows to the transmission case through the **A2** port and **T** port.

9Y1211156HYM0016US0

https://truckmanualshub.com/


**Dump 1**

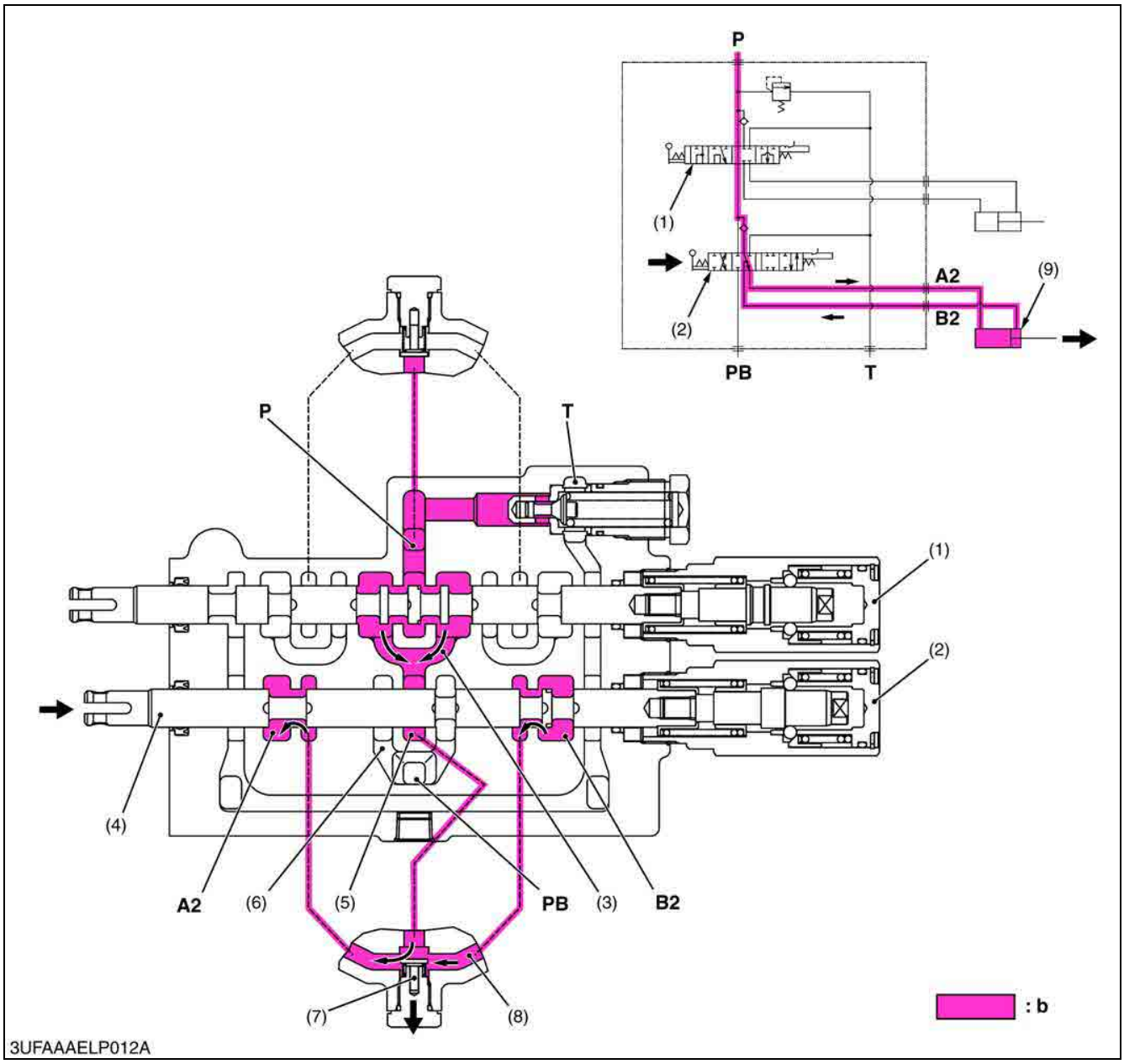


| | | | |
|---|---|---|---|
| (1) Boom Control Section | (6) **PB** Passage 2 | **P: P Port** | **A2: A2 Port (To Bucket Cylinder)** |
| (2) Bucket Control Section | (7) Load Check Valve | **T: T Port** | **B2: B2 Port (From Bucket Cylinder)** |
| (3) **PB** Passage 1 | (8) Passage 2 | **PB: PB Port** | **b: High Pressure** |
| (4) Spool | (9) Bucket Cylinder | | |
| (5) Neutral Passage 2 | | | |

1. When the hydraulic control lever is set to the **"DUMP 1"** position, the spool (4), which forms oil passages among passage 2 (8), **A2** port and **B2** port.
2. The pressure-fed oil from the **P** port flows through the boom control valve, opens the load check valve, and flows to the bucket cylinder to extend the cylinder through the notched section of the spool and **A2** port.
3. Return oil from the bucket cylinder (9) flows from the **B2** port to the passage 2 (8), and flows to the **A2** port together with the pressure-fed oil from the **P** port.
   As a result, the dump speed is increased.

**(Reference)**

- The oil pressure of the **A2** port and **B2** port is identical, but the bucket cylinder extend by the difference of received pressure area (cylinder rod part).

9Y1211156HYM0017US0

https://truckmanualshub.com/


**Dump 2**

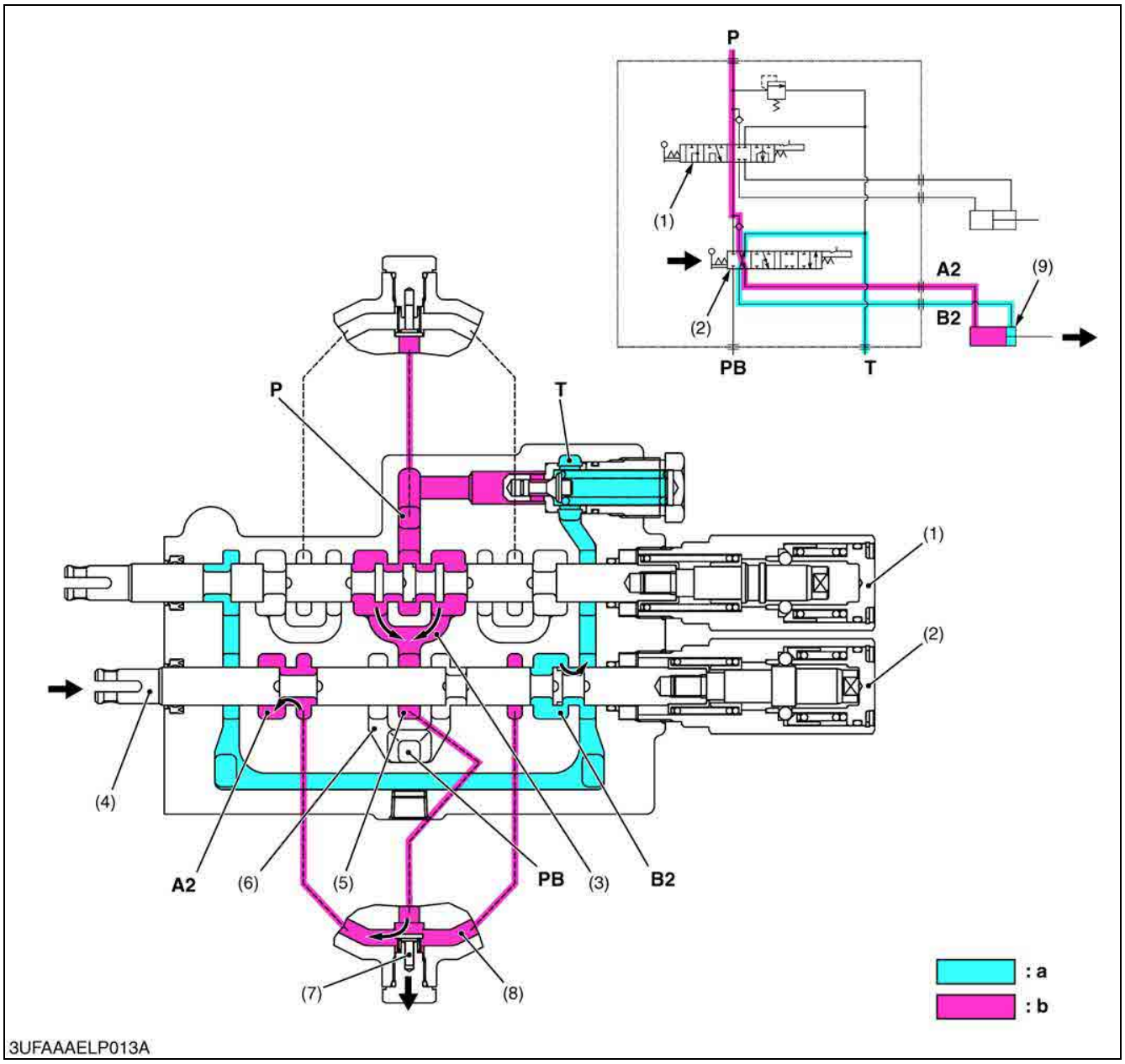


| | | | |
|---|---|---|---|
| (1) Boom Control Section | (6) **PB** Passage 2 | **P: P Port** | **A2: A2 Port (To Bucket Cylinder)** |
| (2) Bucket Control Section | (7) Load Check Valve | **T: T Port** | **B2: B2 Port (From Bucket Cylinder)** |
| (3) **PB** Passage 1 | (8) Passage 2 | **PB: PB Port** | **a: Low Pressure** |
| (4) Spool | (9) Bucket Cylinder | | **b: High Pressure** |
| (5) Neutral Passage 2 | | | |

1. When the hydraulic control lever is set to the **"DUMP 2"** position, the spool (4) of the bucket control section (2) moves to the right of the bucket control section (2) moves further to the right from the **"DUMP 1"** position, which forms oil passages between passage 2 (8) and **A2** port, and between **B2** port and **T** port.
2. The pressure-fed oil from the **P** port flows to the neutral passage 2 (5) through the boom control section (1) and **PB** passage 1 (3). As the oil passage from the neutral passage 2 (5) to the **PB** passage 2 (6) is closed by the spool (4), this oil opens the load check valve (7) and flows through the notched section of the spool (4) and **B2** port to extend the bucket cylinder (9).
3. Return oil from the bucket cylinder (9) flows to the transmission case through the **B2** port and **T** port.

9Y1211156HYM0018US0

https://truckmanualshub.com/


# 5. REMOTE CONTROL VALVE (IF EQUIPPED)

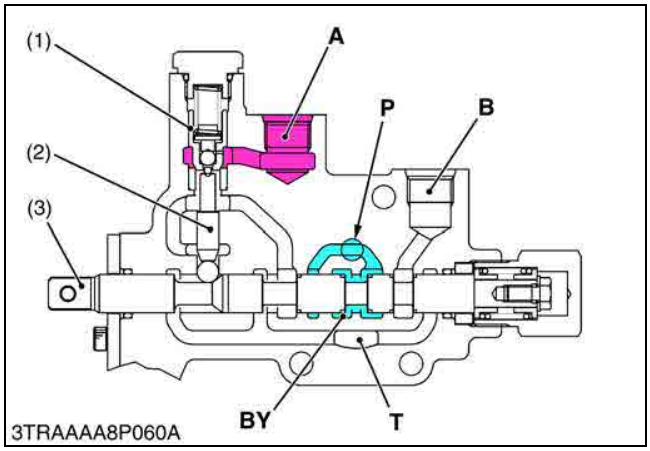


**Neutral**

Pressure-fed oil from the hydraulic pump is delivered into the **P** port, and flows to the rear hydraulic outlet through **BY** port.

At this time, oil from **A** port to the **T** port is blocked by the mechanical check valve (Poppet (1)). Therefore the position of implement is kept at the set position.

| | | | |
|---|---|---|---|
| (1) | Poppet | **P:** | **Pump Port** |
| (2) | Piston | **T:** | **Tank Port** |
| (3) | Spool | **BY:** | **BY Port (To Position Control Valve)** |
| | | **A:** | **A Port** |
| | | **B:** | **B Port** |

9Y1211156HYM0019US0

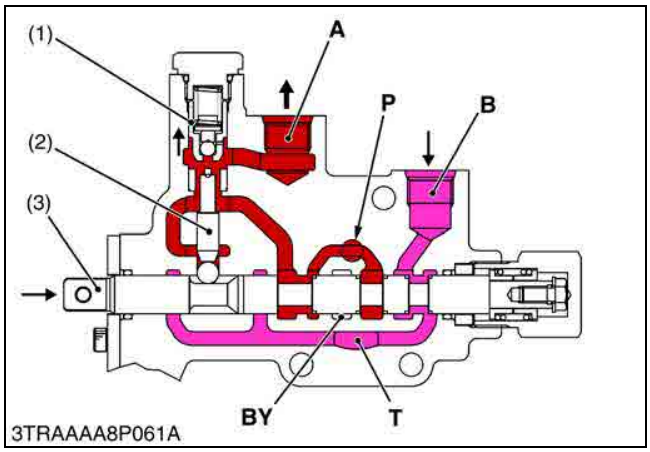


**Lift**

When the remote control valve operating lever is set to **LIFT** position, the spool (3) moves to the right and the passage from **P** port to the **BY** port is blocked by the spool (3).

Then the pressure-fed oil open the poppet (1) and flow through the **A** port to the hydraulic cylinder to lift the implement.

| | | | |
|---|---|---|---|
| (1) | Poppet | **P:** | **Pump Port** |
| (2) | Piston | **T:** | **Tank Port (To Transmission Case)** |
| (3) | Spool | **BY:** | **BY Port** |
| | | **A:** | **A Port** |
| | | **B:** | **B Port** |

9Y1211156HYM0020US0

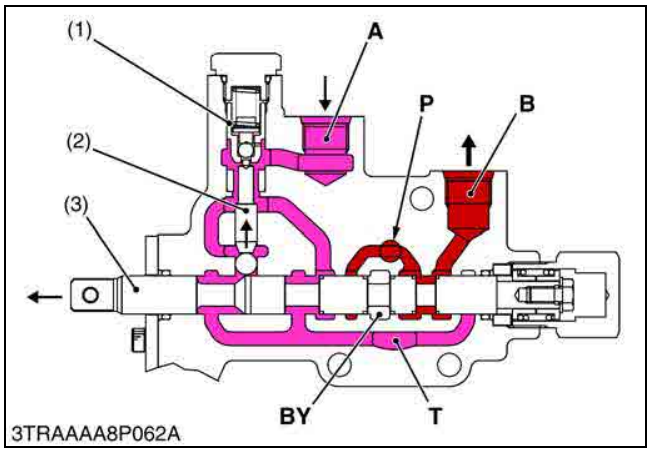


**Down**

When the remote control valve operating lever is set to **DOWN** position, the spool (3) moves to the left and the passage from **P** port to the **BY** port is blocked by the spool (3). At the same time, the piston (2) and poppet (1) moves upward, and open the passage from **A** port to **T** port.

Then the pressure-fed oil flow through the **B** port to the hydraulic cylinder to lower the implement. Return oil from hydraulic cylinder flows from **A** port to the transmission case.

| | | | |
|---|---|---|---|
| (1) | Poppet | **P:** | **Pump Port** |
| (2) | Piston | **T:** | **Tank Port (To Transmission Case)** |
| (3) | Spool | **BY:** | **BY Port** |
| | | **A:** | **A Port** |
| | | **B:** | **B Port** |

9Y1211156HYM0021US0

https://truckmanualshub.com/


# 6. HYDRAULIC OUTLET

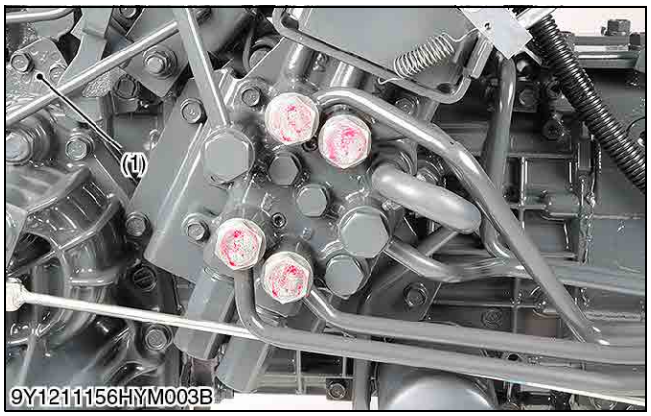


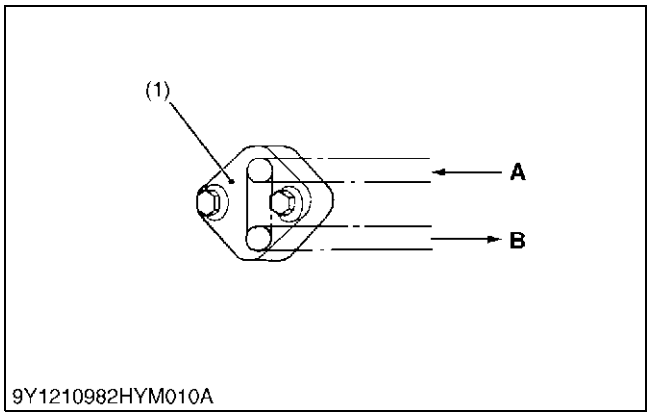


The hydraulic block type outlet is located at the right hand side of the engine.

This hydraulic block type outlet is provided to take power out from the tractor to operate the hydraulic cylinders on the implement.

(1) Hydraulic Block Cover

**A: From Hydraulic Pump**
**B: To Control Valve**

9Y1211156HYM0022US0

https://truckmanualshub.com/

# SERVICING

## CONTENTS

1. TROUBLESHOOTING....7-S1
2. SERVICING SPECIFICATIONS....7-S2
3. TIGHTENING TORQUES....7-S3
4. CHECKING, DISASSEMBLING AND SERVICING....7-S4
   [1] CHECKING AND ADJUSTING....7-S4
      (1) Hydraulic Pump (For 3-Point Hitch Hydraulic System)....7-S4
      (2) Hydraulic Pump (For Power Steering, PTO Clutch and HST)....7-S6
      (3) 3-Points Hitch Relief Valve....7-S8
      (4) Lift Arm....7-S8
   [2] DISASSEMBLING AND ASSEMBLING....7-S9
      (1) Hydraulic Pump....7-S9
      (2) 3-Point Hitch....7-S10
      (3) Separating Hydraulic Cylinder From Tractor Body....7-S10
      (4) 3-Points Hitch: Hydraulic Cylinder....7-S12
      (5) Front Loader Control Valve Assembly (If Equipped)....7-S15
      (6) Remote Control Valve (If Equipped)....7-S18
   [3] SERVICING....7-S18

https://truckmanualshub.com/


# 1. TROUBLESHOOTING

| Symptom | Probable Cause and Checking Procedure | Solution | Reference Page |
|---|---|---|---|
| **Implement Does Not Rise (No Noise)** | 1. Transmission fluid improper | Check transmission oil | G-8 |
| | 2. Hydraulic pump malfunctioning | Solution order<br>1. Check hydraulic flow test | 7-S4 |
| | | 2. Replace hydraulic pump | 7-S9 |
| | 3. Relief valve malfunctioning | Solution order<br>1. Check relief valve | 7-S8 |
| | | 2. Check or adjust relief valve | 7-S8 |
| | | 3. Replace relief valve | 7-S8 |
| | 4. Piston O-ring or cylinder damaged | Replace O-ring or cylinder | 7-S17 |
| | 5. Control valve malfunctioning | Replace control valve | 7-S13 |
| | 6. Control valve improperly adjusted | Check or adjust control valve | 7-S12 |
| | 7. Control valve improperly assembled | Repair control valve | 7-S15 |
| **Implement Does Not Rise (Noise)** | 1. Transmission fluid improper | Check transmission oil | G-8 |
| | 2. Oil filter cartridge clogged | Replace oil filter cartridge | G-26, G-29 |
| | 3. Suction pipe loosen or broken | Check or repair suction pipe | 7-S9 |
| | 4. Suction pipe connecting hose loosen or broken | Check or repair suction hose | 7-S9 |
| | 5. Relief valve setting pressure too low | Solution order<br>1. Check relief valve | 7-S8 |
| | | 2. Check or adjust relief valve | 7-S8 |
| | | 3. Replace relief valve | 7-S8 |
| | 6. Hydraulic pump broken | Solution order<br>1. Check hydraulic flow test | 7-S4 |
| | | 2. Replace hydraulic pump | 7-S9 |
| **Implement Does Not Reach Maximum Height** | 1. Feedback rod improperly adjusted | Solution order<br>1. Check lift arm free play | 7-S8 |
| | | 2. Adjust feedback rod | 7-S8 |
| **Implement Does Not Lower** | 1. Control valve malfunctioning | Replace control valve | 7-S13 |
| **Implement Drops by Its Weight** | 1. Piston O-ring worn or damaged | Replace O-ring or cylinder | 7-S17 |
| | 2. Control valve malfunctioning | Replace control valve | 7-S13 |

9Y1211156HYS0001US0

https://truckmanualshub.com/


# 2. SERVICING SPECIFICATIONS

| Item | | Factory Specification | Allowable Limit |
|---|---|---|---|
| Hydraulic Pump (For 3-Point Hitch)<br>**Condition**<br>• Engine rated speed: 2800 $min^{-1}$ (rpm)<br>• Rated pressure<br>13.0 to 13.8 MPa<br>130 to 140 $kgf/cm^2$<br>1890 to 2000 psi<br>• Oil temperature: 50 °C (122 °F) | Delivery<br>(At No Pressure)<br><br>Delivery<br>(At Rated<br>Pressure) | Above<br>20.1 L/min.<br>5.55 U.S.gals/min.<br>4.62 Imp.gals/min.<br><br>Above<br>19.7 L/min.<br>5.20 U.S.gals/min.<br>4.33 Imp.gals/min. | –<br><br><br><br>Above<br>16.5 L/min.<br>4.36 U.S.gals/min.<br>3.63 Imp.gals/min. |
| Hydraulic Pump (For Power Steering, PTO Clutch and HST)<br>**Condition**<br>• Engine rated speed: 2800 $min^{-1}$ (rpm)<br>• Rated pressure<br>11.5 to 12.5 MPa<br>118 to 127 $kgf/cm^2$<br>1670 to 1810 psi<br>• Oil temperature: 50 °C (122 °F) | Delivery<br>(At No Pressure)<br><br>Delivery<br>(At Rated<br>Pressure) | Above<br>15.8 L/min.<br>4.17 U.S.gals/min.<br>3.48 Imp.gals/min.<br><br>Above<br>15.4 L/min.<br>4.07 U.S.gals/min.<br>3.39 Imp.gals/min. | –<br><br><br><br>Above<br>12.9 L/min.<br>3.41 U.S.gals/min.<br>2.84 Imp.gals/min. |
| Relief Valve<br>**Condition**<br>• Engine rated speed: 2800 $min^{-1}$ (rpm)<br>• Oil temperature: 50 °C (122 °F) | Setting Pressure | 13.0 to 13.8 MPa<br>133 to 140 $kgf/cm^2$<br>1890 to 2000 psi | – |
| Lift Arm | Free Play | 5 to 15 mm<br>0.20 to 0.59 in. | – |
| Tip of Gear Tooth to Casing | Clearance | – | 0.15 mm<br>0.0059 in. |
| Bushing to Shaft<br><br>• Shaft<br><br>• Bushing | Clearance<br><br>O.D.<br><br>I.D. | 0.020 to 0.091 mm<br>0.0008 to 0.0036 in.<br><br>14.970 to 14.980 mm<br>0.5894 to 0.5898 in.<br><br>15.000 to 15.061 mm<br>0.5906 to 0.5930 in. | 0.12 mm<br>0.0047 in.<br><br>–<br><br>– |
| Side Plate | Thickness | 2.48 to 2.50 mm<br>0.0976 to 0.0984 in. | 2.40 mm<br>0.0945 in. |
| Hydraulic Cylinder | I.D. | 75.05 to 75.10 mm<br>2.955 to 2.956 in. | 75.15 mm<br>2.959 in. |
| Hydraulic Arm Shaft to Bushing<br><br>• Hydraulic Arm Shaft (Right)<br><br>• Hydraulic Arm Shaft (Left)<br><br>• Bushing (Right)<br><br>• Bushing (Left) | Clearance<br><br>O.D.<br><br>O.D.<br><br>I.D.<br><br>I.D. | 0.020 to 0.110 mm<br>0.0008 to 0.0043 in.<br><br>37.925 to 37.950 mm<br>1.4931 to 1.4941 in.<br><br>34.925 to 34.950 mm<br>1.3750 to 1.3759 in.<br><br>37.970 to 38.035 mm<br>1.4949 to 1.4974 in.<br><br>34.970 to 35.035 mm<br>1.3768 to 1.3793 in. | 0.30 mm<br>0.0118 in.<br><br>–<br><br>–<br><br>–<br><br>– |

9Y1211156HYS0002US0

https://truckmanualshub.com/


# 3. TIGHTENING TORQUES

Tightening torques of screws, bolts and nuts on the table below are especially specified.
(For general use screws, bolts and nuts: Refer to "5. TIGHTENING TORQUES" on page G-11.)

| Item | N·m | kgf·m | lbf·ft |
|---|---|---|---|
| Hydraulic pump cover mounting screw | 35 to 39 | 3.5 to 4.0 | 26 to 28 |
| Set bolt of the lower link pin | 15 to 20 | 1.6 to 2.0 | 11 to 14 |
| Lock nut of the lower link pin | 43 to 47 | 4.4 to 4.7 | 32 to 34 |
| Rear wheel mounting nut and screw | 145 to 150 | 14.8 to 15.2 | 107 to 110 |
| Front loader valve pipe joint bolt | 48 to 70 | 4.9 to 7.1 | 36 to 51 |
| 3-point hitch delivery pipe 1 joint bolt | 48 to 70 | 4.9 to 7.1 | 36 to 51 |
| 3-point hitch delivery pipe 2 joint bolt (Front loader valve side) | 48 to 70 | 4.9 to 7.1 | 36 to 51 |
| 3-point hitch delivery pipe 2 joint bolt (Hydraulic cylinder case side) | 50 to 60 | 5.1 to 6.1 | 37 to 44 |
| Plug 1 (Remote control valve) | 29.4 to 49.0 | 3.0 to 5.0 | 21.7 to 36.2 |
| Bracket mounting screw (Remote control valve) | 4.9 to 7.8 | 0.5 to 0.8 | 3.6 to 5.8 |
| Plug 2 (Remote control valve) | 39.3 to 58.8 | 4.0 to 6.0 | 28.9 to 43.4 |

9Y1211156HYS0003US0

https://truckmanualshub.com/


# 4. CHECKING, DISASSEMBLING AND SERVICING

## [1] CHECKING AND ADJUSTING

### (1) Hydraulic Pump (For 3-Point Hitch Hydraulic System)

**Test Preparation (For 3-Point Hitch)**

■ **IMPORTANT**
- **When using a flowmeter other than KUBOTA specified flowmeter (Code No. 07916-52792), be sure to use the instructions with that flowmeter.**
- **In this hook-up, there is no relief valve. Therefore while testing, do not close the flowmeter loading valve completely.**

1. Install the flowmeter adaptor to the loader pipe.
2. Connect the hydraulic test hose (Code No. 07916-52651) to the flowmeter (Code No. 07916-52791) inlet port.
3. Connect the another hydraulic test hose to flowmeter outlet port and transmission oil filling port, firmly.
4. Open the flowmeter loading valve completely. (Turn counterclockwise)
5. Start the engine and set the engine speed at 2800 $min^{-1}$ (rpm).
6. Slowly close the loading valve to generate the pressure approximately 10.8 MPa (110 $kgf/cm^2$, 1570 psi).
7. Hold this condition until the oil temperature reaches approximately 50 °C (122 °F).

(1) Delivery Pipe (to 3-Point Hitch)
(2) Delivery Hose (to Power Steering)
(3) Hydraulic Pump

9Y1211156HYS0004US0

https://truckmanualshub.com/

## Hydraulic Pump Test (For 3-Point Hitch)

■ **NOTE**

- **Before pump testing, do the "Test Preparation".**

1. Open the flowmeter loading valve completely (Turn counterclockwise.
2. Start the engine and set at approx. 2800 $min^{-1}$ (rpm).
3. Read and note the pump delivery at no pressure.
4. Slowly close the loading valve to increase the pressure to the rated pressure as shown in the table below.
5. Read and note the pump delivery at rated pressure.
6. Open the loading valve and stop the engine.
7. If the pump delivery does not reach the allowable limit, check the pump suction line, oil filter or hydraulic pump.

**(Reference)**

| | | |
|---|---|---|
| Hydraulic pump delivery at no pressure | Factory specification | Above<br>20.1 L/min.<br>5.55 U.S.gals/min.<br>4.62 Imp.gals/min. |
| Hydraulic pump delivery at rated pressure | Factory specification | Above<br>19.7 L/min.<br>5.20 U.S.gals/min.<br>4.33 Imp.gals/min. |
| | Allowable limit | Above<br>16.5 L/min.<br>4.36 U.S.gals/min.<br>3.63 Imp.gals/min. |

**Condition**

- Engine rated speed
  2800 $min^{-1}$ (rpm)
- Rated pressure
  13.0 to 13.8 MPa
  130 to 140 $kgf/cm^2$
  1890 to 2000 psi
- Oil temperature
  50 °C (122 °F)

9Y1211156HYS0005US0

https://truckmanualshub.com/


## (2) Hydraulic Pump (For Power Steering, PTO Clutch and HST)

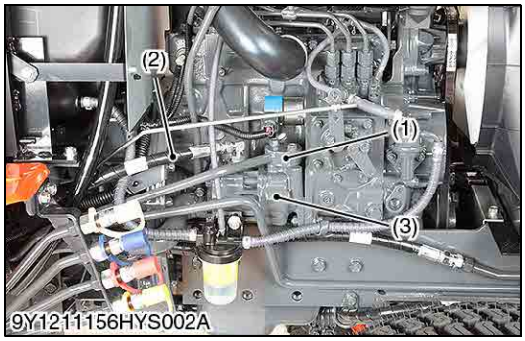

**Test Preparation (For Power Steering, PTO Clutch and HST)**

■ **IMPORTANT**
- **When using a flowmeter other than KUBOTA specified flowmeter (Code No. 07916-52792), be sure to use the instructions with that flowmeter.**
- **In this hook-up, there is no relief valve. Therefore while testing, do not close the flowmeter loading valve completely.**

1. Disconnect the delivery hose (2).
2. Install the flowmeter adaptor to the hydraulic pump body.
3. Connect the hydraulic test hose (Code No. 07916-52651) to the flowmeter (Code No. 07916-52791) inlet port.
4. Connect the another hydraulic test hose to flowmeter outlet port and transmission oil filling port, firmly.
5. Open the flowmeter loading valve completely. (Turn counterclockwise)
6. Start the engine and set the engine speed at 2800 $min^{-1}$ (rpm).
7. Slowly close the loading valve to generate the pressure approximately 9.5 MPa (97 $kgf/cm^2$, 1400 psi).
8. Hold this condition until the oil temperature reaches approximately 50 °C (122 °F).

(1) Delivery Pipe (to 3-Point Hitch)
(2) Delivery Hose (to Power Steering)
(3) Hydraulic Pump

9Y1211156HYS0006US0

https://truckmanualshub.com/

## Hydraulic Pump Test (For Power Steering, PTO Clutch and HST)

■ **NOTE**

- **Before pump testing, do the "Test Preparation".**

1. Open the flowmeter loading valve completely (Turn counterclockwise.
2. Start the engine and set at approx. 2800 $min^{-1}$ (rpm).
3. Read and note the pump delivery at no pressure.
4. Slowly close the loading valve to increase the pressure to the rated pressure as shown in the table below.
5. Read and note the pump delivery at rated pressure.
6. Open the loading valve and stop the engine.
7. If the pump delivery does not reach the allowable limit, check the pump suction line, oil filter or hydraulic pump.

**(Reference)**

| | | |
|---|---|---|
| Hydraulic pump delivery at no pressure | Factory specification | Above<br>15.8 L/min.<br>4.17 U.S.gals/min.<br>3.48 Imp.gals/min. |
| Hydraulic pump delivery at rated pressure | Factory specification | Above<br>15.4 L/min.<br>4.07 U.S.gals/min.<br>3.39 Imp.gals/min. |
| | Allowable limit | Above<br>12.9 L/min.<br>3.41 U.S.gals/min.<br>2.84 Imp.gals/min. |

**Condition**

- Engine rated speed
  2800 $min^{-1}$ (rpm)
- Rated pressure
  11.5 to 12.5 MPa
  118 to 127 $kgf/cm^2$
  1670 to 1810 psi
- Oil temperature
  50 °C (122 °F)

9Y1211156HYS0007US0

https://truckmanualshub.com/


## (3) 3-Points Hitch Relief Valve

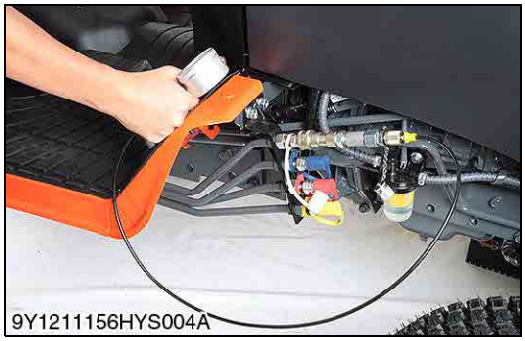
9Y1211156HYS004A

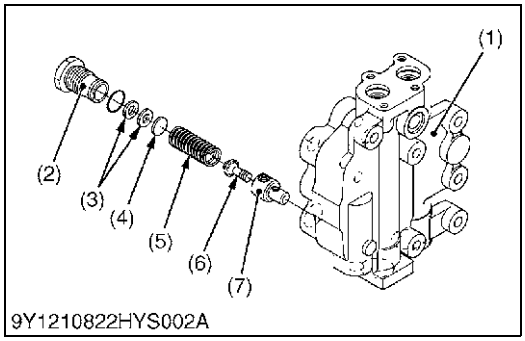

9Y1210822HYS002A

**3-Points Hitch Relief Valve Setting Pressure**

1. Install the adaptor. Then connect the cable and the pressure gauge to the adaptor (Size 1/4).
2. Start the engine and set the engine speed at 2800 $min^{-1}$ (rpm).
3. Set the front loader valve lever to the down ward position and read the pressure gauge when the relief valve is actuated.
4. If the pressure is not factory specifications, adjust the relief valve setting pressure with the adjusting shims (4).

| | | |
|---|---|---|
| Relief valve setting pressure | Factory specification | 13.0 to 13.8 MPa<br>133 to 140 $kgf/cm^2$<br>1890 to 2000 psi |

**Condition**
- Engine rated speed
  2800 $min^{-1}$ (rpm)
- Oil temperature
  50 °C (122 °F)

**(Reference)**
- Thickness of shims (4)
  0.10 mm (0.0039 in.)
  0.20 mm (0.0079 in.)
  0.40 mm (0.016 in.)
  0.60 mm (0.024 in.)

(1) Loader Valve Assembly
(2) Plug
(3) Plain Washer
(4) Shim
(5) Spring
(6) Poppet
(7) Valve Seat

9Y1211156HYS0008US0

## (4) Lift Arm

9Y1211156HYS005A

9Y1211156HYS006A

**Lift Arm Free Play**

1. Set the position control lever (1) to the lowest position.
2. Start the engine, and set at the idling speed.
3. Move the position control lever (1) to the uppermost position.
4. Move the lift arm (2) to the upper end by hand and measure the free play.
5. If the measurement is not within the factory specifications, adjust the free play by changing the position control feedback rod setting length.

| | | |
|---|---|---|
| Lift arm free play | Factory specification | 5 to 15 mm<br>0.20 to 0.59 in. |

(1) Position Control Lever
(2) Lift Arm

**L: Lowest Position**
**H: Uppermost Position**

9Y1211156HYS0009US0

https://truckmanualshub.com/


# [2] DISASSEMBLING AND ASSEMBLING

## (1) Hydraulic Pump

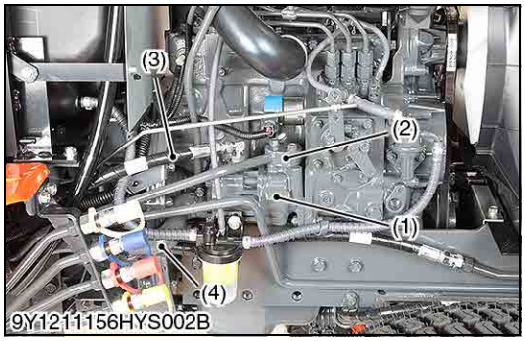


### Removing Hydraulic Pump

1. Open the bonnet then remove the side cover (R.H.) and disconnect the battery grounding cord.
2. Disconnect the connector of the engine stop solenoid and accelerator rod.
3. Disconnect the power steering delivery hose (3).
4. Remove the engine stop solenoid.
5. Disconnect the suction hose (4).
6. Disconnect 3-points hitch delivery pipe (2) and the hydraulic pump (1).

**(When reassembling)**

- Apply liquid gasket (Three Bond 1206D or equivalent) to engine stop solenoid.

(1) Hydraulic Pump
(2) 3-Point Hitch Delivery Pipe
(3) Power Steering Delivery Hose
(4) Suction Hose

9Y1211156HYS0010US0

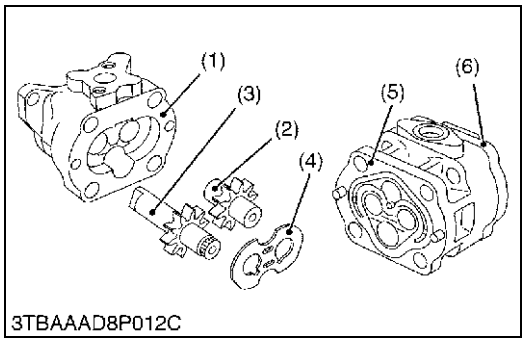


### Hydraulic Pump Cover, Side Plate and Gear

1. Secure the hydraulic pump with a vise, and remove the hydraulic pump cover (6) with casing (5).
2. Remove the side plate (4).
3. Remove the drive gear (3) and driven gear (2) from the casing (1).

**(When reassembling)**

- Be careful not to damage the O-ring.
- Align the holes of the cover and casing (1).
- Install the side plate (4), noting its location and direction.
- Install the gears (2), (3), noting its direction.

| | | |
|---|---|---|
| Tightening torque | Hydraulic pump cover mounting screw | 35 to 39 N·m<br>3.5 to 4.0 kgf·m<br>26 to 28 lbf·ft |

(1) Casing
(2) Driven Gear
(3) Drive Gear
(4) Side Plate
(5) Casing
(6) Hydraulic Pump Cover

9Y1211156HYS0011US0

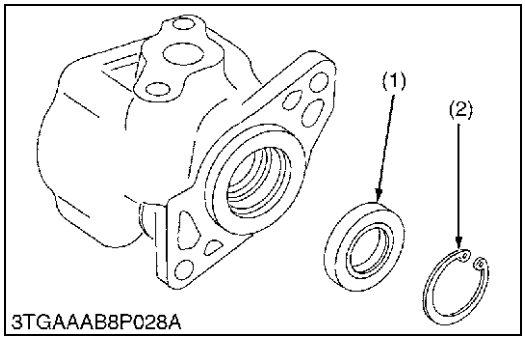


### Oil Seal

1. Remove the internal snap ring (2), and remove the oil seal (1).

**(When reassembling)**

- If the oil seal is damaged, worn or scratched, replace it.

(1) Oil Seal
(2) Internal Snap Ring

9Y1211156HYS0012US0

https://truckmanualshub.com/


## (2) 3-Point Hitch

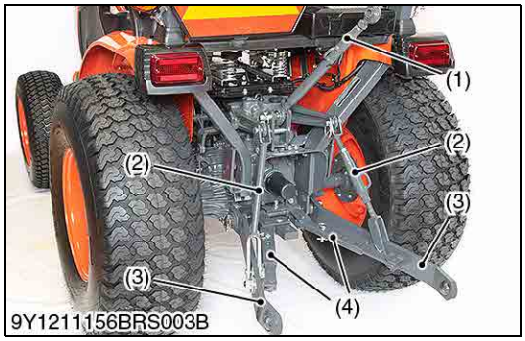


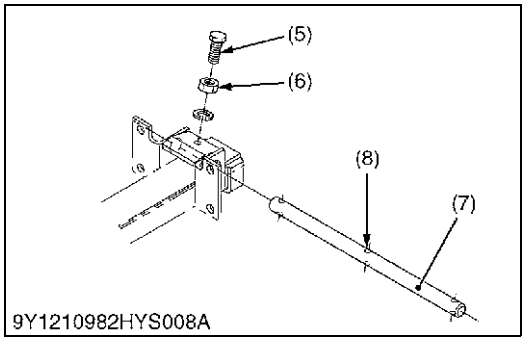


**3-Point Hitch**

1. Remove the top link (1).
2. Remove the lift rods (2).
3. Remove the stabilizer (4).
4. Remove the lower links (3).
5. Loosen the lock nut (6) and remove the set screw (5).
6. Remove the lower link pin (7).

**(When reassembling)**

■ **IMPORTANT**

- **Be sure to align the set screw (5) and lower link pin hole (8), when installing the lower link pin (7).**

| | | |
|---|---|---|
| Tightening torque | Set bolt of the lower link pin | 15 to 20 N·m<br>1.6 to 2.0 kgf·m<br>11 to 14 lbf·ft |
| | Lock nut of the lower link pin | 43 to 47 N·m<br>4.4 to 4.7 kgf·m<br>32 to 34 lbf·ft |

(1) Top Link
(2) Lift Rod
(3) Lower link
(4) Stabilizer
(5) Set Screw
(6) Lock Nut
(7) Lower Link Pin
(8) Lower Link Pin Hole

9Y1211156HYS0013US0

## (3) Separating Hydraulic Cylinder From Tractor Body

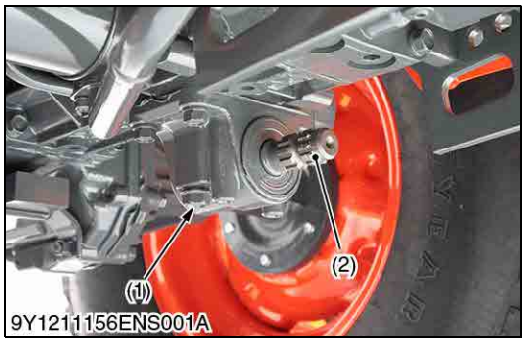


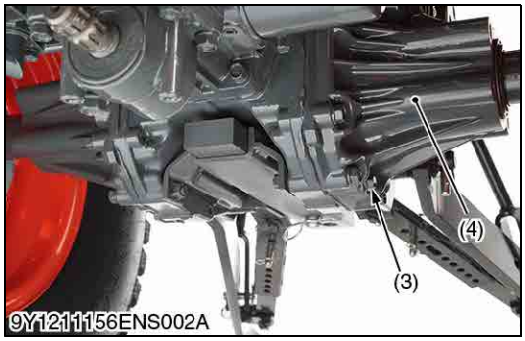


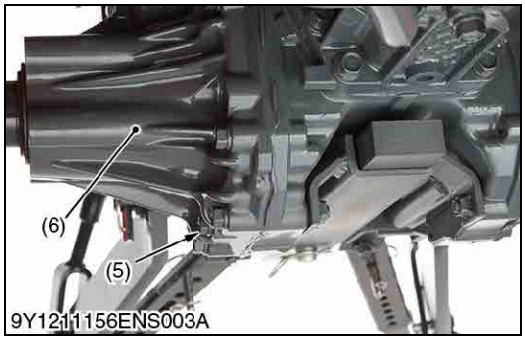


**Draining Transmission Fluid**

⚠ **CAUTION**

- **Stop the engine before checking and changing the transmission fluid.**

1. Place the oil pan under the tractor.
2. Remove the drain plugs (1), (3), (5) at the mid-PTO shaft and at the bottom of the rear axle cases (4), (6).
3. Drain the transmission fluid.
4. After draining the transmission fluid, reinstall the drain plugs (1), (3), (5).

■ **IMPORTANT**

- **Use only KUBOTA UDT oil. Use of other oils may damage the transmission or hydraulic system.**
  **Refer to "4. LUBRICANTS, FUEL AND COOLANT" on page G-8.**
- **Never work the tractor immediately after changing the transmission oil. Keep the engine at medium speed for a few minutes to prevents damage to the transmission.**
- **Do not mix different brands oil together.**

| | |
|---|---|
| Transmission fluid capacity | 15 L<br>4.0 U.S.gals<br>3.3 Imp.gals |

(1) Drain Plug
(2) Mid-PTO Shaft
(3) Drain Plug
(4) Rear Axle Case (L.H.)
(5) Drain Plug
(6) Rear Axle Case (R.H.)

9Y1211156ENS0023US0

https://truckmanualshub.com/

## Battery Negative Cable

1. Disconnect the battery negative cable (2).

(1) Battery
(2) Battery Negative Cable

9Y1211156HYS0014US0

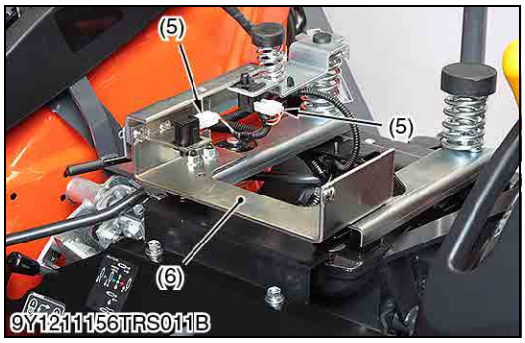


## Seat

1. Remove the seat (1) and lever grips (2).
2. Remove the both side lever guides (3).
3. Remove the seat under cover (4).
4. Disconnect the seat switch connector (5).
5. Remove the seat support (6).

(1) Seat
(2) Lever Grip
(3) Lever Guide
(4) Seat Under Cover
(5) Seat Switch Connector
(6) Seat Support

9Y1211156HYS0015US0

## Separating Hydraulic Cylinder from Tractor Body

1. Disconnect lever linkage from hydraulic cylinder.
2. Disconnect the hydraulic delivery pipe from hydraulic cylinder.
3. Disconnect the wiring harness from switches and pull the wiring harness to the front side.
4. Remove the hydraulic cylinder.

9Y1211156HYS0016US0

https://truckmanualshub.com/


# (4) 3-Points Hitch: Hydraulic Cylinder

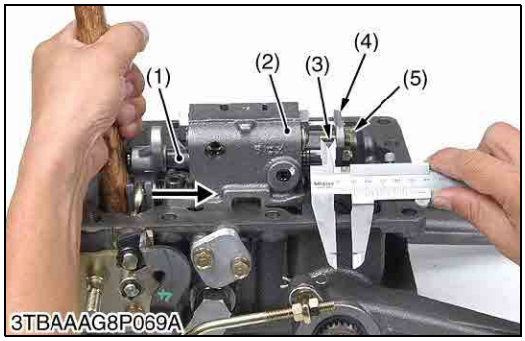


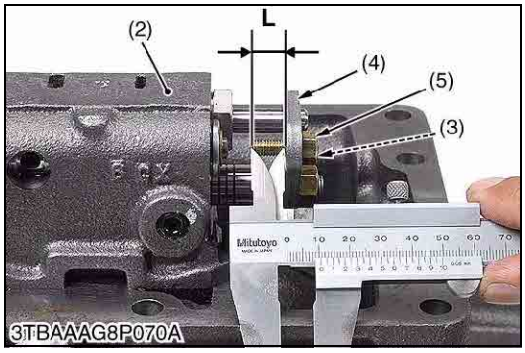


**Checking the Length of the Adjusting Bolt**

■ **NOTE**
- **Before disassembling the control valve, check the length of the adjusting bolt.**

1. Push the spool (1) into the control valve (2).
2. Check the length **"L"** of the adjusting bolt (3) as shown in the picture.

**(Reference)**
- Length **L**
  Approx. 10.70 mm (0.421 in.)

(1) Spool
(2) Control Valve
(3) Adjusting Bolt
(4) Connecting Plate
(5) Nut

**L: Length of the adjusting bolt**

9Y1211156HYS0017US0

https://truckmanualshub.com/


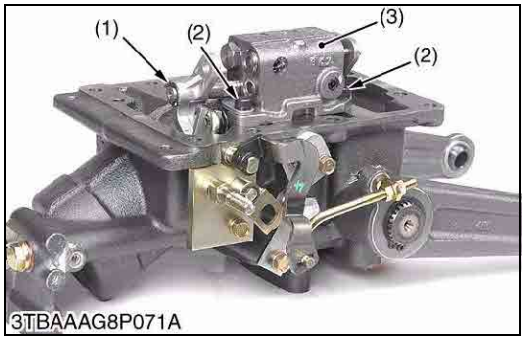


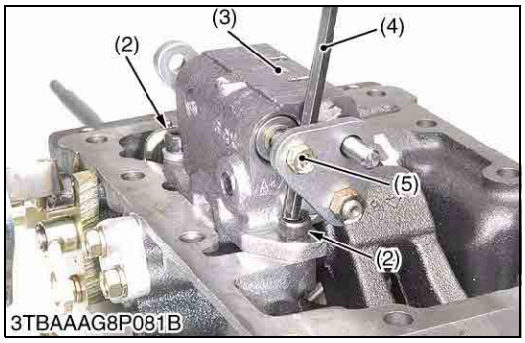


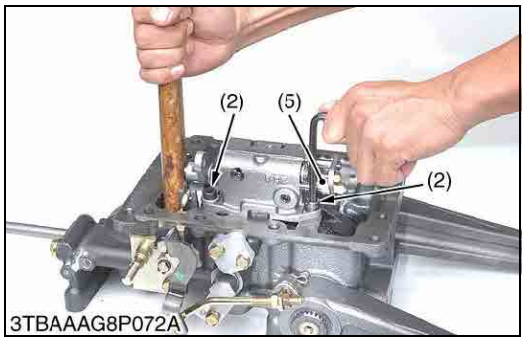

## Control Valve

■ **NOTE**

- **When the control valve is installed in the hydraulic cylinder, the hexagon wrench is not aligned straight to the hexagon bolt without pushing the spool as shown in the picture.**

1. Push the spool (1) into the control valve (3).
2. Remove the hexagon bolts (2) with a hexagon wrench (4).

(1) Spool
(2) Hexagon Bolt
(3) Control Valve
(4) Hexagon Wrench
(5) Adjusting Bolt

9Y1211156HYS0018US0

https://truckmanualshub.com/


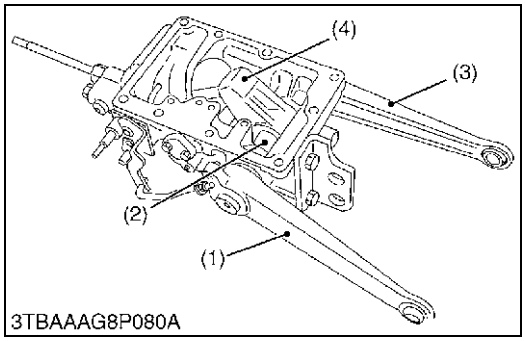


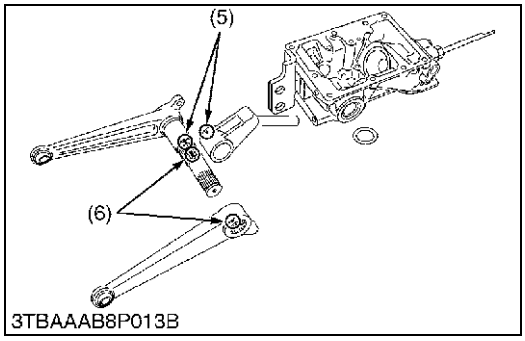


## Lift Arm, Hydraulic Arm Shaft and Hydraulic Arm

1. Remove the external snap ring, and remove the lift arm L.H. (2).
2. Draw out the hydraulic arm shaft (3) and lift arm R.H. (4) as a unit.

**(When reassembling)**

- Align the alignment marks (5) of the hydraulic arm and hydraulic arm shaft.
- Align the alignment marks (6) of the lift arm L.H. and hydraulic arm shaft.
- Apply grease to the right and left bushings and O-rings.
- Be careful not to damage the O-rings.

(1) Lift Arm R.H.
(2) Hydraulic Arm Shaft
(3) Lift Arm L.H.
(4) Hydraulic Arm
(5) Alignment Marks
(6) Alignment Marks

9Y1211156HYS0019US0

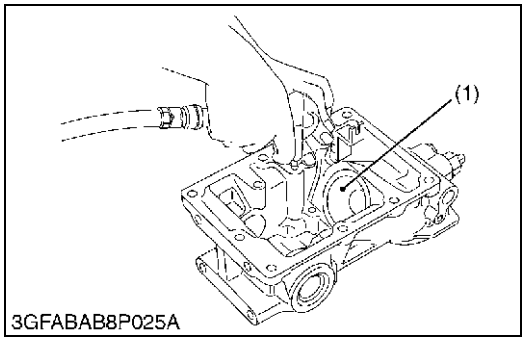


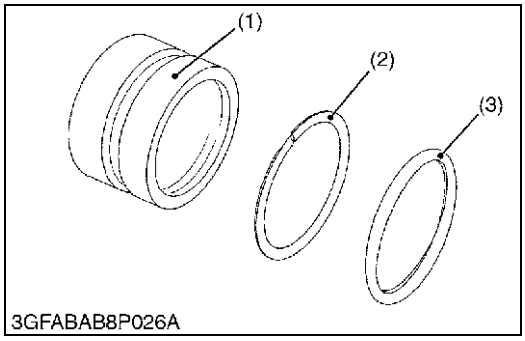


## Hydraulic Piston

1. Inject the compressed air into the hydraulic cylinder, and remove the hydraulic piston (1).

**(When reassembling)**

- Be careful not to damage the O-ring (3) and backup ring (2).
- Apply transmission fluid to the O-ring.
- Replace the O-ring if it is damaged, worn or scratched, which may cause oil leakage.

(1) Hydraulic Piston
(2) Backup Ring
(3) O-ring

9Y1211156HYS0020US0

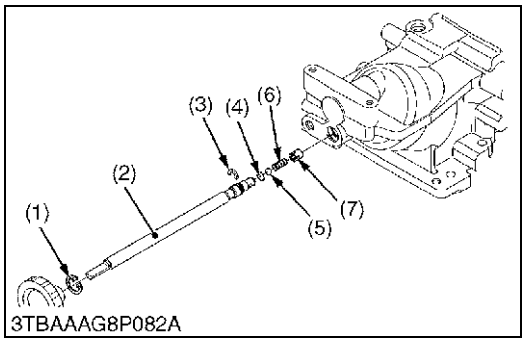


## Hydraulic Adjust Shaft

1. Remove the internal cir-clip (1) and the hydraulic adjusting shaft (2).
2. Draw out the ball (5), the spring (6) and the collar (7).

**(When reassembling)**

- Be careful not to damage the O-rings.

(1) Internal Cir-clip
(2) Hydraulic Adjust Shaft
(3) Stopper
(4) O-ring
(5) Ball
(6) Spring
(7) Collar

9Y1211156HYS0021US0

https://truckmanualshub.com/


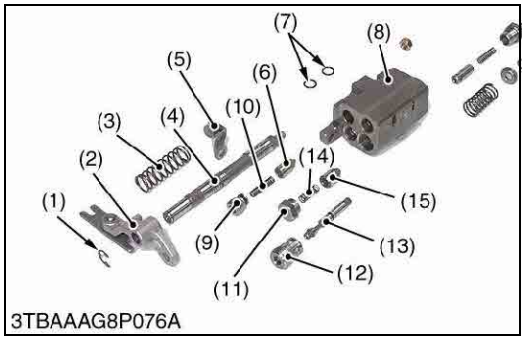


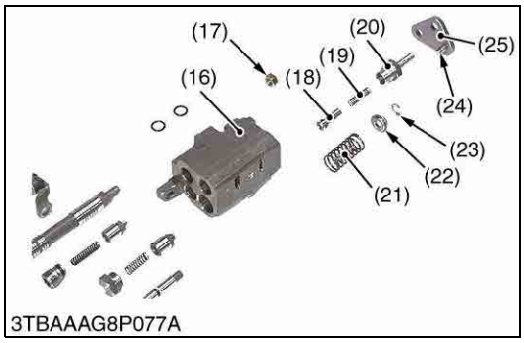

## Disassembling Position Control Valve

1. After removing the control valve, disassemble the component parts as shown in the picture.

**(When reassembling)**

- Readjust the length **"L"** of the adjusting bolt.

**(Reference)**

- Length **"L"**: approximately 10.70 mm (0.4213 in.)

(1) External Cir-clip
(2) Lever
(3) Spring
(4) Spool
(5) Spring Holder
(6) Poppet
(7) O-ring
(8) Control Valve Body
(9) Plug
(10) Spring
(11) Unload Plug
(12) Plug
(13) Poppet
(14) Spring
(15) Unload Poppet
(16) Control Valve Body
(17) Nut
(18) Poppet
(19) Spring
(20) Plug
(21) Spring
(22) Spring Holder
(23) External Cir-clip
(24) Adjusting Bolt
(25) Connecting Plate

**L: Length of adjusting bolt**

9Y1211156HYS0022US0

# (5) Front Loader Control Valve Assembly (If Equipped)

## Rear Wheel

1. Place the disassembling stand under the transmission case.
2. Remove the rear wheel (1).

| | | |
|---|---|---|
| Tightening torque | Rear wheel mounting nut and screw | 145 to 150 N·m<br>14.8 to 15.2 kgf·m<br>107 to 110 lbf·ft |

(1) Rear Wheel

9Y1211156BRS0006US0

https://truckmanualshub.com/


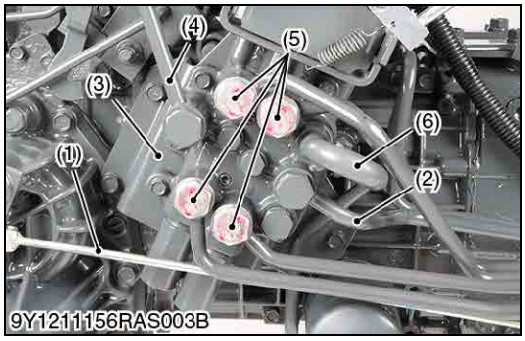


## Front Loader Valve Assembly

1. Remove the brake rod (1).
2. Disconnect the 3-point hitch delivery pipe 1 (2), 3-point hitch delivery pipe 2 (4) and return hose (6).
3. Remove the front loader valve pipes (5).
4. Remove the loader valve assembly (3).

**(When reassembling)**

- Do not damage the O-rings of front loader valve pipes and delivery pipes.
- Apply liquid gasket (Three Bond 1206D or equivalent) to joint face of the rear axle case and differential gear case after eliminating the water and oil.

| | | |
|---|---|---|
| Tightening torque | Front loader valve pipe joint bolt | 48 to 70 N·m<br>4.9 to 7.1 kgf·m<br>36 to 51 lbf·ft |
| | 3-point hitch delivery pipe 1 joint bolt | 48 to 70 N·m<br>4.9 to 7.1 kgf·m<br>36 to 51 lbf·ft |
| | 3-point hitch delivery pipe 2 joint bolt (Front loader valve side) | 48 to 70 N·m<br>4.9 to 7.1 kgf·m<br>36 to 51 lbf·ft |
| | 3-point hitch delivery pipe 2 joint bolt (Hydraulic cylinder case side) | 50 to 60 N·m<br>5.1 to 6.1 kgf·m<br>37 to 44 lbf·ft |

(1) Brake Rod
(2) 3-Point Hitch Delivery Pipe 1
(3) Loader Valve Assembly
(4) 3-Point Hitch Delivery Pipe 2
(5) Front Loader Valve Pipe
(6) Return Hose

9Y1211156HYS0023US0

https://truckmanualshub.com/


## Disassembling Front Loader Control Valve and Relief Valve

■ **NOTE**
- **Refer to the page 7-S8 for the relief valve.**

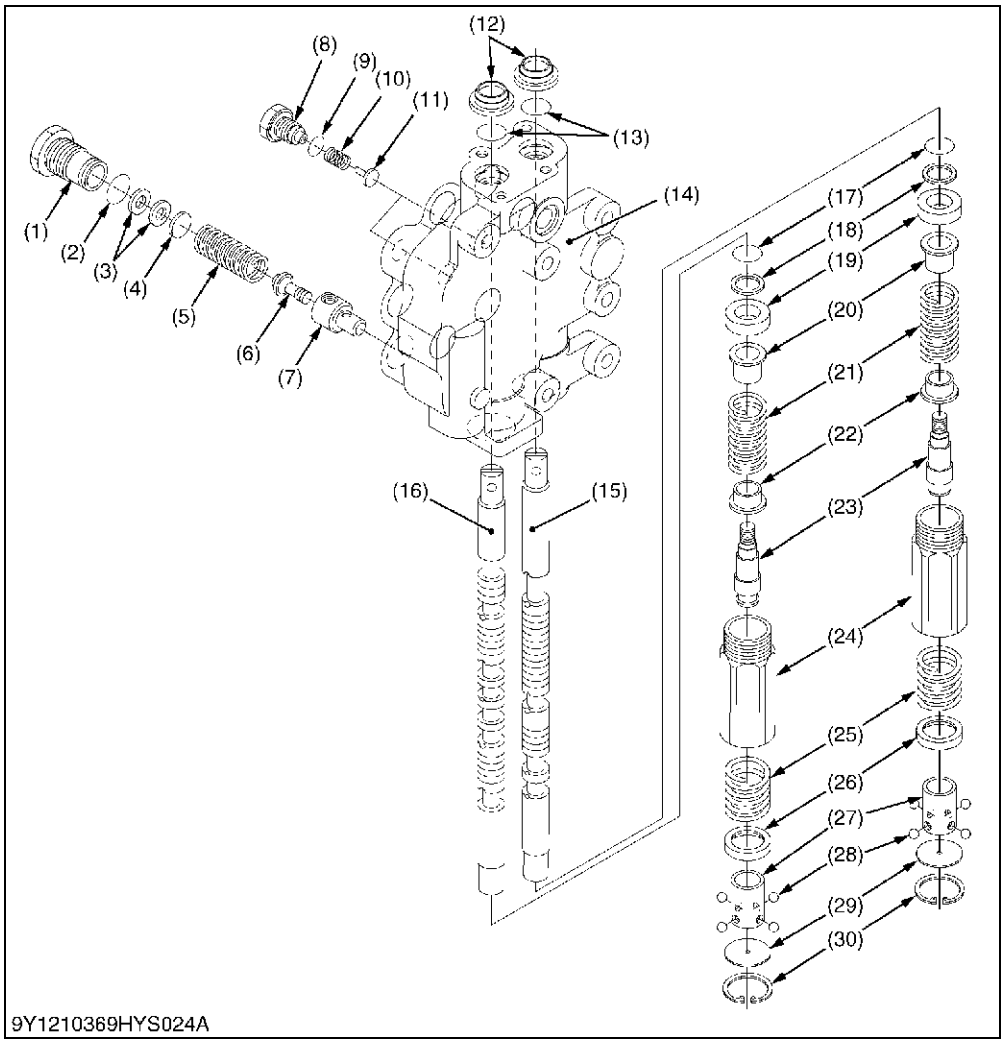


(1) Plug
(2) O-ring
(3) Washer
(4) Shim
(5) Spring
(6) Poppet 2
(7) Poppet 1
(8) Plug
(9) O-ring
(10) Spring
(11) Check Valve
(12) Dust Seal
(13) O-ring
(14) Valve Body
(15) Spool for Boom
(16) Spool for Bucket
(17) O-ring
(18) Backup Ring
(19) Collar
(20) Spring Holder 1
(21) Spring
(22) Spring Holder 2
(23) Detent Bolt 1
(24) Plug
(25) Detent Spring
(26) Detent Ring
(27) Stopper
(28) Ball
(29) Plate
(30) Internal Circlip

■ **Boom Control Section and Bucket Control Section**
1. Remove the plug (8), the spring (10) and load check valve (11).
2. Remove the plug (24) from valve body (14).
3. Remove the internal circlip (30), the stopper (27), detent spring (25), detent ring (26), and ball (28).
4. Draw out the spool (15), (16) with other component parts from valve body (14).

■ **Relief Valve**
1. Remove the plug (1), the spring (5) and poppet (6), (7).

9Y1211156HYS0024US0

https://truckmanualshub.com/


## (6) Remote Control Valve (If Equipped)

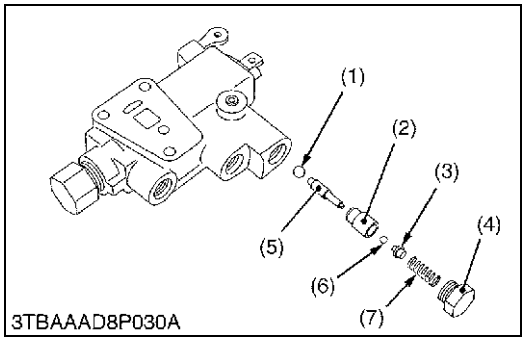


**Poppet and Piston (Mechanical Check Valve)**

1. Remove the plug 1 (4) and draw out the spring (7), ball guide (3), balls (1), (6), poppet (2) and piston (5).

**(When reassembling)**

- Be careful not to damage the O-ring.

| | | |
|---|---|---|
| Tightening torque | Plug 1 | 29.4 to 49.0 N·m<br>3.0 to 5.0 kgf·m<br>21.7 to 36.2 lbf·ft |

(1) Ball
(2) Poppet
(3) Ball Guide
(4) Plug 1
(5) Piston
(6) Ball
(7) Spring

9Y1211156HYS0025US0

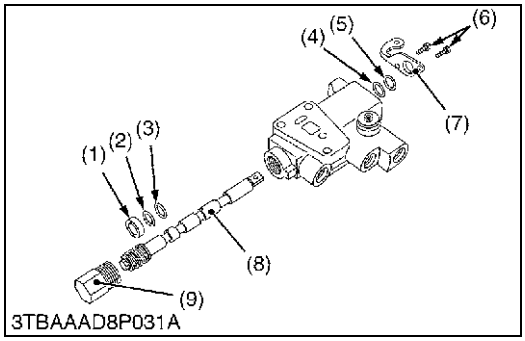


**Spool**

1. Remove the screws (6), and remove the bracket (7).
2. Remove the plug 2 (9), and draw out the spool (8).

**(When reassembling)**

- Be careful not to damage the O-rings and backup rings.

| | | |
|---|---|---|
| Tightening torque | Bracket mounting screw | 4.9 to 7.8 N·m<br>0.5 to 0.8 kgf·m<br>3.6 to 5.8 lbf·ft |
| | Plug 2 | 39.3 to 58.8 N·m<br>4.0 to 6.0 kgf·m<br>28.9 to 43.4 lbf·ft |

(1) Collar
(2) Backup Ring
(3) O-ring
(4) O-ring
(5) Backup Ring
(6) Screw
(7) Bracket
(8) Spool
(9) Plug 2

9Y1211156HYS0026US0

# [3] SERVICING

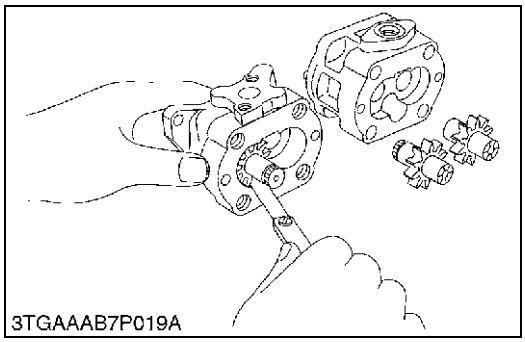


**Clearance between Tip of Gear Tooth and Casing**

1. Measure the clearance between gear and casing at several points with feeler gauge.
2. If the clearance exceeds the allowable limit, replace the assembly.

| | | |
|---|---|---|
| Clearance between tip of gear tooth and casing | Allowable limit | 0.15 mm<br>0.0059 in. |

9Y1211156HYS0027US0

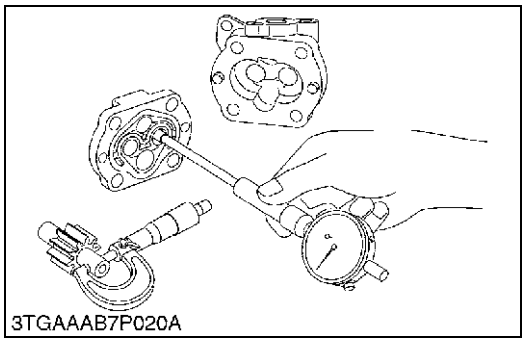


**Clearance between Bushing and Shaft**

1. Measure the shaft O.D. with an outside micrometer.
2. Measure the bushing I.D. with a cylinder gauge.
3. If the clearance exceeds the allowable limit, replace it.

| | | |
|---|---|---|
| Clearance between bushing and shaft | Factory specification | 0.020 to 0.091 mm<br>0.0008 to 0.0036 in. |
| | Allowable limit | 0.12 mm<br>0.0047 in. |

| | | |
|---|---|---|
| Shaft O.D. | Factory specification | 14.970 to 14.980 mm<br>0.5894 to 0.5898 in. |
| Bushing I.D. | Factory specification | 15.000 to 15.061 mm<br>0.5906 to 0.5930 in. |

9Y1211156HYS0028US0

https://truckmanualshub.com/


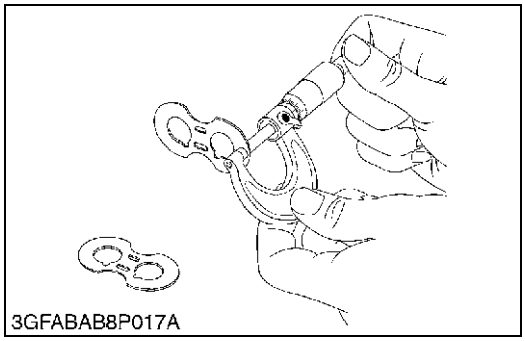
3GFABAB8P017A

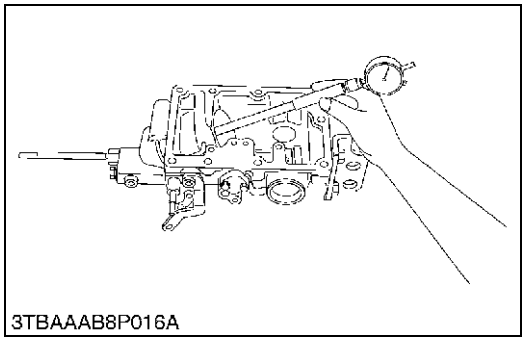
3TBAAAB8P016A

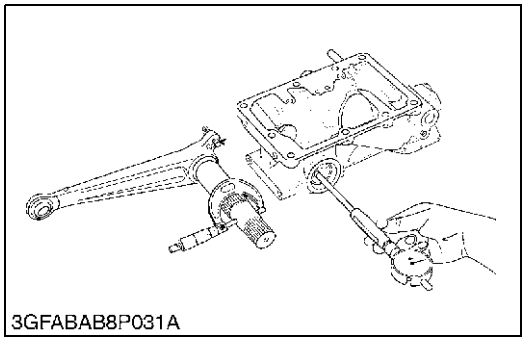
3GFABAB8P031A

## Side Plate Thickness

1. Measure the side plate thickness with an outside micrometer.
2. If the thickness is less than the allowable limit, replace it.

| | | |
|---|---|---|
| Side plate thickness | Factory specification | 2.48 to 2.50 mm<br>0.0976 to 0.0984 in. |
| | Allowable limit | 2.40 mm<br>0.0945 in. |

9Y1211156HYS0029US0

## Hydraulic Cylinder Bore

1. Check the cylinder internal surface for scoring or damage.
2. Measure the cylinder I.D. with a cylinder gauge.
3. If the measurement exceeds the allowable limit, replace the hydraulic cylinder block.

| | | |
|---|---|---|
| Cylinder I.D. | Factory specification | 75.05 to 75.10 mm<br>2.955 to 2.956 in. |
| | Allowable limit | 75.15 mm<br>2.959 in. |

9Y1211156HYS0030US0

## Clearance between Hydraulic Arm Shaft and Bushing

1. Measure the hydraulic arm shaft O.D. with an outside micrometer.
2. Measure the bushing I.D. with a cylinder gauge, and calculate the clearance.
3. If the clearance exceeds the allowable limit, replace the bushing.

| | | |
|---|---|---|
| Clearance between hydraulic arm shaft and bushing | Factory specification | 0.020 to 0.110 mm<br>0.0008 to 0.0043 in. |
| | Allowable limit | 0.30 mm<br>0.0118 in. |

| | | | |
|---|---|---|---|
| Hydraulic arm shaft O.D. | Factory specification | Right | 37.925 to 37.950 mm<br>1.4931 to 1.4941 in. |
| | | Left | 34.925 to 34.950 mm<br>1.3750 to 1.3759 in. |

| | | | |
|---|---|---|---|
| Bushing I.D.<br>(after press filed) | Factory specification | Right | 37.970 to 38.035 mm<br>1.4949 to 1.4974 in. |
| | | Left | 34.970 to 35.035 mm<br>1.3768 to 1.3793 in. |

9Y1211156HYS0031US0

https://truckmanualshub.com/

# 8 ELECTRICAL SYSTEM

https://truckmanualshub.com/

# MECHANISM

## CONTENTS

1. WIRING DIAGRAM ..... 8-M1
2. ENGINE STARTING SYSTEM AND STOPPING SYSTEM ..... 8-M2
   [1] OPC SYSTEM CIRCUIT ..... 8-M2
   [2] CONTROLLER ..... 8-M3
   [3] SAFETY SWITCH ..... 8-M6
      (1) PTO Select Lever Switch ..... 8-M6
      (2) PTO Clutch Lever Switch ..... 8-M6
      (3) HST Pedal Switch (HST Model) ..... 8-M7
      (4) Seat Switch ..... 8-M7
   [4] STARTER ..... 8-M8
   [5] ENGINE STOP SOLENOID ..... 8-M8
   [6] GLOW PLUG ..... 8-M9
3. CHARGING SYSTEM ..... 8-M10
4. LIGHTING SYSTEM ..... 8-M11
   [1] HEAD LIGHT ..... 8-M11
   [2] TURN SIGNAL LIGHT ..... 8-M11
   [3] HAZARD LIGHT ..... 8-M12
5. INSTRUMENT PANEL ..... 8-M13
   [1] EASY CHECKER™ ..... 8-M13
   [2] SWITCHES AND SENSORS ..... 8-M13

https://truckmanualshub.com/



# 1. WIRING DIAGRAM

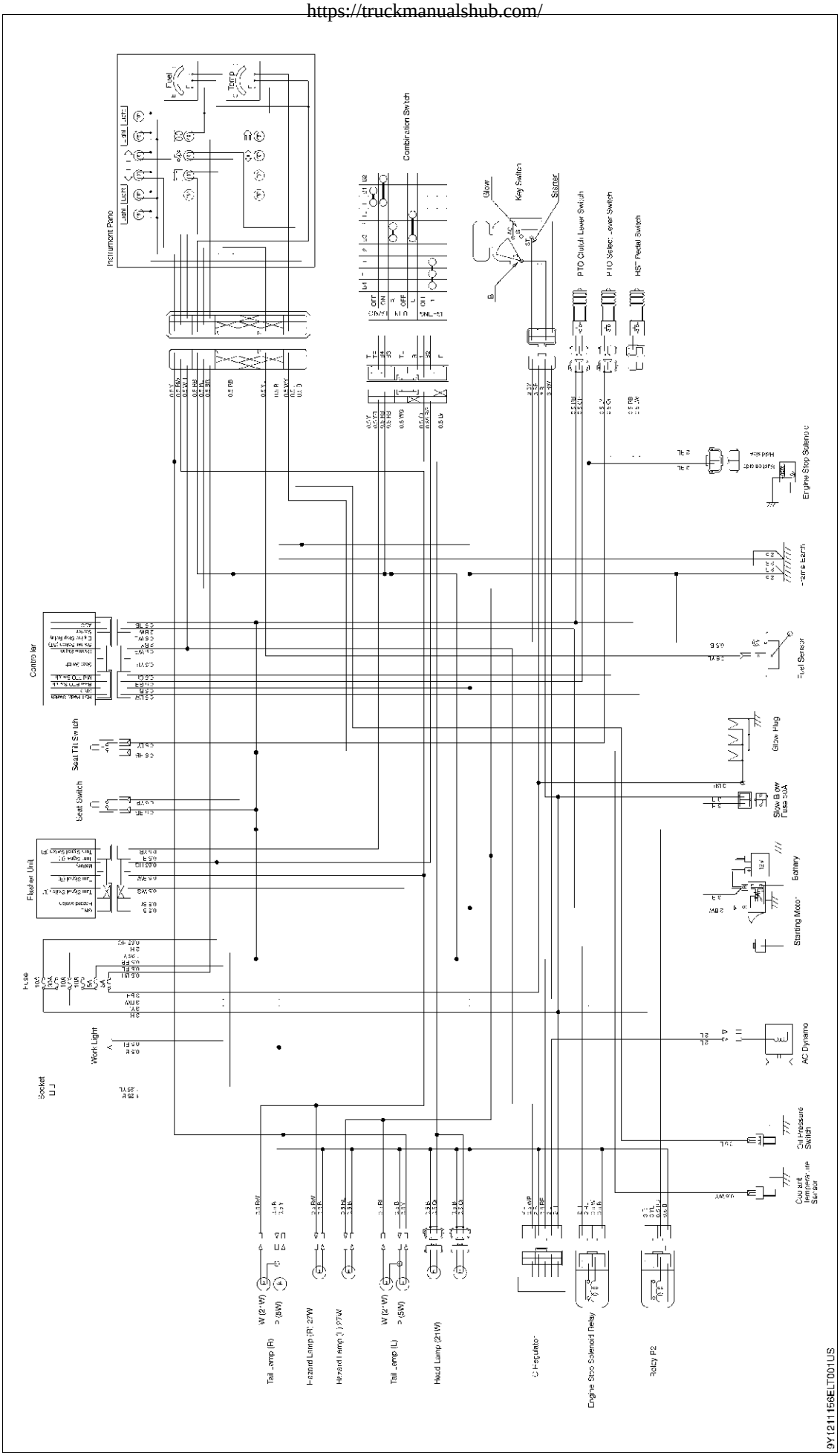

https://truckmanualshub.com/


# 2. ENGINE STARTING SYSTEM AND STOPPING SYSTEM

This series tractors equipped operator presence control (OPC) system. This system will automatically stop the engine when operator stands up from the seat while shifting the PTO gear shift lever, depressing the HST pedal.

This system is controlled by five switches, (PTO clutch lever switch, PTO select lever switch, seat switch, seat tilt switch, HST safety switch) and controller.

Engine starting is operated with starter after current flowing from controller to stator motor.

Engine stopping is operated with engine stop solenoid after current flowing from controller through engine stop solenoid relay to engine stop solenoid.

9Y1211156ELM0002US0

## [1] OPC SYSTEM CIRCUIT

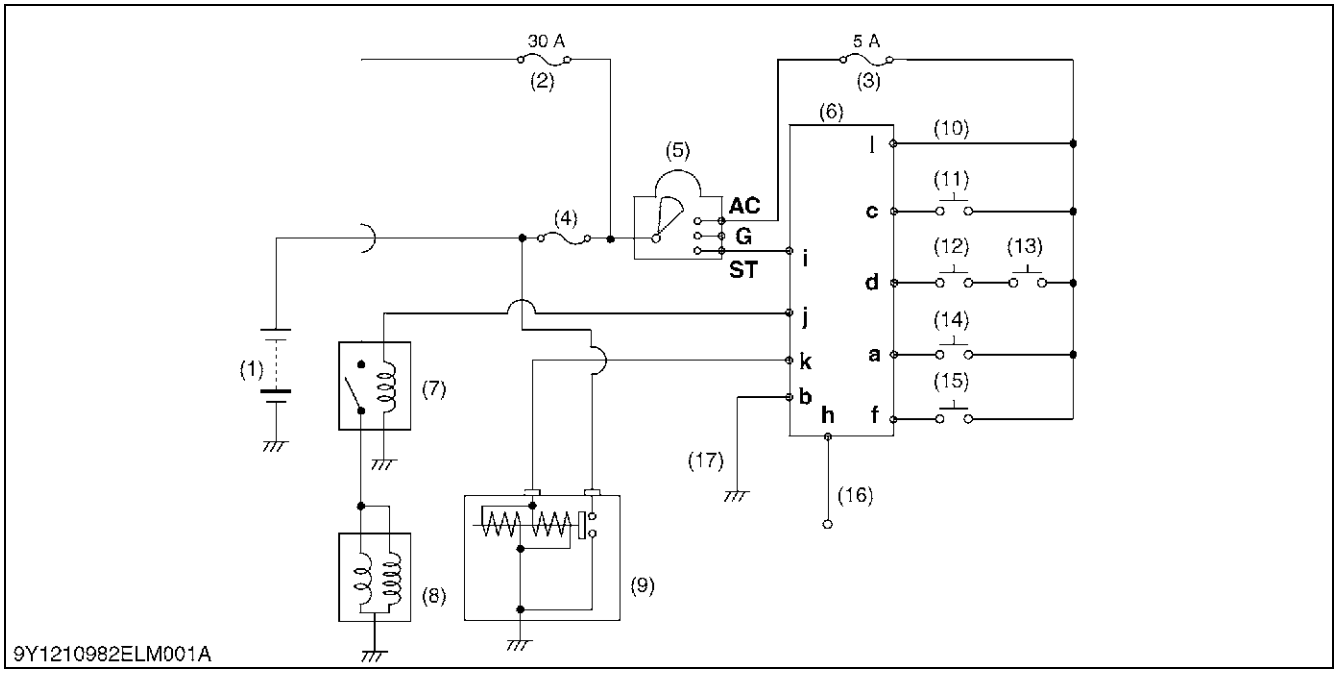


(1) Battery
(2) Fuse
(3) Fuse
(4) Slow Blow Fuse (50 A)
(5) Key Switch
(6) Controller
(7) Relay (Engine Stop Solenoid)
(8) Engine Stop Solenoid
(9) Starter Motor
(10) **AC** Terminal Lead
(11) PTO Clutch Lever Switch
(12) PTO Select Lever Switch
(13) Seat Tilt Switch
(14) HST Pedal Switch
(15) Seat Switch
(16) Regulator
(17) Frame Earth

**a to l: Controller Terminal**
**AC: AC Terminal**
**G: G Terminal**
**ST: ST Terminal**

9Y1211156ELM0003US0

https://truckmanualshub.com/


# [2] CONTROLLER

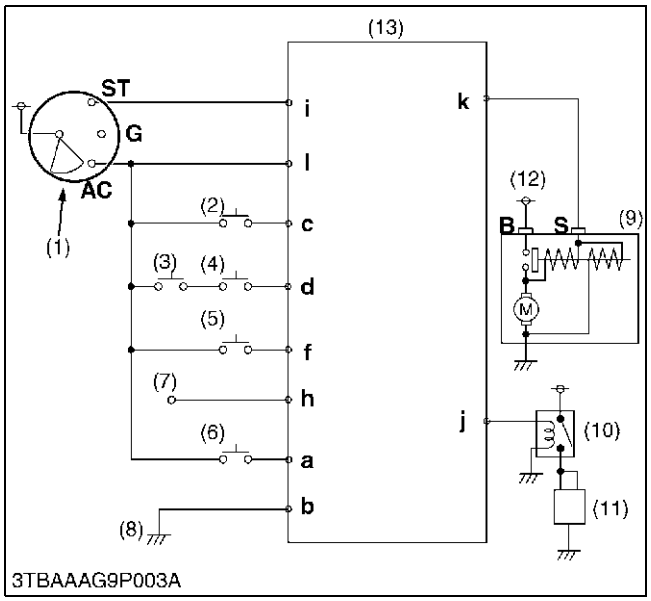


## Operator Presence Control (OPC) System

This series tractor tractors are equipped with an "Operator Presence Control (OPC)" system to control engine starting and engine automatically stopping.

This OPC system mainly consists of controller and engine starting / stopping control switches such as PTO clutch lever switch, PTO select lever switch, seat tilt switch, seat switch, HST pedal switch.

Main parts regarding OPC system are laid out as shown in the electrical circuit.

(1) Key Switch
(2) PTO Clutch Lever Switch
(3) PTO Select Lever Switch
(4) Seat Tilt Switch
(5) Seat Switch
(6) HST Pedal Switch
(7) Regulator
(8) Frame Earth
(9) Starter Motor
(10) Relay (Engine Stop Solenoid)
(11) Engine Stop Solenoid
(12) Battery
(13) OPC Controller

**a to l: Controller Terminal**
**ST: Key Switch ST Terminal**
**G: Key Switch G Terminal**
**AC: Key Switch AC Terminal**
**B: Starter Motor B Terminal**
**S: Starter Motor S Terminal**

9Y1211156ELM0004US0

https://truckmanualshub.com/


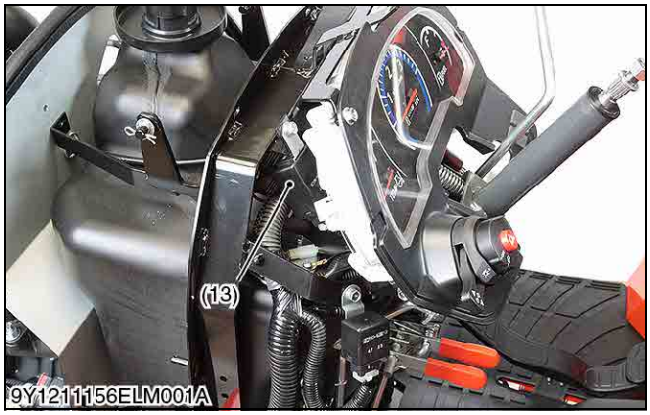


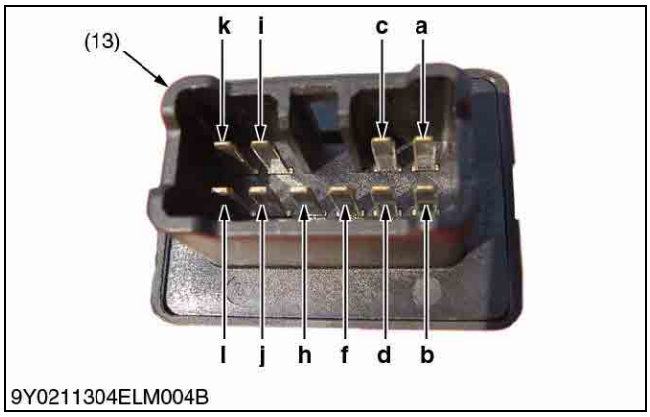


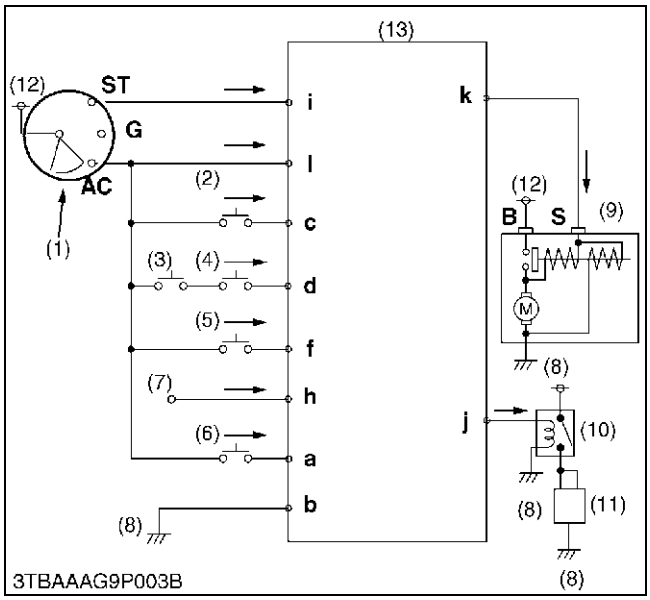


## Controller

Controller is located inside the panel board.

Current from the key switch, safety switches and regulator flows to controller.

Controller receives current as data, processes the data, and sends out current computing results to starter motor, relay (engine stop solenoid), and engine stop solenoid.

OPC controller (13) controls engine starting and engine stopping.

Current flows from battery to controller.

Current from switches such as PTO clutch lever switch (2), PTO select lever switch (3), seat tilt switch (4), seat switch (5), HST pedal switch (6), flows to the controller.

Current from regulator (7) flows to the controller.

When starting the engine, the controller (13) supplies current to starter motor **S** terminal and relay (engine stop solenoid) (10).

Controller (13) receives data, processes the data, and sends out the computing results.

Controller (13) receives data from safety switches, processes the data inside the controller itself, and sends out the computing results to starter motor (9) for engine starting, and relay (engine stop solenoid) (10) for engine stopping.

(1) Key Switch
(2) PTO Clutch Lever Switch
(3) PTO Select Lever Switch
(4) Seat Tilt Switch
(5) Seat Switch
(6) HST Pedal Switch
(7) Regulator
(8) Frame Earth
(9) Starter Motor
(10) Relay (Engine Stop Solenoid)
(11) Engine Stop Solenoid
(12) Battery
(13) OPC Controller

**a to l: Controller Terminal**
**ST: Key Switch ST Terminal**
**G: Key Switch G Terminal**
**AC: Key Switch AC Terminal**
**B: Starter Motor B Terminal**
**S: Starter Motor S Terminal**
**→: Current Flow**

9Y1211156ELM0005US0

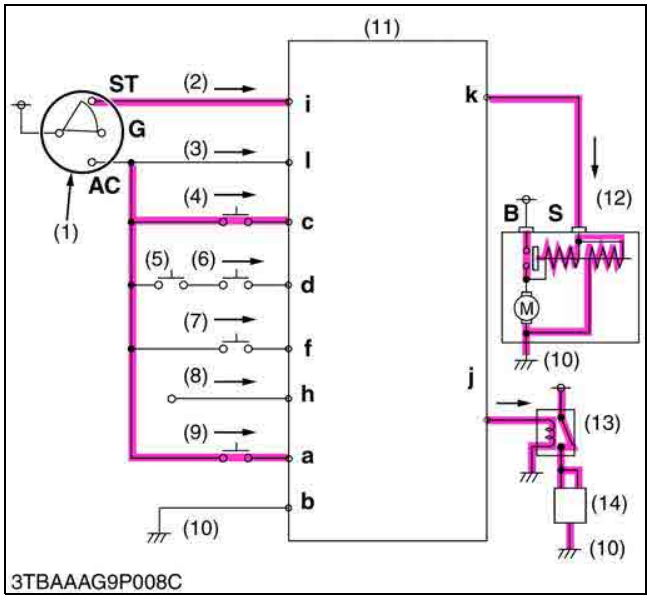


## Engine Starting

When the following conditions become complete, output voltage (12 V) reaches coil terminal of the starter motor from controller **k** terminal, the engine can be started.

| | |
|---|---|
| PTO Clutch Lever Switch<br>(Disengaged: ON, Engaged: OFF) | ON |
| HST Pedal Switch<br>(Neutral: ON, Forward and Reverse: OFF) | ON |

(1) Key Switch
(2) **ST** Terminal Lead
(3) **AC** Terminal Lead
(4) PTO Clutch Lever Switch
(5) PTO Select Lever Switch
(6) Seat Tilt Switch
(7) Seat Switch
(8) Regulator
(9) HST Pedal Switch
(10) Frame Earth
(11) Controller
(12) Starter Motor
(13) Relay (Engine Stop Solenoid)
(14) Engine Stop Solenoid

**ST, G, AC: Key Switch Terminals**
**a to l: Controller Terminals**
**B: Starter Motor B Terminals**
**S: Starter Motor S Terminal**
**→: Current Flow**

9Y1211156ELM0006US0

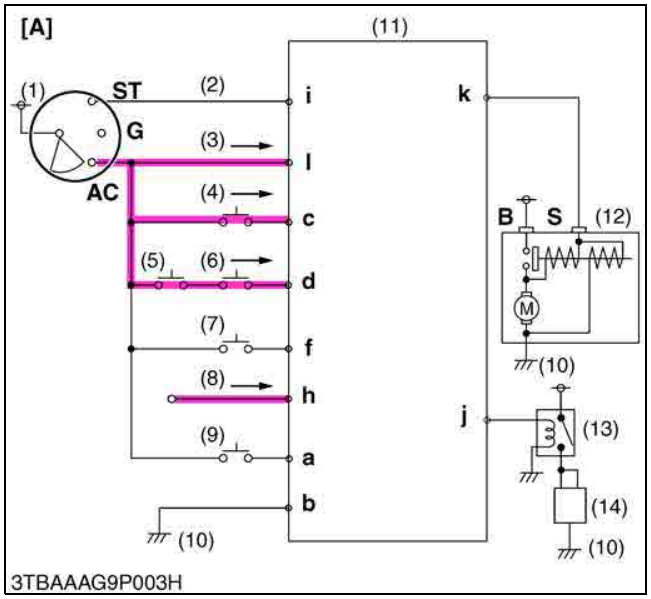


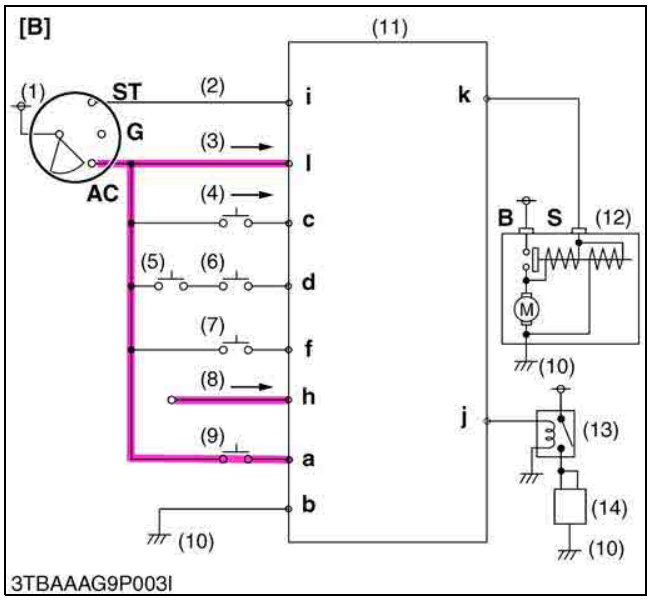


## One Second Delay Engine Stop

When one condition of the three patterns becomes complete, output voltage (12 V) to the relay (engine stop solenoid) from controller **j** terminal will stop in one second delay.

### Pattern 1

| | |
|---|---|
| Seat Switch<br>(Occupied: ON, Vacant: OFF) | OFF |
| HST Pedal Switch<br>(Neutral: ON, Forward and Reverse: OFF) | OFF |

### Pattern 2

| | |
|---|---|
| Seat Switch<br>(Occupied: ON, Vacant: OFF) | OFF |
| PTO Clutch Lever Switch<br>(Disengaged: ON, Engaged: OFF) | OFF |
| Seat Tilt Switch<br>(Tilted : ON, Normal : OFF) | OFF |
| PTO Select Lever Switch<br>(Rear PTO: ON, Rear/Mid or Mid PTO: OFF) | ON |

### Pattern 3

| | |
|---|---|
| Seat Switch<br>(Occupied: ON, Vacant: OFF) | OFF |
| PTO Clutch Lever Switch<br>(Disengaged: ON, Engaged: OFF) | OFF |
| PTO Select Lever Switch<br>(Rear PTO: ON, Rear/Mid or Mid PTO: OFF) | OFF |

(1) Key Switch
(2) **ST** Terminal Lead
(3) **AC** Terminal Lead
(4) PTO Clutch Lever Switch
(5) PTO Select Lever Switch
(6) Seat Tilt Switch
(7) Seat Switch
(8) Regulator
(9) HST Pedal Switch
(10) Frame Earth
(11) Controller
(12) Starter Motor
(13) Relay (Engine Stop Solenoid)
(14) Engine Stop Solenoid

**[A] Pattern 2 and 3**
**[B] Pattern 1**
**ST, G, AC: Key Switch Terminals**
**B: Starter Motor B Terminal**
**S: Starter Motor S Terminal**
**a to l: Controller Terminals**
**→: Current Flow**

9Y1211156ELM0007US0

https://truckmanualshub.com/


# [3] SAFETY SWITCH

## (1) PTO Select Lever Switch

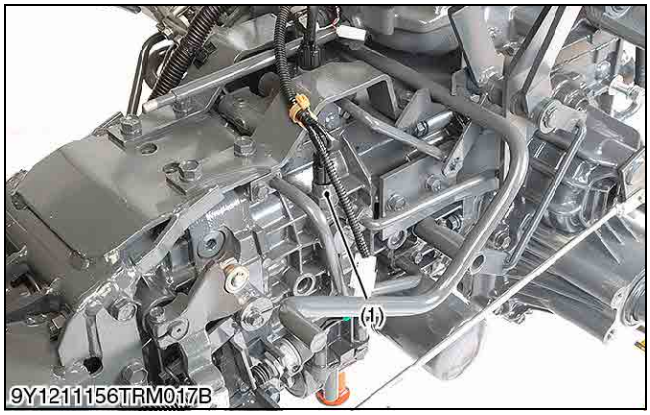


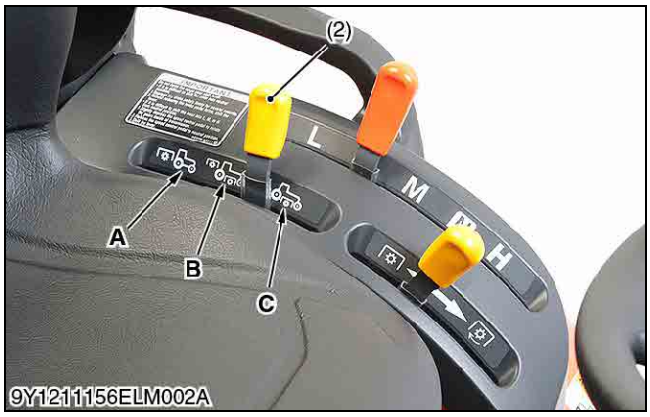


**PTO Select Lever Switch**

This switch locates at transmission case.

This switch is a push type.

This switch detects the position of the PTO select lever.

When the PTO select lever is at **"REAR PTO"** position, this switch is turned to **"ON"**.

When the PTO select lever is at **"Rear/Mid, Mid PTO"** position, this switch is turned to **"OFF"**.

| | | | |
|---|---|---|---|
| (1) | PTO Select Lever Switch | **A:** | **Rear PTO Position** |
| (2) | PTO Select Lever | **B:** | **Rear PTO / Mid PTO Position** |
| | | **C:** | **Mid PTO Position** |

9Y1211156ELM0008US0

## (2) PTO Clutch Lever Switch

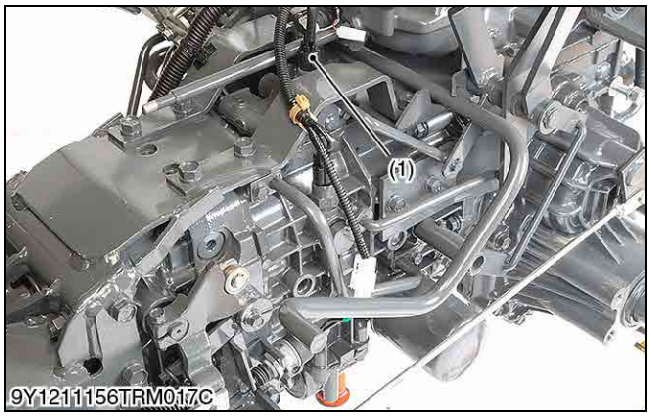


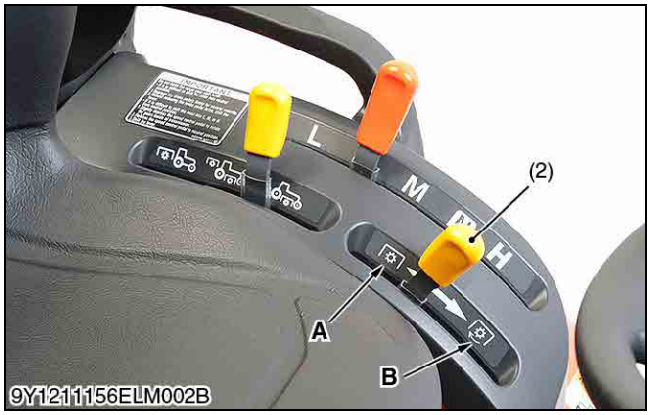


**PTO Clutch Lever Switch**

This switch is a push type.

This switch detects the PTO clutch engagement.

When the PTO clutch lever is set to **"DISENGAGED"** position, this switch is turned to **"ON"**.

When the PTO clutch lever is set to **"ENGAGED"** position, this switch is turned to **"OFF"**.

| | | | |
|---|---|---|---|
| (1) | PTO Clutch Lever Switch | **A:** | **"DISENGAGED" Position** |
| (2) | PTO Clutch Lever | **B:** | **"ENGAGED" Position** |

9Y1211156ELM0009US0

https://truckmanualshub.com/


## (3) HST Pedal Switch (HST Model)

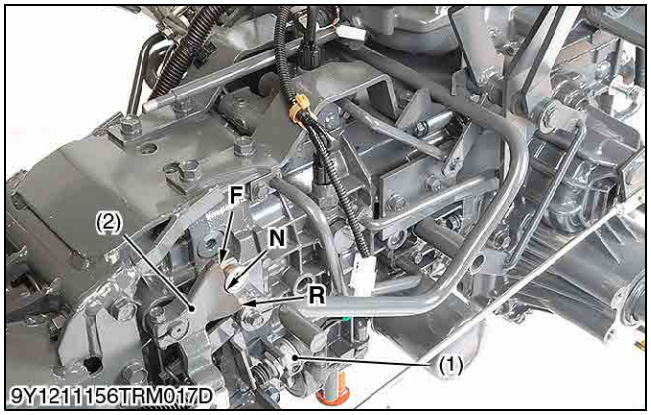


**HST Pedal Switch**

This switch located at the neutral switch stay.
This switch is a push type.
This switch detects the position of the HST pedal.
When HST pedal is at **"NEUTRAL"** position, this switch is turned to **"ON"**.
When HST pedal is at **"FORWARD"** or **"REVERSE"** position, this switch is turned to **"OFF"**.

| | | | |
|---|---|---|---|
| (1) | HST Pedal Switch | **F:** | **FORWARD** |
| (2) | Neutral Holder | **N:** | **NEUTRAL** |
| | | **R:** | **REVERSE** |

9Y1211156ELM0010US0

## (4) Seat Switch

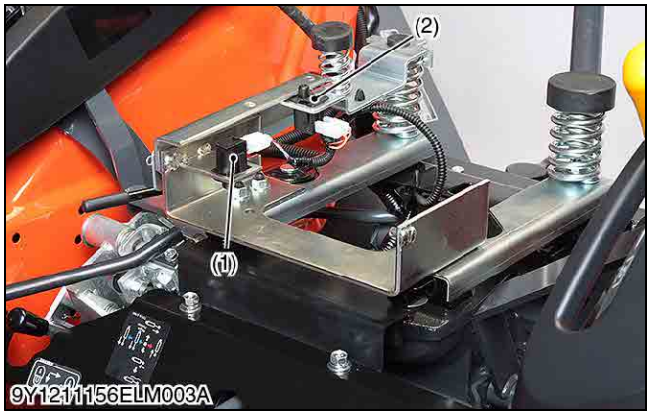


**Seat Switch and Seat Tilt Switch**

These switches are located under the seat. When sitting on the seat, the seat switch (2) is pushed in and electrical circuit is closed. When the seat is vacant, this switch is not pushed and electric circuit is opened. Other seat tilt switch (1) is to detect tilting the seat. When tilting the seat forward as shown in the figure, the seat tilt switch (1) is pushed in and electrical circuit is closed.

| | | | |
|---|---|---|---|
| (1) | Seat Tilt Switch | (2) | Seat Switch |

9Y1211156ELM0011US0

https://truckmanualshub.com/


# [4] STARTER

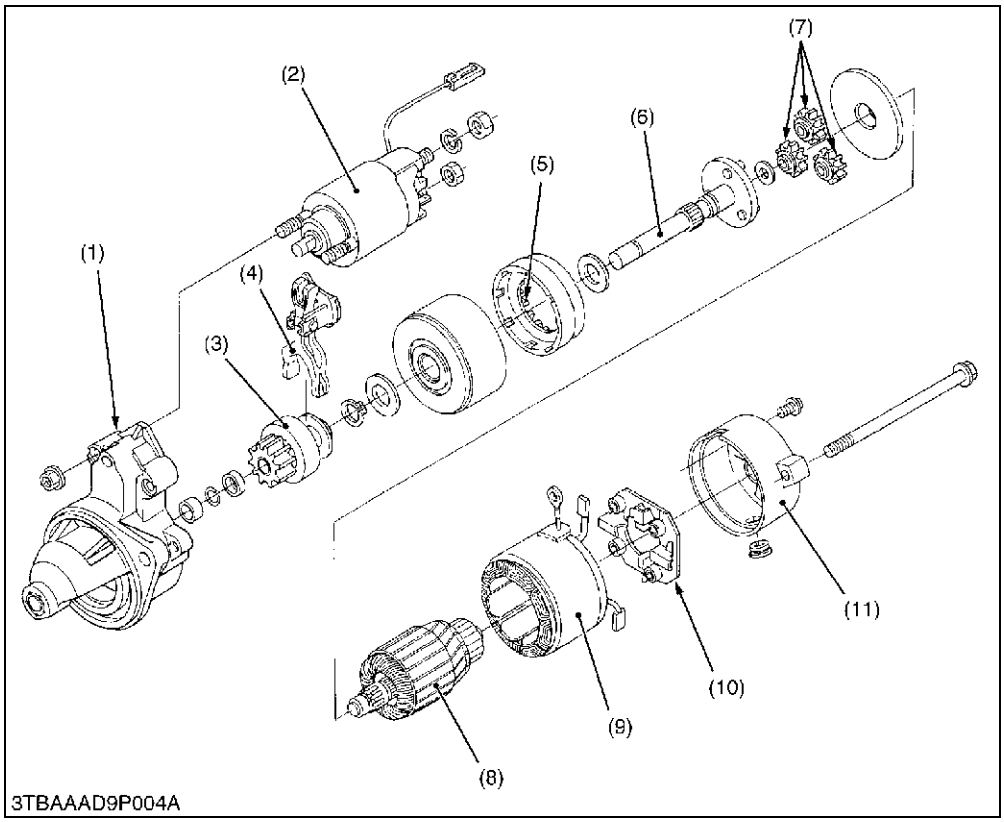


(1) Housing
(2) Magnetic Switch
(3) Overrunning Clutch
(4) Drive Lever
(5) Internal Gear
(6) Gear Shaft
(7) Planetary Gear
(8) Armature Shaft
(9) Yoke
(10) Brush Holder
(11) Rear End Frame

The starter is a reduction type.

The reduction system is used planetary gears, and the speed of gear shaft (6) is reduced to approximately one fifth of the armature shaft (8).

9Y1211156ELM0012US0

# [5] ENGINE STOP SOLENOID

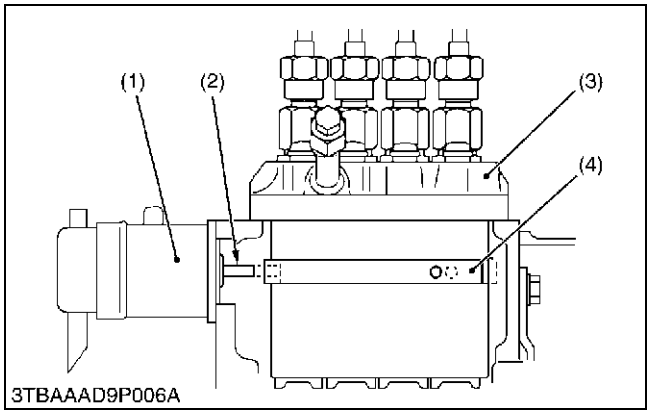


Flowing of the battery current into the engine stop solenoid, the plunger (2) move to left side so that the movement of control rack (4) becomes free. When the battery current stops, the plunger (2) is returned to the original position by the spring to keep the control rack (4) in **"No fuel injection"** position.

(1) Engine Stop Solenoid
(2) Plunger
(3) Injection Pump
(4) Control Rack

9Y1211156ELM0013US0

https://truckmanualshub.com/


# [6] GLOW PLUG

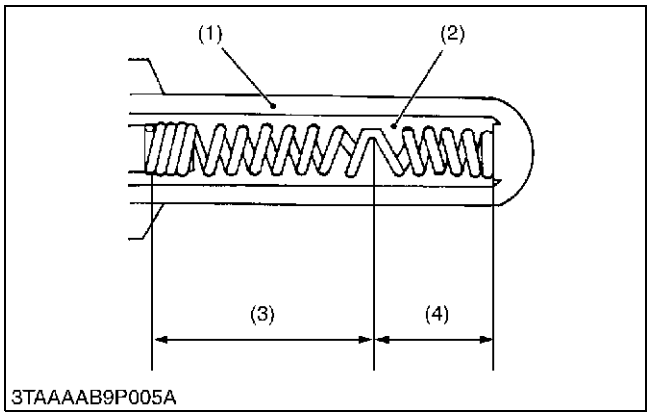


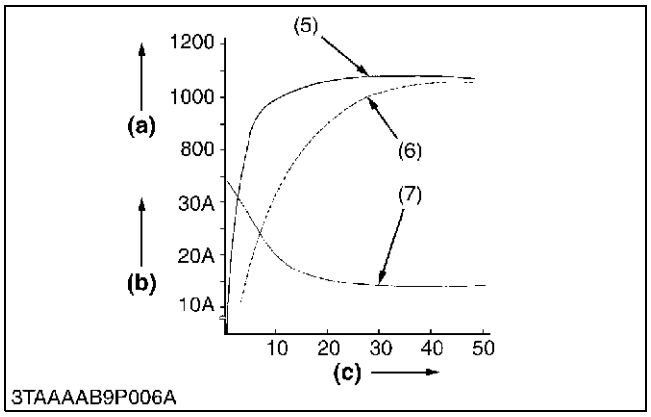


This plug is a two-material type QGS (Quick Glow System) for quick temperature rise, and has self-controlling function as well as excellent durability.

The heater (4) connected in series to the heater (3), which also functions as the resistor, is incorporated in the sheath tube (1) of the super glow plug.

The resistance of this heater (3) cum resistor is small when the temperature is low, while the resistance becomes large when the temperature rises.

Therefore, because sufficient current is flown to the heater (4) during the initial period of energization, the temperature rises quickly and the resistance grows with the rise in the temperature of the resistor, the flowing current is reduces to prevent the heater (4) from being heated.

The ignition point is in the area of 2 to 3 mm (0.079 to 0.118 in.) from the tip of the plug in order to reduce its projection into the combustion chamber.

(1) Sheath Tube
(2) Insulation Powder
(3) Heater also functioning as a Resistor
(4) Heater
(5) Super Glow Plug
(6) Conventional Quick-heating type Glow Plug
(7) Glow Plug Current

**(a) Glow Plug Temperature (°C)**
**(b) Current (A)**
**(c) Time (Sec.)**

9Y1211156ELM0014US0

https://truckmanualshub.com/


# 3. CHARGING SYSTEM

**Charging System Circuit**

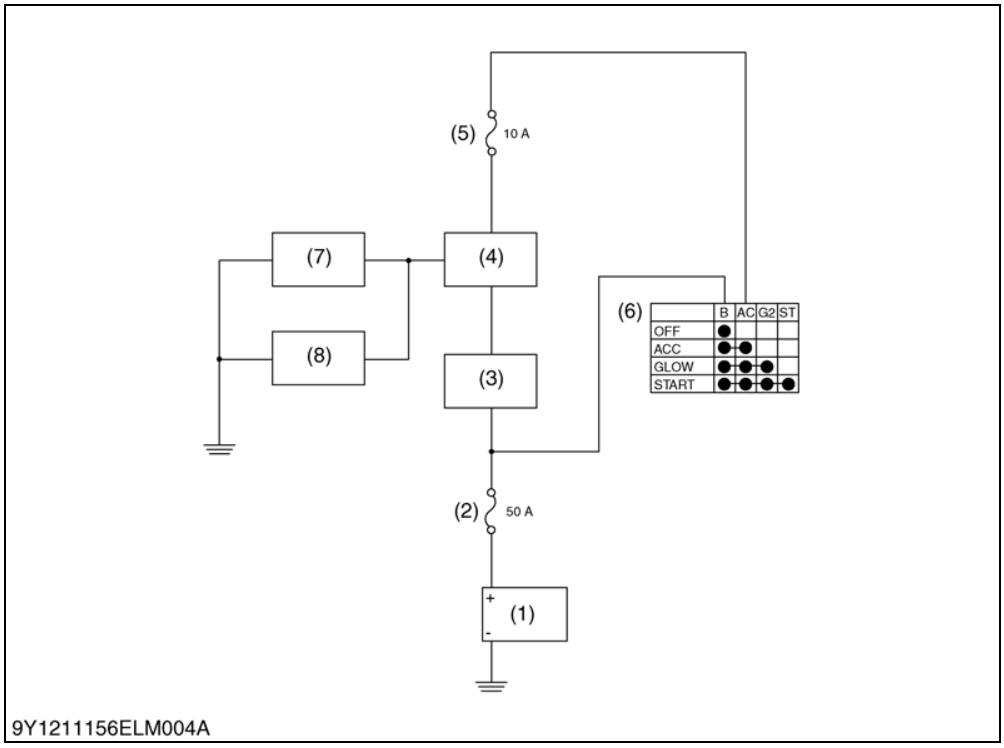


(1) Battery
(2) Slow Blow Fuse
(3) Dynamo
(4) Regulator
(5) Fuse
(6) Key Switch
(7) Instrument Panel
(8) OPC Controller

The charging system supplies electric power for various electrical devices and also charges the battery while the engine operates.

9Y1211156ELM0015US0

https://truckmanualshub.com/


# 4. LIGHTING SYSTEM

The lighting system consists of combination switch (light switch and hazard switch), head lights, tail lights, hazard lights, etc..

9Y1211156ELM0016US0

## [1] HEAD LIGHT

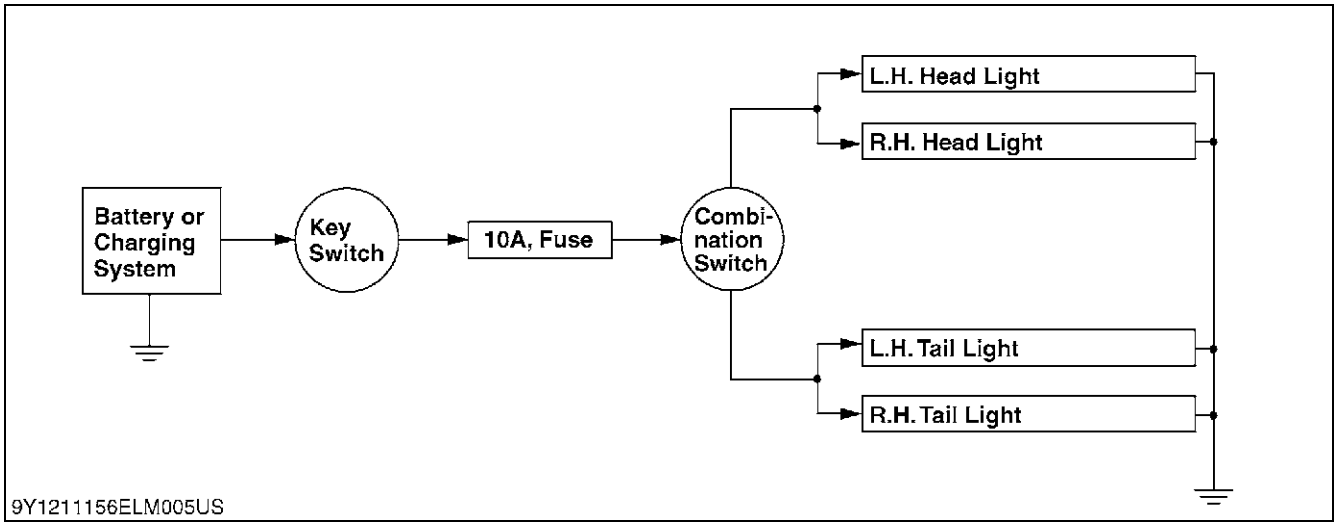


The light switch, which forms a combination switch with the turn signal light switch, has two position **OFF** and **ON**. Current passes through the light circuit as shown in the figure above.

9Y1211156ELM0017US0

## [2] TURN SIGNAL LIGHT

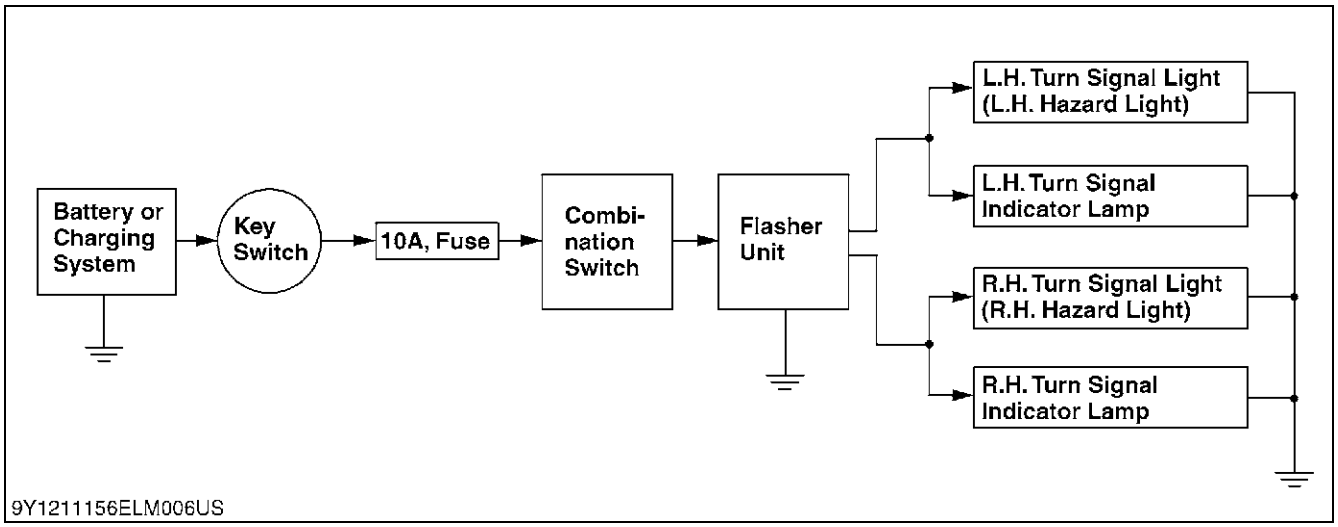


The turn signal light switch which forms a combination switch with the light switch, has three position; **OFF**, **1.**, **2.**. When using turn signal light switch, only one side light blinks and other one stays on. The operation of the turn signal light switch is given to priority when the hazard switch and the turn signal light switch are turned on at the same time.

9Y1211156ELM0018US0

https://truckmanualshub.com/


# [3] HAZARD LIGHT

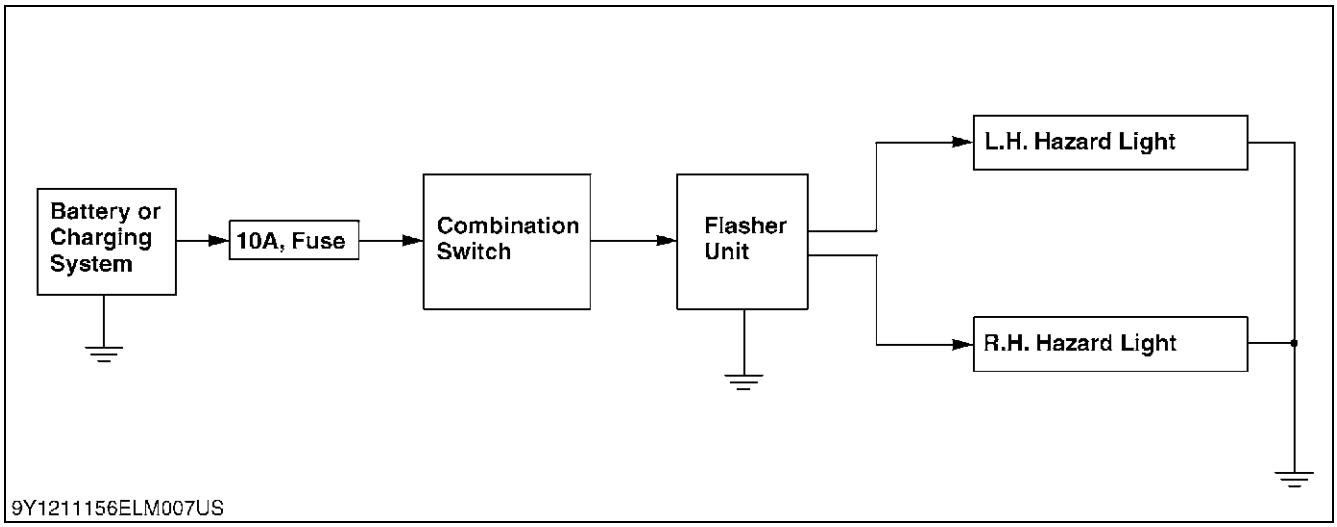


Hazard switch has two positions; **ON** and **OFF**. Blinking the hazard lights as shown in the figure above. The hazard light is operative when the key switch is in either the **ON** or **OFF** positions.

9Y1211156ELM0019US0

https://truckmanualshub.com/


# 5. INSTRUMENT PANEL

## [1] EASY CHECKER™

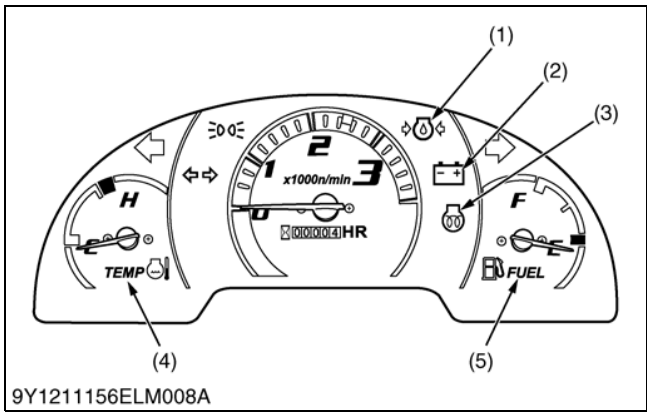


If the warning lamps of the Easy Checker™ come on during operation, immediately stop the engine, and find the cause as shown below.

Never operate the machine while Easy Checker™ lamp is on.

■ **Electrical Charge Warning Indicator**

If the dynamo is not charging the battery, the warning lamp in the Easy Checker™ will come on.

If this should happen during operation, check the electrical charging system.

■ **Glow Plug Indicator**

When the key switch is in the **"PREHEAT"** position, the glow plug indicator illuminates.

■ **Engine Oil Pressure Warning Indicator**

If the oil pressure in the engine goes below 49 kPa (0.5 kgf/cm$^2$, 7 psi), the warning lamp in the Easy Checker™ will come on.

(1) Engine Oil Pressure Warning Indicator
(2) Electrical Charge Warning Indicator
(3) Glow Plug Indicator
(4) Coolant Temperature Gauge
(5) Fuel Gauge

9Y1211156ELM0020US0

## [2] SWITCHES AND SENSORS

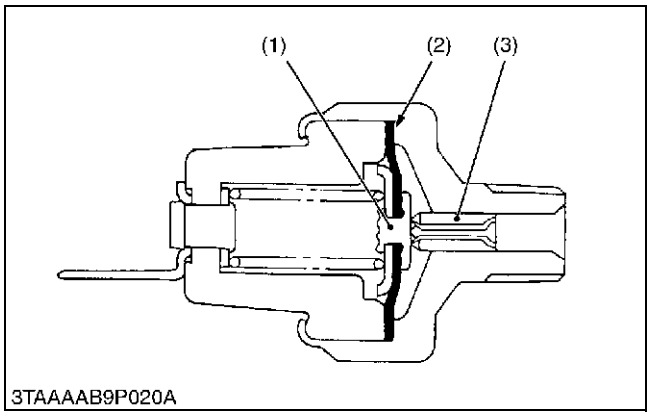


**Oil Pressure Switch**

While oil pressure is high and the force applied to the diaphragm (2) is larger than the spring tension, the terminal contact (1) is open separated from the body contact (3). If the pressure drops below approx. 49 kPa (0.5 kgf/cm$^2$, 7.1 psi), the contact closes.

(1) Terminal Contact
(2) Diaphragm
(3) Body Contact

9Y1211156ELM0021US0

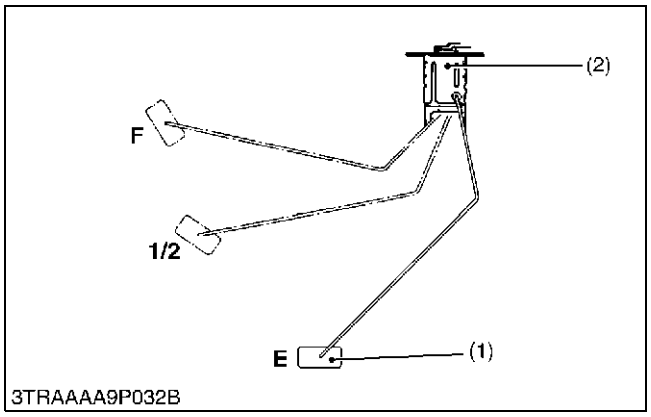


**Fuel Sensor**

The remaining fuel quantity is detected by the fuel level sensor installed in the fuel tank and indicated on the fuel gauge. For detection, a float and a resistor are used.

As the float (1) lowers, the resistance of the variable resistor (2) varies. The relation between the amount of fuel and the resistance is as follows.

| F | 1/2 | E |
|---|---|---|
| 1 to 5 Ω | 32.5 Ω (Reference) | 103 to 117 Ω |

(1) Float
(2) Variable Resistor

9Y1211156ELM0022US0

https://truckmanualshub.com/


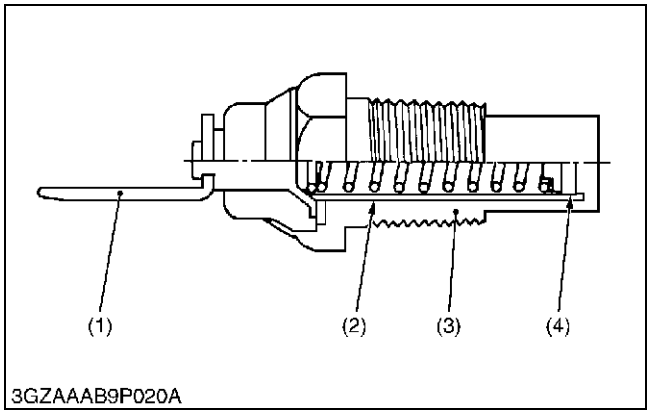


## Coolant Temperature Sensor

The coolant temperature sensor is installed to the cylinder head of engine, and its tip is in touch with the coolant. It contains a thermistor (4) whose electrical resistance decreases as the temperature increases.

Current varies with changes in the coolant temperature, and the increases or decreases in the current move the pointer of gauge.

| Characteristics of Thermistor | |
|---|---|
| **Temperature** | **Resistance** |
| 50 °C (122 °F) | 148.8 Ω |
| 80 °C (176 °F) | 50.3 Ω |
| 120 °C (248 °F) | 16.0 Ω |
| 170 °C (338 °F) | 5.6 Ω |

(1) Terminal
(2) Insulator
(3) Body
(4) Thermistor

9Y1211156ELM0023US0

https://truckmanualshub.com/

# SERVICING

## CONTENTS


1. TROUBLESHOOTING....8-S1
2. SERVICING SPECIFICATIONS....8-S8
3. TIGHTENING TORQUES....8-S9
4. CHECKING AND ADJUSTING....8-S10
   [1] BATTERY....8-S10
   [2] FUSE....8-S11
   [3] RELAYS....8-S12
      (1) Relays....8-S12
   [4] STARTING SYSTEM....8-S13
      (1) Key Switch....8-S13
      (2) Safety Switches....8-S14
      (3) OPC Controller....8-S15
      (4) Engine Stop Solenoid....8-S15
      (5) Starter....8-S15
      (6) Glow Plug....8-S16
   [5] CHARGING SYSTEM....8-S17
      (1) AC Dynamo....8-S17
      (2) Regulator....8-S17
   [6] LIGHTING SYSTEM....8-S18
      (1) Combination Switch....8-S18
      (2) Flasher Unit....8-S20
   [7] WARNING LAMP, INDICATOR LAMP AND GAUGE....8-S20
      (1) Instrument Panel....8-S20
      (2) Engine Oil Pressure Switch....8-S21
      (3) Coolant Temperature Sensor....8-S21
      (4) Fuel Sensor....8-S22
5. DISASSEMBLING AND ASSEMBLING....8-S23
   [1] STARTER....8-S23
   [2] AC DYNAMO....8-S24
6. SERVICING....8-S25
   [1] STARTER....8-S25

https://truckmanualshub.com/


# 1. TROUBLESHOOTING

**FUSE AND WIRING**

| Symptom | Probable Cause and Checking Procedure | Solution | Reference Page |
|---|---|---|---|
| **All Electrical Equipment Do Not Operate** | 1. Battery discharged or damaged | Check or recharge battery | 8-S10 |
| | 2. Battery positive cable disconnected or improperly connected | Repair or replace battery positive cable | 8-S10 |
| | 3. Battery negative cable disconnected or improperly connected | Repair or replace negative cable | 8-S10 |
| | 4. Slow blow fuse blown | Repair main harness | 8-M1 |
| **Fuse Blown Frequently** | 1. Short-circuited | Repair or replace fuse | G-34 |

**BATTERY**

| Symptom | Probable Cause and Checking Procedure | Solution | Reference Page |
|---|---|---|---|
| **Battery Discharges Too Quickly** | 1. Battery damaged | Recharge or replace battery | 8-S11 |
| | 2. Dynamo damaged | Repair or replace dynamo | 8-S17 |
| | 3. Wiring harness disconnected or improperly connected | Repair or replace connector and wire harness | 8-M1 |
| | 4. Cooling fan belt slipping | Adjust fan belt | 1-S25 |

**STARTING SYSTEM**

| Symptom | Probable Cause and Checking Procedure | Solution | Reference Page |
|---|---|---|---|
| **Starter Motor Does Not Operate** | 1. Battery discharged or damaged | Recharge or replace battery | 8-S11 |
| | 2. Slow blow fuse blown | Replace main harness or other | 8-M1 |
| | 3. Safety switch improperly adjusted or damaged | Repair or replace safety switch | 8-S14 |
| | 4. Wiring harness disconnected or improperly connected | Repair or replace connector and wire harness | 8-M1 |
| | 5. Engine stop solenoid relay damaged | Replace engine stop solenoid relay | 8-S12 |
| | 6. Starter motor damaged | Solution order<br>1. Check starter motor | 8-S15 |
| | | 2. Replace starter motor | 8-S15 |
| | 7. Key switch damaged | Check or replace key switch | 8-S13 |

https://truckmanualshub.com/


| Symptom | Probable Cause and Checking Procedure | Solution | Reference Page |
|---|---|---|---|
| **Pre-heat indicator Lamp Does Not Light When Key Switch Is in Pre-heat Position** | 1. Battery discharged or damaged | Recharge or replace battery | 8-S11 |
| | 2. Slow blow fuse blown | Repair glow harness or other | 8-M1 |
| | 3. Wiring harness disconnected or improperly connected | Repair or replace connector and wire harness | 8-M1 |
| | 4. Key switch damaged | Check or replace key switch | 8-S13 |
| | 5. Glow plug indicator damaged | Replace main panel | 8-S20 |

**OPERATOR PRESENCE CONTROL (OPC)**

| Symptom | Probable Cause and Checking Procedure | Solution | Reference Page |
|---|---|---|---|
| **Engine Does Not Stop** | 1. Solenoid fuse blown (30 A) | Repair wire harness or other | 8-M1 |
| | 2. Engine stop solenoid relay damaged | Replace engine stop solenoid relay | 8-S12 |
| | 3. Engine stop solenoid damaged | Replace engine stop solenoid | 8-S15 |
| | 4. Operator presence controller damaged | Check or replace operator presence controller | 8-M3 |
| | 5. PTO select lever switch damaged | Check or replace PTO select lever switch | 8-M6 |
| | 6. PTO lever switch damaged | Check or replace PTO lever switch | 8-M6 |
| | 7. HST pedal switch damaged | Check or replace HST pedal switch | 8-M7 |
| | 8. Seat switch damaged | Check or replace seat switch | 8-M7 |
| | 9. Relay damaged | Replace relay | 8-S12 |
| | 10. Wiring harness disconnected or improperly connected (between engine stop solenoid relay and engine stop solenoid, between engine stop solenoid relay between key switch and operator presence controller, between safety switches and operator presence controller and battery positive terminal) | Repair or replace connector and wire harness | 8-M1 |
| | 11. Wiring harness disconnected or improperly connected (between operator presence controller and engine stop solenoid relay) | Repair or replace connector and wire harness | 8-M1 |

https://truckmanualshub.com/


| Symptom | Probable Cause and Checking Procedure | Solution | Reference Page |
|---|---|---|---|
| **Starter Motor Does Not Operate** | 1. Solenoid fuse blown (30 A) | Replace wire harness or other | G-34, 8-M1 |
| | 2. Engine stop solenoid damaged | Check engine stop solenoid | 8-S15 |
| | 3. Engine stop solenoid relay damaged | Check engine stop solenoid relay | 8-S12 |
| | 4. Seat switch damaged | Replace seat switch | 8-M7 |
| | 5. PTO select lever switch damaged | Check or replace PTO select lever switch | 8-M6 |
| | 6. PTO lever switch damaged | Check or replace PTO lever switch | 8-M6 |
| | 7. HST pedal switch damaged | Check or replace HST pedal switch | 8-M7 |
| | 8. Operator presence controller damaged | Check or replace operator presence controller | 8-M3 |
| | 9. Wiring harness disconnected or improperly connected (between engine stop solenoid relay and engine stop solenoid, between engine stop solenoid relay between key switch and operator presence controller, between safety switches and operator presence controller and battery positive terminal) | Repair or replace connector and wire harness | 8-M1 |
| | 10. Wiring harness disconnected or improperly connected (between operator presence controller and engine stop solenoid relay) | Repair or replace connector and wire harness | 8-M1 |
| **Engine Stops When HST Pedal or Shuttle Shift Switch is Pushed in Forward or in Reverse** | 1. OPC switch damaged | 1. Check OPC switch | 8-S14 |
| | | 2. Replace seat | 7-S11 |

https://truckmanualshub.com/


**CHARGING SYSTEM**

| Symptom | Probable Cause and Checking Procedure | Solution | Reference Page |
|---|---|---|---|
| **Charging Lamp Does Not Light When Key Switch is Turned ON** | 1. Fuse blown (10 A) | Replace wire harness or other | G-34, 8-M1 |
| | 2. Wiring harness disconnected or improperly connected (between key switch **AC** terminal and panel board, between panel board and dynamo) | Repair or replace connector and other | 8-M1 |
| | 3. Dynamo damaged | Repair or replace dynamo | 8-S17 |
| **Charging Lamp Does Not Go Off When Engine Operates** | 1. Wiring harness disconnected or improperly connected (between key switch terminal and dynamo, between panel board and dynamo) | Repair or replace connector and wire harness | 8-M1 |
| | 2. Dynamo damaged | Repair or replace dynamo | 8-S17 |

**LIGHTING SYSTEM**

| Symptom | Probable Cause and Checking Procedure | Solution | Reference Page |
|---|---|---|---|
| **Head Light Does Not Light** | 1. Fuse blown (10 A) | Replace wire harness or other | 8-M1 |
| | 2. Bulb blown | Replace bulb | G-34 |
| | 3. Wiring harness disconnected or improperly connected (between key switch **AC** terminal and combination switch terminal, between combination switch **1** terminal and headlight | Repair or replace connector and wire harness | 8-M1 |
| | 4. Flasher unit damaged | Repair flasher unit | 8-S20 |
| | 5. Combination switch damaged | Check or replace combination switch | 8-S18 |
| **Tail Light Does Not Light** | 1. Fuse blown (10 A) | Repair wire harness or other | 8-M1 |
| | 2. Bulb blown | Replace bulb | G-34 |
| | 3. Wiring harness disconnected or improperly connected (between key switch **AC** terminal and combination switch terminal, between combination switch **T** terminal and tail light) | Repair or replace connector and wire harness | 8-M1 |
| | 4. Flasher unit damaged | Repair flasher unit | 8-S20 |

https://truckmanualshub.com/


| Symptom | Probable Cause and Checking Procedure | Solution | Reference Page |
|---|---|---|---|
| **Illumination Light Does Not Light** | 1. Fuse blown (15 A) | Replace fuse | G-34 |
| | 2. Bulb blown | Replace bulb | G-34 |
| | 3. Wiring harness disconnected or improperly connected (between key switch **AC** terminal and combination switch terminal, between combination switch **T** terminal and panel board) | Repair or replace connector and wire harness | 8-M1 |
| **Hazard Light (Tail Light) Does Not Light** | 1. Fuse blown (15 A) | Repair wire harness or other | G-34, 8-M1 |
| | 2. Bulb blown | Replace bulb | G-34 |
| | 3. Wiring harness disconnected or improperly connected | Repair or replace connector and wire harness | 8-M1 |
| | 4. Flasher unit damaged | Replace flasher unit | 8-S20 |
| | 5. Hazard switch damaged | Replace combination switch | 8-S18 |
| **Hazard Indicator Lamp (Turn Signal Lamp) Does Not Light** | 1. Bulb blown | Replace bulb | G-34 |
| | 2. Wiring harness disconnected or improperly connected | Repair or replace connector and wire harness | 8-M1 |
| **Hazard Light (Tail Light) Does Not Flicker** | 1. Flasher unit damaged | Replace flasher unit | 8-S20 |
| **Turn Signal Light Does Not Light** | 1. Fuse blown (10 A) | Repair wire harness or other | 8-M1 |
| | 2. Bulb blown | Replace bulb | G-34 |
| | 3. Wiring harness disconnected or improperly connected | Repair or replace connector and wire harness | 8-M1 |
| | 4. Flasher unit damaged | Replace flasher unit | 8-S20 |
| | 5. Combination switch damaged | Replace combination switch | 8-S18 |
| **Turn Signal Light Indicator Lamp Does Not Light** | 1. Bulb blown | Replace bulb | G-34 |
| | 2. Wiring harness disconnected or improperly connected (between combination switch **R** or **L** terminal and panel board) | Repair or replace connector and wire harness | 8-M1 |
| **Turn Signal Light Does Not Flicker** | 1. Flasher unit damaged | Replace flasher unit | 8-S20 |

https://truckmanualshub.com/


**EASY CHECKER™**

| Symptom | Probable Cause and Checking Procedure | Solution | Reference Page |
|---|---|---|---|
| **Oil Pressure Lamp Lights Up When Engine Operates** | 1. Engine oil insufficient | Check engine oil | G-8 |
| | 2. Engine oil pressure too low | Solution order<br>1. Check engine oil pressure | 1-S14 |
| | | 2. Check or change engine oil | G-26 |
| | | 3. Check or replace oil filter | G-25 |
| | | 4. Check or replace oil pump | 7-S9 |
| | 3. Oil pressure switch damaged | Check or replace oil pressure switch | 8-S21 |
| | 4. Short circuit between oil pressure switch lead and chassis | Repair or replace connector and wire harness | 8-M1 |
| | 5. Circuit in panel board damaged | Replace meter panel | 8-S20 |
| **Oil Pressure Lamp Does Not Light When Key Switch Is Turned On and Engine Is Not Operating** | 1. Bulb blown | Replace bulb | G-34 |
| | 2. Oil pressure switch damaged | Check or replace oil pressure switch | 8-S21 |
| | 3. Wiring harness disconnected or improperly connected (between panel board and oil pressure switch) | Repair or replace connector and wire harness | 8-M1 |
| | 4. Circuit in panel board damaged | Replace meter panel | 8-S20 |

https://truckmanualshub.com/


**GAUGES**

| Symptom | Probable Cause and Checking Procedure | Solution | Reference Page |
|---|---|---|---|
| **Fuel Gauge Does Not Function** | 1. Fuel gauge damaged | Replace fuel gauge | 8-S22 |
| | 2. Fuel level sensor damaged | Replace fuel level sensor | 8-S22 |
| | 3. Wiring harness disconnected or improperly connected (between panel board and fuel level sensor) | Repair or replace connector and wire harness | 8-M1 |
| | 4. Circuit in panel board damaged | Replace meter panel | 8-S20 |
| **Coolant Temperature Gauge Does Not Function** | 1. Coolant temperature gauge damaged | Replace coolant temperature gauge | 8-S21 |
| | 2. Coolant temperature sensor damaged | Replace coolant temperature sensor | 8-S21 |
| | 3. Wiring harness disconnected or improperly connected (between panel board and coolant temperature sensor) | Repair or replace connector and wire harness | 8-M1 |
| | 4. Circuit in panel board damaged | Replace meter panel | 8-S20 |

9Y1211156ELS0001US0

https://truckmanualshub.com/


# 2. SERVICING SPECIFICATIONS

| Item | | Factory Specification | Allowable Limit |
|---|---|---|---|
| Battery | Voltage | More than 12 V | – |
| | Potential Difference | Less than 0.1 V | – |
| Glow Plug | Resistance | Approx. 0.9 Ω | – |
| Coolant Temperature Sensor | Resistance at 130 °C (266 °F) | Approx. 12.2 Ω | – |
| | at 105 °C (221 °F) | Approx. 23.6 Ω | – |
| | at 80 °C (176 °F) | Approx. 51.9 Ω | – |
| | at 50 °C (122 °F) | Approx. 153.9 Ω | – |
| Fuel Sensor | Resistance Float at upper-most position | 1 to 5 Ω | – |
| | Float at lower-most position | 103 to 117 Ω | – |

**STARTER**

| Item | | Factory Specification | Allowable Limit |
|---|---|---|---|
| Commutator | O.D. | 28.0 mm<br>1.102 in. | 27.0 mm<br>1.063 in. |
| | Difference of O.D.'s | Less than<br>0.02 mm<br>0.0008 in. | 0.05 mm<br>0.0020 in. |
| Mica | Undercut | 0.60 mm<br>0.0236 in. | 0.20 mm<br>0.0079 in. |
| Brush | Length | 14 mm<br>0.551 in. | 9.0 mm<br>0.354 in. |
| Brush Holder to Holder Support | Resistance | Infinity | – |

9Y1211156ELS0002US0

https://truckmanualshub.com/


# 3. TIGHTENING TORQUES

Tightening torques of screws, bolts and nuts on the table below are especially specified.
(For general use screws, bolts and nuts: Refer to "5. TIGHTENING TORQUES" on page G-11.)

| Item | N·m | kgf·m | lbf·ft |
|---|---|---|---|
| Coolant temperature sensor | 11.8 to 17.6 | 1.20 to 1.80 | 8.68 to 13.0 |

9Y1211156ELS0003US0

https://truckmanualshub.com/


# 4. CHECKING AND ADJUSTING

**CAUTION**

- **To avoid accidental short circuit, be sure to attach the positive cable to the positive terminal before the negative cable is attached to the negative terminal.**
- **Never remove the battery cap while the engine operates.**
- **Keep electrolyte away from eyes, hands and clothes. If you are spattered with it, wash it away completely with water immediately.**
- **Keep open sparks and flames away from the battery at all times. Hydrogen gas mixed with oxygen becomes very explosive.**

■ **IMPORTANT**

- **If the machine is to be operated for a short time without battery (using a slave battery for starting), use additional current (lights) while engine operates and insulate terminal of battery. If this advice is disregarded, damage to dynamo and regulator may result.**

9Y1211156ELS0004US0

## [1] BATTERY

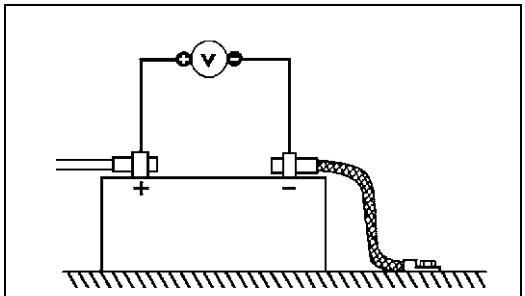

9Y1210684ELS129A

### Battery Voltage

1. Stop the engine and turn the key switch off.
2. Connect the COM (−) lead of the voltmeter to the battery's negative terminal post and the (+) lead to the positive terminal post, and measure the battery voltage.
3. If the battery voltage is less than the factory specification, check the battery specific gravity and recharge the battery.

| | | |
|---|---|---|
| Battery voltage | Factory specification | More than 12 V |

9Y1211156ELS0005US0

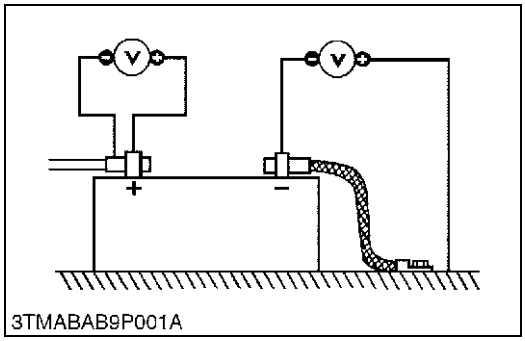

3TMABAB9P001A

### Battery Terminal Connection

1. Turn the key switch on, and turn on the head light.
2. Measure the voltage with a voltmeter across the battery's positive terminal post and the cable terminal, and the voltage across the battery's negative terminal post and the chassis.
3. If the measurement exceeds the factory specification, clean the battery terminal posts and cable clamps, and tighten them firmly.

| | | |
|---|---|---|
| Potential difference | Factory specification | Less than 0.1 V |

9Y1211156ELS0006US0

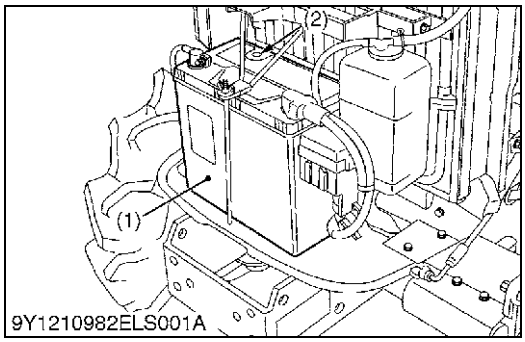

9Y1210982ELS001A

### Battery Condition Indicator

1. Check the battery condition by reading the indicator (2).

| State of indicator display | |
|---|---|
| Green | Specific gravity of electrolyte and quality of electrolyte are both in good condition. |
| Black | Needs charging battery |
| White | Needs replacing battery |

■ **IMPORTANT**

- **The factory installed battery is of non-refillable type. If the indicator turns white, do not charge the battery but replace it with new one.**

(1) Battery (2) Indicator

9Y1211156ELS0007US0

https://truckmanualshub.com/


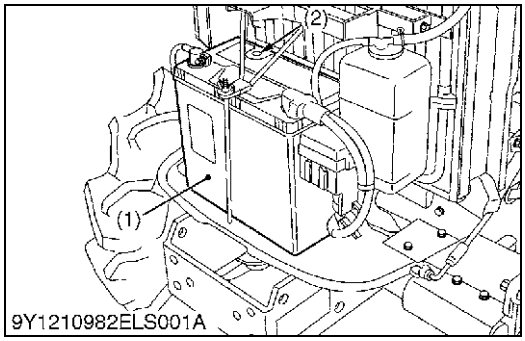


**Recharging**

**CAUTION**

- **When the battery is being activated, hydrogen and oxygen gases in the battery are extremely explosive. Keep open sparks and flames away from the battery at all times, especially when charging the battery.**
- **When disconnecting the cable from the battery, start with the negative terminal first.**
  **When connecting the cable to the battery, start with the positive terminal first.**
- **Never check battery charge by placing a metal object across the posts.**
  **Use a voltmeter or hydrometer.**

1. To slow charge the battery (1), connect the battery positive terminal to the charge positive terminal and the negative to the negative, then recharge in the standard fashion.
2. A boost charge is only for emergencies. It will partially charge the battery at a high rate and in a short time.
   When using a boost-charged battery, it is necessary to recharge the battery as early as possible.
   Failure to do this will shorten the battery's service life.
3. The battery is charge if the indicator display turns green from black.
4. When exchanging an old battery for a new one, use battery of equal specification shown in table.

**Table**

| Battery Type | Volt (V) | Capacity at 5 H.R. | Reserve at (min.) | Cold Cranking Amps | Normal Charging Rate (A) |
|---|---|---|---|---|---|
| 55B24L (S)-MF | 12 | 36 | 80 | 430 | 4.5 |

(1) Battery (2) Indicator

9Y1211156ELS0008US0

**Directions for Storage**

1. When shutting down the tractor for long periods of time, remove the battery from the tractor, store the battery in a well ventilated placed where it is not exposed to direct sunlight.
2. Since the battery self-discharges by approx. 0.5 % per day even in storage, it must be once every two months in cold season.
3. When storing the battery mounted on the tractor, disconnect the ground cable from the battery's negative terminal post.

**(Reference)**

- Self-discharge Rate

| Temperature | Self-discharge rate |
|---|---|
| 30 °C (86 °F) | Approx. 1.0 % per day |
| 20 °C (68 °F) | Approx. 0.5 % per day |
| 10 °C (50 °F) | Approx. 0.25 % per day |

9Y1211156ELS0009US0

# [2] FUSE

1. When inspecting the circuit line, check the related fuses. For the detail of the fuses, refer to the page G-34.
2. If any of the fuse is blown, replace with a new one of the same capacity.

■ **IMPORTANT**

- **If a fuse is blown, check the cause and be sure to replace it with a new one of the same capacity.**

9Y1211156ELS0010US0

https://truckmanualshub.com/


# [3] RELAYS

## (1) Relays

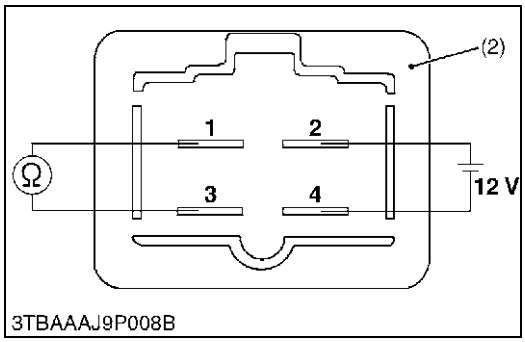


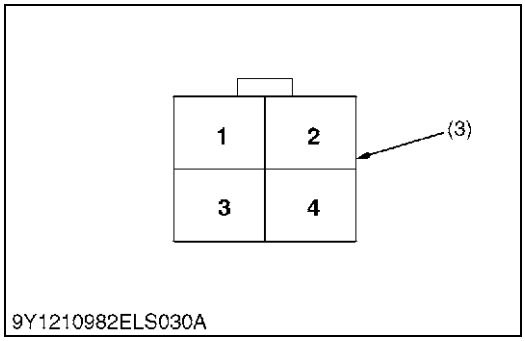


**Relay**

1. Remove the relay.
2. Apply battery voltage across **2** terminal and **4** terminal, and check for continuity across **1** terminal and **3** terminal.
3. If 0 Ω is not indicated, renew the relay.

| | | | |
|---|---|---|---|
| Resistance | **1** terminal – **3** terminal | Battery voltage is applied across **2** terminal and **4** terminal | 0 Ω |

### ■ Color of wiring (To identify the each relay position)

| Item | Terminal No. | Color of Wiring |
|---|---|---|
| Relay (Engine Stop Solenoid) | 1 | R |
| | 2 | WL |
| | 3 | RL |
| | 4 | B |
| Relay (R2) | 1 | R |
| | 2 | RB |
| | 3 | YL |
| | 4 | B |

(1) Relay
(2) Connector (Relay)
(3) Connector (Wire Harness)

9Y1211156ELS0011US0

https://truckmanualshub.com/


# [4] STARTING SYSTEM

## (1) Key Switch

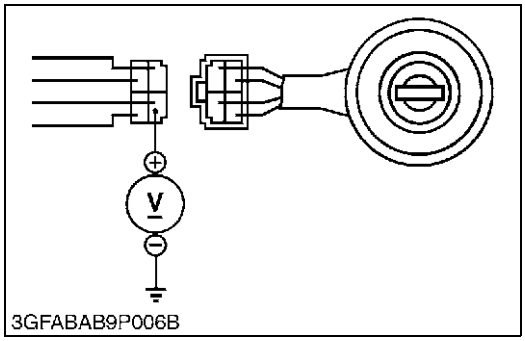

3GFABAB9P006B

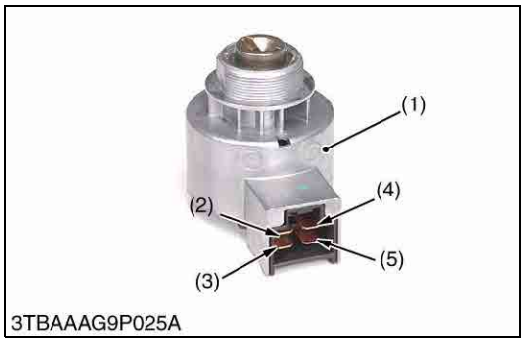

3TBAAAG9P025A

### Connector Voltage

1. Measure the voltage with a voltmeter across the connector **B** terminal (2) and chassis.
2. If the voltage differs from the battery voltage (11 to 14 V), the wiring harness is damaged.

| | | |
|---|---|---|
| Voltage | Connector **B** terminal – Chassis | Approx. battery voltage |

(1) Key Switch
(2) **B** Terminal
(3) **AC** Terminal
(4) **ST** Terminal
(5) **G** Terminal

9Y1211156ELS0012US0

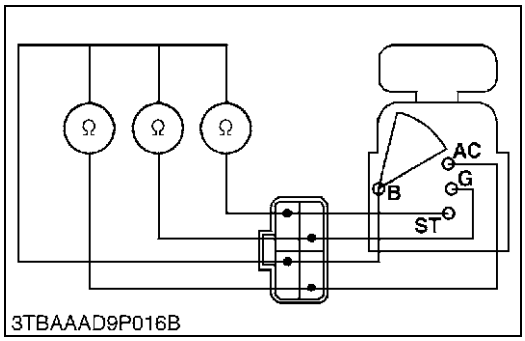

3TBAAAD9P016B

### Key Switch Continuity

**1) Key Switch Key at "OFF" Position**

1. Set the key switch **OFF** position.
2. Measure the resistance with an ohmmeter across the **B** terminal and the **AC** terminal, **B** terminal and **ST** terminal, **B** terminal and **G** terminal.
3. If infinity is not indicated, the contacts of the key switch are damaged.

| | | |
|---|---|---|
| Resistance | **B** terminal – **AC** terminal | Infinity |
| | **B** terminal – **ST** terminal | |
| | **B** terminal – **G** terminal | |

9Y1211156ELS0013US0

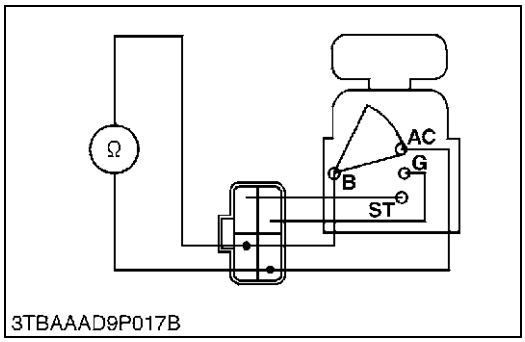

3TBAAAD9P017B

**2) Key Switch Key at "ON" Position**

1. Set the key switch **ON** position.
2. Measure the resistance with an ohmmeter across the **B** terminal and the **AC** terminal.
3. If 0 Ω is not indicated, the **B** - **AC** contact of the key switch are damaged.

| | | |
|---|---|---|
| Resistance | **B** terminal – **AC** terminal | 0 Ω |

9Y1211156ELS0014US0

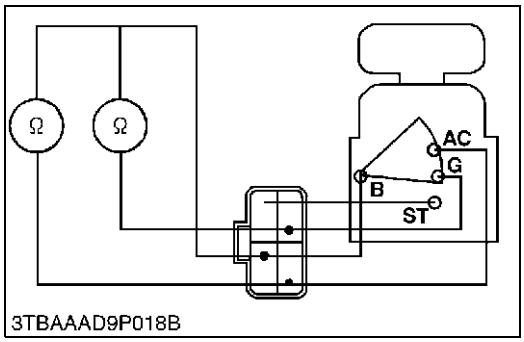

3TBAAAD9P018B

**3) Key Switch Key at "PREHEAT" Position**

1. Set and hold the key switch key at the **PREHEAT** position.
2. Measure the resistance with an ohmmeter across the **B** terminal and the **G** terminal, and measure the resistance across the **B** terminal and the **AC** terminal.
3. If 0 Ω is not indicated, these contacts of the key switch are damaged.

| | | |
|---|---|---|
| Resistance | **B** terminal – **G** terminal | 0 Ω |
| | **B** terminal – **AC** terminal | |

9Y1211156ELS0015US0

https://truckmanualshub.com/


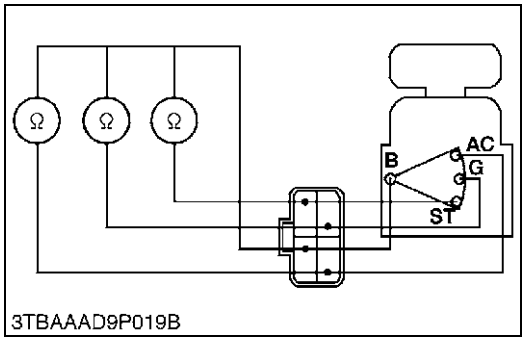


**4) Key Switch Key at "START" Position**

1. Set and hold the key switch key at the **START** position.
2. Measure the resistance with an ohmmeter across the **B** terminal and the **G** terminal, across the **B** terminal an the **ST** terminal, and across the **B** terminal and the **AC** terminal.
3. If 0 Ω is not indicated, these contacts of the key switch are damaged.

| | | |
|---|---|---|
| Resistance | **B** terminal – **G** terminal | 0 Ω |
| | **B** terminal – **ST** terminal | |
| | **B** terminal – **AC** terminal | |

| Key Position | Terminal | | | |
|---|---|---|---|---|
| | B | AC | G | ST |
| OFF | ● | | | |
| ON | ● | ● | | |
| PREHEAT | ● | ● | ● | |
| START | ● | ● | ● | ● |

9Y1211156ELS006US

9Y1211156ELS0016US0

## (2) Safety Switches

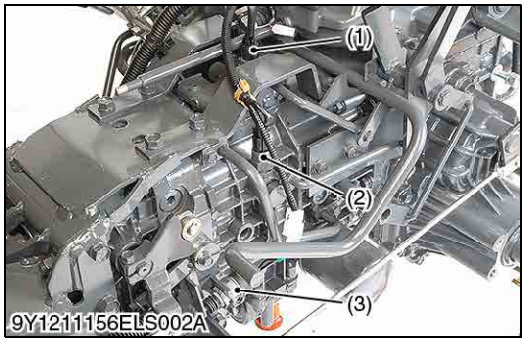


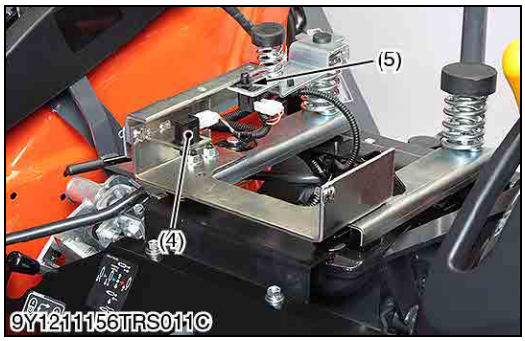


**Safety Switch Continuity**

1. Disconnect the safety switch leads or couplers.
2. Connect the circuit tester to the safety switch leads.
3. Measure the resistance between leads.
4. If the safety switch is damaged, replace it.

| Safety switch | Condition | Resistance |
|---|---|---|
| HST Pedal Switch | HST pedal in neutral | 0 Ω |
| | HST pedal in forward or reverse | Infinity |
| PTO Clutch Lever Switch | PTO clutch lever in disengaged position | 0 Ω |
| | PTO clutch lever in engaged position | Infinity |
| PTO Select Lever Switch | PTO select lever in Rear PTO position | 0 Ω |
| | PTO select lever in Rear PTO / Mid PTO or Mid PTO position | Infinity |
| Seat Switch | Operator on the seat | 0 Ω |
| | Vacant | Infinity |
| Seat Tilt Switch | Tilting the seat | 0 Ω |
| | Not tilting the seat | Infinity |

(1) PTO Clutch Lever Switch
(2) PTO Select Lever Switch
(3) HST Pedal Switch
(4) Seat Tilt Switch
(5) Seat Switch

9Y1211156ELS0017US0

https://truckmanualshub.com/


## (3) OPC Controller

**OPC Controller**

1. Check the "Engine Starting Conditions" and "Automatic Engine Stop Conditions". (See page 8-M5.)
2. If the tractor does not operate appropriately, check all parts according to the "1.TROUBLESHOOTING" section.
3. If all parts except the OPC controller (1) is not damaged, replace the OPC controller (1).

(1) OPC Controller

9Y1211156ELS0018US0

## (4) Engine Stop Solenoid

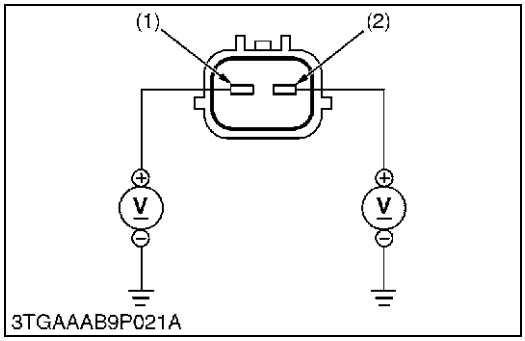


**Connector Voltage**

1. Disconnect the **2P** connector from engine stop solenoid.
2. Turn the key switch key to the **"ON"** position.
3. Measure the voltage with voltmeter between the terminal **1**, terminal **2** of wiring harness side and body.
4. If the voltage differs from the battery voltage, the wiring harness or key switch is damaged.

| | | |
|---|---|---|
| Voltage | Terminal **1** – Body | Approx. battery voltage |
| | Terminal **2** – Body | Approx. battery voltage |

(1) Terminal **2** (2) Terminal **1**

9Y1211156ELS0019US0

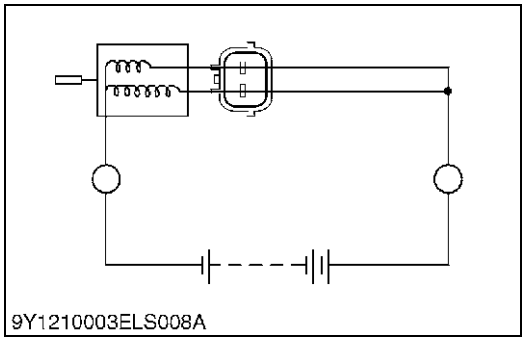


**Engine Stop Solenoid Test**

1. Disconnect the lead from the engine stop solenoid after turning the key switch off.
2. Connect jumper leads from the battery positive terminal to the engine stop solenoid terminal **1** and **2**, then from the battery negative terminal to the engine stop solenoid body.
3. If the solenoid plunger is not attracted, the engine stop solenoid is damaged.

(1) Battery

9Y1211156ELS0020US0

## (5) Starter

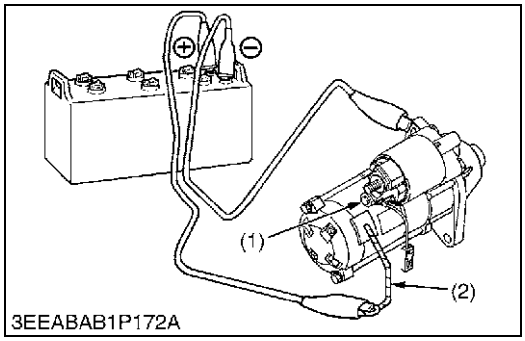


**Motor Test**

**CAUTION**

- **Secure the starter to prevent it from jumping up and down while testing the motor.**

1. Disconnect the battery negative cable from the battery.
2. Disconnect the battery positive cable and the leads from the starter **B** terminal.
3. Remove the starter from the engine.
4. Disconnect the connecting lead (2) from the starter **C** terminal (1).
5. Connect a jumper lead from the connecting lead (2) to the battery positive terminal post.
6. Connect a jumper lead momentarily between the starter motor housing and the battery negative terminal post.
7. If the motor does not operate, check the motor.

(1) **C** Terminal (2) Connecting Lead

9Y1211156ELS0021US0

https://truckmanualshub.com/


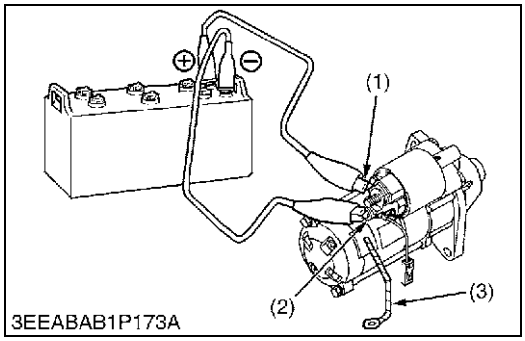


**Magnetic Switch Test**

1. Disconnect the battery negative cable from the battery.
2. Disconnect the battery positive cable and the leads from the starter **B** terminal.
3. Remove the starter from the engine.
4. Disconnect the connecting lead (3) from the starter **C** terminal (2).
5. Connect a jumper lead from the starter **S** terminal (2) to the battery positive terminal post.
6. Connect a jumper lead momentarily between the starter **C** terminal (2) and the battery negative terminal post.
7. If the pinion gear does not pop out, check the magnetic switch.

■ **NOTE**

- **This test should take no longer than 3 to 5 seconds at a time.**

(1) **S** Terminal
(2) **C** Terminal
(3) Connecting Lead

9Y1211156ELS0022US0

## (6) Glow Plug

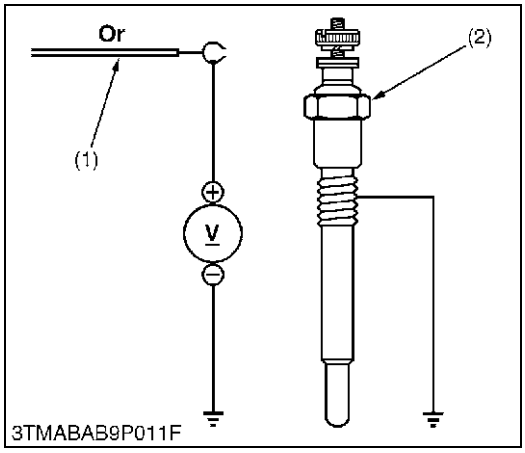


**Lead Terminal Voltage**

1. Disconnect the wiring lead (1) from the glow plug (2) after turning the key switch **OFF**.
2. Turn the key switch to the **PREHEAT** position, and measure the voltage between the lead terminal and the chassis.
3. Turn the key switch to the **START** position, and measure the voltage with a voltmeter between the lead terminal and the chassis.
4. If the voltage at either position differs from the battery voltage, the wiring harness or key switch is damaged.

| | | |
|---|---|---|
| Voltage (Lead terminal - Chassis) | Key switch at **PREHEAT** | Approx. battery voltage |
| | Key switch at **START** | |

(1) Wiring Lead
(2) Glow Plug

9Y1211156ELS0023US0

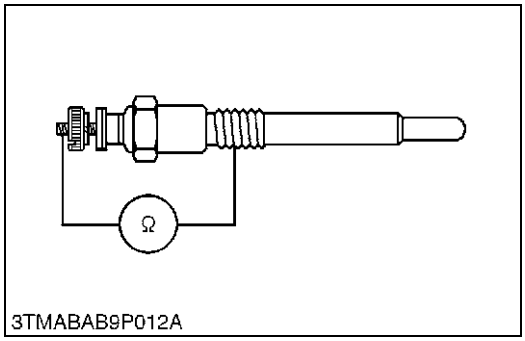


**Glow Plug Continuity**

1. Disconnect the leads from the glow plugs.
2. Measure the resistance with an ohmmeter between the glow plug terminal and chassis.
3. If 0 Ω is indicated, the screw at the tip of the glow plug and the housing are short-circuited.
4. If the factory specification is not indicated, the glow plug is damaged.

| | | |
|---|---|---|
| Glow plug resistance | Factory specification | Approx. 0.9 Ω |

9Y1211156ELS0024US0

https://truckmanualshub.com/


# [5] CHARGING SYSTEM

## (1) AC Dynamo

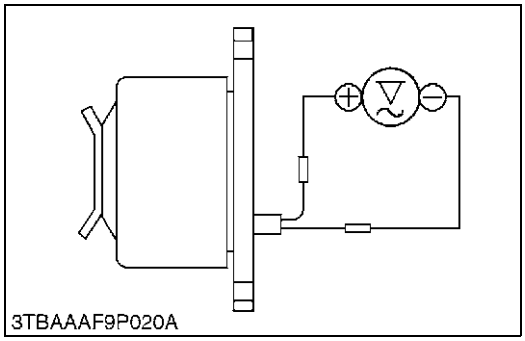


**Dynamo No-load Voltage**

1. Disconnect the lead wires from the dynamo.
2. Start the engine, and check the generating voltage of the dynamo.

| | | |
|---|---|---|
| Factory specification | Voltage | 14 to 15 V (at engine idling speed) |

9Y1211156ELS0025US0

## (2) Regulator

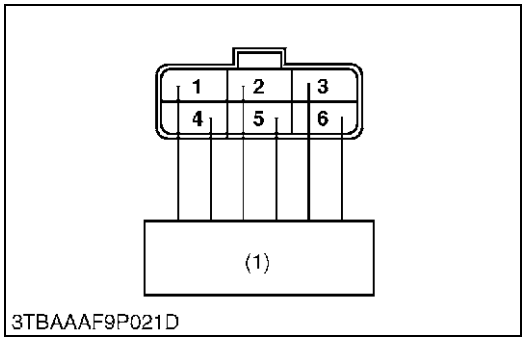


**Continuity across Regulator's Terminals**

1. Remove the regulator (1).
2. Check with a tester whether the regulator (1) is in optimum condition or not as table below.
3. If the continuity is not measured as shown in the table below, the contacts of the regulators are damaged.

■ **NOTE**

- **Use analog tester for measuring the continuity. Do not use insulation resistance tester.**
- **On the check table below, "ON" means that the pointer of tester is swung and "OFF" means it is not swung. The value kΩ is reference value by measuring 1 kΩ range. And this value is changed by range, measurement tools and so on.**
- **When measuring, remove wire harness and measure the value of regulator itself.**

| Tester (−) terminal | | Tester (+) terminal | | | | | |
|---|---|---|---|---|---|---|---|
| | | Cord colors | | | | | |
| | | **1** | **2** | **3** | **4** | **5** | **6** |
| Cord colors | **1** | – | OFF | OFF | OFF | OFF | ON (7.1 kΩ) |
| | **2** | OFF | – | OFF | OFF | OFF | OFF |
| | **3** | OFF | OFF | – | OFF | OFF | ON (7.1 kΩ) |
| | **4** | OFF | OFF | OFF | – | OFF | OFF |
| | **5** | ON (7.1 kΩ) | ON (7.1 kΩ) | ON (7.1 kΩ) | OFF | – | ON (7.1 kΩ) |
| | **6** | OFF | OFF | OFF | OFF | OFF | – |

(1) Regulator

**1 : Sky Blue**
**2 : Black**
**3 : Sky Blue**
**4 : Green**
**5 : Yellow**
**6 : Red**

9Y1211156ELS0026US0

https://truckmanualshub.com/


# [6] LIGHTING SYSTEM

## (1) Combination Switch

**Combination Switch**

1. Remove the steering wheel and panel lower cover.
2. Disconnect the combination switch connector.
3. Remove the combination switch (1) and perform the following checks **1)** to **8)**.

(1) Combination Switch

9Y1211156ELS0027US0

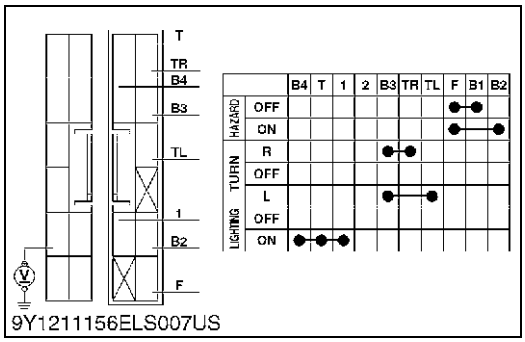


**1) Connector Voltage**

1. Measure the voltage with a voltmeter across the connector **B2**, **B4**, **TL**, **TR** terminal and chassis when the key switch is **ON** position.
2. If the voltage differs from the battery voltage, the wiring harness and key switch is damaged.

| | | | |
|---|---|---|---|
| Voltage | Key switch at **ON** position | **B2** terminal – Chassis | Battery voltage |
| | | **B4** terminal – Chassis | |
| | | **TL** terminal – Chassis | |
| | | **TR** terminal – Chassis | |

9Y1211156ELS0028US0

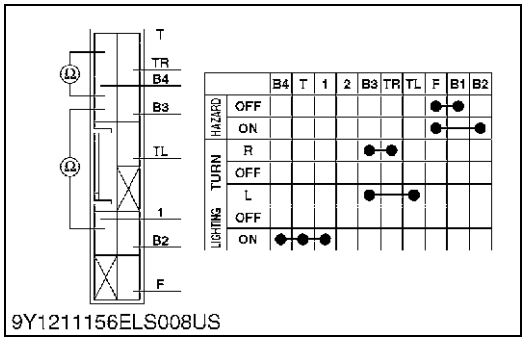


**2) Head Light Switch Continuity When Setting Switch at OFF Position**

1. Set the light switch to the **OFF** position.
2. Measure the resistance with an ohmmeter across the **B4** terminal to the **T** terminal, the **B4** terminal to the terminal **1**.
3. If infinity is not indicated, the head light switch is damaged.

| | | |
|---|---|---|
| Resistance (Switch at **OFF** position) | **B4** terminal – **T** terminal | Infinity |
| | **B4** terminal – **1** terminal | |

9Y1211156ELS0029US0

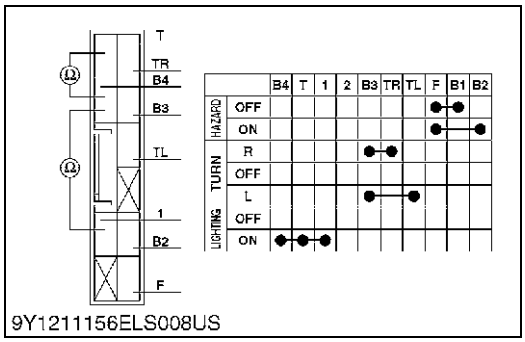


**3) Head Light Switch Continuity When Setting Switch at ON Position**

1. Set the light switch to the **ON** position.
2. Measure the resistance with an ohmmeter across the **B4** terminal to the **T** terminal and the **B4** terminal to the terminal **1**.
3. If 0 Ω is not indicated, the head light switch is damaged.

| | | |
|---|---|---|
| Resistance (Switch at **ON** position) | **B4** terminal – **T** terminal | 0 Ω |
| | **B4** terminal – **1** terminal | |

9Y1211156ELS0030US0

https://truckmanualshub.com/


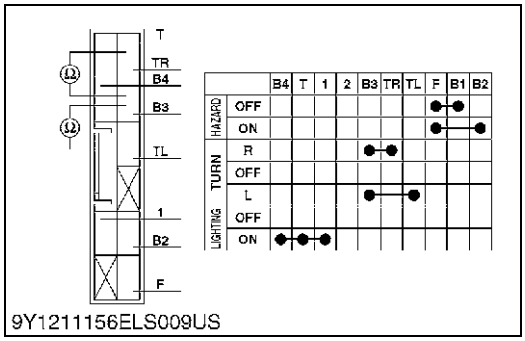

9Y1211156ELS009US

**4) Turn Signal Light Switch Continuity When Setting Switch Knob OFF Position**

1. Set the turn signal light switch to the **OFF** position.
2. Measure the resistance with an ohmmeter across the **B3** terminal and **TL** terminal, the **B3** terminal and **TR** terminal.
3. If infinity is not indicated, the combination switch is damaged.

| | | |
|---|---|---|
| Resistance (Switch knob at **OFF** position) | **B3** terminal – **TL** terminal | Infinity |
| | **B3** terminal – **TR** terminal | |

9Y1211156ELS0031US0

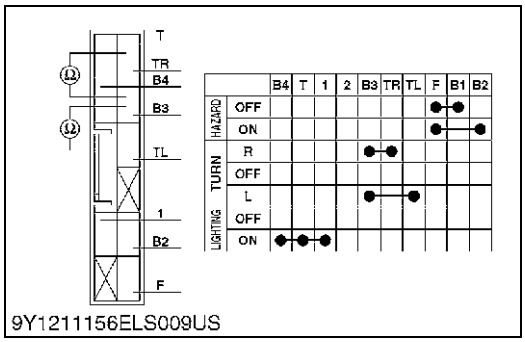

9Y1211156ELS009US

**5) Turn Signal Light Switch Continuity When Setting Switch Knob at L Position**

1. Set the turn signal light switch to the **L** position.
2. Measure the resistance with an ohmmeter across the **B3** terminal and **TL** terminal.
3. If 0 Ω is not indicated, the combination switch is damaged.

| | | |
|---|---|---|
| Resistance (Switch knob at left position) | **B3** terminal – **TL** terminal | 0 Ω |
| | **B3** terminal – **TR** terminal | Infinity |

9Y1211156ELS0032US0

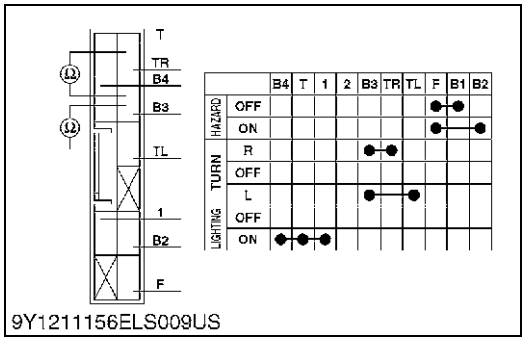

9Y1211156ELS009US

**6) Turn Signal Light Switch Continuity When Setting Switch Knob at R Position**

1. Set the turn signal light switch to the **R** position.
2. Measure the resistance with an ohmmeter across the **B3** terminal and **TR** terminal.
3. If 0 Ω is not indicated, the combination switch is damaged.

| | | |
|---|---|---|
| Resistance (Switch knob at right position) | **B3** terminal – **TR** terminal | 0 Ω |
| | **B3** terminal – **TL** terminal | Infinity |

9Y1211156ELS0033US0

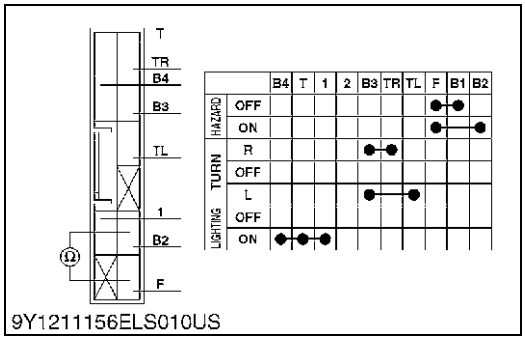

9Y1211156ELS010US

**7) Hazard Switch Continuity when Not Pushing Button**

1. Set the hazard switch to the **OFF** position.
2. Measure the resistance with an ohmmeter across the **B2** terminal and the **F** terminal.
3. If infinity is not indicated, the combination switch is damaged.

| | | |
|---|---|---|
| Resistance (Hazard switch at **OFF** position) | **B2** terminal – **F** terminal | Infinity |

9Y1211156ELS0034US0

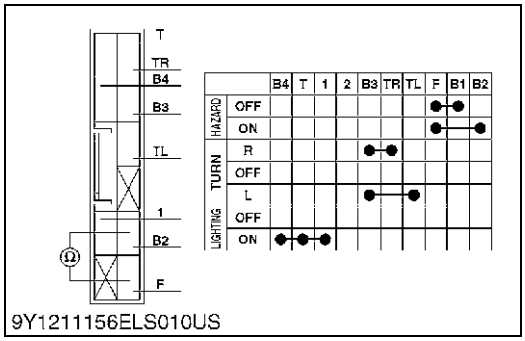

9Y1211156ELS010US

**8) Hazard Switch at "ON" Position**

1. Set the hazard switch to the **ON** position.
2. Measure the resistance with an ohmmeter across the **B2** terminal and the **F** terminal.
3. If 0 Ω is not indicated, the combination switch is damaged.

| | | |
|---|---|---|
| Resistance (Hazard switch at **ON** position) | **B2** terminal – **F** terminal | 0 Ω |

9Y1211156ELS0035US0

https://truckmanualshub.com/


## (2) Flasher Unit

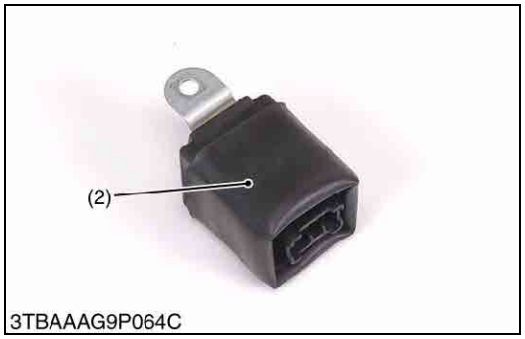


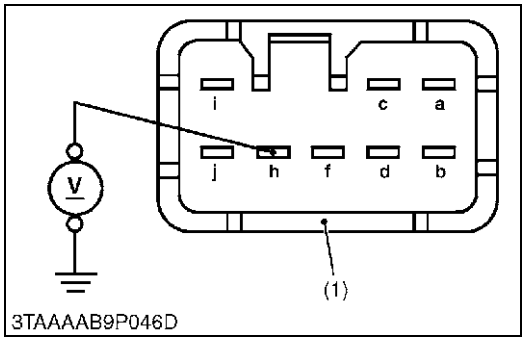


**Flasher Unit Connector Voltage**

1. Remove the instrument panel.
2. Disconnect the connector (1) from the flasher unit (2).
3. Measure the voltage with a voltmeter across the h terminal and chassis.
4. If the voltage differ from the battery voltage, the wiring harness is damaged.

| | | |
|---|---|---|
| Voltage | **h** terminal – Chassis | Approx. battery voltage |

(1) Connector
(2) Flasher Unit

**a: Frame Earth**
**b: Hazard Input**
**c: Vacant**
**d: Turn Signal (Left) Input**
**f: Turn Signal (Right) Output**
**h: Battery**
**i: Turn Signal (Left) Output**
**j: Turn Signal (Right) Input**

9Y1211156ELS0036US0

# [7] WARNING LAMP, INDICATOR LAMP AND GAUGE

## (1) Instrument Panel

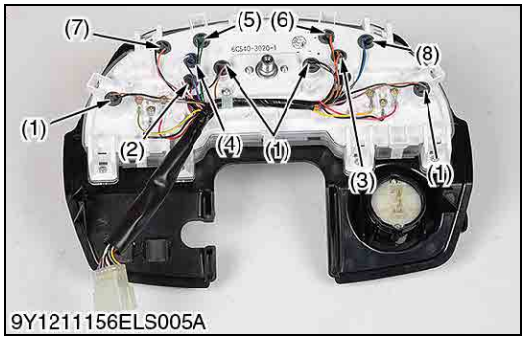


**Monitor Lamp (for Charge, Engine Oil Pressure, Pre-heat, Illumination and Hazard)**

1. Removing the meter panel from the tractor.
2. Remove the each lamp.
3. Measure the lamp resistance.
4. If it is infinity, replace the lamp with new.

| | | |
|---|---|---|
| All lamp | Lamp specification | 12 V, 1.7 W |

(1) Illumination
(2) Pre-heat
(3) Hazard
(4) Charge
(5) Engine Oil Pressure
(6) Position
(7) Turn (R)
(8) Turn (L)

9Y1211156ELS0037US0

https://truckmanualshub.com/


## (2) Engine Oil Pressure Switch

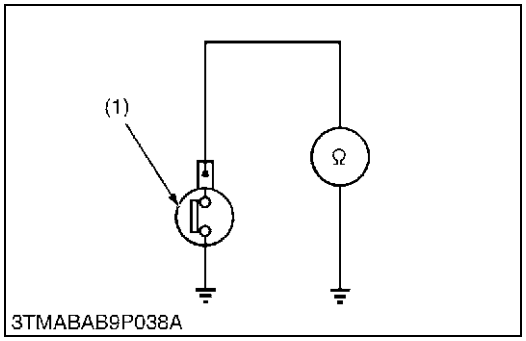


**Engine Oil Pressure Switch Continuity**

1. Measure the resistance with an ohmmeter across the switch terminal and the chassis.
2. If 0 Ω is not indicated in the normal state, the switch is damaged.
3. If infinity is not indicated at pressure over 49 kPa (0.50 kgf/cm$^2$, 7.1 psi), the switch is damaged.

| | | |
|---|---|---|
| Resistance (Switch terminal – Chassis) | In normal state | 0 Ω |
| | At pressure over approx. 49 kPa (0.50 kgf/cm$^2$, 7.1 psi) | Infinity |

(1) Engine Oil Pressure Switch

9Y1211156ELS0038US0

## (3) Coolant Temperature Sensor

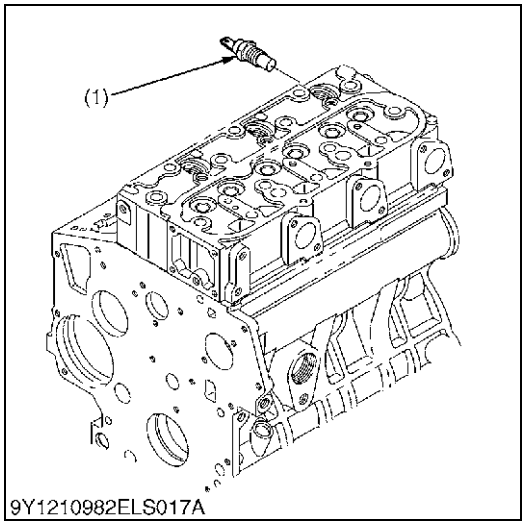


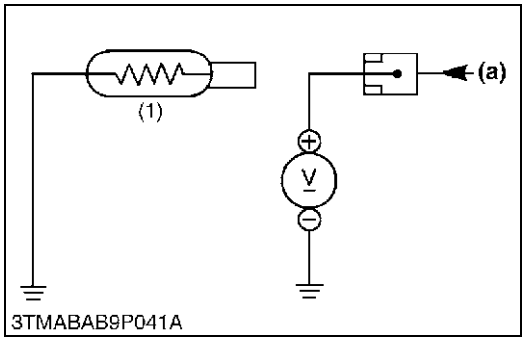


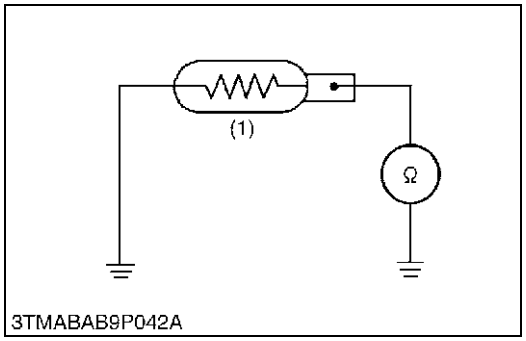


**Coolant Temperature Sensor**

**1) Lead Terminal Voltage**

1. Disconnect the lead from the coolant temperature sensor after turning the key switch **OFF**.
2. Turn the key switch **ON** and measure the voltage with a voltmeter across the lead terminal and the chassis. If the voltage differs from the battery voltage, the wiring harness fuse or coolant temperature gauge is damaged.

| | | |
|---|---|---|
| Voltage | Lead terminal – Chassis | Approx. 5 V |

**2) Sensor Continuity**

1. Measure the resistances with an ohmmeter across the sensor terminal and the chassis.
2. If the reference value is not indicated, the sensor is damaged.

| | | |
|---|---|---|
| Resistance (Sensor terminal – Chassis) | Reference value | Approx. 12.2 Ω at 130 °C (266 °F)<br>Approx. 23.6 Ω at 105 °C (221 °F)<br>Approx. 51.9 Ω at 80 °C (176 °F)<br>Approx. 153.9 Ω at 50 °C (122 °F) |

| | | |
|---|---|---|
| Tightening torque | Coolant temperature sensor | 11.8 to 17.6 N·m<br>1.20 to 1.80 kgf·m<br>8.68 to 13.0 lbf·ft |

(1) Coolant Temperature Sensor **(a) From Temperature Gauge**

9Y1211156ELS0039US0

https://truckmanualshub.com/


## (4) Fuel Sensor

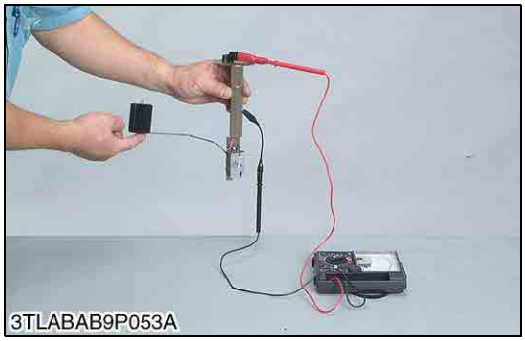


**Fuel Sensor**

**1) Sensor Continuity**

1. Remove the fuel lever sensor from the fuel tank.
2. Measure the resistance across the sensor terminal and its body.
3. If the reference value are not indicated, the sensor is damaged.

| | | | |
|---|---|---|---|
| Resistance (Sensor terminal – its body) | Reference value | Float at upper-most position | 1 to 5 Ω |
| | | Float at lower-most position | 103 to 117 Ω |

9Y1211156ELS0040US0

https://truckmanualshub.com/


# 5. DISASSEMBLING AND ASSEMBLING

## [1] STARTER

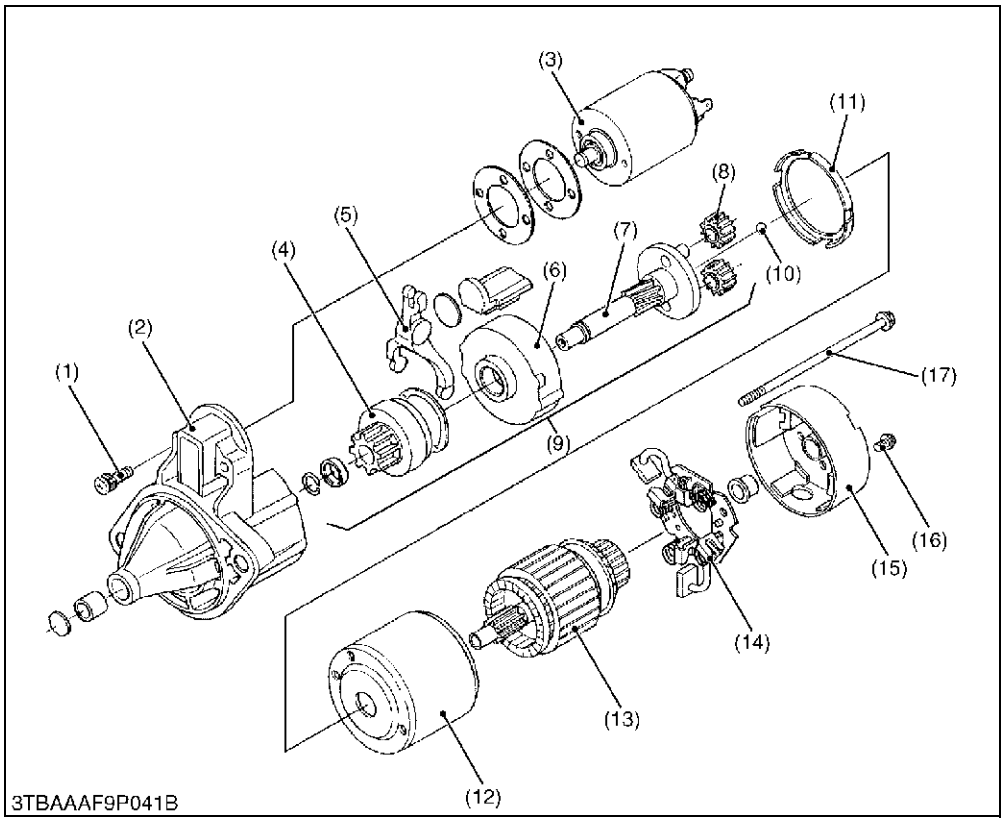


(1) Screw
(2) Front Bracket
(3) Magnetic Switch
(4) Overrunning Clutch
(5) Drive Lever
(6) Internal Gear
(7) Shaft
(8) Planetary Gear
(9) Shaft Assembly
(10) Ball
(11) Gasket
(12) Yoke
(13) Armature
(14) Brush Holder
(15) Rear End Frame
(16) Screw
(17) Through Bolt

1. Disconnect the connecting lead from the magnetic switch (3).
2. Remove the screw (1) and remove the magnet switch (3).
3. Remove the screw (16) and through bolt (17), and separate the rear end frame (15).
4. Remove the brush holder (14).
5. Draw out the armature (13) and yoke (12).
6. Remove the gasket (11), gasket (19) and plate (18).
7. Draw out the shaft assembly (9) with the drive lever (5).

■ **NOTE**

- **Do not damage the brush and commutator.**
- **Do not miss the ball (10).**

9Y1211156ELS0041US0

https://truckmanualshub.com/


# [2] AC DYNAMO

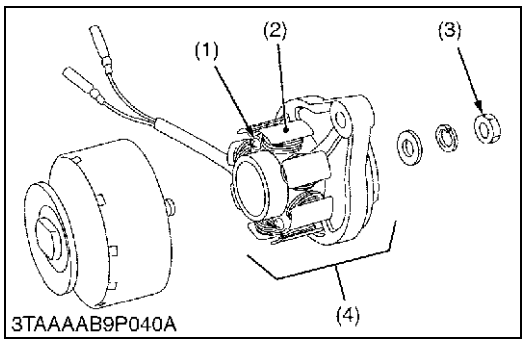


**Stator**

1. Remove the nut (3) and separate the stator comp. (4).
2. Remove the screws (1) and remove the stator (2).

| | | | |
|---|---|---|---|
| (1) | Screw | (3) | Nut |
| (2) | Stator | (4) | Stator Comp. |

9Y1211156ELS0042US0

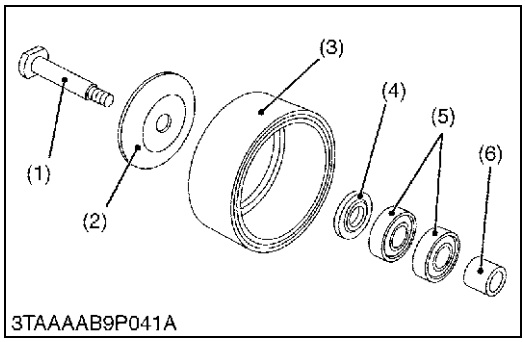


**Rotor**

1. Tap out the shaft (1) from the rotor (3).

**(When reassembling)**

- Be careful the direction of the collar (4), the flat side should face to the pulley (2) side.

| | | | |
|---|---|---|---|
| (1) | Shaft | (4) | Collar |
| (2) | Pulley | (5) | Bearings |
| (3) | Rotor | (6) | Collar |

9Y1211156ELS0043US0

https://truckmanualshub.com/


# 6. SERVICING

## [1] STARTER

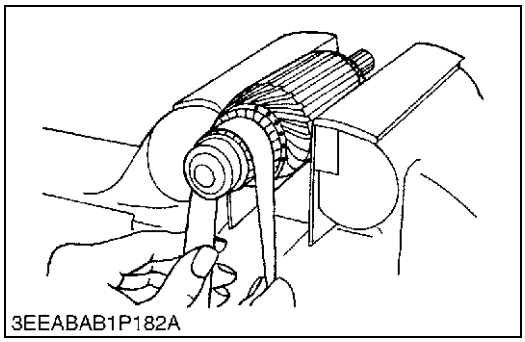
3EEABAB1P182A

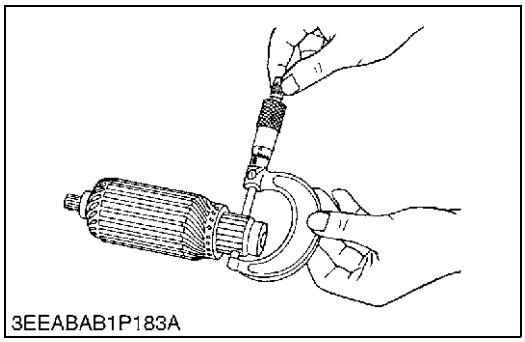
3EEABAB1P183A

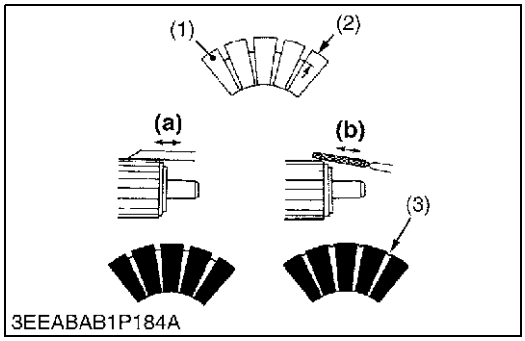

3EEABAB1P184A

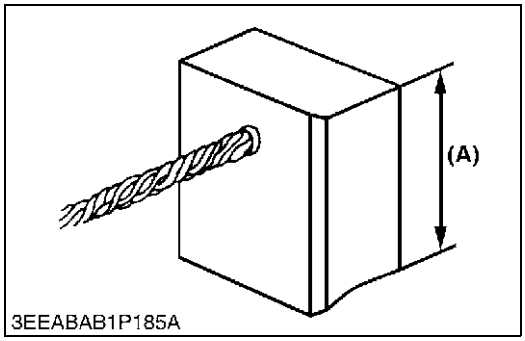

3EEABAB1P185A

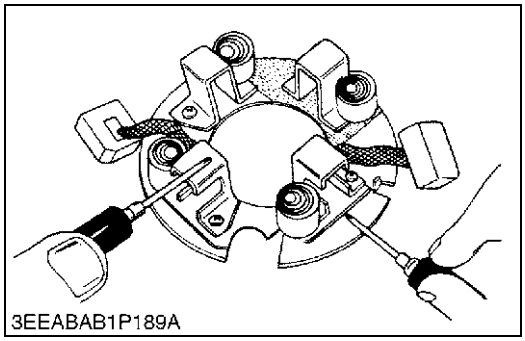
3EEABAB1P189A

### Commutator and Mica

1. Check the contact face of the commutator for wear, and grind the commutator with emery paper if it is slightly worn.
2. Measure the commutator O.D. with an outside micrometer at several points.
3. If the minimum O.D. is less than the allowable limit, correct the commutator on a lathe to the factory specification.
4. Measure the mica undercut.
5. If the undercut is less than the allowable limit, correct it with a saw blade and chamfer the segment edges.

| | | |
|---|---|---|
| Commutator O.D. | Factory specification | 28.0 mm<br>1.102 in. |
| | Allowable limit | 27.0 mm<br>1.063 in. |

| | | |
|---|---|---|
| Difference of O.D.'s | Factory specification | Less than<br>0.02 mm<br>0.0008 in. |
| | Allowable limit | 0.05 mm<br>0.0020 in. |

| | | |
|---|---|---|
| Mica undercut | Factory specification | 0.60 mm<br>0.0236 in. |
| | Allowable limit | 0.20 mm<br>0.0079 in. |

(1) Segment
(2) Undercut
(3) Mica

**(a) Correct**
**(b) Incorrect**

9Y1211156ELS0044US0

### Brush Wear

1. If the contact face of the brush is dirty or dusty, clean it with emery paper.
2. Measure the brush length **(A)** with vernier calipers.
3. If the length is less than the allowable limit, replace the yoke assembly and brush holder.

| | | |
|---|---|---|
| Brush length **(A)** | Factory specification | 14.0 mm<br>0.551 in. |
| | Allowable limit | 9.0 mm<br>0.354 in. |

9Y1211156ELS0045US0

### Brush Holder

1. Check the continuity across the brush holder and the holder support with an ohmmeter.
2. If it conducts, replace the brush holder.

| | | |
|---|---|---|
| Resistance | Brush holder – Holder support | Infinity |

9Y1211156ELS0046US0

https://truckmanualshub.com/


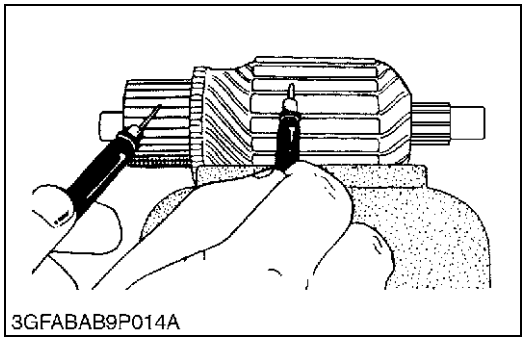
3GFABAB9P014A

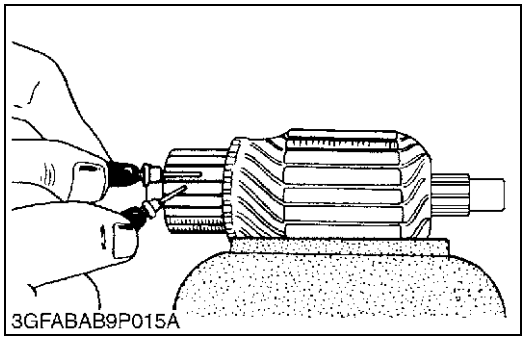
3GFABAB9P015A

**Armature Coil**

1. Check the continuity between the commutator and armature coil core with an ohmmeter.
2. If it conducts, replace the armature.
3. Check the continuity between the segments of the commutator with an ohmmeter.
4. If it does not conduct, replace the armature.

9Y1211156ELS0047US0

https://truckmanualshub.com/

**EDITOR:**
KUBOTA FARM & INDUSTRIAL MACHINERY SERVICE, LTD.
64, ISHIZU-KITAMACHI, SAKAI-KU, SAKAI-CITY, OSAKA, 590-0823, JAPAN
PHONE : (81)72-241-1129
FAX : (81)72-245-2484
E-mail : ks_g.ksos-pub@kubota.com

**KUBOTA Corporation**

Printed in Japan 2014. 11, S, EI, EI, engusa Code No.9Y111-11560