https://truckmanualshub.com/

EFFICIENT POWERFUL COMFORTABLE SERIE 7

SERIE 7 STAGE V

V-SHIFT 7-210 • 7-230 • 7-240
ROBO-SIX 7-200 • 7-210 • 7-230

Passion for Innovation.

https://truckmanualshub.com/

EFFICIENT

landini

https://truckmanualshub.com/

SERIE 7 STAGE V TRACTOR RANGE, A GREAT TRADITION OF EFFICIENCY

For over 30 years, the Argo Tractors Group has focused its activity on the research and development of quality products. This strategic choice has enabled Argo Tractors engineers to further upgrade **Landini's Serie 7 tractor range**, which now leads its class in efficiency, performance, flexibility and comfort.

https://truckmanualshub.com/

HIGHLIGHTS

Cab
- Lounge Cab with four-post design and semi-active suspension system
- DSM Data Screen Manager: 12-inch touch screen monitor with new functions
- Automatic climate control
- Electrically adjustable steering wheel

Design
- New hood design with more rounded lines
- New automotive-style cab
- Up to 20 LED work lights on hood and cab

Engine
- HI-eSCR2 emissions control system meeting Stage V regulations
- Engine located within rugged chassis for enhanced performance
- Coolers open out to allow easier and faster cleaning
- Best-in-Class system: scheduled maintenance is halved to save time and costs

Transmission

V-Shift four-stage continuously variable transmission:
- Four programmable speed ranges
- Transmission controls integrated into the V Easy Pilot proportional controller
- Lower fuel consumption, reduced operating costs
- Speed: 40 km/h or 50 km/h Eco speed at reduced engine rpm. Minimum speed 40 m/h

Robo-Six powershift transmission with 6 speeds and 5 ranges:
- Robotized range shifting
- Engine brake function
- Smart APS Powershift
- Stop & Action with de-clutch function integrated in brake pedal
- Creeper providing up to 54 forward and 27 reverse speeds with up to 400 m/h minimum speed
- Eco mode for transport operations and oil cut-off feature for improved fuel economy

Axles
- Front axle with electronically-controlled independent front suspension
- Automatic 4WD and differential lock engagement

Hydraulic system
- Closed-centre hydraulic system with up to 160 l/min variable displacement pump
- Electronically-operated rear hitch with 9300 kg maximum lift capacity
- Four-speed PTO standard

The new **Serie 7 Stage V** tractors are designed to satisfy the most exacting needs of modern farms and agricultural contractors. Inspired by the automotive design, the new tractor range has been restyled with a more dynamic look and high-quality fit and finish and offers a spacious cab with ergonomically-arranged, intuitive controls for maximum comfort and ease of operation. The cab roof has been fully redesigned and the 12 work lights have been repositioned to provide full all-round visibility for night-time operation. The hood has also been reshaped to enhance visibility to the front.

Located within a rugged chassis, the new FPT NEF engines come packed with more power, delivering up to 240 hp. These new engines offer excellent performance in terms of traction capability and fuel efficiency, while allowing quick and easy maintenance. Equipped with the innovative HI-eSCR2 exhaust after-treatment system, the engines of the new **Serie 7** meet the Stage V emissions regulations.

The range features a closed-centre load-sensing hydraulic system with a high-flow pump that provides 160 l/min. The electronic management of the hydraulic functions ensures accurate implement control. In addition, a 12-inch touch screen monitor allows precise control of both tractor operation and ISObus implements for maximum efficiency and productivity.

Choosing Landini means you can count on a reliable partner capable of offering cutting-edge technology for unmatched performance and productivity.

https://truckmanualshub.com/

EXHAUST SYSTEM

Emissions under control
page 16

CAB

Perfect visibility
and first-class comfort
page 6

ENGINE

A new heart
page 12

SUSPENDED AXLE

Unmatched manoeuvrability
page 26

HYDRAULIC SYSTEM

Innovative, for maximum
configuration flexibility
page 28

TRANSMISSION

Versatile and tailored
to suit every need
page 18

https://truckmanualshub.com/

COMFORT

landini

https://truckmanualshub.com/

*When I get into my **Serie 7**, it's like stepping into an office. Everything is simple, comfortable and within easy reach. And at the end of the day, I don't feel tired at all.*

Max

LOUNGE CAB: SUPERIOR COMFORT FOR GREATER PRODUCTIVITY

The Landini **Serie 7 Stage V** features the newly-designed Lounge Cab, an innovative four-post cab with rear-hinged doors that provides exceptional all-round visibility. The new cab offers a highly-efficient sound insulation system which maintains an in-cab noise level of only 70 dB for maximum comfort of operation. An electrohydraulic semi-active suspension system is optionally available to further enhance ride comfort.

Wide and well-spaced access steps allow the operator to easily get in and out of the cab, while the buddy seat neatly folds away making for easier and safer access. The cab interior features an automotive-style fit and finish with easy-clean soft-touch materials. The instrument panel and the steering wheel can be electrically adjusted in tilt and depth to suit the driver's needs. The Alcantara upholstered swivel seat with dynamic air suspension system and fully automatic height adjustment features backrest heating and ventilation for ultimate driving comfort. The multifunction right-hand armrest accommodates the main tractor controls arranged in a simple and logical manner.

https://truckmanualshub.com/

HIGHLIGHTS

- Four-post design
- One-piece windscreen for unequalled all-round visibility
- Mechanical or hydraulic semi-active cab suspension optional
- Instrument panel electrically adjustable in tilt and depth
- Ventilated air suspension seat with swivel option
- DSM Data Screen Manager: 12" touch screen monitor
- Multi-function armrest with ergonomically-designed controller and integrated controls
- Hide-away buddy seat for easier access to cab
- Automatic climate control
- Opening transparent roof hatch
- Automotive-style interior with soft-touch materials
- DAB radio with MP3 player, Bluetooth and integrated microphone
- Up to 20 latest-generation LED work lights on hood, cab and fenders

In addition, an ergonomically-designed multifunction controller provides easy and intuitive control of key tractor functions. Integrated into the armrest is a 12-inch touch screen monitor with simple tablet-like graphics that allows the operator to quickly manage and adjust the tractor operating parameters.

The Lounge Cab's standard equipment includes a refrigerated in-cab storage compartment, a bottle holder, 12V sockets for charging mobile devices, an internal mirror and an opening transparent roof hatch providing extra visibility for loader operations. Integrated into the cab roof, a highly-efficient automatic climate control system maintains the desired cab temperature whatever the outdoor weather conditions.

LANDINI SEMI-ACTIVE CAB SUSPENSION

True to its mission to reduce farmer fatigue, while improving productivity, Landini has designed and built a new electro-hydraulic semi-active cab suspension system which isolates the tractor body from the wheel vibrations induced by uneven ground conditions. This makes for maximum ride comfort and safety on all terrains.

MyFUNCTIONS

The **Serie 7 Stage V** tractor enables the operator to have all the most frequently used controls within fingertip reach. The innovative MyFunctions menu allows the operator to configure and save up to five different functions via the DSM monitor. All controls are ergonomically integrated into the multifunction armrest for improved comfort and ease of operation.

https://truckmanualshub.com/

CAB ROOF AND WORK LIGHTS

The roof of the Lounge cab has been completely redesigned to increase the number of work lights. Now 12 work lights provide perfect all-round illumination for improved visibility during night-time work.

ELECTRICAL STEERING WHEEL

An innovative system allows the operator to adjust the inclination of the steering wheel through a simple switch. A lever also enables adjustment of steering wheel height.

MyHMF

The MyHMF menu allows the operator to create and modify headland management sequences via the DSM monitor by selecting from the various functions available. The menu features new, ergonomically placed pushbuttons for maximum ease of operation.

https://truckmanualshub.com/

POWERFUL

Landini®

https://truckmanualshub.com/

NEW FPT NEF ENGINES: PLENTY OF PULLING POWER IN THE FIELD

The Serie 7 tractor range meeting the Stage V emission standard is powered by the new FPT NEF 6.7L six-cylinder turbo engines with multivalve technology and electronic common rail injection system. The engines are located within a rugged chassis which helps reduce noise and vibration levels within the cab.

https://truckmanualshub.com/

HIGHLIGHTS

- Power up to 240 hp with the Dual Power system
- Electronic engine management and turbo intercooler with common rail injection system
- High torque backup
- Engine compliant with Stage V emissions regulations
- Exhaust gas after-treatment with HI-eSCR2
- Engine located within a rugged chassis
- Up to 350-liter fuel tank and 52-liter AdBlue® tank with easy-fill design
- Coolers open out to allow easier and faster cleaning
- Viscotronic fan for more efficient engine cooling, improved fuel economy and quieter engine operation
- Best In Class system reduces scheduled maintenance by 50%, saving time and costs
- Engine Brake function for enhanced braking performance

An electronically-controlled viscotronic fan, standard on the entire range, improves the engine cooling efficiency, while reducing fuel consumption and noise levels.

The FPT NEF engines are equipped with the Dual Power system which electronically adjusts the engine power to respond to varying load conditions, maintaining speed and productivity. During transport applications or PTO operations, the Dual Power automatically delivers an additional 10 hp, boosting engine power up to 190, 210 and 240 hp, respectively.

The new FPT NEF fitted on the **Serie 7 Stage V** tractors are state-of-the-art engines designed to offer farmers simplicity and functionality without compromising on performance, reliability and durability.

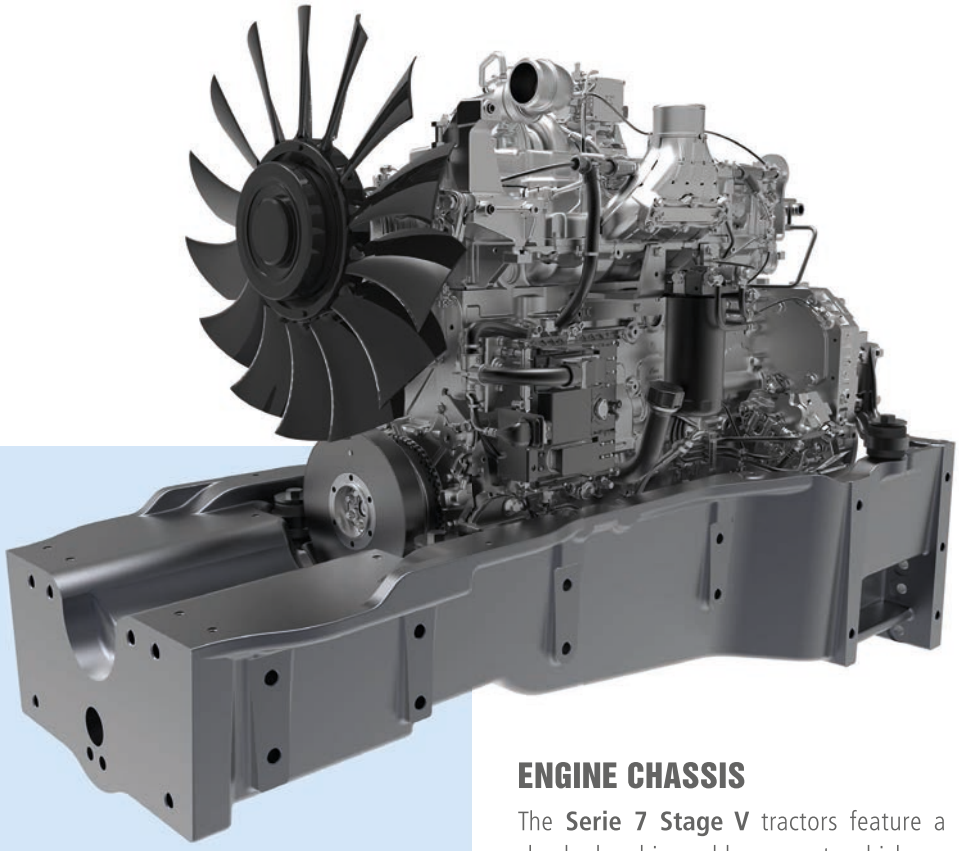

ENGINE CHASSIS

The **Serie 7 Stage V** tractors feature a rugged chassis with shock absorbing rubber mounts which support the engine helping isolate both cab and transmission from vibrations.

https://truckmanualshub.com/

This new engine does consume less fuel. And it only takes 5 minutes to clean the coolers. This saves a lot of time and money.

Peter

HI-ESCR2 SYSTEM TO CUT DOWN ON EXHAUST EMISSIONS

The HI-eSCR2 exhaust after-treatment system helps meet the strictest particulate emissions requirements. This technology integrates the SCR catalyst with a maintenance-free filtering device, thereby doing away with the EGR system. This improves engine performance while reducing operating costs.

RADIATOR MAINTENANCE

The tilt-up hood opens wide to provide easy access to the engine compartment for routine service and maintenance. The coolers located in front of the radiator open out from a single latch making for easy cleaning in dusty conditions.

BEST IN CLASS SYSTEM

The engine of the **Serie 7 Stage V** tractor is equipped with the Best in Class system (BIC). The BIC system relies on an innovative filter use strategy which doubles the interval between maintenance operations, from 500 to 1000 working hours, helping save time and costs.

ENGINE BRAKE FUNCTION

A motorized valve placed on the turbocharger enables the operator to improve the tractor braking performance by activating the engine brake through a foot lever conveniently located between the pedal clusters.

https://truckmanualshub.com/

https://truckmanualshub.com/

V-SHIFT TRANSMISSION FOR MORE CONTINUOUS POWER

The **Serie 7 Stage V** tractor range has been designed to provide modern farmers with pulling power and versatility. The V-Shift continuously variable transmission gives the **Stage V Serie 7** all the flexibility required to handle all kinds of tasks and field conditions. Combining a powerful engine and a V-Shift four-stage continuously variable transmission with four planetary gear trains and oil-cooled clutches, the **Serie 7 Stage V** delivers responsive performance making work easier and safer. The V-Shift transmission offers four speed ranges with advance speeds from 40 m/h to 50 km/h ensuring maximum productivity in any application.

https://truckmanualshub.com/

HIGHLIGHTS

- All transmission controls grouped on the V Easy Pilot controller
- Speed shifting without use of the clutch pedal
- Soft acceleration, optimum speed, constant traction
- Greater concentration on the job in hand with the user-friendly V-Shift transmission
- Fuel economy and lower operating costs
- Remote Shuttle button for automatic forward/reverse shifting
- 40 km/h or 50 km/h top speed in ECO mode at reduced engine rpm, minimum speed 40 m/h

I've chosen the V-Shift transmission because it makes my work lighter. It's very easy to use and responds instantly… Once you get used to it, you can't go back!

Charles

V-SHIFT CONTINUOUSLY VARIABLE TRANSMISSION

The V-Shift transmission with its four-stage technology sets a new benchmark in continuously variable transmissions. Using a four-stage instead of the usual two-stage CVT transmission offers real benefits to farmers and agricultural contractors looking for maximum productivity in any application.

This transmission offers four speed ranges to suit different operating requirements:

Range	**1**	Creeper	0.5 – 3 km/h
Range	**2**	Field 1	0.5 – 12 km/h
Range	**3**	Field 2	0.5 – 21 km/h
Range	**4**	Transport	0.5 – 40 or 50 km/h

The V-Shift transmission features four operating modes:

1. Auto Mode - The electronic unit controls the engine rpm and transmission ratio, based on the parameters set on the potentiometer, in order to achieve the required speed.

2. Manual Mode - The operator sets the engine speed with the hand throttle. The electronic unit controls the transmission ratio in order to achieve the required speed.

3. PTO Mode - The operator sets the engine speed with the hand throttle. The electronic unit controls the transmission ratio in order to achieve the required speed. In this mode, priority is given to the PTO speed.

4. Cruise Mode - The operator selects the tractor travel speed, which remains constant.

https://truckmanualshub.com/

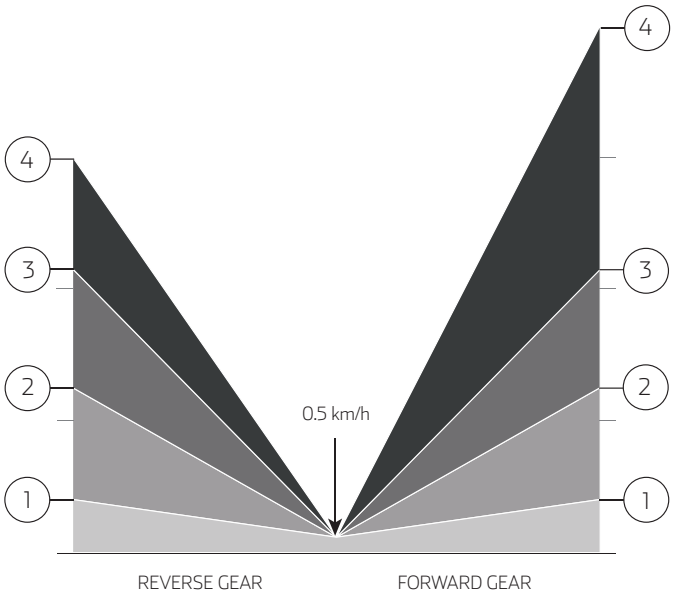

ELECTROHYDRAULIC POWER SHUTTLE

The power reverse shuttle allows the operator to automatically shift from forward to reverse without using the clutch pedal, by simply operating the shuttle control lever adjacent to the steering wheel. The shuttle response is electronically modulated and adjustable by the operator if required for different tasks.

V EASY PILOT MULTIFUNCTION CONTROLLER

Integrated into the multifunctional armrest, the ergonomically-designed V Easy Pilot controller provides easy and intuitive control of the V-Shift transmission, enabling the operator to drive the tractor and operate the implements with maximum ease and comfort. Using the MyFunctions menu, the operator can configure up to five different functions on the V Easy Pilot, which will be activated using the five buttons on the controller. Configurable functions include the speed cruise control; the headland operations, managed via the MyHMF menu; and the remote shuttle function allowing automatic forward/reverse shifting without using the steering-column shuttle lever. All functions are clearly displayed on the digital instrument panel and on the DSM touch screen monitor.

https://truckmanualshub.com/

ROBO-SIX TRANSMISSION, ALWAYS ONE STEP AHEAD

A powerful and versatile tractor range like the **Serie 7 Stage V** must be able to handle all kinds of tasks and field conditions. To provide all the flexibility required by modern agriculture, the Serie 7 tractor range is fitted with the Robo-Six powershift transmission.

https://truckmanualshub.com/

DYNAMIC VERSION

The Dynamic version includes standard a multi-function arm-rest. All controls, including those for the Robo-Six transmission and for the electronically-operated hydraulic remote valves, are logically-arranged for maximum ergonomic comfort.

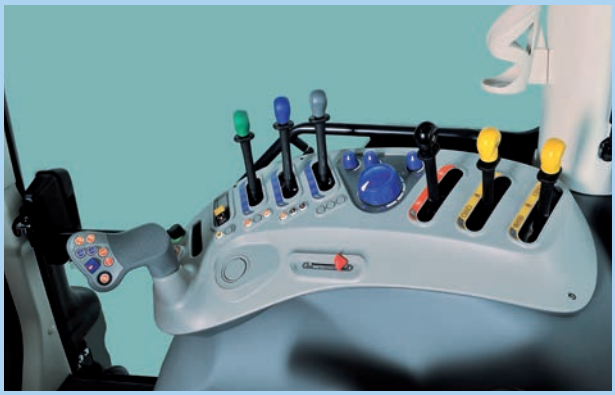

ACTIVE VERSION

On the Active version, all controls, including those for the Robo-Six transmission and for the mechanically-operated hydraulic remote valves, are ergonomically integrated into the right-hand console for maximum comfort and ease of operation.

https://truckmanualshub.com/

This transmission allows me to drive smoothly and relaxed. I don't have power loss problems and I save fuel.

Tom

HIGHLIGHTS

- All transmission controls grouped on a single controller
- Robotized range shifting
- Speed Matching: automatic powershift selection based on tractor speed
- Smart APS - Auto Powershift: automatic shifting through all powershifts and ranges
- De-clutch button
- Stop & Action system to integrate the De-clutch function into the brake pedal
- Shuttle control lever adjacent to the steering wheel with response modulation
- 54 forward speeds + 27 reverse speeds with creeper, minimum speed 400 m/h
- ECO mode for transport operations and Oil Cut-off mode for improved fuel economy

ROBO-SIX TRANSMISSION: HIGH EFFICIENCY AND SMOOTH DRIVING

High performance, fuel efficiency, smooth driving and safety are the strong points of the Robo-Six transmission. The key features of this transmission include five speed ranges, a six-speed on-the-go powershift, a robotized range shifting and an electrohydraulic steering-column power shuttle. The Robo-Six transmission offers 30 forward and 15 reverse speeds. In addition, a creep speed option provides 54 speeds forward and 27 speeds in reverse.

Where legally permitted, the **Serie 7 Stage V** can reach a top speed of 50 km/h at reduced engine rpm. In addition, the Robo-Six transmission is equipped with an oil cut-off function which ensures a more efficient management of the braking system, resulting in better performance on the road and improved fuel economy.

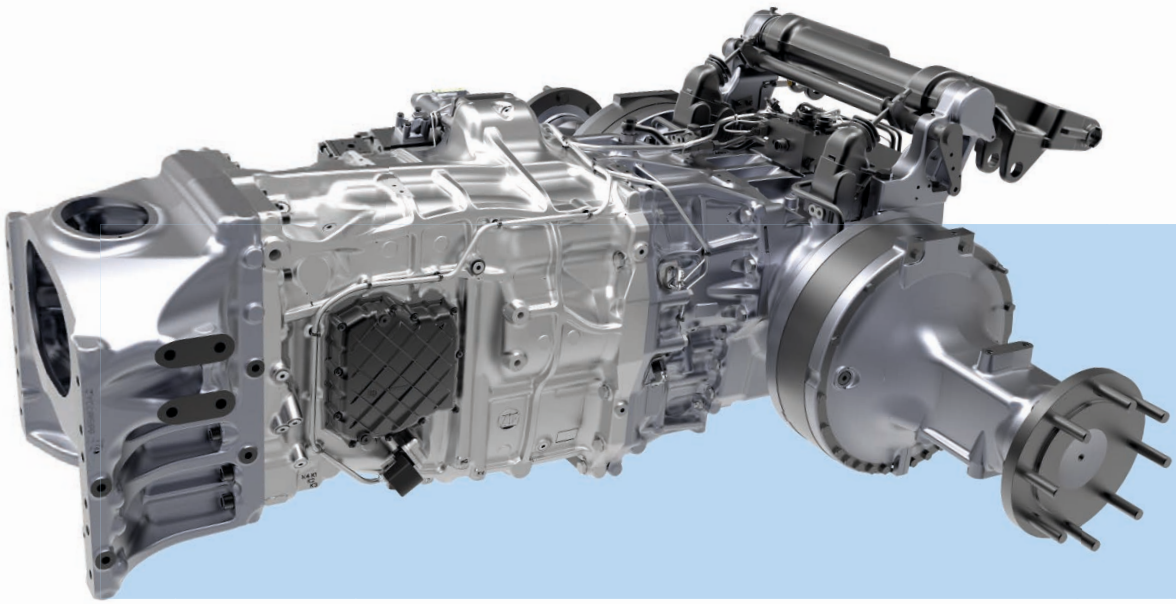

https://truckmanualshub.com/

MULTI-FUNCTION CONTROLLER

An ergonomically-designed controller integrated into the right-hand multifunction armrest provides easy and intuitive control of the Robo-Six transmission, allowing the operator to shift through all gears and ranges without depressing the clutch pedal. The powershift button enables seamless speed progression for optimum traction both in the field and on the road.
The multifunction controller integrates all main functions for tractor and implement operation. The MyFunctions pushbuttons allow the operator to select and activate up to five different functions such as APS Auto Powershift facility, differential lock, 4WD operation, De-clutch control, PTO, rear hitch fast raise/lower, speed cruise control, one remote valve and headland management. All functions are clearly displayed on the digital instrument panel and on the DSM touch screen monitor.

SMART APS AUTO POWERSHIFT AUTOMATIC TRANSMISSION

On the **Serie 7 Stage V** range, the Robo-Six transmission can be controlled both manually and automatically. Based on load conditions, engine speed and rpm, the Smart Auto Powershift (APS) facility allows the operator to automatically select the right gear in each range. This improves tractor performance and driving safety, while optimizing fuel economy.

STOP & ACTION SYSTEM

TThe Stop & Action system integrates the De-clutch function into the brake pedal. This allows the operator to stop the tractor without depressing the clutch pedal and without using the power shuttle. Through the combined use of the Stop & Action and APS systems, the Robo-Six transmission ensures a smooth driving performance, comparable to that of a CVT transmission.

ELECTROHYDRAULIC POWER SHUTTLE

The power shuttle allows the operator to automatically shift from forward to reverse without use of the clutch pedal, by simply operating the shuttle control lever adjacent to the steering wheel. The shuttle response is electronically modulated and adjustable by the operator if required for different tasks.

SMART APS AUTO POWERSHIFT

The Smart APS dial in the armrest allows the engine speed parameters to be adjusted from an Eco through to a Power setting. The Auto Powershift (APS) facility allows the operator to automatically select the right gear in each range for best performance and optimum fuel economy.

https://truckmanualshub.com/

AXLE

MORE TRACTIVE POWER TO INCREASE PRODUCTIVITY

With the engine located within a chassis and its rugged front axle with independent wheels, the **Serie 7 Stage V** is the tractor that transfers more power to the ground in its class.

The **Serie 7 Stage V** is designed to provide outstanding traction and excellent manoeuvrability. This makes for better grip and greater stability, resulting in improved driving safety and comfort both on rough and sloping terrain. The rugged front axle is equipped with full locking differential and electro hydraulic four-wheel drive engagement for maximum efficiency and safety on all terrains. High-capacity wet multi-disc rear axle brakes ensure safe controlled stopping power. Also, when braking, the four-wheel drive engages automatically, which in turn brakes the front axle for efficient braking on all four wheels. All Serie 7 tractors are equipped with a brake power boosting system to reduce the effort required by the operator while improving driving accuracy.

*My **Serie 7** is rugged and powerful. Now I have all the traction I need. It's a true champion in its class!*

Paul

https://truckmanualshub.com/

*Before purchasing my **Serie 7 Stage V** tractor, I explained to my dealer what I needed and they proposed a hydraulic system that seems tailor-made for my needs.*

John

HYDRAULIC SYSTEM TAILORED TO YOUR NEEDS

The **Serie 7 Stage V** tractors feature a closed-centre hydraulic system with variable-displacement pump. This means that the pump always delivers exactly the quantity of oil that the system requires, thereby eliminating unnecessary power waste. The system supplies up to 160 l/min to the hitch and remote valves, allowing for simultaneous operation of all hydraulic functions. The hydraulic system also includes a steering pump with 44 l/min flow rate.

The **Serie 7 Stage V** range has been designed to operate in a variety of conditions with heavy, power-demanding implements. The PTO offers four speeds: 540, 540Eco, 1000 and 1000Eco rpm, and the driveline design ensures minimal power loss and therefore maximum productivity. An electro hydraulically operated clutch enables smooth and modulated engagement of the PTO, ensuring a soft start-up of the implement. The new Serie 7 tractors are equipped with the Dual Power system, which automatically increases power available when the PTO is operational. This enables the engine to maintain a constant power as the load varies, allowing optimum use of the PTO for enhanced tractor performance and productivity. The rear hitch is equipped with lower link draft sensing for accurate implement control and provides a maximum lift capacity of 9300 kg.

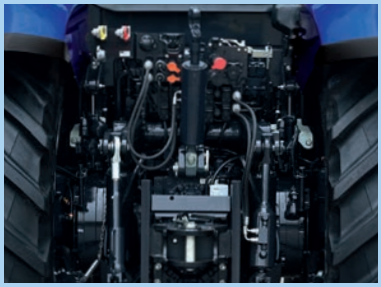

REMOTE VALVES

The **Serie 7 Stage V** tractors can be fitted with up to eight double-acting remote valves, controlled electro-hydraulically via a multi-function controller. A three-way flow divider with push-pull connectors is available as an option to operate three different hydraulic functions with a single remote valve. The valves are operated via three fingertip controls and an electronic mini-joystick integrated into the multifunction armrest.

HYDRAULIC

https://truckmanualshub.com/

SYSTEM

With the satellite-based guidance I've reached a level of accuracy I've never experienced before. And this means more productivity and less overall costs.

Mark

PRECISION FARMING, AUTOMATIC PRODUCTIVITY

SATELLITE-BASED GUIDANCE: HIGHER ACCURACY FOR GREATER PRODUCTIVITY

The optional satellite-based guidance system is controlled via a dedicated 8.4" touch screen monitor. The system offers two major benefits:

1. The Precision Steering Management system based on satellite navigation with RTK correction provides precise steering control in row-crop operations delivering up to 2cm pass-to-pass accuracy. Such a high level of precision enhances productivity on the field resulting in higher yields and profits. In addition, the Eazysteer function allows the tractor to make a complete turn with just a single revolution of the steering wheel, avoiding multiple turns. This improves ride comfort and optimizes working time.

2. Configuration and control of the ISObus system with management of advanced features such as ISO-TC and TC-GEO.

ISOBUS SYSTEM TO SIMPLIFY AND OPTIMIZE YOUR WORK

The **Serie 7 Stage V** tractor range can be optionally equipped with an ISObus system, a communication protocol for data transfer between tractor, implement and on-board computer that enhances operating efficiency and productivity. With the ISObus system, the operator can control all ISObus-compatible implements via a simple DSM 12" touch screen monitor.

https://truckmanualshub.com/

EAZYSTEER

Supplied in conjunction with the satellite guidance system, the Eazysteer function allows the tractor to make a complete turn with just a single revolution of the steering wheel. This avoids multiple turns of the steering wheel, improving ride comfort and optimising working time.

BENEFITS OF SATELLITE-BASED GUIDANCE AND ISOBUS SYSTEM

The satellite-based guidance and the ISObus system maximise efficiency and productivity while improving riding comfort and safety:

- Each implement operation is controlled with extreme accuracy. The implement can also be managed automatically.
- Reducing the travelled distance in the field reduces tractor and implement wear and saves fuel.
- The application of variable rate treatments eliminates skips and overlaps, minimizing product wastes.
- Precision farming reduces chemical residues.
- Report and pre-setting operations become easier and can be done from home without assistance from specialized operators.

FLEET MANAGEMENT

LANDINI FLEET MANAGEMENT

Landini Fleet Management is the telematic system which monitors the activities of your fleet of tractors. Designed to maximise your efficiency and productivity while reducing your operating costs, the Fleet Management performs the following activities:

1. Monitors your fleet in real time: displays the exact position of all your tractors and provides real-time information on the status of machines such as speed, engine rpm, work progress and consumptions.
2. Analyses data: determines the efficiency and productivity of each machine and calculates the profit margin of your business.
3. Performs remote diagnostics: identifies and resolves any issues with the tractors to reduce downtime and extend equipment life.
4. Stores working data: to eliminate errors and maximize productivity.

https://truckmanualshub.com/

CONVENIENCE

landini

https://truckmanualshub.com/

QUICK MAINTENANCE TO GET YOU BACK UP AND RUNNING

Designed to deliver maximum efficiency and reliability, the **Serie 7 Stage V** tractor range offers a variety of solutions to simplify and expedite maintenance.

1. Tilt-up hood opens wide to provide easy access to the engine compartment for maintenance and radiator cleaning.
2. Oil filler cap is placed in the lower part of the engine, so topping up of engine oil can be done without opening the hood.
3. Engine air cleaner is positioned in such a way as to speed up cleaning and replacement.
4. Cooling radiators, mounted in the engine front, and laterally-removable dust cover allow for simple and fast cleaning.
5. Fuel and AdBlue® tanks are conveniently placed to allow quick filling. Tank caps have different colours.
6. In-cab air cleaner is easily accessible for maintenance.
7. Oil level in the transmission can be conveniently checked through the oil filler cap with level gauge placed on the rear of the tractor.
8. Windscreen wiper fluid reservoir is located on the back of the cab.

https://truckmanualshub.com/

https://truckmanualshub.com/

LANDINI SPARE PARTS AND SERVICE, TO GIVE YOU THE BEST ALWAYS

Landini is worldwide recognized as a reliable supplier of high-quality spare parts and after-sales services. Developed by the same engineers who design and manufacture the Landini tractors, genuine Landini parts are designed and manufactured to the highest quality standards to ensure tractors reliable performance and maximum safety.

The pluses of Landini's after-sales service include following:

- Spare parts are delivered promptly and efficiently to Landini's dealers on the same day of order.
- Each part comes with a 12-month warranty and bears a non-falsifiable hologram which certifies its build quality and genuineness.
- Original Landiniparts are reliable and convenient, as they enhance the working quality and efficiency of the Serie 7 tractors.

After-sales service is handled by our dealers through a team of highly-skilled, solution-oriented technicians who avail themselves of the latest diagnostic techniques. Choosing Landini means choosing excellence.

https://truckmanualshub.com/

landini

https://truckmanualshub.com/

LANDINI, A LONG HISTORY OF SUCCESS

Giovanni Landini had a dream: to change forever the history of farming by bringing the power of machines into the fields. He pursued his goal with great determination and, in 1884, he finally realised his dream by founding the Landini company. Landini's long history is marked by continued innovation in design and production processes and by a strong commitment to customers. In 1934, the company launched the Super Landini model: with its 48 hp, it was the most powerful tractor of the time. In 1977, the company introduced the Large series, Europe's first tractor range over 100 hp with cab mounted on suspended platform. In the 80s, Landini started manufacturing a wide range of specialty tractors that led the company to become a world leader for innovation technology and market share. In 1994, Landini was acquired by the Argo Industrial Group. The acquisition enabled the company to expand its international presence by creating a worldwide network of subsidiaries and distributors. Giovanni Landini's dream was to make farm work less tiring and more productive. That dream is still alive today, since our quality of life is closely linked to the quality of agricultural production.

https://truckmanualshub.com/

		7-210 V-SHIFT	7-230 V-SHIFT	7-240 V-SHIFT
ENGINE PERFORMANCE				
Rated power (97/68 CE - ISO TR 14396)	hp/kW	194 / 143	205 / 151	219 / 161
Rated power with Dual Power (97/68 CE - ISO TR 14396)	hp/kW	194 / 143	205 / 151	219 / 161
Max power (97/68 CE - ISO TR 14396)	hp/kW	200 / 147	215 / 158	230 / 169
Max power with Dual Power (97/68 CE - ISO TR 14396)	hp/kW	210 / 155	225 / 166	240 / 176
Rated engine speed	rpm	2200		
Engine speed - max power	rpm	1900		
Max torque without Dual Power, (with Dual Power) - Engine speed at 1400 rpm	Nm	840 (860)	904 (921)	966 (983)
Torque backup without Dual Power, (with Dual Power)		36% (41%)		
Manufacturer - Brand		FPT		
Engine type - Installation type		NEF 67 - engine iso-mounted on cast iron chassis		
Exhaust gas after-treatment Stage V / Tier 4 Final		HI-eSCR2		
No. of cylinders / Displacement / No. of valves		6 / 6.7 l / 24		
Air filter system		air filter with pre-cleaning stage and dust ejector		
Air inlet system		turbo with intercooler		
Fuel injection system		electronically-controlled high-pressure common rail injection system		
Maintenance		BIC Best in Class - 1000 hours maintenance interval		
Cooling system		matrix radiator pack - coolers open out from single latch		
Viscotronic fan		●		
CAPACITIES				
Fuel tank	litres	350		
AdBlue/DEF tank	litres	52		
Coolant	litres	29		
TRASMISSION				
Type		V-Shift continuously variable transmission		
No. of stages		4		
Minimum speed	m/h - rpm	40 - 2200		
40 km/h - engine speed	rpm	● - 1550		
50 km/h - engine speed	rpm	○- 1690		
Transmission control		V Easy Pilot on multi-function armrest		
Reverse power shuttle		electro-hydraulic with modulated engagement		
REAR PTO				
Type		electro-hydraulic multidisc with modulated engagement		
Speeds	rpm	540 / 540 E / 1000 / 1000 E		
PTO rated speeds	rpm	2005 / 1608 / 1995 / 1600		
Rotation - spline shaft type		clockwise (viewed from tractor rear) ●1' 3/8" 6-spline shaft / ○ 1' 3/8" 21-spline shaft		
FRONT AND REAR AXLES				
Front rigid axle		●		
Front suspended axle		○ - IFS with independent front wheels suspension system		
Traction type		electro-hydraulic MFWD		
Front differential lock		100% electro-hydraulic		
Rear differential lock		100% electro-hydraulic		
Rear axle - flanged type		●		
Rear axle - bar axle type		○		
BRAKING SYSTEM				
Front braking system		auto MFWD engagement on braking		
Rear braking system		5 oil-cooled discs		
Trailer braking system		MR-compliant pneumatic system with 2 or 2+1 lines, with or without single-line hydraulic system, MR-compliant 2-line hydraulic system (40 km/h only)		
Engine brake		●		
HYDRAULIC SYSTEM				
Hydraulic piston pump with CCLS (Closed Center Load Sensing) system - flow rate		●- 123 l/min		
Hydraulic piston pump with CCLS (Closed Center Load Sensing) system - high-flow rate		○- 160 l/min		
Steering pump - flow rate		●- 44 l/min		
Rear remote valves type, flow rate, min - max		electro-hydraulic, 100 l/min flow rate, 3 - 6		
Flow divider with flow selector - section flow rate		3 sections with push-pull connectors - 60 l/min flow rate per section		
Free flow return		●		
Power Beyond adaptor and free flow return		○		
Power Beyond with push-pull connectors and free flow return		○		
Mid-mounted remote valves - flow rate		2 electro-hydraulic valves with multi-function joystick - 100 l/min flow rate		
Hydraulic oil take out	litres	40		

https://truckmanualshub.com/

		7-210 V-SHIFT	7-230 V-SHIFT	7-240 V-SHIFT
REAR 3-POINT HITCH				
Electronically-controlled rear hitch		lower link draft control, position control, mixed control, float position		
Category - coupler type		III - quick-couplers		
Max lifting capacity at hitch couplers	kg	9300		
FRONT 3-POINT HITCH				
Electronically-controlled front hitch		○ - with position control		
Category - coupler type		III N - quick-couplers		
Max lifing capacity at 610 mm	kg	3500		
FRONT PTO				
Type		○ - electro-hydraulic multidisc with modulated engagement		
Speeds	rpm	1000		
PTO rated speeds	rpm	1920		
Rotation - spline shaft type		○ - clockwise (viewed from tractor front) - ● 1' 3/8"shaft with 6 splines		
Rotation - spline shaft type (NAO version)		○ - counter-clockwise (viewed from tractor front) - ●1' 3/8"shaft with 21 splines		
CAB				
Lounge Cab - 4-post cab with Landini mechanical suspension		●		
Landini semi-active suspension		○ - electronically-controlled -hydraulic semi-active cab suspension system		
In-cab noise level	dB(A)	70		
Automatic climate control		●		
Deluxe air-suspension seat		●- low-frequency air suspension, swivel and height adjustments, automatic weight control, lumbar support and headrest		
Super Deluxe air-suspension seat		○ - Dynamic Damping System, backrest ventilation, alcantara upholstery, swivel and height adjustments, automatic weight control, lumbar support and headrest		
Hide-away buddy seat		●		
V Easy Pilot on multi-function armrest		●		
DSM Data Screen Manager		● - 12" touchscreen monitor		
Radio ready		● - with 4 loudspeakers		
Radio system		○ - radio DAB mp3, with 4 loud speakers, bluetooth, aux-in adapter and integrated microphone		
Halogen work lights		● 18		
LED work lights		○ - 20		
Beacon lights		● left side - ○ left and right side		
ADDITIONAL EQUIPMENT				
Front ISObus		○		
Rear ISObus		○		
PSM Precision Steering Management & EazySteer - adaptor		○		
PSM Precision Steering Management & EazySteer - EGNOS full kit		○		
PSM Precision Steering Management & EazySteer - RTK NTRIP full kit		○		
Landini Fleet Management - 3-year of full plan subscription		●		
WEIGHT AND DIMENSIONS				
Wheelbase	mm	2820		
Max height over cab without beacon lights (with PSM satellite steering system)	mm	3044 (3159) - measured with tires 540/65R30 - 650/65R42		
Max height from rear axle centre to cab roof (with PSM satellite steering system)	mm	2180 (2295)		
Max lenght with front weights - Max track width	mm	5360 - 2550 measured with tires 600/60R30 - 710/60R42		
Turning radius	mm	5400, measured with tires 540/65R30 - 650/65R42		
Shipping weight - measured with average specifications	kg	8300		
Gross vehicle weight	kg	13000		
Max front and rear tire sizes - (Index Radius- IR)	mm	600/60R30 (RI 700) - 710/60R42 (RI 925)		
Front weight support	mm	●		
Weights - No. x weight	kg	○ - 12 x 45 or 16 x 45		
Front hitch weight	kg	○ - 800 or 1400		
Rear axle weights	kg	○ - 170 or 340 or 510		

Key: ● standard ○ option

https://truckmanualshub.com/

		7-200 ROBO-SIX	7-210 ROBO-SIX	7-230 ROBO-SIX
ENGINE PERFORMANCE				
Rated power (97/68 CE - ISO TR 14396)	hp/kW	175 / 129	194 / 143	205 / 151
Rated power with Dual Power (97/68 CE - ISO TR 14396)	hp/kW	175 / 129	194 / 143	205 / 151
Max power (97/68 CE - ISO TR 14396)	hp/kW	180 / 132	200 / 147	215 / 158
Max power with Dual Power (97/68 CE - ISO TR 14396)	hp/kW	190 / 140	210 / 155	225 / 166
Rated engine speed	rpm	2200		
Engine speed - max power	rpm	1900		
Max torque without Dual Power, (with Dual Power) - Engine speed at 1400 rpm	Nm	756 (778)	840 (860)	904 (921)
Torque backup without Dual Power, (with Dual Power)		36% (41%)		
Manufacturer - Brand		FPT		
Engine type - Installation type		NEF 67 - engine iso-mounted on cast iron chassis		
Exhaust gas after-treatment Stage V / Tier 4 Final		HI-eSCR2		
No. of cylinders / Displacement / No. of valves		6 / 6.7 l / 24		
Air filter system		air filter with pre-cleaning stage and dust ejector		
Air inlet system		turbo with intercooler		
Fuel injection system		electronically-controlled high-pressure common rail injection system		
Maintenance		BIC Best in Class - 1000 hours maintenance interval		
Cooling system		matrix radiator pack - coolers open out from single latch		
Viscotronic fan		●		
CAPACITIES				
Fuel tank	litres	320		
AdBlue / DEF tank	litres	52		
Coolant	litres	29		
TRANSMISSION				
Type		Robo-Six - 6 powershift speeds and 5 ranges		
No. of gears		● 54FWD + 27REV with creeper - ○ 30FWD + 15REV without creeper		
Minimum speed	km/h	0.4 with creeper - 3.2 without creeper		
40 km/h - engine speed	rpm	●- 1505		
50 km/h - engine speed	rpm	○- 1880		
Transmission control		V Easy Pilot on right-hand console (ACTIVE version) - V Easy Pilot on multi-function armrest (DYNAMIC version)		
Reverse power shuttle		electro-hydraulic with modulated engagement		
APS - Auto PowerShift		●- electronically-controlled automatic powershift and range shifting		
REAR PTO				
Type		electro-hydraulic multidisc with modulated engagement		
Speeds	rpm	540 / 540 E / 1000 / 1000 E		
PTO rated speeds	rpm	2000 / 1588 / 2002 / 1590		
Rotation - spline shaft type		clockwise (viewed from tractor rear) ● 1' 3/8" 6-spline shaft / ¡ 1' 3/8" 21-spline shaft		
FRONT AND REAR AXLES				
Front rigid axle		●		
Front suspended axle		○ - IFS with independent front wheels suspension system		
Traction type		electro-hydraulic MFWD		
Front differential lock		100% electro-hydraulic		
Rear differential lock		100% electro-hydraulic		
Rear axle - flanged type		●		
Rear axle - bar axle type		○		
BRAKING SYSTEM				
Front braking system		auto MFWD engagement on braking		
Rear braking system		5 oil-cooled discs		
Trailer braking system		MR-compliant pneumatic system with 2 or 2+1 lines, with or without single-line hydraulic system, MR-compliant 2-line hydraulic system (40 km/h only)		
Engine brake		●		
HYDRAULIC SYSTEM				
Hydraulic piston pump with CCLS (Closed Center Load Sensing) system - flow rate		●- 123 l/min		
Hydraulic piston pump with CCLS (Closed Center Load Sensing) system - high flow rate		○ - 160 l/min (DYNAMIC version)		
Steering pump - flow rate		●- 44 l/min		
Rear remote valves, type, flow rate, min - max		mechanical, 80 l/min flow rate, 2 - 3 mechanical + 1 electro-hydraulic (ACTIVE version) electro-hydraulic, 100 l/min flow rate, 3 - 6 (DYNAMIC version)		
Flow divider with flow selector - section flow rate		3 sections with push-pull connectors - 60 l/min per section (DYNAMIC version)		
Free flow return		●		
Power Beyond adaptor and free flow return		○		

https://truckmanualshub.com/

		7-200 ROBO-SIX	7-210 ROBO-SIX	7-230 ROBO-SIX
HYDRAULIC SYSTEM				
Mid-mounted remote valves - flow rate		2 electro-hydraulic valves with multi-function joystick - 100 l/min flow rate		
Hydraulic oil take out	litres	40		
REAR 3-POINT HITCH				
Electronically-controlled rear hitch		lower link draft control, position control, intermix and floating		
Category - coupler type		III - quick-couplers		
Max lifting capacity at hitchs	kg	● 6400 ○9300 (ACTIVE version) - ● 9300 (DYNAMIC version)		
FRONT 3-POINT HITCH				
Electronically-controlled front hitch		○- with position control		
Category - coupler type		III N - quick-couplers		
Max lifting capacity at 610 mm	kg	3500		
FRONT PTO				
Type		○ - electro-hydraulic multidisc with modulated engagement		
Speeds	rpm	1000		
PTO rated speeds	rpm	1920		
Rotation - spline shaft type		○ - clockwise (viewed from tractor front) - ● 1' 3/8"shaft with 6 splines		
Rotation - spline shaft type		○ - counter-clockwise (viewed from tractor front) - ● 1' 3/8"shaft with 21 splines		
CAB				
Lounge Cab - iso-mounted four-post cab		●		
Landini mechanical suspension		○- mechanical cab suspension system		
Landini semi-active suspension		○- electro-hydraulic semi-active cab suspension system electronically controlled		
In-cab noise level	dB(A)	70		
Manual climate control		● (ACTIVE version)		
Automatic climate control		● (DYNAMIC version) - ○ (ACTIVE version)		
Comfort air-suspension seat		● (ACTIVE version) - swivel and height adjustments, automatic weight control, lumbar support and headrest		
Deluxe air-suspension seat		● (DYNAMIC version) -low-frequency air suspension, swivel and height adjustments, automatic weight control, lumbar support and headrest		
Super Deluxe air-suspension seat		○ (DYNAMIC version) - Dynamic Damping System, backrest ventilation, alcantara upholstery, swivel and height adjustments, automatic weight control, lumbar support and headrest		
Hide-away buddy seat		●		
V Easy Pilot on right-hand console		● (ACTIVE version)		
V Easy Pilot on multi-function armrest		● (DYNAMIC version)		
DSM Data Screen Manager		○ - (DYNAMIC version) - 12" touchscreen monitor		
Radio ready		● - with 4 loudspeakers		
Radio system		○ - radio DAB mp3, with 4 loud speakers, bluetooth, aux-in adapter and integrated microphone		
Halogen work lights		● - 12 (ACTIVE version) - 18 (DYNAMIC version)		
LED work lights		○ - 20 (DYNAMIC version)		
Beacon lights		● left side - ○ left and right side		
ADDITIONAL EQUIPMENT				
Front ISObus		○		
Rear ISObus		○		
PSM Precision Steering Management & EazySteer - adaptor		○		
PSM Precision Steering Management & EazySteer - EGNOS full kit		○		
PSM Precision Steering Management & EazySteer - RTK NTRIP full kit		○		
Landini Fleet Management - 3-year of full plan subscription		●		
WEIGHT AND DIMENSIONS				
Wheelbase	mm	2820		
Max height over cab without beacon lights (with PSM satellite steering system)	mm	3044 (3159) - measured with tires 540/65R30 - 650/65R42		
Max height from rear axle centre to cab roof (with PSM satellite steering system)	mm	2180 (2295)		
Max lenght with front weights - Max overall track	mm	5360 - 2550 measured with tires 600/60R30 - 710/60R42		
Turning radius	mm	5400, measured with tires 540/65R30 - 650/65R42		
Shipping weight - measured with average specifications	kg	8000		
Gross vehicle weight	kg	13000		
Max front and rear tire sizes - (Index Radius- IR)	mm	600/60R30 (RI 700) - 710/60R42 (RI 925)		
Front weight support		●		
Weights - No. x weight	kg	○ - 12 x 45 or 16 x 45		
Front hitch weight	kg	○- 800 or 1400		
Rear axle weights	kg	○ - 170 or 340 or 510		

Key: ● standard ○ option

https://truckmanualshub.com/

Passion for Innovation.

Argo Tractors S.p.A.
via G. Matteotti, 7 | 42042 Fabbrico [RE] Italia
t. +39.0522.656.111 | f. +39.0522.656.476
webmaster@argotractors.com | www.argotractors.com

EN
6637010A1 11/2020
graphic design: **gruppo saldatori** | www.grupposaldatori.com
All data and illustrations provided in this brochure are for information purposes only and can be changed without notice.