https://truckmanualshub.com/

C 400 H
C 400 HI
C 400 H x4
C 400 HI x4
C 500 H
C 500 HI
C 500 H x4
C 500 HI x4

OPERATOR'S MANUAL

ENGLISH
ORIGINAL MANUAL

https://truckmanualshub.com/

https://truckmanualshub.com/

AUSA Forklift

C 400 H
C 400 HI
C 400 H x4
C 400 HI x4
C 500 H
C 500 HI
C 500 H x4
C 500 HI x4

Above chassis number 30365171
Original Manual

скачать.ру
техника и сервис

https://truckmanualshub.com/

CALIFORNIA

Proposition 65 Warning

Diesel engine exhaust and some of its constituents are known to the State of California to cause cancer, birth defects, and other reproductive harm

43.01171.00

WARNING

- **Battery posts, terminals and related accessories contain lead and lead compounds, chemicals known to the State of California to cause cancer and birth defects or other reproductive harm.**

Wash hands after handling.

14.00771.00

https://truckmanualshub.com/

Foreword

■ Thank you for choosing this AUSA forklift truck (hereinafter forklift). The purpose of this Operator's and Safety Manual is to provide you, the user, with instructions concerning the productive, safe and efficient use of this forklift. You should read and understand this Operator's and Safety Manual before operating the forklift. The Operator's and Safety Manual contains safety messages concerning the use of the forklift. Remember that "you" are the key to safety.

The preservation of these qualities over a long period of time is in your hands. The correct use of your forklift will allow you to make the most of the resultant benefits.

The Operator's and Safety Manual also contains instructions for some adjustments and for maintenance of this forklift. Follow these instructions carefully while performing routine maintenance checks and keep a record of all maintenance. As wide variations in operating conditions may be experienced, you are urged to contact your AUSA Distributor to resolve any operational or service problems.

Please have all operators of this forklift read and understand this Operator's and Safety Manual.

Any damage resulting from the incorrect use of the forklift shall not be considered to be the responsibility of AUSA. In the event of query, complaint or to place an order for spares, please contact your Official AUSA Dealer.

This forklift is designed and intended for off highway use. If it is temporarily operated on any public street or highway, the state and local laws governing speed, size, weight, brakes and lighting must be complied with.

For further information you may write, FAX or E-mail to:

AUSA Center, S.L.U.
P.O.B. 194
08243 MANRESA (Barcelona) SPAIN
Tel. 34 - 93 874 75 52 / 93 874 73 11
Fax 34 - 93 873 61 39 / 93 874 12 11 / 93 874 12 55
E-mail: ausa@ausa.com
Web: http://www.ausa.com

AUSA is continuously trying to improve the efficiency, productivity and safety of its products and reserves the right to make such improvements without incurring any obligation to make changes to forklifts previously sold. Because of this policy of striving for constant product improvement, the specifications and operating instructions shown in this Operator's and Safety Manual may be different from prior forklift models. As such, we will not accept claims that are based on the data, illustrations or descriptions included in these instructions.

Only original AUSA spare parts should be used. This is the only way to guarantee that AUSA machinery has the same operational level as at the time of delivery. No alterations should be made to the forklift without the prior authorization of the manufacturer.

When this Operator's and Safety Manual is not used should be kept stored in the place provided on the support of the handling control valve. To access this space, tilt the mast forwards and tip the cabin **(fig. 1)**.

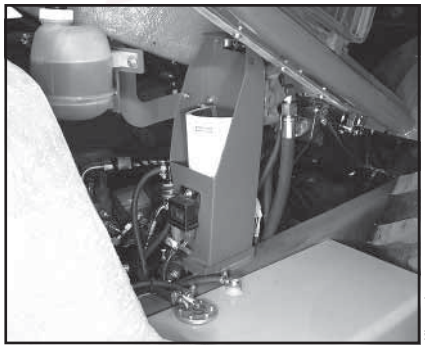

(fig. 1)

https://truckmanualshub.com/

Contents

Uses and improper uses of the forklift 5
Identification of the forklift truck 6
Technical specifications 7
Decals / Labels / Identification plates 24
Special Safety Messages 50
Controls / Instruments / Equipments 59
Operating the forklift 67
Special procedures 71
Recommended fluids and lubricants 73
Maintenance Chart 75
Periodic Maintenance Operations 77
Transporting the forklift 99
Electrical circuit diagram 102
Hydraulic circuit diagram 108
Transmission troubleshooting 112
EC Certificate of conformity 113

https://truckmanualshub.com/

Uses and improper uses of the forklift

■ Uses for which the forklift is designed

Forklifts C 400/500H-HI, and C 400/500H-HI x4 have been designed and manufactured for lifting, handling and transporting loads on rough ground and industrial use. The safety of individuals and of the loads carried must be ensured through the use of forks or other accessories and equipment.

ROUGH TERRAIN USE (C400/500H)

This forklift truck is designed for transporting and lifting loads on grounds not in good condition, roughly flat, not too steep slopes and small obstacles, so that the stability conditions are not optimal.

INDUSTRIAL USE (C400/500HI)

This forklift truck is designed for transporting and lifting loads on good condition floors, that means flat, levelled and paved ground, so that there are optimal stability conditions.

Any use other than that described above shall be considered inappropriate and therefore improper.
Strict adherence to the operating, maintenance and repair conditions specified by the manufacturer are essential in order to maintain the forklift in good working order.
Driving, maintenance and repair of the forklift should only be carried out by suitably qualified personnel, with the necessary tools and knowledge of the control and safety procedures relative to the forklift. When handling loads or carrying out maintenance and/or repair work, the occupational health and safety regulations, together with those relative to accident prevention, should be observed.
When driving with the forklift on public highways, special care should be taken to ensure compliance with the current legislation for this type of vehicle (Highway Code).
AUSA does not assume responsibility for any damage resulting from modifications made to the forklift without express authorization.

❀ The texts following this symbol provide information on recycling and protecting the environment.

■ Improper use

Improper use is understood to mean the use of the forklift in a manner not in keeping with the criteria and instructions given in this Operator's and Safety Manual and in a way which might cause damage to persons or objects.
Some of the more common and dangerous examples of improper use are given below:

- Carrying persons other than the operator on the forklift.
- Not strictly observing the instructions for use and maintenance given in this Operator's and Safety Manual.
- Exceeding the limits for load and centre of gravity given in the relevant load charts.
- Working on unstable, unshored grounds or at the edges of trenches and ditches.
- Working on excessively steep slopes.
- The use of accessories or equipment for purposes other than those for which they have been designed.
- The use of accessories or equipment not manufactured or authorized by AUSA.

https://truckmanualshub.com/

Identification of the forklift truck

Important!
When contacting either AUSA or their dealers on matters regarding the forklift, the following information should be given: Model, date of purchase, chassis number and engine number. This data is given on the identification plate.
For ease of access, write this information in the spaces given below:

Forklift model:.....

Date of purchase:.....

Chassis serial number: .....

Engine serial number: .....

(fig. 1)

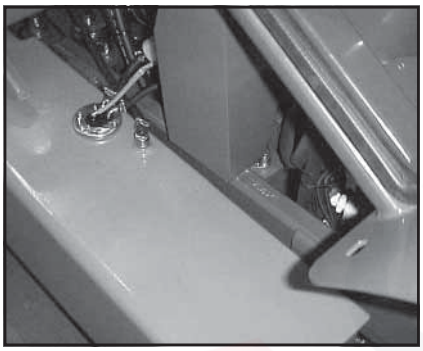
(fig. 2)

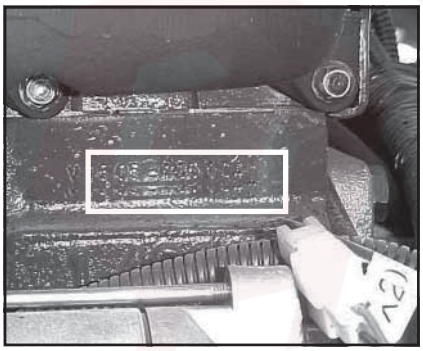
(fig. 3)

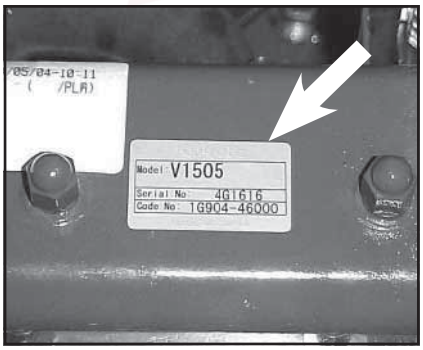

(fig. 4)

- **Machine identification plate: (fig. 1)** This is located on the left-hand side of the driver's seat. It includes the CE mark.

- **Chassis serial number: (fig. 2)** This is engraved on the right-hand strut of the chassis.

- **Engine serial number: (figs. 3, 4)** This is engraved on the right-hand side of the engine, below the exhaust manifold and is also given on a label on the rocker arm cover.

- **Identification plates of the principal components:** The identification plates corresponding to all those components not directly constructed by AUSA (for example: engines, pumps, etc.) are located on the components themselves, in the positions in which the respective manufacturers originally placed them. For further information see the section **DECALS / LABELS / IDENTIFICATION PLATES**.

https://truckmanualshub.com/

Technical specifications

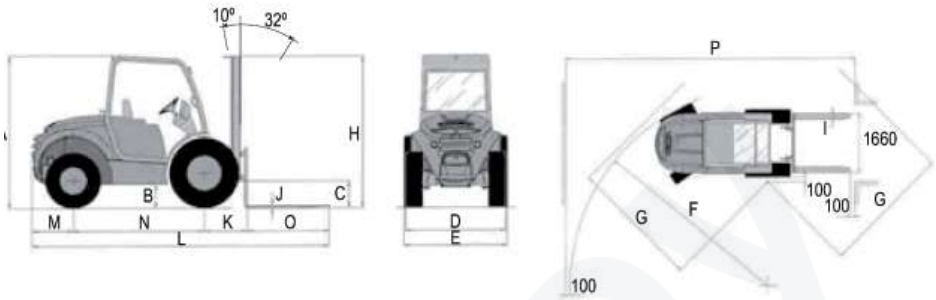

DIMENSIONS	C400H-HI		C400H-HI x4		C500H-HI		C500H-HI x4	
	mm	in	mm	in	mm	in	mm	in
A	2335	7ft 6.6 in	2335	7ft 6.6 in	2335	7ft 6.6 in	2335	7ft 6.6 in
B	280	9.1 in	280	9.1 in	280	9.1 in	280	9.1 in
C	300	9.8 in	300	9.8 in	300	9.8 in	300	9.8 in
D	1640	5ft. 3.8 in	1700	5ft. 5.7 in	1640	5ft. 3.8 in	1700	5ft. 5.7 in
E (Only C400-500H and C400-500H x4)	2000	6ft. 5.6 in	2000	6ft. 5.6 in	2000	6ft. 5.6 in	2000	6ft. 5.6 in
E (Only C400-500HI and C400-500HI x4)	1880	6ft. 2 in	1880	6ft. 2 in	1880	6ft. 2 in	1880	6ft. 2 in
F	3560	11ft 6.7 in	4770	15ft 6.4 in	3560	11ft 6.7 in	4770	15ft 6.4 in
G	3050	10ft	3205	10ft 6.2 in	3050	10ft	3205	10ft 6.2 ft
I	120	3.9 in	120	3.9 in	130	4.2 in	130	4.2 in
J	50	1.6 in	50	1.6 in	60	1.9 in	60	1.9 in
K	718	2ft 3.5 in	718	2ft 3.5 in	728	2ft 3.8 in	728	2ft 3.8 in
L	4568	14ft 9.8 in	4568	14ft 9.8 in	4623	15ft 1.6 in	4623	15ft 1.6 in
M	660	2ft 1.6 in	600	1ft 9.6 in	705	2ft 3.1 in	645	2ft 1.1 in
N	1990	6ft 5.2 in	2050	6ft 7.2 in	1990	6ft 5.2 in	2050	6ft 7.2 in
O	1200	3 ft 9.3 in	1200	3 ft 9.3 in	1200	3 ft 9.3 in	1200	3 ft 9.3 in
P	5680	18ft 6.3 in	6820	22ft 3.7 in	5680	18ft 6.3 in	6820	22ft 3.7 in

Maximum lifting heigh		Free lift		Machine height (H) with mast retracted		Machine height (H) with mast extended	
				ALL MODELS		ALL MODELS	
mm	in	mm	in	mm	in	mm	in
3700	12ft 2in	100	3.2 in	2750	9ft 0.2 in	4585	15ft 0.4 in
4500	14ft 9in	100	3.2 in	3150	10ft 3.3in	5385	17ft 6.6in
4250	13ft 11in	1393	4ft 5.7 in	2350	7ft 7in	5262	17ft 2.6in
5400	17ft 8in	1793	5ft 8.8 in	2750	9ft 0.2 in	6462	21ft 20in
6800	22ft 4in	2243	7ft 3.5 in	3200	10ft 4.9in	7812	25ft 6.2in

Maximum lifting heigh		Free lift		Load at max. height				
				C400H / C400H x4			C500H / C500H x4	
				500 mm. load centre	600 mm. (24 in) load centre		600 mm. (24 in) load centre	
mm	in	mm	in	kg	kg	lbs	kg	lbs
3700	12ft 2in	100	12ft 1.3in	4000	3695	8146	5000	11023
4500	14ft 9in	100	14ft 7.6in	4000	3510	7738	4800	10582
4250	13ft 11in	1393	13ft 9.4in	4000	3695	8146	5000	11023
5400	17ft 8in	1793	17ft 8.8in	1200	1115	2458	1500	3307
6800	22ft 4in	2243	22ft 3in	450	415	915	600	1323

Maximum lifting heigh		Free lift		Load at max. height				
				C400HI / C400HI x4			C500HI / C500HI x4	
				500 mm. load centre	600 mm. (24 in) load centre		600 mm. (24 in) load centre	
mm	in	mm	in	kg	kg	lbs	kg	lbs
3700	12ft 2in	100	12ft 1.3in	4000	3695	8146	5000	11023
4500	14ft 9in	100	14ft 7.6in	4000	3695	8146	4900	11023
4250	13ft 11in	1393	13ft 9.4in	4000	3695	8146	5000	11023
5400	17ft 8in	1793	17ft 8.8in	3400	3140	6920	4250	9370
6800	22ft 4in	2243	22ft 3in	2400	2220	4895	3000	6610

https://truckmanualshub.com/

Technical specifications

■ **Diesel engine**

KUBOTA V3600T – E3B. 85.6 HP / 63 kW at 2600 rpm according to SAE 1995 J Norm. Four cylinder, four stroke, water cooled. Mixed water / oil cooler. Electrical starter.

■ **Transmission**

Hydrostatic system, with variable flow pump and inching function. Hydrostatic motor with variable flow.
Maximum operating pressure: 6092 psi. (420 bar).
FullGrip® 4WD on-demand system with immediate engagement and disengagement device

■ **Directional control**

The selection of movement mode (forwards/ backwards) is made using a switch on the lower part of the joystick. A lamp in the shape of an arrow lights up on the top of it when a movement mode is selected.

■ **Steering**

Hydraulic powered. Drive is in the rear axle, through a double acting hydraulic cylinder.
Operating pressure:
C400H-HI / C500H-HI: 2175 psi (150 bar)
C400H-HI x4 / C500H-HI x4: 2465 psi (170 bar)

■ **External turning circle**

C400H-HI / C500H-HI: 11 ft 6.7 in (3560 mm)
C400H-HI x4 / C500H-HI x4: 15 ft 6.5 in (4770 mm)

■ **Brakes**

Multi-disc sealed brakes oil inmmersed in the front axle.

Service brakes: Hydraulic actuated.
Parking brake: Negative brake system, spring applied, hydraulically released.

https://truckmanualshub.com/

Technical specifications

■ Wheels

Dimensions

Dimensions		
	Front wheels	Rear wheels
C400H	18R – 19’5TL (16 PR)	8’15 - 15 (14 PR)
C400H x4	18R – 19’5TL (16 PR)	10.0 / 75 – 15’3 (14 PR)
C500H	18R – 19’5TL (16 PR)	8’15 - 15 (14 PR)
C500H x4	18R – 19’5TL (16 PR)	10.0 / 75 – 15’3 (14 PR)
C400HI	315/80R22’5TL	8’15 - 15 (14 PR)
C400HI x4	315/80R22’5TL	8’15 - 15 (14 PR)
C500HI	315/80R22’5TL	8’15 - 15 (14 PR)
C500HI x4	315/80R22’5TL	8’15 - 15 (14 PR)

Pressures

Pressures		
	Front wheels	Rear wheel
C400H	87 psi (6 bar)	123 psi (8.5 bar)
C400H x4	87 psi (6 bar)	87 psi (6 bar)
C500H	87 psi (6 bar)	123 psi (8.5 bar)
C500H x4	87 psi (6 bar)	87 psi (6 bar)
C400HI	123 psi (8.5 bar)	123 psi (8.5 bar)
C400HI x4	123 psi (8.5 bar)	123 psi (8.5 bar))
C500HI	123 psi (8.5 bar)	123 psi (8.5 bar)
C500HI x4	123 psi (8.5 bar)	123 psi (8.5 bar)

■ Operating temperature

From 5º F to 104 ºF (from -15ºC to 40ºC)

■ Vibration and sound levels

Sound on the operator’s site:

Warranteed sound power (according to 2000/14/CE):
LwA = 102 dB (A)

A weighted sound pressure in the operator’s ear measured following norms EN 12053 and ISO 4871):
LpA = 84 dB (A)
Measurement uncertainty: 2,5 dB (A)

Vibration level produced by the machine:

Root-mean-square frequency-weighted, hand-arm vibration acceleration value:
< 2,5 m/s2

Root-mean-square frequency-weighted, whole body vibration acceleration value:
< 0,5 m/s2

https://truckmanualshub.com/

Technical specifications

■ Hydraulic circuit

Activated by double gear pump; one gear for the drive circuit and one for the hydraulic steering, connected to the hydrostatic pump of the transmission.

Pump flows:
11.8 - 4.6 US gal/min (45 - 16 l/min) at 1500 rpm.

Operating pressure
C400H-HI / C400H-HI x4: 3191 psi (220 + 5 bar)
C500H-HI / C500H-HI x4: 3336 psi (230 + 5 bar)

Monoblock control valve with two spools and selectable solenoid for side-shift.
Restrictor valve to control the speed of the mast lowering with load.
Oil tank capacity: 25’1 US Gal (95 l.)

■ Electrical equipment

Starter motor 3.0 kW, pre-heating glow plugs, 12V / 720W alternator and regulator, 12 V / 92Ah / 760A battery, rotating beacon, horn, back-up alarm, audible warning for: engine oil pressure, hydraulic oil level, battery charge and coolant temperature.

■ Weights

Unladen weight (with full tanks):
C400H-HI: 14770 lbs (6700 kg)
C400H-HI x4: 14991 lbs (6800 kg)
C500H-HI: 16534 lbs (7500 kg)
C500H-HI x4: 16755 lbs (7600 kg)

Fully laden weight:
C400H-HI: 23589 lbs (10700 kg)
C400H-HI x4: 23810 lbs (10800 kg)
C500H-HI: 27558 lbs (12500 kg)
C500H-HI x4: 27779 lbs (12600 kg)

■ Load capacity

C400H-HI / C400H-HI x4: 8818 lbs (4000 kg)
With load center of gravity at 20 in (500 mm) and 8150 lbs (3695 kg) with load center of gravity at 24 in (600 mm) (see load chart in this section)
C500H-HI / C500H-HI x4: 13396 lbs (5000 kg)
With load centre of gravity at 24 in (600 mm) (see load chart in this section)

■ Standard mast

Side-shift.
Lifting height: 12ft 14in (3,7 m)
Length of forks: 48 in (1200 mm)
Tilting forward (working position): 10º
Tilting forward (transport position) 32º

https://truckmanualshub.com/

Technical specifications

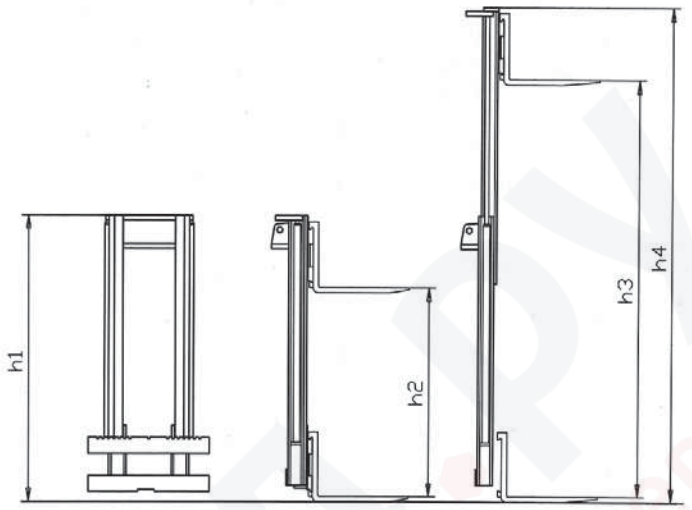

C400-500H-HI (in.)					
MÁSTIL	**Lift height (in)**	**h1 (in)**	**h2 (in)**	**h3 (in)**	**h4 (in)**
DUPLEX	12ft 14in	9ft	3,93in	11ft 97in	15ft
DUPLEX (✱)	14ft 76in	10ft 33in	3,93in	14ft 59in	17ft 66in
TRIPLEX (✱)	13ft 94in	7ft 7in	4ft 57in	13ft 78in	17ft 26in
TRIPLEX (✱)	17ft 88in	9ft	5ft 88 in	17ft 71in	21ft 02in
TRIPLEX (✱)	22ft 30in	10ft 49in	7ft 35in	22ft 14in	25ft 62in

(✱) OPTIONAL

C400-500H-HI (in.)					
MÁSTIL	**Lift height (mm)**	**h1 (mm)**	**h2 (mm)**	**h3 (mm)**	**h4 (mm)**
DUPLEX	3700	2750	100	3650	4585
DUPLEX (✱)	4500	3150	100	4450	5385
TRIPLEX (✱)	4250	2350	1393	4200	5262
TRIPLEX (✱)	5450	2750	1793	5400	6462
TRIPLEX (✱)	6800	3200	2243	6750	7812

(✱) OPTIONAL

https://truckmanualshub.com/

Technical specifications

WARNING

This forklift is not designed to travel with elevated load or with the mast tilted forward.
Do not tilt forward the mast with the forks elevated except to pick up or deposit the load.
The fully forward tilting mast angle is only intended to transport the forklift on a truck bed, always without load.
For operating with load do not exceed 10º for the forward tilting mast angle.

■ **Carriage way and forks**
FEM III class (C400H-HI / C400H-HI x4)
FEM IV class (C500H-HI / C500H-HI x4)

■ **Lifting speed**
Unladen: 21.65 in/sec (0.55 m/s)
Laden: 20.47 in/sec (0.52 m/s)

■ **Lowering speed**
Unladen: 22.44 in/sec (0.37 m/s)
Laden: 18.34 in/sec (0.466 m/s)

■ **Control panel and controls**
The controls, switches and warning lights are incorporated into the steering column and below the joystick.

■ **Lighting (✶)**
Operating lights, park lights, indicators and hazard warning light equipment.

■ **Overhead guard**
Constructed in accordance with ISO 3449 / ISO 3471 and ASME B56.6 standards.

WARNING

The operator is protected by an overhead guard which complies with the ISO 3449 / ISO 3471 and ASME B56.6 standards. It provides protection against falling objects and together with the mast, provides protection should the forklift overturn. The seat belt is an important part of the safety system and should always be fastened before starting to operate the forklift. In the event of the forklift overturning, if the seat belt is not fastened the operator may suffer serious injury or even loss of life as a result of crushing from the forklift or even the overhead guard itself.

https://truckmanualshub.com/

Technical specifications

ROUGH TERRAIN USE (C400/500H)

This forklift truck is designed for transporting and lifting loads on grounds not in good condition, roughly flat, not too steep slopes and small obstacles, so that the stability conditions are not optimal.

Load charts for C 400H / C 400H x4 (500 mm. load centre)

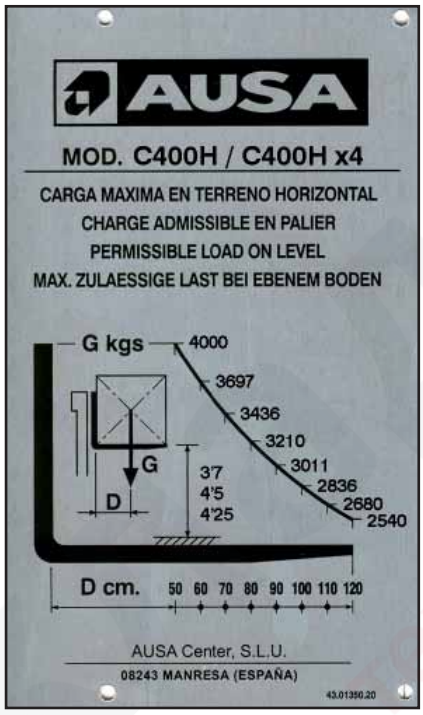

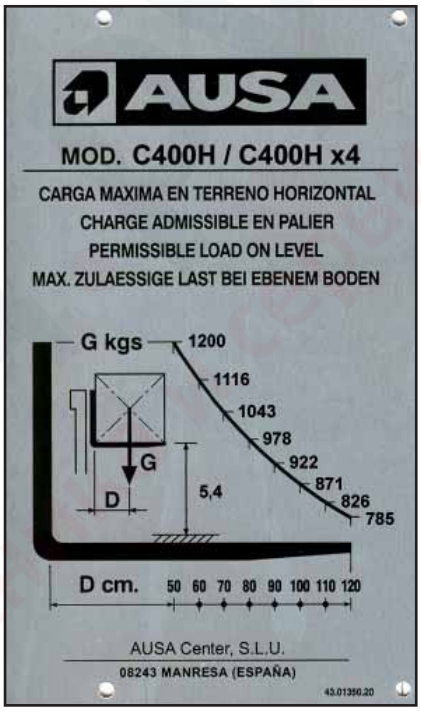

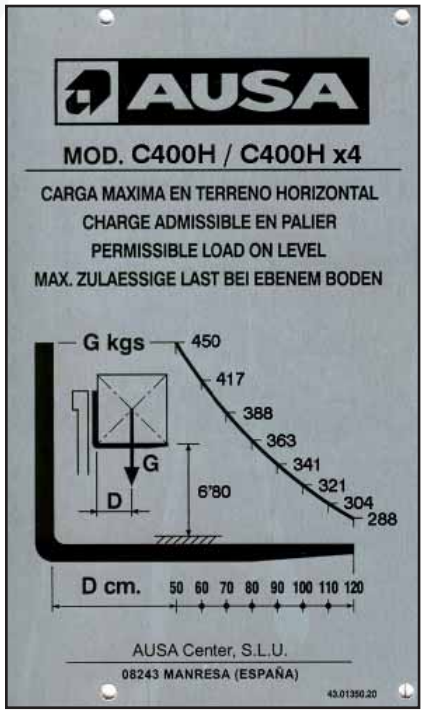

https://truckmanualshub.com/

Technical specifications

Load charts for C 400H / C 400H x4 (600 mm load centre)

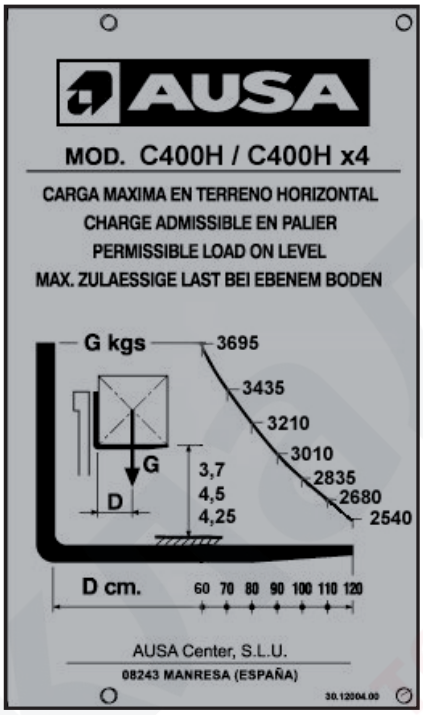

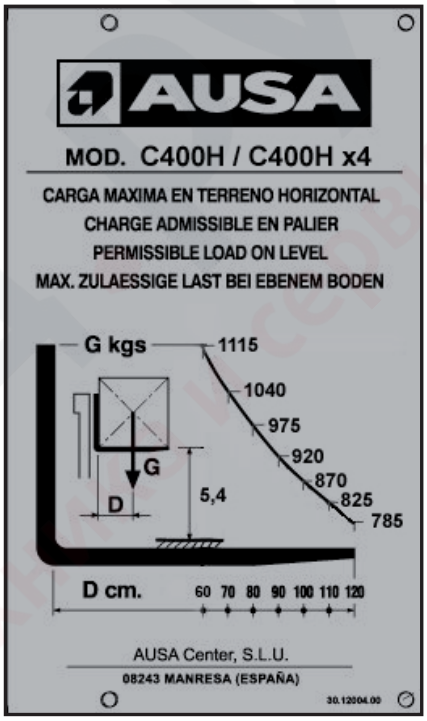

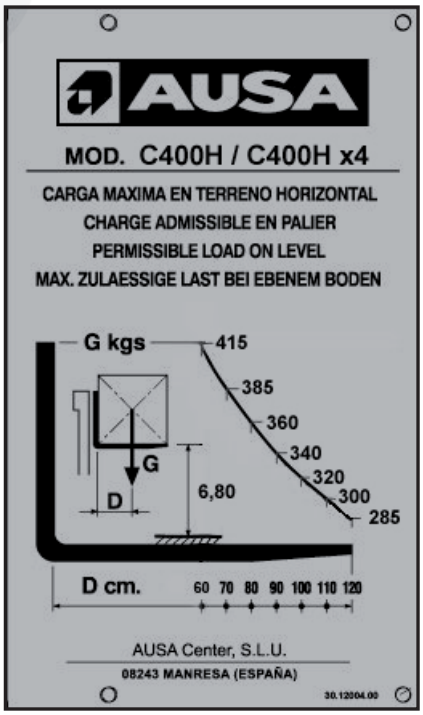

https://truckmanualshub.com/

Technical specifications

Load charts for C 400H / C 400H x4 (24 in load centre)

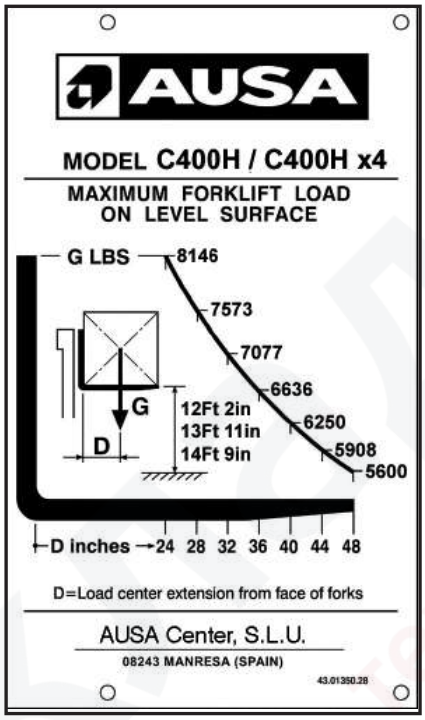

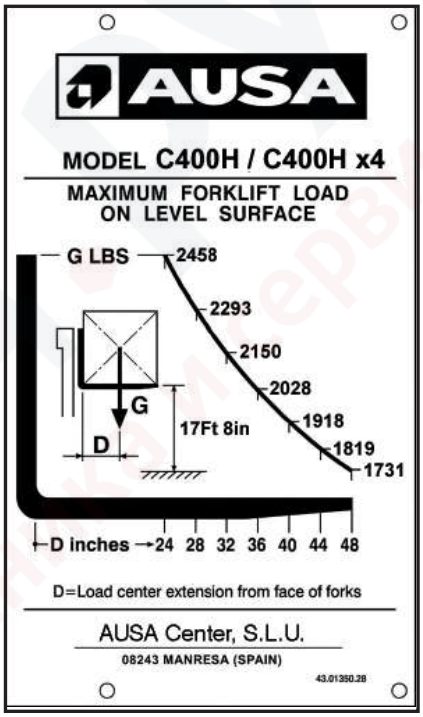

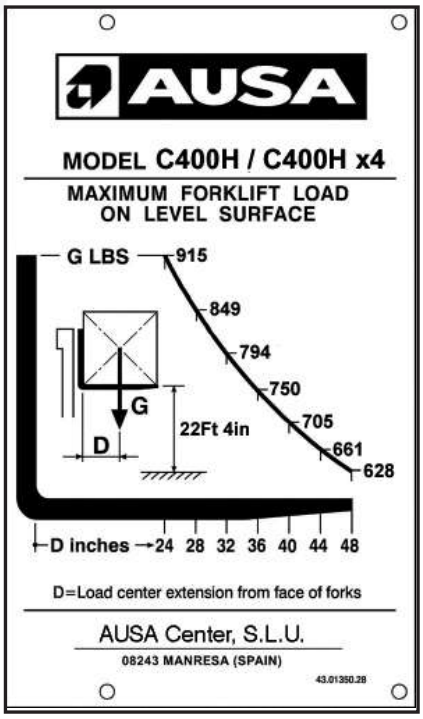

https://truckmanualshub.com/

Technical specifications

Load charts for C 500H / C 500H x4 (600 mm. load centre)

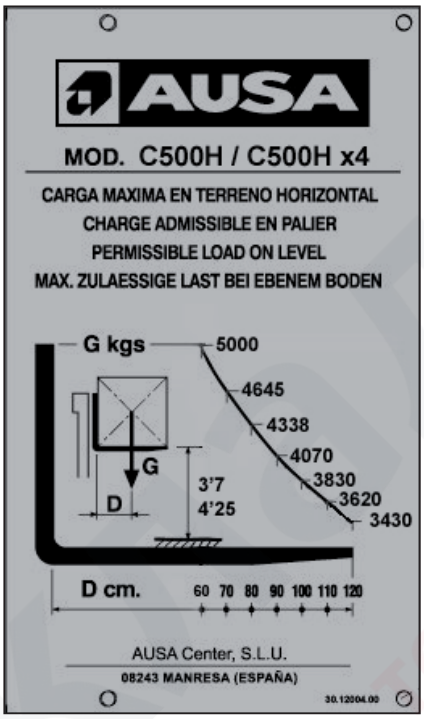

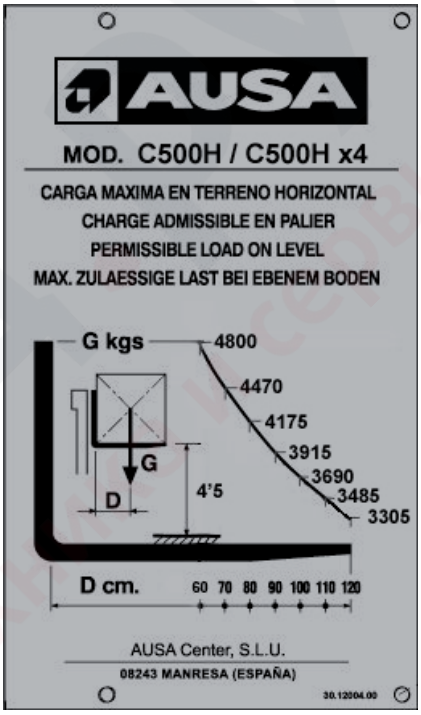

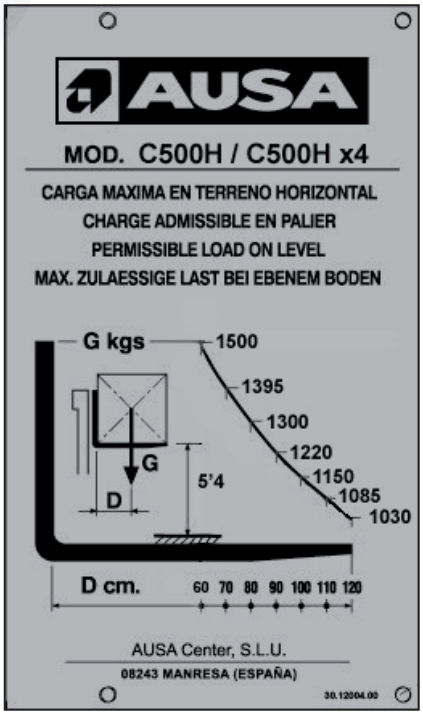

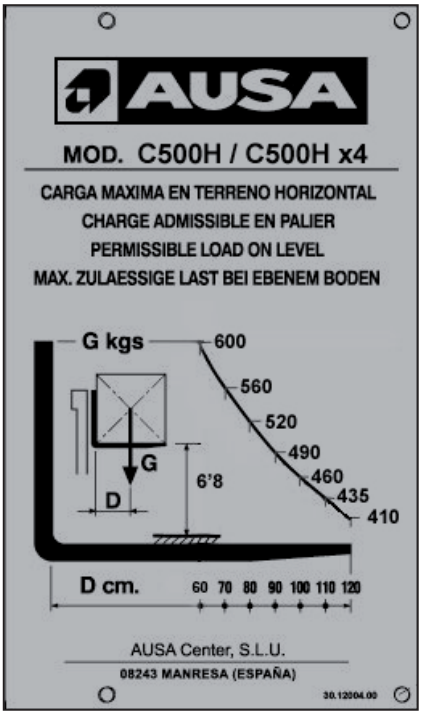

https://truckmanualshub.com/

Technical specifications

Load charts for C 500H / C 500H x4 (24 in load centre)

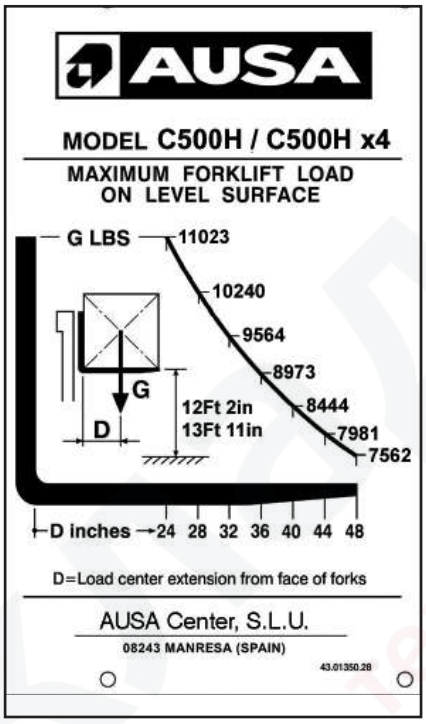

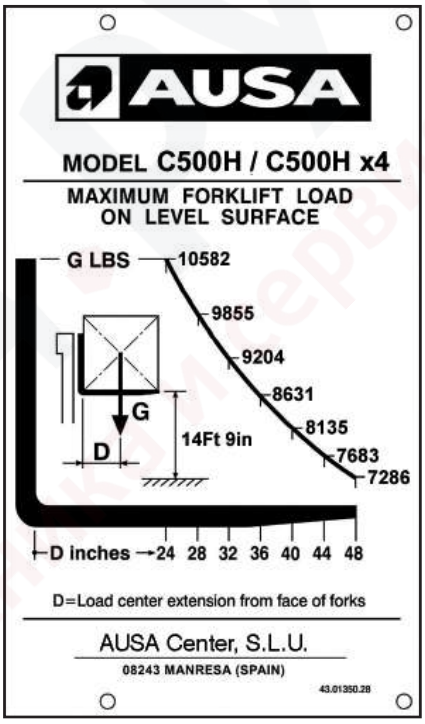

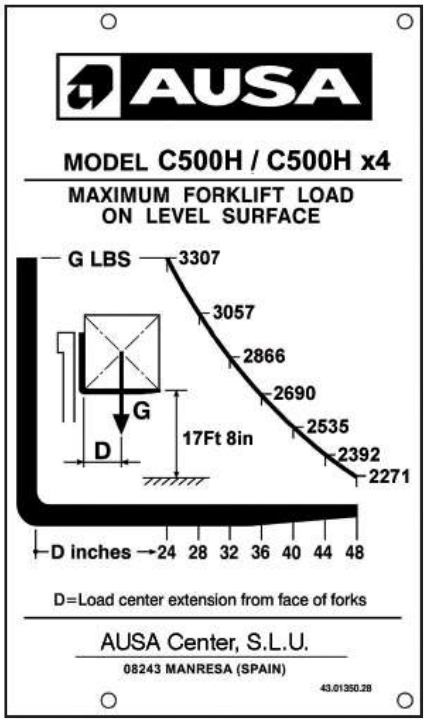

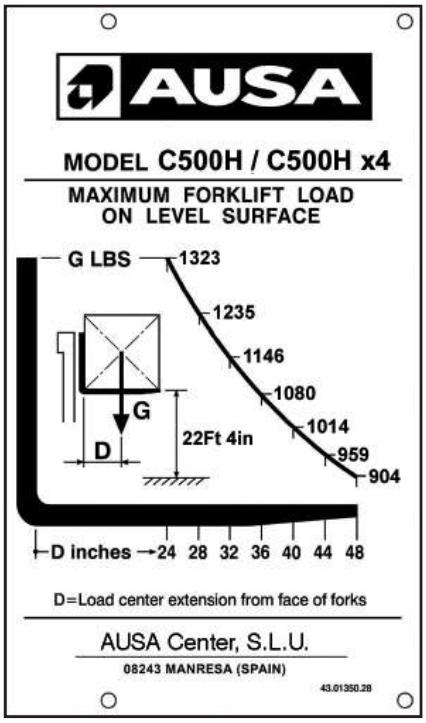

https://truckmanualshub.com/

Technical specifications

INDUSTRIAL USE (C400/500HI)

This forklift truck is designed for transporting and lifting loads on good condition floors, that means flat, levelled and paved ground, so that there are optimal stability conditions.

Load charts for C 400HI / C 400HI x4 (500 mm. load centre)

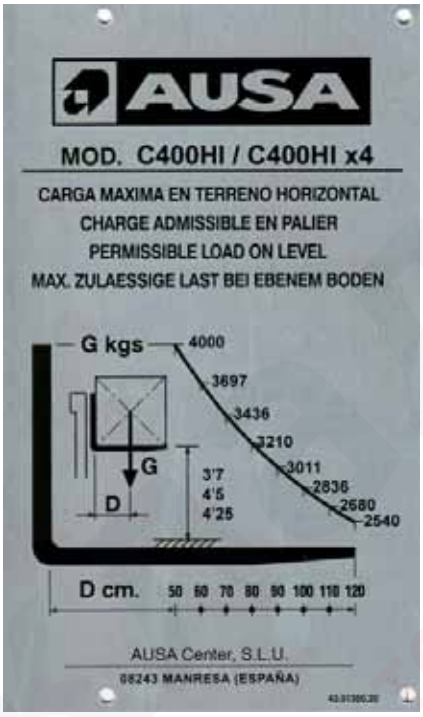

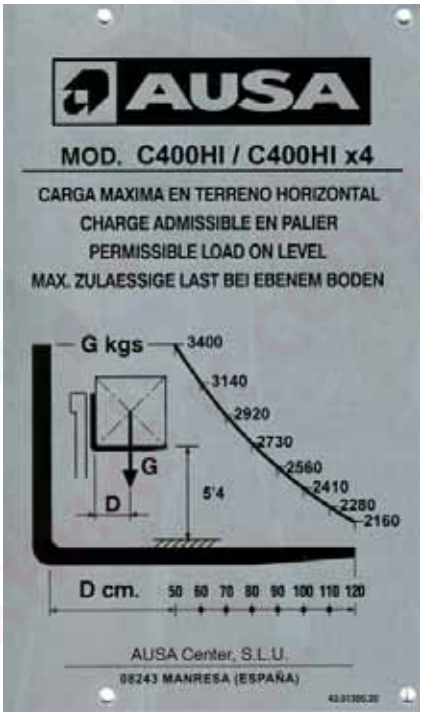

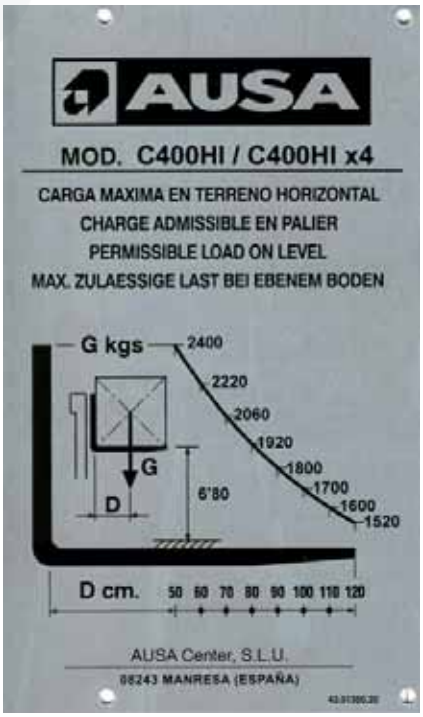

https://truckmanualshub.com/

Technical specifications

Load charts for C 400HI / C 400HI x4 (600 mm. load centre)

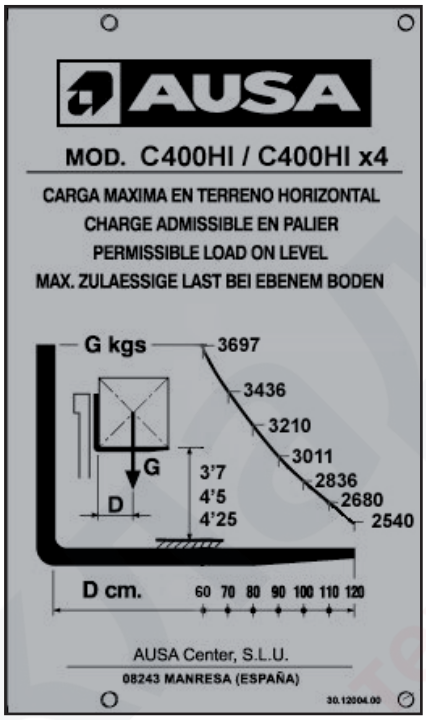

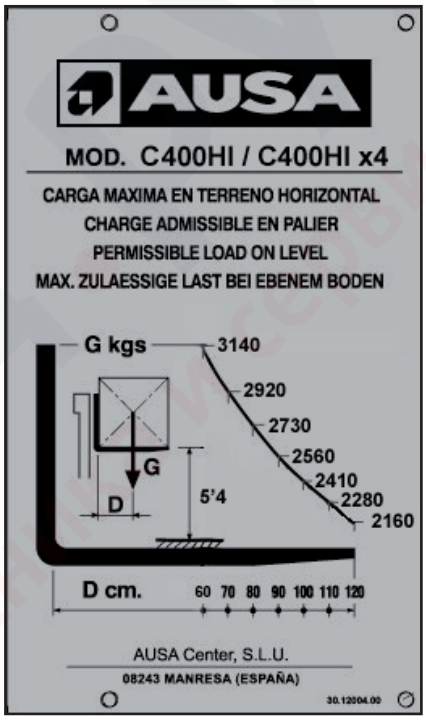

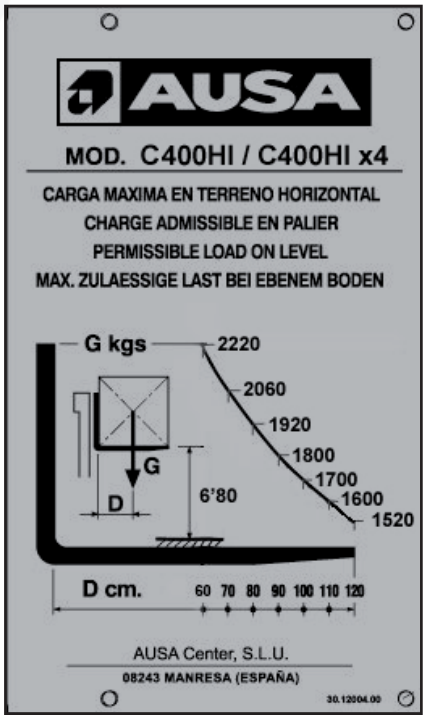

https://truckmanualshub.com/

Technical specifications

Load charts for C 400HI / C 400HI x4 (24 in load centre)

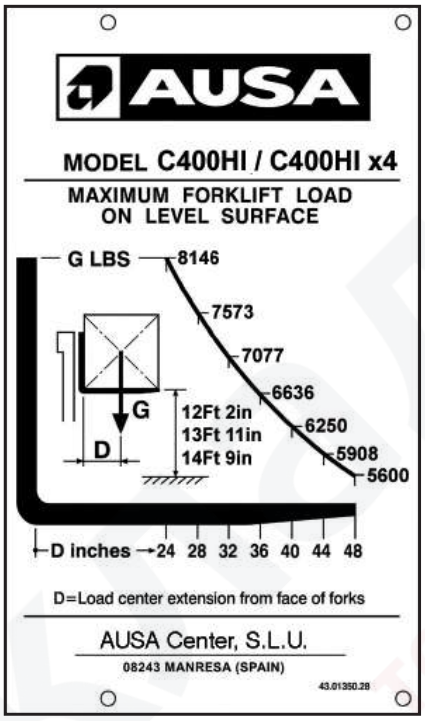

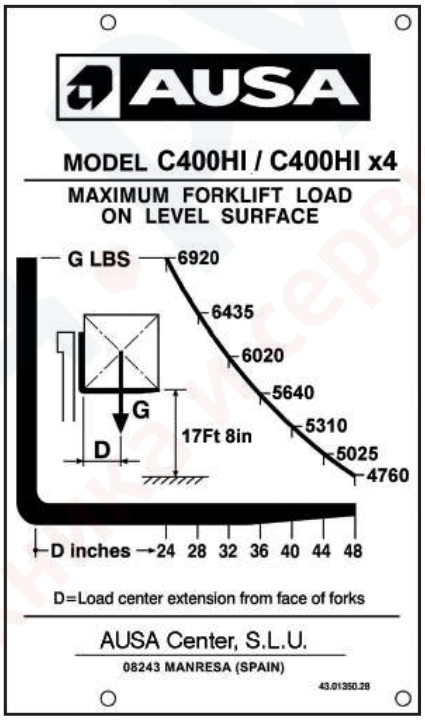

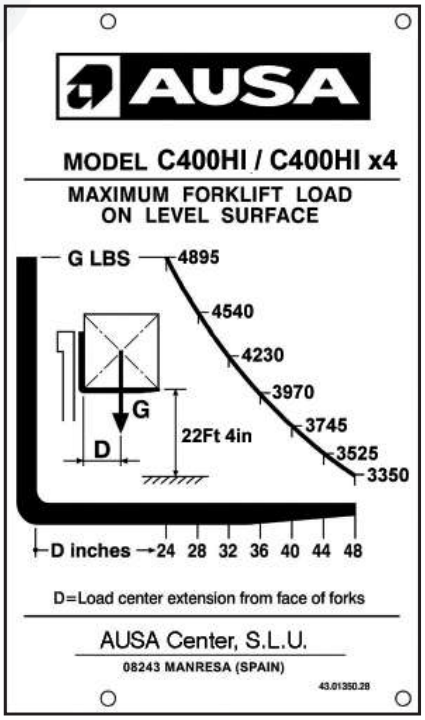

https://truckmanualshub.com/

Technical specifications

Load charts for C 500HI / C 500HI x4 (600 mm. load centre)

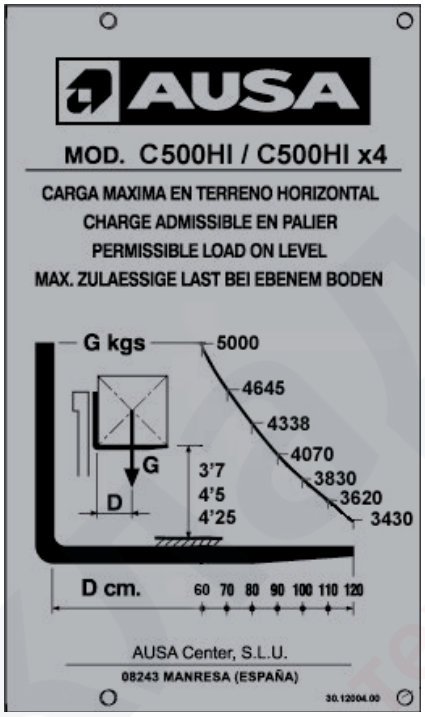

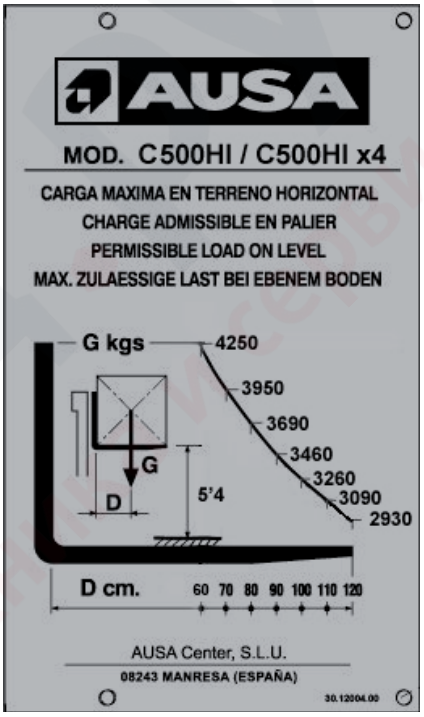

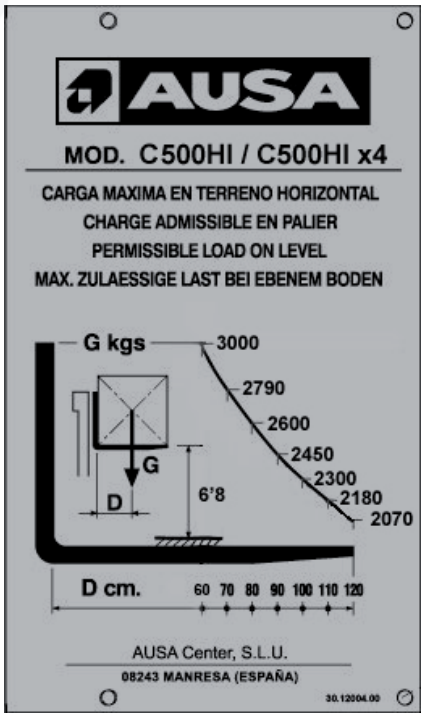

https://truckmanualshub.com/

Technical specifications

Load charts for C 500HI / C 500HI x4 (24 in load centre)

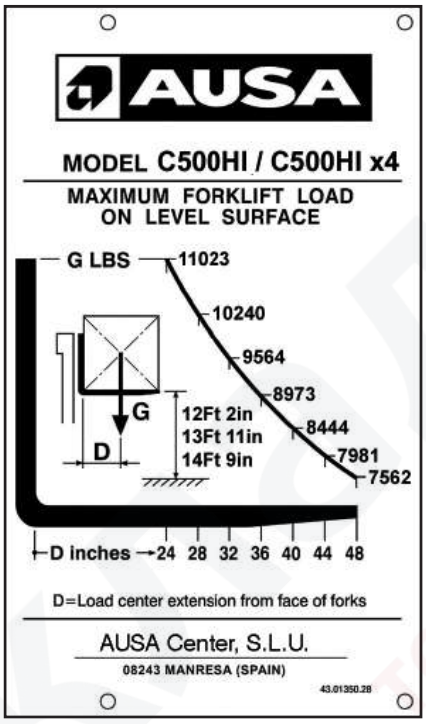

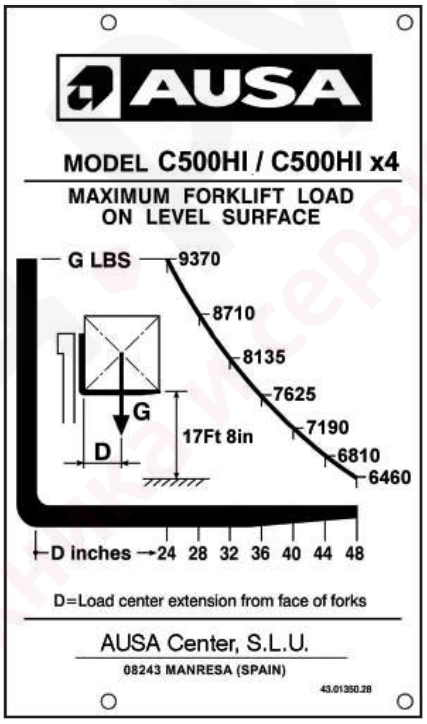

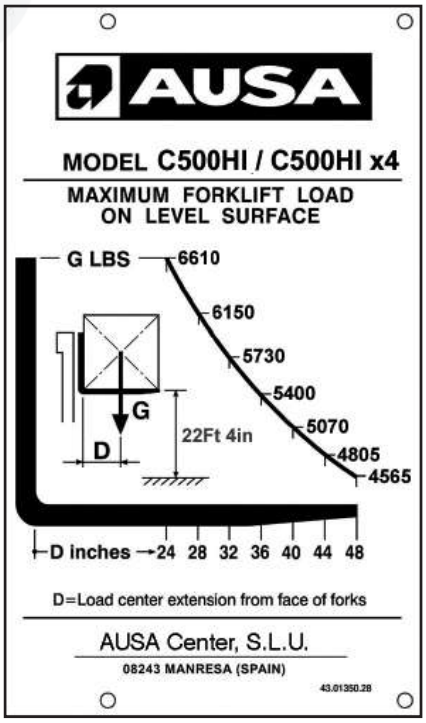

https://truckmanualshub.com/

Technical specifications

■ Optional equipment

Optional equipment is marked with an asterisk (✱). Optional equipment is only supplied at the express wish of the customer, for certain versions of forklift or even only in certain countries.

- 4th valve for accessories.
- Duplex masts:
  - 14 ft 9 in (4500 mm) lift height.
- Triplex masts:
  - 13ft 11 in (4250 mm) lift height with 4ft 57 in (1393 mm) free lift.
  - 17ft 8 in (5400 mm) lift height with 5ft 8.8 in (1793 mm) free lift.
  - 22ft 4 in (6800 mm) lift height with 7ft 35 in (2243 mm) free lift.
- Catalytic converter.
- Exhaust spark arrestor.
- Semi-closed or full cabin with heater.
- 28.3 cu.ft, (800 l), 35.5 cu.ft (1000 l) and 53 cu.ft (1500 l) hydraulic buckets.
- Lighting system (front and rear).
- Radio.
- Load guard.

Where the forklift comes equipped with accessories mounted at factory, please read the relevant Instruction Manual for each accessory carefully before use. Each accessory has its own Instruction Manual issued by the manufacturer, and this is provided with the forklift Operator’s and Safety Manual.

Where accessories and equipment are fitted to the basic chassis or fork carriage plate at a later date by companies other than the manufacturer, the specifications and limitations of the forklift with respect to weight and dimensions, the adjustment and effectiveness of the lighting system, the protective system requirements, or any additional systems required to guarantee vehicle safety should be taken into consideration.

https://truckmanualshub.com/

Decals / labels / identification plates all markets (except USA)

STICKER: JOYSTICK FUNCTION		
REFERENCE: 10.15003.01	**DESCRIPTION:** INDICATIVE STICKER 60X75	**QUANTITY:** 1

POSITION:

Stuck on the inside of the right front fender, in the top center position. Just above sticker ref. 10.15005.01, at 0.1969 in.

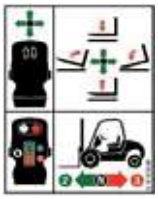

STICKER: JOYSTICK FUNCTION BUTTONS		
REFERENCE: 10.15005.01	**DESCRIPTION:** INDICATIVE STICKER MAST SIDE SHIFT	**QUANTITY:** 1

POSITION:

Stuck on the inside of the right front fender, in the top center position. Just above sticker ref. 10.15003.01, at 0.1969 in.

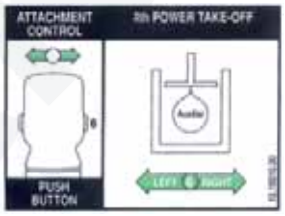

STICKER: DANGEROUS AREA		
REFERENCE: 45.01352.00	**DESCRIPTION:** INDICATIVE STICKER	**QUANTITY:** 2

POSITION:

On both sides of the mast, above the beam, with its upper side aligned at 4ft 92 in from the ground, below the sticker ref. 13.12136.00 “AUSA Make”, and 0.3937 in away from it.

https://truckmanualshub.com/

STICKER: TO HOIST MACHINE		
REFERENCE: 58.01353.01	**DESCRIPTION:** INDICATIVE STICKER 105X100	**QUANTITY:** 2

POSITION:

On both sides of the machine, at the lower exterior part of the front fenders, aligned on its upper side with sticker 45.19101.00 “EC mark”.

STICKER: AUSA		
REFERENCE: 13.12136.00	**DESCRIPTION:** AUSA STICKER	**QUANTITY:** 2

POSITION:

On both sides of the machine, at a distance of 0.984 in and a height of 1.969 in from the lower rear corner of each tank, aligned with the bottom of the tank.

AUSA

STICKER: TURBOCHARGER		
REFERENCE: 20.12012.00	**DESCRIPTION:** INDICATIVE TURBOCHARGER STICKER	**QUANTITY:** 2

POSITION:

On both sides of the machine, above the AUSA sticker (ref. 13.12136.00) at a distance of 0.1969 in height and aligned on the left side.

Turbo Diesel

https://truckmanualshub.com/

STICKER: FRONT AXLE WHEELS INFLATED PRESSURE (C400/500H-C400-500H x4)		
REFERENCE: 32.12102.00	**DESCRIPTION:** INDICATIVE STICKER 6 BAR / 87 PSI	**QUANTITY:** 2

POSITION:

On both sides of the machine, above the fenders of the front wheels, at the front outer end of the fenders, aligned with the outer edge.

STICKER: REAR AXLE WHEELS INFLATED PRESSURE (C400/500H)		
REFERENCE: 01.12108.00	**DESCRIPTION:** INDICATIVE STICKER 8.5 BAR / 123 PSI	**QUANTITY:** 2

POSITION:

On both sides of the machine, on top of the vertical face, in the upper rear position of each tank, aligned with the bottom of the tank.

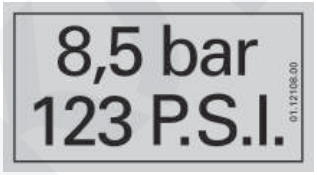

STICKER: REAR AXLE WHEELS INFLATED PRESSURE (C400Hx4/C500Hx4)		
REFERENCE: 32.12102.00	**DESCRIPTION:** INDICATIVE STICKER 6 BAR / 87 PSI	**QUANTITY:** 2

POSITION:

On both sides of the machine, on top of the vertical face, in the upper rear position of each tank, aligned with the bottom of the tank.

https://truckmanualshub.com/

STICKER: FRONT AXLE WHEELS INFLATED PRESSURE (C400/500HI-C400-500HI x4)		
REFERENCE: 01.12108.00	**DESCRIPTION:** INDICATIVE STICKER 8.5 BAR / 123 PSI	**QUANTITY:** 2

POSITION:

On both sides of the machine, above the fenders of the front wheels, at the front outer end of the fenders, aligned with the outer edge.

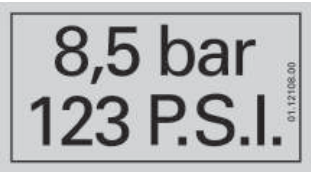

STICKER: REAR AXLE WHEELS INFLATED PRESSURE (C400HI/500HI-C400-500HI x4)		
REFERENCE: 01.12108.00	**DESCRIPTION:** INDICATIVE STICKER 8.5 BAR / 123 PSI	**QUANTITY:** 2

POSITION:

On both sides of the machine, on top of the vertical face, in the upper rear position of each tank, aligned with the bottom of the tank.

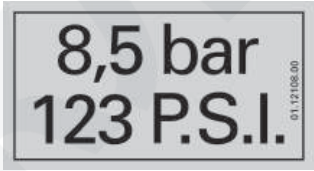

STICKER: FUEL TYPE INDICATION		
REFERENCE: 43.01356.00	**DESCRIPTION:** INDICATIVE STICKER 90x45 FUEL	**QUANTITY:** 1

POSITION:

On the right tank of the machine, next to the fuel cap, aligned with the vertical outer wall of the tank.

https://truckmanualshub.com/

STICKER:
EC INDICATION

REFERENCE:	DESCRIPTION:	QUANTITY:
45.19101.00	INDICATIVE STICKER 70x70	2

POSITION:

On both sides of the machine, at the bottom inner side of the front fenders, aligned on its upper side with mark id 58.01353.01 “To hoist machine”.

STICKER:
HYDRAULIC OIL TYPE

REFERENCE:	DESCRIPTION:	QUANTITY:
43.01352.20	INDICATIVE STICKER 70x32 HYDRAULIC OIL	1

POSITION:

On the left-hand side tank, below the filler cap, aligned with the inner edge of the tank, and centered with the cap.

STICKER:
ENGINE OIL TYPE

REFERENCE:	DESCRIPTION:	QUANTITY:
43.01170.02	INDICATIVE STICKER 90x45	1

POSITION:

On top of part ref. 57.08011.00 “fixed part of the cab lock” on the right-hand side (in forward direction of machine), easily legible with the cab raised.

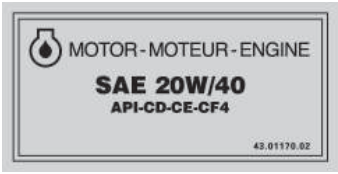

https://truckmanualshub.com/

STICKER: MACHINE MODEL INDICATION (C400H – C400H x4)		
REFERENCE: 30.12001.00	**DESCRIPTION:** INDICATIVE STICKER 68x267 MODEL C400H	**QUANTITY:** 2

POSITION:

On both sides of the machine, at a distance of 0.984 in and a height of 5.906 in from the lower rear corner of each tank, aligned with the bottom of the tank.

STICKER: MACHINE MODEL INDICATION (C500H – C500H x4)		
REFERENCE: 30.12002.00	**DESCRIPTION:** INDICATIVE STICKER 68x267 MODEL C500H	**QUANTITY:** 2

POSITION:

On both sides of the machine, at a distance of 1.969 in and a height of 5.906 in from the lower rear corner of each tank, aligned with the bottom of the tank.

STICKER: MACHINE MODEL INDICATION (C400 HI – C400HI x4)		
REFERENCE: 30.12001.01	**DESCRIPTION:** INDICATIVE STICKER 68x267 MODEL C400HI	**QUANTITY:** 2

POSITION:

On both sides of the machine, at a distance of 1.969 in and a height of 5.906 in from the lower rear corner of each tank, aligned with the bottom of the tank.

https://truckmanualshub.com/

STICKER:
MACHINE MODEL INDICATION (C500 HI – C500HI x4)

REFERENCE:	DESCRIPTION:	QUANTITY:
30.12002.01	INDICATIVE STICKER 68x267 MODEL C500HI	2

POSITION:

On both sides of the machine, at a distance of 1.969 in and a height of 5.906 in from the lower rear corner of each tank, aligned with the bottom of the tank.

STICKER:
CHARACTERISTICS PLATE

REFERENCE:	DESCRIPTION:	QUANTITY:
01.00779.26	PLATE CHARACTERISTICS 100x130	1

POSITION:

Riveted on top of the engine bulkhead, on its rear upper left-hand side (in forward direction of machine), in the holes prepared. Etched according to assembly instruction.

STICKER:
AUSA ANAGRAM

REFERENCE:	DESCRIPTION:	QUANTITY:
46.08099.00	AUSA ANAGRAM	1

POSITION:

Embedded in the cab front panel, on its outer side, in the upper left-hand part (in forward direction of machine).

https://truckmanualshub.com/

STICKER: WARNING IN CASE OF OVERTURNING THE MACHINE		
REFERENCE: 12.12010.00	**DESCRIPTION:** SAFETY STICKER	**QUANTITY:** 1

POSITION:

Top left-hand corner of the dashboard, under sticker ref. 02.00774.00 “Do not use” and aligned with this on its left side.

STICKER: ACOUSTIC OPERATOR PROTECTION		
REFERENCE: 01.00757.00	**DESCRIPTION:** INDICATIVE STICKER D40	**QUANTITY:** 1

POSITION:

Top left-hand corner of the instrument panel, under sticker 02.00774.00 “Do not use”, aligned with this on its right side and centered with sticker ref. 12.12010.00.

STICKER: POINT HOISTED MACHINE		
REFERENCE: 09.15720.00	**DESCRIPTION:** INDICATIVE STICKER 35x35	**QUANTITY:** 4

POSITION:

Above each of the four eyebolts at the bottom of the frame for lifting the machine.

https://truckmanualshub.com/

STICKER: MAXIMUM SOUND LEVEL		
REFERENCE: 09.12014.00	**DESCRIPTION:** STICKER NOISE 104 DB	**QUANTITY:** 1

POSITION:

On the inside of the right front wheel arch, aligned with the cab floor.

STICKER: FUILL GRIP®. (C400-500H x4 / C400-500HI x4)		
REFERENCE: 43.00397.00	**DESCRIPTION:** INDICATIVE STICKER 110x110	**QUANTITY:** 2

POSITION:

On both sides of the machine, next to the AUSA sticker (ref. 13.12136.00) and aligned on the right side.

STICKER: MAST LOWERING MARKER (MACHINES WITH SEMI-CLOSED AND FULL CAB)		
REFERENCE: 57.12010.00	**DESCRIPTION:** INDICATIVE STICKER LOWERING MAST	**QUANTITY:** 1

POSITION:

On the rear window of the cab, centered with the cab opening lever, aligned with the bottom of the window, 0.3937 in away from the rubber surround.

https://truckmanualshub.com/

STICKER:
NON MOVEMENTS WITH LOAD OFFCENTERED (MASTS OF MORE THAN 3,7M / 12ft 2 in)

REFERENCE:	DESCRIPTION:	QUANTITY:
43.02187.02	INDICATIVE STICKER 70x210 ENGLISH	1

* Cab heated

POSITION:

In the upper part of the dashboard, next to the sticker ref. 02.00777.00 “Do not use” aligned with this on its upper side.

* In heated enclosed cab, position at the bottom left-hand side of the window 0.3937 in away from the edge (bottom left side).

STICKER:
AUSA STICKER

REFERENCE:	DESCRIPTION:	QUANTITY:
13.12136.00	AUSA STICKER	2

POSITION:

On both sides of the mast, above the beam, with its lower side aligned at 4ft 95 in from the ground, above the sticker ref. 45.01352.00 “Dangerous area”, and 0.3937 in away from it.

https://truckmanualshub.com/

STICKER:
INDICATION FullGrip SYSTEM® OIL. (C400-500Hx4 / C400-500HI x4)

REFERENCE:	DESCRIPTION:	QUANTITY:
43.00396.02	INDICATIVE STICKER 60x95	1

POSITION:

At the top of the transfer case with the text facing the oil filler cap. Centered with the casting lugs.

STICKER:
NOT USE WITHOUT AUTHORIZATION

REFERENCE:	DESCRIPTION:	QUANTITY:
45.01352.00	INDICATIVE STICKER 50x120 ENGLISH	1

POSITION:

Top left-hand corner of the dashboard, aligned on its left side with sticker nº 12.12010.00 “Safety warning”.

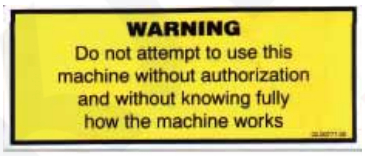

STICKER:
BRAKE FLUID INDICATION

REFERENCE:	DESCRIPTION:	QUANTITY:
43.70780.01	INDICATIVE STICKER 60x100 BRAKE	1

POSITION:

In the engine compartment, on the left side of the brake fluid bottle, aligned with this bottle. Trim the foam rubber covering if necessary.

https://truckmanualshub.com/

STICKER: HOT PARTS INDICATION		
REFERENCE: 02.00765.00	**DESCRIPTION:** INDICATIVE STICKER 40x80 ENGLISH	**QUANTITY:** 1

POSITION:

Inside the counterweight, near the exhaust manifold, easily readable when trying to work on the engine.

STICKER: LOAD CHART PLATE		
REFERENCE: 43.01350.28 / 30.12004.00	**DESCRIPTION:** INDICATIVE PLATE 91x156 LOAD CHARTS	**QUANTITY:** 1

POSITION:

Riveting in 4 holes provided, in the central outer part the left-hand front fender. Etched according to assembly instruction.

* Add another unit at the top in the event of installing a mast higher than 12ft 14 in.

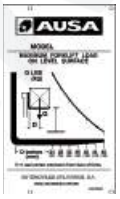

https://truckmanualshub.com/

Decals / labels / identification plates (USA Market)

STICKER:
JOYSTICK FUNCTION BUTTONS. SUBSTITUTE REF. 10.15005.01

REFERENCE:	DESCRIPTION:	QUANTITY:
10.15005.01	INDICATIVE STICKER MAST SIDE-SHIFT (USA)	1

POSITION:

Stuck on the inside of the right front fender, in the top center position. Just above sticker ref. 10.15006.01, at 0.1969 in.

STICKER:
TO HOIST MACHINE

REFERENCE:	DESCRIPTION:	QUANTITY:
58.01353.01	INDICATIVE STICKER 105X100	2

POSITION:

On both sides of the machine, at the lower exterior part of the front fenders, aligned on its upper side with sticker 45.19101.00 “EC mark”.

STICKER:
AUSA (C400/500H-Hx4)

REFERENCE:	DESCRIPTION:	QUANTITY:
13.12136.00	AUSA STICKER	2

POSITION:

On both sides of the machine, at a distance of 0.984 in and a height of 1.969 in from the lower rear corner of each tank, aligned with the bottom of the tank.

https://truckmanualshub.com/

STICKER: TURBOCHARGER		
REFERENCE: 20.12012.00	**DESCRIPTION:** INDICATIVE TURBOCHARGER STICKER	**QUANTITY:** 2

POSITION:

On both sides of the machine, above the AUSA sticker (ref. 13.12136.00) at a distance of 0.1969 in height and aligned on the left side.

Turbo Diesel

STICKER: FRONT AXLE WHEELS INFLATED PRESSURE (C400/500H – C400/500H x4)		
REFERENCE: 32.12102.00	**DESCRIPTION:** INDICATIVE STICKER 6 BAR 87 PSI	**QUANTITY:** 2

POSITION:

On both sides of the machine, above the fenders of the front wheels, at the front outer end of the fenders, aligned with the outer edge.

6 bar
87 P.S.I.
32.12102.00

STICKER: REAR AXLE WHEELS INFLATED PRESSURE (C400/500H)		
REFERENCE: 01.12108.00	**DESCRIPTION:** INDICATIVE STICKER 8.5 BAR / 123 PSI	**QUANTITY:** 2

POSITION:

On both sides of the machine, on top of the vertical face, in the upper rear position of each tank, aligned with the bottom of the tank.

8,5 bar
123 P.S.I.
01.12108.00

https://truckmanualshub.com/

STICKER: REAR AXLE WHEELS INFLATED PRESSURE (C400Hx4/C500Hx4)		
REFERENCE: 32.12102.00	**DESCRIPTION:** INDICATIVE STICKER 6 BAR / 87 PSI	**QUANTITY:** 2

POSITION:

On both sides of the machine, on top of the vertical face, in the upper rear position of each tank, aligned with the bottom of the tank.

STICKER: FRONT AXLE WHEELS INFLATED PRESSURE (C400/500HI-C400-500HI x4)		
REFERENCE: 01.12108.00	**DESCRIPTION:** INDICATIVE STICKER 8.5 BAR / 123 PSI	**QUANTITY:** 2

POSITION:

On both sides of the machine, above the fenders of the front wheels, at the front outer end of the fenders, aligned with the outer edge.

STICKER: REAR AXLE WHEELS INFLATED PRESSURE (C400HI/500HI-C400-500HI x4)		
REFERENCE: 01.12108.00	**DESCRIPTION:** INDICATIVE STICKER 8.5 BAR / 123 PSI	**QUANTITY:** 2

POSITION:

On both sides of the machine, on top of the vertical face, in the upper rear position of each tank, aligned with the bottom of the tank.

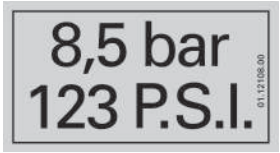

https://truckmanualshub.com/

STICKER: FUEL TYPE INDICATION		
REFERENCE: 43.01356.00	**DESCRIPTION:** INDICATIVE STICKER 90x45 FUEL	**QUANTITY:** 1

POSITION:

On the right tank of the machine, next to the fuel cap, aligned with the vertical outer wall of the tank.

STICKER: EC INDICATION		
REFERENCE: 45.19101.00	**DESCRIPTION:** INDICATIVE STICKER 70x70	**QUANTITY:** 2

POSITION:

On both sides of the machine, at the bottom inner side of the front fenders, aligned on its upper side with mark id 58.01353.01 “To hoist machine”.

STICKER: MACHINE MODEL INDICATION (C400H – C400H x4)		
REFERENCE: 30.12001.00	**DESCRIPTION:** INDICATIVE 68x267 MODEL C400H	**QUANTITY:** 2

POSITION:

On both sides of the machine, at a distance of 0.984 in and a height of 5.906 in from the lower rear corner of each tank, aligned with the bottom of the tank.

https://truckmanualshub.com/

STICKER: MACHINE MODEL INDICATION (C500H – C500H x4)		
REFERENCE: 30.12002.00	**DESCRIPTION:** INDICATIVE 68x267 MODEL C500H	**QUANTITY:** 2

POSITION:

On both sides of the machine, at a distance of 1.969 in and a height of 5.906 in from the lower rear corner of each tank, aligned with the bottom of the tank.

STICKER: MACHINE MODEL INDICATION (C400HI – C400HI x4)		
REFERENCE: 30.12001.01	**DESCRIPTION:** INDICATIVE STICKER 68x267 MODEL C400HI	**QUANTITY:** 2

POSITION:

On both sides of the machine, at a distance of 1.969 in and a height of 5.906 in from the lower rear corner of each tank, aligned with the bottom of the tank.

STICKER: MACHINE MODEL INDICATION (C500HI – C500HI x4)		
REFERENCE: 30.12002.01	**DESCRIPTION:** INDICATIVE STICKER 68x267 MODEL C500HI	**QUANTITY:** 2

POSITION:

On both sides of the machine, at a distance of 1.969 in and a height of 5.906 in from the lower rear corner of each tank, aligned with the bottom of the tank.

https://truckmanualshub.com/

STICKER: AUSA ANAGRAM		
REFERENCE: 46.08099.00	**DESCRIPTION:** AUSA ANAGRAM	**QUANTITY:** 1

POSITION:

Embedded in the cab front panel, on its outer side, in the upper left-hand part (in forward direction of machine).

STICKER: WARNING IN CASE OF OVERTURNING THE MACHINE		
REFERENCE: 12.12010.00	**DESCRIPTION:** SAFETY STICKER	**QUANTITY:** 1

POSITION:

Top left-hand corner of the dashboard, under sticker ref. 02.00774.00 “Do not use” and aligned with this on its left side.

STICKER: OPERATOR ACOUSTIC PROTECTION		
REFERENCE: 01.00757.00	**DESCRIPTION:** INDICATIVE STICKER D40	**QUANTITY:** 1

POSITION:

Top left-hand corner of the instrument panel, under sticker 02.00774.00 “Do not use”, aligned with this on its right side and centered with sticker ref. 12.12010.00.

https://truckmanualshub.com/

STICKER: POINT HOISTED MACHINE		
REFERENCE: 09.15720.00	**DESCRIPTION:** INDICATIVE STICKER 35x35	**QUANTITY:** 4

POSITION:

Above each of the four eyebolts at the bottom of the frame for lifting the machine.

STICKER: MAXIMUM SOUND LEVEL		
REFERENCE: 09.12014.00	**DESCRIPTION:** ADHESIVE NOISE 104 DB	**QUANTITY:** 1

POSITION:

On the inside of the right front wheel arch, aligned with the cab floor.

STICKER: FUILL GRIP®. (C400-500H x4 / C400-500HI x4)		
REFERENCE: 43.00397.00	**DESCRIPTION:** INDICATIVE STICKER 110x110	**QUANTITY:** 2

POSITION:

On both sides of the machine, next to the AUSA sticker (ref. 13.12136.00) and aligned on the right side.

https://truckmanualshub.com/

STICKER:
MAST LOWERING MARKER (MACHINES WITH SEMI-CLOSED AND FULL CAB)

REFERENCE:	DESCRIPTION:	QUANTITY:
57.12010.00	INDICATIVE STICKER LOWERING MAST	1

POSITION:

On the rear window of the cab, centered with the cab opening lever, aligned with the bottom of the window, 0.3937 in away from the rubber surround.

STICKER:
NON MOVEMENTS WITH LOAD OFFCENTERED (MASTS OF MORE THAN 12ft 2 in). SUBSTITUTE REF. 43.02187.02

REFERENCE:	DESCRIPTION:	QUANTITY:
43.02187.02	INDICATIVE STICKER 70x210 ENGLISH	1

* Cab heated

POSITION:

On top of the tablier, next to the adhesive ref. 10.01414.01 “Indication structure,” aligned with it by their side.

* In heated enclosed cab, position at the bottom left-hand side of the window 0.3937 in away from the edge (bottom left side).

https://truckmanualshub.com/

STICKER:
AUSA STICKER

REFERENCE:	DESCRIPTION:	QUANTITY:
13.12136.00	AUSA STICKER	2

POSITION:

On both sides of the mast, above the beam, with its lower side aligned at 4ft 95 in from the ground, above the sticker ref. 45.01352.00 “Dangerous area”, and 0.3937 in away from it.

STICKER:
FullGrip® SYSTEM OIL (C400-500Hx4 / C400-500HIx4)

REFERENCE:	DESCRIPTION:	QUANTITY:
43.00396.02	INDICATIVE STICKER 60x95	1

POSITION:

At the top of the transfer case with the text facing the oil filler cap. Centered with the casting lugs.

STICKER:
BRAKE FLUID INDICATION

REFERENCE:	DESCRIPTION:	QUANTITY:
43.70780.01	INDICATIVE STICKER 60x100 BRAKE	1

POSITION:

In the engine compartment, on the left side of the brake fluid bottle, aligned with this bottle. Trim the foam rubber covering if necessary.

https://truckmanualshub.com/

STICKER: HOT PARTS INDICATION		
REFERENCE: 02.00765.00	**DESCRIPTION:** INDICATIVE STICKER 40x80 ENGLISH	**QUANTITY:** 1

POSITION:

Inside the counterweight, near the exhaust manifold, easily readable when trying to work on the engine.

STICKER: LOAD CHART PLATE		
REFERENCE: 43.01350.28	**DESCRIPTION:** INDICATIVE PLATE 91x156 LOAD CHARTS	**QUANTITY:** 1

POSITION:

Riveting in 4 holes provided, in the central outer part the left-hand front fender. Etched according to assembly instruction.
* Add another unit at the top in the event of installing a mast higher than 12ft 14 in.

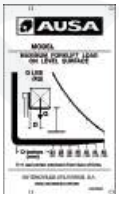

STICKER: REFLECTIVE TRIANGLE WITH PLATE. (MACHINE WITH OPEN CAB) (USA)		
REFERENCE: 10.15120.00	**DESCRIPTION:** INDICATIVE STICKER 350x400	**QUANTITY:** 1

POSITION:

Fixed at the bottom edge of the cab rear opening, centered horizontally, aligned with the lower edge of the cab opening.

https://truckmanualshub.com/

STICKER:
REFLECTIVE TRIANGLE (MACHINES WITH SEMI-CLOSED AND FULL CAB)) (USA)

REFERENCE:	DESCRIPTION:	QUANTITY:
10.15122.00	INDICATIVE STICKER 356x356	1

POSITION:

On the cab rear window, centered horizontally on the glass, aligned with the lower edge 0.3937 in away from it.

STICKER:
JOYSTICK. FUNCTION SUBSTITUTE REF. 10.15003.01

REFERENCE:	DESCRIPTION:	QUANTITY:
10.15006.01	INDICATIVE STICKER, LEVER LOW CONTROL	1

POSITION:

Stuck on the inside of the right-hand front fender, top center position.

STICKER:
CHARACTERISTICS PLATE. SUBSTITUTE REF. 01.00779.26

REFERENCE:	DESCRIPTION:	QUANTITY:
01.00779.23	CHARACTERISTICS PLATE 100x130 SPECIAL	1

POSITION:

Riveted on the engine bulkhead, on its rear side in the holes provided. Etched according to assembly instruction.

https://truckmanualshub.com/

STICKER:
NOT USE WITHOUT BEING AUTHORIZED. SUBSTITUTE REF. 02.00777.00

REFERENCE:	DESCRIPTION:	QUANTITY:
02.00777.04	INDICATIVE STICKER 216x250	1

POSITION:

On top of the vertical face of the engine bulkhead, easily readable before getting into the machine, aligned with the cab floor.

STICKER:
ENGINE OIL TYPE. SUBSTITUTE REF. 43.01170.02

REFERENCE:	DESCRIPTION:	QUANTITY:
43.01170.03	INDICATIVE STICKER 90x45	1

POSITION:

On top of part ref. 57.08011.00 “fixed part of the cab lock” on the right-hand side (in forward direction of machine), easily legible with the cab raised.

STICKER:
HYDRAULIC OIL TYPE (USA). SUBSTITUTE REF. 43.01352.20

REFERENCE:	DESCRIPTION:	QUANTITY:
60.01352.01	INDICATIVE STICKER 40x87 HYDRAULIC OIL	1

POSITION:

On the left-hand side tank, below the filler cap, aligned with the inner edge of the tank, and centered with the cap.

https://truckmanualshub.com/

STICKER:
DANGEROUS AREA. SUBSTITUTE REF. 45.01352.00

REFERENCE:	DESCRIPTION:	QUANTITY:
45.01352.01	INDICATIVE STICKER 68x210	2

POSITION:

On both sides of the mast, above the beam, with its upper side aligned at 4ft 92 in from the ground, below the sticker ref. 13.12136.00 “AUSA Make”, and 0.3937 in away from it.

STICKER:
NOT TO TOUCH INDICATION

REFERENCE:	DESCRIPTION:	QUANTITY:
02.00766.00	INDICATIVE STICKER 40x80 USA	1

POSITION:

On the top of the radiator fan guard.

STICKER:
PROTECTION STRUCTURE INDICATION

REFERENCE:	DESCRIPTION:	QUANTITY:
10.01414.01	INDICATIVE STICKER 60x125 USA	1

POSITION:

In the upper left-hand corner of the dashboard, aligned at the left with the adhesive ref. 10.01414.01 “Warning Security”.

https://truckmanualshub.com/

STICKER: CALIFORNIA INDICATION (USA)		
REFERENCE: 43.01171.00	**DESCRIPTION:** INDICATIVE STICKER 42x77	**QUANTITY:** 1

POSITION:

In the upper right-hand corner of the dashboard, aligned at the top with the bend in the dashboard.

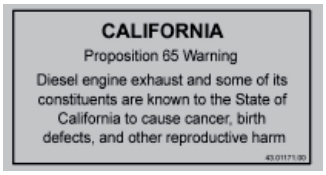

склад.ру
техника и сервис

https://truckmanualshub.com/

Special Safety Messages

WARNING

Do not operate this machine unless you have read and understand the safety and operational instructions contained in this Operator's and Safety Manual and have been instructed and trained in the safe operation of this Forklift. REMEMBER THAT "YOU" ARE THE KEY TO SAFETY.

■ General comments

Operator responsibilities

Before using the forklift that is initially unfamiliar, you should read the Operator's and Safety Manual carefully and resolve any doubts with a supervisor **(fig. 1)**. It is your responsibility to read and understand this Operator's and Safety Manual before operating any rough terrain forklift. This Operator's and Safety Manual takes you step by step through your working day.

In order to help you better understand the text, graphics have been provided in this Operator's and Safety Manual.

It's important that you know and apply all applicable laws and rules including OSHA requirements for operator training and certification.

The forklift must only be used by authorized and correctly trained personnel

AUSA manufactures its forklifts in accordance with ASME B56.6 and the corresponding International Standards.

The Occupational Safety and Health Administration (OSHA) enforces federal laws that apply to safety of operation, application and maintenance of equipment on a worksite. Because it is an employer's responsibility to apply these laws, an OSHA representative may periodically inspect a worksite to see that these laws are being followed. There may also be local or state/provincial laws that apply to this equipment and its use along with specific worksite or employer rules. It is important that you know and apply all applicable laws and rules.

Any danger resulting from improper use, not complying with these provisions or others which are specifically provided with the machinery, shall be the responsibility of the user and not of AUSA.

This section provides instructions on the use of the forklift, in accordance with that established by ASME B56.6, normative 2006/42/EC and OSHA documents..

Description of a forklift truck

A forklift truck is a powered vehicle used for transporting or handling loads with the aid of tools specific to the task to be carried out. The forklift is able to lift loads. It consists of a resistant chassis resting upon two axles. The front axle is the drive axle and the rear axle the steering axle, although versions exist in which both axles are driving axles.

At the front of the forklift there is a mast, along it moves the front carriage. The unit formed by both is designed to lift and tilt the load forwards and backwards, making handling easier .

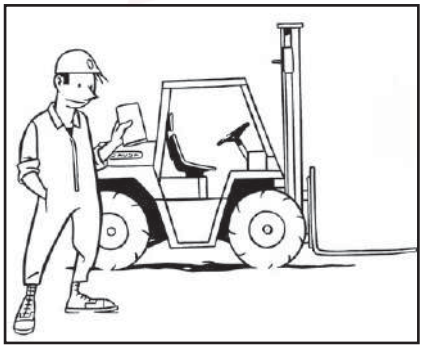

(fig. 1)

https://truckmanualshub.com/

Special Safety Messages

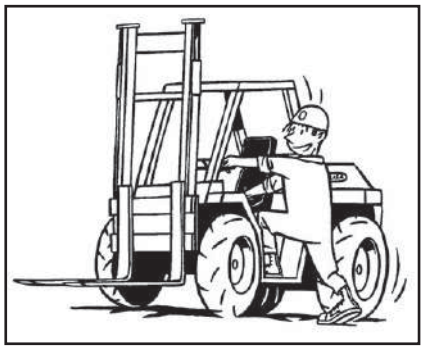
(fig. 1)

(fig. 2)

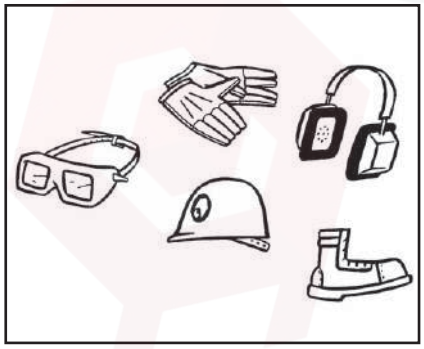
(fig. 3)

(fig. 4)

■ General recommendations for driving a forklift truck

Basic information for starting up a forklift truck

Entering and leaving the operator cabin, do not hold or pull the steering wheel to enter the driver cabin, use the handles provided on the front structure of the overhead guard. Always place one foot on the tread of the sill to prevent slipping when climbing in or out **(fig. 1)**.

Never start or operate any of the controls unless seated on the driver's seat.

Keep the driver's cab free of objects and tools. These may move around, block a control or a pedal, and prevent a manoeuvre or stop the forklift.

Before starting to work with the forklift, clean any oil or fuel spills, clean and remove grease from hands and the soles of shoes **(fig. 2)**. Do not forget to carry out the operations and daily checks listed in the "General maintenance chart" on this Operator's and Safety Manual.

Check the correct position and fastening of all the guards, caps and safety stops.

Check that all the controls are operating correctly.

Check that informative and safety plates on the forklift are clean and in good condition. If they are not in good condition, replace them.

Wear suitable protective that will protect you in the working environment. This may include a helmet, ear plugs, protective goggles or reflective clothing **(fig. 3)**. Do not wear loose clothing or jewellery or long hair as these could become entangled in the controls, in moving parts or edges of the machine and prove dangerous.

If working in an enclosed area make certain there is sufficient ventilation to prevent excessive build-up of exhaust fumes. Under this conditions always stop this engine when not in use.

Before starting the forklift be certain to check or test the following items:

- Check for any leaks in the fuel, hydraulic or cooling system.
- Clean any oil or fuel leaks that may exist on the forklift controls or operating area.
- Check tire conditions and pressures.
- Re-tight wheel nuts if necessary.
- Check that all controls are working correctly.
- Check the operator seat belt and its attachments.

Ensure seat belt is properly latched. Inspect carefully the condition of this security system with special attention to:

- cuts or damages in the belt.
- wear or damages in the metallic parts including the anchorage elements.
- badly functioning of the buckle.
- seams or free points of sewing.

Check brake pedal travel and effectiveness.

Check the following fluid levels:

- Fuel
- Braking fluid
- Hydraulic fluid
- Cooling system fluid
- Engine oil

Check the horn.

Check that lighting and signalling systems are clean and work correctly. If they do not work check the corresponding fuses and bulbs as shown in **MAINTENANCE OPERATIONS** on this Operator's and Safety Manual.

Jumping on or off the forklift can cause serious injury. Always face the machine and use rails and steps to slowly get on and slowly get off the forklift.

Adjust seat position so you are comfortable and can easily reach all the controls. Now fasten your seat belt.

Always stop the engine and do not smoke when fuelling the machine. **(fig. 4)** Follow the instructions given in the section **"Fuel"** on this Operator's and Safety Manual.

https://truckmanualshub.com/

Special Safety Messages

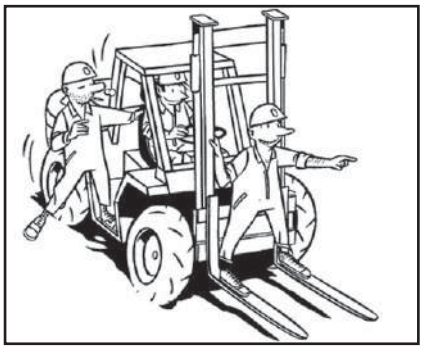
(fig. 1)

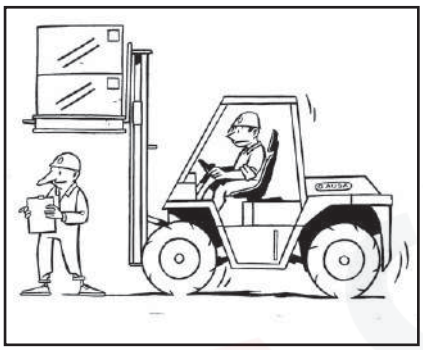
(fig. 2)

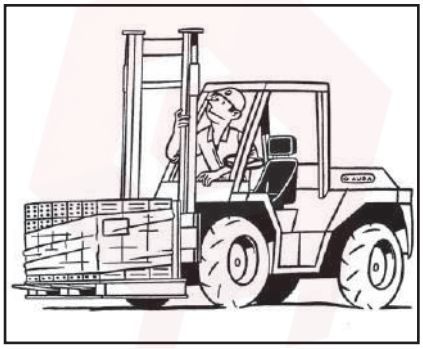
(fig. 3)

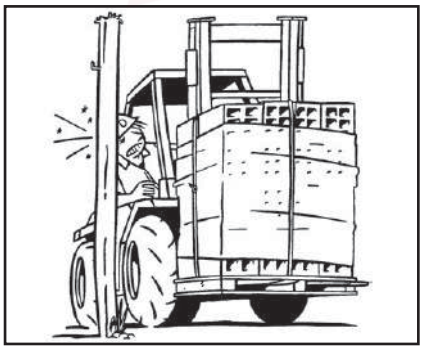
(fig. 4)

Before starting and operating the forklift

- Stay alert. Concentrate fully on your work. Your safety and that of others depends on the care you take when operating this forklift.
- Remember that you are the key to safety. Good safety practices not only protect you but also the people around you.

The surrounding area

Be careful around any pedestrians in the surrounding area
This forklift was designed to lift loads not people. Never transport people on any part of the forklift. Do not let people ride on the forks **(fig. 1)**.
Do not let people stand or walk under raised forks, loaded or unloaded **(fig. 2)**.
Give way to the right to pedestrians found in your path.
Do not drive rapidly. Driving too fast is dangerous to the driver and to the load. The speed at which the forklift is operated should always be suited to the working conditions and to the space available for manoeuvring.
Always drive smoothly and not in a jerky fashion.
Never put any part of your body between the fork mast and the forklift body. **(fig. 3)**.
Be careful around any load edges, pressure zones or revolving movements and extensions.
Be certain you have good visibility at all times. It is important that you can see clearly both forward and backward when operating the forklift. If the load does not allow clear forward visibility, then drive with caution in reverse. **(fig. 4)**.
This forklift is not designed to be used as a tow truck or tow vehicle. However if the forklift is to be towed to or from work location, see the section “Towing the forklift” on this Operator’s and Safety Manual.

Work circuit

The movement of loads within an installation or enclosure must be carried out following certain instructions concerning the circulation of forklifts and pedestrians. If you are not aware of these regulations, please check with your supervisor. Study the movements of the forklift to avoid making manoeuvres which are unnecessary, or involve risk to the surrounding areas. Find out which paths are suited to the type of vehicle you are driving and the load carried. If it is necessary to drive along public highways, first check that the forklift complies with current regulations of the country. Highway use of this off-road equipment may be restricted or prohibited by the laws of a State or Province.

Work cycle

If it is necessary to move loads continuously and repeatedly, try to do so with the minimum number of movements necessary, where possible. Reducing the number of movements saves fuel and reduces the emission of exhaust fumes.
If the work is very intense, remember to check the instrument panel from time to time, especially in extreme climates, as the engine will be working in particularly hard conditions.

Forklift truck circulation

When approaching a junction with poor visibility, reduce speed, emit acoustic warnings and proceed slowly according to the available visibility.
The speed of the forklift should at all times be adapted to the working conditions and the surrounding area. Systematically driving at the maximum speed permitted by the machine may put the operator and the surrounding area at risk.

https://truckmanualshub.com/

Special Safety Messages

Driving in reverse
Ensure good visibility of the path to be taken. If the load being carried obstructs visibility, drive in reverse with the utmost of caution.
Before reversing, the operator should ensure that this does not involve risks for the forklift, people or objects in the surrounding area **(fig. 1)**.

Driving on gradients
Special care should be taken when driving on gradients: move slowly, avoid placing the machine across the gradient and do not work on higher gradients than those recommended.
The maximum permitted gradient does not imply that it is possible to manoeuvre here in absolute safety under full load, ground and operating conditions.
Gradients should be descended in reverse, with the load facing the direction of greatest stability **(fig. 2)**.

Rudiments of static equilibrium
In order that the forklift is able to handle loads in a stable and safe manner, certain equilibrium conditions must exist and be maintained between the load and the machinery. Therefore, the forklift is fitted with counterweights at the rear. These are designed to compensate for the weight of the load being carried, as long as the centre of gravity of the load and the forklift are within certain established limits. In order to calculate the values of the transportable weight and the position of the centre of gravity permitted for the forklift see the Load Charts in the section **"Operating the Machine"** on this Operator's and Safety Manual .

Rudiments of dynamic equilibrium
While the forklift is moving, and as it gains speed, the equilibrium conditions of the load-forklift unit are modified as the centre of gravity shifts. This is accentuated on lifting loads, turning, braking, etc. In these conditions it is necessary to take the utmost care to ensure that the centre of gravity of the load is maintained within the specifications showed on the load chart plate.

Static equilibrium of a conventional forklift
The forklift counterweight produces a situation of imbalance when the forklift is unloaded. The centre of gravity is maintained low and close to the rear of the forklift. When the load is collected, the imbalance is corrected and the centre of gravity shifts forward. If the load is within the margins given on the load chart, equilibrium is maintained. As the load is lifted, the centre of gravity also rises, shifting upwards. At the moment that the centre of gravity shifts beyond the forklift, the equilibrium is lost and the forklift becomes unstable. Therefore, the forklift should not move while the load is raised.

Stability
Do not carry unstable or loose loads, or loads which are oversized with respect to the forklift. If very large or wide loads must be carried, every precaution must be taken to prevent bumps or other possible accidents.
When carrying out lifting manoeuvres, particularly at height, ensure that the forklift is on stable ground as levelled as possible.
Do not drive over objects which may endanger the stability of the machine.

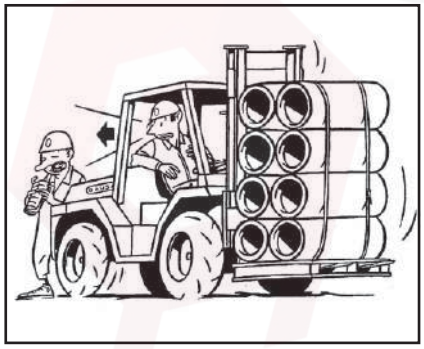
(fig. 1)

(fig. 2)

https://truckmanualshub.com/

Special Safety Messages

The triangle of horizontal stability
To prevent the loads which are being transported from falling, it is necessary to consider the triangle of horizontal stability **(fig. 1)**. This is an imaginary inverted triangle, with the lower end located on the centre of the rear axle and the two upper vertices on each of the front wheels. Stability is guaranteed when the centre of gravity of the combination load **(c)** + machine **(m)** remains within the limits of this imaginary triangle.

Longitudinal stabilization
The risk of longitudinal overturning increases if the forklift is driven while the load is raised. Sharp braking and accelerating or rapid tilting movements decrease stability.

Transversal stability
The risk of overturning sideways increases on turning at incorrect speeds, while the forklift is unloaded or when the load is raised. Rough ground, sharp braking or accelerating or shifts in the load make these conditions worse.

Centre of gravity and the capacity of the forklift truck
Do not overload the forklift or handle loads which shift the centre of gravity beyond that for which it is designed. Manoeuvre slowly, especially when changing direction on slippery ground .
Do not handle loads that are unstable, loose or disproportionate to the size of the forks and the forklift machine itself. Make certain that long or wide loads are fastened together so as to be stable and secure.

The load and counterweight
The load should be lifted and lowered with the mast in vertical position or slightly tilted backwards. The raised load should only be tilted forwards when it is about to be unloaded.
Tilting the load forwards or backwards (swinging) is very useful for collecting or positioning the load, but affects the longitudinal and lateral stability. Therefore, when handling raised loads, do not swing the mast more than is absolutely essential.
The forklift may tip forwards when carrying a raised load with the mast tilted forwards, or in the event of sudden braking or accelerating while the load is raised.
If using an accessory, attachment or tool, first check the permitted load. The combination of the weight of the forklift plus the weight of the accessory or attachment reduces the nominal load.

WARNING

This forklift is not designed to travel with elevated load or with the mast tilted forward.
Do not tilt forward the mast with the forks elevated except to pick up or deposit the load.
The fully forward tilting mast angle is only intended to transport the forklift on a truck bed, always without load.
For operating with load do not exceed 10º for the forward tilting mast angle.

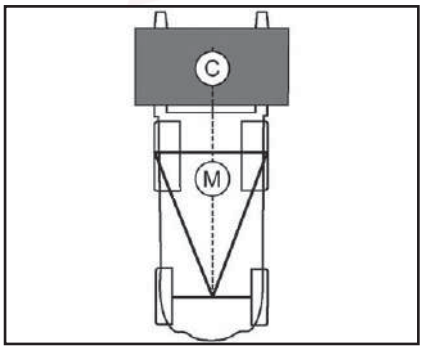

(fig. 1)

https://truckmanualshub.com/

Special Safety Messages

■ **Load handling**

- Know the lifting capacity of your forklift and operate within those limits.
  See the Load Limit Charts shown in the section **TECHNICAL SPECIFICATIONS** on this Operator's Safety Manual and shown in a plate on the left mudguard.
- Never transport loads with the forks raised -keep them as low as possible to attain maximum stability-. The risk of overturning increases when the forklift is driven with the load raised. Keep it low when in transit. **(fig. 1, 2)**
- Do not drive on surfaces that could affect the stability of the machine.
- Only raise the forks when the machine is on a level, flat surface.
- If necessary to temporarily operate the forklift in rough, unimproved areas, be very careful when operating near an open trench, a high bank or an overhang that can fall and cause a roll over with the potential of serious injury or death. You must make a careful judgement whether you and your forklift can be safely operated near any of these areas.
- Stay off steep inclines and slopes. Hillside operation can be very dangerous due to the constant potential of rollovers.
- When operating on modest inclines or slopes:
  - Move very carefully and slowly.
  - Keep the forks and load low.
  - Keep the forks facing uphill at all times. This means driving in backwards down a slope to maintain maximum load stability.
  - Always travels directly up or down the slope.
  - Do not travel across an incline.
  - Never position the forklift sideways on a slope.
- Forks should only be raised on level stable ground. You must be the judge whether ground conditions will permit the safe operation of the forklift. Operation on an incline can be very dangerous.
  Rain, snow, loose gravel or soft ground can be factors which may prevent the use of the forklift.
- Keep the forks and the loads away from overhead obstructions.
- Never operate the forklift near or close to overhead power lines.
- If the forklift is operated in an enclosed area, use ventilation systems to replace the exhaust fumes with fresh air.
- Use ventilation systems to remove any flammable dust or steam in the working area.
- Do not overload the forklift and do not allow the load centre to move. Always manoeuvre slowly and smoothly especially when changing direction.
- Keep the forks facing uphill at all times. This means reversing backwards down a slope to maintain maximum load stability.
- When depositing a load to a height, tilt the mast forward just enough to leave the load on a shelf or pile. When taking a load from a shelf, tilt the mast back just enough to stabilise the load on the forks.
- Always operate the fork tilt lever slowly and smoothly. **(fig. 2)**.
- Always drive with the forks in the low position and with the mast tilted slightly back.
- Make certain that long or wide loads are fastened together so as to be stable and secure.

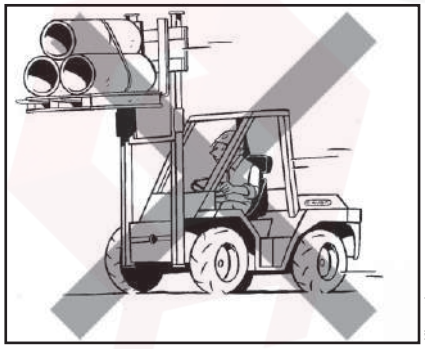

(fig. 1)

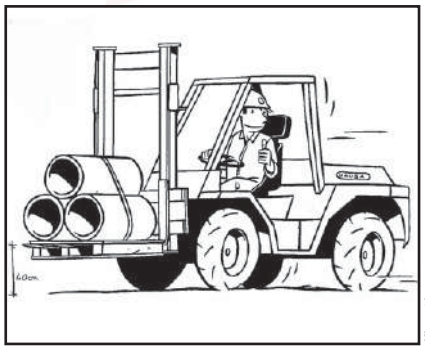

(fig. 2)

https://truckmanualshub.com/

Special Safety Messages

■ **Critical speed**

The speed at which the forklift moves affects its stability. When turning, braking, or accelerating, the centre of gravity shifts within the triangle of stability. Sharp turns, sudden braking or accelerating cause the centre of gravity to shift sharply and it may fall outside the triangle. This is the moment when the stability of the forklift and the load are not guaranteed and there is a risk of accident.
When manoeuvring reduce the speed of the forklift and avoid turning the steering wheel sharply.
Do not drive the forklift at a fast speed and then attempt a turn as the forklift may tip over. Always drive slowly when making a turn and keep the forks low when turning **(fig. 1)**.

■ **Accesses and doors**

Make sure that the passages and doors along the route are sufficiently high to allow all the forklift to pass.
When carrying out lifting manoeuvres, pay special attention to the height of the roof, lighting and other overhead installations.

■ **Ground surface**

Check that the ground is strong enough to bear the forklift when loaded, especially when approaching bridges, the edges of embankments, concrete floors elevators, etc. **(fig. 2)**.

■ **Lighting**

The forklift working area should be adequately lit to prevent the risk of accident, running over persons or colliding with obstacles. As soon as the daylight fades, the forklift lighting system should be switched on. If the forklift is not equipped with lighting, make sure that the working area is adequately lit. If this is not possible, do not continue working with the forklift, this may result in an accident.

■ **Loading bay. Communication. Shelving and installations. The load**

The loading bay or area where the loads are handled should be correctly equipped and signposted. The operating area of the forklift should be free of obstacles and pedestrians, however if their presence is necessary, the pedestrians should move in areas which have been duly marked as such and they should be easily distinguished, for example, by wearing reflective jackets.
If the area is closed it should be well-ventilated and the forklift must be equipped with lighting and exhaust gas purifier systems. The forklift operator should be able to communicate normally with pedestrians. If the surrounding area is excessively noisy, pedestrians should refrain from walking in the immediate vicinity. If this is unavoidable, the utmost care should be taken. Radio communication equipment should not be handled while driving the forklift. If it is necessary to use the radio, pull over to one side and signal the position of the forklift, using the lights or hazard warning lights.
Shelving for the loads have a series of marked passageways. The width of these should be at least the width of the forklift plus 40 in (1 m). If the passageway is two-way, the width must be sufficient to allow two forklifts to pass plus an additional 55 in (1,5 m).
Before using the forklift to handle loads check the load and ensure that the weight does not exceed the forklift capacity. At the same time, check that the load is stabilized and correctly secured, to ensure that no part of the load falls off during transportation.

■ **Order and cleanliness**

Carrying out a series of checks before starting the forklift and keeping the operator cab clean help to make the work safer.
To do so, follow the **MAINTENANCE CHART** given in this Operator's and Safety Manual strictly, and keep the operator cab clean and free of earth, gravel, mud, oil or other objects which may cause falls.
Do not carry objects in the operator cab. These may injure the operator or accidentally activate the forklift controls.

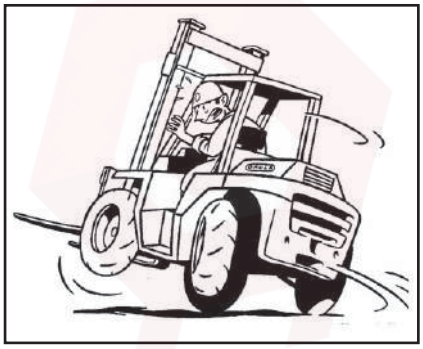
(fig. 1)

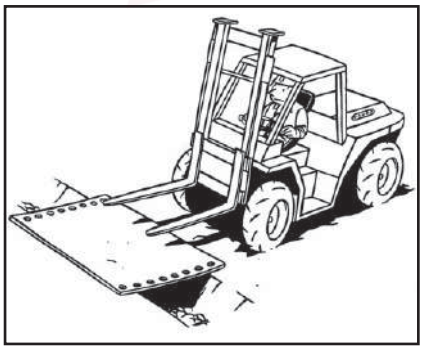
(fig. 2)

https://truckmanualshub.com/

Special Safety Messages

■ **Overhead Guard**

WARNING

You are protected by an overhead guard which complies with the provisions of ISO 3449 / ISO 3471 and ASME B56.6. It protects the operator against falling objects and, together with the mast, gives protection to the operator in the event of an accidental tip over. The seat belt is an important part of this safety system and must always be fastened before operating the forklift.
Failure to wear the seat belt in the event of an accidental tip over could result serious injury or death as you could be crushed by the machine or by the overhead guard.

The above decal is located on the side of the machine. Overhead Guard must be weekly inspected for excessive damage cracks permanent deformation or signs of potential cracks. If these incidents appear, structure must not be repaired but replaced for a new one.

■ **When leaving / parking the forklift (fig. 1, 2, 3)**

A poorly parked forklift truck is a risk.
Park the forklift in the areas provided for this purpose, without obstructing the passage of others, exits or entrances to stairs and emergency equipment.

- Place the forks or attachment in the fully lowered position.
- Set all the controls in the “0” neutral position.
- Apply the parking brake.
- Do not park the forklift on a slope. If it is necessary to park the forklift on a gradient, in addition to using the parking brake, place chocks against the wheels.
- Stop the engine and cut the ignition circuit. Remove the ignition key.
- Lock all mechanisms to prevent any unauthorised person from using the machine.
- Remember that you are the key to safety. Good safety practices not only protect you but also the people around you.

(fig. 1)

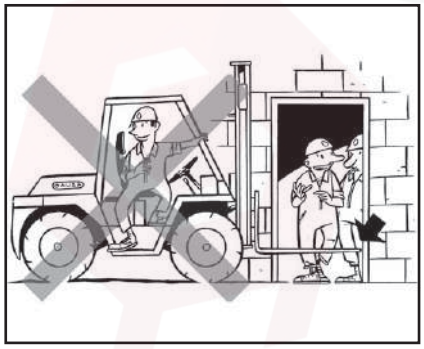
(fig. 2)

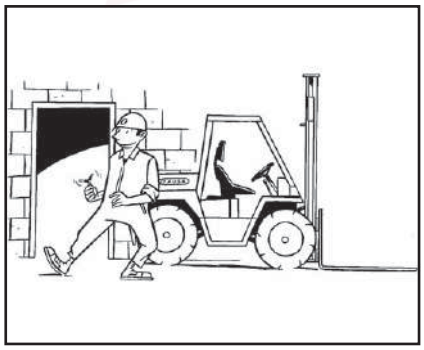
(fig. 3)

https://truckmanualshub.com/

Special Safety Messages

CAUTION

Do not operate this AUSA Forklift unless you have read and understand the Safety and Operational instructions in the Operators Manual and have been trained in the safe operation of this forklift.

CONTROLS

- The brake pedal, accelerator, and parking brake have the same functions as a car.
- Inching pedal has a function similar to a clutch and applies brakes at the end of its path.
- The **directional control** accts forward/reverse direction of travel, and the **forklift lever** controls the raising/lowering, tilting and side-shifting of the forks.

BEFORE STARTING ENGINE

- Always use 2 hands when climbing on or getting off the forklift.
- Adjust driver's seat for maximum comfort and fasten seat belt.

CHECK:

- Parking brake is applied.
- Directional lever is in neutral.
- Fork lift levers are in neutral
- Service brakes have a firm brake pedal.
- Load capacity is within Load Capacity Chart.
- Forks are in fully lowered position.

DRIVE SAFELY

- Start Engine: turn key: lightly press accelerator.
- If any instrument panel red lights remain lit after engine starts, turn off engine & correct problem.
- Before moving be certain of a clear path. Always look in direction of travel.
- Watch out for pedestrians, obstructions, overhead and side clearances.
- Do **NOT** carry passengers. Do **NOT** allow any person to ride the forks or load.
- Do **NOT** allow any person to stand under raised forks.
- Always carry forks and loads in the lowest position (Approx. 12" above ground) with mast titled slightly back to cradle the load.
- Reduce travel speeds for turns, for slippery surfaces or for uneven ground.
- Avoid running over loose objects or depressions or holes in the roadway.
- Start, Turn and Brake smoothly.
- Always bring forklift to a complete stop before reversing directions.
- **Avoid** all steep grades.
- Approach inclines straight. Travel up or down an incline slowly with the forks facing uphill. Never travel across an incline.
- Always center forks under load.
- Always level forklift before lifting any load.
- Use extreme caution when handling long, wide or high loads. Do not handle unstable or loosely stacked loads.
- If improper use of forklift causes it to tip over, keep the seat belt tightly buckled, lean away from the tip and brace yourself. Do not leave Operator's seat.
- Do not apply parking brake until forklift has come to a complete stop.
- Before leaving the forklift unattended, place directional control levers in neutral, lower forks to the ground, set the parking brake, shut off the engine, remove key.

REGULAR MAINTENANCE

CHECK correct level of engine oil, brake fluid, hydraulic oil and radiator coolant, tire pressures. Always use fluids recommended in the Operators Manual.

02-90077-A4

https://truckmanualshub.com/

Controls Instruments Equipments

■ Vehicle

Forklift truck: general points
The terms such as right, left, front and rear when used in this Operator's and Safety Manual indicate the right and left sides of the machine and the front and back of the machine, as viewed from the operator's seat looking forward.

Description of parts
1- Lifting Mast
2- Lighting equipment (✱)
3 - Joystick
4 - Operator overhead guard
5 - Rotating beacon
6 - Diesel tank (placed symmetrically to the hydraulic oil tank)
7 - Hydraulic oil tank
8 - Operator's seat with seatbelt
9 - Mast forks

https://truckmanualshub.com/

Controls Instruments Equipments

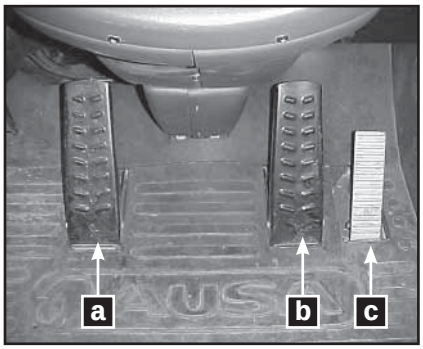

(fig. 1)

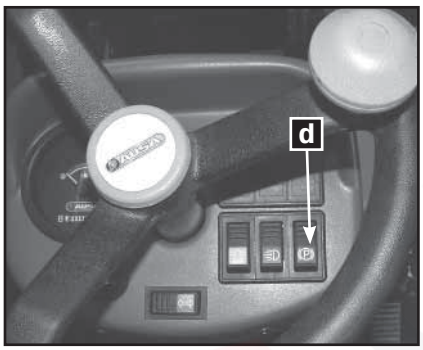

(fig. 2)

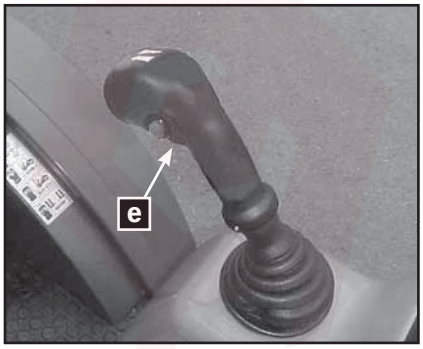

(fig. 3)

(fig. 4)

■ **Pedals (fig. 1)**

a- Inching pedal.
When the pedal is depressed the machine stops, allowing the engine to accelerate for faster operation of the mast. When the pedal is slowly released the machine will start to move again.

WARNING

The inching pedal also acts on the parking brake when it is kept fully depressed.

b- Service brake pedal.
Acts on a pump located below the pedal.

c- Accelerator pedal.
Acts on the engine through a cable.

■ **Emergency brake**
In the event of emergency use the inching pedal.

■ **Parking brake (fig. 2)**
The parking brake is operated electronically using the switch **(d)**. It is also operated electronically when the inching pedal is kept fully depressed.

■ **Joystick (fig. 3)**

Forward and backward directional travel control
The direction of travel is changed using the electric switch **(e)** located on the lower part of the joystick. In each case the corresponding arrow showing the direction of travel lights up.
When the direction arrows are not lit, the direction of travel control is at the stop position (neutral). By pressing the front of the switch the machine travels forwards and by pressing the rear of the switch the machine travels backwards.

Safety: When the parking brake is not on and/or the operator is not sitting in the driver's seat, the direction arrows are also switched off and the direction of travel control is disconnected.

CAUTION

When the parking brake is not on and/or the operator is not sitting in the driver's seat, the direction arrows are also switched off and the direction of travel control is disconnected.

■ **Back-up alarm**
It sounds when reverse is selected.

WARNING

If the forklift is equipped with lighting, the back-up alarm is disconnected when the lights are switched on. However, the rear white reversing lights continue to work.

■ **Horn (fig. 4)**
The horn is operated using the button **(f)** located on the right of the joystick.

https://truckmanualshub.com/

Controls Instruments Equipments

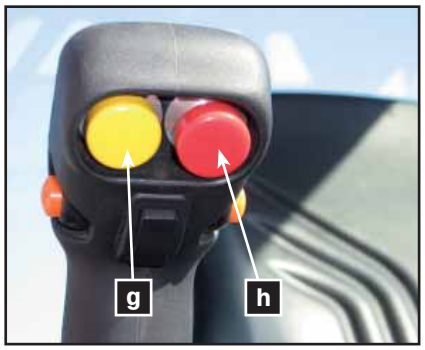

(fig. 1)

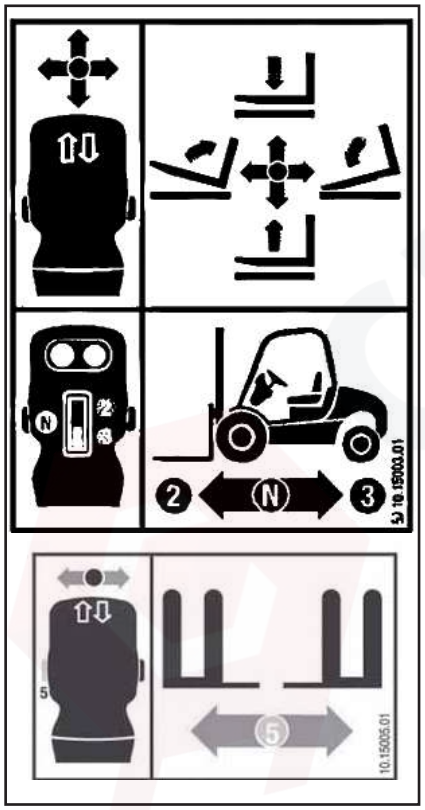

(fig. 2)

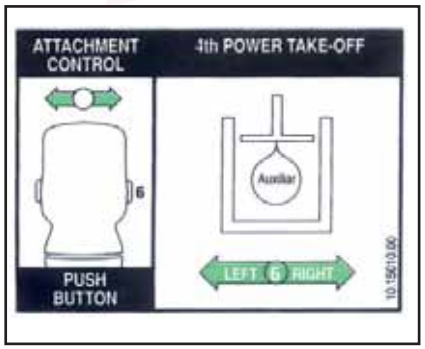

(fig. 3)

■ 4x4 connection (FullGrip® System) (fig. 1)

Connecting the 4x4
The 4x4 connects by pressing yellow switch **(g)** located underneath the joystick at the right side.

Disconnecting the 4x4
The 4x4 disconnects just leaving yellow switch **(g)** on its rest position.

TO DRIVE WITH FULLGRIP® 4x4 TRACTION
* Connect the FULLGRIP only if you drive on slippery surfaces.
* To connect the FULLGRIP, you don't need to stop the vehicle.
* Disconnect the FULLGRIP if you don't need 4x4 traction.

DANGER

Do not conect the 4x4 driving at high speed

REMARK: red switch **(h)** located underneath the joystick at the left side does not have any function.
Moreover, some models may differ from **(fig. 1)** and assemble a plastic plug instead of red switch **(h)**.

■ Load handling controls (fig. 2)

The mast and the load are moved by using the joystick.

Raising and lowering the mast.
If the joystick is pulled backwards the mast and the forks lift and if pushed forwards the mast and the forks lower.

Tilting the forks.
If the joystick is pulled to the left, the mast forks tilt backwards (forks lift) and if pushed to the right, they tilt forward (forks lower).

Side-shift.
By holding down button **(5)** on the joystick and pulling the joystick to the left, the forks move to the left.
By holding down button **(5)** and pushing the joystick to the right the forks move to the right.
Always centre the carriage when in transit or when transporting a load.

Additional hydraulic control for attachments (✶) (fig. 3).
By holding down button **(6)** of the joystick and pulling it to the left (towards the operator), or pushing it to the right, pressure is supplied to the quick hydraulic couplings located on the left-hand side of the mast.

https://truckmanualshub.com/

Controls Instruments Equipments

■ **Instrument panel: Components**

Note: For ease of understanding, the diagram is given with the steering wheel removed.

(fig. 1)

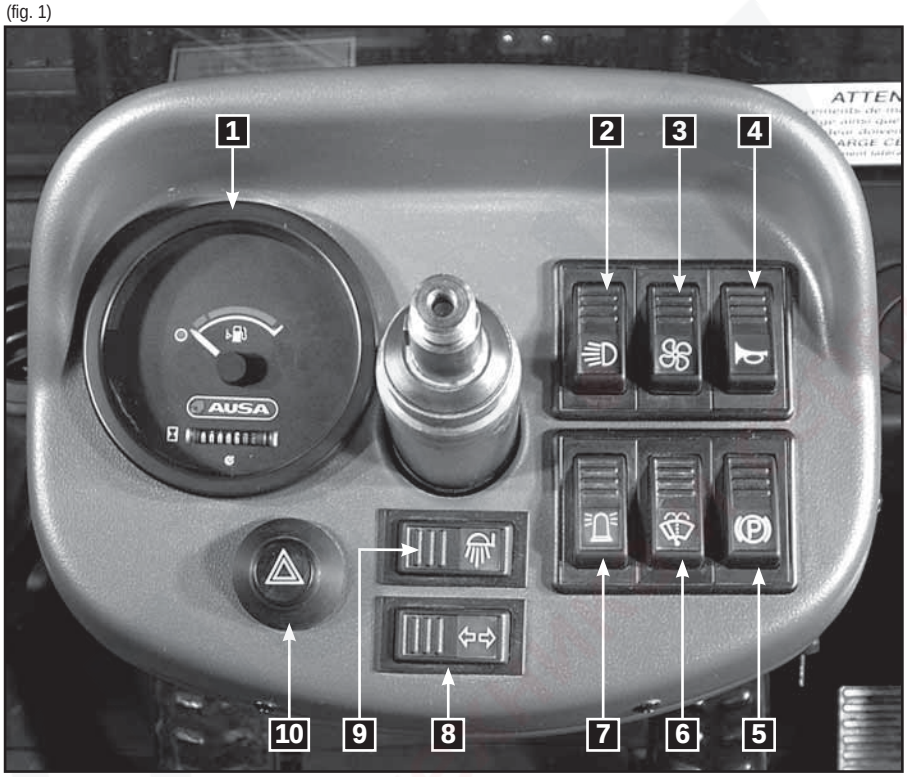

https://truckmanualshub.com/

Controls Instruments Equipments

■ **Starter switch (fig. 1)**

To start the engine see the section **"Starter"**.

a- In this position the ignition and the engine are disconnected.
b- Ignition on. The engine pre-heating system and the lamp on the control panel are activated for a few seconds.
c- Starter. Turning the key to position **(c)** starts the engine.

Before re-starting the engine, the key should first be switched to position **(a)**.

■ **Fuse box (fig. 2)**

This is located at the right of the steering column, next to the starter switch.
See the section **"Electrical circuit diagram"** in this Operator's and Safety Manual to identify the number and function of each fuse.

■ **Instrument panel: Operation (fig. 3)**

1- **Multi-function instrument.** See the section "Multi-function instrument".
2- **Light switch.** This switch has two positions, the first switches on the low beam and the second switches on the high beam.
3- **Heating switch (✶).** This has two positions to give two fan speeds.
4- **Horn switch.** To activate the horn, press the switch.
5- **Parking brake.** To activate the forklift parking brake, press the switch.
6- **Windscreen wiper switch (✶).** To switch on the windscreen wiper, press the switch. To activate the windscreen wiper washer pump, press the same switch again.
7- **Rotating beacon switch.** To switch on, press the button and it will light up. To switch off, press the button again.
8- **Indicators switch (✶).** The turning indicators are switched on by pressing the switch to the left or to the right.
9- **Working light switch (✶).** To connect the front lights switch turn on the switch.
10- **Hazard lights switch (✶).** To switch on, press the button and it will blink. To switch off, press the button again.

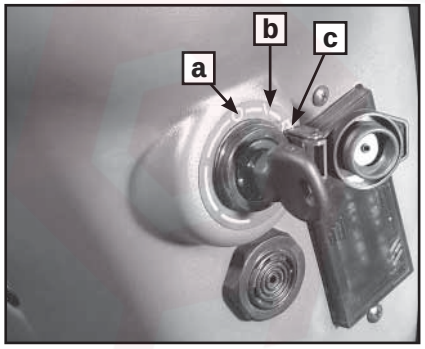

(fig. 1)

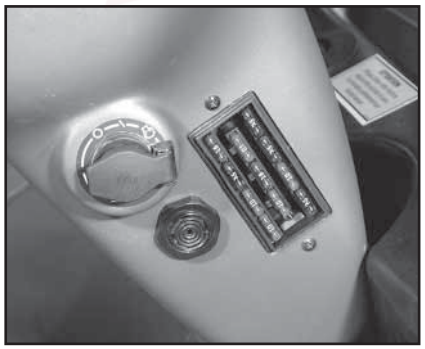
(fig. 2)

(fig. 3)

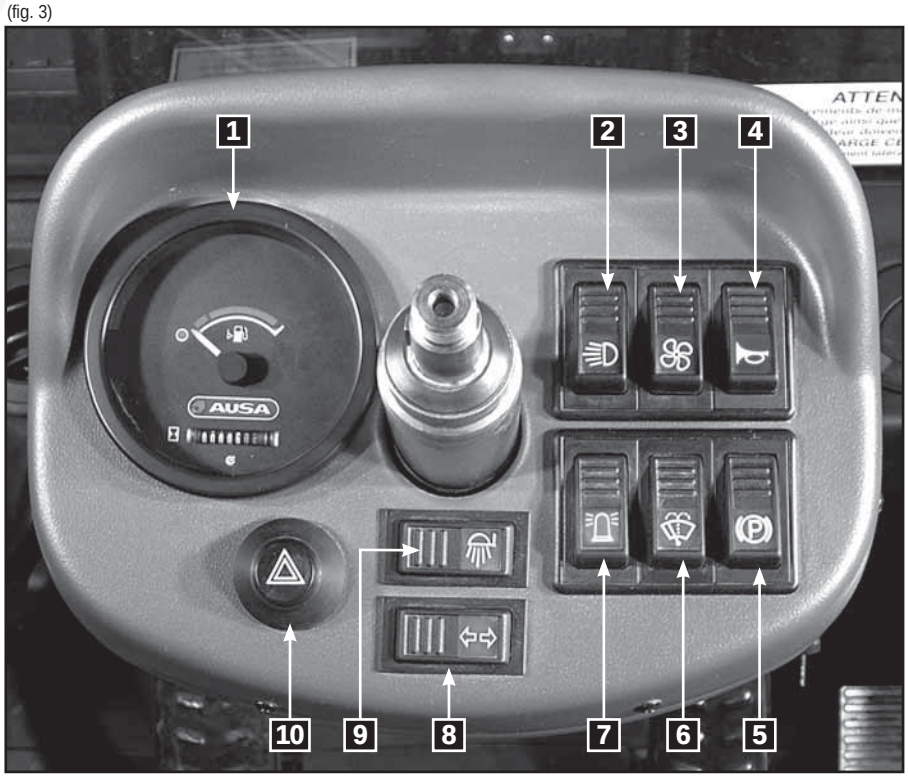

https://truckmanualshub.com/

Controls Instruments Equipments

Multi-function instrument (fig. 1)

(fig. 1)

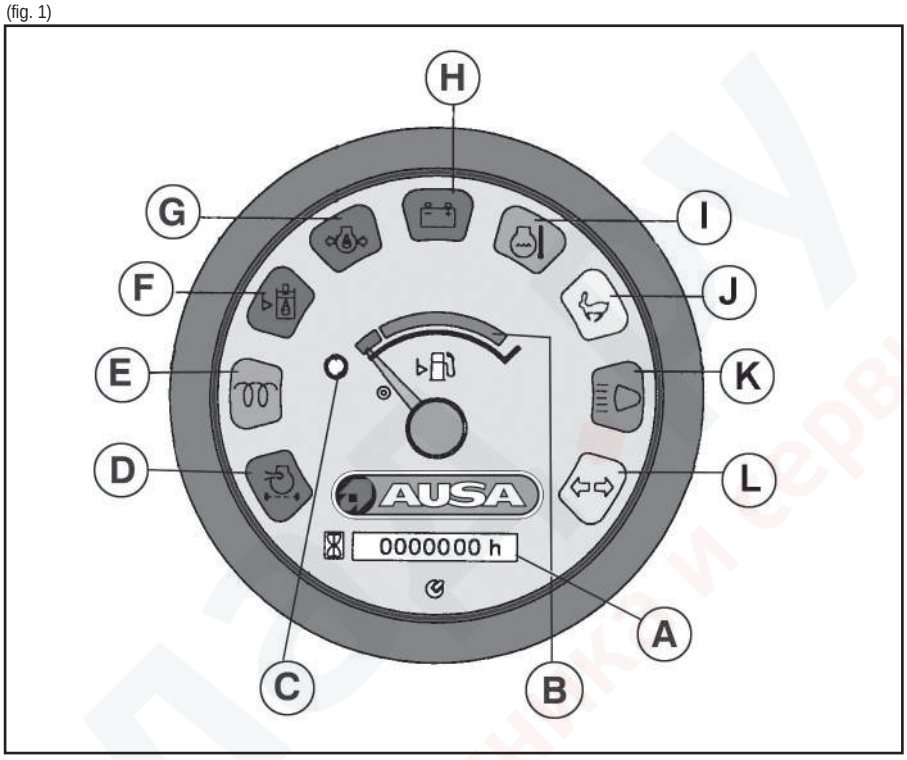

A- Hourmeter. This gauge indicates the total running time of the forklift engine to enable servicing of the engine at proper intervals. (See the section **MAINTENANCE CHART** for servicing frequency).

B- Fuel level. This gauge indicates the diesel fuel level in the tank.

C- Fuel reserve warning lamp. This lights up when the level of diesel in the tank falls into reserve.

D- Air filter warning lamp. When the air filter of the diesel engine becomes clogged with dirt, this lamp will light. The air filter should be immediately cleaned or serviced. The filter element should be cleaned or replaced immediately.

E- Preheating warning lamp. When this lamp glows it indicates that the engine pre-heat plugs are in operation and heating the combustion chamber to the temperature required in order to start the engine.

F- Hydraulic oil level warning lamp. This lights up and emits an audible warning when the hydraulic oil level is at the minimum level. Oil should be added to top up the level to the correct level.

G- Engine oil pressure warning lamp. When the ignition is on, this lamp lit and turns off when the engine is running. If this lamp turns on and a warning signal is emitted while the engine is running, the engine must be stopped immediately to prevent damages. Check the level and add oil if necessary.

https://truckmanualshub.com/

Controls Instruments Equipments

H- **Battery charge warning lamp.** When the ignition is on, this lamp lit when the alternator does not charge the battery and turns off when the engine speed exceeds the idle speed. If this lamp turns on while the engine is running, the engine should be stopped and determine the cause.

I- **Engine temperature warning lamp.** If this lights up and emits an audible warning, this implies that the engine temperature (coolant) is too high. Stop immediately to investigate the problem. It may due to a low level of coolant, dirt in the radiator, that the thermostat does not work correctly or there is a break in the alternator belt.

J- **Not applicable to this model.**

K- **High beam lamp**. This lamp is lit when high beam is selected. (✶)

L- **Indicators warning lamp.** This warning light flashes while the turning indicators are switched on (✶)

■ Fuel

Handling

- Only use the fuel type authorized by AUSA. Do not use fuel mixed with oil, other fuels or unsuitable additives.
- The correct fuel for the forklift is diesel. For further details regarding fuel type and required specifications see the section **FLUIDS AND LUBRICANTS**.
- Do not allow the fuel to come into contact with the skin and avoid inhaling the fumes, which are toxic. High concentrations of fuel vapour may cause sickness, loss of consciousness or even loss of life in the event of prolonged exposure. If you experience symptoms such as sickness or loss of consciousness seek medical advice immediately.
- Do not store fuel in closed places. The fuel vapours will alter the atmosphere of the enclosure and may cause a fire or explosion.
- Use suitable impermeable clothing, safety glasses and gloves when handling fuel. When refuelling from a tank, bucket or barrel using a siphon, the following precautions should be taken.
- If refuelling is by gravity, from a raised tank, open the fuel output valve of the tank slowly.
- If the tank or barrel does not have an output valve use a suitable vacuum pump.

https://truckmanualshub.com/

Controls Instruments Equipments

WARNING

Never suck the fuel into the pipe by mouth to start the siphoning. The fuel and its vapours are highly toxic.

- In the event of fuel spillage, please inform the supervisor, mark the area suitably and cover the spillage with absorbent material.
- Take suitable measures to avoid risk until the remains of the fuel have been completely removed.

■ **Refuelling**

WARNING

Smoking, naked flames or sparks are not permitted in the refuelling area. Fuel vapours can be explosive.

- Refuel in a well-ventilated area.
- Position the forklift as close as possible to the fuel pump so that the filler hose reaches the opening of the tank comfortably.
- Apply the parking brake, switch off the engine and lights, including the rotating beacon.

Note: If the fuel pump is equipped with a vehicle earth connection, connect this to an unisolated metal component of the forklift.

- Clean the fuel cap and surrounding area with a cloth if they have been dirtied. Do not allow dust, water, or any other substance to enter the tank.
- Open the fuel cap using the key and turning to the left.
- Fill the tank without exceeding the volume specified for the forklift (21’2 US Gal). Take care not to spill fuel outside the tank. If you do, clean immediately and dry the surface well.
- Close the tank using the key and remove it from the cap. Check that the cap is correctly closed.

https://truckmanualshub.com/

Operating the forklift

■ **Entering and leaving the operator cabin**

Do not hold or pull the steering wheel to enter the driver cabin, use the handles provided on the front structure of the overhead guard. Always place one foot on the tread of the sill to prevent slipping when climbing in or out **(fig. 1)**.

■ **Adjusting the seat and steering wheel (fig. 2, 3, 4, 5)**

Before using the forklift, adjust the seat and steering wheel to a comfortable driving position.

On all machines the operator is able to adjust the seat in the fore-aft direction by lifting knob **(a)** and sliding seat to the desired position, then releasing the knob to lock the seat into position.
The seat may be adjusted for drivers weight by lifting or lowering lever **(b)** downwards to the relevant position, as indicated by the scale in de middle of the seat.
It is also possible to adjust the seat backrest angle. The seat backrest tilts forward or backwards by lifting knob **(c)**.

The position of the steering wheel is adjusted by inclining the steering column. The lever **(d)** unblocks the steering column and can be adjusted to the correct position. To block again bolt the lever.

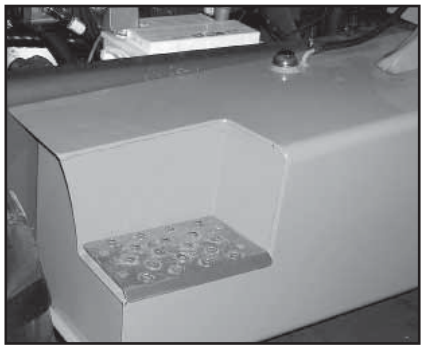

(fig. 1)

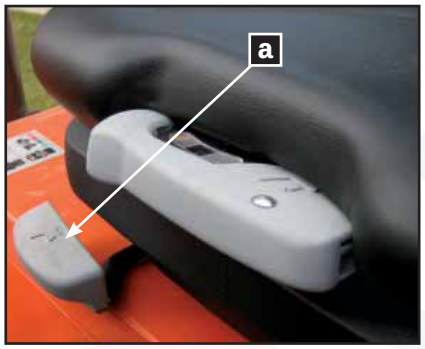

(fig. 2)

(fig. 3)

(fig. 4)

(fig. 5)

https://truckmanualshub.com/

Operating the forklift

■ **Starter:**

WARNING

For reasons of safety, the operator should be seated, the seatbelt fastened, and the parking brake applied.

Starting engine when the operator is seated:
The direction of travel control switch should be in neutral or the parking brake switch is on.

Starting engine when the operator is not seated:
The direction of travel control switch or the parking brake switch can be in any position.

- Place the key in the ignition switch and turn to position **(b)** ignition. Wait a few moments until the engine preheating light goes out.
- Press the accelerator pedal 1/4 of the way and turn the key to position **(c)** to start the engine. Do not hold the key in this position for more than 15 seconds.
- If the engine does not start, repeat the above steps and wait 30 seconds between each attempt. Before re starting the engine, the key should first be switched to position **(a)**.

■ **Checks**

With the engine running and the forklift at idle, carry out the following checks and tests.

- Check the instrument panel controls.
- Check the steering by turning it gently to the left and right.
- Lift the forks off the ground 6 in (150 mm).
- Check the parking brake.
- Check that the brake pedal action is firm.

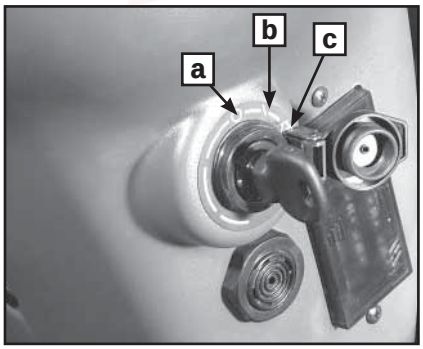

(fig. 1)

https://truckmanualshub.com/

Operating the forklift

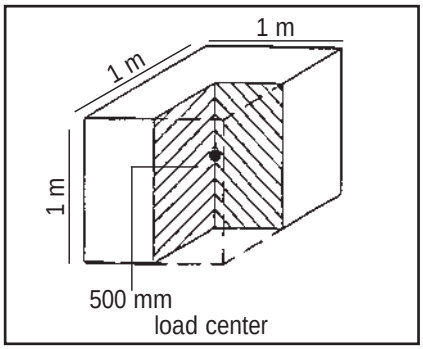

(fig. 1) C400H / C400H x4

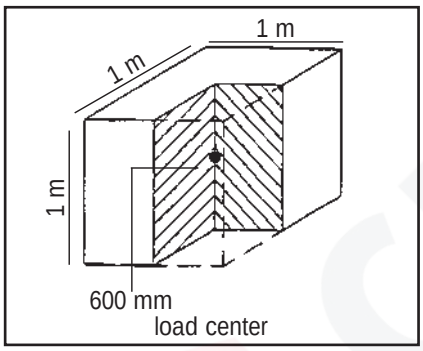

(fig. 1) C500H / C500H x4

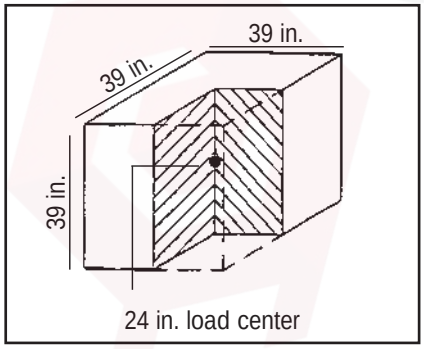

(fig. 1)

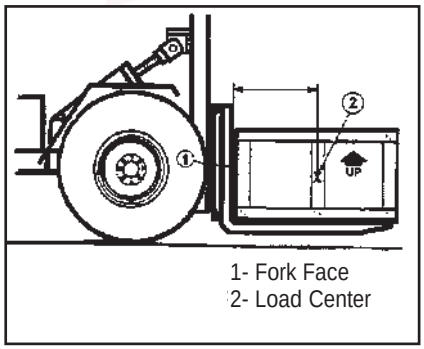

(fig. 2)

■ Parking the forklift and stopping the engine

Note: Make certain that the forklift is parked on level ground when leaving it overnight. Also park it on level ground before any scheduled maintenance is attempted.

- Lower the forks to the ground, apply the parking brake and push directional switch to neutral.
- Run the engine at idle for 1 minute if the engine has been working at full load -as this procedure will cool down the engine components evenly.
- Turn off the key switch in a counterclockwise motion to position to stop the engine **(a) (fig. 1 previous page)**.
- Remove the key from the ignition and take it with you. Never leave the key in a parked machine.

■ Forklift nominal load (fig. 1)

The Rated Capacity of this forklift is the weight the machine is capable of lifting under safe operating conditions. The lifting capacity of a forklift is determined by the height and weight limits of the load. Poor ground conditions as well as shape of the load may reduce the weight that can be safely lifted. Overloading the forks can make the forklift unstable, hard to handle, and may be in danger of tipping over.
Inspect the load you intend to lift and make certain it is within the limits of the Load Capacity Chart located on the left hand side mudguard.

Rough terrain use:
With load center at 20in (500 mm) from vertical face of the forks, the C400H and C400H x4 has a rated capacity of 8818lbs (4000 kg)
With a load center at 24in (600 mm) from the vertical face of the forks, the C400H and C400H x 4 has a rated capacity of 8146lbs (3695 kg) and the C500H and C500H x 4 has a rated capacity of 11023lbs (5000 kg).

Industrial use:
With load center at 20in (500 mm) from vertical face of the forks, the C400HI and C400HI x4 has a rated capacity of 8818lbs (4000 kg)
With a load center at 24in (600 mm) from the vertical face of the forks, the C400HI and C400HI x 4 has a rated capacity of 8146lbs (3695 kg) and the C500HI and C500HI x 4 has a rated capacity of 11023lbs (5000 kg).
If the load is too heavy split it and re-stack it. Use of attachments other than the pallet forks that came with this machine may reduce lifting capacity and affect other machine handling characteristics.
Reproduced copies of the Load Capacity Charts are included in the section **"Tecnical Specifications"** on this Operator's and Safety Manual. Study the Load Capacity Chart of your machine carefully and make certain you understand it before lifting loads on the forks.

■ Load Center (fig. 1, 2)

To rate the lifting capacity of forklifts manufacturers have standardized on a certain size of load. The rated capacity of this forklift is based on a cube measuring 39in (1 m.), in all three dimensions with the center of gravity in the center of this cube. This is known as 24in (600 mm) load center o 19in (500 mm) from both the vertical face of the mast and from the lifting surface of the forks). It is important to keep load center in mind for as the load center increases the lifting capacity of the forklift decreases.

https://truckmanualshub.com/

Operating the forklift

■ **Alteration to the forklift / load relation**

The relationship between the forklift and the load is altered by changes in:

- Removable attachments (see load limit charts).
- Height of the forks.
- Changes in the motion of the machine and the grade of the ground on which it is moving.
- Smoothness and stability of the ground.
- Machine stability must be maintained while these factors change constantly during forklift operation.

This requires careful judgement on the part of the operator.

■ **Lifting Capacity**

Machine stability is maintained only when the forklift handles loads within its rated lifting capacity. The Load Capacity Charts are included in the section **TECHNICAL SPECIFICATIONS** on this Operator's and Safety Manual. The lifting capacity of the machine is determined by the safe height and weight limits of the load. An overload on the forks makes the forklift unstable, hard to handle, and will present the danger of tipping over.

■ **Load charts (fig. 1, 2, 3)**

The charts you can see in the section **TECHNICAL SPECIFICATIONS** on this Operator's and Safety Manual shows how much your forklift can lift as the load centre increases out to 4in. Note how the lift capacity decreases as the load centre increases. This chart is reproduced as a machine decal and is located on both the right and the left side of the mast and at the driver seat for ease of reference during machine operation.
The charts you can see in the section **TECHNICAL SPECIFICATIONS** on this Operator's and Safety Manual represents the load that can be lifted on a level surface, with the load evenly displaced (like a square box with the weight centred), at certain lift height (depending on the mast height and use) .
The horizontal axis "**D**" (often referred to as the "**X**" axis), represents the distance in inches that the load centre is moved forward from the face of the forks.
The vertical axis "**G**" (often referred to as the "**Y**" axis), shows the load weight in pounds o kilos.

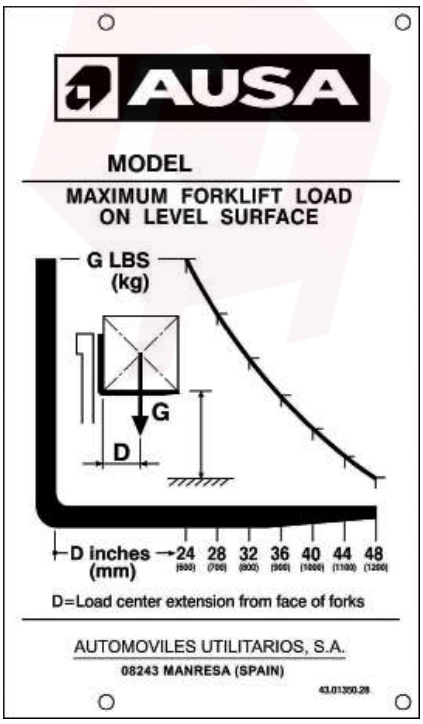

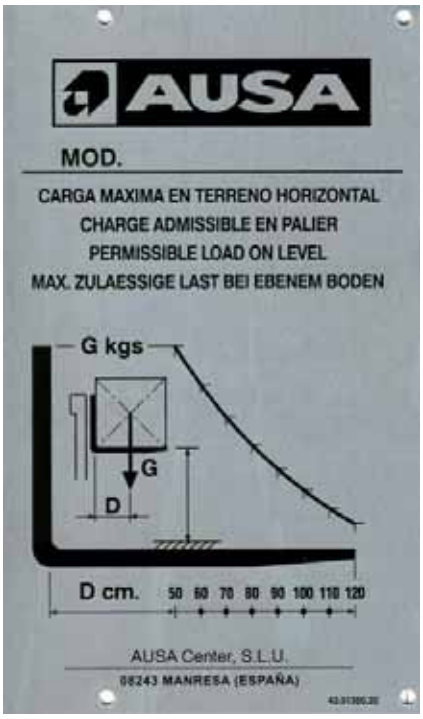

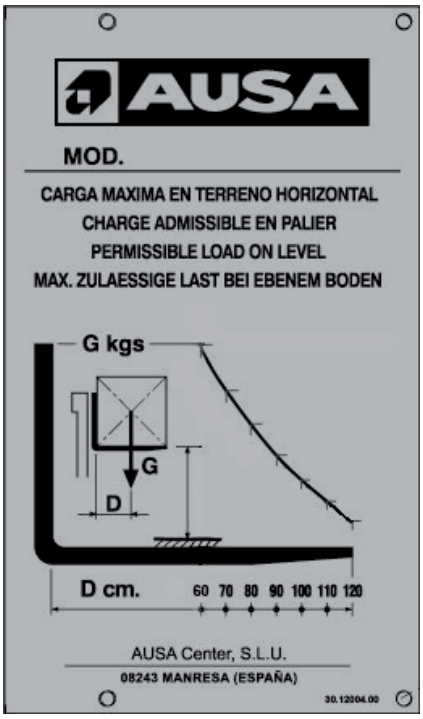

https://truckmanualshub.com/

Special procedures

■ **Engine overheating**

If the engine overheats and the engine temperature warning light on the control panel lights up, try the following:

- Check and clean the radiator coolant blades. See the section **"Periodic maintenance operations"** in this Operator's and Safety Manual.
- Slow down the speed but keep the forklift moving in order to allow air to circulate around the radiator.
- If the engine is still overheating after approximately one minute, stop driving the forklift, set the forward / backwards directional travel control switch to neutral, apply the parking brake and stop the engine.

WARNING

The radiator may be extremely hot. Use gloves before touching the radiator.

- Allow the engine to cool down. Check the coolant level and refill if necessary.
- If the engine continues to overheated, pls. contact to an authorized AUSA dealer as soon as possible.

■ **After-use care**

When the forklift is used in salt water areas (beach areas, etc.), rinse the machine with fresh water to protect the forklift and its components from rust. We recommend lubricating the metal components. This should be carried out at the end of every day after using the forklift.
When the forklift has been working in muddy areas, it should be washed with fresh water to protect the forklift and keep the lights clean.

Note: Never use high-pressure water to clean the forklift. **ONLY USE LOW-PRESSURE WATER**. High-pressure water may cause electrical and mechanical damage.

■ **Overturning (fig. 1)**

In the event of the forklift overturning, the driver must avoid being trapped between the machine and the ground. Therefore, we recommend:

- Try to remain inside the operator cabin.
- Hold onto the steering wheel tightly.
- Lean feet firmly onto the floor of the overhead guard.
- Try to keep as far away as possible from the point of impact.

(fig. 1)

https://truckmanualshub.com/

Special procedures

When the forklift overturns or is knocked onto one side, restore it to normal operating position (on all four wheels).

WARNING

DO NOT TRY TO START THE FORKLIFT without first checking with an authorized AUSA dealer.

- Remove the four glow plugs.
- Turn the key in the ignition to position **(c)**. Hold the key in position until the oil has come out of the combustion chamber.

WARNING

The oil will come out of the combustion chambers at high pressure and may cause injury.

- Re-assemble the four glow plugs.
- Check the engine oil level and refill if necessary.
- If the engine oil pressure warning light remains lit after starting the engine, stop immediately to prevent internal damages and refer contact to an authorized AUSA dealer as soon as possible.

■ **Immersion of the forklift**

If the forklift becomes submerged under water, it will be necessary to take it to an authorized AUSA dealer as soon as possible.

WARNING

DO NOT START THE ENGINE. Immersion of the forklift may cause serious damage to the engine if the start-up procedures are not followed correctly.

- Arrange for an authorized AUSA dealer to carefully inspect the supply system as shown in the **MAINTENANCE CHART**.

■ **Storage and pre-parking preparation.**

When the forklift is not to be used for more than a month it should be stored correctly. When the forklift is brought out for use again after a period of storage, special preparation is required. Ask an authorized AUSA dealer about the appropriate procedures.

https://truckmanualshub.com/

Recommended fluids and lubricants

■ Lubricant and fluid products

This section specifies the recommended fluids and lubricants. See the section **"Periodic Maintenance Operations"** in this Operator's and Safety Manual for procedures to check fluid levels and changes.

Table of fluids and lubricants (references and capacities)

FLUID OR LUBRICANT	SPECIFICATION	REMARKS	AUSA P/N	CAPACITY (US Gal.)	CAPACITY (liters)
FUEL	Use clean auto diesel (class A), preferably in accordance with Directive 98/70/EEC modified by directive 2003/17 or Standard EN 590 equivalent to the same.	See section "FUEL" in this section		31,7	120
ENGINE OIL	Engine oil in accordance with MIL- 2104C / API CD or higher	See "ENGINE OIL" in this section	461.00099.01	2,38	9
ENGINE COOLANT	Ethylene glycol antifreeze with corrosion inhibitors for aluminum engines with internal combustion. 50% glycol / 50% distilled water in Standard machine.	See "ENGINE COOLANT" in this section	45.00075.01	3,9	15
HYDRAULIC CIRCUIT	Transmission oil SAE 80W90 in accordance with API GL5 / MIL L-2105-B with additive for oil-bath brakes	See "HYDRAULIC CIRCUIT OIL" in this section	461.00099.06	25,1	95
FRONT AXLE DIFF.	Transmission oil SAE 80W90 in accordance with API GL5 / MIL L-2105-B with additive for oil-bath brakes	See "FRONT AXLE AND FullGrip SYSTEM" in this section	461.00099.09	1,92	7,3
FRONT AXLE PLANETARY REDUCTION	Transmission oil SAE 80W90 in accordance with API GL4 / MIL L-2105	See "FRONT AXLE AND FullGrip SYSTEM" in this section	461.00099.09	0,22	0,85
REAR AXLE DIFF. 4x4	Transmission oil SAE 80W90 in accordance with API GL4 / MIL L-2105		461.00004.01	0,95	3,6
4x4 REAR AXLE PLANETARY REDUCTION	Transmission oil SAE 90 in accordance with API GL4 / MIL L- 2105B		461.00004.01	0,1	0,35
4x2 TRANSFER BOX	Oil for COMPEN AUSA		461.00004.01	0,6	2,25
4x4 TRANSFER BOX (FullGrip® SYSTEM)		See "FRONT AXLE AND FullGrip SYSTEM" in this section	461.00099.09	0,46	1,75
BRAKE FLUID AND INCHING	SAE 10W Hydraulic Oil or ATF fluid in accordance with CAT TO-4 / TO-2 o ALLISON C-4 / C-3.	See section "BRAKE FLUID AND INCHING" in this section	461.00099.07	0,26	1
WINDSCREEN WIPER WASHER		Freezing point temperature: - 20ºC	465.00016.00	0,4	1,5
BATTERY ELECTROLYTE	Distilled Water	See section "BATTERY ELECTROLYTE" in this section			
REAR AXLE ARTICULATION POINTS	MOLIKOTE grease	Lubricating compound containing molybdenum disulphide, used to lubricate articulation pins and to prevent sticking and oxidation of parts that there are not lubricated on a regular basis.			
GREASING POINTS	Calcic grease NLGI-3 consistency	See section "LUBRICATION POINTS" in this Operator's and Safety Manual. Applied to bearings, sliding parts and used to lubricate seals or parts during assembly.	461.00009.00		

https://truckmanualshub.com/

Recommended fluids and lubricants

■ **Engine oil**

Use 4-stroke engine oil in accordance with MIL-L-2104C / API CD or superior.
Verify always the quality in the attached etiquette in the container of the oil to make sure that the quality is the required.
Your machine leaves the factory with SAE 15W40 viscosity. However, depending on the environment temperatures, refer to the following chart **(fig. 1)** to select the proper viscosity.
If you use oils of different brands, drain completely the oil pan before adding the new oil.
AUSA recommends oil REPSOL AUSA EFFICIENT for Diesel engines p/n 461.00099.01

■ **Hydraulic Oil**

- VG 32 for environment temperatures usually below 50ºF (10ºC)
- VG 46 for environment temperatures between 50F to 120ºF (10ºC to 40ºC)
- VG 68 for environment temperatures above 120ºF (40ºC)

■ **Front axle and FullGrip® System**

Use oil for COMPEN AUSA which meets with the following characteristics:

- Friction coefficient modifying additives
- “Extreme Pressure” and anti-wear capacity
- Good antirust and anticorrosion characteristics
- Excelent thermal stability
- Avoids vibrations and noise

■ **Brake and inching fluid**

Only use SAE 10W Hydraulic Oil or ATF Fluid

Caution:

To avoid serious damage to the brake system or inching system do not use fluids other than the recommended one, or mix different fluids for topping up.

■ **Battery electrolyte**

This dumper is equipped with a type battery that requires maintenance. Add distilled water for missing electrolyte.

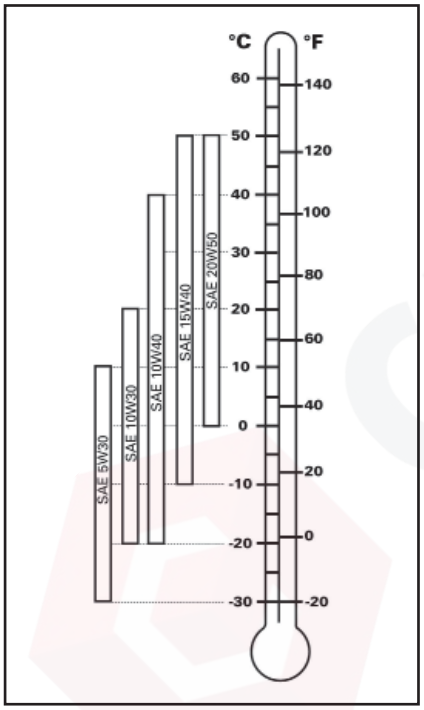

(fig. 1)

https://truckmanualshub.com/

Maintenance Chart

LUBRICATION AND MAINTENANCE CHART C400H-HI / C500H-HI / C400H-HI x4 / C500H-HI x4 **I:** Inspect, verify, clean, lubricate, replace if necessary **C:** Clean **L:** Lubricate **R:** Replace	EVERY													
	Initial Inspection (50 h)	100 h.	250 h.	400 h.	500 h.	800 h.	1000 h.	1500 h.	3000 h.	Week	Month	Year	2 Years	To be performed by
ENGINE														
Oil (1)	R		R									R		USER
Oil filter (1)	R				R									USER
Alternator Belt (1)	I	I			R								R	DEALER
Valve Clearance (2)							I							DEALER
Turbo charger (2)									I					DEALER
FUEL SYSTEM														
External air filter element (4)		C			R(6)							R		USER
Internal air filter element (4)			C				R(6)					R		USER
Intake air line			I										R	USER
Fuel pipes and clamps										I			R(2)	USER
Fuel filter cartridge				R										USER
Prefiltro combustible (1)	R		R											USER
Fuel tank					C									USER
Fuel injection nozzle injection pressure (2)								I						DEALER
Injection pump (timing) (2)									I					DEALER
Fuel injection timer (2)									I					DEALER
COOLING SYSTEM														
Radiator hoses and clamps bands			I										R	USER
Water jacket (radiator interior)					C									DEALER
Cooling system pressure test										I				USER
Radiator (exterior) (4)			C											USER
Coolant										I			R	USER
ELECTRICAL SYSTEM														
Battery electrolyte	I	I												USER
Battery connections										I				USER
Dash panel indicators / Warning lights (3)										I				USER
Battery											I		R	USER
Electric harness and loose connections												I		USER
HYDRAULIC CIRCUIT														
Oil and strainer (3)	R/C						R/C			I				DEALER
Hydraulic filter cartridge	R						R							USER
Mast operations (3)										I				USER
Pipes, hoses and fittings damages or leaks			I											USER
Hoses	REPLACE EVERY 6 YEARS													DEALER
Steering (3)										I				USER

(1) Initial inspection. The initial maintenance is very important and must not be neglected.
(2) To be performed by an authorized AUSA dealer.
(3) Daily inspection item.
(4) More often under severe use such dusty areas, sand, snow, wet or muddy conditions.
(5) ... or at least once a year.
(6) ....or after cleaning 6 times.

https://truckmanualshub.com/

LUBRICATION AND MAINTENANCE CHART C400H-HI / C500H-HI / C400H-HI x4 / C500H-HI x4 **I:** Inspect, verify, clean, lubricate, replace if necessary **C:** Clean **L:** Lubricate **R:** Replace	EVERY													
	Initial Inspection (50 h)	100 h.	250 h.	400 h.	500 h.	800 h.	1000 h.	1500 h.	3000 h.	Week	Month	Year	2 Years	To be performed by
GREASING POINTS														
Mast profiles										C/L				USER
Nipples (see section "Greasing points" in this Manual)										L				USER
Cables and articulations (throttle, lifting rams...)										L				USER
TRANSFER BOX														
4x2 models Oil (1)	R						R				I	R		USER
4x4 models FULL GRIP® SYSTEM Oil (1)	R				R						I	R		USER
Oil leaks											I			USER
Screws and nuts torque	I										I			USER
AXLES (FRONT AND REAR)														
Differential Oil (1)	R					R					I	R		USER
Planetary reduction (1)	R		I				R							USER
Oil leaks										I				USER
Fixation wheel nuts torque										I				USER
Chassis fixation screws (torque)					I									DEALER
Cardan joints fixation screws (torque)					I									DEALER
Flange fixation nut (torque)					I									DEALER
Condition of tires and pressures										I				USER
BRAKES														
Brake fluid (3)							R			I			R	USER
Brake pedal and master cylinder clearance (3)	I									I				USER
Service brake adjustment				I										DEALER
Negative brake adjustment	I						I							DEALER
BODY / FRAME														
FOPS / ROPS frame										I				USER
Seat belt (3)										I				USER
Access steps and handles (3)										I/C				USER
Guards and covers (3)										I				USER
Plates and decals (3)										I/C				USER
Safety systems / open cabin gas struts and safety prop										I				USER
Close cabin lock (3)										I				USER

(1) Initial inspection. The initial maintenance is very important and must not be neglected.
(2) To be performed by an authorized AUSA dealer.
(3) Daily inspection item.
(4) More often under severe use such dusty areas, sand, snow, wet or muddy conditions.
(5) ... or at least once a year.
(6) ....or after cleaning 6 times.

https://truckmanualshub.com/

Periodic Maintenance Operations

■ General comments

Only original AUSA spare parts should be used during maintenance operations. This is the only way to guarantee that the AUSA machinery will have the same operational level that it had upon delivery.
This forklift contains parts and systems which are subject of wearing and could require re-adjusting, in order to keep reliability of the machine and the safety of the operator, the environment and the surrounding area, such as for example, exhaust gas emissions. The necessary maintenance should be carried out regularly in order to ensure similar conditions to those existing on leaving the factory.
All repair and maintenance operations should be made while the forklift is unloaded, the parking brake applied and the wheels blocked in order to keep the forklift stationary. Disconnect the battery **(fig. 1)** before carrying out any work on the electrical system. Never use a flame to check fluid levels.

❀ Respect the environment

When changing oil or other fluids use a suitable container to collect the old fluid. Take care not to cause damage to the environment and take all the replaced materials (batteries, coolant, etc) to the appropriate recycling centres.
In the event of leaks of substances which may be harmful to persons or to the environment, immediately take the necessary measures to reduce their impact, for example in the case of oil leaks, plug the leak, use a recipient to collect the oil, sprinkle absorbent material or collect up and remove the contaminated soil if necessary.

■ Access to engine and transmission for maintenance

The engine, the transmission, the engine oil and hydraulic reservoirs and filters, and the engine coolant reservoir are located beneath the floor (cabin floor) of the operator's compartment (also referred to as the "operator's cabin") **(fig. 2)**.
Use the following procedures to access them:

- With the operator's sat, start the machine and tilt the mast fully forwards.
- Stop the engine and remove the key from the ignition.
- Move the joystick to the right until reaching the maximum forward tilt.
- Stop the engine and remove the key from the ignition switch.
- Get down from the driver's cabin.
- Pull lever **(a)** located at the rear of the cabin, behind the seat **(fig. 3)** to unlock the latch of the cabin, then lift and tilt it forward.
- The operator's compartment is tilted forward and upward by a gas strut on each side of the operator's compartment.

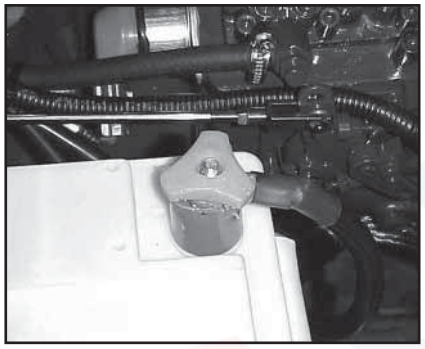
(fig. 1)

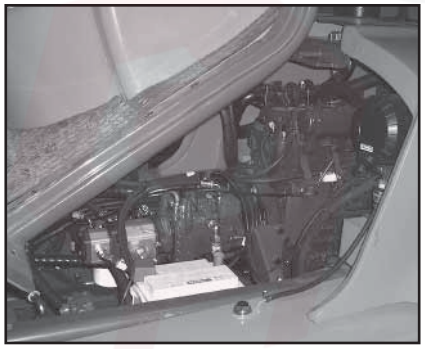
(fig. 2)

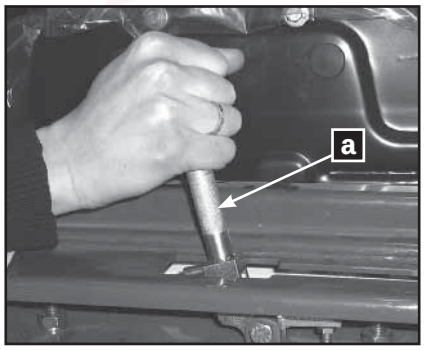

(fig. 3)

https://truckmanualshub.com/

Periodic Maintenance Operations

- To prevent the falling down of the cabin during carrying out maintenance operations it should be secured using the safety lock **(fig. 1, 2)**. This will prevent it from lowering and causing accident.

REMARK

Whenever the cabin is raised, the safety lock must be on. This prevents the cabin from causing an accident on descending.

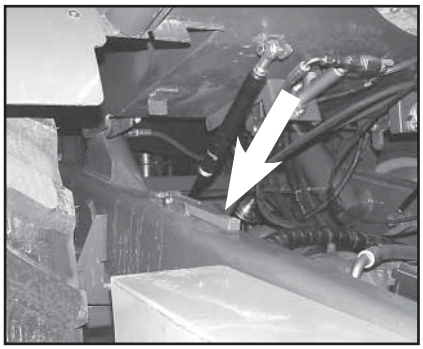
(fig. 1)

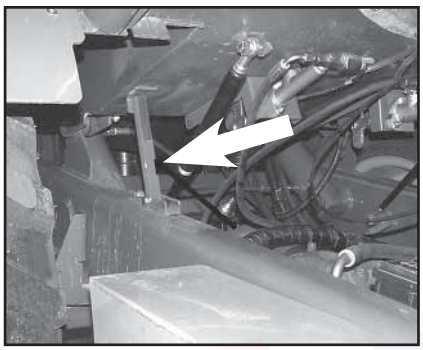
(fig. 2)

To access the upper part of the engine, after raising and securing the operator cabin, lift the inspection cover **(fig. 3)(a)** by pulling on the lock **(fig. 3)(b)**.

To access the sides of the engine, undo the bolt **(fig. 4)(c)** and nut **(fig. 4)(d)** and remove the rear wheel cover. There is a wheel cover on each side of the machine.

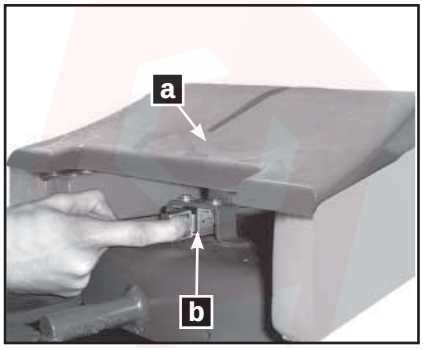

(fig. 3)

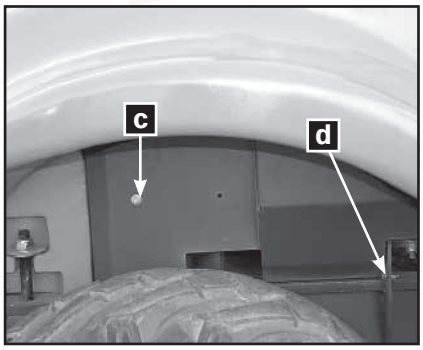

(fig. 4)

Daily checks

- Before starting to work with the forklift, clean any oil or fuel spills, clean and remove grease from hands and the soles of shoes and do not forget to make the following checks:
- Condition of the lifting chains
- Tyre pressure and condition of the tread.
- Brakes.
- Leaks in the hydraulic, coolant, fuel circuits, etc.
- Check the correct position and fastening of all the guards, caps and safety stops.
- Absence of cracks or other structural defects visible at first glance.

https://truckmanualshub.com/

Periodic Maintenance Operations

- Check that all the controls are operating correctly.
    - Check fluid levels:
    - fuel.
    - brake and inching fluid.
    - hydraulic circuit fluid.
    - coolant circuit fluid.

- Check that alarm and signaling devices are operating correctly (for example: acoustic warning, air intake filter blocked warning, etc.)

- Check that informative and safety plates on the forklift are clean and in good condition.

- Clean and check lighting and signaling system are operating correctly.

- Check electrical battery connections and level of electrolyte.

- Adjust the seat to your build.

Daily checks of the seatbelt for defects, such as:
- Cuts, loose threads & poor stitching.
- Wear or damage to anchor points.
- Poor operation of the seatbelt buckle or retracting roller.

Correct any problems before using the forklift.
When necessary, refer the problem to an authorized AUSA dealer.

склад.ру
техника и сервис

https://truckmanualshub.com/

Periodic Maintenance Operations

■ **Engine**

For operating instructions, list of spare parts and general maintenance, see the engine User's Manual or the **MAINTENANCE CHART**.

■ **Alternator belt**

Check the tension of the alternator belt regularly. Also check for cracks or other damage. Refer to an authorized AUSA dealer for the replacement of the alternator belt.

■ **Engine oil**

Oil level: Checking

With the forklift on a level surface, while the engine is cold and switched off, check the oil level as follows:

- Pull out the dipstick and clean it with a clean cloth.
- Set the dipstick into its casing.
- Remove again and check the oil level. This should be at the upper level **(fig.1)**.

a- Full
b- Add oil
c- Operating range

- Add oil until the level reaches the upper level.

Oil level: Correct

- Remove the dipstick and place a funnel in the opening of the oil filler neck located above the rocker arm cover.

CAUTION

Do not exceed the maximum level mark. Starting the engine with incorrect oil levels may cause serious damage. Clean up any spillage. Check the oil level often and top up where necessary.

- Top up with oil gradually until the level is correct.

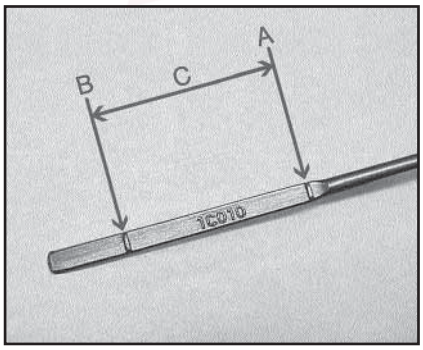

(fig. 1)

https://truckmanualshub.com/

Periodic Maintenance Operations

Engine oil: Draining

The oil change should be made when the oil is warm.

WARNING

The engine oil may be very hot. To avoid the risk of burns, do not remove the drain plug or unscrew the filter if the engine is hot. Wait until the engine oil is cooler.

- Make sure the forklift is on level ground.
- Remove the dipstick.
- Clean the area around the oil drain hose.
- Place a container below the oil drain hose **(fig. 1)**.
- Unscrew the oil drain hose **(a)**.
- Allow all the oil to drain from the engine.
- Clean the oil drain hose area.
- Screw on the plug and tighten.

Oil filter cartridge: Replacing

The oil filter cartridge **(fig. 2)(b)** is located on the left-hand side of the engine.

- Unscrew the oil filter cartridge by turning it to the left.
- Clean the base of the filter and oil the seal of the new filter element.
- Screw on the new filter element and tighten it by hand, without using mechanical means.

❀ Dispose of the used oil filter cartridge in an authorized centre for this purpose.

Engine oil: Filling up

- Remove the dipstick and place a funnel in the opening of the oil filler neck located above the rocker arm cover.
- Fill the engine to the recommended oil level. See **FLUIDS AND LUBRICANTS CHART** (references and capacities) in this Operator's and Safety Manual for oil specifications and capacity.
- Start the engine and leave idling for a few minutes. Check the areas around the oil filter and oil drain plug for leaks.
- Switch off the engine.

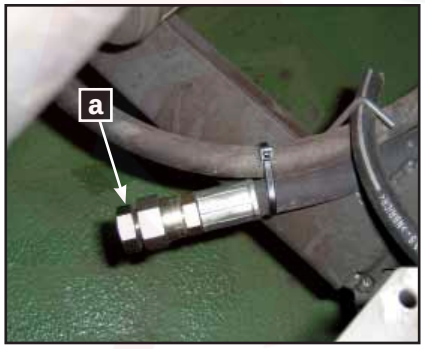

(fig. 1)

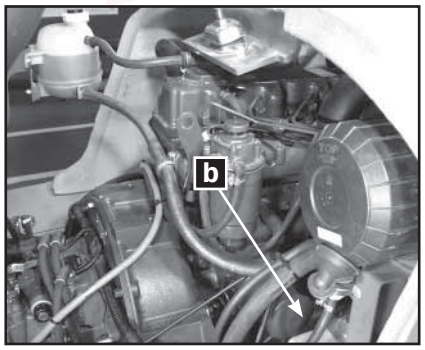

(fig. 2)

https://truckmanualshub.com/

Periodic Maintenance Operations

- Wait a few seconds to allow the oil to flow towards the engine oil pan and then check the level.

CAUTION

Do not exceed the maximum level mark. Starting the engine with incorrect oil levels may cause serious damage. Clean up any spillage. Check the oil level often and top up where necessary.

- Top up if necessary.

❀ Waste used oil in authorized centres.

■ **Coolant system**

Level of coolant: Checking

WARNING

Never remove the coolant reservoir cap while the engine is hot. Wait until the engine has cooled down.

The level of coolant should be between the “MIN” and “MAX” marks on the coolant reservoir **(fig. 1)**.

If the coolant level is below the “MIN” mark, top up the expansion tank with coolant. Check the engine, hoses and radiator for possible coolant leaks.

Coolant circuit: Draining

The coolant should be changed according to **FLUIDS AND LUBRICANTS CHART** (references and capacities), or when the circuit is drained for repair purposes. To do so, proceed as follows:

- Place a container below the radiator.
- Disconnect the lower radiator hose in order to drain the radiator here.

Coolant circuit: Filling and bleeding

- Before filling the circuit, re-connect the lower radiator hose.
- The circuit is filled through the coolant reservoir.

Proportions of coolant and distilled water:

Temperatures from -35 ºC to 145 ºC: 50 % glycol and 50 % distilled water.

- Start the engine until the thermostat opens.

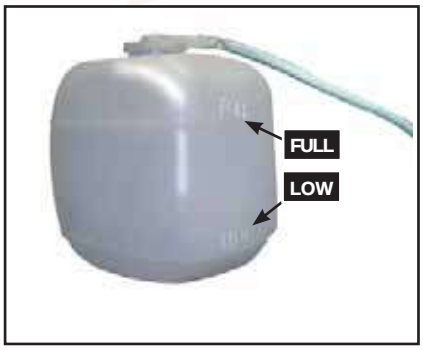

(fig. 1)

https://truckmanualshub.com/

Periodic Maintenance Operations

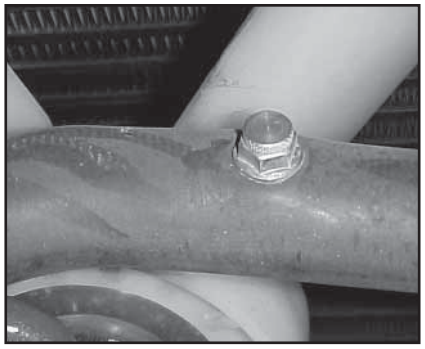

(fig. 1)

(fig. 2)

(fig. 3)

(fig. 4)

- Then, when the engine is cold, check the level of coolant in the coolant reservoir.
- If necessary, bleed the coolant air circuit using the bleeder located on the radiator hose **(fig. 1)**.

❀ Dispose of used coolant in authorized centres.

■ Air filter

Replacing

The air intake in the engine is through a dry filter **(fig. 2, 3)** with double element. The life of the engine and its performance largely depend on the correct maintenance of this filter.
The filters should be changed and cleaned as shown in the **MAINTENANCE CHART**. If the forklift is working in a dusty atmosphere the filter element should be replaced more often than that specified.

NOTE: The intake filter includes a filter blocked clogged indicator. If the warning light on the control panel lights up, the filter element should be cleaned or replaced as soon as possible.

CAUTION
Do not start the engine when there is water inside the air filter casing. When there are fluids or dirt inside the casing, the filter cartridges should be inspected, drained or replaced.

- Undo the left and right-hand staples of the filter cover and remove the cover.
- To clean the filter element, blow high-pressure air (maximum 72’5 PSI) through the element from the inside to the outside while turning.
- Also clean the interior of the filter casing.

Air filter blocked warning light. check the working.

- Disconnect the wiring from the air filter clogged indicator.
- Make a bridge between the connector contacts using, for example, a small diameter piece of electrical cable.
- The air filter blocked warning light on the multi-function instrument should light up.
- If the warning light does not light up, contact a AUSA dealer.

https://truckmanualshub.com/

Periodic Maintenance Operations

■ **Fuel pre-filter**

Replacing
The fuel pre-filter is located next to the fuel tank, on the inside of the chassis.

WARNING

Always replace this component. Never try to clean it.

a- Brackets
b- Fuel pre-filter

- Remove the fastening brackets and the filter.
- Make sure that the new filter is fitted in the correct direction as shown by the arrow on the body of the filter.

❀ Dispose of remains of fuel in authorized centres.

■ **Fuel filter**

- Unscrew, by turning to the left, the cartridge **(c)** of the fuel filter **(fig. 2)** located on the left-hand side of the engine and remove it from the support.
- Clean the base and oil the seal of the new filter.
- Screw on the new filter element and tighten by hand, without using mechanical means.

❀ Dispose of remains of fuel in authorized centres.

WARNING

Take care to correctly tighten the filter element otherwise the circuit may suction air from the outside, causing faults in the supply to the engine.

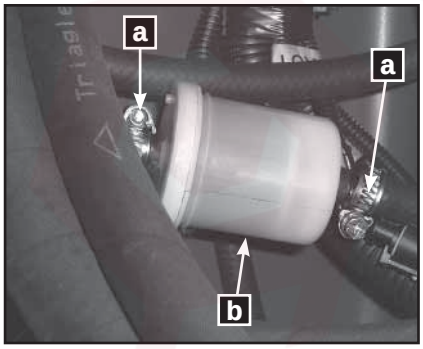

(fig. 1)

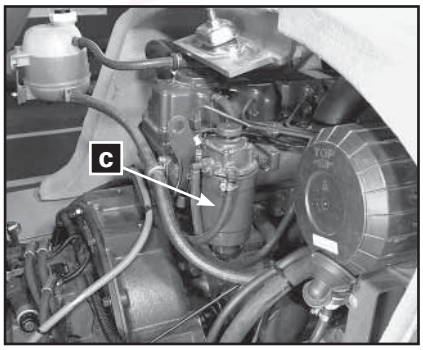

(fig. 2)

https://truckmanualshub.com/

Periodic Maintenance Operations

Drain the water from the fuel filter (fig. 1)

The fuel used may contain water which is deposited on the lower part of the filter element. To protect the fuel injection system it is essential to drain the water from the filter element regularly as shown in the **MAINTENANCE CHART**.

- Unscrew the drainage cap **(a)** located on the lower part of the filter element.
- Wait until all the water in the filter has drained off.
- Tighten the drainage cap **(a)**.

❀ Dispose of remains of fuel in authorized centres.

WARNING

Take care to correctly tighten the drainage cap. If it is loose, unwanted air may enter the injection system and cause the engine to operate incorrectly.

■ **Tilting the mast while the engine is stopped (emergency movement)**

It is possible to tilt the mast of the forklift (emergency movement) forwards with the ignition off. To do so, proceed as follows:

- Locate the emergency movement connector under the dash panel, next to the steering column **(fig. 2)**.
- Remove the protective cover from the connector by lifting the locking tab and moving it forwards.
- With the help of an external battery supply the connector with + 12V DC and earth (-) as follows:
  Connector, contact 1: + 12V DC
  Connector, contact 2: earth (-)
- Push the joystick **(fig. 3)** to the right in order to tilt the mast.

Note: To help this movement, we recommend applying a small load on the end of the forks.

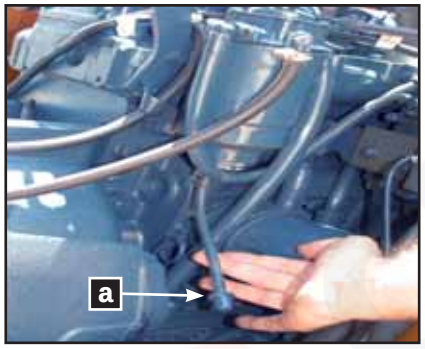

(fig. 1)

(fig. 2)

(fig. 3)

https://truckmanualshub.com/

Periodic Maintenance Operations

■ **Parking brake**

Oil: Replacing
If the brake pedal lowers excessively, refer to the authorized AUSA dealer for adjusting, bleeding or replacement of the inner discs.

Releasing the parking brake while the engine is stopped:

- This operation should be carried out following the instructions given in **"Towing the forklift"** in this Operator's and Safety Manual.

■ **Service brake**

Adjusting (fig. 1)

If the pedal has excessive free play, this can be corrected using the push rod **(a)** of the pedal which operates the brake pump. This has a system of nut and locknut. Allow the push rod to have a free play of between 0'04 and 0'06 in., making sure that the pump is free of internal pressure.
If, on applying the service brake, the pedal lowers too much it should be adjusted. To do so, contact an AUSA authorized dealer.

To replace the brake discs contact an authorized AUSA dealer.

Chek that, when the brakes are released (pressure inserted), levers **(19)** do lean against the screws **(18)** without prestressing them and make sure that a clearance **(b)** is left between cylinder **(4)** an d lever **(19)**. Also check that when pressure is released, piston **(13)** projects out by 0'16 ÷ 0'19 in (4 ÷ 5 mm) **(fig. 2)**.

Brake and inching fluid: Checking the level

With the forklift parked on a level surface, the level of the brake fluid in the tank should lie between the marks MIN. and MAX. **(fig. 3)**.

If necessary, top up the brake fluid in the tank:

- Unscrew the filler cap and use a funnel to prevent spillage.
- Top up with fluid until the level reaches the MAX. mark.
- Close the filler cap by screwing it on again.

Note: While topping up, do not exceed the MAX. mark.

WARNING

If it becomes necessary to top up the brake fluid frequently, it is possible that the brake system has a leak. Park the forklift correctly (See the section **PARKING THE FORKLIFT TRUCK**) and consult an authorized AUSA dealer.

Brake an inching fluid: Replacing

The replacement of brake fluid or any repair to the brake system should be carried out by an authorized AUSA dealer.

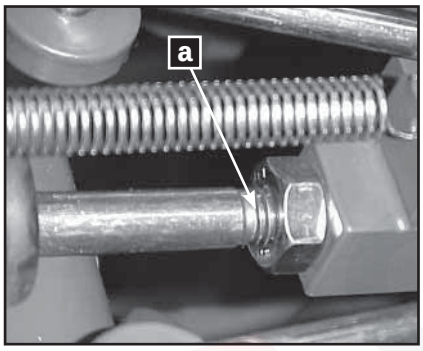

(fig. 1)

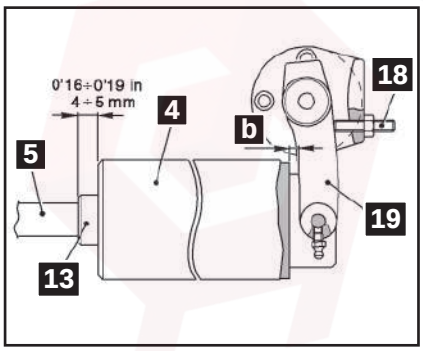

(fig. 2)

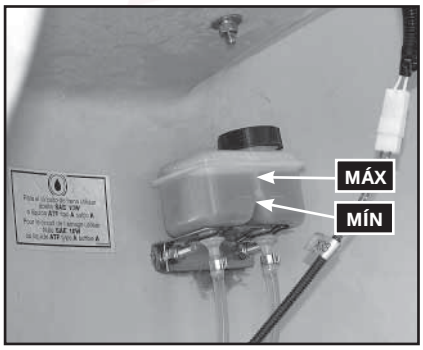

(fig. 3)

https://truckmanualshub.com/

Periodic Maintenance Operations

■ Transfer box oil level

Checking

- To check the oil level unscrew the cap **(b)(fig. 2)**.

Draining

- To drain the oil, unscrew the plug located on the lower part **(c)(fig. 3)**.

Topping up

- Top up with the specified oil through the filler cap **(a) (fig. 1)** bleeder located on the upper part. See the **FLUIDS AND LUBRICANTS CHART** (references and capacities) in this Operator's and Safety Manual for oil specs. and capacity.

❀ Dispose of used oil in authorized centres.

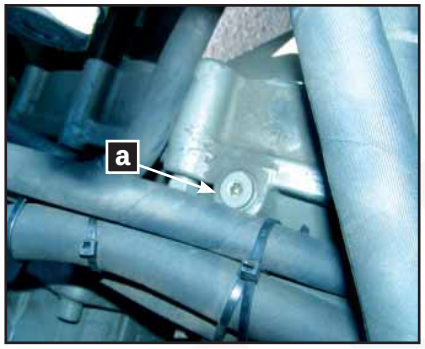

(fig. 1)

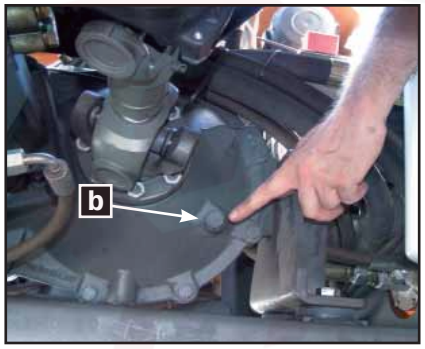

(fig. 2)

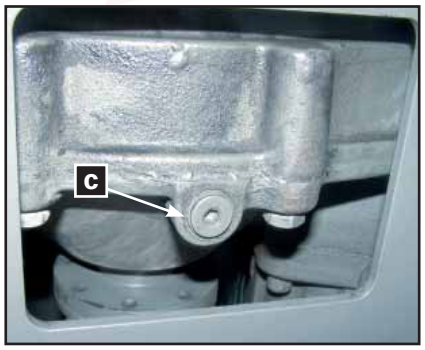

(fig. 3)

https://truckmanualshub.com/

Periodic Maintenance Operations

■ Oil level on front axles

This should be checked while the forklift is on flat ground. The oil of the differentials and the final drive is connected internally. **(Fig. 4) (a)** filling / **(b)** checking hole; **(c)** draining hole.

Differential: Topping up

- Fill with the specified oil through the opening of the plug **(a)**. See the **FLUIDS AND LUBRICANTS CHART** (references and capacities) in this Operator's and Safety Manual for oil specs. and capacity. **(fig. 4)(a)**.

Differential: Checking the level

- To check the oil level in the differentials use the cap **(fig. 4)(b)**.

Differential: Draining

- To check the oil level in the differentials use the cap **(fig. 4)(c)**.

❀ Dispose of used oil in authorized centres.

■ Oil level in the rear axles differential (4x4 models)

This should be checked while the forklift is on flat ground. **(Fig. 5)** Filling / checking hole **(a and b)**; draining hole **(c)**.

Checking

- To check the oil level unscrew the cap **(a-b) (fig. 5**). The oil should be at the level of the casing.

Draining

- To drain the oil, unscrew the plug **(c)** located on the lower part.

Topping up

- Fill with the specified oil through the opening of the plug **(a-b)**. See the **FLUIDS AND LUBRICANTS CHART** (references and capacities) in this Operator's and Safety Manual for oil specs. and capacity.

❀ Dispose of used oil in authorized centres.

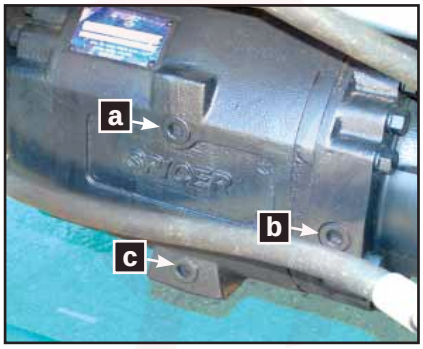

(fig. 4)

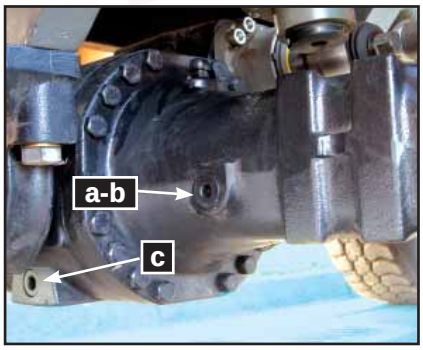

(fig. 5)

https://truckmanualshub.com/

Periodic Maintenance Operations

■ **Oil level in planetary reductions (front and rear axles)**

WARNING

Never remove the drain plug of the final reductions when the oil is hot. The gases formed in the interior may cause injury.

Planetary reduction: Checking the level

- Turn the wheel until the mark “Oil Stand Level” on the reducer is horizontal.
- To check the oil level in the final reductions use the cap **(fig. 1) (a)**.

Planetary reductions: Draining

- Remove the wheel.

WARNING

If is necessary to remove the drain plug while the oil is still hot, place it on the upper part of the wheel hub, and remove the plug carefully covering it with a cloth or similar.

- To drain the oil, turn the wheel hub until plug **(fig. 2)(b)** is located on the lower part of the wheel hub.

❀ Dispose of used oil in authorized centres.

Planetary reduction: Topping up

- Turn the wheel until the mark “Oil Stand Level” on the reducer is horizontal.
- Fill with the specified oil through the opening of the plug **(b)**. See the **FLUIDS AND LUBRICANTS CHART** (references and capacities) in this Operator’s and Safety Manual for oil specs. and capacity.

■ **Hydraulic oil**

Level: checking

This should be checked while the forklift is on flat ground, the forks are lowered to rest position and the engine is switched off.

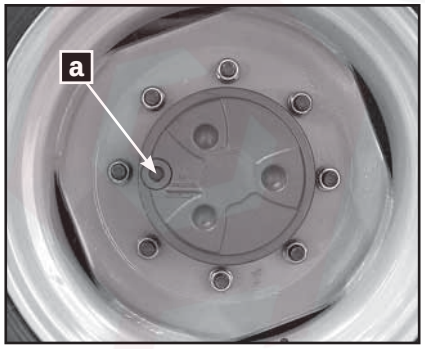

(fig. 1)

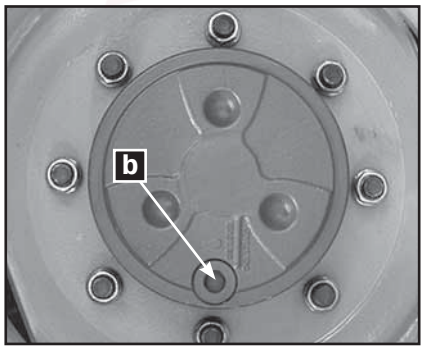

(fig. 2)

https://truckmanualshub.com/

Periodic Maintenance Operations

Note: The oil tank is equipped with an oil level low warning light. When this level is reached, the light on the multi-function instrument lights up and an acoustic warning is emitted. Add oil immediately to prevent damage to the hydraulic pumps.

- Loosen the plug **(fig. 1)(a)**.
- Check the oil level by checking the level indicator **(Fig. 3) (c)** placed over the step.
- If necessary, top up with oil through the plug hole.

Draining

- The tank is drained through plug **(fig. 2)(b)** on the lower part of the tank.

❀ Dispose of used oil in authorized centres.

Topping up

Fill with the specified oil through the plug hole **(Fig. 1) (a)**. See **FLUIDS AND LUBRICANTS CHART** (references and capacities) in this Operator's and Safety Manual for oil specs. and capacity.

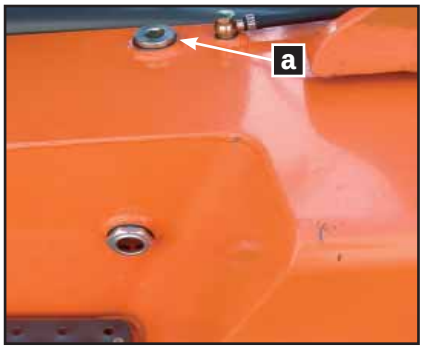

(fig. 1)

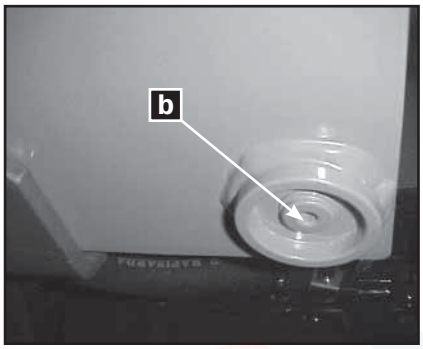

(fig. 2)

Clean the hydraulic oil strainer

There is a oil strainer filter located on the interior of the tank in the hydraulic circuit. This is a metal filter which should be cleaned every time the hydraulic oil is drained.

- To do so, remove the 6 screws **(d)** from the plate **(fig. 4)**.
- Before assembling, check the condition of the seal and replace if necessary.

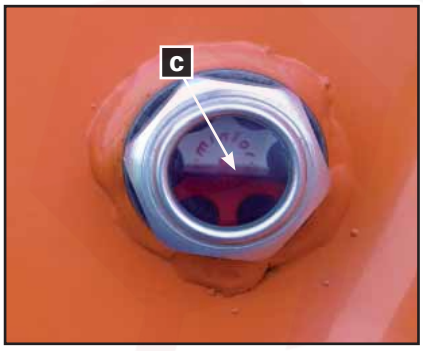

(fig. 3)

■ **Hydraulic hoses**

All the hydraulic hoses should be replaced at least every 6 years.

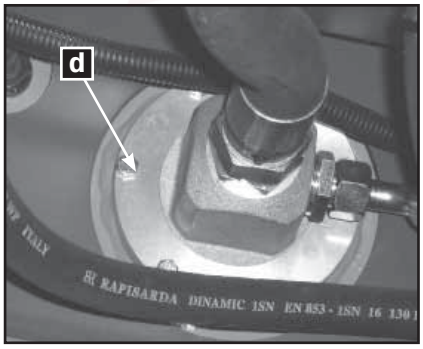

(fig. 4)

(fig. 5)

https://truckmanualshub.com/

Periodic Maintenance Operations

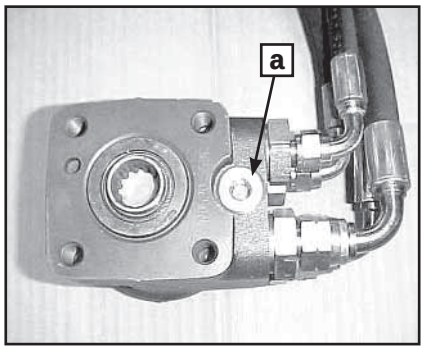

(fig. 1)

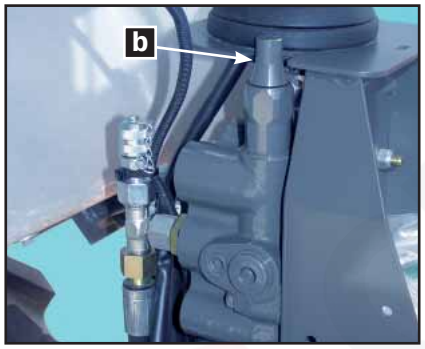

(fig. 2)

(fig. 3)

(fig. 4)

■ Hydraulic system safety valves: trimming

There are two safety valves for preventing overpressure: one on the steering circuit and one on the mast operating circuit. The first is located on the hydraulic steering **(fig. 1)** and the second on the control valve **(fig. 2)**. These valves are set to the correct pressure in the factory, but their trim should be checked regularly and adjusted accordingly.
The trimming should be carried out by personnel with a good knowledge of hydraulics and suitable tools. The pressures should never exceed those given in the section **TECHNICAL SPECIFICATIONS** in this Operator's and Safety Manual.

Hydraulic steering valve

- Remove the plug **(fig. 1) (a)**.
- To increase the hydraulic pressure turn the interior screw clockwise using a screwdriver. To reduce the pressure, turn the interior screw in the opposite direction.

Control valve

- Remove the seal.
- Remove the plastic cover.
- Unscrew the metal cap **(fig. 2) (b)** and loosen the locknut.
- To increase the hydraulic pressure turn the screw clockwise using an allen key. To reduce the pressure, turn the interior screw in the opposite direction.

■ Hydrostatic transmission filter: Replacing

The hydrostatic circuit has a cartridge filter **(fig. 3)** which should be replaced regularly (See **MAINTENANCE CHART**).

- Undo the cartridge filter by turning it to the left.
- Clean the base of the filter and oil the seal of the new filter element.
- Screw on the new filter element and tighten by hand, without using mechanical means.

Check whether the filter needs replacing (vacuometer).

The filter support has a filter clogged indicator **(fig. 4)**. When the engine is running the needle should lie in the green zone, or at a maximum, in the yellow zone. If the needle approaches or lies in the red zone, replace the cartridge filter as soon as possible.

WARNING

Take care to correctly tighten the filter element otherwise the circuit may suction air from the outside, causing faults in the transmission.

https://truckmanualshub.com/

Periodic Maintenance Operations

■ **Wheels**

WARNING

Unless it is imperative for the work to be carried out, given that the machine does not have suspension, the use of solid tyres is not recommended, as this increases the effect of impacts on the transmission and the operator.

Tyre pressure: Checking

If possible, the tyres should be inflated by specialised personnel.
The following operations are recommended, in particular for the front wheels:

Checking and inflating tyres: Safety measures

WARNING

The tyre pressures of the forklift are very high. Inflating the wheels could be dangerous if not performed with care.

- Inflate the forklift tyres when cold to the pressure given by AUSA before starting the day's work (See the section **TECHNICAL SPECIFICATIONS** in this Operator's and Safety Manual).

- Checking tyre pressures and inflation should be carried out with a manometer in good condition fitted with a nozzle with safety clip. The safety clip is essential for preventing the manometer nozzle from coming off the tyre valve during inflation, which could cause serious injury to the operator.

- Use gloves to protect hands.

Wheel mounted on the machine

This should be checked while the forklift is on flat ground, the forks are lowered to rest position and the engine is switched off.

Wheel dismounted

- Place the tyre in a cage or other device suitable for inflating tyres of this nature.

Wheel nuts: Tightening torque

The tightening torque of the wheel nuts should be checked every week. The exact values of the wheel nut torques are given in the attached table.

- Use a torque wrench in good condition to check the tightening torque of the wheel nuts.

https://truckmanualshub.com/

Periodic Maintenance Operations

- If pneumatic wrenches have been used, the torques should still be checked using a torque wrench.

- Do not force the torque wrench by using extensions (pipes or similar).

Tightening Torque		
	Front wheels	**Rear wheels**
C400H-HI / C500H-HI (Nm)	650 ± 100 Nm	350 ± 30 Nm
C400H-HI x4 / C500H-HI x4 (Nm)	650 ± 100 Nm	470 ± 30 Nm
C400H-HI / C500H-HI (lbf·ft)	480 ± 74 lbf ft	258 ± 22 lbf ft
C400H-HI x4 / C500H-HI x4 (lbf·ft)	480 ± 74 lbf ft	346 ± 14 lbf ft

■ Mast: tension and length of mast chains

The tension and length of the mast chains should be checked regularly. They stretch gradually due to the strain applied to them.
The mast chains should be replaced when their nominal length has increased by 3%.
Length can be checked by counting the links in 39.4in (1m) of 1” (25.4mm) chain. Nominally there should be the length of 39 links. The change should be made when there is the length of 40 links.
The chain is tensioned by turning the stop nut **(fig. 1)** of the tensioning rods.

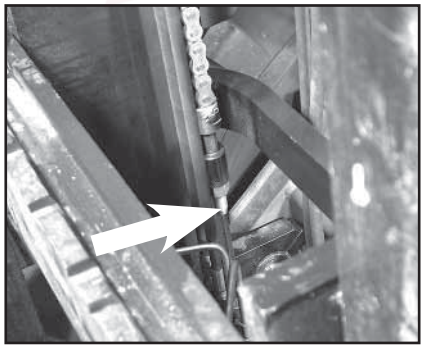

(fig. 1)

https://truckmanualshub.com/

Periodic Maintenance Operations

■ Lubrication

Rear axle

C400H-HI / C500H-HI

1 nipple on the central articulation of the axle **(fig. 1)**.
2 nipples, one on each wheel pivot **(fig. 2)**.

C400H-HI x4 / C500H-HI x4

2 nipples on the central articulation of the axle **(fig. 3)**.
4 nipples, two on each wheel reduction joint **(fig. 4)**.

Cardan shafts

All models

2 nipples, one on each cross **(fig. 5)**.
1 nipple on the grooving **(fig. 5)**.

Brake cylinder pins

All models

2 nipples, one on each side **(fig. 6 and fig. 7)**

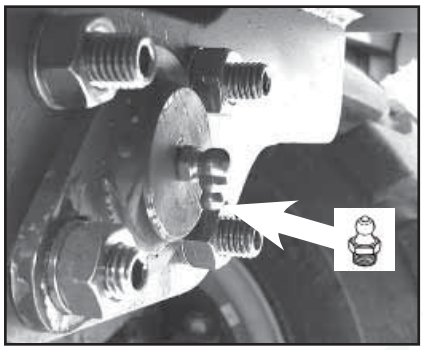

(fig. 1)

(fig. 2) (fig. 3) (fig. 4)

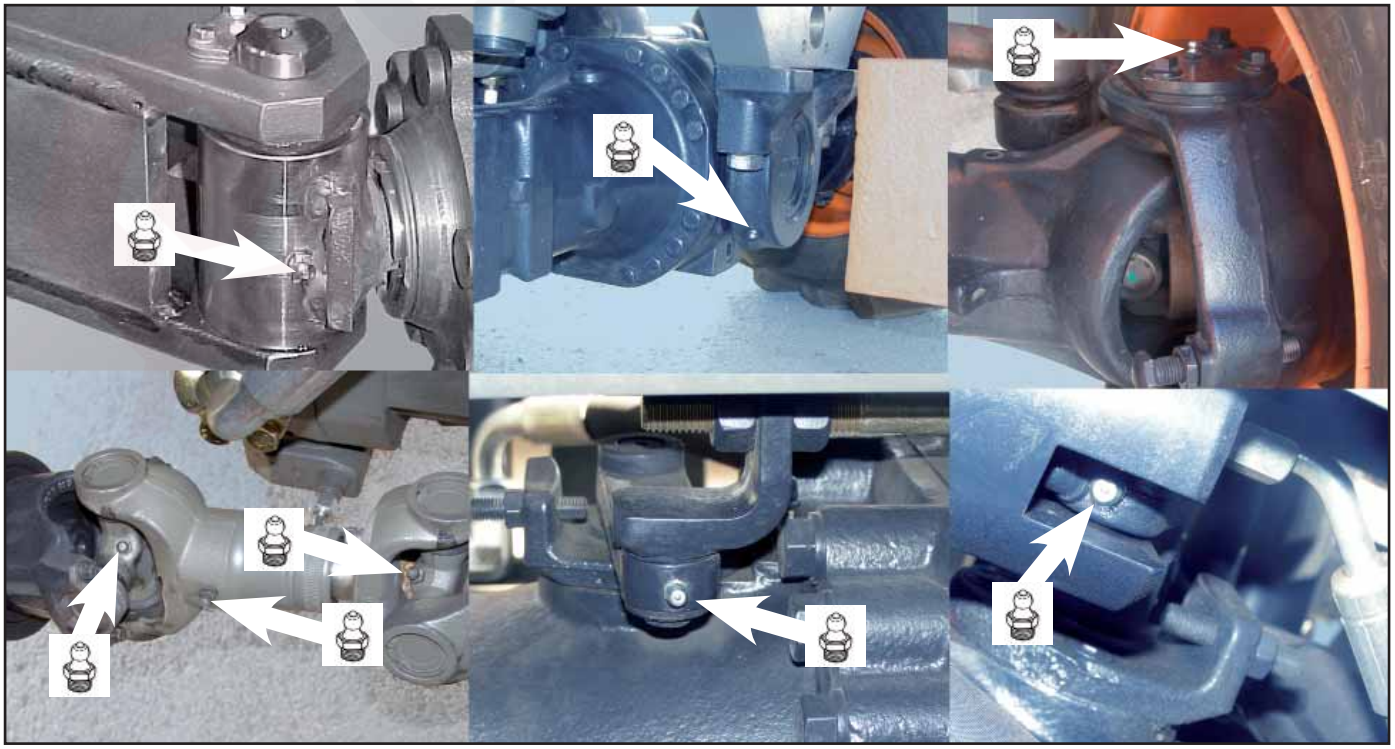

(fig. 5) (fig. 6) (fig. 7)

склад.ру техника и сервис

https://truckmanualshub.com/

Periodic Maintenance Operations

- **Mast articulation supports (fig. 1)**
  2 nipples, one on each pin of the mast articulation.

- **Mast articulation with the tilting cylinder (fig. 1)**
  2 nipples, one on each support of the articulation.

- **Tilting cylinder articulation with the chassis (fig. 1)**
  2 nipples, one on each support.

- **Articulations of the controls (fig. 2)**
  Inching pedal.
  Brake pedal.

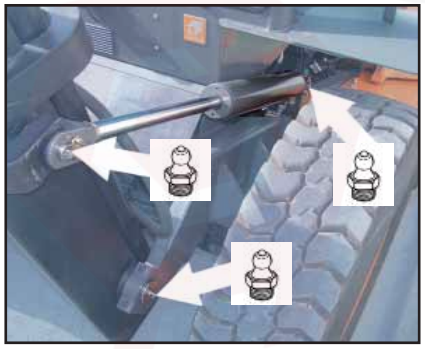

(fig. 1)

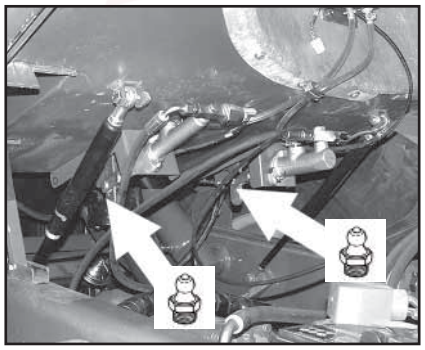

(fig. 2)

склад.ру
техника и сервис

https://truckmanualshub.com/

Periodic Maintenance Operations

■ **Lighting and signaling system** (✶)

Indicator, parking, reverse, left and right side light bulbs: replacing (fig. 1).

- Undo bolts **(a)** and remove the lens.
- Remove the bulb by pressing it gently inwards and turning it to the left at the same time in order to release it from the lamp holder.
- Replace the bulb with a new bulb of the same type and power.

Operating beacon bulbs: replacing (fig. 2).

- Undo bolts **(b)** and remove the rear housing of the operating beacon.

Operating beacon bulb:

- Remove the connector from the bulb.
- Undo the clip fastening the bulb by pressing it inwards and to the right at the same time.
- Replace the bulb with a new bulb of the same type and power.

CAUTION
Do not touch the surface of the glass of the bulb. If it is dirty wipe gently using a clean dry cloth.

- Secure the clip again by pressing it inwards and to the left at the same time.

Indicator bulb:

- Remove the connector from the bulb.
- Remove the bulb by pressing it gently inwards and turning it to the left at the same time in order to release it from the lamp holder.
- Replace the bulb with a new bulb of the same type and power.

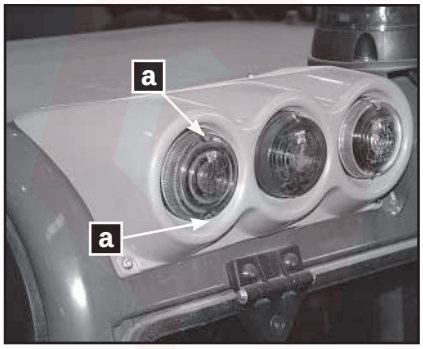

(fig. 1)

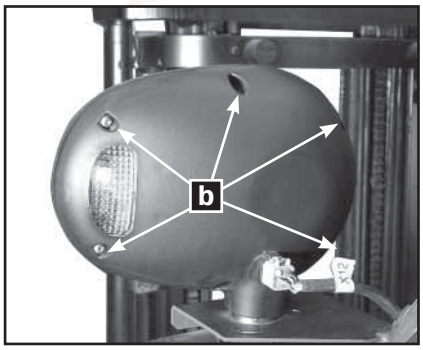

(fig. 2)

https://truckmanualshub.com/

Periodic Maintenance Operations

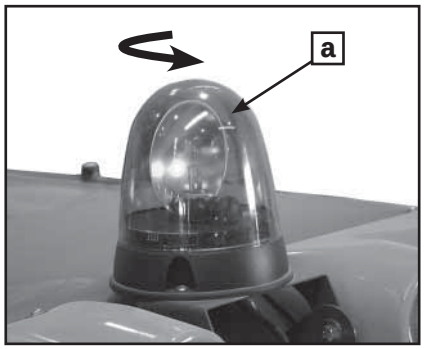

(fig. 1)

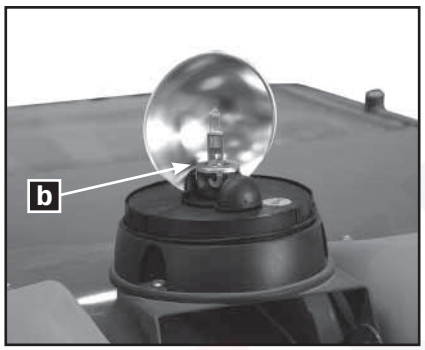

(fig. 2)

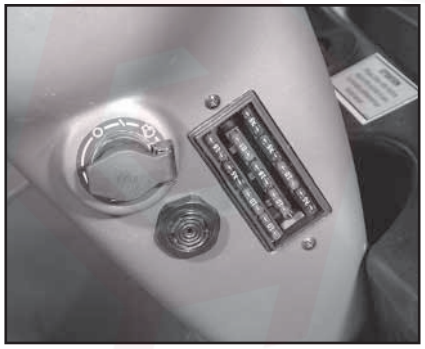

(fig. 3)

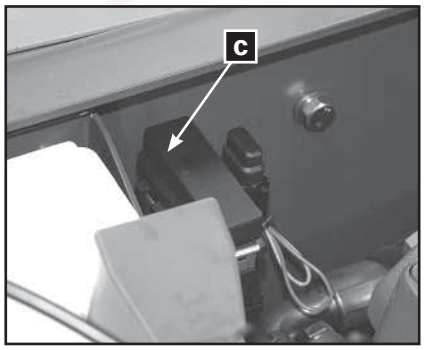

(fig. 4)

Rotating beacon bulb: replacing (fig. 1, 2)

- Turn the amber cover **(a)** of the rotary beacon to the left and remove.
- Unhook the plate **(b)** holding the bulb by pressing it inwards and to the left at the same time.
- Replace the bulb with a new bulb of the same type and power.

CAUTION
Do not touch the surface of the glass of the bulb. If it is dirty wipe gently using a clean dry cloth.

- Fasten the plate holding the bulb by pressing it inwards and to the right at the same time.

■ Electrical system

Steering column fuses: checking (fig. 3)

- Switch off the ignition.
- Remove the protective cover from the fuses by pulling it outwards.
- The burnt fuse can be recognised as the metal strip which is visible in the centre of each fuse will have melted (viewing window).
- Remove the burnt fuse and replace with a new fuse of the same type.

CAUTION
Do not use fuses of a higher value, this could cause major damage.

Battery fuses: checking (fig. 4)

- Switch off the ignition.
- Remove the protective cover from the fuses **(c)**.
- The burnt fuse can be recognised as the metal strip which is visible in the centre of each fuse will have melted (viewing window).
- Remove the burnt fuse and replace with a new fuse of the same type.

CAUTION
Do not use fuses of a higher value, this could cause major damage.

https://truckmanualshub.com/

Periodic Maintenance Operations

■ **Windscreen wiper blade (✶): replacing (fig. 1)**

- Loosen screws **(a)** to remove the blade from the windscreen wiper arm.
- Replace blade.
- Check that the screws **(a)** hold the blade tightly to the wiper arm.

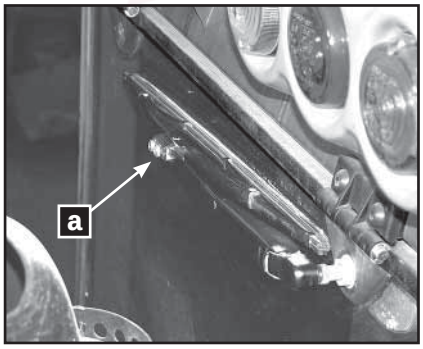

(fig. 1)

склад.ру
техника и сервис

https://truckmanualshub.com/

Transporting the forklift

■ **Safety measures for loading the forklift onto a lorry or trailer using ramps**

CAUTION
Before loading the forklift onto a lorry or trailer make sure that ramp is strong enough to bear the weight of the forklift. The lorry platform should be clean, and never greasy or frozen. Do not transport the forklift with a full tank of fuel.

■ **Loading the forklift onto a lorry or trailer using ramps**

- Fasten the seatbelt.
- Drive the forklift up or down the ramps slowly and carefully.
- Set the forward-reverse directional travel control switch to neutral.
- Apply the parking brake.
- Lower the forks as far as possible.
- Place a bulk under the ends of each fork and tilt the mast slightly forwards.
- Stop the engine and remove the key from the ignition switch.
- Once the machine has been loaded onto the lorry / trailer, place chocks behind each of the four wheels.
- Tie the forklift tightly to the platform using suitable securing systems (chains, belts or slings) making sure that these are sufficiently strong and suited to this purpose **(fig. 1)**.
  Use the four eyes welded onto the chassis of the forklift for this purpose **(fig.2)**.

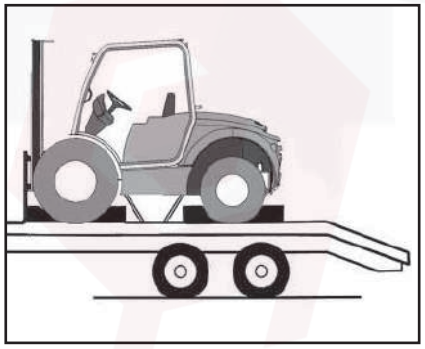

(fig. 1)

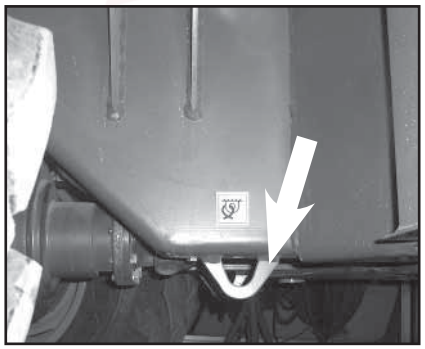

(fig. 2)

https://truckmanualshub.com/

Transporting the forklift

■ **Safety measures for loading the forklift onto a lorry or trailer using a crane**

WARNING

The lorry or trailer platform should be clean, and never greasy or frozen.
Do not transport the forklift with a full tank of fuel.

WARNING

This forklift is not design to travel with elevated load or with the mast tilted forward.
Do not tilt forward the mast with the forks elevated except to pick up or deposit the load.
The fully forward tilting mast angle is only intended to transport the forklift onto a truck bed, always without load.
For operating with load do not exceed 10º for the forward tilting mast angle.

- When loading a forklift onto a lorry using a crane and cable or sling, hook the cable or sling as shown in the figure **(fig. 1)**.
- The slings used at the front should be at least 8ft. 2’5in (2,5 m) length.
- Before lifting the forklift, make sure that the cable or sling is securely attached.
- While lifting the forklift, no-one is permitted inside the cabin or within a 16ft. 5 in. radius.
- Make sure that the angle of the front sling is approximately the same as that of the mast.

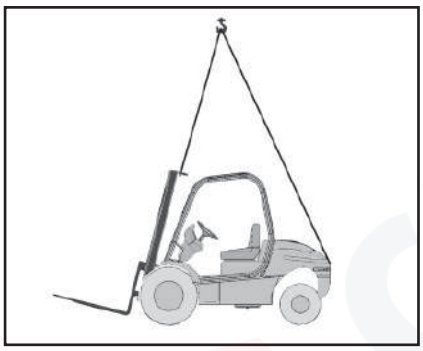

(fig. 1)

■ **Loading the forklift onto a lorry or trailer using a crane**
Observe the following:

- The slings used at the front should be at least 8ft. 2’5in (2,5 m) length.
- Make sure that the angle of the front sling is approximately the same as that of the mast.
- Once the machine has been loaded onto the lorry / trailer, place blocks behind each of the four wheels.
- Tie the forklift tightly to the platform using suitable securing systems (chains, belts or slings) making sure that these are sufficiently strong and suited to this purpose **(fig. 2)**.

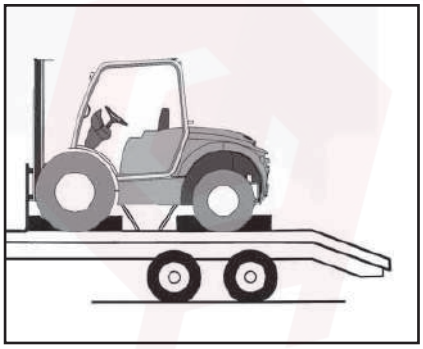

(fig. 2)

Use the four eyes welded onto the chassis of the forklift for this purpose **(fig. 3)**.

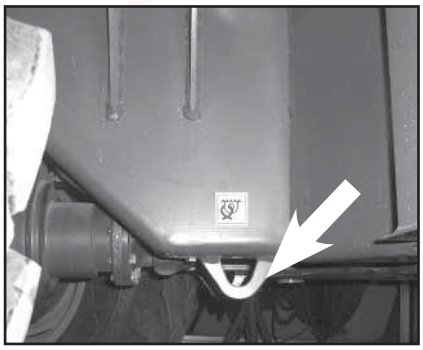

(fig. 3)

https://truckmanualshub.com/

Transporting the forklift

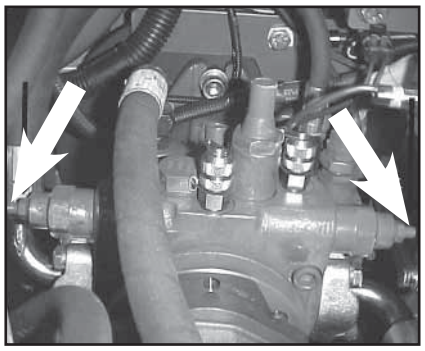

(fig. 1)

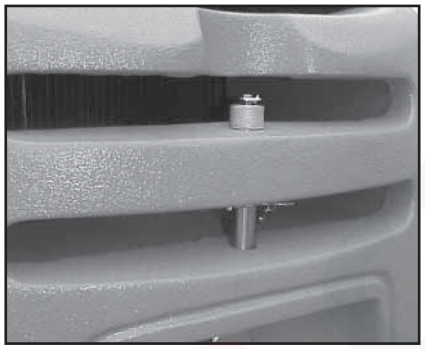

(fig. 2)

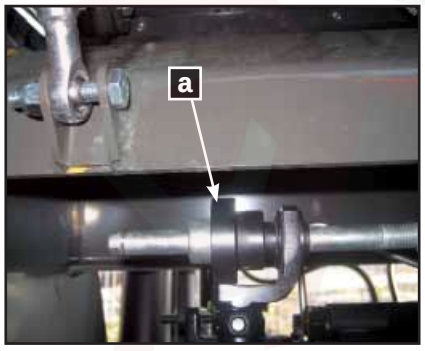

(fig. 3)

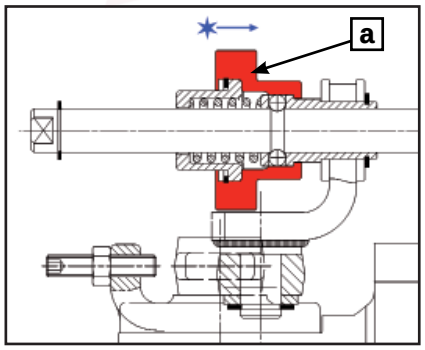

(fig. 4)

■ Towing the forklift

Conditions for towing the forklift

The forklift should only be towed in the event of breakdown when there is no other alternative, as this could seriously damage the hydrostatic transmission. Wherever possible, the repair should be carried out at the point of breakdown. In the event that this is not possible, the forklift should be towed over short distances and at low speeds.

- Before towing the forklift, tighten (but not over-tighten) the central bolts of the maximum pressure valves of the hydrostatic pump, to do so loosen the counter nuts **(fig. 1)**.

- After repairing the machine, loosen the central bolts of the maximum pressure valve of the hydrostatic pump and re-tighten the counter nuts.

- The forklift should be towed using a solid towing bar to prevent any lateral oscillation. The bar should be fixed to the rear bolt of the counterweight **(fig. 2)**.

■ Release the parking brake (fig. 3, 4)

In the event that the parking brake is blocked, due, for example, to a loss of brake fluid, or because the engine does not start, release the parking brake by moving the ring **(a)** of the brake cylinder to the right side. Gently tap the ring with a nylon hammer. The ring is located at the top left of the differential.

WARNING

Any repair to the brake system should be carried out by an authorized AUSA dealer.

https://truckmanualshub.com/

Electrical circuit diagram

Cables: Colour chart

Cables colours	
A	Light blue
B	White
C	Orange
G	Yellow
H	Grey
L	Blue
M	Brown
N	Black
R	Red
S	Pink
V	Green
Z	Violet

Remark: In the bicolor cables, the longitudinal or traverse shape of the marks on the protective coating are to indicate the color. For example:

G-V -Yellow / Green with traverse marks.
G/V -Yellow / Green with longitudinal marks.

https://truckmanualshub.com/

Electrical circuit diagram

1

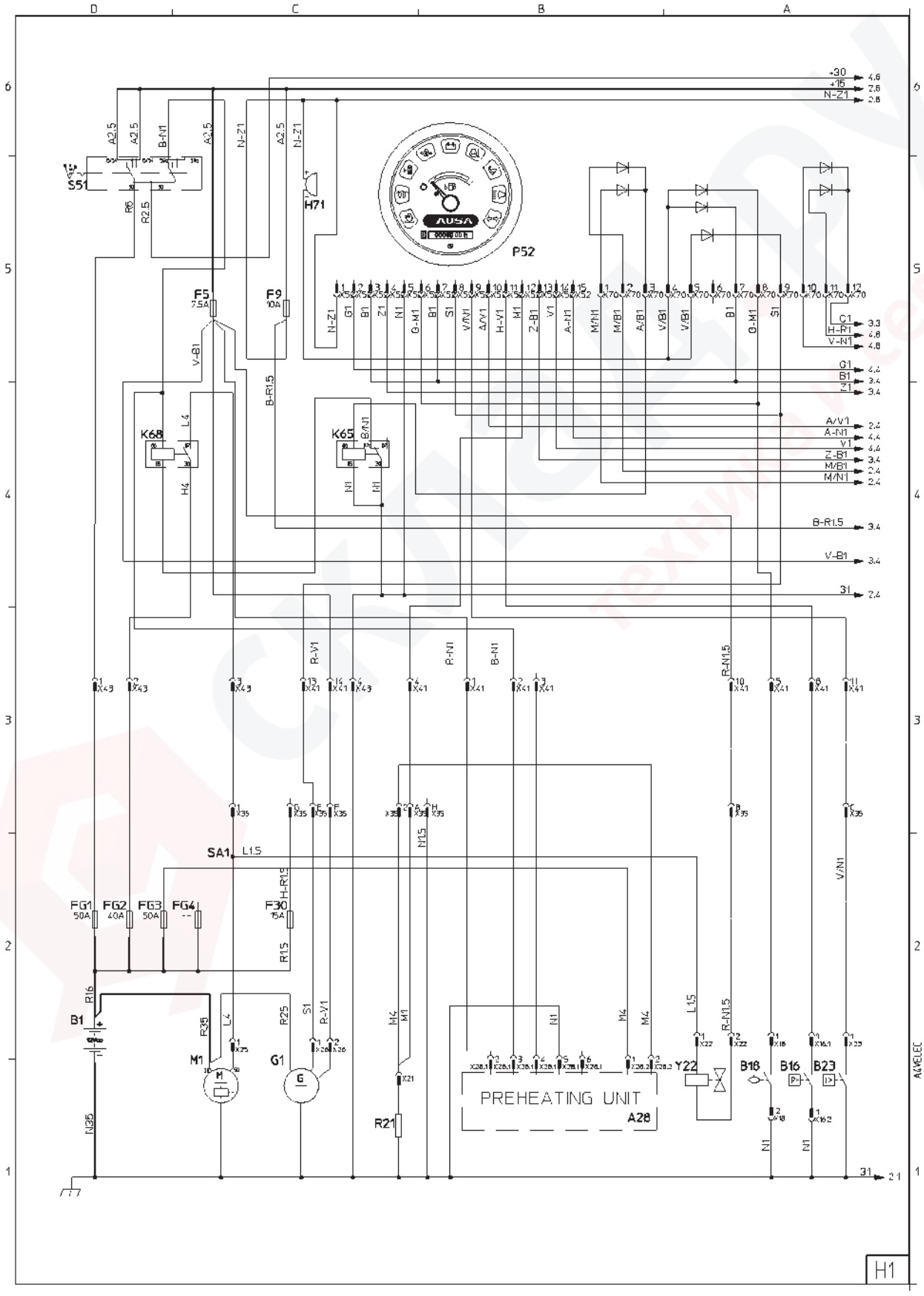

https://truckmanualshub.com/

Electrical circuit diagram 2

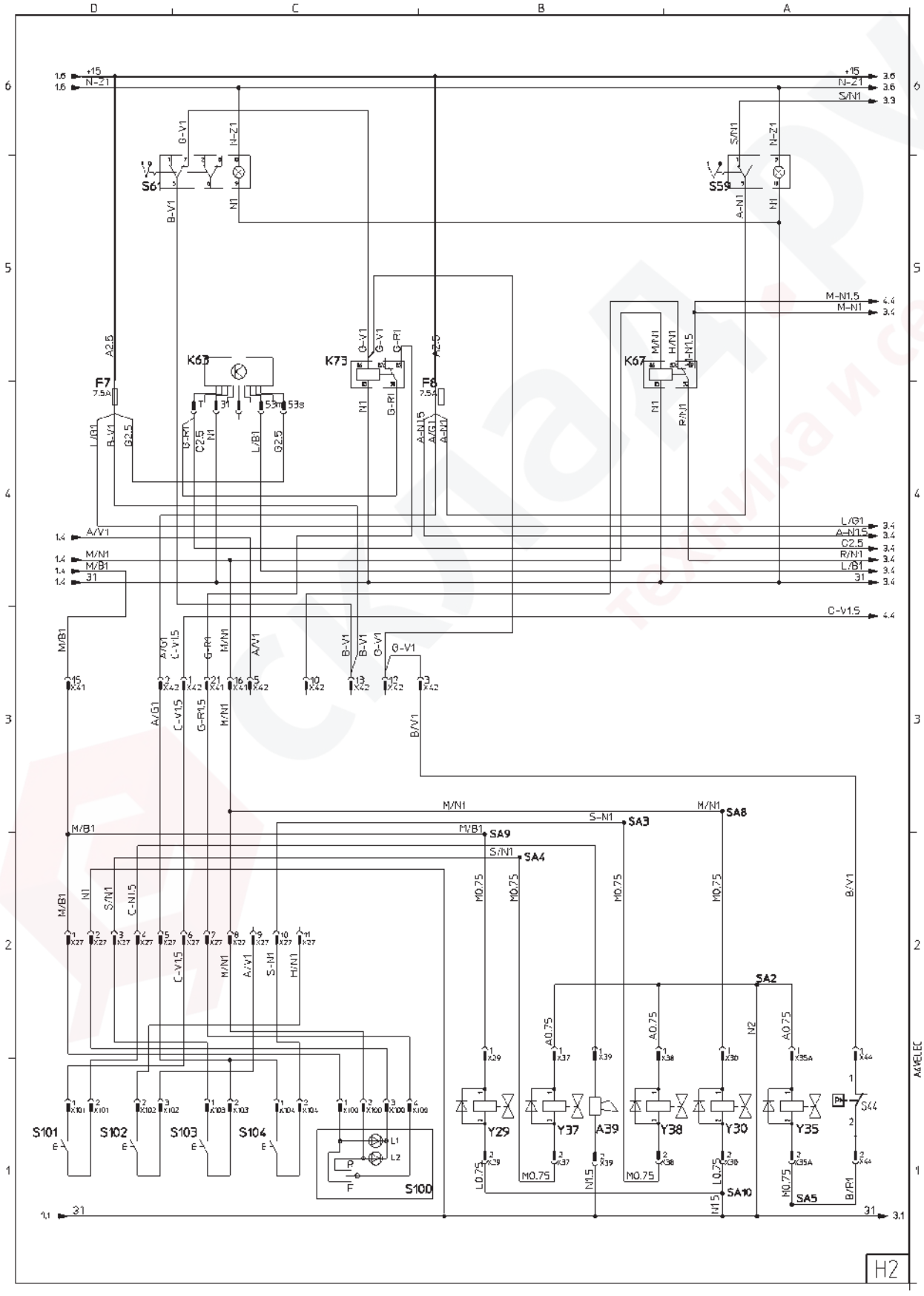

https://truckmanualshub.com/

Electrical circuit diagram

3

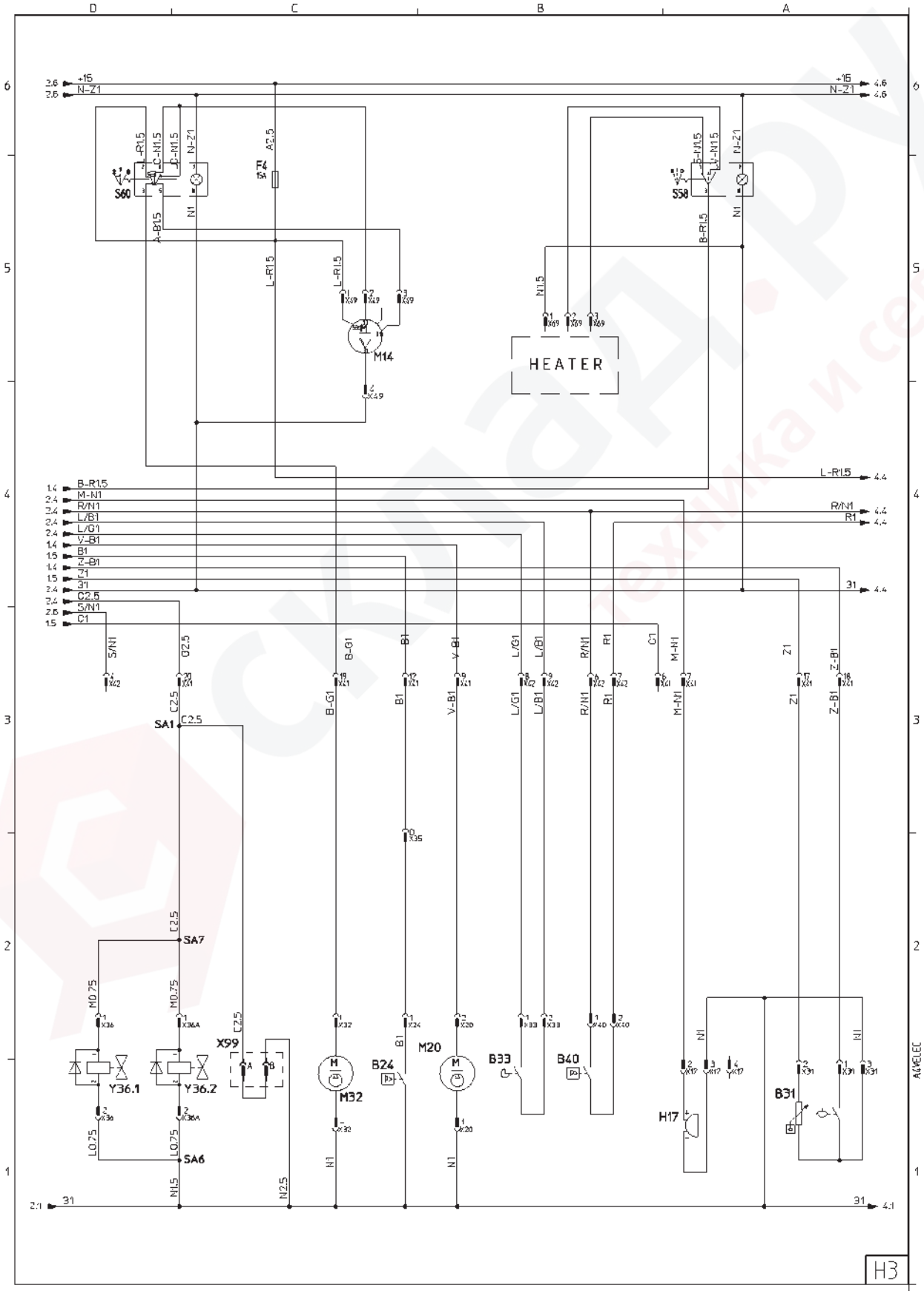

https://truckmanualshub.com/

Electrical circuit diagram

4

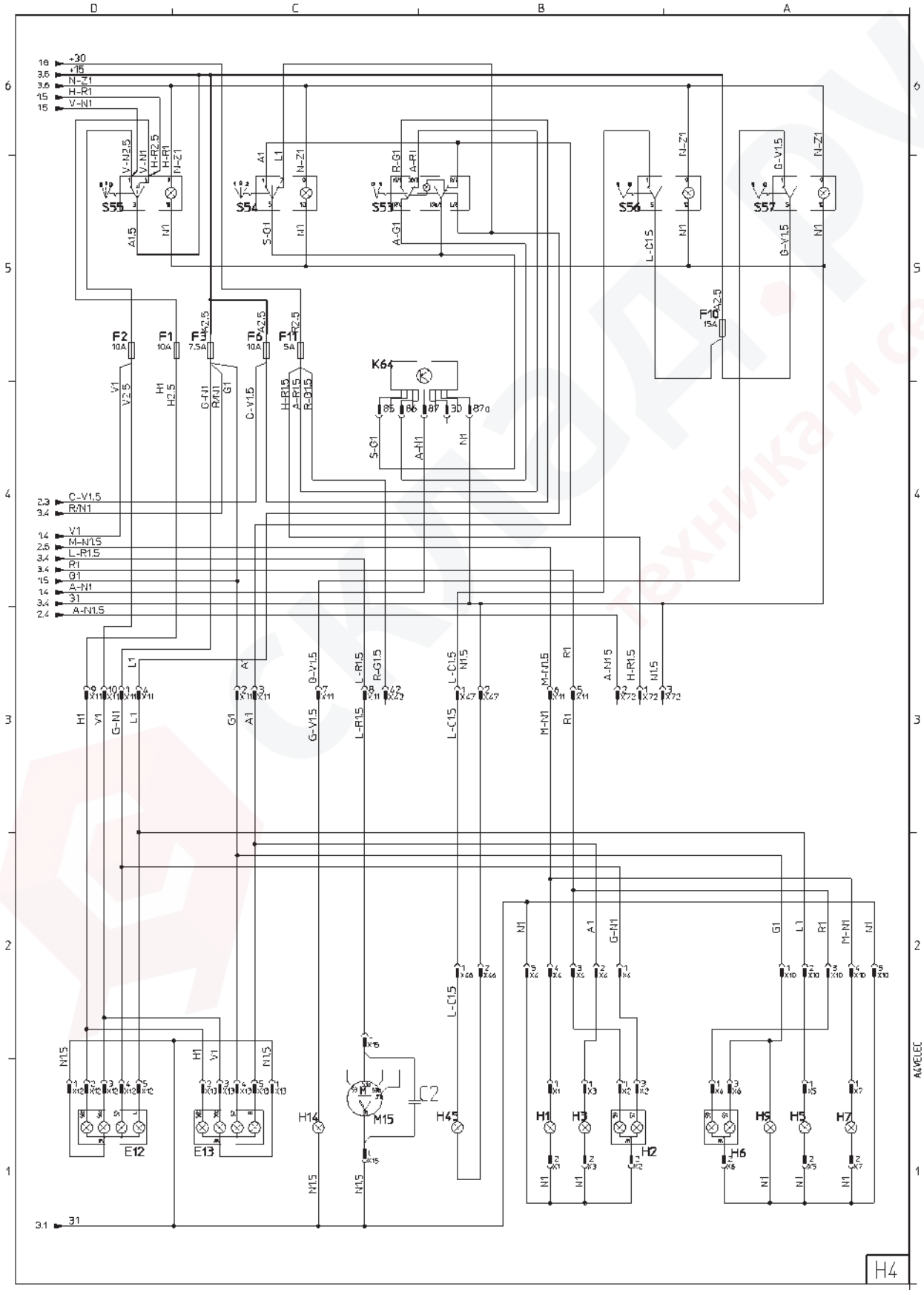

https://truckmanualshub.com/

Electrical circuit

List of electronic components		
Name	Definition	Diagram
A28	Pre-heat relay	1
A39	Horn	2
B1	Battery	1
B16	Air filter blockage indicator	1
B18	Hydraulic oil level sensor	1
B23	Coolant temperature warning switch	1
B24	Engine oil pressure switch	3
B31	Fuel tank gauge	3
B33	Seat switch	3
B40	Brake lights switch	3
C2	Condensator	4
E12	Left hand headlight	4
E13	Right hand headlight	4
F1	Low beam fuse (10A)	4
F2	High Beam fuse (10A)	4
F3	Side lights / brake lights / reverse relay fuse (7’5A)	4
F4	Front windscreen wiper fuse (15A)	3
F5	Ignition feed stop solenoid / fuel pump / pre-heating / alternator fuse (7’5A)	1
F6	Ignition feed warning lights / horn fuse (10A)	4
F7	Seat switch / handbrake switch / timer relay fuse (7’5A)	2
F8	4x4 (not used) / 3rd.and 4rth.service solenoids (sideshift or attachments) fuse (7’5A)	2
F9	Dash panel lights / heater motor fuse (10A)	1
F10	Flashing / rotating beacon and working lights fuse (25A)	4
F11	Permanent live warning lights switch (15A)	4
F30	Starter motor solenoid fuse	1
FG1	Permanent live main fuse (50A)	1
FG2	Starter motor relay main fuse (50A)	1
FG3	Pre-heat relay main fuse (50A)	1
FG4	Battery main fuse (200A)	1
G26	Alternator	1
H1	Right hand reverse light	4
H2	Brake and tail lights right hand side	4
H3	Rear right hand indicator	4
H5	Rear left hand indicator	4
H6	Brake and tail lights left hand side	4
H7	Left hand reverse light	4
H9	Number plate light	4
H14	Work lights	4
H17	Reverse alarm	3
H45	Rotating / Flashing beacon	4

List of electronic components		
Name	Definition	Diagram
H71	Dash panel buzzer (warning lights)	1
K63	Seat switch timer relay	2
K64	Flasher relay	4
K65	Neutral start relay	1
K67	Reverse lights and alarm relay	2
K68	Starter motor relay	1
K73	FNR switch disconnection relay (handbrake on)	2
M14	Front wiper motor	3
M15	Rear wiper motor	4
M20	Electric fuel pump	3
M25	Starter motor	1
M32	Windscreen washer motor	3
P52	Instrument panel	1
R21	Pre-heater plugs	1
S44	Inching pedal switch	2
S51	Ignition barrel	1
S53	Hazard light switch	4
S54	Indicator switch	4
S55	Headlight / sidelight switch	4
S56	Rotating / Flashing beacon switch	4
S57	Worklight switch	4
S58	Heater motor switch	3
S59	4x4 switch (not used)	2
S60	Front windscreen wiper switch	3
S61	Handbrake switch	2
S100	Forward and Reverse switch (joystick)	2
S101	Horn switch (joystick)	2
S102	2 Speed selector switch (joystick) (not used)	2
S103	3rd. service switch (side shift) (joystick)	2
S104	4rd. service switch (attachments) (joystick)	2
Y22	Engine stop solenoid	1
Y29	Forward solenoid	2
Y30	Reverse solenoid	2
Y35	Handbrake solenoid	2
Y36	Joystick spool valve lock unit (1)	3
Y36A	Joystick spool valve lock unit (2)	3
Y37	3rd. service solenoid (side shift)	2
Y38	4rd. service solenoid (attachments)	2
X99	Joystick spool valve lock connector	3

https://truckmanualshub.com/

Hydraulic circuit

Hydraulic symbols	
	Tank
	Variable flow pump
	Motor activation
	Filter
	Radiator
	Pressure limiting valve
	Directional valve
	Directional valve with spring
	Auxiliary connection valve
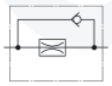	Flow limiting valve
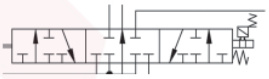	Distributor valve
	Selector valve
	Hydraulic steering
	Actuator cylinder
	Bidirectional actuator cylinder
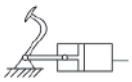	Brake pump
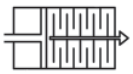	Service brake (negative brake)

https://truckmanualshub.com/

Hydraulic circuit diagram HYDRAULIC APPLIANCES

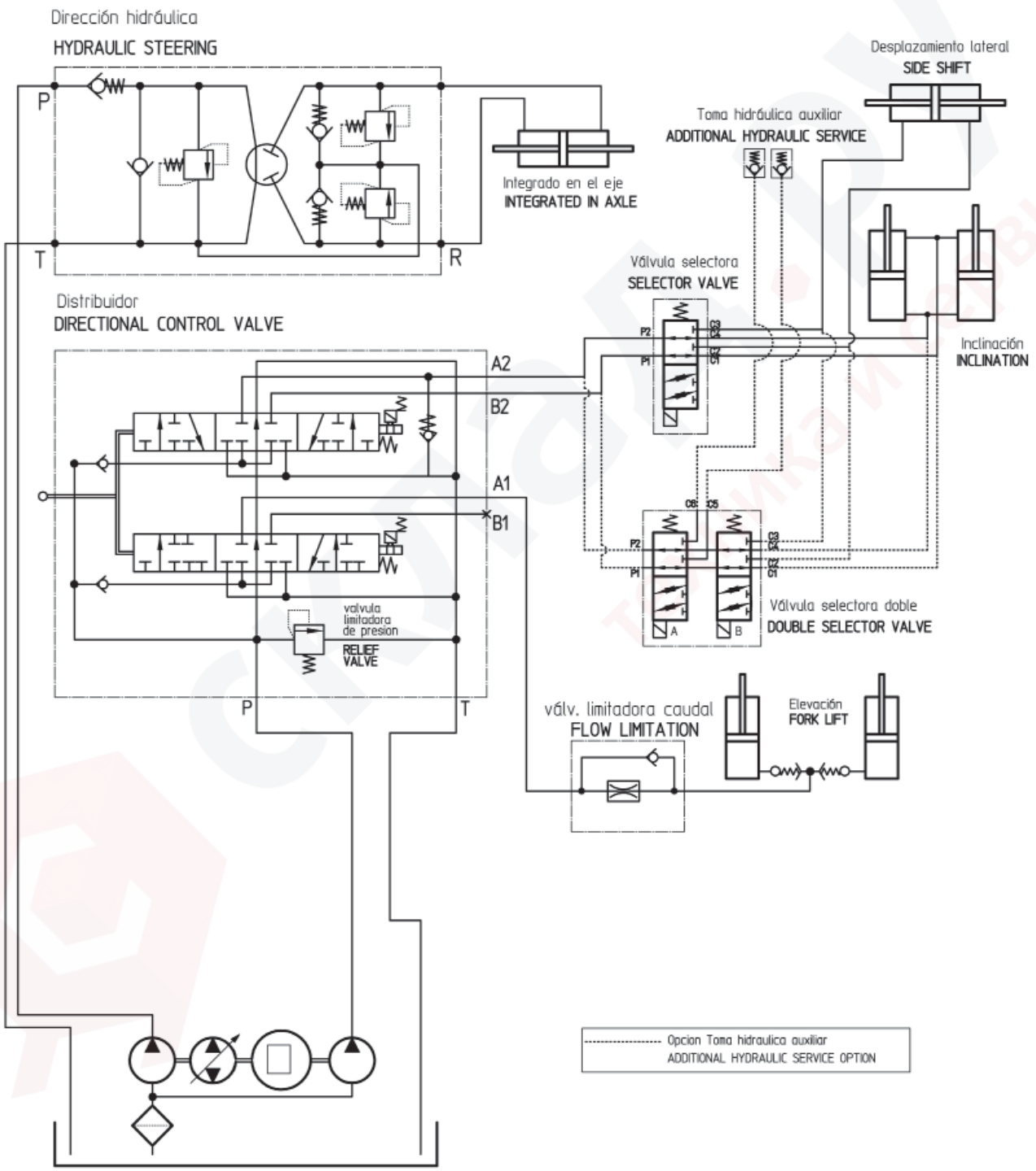

https://truckmanualshub.com/

Hydraulic circuit diagram TRANSMISSION
C400H / C400HI / C500H / C500HI

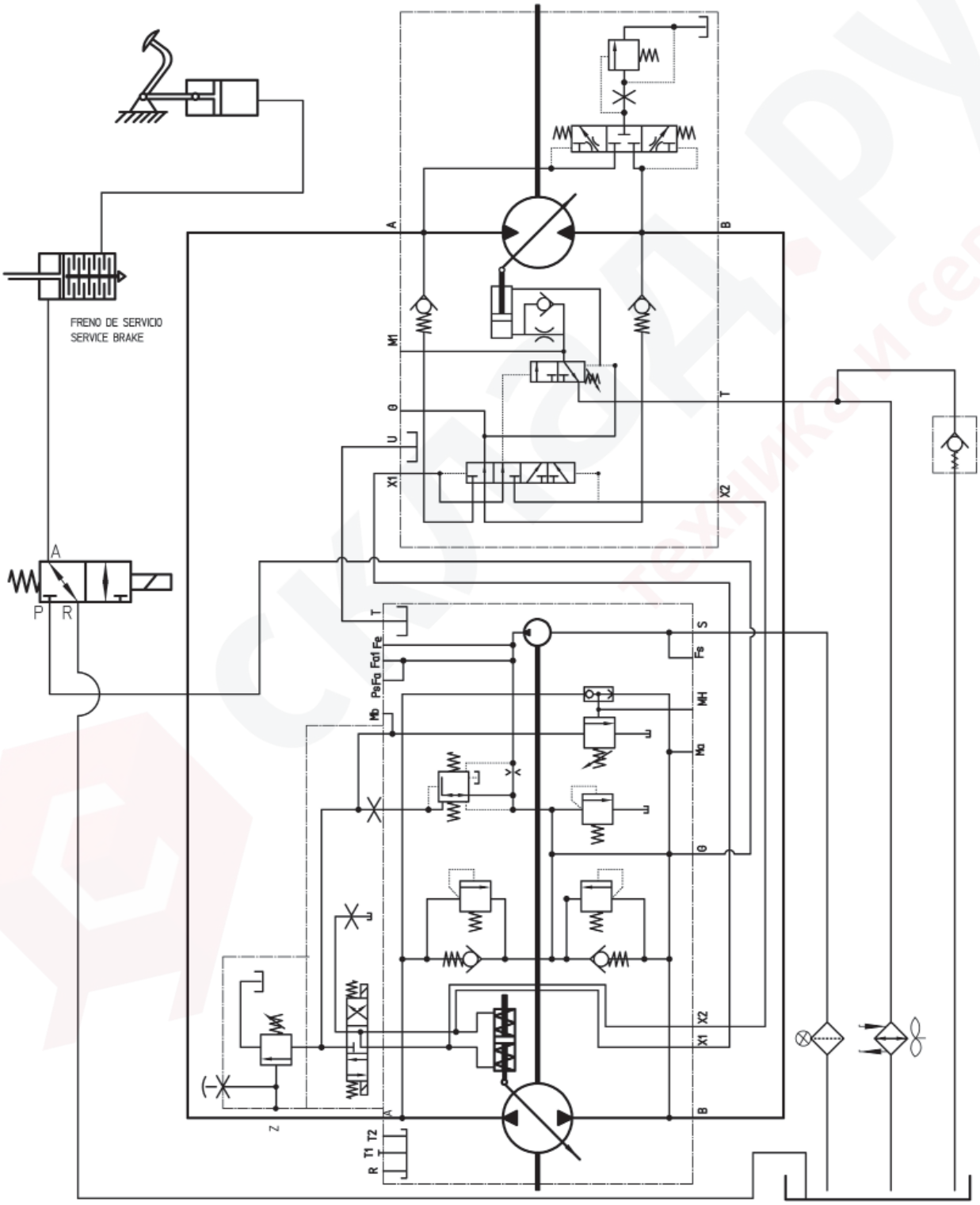

https://truckmanualshub.com/

Hydraulic circuit diagram TRANSMISSION
C400H x4 / C400HI x4 / C500H x4 / C500HI x4

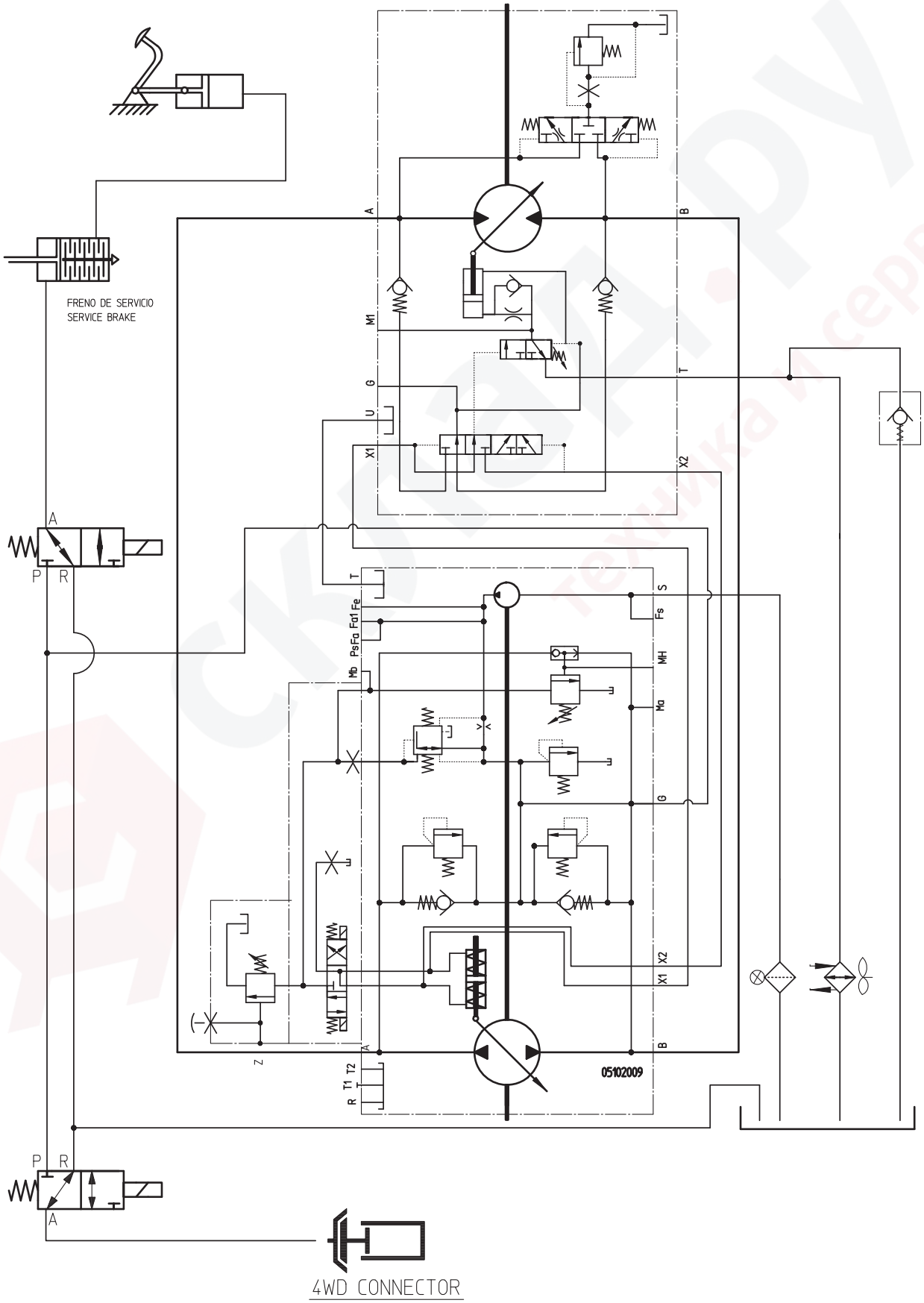

https://truckmanualshub.com/

Transmission troubleshooting

INSTRUCTIONS FOR THE IDENTIFICATION OF FAILURES IN HYDROSTATIC TRANSMISSIONS				
FAILURES	**POSSIBLE CAUSE**	**CHECK**	**LOCATION**	**CORRECT VALUES**
The machine does not move neither forward nor reserve	Oil Level is low	Oil level	Oil tank	
	Suction hose is bent or squashed		Suction hose	
	Hydraulic oil cartridge is clogged	Depressor marked in vacuum gauge	Suction filter	< 0,3 bar
	Faulty coupling		Motor or pump coupling	
	Pre-load pump turns counterwise to engine	Load pressure	Pressure intake with a gauge on pump sport M3 (SAUER GROUP) or S (BOSCH REXROTH GROUP)	20 ÷ 24 bar
	Faulty pre-load pump			
	Faulty oil motor			
	Directional solenoid does not work	Resistance and voltage Control box (SAUER)	Directional solenoids in pump	
	Inching is seized, disconnected or badly set (SAUER)	Throw and connections	Pedal and electric connections	
	Faulty oil strainer	Faulty oil suction Seadling of tubes connectors and suction	Oil connections	
Non instant motion response, abnormal	Oil is air emulsified or Oil level is low	Oil level seating of pipes / hoses, fittings	Oil tank, fittings	
	Vacuum filter is clogged	Depressor marked in vaccum gauge	Vacuum filter	< 0,3 bar
	Inching is seized, disco meeted or badly connected (SAUER)	Potentionmeter, linkage and connections	Pedal and electric connections	

INSTRUCTIONS FOR THE IDENTIFICATION OF FAILURES IN HYDROSTATIC TRANSMISSIONS				
FAILURE	**POSSIBLE CAUSE**	**CHECK**	**LOCATION**	**CORRECT VALUES**
Engine is overloaded	Low engine power or faulty engine	Engine does not accelerate at max. Load	Engine	85 ÷ 95 % max rpm. of engine
	High pressure limit is set too low	Working pressure	Working pressure ports in pump	Recommended max. Pressure 345 or 410 bar.
	Inching is seized (SAUER)	Potentiometer / linkage	Pedal	< 0,3 bar
Low traction power	Engine does not work at nominal level or it's over	Haul of accelerator lever	Engine	85 ÷ 95 % max rpm. of engine
	Low load pressure	Load pressure	Pressure intake with a gauge on pump sport M3 (SAUER GROUP) or S (BOSCH REXROTH GROUP)	20 ÷ 24 bar.
	Inching is seized (SAUER)	Potentiometer / linkage	Pedal	
	M4, M5 (SAUER) or Xa, Xb (BOSCH REXROTH) Piloting hoses of hydrostatic motor are reversed.	Hydraulic chart	Connections	
	Hydraulic Oil overheating	Dirt in radiator	Radiator oil	
Hydraulic oil overheating	Low oil level	Oil level	Oil tank	
	Faulty oil	Oil degradation an pollution		
	Suction line is not sealed	Sealing for hoses, fitchings and cartridge	Oil connections	
	Faulty high pressure relief valves	Working pressure	Working pressure ports in pump	Recommended max. Pressures 345 or 410 bar.
	Radiator is dogged	Dirt in radiator		

INSTRUCTIONS FOR THE IDENTIFICATION OF FAILURES IN HYDROSTATIC TRANSMISSIONS				
FAILURE	**POSSIBLE CAUSE**	**CHECK**	**LOCATION**	**CORRECT VALUES**
Transmission overspeed	Max. Engine RPM is higher than recommended	Max. RPM on the engine	Engine	
	Faulty hydrostatic motor. Does not move to max. flow.			
Irregular running	M4, M5 (SAUER) or Xa, Xb (BOSCH REXROTH) Piloting hoses of hydrostatic motor are reversed.	Hydraulic Chart	Oil connections	
Insuficient acceleration	Low engine power	Haul of accelerator lever	Engine	
	M4, M5 (SAUER) or Xa, Xb (BOSCH REXROTH) Piloting hoses of hydrostatic motor are reversed.	Hydraulic Chart	Oil connections	

https://truckmanualshub.com/

EC DECLARATION OF CONFORMITY

The manufacturer **AUSA Center, S.L.U.,** established on Ctra. De Vic, km 2.8, 08243 – Manresa – Barcelona – Spain, declares that the machine assigned below:

Generic denomination: **ENGINE DRIVEN COUNTERBALANCED FORKLIFT TRUCK**

Model/Type : **C XXX X**

Serial number: **XXXXXXXX**

fulfils all relevant provisions of the machinery Directive 2006/42/EC

and it conforms with the next European Directives:

Electromagnetic Compatibility Directive 2004/108/EC

Sound level Directives of machinery used outdoors, 2000/14/EC and 2005/88/EC

Exhaust emissions Directives, 97/68 and 2004/26

and also it conforms with the following harmonized European Standards:

EN 1726-1 – Safety of industrial trucks – Self-propelled trucks up to and including 10.000 kg capacity and industrial tractors with a drawbar pull up to and including 20.000 N.

The certification procedure has been carried out in accordance with the provisions relating to non-dangerous machinery in the above mentioned Directives.

Name and address of the person authorized to compile the technical file:

Mr Antoni Tachó Figuerola

Ctra. De Vic, km 2.8, 08243, Manresa, Barcelona, Spain

Signed by Mr Antoni Tachó Figuerola

Given at Manresa on

AUSA Center, S.L.U.
Cra. de Vic, Km. 2,8 - P.O.B. 194
08243 MANRESA (Barcelona) España

Tel. 34-93 87 47 311
Fax 34-93 874 12 11
Web: http://www.ausa.com

https://truckmanualshub.com/

https://truckmanualshub.com/

AUSA

https://truckmanualshub.com/