https://truckmanualshub.com/

MAHINDRA
TRACTORS

OPERATOR MANUAL
'10' Cab Series
4510C

Click here to go on

INDEX

Main Menu

Cultivate Your Dreams℠

Mahindra Tractors

contactus@almats.com

The Mahindra Group ▪ Mahindra USA, Inc. ▪ 17723 FM 2920 ▪ Tomball, Texas 77377 ▪ 1-800-887-2286 ▪ www.mahindrausa.com

https://truckmanualshub.com/

Mahindra

OPERATOR'S MANUAL

FOR

TRACTORS

(4510)

Mahindra U.S.A. Inc.
17723, FM 2920
Tomball, Texas
U.S.A.

DAEDONG

Off-Road compression-Ignition Engine
Emission Control System Warranty statement

EMISSION RELATED SYSTEM DEFECT WARRANTY

The warranty period shall begin on the date the engine or equipment is delivered to an ultimate purchaser. The use of alternative fuels shall not void the warranties on any engine certified to use such fuel.

Daedong-USA INC.warrants to the ultimate purchaser and each subsequent purchaser of certified off- road compression-ignition engine(powering off-road machines and equipment),that such engine is;

1) Designed,built,and equipped so as to confirm with all applicable regulations adopted by the United States Environmental Protection Agency and the California Air Resource Board.
2) Free from defects in materials and workmanship which cause the failure of a warranted part to be identical in all material respects to the part as described in the engine manufacturer's application for certification for period of five years or 3000 hours of operation, whichever occurs first , for all engines rated at 19 kw and greater, except as noted below. In the absence of a device to measure hours of use, the engine shall be warranted for a period of five years. For all engines rated less than 19 kw, and for constant speed engine rated under 37 kw with rated speeds higher than or equal to 3000 rpm, the period of two years or 1500 hours of operation, whichever occurs first, shall apply. In the absence of a device to measure hours of use, the engine shall be warranted for a period of two years.

If a warranted part fails because of a defect during the terms of this warranty,Daedong-USA will repair or replace it at any authorized Daedong-USA dealer.Any other parts damaged by the failure of a warranted part will also be repaired or replaced.The repair and/or replacement will be made at no charge to the owner for parts,labor and diagnosis.Any such part repaired or replaced under the warranty shall be warranted for the remaining warranty periods.

In case of emergency,repairs may be performed at any service establishment,or by the owner,using any replacement part.

Daedong-USA INC. will reimburse the owner for their expenses,including diagnostic charges for such emergency repair.These expenses shall not exceed Daedong-USA INC.suggested retail price for all warranted parts replaced,and labor charges based on Daedong-USA INC.recommended time allowance for the warranty repair and geographically appropriate hourly labor rate.

A part not available within 30 days or a repair not being complete within 30 days constitute an emergency.
As a condition of reimbursement,replaced parts and receipt invoices must be presented at a place of business of an authorized Daedong engine dealer or other establishment authorized by Daedong-USA INC.

This warranty covers the following emission-related parts and components.
-Fuel Injection pump
-Nozzle Assembly
-Injection pipe
-Turbocharger (if equipped)
-Intake,Exhaust manifold

If failure of one of these components results in failure of another part,both will be covered by this warranty. Any replacement part may be used for maintenance or repairs,The owner should ensure that such parts are equivalent in design and durability to Daedong genuine parts.
Use of non-genuine Daedong parts does not invalidate the warranty.However Daedong-USA INC. is not liable for parts,which are not genuine Daedong parts.

RESPONSIBILITY AND LIMITATIONS.

These warranties are subject to the following;

DAEDONG-USA INC.RESPONSIBILITIES.

During the emission warranty period,if a defect in material or workmanship of a warranted parts or component is found.Daedong-USA INC.will provide;

-New,remanuctured,or repaired parts and/or components required to correct the defect.
Items replaced under this warranty become the property of Daedong-USA INC.

-Labor,during normal working hours,required to make the warranty repair.
This includes diagnosis and labor to remove and install the engine,if necessary.

Owner’s Warranty Responsibilities.

As the Daedong-USA INC.off-road compression-ignition engine owner,you are responsible for the performance of the required maintenance listed in your Owner’s Manual.
Daedong-USA INC.recommends that you retain all receipts covering maintenance on you Daedong engine but Daedong-USA INC.cannot deny warranty solely for the lack of receipts or for your failure to ensure the performance of all scheduled maintenance.However,if the lack of required maintenance was the reason for the repair,then the claim will be denied.

You are responsible for presenting your Daedong engine to a Daedong-USA INC.dealer as soon as a problem exists.The warranty repairs should be completed in a reasonable amount of time,not to exceed 30 days.

As the Daedong engine owner,you should also be aware that Daedong-USA INC.may deny you warranty coverage if your Daedong engine or parts has failed due to abuse,neglect,improper maintenance or unapproved modifications.if you have any questions regarding your warranty rights and responsibilities, you should contact Daedong-USA INC.Kioti Tractor.
Division at 1801 Quality Drive(Tel.No;1-252-291-6111)

LIMITATION

The emission control system defects warranty and the emission control system performance warranty shall not apply to:

-malfunctions in any part directly caused by abuse,misuse,modification,improper adjustment except those done by a dealership during warranty service work,alterations,tempering connections,improper or inadequate maintenance,neglect or use of leaded diesel or other fuels not recommended in the owner's Manual.
-Damage resulting from accident or an Act of God.
-Failure that are a direct result of a lack of performance of required emission control maintenance as outlined in your Owner' Manual.
-Parts or accessories used in applications for which they were not designed or not approved for use on the engine by Daedong-USA INC.
-Parts not supplied by Daedong-USA INC. or damage to other parts caused directly by non-Daedong parts or non-equivalent parts.
-The charge for diagnostic labor which does not lead to the determination that a warrantable condition exists.
- Daedong-USA INC. is not responsible for incidental or consequential damages such as downtime or loss-use of engine powered equipment.
-Although you purchase the equipment on which Daedong engine is mounted, if the equipment is not manufactured by Daedong, you will make contact with purchasing dealer.

Emergency Service

If emergency Emission Control System Warranty service is required and the owner is unable to readily locate an authorized Daedong dealer or if a warranted part is available within 30 days, then, repairs may be performed at any available service establishment, or by the owner, using any replacement part.

Daedong will reimburse the owner for the owner's expenses including diagnostic charges for such emergency repair or replacement at Daedong's suggested retail price for all warranted parts replaced and labor charges based on Daedong's recommended time allowance for the warranty repair and the geographically appropriate hourly labor rate. Replaced part and copies of paid original receipts must be available for presentation to Daedong as a condition of reimbursement for these emergency repairs.

In addition, the owner must provide Daedong a detailed description indicating why the situation was considered an emergency and why an authorized Daedong dealer was not available. Additional information may be obtained by calling **1-252-291-6111**. A repair not being complete within 30 days constitutes an emergency.

CALIFORNIA EMISSION CONTROL WARRANTY STATEMENT
YOUR WARRANTY RIGHTS AND OBLIGATIONS

The California Air Resources Board and Daedong-USA, INC. are pleased to explain the emission control system warranty on your 2004 and later engine. In California, new off-road engines must be designed, built, and equipped to meet the State's stringent anti-smog standards. Daedong-USA, INC. must warrant the emission control system on your engine for the periods of time listed below provided there has been no abuse, neglect or improper maintenance of your engine.

Your emission control system may include parts such as the fuel-injection system and the air induction system. Also included may be hoses, belts, connectors and other emission-related assemblies.

Where a warrantable condition exists, Daedong-USA, INC. will repair your off-road compression ignition engine at no cost to you including diagnosis, parts, and labor.

MANUFACTURER'S WARRANTY COVERAGE;

The 2003 and later off-road compression-ignition engines;

For all engines rated under 19 kW and for constant speed engines rated under 37 kW with rated speeds greater than or equal to 3,000 rpm, the warranty period is 1,500 hours or 2 years of use, whichever first occurs, after date of delivery to initial owner.
For all other engines rated at or above 19 kW, the warranty period is 3,000 hours or 5 years of use, whichever first occurs, after date of delivery to the initial owner. If any emission-related part on your engine is defective, the part will be repaired or replaced by Daedong-USA, INC.

OWNER'S WARRANTY RESPONSIBILITIES;

—As the off-road compression ignition engine owner, you are responsible for the performance of the required maintenance listed in your Owner's Manual. Daedong-USA, INC. recommends that you retain all receipts covering maintenance on your off road compression ignition engine, but Daedong-USA, INC. cannot deny warranty solely for the lack of receipts or for your failure to ensure the performance of all scheduled maintenance.

—As the off-road compression ignition engine owner, you should however be aware that Daedong-USA, INC. may deny you warranty coverage if your off-road compression ignition engine or a part has failed due to abuse, neglect, improper maintenance or unapproved modifications.

— Your engine is designed to operate on diesel fuel only. Use of any other fuel may result in your engine no longer operating in compliance with California's emissions requirements.

— You are responsible for initiating the warranty process. The CARB suggests that you present your off-road compression ignition engine to a Daedong-USA, INC. dealer as soon as a problem exists. The warranty repairs should be completed by the dealer as expeditiously as possible.

— If you have any questions regarding your warranty rights and responsibilities, you should contact Daedong-USA, INC. Kioti Tractor Division at 1801 Quality Drive (Tel.No ; 1-252-291-6111)

— Although you purchase the equipment on which Daedong engine is mounted, if the equipment is not manufactured by Daedong, you will make contact with purchasing dealer.

MAINTENANCE RECOMMENDATION

Some Daedong-USA, INC off-road compression ignition engines are certified by the United States Environmental Protection Agency and California Air Resource Board to comply with smoke and gaseous emission standards prescribed by federal laws at the time of maintenance.

The engine is certified if it has a special certification label. A Daedong engine dealer can also inform you if the engine is certified.

Efficiency of emission control and engine performance depends on adherence to proper operation and maintenance recommendations and use of recommended fuels and lubricating oils. It is recommended that major adjustments and repair be made by your authorized Daedong engine dealer.

Various chemical fuel additives, which claim to reduce visible smoke, are available commercially. Although additives have been used by individuals to solve some isolated smoke problems in the field, they are not recommended for general use. Federal smoke regulations require that engines be certified without smoke depressants.

The corrective step taken immediately on discovery of worn parts, which may affect emission levels, will help assure proper operation of emission control system. The use of genuine Daedong parts recommended. Suppliers of non-Daedong parts must assure the owner that the use of such parts will not adversely affect emission levels.

Regular maintenance intervals, along with special emphasis on the following items, are necessary to keep exhaust emissions within acceptable limit for the useful life of the engine.

Refer to the maintenance intervals. If the engine is operation under severe conditions, adjust the maintenance exhaust emissions within acceptable limit for the useful life of the engine.

The following is an explanation of maintenance for emission-related components.

See the Maintenance schedule for specific interval for the following items.

FUEL INJECTION PUMP OR NOZZLES – Fuel injection pumps or nozzles are subject to tip wear as a result to fuel contamination. This damage can cause an increase in fuel consumption,the engine to emit black smoke misfire or run rough. Inspect, test, and replace if necessary.
Fuel injection pumps can be tested by an authorized Daedong engine dealer.

TURBOCHARGER – Check for any unusual sound or vibration in the turbocharger. Inspect inlet and exhaust piping and connections. Check bearing condition and perform maintenance as described in the Maintenance Schedule.

Slow engine response and low power may indicate a need for adjustment or repair.
Your Daedong engine dealer is equipped with the necessary tools, personnel, and perform this service.

Owner is encouraged to keep adequate maintenance records, but the absence of such, in and of itself, will not invalidate the warranty.

The machine or equipment owner may perform routine maintenance, repairs and other non warranty work or have it done at any repair facility. Such non-warranty work need not be performed at a designated warranty station in order for the warranty to remain in force.

CUSTOMER ASSISTANCE – EMISSION CONTROL SYSTEM WARRANTY;

Daedong-USA INC. aims to ensure that the Emission Control Systems Warranty is properly administrated. In the event that you do not receive the warranty service to which you believe you are entitled under the Emission Control System Warranty, call or write.

Daedong-USA, INC.
Kioti Tractor Division
at 1801 Quality Drive
Tel. No ; 1-252-291-6111
Fax. No ; 1-252-291-9161

-Authorized dealers are recommended for major maintenance and repair work as they are staffed with trained personnel, proper tools and are aware of the latest maintenance methods and procedures. Owners and others who desire to perform their own work should purchase a Service Manual and obtain current information from their Daedong engine dealer .

-In case of purchasing the equipment on which Daedong engine is mounted, if the equipment is not manufactured by Daedong, the equipment owner will make contact with purchasing dealer.

FOREWARD

Thank you very much for purchasing our tractor, which, we feel sure, will give you many years of troubling the service.

The introduction in this manual set out the correct manner of operating, maintaining and checking the tractor to ensure long-term durability.

Please ensure correct operation of the tractor as incorrect operation can cause substantial mechanical damage as well as cause accidents with the associated injuries.

Please note that in some cases differences can exist between this manual and your tractor due to the manufacture's policy of constant product improvement.

In the event that you strike a problem not covered by this manual please contact your nearest dealer who will assist you in resolving your problem.

WARNING

CALIFORNIA Proposition 65 Warning

The Engine Exhaust from this product contains chemicals known to the state of California to cause cancer,birth defects or other reproductive harm

WARNING SIGNS IN THIS MANUAL

The following warning signs in this manual draw additional attention to items of importance for the safe and correct operation of the tractor.

SIGN	MEANING OF THE SIGN
Danger	Serious hazard with a very high level of risk of either serious injury or death
Warning	Hazard or unsafe practice that can lead to severe injury or death.
Caution	Hazard or unsafe practice that can lead in injury or death.
Important	Instructions for the correct operation of the machine which, if followed, will ensure that it performs at it's best

All information,illustrations and specifications in this manual are based on latest information available at the time of publication.The right is reserved to make changes at any time without notice.

CONTENTS

Sr. No.	Description	Page No.
1.	Tractor Identification	3
2.	About this manual	4
3.	Introduction & description	5~7
4.	Owner assistance	8
5.	ROPS (Roll over protection structures)	9
6.	Safety instructions, Do's & Don'ts	12~25
7.	Safety signs	26~28
8.	Universal symbols	29
	Section A	
9.	Controls, Instruments & Operations	31~51
	Section B	
10.	Lubrication & maintenance	53~74
	Section C	
11.	CABIN	75~81
12.	Air conditioning system	82~88
	Section D	
13.	Specifications	89~91
14.	Fuel saving Tips	92~93
15.	Fault tracing	94~97
16.	Wiring Diagram	99~106
17.	Tractor history card	107
18.	Service record	108
19.	Daily operating Log	109
20.	Part replacement record	110

All information, illustrations and specifications in this manual are based on latest information available at the time of publication. The right is reserved to make changes at any time without notice.

TRACTOR IDENTIFICATION

The engine number is stamped on the left hand side of the engine block.

The chassis number is shown on the left hand side of the tractor as shown in the drawing.

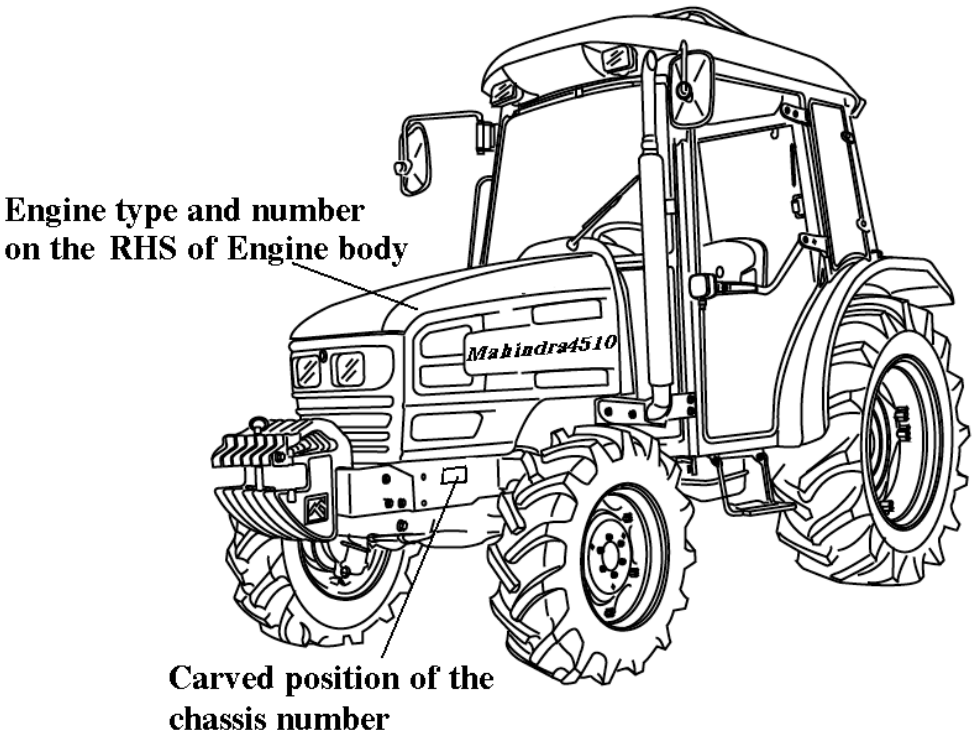

Illustration A

WARRANTY OF THE PRODUCT.

The manufacturer warrants this product and full details of the warranty are provided on a separate warranty schedule.

SERVICE.

Service is available from any Mahindra dealer in the country.

PARTS.

To obtain spare parts please contact your nearest dealer and give him the details listed below.

Tractor model

Tractor serial number

Tractor engine number

Part number and description

Quantity required.

MUSA Website Main Menu Index Full Screen Search Print EXIT

ABOUT THIS MANUAL

This manual has been prepared to assist you in following/adopting the correct procedure for running-in operation and maintenance of your new Mahindra Tractor.

Your Tractor has been designed and built to give maximum performance, with good fuel economy and ease of operation under a wide variety of operating conditions. Prior to delivery, The tractor was carefully inspected, both at the factory and by your Mahindra Dealer/Distributor, to ensure that it reaches you in optimum conditions .To maintain this condition and ensure trouble free performance. it is important that the routine services, as specified in this manual, are carried out at the recommended intervals.

Read this Manual carefully and keep it in a convenient place for future reference. If at any time you require advice concerning your Tractor, do not hesitate to contact your Authorized Mahindra dealer/Distributor. He has trained personnel, genuine parts and necessary equipments to undertake all your service requirements.

Manufacturer's policy is one of continuous improvement, and the right to change prices, specifications or equipments at any time without notice is reserved.

All data given in this book is subject to production variations. Dimensions & weight are approximate only and the illustrations do not necessarily show Tractors in standard condition. For exact information about any particular Tractor, please consult your Mahindra dealer/Distributor.

Introduction & Description

TRACTOR AN INTRODUCTION

The word, 'Tractor' has been derived from 'Traction' which means pulling.

A Tractor is required to pull or haul an equipment, implement or trolley which are coupled to the Tractor body through suitable linkage. A Tractor can also be used as a prime mover as it has a power outlet source which is also called Power Take or PTO shaft.

In this book the operating, maintenance and storage instructions for all models of Mahindra Diesel Tractors has been complied. This material has been prepared in detail to help you in the better understanding of maintenance and efficient operation of the machine.

If you need any information not given in this manual, or require the services of a trained mechanic, please get in touch with the Mahindra Dealer/Distributor in your locality. Dealer/Distributors are kept informed of the latest methods of servicing Tractors. They stock genuine spare parts and are backed by the Company's full support.

Through this manual. The use of the terms LEFT, RIGHT, FRONT and REAR must be understood, to avoid any confusion when following the introductions. The LEFT and RIGHT means left and right sides of the Tractor when facing forward in the driver's seat, Reference to the FRONT indicates the radiator end of the Tractor, while the REAR, indicates the drawbar end (illustration E)

When spare parts are required, always specify the Tractor and engine serial number when ordering these parts.(See illustration A).This will facilitate faster delivery and help ensure that the correct parts for your particular Tractor is received. The tractor serial number is punched on a plate attached to the left hand side of the engine body (illust.A),For easy reference, we suggest you to write the number in the space provided in the owner's personal data.

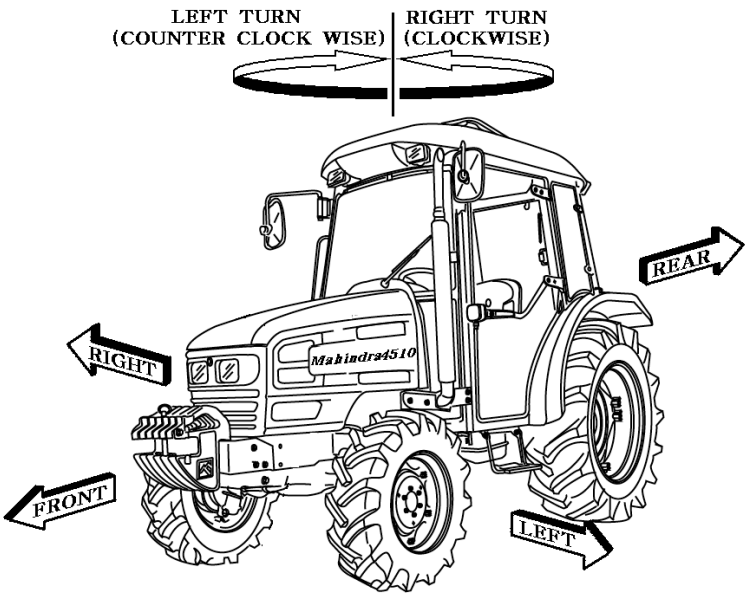

illustration E

(Front, Rear,Left,Right Portion)

DESCRIPTION

■ General construction

The transmission case, Clutch, Clutch housing, Engine and Front Axle Support are bolted together to form a rigid unit

■ Front Axle & Wheels

The 4WD front axle is a center-pivot, reverse Eliot type. The front wheel drive mechanism is incorporated as a part of the axle.

The front wheel drive power is taken off the rear transmission and transmitted to the differential in the front axle where the power is divided into right and left and to the respective final cases.

In the final cases, the transmitted revolution is reduced by the level gears to drive the front wheel. The 4WD mechanism with level gears provides wider steering and greater durability.

■ Engine

The tractors are fitted with vertical, Water-cooled 4-cycle and spherical chamber type Daedong ENGINES(4A220-DY)

■ Clutch and Transmission

A single plate dry clutch(10.24″diameter) is used on these tractors. Tractor with IPTO(Independent Power Take Off) are fitted with hydraulic Clutch Assy. The transmission Gear box has sixteen forward & sixteen reverse speeds of 4510 with high-low selector lever, Presently, Mahindra Tractors are fitted with partial synchro mesh type gears.

■ Brakes

Mahindra tractors are provided with independent disc brakes operated by two road travel. A foot brake lever is fitted for parking.

■ Rear axle & Wheels

This is mounted on ball bearings and is enclosed in removable housing which are bolted to the transmission case. The rim & Disc fitted with Rear tires are bolted to the outer flange of Rear Axle.

■ Hydraulic system & Linkages.

Mahindra Tractors are fitted with Live (i.e. system is in operation even when clutch is disengaged.) independent, very touch of hydraulic System. Three point Linkages can be used for category 1 type of implements.

■ Steering

It consists of Hydrostatic Power steering system, which has a hydraulic cylinder and tandem type hydraulic pump

■ Electrical System

A 12 Volt Lead Acid Propylene Battery is used to activate the Engine through the Starter Motor and the Electrical system comprising Horn, Head Lamp. Side indicator Lamps, Plough Lamp, Brake Light, Gauge lamp, Hazard Lamp. Generator or Alternator, Fuse box also from part of the Electrical system.

OWNER ASSISTANCE

We at Mahindra USA Inc and your Mahindra Dealer/Distributor wants you to be completely satisfied with your investment. Normally any problems with your equipment will be handled by your Dealer/Distributor's Service Departments, however, misunderstanding can occur. If you feel that your problem has not been handled to your satisfaction, we suggest the following.

Contact the owner or General Manager of the Dealership, explain the problem, and request assistance. When additional assistance is needed, Your Dealer/Distributor has direct access to your office. If you cannot obtain satisfaction by doing this, contact the Mahindra USA Inc . Office and provide them with;

- Your name, address and telephone number
- Model and Tractor serial number
- Dealer/Distributor Name & Address
- Machine purchase date and Hours used
- Nature of problem

Before contacting Mahindra USA Inc office, be aware that your problem will likely to be resolved in the Dealership using the Dealer's/Distributor's facilities, equipment and personnel. So it is important that your initial contact be with the Dealer/Distributor.

(ROPS) Roll Over Protective Structures

Roll Over Protective Structures (ROPS)

TYM Tractors are equipped with a frame for the protection of operators.
In the case of cab tractors the frame is incorporated in the cab structure.
The objective of the frame or cab structure is to protect the operator in the event of a roll over and they are designed to support the entire weight of the tractor in that event.
Each TYM ROPS frame or cab structure is designed and has been tested to meet industry and or Government standards.
Included in these tests were all mounting bases and bolts or other fasteners.

DANGER

For ROPS frames to be effective and protect the operator, the seat belt provided must be worn in order to keep operators within the ROPS protected area in the event of a roll over. Failure to use the seat belt can still cause serious injury or death.

On some models the ROPS frame has a fold down feature, which can be used to enter low buildings etc.
Take care when lowering the upper section of the ROPS frame and take extreme care while driving the tractor with the ROPS frame lowered.
Do not wear the seat belt with the ROPS lowered and please remember that the fold down facility is for special circumstances only and must not be lowered for general use.

Use of the tractor with the ROPS lowered can cause fatal injuries.

As the ROPS frame or cab together with the seat belt was designed to meet certain standards, they must be maintained in good order and condition.
To achieve this objective, both the structure and the seat belt should be inspected on a regular basis (every time the tractor is serviced)

In the event that the seat belt is damaged or frayed, it should be replaced and in the event that the ROPS frame or any part of the mounting structure is damaged or cracked, the faulty component must be replaced with a new unit.
Such a unit must meet all of the test criteria of the original unit.
Fitment of an inferior item or items affects the certification of the entire ROPS structure and the effectiveness of the structure in the event of an accident.
Drilling or welding of the ROPS structure is forbidden.

Damage of the ROPS

If the tractor has rolled over or the ROPS has damaged (such as striking an overhead object during transport), It must be replaced to provide the original protection. After an accident, check for damages to the 1.ROPS.2.Seat 3.seat belt & seat mountings. Before you operate a Tractor, replace all damaged parts.

DO NOT WELD, DRILL OR STRAIGHTEN THE ROPS

Warning	Never attach chains, ropes to the ROPS for pulling purposes; this will cause the Tractor to tip backwards. Always pull from the Tractor drawbar. Be careful when driving through door opening or under low overhead objects. Make sure there is sufficient overhead clearance for the ROPS fatal injuries

Warning	If the ROPS is removed or replaced, make certain that the proper hardware is used to replace the ROPS and the recommended torque values are applied to the attaching bolts

Warning	Always wear your seat belt if the tractor is equipped with ROPS

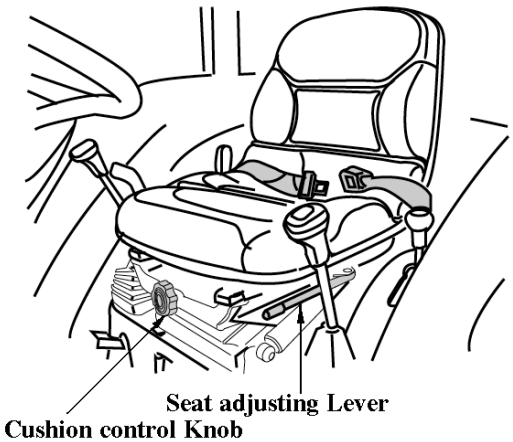

Fig.1

NOTE: Do not use solvents to clean the seat. Use warm water with a little detergent added.

Before operating a Tractor it is important to adjust the seat to the most comfortable position & check whether it is properly locked in its position. Figure 1 identifies the seat fitted to your Tractor.

FOR Sliding seat

To select Seat position, move Adjusting lever and slide Seat closer to or away from Dash panel and controls.

Danger	Check whether the seat properly locked in its position before driving the tractor

https://truckmanualshub.com/

SAFETY INSTRUCTIONS

RECOGNIZE SAFETY INFORMATION

This symbol means **ATTENTION! YOUR SAFETY IS INVOLVED.** The message that follows the symbol contains important information about safety. Carefully read the message

SIGNAL WORDS.

A signal word—DANGER, WARNING OR CAUTION—is used with safety alert symbol. DANGER identifies the most serious hazards. Safety signs with signal Word —DANGER OR WARNING—are typically near specific hazards. General precautions are listed on CAUTION safety signs**.**

DANGER

WARNING

CAUTION

READ SAFETY INSTRUCTION

Carefully read all safety instructions given in this manual for your safety. Tempering with any of the safety devices can cause serious injuries or death. Keep all safety signs in good condition. Replace missing or damaged safety signs.

Keep your tractor in proper condition and do not allow any unauthorized modifications to be carried out on the Tractor, which may impair the function/safety and affect Tractor life.

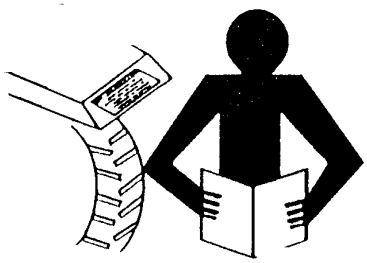

PROTECTION CHILDREN

Keep children and others away from the Tractor while operating.

BEFORE YOU REVERSE

- Look behind Tractor for children.
- Do not let children to ride on Tractor or any implement.

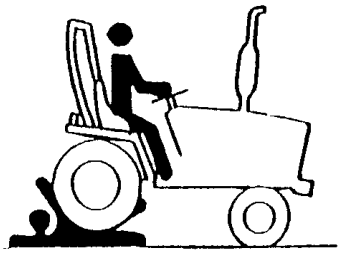

MUSA Website Main Menu Index Full Screen Search Print EXIT

USE OF ROPS AND SEAT BELT

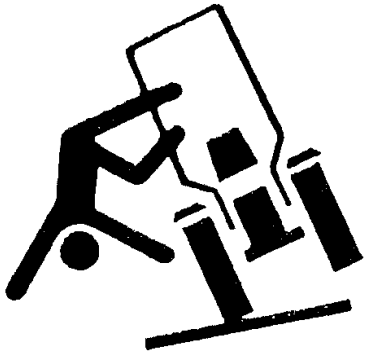

The Roll Over Protective Structure(ROPS) has been certified to industry and/or government standards. Any damage or alternation to the ROPS, mounting hard-ware, or seat belt voids the certification and will reduce or eliminate protection for the operator in the event of a roll-over. The ROPS, mounting hardware, and seat belt should be checked after the first 100 hours of Tractor and every 500 hours thereafter for any evidence of damage, wear or cracks. In the event of damage or alteration, the ROPS must be replaced prior to further operation of the Tractor.

The seat belt must be worn during machine operation when the machine is equipped with a certified ROPS.

Failure to do so will reduce or eliminate protection for the operator in the event of a roll over.

PRECAUTION TO AVOID TIPPING

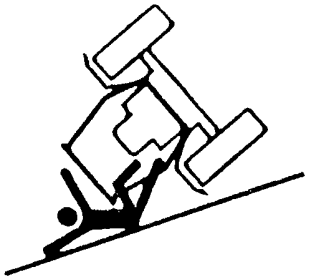

Do not drive where the Tractor could slip or tip.

Stay alert for holes and rocks in the terrain, and other hidden hazards.

Slow down before you make a sharp turn.

Driving forward out of a ditch or mired condition could cause Tractor to tip over backward. Back out of these situations if possible

PARK TRACTOR SAFELY

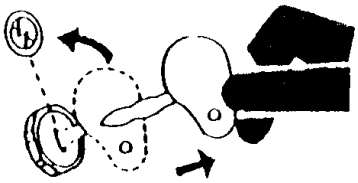

Before working on the Tractor ;

Lower all equipment to the ground.

Stop the engine and remove the key

KEEP RIDERS OFF TRACTOR

Do not allow riders on the Tractor.

Riders on Tractor are subject to injury such as being stuck by foreign objects and being thrown off of the Tractor

HANDLE FUEL SAFELY-AVOID FIRES

Handle fuel with care; it is highly flammable. Do not refuel the Tractor while smoking or near open flame or sparks.

Always stop engine before refueling Tractors.

Always keep your tractor clean of accumulated grease, and debris. Always clean up spilled fuel.

STAY CLEAR OF ROTATING SHAFTS

Entanglement in rotating shaft can cause serious injury or death.

Keep PTO shield in place at all times.

Wear close fitting clothing. Stop the engine and be sure PTO drive is stopped before making adjustments, connections, or cleaning out PTO driven equipment**.**

ALWAYS USE SAFETY LIGHTS AND DEVICES

Use of hazard warning lights and turn signals are recommended when towing equipment on public roads unless prohibited by state or local regulations.

Use slow moving vehicle (SMV) sign when driving on public road during both day & night time, unless prohibited by law

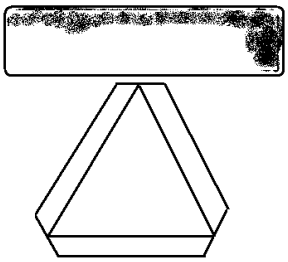

PRACTICE SAFE MAINTENANCE

Understand service procedure before doing work.

Keep the surrounding area of the Tractor clean and dry.

Do not attempt to service Tractor when it is in motion.

Keep body and clothing away from rotating shafts.

Always lower equipment to the ground. Stop the engine.

Remove the key. Allow Tractor to cool before any work repair is caused on it.

Securely support any Tractor elements that must be raised for service work.

Keep all parts in good condition and properly installed.

Replace worn or broken parts. Replace damage/missing decals.

Remove any buildup of grease or oil from the Tractor.

Disconnect battery ground cable(–) before making adjustments on electrical systems or welding on Tractor

AVOID HIGH-PRESSURE FLUIDS

Escaping fluid under pressure can penetrate the skin causing serious injury. Keep hands and body away from pinholes and nozzles, which eject fluids under high pressure. If ANY fluid is injected into the skin. Consult your doctor immediately.

PREVENT BATTERY EXPLOSIONS

Keep sparks, lighted matches, and open flame away from the top of battery. Battery gas can explode.

Never check battery charge by placing a metal object across the poles.

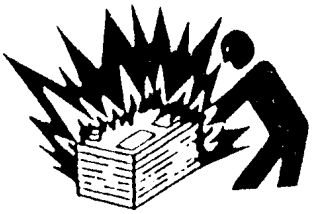

PREVENT ACID BURNS

Sulfuric acid in battery electrolyte is poisonous. It is strong enough to burn skin, cause holes in clothing and cause blindness if found entry into eyes.

For adequate safety always;

1.Fill batteries in a well-ventilated area.

2.Wear eye protection and acid proof hand gloves

3. Avoid breathing direct fumes when electrolyte is added.

4. Do not add water to electrolyte as it may splash off causing severe burns.

If you spill acid on yourself;

1.Flush your skin with water.

2.Flush your eyes with water for 10-15 minutes.

Get medical attention immediately.

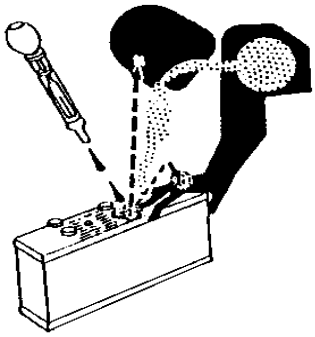

SERVICE TRACTOR SAFELY

Do not wear a necktie, scarf or loose clothing when you work near moving parts. If these items were to get caught, severe injury could result.

Remove rings and other jeweler to prevent electrical shorts and entanglement in moving parts.

WORK IN VENTILATED AREA

Do not start the Tractor in an enclosed building unless the doors & windows are open for proper ventilation, as tractor fumes can cause sickness or death. If it is necessary to run an engine in an enclosed area remove the exhaust fumes by connecting exhaust pipe extension.

TRACTOR RUNAWAY

1. The tractor can start even if the transmission is engaged position causing Tractor to runaway and serious injury to the people standing nearby the tractor.
2. For additional safety keep the pull to stop knob (fuel shut off control) in fully pulled out position. Transmission in neutral position, Foot brake engaged and PTO lever in disengaged position while attending to Safety Starter Switch or any other work on Tractor.

SAFETY STARTER SWITCH

1. Clutch operated safety switch is provided on all Tractors which allow the starting system to become operational only when the Clutch pedal is fully pressed.
2. Do not By-pass this safety starter switch or work on it. Only Authorized Dealers are recommended to work on safety starter switch.
3. On some models Safety Starter switch is provided on transmission High-low shifter lever and in PTO shifter lever.The tractor can be started only if High-low shifter lever is in neutral position.

Caution

Safety Starter Switch is to be replaced after every 2000 hours/4 years, whichever is earlier

https://truckmanualshub.com/

SAFE OPERATION OF YOUR TRACTOR

The manufacturer of your tractor has made every effort to make it as safe as is humanly possible.

Beyond this point it is the responsibility of the operator to avoid accidents and we ask that you read and implement our suggestions for your safety.

Ensure that only trained and competent operators use this tractor and ensure that they are fully conversant with the machine and aware of all it's control and safety features.

Operators should not operate the tractor or associated machinery while tired or untrained.

To avoid accidents please ensure that the operator wears clothing which will not get entangled in the moving parts of the tractor or machine and protect him or her from the elements.

When spraying or using chemicals, please ensure that clothing and protective equipment is worn which prevents respiratory or skin problems.

For full details consult the manufacturer of the chemicals.

To avoid lengthy exposure to noise ensure that ear protection is worn.

If adjustment to the tractor or machinery need to be made ensure the tractor or machine are turned off beforehand.

Use of certified Roll Over Protection Structure (ROPS) is a must while operating a tractor.

Use of seat belt is a must while operating a tractor.

In summary, ensure at all times that the safety of the operator and any other worker is paramount**.**

SAFETY TIPS DURING MAINTENANCE

1. At least on a daily basis check all oil levels. Water level in the radiator and electrolyte level in the battery and perform services according to the service schedule.
2. Ensure tire pressure are even and the correct pressure for the job being done is maintained.
3. Check to ensure that the all controls and preventative mechanisms of the Tractor and implement work correctly and effectively.
4. Ensure that an adequate set of the correct tools is available for maintenance and minor repairs.
5. Ensure that all service work and repairs are carried out on a flat area with a concrete or similar floor.

   Do not carry out service work on a tractor until it is switched off, and the parking brake applied and wheels choked.

   Where a tractor is started in a confined area, ensure that the area is well ventilated as exhaust gases are very harmful, and can cause death.
6. Do not work under raised implements.
7. When changing wheels or tires ensure that a suitable wheel stand is placed under the axle prior to removing the wheel and the wheels are chocked.
8. Where guards or shields need to be removed to perform a service or repair, ensure that the guard or shield is correctly reinstalled before starting the Tractor.
9. Never refuel near a naked flame or with an overheated engine. Ensure to turn off Engine before refueling.
10. The cooling system operates under pressure, take care when removing the Radiator cap on a hot engine to prevent being scalded by steam or hot water. Do not add water in the radiator when the engine is hot. Add water to the radiator only after the engine cools down completely.
11. To prevent fires keep the tractor including the engine clean and free from inflammable material and well away from fuels and other inflammable material.

► MOUNTING AND DEMOUNTING IMPLEMENTS

(1)Ensure that all mounting and removal of implements is done on safe flat ground. Ensure no one is between the Tractor and implement and do not get under the implement to avoid accidental injuries.
(2) After mounting the implement, ensure that all sway chains are correctly adjusted and, where PTO shafts are used that the shaft is fitted and secured correctly.
(3) Where heavy implements are used, ensure that the combination is well balanced or use proper ballast to achieve balance.
(4) Before leaving the tractor at any time, lower the implement, stop the PTO shaft where applicable, set the parking brake and switch off the engine.
(5) While operating the implements with the PTO keep all bystanders away from any moving parts and do not attempt to make adjustments while the machine is running.
(6) Only the driver should ride on the Tractor with the ROPS frame fitted and with the seat belt properly fastened.
(7) Where young children are present, particular care should be taken and the tractor should not be moved until the whereabouts of all children is known.
(8) Only trained operators should operate the Tractor and so taking care to ensure that other workers are not injured. In particular they should take care during dusty operations, which will reduce visibility substantially.
(9) Never start the tractor unless the transmission is out of gear, the operator is in the seat and all round safety has been checked.
(10) Only operate the tractor seated in the drivers seat and never turn or brake suddenly at high speed as this can cause a roll-over and serious injury or death.
(11) When traveling on a public road ensure that the tractor and driver both meet all laws relating to safety and licensing. When traveling with wide implements use red flags on the extremities and observe all legal including escort requirements**.**
(12) When operating under adverse conditions, hilly terrain or on bad ground adjust the speed of the tractor to suit the conditions, safety comes first. Never drive down hill at high speed or with the transmission in neutral. Use of the braking capacity of the engine as well as the service brakes. Do not try to change gear going up or down a steep slope, select the correct gear before starting.
(13) Take care when traveling uphill with a heavy implement to ensure that it does not overbalance and tip up the front end.
(14) Never remove or modify the seat belt.
(15) Never remove, modify or repair the ROPS frame.

PLEASE REMEMBER THAT A LITTLE BIT OF EXTRA CARE CAN PREVENT SERIOUS INJURY OR TEATH AND AVOID DAMAGE TO YOUR TRACTOR.

The following precautions are suggested to help prevent accidents.

A careful operator is the best operator. Most accidents can be avoided by observing certain precautions .Read and take the following precautions before operating the Tractor to prevent accidents. Tractor should be operated only by those who are responsible and properly trained to do so.

■ The Tractor

1. Read the operator's manual carefully before using the tractor. Lack of operating knowledge can lead to accidents.
2. Use an approved rollover bar and seat belt for safe operation. Overturning of a tractor without a rollover bar can result in death or injury.
3. **Do not remove ROPS (Roll Over Protective Structure).** Always use the seat belt.
4. Fiberglass canopy does not give any protection.
5. To prevent falls, keep steps and platform clear of mud and oil.
6. Do not permit anyone but the operator to ride on the Tractor. There is no safety place for extra riders.
7. Replace all missing, illegible or damaged safety signs.
8. **Keep safety signs clean of dirt and grease**

■ servicing the Tractor

1.keep the tractor in good operating condition for your safety. An improperly maintained Tractor can be hazardous.
2. Stop the engine before performing any service on the tractor.
3. The cooling system operates under pressure, which is controlled by the radiator cap**. It is dangerous to remove the cap while the system is hot**. First turn the cap slowly to stop and allow the pressure to escape before removing the cap entirely.
4. **Do not smoke while the refueling the tractor. Keep away any type of open flame**.
5. The fuel in the injection system is under high pressure and can penetrate the skin. Unqualified persons should not remove or attempt to adjust a pump, injector, nozzle or any part of the fuel injection system.
   Failure to follow these instructions can result in serious injury.
6. **Keep open flame away from battery or cold weather starting aids to prevent fire or explosions.**
7. **Do not modify or alter or permit anyone else to modify or alter this tractor or any of its components or any tractor functions**

■ **Operating the tractor**

1. Before starting the tractor apply the parking brake, place the PTO (Power Take Off) lever in the "OFF" position, the hydraulic control levers in the downward position, the remote control valve levers in the neutral position(if fitted) and the transmission in neutral.
2. Do not start the engine or controls while standing besides the tractor. Always sit on the tractor seat when the engine or operating controls.

3. Safety starter switch.

In order to prevent the accidental starting of the tractor, a safety switch has been provided. The starting system of the tractor is connected through this switch, which becomes operative only when the clutch pedal is depressed. On some models shuttle shifter lever and PTO button should also be in neutral position for completing the starting circuit. **Do not bypass the safety starter switch**. Consult your Mahindra Tractor Dealer/Distributor if safety- starting switch malfunctions.

4. Avoid accidental contact with the gear shifter lever while the engine is running. Unexpected Tractor movement can result from such contact.
5. Do not get off or climb the tractor while it is in motion.

6. Shut off the engine, remove the key and apply the parking brake before getting off the tractor.

7. Do not operate the tractor in an enclosed building without adequate ventilation. Exhaust fumes can cause death.

8. Do not park the tractor on a steep slope.

9. **If power steering or Engine seizes to operate, stop the tractor immediately**.

10. Pull only from the swinging draw bar or the lower link drawbar in the down position. Use only a drawbar pin that locks in place. Pulling from the tractor rear axle carriers or any point above the rear axle may cause the Tractor's front end to lift.

11. If the front end of the tractor tends to rise when heavy implements are attached to the three-point linkage, install front end or front wheel weights. Do not operate the tractor with a light front end.

12. Always use hydraulic position control lever when attaching equipments/implement and when transporting equipment. Be sure that the hydraulic couplers are properly mounted and will disconnect safely in case of accidental detachment of implement.

13. Do not leave equipment/implement in the raised position.

14. Use the flasher/ Turn signal lights and Slow Moving Vehicle (SMV) signs when driving on public roads during both day and night time, unless prohibited by law.
15. Dim tractor lights when meeting a vehicle at night. Be sure the lights are adjusted to prevent the blinding on the eyes of coming vehicle operator.
16. Emergency stopping instruction; If tractor fails to stop even after application of brakes, Pull the knob of fuel shut off control rod.

■ Driving the tractor

1. Watch where you are going especially at row ends, on roads, around trees and low hanging obstacles.
2. To avoid upsets, drive the tractor with care and at speeds compatible with safety, especially when operating over rough ground, crossing ditches or slopes, and when turning at corners.
3. Lock the tractor brake pedals together when transporting on roads to provide proper wheel braking.
4. Keep the tractor in the same gear when going downhill as used when going uphill. Do not coast or free wheel down hills.
5. Any towed vehicle and/or trailer whose total weight exceeds that of the towing Tractor, must be equipped with its own brakes for safe operation.
6. When the tractor is stuck or tires are frozen to the ground, back out to prevent upset.
7. Always check overhead clearance, especially when transporting the tractor.

■ Operating the PTO (Power Take Off)

1. When operating PTO driven equipment, shut off the engine and wait until the PTO stops before getting off the tractor and disconnecting the equipment.
2. Do not wear loose clothing when operating the power take-off or near rotating equipment.
3. When operating stationery PTO driven equipment, always apply the tractor parking brake and block the rear wheels from front and rear side.
4. To avoid injury, always move down flip part of PTO. Do not clean, adjust or service PTO driven equipment when the tractor engine is running.
5. Make sure the PTO master shield is installed at all times and always replace the PTO shield cap When the PTO is not in use.

■ Diesel fuel

1. Keep the equipment clean and properly maintained.
2. Under no circumstances should gasoline, alcohol or blended fuels be added to diesel fire or explosive hazard. Such blends are more explosive than pure gasoline. In a closed container, such as a fuel tank. DO NOT USE THESE BLENDS.
3. Never remove the fuel cap or refuel the tractor with the engine running.
4. Do not smoke while refueling or when standing near fuel.
5. Maintain control of the fuel filler pipe when filling the tank.
6. Do not fill the fuel tank to capacity. Allow room for expansion.

7.Wipe up spilled fuel immediately.

8.Always tighten the fuel cap securely.

9.If the original fuel tank cap is lost, replace it with genuine cap. A none approved cap may not be safe.

10.Do not drive equipment near open fire.

11.Never use fuel for cleaning purpose.

12.Arrange fuel purchases so that winter grade fuel are not held over and used in the spring.

N.B: It is suggested that after repairs if any of the Safety Decal/sign is peeled/defaced, the same may be replaced immediately in interest of your safety.

DO'S AND DON'T'S

DO'S-For Better performance

DO-Ensure that safety shields are in place and in good condition.

DO-Read all operating instructions before commencing to operate Tractor.

DO-Carry out all maintenance tasks without fail.

DO-Keep the air cleaner clean.

DO -Ensure that the correct grade of lubricating oils is used and that they are replenished and changed at the recommended intervals.

DO-Fit new sealing rings when the filter elements are changed.

DO-Watch the oil pressure gauge or warning light and investigate any abnormality immediately.

DO-Keep the radiator filled with clean water and in cold weather use anti-freeze mixture. Drain the system only in an emergency and fill before starting the engine.

DO-Ensure that the transmission is in neutral before starting the engine.

DO-Keep all fuel in clean storage and use a filter when filling the tank.

DO-Attend to minor adjustments and repairs as soon as necessity is apparent.

DO-Allow the engine to cool before removing the radiator filler cap and adding water, remove the radiator cap slowly.

DO-Shift into low gear when driving down steeps hills.

DO-Latch the brake pedals together when driving on a highway.

DO-Keep draft control lever fully down when not in use.

Don'ts-For safe operation

DON'T-Run the engine with the air cleaner disconnected.

DON'T-Start the tractor in an enclosed building unless the doors and windows are open for proper ventilation.

DON'T-Operate the tractor or engine while lubricating or cleaning.

DON'T-Allow the tractor to run out of diesel fuel otherwise it will be necessary to vent the system.

DON'T-Temper the fuel injection pump, If seal is broken the warranty becomes void.

DON'T-Allow the engine to run idle for a long period.

DON'T-Run the engine if it is not firing on all cylinders.

DON'T-Ride the brake or clutch pedal. This will result in excessive wear of the brake lining, clutch driven member and clutch release bearing.

DON'T-Use the independent brakes for making turns on the highway or at high speeds.

DON'T-Refuel the tractor with the engine running.

DON'T-Mount or dismount from the right side of the tractor.

DON'T-Temper the hydraulic control levers' upper limit stops.

DON'T-Use draft control lever for lifting of implements.

DON'T-Start the engine with the PTO engaged.

DON'T-Use the governor Control Lever (Hand throttle) while driving on roads.

DON'T-Move the hydraulic levers rearward.

SAFETY SIGNS

(Replace all missing, damaged or illegible signs)

GENERAL SAFETY INFORMATION

IMPORTANT: This **"General safety Information"** should be kept with the machine at all times as reference data.

⚠	This symbol means **ATTENTION! YOUR SAFETY IS INVOLVED**. The message that follows the symbol contains important information about safety. Follow recommended precautions and safe operating practice.

⚠ WARNING

- Before starting and operating know the operating and safety instructions in the operators Manual and on the tractor
- Clear the area of bystanders.
- Locate and know operation of controls.
- Start engine only from Operator's seat with depressed clutch pedal, transmission in the neutral, PTO disengaged and hydraulic control in lower position
- Slow down on turns, rough ground and slopes to avoid upset.
- Do not permit anyone but the operator to ride on the tractor. There is no safe place for rider.
- Lock brakes together, use warning lights and SMV emblem while driving on roads.
- Lower equipment, place gear shift levers in neutral, stop engine, remove the key and apply parking brake before leaving the tractor seat.
- Air pressures are specified by the manufacturer

FAILURE TO FOLLOW ANY OF THE INSTRUCTIONS ABOVE CAN CAUSE SERIOUS INJURY TO THE OPERATOR.

Location: On fender RH

Part No.: 1260-904-070-1A

⚠ Warning

TO AVOID POSSIBLE

PERSONAL INJURY, THIS GUARD MUST BE KEPT IN PLACE

Location: ON PTO guard

Part No.: 1260-904-069-0A

https://truckmanualshub.com/

CAUTION

TO PROTECT ENGINE AND HYDRAULIC COMPONENTS.

- Idle engine for 1 minute before shut down or full load operation.
- Do not exceed 1/2 throttle for first 5 minutes of operation.

Location: On Dash cover side RH

Part No.: 1260-904-064-0

Warning

The cooling system Operates under pressure .

- It is dangerous to remove the radiator cap while the system is hot
- Always turn the cap slowly to the first stop and allow pressure to escape before removing the cap completely.
- When operating below 32°F, use suitable anti-freeze solution as coolant

Location: On Radiator bracket side LH&RH
Part No.: 1260-904-063-0

Location: On PTO Guard
Part No.: 1200-910-013-0

Warning

KEEP HANDS AND CLOTHING AWAY FROM ROTATING FAN AND BELTS TO PREVENT SERIOUS INJURY

Location: On Radiator bracket side LH&RH
Part No.: 1260-904-061-0

CAUTION

BEFORE OPERATE THE TRACTOR, READ THE OPERATOR'S MANUAL THOROUGHLY, TO UNDERSTAND THE IMPORTANT FUNCTIONS AND CONTROLS.

Location: On dash cover side LH.
Part No.: 1260-904-067-0A

DANGER

Rotating driveline contact can cause Death

KEEP AWAY !

Keep all drive line.

Tractor and equipment shields in place during operation

MUSA Website Main Menu Index Full Screen Search Print EXIT

DANGER

BLINDNESS CAN RESULT FROM BATTERY EXPLOSION.
KEEP SPARKS OR OPEN FRAMES AWAY FROM BATTERY.
DO NOT JUMP START.
BURNS CAN RESULT FROM BATTERY ACID.
IN CASE OF CONTACT FLUSH IMMEDIATELY WITH WATER .

Location: On battery bracket RH
part No.: 1260-904-066-0

WARNING

- Pull only from drawbar. Pulling from any other point can cause rear overturn.
- Do not operate with unshielded PTO.
- Disengage PTO and stop engine before servicing tractor or attaching and detaching implements.
- When towing equipment use a Safety chain

FAILURE TO FOLLOW ANY OF THE INSTRUCTIONS ABOVE CAN CAUSE SERIOUS INJURY TO THE OPERATOR OR OTHER PERSONS.

Location: On rear frame
Part No.: 1260-904-065-0A

FRONT TYRE (9.5-16) PRESSURE
Air pressure: 30 p.s.i

Location: On Front Rims.

REAR TYRE (13.6-26) PRESSURE
Air pressure: 21.3 p.s.i

Location: : On rear rims.

WARNING

- Start engine only from operators seat. If safety start switch is bypassed engine can start with transmission in gear.
- Do not connect or short across terminal on starter solenoid.
- Attach booster cables as shown on battery decal and operators manual.

Starting in gear causing runaway can result in serious injury.

Location: On dash cover side LH
Part no: 1260- 904-062-0A

WARNING

DO NOT REST FOOT ON CLUTCH PEDAL.
MAY RESULT IN DAMAGE TO CLUTCH ASSEMBLY.

Location: On dash panel near clutch pedal

Part No.: 1260-904-068-0

UNIVERSAL SYMBOLS

Some of the universal symbols have been shown below with an indication of their meaning

Engine speed rev/minX100)	Pressured-open slowly	Corrosive substance
Hours, recorded	Continuous variable	”Tortoise” Slow or ınminimum Setting
Engine coolant temperature	Warning	”Hare” fast or maximum setting
Fuel level	Hazard warning	Transmission oil pressure
Engine Stop control	Neutral	Turn signal
Lights	Fan	Transmission ıl temperature
Horn	Power take off engaged	parking brake
Engine oil pressure	Power take off Disengaged	Work lamps
Air filter	Lift arm/raise	Differential lock
Battery charge	Lift arm/lower	See operator’s manual

https://truckmanualshub.com/

Section - A

Controls, Instruments And Operations

The following pages in this section detail the location and function of various instruments, switches and controls on your Tractor. Even if you operate other Tractors, you should read through this section of the manual and ensure that you are thoroughly familiar with the location and function of all the features of your New Tractor.

Do not start the engine or attempt to drive or operate the Tractor until you are fully accustomed to all the controls. It is too late to learn once the Tractor is moving. If in doubt about any aspect of the operation of the tractor consult your Mahindra Tractor Dealer/Distributor.

Particular attention should be paid to the recommendations for running-in to ensure that your tractor will give long life and dependable service for which it was intended

DESCRIPTION OF TRACTOR CONTROLS

INSTRUMENT AND SWITCHES

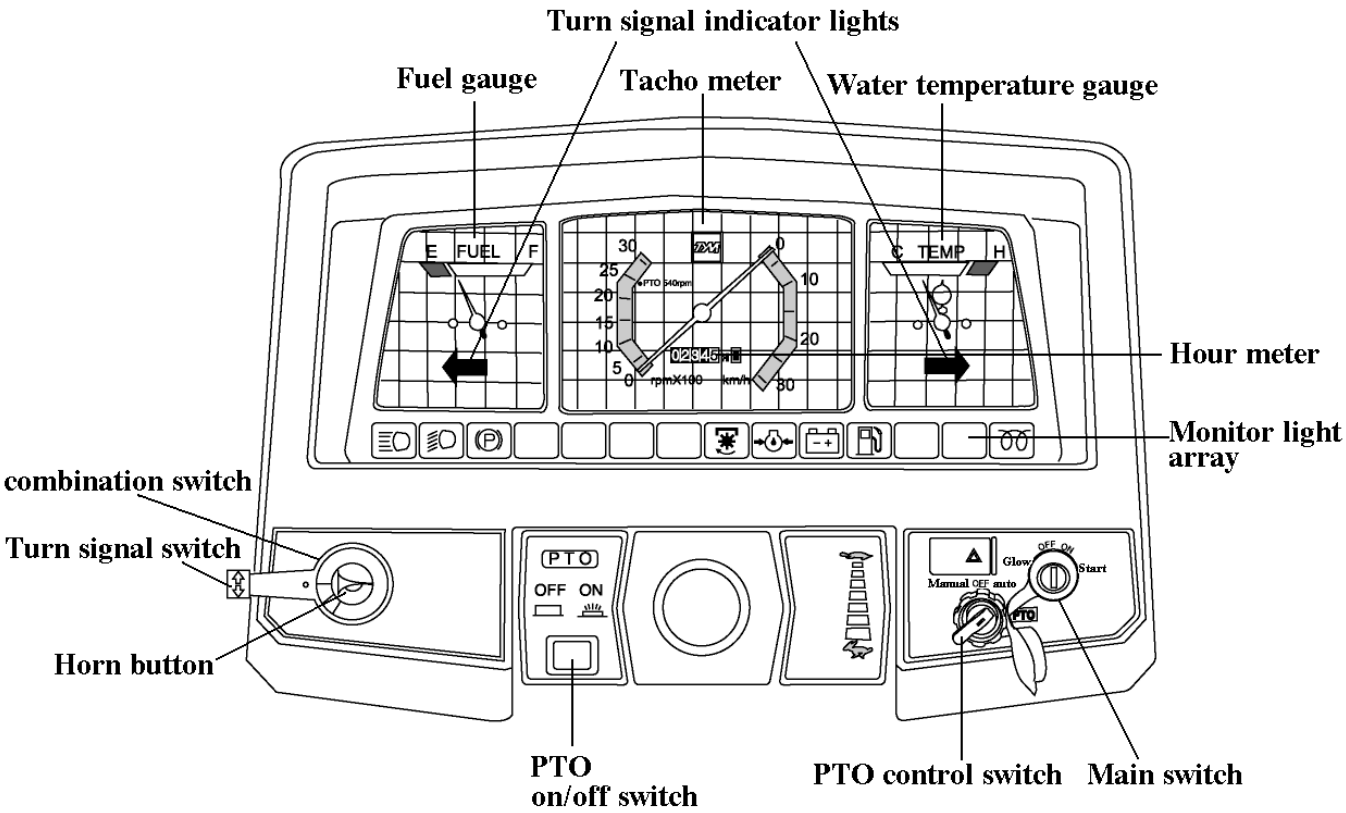

►Main switch

[OFF]-The key can be inserted or removed

[ON]- The electric circuit is on.

[Glow]-Glow plugs preheat the combustion chamber

[START]-The starter motor is engaged.

When the key is released it will return to the ON position

►LIGHT SWITCH, INDICATORS AND HORN

High and low beam are operated

On the main switch

Position 1. High beam

Position 2. Low beam

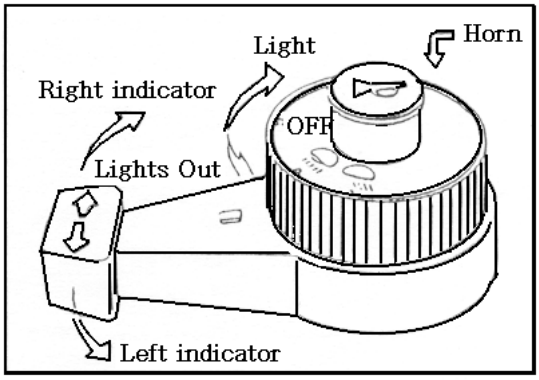

►TACHOMETER

This meter shows the revolutions of the engine and the PTO shafts as well as the travel speed in top gear

(1) Right needle

Indicates speed in top gear.

(2) Left needle

Indicates engine revolutions

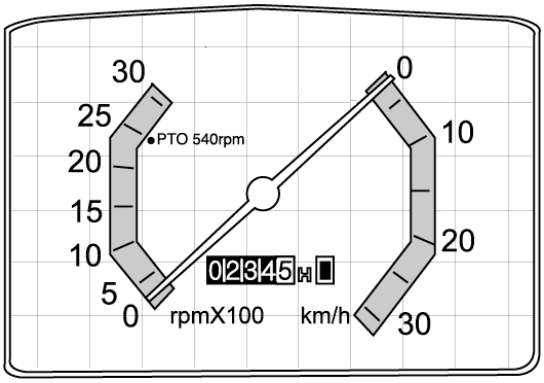

►HOUR METER

The hour meter consists of digits with the last digit indicating 1/10th of an hour

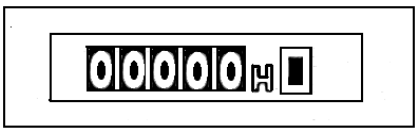

►FUEL GAUGE

Shows the amount of fuel in the tank when the ignition switch is ON

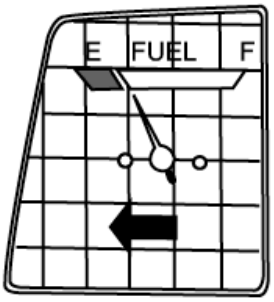

►WATER TEMPERATURE GAUGE

Shows the water temperature with the ignition switch ON

C is low to normal temperature

H is high temperature

If the pointer is in the red H segment the engine is overheating.

Refer this book to rectify the problem

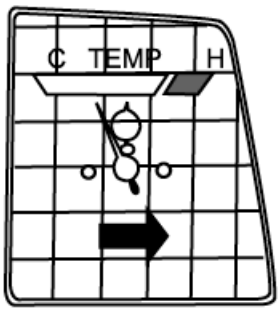

►WARNING LIGHTS

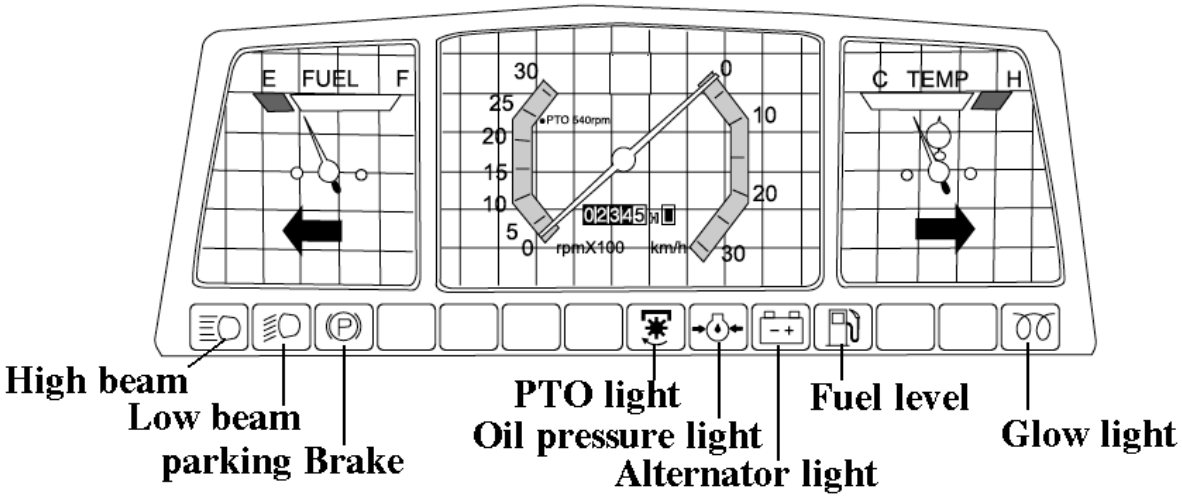

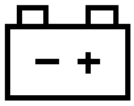

Charge lamp

This light will go off as soon as the engine starts to run to indicate that the alternator is changing.

(Please note, as broken fan belt can cause the light to come on, please stop the engine as overheating can occur if not rectified immediately)

Oil pressure lamp

Will go out as soon as the engine starts if the oil pressure is correct.

If it comes on while the engine is running, stop the engine and get expert advice**.**

PTO monitor Lamp
Shows the revolution of PTO
Refer to monitor lamp on Page 34

High beam lamp is operated on the combination switch.

Low beam lamp is operated on the combination switch

Glow signal Lamp indicates preheating

►Independent PTO

■ It must be noted that the PTO shift lever on the LHS below the driver seat should be shifted to position 1 (540 RPM) depending upon the implement specification. **In no case the specified speeds be crossed as serious damage to the tractor/implement to person can result because of this.** When the PTO is not in use the shift lever must be put in neutral position to avoid unnecessary use or accidental use.

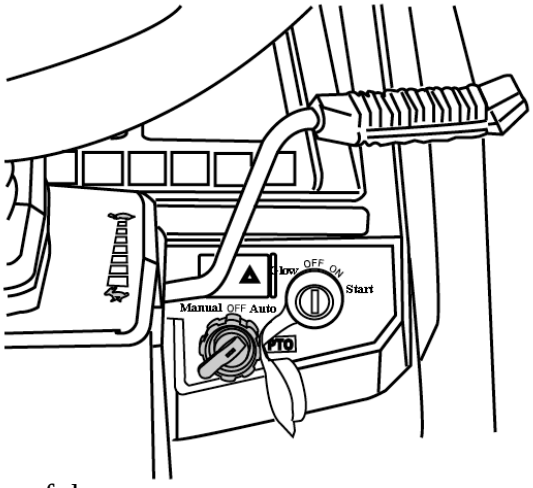

■ **The PTO monitor lamp** on the dash panel indicates the state of the PTO shaft.

1. If the monitor glows: The PTO is rotating
2. If the monitor is off: The PTO is off
3. If the monitor blinks: The PTO is presently stationary but will instantly start rotating of the clutch pedal is released or the implement is lowered

PTO monitor Lamp

Two switches operate the independent PTO.

1.PTO ON/OFF switch: PTO ON/OFF switch is situated on the LHS. on the steering column and can be identified easily with its built in red colored indicator. When the switch is pushed down to start the PTO indicator glows to indicate that the switch and the PTO are in ON position, If the switch is pushed down again the indicator goes off signaling that the PTO is OFF.

2. PTO Control switch: This switch is situated near the starting key location on the dash panel. There are three positions marked for this switch.

■ **Off** at the center
■ **Manual** at the left
■ **Auto at the right.**

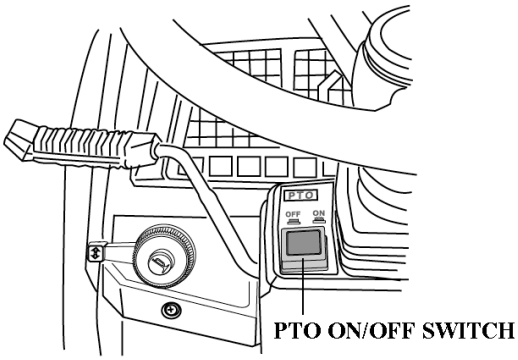

PTO ON,Off switch

The PTO shaft will not rotate if either of the two switches is in OFF position.

The following table explains how the PTO operates at the two different (Manual & Auto) positions of the PTO control switch with the PTO ON/OFF switch in the on position.

PTO control switch

First select the specified speed for the PTO by using the PTO shifter on the LHS, below the driver seat.

PTO ON/OFF Switch	PTO Control Switch	Clutch Pedal.	Hydraulic Position Control Lever.	PTO Monitor Lamp on the dash panel	PTO SHAFT
On	Manual Mode	Either pressed or released	Either raised or lowered	Glows	Rotates
On	Auto Mode	Pressed	Either raised or lowered	Blinks	Stationary
On	Auto Mode	Either pressed or released	Raised	Blinks	Stationary
On	Auto Mode	Released	Lowered	Glows	Rotates

■ From the table above we learn about the safety features of the PTO. When the monitor on the dash panel is blinking it indicates to the operator that the PTO is in the on position but temporarily not rotating either because the clutch pedal is pressed or the implement is lifted off the ground or both. The PTO will start rotating instantaneously when either the clutch pedal is released and/or the implement is lowered to the ground.

■ The operator must use this blinking signal to clear the area around the tractor off bystanders/onlookers as the rotating blades of certain implements can accidentally cause injuries to the persons standing near the tractor.

■ The stopping of the PTO when the implement is lifted off the ground with the position control prevents the damage to the implement or the PTO shaft.

Warning

1.When the PTO control switch is in manual position the PTO does not stop rotating even if the clutch pedal is pressed. If working on hard soils,pavements with a rotary implement the PTO ON/OFF switch must be put to the OFF position to stop the PTO from rotating, If this is not done the rotating blades of the implement will push on the hard ground below and in turn push the tractor toward causing accident which can lead to serious injuries or death.

2. Extra precaution must be taken to clear the area of bystanders/onlookers when using PTO driven implements. The rotating blades of the implements can cause serious injuries on contact. The warning that is indicated by the blinking PTO monitor is to make the operator aware that the PTO is in on position and will instantly start rotating if the clutch pedal is released or implement is lowered or both.

3.In no case the specified rotating speeds indicated by the implement manufacturer be crossed as the same can lead to serious damage to the tractor/equipment and can lead to serious injuries to persons around.

TRACTOR CONTROLS

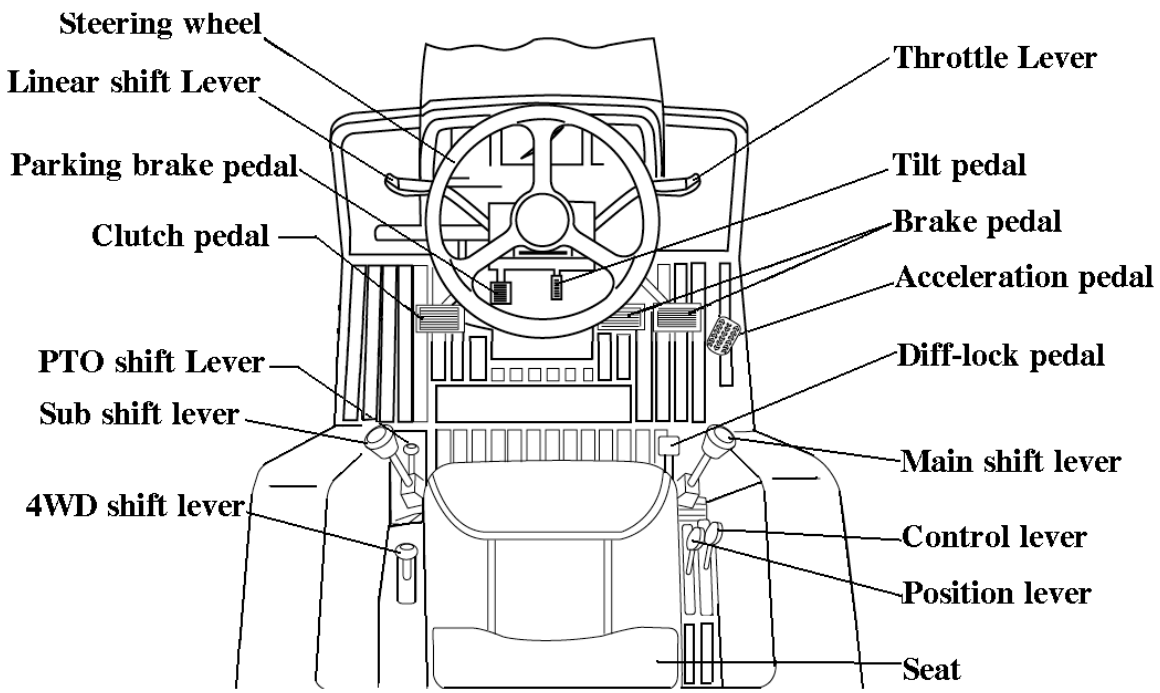

►Hand Throttle

Pulling the hand throttle towards the driver increases revolutions.

Pushing it away from the driver decreases revolution.

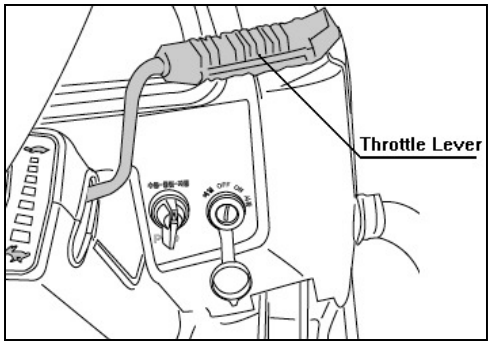

►Clutch disconnecting arm

For long term storage of the Tractor it is possible to latch the clutch in the disengaged position.

Push the clutch down and engage the latch to hold it there.

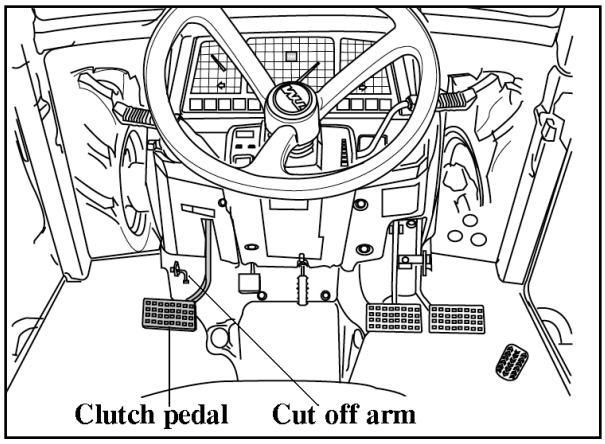

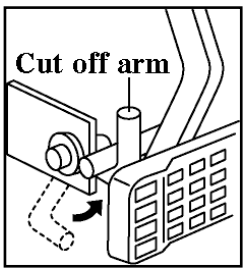

warning

Do not attempt to start engine when this arm is being used.

► BRAKE PEDAL

Right and left brake pedals are provided to assist in turning the tractor in the field.

Caution	A connecting latch is provided to connect the right and left brake pedals for high speed or road use. In the interest of safety always use it on the road or at high speed as using one side only can cause rollovers. When servicing the tractor ensure that the adjustment on both sides in the same.

► Foot operated accelerator

This pedal can override a fixed hand throttle setting

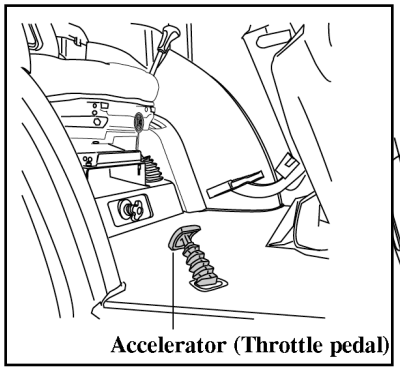

► Park brake

Connect the brake pedals , push them down while pulling the park brake up to engage. Press the parking brake pedal and push the Brake pedal to release.

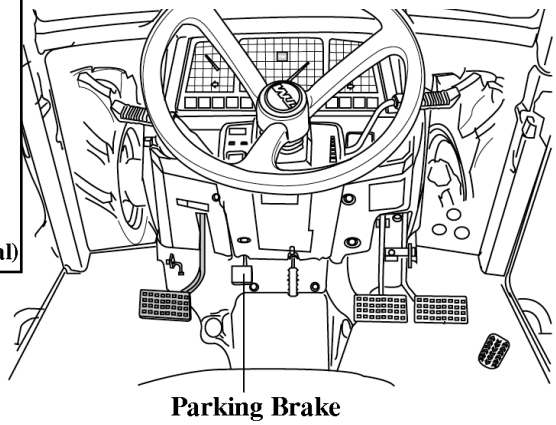

important	Traveling with the park brake on will damage the brakes.

►Shuttle shift lever

This control allows shifting from forward to reverse & reverse to forward. When stationary set the lever to **N** for neutral

① Push the lever away from the driver engages forward.

② Pulling the lever towards the driver engages reverse.

important	Press clutch pedal fully before operating shuttle shift lever.

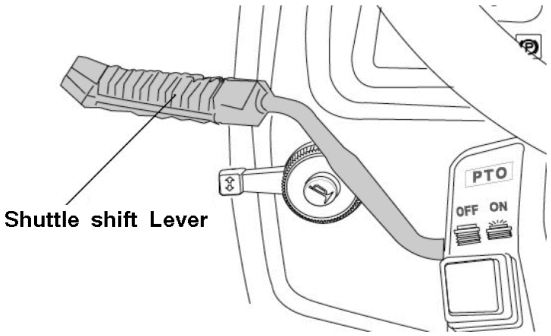

important	When changing from forward to reverse or back to forward again while in high range make sure the tractor comes to a stop before changing direction. Failure to do so is likely to result in damage to the mechanism and place the driver at risk of injury.

Caution	Operate the shuttle shift only while seated on the tractor. Do not use the shuttle shift lever to start the tractor for towing or traveling uphill, use the clutch instead. Always stop the tractor before getting off.

▶ Main gear lever

This lever can be shifted by using the clutch, both when the tractor is stationary or mobile.

It is located on the R.H.S of the driver seat.

▶ Sub gear lever(Linear shift lever)

Operate the sub gear lever using clutch to select the appropriate speed for different applications.

It is located on the LHS of driver seat.

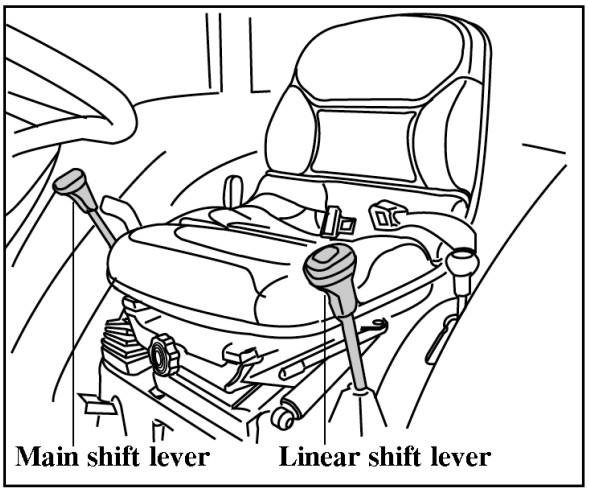

important	Do not operate gear levers without stopping the tractor & without using the clutch.

▶ Diff-lock pedal

In case of wheel slippage use the diff-lock by pushing down on the diff lock pedal.

To release it remove the foot from the pedal.

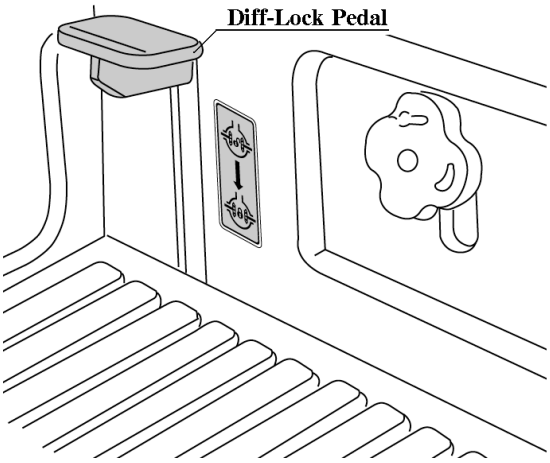

Danger	Tractor will be difficult to turn if the Diff-lock is engaged, ensure the lock is disengaged before turning the steering wheel.

important	Do not use high engine RPM when engaging Diff lock If the diff lock does not release after removing the foot from the diff lock pedal alternatively brake with the left and right brake until it gets released.

Caution	Never use the diff lock at high speed or on the road as this can cause roll over and injury.

▶ Front wheel drive lever

In the ON position the front wheels are engaged and in the OFF position they are disengaged.

Engage & disengage the front wheel drive with the front wheels in the straight position and at low Engine RPM.

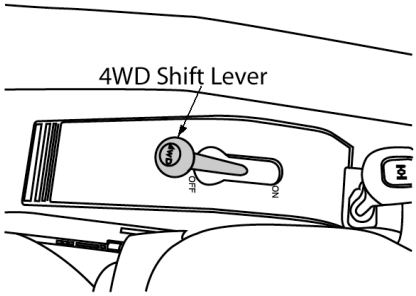

important	Always use the clutch when using the front wheel drive lever.

important	Do not use front wheel drive at high speed or on the road as premature wear of components will result.

Use of front wheel drive improves traction performance.

▶ **Driver's seat**

To adjust the seat backwards and forwards lift the lever at the front of the seat and set it to the desired position

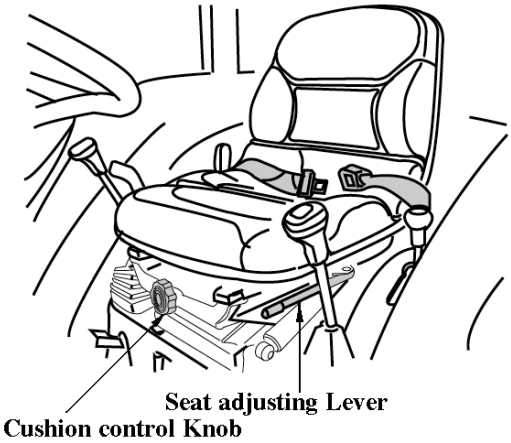

▶ **Tilt pedal**

To adjust the inclination of the steering wheel with a 3 stages and set it to the desired position.

Danger	Ensure that the tilt pedal has locked before moving the tractor.

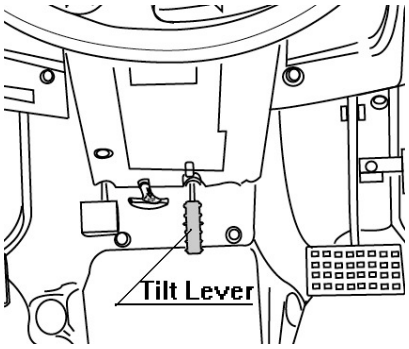

PTO GEAR SELECTION LEVER

Your tractor is equipped with 1 Speed PTO (4510) to suit range of applications and conditions.

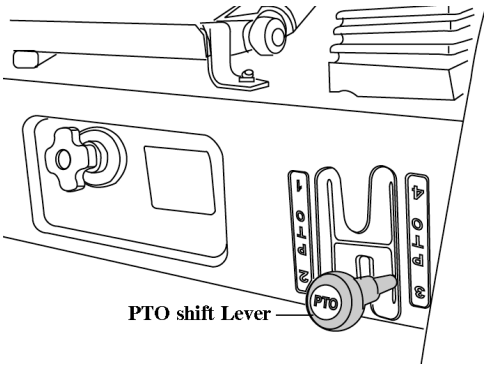

MODEL	POSITION			
	1			
4510	587			

important	Always use the clutch when engaging or disengaging the PTO or changing PTO speed. Let the PTO driven implement come to a complete stop before changing.

Caution	Do not operate any implement at a high speed than is specified for it. When making adjustments to the implement stop the engine to avoid serious injury. When leaving the tractor stop the engine, and remove the key. Set the parking brake.

Operating the hydraulics.

The hydraulics are powered with an engine driven hydraulic pump and controlled with a position control lever mounted beside the driver.

Position control

▶ implements can be raised and lowered with the hydraulic position control lever and can be stopped at any position by stopping the lever.

To ensure a consistent working depth the adjustable stop can be set to ensure that the implement returns to the same depth every time.

To raise the implement: Pull the lever back

To lower the implement: Push the lever forward.

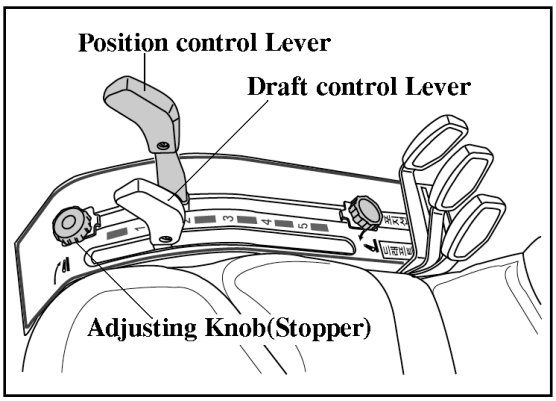

MUSA Website Main Menu Index Full Screen Search Print EXIT

Warning	After finishing the work, always lower the implement to the ground and switch off the engine, Set the parking brake to avoid injuries and accidents .

Draft control lever

▶ Soil engaging implements can be set for precision work by using draft control. By mounting the lever forward. The depth increase & by moving the lever backwards the depth increases.

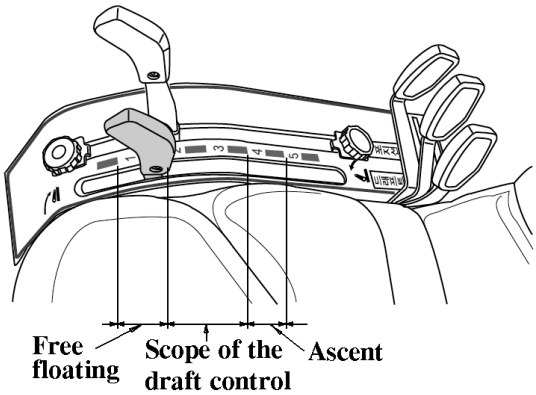

Adjusting Knob of hydraulic descent speed

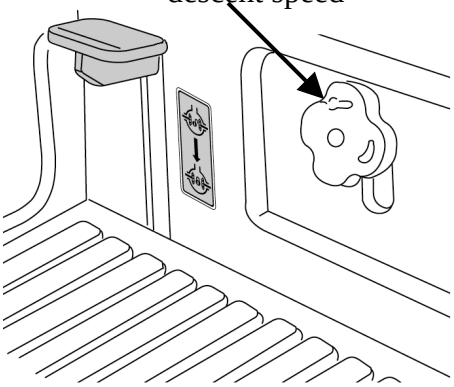

▶Lowering speed control knob for the 3 point hitch

This knob controls the downward speed of the hydraulics three point linkage and is positioned at the front of the driver's seat.

To slow the downward speed- Turn the knob clockwise.

To increase the downward speed, turn the knob anticlockwise.

To lock the knob clockwise.

Do not over tighten the knob.

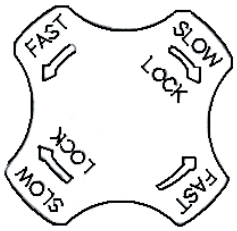

Caution	Always set the knob to lock when 1.Traveling on the road 2.Replacing tires or blades on an implement. 3.Making adjustments to an implement. Sudden dropping of an implement due to hydraulic problems can cause serious injury or death.

Exterior hydraulic Lever (Optional)

Move the lever up or down and hold.This will raise or lower the implement (rotavator or hydraulic plow). Lever will return to neutral by itself.

Important:

-Do not hold the lever in the “pull” or “Push”position once the remote cylinder has reached the end of the stroke.as this will cause oil to flow through the relief valve.Forcing oil through the relief valve for extended periods will overheat the oil.

-When Using the tractor hydraulic system to power front loader,do not operate the boom and bucket cylinders simultaneously.

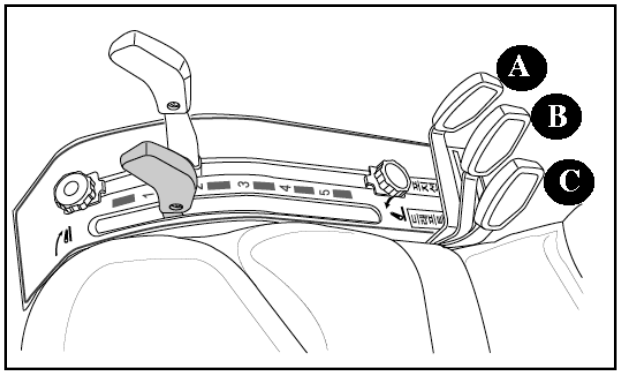

Remote hydraulic control valve coupler connecting and disconnecting

■ Connecting

1.Clean both couplers.

2.Remove dust plugs.

3.Insert the implement coupler to the tractor hydraulic coupler

4.pull the implement coupler slightly to make sure couplers are firmly connected.

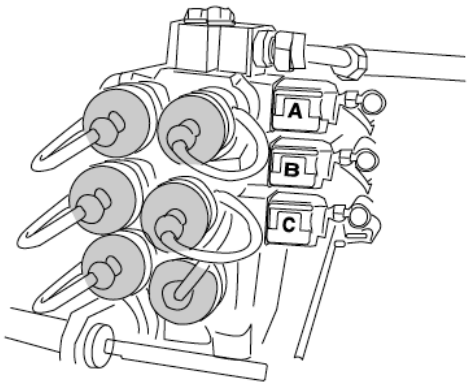

■ Disconnecting

1.Lower the implement first to the ground to release hydraulic pressure in the hoses.

2.Clean the couplers

3.Relieve pressure by moving hydraulic control levers with engine shut off.Pull the hose straight from the hydraulic coupler to release it

4.Clean oil and dust from the coupler,then replace the dust plugs.

OPERATING THE 3 POINT LINKAGE (TPL)

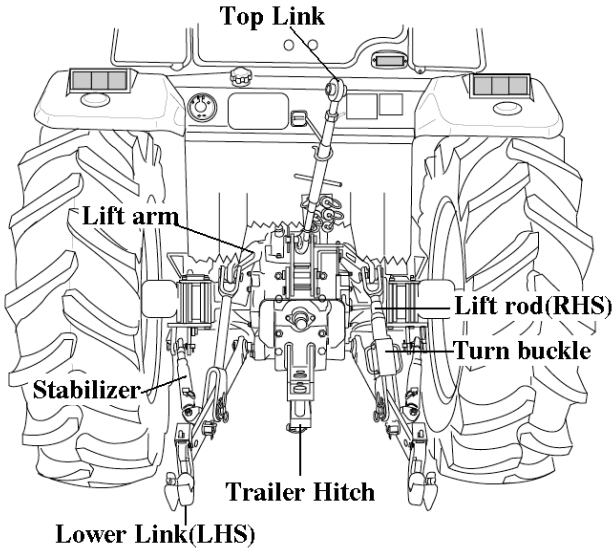

▶Telescopic stabilizers adjustment

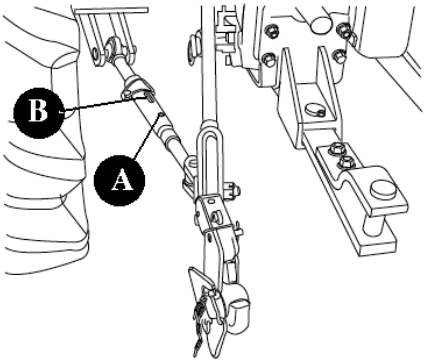

The stabilizers are intended for limiting or preventing implement side movement.

There should be no clearance(Position A) during implement transport and when working with grades,rollers mowers,seeders,drills and similar implements.However,a slight play is necessary(Position B) when working with ploughs,Harrows,ditchers,cultivators and the like:that is when working with “draft control”.The length of stabilizers is adjusted by removing the pin and rotating the turn buckle barrel by which the threaded ends are interconnected.

▶ADJUSTMENT OF THE TOP LINK

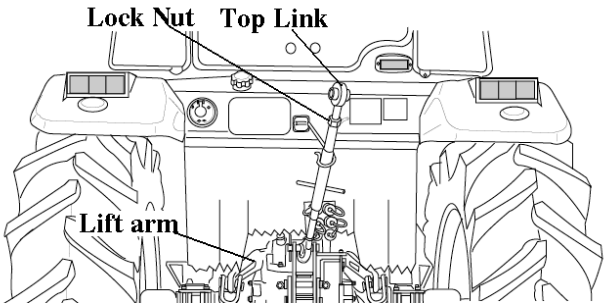

Lengthening or shortening the top link will change the angle of the implement.

The locating hole of the top link varies with the type of implement used.

The most common locations are the 1st and 2nd hole from the top

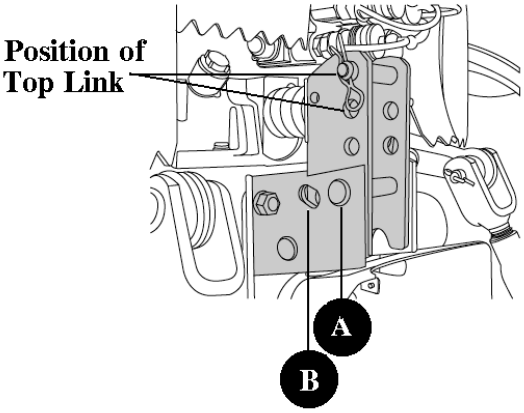

1) For general implement :Use the Pin to “A: point

2) For Draft control :Use the Pin to “B”point

▶ADJUSTMENT OF LOWER LINK

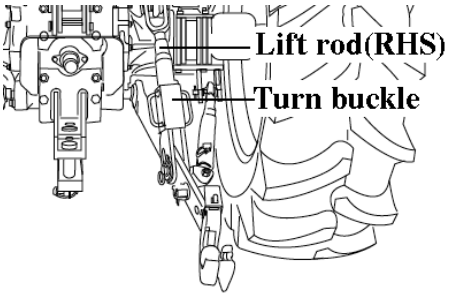

The adjustment is done with the adjusting handle on the Right hand yoke rod

To shorten it wind the handle clockwise and to lengthen it wind it anti-clockwise.

When adjusted correctly hold the turn buckle with the stopper provided.

▶ADJUSTMENT OF THE YOKE ROD ON THE LOWER LINK

For different applications change the position of the yoke rod on the lower links as shown and insert the pin in the direction of the arrow

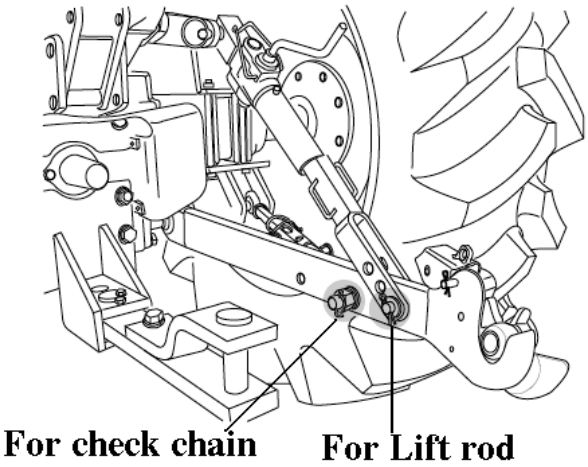

Danger	Only use drawbar to tow and keep the 3 point linkage in raised position when toeing with the drawbar. Position can create unbalance causing the Tractor to roll-over & Result the death or serious injury.

▶MOUNTING IMPLEMENT

If the PTO is used, remove the safety cover off the PTO shaft.
Adjust the yoke rod on the lower links to suit the implement in use.
Attach the left lower link, then attach the right lower link using the adjusting handle on the leveling box if required.
Attach the top link.
Attach the PTO shaft to the tractor if used, making sure that it is locked in place.
Adjust the check chains to suit the implement and tighten the locknuts.
To remove an implement reverses the procedure

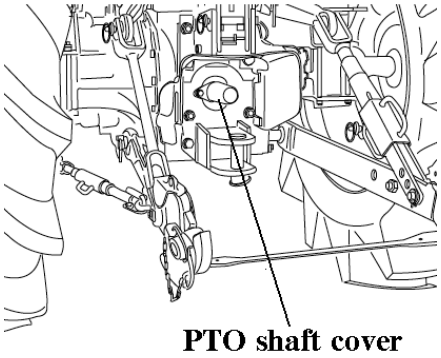

Caution	Do not attach a PTO shaft with the engine running and ensure all safety shields are in place.

DRIVING THE TRACTOR

STARTING THE ENGINE

Before starting the engine carry out the pre-operational checks as set out on page 17.

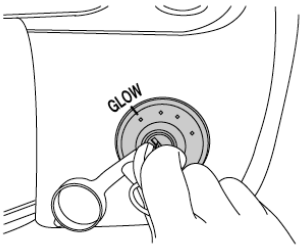

(1) Sit on the driver seat
(2) Apply the footbrake.
(3) Put the hydraulic lever in the down position.
(4) Push down the clutch to activate the safety-starting switch.
(5) Put the main gear lever in neutral
(6) Insert the ignition key and turn it on
(7) Ensure that the warning lights are working
(8) Always turn the ignition key to left for a moment & release it.
The automatic heater will start working as will be indicated by a light on the instrument panel .As the lamp goes off turn the key to the start position to start the engine.
(9) Ensure that all the warning lights are off with the engine running.

important	Never turn the key to the start position while the engine is running as this can cause serious damage to the starter and engine flywheel. Only engage the starter for a period of not more than 10 seconds. If Engine does not start, rest the starter for about 20 seconds and try again for a maximum of 10 seconds.If the engine does not start after repeated attempts, refer to the fault tracing guide on page 94

important	Especially in cold weather, always allow the tractor to idle for a while to warm up & build up sufficient oil pressure to ensure normal operating temperature for longer engine life.

STOPPING THE ENGINE

-After light work let the engine idle for a while and turn the key off.
-The engine stops when the key is turned off,If the engine does not stop .Pull the engine stop cable back and hold it until the engine stops.After the engine has stopped,be sure to push the engine stop cable back in,or the engine will not start next time.

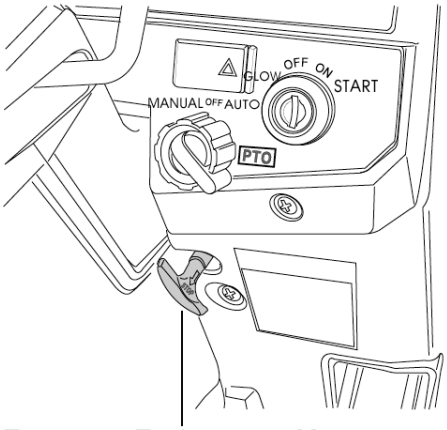

Emergency Engine stop cable

important	After long or heavy work allow the engine to idle for 5- 10 minutes and turn the key off.

MUSA Website Main Menu Index Full Screen Search Print EXIT

WARMING UP

When starting the engine allow it to warm up to operating temperature by allowing it to idle 5-10 minutes to ensure full lubrication and operating temperature.

Failure to do so can shorten engine life substantially.

▶WARMING UP IN COLD WEATHER

Cold weather will change the viscosity of the oil, resulting in a reduced oil pumping capacity, which can cause damage to the engine if it is not warmed up correctly.

It also causes problems with the hydraulic system and the synchromesh in the transmission.

Correct times for warming up are:

Temperature	Time for warming up
Above 50°F	5~10 min.
50°F~ 32°F	10~20 min.
32°F~14°F	20~30 min.
14°F~-4°F	30~40 min.
Below –4°F	Over 40 min.

important	Ensure the handbrake (Foot brake) is on during the warming period.

When the engine is warm push down the clutch and engage the main and auxiliary gear levers to the required position.

Push down on the brake pedals and release the handbrake.

Increase the engine revolutions and let out the clutch smoothly.

Only change gears with main gear lever while moving and ensure that this is done with fully use of the clutch.

Caution	Do not ”ride” the clutch to control speed, use a lower gear. Do not travel with your foot on the clutch pedal.

Danger	Always connect the brake pedals when traveling on the road. Never tow anything except with the drawbar. Do not tow loads which are too large for the tractor’s capacity to brake effectively especially in hilly terrain. Take special care when towing large or wide implements. Do not carry passengers. At all times observe local legislation and road rules.

TIGHT TURNS IN THE FIELD

Disconnect the latch connecting left and right brake pedals to allow the use of individual pedals.
To make a tight turn use both the steering wheel and the brake pedal at the same time.
For a left turns use the left pedal and a right turn the right pedal.

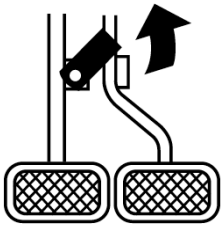

Caution	Perform tight turns only at a slow safe speed. Doing so at a high speed can cause rollovers and very serious injury or death.

NORMAL BRAKING AND PARKING

Let the engine come back to idle and at the same time push in the clutch and brake simultaneously.

When the tractor has come to a halt, lower any implement to the ground, and put the main gear in neutral.

Apply the park brake, stop the engine, and remove the key.

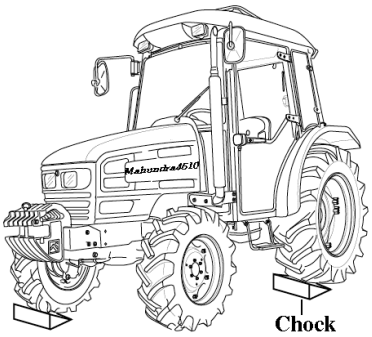

Illustration

Caution	Always apply the park brake when parking. Failure to do so can cause accidents and damage. As an extra precaution when parking on a slope, chock the rear wheels.

UPHILL STARTS ON A STEEP SLOPE

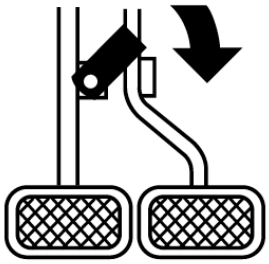

With the pedals connected together push down on the brake pedals and push down the clutch.
Set all gear levers to low and the throttle to medium engine speed.
Release the clutch and as it engages release the brake pedals.
Adjust the throttle to the required speed.

▶ Driving downhill

Use the engine's ability to brake when traveling downhill.

Never rely on the brakes only and never travel downhill with the gears in neutral.

Caution	When operating in hilly terrain the risk of the rollover is increased substantially, please drive with extra care. When towing trailers in hilly terrain ensure that they are equipped with brakes, use a lower gear to get maximum engine braking and do not change gears on a down hill run

OPERATION OF THE DIFF LOCK

While the diff lock is a very useful feature, care should be taken in its use as misuse can lead to dangerous situations.

The diff lock would only be used in situations where traction is lost on one of the rear wheels.

Warning	Use low engine revolutions when using the diff lock. If the diff lock does not release after removing the foot from the pedal use the left and right brake pedals in turn to release it. Do not try to engage or use the diff lock on tight turns as serious damage can result.

CHECK DURING DRIVING

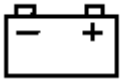

Constantly monitor the warning lights on the dash and if any comes on stop the tractor to determine the cause.
If the oil pressure light comes on check the oil level first of all.
If the oil level is OK ask a qualified dealer to check the reason for the light coming on.
If the alternator warning light comes on check all connections and ensure that the fan belt is not broken.
If all connections and the fan belt are intact consult your dealer to determine the cause of the problem.

▶**Fuel gauge.**

To avoid excessive condensation in the fuel tank refill at the end of each day's work and ensure during the day that it does not drop to a low level where the fuel system will require bleeding to expel air in the system after refilling the tank.

▶ **Engine cooling water.**

If the gauge indicates that the engine is running hot, stop the tractor and check the coolant in the radiator.

Danger	Allow the engine to cool down before opening radiator cap as serious burns may result due to hot steam & boiling water.

Also check to ensure that the fins in the radiator core are not clogged or that the tractor has a broken or stretched fan belt.

Caution	When traveling on public or farm roads connect both brake pedals and allow for the weight of any mounted implement to ensure that the unit is not unbalanced. Also allow for the width when passing other road users. Where fitted use the hazard lights provided. Strictly follow the local traffic regulations.

Caution	When operating near others with an implement attached take particular care to allow for the width of the implement and avoid accidents.

▶ Track adjustment

As some models of Mahindra are front wheel assist the front track can be set in 2 positions

The rear track can be set in 5 positions as illustrated.

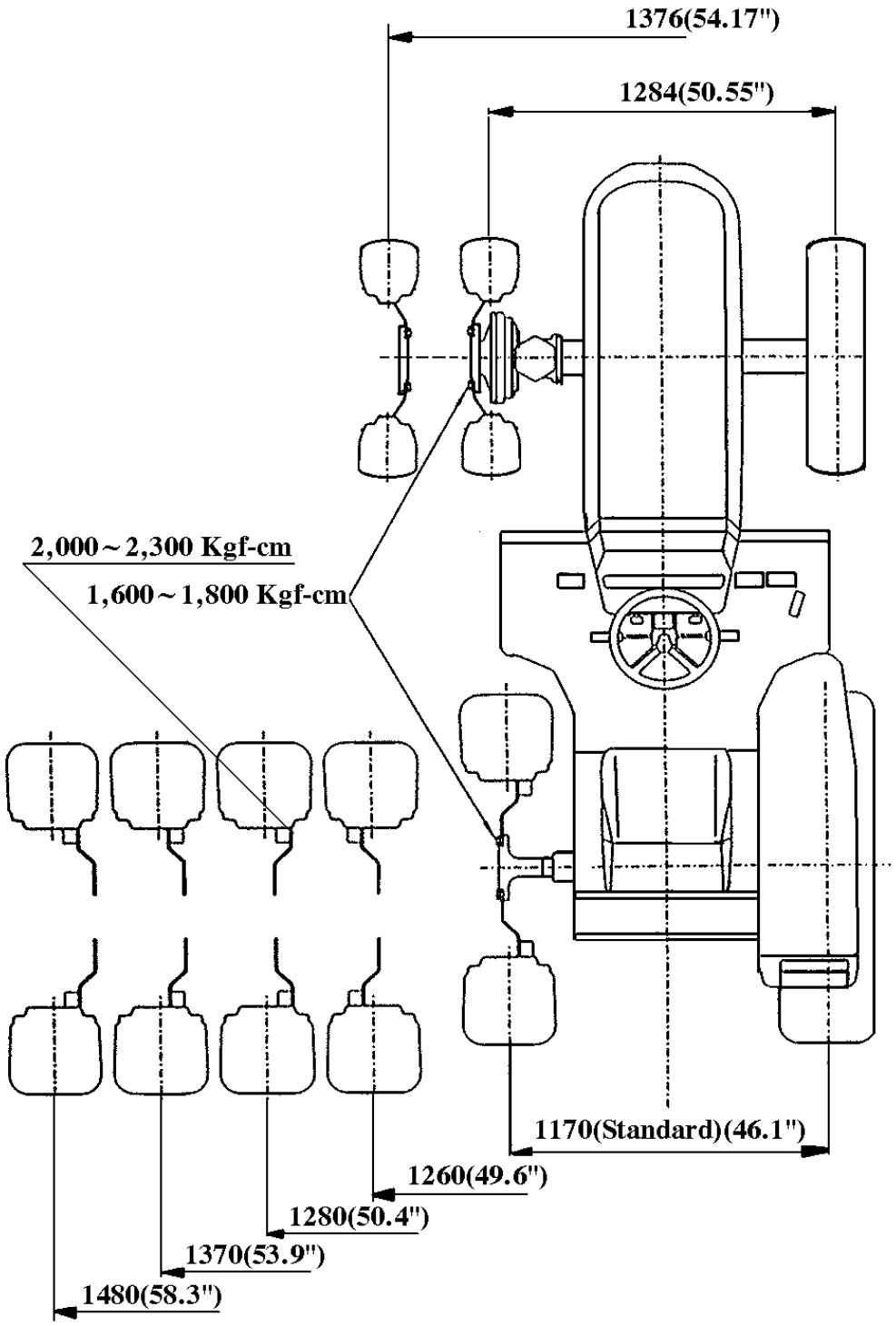

Unit : mm(in)

MUSA Website Main Menu Index Full Screen Search Print EXIT

https://truckmanualshub.com/

Lubrication

&

Maintenance

This section gives full details of the service procedures necessary to maintain your Tractor at peak efficiency while the lubrication and maintenance chart provides a ready reference to these requirements.

CHECKS AND SERVICE

PRE-START CHECKS

To avoid problems it is recommended that a range of checks be carried out daily before starting the tractor.

For full details of the items and frequency please refer to the tables on page 57,58, and 59.

▶ Engine coolant

Remove the radiator cap and ensure that the coolant is up to the filler neck and that it is clean with the correct anti-freeze or anti corrosion inhibitor in it.

If the coolant is a rusty color, drain the system completely and refill with the correct mixture of water and anti-freeze or corrosion inhibitor.

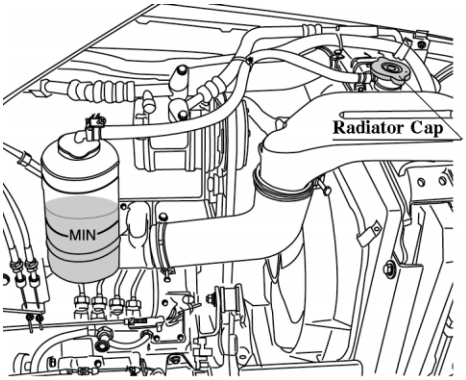

▶ Engine oil

Pull out the stick, wipe it and dip in the oil sump.

Ensure that oil level is between the upper and lower mark near the upper mark. If too low add oil, but never excess 100hrs.

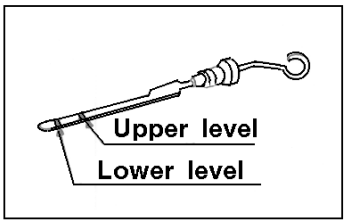

Engine oil gauge

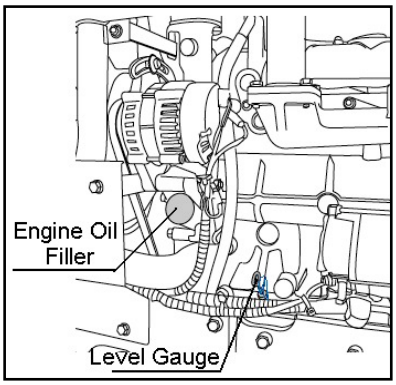

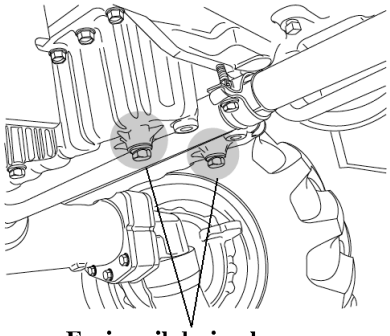

Engine oil drain plug

important	Do not overfill the crankcase with oil.

▶ Transmission oil

Check the level with the dipstick on top of the transmission in rear of the seat.

If the level is low add oil through the filler hole.

Caution	Always ensure that you use the correct oil for topping up or oil changes

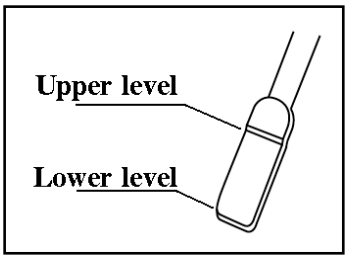

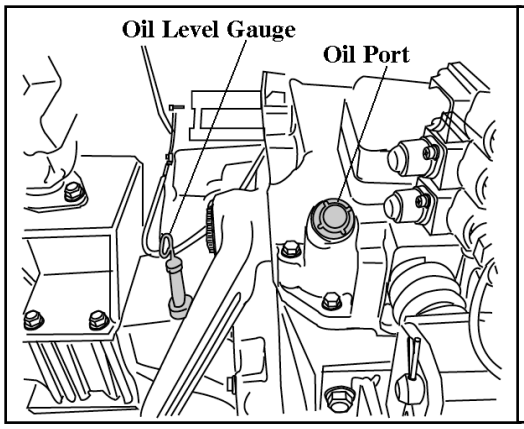

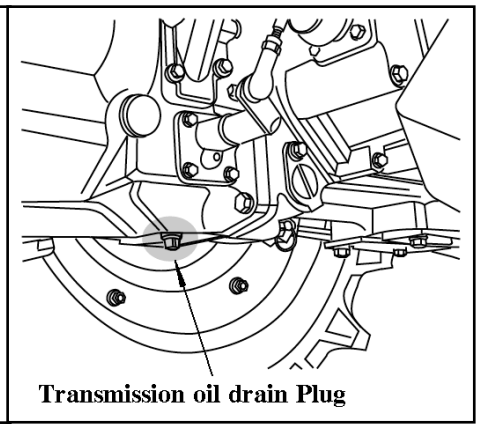

▶ Fuel

Use the fuel gauge to check the fuel level and top up if too low.

It is a good practice to refill the tank immediately after use to avoid condensation

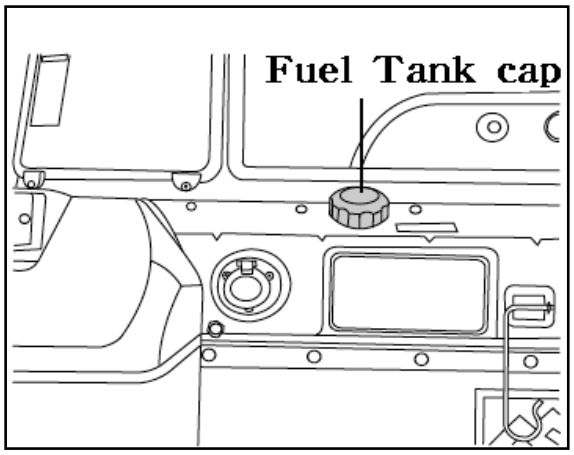

▶ Tire pressure

The air pressure used in the tires has a direct bearing on the life of the tire and its performance in the field.

Ensure that the tire pressures are correct and in accordance with the table on page 59.

To make a visual judgment see the drawing on the right.

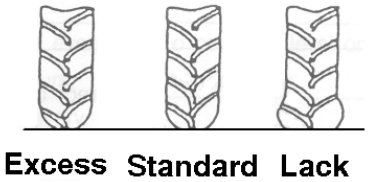

important	It is strongly recommended that tire pressures are checked with a proper gauge only & visual inspections are relied upon.

Danger	Excess tire pressure can cause accidents!

▶ Steering

Ensure that the steering wheel does not have excessive free play.

▶ Brake

Ensure that the left and right brakes are adjusted correctly so they operate simultaneously. The correct free play on the brake is 1.18-1.57 in (30~40 mm).

▶ Clutch

Ensure that the clutch is adjusted correctly.

Correct free play on the clutch pedal is 0.78-1.18 in (20~30mm).

⚠ Caution	Incorrect clutch adjustment can cause excessive wear and reduced tractor performance.

▶ Electrical

Check the operation of all gauge, switches, horn, lights and indicators.

▶ Installing loader

1.Connect P port of loader control valve to the line on the tractor marked P(from the PTO valve)
2.Connect the T port on the loader control valve to the line on the tractor marked T
(to the TPL at the rear of the tractor)
3.Connect the remaining line from the control valve to the line on the tractor marked P1
(to the transmission housing)

▶ Detaching the loader

1.Detach the hydraulic hoses of loader
2.Assemble the cap (PF1/2) with pipe comp.(PF1/2)

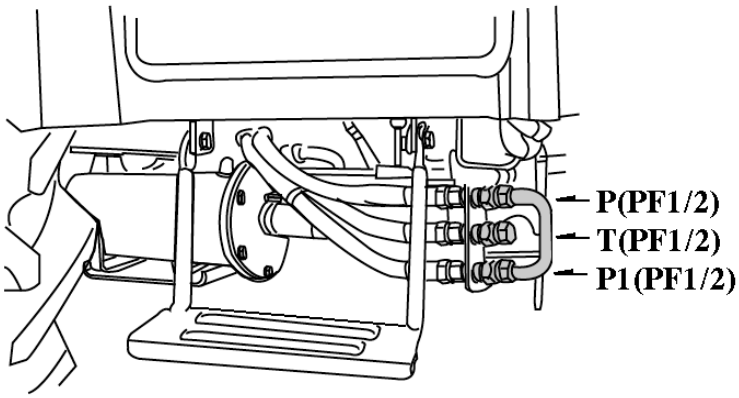

P1 :Passed oil through application
T :From application(Loader)valve(Used oil)

MAINTENANCE AND ADJUSTMENT SCHEDULE

Periodical check and service table

○ Check, Top-up or adjust ● Replace

△ Clean or wash ★ Consult the service Dealer

Division	Item	Daily	Service interval(hour meter,mark)												Frequency	Comment
			50	100	150	200	250	300	350	400	450	500	550	600		
Engine	Engine oil	○	●		●		●		●		●		●		Change every 100 hours	To correct level on the dipstick
	Air cleaner			△		△		△		△		△		●	Clean every 100 hours	
	Radiator coolant	○													Check daily top up if required	See page 54
	Radiator	○													Check daily for damages leakage	
	Fuel	○														Fill tank
	Fuel filter			○	△	○	△	●	○	○	△	○	△	●		
	Fan belt	○													Check daily	See page 71.
	Battery			○		○		○		○		○		○	Check daily	
	Oil filter		★								★				Change every 400 hours	
	Loose nuts and bolts	○													Check daily	Tighten
	Radiator hose clamp	○														Tighten if required

Caution	These intervals are for operation under normal conditions and need to be reviewed under severe conditions to a greater frequency

Division	Item	Daily	Service interval(hour meter,mark)												Frequency	Comment
			50	100	150	200	250	300	350	400	450	500	550	600		
Chassis	Trans mission oil	○	●						●						Change every 300 hours after first 50 hours	
	Free play of clutch pedal	○													Check daily	(0.78-1.18in)
	Free play of brake pedal	○													Check daily	(1.18-1.57)
	State of both brake pedals	○													Check daily	Adjust so that both operate simultaneously and brake at the same time
	Operation of each lever	○													Check daily	Smooth operation
	Free play of steering wheel	○													Check daily	About 50mm (1.97 in) of wheel circumference
	Toe-in							★						★	Check every 300 hours	(0.08-0.24in)
	Grease in front wheel hub														Grease every 900 hours	
	Check the steering wheel joint	○													Adjust every 300 hours	
	Wheel nut fastening torque	○													Check daily	Tighten if loose Front:116-130(ft-lbs) Rear:268-282(ft-lbs)
	Operation of the instrument	○													Check daily	

Division	Item	Daily	Service interval(hour meter,mark)												Frequency	Comment
			50	100	150	200	250	300	350	400	450	500	550	600		
Chassis	Adjustment of the throttle pedal														Check every 300 hours	
	Grease each nipple		○	○	○	○	○	○	○	○	○	○	○	○	Replenish every 50 hours (everyday in dusty conditions)	
	Loose bolts and nuts	○													Check daily	Tighten to proper torque
	Check the leakage of oil at the clutch chamber														Check once a year with the lower plug pulled out	
	Hydraulic oil filter		●						●						Change every 300 hours	
	Oil of the 4WD front axle		●		○		○		○		○		○	○	Check every 100 hours. Change every 600 hours	Replace if leaking
	Check the electric wiring	○													Check every year	Without loose or broken terminals. Without damaged or missing wiring. Correctly clamped

	DIVISION	SIZE	Air pressure (PSI)	MODEL
Tire	Front	9.5~16	30 psi	4510
	Rear	13.6~26	21.3 psi	

FILLING DIAGRAM & CAPACITY TABLE

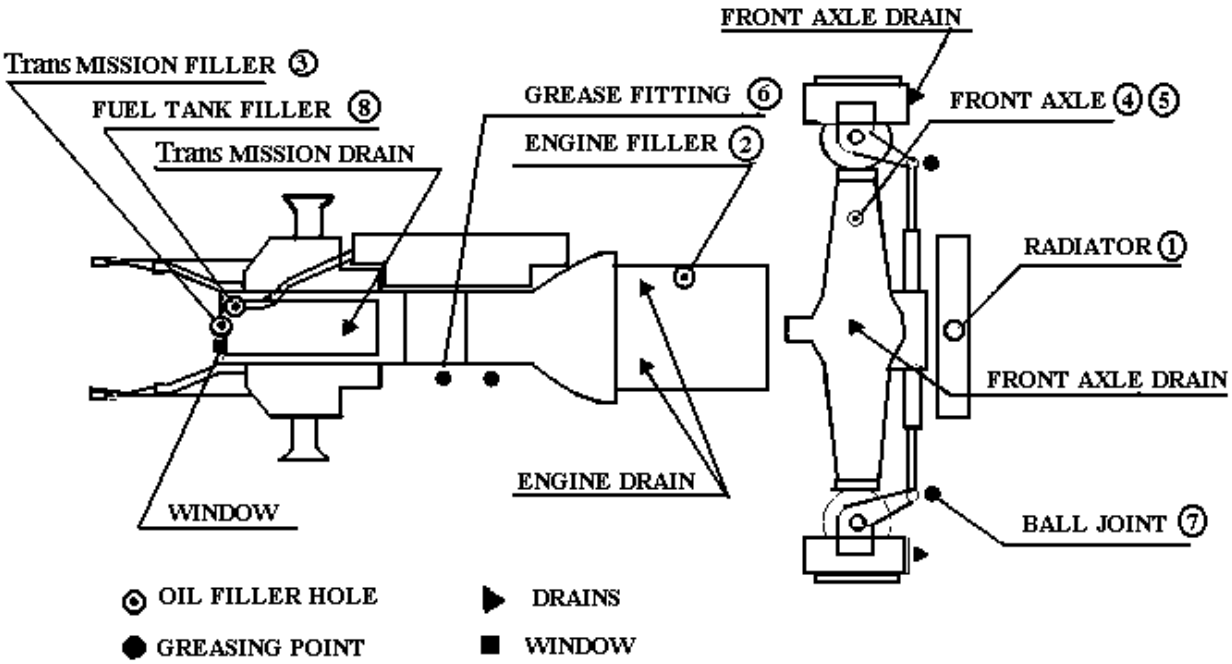

No.	Filling point	Fillings	Quantity Liter (gal.)
	MODEL		4510
1	RADIATOR	Fresh clean Water(L.L.C)	9ℓ(2.38 US gal)
2	ENGINE	API : CD/CE grades Above:25°C(77°F)…SAE30 or 10W-30 0°C to 25°C(32°F to 77°F)…SAE20 or 10W30 Below 0°C(32°F)…SAE 10W or 10W-30	7.0ℓ (1.85 gal)
3	TRANSMISSION CASE	See next page *	34ℓ(9 US gal)
4	FRONT AXLE	Gear oil #80 or #90	9.3ℓ(2.46 US gal)
5	FINAL DRIVE CASE(B)	Gear oil #80 or #90	
6	Clutch pedal shaft	Grease	As required
7	BALL JOINT	Grease	As required
8	FUEL TANK	Diesel fuel	43.5ℓ(11.49 US gal)

l **Recommended Transmission oil**

① RPM Tractor Hydraulic Fluid or Textron TDH Premium (CALTEX)

② TDH Oil or TDH Oil special (TEXACO)

③ Chevron 1000THF (CHEVRON)

Opening method of each cover

▶ Opening method of Hood

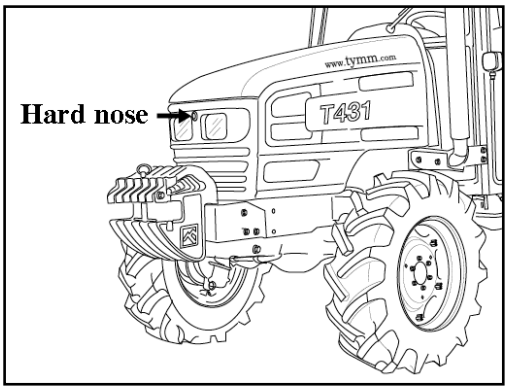

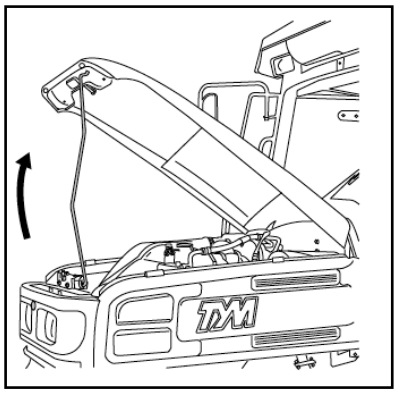

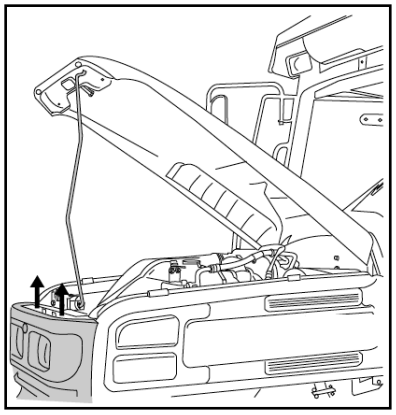

With the hood up,the hard nose can be removed by pulling forward,having first detached the hood lamp wiring harness.

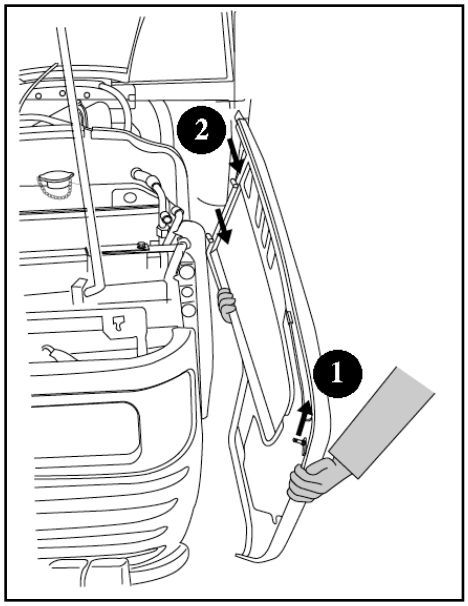

▶ Opening the Side cover

To open, grasp the side cover, Pull the forward panel upward to separate from guide support pin (1).

And pull the side panel forward again,

▶ Fuel

Use clean diesel fuel only

important	As diesel fuel equipment is susceptible to contamination by dust or water, Ensure that all dust and water is kept well away from the fuel tank

BLEEDING THE FUEL SYSTEM

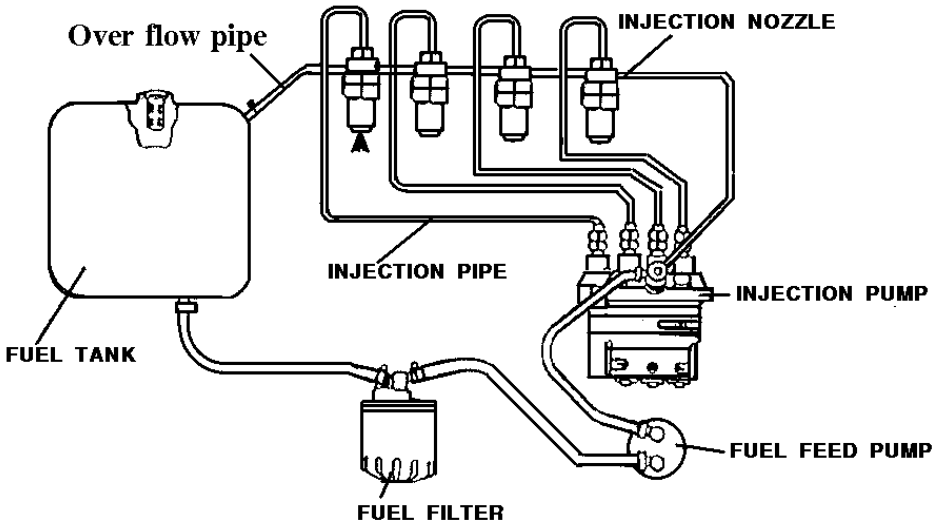

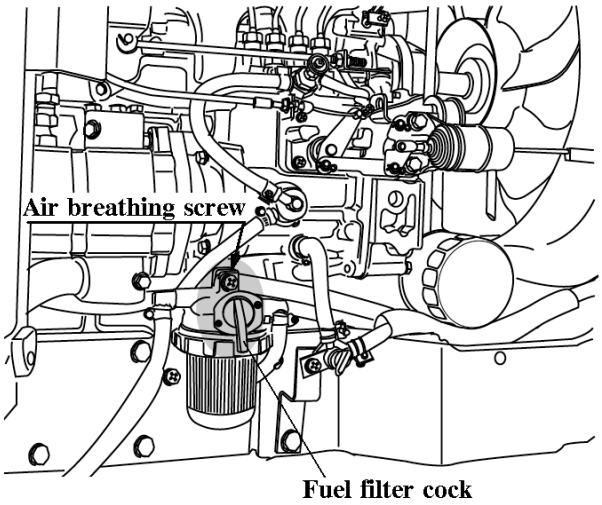

1) Fuel filter cock 「 ON 」

2) Open the cock on the fuel injection pump

3) Fill the tank with fuel and turn the ignition key to on.

4) Start the engine and allow it to run for a while

5) Close the fuel injection pump cock.

6) The bleeding of the system is now finished.

CHANGING THE OILS IN THE TRACTOR

Always use quality oils as engine or transmission oil (refer to the page 60)

Refer to the table on page 60,61 and 62 for the change frequency.

▶ Changing engine oil.

Park tractor on level surface, shut-off engine
Remove sump plug & drain oil.
Replace and check the sump plug and refill the engine with oil to the correct level on the dipstick (approx. 1.85 gal)
The grade of oil to be used will depend on the ambient temperature.
The tractor is shipped from the factory with 10W/30
For summer use over 77˚F use SAE 30
For temperatures from 32˚F-77˚F use SAE20 or 10W/30
For temperatures below 32˚F use SAE 10W

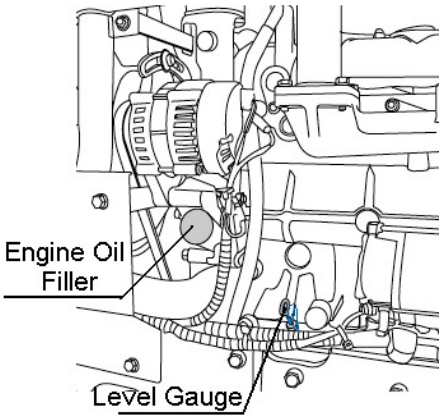

important	When changing the oil always change the filter. Always use the same oil, as using different oils or specifications can cause damage. Dispose off the old oil as per local regulations.

▶ Changing the transmission oil

Remove the drain plug from bottom of the transmission and drain the oil.

Replace and check the drain plug.

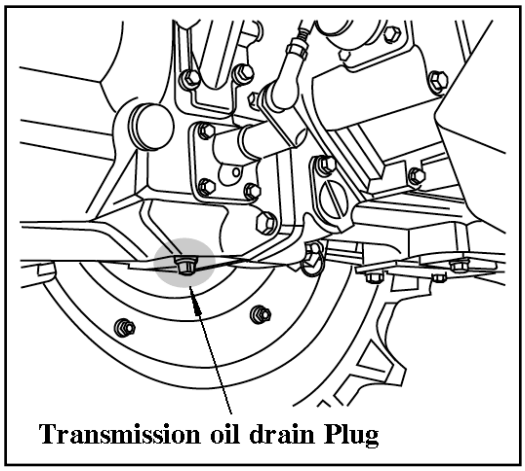

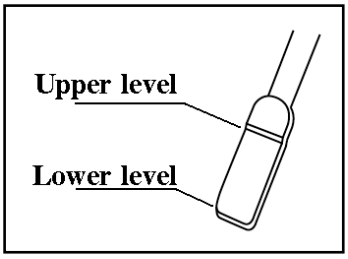

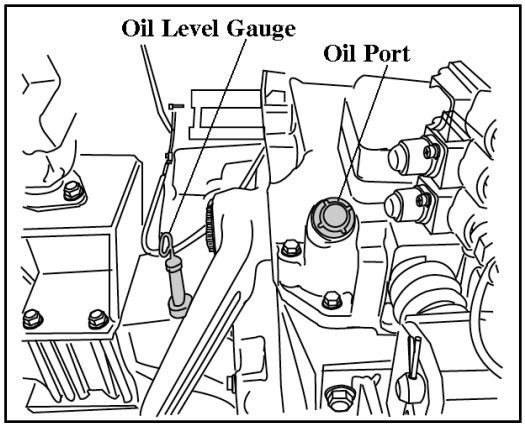

Refill the transmission to the correct level on the dipstick with new oil :qty 34ℓ(9 US gal)

important	Always use the same grade and specified oil as replacements Dispose off the old oil as per local regulations.

▶ Changing the front axle oil

Drain the oil from the left and right drain plugs.

Replace and check the drain plugs.

Fill with new oil to the correct level in the filler hole

(qty 9.3ℓ) (2.46 US gal)

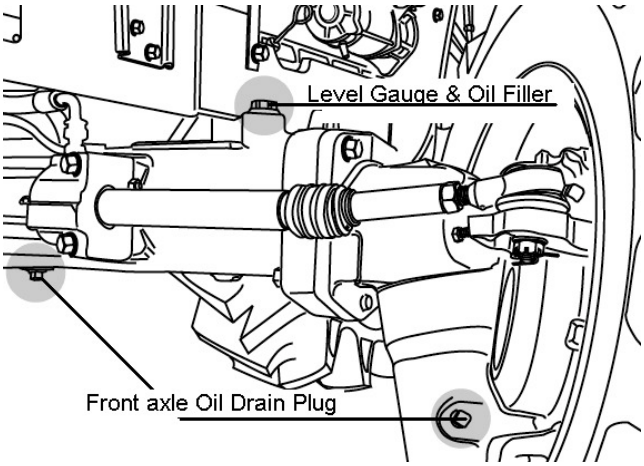

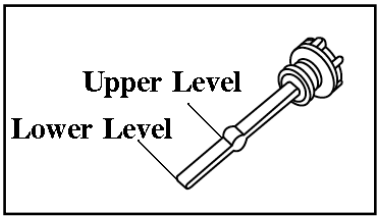

CLEANING AND CHANGING FILTERS

■ Engine oil filter

Using a filter wrench turn the filter anti clockwise to remove it. Lightly smear the rubber seal on the new filter with oil to ensure, turn it clockwise until the seal contacts the base and then turn it another 2/3 turn to tighten it.

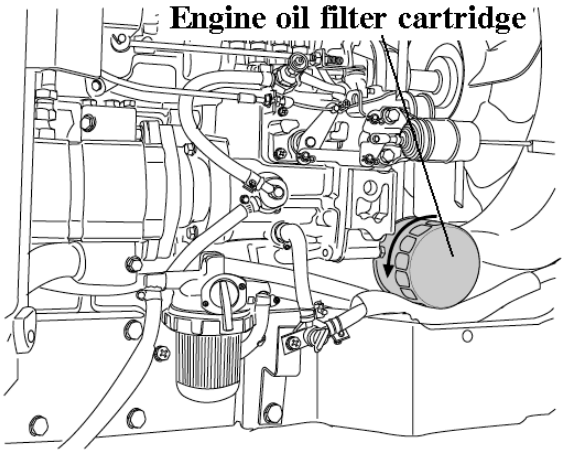

■ FUEL FILTER

This is the primary filter and removes water and coarse dirt from the fuel. To clean it first close the tap then remove the filter and wash it.

After replacing it bleed the air from the filter

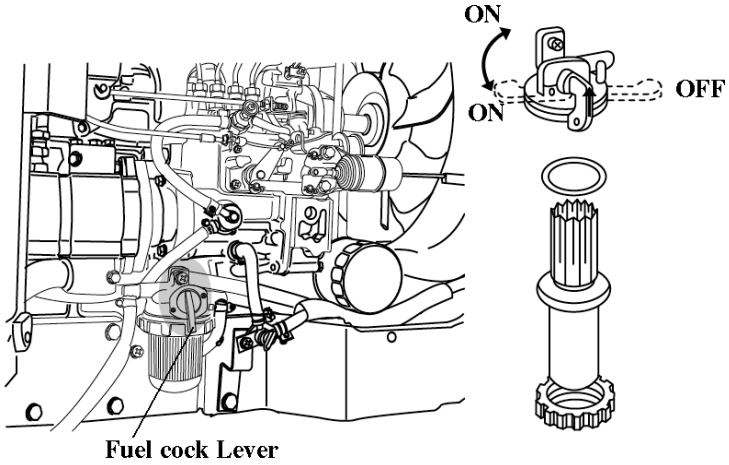

important	Never use petrol (gasoline) thinner or similar inflammable material to wash the primary fuel filter. After replacing the filter always bleed the system (see page 57)

▶ HYDRAULIC OIL FILTER

Remove the filter with a filter wrench.

To replace, apply oil or grease on the seal, fit by hand until seal contacts bare, then turn it 2/3rd turn further to tighten it check for leaks.

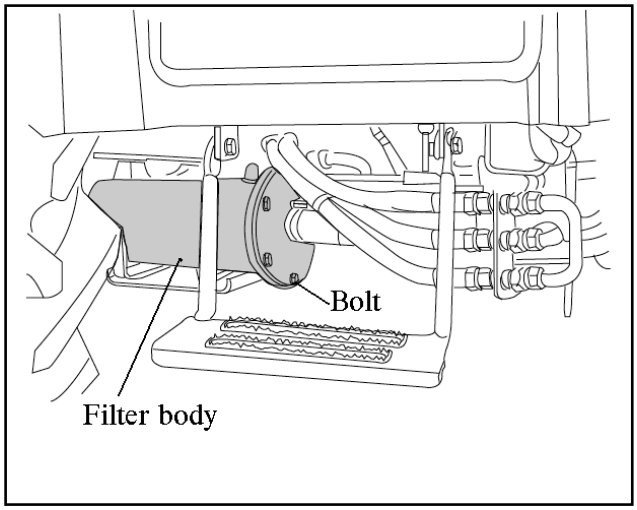

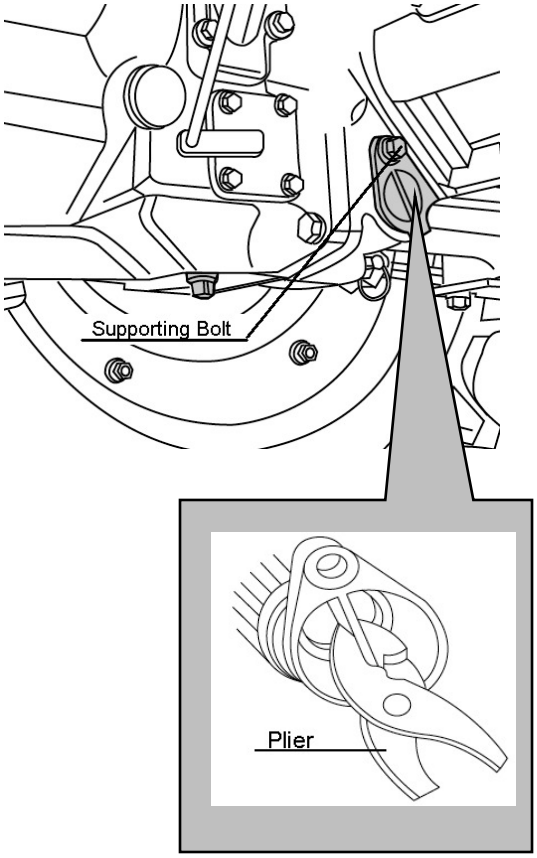

CHANGING THE COOLANT

(1) Open the tap in front of the gear pump to drain the coolant.
(2) Open the radiator cap at the same time.
(3) To give a thorough clean run a hose into the radiator and flush it out.
(4) Close the tap and refill the radiator with a coolant mixture of water and corrosion inhibitor or anti freeze.
(5) Start the engine and allow it to run for approx 5 minutes, check the water level again and top up if required

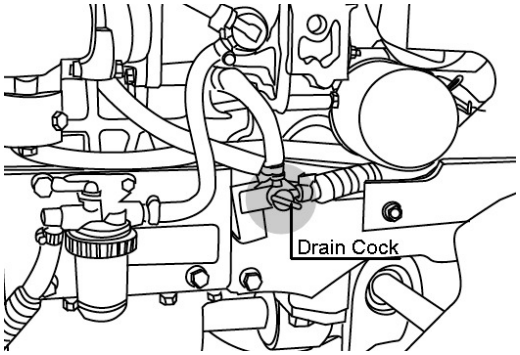

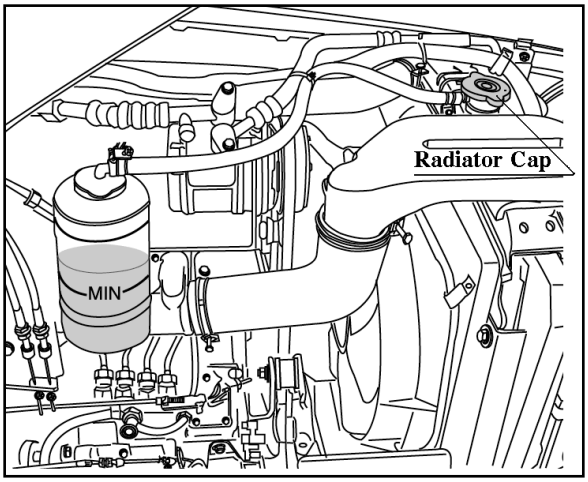

Caution	Do not remove the radiator cap on a hot engine. Allow the engine to cool down and then turn the cap slowly to ensure, that there is no excessive pressure in the radiator.

Caution	Serious burns, can result from the contents of pressurized, hot radiators. Allow the engine to cool down completely before opening radiator cap.

▶ **Anti freeze.**

Frozen cooling water can damage the engine.
Before replacing the anti freeze solution flush the radiator.
Mix the anti freeze solution in accordance with the instructions applicable to the brand of anti freeze and the locals climate.
Replace the solution in the radiator.
In case of loss of solution due to evaporation or overflow, replace with the original mixture ratio.

▶ **CLEANING THE RADIATOR AND COVER**

Insects, grass straw and dust can all block the radiator ,condenser and reduce its efficiency.

Remove the radiator cover to clean it and the radiator.

Release the bolt and pull to remove the cover.

Then clean the radiator between the fins and tube by using clean water.

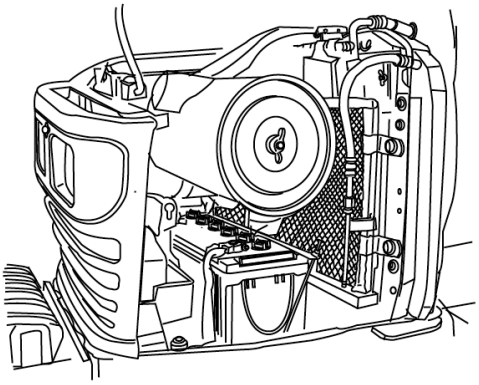

important	Water or air under high pressure can distort the cooling fins on the radiator and reduce its efficiency.

GREASING THE TRACTOR

Grease the tractor according to the service schedule (page 57 and 59)

Ensure that grease nipples are cleaned well before any attempt is made to grease them.

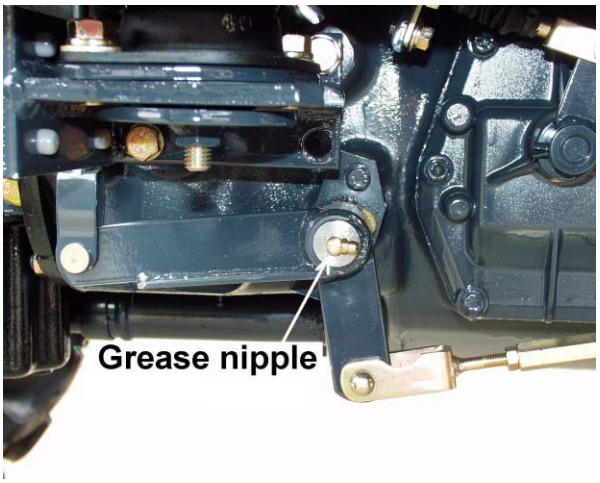

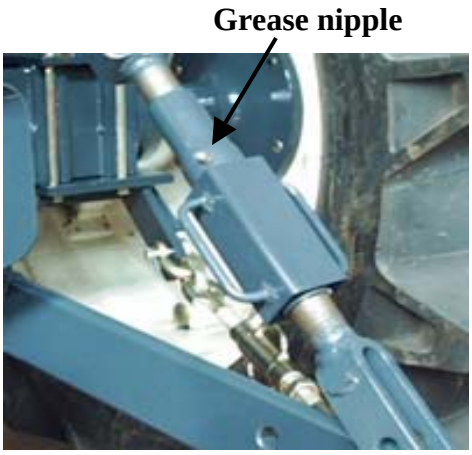

GAP ADJUSTMENT ON THE FRONT AXLE

Lift the front with a hydraulic jack to get the wheels of the ground.

Then loosen the nut and tighten the bolt fully and turn the bolt ½ to loosen again in order to roll the center pivot metal freely and tighten the nut again.

While the wheels arte still off the ground, move the axle on the center pivot as a final check that the gap is set correctly on the top of the pivot metal

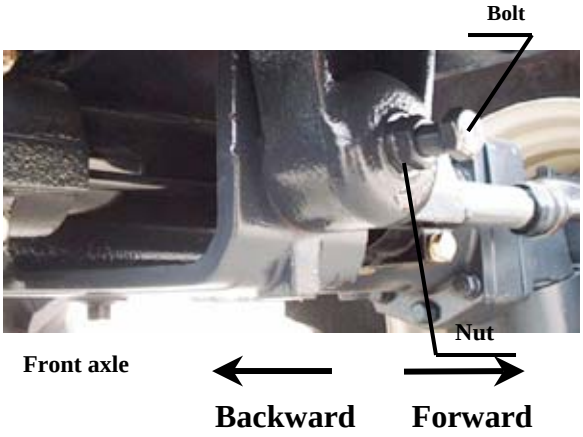

ADJUSTING THE CLUTCH

Using the clutch over a period of time will increase the free play.

The correct free play of the pedal is 0.78~1.18 in

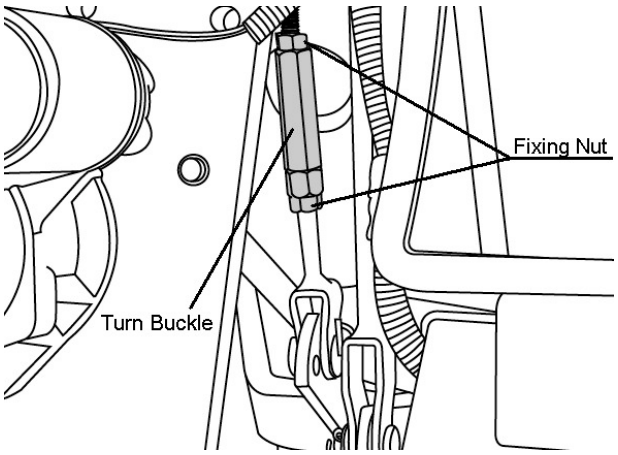

To adjust, loosen the locknut on the turnbuckle and adjust.

Check the adjustment and tighten the locknut if the free play is correct.

ADJUSTING THE BRAKES

As is the case with the clutch, use of the brakes will change the pedal free play and the balance between the right and left pedal.

The correct pedal free play is 1.18~ 1.57 in

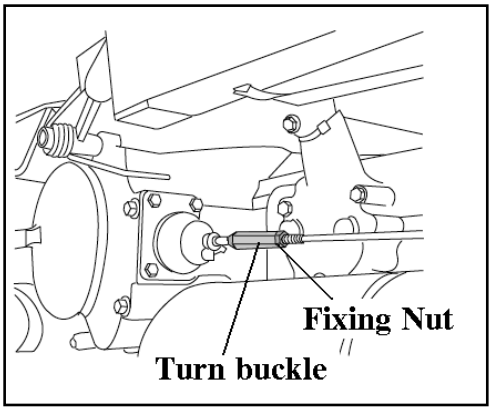

▶Adjustment method.

Loosen the locknuts at each end and turn the rod to adjust the brake.
Turning it anticlockwise increases the free play, clockwise decreases it.
Tighten the locknuts.
Check that the free play is correct and the same on both pedals to ensure even braking

Caution	Uneven adjustment of the left and right pedal will result in one sided braking when the pedals are connected and can cause serious accidents, especially at high speeds. Double check to ensure free play is the same on both pedals

ADJUSTING THE THROTTLE LEVER

If this lever is either loose or difficult to move please consult your dealer for rectification of the problem.

ADJUSTING TOE-IN

If the toe-in adjustment is incorrect it can cause severe shaking of both the steering wheel and the entire tractor.

The correct toe in is 0.08~0.24in. We recommend that this adjustment is made by the dealer.

CHECKING THE BATTERY

The electrolyte level of the battery can evaporate during use thus lowering the level.

Where it does so replace it with distilled water.

Where a spillage has reduced the level, replace it with electrolyte.

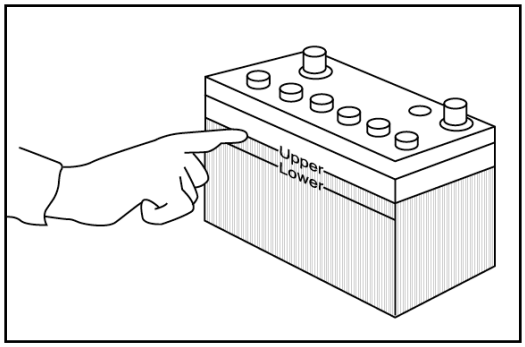

important	Low electrolyte levels can cause premature battery failure and corrosion.

Caution	Electrolyte contains acid and can cause serious burns. Any spillage on skin should be washed off by running water immediately.

▶BATTERY MAINTENANCE

Low temperatures will affect the performance of batteries so take particular care of it in winter.
For long-term storage of the tractor remove the battery and keep it in a cool dry room.
If it is on the tractor while stored, disconnect the negative terminal.
Batteries will self discharge if left for a period of without use time.
To keep them in good condition charge them once a month in summer and every second month in winter.
When replacing the original battery, ensure that the replacement battery is the same size.
Failure to do so can cause problems with the electrical circuit.

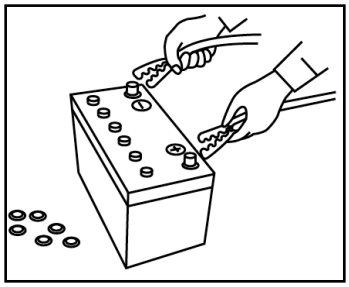

▶BATTERY CHARGING

-A boost charge is only for emergencies.It will partially charge the battery at a high rate and in a short time.

-When using a boost-charged battery,It is necessary to recharge the battery as early as possible.

Failure to do this will shorten the battery's service life.

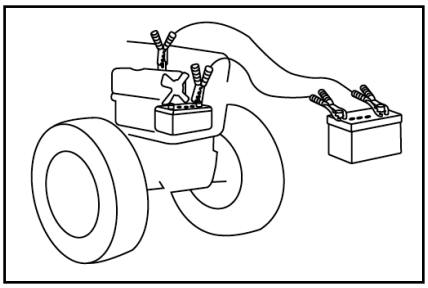

⚠ Caution	Always disconnect the negative terminal first when removing the battery and always connect the positive terminal first when fitting the battery. When connecting the battery leads make sure not to reverse the polarity. Quick charging will reduce battery life. Disconnect the terminals prior to charging the battery to avoid damage to the circuit and electrical instruments.

FAN BELT ADJUSTMENT

Check the fan belt tension regularly and adjust if required.
The correct tension is if the center of the belt is pushed.
With a finger it moves in approx. 7 to 9 mm (0.28 to 0.35 in) as shown in the picture.
To adjust the fan belt loosen the top bolt on the alternator,
Move the alternator to the desired position and tighten the bolt.
Also ensure that the bolts at the bottom of the alternator are tight.

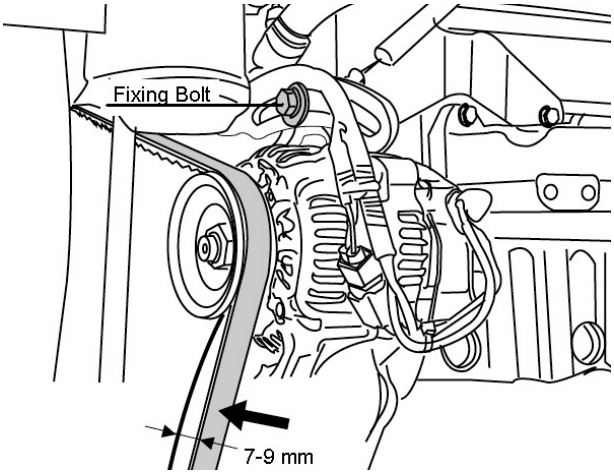

AIR CONDITIONER COMPRESSOR BELT ADJUSTMENT

Check the compressor belt tension regularly and adjust If required.
The correct tension is if the center of the belt is Pushed With a finger it moves in approx. 10 mm (0.39 in) as shown in the picture.
To adjust the belt, loosen or tighten the nut as shown in the picture.

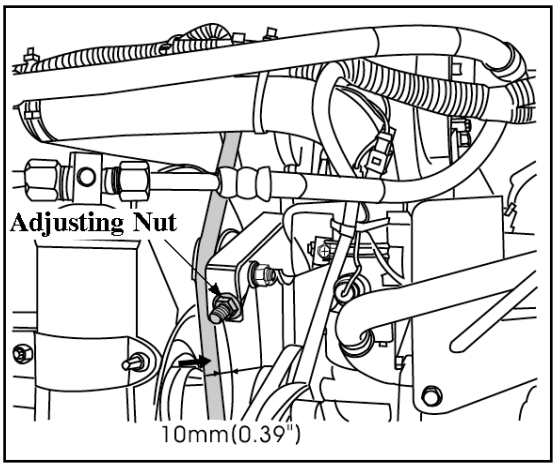

SERVICING THE AIR CLEANER

To remove the dust from the evacuator valve squeeze it between thumb and fingers to let excess dust out and wipe around the valve to keep it clean from outside.

To clean the main element, remove the right fan cover. Remove the element by unloading the wing nut. Remove dust by blowing it out of the element with Compressed air.Check the element to ensure it is not damaged.Reassemble the element.

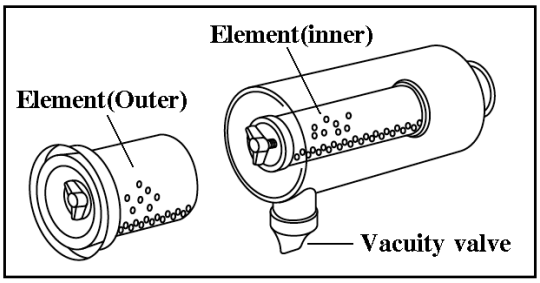

important	Never beat the element on a stone or concrete floor/wall to clean it Check all connections and hoses especially on the clean side of the air cleaner to ensure no dusty air can enter the engine. Check the element for flaws by putting a light inside the element. When reassembling make sure all surfaces seal correctly to keep dust out. When working in dusty conditions increase the service frequency.

▶ Replace the element after cleaning it 5 times or it is damaged.

CHECKING HOSES AND LINES.

The fuel lines, radiator hoses, hydraulic and rubber hoses are consumables, which deteriorate by age and use.

Check them regularly and replace if faulty.

Caution	Damaged fuel lines leak and cause fires. Damaged radiator hoses can cause hot water burns and in severe cases seize the engine.

CHECKING THE WIRING HARNESS AND FUSES

Loose wires make inferior connections and damaged wires can cause short circuits, fires burnt wiring or reduce efficiency of components.

Replace or repair any faulty wiring or insulation.

If a fuse burns out again after it has been replaced, do not replace it with wire or a high capacity fuse, find the cause and rectify it or get an auto electrician to do so.

Where insulation is chafed or peeled off, recover the area with a good quality insulation tape. Where wiring comes out of it's fitting replace it correctly with the standard fitting.

important	Incorrect wiring or fuses can cause fires to both the tractor and surrounding area so get the dealer to check it annually. Likewise fuel pipes and wiring age with use. Ask your dealer to check it at least once every 2 years and replace as required

▶ REPLACING FUSES

The circuit has 8 blade type fuses in its wiring circuit

(See diagram on page 104)

When a fuse has blown replace it with one of the same value.

Using a large capacity fuse or wire burn out the wiring system.

Use fuse tongs to replace fuses

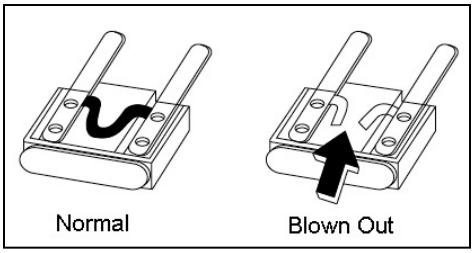

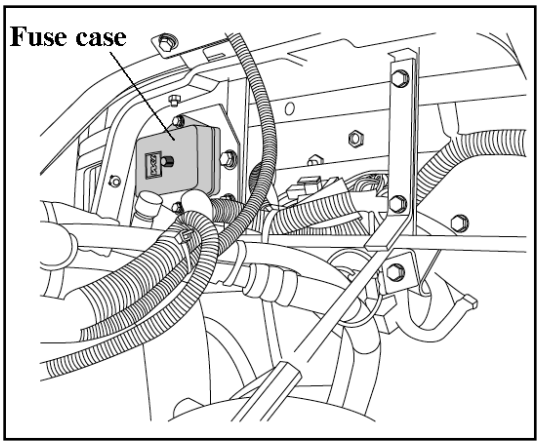

▶ MAIN FUSES

The wiring harness is equipped with 3 main fuses who's function is to preserve the wiring.
However when a main fuse blows the entire circuit is dead.
Always check the reason & rectify before replacing the fuse of the same value.
To indicate that the fuse is blown it will be discolored.

important	Always check the reason for a blown fuse otherwise the new fuse is also likely to blow. **NEVER EVER USE WIRE** in place of correct grade fuse.

SERVICE PRIOR TO DAILY AND SHORT TERMS STORAGE.

Wash the tractor and keep it clean.
Fill the tank to avoid condensation and rust.
Lower any attached implement to the ground before parking the tractor.
For long-term storage consult your dealer

3.MAINTENANCE

For daily or short term storage

Clean the tractor and remove all dirt from field work.

Fill the fuel tank to avoid condensation and rust.

Lower the implement to the ground..

Keep it in a machinery shed or, if not available cover the unit if left outside.

In very cold conditions it is advisable to remove the battery and keep it inside in a warm environment.

This will ensure effective starting when the tractor is required.

When the outside temperature is below 32˚F, replace the Antifreeze completely or drain the coolant to protect the engine from damage from frozen coolant.

important	When washing the tractor ensure that the water does not get near electrical components or the oil filter points. To prevent short circuits remove the ignition key. Do not wash the tractor when the engine is running.

Long-term storage.

When the tractor will not be used for a long time carry out the cleaning as for short term storage.

Drain the oil and replace with new oil.

Run the engine for approx. 5 min. to ensure that it has new oil throughout the engine.

Drain the coolant from the radiator and remove the ignition key.

Attach a tag both the key and the steering wheel saying” No coolant”.

Lubricate all grease and oil points on the tractor.

Check the pressures and add a small amount of extra pressure.

Lower any implement to the ground or store in a shady dry place.

Disconnect the clutch by using the clutch disconnecting arm.

Place a piece of wood under each tire to preserve the tire.

important	After refilling the engine with the coolant run the engine for approx. 5-10 min. at 1500-2000rpm every month as a corrosion prevention measure. Either removes the battery or the negative terminal as mouse damage to wiring can cause short circuits and fires. Remove the ignition key and store in a safe place.

Re-use after long term storage.

Carry out a full check of all oils and coolant.

Refit the battery and run the engine at idle for 30 min. to ensure optimum engine life.

Section - C

CABIN

The cab fully conforms to the international standard as far as safety and soundproofing are concerned.

It can be provided with ventilation, heating and air-conditioning system.

It is available in the following version.:

- Cab with ventilation and heating systems
- Cab with ventilation, heating and air-conditioning systems.

⚠	The cab is in full conformity with the international standards as to the cab's soundproofing. Be very careful when operating in small spaces and always protect your ears whenever other working equipment is generating dangerous noise levels.

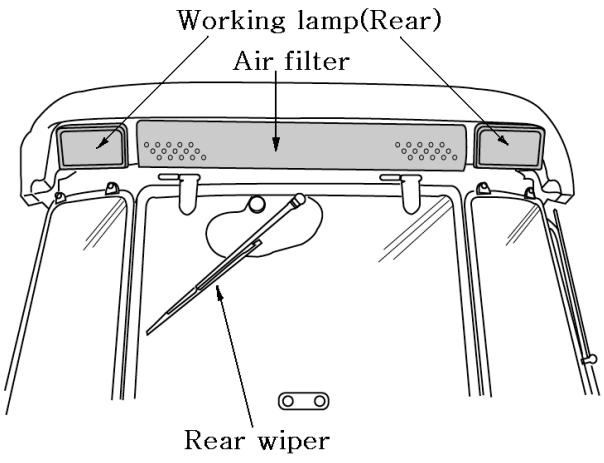

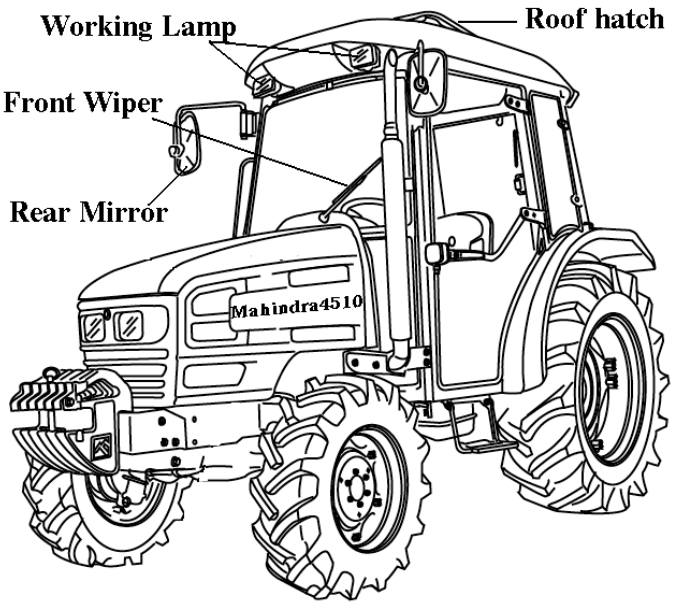

⚠	Remember that steering, braking and operational performances are highly influenced by the implements mounted, the trailers transported and the ballasts applied to the tractor.

⚠	When transporting heavy loads (exceeding the weight of the tractor) reduce the speed under 15 Km/h..

⚠	All the implements mounted onto the tractor must be safely secured.

⚠	Be very careful during implement hitching and unhitching operations. When using implement supports, be sure they are suitable and sufficiently strong.

Instrument and Related parts.

Doors:

The doors are provided with key locks.

To open from the outside, when unlocked, depress the push button.

To open from inside, push the lever downwards.

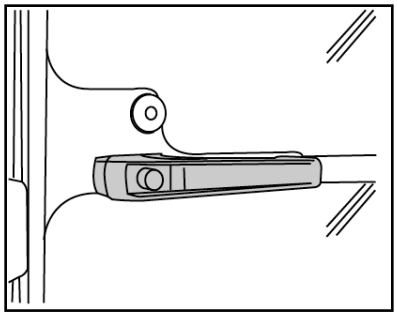

Rear Window:

The rear window is fitted with central handle for opening.

When opened it is held in place by two dampers.

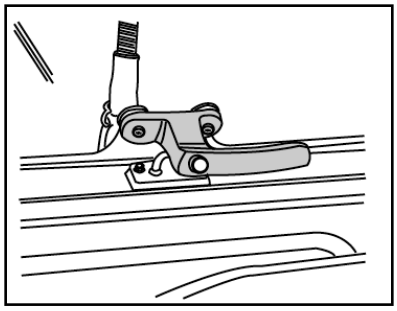

Side Window:

The side window is fitted with central handle for opening.

When opened it is held in place by holder.

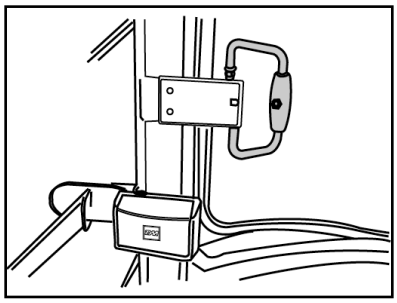

Working lamps (front and rear) :

the working lamps are located on the cab roof (two in the front and two in the rear) .They are switched on by means of the special switches on the roof console

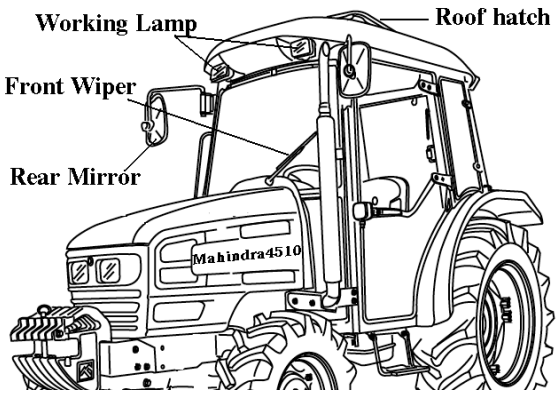

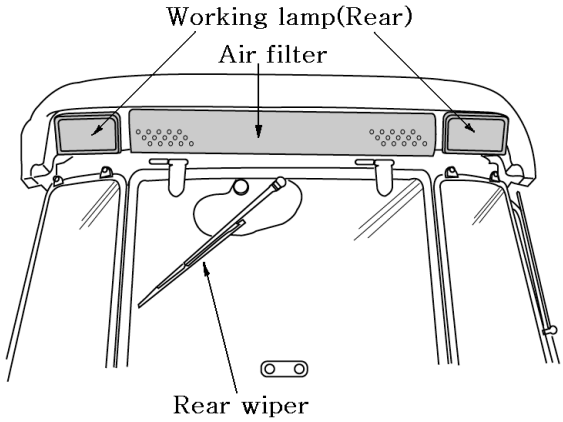

Rearview mirrors.:

the cab is provided with rearview mirrors on both sides. They can be adjusted and folded, whenever necessary, to avoid interference with external obstacles.

The mirror have a telescopic arm to allow positioning for maximum convenience by the user.

Remember that mirrors must always be positioned in compliance with road traffic regulations when driving on a public highway.

Cab ceiling:

The ceiling is padded with insulation material to block heat radiation into the cab and keep the temperature down when working in very sunny areas.

The cab platform is covered with a “firm grip” carpet in the most commonly used areas.

It is recommended to keep this carpet clear of earth, mud, etc. so that the operator may get on and off the tractor in full safety.

How to Controls Cabin

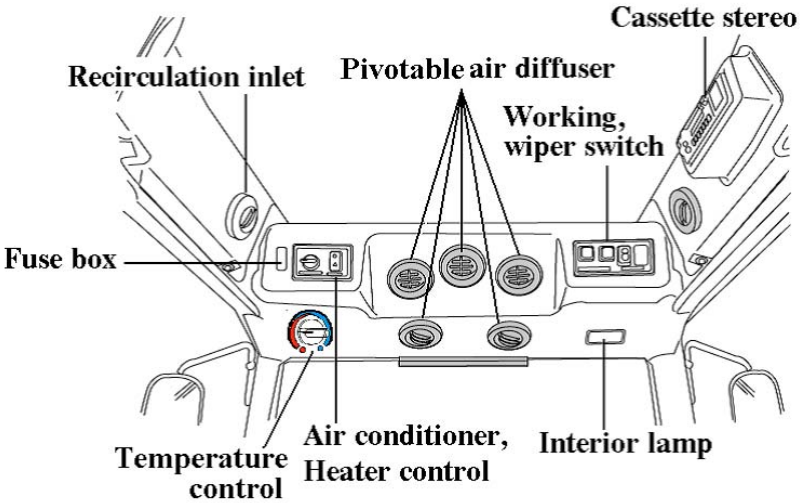

VENTILATION

The ventilation unit is housed in the cab ceiling.
To switch it on and adjust it, turn the electrical fan switch to the desired speed.
The cab becomes slightly pressurized when the ventilation system is in operation, so that the fresh air can enter only by way of the filter installed in the rear section of the cab roof.

The fan switch can be operated only after the ignition key is inserted.
The air flow can be regulated and directed by suitable positioning the air diffusers.
Air can be taken in fresh from outside or recirculated from within the cab by way of the relative side inlets
Recirculation inlets fully closed:
air is taken in entirely from outside the cab through the rear grille and filtered through a paper element positioned behind the grille.

N.B-it is very important that the air diffusers never be completed closed so as to allow for a steady air flow.
To obtain a greater pressurization inside the cab, it is necessary to take the air from the outside, therefore the inside air recirculatiing grille should be fully closed.

Working lamp switch

The front and rear working lights are ON when push the button.The work light indicator lamp on the instrument cluster will illuminate.

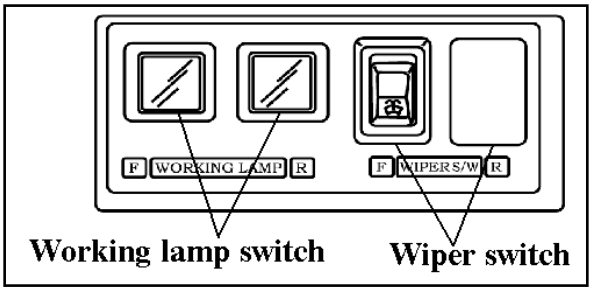

Wiper control switch
ON switch
-Wind screen wiper operation
-Continuous pushing button operates wiper and washer pump
OFF switch
-Wind screen wiper Off and operates washer pump

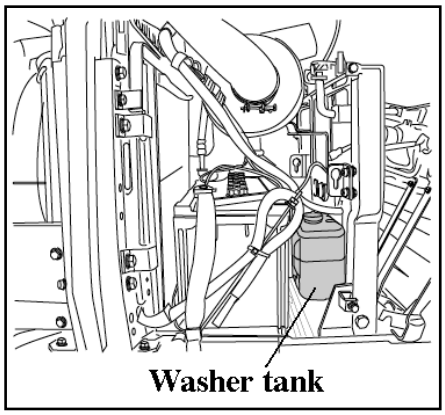

Windscreen Washer tank
Check the level of windscreen washer fluid in the plastic reservoir located at the front of the radiator

During winter,it is advisable to add a suitable antifreeze or methyl alcohol to the windscreen washer fluid.

Interior Lamp
Push the button to light on
And push it again to light off

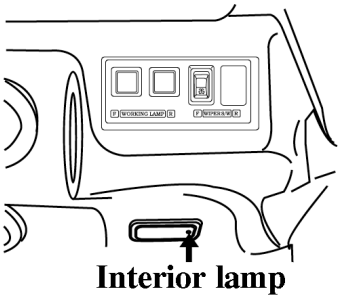

Blower control switch

Three position rocker switch

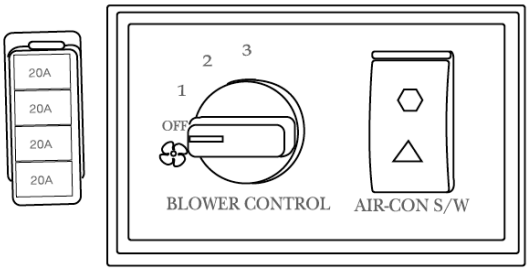

Temperature control

Set temperature control as required,fully clockwise

For maximum cool and fully counterclockwise for heat

Air conditioner switch

To operate the air conditioner,the blower must be on.The blower speed temperature control and all vents must be adjusted to obtain the best cooling for the ambient temperature and dust conditions. Under normal operating conditions,and the windows and doors closed,temperatures in the cab of 6ºC to 15 ºC (10 ºF to 25 ºF) less than the ambient temperature will occur.When operating the air conditioner system,the moisture level is decreased.

NOTE:

1) During cold weather,with ambient temperature above 0 ºC (32 ºF) operate the air conditioner at least once per month,for a period of 10 to 15 minutes.This will lubricate the seals to prevent them becoming brittle and help prevent the loss of refrigerant from the system.

2) The system is equipped with an environmentally safe refrigerant,R134a.Never recharge the air conditioning system with refrigerant other than R134a as this will result in loss of cooling and permanent damage to all air conditioning components

Circulation diffuses

With the circulation vent set in any position outside Air will still be pulled into the cab.

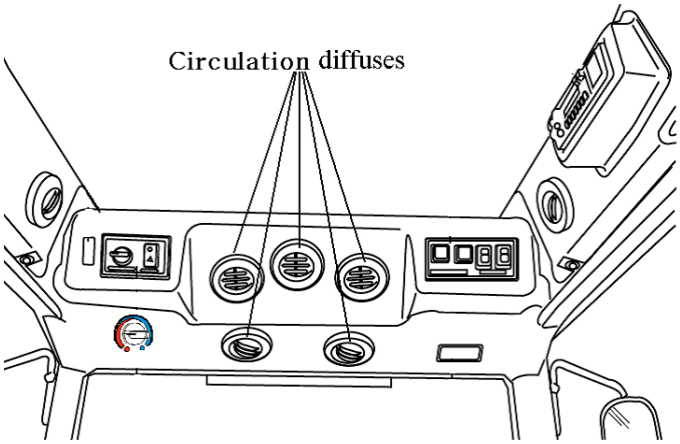

Heating system

General description

The heater is switched on and adjusted by rotating the control knob at the roof console, then switching on the blower and setting the selector at the preferred speed .

To warn the cab up quickly, the knob should be rotated fully clockwise and the blower set to speed 3.

The screen is demisted or defrosted by air directed through a slot vent . For defrost or fast demist, all other vents should be closed off.

IMPORTANT:

Ventilation is provided by a single blower unit serving both the heating system and the air conditioning system.

After reaching the desired temperature adjust the system to suit your needs.

Note:

-For ideal system operation, the engine must run at 1000 rpm

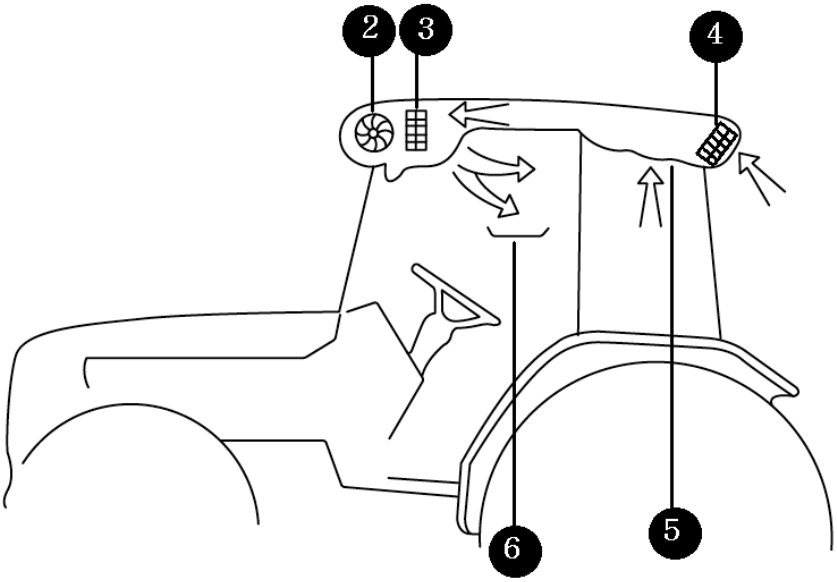

2. Speed heating fan 3.Electric resistances 4.Air filter 5.Recirculation inlets 6.Pivotal air diffuser

Warning	Before starting the engine, make sure the system is off (by turning off the ventilation fan) so as not to overload the battery. After the system at full power for a long period of time, never turn it off suddenly but let it first idle for about 20 seconds.

SYSTEM CONFIGULATION

1.The heating system consist of two units:

1-Electric heater and blower unit installed behind roof console.

2-Power supplying set, consisting of an auxiliary alternator located front of the engine and driven by a belt directly linked to the engine pulley.

If the air does not come out from the diffusers right away as soon as the system is started, turn off immediately and identify the fault.

N.B-Never turn on the heating system when working in dusty environments.

Compressor belt adjustment

Check the compressor belt tension regularly and adjust If required.
The correct tension is if the center of the belt is Pushed With a finger it moves in approx. 10 mm (0.39 in)as shown in the picture.
To adjust the belt, loosen or tighten the nut as shown in the picture.

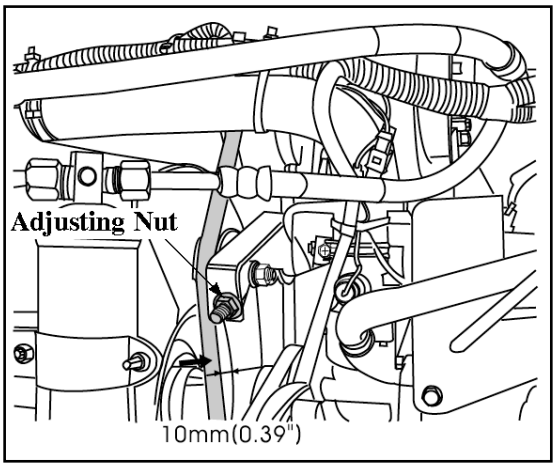

Air conditioner system

The system is designed to ensure optimum temperature inside the cab and maximum comfort and safety for the operator.
However, it is advisable to consult our specialized workshops whenever repairs or adjustments need to be performed.
Do not approach the system with open flames, as any escape from the circuit may produce a lethal gas.

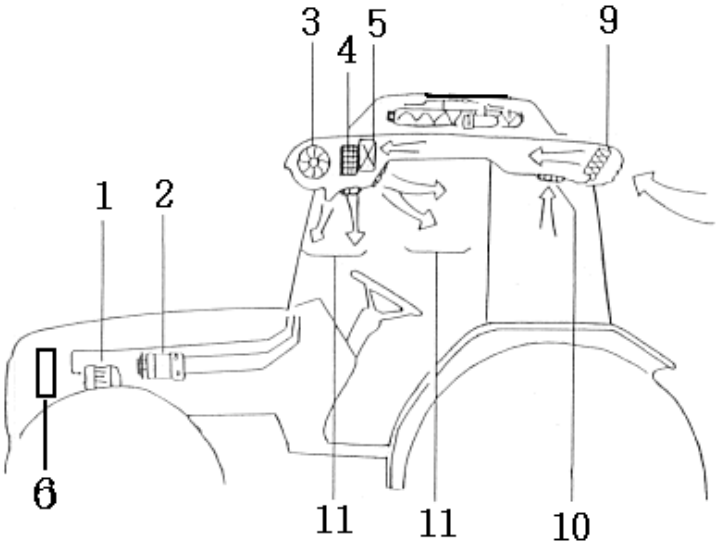

1.Alternator 2. Compressor 3.Speed fan 4.Electric resistance
5.Evaporator 6. Condenser 9.Air filter 10.Recirculation inlets
11.Pivotal air diffusers

Roof hatch(if equipped)

Ventilation-push the latch towards the front of the tractor and then push the hatch up.

Emergency Exit-Push firmly upwards to release the support struts from the lower retainer clips.

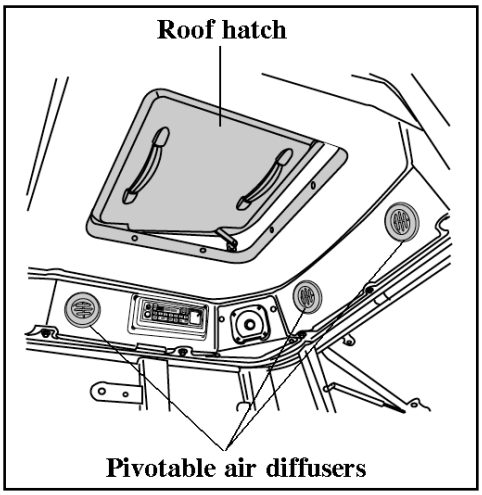

Cab Air intake filter

The《Paper》 filter is not suitable for the treatment of pesticides and so must be replaced by an《ACTIVE CARBON》FILTER available optionally.Once the pesticide treatment is finished, it is necessary to once again replace the “ACTIVE CARBON” filter with the paper filter, since this is the only type suited for filtering foreign particles from the air.

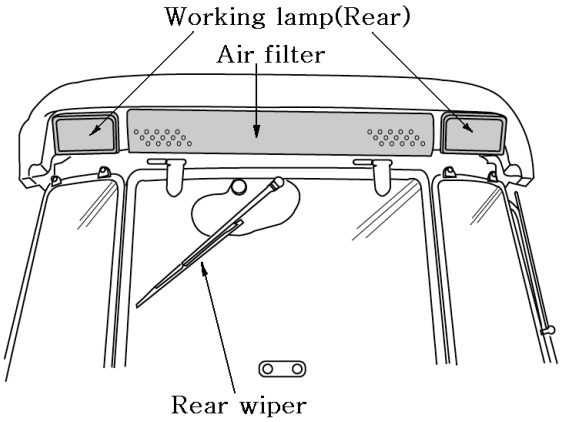

Warning	Cab air filters remove dust in the air,but are not capable of removing chemicals used in spraying crops or in weed control.Many chemicals used for these purposes are toxic when improperly used.and can be hazardous to operators and others in the area.Follow the instructions of manufacturers of both the equipment and the chemicals regarding prohibition of dust or spray,personal hygiene practices,and other precautions noted by the manufacturers.

Radio cassette(If equipped)

For operation refer to the radio manufacturers instructions.

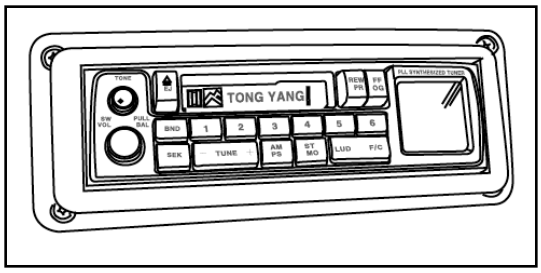

Ash tray

Located at left side of near side window in cabin

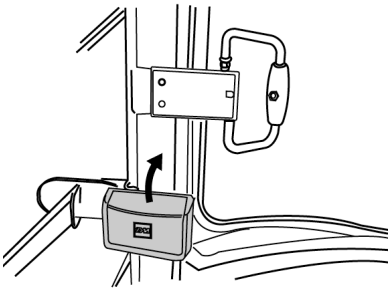

1.SAFETY PROCEDURES.

Warning	This safety alert symbol indicates important safety messages in this manual. when you see this symbol, carefully read the message that follows and be alert to the possibility of personal injury or death

Refrigerant R134a is the most stable and easiest to work with refrigerants now in use in air conditioner systems. Refrigerant R134a does not contain any chlorofluorocarbons (CFC's) which are harmful to the earth's ozone layer.

Safety procedures must be followed when working with Refrigerant R134a to prevent possible personal injury.

1.Always wear safety goggles when doing any service work near an air conditioner system. Liquid refrigerant getting into the eyes can cause serious injury. Do the following if you get refrigerant near or in your eyes.

A.Flush your eyes with water for 15 minutes.
B. See a physician immediately.

2. A drop of liquid refrigerant on your skin will cause frostbite. Open the fittings carefully and slowly when it is necessary to service the air conditioner system.
Your skin must be treated for frostbite or a physician must be seen if you get refrigerant on your skin.

3.Keep refrigerant containers in the correct upright position. Always keep refrigerant containers away from heat or sunlight. The pressure in a container will increase with heat.

4.Always reclaim refrigerant from the system, if you are going to weld or steam clean near the air conditioner system.

5.Always check the temperature and pressure of the air conditioner system before reclaiming the refrigerant and when you test the system.

6.Never leak test the system using a flame tester. Dangerous gas can form when refrigerant comes in contact with an open flame. Never permit fumes to be inhaled.

7. Never leak or pressure test the system with compressed air or oxygen.
Refrigerant R134a in the presence of air or oxygen above atmospheric pressure can form a combustible gas.

Caution	Never operate the engine in a closed building. Proper ventilation is required under all circumstances.
Caution	Never touch liquid refrigerant, since even a small drop on your skin will cause severe and painful frostbite. Always wear protective gloves.
Caution	Always wear safety goggles when working with liquid refrigerant. Liquid refrigerant in your eyes could cause blindness.
Caution	DO NOT use steam to clean any air conditioner system parts while the system is charged. The heat may cause the refrigerant to rise in pressure that can cause the system to explode

2. OPERATION

The air conditioner system contains five major components: Compressor, receiver drier, expansion valve and evaporator. These components are connected by tubes and hoses and operate as a closed system. The air conditioner system is charged with R-134a refrigerant..

The compressor receives the refrigerant as a low pressure gas. The compressor then compresses the refrigerant and sends it in the form of a high-pressure high temperature gas to the condenser. The airflow through the condenser then removes the heat from the refrigerant. As the heat is removed the refrigerant changes to the high-pressure liquid.

The high-pressure refrigerant liquid then flows from the condenser to the receiver drier. The receiver drier is a container filled with moisture removing material, which removes any moisture that may have entered the air conditioner system in order to prevent corrosion of the internal components of the system.

The refrigerant still in a high pressure liquid form, then flows from the receiver drier to the expansion valve then causes a restriction in flow of refrigerant to the evaporator core, lowering the pressure of the liquid.

As the refrigerant flows through the evaporator core the refrigerant is heated by the air around and flowing through the evaporator fins. The combination of increased heat and decreased pressure causes the refrigerant to evaporate an d form a low pressure gas.

The evaporation causes the airflow through the evaporator fins to become very cool. The cool air then passes from the evaporator to the operators cab.

The low pressure refrigerant gas return to the compressor to repeat the cycle.

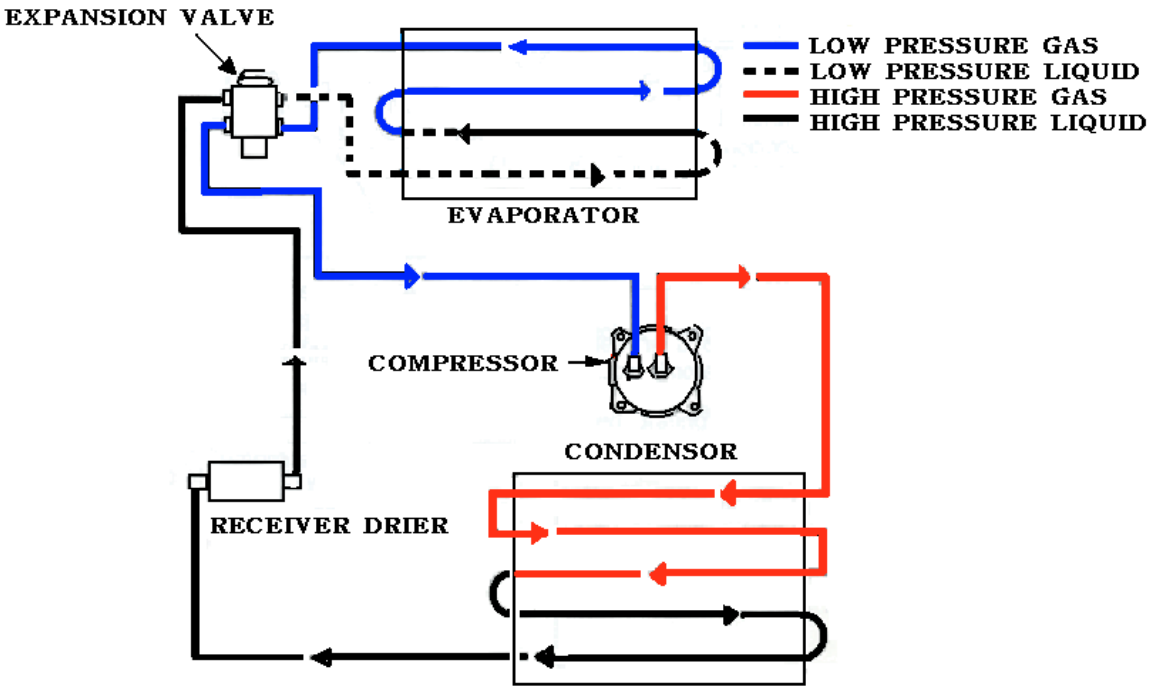

3. Checking the air conditioning system.

①Economic friendly refrigerant : R134a 0.7～0.85Kg.

The presence of air and water in the system could jeopardize its efficiency.

-The air is uselessly compressed by the compressor and no cooling effect is produced.

-The moisture has a tendency rise to obstructions which prevent the cooling efficiency.

② Check belt tension ; when finger pressure is applied to the mid-point between both pulleys.

③ Condenser fins must always be duly clean using water or an air set.

4. Checking the air conditioning system charge

(1) Check the refrigerant charge.

A.Run the engine at 1500rpm

B. Set the air conditioning system in the coldest for 5 minutes.

C. Check the sight glass dear or cloud

⚠ Caution	If the air-con. is operated with not charged. The lubrication in the compressor can cause the damage.

(2) Check the refrigerant with receive drier sight glass

	Bubbles or foam visible	Trouble shoot	
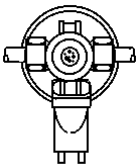	● Bubbles flow and refrigerant gas disappeared like a fog flows	● Deficient of refrigerant Replenish ● Nothing different temperature between H.L pipe ● High pressure of the pressure gauge needle indicates low pressure	Abnormal
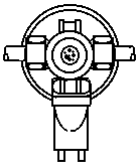	●Same bubble appeared occasionally (1~2 sec. gap)	● Replenish the refrigerant ● High pressure pipe is hot and low pressure pipe is a little cool. ●H.L pressure of the pressure gauge needle indicates low pressure.	Abnormal

	Bubbles or foam visible	Trouble shoot	
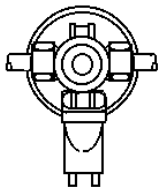	● No bubble shown High-pressure pipe is hot abnormally. H-L pressure of the pressure gauge needle indicates high pressure abnormally	●Too much of refrigerant deflate. ●High pressure pipe is not abnormal ● H.L pressure of the pressure gauge needle indicates high abnormally.	Abnormal
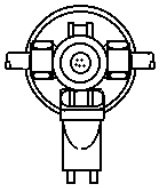	● Refrigerant in the sight is shown clearly ● When engine RPM operates with high low some bubbles disappear slowly	● Normal refrigerant gas situation ● High pressure pipe is hot Low pressure pipe is cool ● High low pressure is normal with below. Low: 1.5~2.0kg/㎡ High: 14.5~15kg/㎡	normal

5.Diagnosing malfunctions.

(1) Tracing faults

	SYMPTOM	CONDITION	CAUSE	REMEDY
1.Compressor	Abnormal sound	Inlet sound Outlet sound	Insufficient Lub.	Replenish
			Belt tension release	Adjust
			Release the bracket	Tighten the bolts
			Clutch fail	Check
	Abnormal revolution	Inlet cause	Damaged parts	Check,replace
			Slip the clutch	Check,replace
			Not Lub.	Replenish
		Outlet cause	Belt tension released	Adjust
	Refrigerant or oil leakage	Refrigerant or oil leakage	Sealing washer damaged	replace
			Head bolt released	Tighten the bolts
			D-ring damaged	Replace
	Excessive pressure	Low,High pressure	Insufficient refrigerator	Adjust
			Compressor	Replace

	SYMPTOM	CONDITION	CAUSE	REMEDY
2.Motor	Weak from pressure or don”t work	Motor is normal	Air inlet clogged	Remove
			Evaporator freezing	Controlling minimum pressure
			Ventilator switch damage	Replace the switch
			Compressor	Replace
		Motor is abnormal	Motor failure	Replace
			Wire cut	Replace
		Air leakage	Duct leakage	Check,tighten
	Unable to control the fan	Motor	Air volume control switch failure	Check,tighten
		Motor is abnormal	Motor failure	Replace
3. Clutch	Noise	Regular noise Irregular noise	Interference with pulley	Control the compressor direction
	Disengage	Engaged sometimes	Wire defect	Check wire
		Engaged to push with hand	Clutch gap large	Adjust
			Low voltage	Check battery
		No defect wire	malfunction	Replace
	Slip	Slip during rotation	Low voltage	Check battery
			Oil stick at clutch	Clean
			Malfunction	Replace

(2) How to check the air conditioning system with the needle of high low gauge

To connect with manifold pressure gauge can find the cause of air conditioning system.
Because manifold pressure gauge is various sensibly (Ambient Temp. is based on 30~35℃)

Caution:
Operating E/G RPM 1500~2000 is must, and so to that you can check the correct cause and air conditioning.
(In case below the figure of indicated pressure gauge has some clearance, confirm with approximate indicated needle data.)

Gauge pressure conversion
- lb/in²=PSI
- 1 kg/㎠=14,223 in²

(Ex) 200 PSI=14 kgf/㎠

https://truckmanualshub.com/

Specifications

The specifications on the following pages are given for your information and guidance. For further information concerning your Tractor and equipment, consult your Authorized Mahindra Dealer/Distributor.

Mahindra USA Inc. policy is one of continuous improvement and the right to change prices, specifications or equipment at any time without notice is reserved.

All date given in this book is subject to production variations. Dimensions and weights are approximate only and the illustrations do not necessary show Tractors in standard condition. For exact information about any particular Tractor, please consult your Mahindra Authorized Dealer/Distributor.

SPECIFICATIONS

Model: 4510

ENGINE

Four strokes, Direct injection, water-cooled Diesel Engine.

Model	:4A220-DY
No. of cylinders	:4
Swept Volume	:133.656 in³(2,197cc)
Bore	:3.42 in
Stroke	:3.64 in
Compression Ratio	:22:1
Horse Power (HP) (Manufacturing rating)	:45/2600 rpm
Rated Speed	:2,600 rpm
High idle rpm	:3,000 rpm
Low idle rpm	:700 to 750
Fuel injection pump	:Throttle type
Cylinder sleeve	:Dry
Air Cleaner	: Dry Filter element, paper element filtering type.
Exhaust Muffler	: Horizontal Round.
Firing order	: 1-3-4-2
Accelerator	: Hand & Foot Accelerator

ELECTRICAL STARTING AND LIGHTING

Battery Capacity	: 12 Volt 110AH
Starter	:Solenoid Engaged. Key Start with Safety , starter switch
Alternator	:12V 50A
Instrumentation	:Water Temperature Gauge, Taco meter, Hour meter, Electrical fuel level gauge.
Lighting:	Head lights, side indicators, Rear parking,, brake & indicator light, Front parking & indicator light, On dash board indicators for battery charging, turn signal, PTO signal, Engine oil pressure, Preheat signal.

CLUTCH

Type	: Dry single plate
Outer dia. X Inner dia.	: 10.26 X 6.69″

TRANSMISSION

Type	: synchro mesh
No. of gears	:16 forward, 16 reverse gears with high and low selection lever with Differential Lock

STEERING **:** Hydraulic power (Power steering)

POWER TAKE OFF

Rear mounted	: 6 splines
Diameter	: 1⅜ in.

Standard PTO : ①540@2,391 engine RPM

BRAKES

Foot operated, independent with provision of inter lock for simultaneous operation. A foot brake is fitted for parking.

Disc Diameter	:7.24 in
Number of lining	:5.5 each side
Total brake thickness	: 2.299 in

HYDRAULIC SYSTEM

Independent fully"Live"hydraulic pump and separate reservoir.Position controls with isolating & response control

Working Pressure	:15697KPA(2,275psi)
Max.Lifting Force at Lower Link hitch point	:2,867 lbs(1,300Kg)
Pump output	:Main:9.6GPM(36.4LPM) Steering:4..46GPM(16.9LPM)
3 point linkage	: category 1 adjustable outside check chains.

▶ MAIN SPECIFICATIONS

Model			4510
Dimensions	Overall length (mm)		3,680(144.8")
	Overall width(mm)		1,600 (63")
	Overall height(mm)		2,400 (94.5")
	Distance between shafts(mm)		1,900 (75")
	Tread(mm)	Front	1,284 (50.6")
		Rear	1,260~1480 (49.6"~58.2")
	Least ground clearance (mm)		320 (12.6")
Weight (kg)			2,149 (4,737 lbs)
Engine	Name		4A220-DY
	Type		Water cooled 4 cycle diesel engine
	Displacement (CC)		2,197
	Output/speed(HP/rpm)		45/2600
	Fuel		Diesel fuel
	Fuel tank capacity		43.5
	Starting system		Starting with motor
Tire	Front		9.5-16 PR
	Rear		13.6-26 PR
Body	Clutch system		Dry single type
	Braking system		Wet disc type
	Steering system		Hydraulic
	Diff system		Bevel gear(Diff-lock)
	Shift method		Synchromesh
Minimum turning radius(m)			2.4 (94.4")
Shifting stages	Forward		16 stage
	Reverse		16 stages
PTO	Shaft (mm)		Ø35(1⅜),6 splines
Lifter	Control		Position ,Draft
	Mounting		CAT 1 type

Traveling Speed(mile/h)				
Linear	Sub shift	Main shift	Forward (mile/h)	Reverse (mile/h)
F (R)	L L	1	0.21	0.19
		2	0.30	0.28
		3	0.41	0.37
		4	0.54	0.49
	L	1	0.65	0.60
		2	0.92	0.84
		3	1.24	1.14
		4	1.64	1.50
	M	1	1.82	1.66
		2	2.55	2.33
		3	3.46	3.16
		4	4.54	4.15
	H	1	6.12	5.60
		2	8.60	7.86
		3	11.65	10.65
		4	15.29	13.98

*The specifications are subject to change for improvement without notice.

FUEL SAVING TIPS

To save fuel & oil in your tractor, following things should always be kept in mind.

A) Air cleaning system

1) Clean the air cleaner regularly so that dust does not settle down.
2) For every 50 hours & everyday in sandy/dusty conditions.

(a) Clean the air cleaner filter element with compressed air.
(b) If the rubber ring is cut or expanded then change it with an appropriate one. Fix the rubber at the proper location & check for leakages if any.
(c) If air is leaking through the hose connection, check & rectify other leakages, too.

Note: If air cleaning system is not properly maintained, it will lead to early wear of piston rings & sleeves. This will lead to problems like loss of engine power,, excessive oil consumption fuel consumption.

B) Engine

1) put the engine oil on load after the engine is heated & the water temperature gauge indicates the needle to be in the green zone.
2) If excessive black smoke is visible, then the paper element of air cleaner, Fuel injection Pump or nozzles should be checked.
3) Do not run the engine without load for more than 2 minutes. It is better to stop the engine rather than run it idle. This will help in saving of fuel.

C) Clutch & Brakes.

1) Do not reduce the power of the power of the engine by depressing the clutch halfway. Instead use low gear.
2) If the Tractor has to be stopped for a long period, it is advisable to bring the transmission in neutral position & release the clutch pedal.
3) Do not over ride the clutch & brake pedals.
4) While coming down from a slope, reduce the engine throttle & use low gear. Do not depend only on the brakes for stoppage.

D) Fuel system

1) Always use filtered diesel for the fuel system
2) At the end of the day's working, it is preferable to fill the diesel tank so that it may prevent condensation.
3) Change the filter, if the system gets choked. Do not change both the filters at the same time. If the above directives are not adhered to, the fuel injection pump & injection nozzle will lose its life early. Also, it will lead to excessive black smoke & excessive diesel consumption.

E) Cooling system

1) Always use recommended grade of oil.

2) Everyday before starting the engine, check the oil level with a dipstick & refill between the minimum & maximum level.

3) Charge the engine oil, Replace filter & “O” ring, as & when required.

F) Cooling system

1) Check the fan belt tension regularly. Adjust, If required.

2) Check the coolant level in the radiator fins always clean.

3)Replace the radiator cap with a genuine cap only, if required.

4) Do not remove the thermostat but replace with a new one, if required.

5) Do not change the radiator water often.

Note:

1) Always stop any fuel or oil leakages.

2) Carry out the regular maintenance failure to do so might increase the fuel consumption by 25%.

3) Carry out the torque of cylinder head bolt & adjustment of valve clearance regularly. Consult your dealer for this.

4) Check the tire pressure & inflate, as recommended.

5) Always buy genuine spares from the authorized Dealer/Distributor.

6) Always carry out the service of the Tractor by your authorized Dealer/Distributor.

For any other information, contact your nearest Authorized Dealer/Distributor.

https://truckmanualshub.com/

	SYMPTOM	CAUSE	REMEDY
Engine	Turning the main switch will not operate the starter	Clutch not pushed in Battery flat Switch faulty	Push the clutch in Charge or replace the battery Dealer to repair or replace Contact dealer for repair or replace
	Starter operates but not enough to turn the engine	Low battery Bad earth Thick oil	Charge the battery Clean the earth lead and tighten Drain and replace with correct oil
	Starter operates OK but does not start the engine	Air in fuel system Clogged fuel filter No fuel being supplied Glow plug disconnected or not working	Bleed the system Clean or replace both filters Fill tank or turn tap on Contact dealer for repair.
	Engine revolutions are irregular	Air in the fuel system Faulty injector Fuel pipe leak	Bleed the system Contact dealer for repair.
	The engine stops at low revolution	Poor fuel injection Faulty injection pump Wrong valve clearance Wrong idle setting Faulty injector	Contact dealer for repair Contact dealer for repair Contact dealer for repair Contact dealer for repair Contact dealer for repair
	The engine stops suddenly	Lack of fuel Faulty injectors Seized engine due to lack of oil, the wrong oil or lack of coolant	Fill the tank and bleed the fuel system Contact dealer for repair
	The engine overheats	Lack of coolant Broken or misadjusted fan belt Clogged air filter element Clogged radiator Low oil	Refill with coolant Adjust or replace Clean or replace air filter Clean the core Replace the oil to correct grade

SYMPTOM		CAUSE	REMEDY
Engine	White smoking from the exhaust	Oil level too high Shortage of or faulty fuel	Reduce to correct quantity Contact dealer for repair
	Reduced performance of the engine	The injectors are clogged, carbon coated and sticking Low compression Leaking valve seat Incorrect valve gap Faulty timing Fuel shortage Clogged air cleaner	Contact dealer for repair Contact dealer for repair Contact dealer for repair Contact dealer for repair Contact dealer for repair Fill the tank and check fuel quality Clean the element
	Oil warning light comes on with the engine running	Low oil level Wrong oil Faulty light or switch Clogged oil filter	Fill to correct level Change to correct oil Replace faulty part Contact dealer for repair
	Alternator light comes on with the engine running	Wiring fault Faulty alternator Low water level or faulty battery Broken or loose fan belt	Contact dealer for repair Contact dealer for repair Top up or replace Replace or adjust

SYMPTOM		CAUSE	REMEDY
Clutch	The clutch slips	Incorrect adjustment	Adjust to correct free play
		Worm or burnt lining	Contact dealer for repair
	The clutch does not disengage	Incorrect adjustment Rusty clutch lining	Adjust to correct free play Contact dealer for repair
Brake	Brake not working	Incorrect free play Worm or burnt lining Left and right gap different	Adjust to correct free play Contact dealer for repair Equalize
	Brake pedal not returning	Faulty return spring Lack of grease on the joints	Replace spring Remove rust and lubricate with grease
Hydraulic system	Hydraulics are not lifting	Engine revs. too low Lack of transmission Oil Air leaking in from a pipe Clogged suction filter Faulty pump Faulty hydraulic valve Faulty cylinder	Increase engine revs. Top up the oil to the correct level Repair or replace pipe or replace O ring on joint and tighten Clean and change oil Contact dealer for repair Contact dealer for repair Contact dealer for repair
	Oil leak from pipe	Loose pipe joint Cracked pipe	Tighten joint Replace or repair pipe
	When lifting the relief valve whistles	The stopper has slipped down	Adjust the stopper
For any other hydraulic problems please consult your dealer who has the correct equipment to diagnose and repair the system			

SYMPTOM		CAUSE	REMEDY
Steering wheel	Steering wheel shaking	Wrong toe-in Unequal tire pressure Loose component	Adjust toe-in Inflate both to correct pressure Tighten or replace if worn
	Excessive play in the steering	Worn steering shaft Worn components	Contact dealer for repair Contact dealer for repair
Electric instruments	Flat battery	Faulty wiring Faulty alternator Faulty regulator Broken or loose fan belt	Repair,reconnect or tighten as needed Contact dealer for repair Contact dealer for repair Replace or adjust
	Before anything else,check the electrolyte level of the battery and the connections.Top up it required and clean and retighten the terminal		
	Dim head lights	Low battery Faulty wiring	Charge or replace Repair or replace as needed
	Headlights not working	Blown bulb Blown fuse Faulty contact	Replace bulb Replace fuse Repair or replace and check the earth
	Horn not working	Faulty horn button Faulty wiring Faulty horn	Replace button Repair or replace Replace
	Indicator not working	Blown bulb Faulty flasher unit Faulty wiring	Replace bulb Replace unit Repair or replace

4510 WIRING DIAGRAM

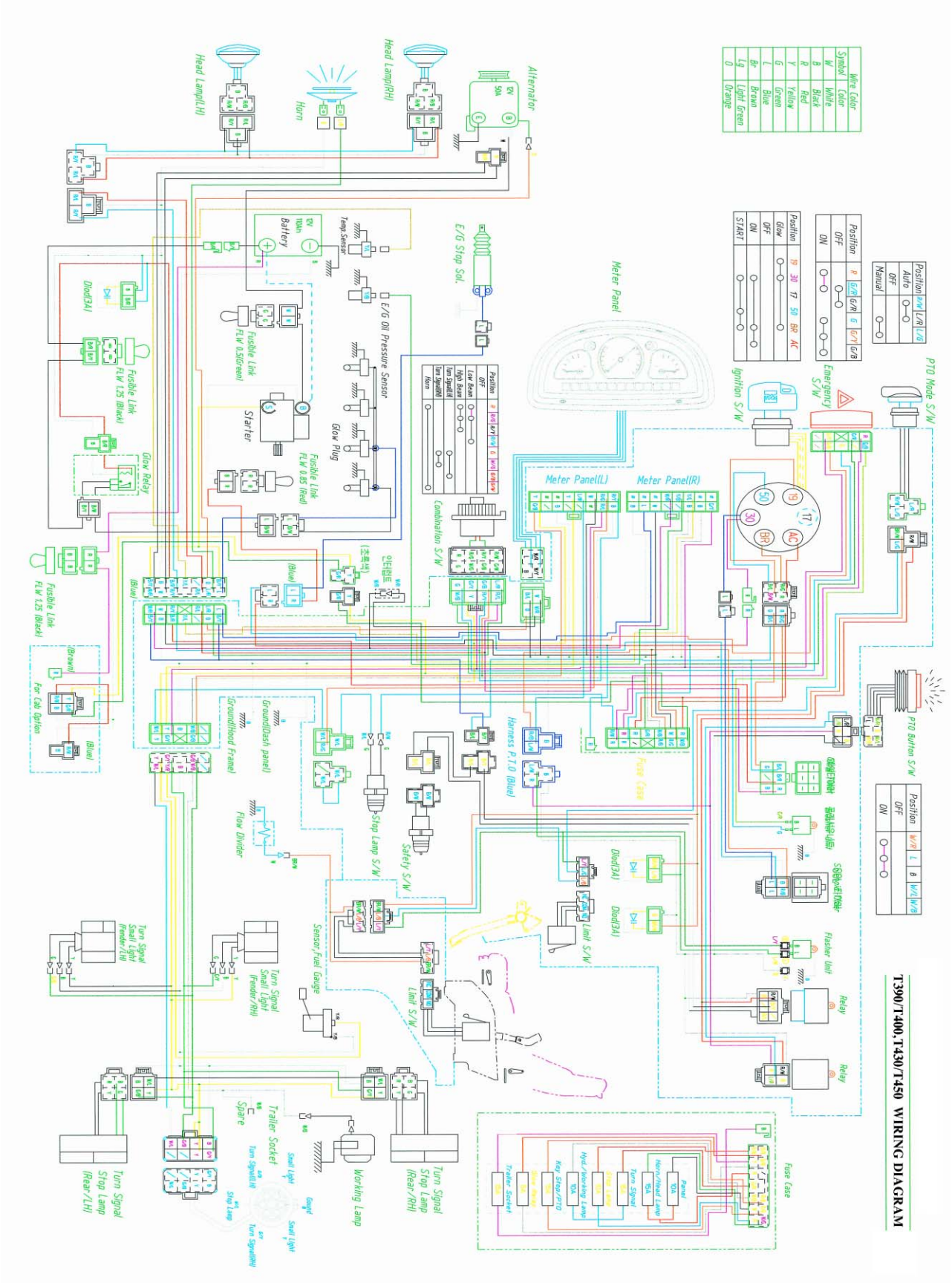

4510 WIRING DIAGRAM

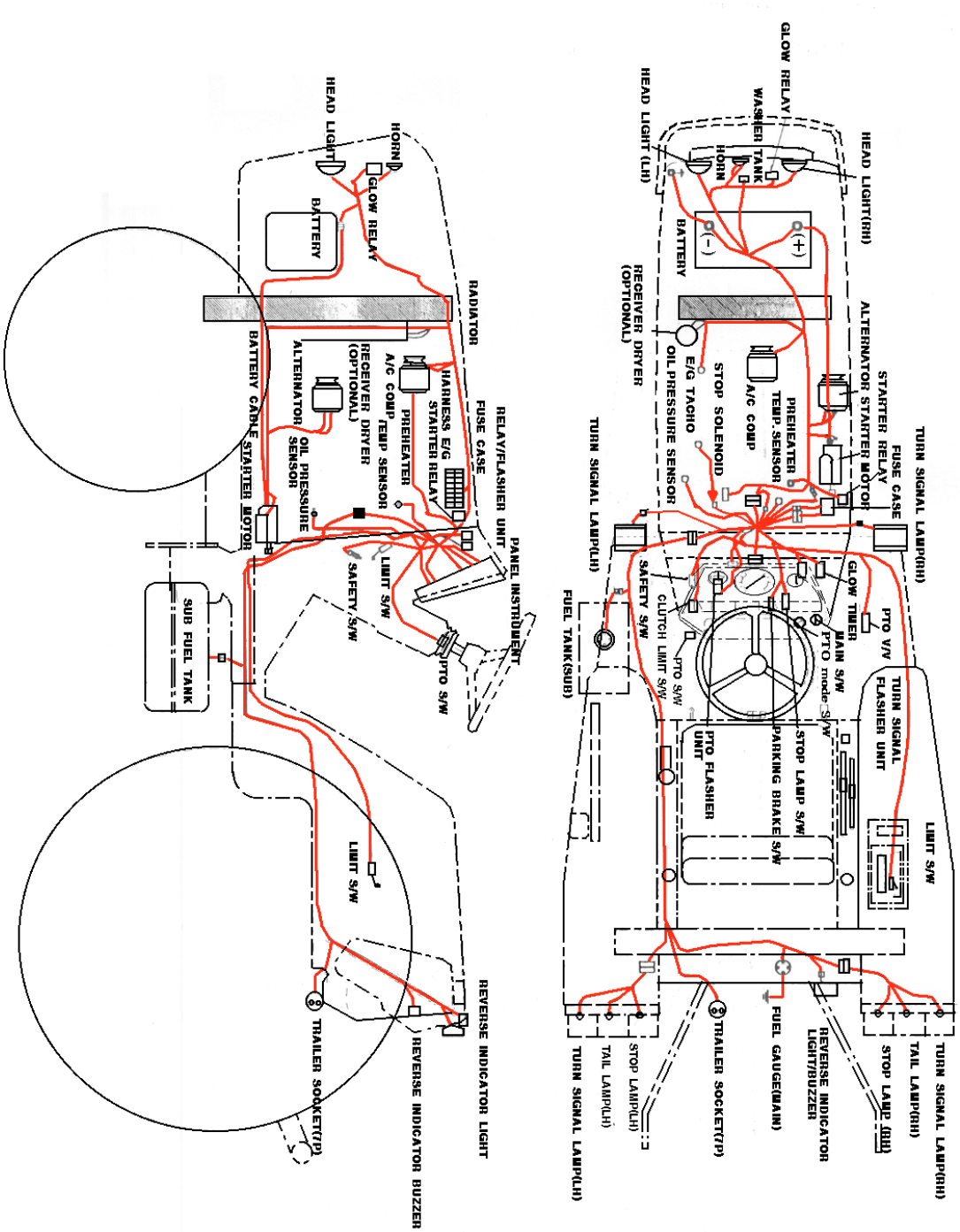

CABIN WIRING DIAGRAM 1.

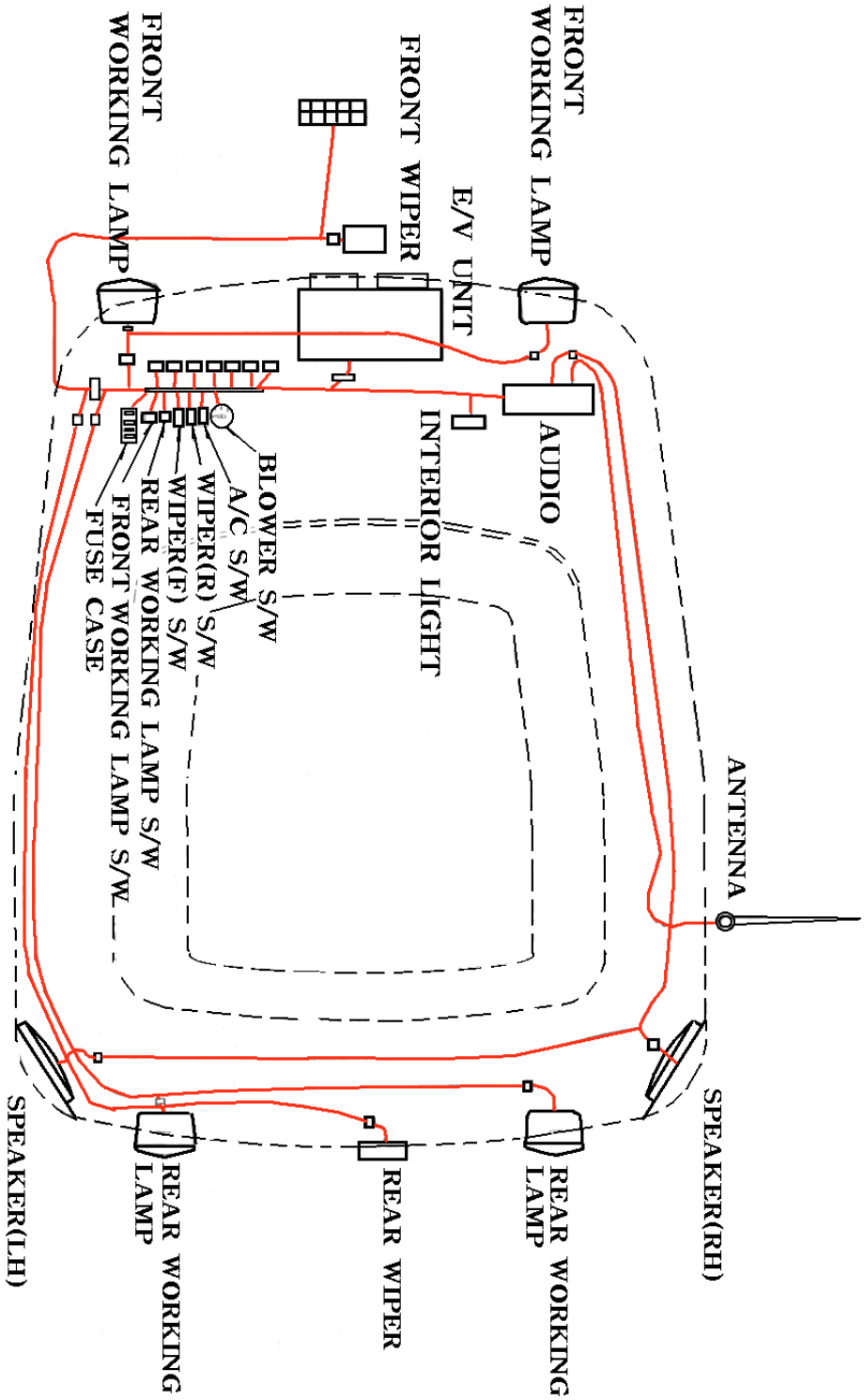

CABIN WIRING DIAGRAM 2.

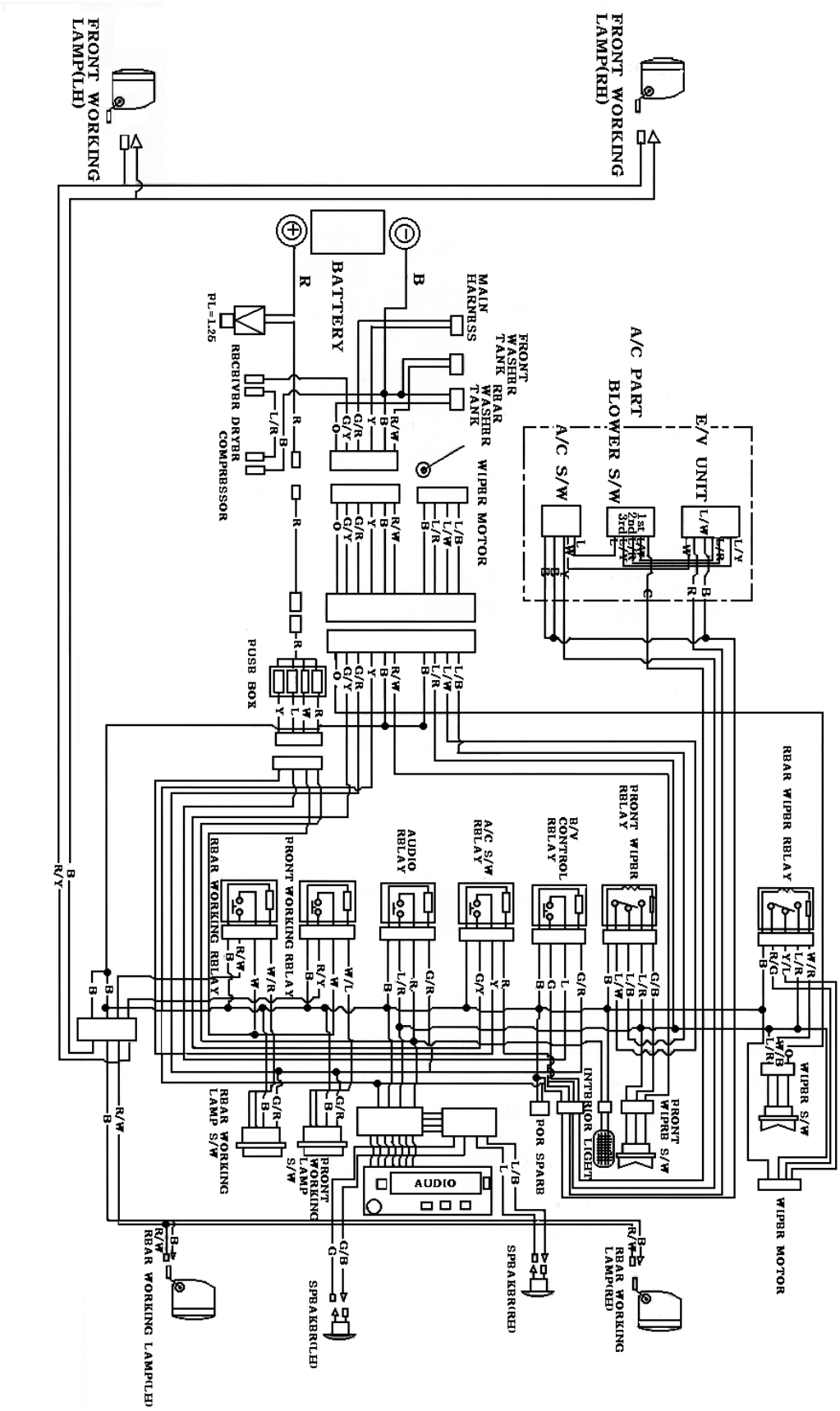

▶Drawing for fixing position of the fuse

▶Wiring diagram of the electric instrument

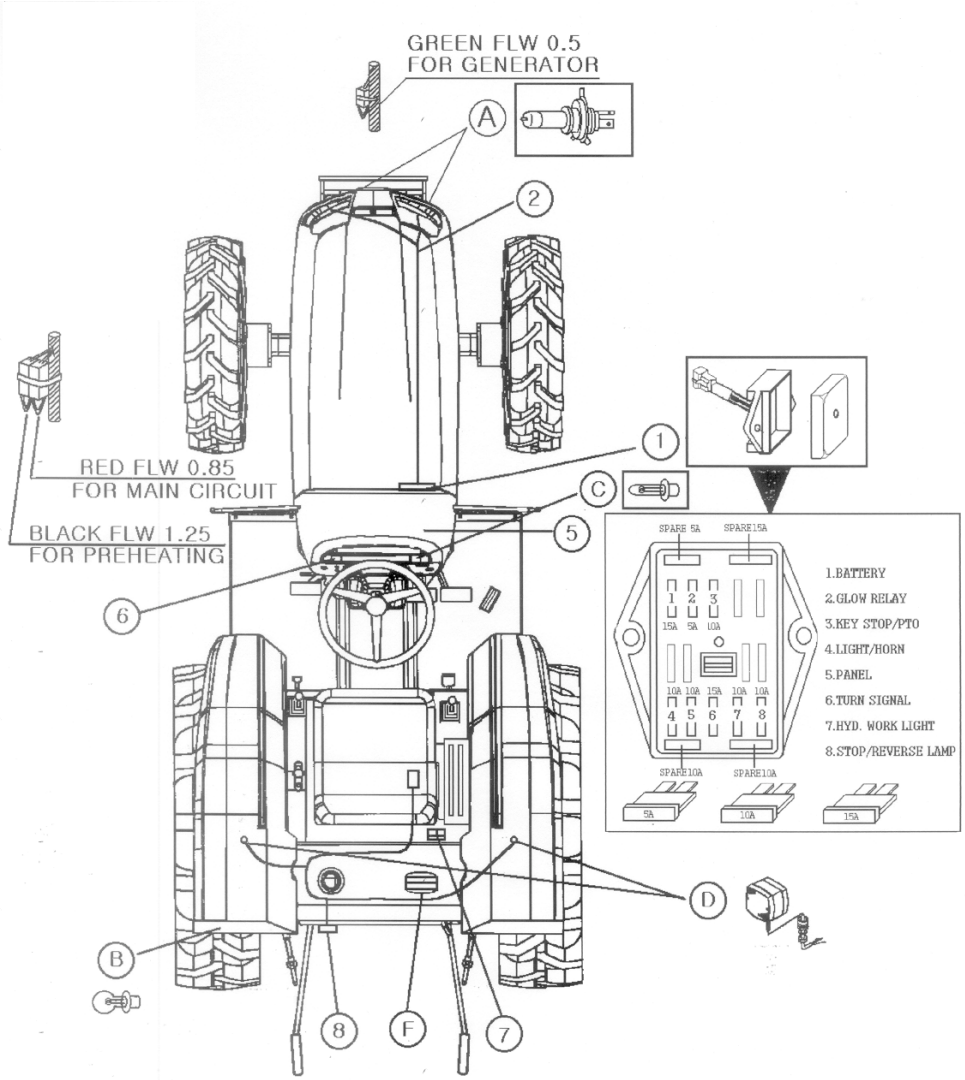

1	Fuse box
2	3 pieces of fuse blinks
3	Power for the working
5	Units for direction Signal relay for the power
6	PTO monitor PTO safety relay
7	Coupler for the power Max rated ampere
8	Coupler for the trailer

A	Head lamp	12V45/45W
B	Direction signal lamp	12V21W
	Stop lamp back light	21/5W
C	Meta panel light	12V3.4W
D	Working lamp	12V35W
E	Direction signal lamp	12V21W
	Side lamp	21V5W
F	Back lamp	12V20W
G	Number lamp	12V10W

Wiring diagram of Independent PTO

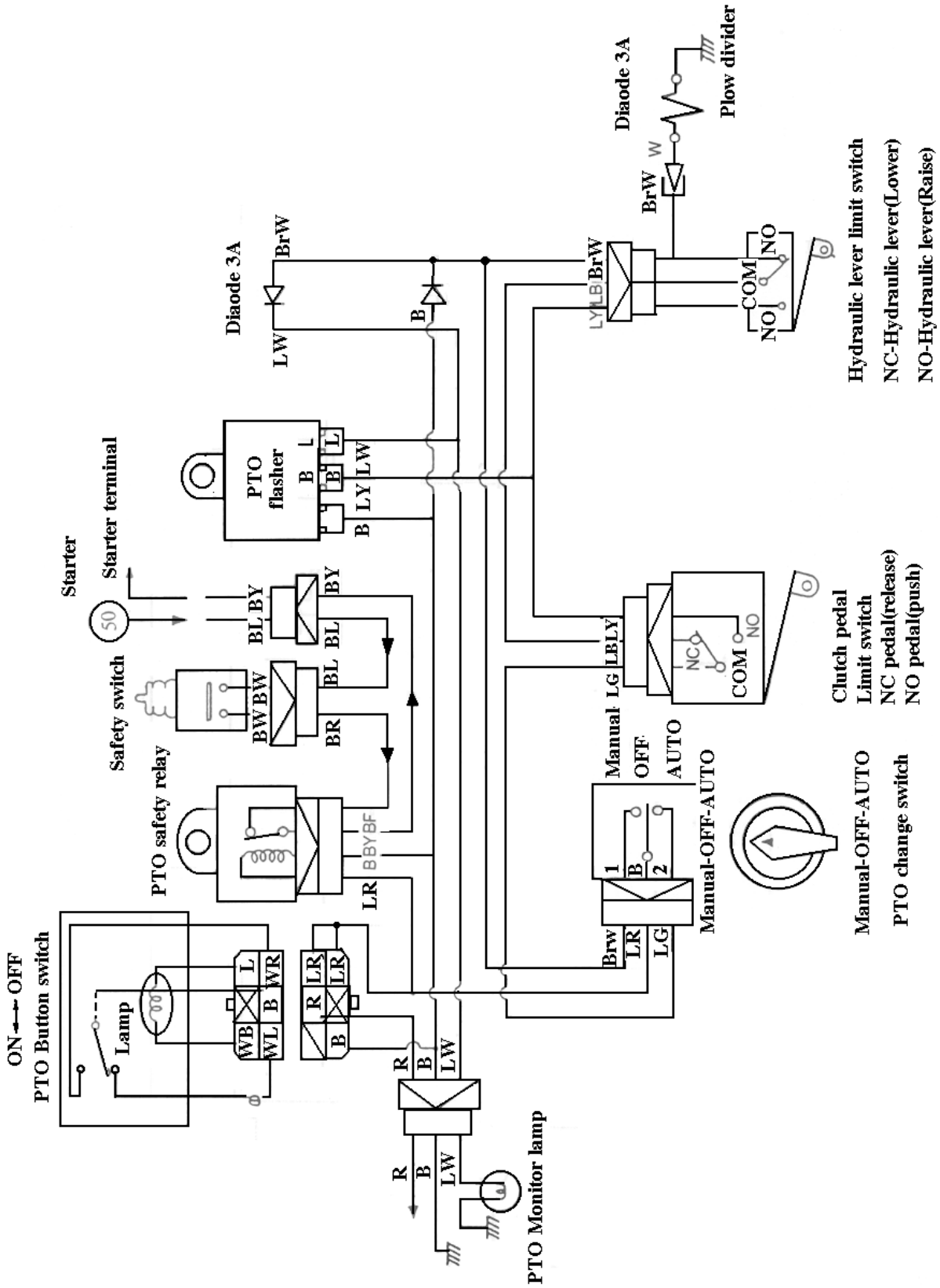

◎ 4510 POWER TRAIN

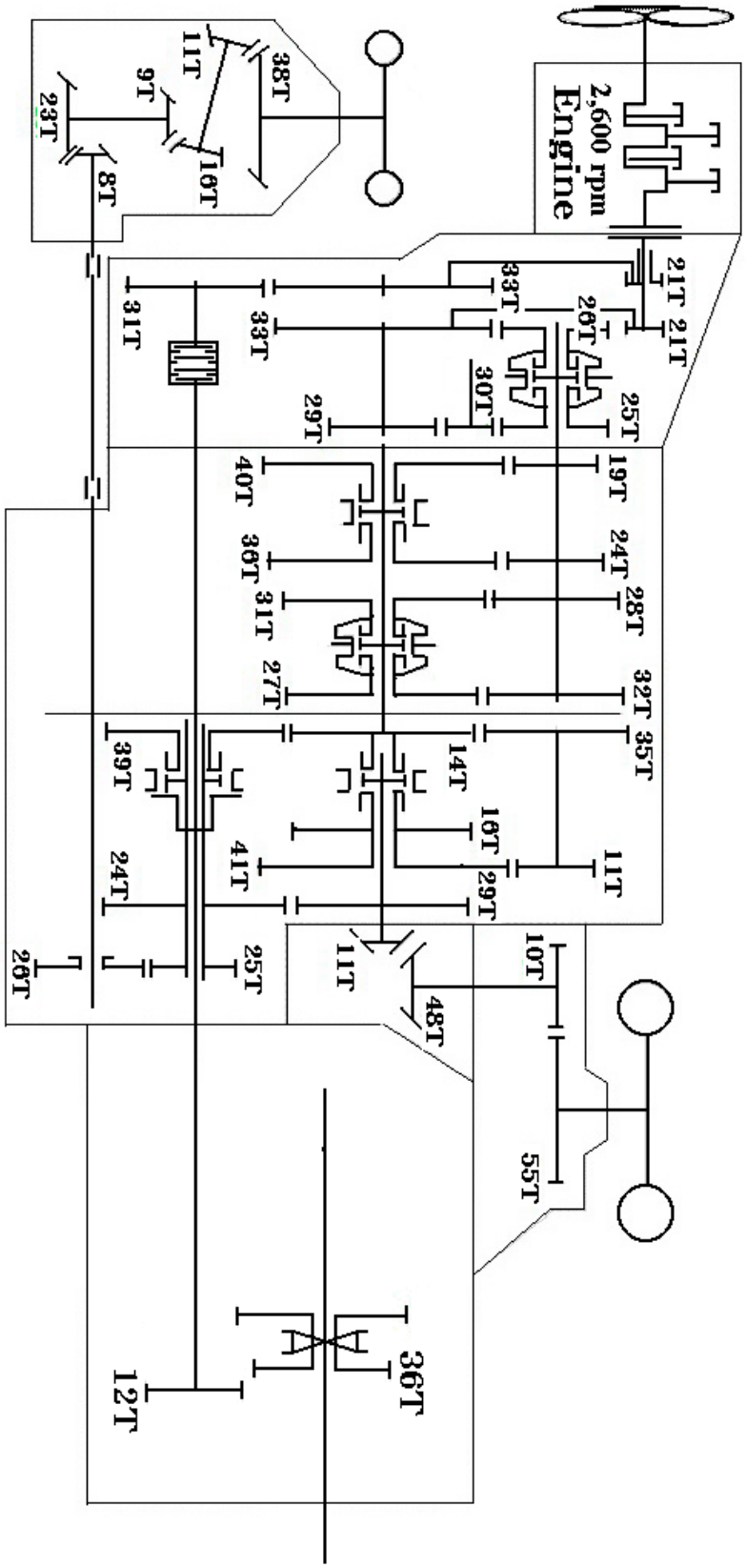

https://truckmanualshub.com/

TRACTOR HISTORY CARD

DATE	JOB CARD NO.	NATURE OF DEFECT	PARTS REPLACEMENT	W/CLAIM NO. AND DATE	REMARKS

MUSA Website Main Menu Index Full Screen Search Print EXIT

https://truckmanualshub.com/

SERVICE RECORD

DATE	TRACTOR HOURS	NATURE/TYPE OF REPAIR/SERVICE CARRIED OUT

MUSA Website Main Menu Index Full Screen Search Print EXIT

DAILY OPERATION LOG

DATE	JOB DONE	MACHINE HOURS		FUEL CONSUMPTION	ENGINE OIL TOPPED UP	REMARKS
		START	END			

PART REPLACEMENT RECORD

DATE	PART DESCRIPTION	QTY	COST	DATE	PART DESCRIPTION	QTY	COST

https://truckmanualshub.com/

4510

OPERATOR'S MANUAL FOR TRACTORS

CODE NO.

1451-940-001-0

Printed on March. 2005

2nd Edition