Haulotte GROUP

TELESCOPIC MASTS

Operator's manual

TELESCOPIC MASTS

STAR 6 (STAR 13) - STAR 6P - STAR 8 (STAR 22J) - STAR 10 (STAR 26J)

2420343790 e10.11 AUS

Downloaded from www.Manualslib.com manuals search engine

https://truckmanualshub.com/

Downloaded from www.Manualslib.com manuals search engine

CONTENTS

1 - Operator's manual 7
2 - After Sales Service 7
3 - Compliance 8
4 - HAULOTTE Services® contact details. 9

A

SAFETY PRECAUTIONS

1 - Recommendations 11
1.1 - Operator's manual 11
1.2 - Symbols used 11
1.3 - Label colors 12
2 - Pre-operation instructions. 13
2.1 - General instructions 13
2.2 - Specific instructions. 14
3 - Operation instructions 15
3.1 - Prohibitions. 15
3.2 - Potential risks. 16
3.2.1 - Risk of command system disturbance 16
3.2.2 - Risk of falling 16
3.2.3 - Risk of electrocution 17
3.2.4 - Risk of uncontrolled movement and overturning 18
3.2.5 - Risk of burns and explosion 20
3.2.6 - Risk of crushing and collision 20

B

INTERVENOR'S RESPONSIBILITY

1 - Owner's (or hirer's) responsibility. 21
2 - Employer's responsibility 21
3 - Trainer's responsibility 21
4 - Operator's responsibility 21
5 - Inspection and maintenance 22

C

MACHINE LAYOUT

1 - Identification 23
2 - Main components 23
3 - Safety devices. 27
3.1 - Sliding (or swinging) intermediate guardrail. 27
3.2 - Swing doors. 27
3.3 - Anchorage point (Please see machine configuration) 28
4 - Labels. 29
4.1 - Classification plan 29
4.1.1 - Red labels. 29
4.1.2 - Orange labels 31
4.1.3 - Yellow labels. 32
4.1.4 - Other labels 33
4.1.5 - Green labels 35
4.2 - Identification 36
5 - Control boxes 45
5.1 - Ground control box - Emergency control panel. 45
5.2 - Platform control box 49

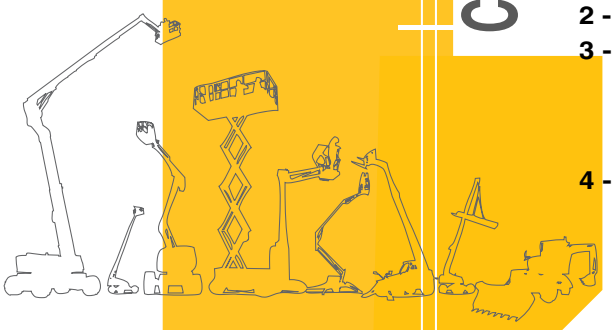

Downloaded from www.Manualslib.com manuals search engine

D

OPERATING PRINCIPLE

1 - Description 55
2 - Safety devices. 55
2.1 - Activation of controls 55
2.2 - Drive speed. 55
2.3 - Electronic variable speed drive. 55
2.4 - Multi-function indicator : Battery charge status calculator-Indicator hour56
2.5 - Load limiting in the platform (if fitted) 56
2.6 - Chassis tilt 57
2.7 - Machine braking 57
2.8 - Wheel motor brake release. 57
2.9 - Anti-pothole safety system. 57
2.10 - On-board charger 58
2.11 - Order Picker Specific 58

E

DRIVING

1 - Recommendations 59
2 - Checks and inspection before use 59
2.1 - Visual inspections 59
2.1.1 - General mechanical functions 59
2.1.2 - Environment 61
2.2 - Functional tests 62
2.2.1 - Safety features 62
2.2.2 - Ground control box controls (emergency station) 62
2.2.3 - Platform control box controls (driving station) 63
2.3 - Periodical checks. 63
2.4 - Repairs and adjustments. 64
2.5 - Inspection / Testing requirements 64
3 - Operation. 65
3.1 - Test procedure. 65
3.1.1 - Emergency stop button operation 65
3.1.2 - Tilt sensor switch operation 66
3.1.3 - Visual and sound alarms 67
3.1.4 - Weighing system 67
3.2 - Operation from ground position 67
3.2.1 - Machine start-up. 67
3.2.2 - Machine shutdown 67
3.2.3 - Movement control. 68
3.2.4 - Other controls. 68
3.3 - Operations from the platform 69
3.3.1 - Machine start-up. 69
3.3.2 - Machine shutdown 69
3.3.3 - Movement control. 69
3.3.4 - Other controls. 71

Downloaded from www.Manualslib.com manuals search engine

CONTENTS

F

SPECIAL PROCEDURE

1 - Emergency lowering 73
1.1 - Principle 73
1.2 - Procedure 73
2 - Lowering for repairs 74
2.1 - Principle 74
2.2 - Procedure 74
3 - Towing 76
3.1 - Brake release 76
4 - Loading and unloading 77
4.1 - Principle 77
4.1.1 - Loading by ramp 77
4.1.2 - Loading by power lift truck 77
4.1.3 - Unloading by power lift truck 78
4.1.4 - Loading by lifting 78
4.1.5 - Unloading by lifting 78
4.2 - Putting in transport position 79
4.3 - Unloading 80
4.4 - Warning 80
5 - Detection of internal fault 80
5.1 - Principle 80
5.2 - Procedure 80

G

TECHNICAL CHARACTERISTICS

1 - Main characteristics 81
2 - Overall dimensions 86
3 - Working area 89
3.1 - Machine STAR 6 89
3.2 - Machine STAR 6 P 90
3.3 - Machine STAR 8 91
3.4 - Machine STAR 10 92
4 - AS - CE standard specifics 93
4.1 - Overload test 93
4.2 - Functional test 93
4.3 - Stability test 94
5 - Declaration of conformity 98

H

INTERVENTION REGISTER

1 - Intervention register 99

Downloaded from www.Manualslib.com manuals search engine

Downloaded from www.Manualslib.com manuals search engine

https://truckmanualshub.com/

You have just purchased a HAULOTTE® product

and we would like to thank you for your business.

1 - Operator's manual

As stated on the delivery slip, this manual is one of the documents in the on-board document holder provided upon delivery of your HAULOTTE® machine.

The operator manual is a translation of the original instructions.

Safe operation of this product can only be assured if you follow the operating instructions contained in this manual.

We would particularly like to draw your attention to 2 essential points :

- Compliance with safety instruction (machine, use, environment)
- Use of the equipment within the performance limits set down in this manual.

With regard to the designation of our equipment, we stress that this is purely for commercial purposes and not to be confused with the technical characteristics. Only the tables of technical characteristics should be used to study the suitability of the equipment for the intended use.

2 - After Sales Service

Our HAULOTTE Services® After Sales Service is at your disposal throughout your machine's service life to ensure optimal use of your HAULOTTE product..

- When contacting our After Sales Service, ensure that you provide the machine model and serial number.
- When ordering any consumables or spare parts, please use this manual and the Haulotte Essential catalogue to receive your genuine HAULOTTE spare parts, your only guarantee of parts interchangeability and correct machine operation.
- If there is an equipment malfunction involving a HAULOTTE® product, then contact HAULOTTE Services® immediately even if the malfunction does not involve material and/or bodily damage..
- In the event of malfunctions or incidents involving a HAULOTTE® machine, contact HAULOTTE Services® immediately even if no material or bodily damage is observed and we will intervene as soon as possible (See : HAULOTTE Services® contact details)

Downloaded from www.Manualslib.com manuals search engine

https://truckmanualshub.com/

3 - Compliance

We would like to remind you that HAULOTTE® complies with the provisions of any applicable directives applicable to this type of machine.

HAULOTTE advises you that NO modifications carried out without the written permission of HAULOTTE® will void the HAULOTTE warranty..

HAULOTTE® cannot be held liable for any changes to the technical specifications contained in this manual.

HAULOTTE® reserves the right to alter technical specifications and to make improvements or modifications to the machine without modifying this manual.

Certain options can modify the machine's operating characteristics and its associated safety. If your machine was originally delivered with options fitted, replacing a safety component associated with a particular options not require any particular precautions other than those associated with the installation itself (static test).

If you intend to add options to your product after original delivery, it is essential to follow the manufacturer's recommendations below :

- **Installation by authorised HAULOTTE® personnel only.**
- **Update the manufacturer's identification plate.**
- **Have stability tests carried out by a certified agency/competent person.**
- **Ensure that any additional labels that relate to the option installed, are affixed to the machine in the appropriate location/s.**

Downloaded from www.Manualslib.com manuals search engine

https://truckmanualshub.com/

4 - HAULOTTE Services® contact details

HAULOTTE Services® contact details

	HAULOTTE FRANCE PARC DES LUMIERES 601 RUE NICEPHORE NIEPCE 69800 SAINT-PRIEST **TECHNICAL Department:** **+33 (0)820 200 089** **SPARE PARTS : +33 (0)820 205 344** FAX : +33 (0)4 72 88 01 43 E-mail : haulottefrance@haulotte.com www.haulotte.fr		HAULOTTE ITALIA VIA LOMBARDIA 15 20098 SAN GIULIANO MILANESE (MI) **TEL: +39 02 98 97 01** FAX: +39 02 9897 01 25 E-mail : haulotteitalia@haulotte.com www.haulotte.it		
	HAULOTTE HUBARBEITSBÜHNEN GmbH AN DER MÖHLINHALLE 1 D-79189 BAD KROZINGEN-HAUSEN **TEL : +49 (0) 7633 806 92-0** FAX : +49 (0) 7633 806 92-18 E.mail : haulotte@de.haulotte.com www.haulotte.de		HAULOTTE VOSTOK, OOO 3, ZHUKOVSKOGO STREET DOLGOPRUDNY 141700 MOSCOW REGION RUSSIAN FEDERATION **TEL/FAX : +7 495 579 57 17** E.mail : nkoval@haulottevostok.ru www.haulotte-international.com		HAULOTTE DO BRASIL AV. CECI, 608 – B 13 CEP: 06460-120 – TAMBORE BARUERI – SAO PAULO – BRASIL **TEL : +55 11 4208 4206** FAX : +55 11 4191 4677 E.mail : haulotte@haulotte.com.br www.haulotte.com.br
	HAULOTTE IBERICA C/ARGENTINA N° 13 - P.I. LA GARENA 28806 ALCALA DE HENARES MADRID **TEL : +34 902 886 455** TEL SAT : +34 902 886 444 FAX : +34 91 656 97 81 E.mail : iberica@haulotte.com www.haulotte.es		HAULOTTE POLSKA Sp. Z.o.o. UL. GRANICZNA 22 05-090 RASZYN - JANKI **TEL : +48 22 720 08 80** FAX : +48 22 720 35 06 E-mail : haulottepolska@haulotte.com www.haulotte.pl		HAULOTTE MÉXICO, Sa de Cv Calle 9 Este, Lote 18, Civac, Jiutepec, Morelos CP 62500 Cuernavaca México **TEL : +52 77 7321 7923** FAX : +52 77 7516 8234 E-mail : haulotte.mexico@haulotte.com www.haulotte-international.com
	HAULOTTE PORTUGAL ESTRADA NACIONAL NUM. 10 KM. 140 - LETRA K 2695 - 066 BOBADELA LRS **TEL : + 351 21 995 98 10** FAX : + 351 21 995 98 19 E.mail : haulotteportugal@haulotte.com www.haulotte.es		HAULOTTE SINGAPORE Pte Ltd. No.26 CHANGI NORTH WAY, SINGAPORE 498812 **Parts and service Hotline: +65 6546 6179** FAX : +65 6536 3969 E-mail: haulotteasia@haulotte.com www.haulotte.sg		HAULOTTE MIDDLE EAST FZE PO BOX 293881 Dubaï Airport Free Zone DUBAÏ United Arab Emirates **TEL : +971 (0)4 299 77 35** FAX : +971 (0) 4 299 60 28 E-mail : haulottemiddle-east@haulotte.com www.haulotte-international.com
	HAULOTTE SCANDINAVIA AB Taljegårdsgatan 12 431 53 Mölndal SWEDEN **TEL : +46 31 744 32 90** **FAX : +46 31 744 32 99** E-mail : info@se.haulotte.com spares@se.haulotte.com www.haulotte.se		HAULOTTE TRADING (SHANGHAI) Co. Ltd. #7 WORKSHOP No 191 HUA JIN ROAD MIN HANG DISTRICT SHANGHAI CHINA 201108 **TEL : +86 21 6442 6610** FAX : +86 21 6442 6619 E-mail : haulotteshanghai@haulotte.com www.haulotte.cn		HAULOTTE ARGENTINA Ruta Panamericana Km. 34,300 (Ramal A Escobar) 1615 Gran Bourg (Provincia de Buenos Aires) Argentina **TEL.: +54 033 27 45 21 91** FAX. +54 033 27 45 72 19 E-mail : haulotteargentina@haulotte.com www.haulotte-international.com
	HAULOTTE UK Ltd STAFFORD PARK 6 TELFORD - SHROPSHIRE TF3 3AT **TEL : +44 (0)1952 292753** FAX : + 44 (0)1952 292758 E.mail : salesuk@haulotte.com www.haulotte.co.uk		HAULOTTE GROUP / BILJAX 125 TAYLOR PARKWAY ARCHBOLD, OH 43502 – USA **TEL : +1 419 445 8915** FAX :+1 419 445 0367 Toll free : +1 800 537 0540 E.mail : sales@us.haulotte.com www.haulotte-usa.com		HAULOTTE DO BRASIL AV. CECI, 608 – B 13 CEP: 06460-120 – TAMBORE BARUERI – SAO PAULO – BRASIL **TEL : +55 11 4688 1295 / +55 11 4208 4206** FAX : +55 11 4191 4677 E.mail : americalatina@haulotte.com www.haulotte-international.com
	HAULOTTE NETHERLANDS BV Koopvaardijweg 26 4906 CV OOSTERHOUT - Nederland **TEL : +31 (0) 162 670 707** FAX : +31 (0) 162 670 710 E.mail info@haulotte.nl		HAULOTTE AUSTRALIA PTY Ltd 46 GREENS ROAD DANDENONG – VIC – 3175 **TEL : +61 (0)3 9792 1000** FAX : +61 (0)3 9792 1011 E.mail : sales@haulotte.com.au		

Downloaded from www.Manualslib.com manuals search engine

https://truckmanualshub.com/

Downloaded from www.Manualslib.com manuals search engine

https://truckmanualshub.com/

1 - Recommendations

1.1 - OPERATOR'S MANUAL

This operators manual is specific to the HAULOTTE® products listed on the cover page of this manual..

The operator manual does not replace the basic training required for all worksite equipment operators.

HAULOTTE® has compiled this manual to assist in safe and efficient operation of the products covered by the manual.

This manual must be kept on the machine (or in the cab in its storage case. The manual must be available to all operators and must be kept in good condition. Additional copies can be ordered from HAULOTTE Services®.

1.2 - SYMBOLS USED

Symbols are used to alert the operator to safety precautions or to highlight practical information.

Legend

Symbol	Meaning
	Danger : Risk of injury or death (work safety)
	Caution : Risk of material damage (work quality)
	Prohibition relating to work safety and quality
	Reminder : No identified risk, but a reminder of the need for common sense, good practice or pre-action prerequisites
	Cross-reference to another part of the manual (see section or sheet)
	Cross-reference to another manual (see manual)
	Cross-reference to repairs (contact HAULOTTE Services®)
N.B. :	Additional technical information

Downloaded from www.Manualslib.com manuals search engine

https://truckmanualshub.com/

1.3 - LABEL COLORS

The potential dangers and any specific regulations are indicated around the product by labels and identification plates.

The labels must be kept in good condition. Additional labels can be obtained from HAULOTTE Services®.

Familiarize yourself with the labels and their respective color codes.

Label color code

Labels	Color	Meaning
	Red	Potentially fatal danger
	Orange	Risk of serious injury
	Yellow	Risk of material damage and/or minor injury
	Other	Additional technical information
	Green	Maintenance operation or information

Downloaded from www.Manualslib.com manuals search engine

https://truckmanualshub.com/

2 - Pre-operation instructions

2.1 - GENERAL INSTRUCTIONS

- **The employer has the obligation to issue a driving permit to the operator.**
- **The employer is obliged to inform the operator of the local regulations.**

Do not operate the product in the following situations :

- On soft, unstable or cluttered ground.
- With wind blowing faster than the permissible limit. Check the maximum value in the technical characteristics (Section G 1-Main characteristics). Consult the Beaufort scale (Section A 3.2.4-Risk of uncontrolled movement and overturning).
- Close to power lines. Respect the safety distance (Section A 3.2.3-Risk of electrocution).
- At ambient temperatures higher than 45 °C(113 °F) and lower than -15 °C(5 °F) . Consult HAULOTTE® if it is necessary to work outside this range.
- In an explosive atmosphere.
- During storms (risk of lightning).
- In the presence of strong electromagnetic fields (radar, etc ...).

***N.B.**-:-You are advised to use the machine under "NORMAL" climatic conditions.. If you need to use the machine in climatic conditions likely to cause deterioration (humidity, temperatures outside the recommended ranges, salinity, corrosiveness, atmospheric pressure), contact HAULOTTE Services®. Reduce intervals between servicing.*

***N.B.**-:-Whilst the machine is not in use, care must be taken to ensure that if the machine is not locked in a secure location, that the unit key switch is removed to prevent unauthorised use of the machine.*

Downloaded from www.Manualslib.com manuals search engine

https://truckmanualshub.com/

2.2 - SPECIFIC INSTRUCTIONS

Do not operate the product in the following situations :

- If the load in the platform exceeds the maximum load authorized. Check the maximum value in the technical characteristics (Section G 1-Main characteristics).
- If the ground slope is greater than the permissible limit. Check the maximum value in the technical characteristics (Section G 1-Main characteristics).
- At night unless the machine is equipped with the optional light.
- If the number of persons exceeds the permissible limit. Check the maximum value in the technical characteristics (Section G 1-Main characteristics)
- If the side force is greater than the permissible force. Check the maximum value in the technical characteristics (Section G 1-Main characteristics)

Downloaded from www.Manualslib.com manuals search engine

https://truckmanualshub.com/

3 - Operation instructions

It is preferable to operate the machine on flat, consolidated ground (tarmac, concrete, etc.).

3.1 - PROHIBITIONS

- Never use a faulty machine (hydraulic leaks, worn tires, malfunction).
- Never operate the machine controls suddenly.
- Never place the machine against a structure to hold that structure in place.
- Never use the machine to tow other machines or to drag materials.
- Never expose the batteries or electrical components to water (pressure cleaner, rain).
- Never disable the safety devices.
- Do not make contact with a fixed or mobile obstacle. The contact can cause premature deterioration of the structure and lead to the corruption of certain safety elements.
- Do not climb onto the covers.
- Never use the machine with only an operator in the platform. It must be used by 2 operators.
- Never use the machine when the platform is cluttered.
- Never increase the surface area of the platform by using floor extensions or accessories not authorized by HAULOTTE®.
- Never leave the hydraulic cylinders fully extended or retracted before switching off the machine, or during an extended stop period.

- Never use the machine with material or objects suspended from the guard-rail.
- Never use the machine with elements that can increase the wind force (panels).
- Never increase the working height by using attachments (ladder).
- Never use the guardrail as a means of access for climbing in or out of the platform. The basket can be easily accessed in its low position. For machines fitted with : Steps have been provided for this purpose where required.
- Never climb on the guardrail.
- Never use the adjustable tray as step.
- Never climb onto the adjustable tray.
- Never use the machine without fitting the sliding (or rotating) middle rail, closing the safety gate or the swing gates beforehand.
- Never use the machine as a crane, material lift or elevator.
- Never use the machine for any other purpose than to transport people, their tools and material to the desired place.
- Never drive fast in narrow or cluttered areas. Keep speed under control in bends.
- Never tow the machine over extended distances (it must be transported on a trailer).

For STAR 6 P only :

When the machine is used in the picking mode, the area in which it is to be used must be clearly marked with a barrier to prevent access to other equipment or individuals. The area protected by the barrier must be sufficient in all direction to cater for the length of the machine. There should be a person at ground level at all times to act as an observer to ensure that no one enters the area protected by the barrier. The observer must also remain outside the barrier unless an emergency occurs and the platform needs to lowered using the ground level controls.

Downloaded from www.Manualslib.com manuals search engine

https://truckmanualshub.com/

3.2 - POTENTIAL RISKS

3.2.1 - Risk of command system disturbance

Risk of disrupted movement. Maintain clearance from high voltage lines or magnetic fields.

3.2.2 - Risk of falling

When in the platform, respect the following instructions :

- Carry individual protection equipment adapted to the work conditions and local rules.
- Avoid contact with fixed or mobile obstacles (other machines).
- Ensure that the adjustable midrail is closed (low position and against the guardrails).
- Ensure that the gate is closed and locked (For machines fitted with).
- Hold on securely to the guardrails during elevation and driving.
- Do not sit, stand, or climb on the platform guard rails.
- Ensure that guard rails are correctly installed and locked.
- Always keep your feet firmly on the floor of the platform.
- Remove any trace of oil or grease from the steps, floor, handrail and the guardrails.
- Keep the floor of the platform free of debris.
- Do not leave the platform until it is fully in its stowed position.
- Do not climb on to the platform if the machine is not in the stowed position.

Downloaded from www.Manualslib.com manuals search engine

https://truckmanualshub.com/

For STAR 6 P only :

- Check that the swing gates are locked.
- The boxes must be securely strapped onto the tray if stacking several boxes or if the boxes are unstable (ie. the height is greater than the width or length). Use the 6 anchorage points provided for this purpose.
- Only parcels not exceeding the surface of the adjustable tray can be handled.
- The adjustable tray must be set at the same the same height as the load to be transferred onto it.

To climb up or climb down from the platform :

- The machine must be completely stowed.
- Face the machine to access the entry opening to the platform
- Keep 3 support points between the steps and the guardrail

3.2.3 - Risk of electrocution

The machine is not electrically insulated and does not offer any insulation protection.

The risks of electrocution are high in the following situations :

- Close to live power lines, consider the movement of the machine and the sway of the electric power lines particularly in windy conditions.
- In the event that you were to make accidental contact with a high voltage line, wait for the power to the line to be switched off before operating the machine.
- During storms.

Never use the machine as a welding earth.

Maintain a minimum safe distance with regard to power lines and electrical devices.

Respect the local rules and the minimum safety distance from power lines..

Minimum safety distance

Electric voltage	Minimum safety distance	
	Mètre	Feet
0 - 300 V	Avoid contact	
300 V - 50 kV	3	10
50 - 200 kV	5	15
200 - 350 kV	6	20
350 - 500 kV	8	25
500 - 750 kV	11	35
750 - 1000 kV	14	45

***N.B.**-:-This table is applicable, except when the local regulations are more strict.*

Downloaded from www.Manualslib.com manuals search engine

https://truckmanualshub.com/

3.2.4 - Risk of uncontrolled movement and overturning

When in the platform, respect the following instructions :

- Before operating the machine on any indoor or outdoor surface (premises, bridge, truck, etc.), check that the surface is capable of supporting the combined machine weight and platform capacity. Check the maximum value in the technical characteristics (Section G 1-Main characteristics).
- Remain vigilant of driving direction reversal at the platform. Check the driving direction with the help of the red or green arrow on the chassis relative to the red and green arrows on the platform control box.
- Always ensure that the chassis is never driven any closer than 1 m(3 ft3 in) m to holes, bumps, tilts, obstructions, debris and ground coverings that may hide holes and other dangers.
- During motion direction reversal from the platform or ground control box, the joysticks or switches must be stopped in neutral position before reversing the direction of motion.
- Taking note of the overall load dimensions and weight, place the loads in the centre of the platform or distribute them it a uniform manner.
- If the tilt alarm sounds when the platform is raised, lower platform completely, then reposition machine onto level ground before raising platform.

- **Do not drive the machine on slopes or tilts beyond the design limits. Check the maximum value in the technical characteristics(Section G 1-Main characteristics).**
- **Do not travel down slopes at high speed.**
- **Do not use the machine (elevation and travel) on an incline greater than that permitted by the slope sensor.**
- **Do not drive in reverse (direction opposite the field of vision).**
- **Never use the machine in winds exceeding the permissible limit.**
- **Do not increase the surface area exposed to wind. The greater the surface area exposed, the more unstable the machine becomes.**

For STAR 6 P only :

Only drive the machine when the goods to be transported on the tray are securely positioned. The operator must have full visibility of the ground on which the machine is operating.

N.B.-:-*The Beaufort scale measures the wind force with a graduation system. A wind speed range at 10 m(32 ft9 in) above flat, clear land is associated with each degree.*

Some models have a zero wind rating and must not be exposed to wind forces. It should also be noted that winds can occur inside buildings if external windows or doors are left open. Refer to the machine identification plate to confirm the allowable wind load on the product being used.

Downloaded from www.Manualslib.com manuals search engine

https://truckmanualshub.com/

Beaufort scale

Force	Meteorological description	Observed effects	m/s	km/h	mph
0	Calm	Smoke rises vertically.	0 - 0,2	0 - 1	0 - 0,62
1	Very light breeze	Smoke indicates the wind direction.	0,3 - 1,5	1 - 5	0,62 - 3,11
2	Light breeze	Wind felt on the face. Leaves rustle. Weather vanes turn.	1,6 - 3,3	6 - 11	3,72 - 6,84
3	Slight breeze	Leaves and small branches in constant movement. Flags move slightly.	3,4 - 5,4	12 - 19	7,46 - 11,8
4	Nice breeze	Dust and loose papers fly. Small branches bend.	5,5 - 7,9	20 - 28	12,43 - 17,4
5	Nice breeze	Small trees sway. Crested wavelets form on inland waters.	8,0 - 10,7	29 - 38	18,02 - 23,6
6	Cool wind	Large branches shake. Power lines and chimneys 'sing'. It is difficult to use an umbrella.	10,8 - 13,8	39 - 49	24,23 - 30,45
7	Strong cool wind	All trees shake. Walking against the wind becomes difficult.	13,9 - 17,1	50 - 61	31 - 37,9
8	Squall	Some branches break. Generally we cannot walk against the wind.	17,2 - 20,7	62 - 74	38,53 - 45,98
9	Strong squall	The wind causes slight damage to buildings. Tiles and chimney stacks are blown off.	20,8 - 24,4	75 - 88	46,60 - 54,68

Downloaded from www.Manualslib.com manuals search engine

https://truckmanualshub.com/

3.2.5 - Risk of burns and explosion

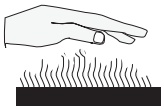

For any intervention on the power sources, wear glasses and protective clothes (acid spray).

N.B.-:-*Acid is neutralised with sodium bicarbonate and water.*

- **Do not work in an explosive or flammable atmosphere (spark, flame, etc.).**
- **Do not touch the hot parts of the hydraulic power source (engine, filters, etc.).**
- **Do not bridge the battery terminals with metallic objects.**
- **Do not service the battery close to a spark, naked flame, glowing tobacco (emissions of gas).**

3.2.6 - Risk of crushing and collision

When in the platform, respect the following instructions :

- During operation, keep all the parts of the body inside the platform.
- To position the machine close to obstacles, use the raise controls (arm, boom, etc.) instead of the drive controls.
- Ensure there are no obstacles (structure) in the work area.
- When driving, position the platform so as to provide the best visibility possible.
- Always obtain assistance from a guide on the ground when manoeuvring.
- All the personnel in the platform or on the within the vicinity of the machine must wear Personal Protection Equipment (safety helmet, etc.).
- When lifting or lowering the basket and during driving, the operator must check that the area above, below and to each side of the machine are clear.
- When moving the machine, ensure that the machine operating areas is free of persons and obstacles.
- Adjust the movement speed to the ground conditions (traffic, slope, etc.).
- Respect stopping distances after the controls are released :
    - 3 m(9 ft10 in) at high speed.
    - 1 m(3 ft3 in) at low speed.

Do not operate other machines (crane, platform, etc.) in the work area.

Take account of the distance, reduced visibility and blind spots during use of the machine.

Downloaded from www.Manualslib.com manuals search engine

https://truckmanualshub.com/

B - Intervenor's responsibility

1 - Owner's (or hirer's) responsibility

The owner (or hirer) has the obligation to inform operators of the instructions contained in the Operator Manual.

The owner (or hirer) has the obligation to renew all manuals or labels that are either missing or in bad condition. Additional copies can be ordered from HAULOTTE Services®.

The owner (or hirer) is responsible for applying the local regulations regarding operation of the machine.

2 - Employer's responsibility

. The employer has the obligation to issue a driving permit to the operator.

N.B.-:-*In accordance with the regulation in the country where the machine is operating, the user must be authorized to drive by the doctor of Labour Ministry.*

Forbid anyone from operating the machine who is :

- **Under the influence of drugs, alcohol, etc..**
- **subject to fits, loss of motor skills, dizziness, etc..**

3 - Trainer's responsibility

The trainer must be qualified to provide training to operators in accordance with applicable local regulations. The training must be given in an obstacle-free area until the trainee is considered competent as defined by the training program undertaken.

4 - Operator's responsibility

The operator must read and understand the contents of this manual and the labels affixed on the machine.

The operator must inform the owner (or hirer) if the manual or any labels are missing or in poor condition, and of any malfunction of the machine.

The operator may only operate the machine for the purpose intended by the manufacturer.

Only authorized and qualified operators may operate HAULOTTE® machines.

All operators must become familiar with and fully understand the emergency controls and how to operate the machine in an emergency as a component of their formal operator training.

The operator has the obligation to stop using the machine in the event of malfunction or safety problems on the machine or in the work area and report the problem to his/her supervisor.

Downloaded from www.Manualslib.com manuals search engine

https://truckmanualshub.com/

5 - Inspection and maintenance

The inspection and maintenance table below, identifies the role and the responsibilities of each party in periodical machine maintenance..

If the machine is operated in a hostile environment or intensively, increase the frequency of maintenance.

Inspections and maintenance

Type of intervention	Frequency	Person-in-charge	Intervenor	Reference document
Pre-delivery inspection	Before each delivery of sold, hired or resold equipment	Owner (or hirer)	Qualified HAULOTTE Services® technician	Operator's manual
Pre-operation inspection	Before operation or when the operator changes	Operator	Operator	Operator's manual
Periodical preventive maintenance	At the specified intervals (250 hours or 1 year)	Owner (or hirer)	On-site technician or qualified HAULOTTE Services® technician	Maintenance book
Periodical visit	2 times a year or at the latest 6 months after the last periodic visit, and according to the local regulations	Owner (or hirer)	Organization or technician approved by the employer or by the intermediary of HAULOTTE Services® in accordance with the HAULOTTE Services® contract	Maintenance book

Downloaded from www.Manualslib.com manuals search engine

https://truckmanualshub.com/

1 - Identification

The manufacturers identification plate fixed on the chassis bears all pertinent information to identify the machine (Please see machine configuration).

The manufacturers identification plate fixed on the chassis bears all pertinent information to identify the machine (Please see machine configuration).

For any request for information, intervention or spare parts, specify the type and serial number of the machine.

2 - Main components

STAR 6 - Major Component Location Diagram

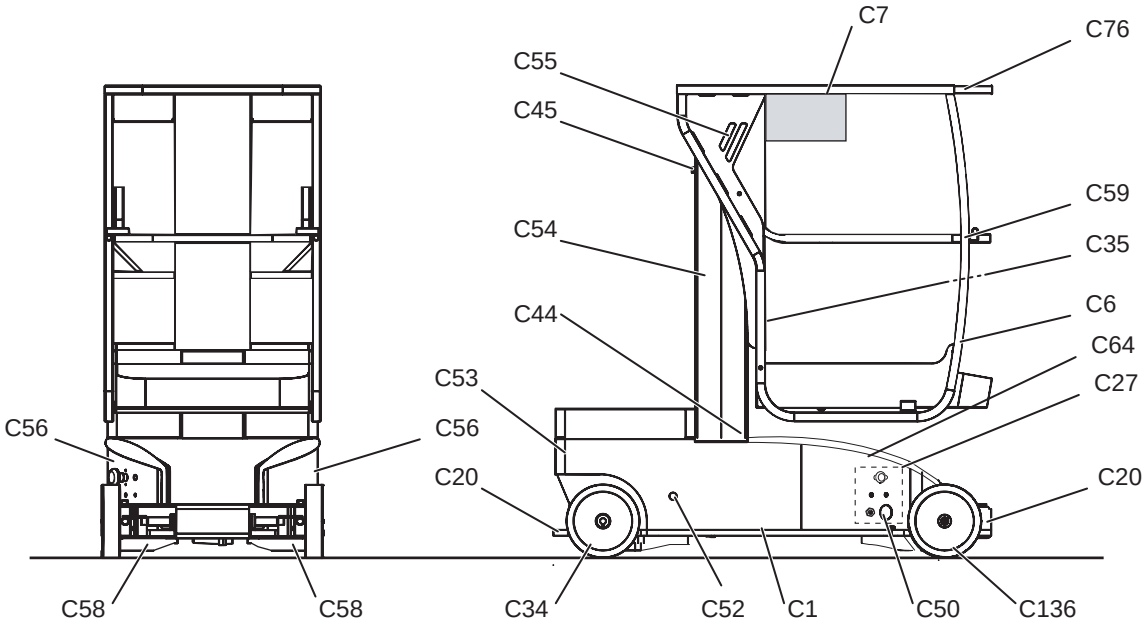

STAR 6 - Description of the components

Marking	Description
C1	Chassis
C6	Platform
C7	Platform control box
C20	Tie-down (and/or lifting) points
C27	Ground control box
C34	Drive wheels
C35	Document holder
C44	Slack chain limit switch
C45	Mast raised/mast lowered contactor
C50	Battery charger socket
C52	Emergency lowering
C53	Connection control box/chassis
C54	Telescopic mast

Downloaded from www.Manualslib.com manuals search engine

https://truckmanualshub.com/

C - Machine layout

Marking	Description
C55	Platform control box connection
C56	Battery box
C58	Pothole protection
C59	Hinged midrail
C64	Tilt sensor switch
C76	Guardrail
C136	Steer wheels

Downloaded from www.Manualslib.com manuals search engine

https://truckmanualshub.com/

C - Machine layout

STAR 6 P - Major Component Location Diagram

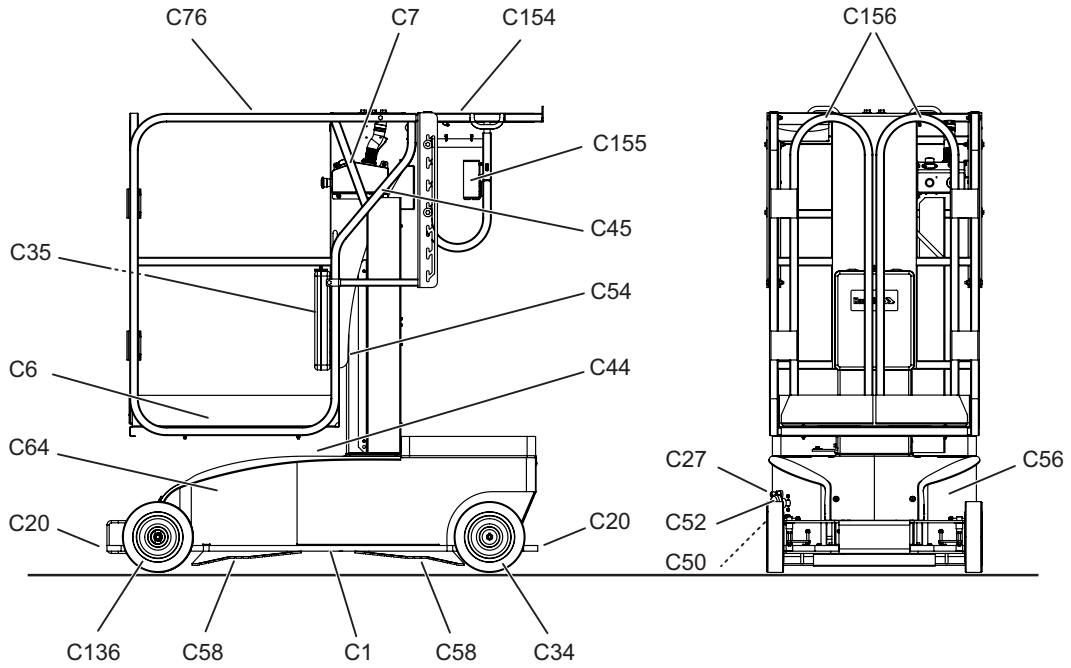

STAR 6 P - Description of the components

Marking	Description
C1	Chassis
C6	Platform
C7	Platform control box
C20	Tie-down (and/or lifting) points
C27	Ground control box
C34	Drive wheels
C35	Document holder
C44	Slack chain limit switch
C45	Mast raised/mast lowered contactor
C50	Battery charger socket
C52	Emergency lowering
C54	Telescopic mast
C55	Platform control box connection
C56	Battery box
C58	Pothole protection
C64	Tilt sensor switch
C76	Guardrail
C136	Steer wheels
C154	Adjustable tray (Picking type)
C155	Weighing limit switch for the tray
C156	Swing doors

Downloaded from www.Manualslib.com manuals search engine

https://truckmanualshub.com/

C - Machine layout

STAR 8 - STAR 10 - Major Component Location Diagram

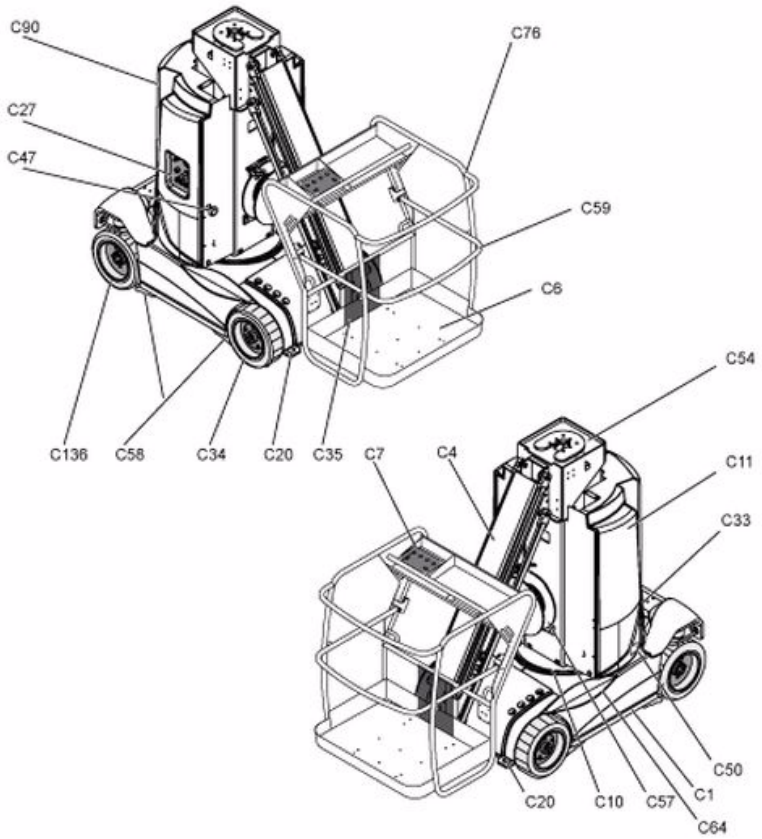

STAR 8 - STAR 10 - Description of the components

Marking	Description
C1	Chassis
C4	Pendulum jib
C6	Platform
C7	Platform control box
C10	Slew ring
C11	Turntable assembly
C20	Tie-down (and/or lifting) points
C27	Ground control box
C33	Counterweight
C34	Drive wheels
C35	Document holder
C47	Battery isolation switch
C50	Battery charger socket
C54	Telescopic mast
C57	Cable reel (Option)
C58	Pothole protection
C59	Hinged midrail
C64	Tilt sensor switch
C76	Guardrail
C90	Battery bay (hydraulic block, hydraulic filter and winder)
C136	Steer wheels

Downloaded from www.Manualslib.com manuals search engine

https://truckmanualshub.com/

3 - Safety devices

3.1 - SLIDING (OR SWINGING) INTERMEDIATE GUARDRAIL

The illustrations in this paragraph do not necessarily correspond to the range of products designated in the manual.

The platform is comprised of guardrails and a sliding mid-rail facilitating platform access.

Do not restrain the sliding midrail to the guard rail.

3.2 - SWING DOORS

For STAR 6 P only :

The platform is comprised of 2 swing doors facilitating platform access. The function is assured by spring hinges returning the door to its closed position as soon as the operator has passed.

The doors close automatically once the operator has entered the platform and stepped clear of the swinging doors.

Do not restrain the swinging doors in their open position.

Do not open the swing doors until the machine is in the stowed position.

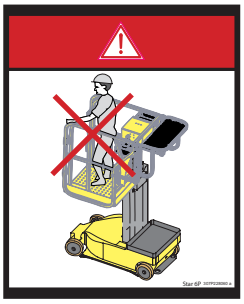

Downloaded from www.Manualslib.com manuals search engine

https://truckmanualshub.com/

3.3 - ANCHORAGE POINT (PLEASE SEE MACHINE CONFIGURATION)

The illustrations in this paragraph do not necessarily correspond to the range of products designated in the manual.

The machine is equipped with harness anchorage points points which accept a single harness per anchorage point. The anchorage points are identified by the presence of the Anchorage point label.

If the local regulation imposes the wearing of a harness, use the approved anchorage points.

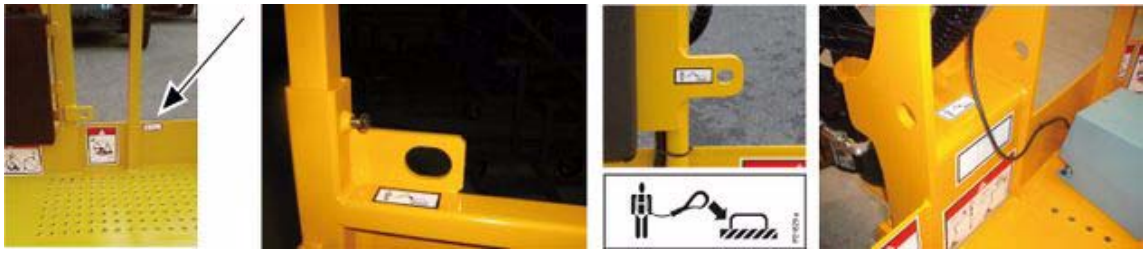

Downloaded from www.Manualslib.com manuals search engine

https://truckmanualshub.com/

4 - Labels

4.1 - CLASSIFICATION PLAN

4.1.1 - Red labels

The red labels indicate a potentially fatal danger.

Common labels

R7

R3

R5

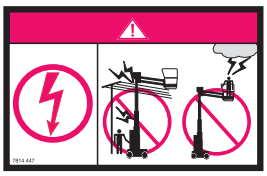

R8

R21

R31

R57

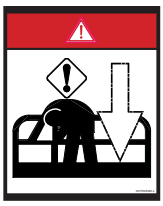

Specific labels STAR 6

R1

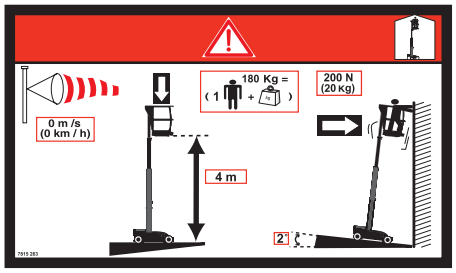

R2

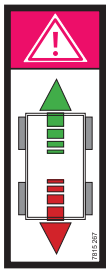

R9

R39

R55

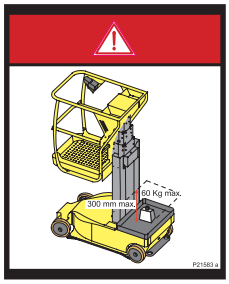

Downloaded from www.Manualslib.com manuals search engine

https://truckmanualshub.com/

C - Machine layout

Specific labels STAR 6 P

R1

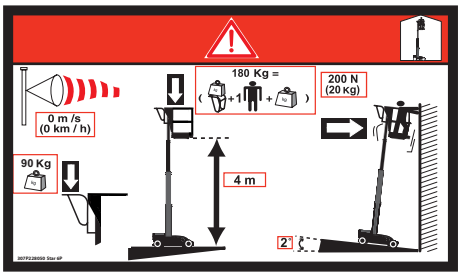

R2

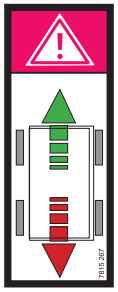

R9

R55

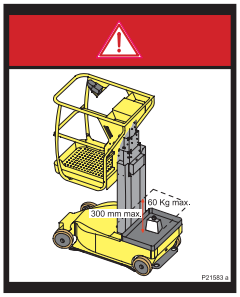

R56

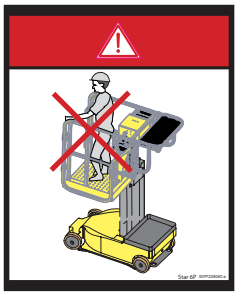

Specific labels STAR 8

R1

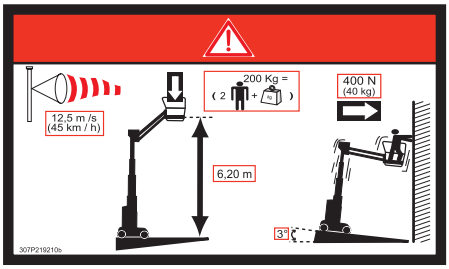

R9

R4

R30

R32

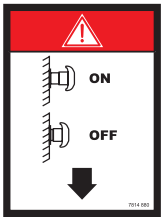

Downloaded from www.Manualslib.com manuals search engine

https://truckmanualshub.com/

Specific labels STAR 10

R1

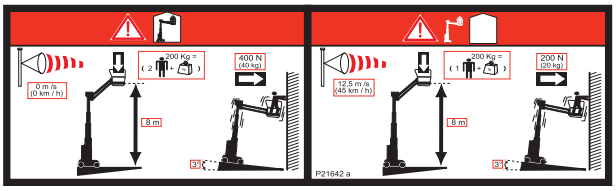

R4

R30

R32

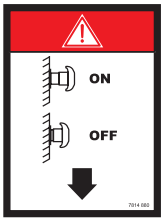

R9

4.1.2 - Orange labels

The orange labels indicate a risk of serious injury.

Common labels - CE

O1

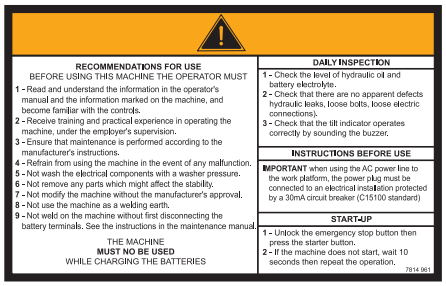

RECOMMENDATIONS FOR USE
BEFORE USING THIS MACHINE THE OPERATOR MUST
1 - Read and understand the information in the operator's manual and the information marked on the machine, and become familiar with the controls.
2 - Receive training and practical experience in operating the machine, under the employer's supervision.
3 - Ensure that maintenance is performed according to the manufacturer's instructions.
4 - Refrain from using the machine in the event of any malfunction.
5 - Not wash the electrical components with a washer pressure.
6 - Not remove any parts which might affect the stability.
7 - Not modify the machine without the manufacturer's approval.
8 - Not use the machine as a welding earth.
9 - Not weld on the machine without first disconnecting the battery terminals. See the instructions in the maintenance manual.

THE MACHINE
MUST NO BE USED
WHILE CHARGING THE BATTERIES

DAILY INSPECTION
1 - Check the level of hydraulic oil and battery electrolyte.
2 - Check that there are no apparent defects hydraulic leaks, loose bolts, loose electric connections).
3 - Check that the tilt indicator operates correctly by sounding the buzzer.

INSTRUCTIONS BEFORE USE
IMPORTANT when using the AC power line to the work platform, the power plug must be connected to an electrical installation protected by a 30mA circuit breaker (C15100 standard)

START-UP
1 - Unlock the emergency stop button then press the starter button.
2 - If the machine does not start, wait 10 seconds then repeat the operation.

7814 961

O4

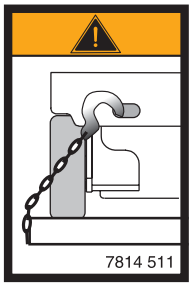

O5

Common labels - AS

O1

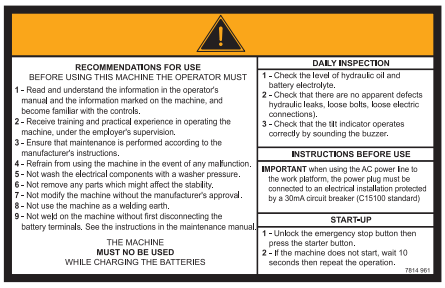

RECOMMENDATIONS FOR USE
BEFORE USING THIS MACHINE THE OPERATOR MUST
1 - Read and understand the information in the operator's manual and the information marked on the machine, and become familiar with the controls.
2 - Receive training and practical experience in operating the machine, under the employer's supervision.
3 - Ensure that maintenance is performed according to the manufacturer's instructions.
4 - Refrain from using the machine in the event of any malfunction.
5 - Not wash the electrical components with a washer pressure.
6 - Not remove any parts which might affect the stability.
7 - Not modify the machine without the manufacturer's approval.
8 - Not use the machine as a welding earth.
9 - Not weld on the machine without first disconnecting the battery terminals. See the instructions in the maintenance manual.

THE MACHINE
MUST NO BE USED
WHILE CHARGING THE BATTERIES

DAILY INSPECTION
1 - Check the level of hydraulic oil and battery electrolyte.
2 - Check that there are no apparent defects hydraulic leaks, loose bolts, loose electric connections).
3 - Check that the tilt indicator operates correctly by sounding the buzzer.

INSTRUCTIONS BEFORE USE
IMPORTANT when using the AC power line to the work platform, the power plug must be connected to an electrical installation protected by a 30mA circuit breaker (C15100 standard)

START-UP
1 - Unlock the emergency stop button then press the starter button.
2 - If the machine does not start, wait 10 seconds then repeat the operation.

7814 961

O4

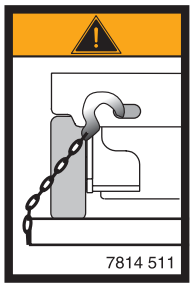

O5

Downloaded from www.Manualslib.com manuals search engine

https://truckmanualshub.com/

Common labels - ANSI - CSA

O1

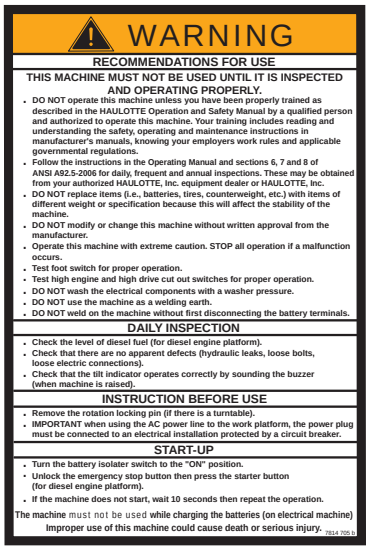

WARNING

RECOMMENDATIONS FOR USE

THIS MACHINE MUST NOT BE USED UNTIL IT IS INSPECTED AND OPERATING PROPERLY.

- DO NOT operate this machine unless you have been properly trained as described in the HAULOTTE Operation and Safety Manual by a qualified person and authorized to operate this machine. Your training includes reading and understanding the safety, operating and maintenance instructions in manufacturer's manuals, knowing your employers work rules and applicable governmental regulations.
- Follow the instructions in the Operating Manual and sections 6, 7 and 8 of ANSI A92.5-2006 for daily, frequent and annual inspections. These may be obtained from your authorized HAULOTTE, Inc. equipment dealer or HAULOTTE, Inc.
- DO NOT replace items (i.e., batteries, tires, counterweight, etc.) with items of different weight or specification because this will affect the stability of the machine.
- DO NOT modify or change this machine without written approval from the manufacturer.
- Operate this machine with extreme caution. STOP all operation if a malfunction occurs.
- Test foot switch for proper operation.
- Test high engine and high drive cut out switches for proper operation.
- DO NOT wash the electrical components with a washer pressure.
- DO NOT use the machine as a welding earth.
- DO NOT weld on the machine without first disconnecting the battery terminals.

DAILY INSPECTION

- Check the level of diesel fuel (for diesel engine platform).
- Check that there are no apparent defects (hydraulic leaks, loose bolts, loose electric connections).
- Check that the tilt indicator operates correctly by sounding the buzzer (when machine is raised).

INSTRUCTION BEFORE USE

- Remove the rotation locking pin (if there is a turntable).
- IMPORTANT when using the AC power line to the work platform, the power plug must be connected to an electrical installation protected by a circuit breaker.

START-UP

- Turn the battery isolater switch to the "ON" position.
- Unlock the emergency stop button then press the starter button (for diesel engine platform).
- If the machine does not start, wait 10 seconds then repeat the operation.

The machine must not be used while charging the batteries (on electrical machine)

Improper use of this machine could cause death or serious injury. 7814 705 b

O4

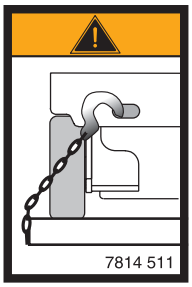

O5

4.1.3 - Yellow labels

The yellow labels indicate a risk of material damage and/or minor injury.

Common labels

J3

J10

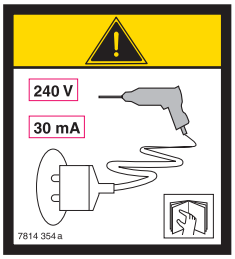

J6

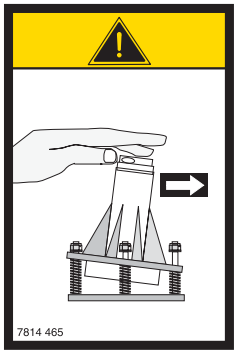

Specific labels STAR 6 - STAR 6 P

J22

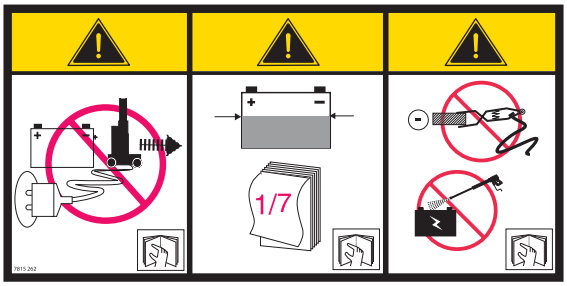

J23

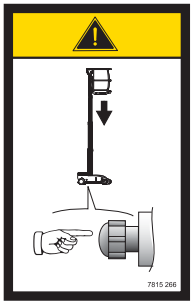

Downloaded from www.Manualslib.com manuals search engine

https://truckmanualshub.com/

Specific labels STAR 8 - STAR 10

J4

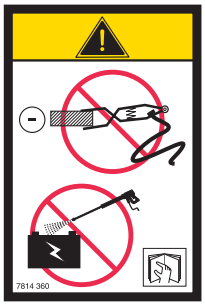

J13

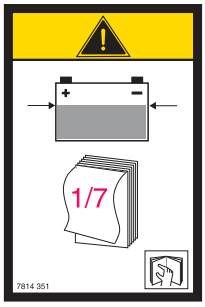

J14

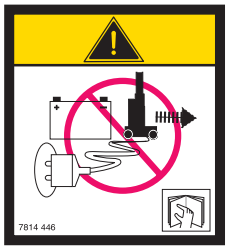

J15

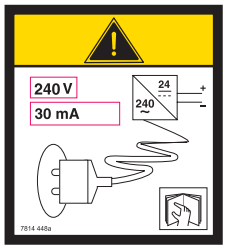

J23

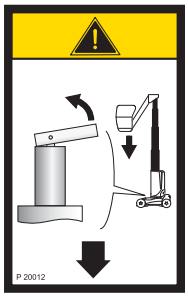

J24

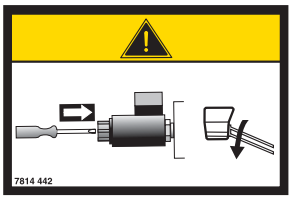

4.1.4 - Other labels

The other labels provide additional technical information.

Common labels

A1

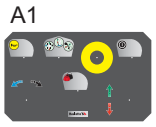

A1

A1

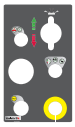

A5

A16

A8

A9

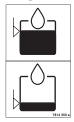

A32

A2

A2

A3

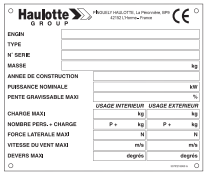

A11

A12

A7

A15

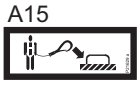

A4

Downloaded from www.Manualslib.com manuals search engine

https://truckmanualshub.com/

C - Machine layout

Specific labels AS

R16

R17

R15

R19

A28

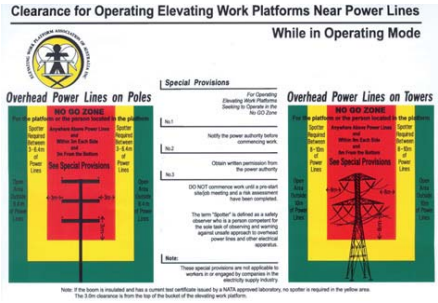

Specific labels ANSI

A22

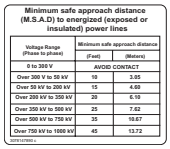

Minimum safe approach distance (M.S.A.D) to energized (exposed or insulated) power lines

Voltage Range (Phase to phase)	Minimum safe approach distance (Feet)	(Meters)
0 to 300 V	AVOID CONTACT	
Over 300 V to 50 kV	10	3.05
Over 50 kV to 200 kV	15	4.60
Over 200 kV to 350 kV	20	6.10
Over 350 kV to 500 kV	25	7.62
Over 500 kV to 750 kV	35	10.67
Over 750 kV to 1000 kV	45	13.72

O3

A35

POWER TO PLATFORM
7814 863

A30

Specific labels ANSI : STAR 6

A27

400 lbs CAPACITY

A4

STAR13

Specific labels ANSI : STAR 8

A29

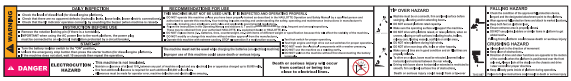

A32

STAR 22J

A27

440 LBS CAPACITY

A34

BATTERY CHARGER
7814 863

Downloaded from www.Manualslib.com manuals search engine

https://truckmanualshub.com/

Specific labels, optional

A8

4.1.5 - Green labels

Green labels indicate maintenance, operations or information (CSA standard).

Downloaded from www.Manualslib.com manuals search engine

https://truckmanualshub.com/

4.2 - IDENTIFICATION

Location of the STAR 6 labels - Standards CE and AS

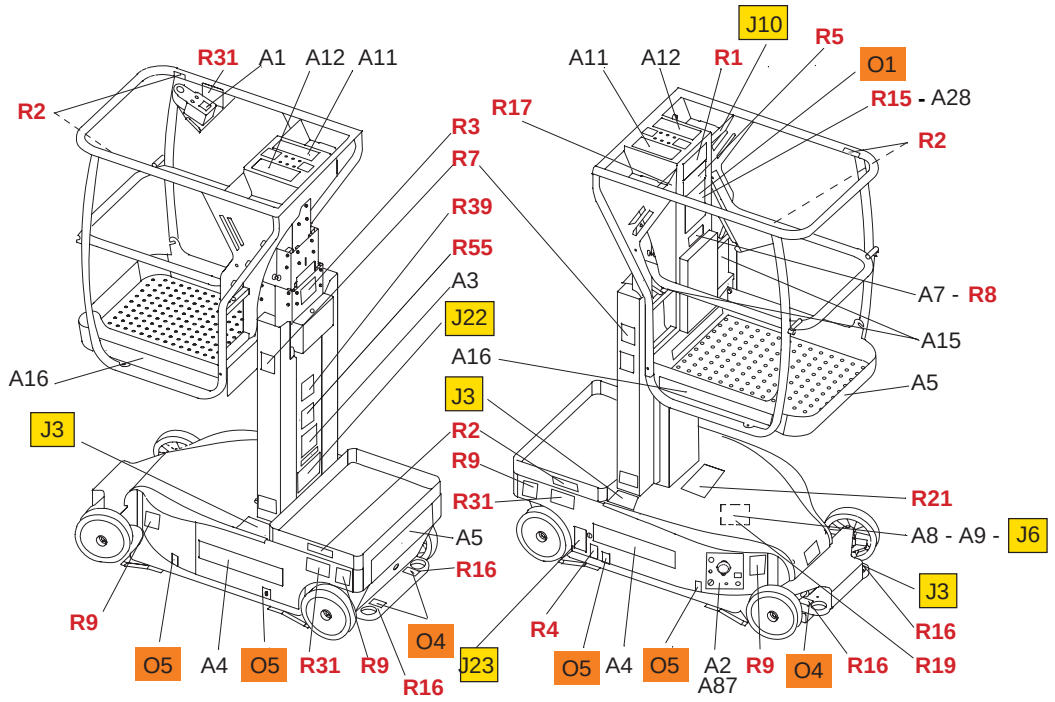

Location of the STAR 6 P labels - Standards CE and AS

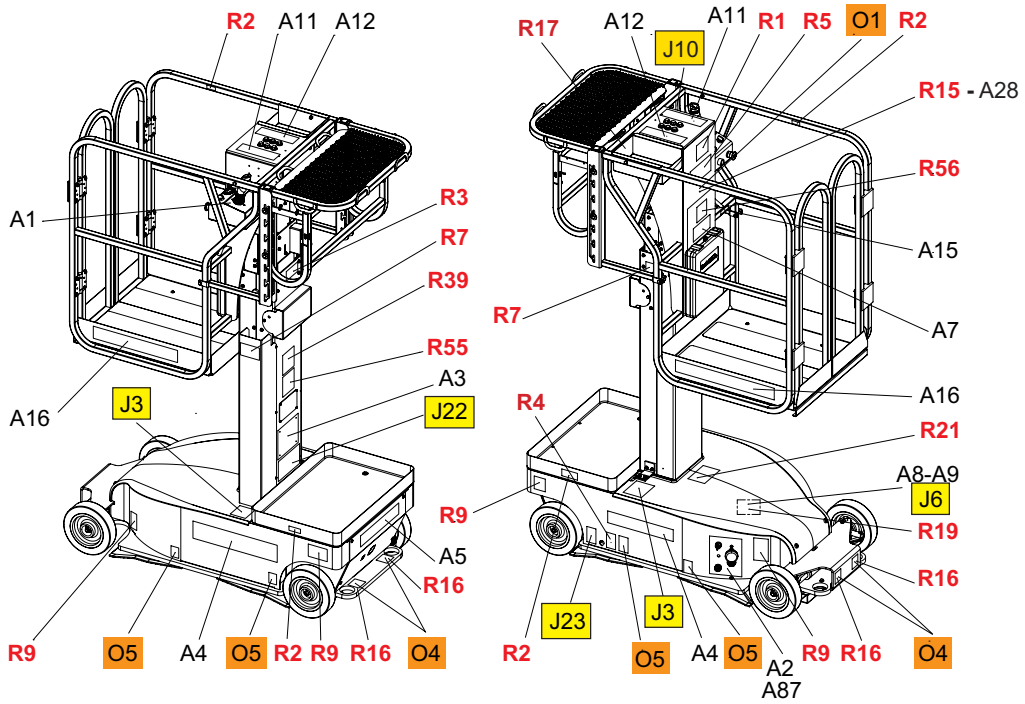

Downloaded from www.Manualslib.com manuals search engine

https://truckmanualshub.com/

C - Machine layout

Location of STAR 8 and STAR 10 labels - Standards CE and AS

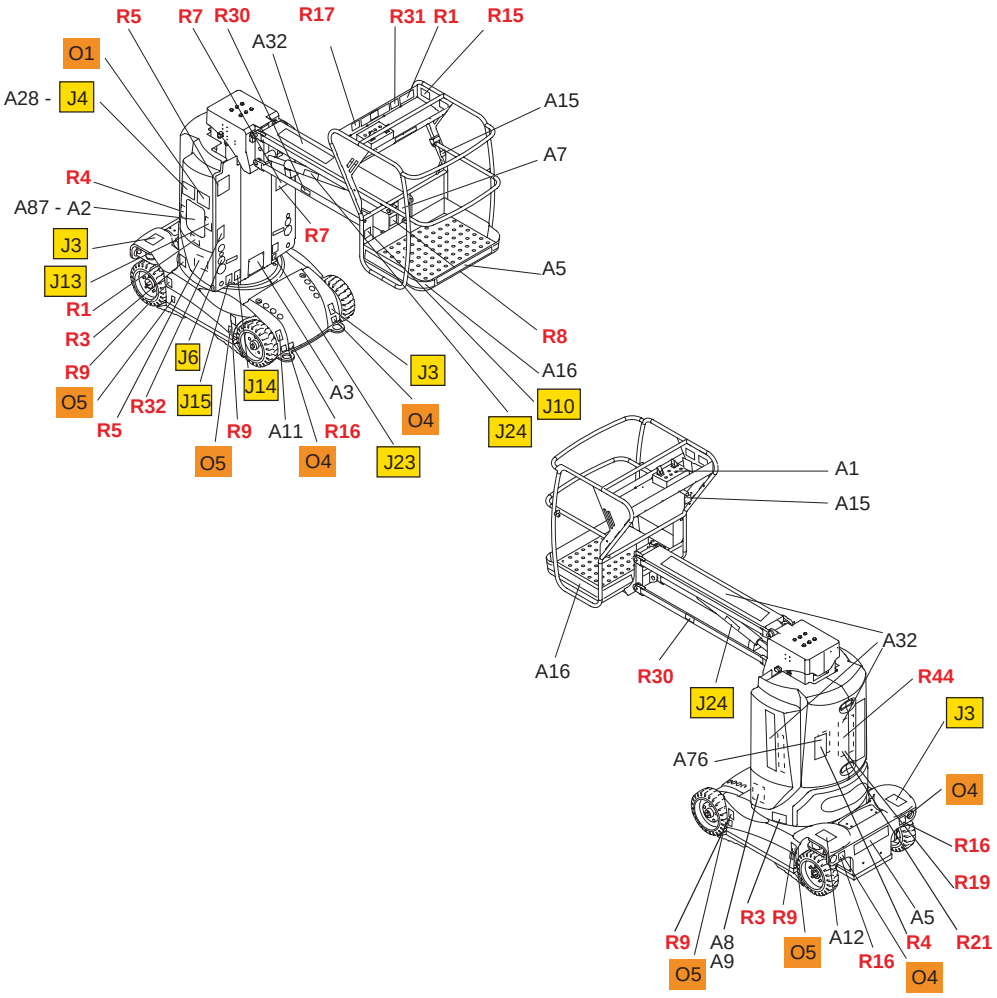

Label descriptions STAR 6 (STAR 13) - STAR 6P - STAR 8 (STAR 22J) - STAR 10 (STAR 26J) - Standards CE and AS

Color	Marking	Description	Quantity	
Red	R1	Height of the floor and load	1	For STAR 6 : 3078152630 For STAR 6 P : 307P228050 For STAR 8 : 307P219210 For STAR 10 : 307P216420
Red	R2	Travel direction	4	For STAR 6 and STAR 6 P : 3078152670
Red	R3	Risk of crushed hands	1	3078149010
Red	R4	Risk of body crushing	1	307P228390
Red	R5	Danger of electrocution	1	3078144470
Red	R7	Do not park in the work area	2	3078144240
Red	R8	Close the sliding mid-rail	1	3078153510 Except STAR 6 P

Downloaded from www.Manualslib.com manuals search engine

https://truckmanualshub.com/

C - Machine layout

Color	Marking	Description	Quantity	
Red	R9	Wheel load	4	For STAR 6 : 3078152950 For STAR 6 P : 307P229050 For STAR 8 : 307P219220 For STAR 10 : 307P216430
Red	R15	Wearing of a safety harness is essential	1	For AS standard only : 3078144520
Red	R16	Load strength on each slings	4	For AS standard only : 3078144490
Red	R17	Do not travel down slopes at high speed	1	For AS standard only : 3078144360
Red	R19	Fluid under pressure	1	For AS standard only : 3078145200
Red	R21	Protective clothing required	2	3078143610
Red	R30	Vertical crushing of the body	2	For STAR 8 and STAR 10 : 3078144440
Red	R31	Travel direction	For STAR 6 : 3 For STAR 8 and STAR 10 : 1	For STAR 6 : 3078152650 For STAR 8 and STAR 10 : 3078148790
Red	R32	Emergency stop button	1	For STAR 8 and STAR 10 : 3078148800
Red	R39	Do not climb onto the tool box	1	For STAR 6 and STAR 6 P : 307P218750
Red	R44	Vertical crushing of the body	2	For STAR 8 and STAR 10 : 3078143630
Red	R55	Maximum load in the toolbox	1	For STAR 6 and STAR 6 P : 307P215830
Red	R56	Do not lower while operating	1	For STAR 6 P only : 307P228060

Downloaded from www.Manualslib.com manuals search engine

https://truckmanualshub.com/

C - Machine layout

Color	Marking	Description	Quantity	
Orange	O1	Operation instructions	1	In french (CE standard) : 3078149030 In english (CE standard) : 3078149610 In english (AS standard) : 3078149660 In german (CE standard) : 3078149620 In spanish (CE standard) : 3078149630 In italian (CE standard) : 3078149640 In dutch (CE standard) : 3078149650 In danish (CE standard) : 3078149670 In finish (CE standard) : 3078149680 In portuguese (CE standard) : 3078149690 In swidish (CE standard) : 3078149700
Orange	O4	Machine tie down points	4	3078145110
Orange	O5	Position of the lift truck forks	4	3078143830
Yellow	J3	Do not place your foot on the cover	2	3078143640
Yellow	J4	Do not use the machine as a welding earth	2	For STAR 8 and STAR 10 : 3078143600
Yellow	J6	Verification of tilt operation	1	3078144650
Yellow	J10	Socket	1	CE standard : 3078143540 AS standard : 3078144570
Yellow	J10	Socket (Option 110V)	1	For STAR 6 only : 307P222230
Yellow	J10	Socket (Option 115V)	1	For STAR 8 and STAR 10 : 3078151380
Yellow	J10	Socket - Cable reel	1	For STAR 8 and STAR 10 : 240V : 3078145730 110V : 3078147580 AS standard : 3078144390
Yellow	J13	Battery verification	1	For STAR 8 and STAR 10 : 3078143510
Yellow	J14	Using the machine during battery charging is forbidden	1	For STAR 8 and STAR 10 : 3078144460

Downloaded from www.Manualslib.com manuals search engine

https://truckmanualshub.com/

C - Machine layout

Color	Marking	Description	Quantity	
Yellow	J15	Battery charger socket	1	For STAR 8 and STAR 10 : CE standard : 3078144480 AS standard : 3078144390
Yellow	J22	Battery use	1	For STAR 6 and STAR 6 P : 3078152620
Yellow	J23	Emergency mast lowering	1	For STAR 6 and STAR 6 P : 3078152660 For STAR 8 and STAR 10 : 307P218900
Yellow	J24	Emergency jib lowering	1	For STAR 8 and STAR 10 : 3078144420
Other	A1	Platform control box	1	For STAR 6 : 3078152460 For STAR 6 P : 307P227960 For STAR 8 and STAR 10 : 3078148280
Other	A2	Ground control box	1	For STAR 6 and STAR 6 P : 3078152680 For STAR 8 and STAR 10 : 3078148300
Other	A3	Identification plate	1	3078146180
Other	A4	Machine name logo	2	For STAR 6 : 307P217370 For STAR 6 P : 307P227980
Other	A5	Small format HAULOTTE® logo	For STAR 6 P : 1 For STAR 6 , STAR 8 and STAR 10 : 2	307P217410
Other	A7	Read the operation manual	1	3078143680
Other	A8	Hydraulic oil	1	3078143520
Other	A8	Biodegradable oil	1	3078148890
Other	A8	Winter grade hydraulic oil	1	307P223700
Other	A9	Upper and lower oil level	1	3078143590
Other	A11	Front green drive direction arrow	1	3078148820
Other	A12	Rear red drive direction arrow	1	3078148830
Other	A15	Harness anchor point location	For STAR 6 P : 1 For STAR 6 , STAR 8 and STAR 10 : 2	307P216290
Other	A16	Yellow and black adhesive tape	2	2421808660
Other	A28	Risks of electrocution	1	For AS standard only : 307P226440
Other	A32	Vertical machine name logo	3	For STAR 8 : 307P217430 For STAR 10 : 307P217400
Other	A76	Hand pomp	1	For STAR 8 and STAR 10 : 307P227170
Other	A87	Emergency control panel	1	For Italy only : 307P232500

Downloaded from www.Manualslib.com manuals search engine

https://truckmanualshub.com/

C - Machine layout

Location of the STAR 6 labels - ANSI standard - CSA standard

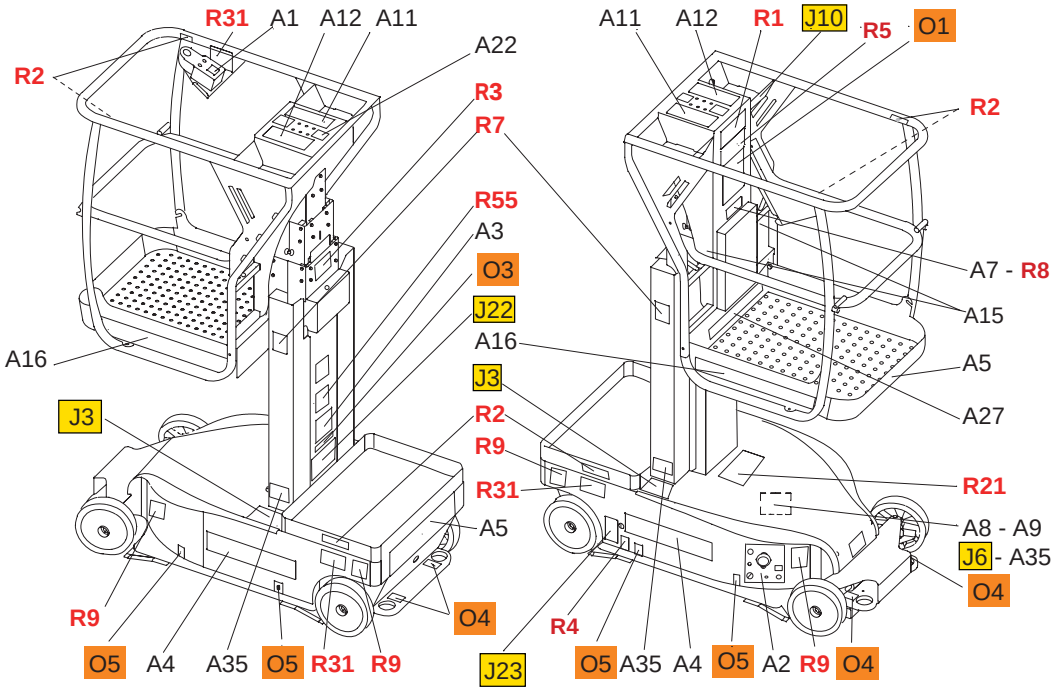

Location of STAR 8 and STAR 10 labels - ANSI standard - CSA standard

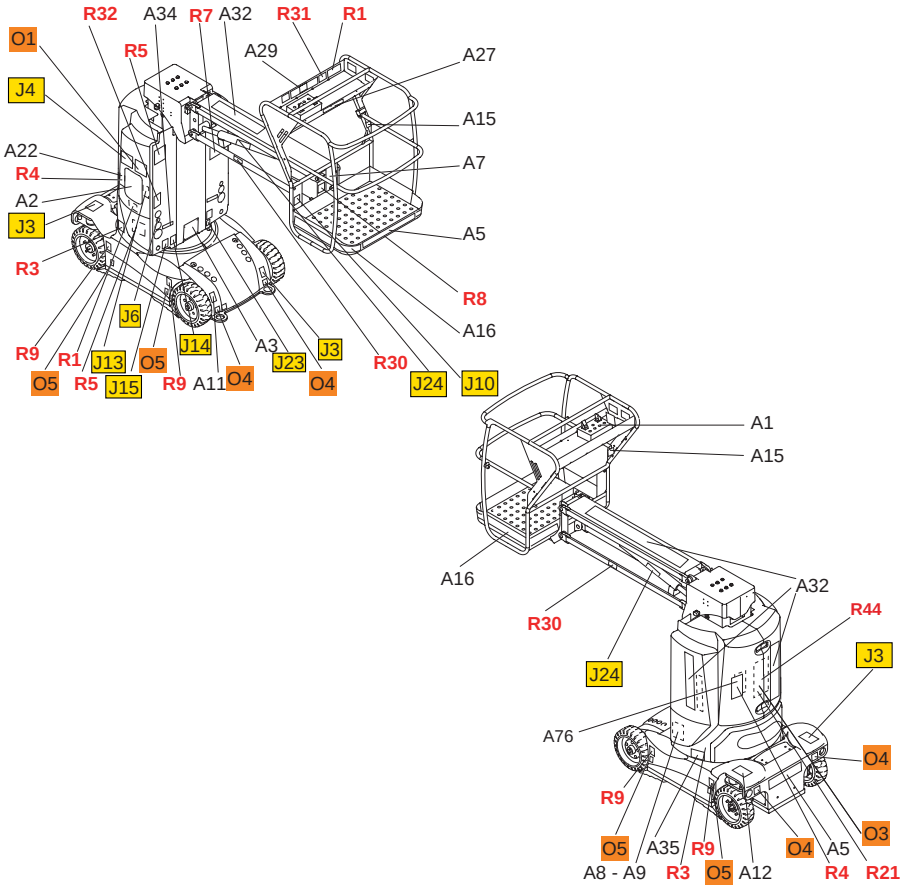

Downloaded from www.Manualslib.com manuals search engine

https://truckmanualshub.com/

C - Machine layout

Label descriptions STAR 6 (STAR 13) - STAR 8 (STAR 22J) - STAR 10 (STAR 26J) - ANSI standard - CSA standard

Color	Marking	Description	Quantity	
Red	R1	Height of the floor and load	1	For STAR 6 : 3078152970 For STAR 8 : 3078149340 For STAR 10 : 307P222560
Red	R2	Travel direction	4	For STAR 6 only : 3078152980
Red	R3	Risk of crushed hands	1	3078147240
Red	R4	Risk of body crushing	1	For STAR 6 : 3078147260 For STAR 8 and STAR 10 : 307P229490
Red	R5	Danger of electrocution	1	3078149300
Red	R7	Do not park in the work area	2	3078149310
Red	R8	Close the sliding mid-rail	1	3078153630
Red	R9	Wheel load	1	For STAR 6 : 3078153040 For STAR 8 : 307P219240 For STAR 10 : 307P222570
Red	R21	Protective clothing required	1	3078147350
Red	R30	Vertical crushing of the body	2	For STAR 8 and STAR 10 : 3078149390
Red	R31	Travel direction	For STAR 6 : 3 For STAR 8 and STAR 10 : 1	For STAR 6 : 3078152990 For STAR 8 and STAR 10 : 3078149350
Red	R32	Emergency stop button	1	For STAR 8 and STAR 10 : 3078149370
Red	R44	Horizontal crushing of the body	2	For STAR 8 and STAR 10 : 3078147260
Red	R55	Maximum load in the toolbox	1	For STAR 6 only : 307P215850
Orange	O1	Operation instructions	1	For STAR 6 : 3078149050 For STAR 8 and STAR 10 : 3078147050
Orange	O3	Risks of explosion	1	3078148030
Orange	O4	Machine tie down points	4	3078147310
Orange	O5	Position of the lift truck forks	4	For STAR 6 : 3078149290 For STAR 8 and STAR 10 : 3078146950
Yellow	J3	Do not place your foot on the cover	2	3078147270
Yellow	J4	Do not use the machine as a welding earth	2	For STAR 8 and STAR 10 : 3078147220

Downloaded from www.Manualslib.com manuals search engine

https://truckmanualshub.com/

C - Machine layout

Color	Marking	Description	Quantity	
Yellow	J6	Verification of tilt operation	1	3078147090
Yellow	J10	Socket	1	3078148900
Yellow	J13	Battery verification	1	For STAR 8 and STAR 10 : 3078147330
Yellow	J14	Using the machine during battery charging is forbidden	1	For STAR 8 and STAR 10 : 3078149280
Yellow	J15	Battery charger socket	1	For STAR 8 and STAR 10 : 3078147580
Yellow	J22	Battery use	1	For STAR 6 only : 3078153000
Yellow	J23	Emergency mast lowering	1	For STAR 6 : 3078153010 For STAR 8 and STAR 10 : 307P218920
Yellow	J24	Emergency jib lowering	1	For STAR 8 and STAR 10 : 3078149380
Other	A1	Platform control box	1	For STAR 6 : 3078152460 For STAR 8 and STAR 10 : 307P203690
Other	A2	Ground control box	1	For STAR 6 : 3078152880 For STAR 8 and STAR 10 : 3078148300
Other	A3	Identification plate	1	307P218930
Other	A4	Machine name logo	2	For STAR 6 only : 307P217380
Other	A5	Small format HAULOTTE® logo	2	307P217410
Other	A7	Read the operation manual	1	3078147290
Other	A8	Hydraulic oil	1	3078147140
Other	A8	Biodegradable oil	1	3078148920
Other	A9	Upper and lower oil level	1	3078147210
Other	A11	Front green drive direction arrow	1	3078148820
Other	A12	Rear red drive direction arrow	1	3078148830
Other	A15	Harness anchor point location	2	3078147950
Other	A16	Yellow and black adhesive tape	2	2421808660
Other	A22	Voltage table	1	3078147890
Other	A27	Permissible load	1	For STAR 6 : 3078153050 For STAR 8 : 307P201510 For STAR 10 : 307P222690
Other	A29	Summary safety instructions	1	For STAR 8 and STAR 10 : 3078150870
Other	A32	Vertical machine name logo	3	For STAR 8 : 307P217440 For STAR 10 : 307P222710

Downloaded from www.Manualslib.com manuals search engine

https://truckmanualshub.com/

Color	Marking	Description	Quantity	
Other	A34	Battery charger	1	For STAR 8 and STAR 10 : 3078148620
Other	A35	Socket connection	1	For STAR 6 : 3078153360 For STAR 8 and STAR 10 : 3078148630
Other	A76	Hand pomp	1	For STAR 8 and STAR 10 : 307P226850

Downloaded from www.Manualslib.com manuals search engine

https://truckmanualshub.com/

5 - Control boxes

***N.B.**-:-The functions are described for the entire range. Refer to the machine model to identify the controls and functions indicators.*

5.1 - GROUND CONTROL BOX - EMERGENCY CONTROL PANEL

STAR 6 - STAR 6 P - General view

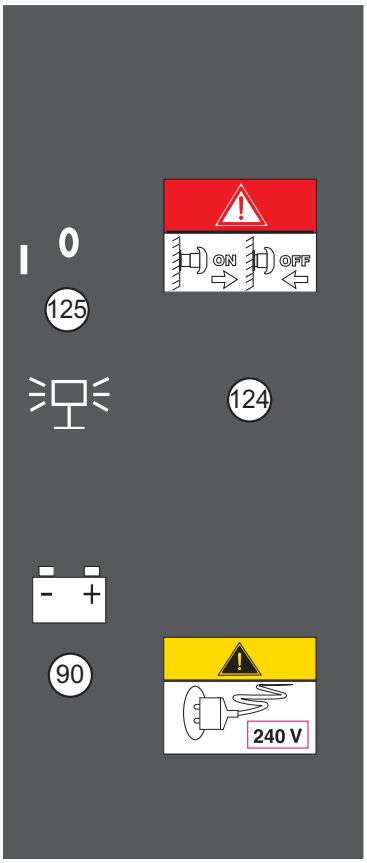

STAR 6 - STAR 6 P - Controls and indicators

Marking	Description	Function
90	Battery charge indicator	Battery charger status
124	Main contactor/battery isolation switch- push button	Pulled out (activated) : Main contactor/battery isolation switch activated
		Pushed down (deactivated) : Main contactor/battery isolation switch deactivated
125	Key selector	Left : Energizes control system
		Center : De-energizes control system

Downloaded from www.Manualslib.com manuals search engine

https://truckmanualshub.com/

C - Machine layout

Photo STAR 6 - STAR 6P

Downloaded from www.Manualslib.com manuals search engine

https://truckmanualshub.com/

C - Machine layout

STAR 8 - STAR 10 - General view

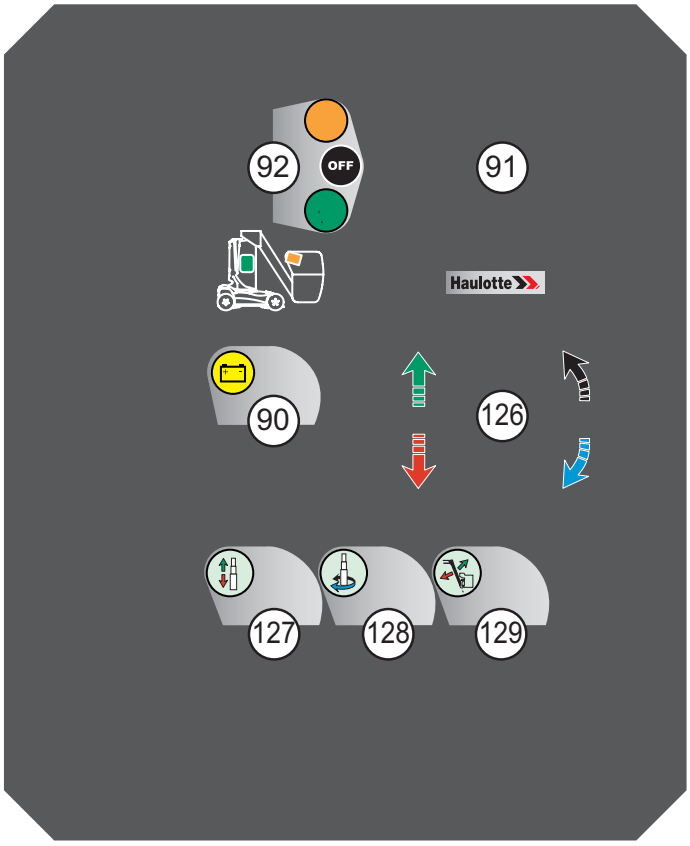

STAR 8 - STAR 10 - Controls and indicators

Marking	Description	Function
90	Battery charge indicator	Battery charger status
91	Indicator hour-Battery charge indicator	Total machine running hours-Battery charger status
92	Control box energizing key selector	Move upwards : Platform control box energized
		Center : De-energizes control system
		Move downwards : Ground control box energized
126	Movement selector	Moved upwards (proportional) : Mast elevation, clockwise rotation or jib elevation
		Moved downwards (proportional) : Mast lowering, counter clockwise (CCW) turntable rotation or jib lowering
127	Mast telescoping selector button	Press in and hold (activated) : Mast elevation/lowering
		Release (deactivated) : Movement stopped
128	Mast rotation selector button	Press in and hold (activated) : Mast rotation
		Release (deactivated) : Movement stopped
129	Jib lifting / lowering selector	Press in and hold (activated) : Jib lifting/lowering
		Release (deactivated) : Movement stopped

Downloaded from www.Manualslib.com manuals search engine

https://truckmanualshub.com/

C - Machine layout

Photo STAR 8 - STAR 10

Downloaded from www.Manualslib.com manuals search engine

https://truckmanualshub.com/

5.2 - PLATFORM CONTROL BOX

STAR 6 - General view

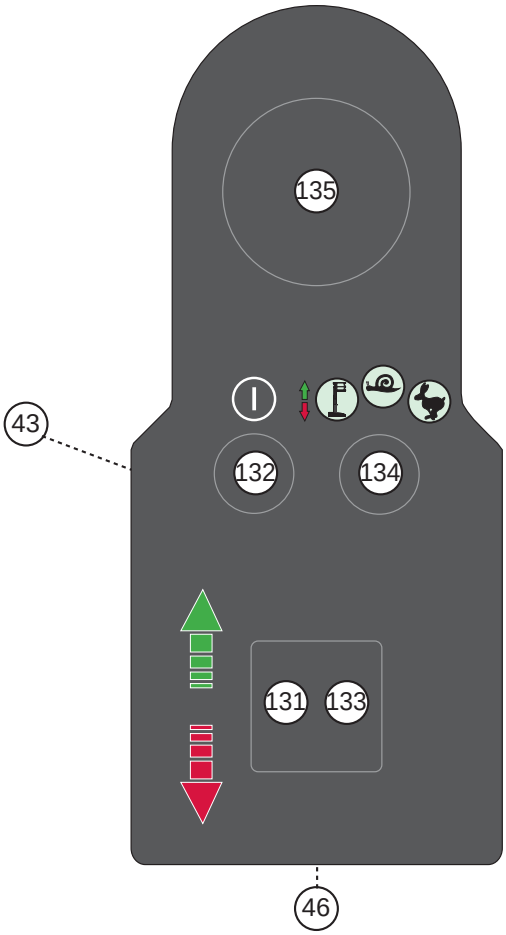

STAR 6 - Controls and indicators

Marking	Description	Function
43	Horn selector	Horn
46	Emergency stop button	Pulled out (activated) : Ground control box energized
		Pushed down (deactivated) : De-energizes control system
131	'Enable Switch' selector	Hold in the red selector (trigger) : Associated command is validated
132	Movement validation selector	Pressed down : Movement selection
		Release : Movement validated (time delay)
133	Drive joystick	Move forward : Forward drive
		Move backward : Reverse drive
		Move to the left : Left-hand steering
		Move to the right : Right-hand steering
	Joystick as mast movement function	Move forward : Mast elevation
		Move backward : Mast lowering

Downloaded from www.Manualslib.com manuals search engine

https://truckmanualshub.com/

Marking	Description	Function
134	Movement selector	High-speed driving
		Low-speed driving
		Mast telescoping
135	Indicator hour-Battery charge indicator	Total machine running hours-Battery charger status-Alarms indicator

Downloaded from www.Manualslib.com manuals search engine

https://truckmanualshub.com/

C - Machine layout

STAR 6 P - General view

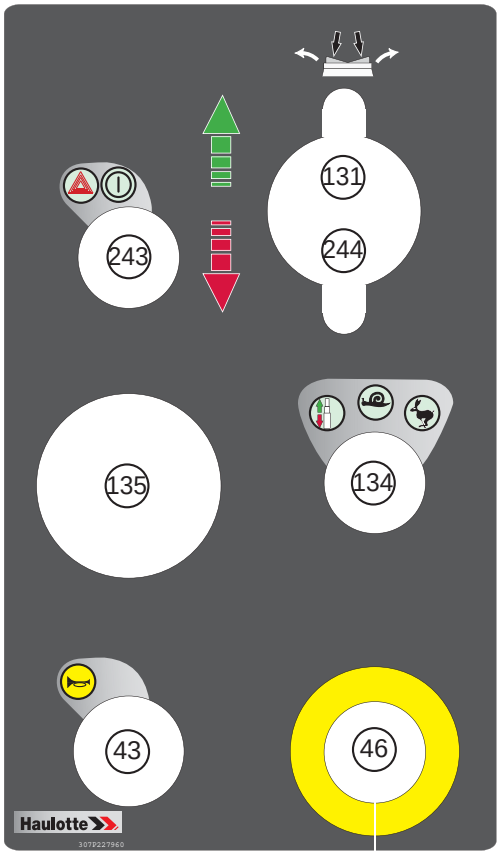

STAR 6 P - Controls and indicators

Marking	Description	Function
43	Horn selector	Horn
46	Emergency stop button	Pulled out (activated) : Ground control box energized
		Pushed down (deactivated) : De-energizes control system
131	'Enable Switch' selector	Press down and hold : Associated command is validated
243	Movement validation selector - Fault indicator	Pressed down : Movement selection
		Release : Movement validated (time delay)
		Flashing : Adjustable tray overloaded
244	Drive joystick	Move forward : Forward drive
		Move backward : Reverse drive
		Press left side of button : Left-hand steering
		Press right side of button : Right-hand steering
	Joystick as mast movement function	Move forward : Mast elevation
		Move backward : Mast lowering
134	Movement selector	High-speed driving
		Low-speed driving
		Mast telescoping
135	Indicator hour-Battery charge indicator	Total machine running hours-Battery charger status-Alarms indicator

Downloaded from www.Manualslib.com manuals search engine

https://truckmanualshub.com/

Photo STAR 6

Photo STAR 6 P

Downloaded from www.Manualslib.com manuals search engine

https://truckmanualshub.com/

C - Machine layout

STAR 8 -STAR 10 - General view

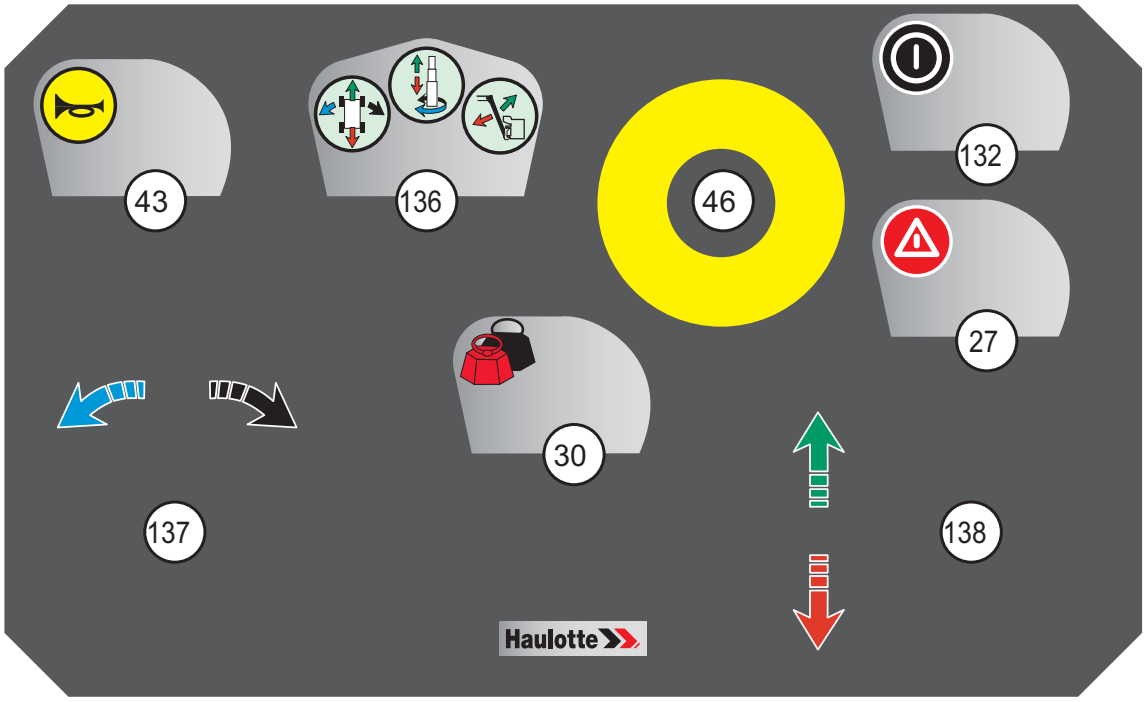

STAR 8 -STAR 10 - Controls and indicators

Marking	Description	Function
27	Tilt indicator	Machine on excessive slope
30	Platform overload indicator	Platform overload
43	Horn selector	Horn
46	Emergency stop button	Pulled out (activated) : Ground control box energized
		Pushed down (deactivated) : De-energizes control system
132	Movement validation selector	Pressed down : Validation selection
		Release : Movement validated (time delay)
136	Movement selector	Driving and steering
		Mast telescoping and rotation
		Jib elevation/lowering
137	Movement selector	To the right (proportional) : Right-hand steering or counter clockwise (CCW) mast rotation
		To the left (proportional) : Left-hand steering or clockwise mast rotation
138	Movement selector	Moved upwards (proportional) : Mast elevation, forward driving or jib elevation
		Moved downwards (proportional) : Mast lowering, reversing or jib lowering

Downloaded from www.Manualslib.com manuals search engine

https://truckmanualshub.com/

C - Machine layout

Photo STAR 8 - STAR 10

Downloaded from www.Manualslib.com manuals search engine

https://truckmanualshub.com/

D - Operating principle

1 - Description

Hydraulic energy to perform machine movements is provided by an electric motor driven hydraulic pump.The operating speed of the pump is governed by a speed regulator.

The controls and start-up of the electric motor are powered by battery.

To protect the user and the machine, safety systems prevent the operation of the machine beyond its capacities. Section G Technical characteristics

These security systems if activated, immobilize the machine and neutralize the movements.

Poor knowledge of the characteristics and operation of the machine can lead the operator to think that a normal safety operation is a malfunction.

2 - Safety devices

2.1 - ACTIVATION OF CONTROLS

The controls must be validated by a 'Enable Switch' system to activate the different movements.

The 'Enable Switch' system depends on the machine configuration and will consist of one of the following :

- Joystick handle.
- Pedal.
- Validation button.

2.2 - DRIVE SPEED

All driving speed options are allowed when the machine is stowed (machine in fully lowered position).

The only speed allowed when not in stowed position is microspeed (This speed is a default speed programed into the machine).

2.3 - ELECTRONIC VARIABLE SPEED DRIVE

The machines are equipped with an electronic speed regulator configured for each function.

The machines are fitted with an electronic variable speed drive which manages the power supplied to the drive motors and hydraulic pump motor. Power to the motors is controlled by the machine calculator.

The speed regulators are configured for each individual machine. Do not interchange the speed controllers/regulators between machines even if they are the same model..

Downloaded from www.Manualslib.com manuals search engine

https://truckmanualshub.com/

2.4 - MULTI-FUNCTION INDICATOR : BATTERY CHARGE STATUS CALCULATOR-INDICATOR HOUR

This device has the following functions :

- The origin and type of defect can be located by regulator alarm code display (see maintenance book).
- A hour meter indicates the number of machine in-service hours.
- A battery charge level indicator display with luminous segments.

***N.B.**-:-If batteries are 80 % discharged, it is impossible to raise the platform and driving is reduced by half (See machine maintenance book).*

2.5 - LOAD LIMITING IN THE PLATFORM (IF FITTED)

If the load in the platform exceeds the maximum allowed load, no movement can be activated from the control boxes.

The platform overload indicator and the buzzer warn the operator that the overload condition exists..

There are 2 options that will allow restoration of normal operation :

- To return the machine to normal operation remove some weight from the platform.
- In the event of an emergency or if it is impossible for the driver to operate the controls, use the lower console to lower the platform.

***N.B.**-:-All the movements are slowed down.*

For STAR 6 P only :

The adjustable tray is equipped with a weighing system. If the load on the tray exceeds the maximum allowed load (90 kg(198 lb)), no movement can be activated from the control boxes. The (243) indicator flashes and the buzzer warns the operator.

To return to a normal configuration :

- Remove weight from the adjustable tray.

***N.B.**-:-The adjustable tray's weighing system is only active when the mast is raised.*

Downloaded from www.Manualslib.com manuals search engine

https://truckmanualshub.com/

2.6 - CHASSIS TILT

For STAR 6 and STAR 6 P

If the machine is positioned on a slope exceeding the allowable tilt with the mast extended, the tilt control unit alerts the operator.

Drive and elevation controls are cut if this situation lasts longer than 1 or 2 s (seconds).

To restore the drive function, only movements allowing the machine to be stowed are permitted :

- Mast lowering.

If the machine descends a slope greater than 10 % (around 5 °) with the mast stowed, the machine automatically defaults to slow speed.

For STAR 8 - STAR 10

If the machine is positioned on a slope exceeding authorized tilt, the tilt control unit alerts the operator.

Drive and elevation controls are cut if this situation lasts longer than 1 or 2 s (seconds).

To restore the drive function, only movements allowing the machine to be stowed are permitted :

- Mast lowering.
- Jib lowering.
- Turntable rotation.

2.7 - MACHINE BRAKING

If electric power is cut off, the machine is braked automatically.

Performance levels can may be reduced in the following situations :

- Descending a bumpy ramp.
- Worn tyres.
- Damp or muddy ground conditions.

2.8 - WHEEL MOTOR BRAKE RELEASE

Each time a drive command is activated, electric power releases the brakes.

2.9 - ANTI-POTHOLE SAFETY SYSTEM

To reduce the risk of tip over, the machine is equipped with anti-tipping devices located under the chassis . The presence of this device depends on the machine configuration

Downloaded from www.Manualslib.com manuals search engine

https://truckmanualshub.com/

2.10 - ON-BOARD CHARGER

Connection point for onboard battery charger.

Battery charging starts as soon as external power supply is connected.

The machine's electric system is automatically deactivated while the external power supply is connected to the machine.

2.11 - ORDER PICKER SPECIFIC

For STAR 6 P only :

Safety precautions

When the machine is used in the picking mode, the area in which it is to be used must be clearly marked with a barrier to prevent access to other equipment or individuals. The area protected by the barrier must be sufficient in all direction to cater for the length of the machine. There should be a person at ground level at all times to act as an observer to ensure that no one enters the area protected by the barrier. The observer must also remain outside the barrier unless an emergency occurs and the platform needs to lowered using the ground level controls. :

- **The parcels must be securely strapped onto the tray if stacking several parcels or if the parcels are unstable (height greater than width or length). Use the 6 anchorage points provided for this purpose.**
- **Only parcels not exceeding the surface of the adjustable tray can be handled.**
- **When transferring the load to be transported to or from the storage, the adjustable tray must be situated at the same height as the load to be transferred.**

Only drive the machine when the goods to be transported on the tray are securely positioned. The operator must have full visibility of the ground on which the machine is operating.

- **Never use the adjustable tray as step.**

- Only drive the machine when the goods to be transported on the tray are securely positioned. The operator must have full visibility of the ground on which the machine is operating.

Loading instructions

- The boxes must be securely strapped onto the tray if stacking several boxes or if the boxes are unstable (ie. the height is greater than the width or length).
- Only parcels not exceeding the surface of the adjustable tray can be handled.
- The adjustable tray must be set at the same the same height as the load to be transferred onto it.

Lock the machine when it is not operating.

Downloaded from www.Manualslib.com manuals search engine

https://truckmanualshub.com/

1 - Recommendations

The manager of the company responsible for the commissioning of the machine must ensure that the machine is fit for the work it is to perform. i.e. that the machine is suitable to carry out the work in complete safety in compliance with this Operator Manual. All managers who are responsible for persons operating the machine, must be familiar with the regulations currently applicable in the country of use and ensure that they are adhered to.

Before using the machine, read the previous chapters in this manual. Ensure that you have understood the following points :

- **Safety precautions.**
- **Operator's responsibilities.**
- **Preparation and the operating principle of the machine.**

2 - Checks and inspection before use

Each day and before the beginning of a new work period and on each change of operator, the machine must be subjected to a visual inspection and a complete functional test.

Any repairs required must be performed before the machine is used, its correct operation depends on it.

Find all the function indicators and controls in Section C 5 - Control boxes

2.1 - VISUAL INSPECTIONS

2.1.1 - General mechanical functions

For all the following checks, ensure that the machine is switched off.

Check the following points :

- The presence of the identification plate, labels and operator manual :
  - Their state of cleanliness and visibility.
  - Clean or replace if necessary.
- Visual state of the machine :
  - Absence of leaks (battery acid, hydraulic oil, etc.). Absence of foreign objects on all surfaces. Call the staff in charge of the maintenance if necessary.
  - No missing or loose parts (bolts, nuts, connectors, cables, etc.). Refer to the "tightening torques" table quoted in the Maintenance Book.
  - Absence of cracks, broken parts, damaged paint. No deformations or other anomalies on the structure's parts.

Downloaded from www.Manualslib.com manuals search engine

https://truckmanualshub.com/

Example

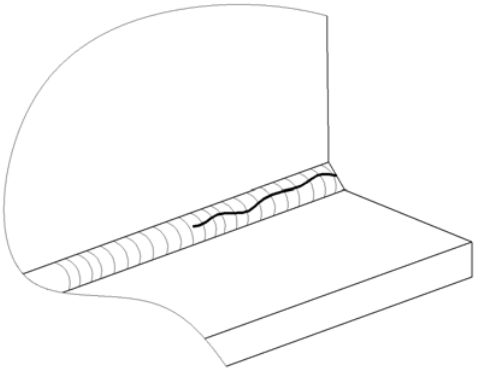

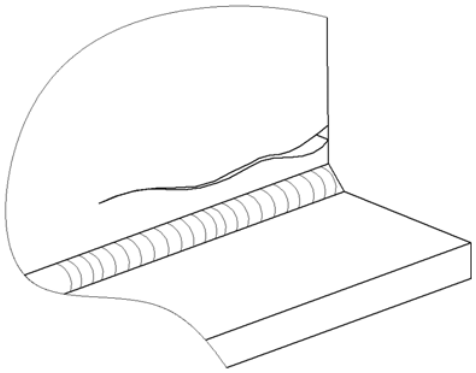

- Cylinders' state :
  - No leaks. Refer to the Maintenance book.
  - No rust and abrasions on the cylinder rod.
  - Absence of foreign objects on all surfaces.
- Steering system's state : wheels, reducers, brakes and tires :
  - No cracks, distortions, damaged paint or other faults
  - No missing or loose bolts. Refer to the "tightening torques" table quoted in the Maintenance Book.
  - Condition of the tyres (cuts, excessive wear, etc.).
- Status of the control boxes :
  - No damage.
  - Back to neutral for all joysticks, selectors, etc..
  - Present and legible control labels.
- Movement, safety limit switches :
  - No damage.
  - No missing or loose bolts. Refer to the "tightening torques" table quoted in the Maintenance Book.
  - Absence of foreign objects on all surfaces.
- The state and connection of the electric wires and cables :
  - No damage, wear marks or other faults.
  - No contact between connectors.
- State of the hydraulic unit and pump :
  - No leaks.
  - No missing or loose parts (bolts, nuts, connectors, cables, etc.).
  - Hydraulic oil filter. Refer to the Maintenance book.

Downloaded from www.Manualslib.com manuals search engine

https://truckmanualshub.com/

- State of the structure's parts : Boom, jib, platform :
  - No cracks, damaged paint.
  - No distortion in metal components or visible damage.
  - Absence of foreign objects at the ends of boom/attachments.
  - Presence and check the original position of the platform control box sliding bar.
- Condition of the pulley system :
  - No excessive clearance : Refer to the Maintenance book.
  - No missing or loose bolts.
  - Absence of foreign objects on all surfaces.
  - Grease the extension system if necessary.
- State of the tanks :
  - No leaks.
  - No missing or loose parts (bolts, nuts, connectors, cables, etc.). Top up the oil level, if necessary (Machine in transport position).

2.1.2 - Environment

Section A -Safety precautions.

Check the following points :

- Wind speed (Section G 1-Main characteristics).
- The permissible ground pressure and loading on the machine supporting surface (Section G 1-Main characteristics).
- The maximum permissible load in the platform (Section G 1-Main characteristics).
- The maximum permissible lateral force allowed at the platform (Section G 1-Main characteristics).

Downloaded from www.Manualslib.com manuals search engine

https://truckmanualshub.com/

2.2 - FUNCTIONAL TESTS

2.2.1 - Safety features

Features to be tested :

- Operation of the upper and lower emergency stop buttons.
- Operation of the tilt sensor.
- Visual and audible alarms.
- Platform load management system (Where fitted).

For functional test procedures refer to (Section E 3.1-Test procedure).

2.2.2 - Ground control box controls (emergency station)

Refer to the corresponding operations to test the controls in the order mentioned (Section E 3.2-Operation from ground position).

STAR 6 - STAR 6 P

Step	Control
1	Energizes control system(125)

STAR 8 - STAR 10

Step	Control
1	Energizes control system(92)
2	Movements : • Mast elevation/lowering (126) and mast telescoping selector (127) • Mast rotation (126) and mast rotation selector (128) • Jib elevation/lowering (126) and jib selector switch (129)
3	Control box energizing key selector(92)

Downloaded from www.Manualslib.com manuals search engine

https://truckmanualshub.com/

2.2.3 - Platform control box controls (driving station)

Refer to the corresponding operations to test the controls in the order mentioned (Section E 3.3-Operations from the platform).

STAR 6 - STAR 6 P

Step	Control
1	Driving and steering 133
2	Movements : • Mast movement joystick (133) and mast telescoping movement selector(134)
3	Drive speed selector : • Fast movement selector (134) and joystick (133) • Slow movement selector (134) and joystick (133)
4	Horn selector 43

STAR 8 - STAR 10

Step	Control
1	Driving (136) and movement selector (138)
2	Steering (136) and movement selector (138)
3	Movements : • Mast rotation (136) and movement selector (137) • Mast elevation/lowering (136) and movement selector (138) • Jib elevation/lowering (136) and movement selector (138)
4	Horn selector 43

2.3 - PERIODICAL CHECKS

The machine must be inspected on a regular basis at intervals in accordance with the requirements set forth in the Country of use but no less than once per year. The purpose of the inspection is to detect any defect which could lead to an accident during routine use of the machine.

These inspections must be carried out by a competent company or person whose selection is under the responsibility of the manager (Company employee or other).

The inspection results must be recorded in the safety register or machine log book controlled and overseen by the company manager. This register or machine log book and the list of competent repair persons must be made available to the Government Work Inspector and company safety commitee at all times.

N.B.-:- *Section H Intervention register*

Downloaded from www.Manualslib.com manuals search engine

https://truckmanualshub.com/

2.4 - REPAIRS AND ADJUSTMENTS

Extensive repairs, interventions or adjustments on the safety systems or elements must be performed by a HAULOTTE Services® employee or a HAULOTTE Services®-approved employee with HAULOTTE Services® training, using original spare parts only.

HAULOTTE Services® technicians are specially trained to carry out extensive repairs, interventions or adjustments on the safety systems or elements of HAULOTTE® machines, and carry genuine HAULOTTE spare parts and tools as required, and also provide fully documented reports on all work completed..

HAULOTTE Services® will not take responsibility for any consequential outcomes resulting from inferior services/repairs carried out by others.

HAULOTTE advises you that NO modifications carried out without the written permission of HAULOTTE® will void the HAULOTTE warranty..

2.5 - INSPECTION / TESTING REQUIREMENTS

Intervention to be made after :

- Extensive dismantling and reassembly.
- Repairs involving the machine's essential components.
- Any accident causing mechanical stress to the machine.

Perform a fitness for function inspection, a condition inspection and static and dynamic tests (Consult the After-Sales Service HAULOTTE Services®).

Downloaded from www.Manualslib.com manuals search engine

https://truckmanualshub.com/

3 - Operation

***N.B.**-:-The functions are described for the entire range. Refer to the machine model to identify the controls and functions indicators.*

Find all the function indicators and controls in Section C 5 - Control boxes

3.1 - TEST PROCEDURE

3.1.1 - Emergency stop button operation

STAR 6 - STAR 6 P - Ground control box emergency stop button

Step	Action
1	Pull the battery power switch- push button (124).
2	Turn the key selector (125) to the left to power up.
3	Push the battery power switch- push button (124).

STAR 6 - STAR 6 P - Platform control box emergency stop button

Step	Action
1	Pull the emergency stop push-button (46).
2	Turn the key selector (125) to the left to power up.
3	Push the emergency stop button (46).

STAR 8 - STAR 10 - Ground control box emergency stop button

Step	Action
1	Pull the emergency stop push-button (46).
2	Turn the control box activation selector key (92) downwards to activate the ground control box.
3	Push the emergency stop button (46).

STAR 8 - STAR 10 - Platform control box emergency stop button

Step	Action
1	Pull the emergency stop push-button (46).
2	Turn the control box activation selector key (92) upwards to activate the platform control box.
3	Push the emergency stop button (46).

Downloaded from www.Manualslib.com manuals search engine

https://truckmanualshub.com/

3.1.2 - Tilt sensor switch operation

For ANSI models only :

Machine unfolded, the slope sensor gives an audible signal telling the operator that the machine should not be deployed. In this case, fully lower the platform and reposition the machine on level ground before raising the platform again.

This test must be performed on the machine with the mast fully extended.

For STAR 6 - STAR 6 P

1. Pull the battery power switch push-button (124) on the lower control box.
2. Switch on the machine from the lower control box (125).
3. Remove the cover.
4. Locate the tilt sensor next to the ground control box.
5. Manually tilt and maintain the tilt sensor towards the front for a few seconds (Section C 2-Main components) :

- The audible beep sounds.
- For machines fitted with : When the slope sensor alarm sounds, the sensor prevents lifting and driving movements.

***N.B.**-:-With the machine unfolded, the tilt sensor gives an audible signal indicating to the operator that the platform could not raise. In this case, lower the machine completely, then reposition the machine on a level ground before performing any raising operations.*

For STAR 8 - STAR 10

1. Pull the emergency stop switch- push buttons (46) and on the chassis (button position ON).
2. Turn the control box activation selector key (92) downwards or upwards to activate a control box.
3. Remove the cover.
4. Locate the tilt sensor next to the ground control box.
5. Manually tilt and maintain the tilt sensor towards the front for a few seconds (Section C 2-Main components) :

- The audible beep sounds.
- For machines fitted with : When the slope sensor alarm sounds, the sensor prevents lifting and driving movements.

***N.B.**-:-With the machine unfolded, the tilt sensor gives an audible signal indicating to the operator that the platform could not raise. In this case, lower the machine completely, then reposition the machine on a level ground before performing any raising operations.*

Downloaded from www.Manualslib.com manuals search engine

https://truckmanualshub.com/

3.1.3 - Visual and sound alarms

For : STAR 6 - STAR 6 P

1. Pull the battery power switch- push button (124).
2. Switch the machine on (125). A sound signal (beep) sounds.

For : STAR 8 - STAR 10

1. Pull the emergency stop switch- push buttons (46) and on the chassis (button position ON).
2. Turn the control box activation selector key (92) downwards or upwards to activate a control box. A sound signal (beep) sounds.

3.1.4 - Weighing system

For STAR 8 - STAR 10

1. Pull the emergency stop switch- push buttons (15, 46) and on the chassis (button position ON).
2. Turn the control box activation selector key (72) or (92) to activate a control box(Depending on the machine). Platform control box overload indicator (30) flashes.

3.2 - OPERATION FROM GROUND POSITION

Ground control box is an auxiliary to be used only in case of emergency.

3.2.1 - Machine start-up

For : STAR 6 - STAR 6 P

1. Pull the battery power switch- push button (124).
2. Turn the key selector (125) to the left to power up.

For : STAR 8 - STAR 10

1. Pull the emergency stop switch push-button on the chassis (button in position ON) : This will de-activate the state of emergency stop button located in platform.
2. Turn the control box activation selector key (92) downwards to activate the ground control box.

3.2.2 - Machine shutdown

For : STAR 6 - STAR 6 P

Push in the battery power switch- push button (124).

For : STAR 8 - STAR 10

Push in the emergency stop switch- push button on the chassis (button in OFF position).

Downloaded from www.Manualslib.com manuals search engine

https://truckmanualshub.com/

3.2.3 - Movement control

STAR 8 - STAR 10 - Ground control box controls (emergency station)

Control		Action
Mast telescoping	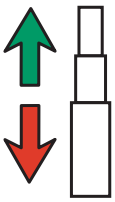	Press and hold in the mast telescoping button (127). Push the movement selector paddle (126) upwards to raise the mast.
		Press and hold in the mast telescoping button (127). Push the movement selector paddle (126) downwards to lower the mast.
Mast rotation		Press and hold in the mast rotation selector button (128). Push the movement selector paddle (126) upwards for clockwise mast rotation.
		Press and hold in the mast rotation selector button (128). Push the movement selector paddle (126) downwards for counter clockwise (CCW) mast rotation.
Jib lifting/lowering	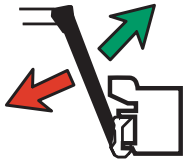	Press and hold in the jib selector button (129). Push the movement selector paddle (126) upwards to raise the jib.
		Press and hold in the jib selector button (129). Push the movement selector (126) downwards to lower the jib.

***N.B.**-:-Either the selector button or speed selector paddle are released, movement stops.*

3.2.4 - Other controls

For : STAR 8 - STAR 10

- Switching from the ground control box to the platform control box :

The emergency switch- push button on the chassis must be in position ON.

- **Turn the control box activation selector key (92) upwards to activate the platform control box. The ground control box controls are de-energized.**

- Switching from the platform control box to the ground control box :

The emergency switch- push button on the chassis must be in position ON.

- **Turn the control box activation selector key (92) downwards to activate the ground control box. The platform control box controls are de-energized.**

Downloaded from www.Manualslib.com manuals search engine

https://truckmanualshub.com/

3.3 - OPERATIONS FROM THE PLATFORM

3.3.1 - Machine start-up

Pull the emergency stop button 46.

3.3.2 - Machine shutdown

Press the emergency stop button (46).

3.3.3 - Movement control

Activate the controls and the 'Enable Switch' system simultaneously to perform the various movements.

The validation selector authorises validation of the joystick's action for 3 seconds for STAR 6 (STAR 13) - STAR 6P and for 2 seconds for STAR 8 (STAR 22J) - STAR 10 (STAR 26J). The joystick becomes inoperative after this time limit.

Platform control box controls (driving station) STAR 6

Control		Action
Driving		Set the movement selector (134) to : • High for high speed. • Slow for slow driving. Pull the drive joystick (133) forwards to move the machine forwards.
		Set the movement selector (134) to : • High for high speed. • Slow for slow driving. Pull the drive joystick (133) backwards to reverse the machine.
Steering		Push the steering joystick (133) to the left to steer left.
		Push the steering joystick (133) to the right to steer right.
Mast telescoping	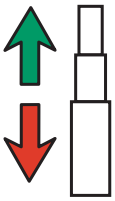	Set the movement selector (134) to mast telescoping. Push the mast movement joystick (133) forwards to raise the mast.
		Set the movement selector (134) to mast telescoping. Push the mast movement joystick (133) backwards to lower the mast.

Downloaded from www.Manualslib.com manuals search engine

https://truckmanualshub.com/

Platform control box controls (driving station) STAR 6 P

Control		Action
Driving		Set the movement selector (134) to : • High for high speed. • Slow for slow driving. Pull the drive joystick (133) forwards to move the machine forwards.
		Set the movement selector (134) to : • High for high speed. • Slow for slow driving. Pull the drive joystick (244) backwards to reverse the machine.
Steering	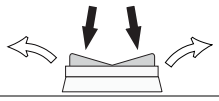	Push the joystick button (244) to the left to steer left.
		Push the joystick button (244) right to steer right.
Mast telescoping	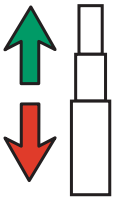	Set the movement selector (134) to mast telescoping. Push the mast movement joystick (244) forwards to raise the mast.
		Set the movement selector (134) to mast telescoping. Push the mast movement joystick (244) backwards to lower the mast.

Downloaded from www.Manualslib.com manuals search engine

https://truckmanualshub.com/

Platform control box controls (driving station) STAR 8 - STAR 10

Control		Action
Driving	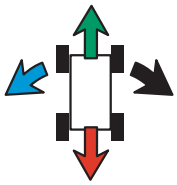	Set the movement selector (136) to driving and steering. Push the movement selector (138) upwards to move the machine forwards.
		Set the movement selector (136) to driving and steering. Push the movement selector (138) downwards to reverse the machine.
Steering		Set the movement selector (136) to driving and steering. Push the movement selector (137) to the right to steer right.
		Set the movement selector (136) to driving and steering. Push the movement selector (137) to the left to steer left.
Mast telescoping	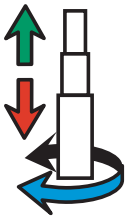	Set the movement selector (136) to mast telescoping. Push the movement selector paddle (138) upwards to raise the mast.
		Set the movement selector (136) to mast telescoping. Push the movement selector paddle (138) downwards to lower the mast.
Mast rotation		Set the movement selector (136) to mast rotation. Push the movement selector paddle (137) to the right for counter clockwise (CCW) mast rotation.
		Set the movement selector (136) to mast rotation. Push the movement selector paddle (137) to the left for clockwise mast rotation.
Jib lifting/lowering	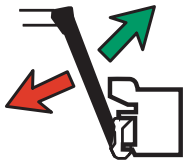	Set the movement selector (136) to jib elevation/lowering. Push the movement selector paddle (138) upwards to raise the jib.
		Set the movement selector (136) to jib elevation/lowering. Push the movement selector (138) downwards to lower the jib.

***N.B.**-:-The release of the selectors and (or) joysticks causes all movement to stop.*

3.3.4 - Other controls

- Horn : Push the horn push-button (43) to sound the horn.

***N.B.**-:-Releasing the push button stops the horn.*

Downloaded from www.Manualslib.com manuals search engine

https://truckmanualshub.com/

E - Driving

Downloaded from www.Manualslib.com manuals search engine

https://truckmanualshub.com/

1 - Emergency lowering

1.1 - PRINCIPLE

Emergency lowering is required if the operator in the platform is no longer capable of controlling the movements even though the machine operates normally.

A ground operator trained in using the emergency controls and in possession of the starter key can operate the ground control box with the main power source to lower the platform operator.

1.2 - PROCEDURE

Section A 2-Pre-operation instructions

For : STAR 6 - STAR 6 P

Push the emergency valve located under the chassis.

For : STAR 8 -STAR 10

1. Turn the control box activation selector key (92) downwards to activate the ground control box. The platform control box controls are de-energized.
2. Press the mast telescoping selector (127) and movement selector (126) simultaneously downwards.

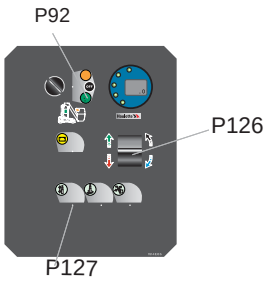

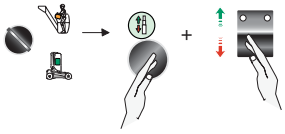

If the machine is stuck or hooked in surrounding structures or equipment, it is essential to release the operators before intervening on the machine.

Downloaded from www.Manualslib.com manuals search engine

https://truckmanualshub.com/

2 - Lowering for repairs

2.1 - PRINCIPLE

The lowering for repairs function allows the operator to be lowered to the ground in case of failure of the main power source.

For STAR 6 and STAR 6P only :

- **Ensure that the platform is supported in the raised position whenever access is required to the power system under the power system cover at ground level.**

2.2 - PROCEDURE

For : STAR 6 - STAR 6 P

Push the emergency valve located under the chassis.

For : STAR 8 - STAR 10

Lowering the mast manually

- Pull the mast lowering solenoid valve control to lower the mast.
- Release it to halt lowering

For : STAR 8 -STAR 10

Lowering the jib manually

- Press the centre of the solenoid valve to lower the jib.
- Release it to halt lowering.

If the operator in the platform has to exit the platform when elevated, he must exit onto a sturdy, safe structure, the transfer must respect the following recommendations :

Downloaded from www.Manualslib.com manuals search engine

https://truckmanualshub.com/

- The operator must secure himself by using 2 straps. One lanyard is attached to the platform, the other to the structure onto which he wishes to exit.
- The operator must exit the platform via the standard access point.
- The operator must not detach the strap connected to the platform until transfer is complete or while the transfer still presents a danger.

If the operator cannot be lowered by any of the above mentioned methods, contact HAULOTTE Services® immediately.

Downloaded from www.Manualslib.com manuals search engine

https://truckmanualshub.com/

3 - Towing

In case of a machine failure, it is possible to tow it to load it onto a trailer.

3.1 - BRAKE RELEASE

To tow a broken-down machine, perform manual brake release.

Perform these operations on flat, horizontal ground. Failing that, block the wheels to immobilize the machine. During an operation of releasing the clutch from the drive system, the machine is in free wheels, the brake system is no more longer.

For STAR 6 (STAR 13) - STAR6 P :

1. Maintain the pull rod in brake release position during towing or moving the machine.

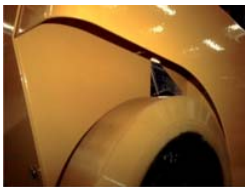

For STAR 8 (STAR 22J) - STAR 10 (STAR 26J) :

In the event of machine traction, the drive wheels break release is available via the switch found in the turntable switch box. To use the switch, the machine must be disconnected from the power source using the SB1 battery isolation and the battery charger must be disconnected from the mains.

Downloaded from www.Manualslib.com manuals search engine

https://truckmanualshub.com/

4 - Loading and unloading

***N.B.**-:-When traveling up slopes, during loading or unloading HAULOTTE® recommends positioning the counterweight at the rear.*

4.1 - PRINCIPLE

4.1.1 - Loading by ramp

***N.B.**-:-The slope of the ramp is always greater than the maximum authorized slope. To authorise driving :*

- Lower the mast and jib.

To avoid any risk of sliding during loading, ensure that :

- **The loading ramps can bear the load.**
- **The loading ramps are correctly attached.**
- **The loading ramp has sufficient grip.**
- **The machine is completely stowed.**

If 2 ramps are used, ensure that the distance between them does not exceed 0,35 m(1 ft1 in).

If the slope is too steep, use a winch in addition to traction.

Never place yourself below or too close to the machines during loading.

A wrong move can lead to machine tip over which could result in serious injury or material damage.

For STAR 6 only

***N.B.**-:-In order to perform loading and unloading operations, the operator can :*

- Disconnect the upper control unit.
- Connect the upper control unit to the chassis.

4.1.2 - Loading by power lift truck

- Ensure that the machine controls are in the OFF position.
- Use a sufficiently powerful lift truck of sufficient capacity.
- Move the forks apart.
- Place the forks in the positions indicated on the chassis.
- Place the forks well under the machine to ensure optimum stability.

Downloaded from www.Manualslib.com manuals search engine

https://truckmanualshub.com/

4.1.3 - Unloading by power lift truck

- While lifting, make sure that the load is evenly spread.
- Lower the machine onto the support surface.

4.1.4 - Loading by lifting

For : STAR 8 - STAR 10

Use a lifting beam with 4 slings of sufficient strength.

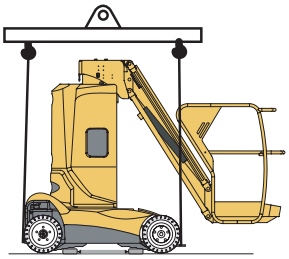

4.1.5 - Unloading by lifting

For : STAR 8 - STAR 10

Hook the 4 slings on the 4 sling hooks provided for this purpose.

Downloaded from www.Manualslib.com manuals search engine

https://truckmanualshub.com/

4.2 - PUTTING IN TRANSPORT POSITION

The machine must be completely stowed.

1. Check that there is no load in the platform.
2. Secure the machine to the anchorage points provided for this purpose.
3. The guardrails must be locked and/or folded back.
4. Extensions must be locked and restrained with straps.

For : STAR 6 - STAR 6 P - STAR 8 - STAR 10

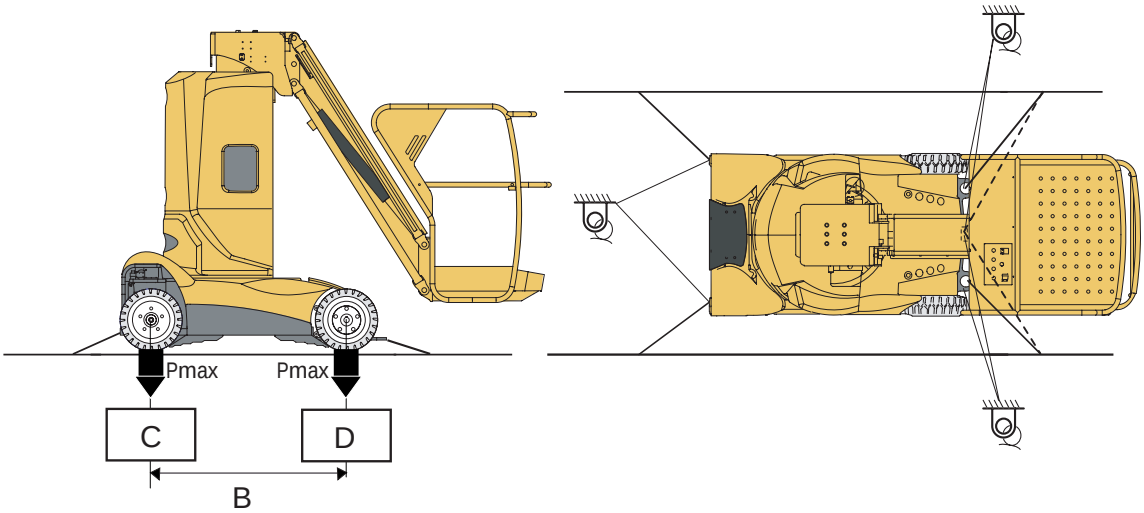

Loading characteristics

Marking	Description	STAR 6	STAR 6 P
B	Lateral distance between the wheels(1).	1,17 m(3 ft10 in)	1,17 m(3 ft10 in)
C	Front wheel ground pressure((1.))	14,2 daN/cm² (2,90 lbf/sq.ft)	17,6 daN/cm² (3,60 lbf/sq.ft)
D	Rear wheel ground pressure((1.))	14,2 daN/cm² (2,90 lbf/sq.ft)	17,6 daN/cm² (3,60 lbf/sq.ft)
	Anchorage point		

(1.) Check the technical data in the technical characteristics

Loading characteristics

Marking	Description	STAR 8	STAR 10
B	Lateral distance between the wheels(1).	1,20 m(3 ft11 in)	1,20 m(3 ft11 in)
C	Front wheel ground pressure((1.))	15 daN/cm² (3,07 lbf/sq.ft)	18,2 daN/cm² (3,73 lbf/sq.ft)
D	Rear wheel ground pressure((1.))	15 daN/cm² (3,07 lbf/sq.ft)	18,2 daN/cm² (3,73 lbf/sq.ft)
	Anchorage point		

(1.) Check the technical data in the technical characteristics

Downloaded from www.Manualslib.com manuals search engine

https://truckmanualshub.com/

4.3 - UNLOADING

Before operating, check that the machine is in good condition.

the damage must be assessed by a competent person to decide wether the machine can be operated. The transport company must also be advised of the damage in writing.

1. The machine is completely stowed.
2. Remove the tie downs.
3. Start the machine.

4.4 - WARNING

To unload the machine, select low driving speed .

Do not travel down the ramp at a fast speed.

5 - Detection of internal fault

5.1 - PRINCIPLE

For : STAR 6 (STAR 13) - STAR 6 P - STAR 8 - STAR 10

The machine is equipped with an internal fault detection system.

The code displayed on the hour recorder (91) shows the user what kind of fault has occurred.

According to the type of fault, the machine switches to DOWNGRADED MODE; certain movements can be limited or forbidden by the system to maintain the operator's safety.

5.2 - PROCEDURE

1. Stow the machine.
2. Switch the machine off.

Do not use the machine until the fault has been repaired.

Perform the required maintenance (see the machine maintenance book).

Downloaded from www.Manualslib.com manuals search engine

https://truckmanualshub.com/

1 - Main characteristics

Certain options can modify the machine's operating characteristics and its associated safety. If your machine was originally delivered with options fitted, replacing a safety component associated with a particular options not require any particular precautions other than those associated with the installation itself (static test).

If you intend to add options to your product after original delivery, it is essential to follow the manufacturer's recommendations below :

- **Installation by authorised HAULOTTE® personnel only.**
- **Update the manufacturer's identification plate.**
- **Have stability tests carried out by a certified agency/competent person.**
- **Ensure that any additional labels that relate to the option installed, are affixed to the machine in the appropriate location/s.**

HAULOTTE® has a continuous improvement policy in place for its product range ; Given this policy, The Company reserves the right to modify their product technical characteristics without notice.

The hand and feet vibration and accoustic power values indicated in the technical characteristics tables are obtained in the following conditions :

- **The maximum quadratic mean value weighted as an acceleration frequency and the total value of the vibrations to which the hand-arm system is exposed have been measured on the products by simulating a cycle representative of normal use. The values meet the requirements of the 2006/42/CE machine directive.**
- **For electric machines, the accoustic power level is measured at the drive station under the conditions described by the 2006/42/CE machine directive.**
- **For machines equipped with internal combustion engines, the accoustic level guarantees (LWA displayed on the product) and is measured in accordance with the method and the conditions described in Appendix III, Part B, Method 1 and 0 of the 2000/14/CE European directive.**

For STAR 6 - Technical characteristics

Machine	STAR 6		STAR 13	
Characteristics	Metric	Imperial	Metric	Imperial
Length of machine in stowed position	1,5 m	(4 ft11 in)	1,5 m	(4 ft11 in)
Overall width of machine	0,76 m	(2 ft5 in)	0,76 m	(2 ft5 in)
Machine stowed height	1,65 m	(5 ft5 in)	1,65 m	(5 ft5 in)
Maximum ground clearance	0,07 m	(0 ft3 in)	0,07 m	(0 ft3 in)
Maximum work height	6,00 m	(19 ft8 in)	6,00 m	(19 ft8 in)
Maximum platform height	4,00 m	(13 ft1 in)	4,00 m	(13 ft1 in)
Platform stowed length	0,80 m	(2 ft7 in)	0,80 m	(2 ft7 in)
Platform width	0,68 m	(2 ft2 in)	0,68 m	(2 ft2 in)
Outer turning radius	1,50 m	(4 ft11 in)	1,50 m	(4 ft11 in)
Inner turning radius	0,24 m	(0 ft9 in)	0,24 m	(0 ft9 in)
Distance between centres of the wheels	1,17 m	(3 ft10 in)	1,17 m	(3 ft10 in)
Dumping CE - AS	2 °			
Rated slope ANSI - CSA			0 °	
Slope warning ANSI - CSA			2 °	
Maximum wind speed allowed	0 km/h -Indoor use only	(0 mph)	0 km/h -Indoor use only	(0 mph)

Downloaded from www.Manualslib.com manuals search engine

https://truckmanualshub.com/

G - Technical characteristics

Machine	STAR 6		STAR 13	
Characteristics	Metric	Imperial	Metric	Imperial
Total weight	810 kg	(1786 lb)	810 kg	(1786 lb)
Maximum platform load	180 kg	(400 lb)	180 kg	(400 lb)
Maximum number of people on the platform	1			
Engine type	Electric			
Engine power	0,9 kW (1,2 Hp)			
Acoustic power	<70 dB (A)			
Hand vibration	>2,5 m/s²	(98,4 in/s²)	>2,5 m/s²	(98,4 in/s²)
Feet vibration	<2,5 m/s²	(98,4 in/s²)	<2,5 m/s²	(98,4 in/s²)
Hydraulic oil tank capacity	5 l	(1,32 gal US)	5 l	(1,32 gal US)
Operating batteries	24 V-180 Ah			
Maximum climbable slope	20 %			
Tyre type and/ or size	Solid tyres			
Wheel nut torque	12,7 daN.m	(93,7 lbf.ft)	12,7 daN.m	(93,7 lbf.ft)
Maximum ground pressure on hard ground	14,2 daN/cm²	2,91 lbf/sq.ft	14,2 daN/cm²	2,91 lbf/sq.ft
Micro drive speed	0,5 km/h	(0,1 mph)	0,5 km/h	(0,1 mph)
Low drive speed	1,5 km/h	(0.9 mph)	1,5 km/h	(0.9 mph)
High drive speed	5 km/h	(3.1 mph)	5 km/h	(3.1 mph)
Manual lateral force at platform	CE - AS : 200 N - 45 lbf		ANSI - CSA : 445 N / 100 lbf	

Downloaded from www.Manualslib.com manuals search engine

https://truckmanualshub.com/

G - Technical characteristics

For STAR 6 P - Technical characteristics

Machine	STAR 6 P	
Characteristics	Metric	Imperial
Length of machine in stowed position	1,5 m	(4 ft11 in)
Overall width of machine	0,77 m	(2 ft6 in)
Machine stowed height	1,65 m	(5 ft5 in)
Maximum ground clearance	0,075 m	(0 ft3 in)
Maximum work height	6,00 m	(19 ft8 in)
Maximum platform height	4,00 m	(13 ft1 in)
Platform stowed length	0,70 m	(2 ft4 in)
Platform width	0,74 m	(2 ft4 in)
Outer turning radius	1,50 m	(4 ft11 in)
Inner turning radius	0,24 m	(0 ft9 in)
Distance between centres of the wheels	1,17 m	(3 ft10 in)
Dumping CE - AS	2 °	
Maximum wind speed allowed	0 km/h (0 mph)-Indoor use only	
Total weight	820 kg	(1808 lb)
Maximum platform load	180 kg	(400 lb)
Maximum number of people on the platform	1	
Maximum picking platform load	90 kg	(198 lb)
Engine type	Electric	
Engine power	0,9 kW (1,2 Hp)	
Acoustic power	<73 dB (A)	
Hand vibration	>2,5 m/s²	(98,4 in/s²)
Feet vibration	<2,5 m/s²	(98,4 in/s²)
Hydraulic oil tank capacity	7 l	(2 gal US)
Operating batteries	24 V-180 Ah	
Maximum climbable slope	20 %	
Tyre type and/ or size	Solid tyres	
Wheel nut torque	12,7 daN.m	(93,7 lbf.ft)
Maximum ground pressure on hard ground	17,6 daN/cm²	3,60 lbf/sq.ft
Micro drive speed	0,5 km/h	(0,1 mph)
Low drive speed	1,5 km/h	(0.9 mph)
High drive speed	5 km/h	(3.1 mph)
Manual lateral force at platform	CE - AS : 200 N - 45 lbf	

Downloaded from www.Manualslib.com manuals search engine

https://truckmanualshub.com/

G - Technical characteristics

For STAR 8 - Technical characteristics

Machine	STAR 8		STAR 22J	
Characteristics	Metric	Imperial	Metric	Imperial
Length of machine in stowed position	2,70 m	(8 ft10 in)	2,70 m	(8 ft10 in)
Overall width of machine	1,00 m	(3 ft3 in)	1,00 m	(3 ft3 in)
Machine stowed height	1,99 m	(6 ft6 in)	1,99 m	(6 ft6 in)
Maximum ground clearance	0,10 m	(0 ft3 in)	0,10 m	(0 ft3 in)
Maximum work height	8,20 m	(26 ft11 in)	8,80 m	(28 ft10 in)
Maximum platform height	6,20 m	(20 ft4 in)	6,80 m	(22 ft4 in)
Maximum work radius	3,00 m	(9 ft10 in)	3,00 m	(9 ft10 in)
Turntable rotation	345 °		345 °	
Pendulum jib working range	130 °		130 °	
Platform stowed length	0,78 m	(2 ft7 in)	0,78 m	(2 ft7 in)
Platform width	0,93 m	(3 ft1 in)	0,93 m	(3 ft1 in)
Outer turning radius	1,88 m	(6 ft2 in)	1,88 m	(6 ft2 in)
Inner turning radius	0,45 m	(1 ft6 in)	0,45 m	(1 ft6 in)
Distance between centres of the wheels	1,20 m	(3 ft11 in)	1,20 m	(3 ft11 in)
Dumping CE - AS	3 °			
Rated slope ANSI - CSA			0 °	
Slope warning ANSI - CSA			5 °	
Maximum wind speed allowed	Indoor use : 0 km/h Outdoor use : 45 km/h	Indoor use : (0 mph) Outdoor use : (28 mph)	Indoor use : 0 km/h Outdoor use : 45 km/h	Indoor use : (0 mph) Outdoor use : (28 mph)
Total weight	2610 kg	(5755 lb)	2680 kg	(5909 lb)
Maximum platform load	200 kg	(440 lb)	200 kg	(440 lb)
Maximum number of people on the platform	2			
Engine type	Electric			
Engine power	1,2 kW (1,6 Hp)			
Acoustic power	<70 dB (A)			
Hydraulic oil tank capacity	7 l	(2 gal US)	7 l	(2 gal US)
Operating battery	24 V-240 Ah			
Maximum climbable slope	23 %			
Tyre type and/ or size	Solid tyres			
Wheel nut torque	11.5 daN.m-Steer wheels 8 daN.m-Central bolt for the drive wheels	(84.87 lbf.ft) - Steer wheels (59 lbf.ft) - Central bolt for the drive wheels	11.5 daN.m-Steer wheels- 8 daN.m-Central bolt for the drive wheels	(84.87 lbf.ft) - Steer wheels (59 lbf.ft) - Central bolt for the drive wheels
Slew ring bolt torque	13,5 daN.m	(100 lbf.ft)	13,5 daN.m	(100 lbf.ft)
Maximum ground pressure on hard ground	15 daN/cm²	3,07 lbf/sq.ft	15 daN/cm²	3,07 lbf/sq.ft
Micro drive speed	0,6 km/h	(0,37 mph)	0,6 km/h	(0,37 mph)
High drive speed	4,5 km/h	(2.79 mph)	4,5 km/h	(2.79 mph)
Hand vibration	<2,5 m/s²	(98 in/s²)	<2,5 m/s²	(98 in/s²)
Feet vibration	<0,5 m/s²	(19 in/s²)	<0,5 m/s²	(19 in/s²)
Manual lateral force at platform	CE - AS : 400 N - 90 lbf		ANSI - CSA : 666 N / 150 lbf	

Downloaded from www.Manualslib.com manuals search engine

https://truckmanualshub.com/

G - Technical characteristics

For STAR 10 - Technical characteristics

Machine	STAR 10		STAR 26J	
Characteristics	Metric	Imperial	Metric	Imperial
Length of machine in stowed position	2,70 m	(8 ft10 in)	2,70 m	(8 ft10 in)
Overall width of machine	1,00 m	(3 ft3 in)	1,00 m	(3 ft3 in)
Machine stowed height	1,99 m	(6 ft6 in)	1,99 m	(6 ft6 in)
Maximum ground clearance	0,10 m	(0 ft4 in)	0,10 m	(0 ft4 in)
Maximum work height	9,95 m	(32 ft8 in)	9,95 m	(32 ft8 in)
Maximum platform height	7,95 m	(26 ft1 in)	7,95 m	(26 ft1 in)
Maximum work radius	3,00 m	(9 ft10 in)	3,00 m	(9 ft10 in)
Turntable rotation	345 °			
Pendulum jib working range	130 °			
Platform stowed length	0,78 m	(2 ft7 in)	0,78 m	(2 ft7 in)
Platform width	0,93 m	(3 ft1 in)	0,93 m	(3 ft1 in)
Outer turning radius	1,88 m	(6 ft2 in)	1,88 m	(6 ft2 in)
Inner turning radius	0,45 m	(1 ft6 in)	0,45 m	(1 ft6 in)
Distance between centres of the wheels	1,20 m	(3 ft11 in)	1,20 m	(3 ft11 in)
Dumping CE - AS	3 °			
Rated slope ANSI - CSA	0 °			
Slope warning ANSI - CSA	5 °			
Maximum wind speed allowed	Indoor use : 0 km/h Outdoor use : 45 km/h	Indoor use : (0 mph) Outdoor use : (28 mph)	Indoor use : 0 km/h Outdoor use : 45 km/h	Indoor use : (0 mph) Outdoor use : (28 mph)
Total weight	2735 kg	(6031 lb)	3100 kg	(6836 lb)
Maximum platform load	200 kg	(440 lb)	227 kg	(500 lb)
Maximum number of people on the platform	2-Indoor use -1-Outdoor use			
Engine type	Electric			
Engine power	1,2 kW (1,6 Hp)			
Acoustic power	<70 dB (A)			
Hydraulic oil tank capacity	7 l	(2 gal US)	7 l	(2 gal US)
Operating battery	24 V-240 Ah		24 V-240 Ah	
Maximum climbable slope	23 %			
Tyre type and/ or size	Solid tyres			
Wheel nut torque	11.5 daN.m-Steer wheels 8 daN.m-Central bolt for the drive wheels	(84.87 lbf.ft) - Steer wheels (59 lbf.ft) - Central bolt for the drive wheels	11.5 daN.m-Steer wheels- 8 daN.m-Central bolt for the drive wheels	84.87 daN.m(1549 lbf.ft) -Steer wheels (59 lbf.ft) - Central bolt for the drive wheels
Slew ring bolt torque	13,5 daN.m	(100 lbf.ft)	13,5 daN.m	(100 lbf.ft)
Maximum ground pressure on hard ground	18,2 daN/cm²	3,73 lbf/sq.ft	18,2 daN/cm²	3,73 lbf/sq.ft
Micro drive speed	0,6 km/h	(0,37 mph)	0,6 km/h	(0,37 mph)
High drive speed	4,5 km/h	(2.79 mph)	4,5 km/h	(2.79 mph)
Hand vibration	<2,5 m/s²	(98 in/s²)	<2,5 m/s²	(98 in/s²)
Feet vibration	<0,5 m/s²	(19 in/s²)	<0,5 m/s²	(19 in/s²)
Manual lateral force at platform	CE - AS : 400 N - 90 lbf		ANSI - CSA : 666 N / 150 lbf	

Downloaded from www.Manualslib.com manuals search engine

https://truckmanualshub.com/

2 - Overall dimensions

General diagram STAR 6

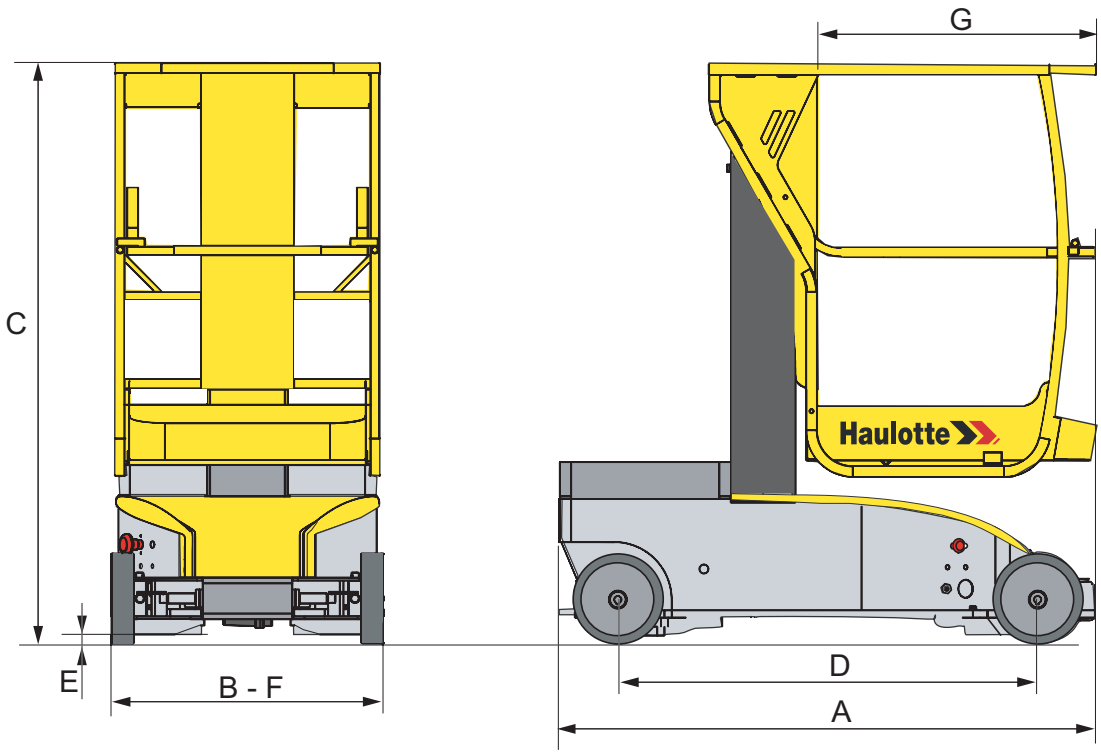

Overall dimension specifications

Marking	STAR 6	
	Mètre	Feet inch
A	1,50	4 ft 11 in
B	0,76	2 ft 5 in
C	1,65	5 ft 5 in
D	1,17	3 ft 10 in
E	0,07	0 ft 2 in
F x G	0,76 x 0,80	2 ft 5 in x 2 ft 7 in

Downloaded from www.Manualslib.com manuals search engine

https://truckmanualshub.com/

G - Technical characteristics

General diagram STAR 6 P

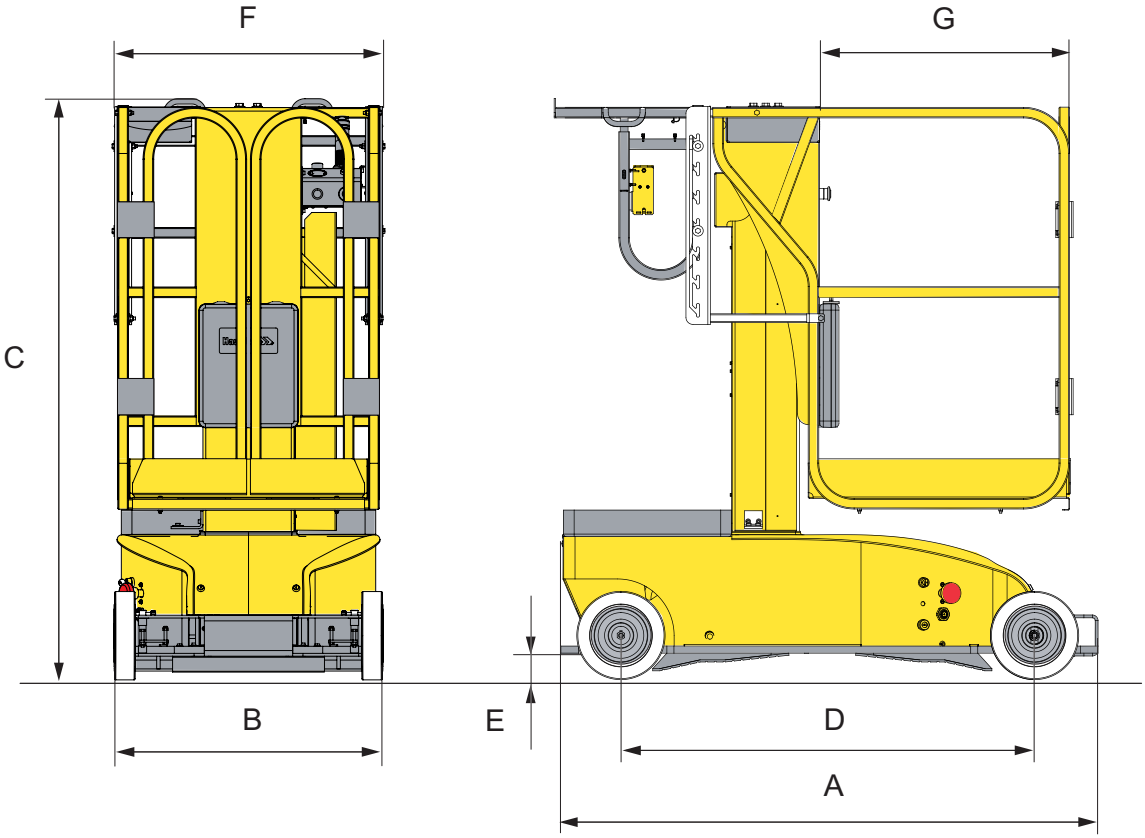

Overall dimension specifications

Marking	STAR 6 P	
	Mètre	Feet inch
A	1,54	5 ft 1 in
B	0,77	2 ft 6 in
C	1,65	5 ft 5 in
D	1,17	3 ft 10 in
E	0,075	0 ft 3 in
F x G	0,74 x 0,70	2 ft 5 in x 2 ft 4 in

Downloaded from www.Manualslib.com manuals search engine

https://truckmanualshub.com/

G - Technical characteristics

General diagram STAR 8 -STAR 10 -

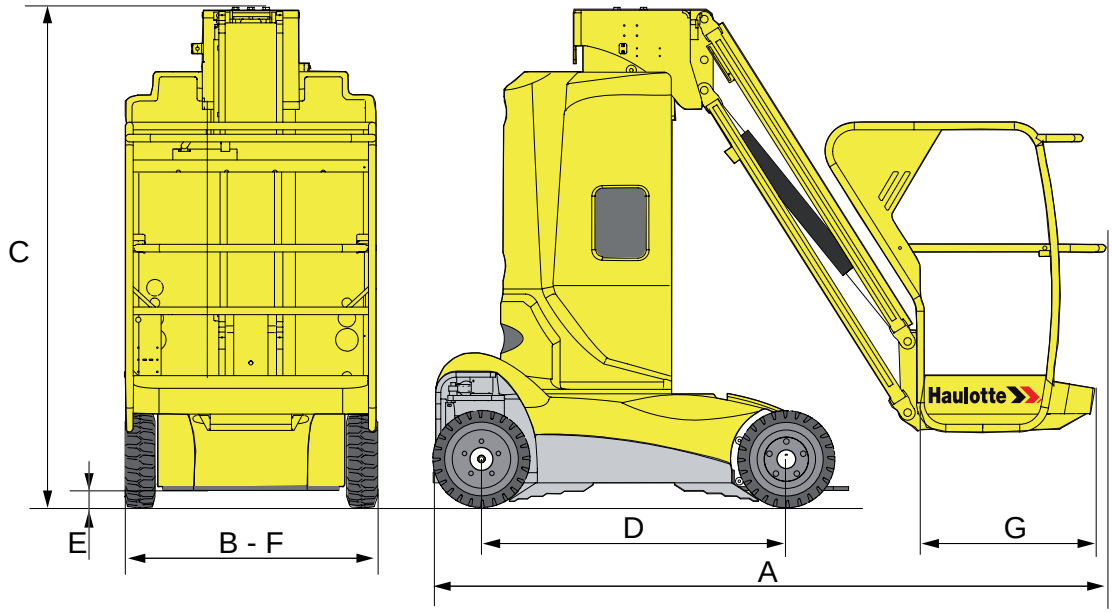

Overall dimension specifications

Marking	STAR 8		STAR 10	
	Mètre	Feet inch	Mètre	Feet inch
A	2,70	8 ft 10 in	2,70	8 ft 10 in
B	1,00	3 ft 3 in	1,00	3 ft 3 in
C	1,99	6 ft 6 in	1,99	6 ft 6 in
D	1,20	3 ft 11 in	1,20	3 ft 11 in
E	0,10	0 ft 3 in	0,10	0 ft 3 in
F x G	1,00 x 0,78	3 ft 3 in x 2 ft 7 in	1,00 x 0,78	3 ft 3 in x 2 ft 7 in

Downloaded from www.Manualslib.com manuals search engine

https://truckmanualshub.com/

3 - Working area

3.1 - MACHINE STAR 6

Working area

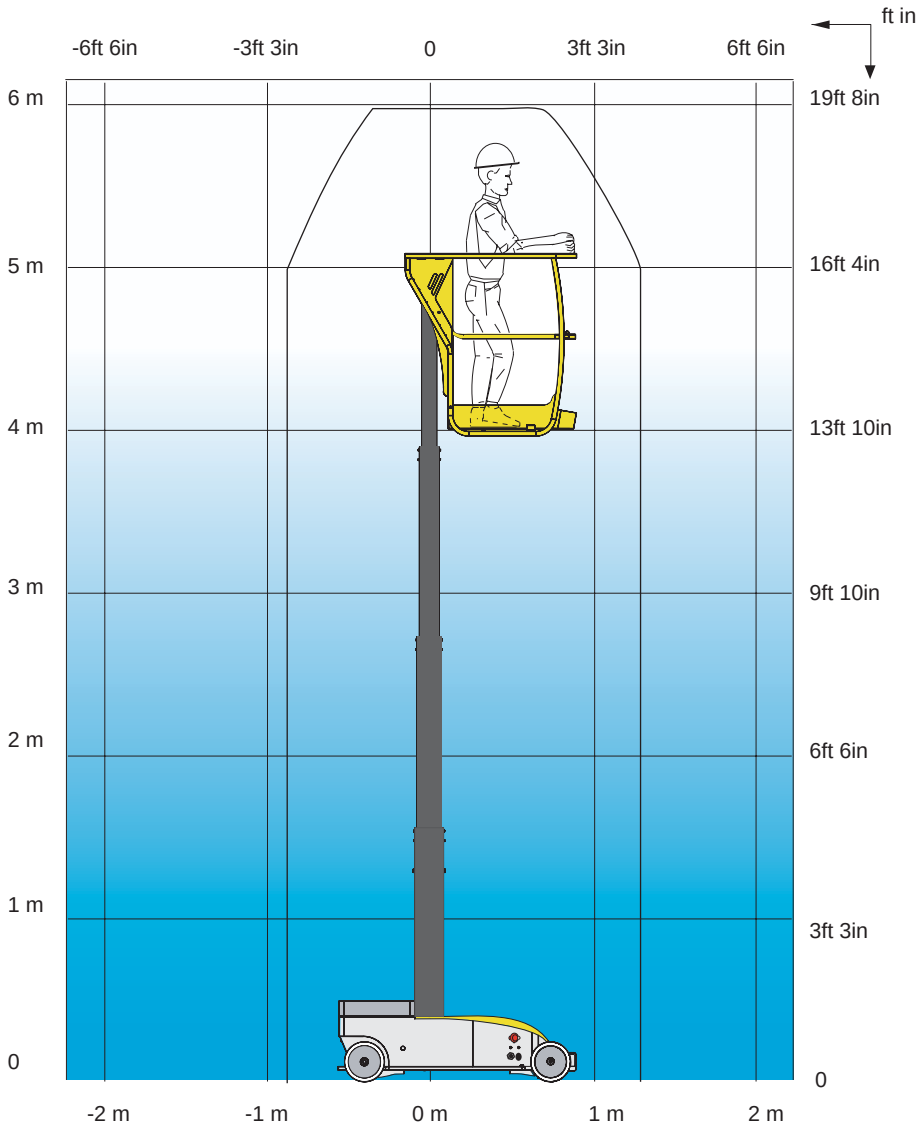

Downloaded from www.Manualslib.com manuals search engine

https://truckmanualshub.com/

3.2 - MACHINE STAR 6 P

Working area

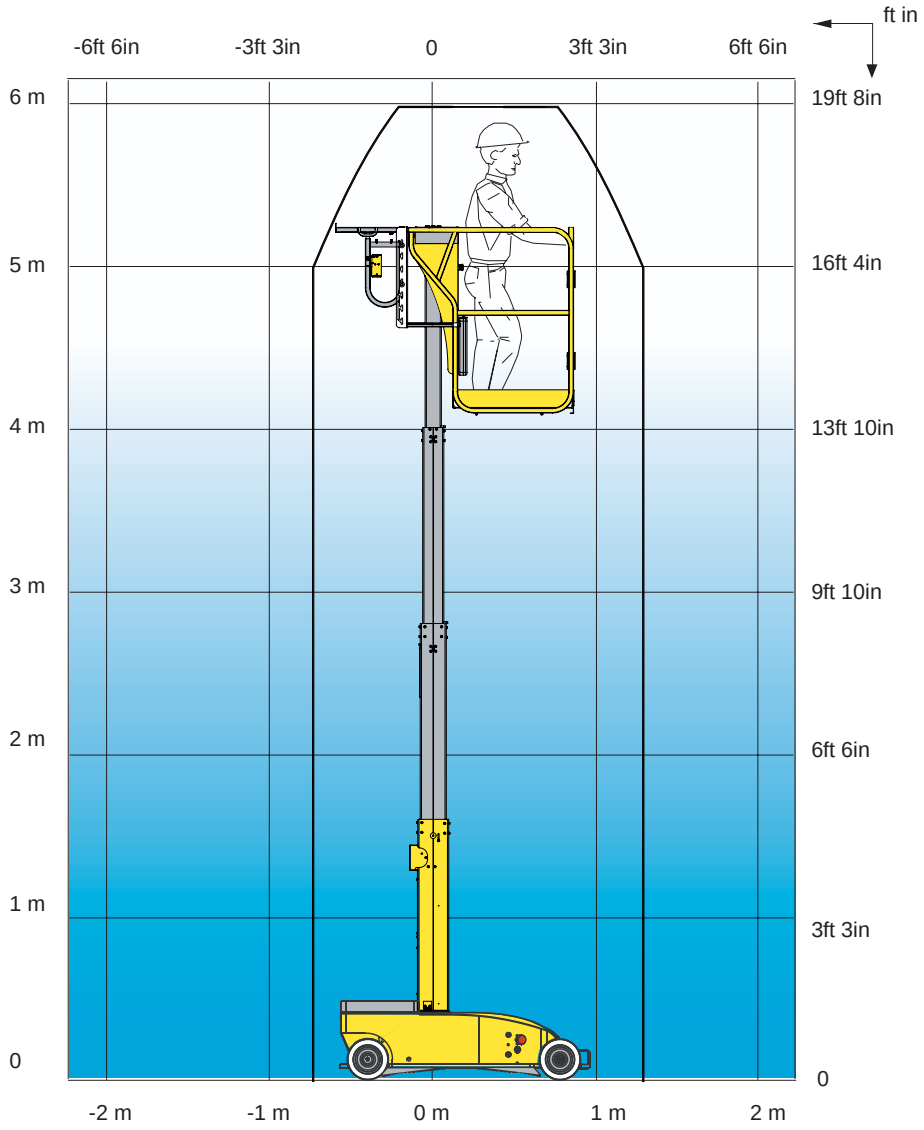

Downloaded from www.Manualslib.com manuals search engine

https://truckmanualshub.com/

3.3 - MACHINE STAR 8

Working area

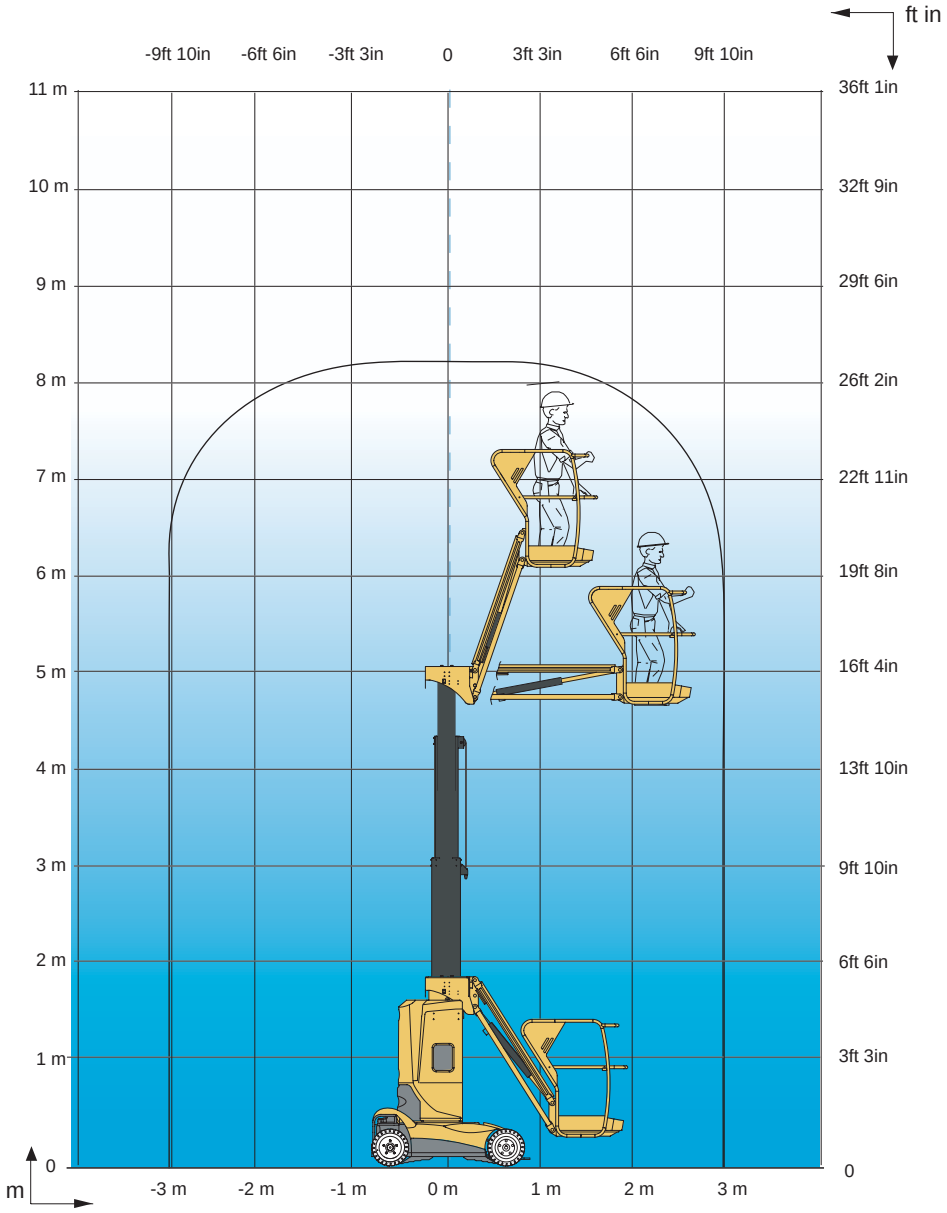

Downloaded from www.Manualslib.com manuals search engine

https://truckmanualshub.com/

3.4 - MACHINE STAR 10

Working area

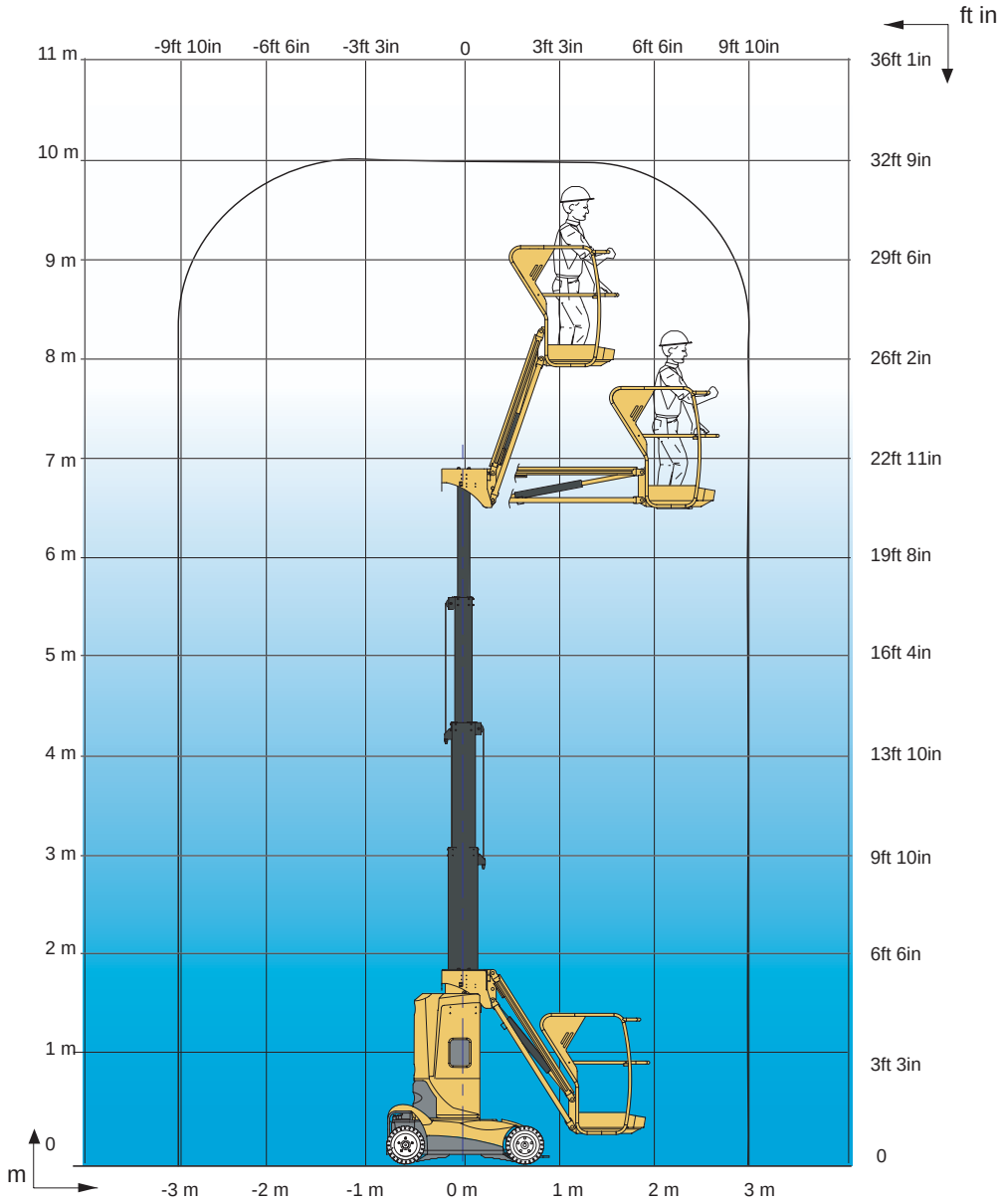

Downloaded from www.Manualslib.com manuals search engine

https://truckmanualshub.com/

4 - AS - CE standard specifics

The following tests must be performed after :

- A major technical intervention.
- An accident which results in major component failure on the machine.

• The following tests must be performed by a qualified person in secure conditions.

• The test results must be fully recorded.

To avoid the machine tipping over, it must be secured during the test (by a chain or anchorage point).

4.1 - OVERLOAD TEST

The overload test is performed with 125 % of the nominal load. See paragraph 1.12.3 of the AS1418.10 standard for test details.

Load table

Machine	Test load	
	Pound (lb)	Kilogramme (kg)
STAR 6	496	225
STAR 6 P	496	225
STAR 8	551	250
STAR 10	551	250
STAR 26J	626	284

The machine must not show any signs of permanent distortion after the test.

Tests to be performed by a qualified competent person under optimal conditions and results must be fully recorded.

4.2 - FUNCTIONAL TEST

Functional tests shall confirm the following: :

- The machine performs all movements without jerking, while carrying the nominal load.
- All security systems are operating correctly.
- Maximum authorized operating speeds are not exceeded.

Downloaded from www.Manualslib.com manuals search engine

https://truckmanualshub.com/

4.3 - STABILITY TEST

The stability test proves that the machine is stable in its most unfavourable position. The moment when the machine tips is calculated by combining loads in the machine's most unfavorable position of stability (load W applied over distance L).

Stability table for STAR 6

	T (°)	W		L		Tipping moment
		Pound (lb)	Kilogramme (kg)	Feet inch (ft in)	Mètre (m)	Déca Newton Mètre (DaN.m)
Horizontal	2,5	99	45	16-9	5,1	231

Stability for STAR 6

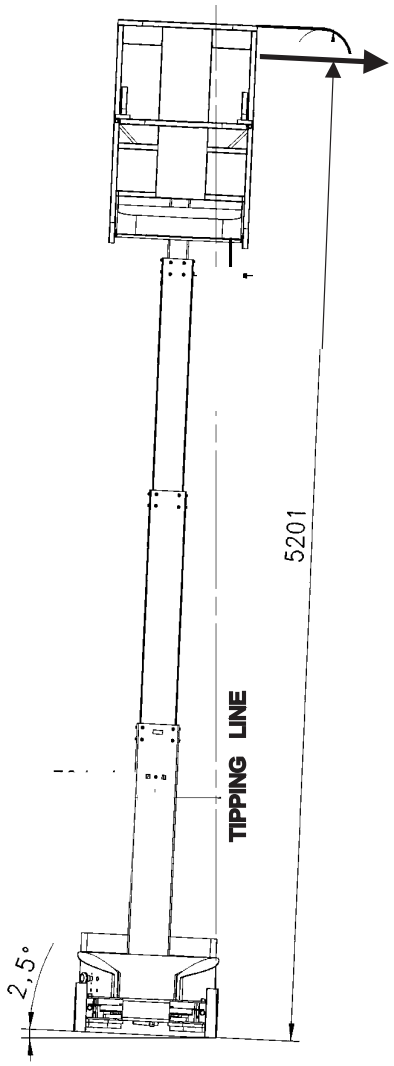

Downloaded from www.Manualslib.com manuals search engine

https://truckmanualshub.com/

G - Technical characteristics

Stability table for STAR 6 P

	T (°)	W		L		Tipping moment
		Pound (lb)	Kilogramme (kg)	Feet inch (ft in)	Mètre (m)	Déca Newton Mètre (DaN.m)
Horizontal	2,5	99	45	16-9	5,1	228

Stability for STAR 6 P

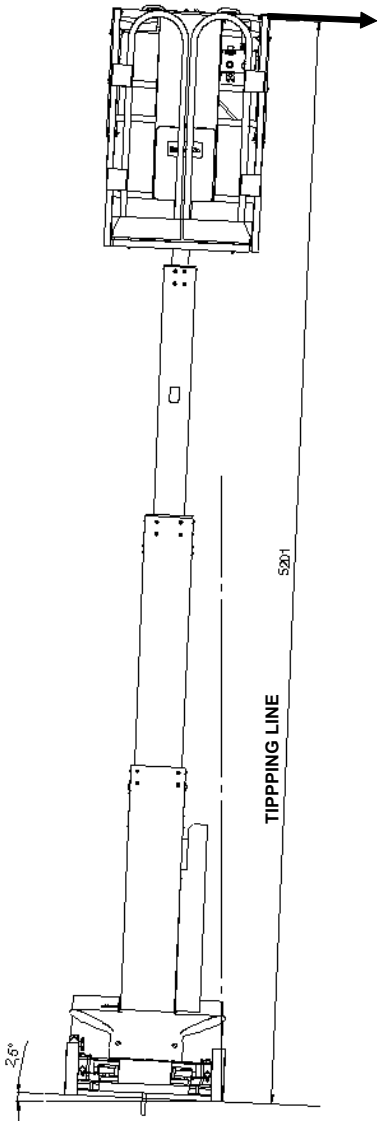

Downloaded from www.Manualslib.com manuals search engine

https://truckmanualshub.com/

Stability table for STAR 8

	T (°)	W		L		Tipping moment
		Pound (lb)	Kilogramme (kg)	Feet inch (ft in)	Mètre (m)	Déca Newton Mètre (DaN.m)
Horizontal	3,5	265	120	21-0	6,4	770

Stability for STAR 8

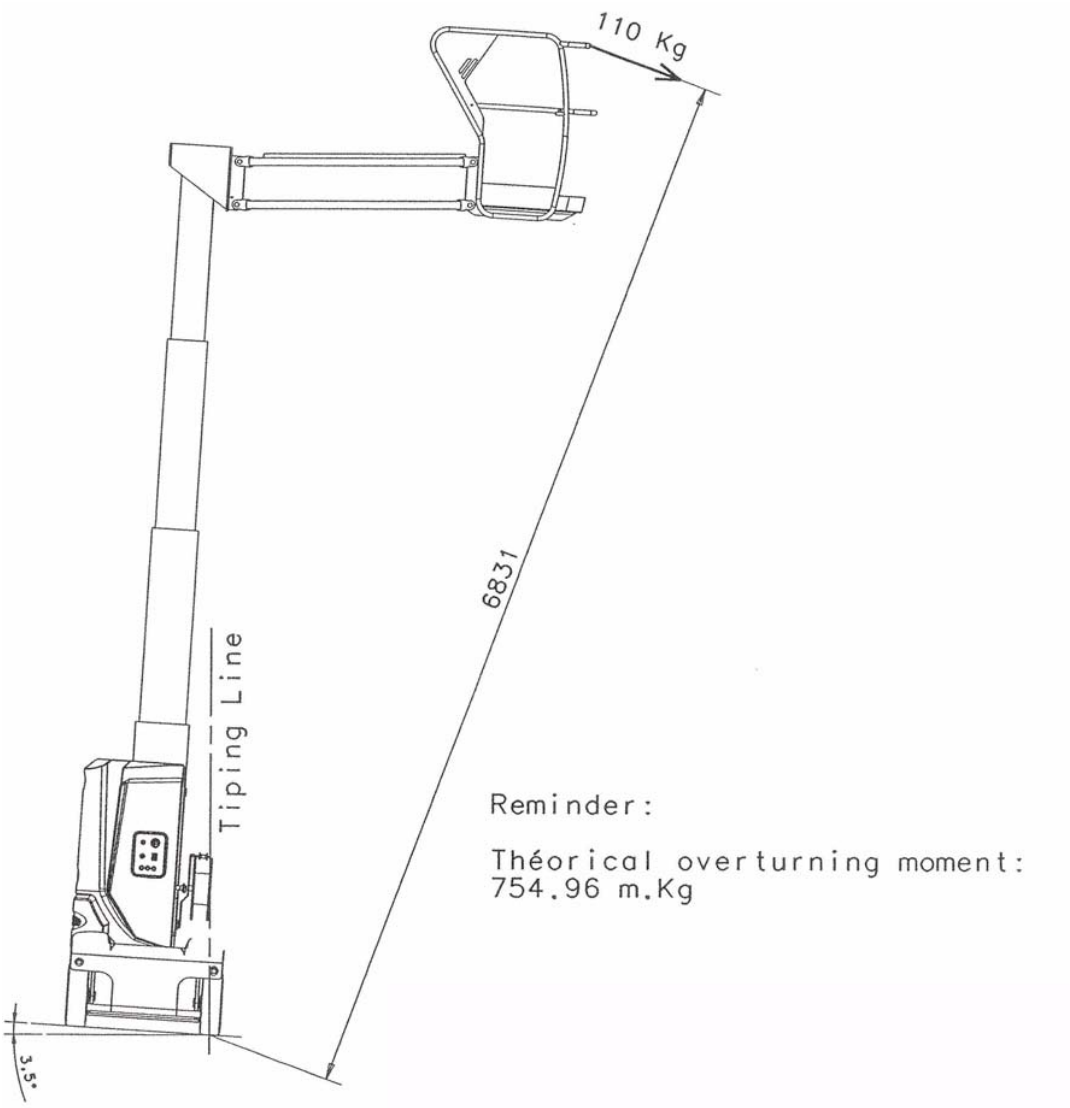

Downloaded from www.Manualslib.com manuals search engine

https://truckmanualshub.com/

Stability table for STAR 10

	T (°)	W		L		Tipping moment
		Pound (lb)	Kilogramme (kg)	Feet inch (ft in)	Mètre (m)	Déca Newton Mètre (DaN.m)
Horizontal	3,5	245	111	26-3	8	890

Stability for STAR 10

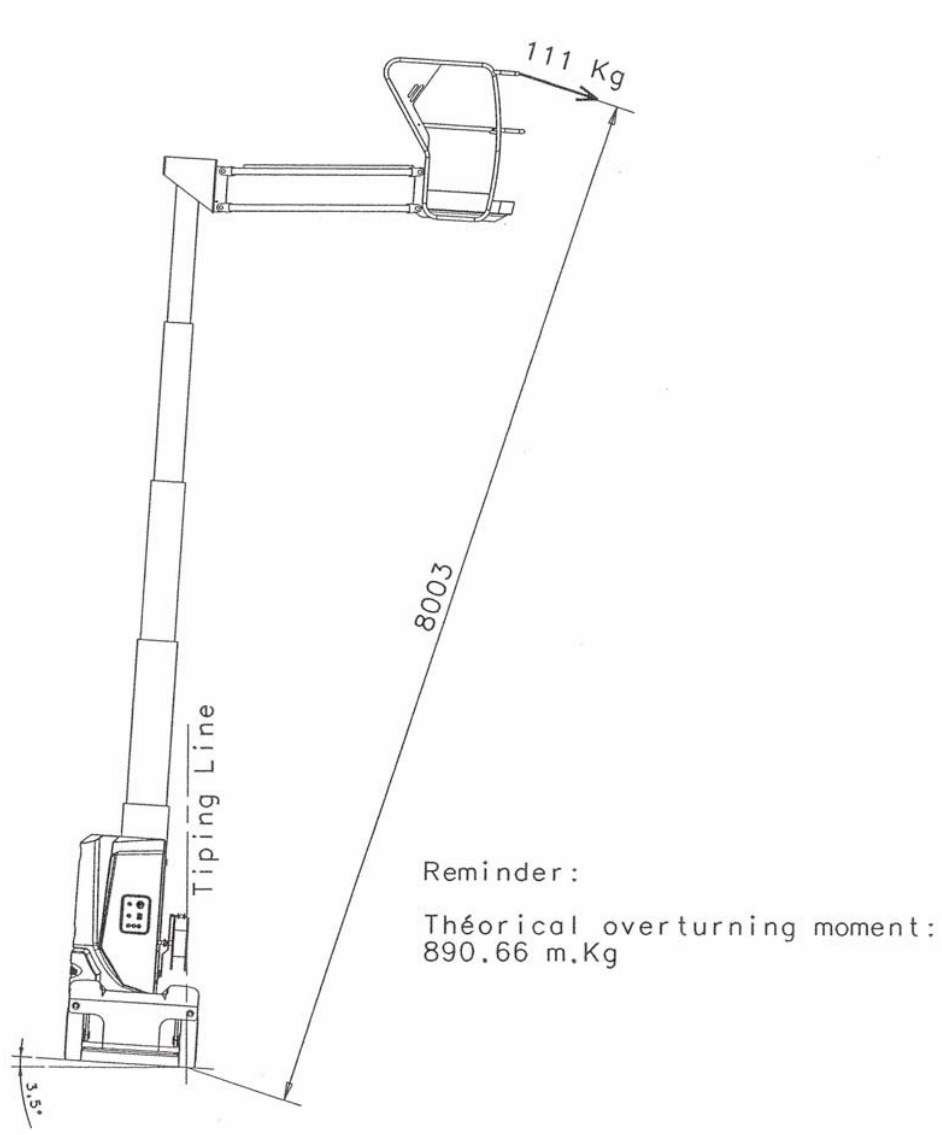

See paragraph 1.12.2 of the AS1418.10 standard for test details.

The machine must return to a stable state without tipping over.

Downloaded from www.Manualslib.com manuals search engine

https://truckmanualshub.com/

5 - Declaration of conformity

CE Declarations of Conformity only apply to machines that are certified for the European market.

Declaration of conformity - Electric platforms

DECLARATION DE CONFORMITE CE

(certificate of conformity with CE-directives)

Nom et adresse du constructeur ou son représentant autorisé dans la communauté :
Name and address of manufacturer or their authorised agents within the European Community

HAULOTTE Group Siège Social
La Péronnière
BP 09
42152 L'HORME Cedex
FRANCE

HAULOTTE GROUP
Usine de _____
_____
_____
_____

Déclare que la machine décrite ci-dessous :
(Declares that the technical installation described below)

Nacelle ou Plate-forme mobile élévatrice de personnes
(Elevating work Platform)

Machine au nom commercial *(Machine with the commercial name)* ____,
Conforme au type *(in compliance with the type)* ____
Numéro de série *(Serial number)*: ____

Se conforme aux dispositions de la directive machine 2006/42/CE.
(Conforms to the provisions set out in the EC Machinery Directive 2006/42/EC)

N° de certificat *(Certificate no)*: ____ ____ ___ __ __ ____

Cette machine est identique au modèle ayant fait l'objet d'un examen CE de type par l'organisme notifié :
(This machinery is identical to the model that was tested in an EC type-examination by the appointed body)

Organisme certifié (*Authorised certification body*) :

_____ n° ___
_____
_____

- Se conforme également aux dispositions de la directive 2004/108/CE concernant la compatibilité électromagnétique.
  (is in accordance with the provisions contained in EEC Directive no. 2004/108/CE on electromagnetic compatibility)
- Se conforme aux principales exigences des normes harmonisées suivantes : EN 280 et EN 954.
  (also fulfils the principal requirements of the following harmonised standards: EN 280 and EN 954)

Fait à L'Horme le : ……

_____
Directeur Division _____ */Managing Director, _____ Division*

Signature

Cette déclaration est conforme aux exigences de l'annexe II-a de la directive 2006/42/CE. Toute modification de la machine décrite ci-dessus rendrait cette déclaration caduque.
This declaration conforms with the requirements of annex II-A of the directive 2006/42/EEC.Any modification to the above described machine violates the validity of this declaration.

Downloaded from www.Manualslib.com manuals search engine

https://truckmanualshub.com/

1 - Intervention register

In order to protect your HAULOTTE® guarantee, each maintenance or repair operation must be entered in the INTERVENTION REGISTER, which can be found at the end of the maintenance book delivered with your machine.

Intervention register

Haulotte GROUP

H - REGISTRE D'INTERVENTION

REGISTRE D'INTERVENTION HAULOTTE SERVICE				
Date	Nature de l'intervention	Nbre heures	Intervenant	N° intervention Haulotte service

MODELE

Downloaded from www.Manualslib.com manuals search engine

https://truckmanualshub.com/

H - Intervention register

Downloaded from www.Manualslib.com manuals search engine