https://truckmanualshub.com/

December 2017, en-GB

Dismantling information

P, G, R and S series

SCANIA

https://truckmanualshub.com/

https://truckmanualshub.com/

Table of contents

General **1**
Dismantling information 1
Exchange components 3
Hazardous substances and materials 4
Identification of plastics 9
Lifting and supporting on stands 27
Engine **38**
Engine 38
Oil filter 41
Rotor 43
Engine oil 45
Cooling system **46**
Coolant 46
Fuel and exhaust systems **50**
Dismantling the silencer 50
Reductant tank 54
Fuel tank 57
Coupling **60**
Connection and operation 60
Gearbox **63**
Gearbox 63
Brakes - Pneumatic system **65**
Compressed air tanks 65
Spring brake chamber 66
Suspension **68**
Air suspension 68
Steering **71**
Removal - Airbag 71
Electrical system **75**
Chassis central electric unit 75
Removal - Curtain airbag 77
Batteries 81

https://truckmanualshub.com/

Instrument **83**

Removal - Instrument panel 83

Cab - Body - Canopy **93**

Cab tilt system 93

U4, Refrigerator 95

A/C compressor 97

Working with refrigerant 99

Compressor - auxiliary cab cooler (E114) 101

General

Dismantling information

General

This information is aimed at everybody dealing with reconditioning and scrapping of Scania vehicles. The information applies to workshops, dismantling and recycling companies.

The information is applicable to new Scania models. However, not all parts are covered by this information booklet. The information is incomplete.

Draining and removing describes how environmentally hazardous waste should be separated from the vehicle (pre-treatment).

Identification of materials is to facilitate identification and sorting of material for recycling.

Colours and a material code identify polymer materials. Parts consisting of two plastic materials are two-coloured. Where there are more than one variant of a part, the codes of both materials will be stated.

Scania and the environment

Scania works continuously towards products, processes and services with reduced impact on the environment. The environmental work therefore focuses on doing the right thing from the beginning, and reducing the consumption of resources such as base materials and energy.

By including environmental aspects in the product development from an early stage, the product's impact on the environment can be reduced during the whole life cycle - from research and development, via production and usage, to end-of-life treatment. Lower fuel consumption and reduced exhaust emissions are always in focus. An environmentally appropriate end-of-life treatment can be made possible by adapting the design solutions, by choosing materials with little environmental impact, and by avoiding hazardous materials.

A more environmentally friendly production is obtained by, among other things, reducing the consumption of water, chemicals, base materials and energy. Residual products such as chips and scrap are utilised.

Scania supports its customers in choosing the right vehicle for a certain transport task. This reduces both fuel consumption and wear. Scania can also assist with driver training and inspection programmes. Correct maintenance is important in order to maintain the environmental characteristics of the vehicle. About 1,500 Scania workshops are found around the world to provide this.

Dismantling information and correct marking of components and materials facilitate end-of-life treatment.

End-of-life treatment of vehicles

With the ever increasing global population and economical development, efficient usage of the resources is becoming more and more important. Material reuse and recycling are two ways to contribute to efficient usage of resources.

Scania's involvement in end-of-life treatment issues aims for responsible, environmentally responsible and resource-efficient after-life management of Scania vehicles.

End-of-life treatment comprises a number of procedures that the vehicle must undergo, for example:

- Pre-treatment: E.g. draining fluids, emptying climate control systems and removing batteries
- Re-use: Parts, reconditioned or non-reconditioned, are being re-used after removal. Scania has its own service exchange system.

© Scania CV AB

 https://truckmanualshub.com/

- Recycling: The material is re-used in the production of new products with the same or a lower quality rating.
- Energy recovery: Combustion with energy recovery.

Only disposal remains if none of the above alternatives is possible.

 © Scania CV AB

Exchange components

General

As part of its efforts to be environmentally-friendly, Scania offers a wide range of Service Exchange components. Units that have been returned are reconditioned so as to have the same technical status as a new part. Scania Service Exchange is a sustainable way of reducing harmful carbon dioxide emissions, energy use and consumption of raw materials.

Exchange components have the same warranty as other spare parts.

Ordering exchange components

Exchange components are ordered from Scania in the same way as other spare parts. Orders for spare parts and exchange components can be placed on the same order.

Scania service exchange system

For more information about the Scania service exchange system, you can contact a Scania dealer or a Scania workshop.

© Scania CV AB

https://truckmanualshub.com/

Hazardous substances and materials

The following list is a guide of lubricants, fluids and parts that are recovered from the truck during pre-treatment. Volumes are approximate.

ENVIRONMENT

Avoid spillage and use a receptacle when handling hazardous fluids

Engine:	Specification:	Quantity:
7-9 litre engine	Oil	27 - 38 litres
D9/13 XPI	Fuel filter housing, diesel	0.4 l
D9/13/16 XPI	High pressure fuel pump, oil	0.3 l
13 litre engine	Oil	40 - 44 litres
D16 XPI	Fuel filter housing, engine, diesel	0.2 l
D13 PDE	Fuel filter housing	0.3 l
16 litre engine	Oil	32 - 47 litres

Cooling system:	Specification:	Quantity:
7-9 litre engine	Coolant	30-52 litres
13 litre engine	Coolant	40-62 litres
16 litre engine	Coolant	45-102 litres

Chassis:	Specification:	Quantity:
Fuel tank	Diesel	-

Steering:	Specification:	Quantity:
Steering axle	Transmission oil, ATF	2.2 litres

Gearbox:	Specification:	Quantity:
Gearbox	Oil	13-50 litres
Transfer gearbox	Oil	6.5 litres
Opticruise, longitudinal stroke damper	Oil	0.09 litres
Retarder	Oil	approx. 7.5 litres
M33 electric machine	Oil	5.5 litres

© Scania CV AB

https://truckmanualshub.com/

Axle gear:	Specification:	Quantity:
Axle gear	Oil	9-13 litres
Axle gear with bogie gear	Oil	11-12 litres
Portal axle (ZF)	Oil	19.5 litres

Hub:	Specification:	Quantity:
Hub reduction gears	Oil	2 litres
ZF hub	Oil	0.7 litres

Cab:	Specification:	Quantity:
Refrigerator	Refrigerant R134a	30-47 g
Auxiliary cab cooler	Refrigerant R134a	
A/C	Refrigerant R134a	approx. 1,200 g
Airbag (H14)	-	-
Safety belt with belt pretensioner (H16, H17)	-	-
Side curtain airbags (H30, H31)	-	-

Cab tilt system:	Specification	Quantity
Pump and cylinder	Pentosin oil	1.7-2 l

Electrical parts:	Specification	Quantity
Battery, VPS	-	-
Starter battery	-	-
Battery cable terminals	Lead, brass	-

Wheel	Specification	Quantity
Balancing weights	-	-

© Scania CV AB

https://truckmanualshub.com/

Isocyanates

WARNING!

Isocyanates are found in some paints, putty, adhesive and plastic foams that are used in motor vehicles. Inhaling isocyanates in the form of vapour, dust or aerosols may cause irritation of mucous membranes causing asthmatic symptoms from the respiratory passages and an impaired function of the lungs. Even brief exposure to high concentrations can cause problems of permanent hypersensitivity

When products containing isocyanates in combined form are heated to temperatures above 150°C, isocyanates are released. This results in a high degree of exposure. This applies for example to grinding, welding and cutting products to which a top coat of paint containing isocyanates has been applied. For this reason, make sure that there is adequate ventilation in the areas where the work is carried out. Personnel carrying out such work should use protection such as respiratory masks with air supply.

Do not take any risks when carrying out work involving heating materials that may contain isocyanates; always presume that the material contains isocyanates and take the necessary safety precautions.

© Scania CV AB

https://truckmanualshub.com/

Vehicle fires

WARNING!

Where a vehicle is involved in a fire, a number of substances that are hazardous to health and the environment are formed. Smoke and water carry these substances and to a certain extent they remain in the vehicle (ashes).

Use protective equipment such as respiratory protective equipment and gloves when working on vehicles that have been involved in a fire. Avoid skin contact with ashes.

When dismantling a vehicle that has been involved in a fire, the following must be taken into consideration:

The vehicle may be weakened, which can have a negative affect on lifting points. This should also be taken into consideration when tilting cabs.

Gas dampers which have not been punctured represent an explosion risk, as the material they are made of may be weakened or damaged.

Wash the vehicle before starting dismantling.

Keep the following in mind:

Do not start dismantling before the cause of the fire has been fully investigated.

Power should be disconnected on vehicles which have been involved in a fire as soon as possible, by disconnecting the battery cables. This is to prevent short circuits, which can result in a new fire.

Corrosion is accelerated on vehicles which have been involved in a fire, for example due to moisture in combination with ashes and some extinguishing agents. The vehicle should be processed as soon as possible, to minimise the risk of undesirable leakage of environmentally hazardous fluids and substances.

Fire damaged vehicles should be washed in a way that allows the washing water to be disposed of in an environmentally responsible way, as it contains environmentally hazardous contaminants

© Scania CV AB

https://truckmanualshub.com/

IMPORTANT!

When carrying out any type of work which involves heating products, the relevant safety regulations for this type of work should be followed.

Cut the power to the vehicle before starting work.

When working with air bellows, the system must not be pressurised.

© Scania CV AB

https://truckmanualshub.com/

Identification of plastics

Plastics are divided into 2 main groups; meltable (thermoplastics) and non-meltable (thermosets).

Thermoplastics are cast or injection moulded and unlike thermosets they lack bonds between the plastic molecules. Thermoplastics can be recycled with good results.

Thermoplastic recycling is a good way to conserve base materials and save money. There are different types of thermoplastics and it is important to keep them separate during recycling work so that the mechanical properties of the recycled material are not impaired. Certain material combinations can be compensated using additives that make the plastics miscible. Mixing in new base material can also improve the properties.

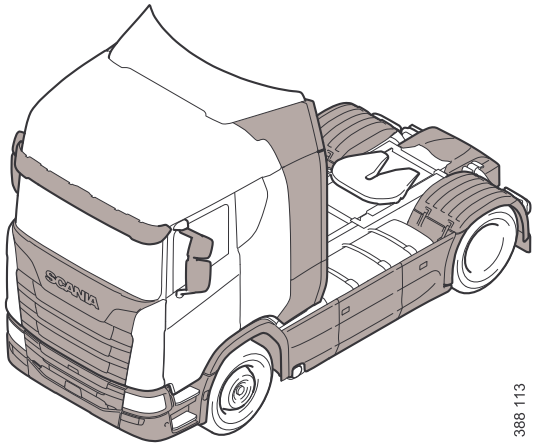

Parts made of thermoplastic

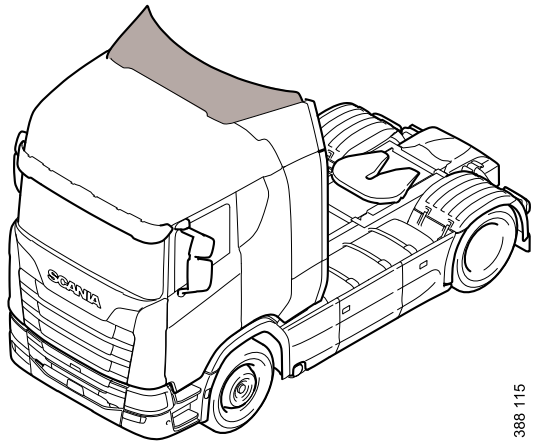

Parts made of thermosets

© Scania CV AB

 https://truckmanualshub.com/

Examples of plastics that are not suitable for mixing are listed in the table below:

		Base material									
		ABS	**PA**	**PBT**	**PC**	**PC +ABS**	**PC +PBT**	**PE**	**PMM-A**	**PP**	**PVC**
Mixing material	**ABS**	A	B	A	A	A	A	C	A	C	A
	PA	B	A	B	C	C	C	B	B	B	C
	PBT	A	B	A	A	A	A	B	B	B	C
	PC	A	C	A	A	A	A	B	A	B	C
	PC +ABS	A	B	A	A	A	A	B	A	B	C
	PC +PBT	A	C	A	A	A	A	B	A	B	C
	PE	C	B	C	B	C	C	A	C	A	B
	PMMA	A	B	B	A	A	A	B	A	B	B
	PP	C	B	C	C	C	C	B	A	B	A
	PVC	A	C	C	C	C	C	B	A	B	A

A = Compatible

B = Compatible in purer mixtures (<5%)

C = Incompatible

Painting thermoplastics is disadvantageous with respect to recycling even though there are methods of separating the paint. Plastics age and become brittle. Take a random sample for measuring the melting index to see how far degradation has advanced. See ISO 1133.

Pure plastic that does not contain a high degree of other material (maximum 5% of another plastic), and has not degraded due to long periods of damp or heat treatment can be classified as new plastic, though with reduced properties.

Mixed material or material with molecules degraded to short chains can only be reshaped to very simple products or used for energy recovery.

Thermosets are plastic prepared with hardeners which bind the plastic molecules to each other. Thermosets are strong and rigid but brittle. Therefore it is often reinforced with for example glass fibre mat.

Thermosetting plastics are more difficult to recycle as it is not possible to melt and reshape them. The methods of recycling available today are energy recovery and, to a certain degree, pulverisation for filling.

Marking of plastics

Scania marks all its plastics (where there is space for a mark) in compliance with Scania Standard STD 387, which in turn is based on ISO 11469 - Generic identification and marking of plastic products.

The marks consists of international designations according to the following standards:

ISO 1043 Plastics - Symbols and abbreviations

ISO 1433 Vulcanised rubber - Choice of required properties

ISO 1629 Rubber and latex - Terminology

 © Scania CV AB

The marks start and finish with the arrow symbols > and <.

The following is a brief description of the thermoplastics most commonly used by Scania. Plastics are designated by 2 to 4 capital letters (e.g. >ABS<) and sometimes a mixture of 2 materials (e.g. >ABS +PC<).

There are often fillers (T for Talcum powder, M for Mineral and G for Glass) and the amount of filler as a percentage (e.g. >ABS-T20<, which means ABS with 20% talcum powder).

Part numbers are necessary for identification of parts in production as well as for maintenance and spare parts. Part numbers comprise a five, six or seven digit serial number, e.g. 1234567-LH (part number - left-hand).

The marked date refers to the date of manufacture. The marked date often comprises a date and a time or just a date field.

Plastics designations

>ABS<

Acrylonitrile butadiene styrene:

ABS is easy to recycle and can be mixed with PC to form PC+ABS after recycling, which is advantageous since pure ABS can loose impact resistance when remelted.

>ASA<

Acrylonitrile styrene acrylate:

Used for A-pillar panels, windscreen wiper panels, hinge covers, rear view mirror holders and roof hatch panels. Weather and colour resistant. Easy to recycle.

>EPDM<

Ethylene propylene diene monomer (rubber).

>HDPE<

High density polyethylene.

NR

Nitrile rubber.

>PA<

Polyamide:

The designation is often followed by one of the figures 6, 6.6, 11 or 12. Used primarily for engine compartment components, compressed air and fuel pipes. Recycling is limited by the availability of material. Material properties are not impaired to any significant degree as long as the recycling process takes into account the problems of moisture.

>PBT<

Polybutyleneterephthalate:

Recycling is limited by the relatively small amounts of material available and the lack of material data collected from recycled material.

© Scania CV AB

 https://truckmanualshub.com/

>PMMA<

Polymethylmethacrylate:

Better known as plexiglas. Used primarily for covers for lighting and instruments. Easy to recycle.

>PC<

Polycarbonate:

At Scania, we use PC in exterior sun visors and as lenses. PC is often used in combination with ABS, PBT, PET or ASA.

>PC+PBT<

A mixture of PC and PBT, combining the best characteristics from both materials. It is sensitive to moisture and high temperatures during manufacturing.

Recycling is difficult to assess as the material degrades at high temperatures and after exposure to moisture for long periods.

>PC+ABS<

A mixture of PC and ABS. Recycling is easier than PC+PBT and works well for material for simpler products.

>PE<

Polyethylene:

Several designations can occur depending on the density:

- PE - LD where LD means Low Density
- PE - HD where HD means High Density

Used for certain fuel tanks, etc. Polythene is the most recycled material in the world. The material absorbs fuel which later, and if recycled, emits odour. Material from fuel tanks should therefore undergo special treatment and be used for energy recovery.

>PP<

Polypropylene:

Normally used for interiors, in low temperature applications around the engine and even externally in some cases. PP is easy to recycle.

>PUR<

Polyurethane (Thermosets):

Used in squab cushions, armrests and noise reduction mats. This material is difficult to recycle at present.

>PVC<

Polyvinyl chloride:

Used for cable insulation, for example. This material is difficult to recycle as it is sensitive to impurities. It also forms hydrochloric acid during incineration.

>TPE<

Thermoplastic elastomer (rubber).

 © Scania CV AB

>UP<

Unsaturated polyester (Thermosets):

At Scania, UP is used mostly as pressed SMC - Sheet Moulding Compound. SMC is a semi-finished product comprising fibres (usually glass fibres) and UP mixed with filling, release agent, hardener and sometimes paint. Used most often for air deflector kits and exterior panels.

Overview illustrations

Colour codes

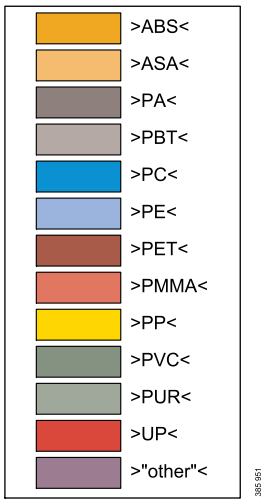

"other" = other polymer materials

© Scania CV AB

 https://truckmanualshub.com/

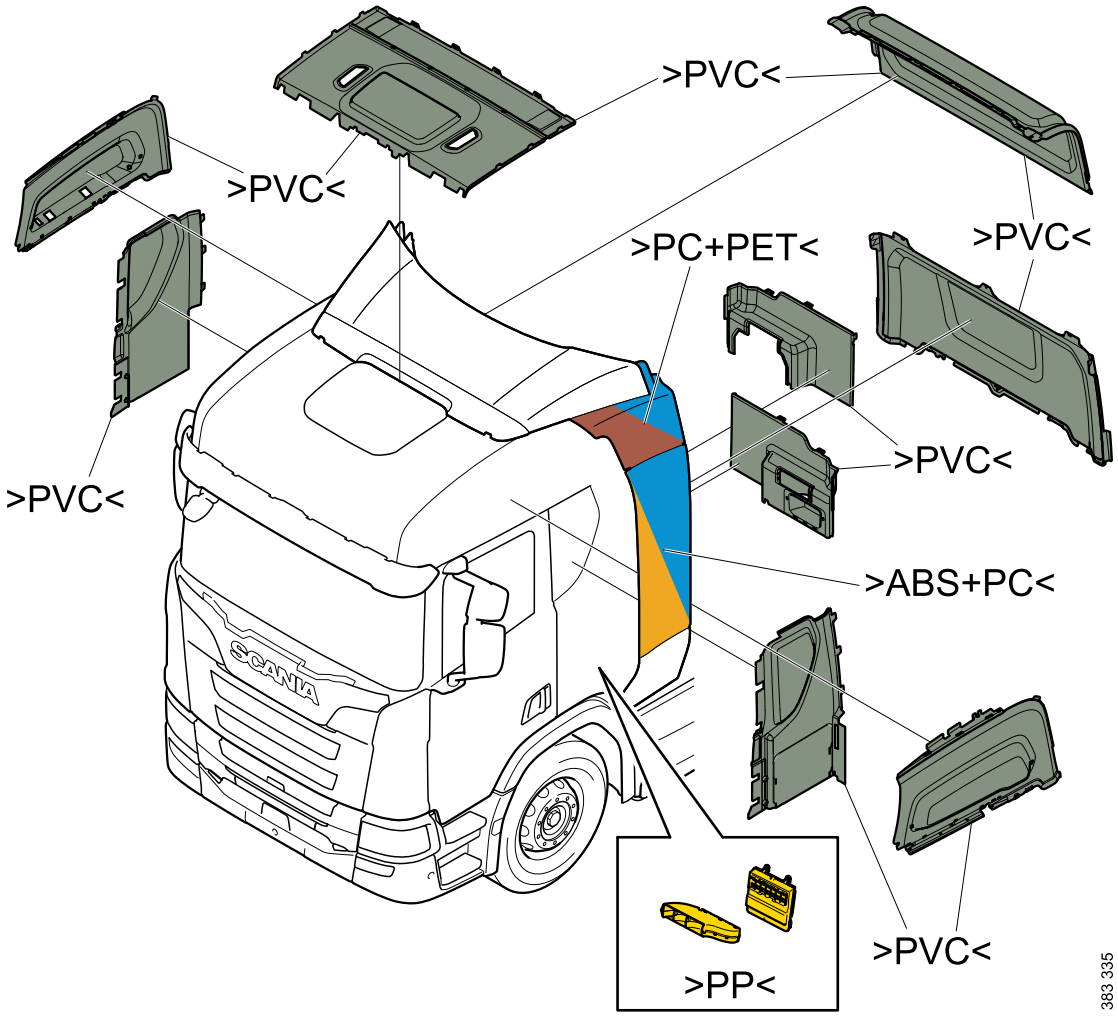

 © Scania CV AB

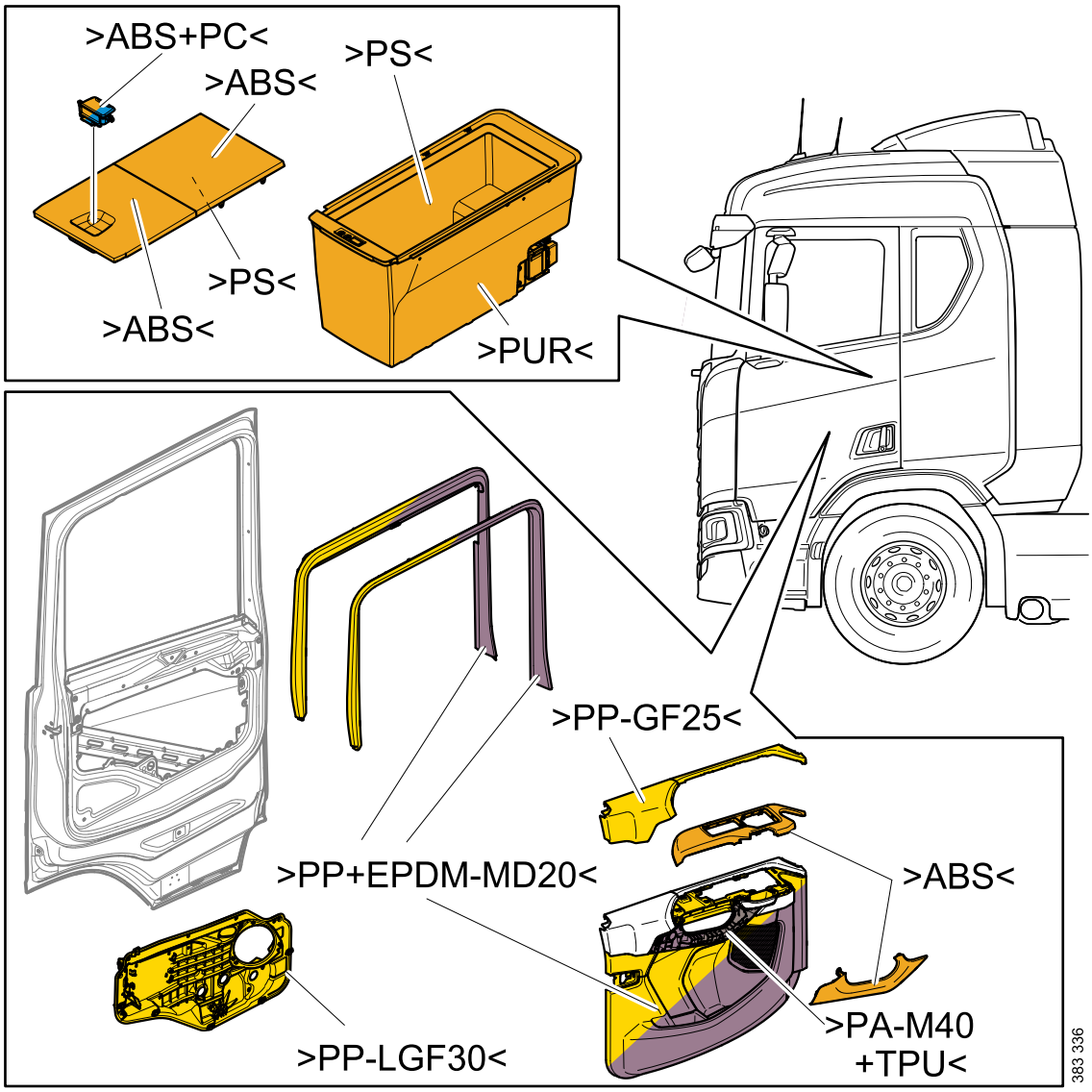
>ABS+PC<
>ABS<
>PS<
>PS<
>ABS<
>PUR<
>PP-GF25<
>PP+EPDM-MD20<
>ABS<
>PA-M40
+TPU<
>PP-LGF30<
383 336

 https://truckmanualshub.com/

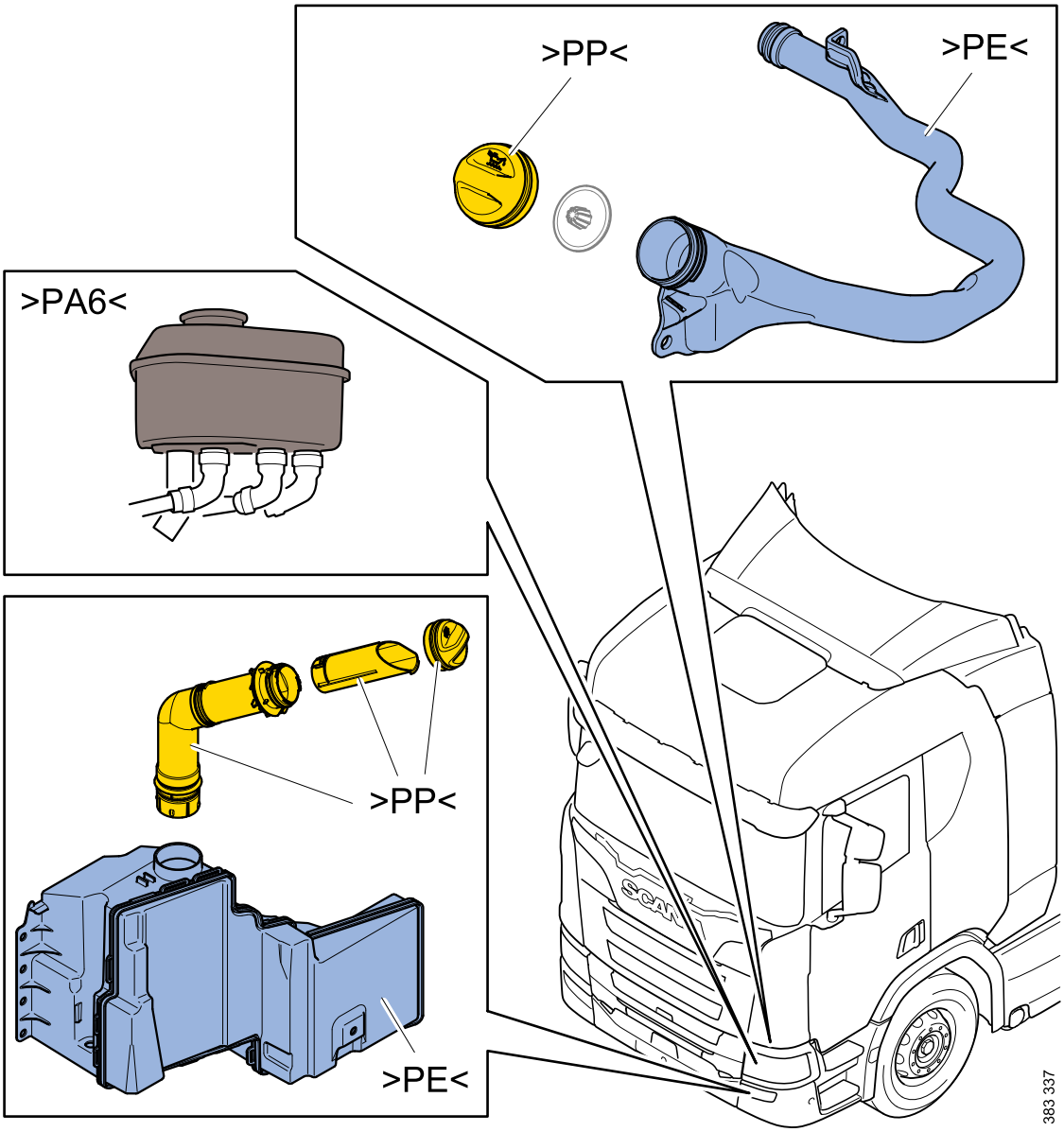

 © Scania CV AB

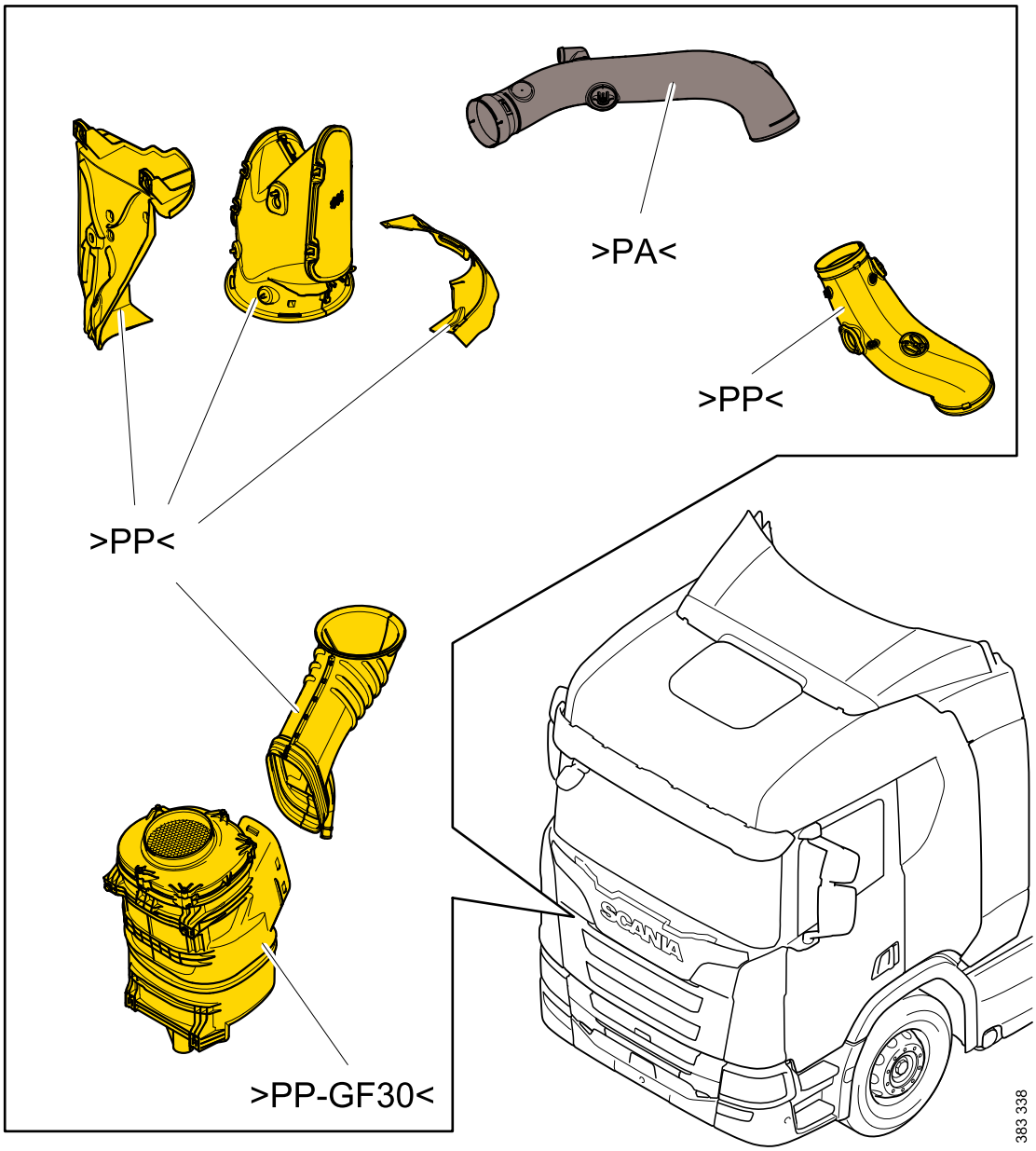

© Scania CV AB

 https://truckmanualshub.com/

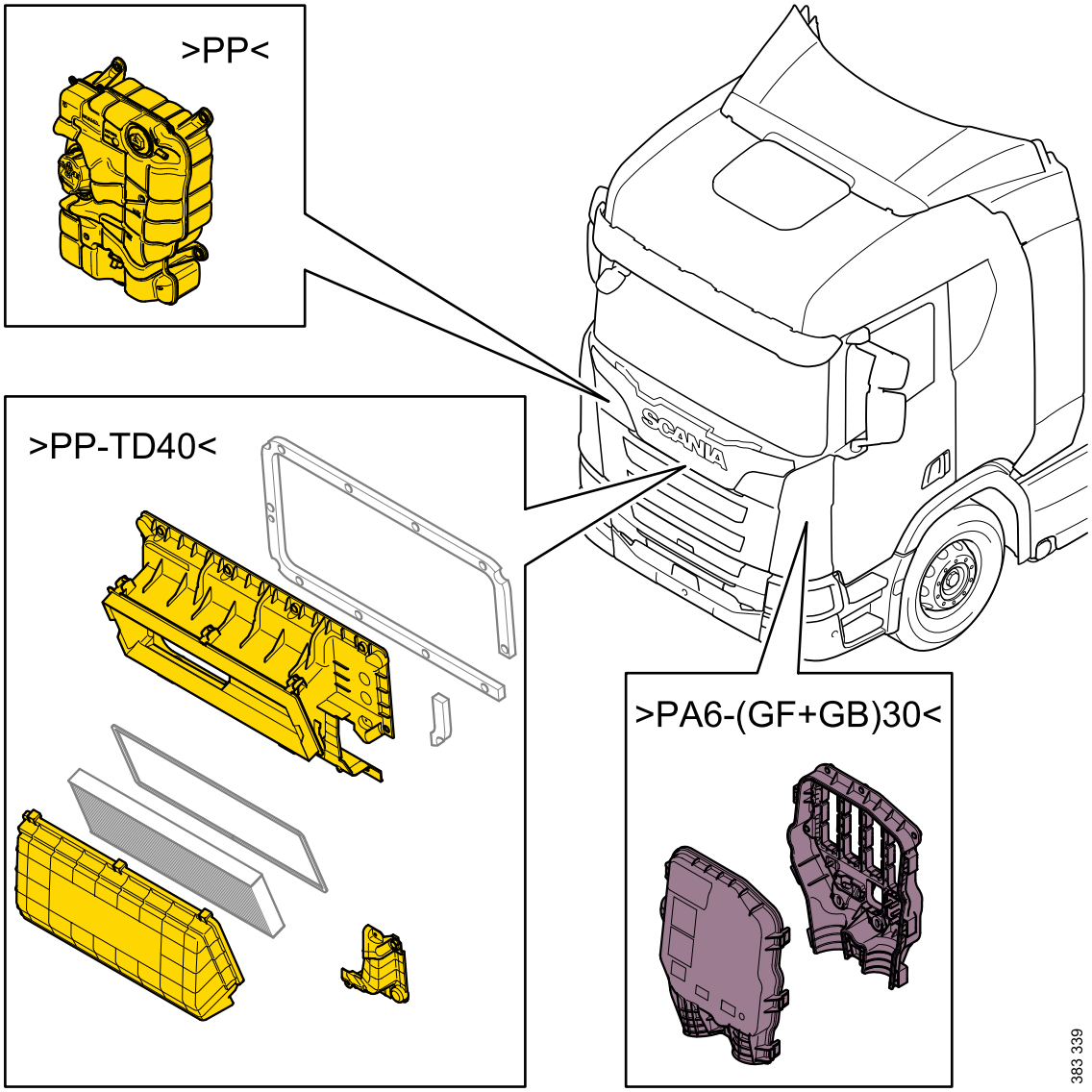

 © Scania CV AB

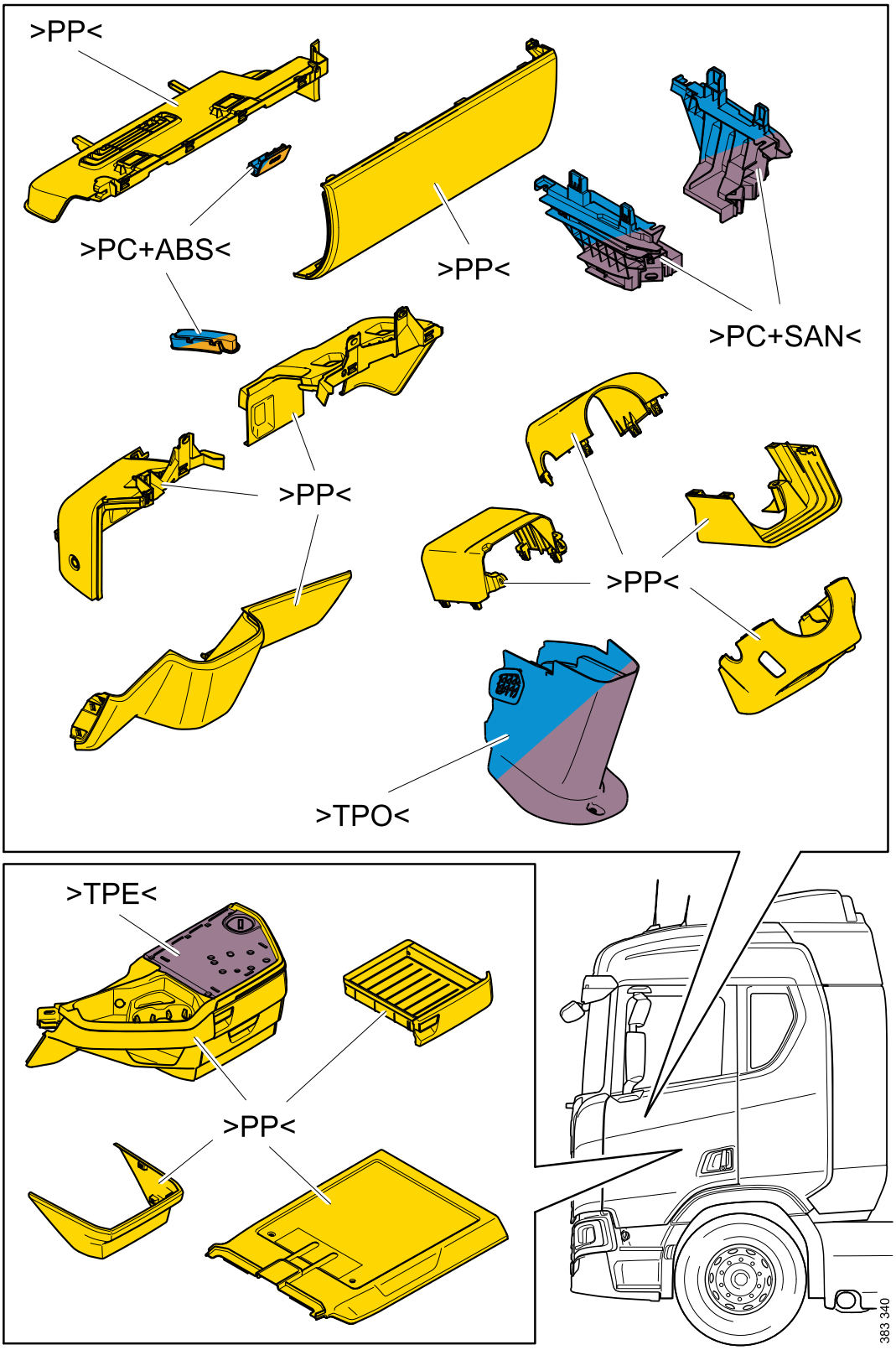

© Scania CV AB

 https://truckmanualshub.com/

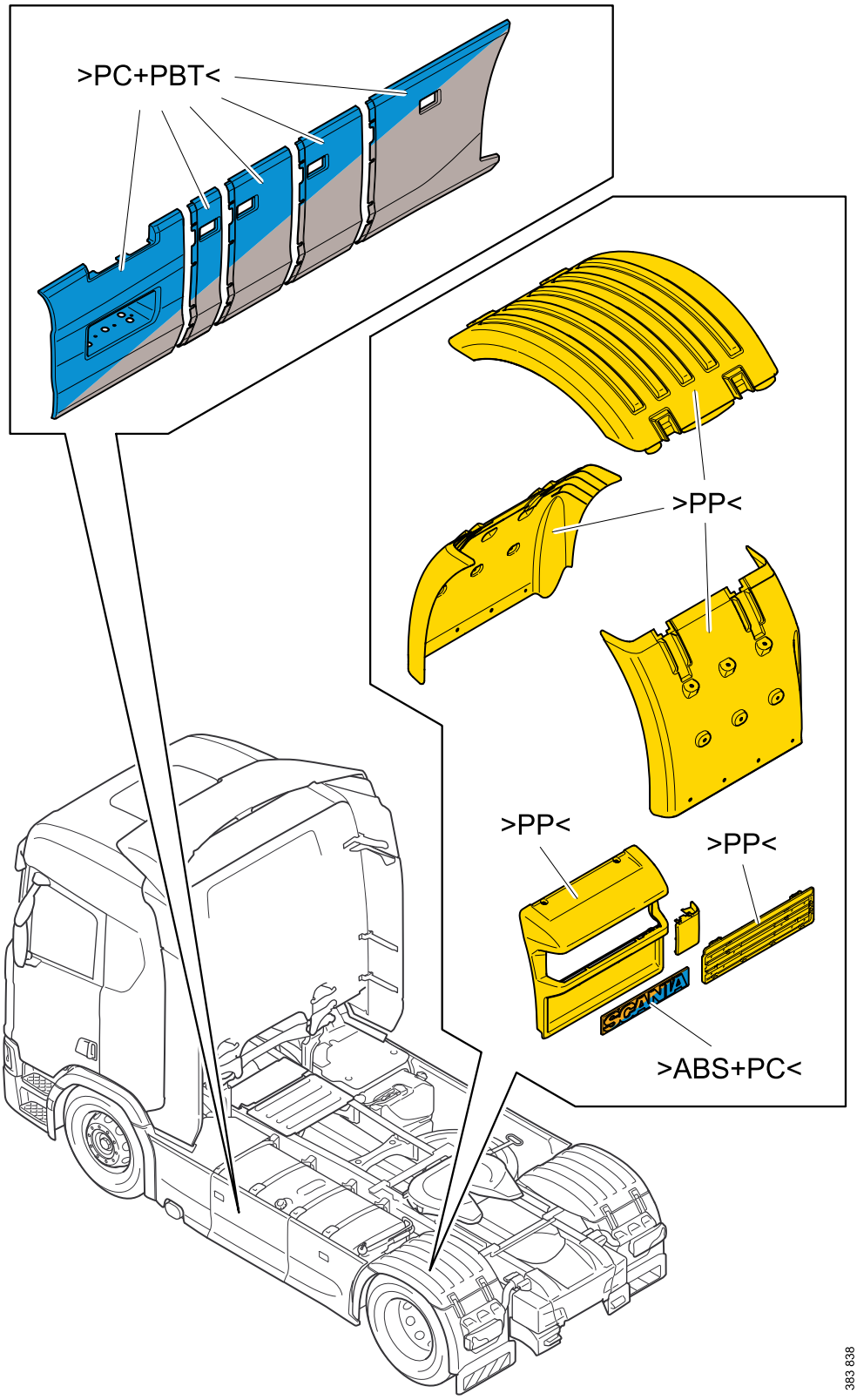

 © Scania CV AB

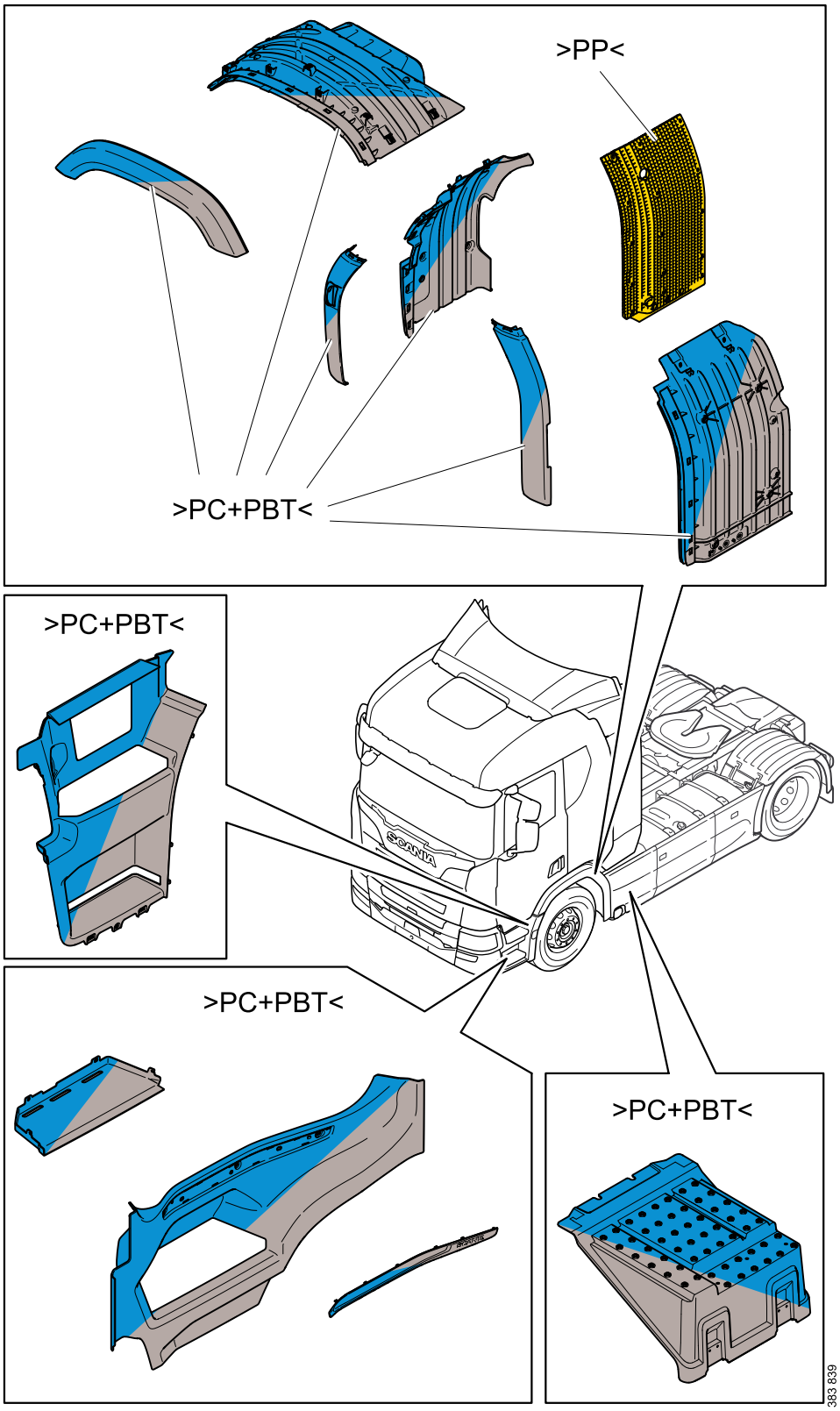
>PP<
>PC+PBT<
>PC+PBT<
>PC+PBT<
>PC+PBT<
383 839

 https://truckmanualshub.com/

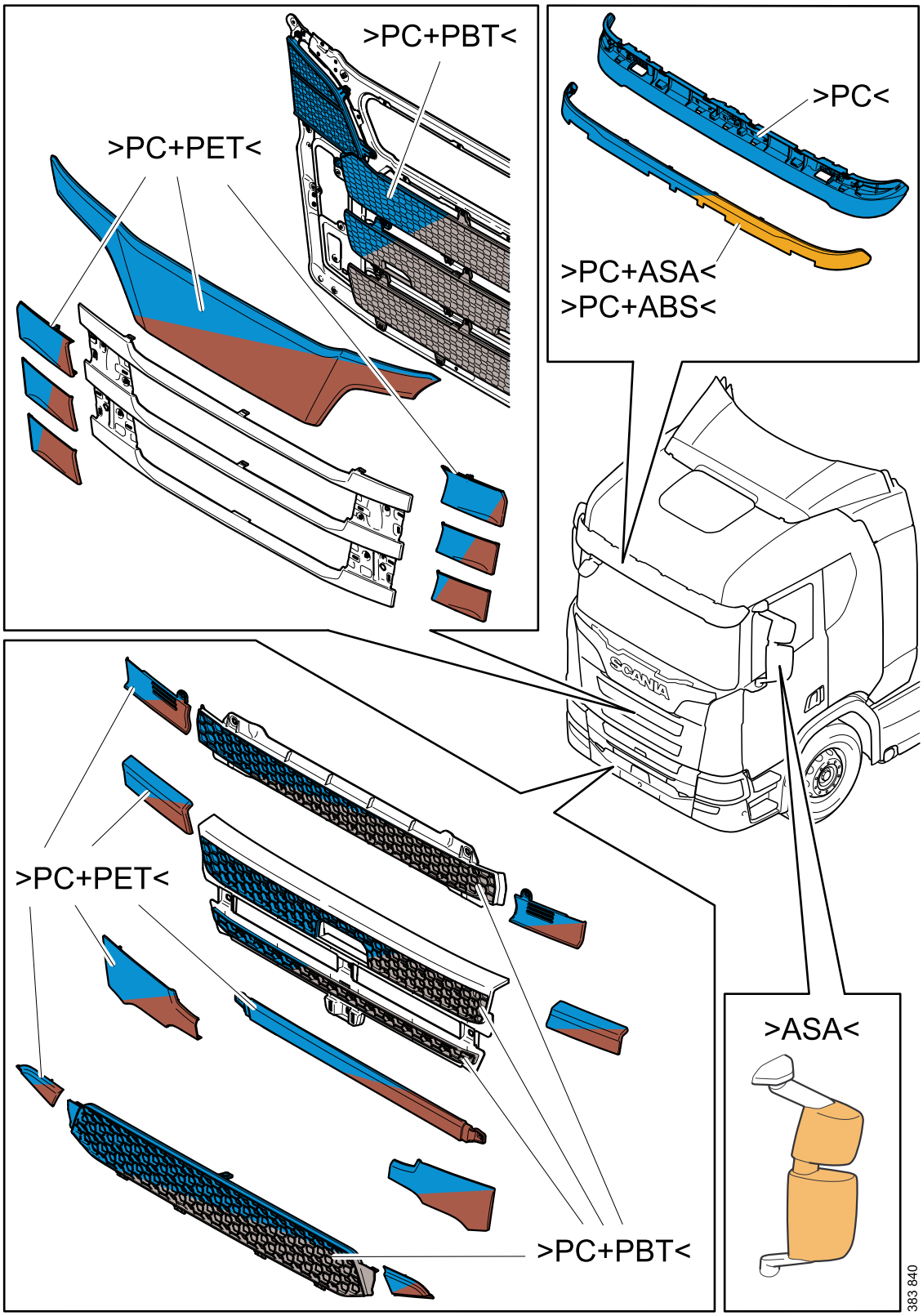

 © Scania CV AB

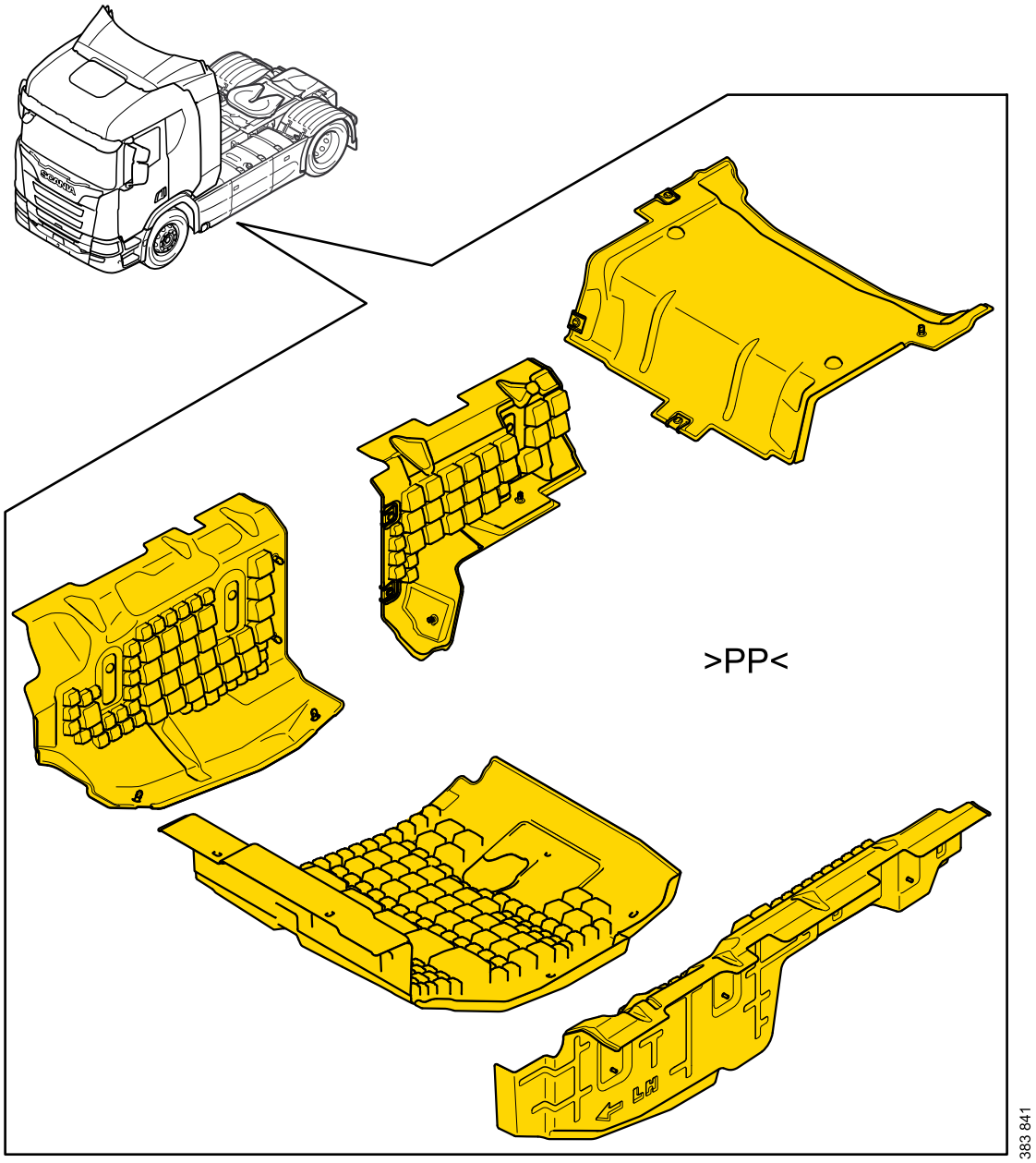

© Scania CV AB

 https://truckmanualshub.com/

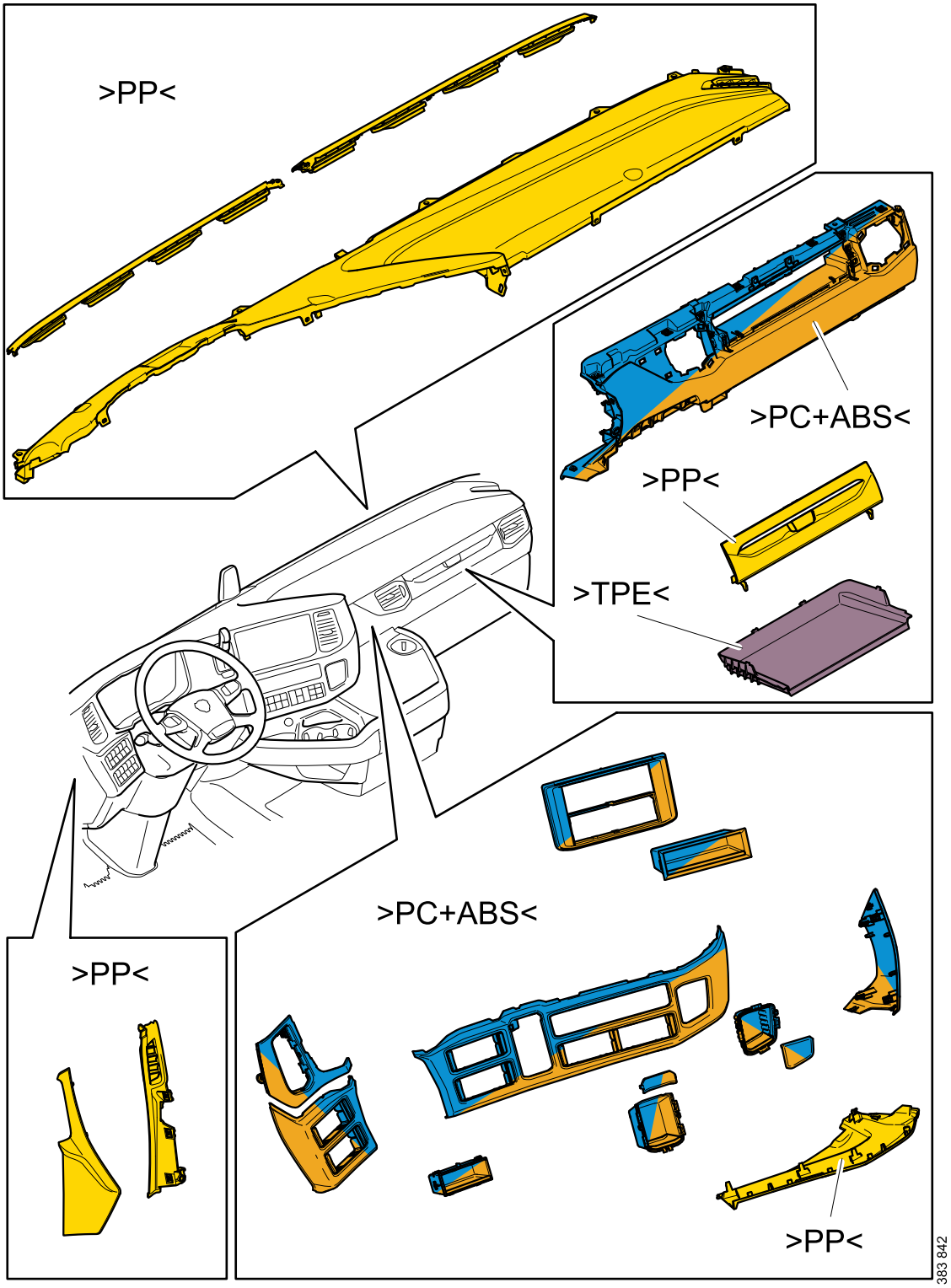

 © Scania CV AB

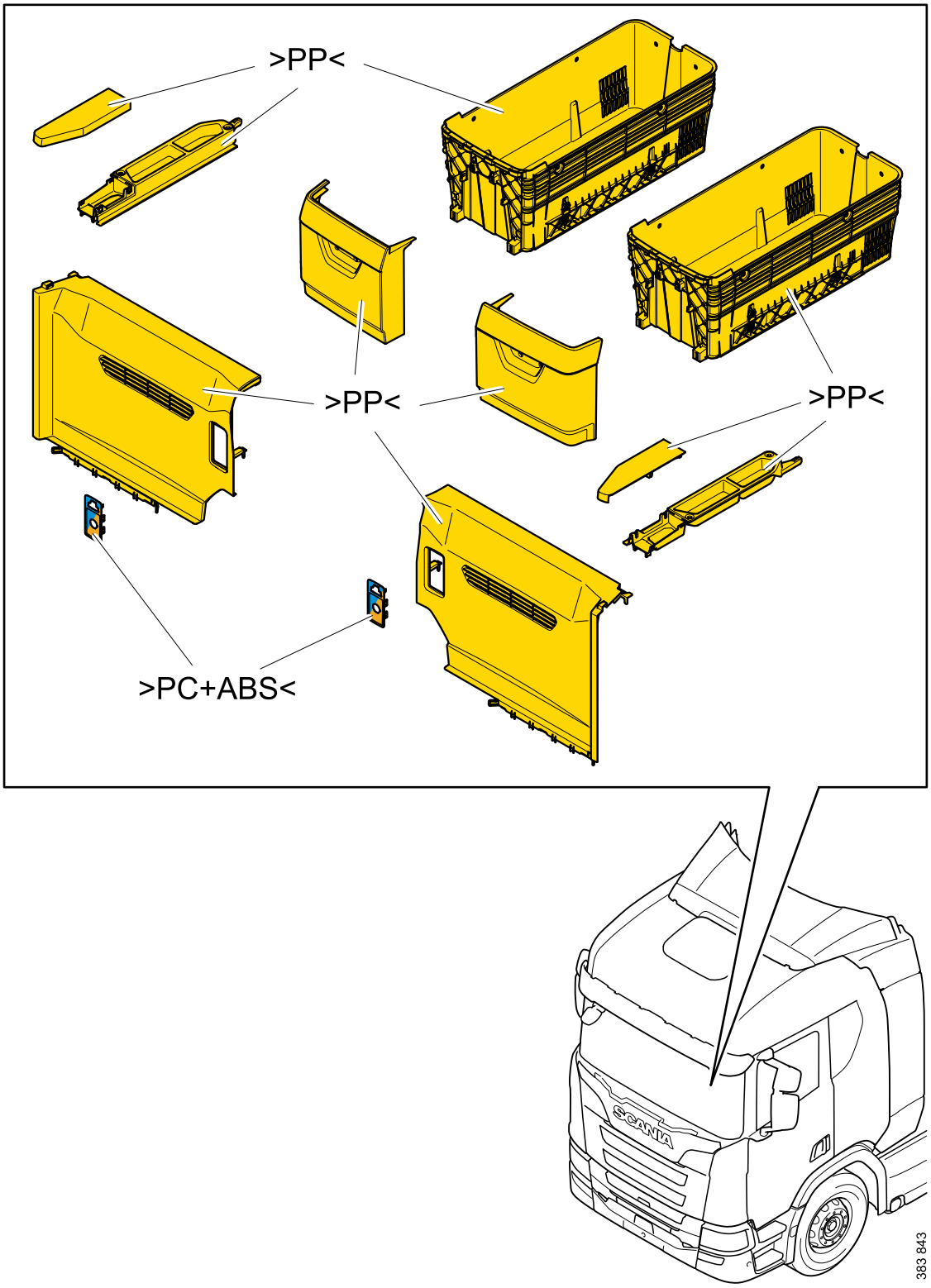

© Scania CV AB

 https://truckmanualshub.com/

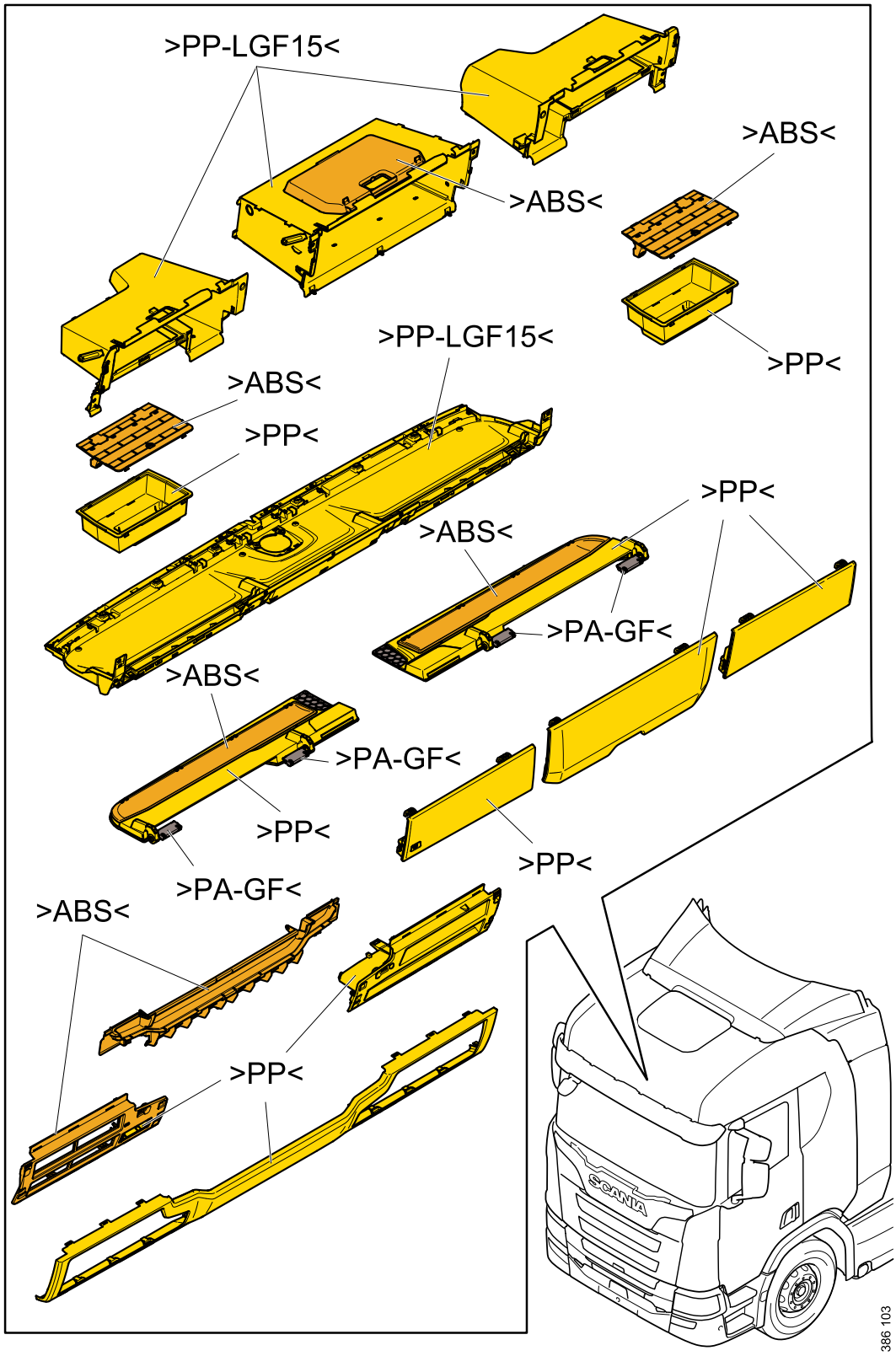

 © Scania CV AB

https://truckmanualshub.com/

Lifting and supporting on stands

Safety precautions

WARNING!

Never work under a vehicle only supported by a jack!

IMPORTANT!

Never support on stands or lift a raised vehicle on parts belonging to the wheel suspension or steering.

Never support on stands or lift underneath the torque rods or their brackets.

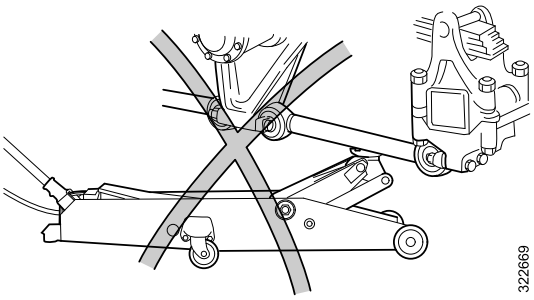

WARNING!

Use reliable and correctly dimensioned axle stands, struts and locks with standard locking devices.

Ensure that the jack and stands are stable on a level surface.

WARNING!

Always empty the air bellows or support the frame on stands before starting work under **vehicles with air suspension**. See the Work on vehicles with air suspension section.

Raising with a jack

NOTE:

Read the safety precautions before starting work!

© Scania CV AB

https://truckmanualshub.com/

IMPORTANT!

Lifting under the front axle or rear axle is only permitted on an **unladen** vehicle.

Lifting using a jack under driving axles with a high axle weight can cause the axle housing and gear housing to become deformed.

No load must be placed on the oil drain plug.

IMPORTANT!

When lifting vehicles with several front axles or rear axles, the axle weight distribution must be taken into account.

1.

WARNING!

Chock the wheels and release the parking brake before jacking up the vehicle, so that the vehicle can follow the movement of the jack.

Chock the wheels to prevent the vehicle rolling away and release the parking brake.

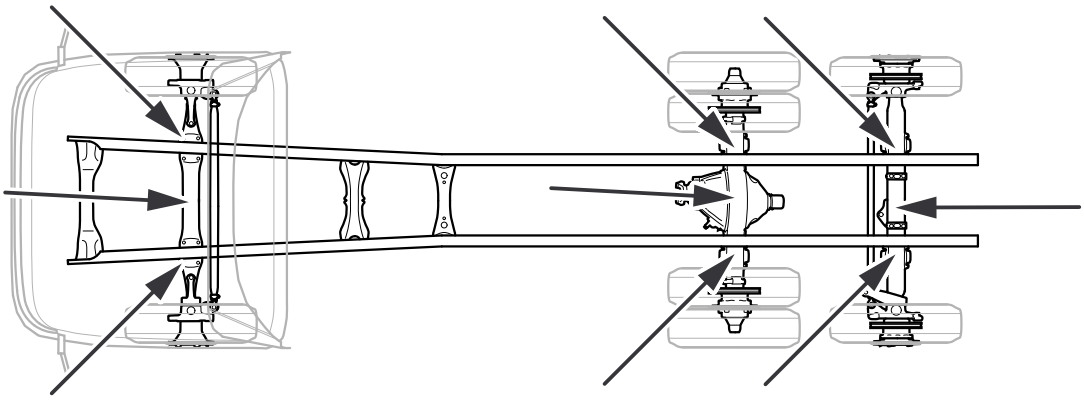

2. Lift the vehicle under any of the lifting points

IMPORTANT!

A laden vehicle can only be lifted under the spring mountings.

3. Secure the vehicle on axle stands.

© Scania CV AB

https://truckmanualshub.com/

Raising with wheel lifts

WARNING!

Always empty the bellows before lifting with wheel lifts.

If there is a loss of air pressure, the axle distance will change, which can cause the wheel lifts to tip over.

Vehicles with air suspension:

Empty the bellows of air according to Work on vehicles with air suspension.

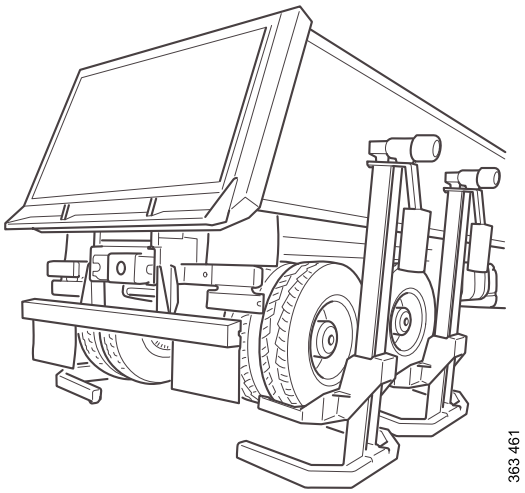

Always raise all axles with wheel lifts.

Supporting on stands under the axle

Front

Supporting under the axle, front

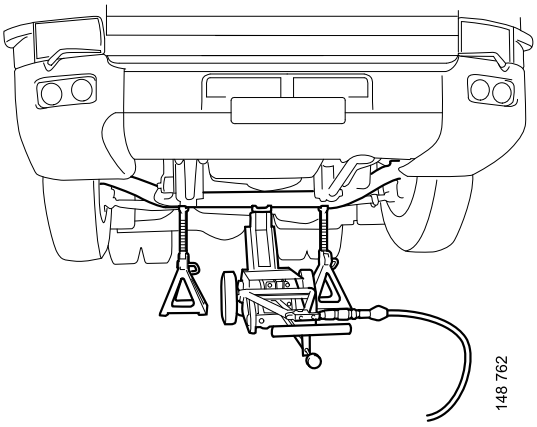

© Scania CV AB

https://truckmanualshub.com/

Rear

Supporting under the axle, rear

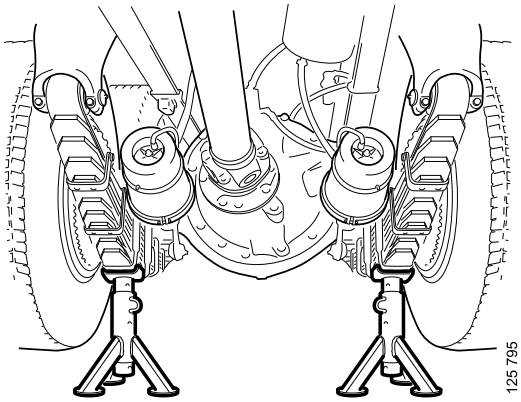

Vehicles with leaf spring suspension can also be supported under the springs.

Supporting the vehicle on stands, front

NOTE:

Read the safety precautions before starting work!

1. Remove the air deflector, if fitted, by unscrewing the screws at the front edge and then unhook the air deflector from the rear brackets.

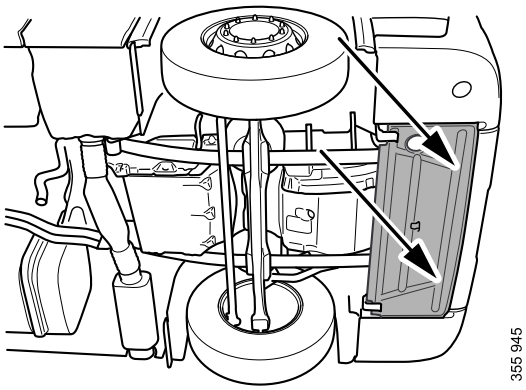

2. Raise the vehicle on jacks or wheel lifts.

© Scania CV AB

https://truckmanualshub.com/

3. Place axle stands under the jacking points.

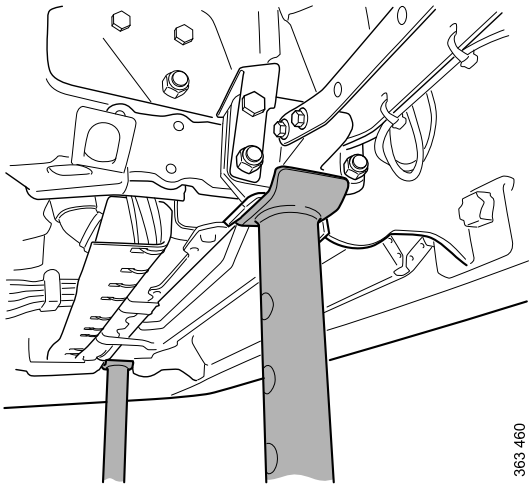

4. Lower the vehicle carefully, making sure that it is secure on the axle stands.

Supporting vehicles with a heavy-duty front on stands

NOTE:

Read the safety precautions before starting work!

Without tools

1. Raise the vehicle on jacks or wheel lifts.
2. Remove the inner rear screws securing the corner plates.
3. Place axle stands under the jacking points.

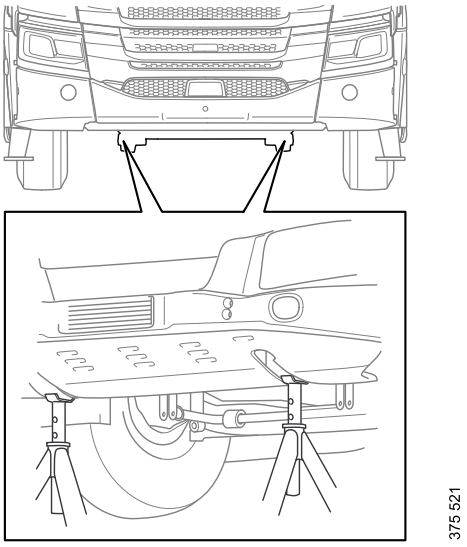

4. Lower the vehicle carefully, making sure that it is secure on the axle stands.

© Scania CV AB

https://truckmanualshub.com/

With tools

1. Raise the vehicle on jacks or wheel lifts.
2. Remove the corner plates.
3. Screw tool 99 363 in place.
4. Place axle stands under the jacking tools.

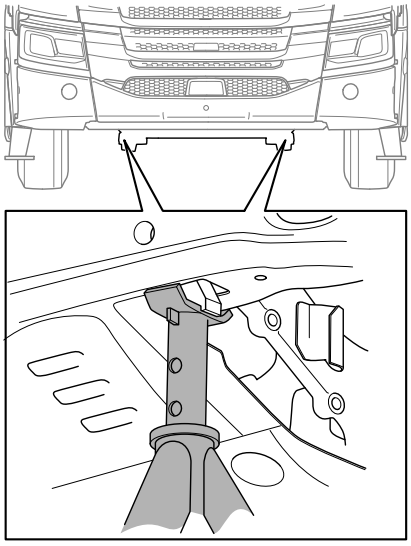

5. Lower the vehicle carefully, making sure that it is secure on the axle stands.

Supporting vehicles with front underrun protection on stands

NOTE:

Read the safety precautions before starting work!

1. Raise the vehicle on jacks or wheel lifts.
2. Place axle stands under the jacking points.

IMPORTANT!

Only support with stands under the underrun protection on an **unladen** vehicle.

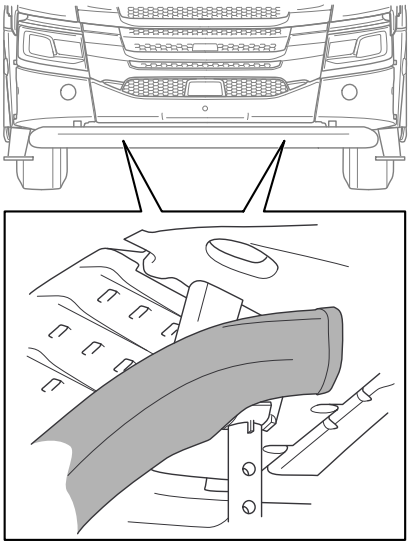

© Scania CV AB

https://truckmanualshub.com/

3. Lower the vehicle carefully, making sure that it is secure on the axle stands.

Supporting on stands under rear frame

NOTE:

Read the safety precautions before starting work!

If there is space, supporting the vehicle on stands in front of the axle is permitted. In this case position the stand as close to the axle as possible.

Position the stands on the frame behind the last rear axle.

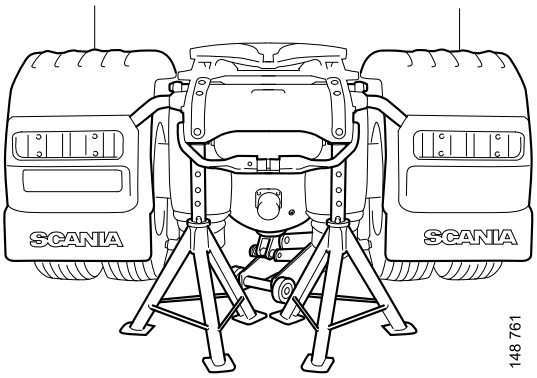

On vehicles with the battery at the rear and air suspension, the axle stands can be positioned between the rear axle and the air bellows.

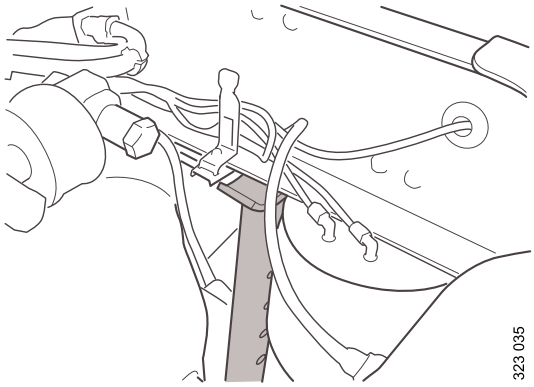

Supporting vehicles with air suspension, rear

Always use the safety prop when working in a pit under vehicles with air suspension. If the air bellows fails, this can result in personal injury.

WARNING!

The safety prop must always be fitted parallel on the left and right sides.

© Scania CV AB

https://truckmanualshub.com/

IMPORTANT!

The vehicle must not be driven when the safety prop is fitted.

Fitting the safety prop to vehicles with air suspension

The safety prop is available in 2 lengths, short: 99 678 and long: 99 677.

Fit the safety prop between the spring shackle and frame. The load on the axles is not to exceed 7.5 tonnes per safety prop.

Clean any dirt from the air spring link before fitting the safety prop.

1. Set the rear air suspension to approximately half of the air spring height.
2. Fit the safety prop at the top between the screws on the shock absorber bracket in the frame.

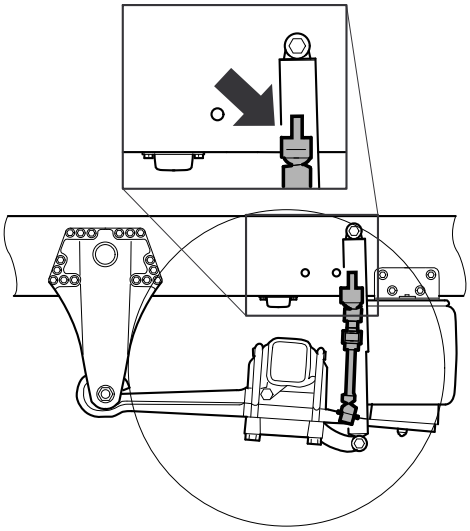

3. Position the foot of the safety prop in front of the air bellows on the air spring link.
4. Detach the rotary control so that the release button can be pushed in and then pull the safety prop out to the correct length.

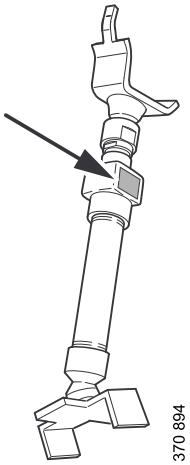

© Scania CV AB

https://truckmanualshub.com/

5. Finish by tightening the quick extension bar until the safety prop is stable.

   Tighten the rotary control and lock the release button.

IMPORTANT!

If the air bellows are filled with air during the work, the safety prop must be adjusted afterwards as described in steps 4-5.

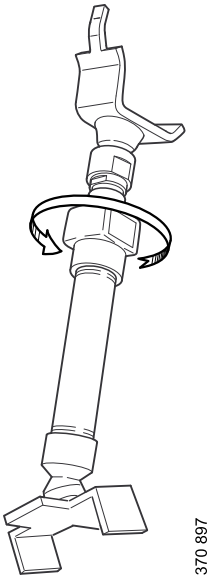

Removing the safety prop

1. Fill the air bellows with air until the safety prop is no longer under load.

WARNING!

Take care when removing the safety prop, there is a risk of crush injuries.

   Detach the rotary control so that the button on the safety prop can be pushed in. Push the safety prop together and remove it.

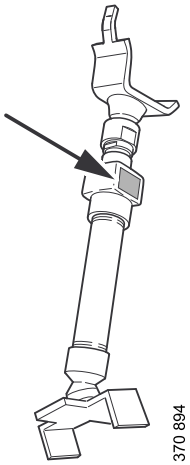

Maintenance

To ensure that the safety prop can be used safely at all times, the following points must be checked at regular intervals.

© Scania CV AB

https://truckmanualshub.com/

1. Checking screw joints. Check that the screw joints have not come loose. Max. 7 millimetres of the thread should be visible (1).

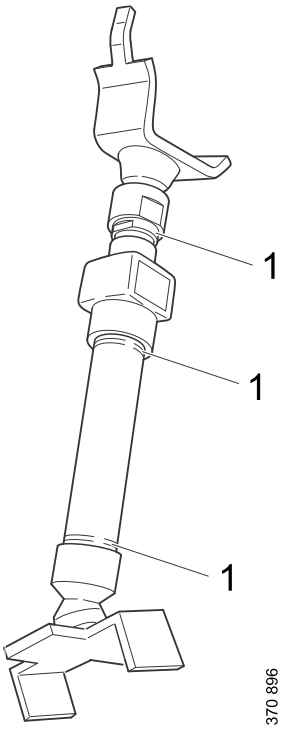

2. Checking the release button. Check that the release button does not stick and that it goes out to the locked position. This ensures that it will not collapse during work.
3. Checking the feet. Check that there is not crack formation on the safety prop feet.

Also make sure that:

4. The threads are free of dirt.
5. The screws securing the cover are tightened. (See picture.) This is important, as these bolts also retain the release button springs.

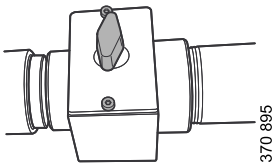

6. Finally the balls of the joints should be lubricated with oil if they are stiff.

Renewing the foot on the safety prop

If the feet on the safety prop are damaged or worn, they should be renewed.

1. The threads are locked with adhesive. To unscrew the feet, heat the thread in a suitable manner.
2. Unscrew the feet.
3. Lock the thread with adhesive.

© Scania CV AB

https://truckmanualshub.com/

4. Fit the new feet. A maximum of 7 millimetres of thread (1) should be visible.

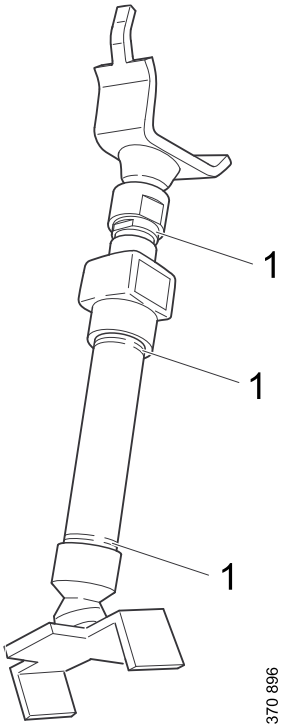

© Scania CV AB

https://truckmanualshub.com/

Engine

Engine

Removal - Engine

NOTE:

The gearbox must be removed before removing the engine.

Tools:

Number	Designation	Picture	Tool-board
99 063	Lifting yoke	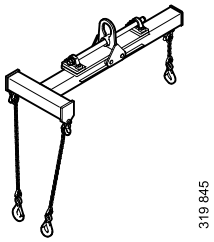 319 845	
98 094	Lifting chain	98 094 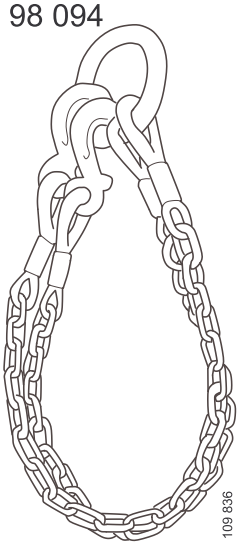 109 836	D4
99 611	Lifting eye for V8 engine	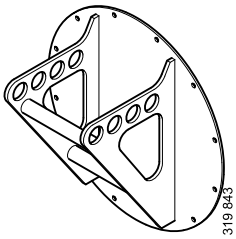 319 843	

© Scania CV AB

https://truckmanualshub.com/

Number	Designation	Picture	Tool-board
99 637	Lifting eye for 9 and 13 litre engines	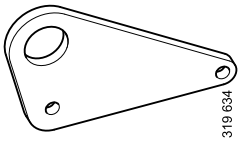	
587 308	Ratchet lever hoist	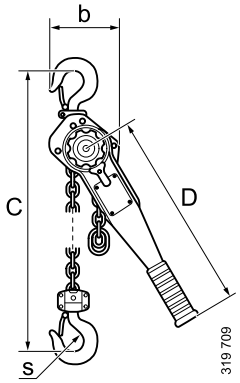	
99 318	Engine support	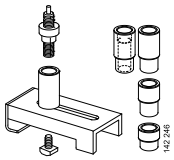	D5
99 470	Adapter	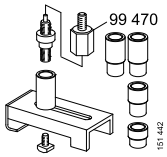	D5
2 377 964	Completing kit for engine support kit 99 318	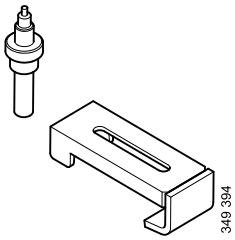	D5

1. Tilt the cab in accordance with the applicable safety precautions. See the section Cab tilt system.
2. Cut the power.

IMPORTANT!

Turn off the power by removing the battery negative terminals.

3. Detach all pipes and hoses from the engine.
4. Drain the engine of all fluids.

© Scania CV AB

https://truckmanualshub.com/

5. Undo the 8 screws. The image shows a V8 engine but the principle is the same for other engines as well.

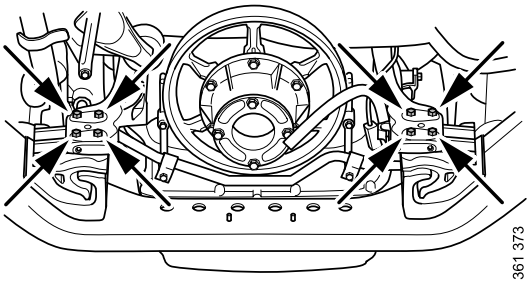

V8 engine

6. Lift off the engine. Use the lifting eyes. The image shows a V8 engine but the principle is the same for other engines as well.

IMPORTANT!

The lifting eyes are designed to manage a maximum inclination angle of 30° when lifting an engine with the gearbox removed.

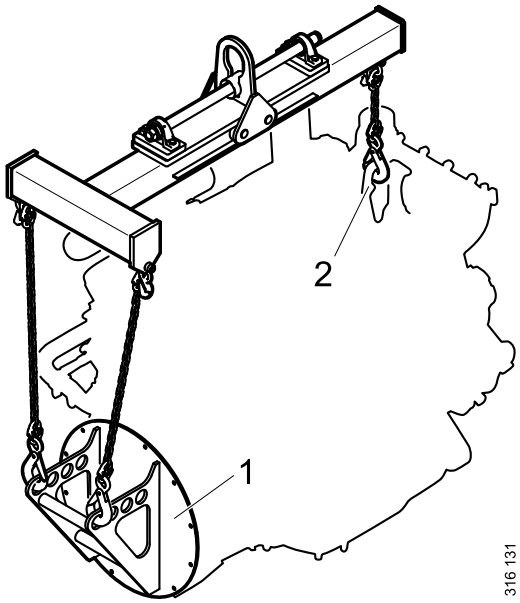

1. *Lifting eye 99611 for V8 engines*
2. *Engine-mounted lifting eye*

© Scania CV AB

https://truckmanualshub.com/

Oil filter

Removal - Oil filter

WARNING!

Always tilt the cab fully. When working under the cab, it should be secured in accordance with the safety precautions. See the section Cab tilt system.

1. Detach the oil filter cover. Let the system drain for 30 seconds.

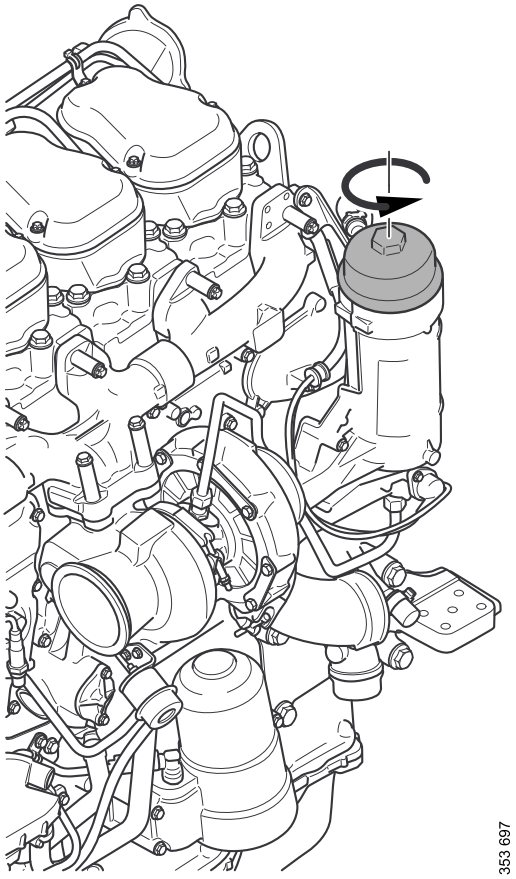

Oil filter, 9 and 13 litre engine

© Scania CV AB

https://truckmanualshub.com/

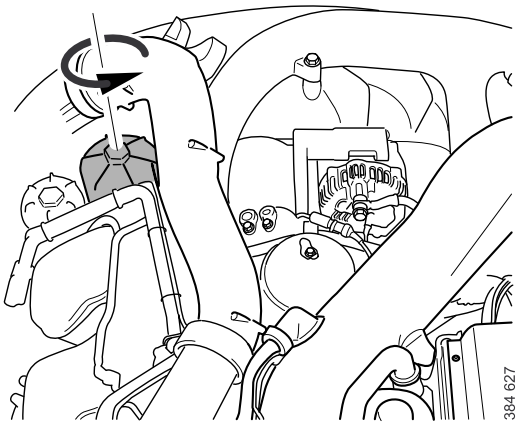

Oil filter, 16 litre engine

2. Remove the oil filter.

© Scania CV AB

https://truckmanualshub.com/

Rotor

Removal - Rotor

WARNING!

Always tilt the cab fully. When working under the cab, it should be secured in accordance with the safety precautions. See the section Cab tilt system.

Removing the rotor, 9 and 13 litre engine

1. Remove the engine noise shields to access the centrifugal oil cleaner.

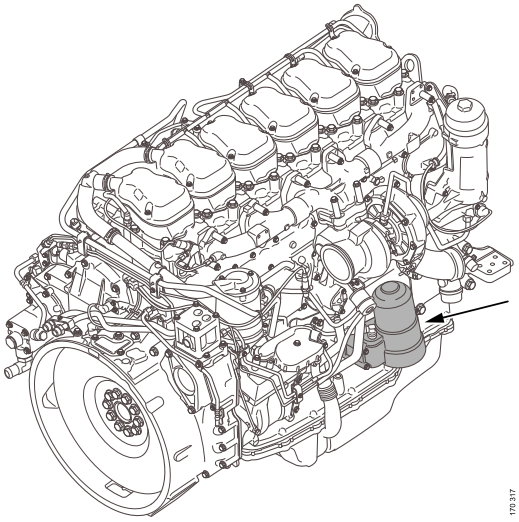

Centrifugal oil cleaner, 9 and 13 litre engine

2. Unscrew the bottom lid of the centrifugal oil cleaner, 2 rotations. Let the system drain.

NOTE:

Use a waste oil trolley when draining the centrifugal oil cleaner.

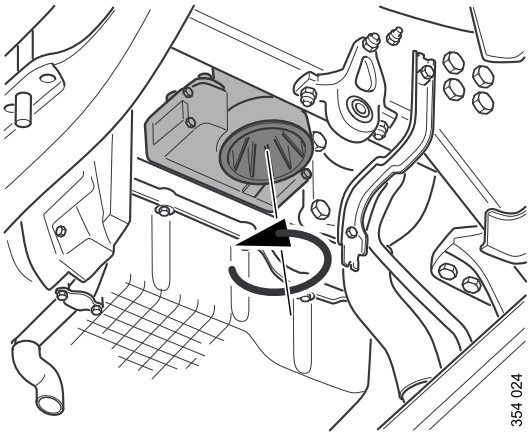

Bottom cover on centrifugal oil cleaner

3. Remove the bottom cover together with the rotor.

   Remove the rotor from the cover by pulling the rotor straight up from the cover.

© Scania CV AB

https://truckmanualshub.com/

Removing the rotor, 16 litre engine

Number	Designation	Picture	Tool-board
588 475	Socket		MB2

1. Tilt the cab in accordance with the applicable safety precautions. See the section Cab tilt system.
2. Remove the engine noise shields to access the centrifugal oil cleaner.

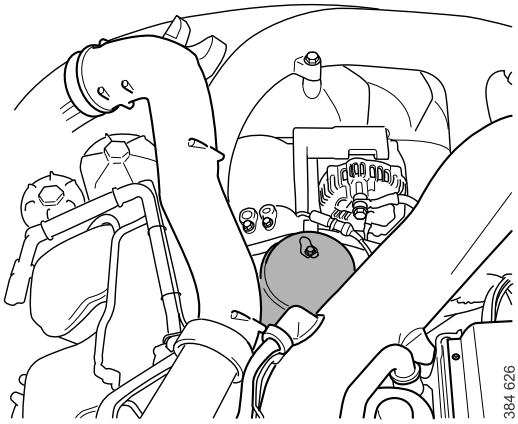

Centrifugal oil cleaner, 16 litre engines

3. Undo the cover with socket 588 475. Remove the cover and rotor.

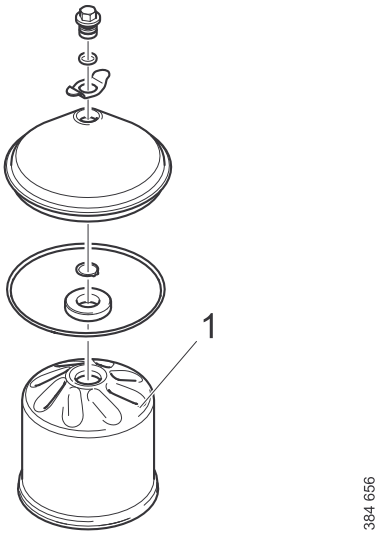

1. *Cover*
2. *Rotor*

© Scania CV AB

https://truckmanualshub.com/

Engine oil

Draining the engine oil

1. Remove the noise shield underneath the engine.
2. Detach the pipe from the crankcase ventilation and unscrew the oil plug.

ENVIRONMENT

Drain oil into a suitable container.

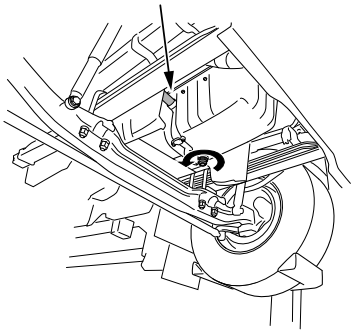

Oil plug, 9 litre engine

© Scania CV AB

https://truckmanualshub.com/

Cooling system

Coolant

Draining coolant

WARNING!

If the engine is at operating temperature, the coolant is very hot and can cause burns.

ENVIRONMENT

Avoid spillage and use a suitable container. Used coolant must be disposed of as specified in national and international law.

Tools:

Number	Designation	Picture	Tool-board
588 540	Coolant trolley (replaces 588 450)	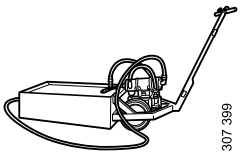	
99 301	Adapter (for 588 450)	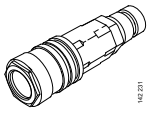	D5

1. Carefully open the expansion tank cap. The cooling system may be exposed to overpressure.

© Scania CV AB

https://truckmanualshub.com/

2. Remove the rubber plug that protects the drain and filler nipple of the cooling system.

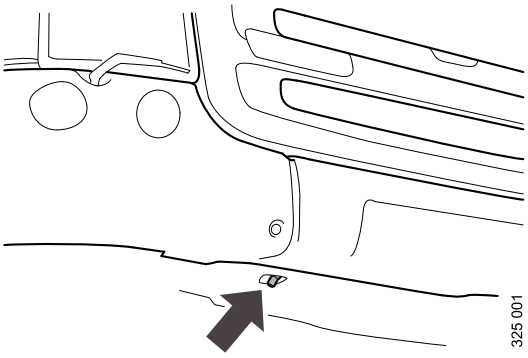

Drain nipple for coolant directly under the cab front

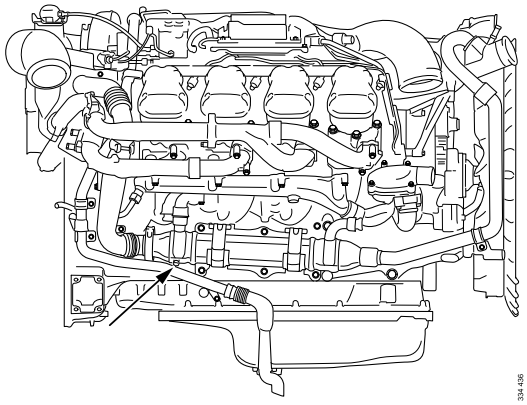

Drain nipple for coolant, V8 engines with EGR cooler

3. Connect the hose from the coolant trolley (588 540) to the drain nipple under the cab front. Drain and collect the coolant.

   With the earlier version of the trolley (588 450), adapter 99 301 is required.

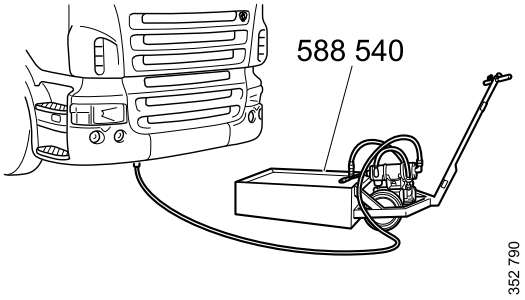

© Scania CV AB

https://truckmanualshub.com/

4. Remove the noise shields to access the lower drain nipple on the engine cylinder block.

   Connect the hose from coolant trolley 588 540 to the drain nipple.

   Drain the coolant as described above.

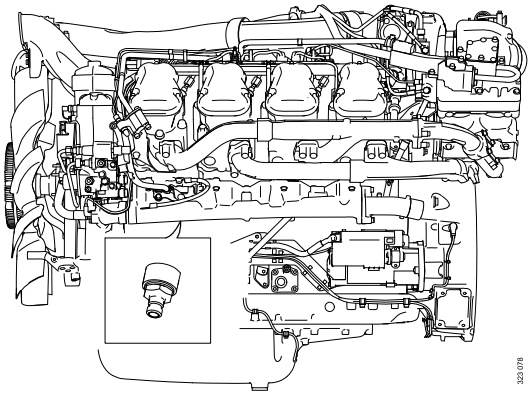

Drain nipple for coolant on the cylinder block, 16 litre engine

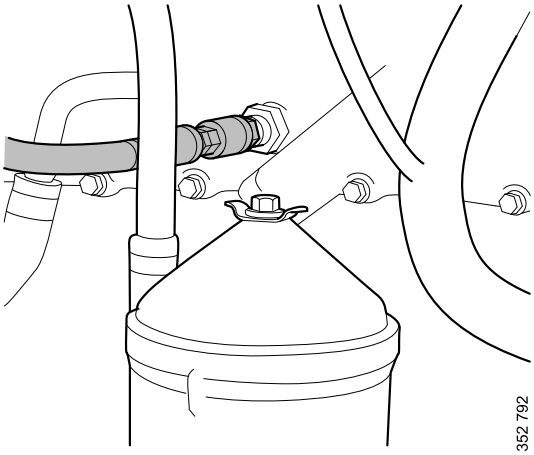

Hose to coolant drainage nipple on the cylinder block, 9 and 13 litre engine

Vehicles with Scania retarder

Number	Designation	Picture	Tool-board
588540	Coolant trolley (replaces 588 450)		

© Scania CV AB

https://truckmanualshub.com/

1. Connect the hose from the coolant trolley (588 540) to the drain nipple on the engine.

   With the earlier version of the trolley (588 450), adapter 99 301 is required.

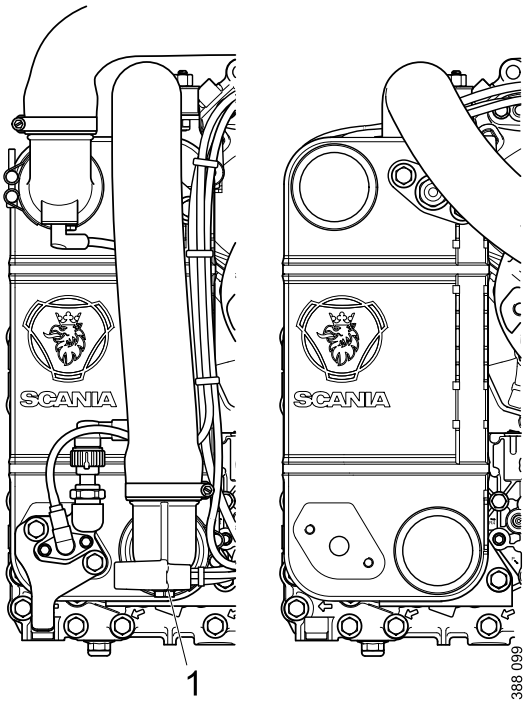

1. Drain nipple for coolant.

2. Drain the coolant.

© Scania CV AB

https://truckmanualshub.com/

Fuel and exhaust systems

Dismantling the silencer

Silencer Euro 3, 4, 5

1. Cut away the brackets.

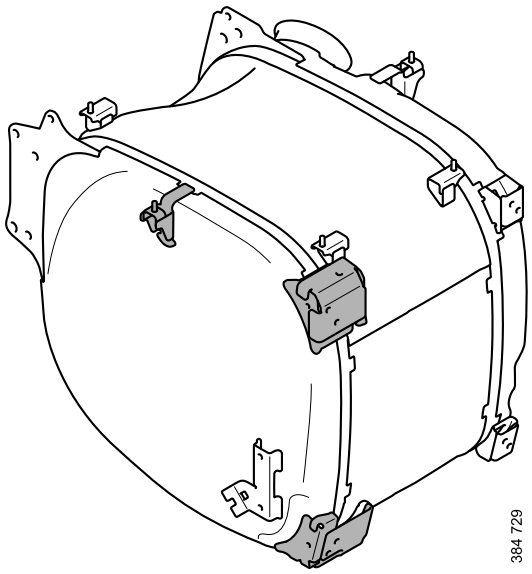

2. Remove the outer protective casing by cutting above the weld joint which has been highlighted in the illustration.

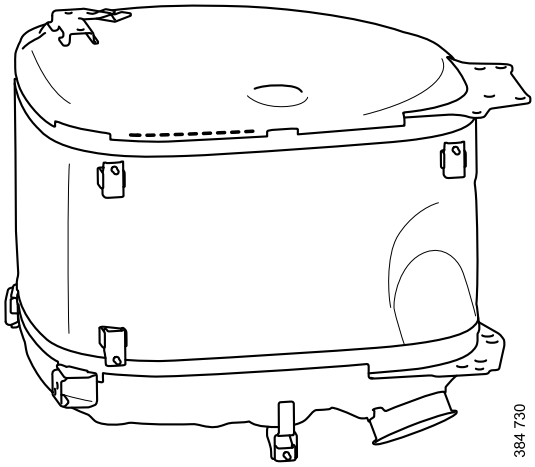

© Scania CV AB

https://truckmanualshub.com/

3. Remove the casing over the catalytic converter by cutting around the entire weld joint securing the casing.

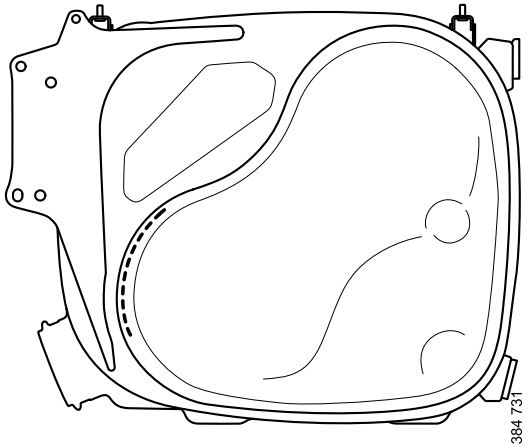

4. Remove the outer protective plate by cutting as illustrated.

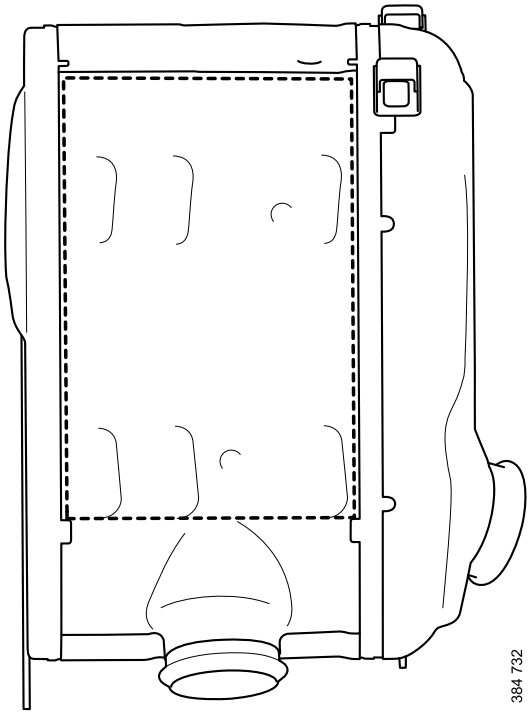

© Scania CV AB

https://truckmanualshub.com/

5. Remove the inner plate by cutting as illustrated.

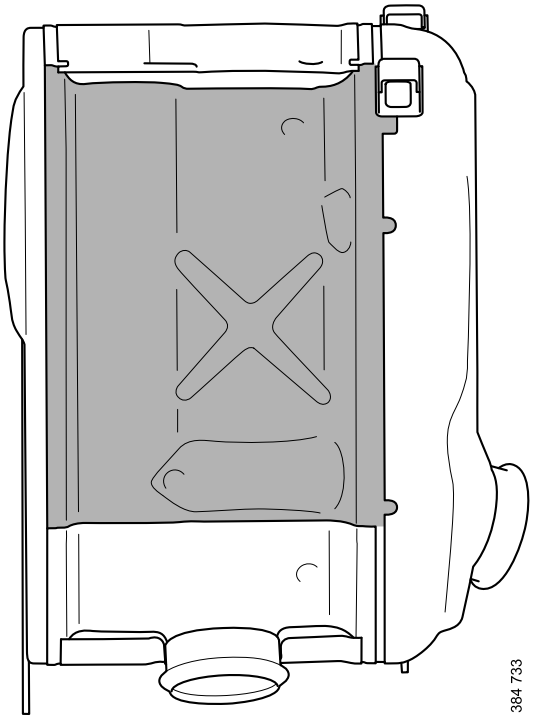

6. Cut off the pipe according to the marking in the illustration.

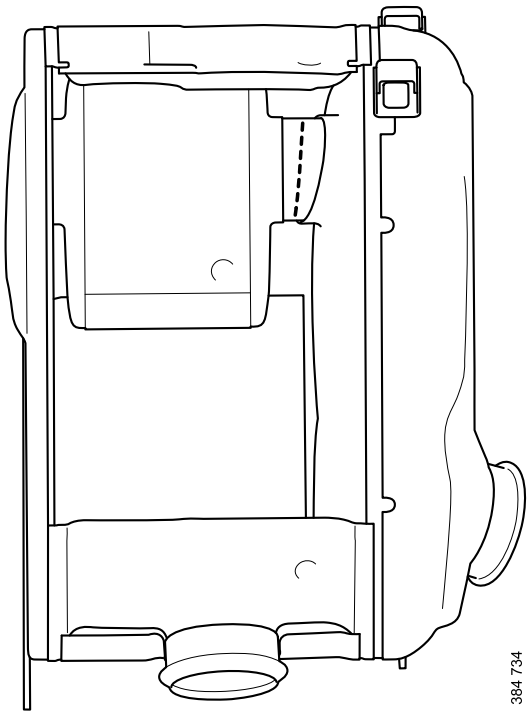

© Scania CV AB

https://truckmanualshub.com/

7. Remove the plate over the catalytic converter by cutting under the weld joint as illustrated.

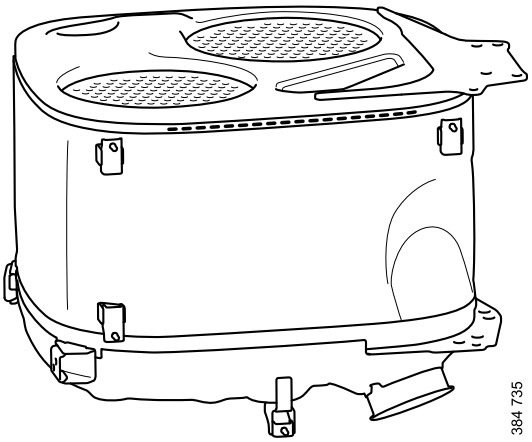

8. Cut off the bracket between the catalytic converters.

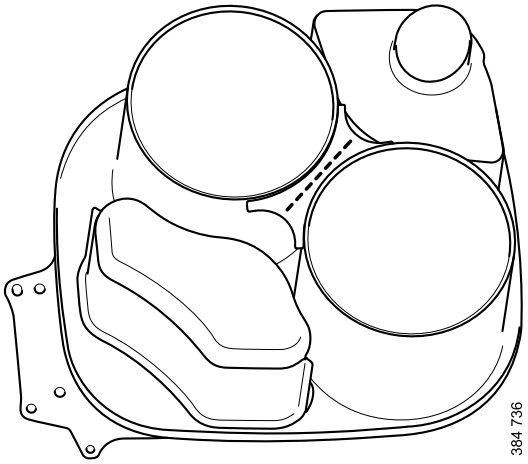

9. The catalytic converters are attached to double plates. Cut through both plates and lift off the catalytic converters.

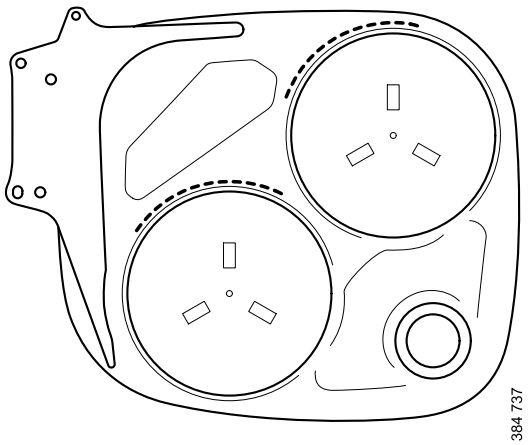

© Scania CV AB

https://truckmanualshub.com/

Reductant tank

Safety precautions and procedures when working on the reductant circuit

Even though the reductant is not toxic, the following should be taken into account when working on the reductant circuit.

- In case of eye contact, rinse immediately using an eye bath and then seek medical attention.
- In case of contact with skin, rinse with water.
- Change immediately out of clothes which have spills on.
- If ammonia gas is inhaled, make sure that plenty of fresh air is provided immediately.

WARNING!

Use protective goggles and gloves if there is any risk of splashing or spraying of reductant or coolant.

WARNING!

When the engine is running, the exhaust system parts can reach such high temperatures that there is a risk of personal injury. Make sure that the exhaust system temperature has decreased to a suitable level before starting work.

WARNING!

The reductant system is heated by water from the engine cooling system. The cooling system runs at overpressure and when the engine is hot the coolant is hot. Do not open any hoses without first stopping the coolant flow in the hose.

IMPORTANT!

Cleanliness is very important when working on the reductant circuit. Clean thoroughly around all parts to be dismantled to prevent dirt from entering the system.

IMPORTANT!

Reductant causes certain metals to corrode. Always rinse away any spillage on e.g. connections and other parts with lukewarm water to prevent corrosion.

© Scania CV AB

https://truckmanualshub.com/

IMPORTANT!

When working on the SCR system, e.g. when renewing hoses for the reductant tank and SCR pump, connections must only be lubricated with soapy water or distilled water with a 3% urea mixture. Any other types of lubricants may block and damage components in the SCR system.

Draining reductant using tool 588 682

Use the equipment to drain reductant during work that involves removing the reductant tank from the vehicle.

Clean the filter 588 684 every three uses; refer to the instructions for cleaning filter 588 684 below.

Draining

1. Remove the reductant tank cover.
2. **Side-hung reductant tank:** Remove the adapter and press the draining tool suction hose to the bottom of the reductant tank.

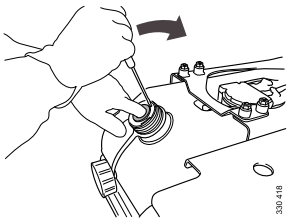

Hidden reductant tank: Remove the pressurising hose and the bleed hose from the tank and press the draining tool suction hose to the bottom of the tank.

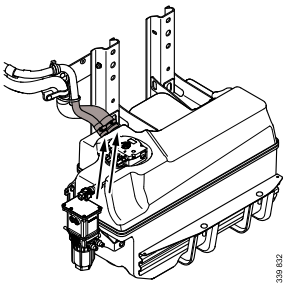

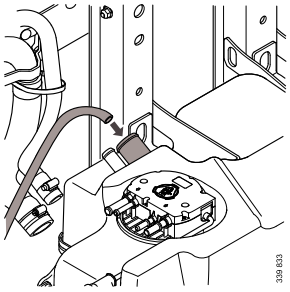

3. Connect compressed air to the fuel suction unit.

© Scania CV AB

https://truckmanualshub.com/

4. Open the compressed air connection tap.

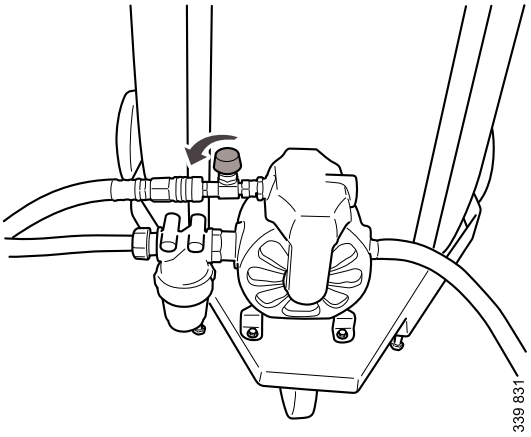

5. Use the filler handle to pump over reductant into the draining tool drum.

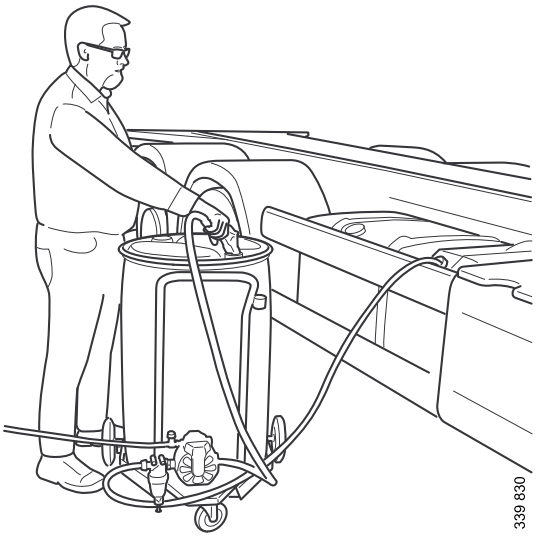

6. Close the compressed air connection tap once the reductant tank is empty.
7. **Side-hung reductant tank:** Remove the suction hose from the reductant tank and refit the adapter.

   Hidden reductant tank: Remove the suction hose from the reductant tank.

© Scania CV AB

Fuel tank

Draining the fuel tank

Number	Designation	Picture	Tool-board
588 794	Fuel suction unit for fuel tanks	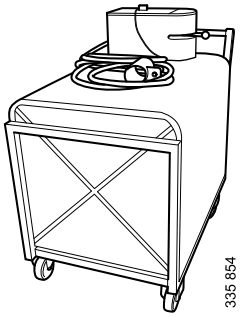	

Fuel suction unit for fuel tanks

The fuel suction unit is intended for ethanol, diesel and petrol. It is fitted with wheels but it can also be handled with a pallet lifter or a forklift truck. The fuel suction unit is made from stainless steel. Its capacity is 630 litres and it weighs 145 kg when empty.

The fuel suction unit is equipped with a pneumatic diaphragm pump. An overfill protection device automatically breaks the air supply to the pump if the fuel level in the fuel suction unit is too high. Pumping must always be interrupted manually at the marked maximum level on the level pipe.

The fuel suction unit is equipped with a venting hose fitted with a flame guard, which is connected to the vehicle exhaust extraction system when draining vehicles to achieve odourless fuel handling.

Use of tool 544794.

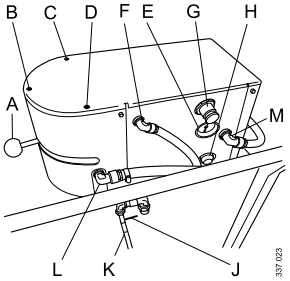

A - Control lever	E - Manometer	M - Venting
B - Off position	F - Compressed air	J - Maximum level
C - Draining position	G - Pressure regulator	K - Level pipe
D - Refilling position	H - Flow valve	L - Fuel hose with strainer

Always ensure that the pneumatic system is free from water and dirt before the fuel suction unit is operated. Water and dirt can damage the fuel suction unit.

Never leave the fuel suction unit unattended during operation. Never rely on the automatic overfill protection device. The operator is responsible for interrupting pumping when it reaches the marked maximum level on the level pipe.

 © Scania CV AB

https://truckmanualshub.com/

Position the fuel suction unit on a level surface close to the vehicle that is to be drained. The castor wheels must be locked during operation. Connect the fuel suction unit to compressed air 4-8 bar.

If the overfill protection is triggered: It is reset by pumping the fuel back, lever in the Refill vehicle position until the maximum level is no longer exceeded. When pumping is completed, the control lever must be in the Off position and the fuel hose disconnected from the drain pipe and drain valve so that the coupling is sealed. In adverse conditions, the fuel may otherwise continue to flow through the pump to the siphon effect. For complete draining and cleaning of the fuel suction unit: Open the bottom plug with a 10 mm internal hexagon key.

WARNING!

The fuel suction unit must be fully drained using the pump before removing the bottom plug.

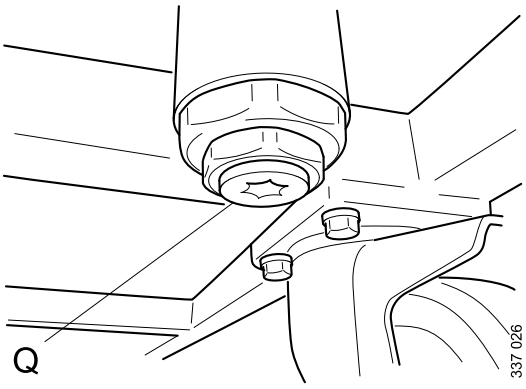

Q – Bottom plug

ENVIRONMENT

Any fuel spills must be disposed of in compliance with local regulations.

Fix the ground clamp to an unpainted metal surface with the best possible grounding connection.

WARNING!

Without grounding there is a risk for static electricity to build up when the fuel is pumped. Static electricity can cause a spark which in turn can set the fuel alight.

© Scania CV AB

Removal - Fuel tank

Number	Designation	Picture	Tool-board
2 378 561	Crowfoot wrench, U-type, 22 mm	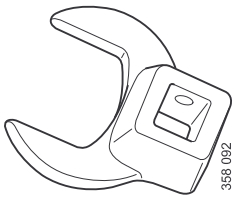 358 092	
588 794	Fuel suction unit for fuel tanks	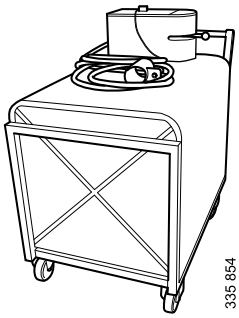 335 854	
588 084	Hydraulic, mobile lifting table	143 149	

1. Drain the tank using tool 588 794.
2. Detach the electrical connection and hoses from the fuel pick-up unit.

WARNING!

There may be residual pressure in the pipes. Wear eye protection during removal.

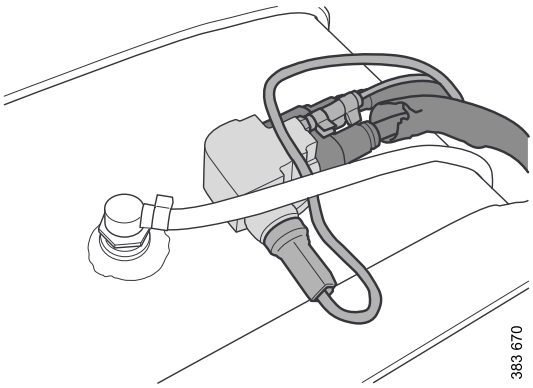

3. Remove the fuel pick-up unit, separating the plastic and metal.
4. Drill a hole in the fuel tank to get all the fuel out.

© Scania CV AB

https://truckmanualshub.com/

Coupling

Connection and operation

Draining – clutch fluid

Number	Designation	Picture	Tool-board
587 949	Clutch bleeder/filling equipment	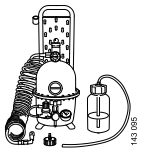 143 095	
588 905	Tool for extracting excess clutch fluid	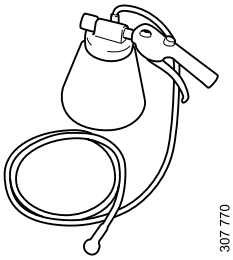 307 770	

WARNING!

Use goggles. Clutch fluid is corrosive and can cause permanent eye damage.

1. Remove the plastic cover.

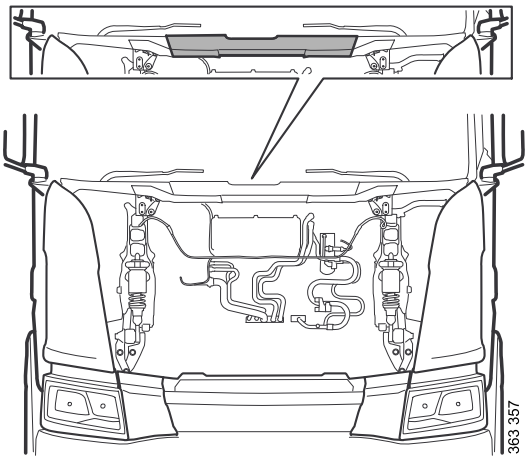

2. Unscrew the cap on the clutch fluid reservoir in the vehicle and remove the strainer.

© Scania CV AB

https://truckmanualshub.com/

3. Connect the cover on clutch bleeder 587 949 to the clutch fluid reservoir. Tighten the cover so that it is sealed tightly.

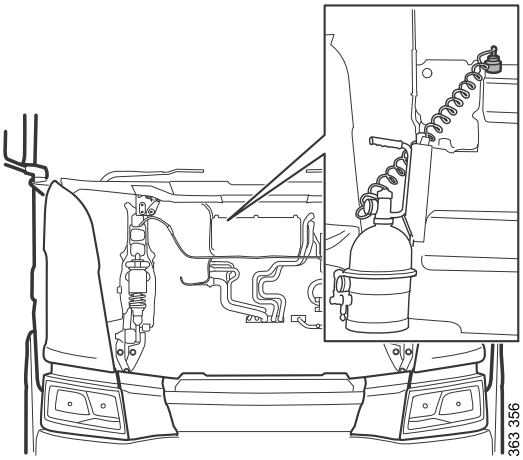

4. Connect compressed air to the clutch bleeder. Check that the upper manometer shows 2 bar.
5. Connect a bleed hose with a container to the bleed nipple at the gearbox.

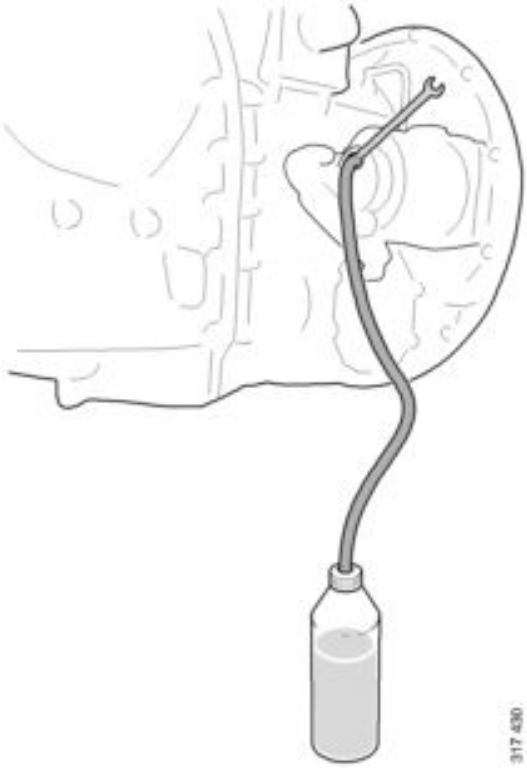

6. Open the tap on clutch bleeder 587 949.

© Scania CV AB

https://truckmanualshub.com/

7. Drain and bleed the system by opening the bleed nipple.

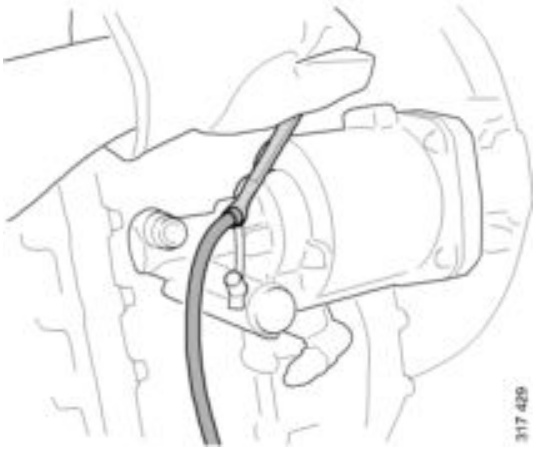

NOTE:

The clutch pedal must be in its highest position and must not be actuated during the bleeding phase.

8. Close the tap on the clutch bleeder and disconnect the tool.

© Scania CV AB

https://truckmanualshub.com/

Gearbox

Gearbox

Gearbox - tools

There are several different models of gearboxes. The following tools are used when removing gearboxes from Scania vehicles.

Number	Designation	Picture	Tool-board
99 644*	Base bracket	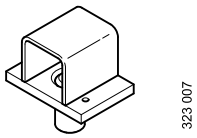 323 007	F3
99 646	Bracket kit	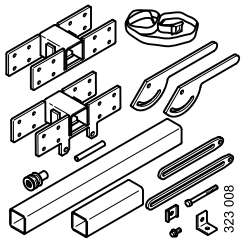 323 008	F3
587 313	Gearbox jack	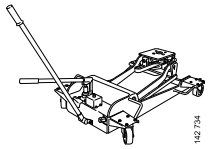 142 734	-
588 966	Machine lift	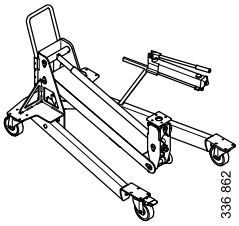 336 862	-

*Tool 99 644 fits most gearbox jacks distributed by Scania. If another type of gearbox jack is used, another base bracket must be used, see tool sheet for 99 645.

The above combination of lifting accessories is used for lifting components.

For information on how to dismantle a specific gearbox, contact a Scania workshop.

© Scania CV AB

https://truckmanualshub.com/

WARNING!

Always secure the vehicle against collapsing before starting work. There is a serious danger of crushing. Both the chassis and moving axle suspension components must be secured with axle stands to ensure absolute safety when working under a raised vehicle.

If the vehicle has air suspension, the air bellows must be emptied before starting work.

Only move a loaded gearbox jack with the load in the lowest possible position.

When lowering, make sure that nothing catches and damages the gearbox jack, component or the lifting accessory.

Be aware of the risk of crushing when lowering the gearbox jack and the lifting accessory.

© Scania CV AB

https://truckmanualshub.com/

Brakes - Pneumatic system

Compressed air tanks

Draining – compressed air tanks

IMPORTANT!

Handle empty compressed air tanks in compliance with local regulations.

Pull the drain valves to depressurise the tanks.

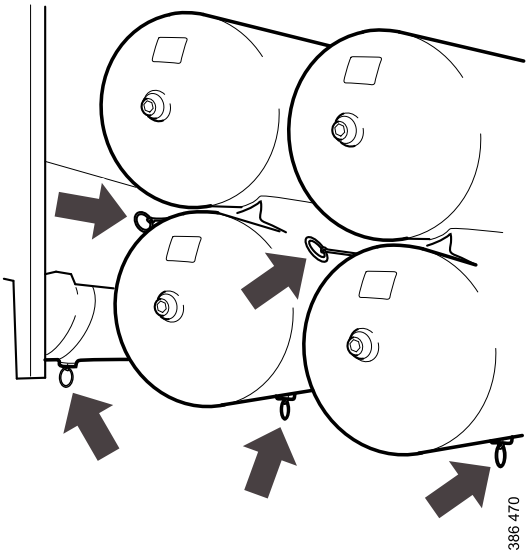

© Scania CV AB

https://truckmanualshub.com/

Spring brake chamber

Removal – Spring brake chamber

1. Place wheel chocks in front of and behind at least 2 wheels.
2. Release the parking brake.
3. Unscrew the release bolt until the parking brake is fully released on the relevant wheel.

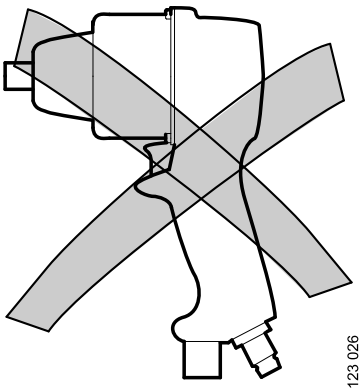

WARNING!

When the release bolts are screwed out, the vehicle has no parking brake on the wheels where the release bolt has been screwed out. Therefore, use wheel chocks to prevent the vehicle from rolling.

WARNING!

Always ensure that the parking brake is released before removing the spring brake chamber. Check this by rotating the brake disc.

IMPORTANT!

Danger of cross-threading. Clean and oil the bolt. Do not use a nut runner. If the bolt is damaged, the parking brake will not release even though the bolt is unscrewed.

The release bolts (1) are available in different versions. The release bolt is screwed out different lengths depending on the version. Screw until it stops. On certain versions there is a red pin (2) in the release bolt centre that indicates that the bolt is screwed out from its normal position.

© Scania CV AB

https://truckmanualshop.com/

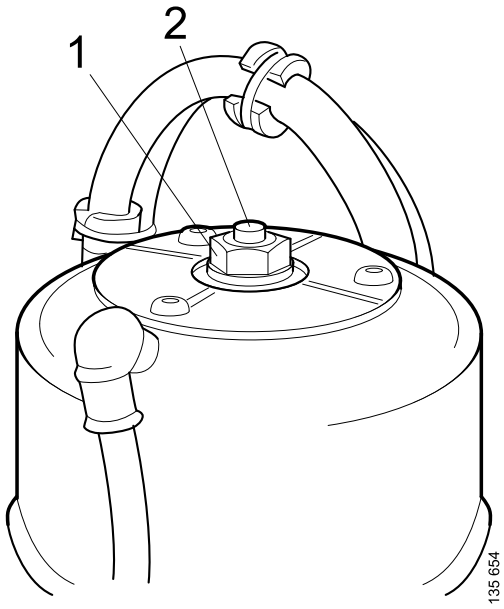

1. *Release bolt*
2. *On some versions, there is a red pin that indicates that the screw has been turned out of its normal position.*

4. Apply the parking brake again on the other wheels to release the braking pressure.
5. Detach the compressed air connections.
6. Undo the 2 nuts which attach the spring brake chamber. If there are wear wires, move the wear sensor cable retainer to the side.
7. Remove the spring brake chamber.

WARNING!

The spring brake unit must not be dismantled. Dismantling the spring brake unit constitutes a serious risk of injury due to strong spring tension.

© Scania CV AB

https://truckmanualshub.com/

Suspension

Air suspension

Work on vehicle with air suspension

NOTE:

Always support the vehicle. See the Lifting and supporting on stands section.

WARNING!

Always support the vehicle on stands when working on vehicles with air suspension. Empty the air bellows.

When working on vehicles without stands under the frame, there is a considerable risk of serious personal injury. When the bellows lose air pressure, the frame will drop onto the axles. This will occur when:

– pressurised lines are removed.

– an air bellows is punctured.

– voltage is applied to the valve for the purpose of emptying the bellows.

– the level sensor lever is moved downwards.

WARNING!

Always empty the bellows before lifting with wheel lifts.

If there is a loss of air pressure, the axle distance will change, which can cause the wheel lifts to tip over.

IMPORTANT!

Never support on stands or lift a raised vehicle on parts belonging to the wheel suspension or steering.

Never support on stands or lift underneath the torque rods or their brackets.

© Scania CV AB

https://truckmanualshub.com/

IMPORTANT!

Always use new U-bolts and nuts as well as new washers and screws.

Safety precautions

1. Use reliable and correctly dimensioned axle stands, struts and locks with standard locking devices.
2. Ensure that the jack and axle stands are stable on a level surface.
3. Lifting accessories must have been approved for use.
4. Apply the parking brake.
5. Chock the wheels before the vehicle is lifted with a jack.

Empty the air bellows

Use the level adjustment switch or operation unit to empty the bellows. Hold the button down until the vehicle rests on the bump stops.

Example of a level adjustment switch

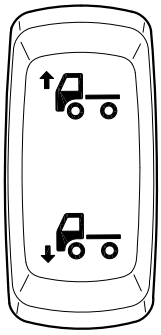

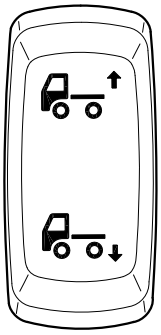

© Scania CV AB

https://truckmanualshub.com/

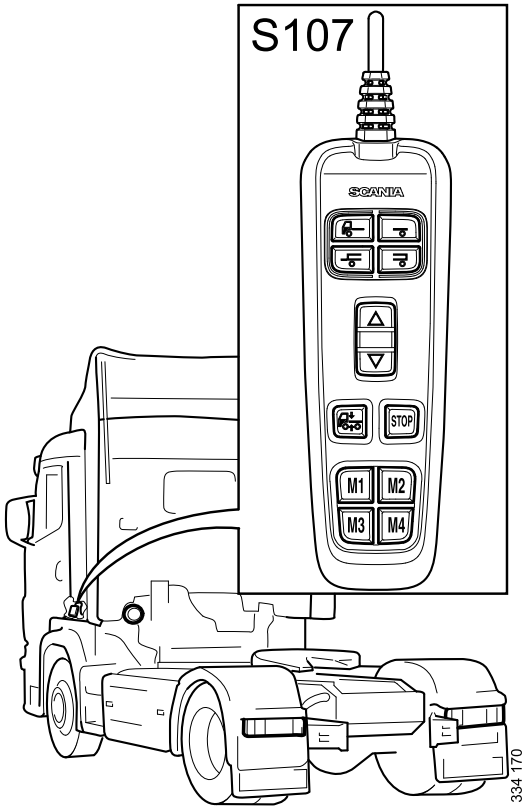

Position of the operation unit.

© Scania CV AB

https://truckmanualshub.com/

Steering

Removal - Airbag

Action on contact with hazardous substances from the airbag

Hazardous substances in the airbag: An airbag that has not been activated contains hazardous substances that can cause damage or injury if they leak out. See below and in the product data sheet in the stores. Before activation an airbag contains sodium azide, potassium nitrate, silicon oxide and iron oxide.

If inhaled: Go outdoors in the fresh air. Give the person artificial respiration or oxygen, if necessary. The person should seek medical attention.

Skin contact: Wash with plenty of soap and water.

Eye contact: Rinse with water for at least 15 minutes. Seek medical attention

If ingested: Drink 2-3 decilitres of water and provoke vomiting by inserting one or two fingers down the throat. Call a doctor. If the person is unconscious or has convulsions, do not try to make him drink water or provoke vomiting. Call a doctor without delay.

Signal cap with built-in airbag (H14)

WARNING!

Cut the power to the vehicle and wait at least 10 seconds before starting work on the airbag.

The airbag contains an explosive charge. Do not perform any other work besides that described here.

Carry the airbag with the Scania badge facing you.

Number	Designation	Picture	Tool-board
588390	Tool kit for panels	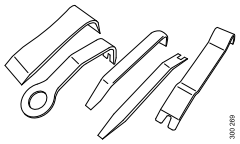	

1. Turn the wheels to the straight-ahead position.

   A latch clamp holds the signal cap in place. To remove it, you must carry out steps 2-4 below on both sides of the steering wheel.

© Scania CV AB

https://truckmanualshub.com/

2. Make a hole in the marked area on the side of the steering wheel (see illustration) if this has not been done previously. Use a T30 Torx screwdriver.

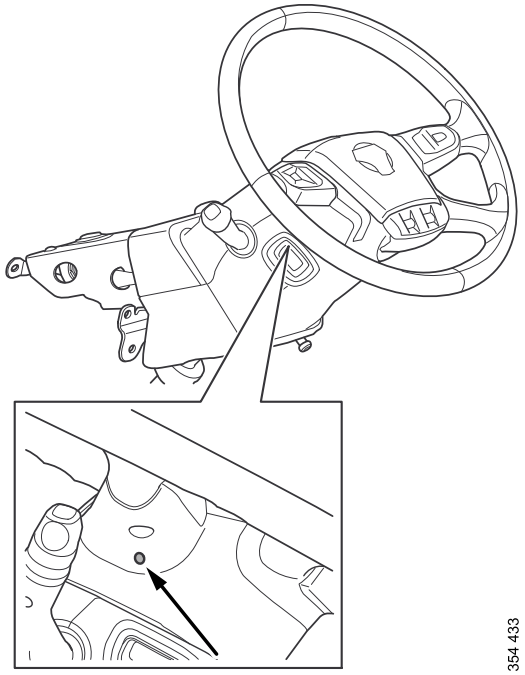

3. Press in the screwdriver approx. 3 cm. Then lightly lift the screwdriver towards the steering wheel and press it straight in towards the latch clamp.

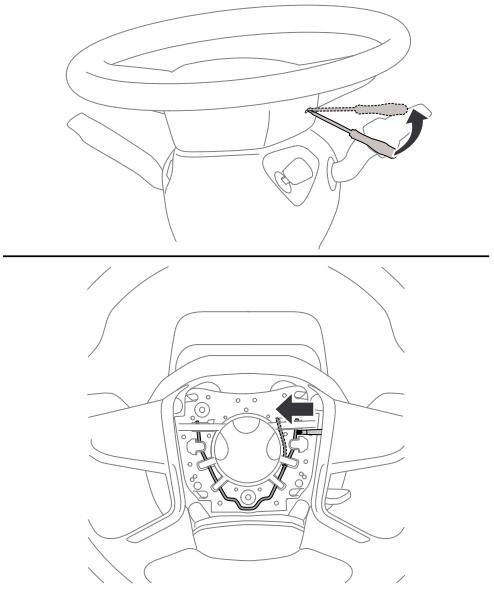

© Scania CV AB

https://truckmanualshub.com/

4. Keep the pressure against the latch clamp and lift the edge of the signal cap until there is a gap of approx. 1 cm to the steering wheel.

   Use tools from tool kit 588 390 to facilitate removal of the signal cap.

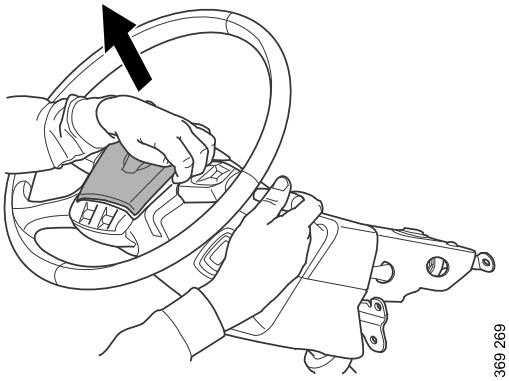

5. Repeat steps 2-4 on the opposite side of the steering wheel.
6. Support the signal cap against the steering wheel.

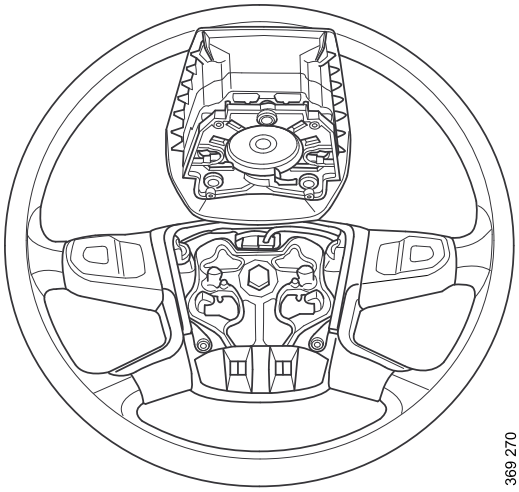

© Scania CV AB

https://truckmanualshub.com/

7. Remove the connector for the airbag. For information on handling of the airbag, see the section Action on contact with hazardous substances from the airbag.

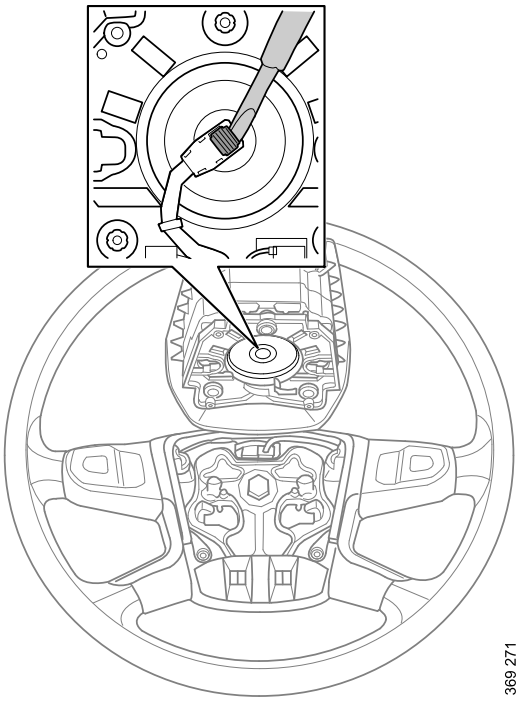

8. Remove the horn connectors.

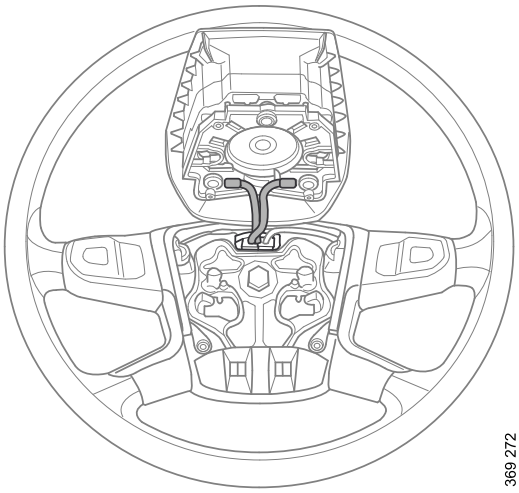

© Scania CV AB

https://truckmanualshub.com/

Electrical system

Chassis central electric unit

Removal - Chassis central electric unit

NOTE:

The instructions below apply to both central electric unit P8 and central electric unit P11.

1. Tilt the cab, see the Cab tilt system section.
2. Remove the mudguard. The chassis central electric unit is suspended in the same plate as the mudguard.
3. Remove the wheel housing.
4. Remove the batteries. See the Batteries section.

WARNING!

The batteries are removed for safety reasons to avoid short circuits, as there is very little space between the batteries and the chassis central electrical unit.

5. Remove the battery box for better access to the chassis central electric unit.

© Scania CV AB

https://truckmanualshub.com/

6. Unscrew the nuts on the rear of the chassis central electric unit.

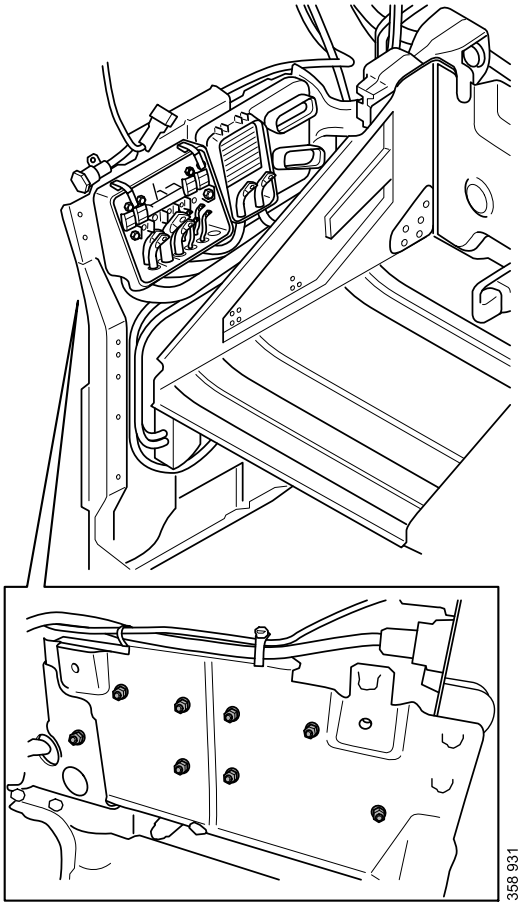

7. Remove the chassis central electric unit.

© Scania CV AB

https://truckmanualshub.com/

Removal - Curtain airbag

H30, Curtain airbag, driver's side

NOTE:

The curtain airbag is regarded as pyrotechnic equipment and must be handled according to special rules. Every country has its own legislation regarding handling, but in general this equipment is considered explosive goods as soon as it is handled outside the vehicle.

For the storage, transport or disposal of non-deployed units, check with the relevant country's Scania importer which rules apply in your country.

For transport between Scania parts warehouses and workshops, the pyrotechnic equipment is transported in specially reinforced packaging. The transport is considered hazardous goods.

WARNING!

Cut the power to the vehicle and wait at least 10 seconds before starting work on the curtain airbag.

The curtain airbag contains an explosive charge. Do not perform any other work besides that described here.

Carry the airbag with the metal casing facing away from you.

Preparatory work

1. Remove the upper bed.
2. Remove the panels:
   - Ceiling panel
   - The A- and B-pillar cover
   - Lower side wall panel
   - Upper side wall panel

© Scania CV AB

https://truckmanualshub.com/

Removing the curtain airbag

1. Start by undoing the curtain airbag connectors. Pull the highlighted part of the connector from the curtain airbag to detach the connector.

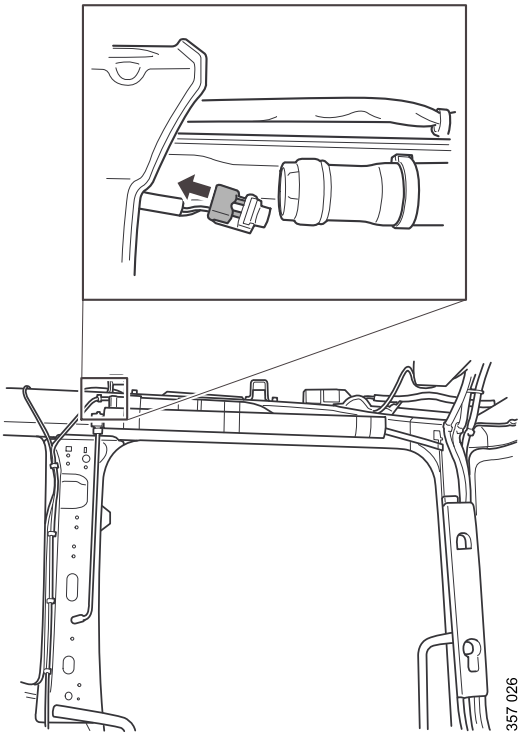

2. Then detach the cable duct in the A-pillar and place it to one side.

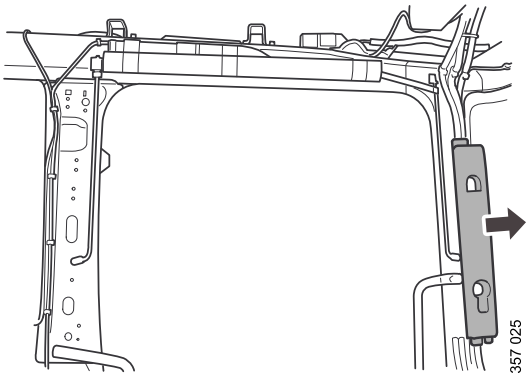

3. Drill out the rivets (2) and remove the screws (1). Prise the curtain out of its keyhole brackets.

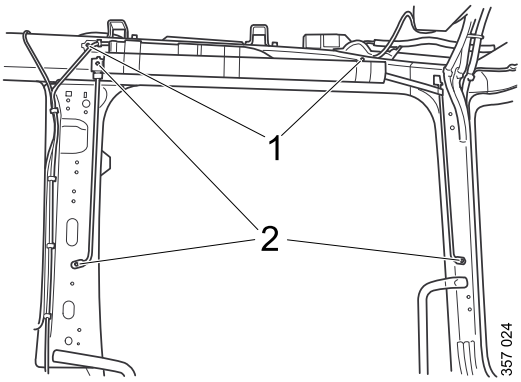

© Scania CV AB

https://truckmanualshub.com/

H31, Curtain airbag, passenger side

NOTE:

The curtain airbag is regarded as pyrotechnic equipment and must be handled according to special rules. Every country has its own legislation regarding handling, but in general this equipment is considered explosive goods as soon as it is handled outside the vehicle.

For the storage, transport or disposal of non-deployed units, check with the relevant country's Scania importer which rules apply in your country.

For transport between Scania parts warehouses and workshops, the pyrotechnic equipment is transported in specially reinforced packaging. The transport is considered hazardous goods.

WARNING!

Cut the power to the vehicle and wait at least 10 seconds before starting work on the curtain airbag.

The curtain airbag contains an explosive charge. Do not perform any other work besides that described here.

Carry the airbag with the metal casing facing away from you.

Preparatory work

1. Remove the upper bed.
2. Remove the panels:
   - Ceiling panel
   - The A- and B-pillar cover
   - Lower side wall panel
   - Upper side wall panel

© Scania CV AB

https://truckmanualshub.com/

Removing the curtain airbag

1. Start by undoing the curtain airbag connectors. Pull the highlighted part of the connector from the curtain airbag to detach the connector.

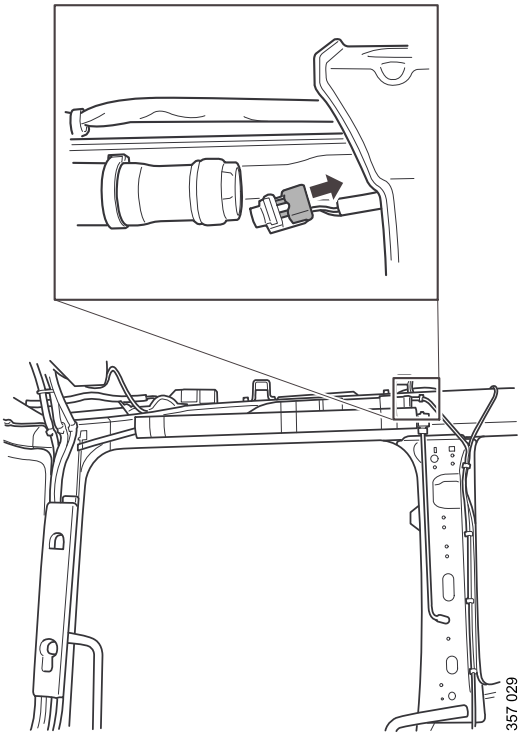

2. Then detach the cable duct in the A-pillar and place it to one side.

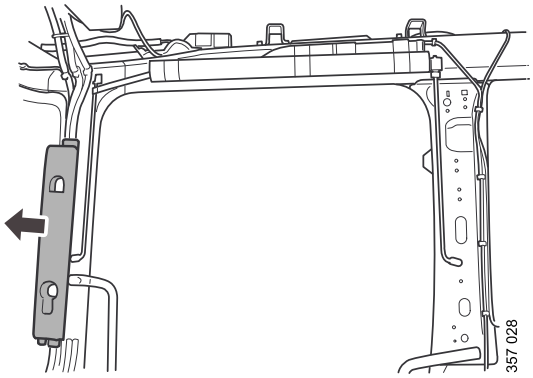

3. Drill out the rivets (2) and remove the screws (1). Prise the curtain out of its keyhole brackets.

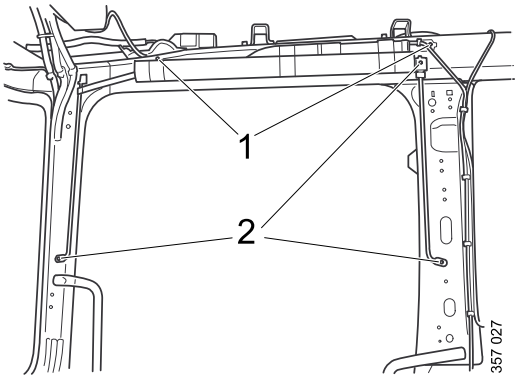

© Scania CV AB

https://truckmanualshub.com/

Batteries

Removal - Batteries

The information below applies to starter batteries.

WARNING!

Wear gloves and eye protection, as the vehicle batteries contain corrosive diluted sulphuric acid and the toxic metal lead.

If acid splashes into your eyes, rinse immediately with running water for at least 15 minutes. Always see a doctor if you get acid in your eyes.

If acid splashes on other parts of your body, rinse immediately with water.

ENVIRONMENT

Handle and store batteries in compliance with local regulations. Within the EU there are manufacturer responsibility regulations for batteries. This means that all Scania workshops are obliged to dispose of batteries responsibly and ensure that they are recycled correctly.

The vehicle batteries contain lead. Lead is harmful to humans and the environment. The batteries must therefore be handled in accordance with national regulations on environmentally hazardous substances.

IMPORTANT!

Be aware of the risks of short-circuiting when working near the battery terminals. Use a lifting board for removing and replacing the batteries.

Number	Designation	Picture	Tool-board
588 084	Hydraulic, mobile lifting table		

© Scania CV AB

https://truckmanualshub.com/

1. Remove the battery from the battery box.

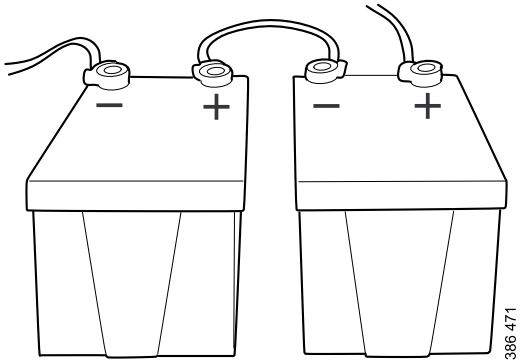

2. Loosen the connections to the central electric unit.
3. Sort the electrical scrap from the cable harness and recycle.

© Scania CV AB

https://truckmanualshub.com/

Instrument

Removal - Instrument panel

Preparatory work

Tools:

Number	Designation	Picture	Tool-board
587 627	Recycling station	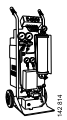	-
2 397 198	Hose pinch-off pliers, 2 off, or 588 603	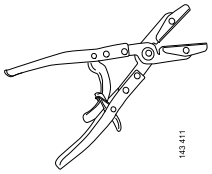	

1. Remove the battery negative terminals, see the Batteries section
2. Open and close the expansion tank cap to release the overpressure.
3. Drain the A/C circuit of refrigerant; see the section Working with refrigerant.

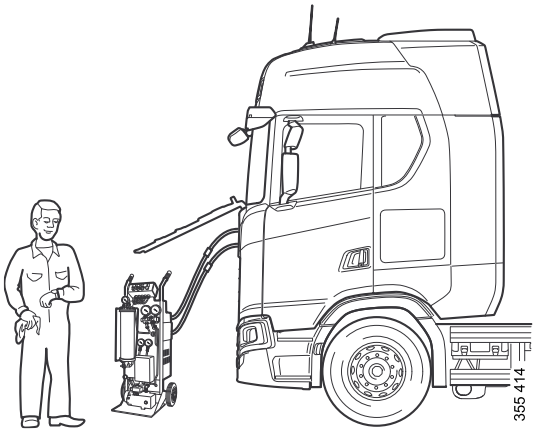

© Scania CV AB

https://truckmanualshub.com/

Working from inside the cab

Tools:

Number	Designation	Picture	Tool-board
588 390	Tool kit for panels	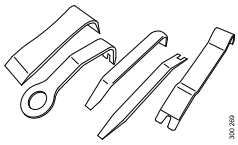	-

1. Remove the A-pillar panels.
2. Remove the covers on the driver's side.
3. Remove the covers on the passenger side.
4. Remove the lower storage compartment.

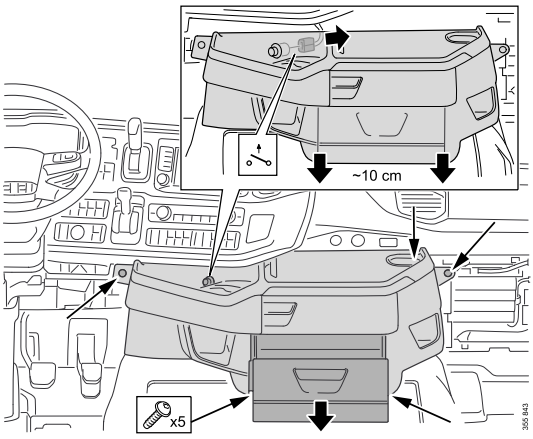

Lower storage, R-cab

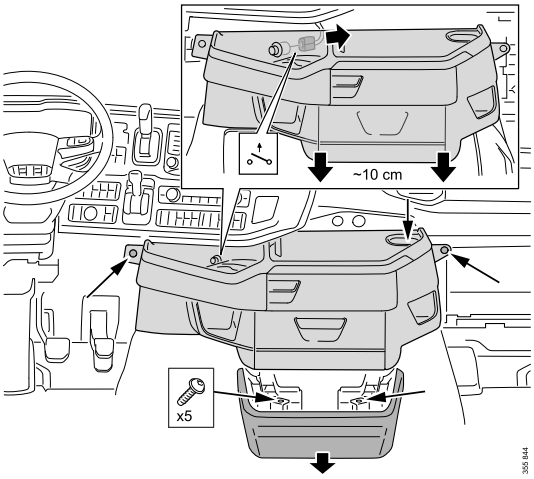

Lower storage, S-cab

© Scania CV AB

https://truckmanualshub.com/

5. Remove the bracket to the lower storage.

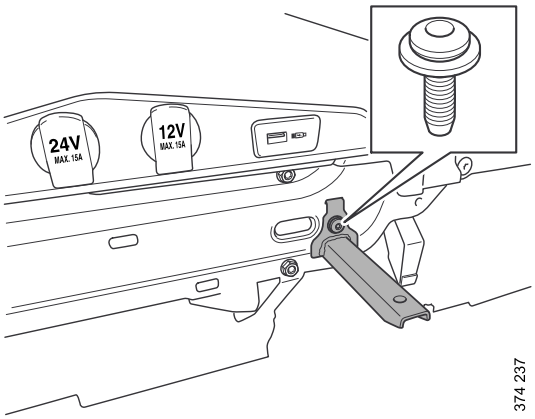

6. Remove the defroster panel.

   Remove the upper attachments of the instrument panel in the firewall.

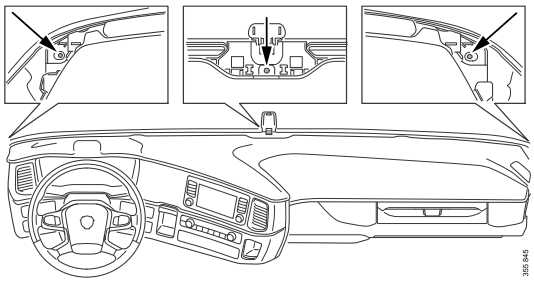

7. Remove the pipe to the exhaust air vent, left-hand side of floor.

   Detach the vertical steering column at the top.

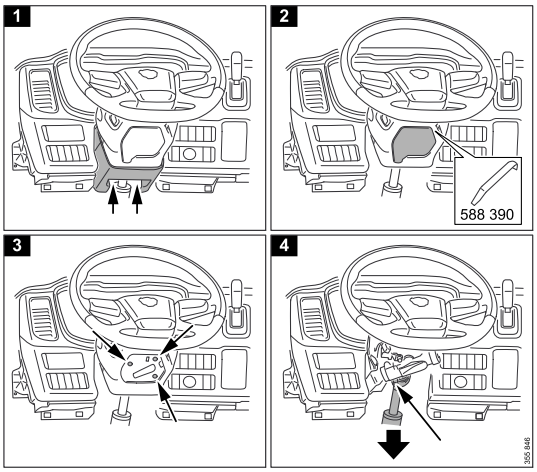

8. Remove the cable harness and air supply on the driver's side.

   1. Remove the door cabling (C14 and C18), floor cabling (C12, C20, C78) (and C8015, if fitted)
   2. Remove the screws (C14 and C18) and floor cabling (C12, C20, C78) (and C8015, if fitted)

   Attach the ground cable to the instrument panel crossmember with cable ties.

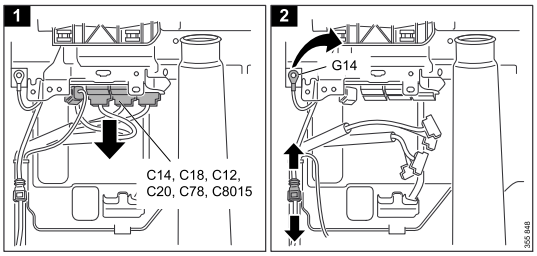

© Scania CV AB

https://truckmanualshub.com/

9. Remove the cable harness and air supply on the passenger side.
   1. Remove the door cabling (C9, C25 and C218)
   2. Remove the cable harness for the roof shelf.
   3. Remove the cable harness and the central electric unit for BWE, between the instrument panel and floor lead-through
   4. Remove the compressed air supply, screw and electrical ground point (G).

   Attach the cable harnesses for the door and roof shelf with cable ties to the grab handle. Attach the ground cable to the instrument panel crossmember with cable ties.

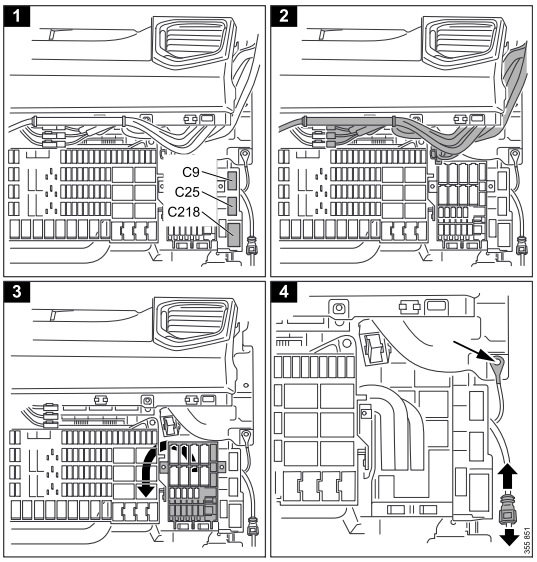

Working from outside the cab

Tools:

Number	Designation	Picture	Tool-board
2 397 198	Hose pinch-off pliers, 2 off, or 588 603	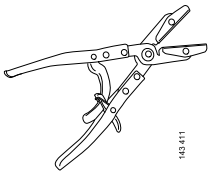	-

1. Remove the windscreen panels and windscreen wiper linkage.

WARNING!

Use eye protection as washer fluid can splash from the washer hoses.

2. Remove the coolant hoses. Use tool 2 397 198.

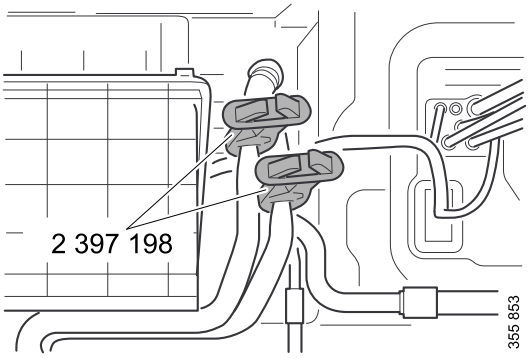

Borttagning av kylvätskeslangarna.

© Scania CV AB

https://truckmanualshub.com/

3. Remove the receiver dryer.

WARNING!

Always use personal protection equipment when working with refrigerant. Refrigerant could cause frostbite injury if it comes into contact with the skin.

Immediately contact a doctor if the refrigerant comes into contact with the eyes. Do not rub! Flush immediately with plenty of water, preferably running water.

4. Remove the HVAC housing.

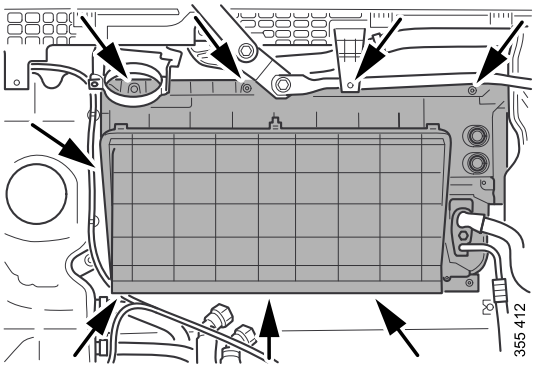

5. Remove the A/C pipe connection at the expansion valve.

IMPORTANT!

Vira mjukt torkpapper runt anslutningarna för att skydda O-ringarna.

Skydda anslutningarna till expansionsventilen.

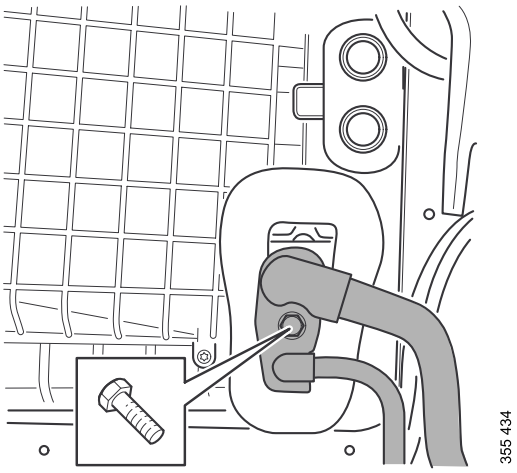

Röranslutningen för AC vid expansionsventilen.

© Scania CV AB

https://truckmanualshub.com/

6. Remove the service brake module connections.

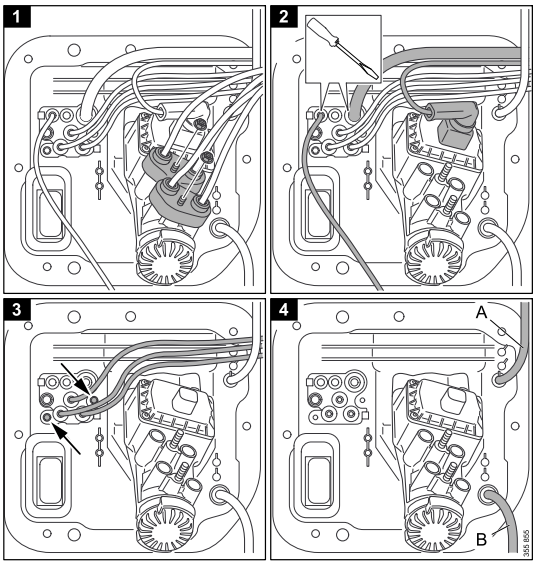

A. Sugledning till behållare för kopplingsvätska. B. Tryckledning från behållare för kopplingsvätska.

7. Remove the connector panel.

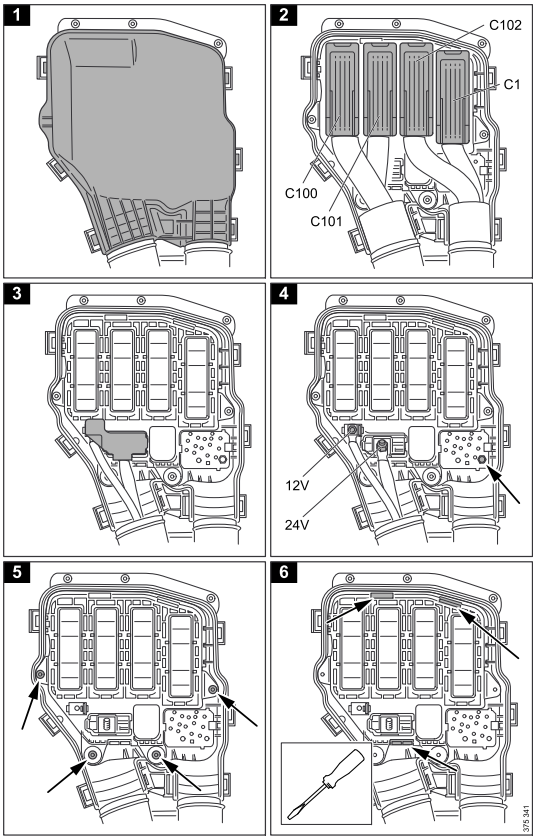

© Scania CV AB

https://truckmanualshub.com/

8. Remove the outer frame for the connector panel.
   1. Remove the holder for the compressed air lines.
   2. Remove the outer frame for the connector panel. Insert the connector panel through the firewall and suspend the connector panel with cable ties from the instrument panel.

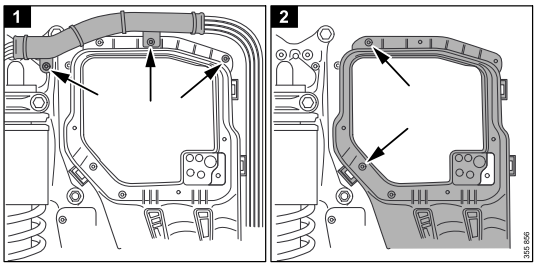

9. Remove the pedal panel.

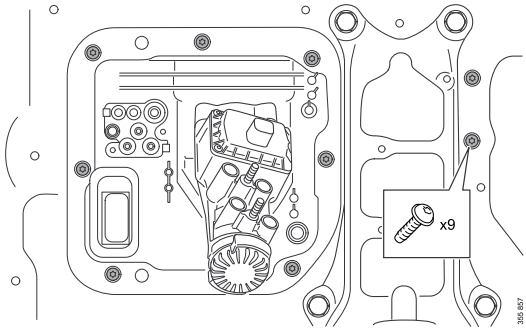

Pedalpanelen

10. Remove the screws for attachment of the HVAC to the firewall.

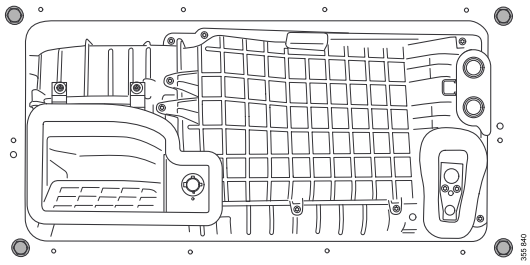

Infästningspunkter för HVAC mot torpedplåten.

Instrument panel from the cab

WARNING!

Risk of crush injuries when the instrument panel is lifted out of the cab. Secure the instrument panel in an overhead hoist and machine lift during the work.

Tools:

© Scania CV AB

https://truckmanualshub.com/

Number	Designation	Picture	Tool-board
99 644	Base bracket	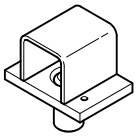 323 007	
99 646	Bracket kit	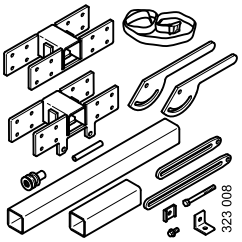 323 008	
2 426 173	Lifting accessory	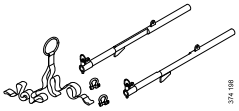 374 198	-
588 966	Machine lift	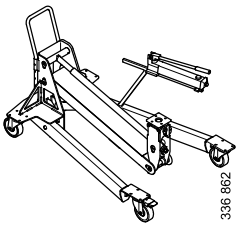 336 862	
	Spirit level		-

Fit the lifting accessory to the instrument panel

1. Push the exhaust air vent to the door aside.

   Fit 2 426 173 Lifting accessory for instrument panel in the instrument panel crossmember.

2. Remove the screw in the crossmember on the driver's side.

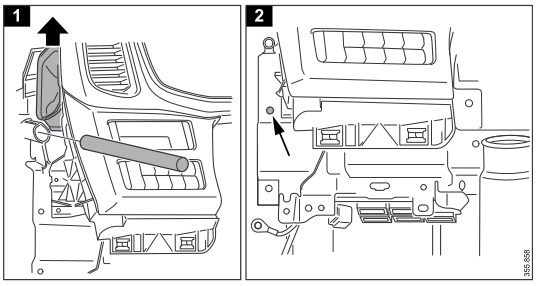

https://truckmanualshub.com/

3. Fit the lifting accessory to the overhead lifting sling.

   Tension the lifting sling so that it is stretched.

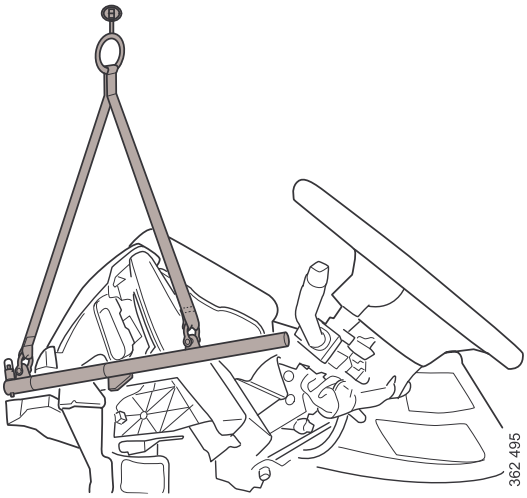

4. Fit 2 426 173 Lifting accessory for instrument panel in the instrument panel crossmember.

   Remove the screw to the crossmember on the passenger side.

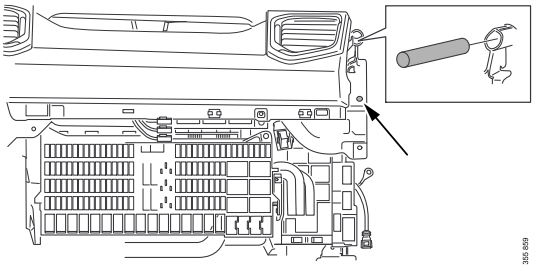

Remove the instrument panel from the cab

1. The right-hand side of the instrument panel should be lifted off by person 1 at the same time as person 2 controls the overhead hoist.

   Place the left hand on the lifting accessory and right hand on the defroster outlet for balance.

   Lift the instrument panel out of the cab until only ten centimetres of the right-hand side of the instrument panel is in the cab.

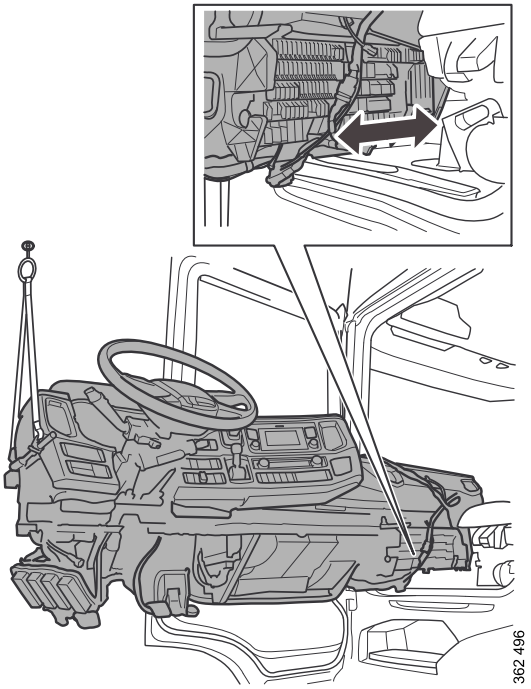

© Scania CV AB

https://truckmanualshub.com/

2. Insert 588 966 Machine lift under the instrument panel.

   Fit the machine lift in the instrument panel crossmember and in the HVAC, as illustrated.

   Use flange screws M8x30.

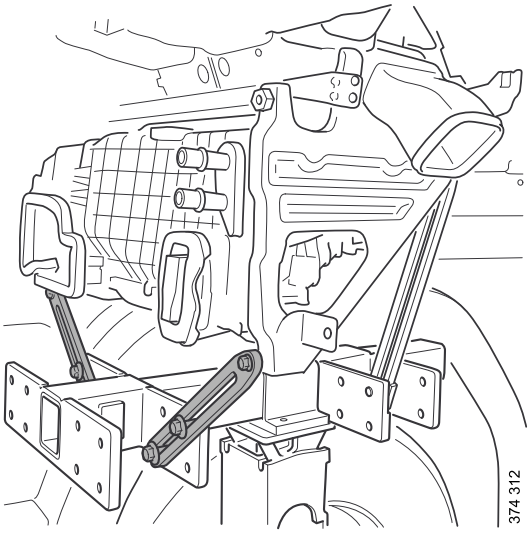

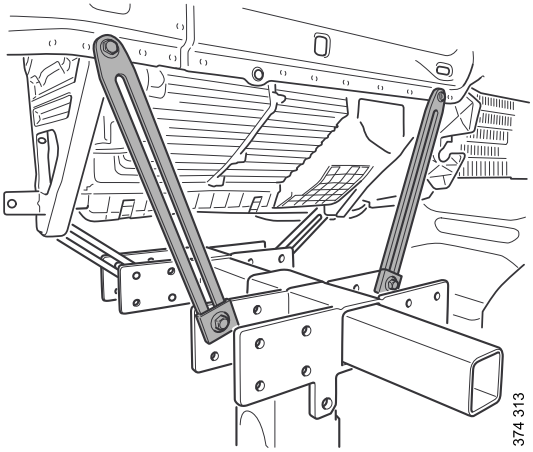

3. Slightly lift the instrument panel using the machine lift.

   Remove the instrument panel from the cab.

4. Lower the instrument panel using the machine lift, leave the instrument panel secured to the overhead lifting sling whilst lowering.

© Scania CV AB

https://truckmanualshub.com/

Cab - Body - Canopy

Cab tilt system

Safety - Cab tilt system

Working on the cab tilting mechanism disables the integral safety functions.

Always follow the instructions and use the special tools specified, otherwise there is a risk of personal injury.

WARNING!

Risk of crushing when the cab is tilted back. The cab falls freely during the last part of the tilting back phase.

WARNING!

Do not stand in front of or behind the cab during tilting.

WARNING!

Do not work under a cab tilted to the intermediate position.

Always tilt and tilt back the cab fully.

Working under a partially tilted cab can result in personal injury.

WARNING!

Do not tilt the cab if the anti-roll bar has been removed.

WARNING!

Do not tilt the cab if the ground slopes more than 10 %.

© Scania CV AB

https://truckmanualshub.com/

WARNING!

When driving vehicles equipped with a mechanical cab tilt pump, the pump valve must be in the tilt-back position. Otherwise the hydraulics may cause damage.

WARNING!

Removing and fitting the cab tilt cylinder or cab tilt pump must only be carried out when the cab is tilted back with the cab locks in the locked position, unless otherwise specified in the work description.

© Scania CV AB

https://truckmanualshub.com/

U4, Refrigerator

Refrigerator

1. Fold up the lower bed.
2. Pull out the refrigerator.

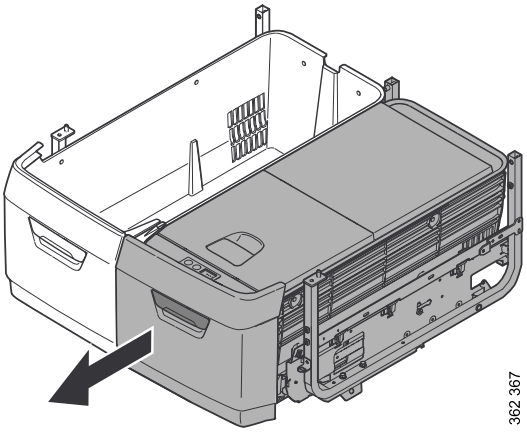

3. Remove the connection.

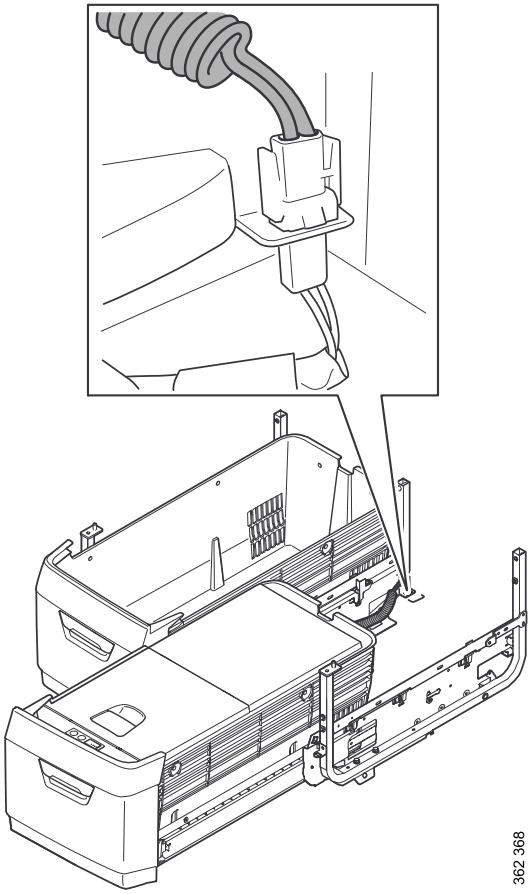

© Scania CV AB

https://truckmanualshub.com/

NOTE:

Depending on the refrigerator model, there may be 4 or 6 screws.

Remove the screws.

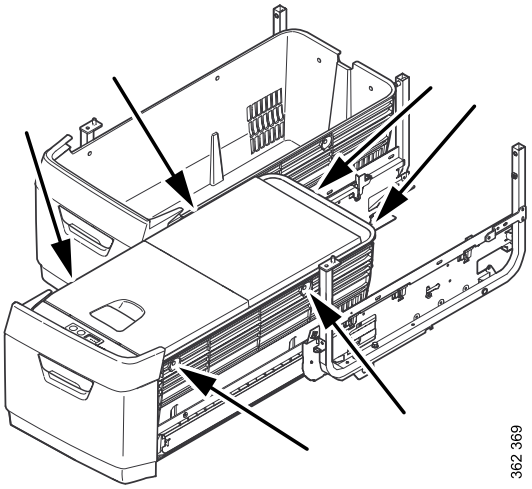

5. Lift the refrigerator out of the storage compartment.

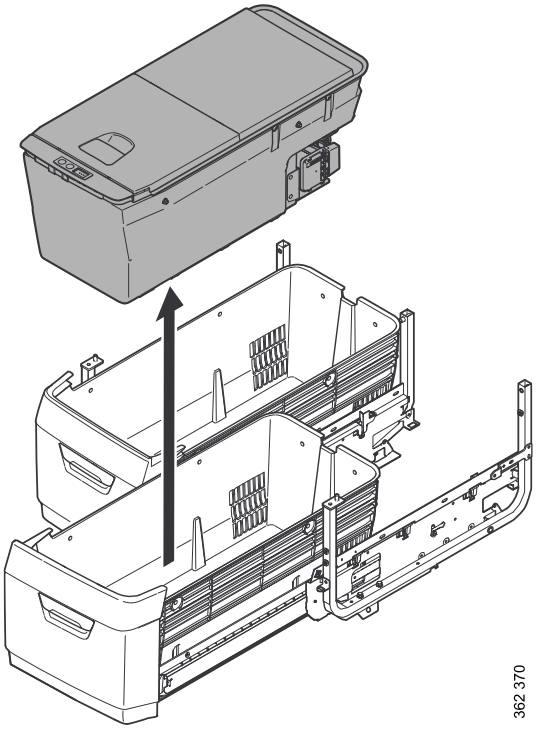

© Scania CV AB

https://truckmanualshub.com/

A/C compressor

Removal - A/C compressor

WARNING!

Always use personal protection equipment when working with refrigerant. Refrigerant could cause frostbite injury if it comes into contact with the skin. Immediately contact a doctor if the refrigerant comes into contact with the eyes. Do not rub! Flush immediately with plenty of water, preferably running water.

WARNING!

Welding, smoking or heating are not allowed if there is refrigerant present in the air. The refrigerant generates a very toxic gas when heated.

ENVIRONMENT

Work on the air conditioning must be carried out in compliance with the legislation of the country in question.

WARNING!

Refrigerant may only be handled by authorised personnel.

WARNING!

The A/C circuit contains refrigerant under pressure.

Tools:

© Scania CV AB

https://truckmanualshub.com/

Number	Designation	Picture	Tool-board
99 565	Ratchet spanner for belt tensioner	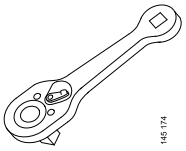	D2
2 375 271	Tool for belt tensioner	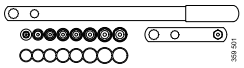	

© Scania CV AB

https://truckmanualshub.com/

Working with refrigerant

Draining refrigerant

Tools:

Number	Designation	Picture	Tool-board
587627	Recycling station	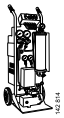	-

WARNING!

Always use personal protection equipment when working with refrigerant. Refrigerant could cause frostbite injury if it comes into contact with the skin.

Immediately contact a doctor if the refrigerant comes into contact with the eyes. Do not rub! Flush immediately with plenty of water, preferably running water.

WARNING!

Welding, smoking or heating are not allowed if there is refrigerant present in the air. The refrigerant generates a very toxic gas when heated.

ENVIRONMENT

Work on the air conditioning system must be carried out in compliance with the legislation of the country in question.

ENVIRONMENT

The refrigerant must not be released into the atmosphere and must be recycled. If, for any reason, the refrigerant needs to be replaced, follow any national requirements for the handling of depleted refrigerant.

© Scania CV AB

https://truckmanualshub.com/

NOTE:

Scania does not recommend reuse of used A/C components.

1. Connect the recycling station hoses to the maintenance valves. The valve, marked in the illustration by "SUC", is the low pressure side, the valve "DIS" is the high pressure side.

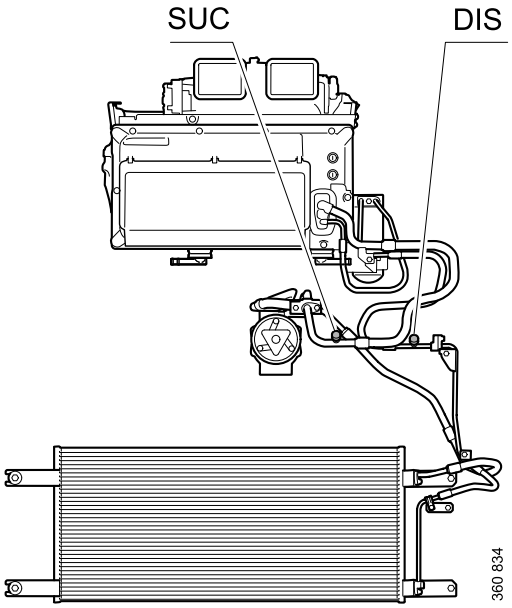

2. Check the value displayed by the pressure gauge of the recovery station before the system is opened.
3. Drain the refrigerant and check the pressure gauges in the meantime. Remember that a high drain rate can cause the receiver dryer to freeze and an unnecessary amount of oil to be sucked out of the system.
4. Continue draining until the pressure gauges are stable. It is normal for the value to increase and decrease during draining because the temperature of the refrigerant changes. Complete draining should take at least 10 minutes.
5. When draining is complete, leave the recovery station connected for another 10 minutes. Check that the pressure does not rise in the meantime. The pressure gauges should be completely stable. Repeat the draining procedure if the pressure rises.
6. Plug the connections as soon as the recycling station has been disconnected.

© Scania CV AB

https://truckmanualshub.com/

Compressor - auxiliary cab cooler (E114)

Removal - Compressor

WARNING!

Please read through the safety precautions in the Working with refrigerant section before starting work on the compressor. Use designated special tools, otherwise there is a risk of injury

Tools:

Number	Designation	Picture	Tool-board
587 627	Recycling station	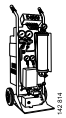	-

1. Drain the refrigerant from the air conditioning; refer to the Working with refrigerant section.
2. Tilt the cab in accordance with the applicable safety precautions, see the Cab tilt system section.
3. Remove the connections to and from the compressor.

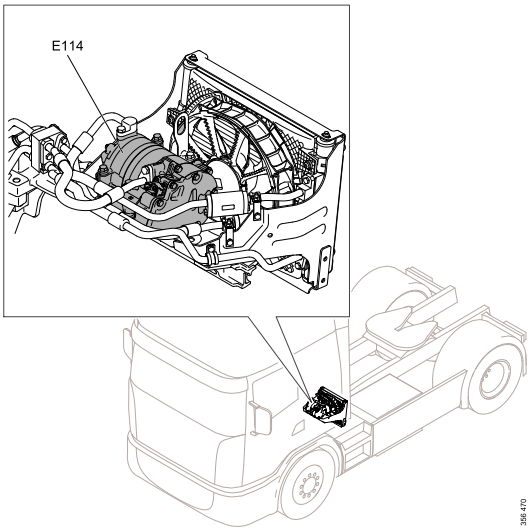

4. Remove the screws.
5. Remove the compressor without angling it, as there is a risk of oil leakage.

© Scania CV AB

https://truckmanualshub.com/

SCANIA

00:45-06