https://truckmanualshub.com/

PACCAR

SERVICE MANUAL

Section	Electrical System Service Manual
Number	PM819010/KM815054
Date	04/01/2010

2005 - 2010 MULTIPLEXED ELECTRICAL SYSTEM SERVICE MANUAL

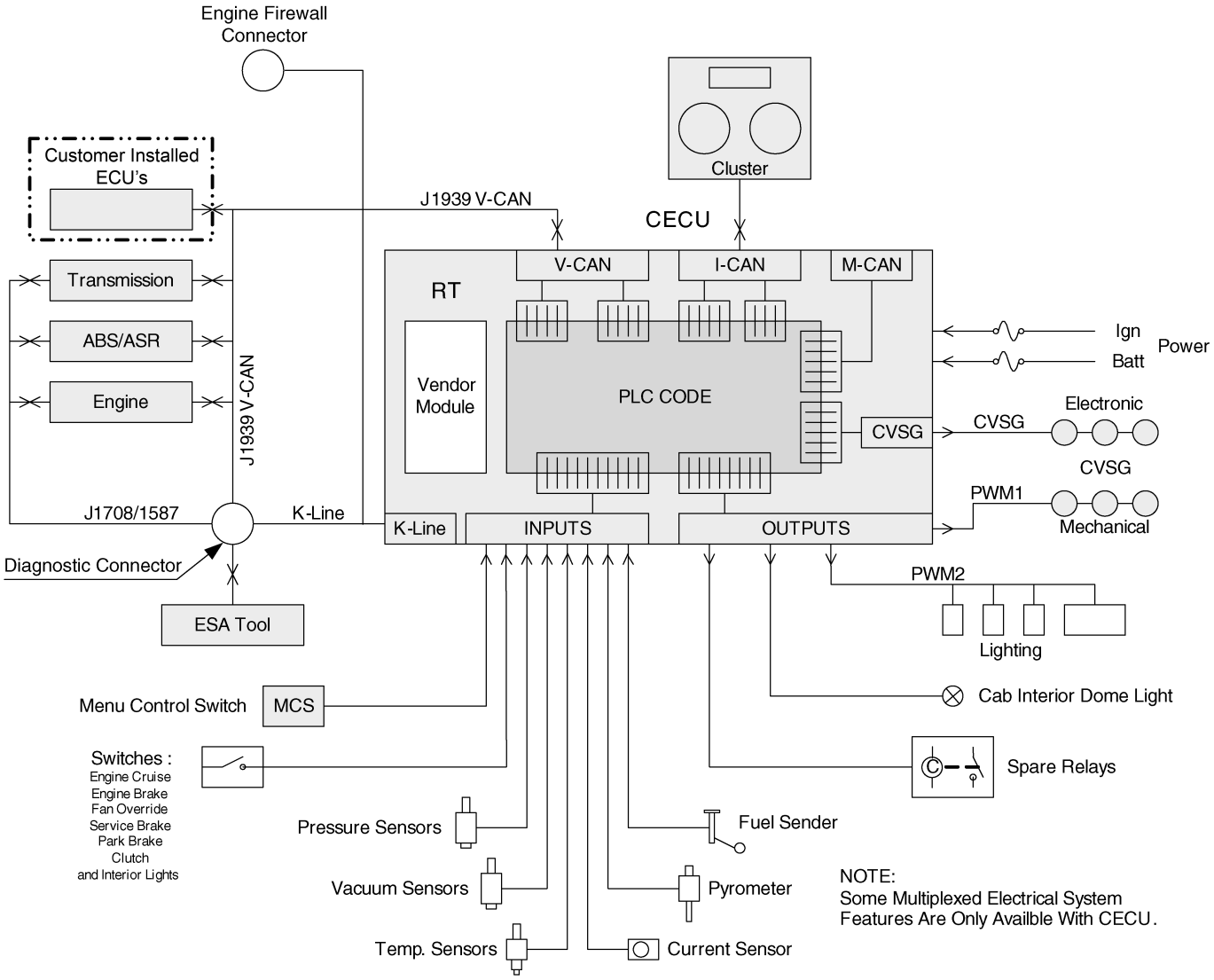

https://truckmanualshub.com/

©2010 PACCAR Corporation

Confidentiality Notice: This document and the information contained herein is proprietary. It shall not be reproduced, copied or disclosed, in whole or in part, or used for manufacture without the written permission of PACCAR. You are hereby notified that any dissemination of this information is strictly prohibited.

 https://truckmanualshub.com/

Table of Contents

Safety 1
Applies To 2
Exploded View 3
What's New 4
General Information 5
Special Tools 6
Specifications 7
How It Works 8
Maintenance 9
Disassembly / Assembly 10
Inspection 11
Troubleshooting 12
Glossary 13
Index 14

https://truckmanualshub.com/

https://truckmanualshub.com/

1 Safety

Important Notes . . . . . 1 - 2

Important Notes

The simulate function within ESA is a good diagnosis tool. Safety is always the primary concern, so many CECU outputs are not accessible for simulation such as: cruise control, engine oil pressure, park brake switch.

Simulation of gauges is also not permitted if the engine is running.

Replacing the control unit results in the odometer being reset. Take appropriate action to record the vehicle miles prior to removing the control unit.

CAUTION: Interrupting the communication or power supply during a control unit reflash could result in hardware damage.

ESA recognizes when a software update is required on a connected vehicle. If for some reason the user chooses not to reflash the control unit, ESA triggers a warning display. The LCD backlighting of the speedometer and outside air temperature blink for 1 minute. The warning is triggered at every key-on of the vehicle until the required update is performed. This is to alert the operator or other technicians that a vehicle reflash is required.

ESA automatically identifies what version of control unit it is connected to, and only permits software downloads that are applicable for that control unit.

Check the program menu to see if an inoperative feature is disabled. This is very important when diagnosing an inoperative gauge on a CECU equipped vehicle. The gauge may simply have been previously disabled.

Instrumentation Service Information describing how to remove, disassemble, and reinstall instrumentation components is located on ServiceNet. Before attempting any instrumentation repairs, the technician should have a complete understanding of the procedures described in ServiceNet.

This manual contains service manual information covering the following software versions: ICU (P30-1003), CECU/CECU2 (P30-1002), and CECU3 (P30-1008.) For vehicles equipped with software version CECU3 with Chassis Node (P30-1009), refer to a separate publication.

https://truckmanualshub.com/

2 Applies To

Electronic Service Analyst (ESA) . . . . 2 - 2
What Control Unit Do I Have . . . . . 2 - 3
Models–Build Dates . . . . . 2 - 4
Control Unit Identification . . . . . 2 - 5
Control Unit Comparison Chart . . . . 2 - 7

https://truckmanualshub.com/

Electronic Service Analyst (ESA)

ESA History

Multiplexed instrumentation was introduced in 2005. This method of communication, using a single wire to transmit multiple signals to many components, has dramatically reduced the size and complexity of the wiring bundle behind the dash panel.

While some traditional diagnostic and troubleshooting methods apply to multiplexed instruments, other methods do not. Professional service technicians needed a new diagnostic software program to make troubleshooting easier and more efficient. The program is called Electronic Service Analyst (ESA). It does not replace basic electrical system troubleshooting skills; it supplements them.

ESA is flexible and allows the technician to use his own experience and expertise to help find and fix the problem. The technician reviews fault codes stored in the components, verifies whether the instrumentation is working properly, and diagnoses the root cause of the problem using troubleshooting information found in ServiceNet.

Once the software is installed on a personal computer, it’s easy to use. It’s available in English, Spanish, and Canadian French. Much like existing PC-based service applications, this analytic program communicates over a wireless data link adapter (DLA) to the multiplexed components. A USB Link to data link adapter is used for easy ESA connection and communication.

ESA 3 is the latest revision/update to the troubleshooting software. As more features are added to take advantage of multiplexing, ESA needs to grow in order to continue to support the technician.

NOTE: At the time of publication "ESA 3.1" was the latest released version of the Electronic Service Analyst. If there are subsequent releases of ESA (version 3.2, 3.3, 4.0, etc.), ESA will automatically update to the most recent version.

https://truckmanualshub.com/

What Control Unit Do I Have

This manual provides service information covering trucks equipped with the multiplexed instrumentation system. Before attempting to make service repairs, the technician should be knowledgeable about the system design, components, operation and troubleshooting procedures for diagnosing multiplexed instrumentation problems.

ICU or CECU?

Early multiplexing was for the instrumentation system only. The module was known as the Instrumentation Control Unit (ICU).

Now, as multiplexing from this control unit is being used for systems other than just the instrumentation, the module has been renamed the Cab Electronic Control Unit (CECU).

The CECU is an updated ICU. but now includes a few more circuits to incorporate the new features. ESA is the tool for both.

CECU's are available in a few variants according to the vehicle model and the engine emissions standard. ESA automatically identifies what version of CECU is connected and only permits software downloads that are applicable for that control unit.

Identifying which control unit is in the vehicle helps determine what features are present and also aids in troubleshooting.

Models–Build Dates

Models–Build Dates Chart

Control Unit	Hardware Part Number	Software Version	Models	Engine Emissions Level	Production Built Dates
ICU	Q21-1029-X-XXX	P30-1003-XXX	**PB:** 357, 378, 379, 385, 386 **KW:** C500, T600, T800, W900, Off-Highway	1998, 2004	2005 - present
CECU / CECU2	Q21-1055-X-XXX / Q21-1075-X-XXX	P30-1002-XXX	**PB:** 365, 367, 384, 386, 388, 389 **KW:** C500, T440/T470, T660, T800, W900, Off-Highway	2007	2007 - present
			PB: 387 **KW:** T2000		2008 - present
			PB: 325, 330, 335, 340		2009 - present
CECU3	Q21-1076-X-XXX	P30-1008-XXX	**PB:** 325, 330, 337, 348, 387 **KW:** T170, T270, T370, T700	2010	2010 - present
CECU3 with Chassis Node	Q21-1076-X-XXX / Q21-1077-X-XXX	P30-1009-XXX	**PB:** 365, 367, 384, 386, 388, 389 **KW:** C500, T440/T470, T660, T800, W900, Off-Highway	2010	2010 - present

NOTE: This manual contains service manual information covering the following software versions: ICU (P30-1003), CECU/CECU2 (P30-1002), and CECU3 (P30-1008.) For vehicles equipped with software version CECU3 with Chassis Node (P30-1009), refer to a separate publication.

https://truckmanualshub.com/

Control Unit Identification

Control unit identification can be made using a few methods:

- Searching using the Electronic Catalog (ECAT)
- Connecting using the Electronic Service Analyst (ESA)
- Dome light function
- Menu Control Switch (MCS), only available with highline display

Using ECAT or ESA are the easiest and most exact ways of determining the type of control unit in the truck.

Types of Control Unit Identification

Electronic Catalog (ECAT) Identification

ECAT provides a parts list “as built” and Bill of Materials information for each specific truck. The catalog is searchable, and contains the part number and identification of the trucks instrument panel control unit.

- ICU Part Number Q21-1029-X-XXX
- CECU Part Number Q21-1055-X-XXX
- CECU2 Part Number Q21-1075-X-XXX
- CECU3 Part Number Q21-1076-X-XXX

Electronic Service Analyst (ESA) Identification

Connecting using ESA brings up a control unit information window. In this window, the sixth line item is the Control Unit Type and identifies whether the truck has an ICU or CECU. It also details the variant of the CECU.

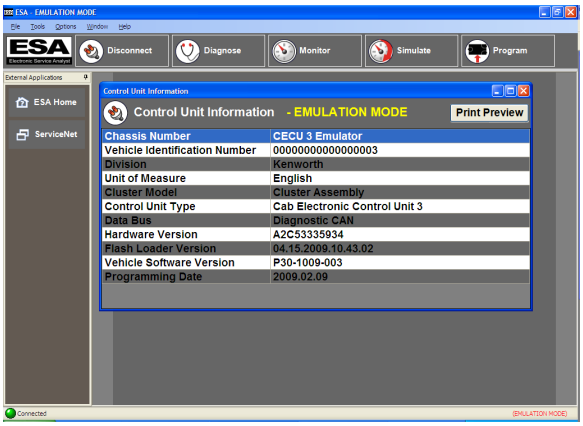

Line item ten of this Control Unit Information window displays the current Vehicle Software Version. This details the current ICU/CECU software and programming date that is presently installed on the vehicle.

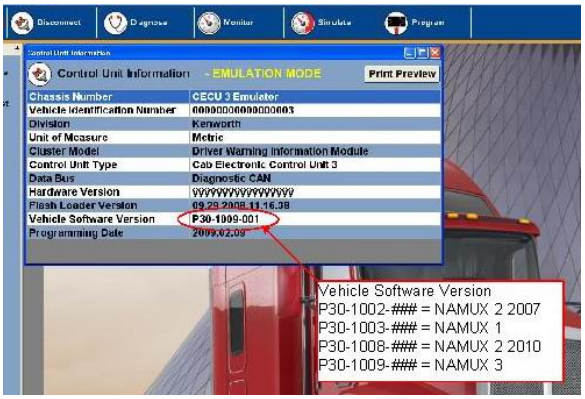

Upon connection, ESA recognizes if a software update has been issued for the control unit within the connected vehicle. If an update is required, ESA prompts the technician to perform the update operation.

Dome Light Identification

The CECU system has an updated feature that delays turning the dome light off when you close the door. The previous ICU system did not have this function so the light turns off as soon as the door is shut. Therefore, if the dome light does not turn off immediately after all doors are shut, then the vehicle has a CECU system. If the dome light does turn off immediately, then the vehicle may be ICU OR CECU with this function disabled. In these cases, you will need to refer to ECAT for verification.

MCS Identification

For vehicles equipped with the highline display, control unit identification is possible via the Menu Control Switch (MCS). Using the MCS knob, select the "Truck Information" menu. Use this menu to look up the "CECU SW Ver." Software version P30-1002-XXX can denote either a CECU or CECU2.

- ICU Software P30-1003-XXX
- CECU Software P30-1002-XXX
- CECU2 Software P30-1002-XXX
- CECU3 Software P30-1008-XXX

https://truckmanualshub.com/

Control Unit Comparison Chart

The following charts show the differences between the ICU and CECU.

The first chart provides an alphabetical listing of the features available for either an ICU or CECU. Since the CECU is an updated ICU, almost all of the features of an ICU are found in a CECU.

The similarity of the modules is easily seen in the second chart as well. This chart is an abbreviated connector pinout of each module. Since the same wiring connections are used for both modules, its easy to see that the CECU has more circuits to handle the increase in multiplexed features. There are also a few features for the CECU that are only present on vehicles outfitted to meet the 2010 emissions standards.

Comparison Charts

Comparison Chart - (Supported Features)

Supported Features	ICU	CECU
Air filter restriction	X	X
Air pressure transducer	X	X
Ammeter	X	X
Axle temperature, center/steer	X	X
Axle temperature, front	X	X
Axle temperature, rear	X	X
Backlighting - auxiliary	X	X
Brake switch (hyd)		X
Brakesaver oil temperature	X	X
Cab dome lamp		X
Check engine telltale	X	X
Clutch switch		X
Courtesy lights - left door	X	X
Courtesy lights - right door		X
Cruise control		X
CVSG data/power	X	X
Dash buzzer	X	X
Dash/panel illumination	X	X
Dimmer input	X	X
Dome lamp		X
Editable telltale 1	X	X
Editable telltale 2	X	X
Editable telltale 3	X	X
Editable telltale 4	X	X
Editable telltale 5	X	X
Editable telltale 5	X	
Editable telltale 6	X	X
Editable telltale 7	X	
Editable telltale 8	X	X
Editable telltale 9	X	X
Engine fan override		X
Fifth wheel lock telltale	X	X
Fuel filter restriction	X	X
Fuel level sensor 1	X	X
Fuel level sensor 2	X	X
General oil temperature	X	X
Hazard	X	X
Headlamps active		X
High beam active	X	X
I-CAN high	X	X
I-CAN low	X	X
Inhibit regen		X
Idle timer relay		X
Interaxle lock telltale	X	X
K-line	X	X
Left turn	X	X
LVD input		X
Message display		X
Outside air temperature	X	X
Park brake active	X	X
Park lamp/Headlamp active	X	X
Power - accessory	X	X
Power - battery	X	X
Power - ignition	X	X
Power supply +5V sensors	X	X
PTO		X
Regeneration switch enable		X
Retarder select		X
Right turn	X	X
Seat belt telltale		X
Spare analog input		X
Spare digital input		X
Spare relay output	X	X
Stop engine telltale	X	X
Tractor ABS telltale	X	X
Trailer ABS telltale	X	X
Transfer case oil temp	X	X
Transmission oil temp - aux	X	X
Transmission oil temp - main	X	X
V-CAN high	X	X
V-CAN low	X	X

Comparison Chart - (Pinout)

Conn	Pin Number	Circuit Function	ICU	CECU
A	1	CVSG power	X	X
	2	Power - battery	X	X
	3	Cab dome lamp		X
	4	Menu control switch power		X
	5	Ground	X	X
	6	Menu control switch ground		X
	7	Dash/panel illumination	X	X
	8	Auxiliary backlighting	X	X
	9	Power - battery		X

Conn	Pin Number	Circuit Function	ICU	CECU
B	1	Menu control switch encode A		X
	2	Menu control switch encode B		X
	3	Menu control switch enter		X
	4	Courtesy lights - right door jamb switch		X
	5	Brake Switch (Hydraulic)		X
	6	Dome lamp input		X
	7	Seat belt telltale		X
	8	Cruise set		X
	9	Cruise resume		X
	10	Spare digital input 1L		X
	11	Retarder select 1		X
	12	Retarder select 2		X
	13	Clutch switch		X
	14	Headlamps active		X
	15	PTO set		X
	16	PTO resume		X
	17	Engine fan override		X
	18	Regen enable		X
	19	Inhibit regen		X
	20	Spare digital input		X
	21	Spare digital input		X
	22	LVD input		X
	23	Spare digital input		X
	24	Spare digital input		X
C	1	Power supply +5V sensors	X	X
	2	Analog return	X	X
	3	PTO oil temp	X	
	3	Analog return		X
	4	K-line	X	X
	5	Dimmer input	X	X
	6	Air pressure transducer - primary	X	X
	7	Air pressure transducer - secondary	X	X
	8	Air pressure transducer - application	X	X
	9	Ammeter	X	X
	10	Air filter restriction	X	X
	11	Fuel filter restriction	X	X
	12	Fuel level sensor 1	X	X
	13	Fuel level sensor 2	X	X
	14	CVSG data	X	X
	15	CVSG return	X	X
	16	Outside air temperature	X	X
	17	Front axle temperature	X	X
	18	Rear axle temperature	X	X
	19	Center/steer axle temperature	X	X
	20	General oil temperature	X	X
	21	Transmission oil temperature - main	X	X
	22	Transmission oil temperature - auxiliary	X	X
	23	Pyrometer	X	X
	24	Brakesaver oil temperature	X	X
	25	Analog return	X	X
	26	Transfer case oil temperature	X	X
	27	Remote throttle signal		X
	28 thru 52	Spare		X
D	1	Power - ignition	X	X
	2	Courtesy lights - left door jamb switch	X	X
	3	Power - accessory	X	X
	4	Hazard	X	X
	5	Park lamp/Headlamp active	X	X
	6	High beam active	X	X
	7	Park brake active	X	X
	8	Left turn	X	X
	9	Right turn	X	X
	10	Cruise on/off		X
	11	Interaxle lock telltale	X	X
	12	Fifth wheel lock telltale	X	X
	13	Tractor ABS telltale	X	X
	14	Trailer ABS telltale	X	X
	15	Check engine telltale	X	X
	16	Stop engine telltale	X	X
	17	Spare	X	X
	18	Spare	X	X
	19	Editable telltale 1 See editable telltale table	X	X
	20	Editable telltale 2 See editable telltale table	X	X
	21	Editable telltale 3 See editable telltale table	X	X
	22	Editable telltale 4 See editable telltale table	X	X
	23	Editable telltale 5 See editable telltale table	X	
	23	Spare digital input		X
	24	Editable telltale 6 See editable telltale table	X	X
	25	Editable telltale 7 See editable telltale table	X	X
	26	Editable telltale 8 See editable telltale table	X	X
	27	Editable telltale 9 See editable telltale table	X	X
	28	Dash buzzer 1A	X	X
	29	Dash buzzer 1B	X	X
	30	Dash buzzer 1C	X	X
	31	Dash buzzer 2	X	X
	32	Not used		X
	33	Not used		X
	34	I-CAN high	X	X
	35	I-CAN low	X	X
	36	I-CAN ground	X	X
	37	V-CAN high	X	X
	38	V-CAN low	X	X
	39	V-CAN ground	X	X

Conn	Pin Number	Circuit Function	ICU	CECU
	40	V-CAN low terminated	X	X
E	1	Idle timer relay		X
	2	Spare relay output		X
	3	Spare relay output		X
	4	Spare relay output		X
	5	Ground		X
	6	Spare relay output		X
	7	Spare relay output		X
	8	Spare relay output		X
	9	Spare relay output		X

Editable Telltale Application

Editable Telltale Location	KW Cluster	KW DWIM	PB Cluster	PB DWIM
Editable Telltale 1	Position 4	Position 1	Position 2	Position 1
Editable Telltale 2	Position 7	Position 2	Position 3	Position 2
Editable Telltale 3	Position 8	Position 5	Position 4	Position 5
Editable Telltale 4	Position 9	n/a	Position 5	Position 8
Editable Telltale 5	Position 10	n/a	Position 7	Position 9
Editable Telltale 6	Position 12	n/a	Position 8	Position 10
Editable Telltale 7	Position 13	n/a	n/a	Position 11
Editable Telltale 8	Position 14	n/a	n/a	n/a
Editable Telltale 9	Position 16	n/a	n/a	n/a

See Editable Telltale Lights for illustration of possible telltale locations.

https://truckmanualshub.com/

3 Exploded View

Control Unit Location . . . . . 3 - 2

Control Unit Location

Instrumentation Control Unit/Cab Electronic Control Unit (ICU/CECU)

The heart of the multiplexed instrumentation system is the ICU/CECU. For the majority of Peterbilt vehicles, the ICU/CECU is located behind the center of the dash, near the radio. For the majority of Kenworth vehicles, the ICU/CECU is located behind the center console.

Typical ICU/CECU Locations

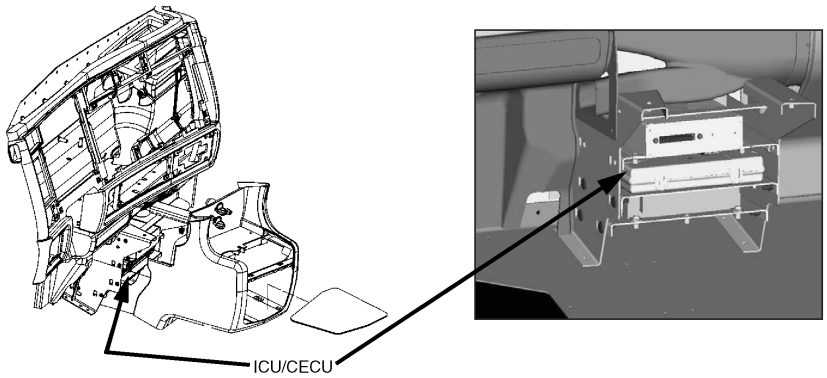

Kenworth Location

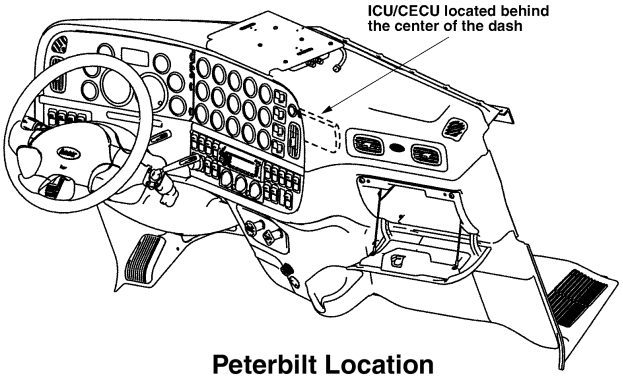

Peterbilt Location

For Kenworth models T2000 and T700, the CECU is located at the front of the passenger footwell. It is beneath the carpet, attached to the firewall and covered by a protective plate.

Kenworth T2000/T700 CECU Locations

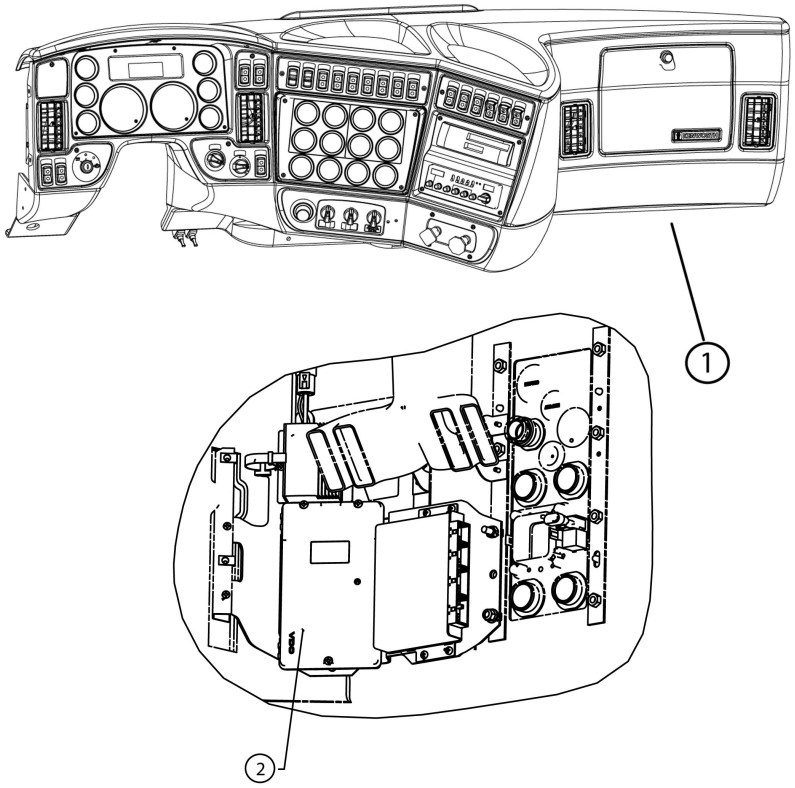

1. Located behind a protective plate attached to the firewall at the front of the passenger footwell
2. Cab Electronic Control Unit (CECU)

For 2010 emissions compliant Kenworth medium duty models (T170, T270, T370), the CECU is located behind the lower center of the dash panel.

Kenworth Medium Duty CECU Locations

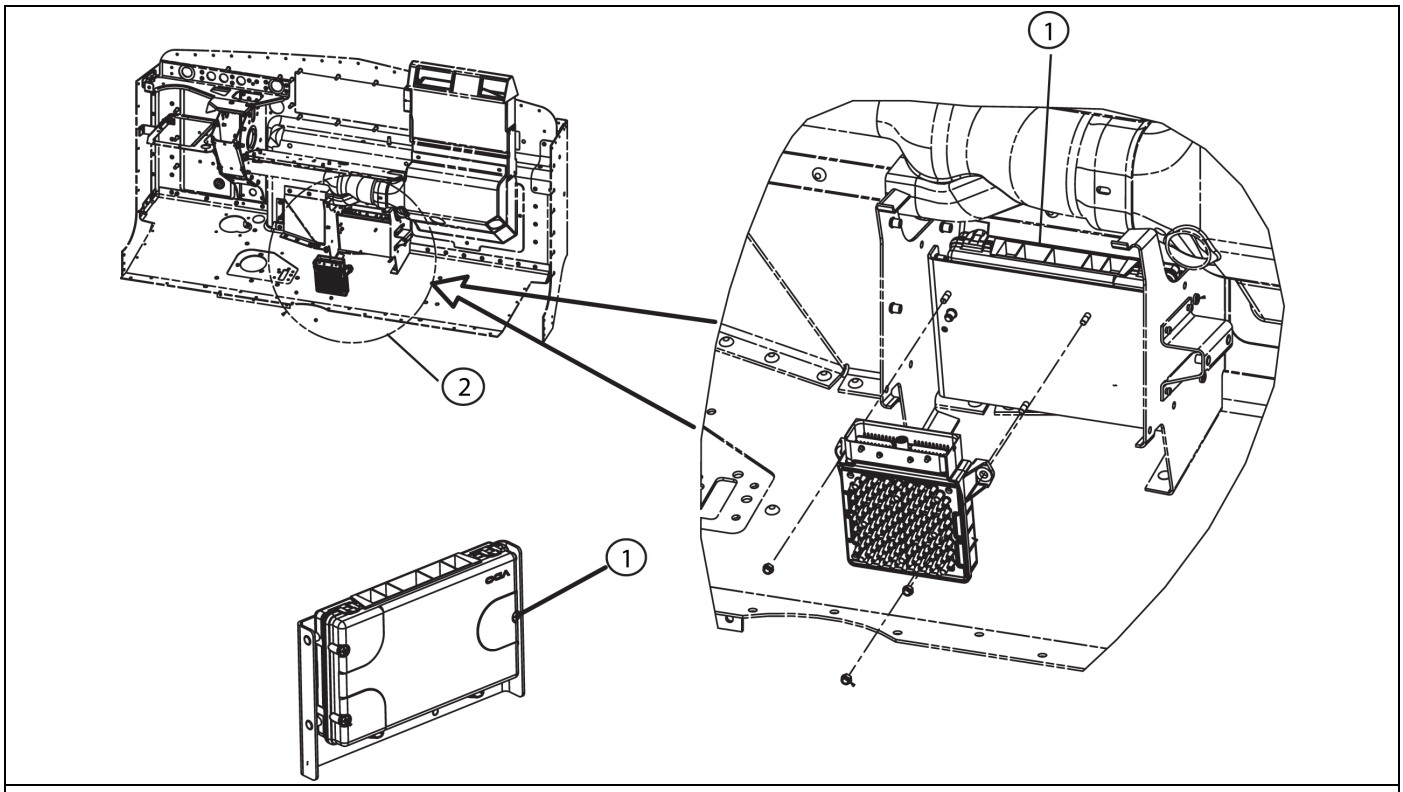

1. Cab Electronic Control Unit (CECU), located behind protective plate.
2. Behind lower center of dash, in back of the cupholder.

For 2010 emissions compliant Peterbilt medium duty models, the CECU is located behind the top center of the dash panel.

Peterbilt Medium Duty CECU Locations

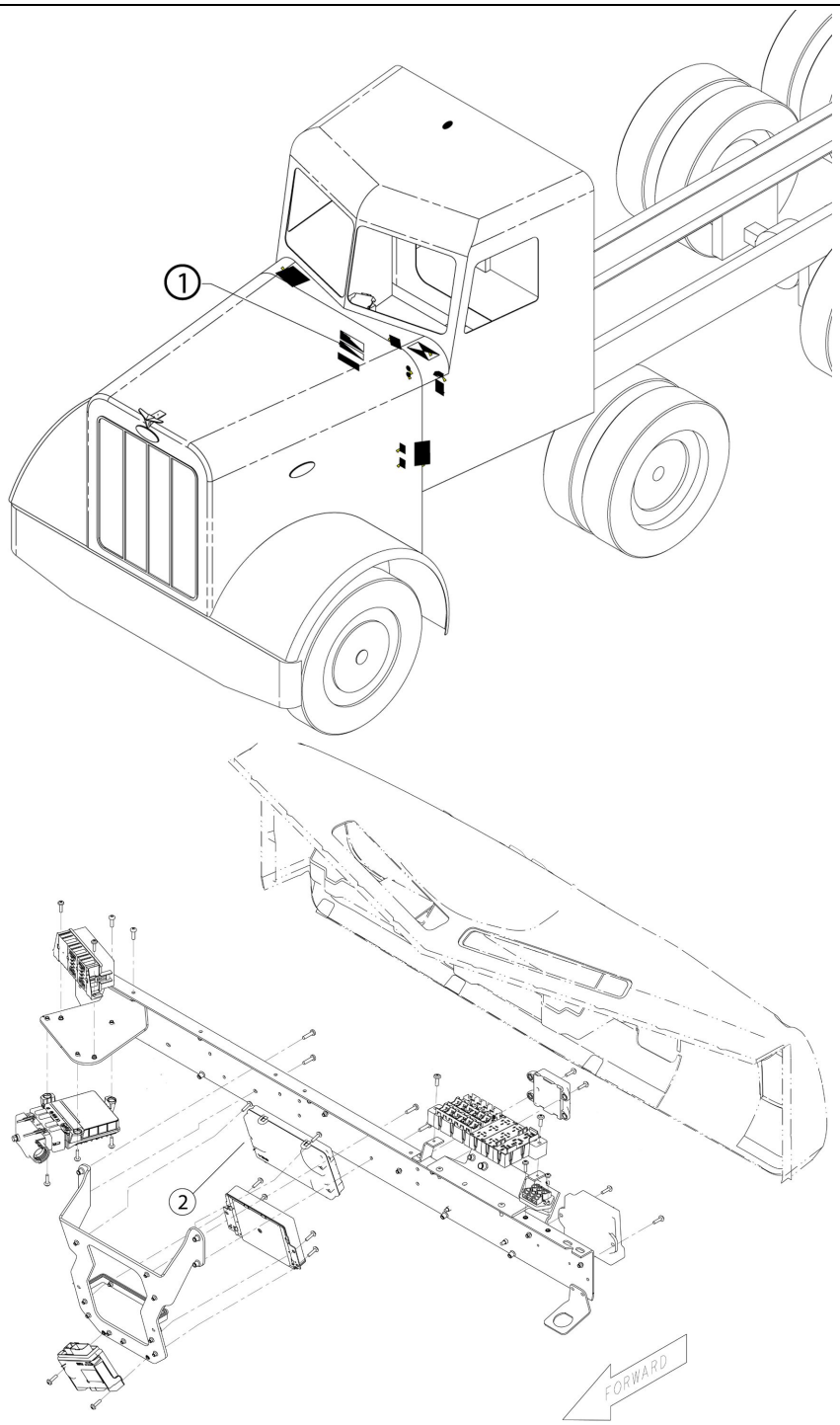

1. Located behind the top center of the dash panel
2. Cab Electronic Control Unit (CECU)

https://truckmanualshub.com/

https://truckmanualshub.com/

4 What's New

Electronic Service Analyst (ESA) . . . . 4 - 2
New Features of ESA 3 . . . . . 4 - 4

Electronic Service Analyst (ESA)

What is ESA?

Multiplexed instrumentation was introduced in 2005. This method of communication, using a single wire to transmit multiple signals to many components, has dramatically reduced the size and complexity of the wiring bundle behind the dash panel.

While some traditional diagnostic and troubleshooting methods apply to multiplexed instruments, other methods do not. Professional service technicians needed a new diagnostic software program to make troubleshooting easier and more efficient. The program is called Electronic Service Analyst (ESA). It does not replace basic electrical system troubleshooting skills; it supplements them.

ESA is flexible and allows the technician to use his own experience and expertise to help find and fix the problem. The technician reviews fault codes stored in the components, verifies whether the instrumentation is working properly, and diagnoses the root cause of the problem using troubleshooting information found in ServiceNet.

Once the software is installed on a personal computer, it's easy to use. It's available in English, Spanish, and Canadian French. Much like existing PC-based service applications, this analytic program communicates over a data link adapter (DLA) to the multiplexed components.

A USB Link to data link adapter is used for ESA connection and communication and is compatible for use with all control units.

There are many existing adapters that can continue to be used to support vehicles without 2010 emissions engines. ESA is a must-have diagnostic tool for dealerships to troubleshoot the new instrumentation. ESA eliminates much of the time consuming guesswork in some hard to diagnose cases, and significantly reduces unnecessary gauge replacement.

https://truckmanualshub.com/

Why ESA?

ESA 3 is the latest revision/update to the troubleshooting software. As more features are added to take advantage of multiplexing, ESA needs to grow in order to continue to support the technician.

NOTE: At the time of publication "ESA 3.1" was the latest released version of the Electronic Service Analyst. If there are subsequent releases of ESA (version 3.2, 3.3, 4.0, etc.), ESA will automatically update to the most recent version.

As version 3 is simply an update to the ESA software, many of the functions, navigation and screen images look and feel just as before.

This ESA update includes diagnostic coverage of new features available with the Cab Electronic Control Unit (CECU), as well as several enhancements to the program itself.

Keep in mind; although the program and software contain many new improvements, the type of control unit that is in the truck determines some of the ESA features and procedures. The Instrumentation Control Unit (ICU) does not possess all the capabilities of the newer CECU; however, ESA is the diagnostic tool for both control units.

CECU and ESA 3 Highlights

- Manufacturer selection available
- Five Data Link Adapter (DLA) selections
- Storage and display of up to 50 Diagnostic Trouble Codes (DTCs)
- Components grouped by type to help find what you are looking for
- Monitor capabilities expanded
- Selective simulation permitted while module software is active
- Many new features/parameters available in the program menu
- Available backup utility to save vehicle parameters
- Out-of-date software warning
- Diagnostics, monitoring, and simulating of most exterior lighting
- Diagnostics, monitoring, and simulating of windshield wiper and washer Pump
- Addition of Nexiq USB Link to Data Link Adapter selections
- Simplified flashing menu
- Faster software flashing times
- Can choose between compatible software versions for a particular control unit
- As-Built control unit parameters can be retrieved from ECAT (ePortal access required)
- Print preview function allows printing from most screens
- Monitoring and logging of J1939 data bus

New Features of ESA 3

This section gives a brief overview of the many enhancements made to ESA. Some of the most important additions are highlighted here. Refer to ServiceNet for ESA information and resources.

New Features

This section gives a brief overview of the many enhancements made to ESA. Some of the most important additions are highlighted here. Refer to ServiceNet for ESA information and resources.

Connecting ESA

Connecting with ESA has not changed, simply connect the vehicle using the DLA and the connectors included in the ESA kit and click on the connect icon.

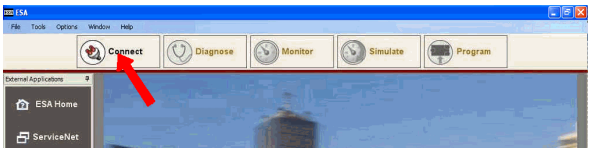

Once the connection is established a revised Control Unit Information pop-up window automatically appears on screen. This is to greet the user with important criteria that will help in continuing to troubleshoot a vehicle. Information such as:

- Chassis number
- Vehicle Identification Number (VIN)
- Unit of measure of the cluster
- Type of control unit
- Data bus ESA is using to connect to the Control Unit
- When the module was last flashed
- What version of software is currently loaded onto the module

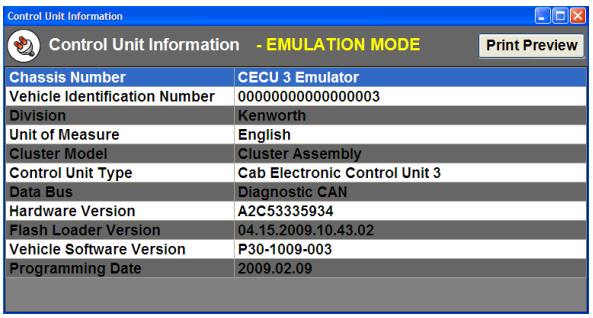

Chassis Number	CECU 3 Emulator
Vehicle Identification Number	00000000000000003
Division	Kenworth
Unit of Measure	English
Cluster Model	Cluster Assembly
Control Unit Type	Cab Electronic Control Unit 3
Data Bus	Diagnostic CAN
Hardware Version	A2C53335934
Flash Loader Version	04.15.2009.10.43.02
Vehicle Software Version	P30-1009-003
Programming Date	2009.02.09

Navigating ESA

The navigation icons are located at the top of the ESA screen. Selecting an icon activates that portion of the program.

The icons are:

- Connect/Disconnect: starts and stops communications with the truck via the DLA.
- Diagnose: read, review and monitor fault codes.
- Monitor: watch activity of inputs to the ICU/CECU.
- Simulate: limited activation of ICU/CECU outputs.
- Program: disable/enable components of the ICU/CECU.

Diagnose - New Features

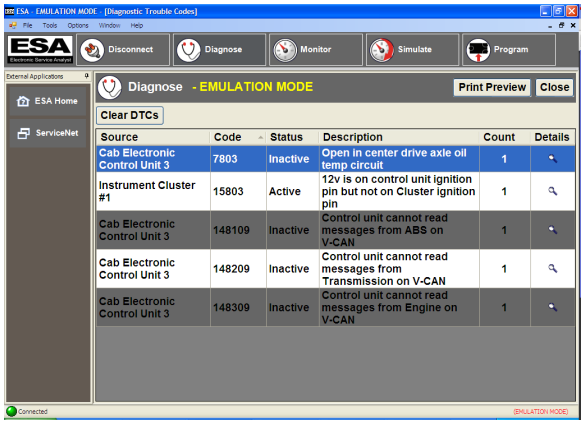

50 Stored Codes

The Diagnosis screen now has the ability to store and display up to 50 Diagnostic Trouble Codes (DTCs) for the CECU. The ICU is limited to 15.

Details

There is a Details columns for CECU diagnosis. Details are recorded at the first instance of the DTC. For example, if the DTC has been recorded twice, the count displays 2. The information in the details screen is also captured when that DTC was first recorded.

Selecting the magnifying glass in the details column for a DTC brings up a pop-up screen that provides the following freeze-frame information:

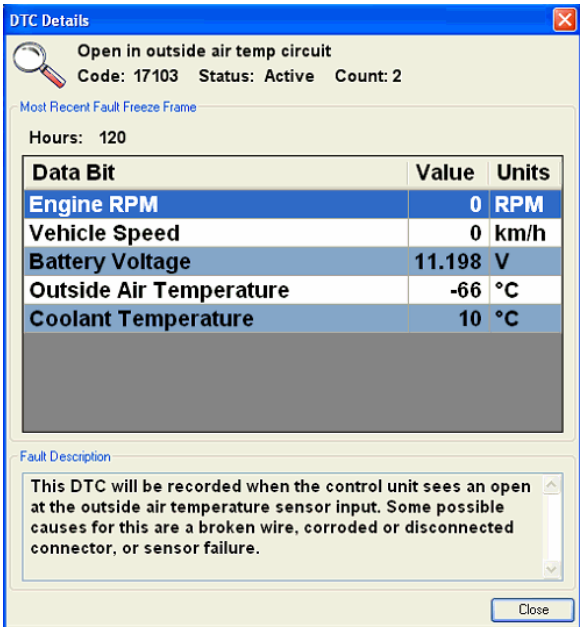

- Engine RPM
- Vehicle Speed
- Battery Voltage
- Outside Air Temp
- Coolant Temp

The same criteria are recorded for every DTC first occurrence. Some of the information may not relate to your specific DTC. As seen in the example there is a very abnormal reading for the outside air temperature, which is understandable since the DTC is dealing with a fault on that circuit.

The details screen also provides a brief description of the fault along with some possible cause suggestions.

Clearing DTCs

For CECU equipped vehicles, selecting “Clear DTCs” removes all non-active faults and instantly displays only active codes.

ICU equipped vehicles still require the extra step of cycling the ignition key (from on to off and back on) in order to display active fault codes.

Service Manual Link

When ESA is updated, the service manual for the Multiplexed Electrical System is also downloaded to the computer that has ESA installed. The service manual is accessed through the Help menu link at the top of every screen.

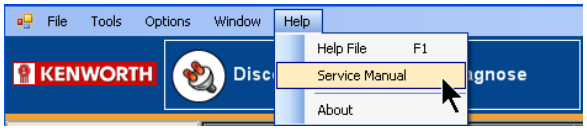

If there are any service manual revisions available, they will automatically be updated in ESA when you are prompted to check for ESA updates (approximately every 45 days). The service manual is where to find a complete DTC list along with troubleshooting charts to help the technician diagnose problems.

Monitor - New Features

To allow more viewing area when monitoring multiple components, there are auto-hide pin icons for reducing some of the sub-windows on the monitor screen. When selected to auto-hide, the sub-window reduces to a tab on the left side of the monitor screen. Simply place the cursor over the tab to bring the sub-window back up for further selection.

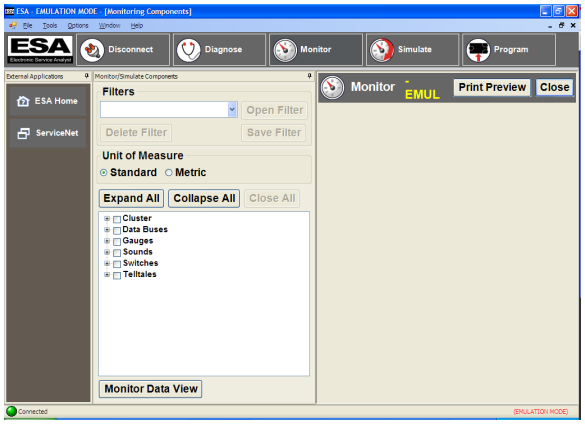

To make it easier to navigate to desired features, similar components have been grouped into a menu tree structure.

Monitoring shows a representation of what the control unit sees as input signals. Comparing what the unit sees to what the actual component (gauge, telltale, etc.) is doing helps determine if there is a problem.

The enhancements made to the CECU increased the amount of monitored components using ESA.

	ICU	CECU
Gauges	28	38
Telltales	26	58
Editable telltales	0	9
Switches	0	19
Alarm	0	7
LCD	0	4
Knob (driver information display)	0	1

Monitoring Data Bus

With ESA 3 the user is now able to monitor the vehicle data bus. Select the data bus group to be monitored. A table will open that shows all Control Units communicating on the bus. If a control unit stops communicating during the monitoring session, the status will change from Active to Inactive. If needed, the user also has the capability to record messages on the data bus to be sent to your service manager for further analysis.

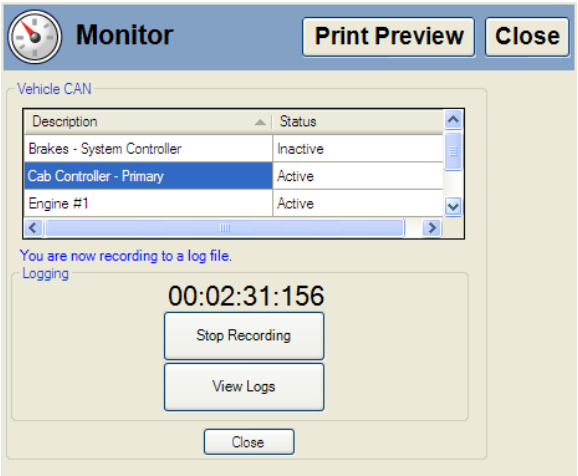

Simulate - New Features

As with the monitor screen, to allow more viewing area when simulating components, there are auto-hide pin icons for reducing some of the sub-windows. When selected to auto-hide, the sub-window reduces to a tab on the left side of the screen. Simply place the cursor over the tab to bring the sub-window back up for further selection.

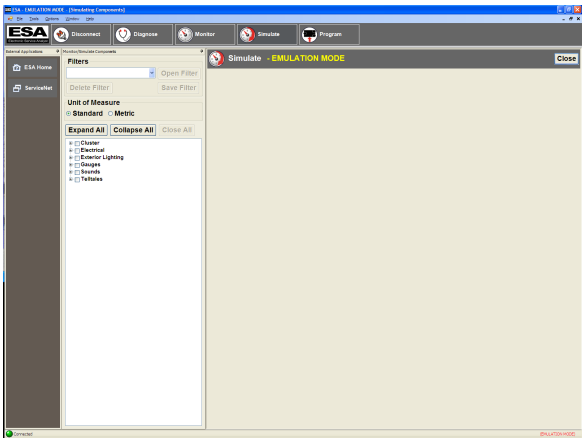

To make it easier to navigate to desired features, similar components have been grouped into a menu tree structure.

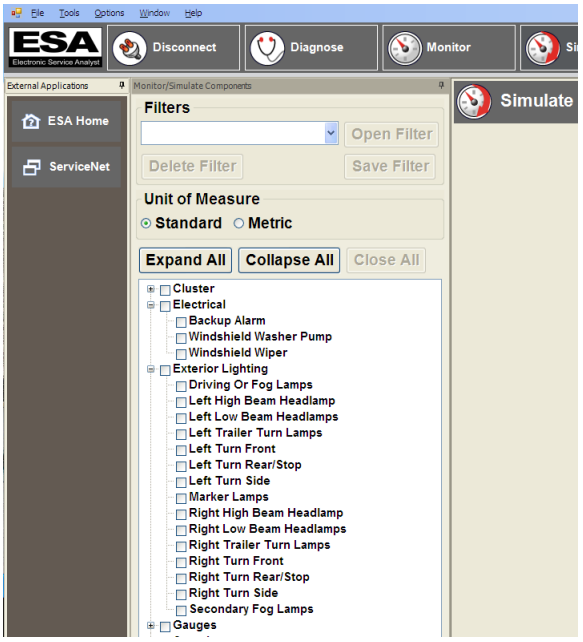

Individual Output Simulation

Simulation performed with an ICU would basically shutdown the unit software so outputs could be simulated without being influenced by the other operations of the ICU. Now, with the CECU, individual outputs may be simulated while the control unit software is active. While this allows greater flexibility there is much that cannot and should not be simulated while a vehicle is operational. For instance, as a safety precaution, gauge simulation will not be permitted if there is engine rpm.

Safety Issues

While the simulate function is a good diagnosis tool, safety is always the primary concern, so many CECU outputs are not accessible for simulation such as: cruise control, engine oil pressure, park brake switch.

Program - New Features

Similar components have been grouped into tabs to make finding your choice easier.

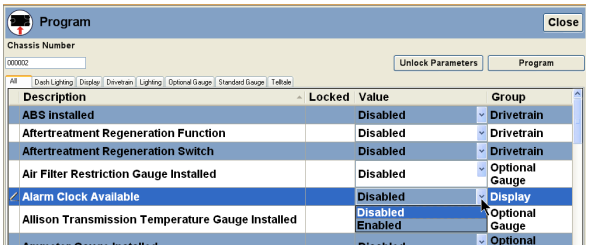

Parameters

There were 14 parameters for the ICU. Parameters are like part numbers that tell the control unit what features are on the vehicle and hence what inputs/outputs need activated.

With the CECU3, the available parameters have grown to around 130. Some parameters are restricted or locked to ensure proper activation.

Disable Components Now Means No Function

With the ICU, disabling a component would turn off the diagnostics but not remove the component from operation. An ICU disabled gauge still functions, but is prevented from detecting problems and triggering DTCs.

Now with the CECU, disabling really means disabled. A disabled gauge will not function. It is removed from all signal transmissions in order to allow the other features faster communication. This is very important when diagnosing a component that is inoperative. It may simply have been previously disabled.

NOTE: Check the program menu to see if an inoperative feature is disabled.

Flash - New Features

It may be necessary to reflash a control unit for the following:

- Replacing a control unit.
- Updating the software of a control unit.
- Obtaining additional features when available.

NOTE: Replacing the control unit results in the odometer being reset. Take appropriate action to record the vehicle miles prior to removing the control unit.

Reflashing takes approximately only 6 minutes over the K-line if using the USB Link adapter. The control unit must stay connected and power to the unit must be maintained throughout the flashing process.

CAUTION: Interrupting the communication or power supply could result in hardware damage to the unit.

K-Line is the communication bus used for diagnostics on vehicles with: ICU software (P30-1003-XXX), CECU/CECU2 software (P30-1002-XXX), or CECU3 Software (P30-1008-XXX). Moving forward to vehicles containing "CECU3 with Chassis Node" software (P30-1009-XXX), the K-Line will be replaced with the D-CAN communication bus. However the only difference the technician will notice is a faster reflash time.

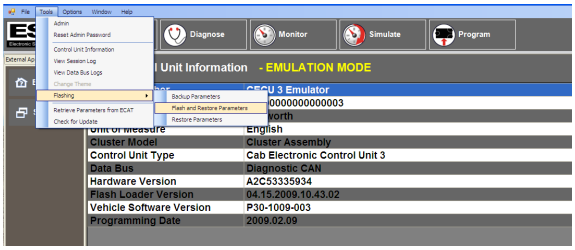

Compatible Software

When initiating the flashing process, the technician is required to select the appropriate software version to program into the control unit. Only compatible software versions for the vehicle unit that is connected will present in the selection menu.

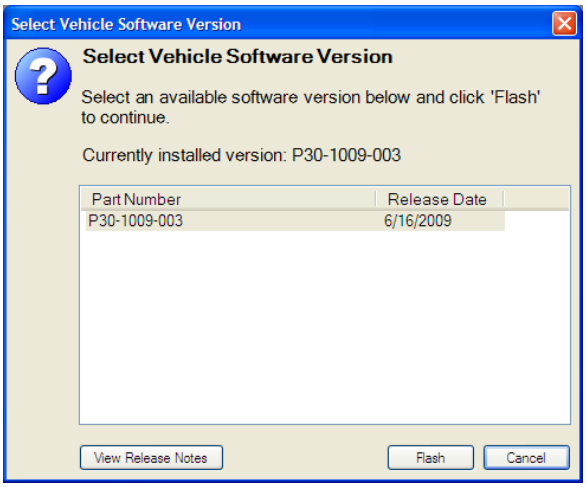

Details on the differences between available software versions are available through the View Release Notes button at the bottom of the Select Vehicle Software screen.

Backup Parameters

Flashing a control unit or replacing a control unit involves backing up the stored parameters of the unit. The backup saves an encrypted file onto the connected PC that is used to reload all the parameters of the control unit. These are the parameters that are enabled/disabled through the program menu. This ensures that your chassis number retains all the previously programmed functions.

Retrieving Parameters

ESA 3 has the capability to retrieve the parameter configuration from ECAT that was on the vehicle when issued from the factory. This may aid in restoring parameters in instances such as replacing a non responsive control unit. The technician must still verify the parameters are correct for any settings modified after the vehicle leaves the factory.

The as-built parameter sets can be retrieved from ECAT through the Tools drop down menu. It may also be presented as an option when flashing a blank unit or when parameters cannot be retrieved from a unit.

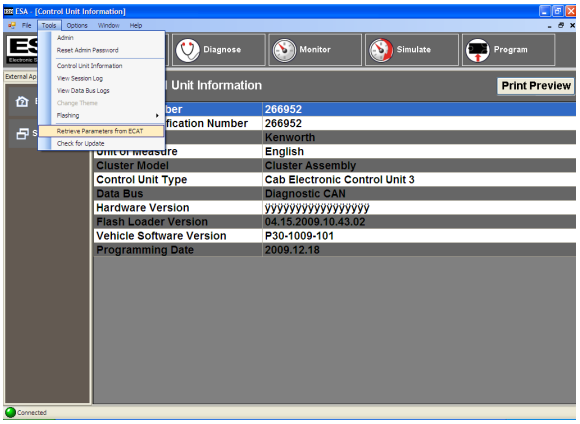

After selecting "Retrieve Parameters from ECAT", the user needs to enter the chassis number or numbers for the desired parameter sets to be downloaded.

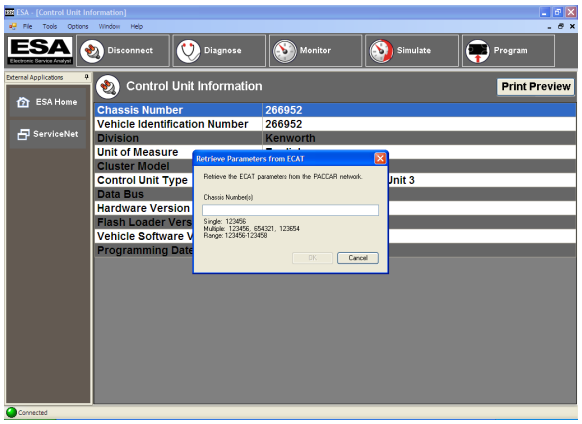

At this time, the user is required to log into ServiceNet with a valid ePortal account.

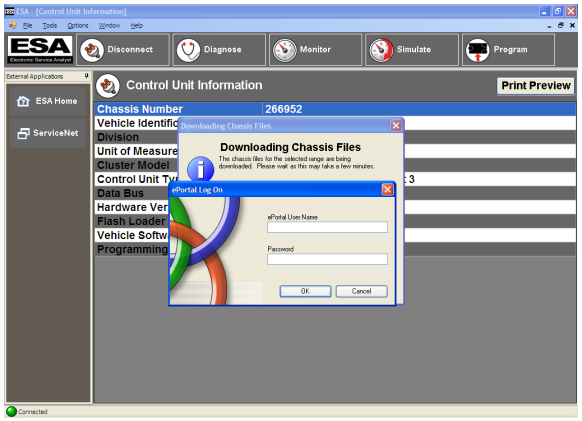

Once the login is verified, ESA will download the designated parameter sets and inform the user when the transfer is complete.

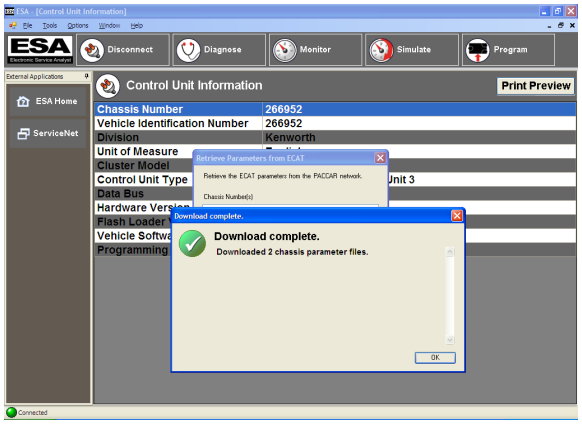

The downloaded files are stored in a secure format that prohibits tampering. ESA also prevents any user from loading parameters sets designated for one chassis number into a control unit that is assigned to another chassis number.

To restore parameters from the downloaded parameter set, the user must Initiate a Flashing from the Tools drop down menu and select Restore Parameters.

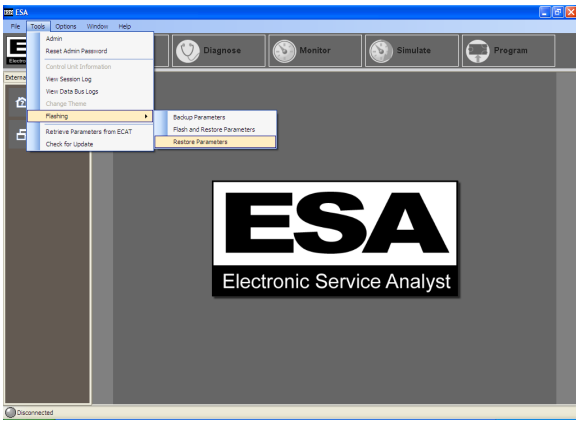

Finally, the user needs to designate the source of the parameter set to be restored.

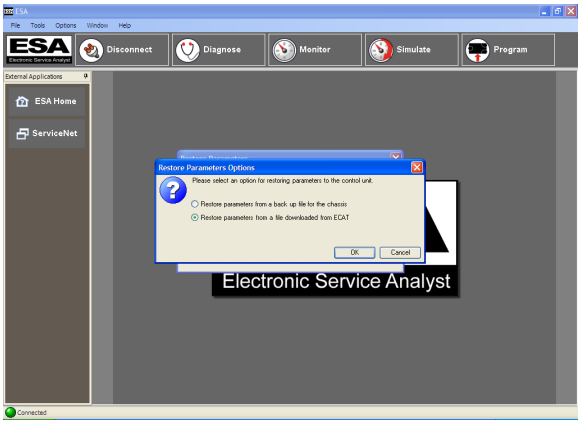

Out-of-Date Software Warning

Let's say an update has been issued for the CECU software and a truck is connected to ESA for some troubleshooting purpose. ESA recognizes that there is a software update required and prompts the technician to perform the operation. If for some reason the user chooses not to reflash the control unit, maybe there isn't sufficient time to perform an update or maybe the Data Link Adapter isn't immediately available, **ESA triggers a warning display in the vehicle. This warning blinks the LCD backlighting of the speedometer and outside air temperature for 1 minute. The warning is triggered at every key-on of the vehicle until the required update is performed.** This is to alert the operator or other technicians that a vehicle reflash is required.

Administration - New Features

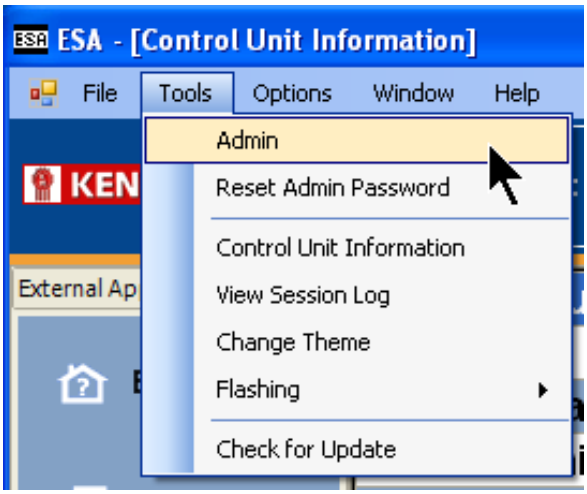

There are a few improvements made to the administration form that is found under the Tools pull down menu at the top of the ESA screen.

First off, any changes now performed in the administration form automatically update as soon as the user selects Apply or OK on the administration window. It is no longer necessary to shut down and restart the program to initiate administration changes.

A couple of highlight improvements involve selections under the Manufacturer and Data Link Adapter (DLA) options.

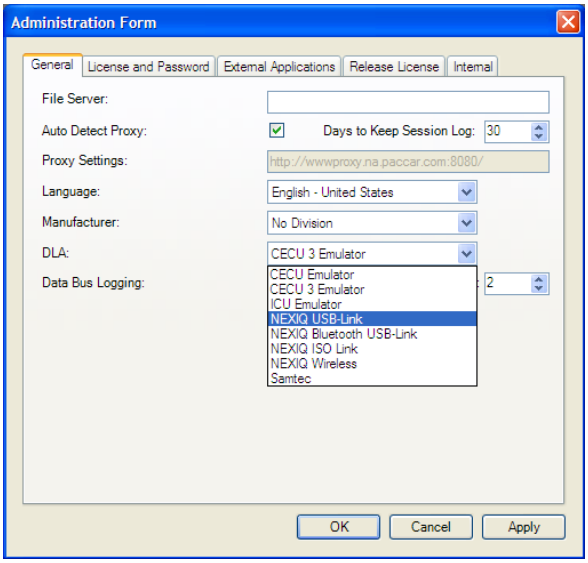

The manufacturer selection allows ESA presentation as either a Kenworth or Peterbilt dealer.

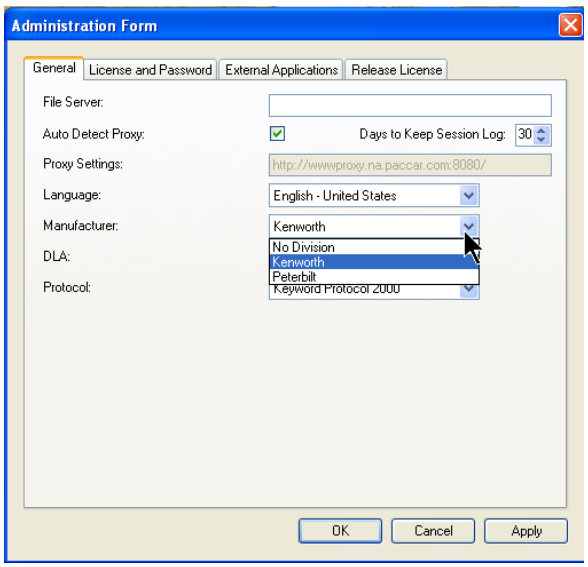

https://truckmanualshub.com/

5 General Information

Service Resources . . . . . 5 - 2

Service Resources

Service Manual Update

If there are any service manual revisions available, they will automatically be updated in ESA when you are prompted to check for ESA updates (approximately every 45 days). The service manual is accessed through the Help menu link at the top of every screen. The service manual is where to find a complete DTC list along with troubleshooting charts to help the technician diagnose problems.

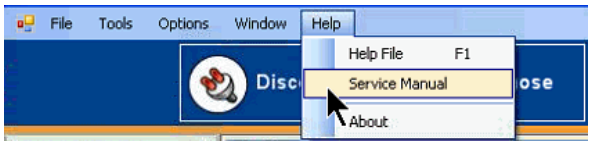

Instrumentation Service Information describing how to remove, disassemble, and reinstall instrumentation components is located on ServiceNet. Before attempting any instrumentation repairs, the technician should have a complete understanding of the procedures described in ServiceNet.

Disabled Gauges

For both the ICU and CECU, a disabled gauge cannot detect problems or trigger DTCs. But when it comes to the operation of the gauge, keep the following in mind:

- An ICU disabled gauge can still function.
- A CECU disabled gauge is removed from operation and does **NOT** function.

Control Unit	How the control unit handles disabled components
ICU	With the ICU, disabling a component turns off the components diagnostics but does not remove the component from operation. An ICU disabled gauge still functions, but is prevented from detecting problems and triggering DTCs.
CECU	With the CECU, disabling a component turns the component off completely. The disabled component is removed from all signal transmissions in order to allow the other features on the vehicle faster communication. A disabled gauge will not function or communicate with the control unit.

NOTE: Check the program menu to see if an inoperative feature is disabled. This is very important when diagnosing an inoperative gauge on a CECU equipped vehicle. The gauge may simply have been previously disabled.

When a service technician installs an optional gauge in the multiplexed instrumentation system, the newly installed gauge will initially be disabled. Because the gauge is not factory-installed, the technician must program the ICU/CECU to monitor it. Until the ICU/CECU is programmed, the link between the ICU/CECU and the gauge is termed “disabled” – that is, the ICU/CECU is prevented from detecting problems, and also from logging and displaying diagnostic trouble codes (DTCs).

To program the ICU/CECU and enable gauges, select “Program”. If the gauge value is “Disable”, change it to “Enable”.

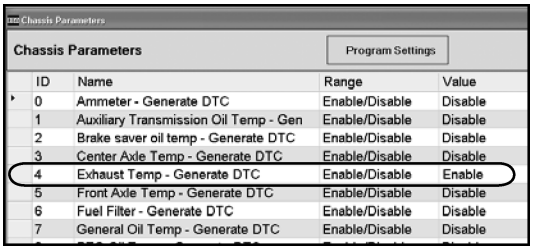

Once the ICU/CECU is programmed and the link to the gauge is “enabled”, the ICU/CECU monitors it, diagnoses problems like “shorts” and “opens”, logs DTCs for troubleshooting, and displays the DTCs on ESA’s “Diagnose” screen.

Harness Interface Diagrams

The following diagrams provide typical examples of harness inter-connects, or harness connections that provide the signals to the ICU/CECU. This type of reference is helpful when trying to locate harness inter-connection points. Sometimes these connections become loose, have bent or misaligned pins, and visually inspecting them may help identify why other electrical problems may be occurring.

Peterbilt Harness Interface Diagram

Electrical Harness Interface Diagram

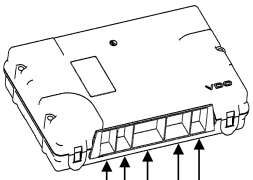

A - J41 (9 pin)
Power

Crt No	Ends At...	For the...	Located around...
YEL2619	P92	Cab dome Light	Roof harness, RH cab door

E - J101 (9 pin)
Sparcs

Crt No	Ends At...	For the...	Located around...
GRA3155	P100	Engine Timer	700 mm from spare relay block

B - J102 (24 pin)

Crt No	Ends At...	For the...	Located around...
GRA4952 GRA4953 GRA4954	J103	MCS knob	D-Panel
GRA3192	P94	Fan Override	D-panel
GRA5451	P109	Seatbelt	700 mm from spare relay block
RED6291	J86	LVD	Below C-panel
YEL2619	P108	Dome lamp switch	700 mm from spare relay block
YEL6219	P92	RH door jamb	
GRA3162	P28	Cruise Control re-sume	
GRA3163	P28	Cruise Control set	
GRA3133	P12	Engine brake 1	B-panel
GRA4613 GRA4614	P93	Emmisions - regen-eration	B-panel

C - J31 (52 pin)
Sensors

Crt No	Ends At...	For the...	Located around...
BLU4511	P67	Primary air	Driver footwell
BLU4512	P68	Secondary air	Driver footwell
BLU4515	P69	Application air	Driver footwell
BLU4517	P72	Air filter restriction	Driver footwell
BLU4527	J9	Outside air tem-perature	Behind A panel
BLU4585	J50	Ammeter	Firewall
VIO0862	J14	K-Line	Diagnostic port
BLK4100(RETURN) BLU4120(DATA)	P65 & P66	CVSG	On each gauge
BLU3144	J109	Remote engine control	RH cab door
BLU4518	J2	Fuel filter restriction	Firewall
BLU4513	J53	Fuel Level	D-panel 1215 mm from spare relay block
BRN2620	P31	Dimmer switch	
BLU4522	At sensor	XMSN Oil tempera-ture	On component
BLU4534	At sensor	PTO oil tempera-ture	On component
BLU4553	At sensor	Aux xmsn oil tem-perature	On component
BLU4526	At sensor	Axle oil tempera-ture 1	On component
BLU4525	At sensor	Axle oil tempera-ture 2	On component

D - J27 (40 pin)
Switches & Data

Crt No	Ends At...	For the...	Located around...
GRA3161	P9 & P29	Cruise control on /off	B-panel
BRN4361	J23	Diff lock	B-panel
BRN4391	J22	5th wheel	B-panel
RED0712	P40	Hazard switch	C-panel
BRN4393	J26 & J42	Suspension dump	B-panel
BRN5112	P15	Tractor ABS light	895 mm from spare relay block
YEL0811 GRN0811	J14	J1939 Datalink	C-panel
YEL2619	P92	LH door jamb	
YEL2311 YEL2312	J5 & J6	LH & RH turn lamp	
BRN4312 BRN4311	J50	Stop engine & check engine	Firewall
BRN9920	J104	Trailer ABS chevron	
GRA3511	J109	PTO on/off	
YEL2422	J1	Dash light	Firewall
YEL0812 GRN0812	P63	ICAN	

Please refer to the ‘Comparison Chart—(Pinout)’ in Section 1 to find pin numbers for each wire.

Kenworth ICU (P30-1003-XXX) Harness Interface Diagram

ICU Electrical Harness Interface Diagram

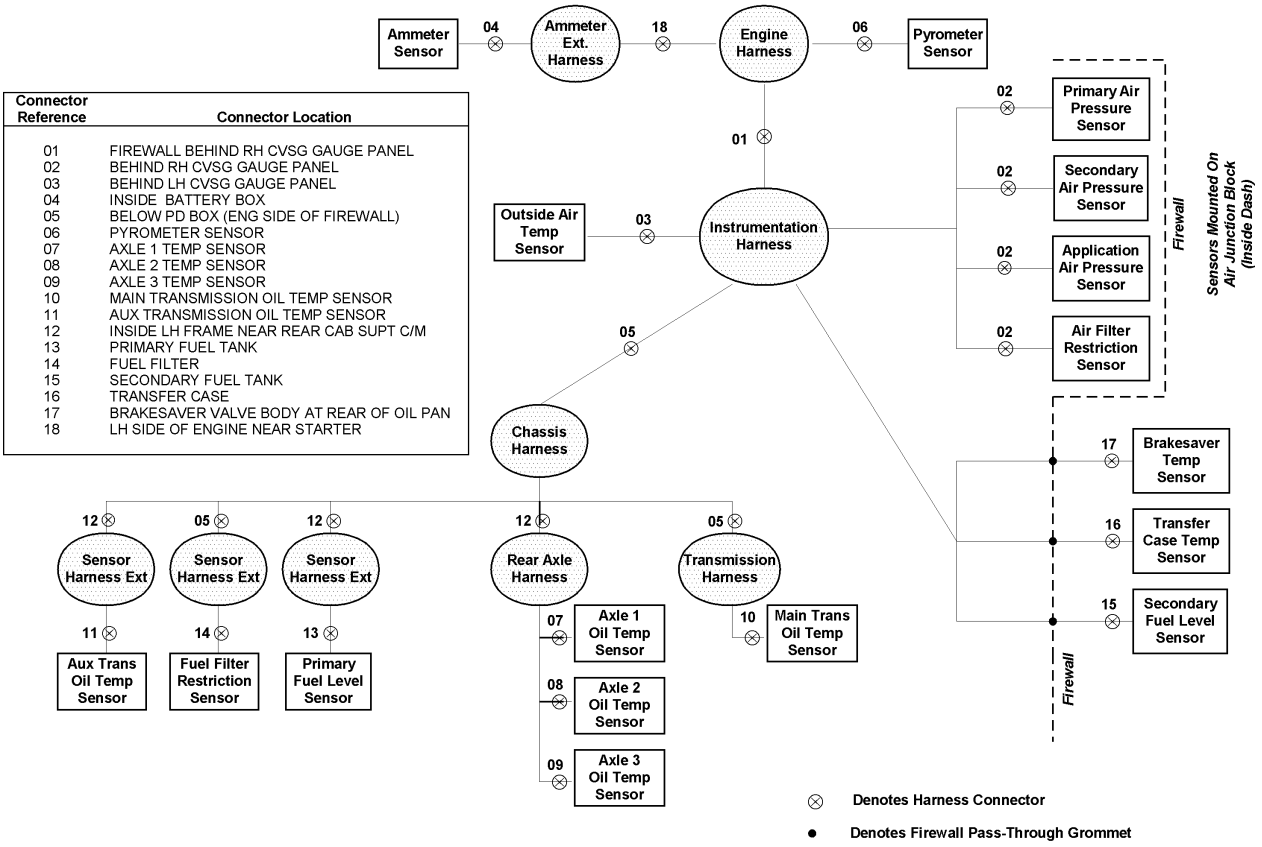

Connector Reference	Connector Location
01	FIREWALL BEHIND RH CVSG GAUGE PANEL
02	BEHIND RH CVSG GAUGE PANEL
03	BEHIND LH CVSG GAUGE PANEL
04	INSIDE BATTERY BOX
05	BELOW PD BOX (ENG SIDE OF FIREWALL)
06	PYROMETER SENSOR
07	AXLE 1 TEMP SENSOR
08	AXLE 2 TEMP SENSOR
09	AXLE 3 TEMP SENSOR
10	MAIN TRANSMISSION OIL TEMP SENSOR
11	AUX TRANSMISSION OIL TEMP SENSOR
12	INSIDE LH FRAME NEAR REAR CAB SUPT C/M
13	PRIMARY FUEL TANK
14	FUEL FILTER
15	SECONDARY FUEL TANK
16	TRANSFER CASE
17	BRAKESAVER VALVE BODY AT REAR OF OIL PAN
18	LH SIDE OF ENGINE NEAR STARTER

Kenworth CECU/CECU2 (P30-1002-XXX) and CECU3 (P30-1008-XXX) Harness Interface Diagram

CECU Electrical Harness Interface Diagram

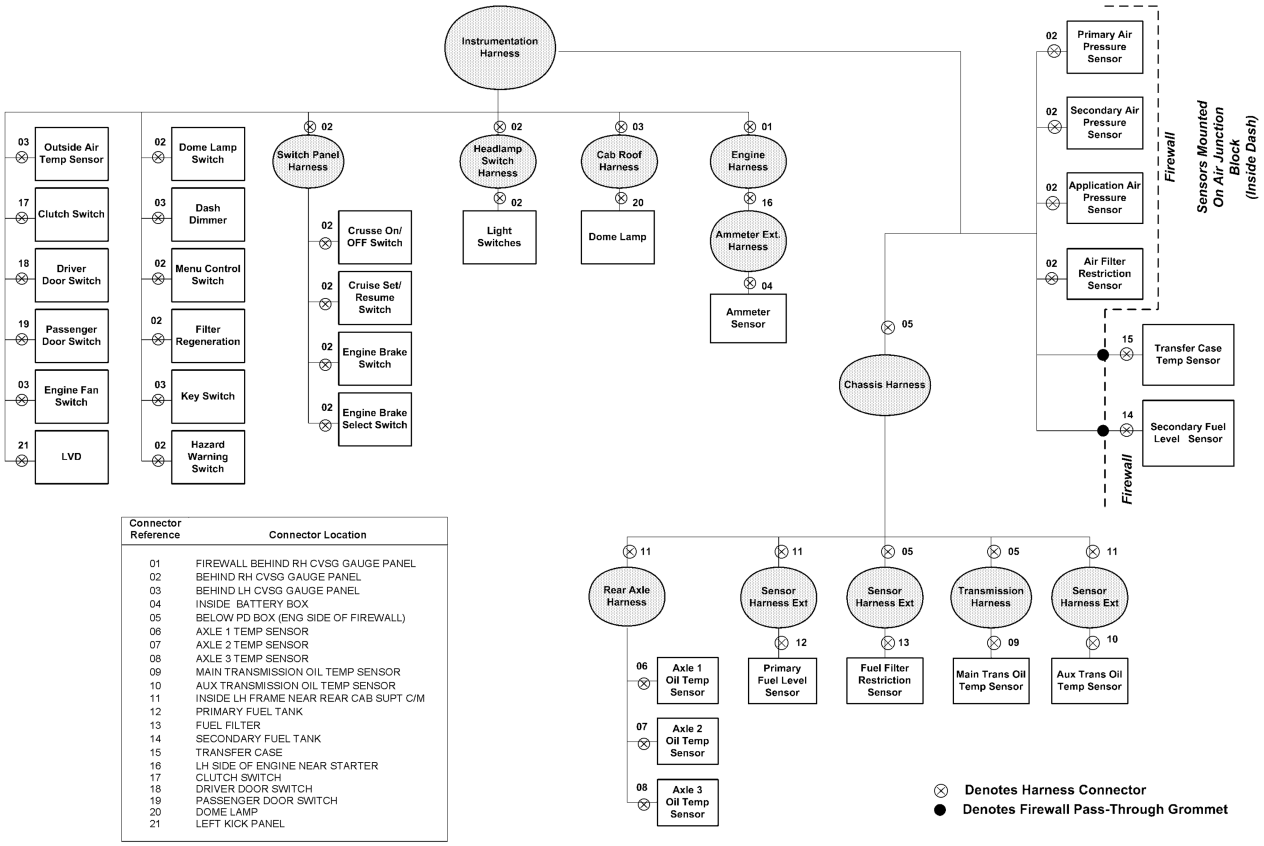

Connector Reference	Connector Location
01	FIREWALL BEHIND RH CVSG GAUGE PANEL
02	BEHIND RH CVSG GAUGE PANEL
03	BEHIND LH CVSG GAUGE PANEL
04	INSIDE BATTERY BOX
05	BELOW PD BOX (ENG SIDE OF FIREWALL)
06	AXLE 1 TEMP SENSOR
07	AXLE 2 TEMP SENSOR
08	AXLE 3 TEMP SENSOR
09	MAIN TRANSMISSION OIL TEMP SENSOR
10	AUX TRANSMISSION OIL TEMP SENSOR
11	INSIDE LH FRAME NEAR REAR CAB SUPT C/M
12	PRIMARY FUEL TANK
13	FUEL FILTER
14	SECONDARY FUEL TANK
15	TRANSFER CASE
16	LH SIDE OF ENGINE NEAR STARTER
17	CLUTCH SWITCH
18	DRIVER DOOR SWITCH
19	PASSENGER DOOR SWITCH
20	DOME LAMP
21	LEFT KICK PANEL

ICU/CECU Details

The heart of the multiplexed instrumentation system is the ICU/CECU. For the majority of Peterbilt vehicles, the ICU/CECU is located behind the center of the dash, near the radio. For the majority of Kenworth vehicles, the ICU/CECU is located behind the center console. See Control Unit Locations for illustrations depicting the physical positioning of the control unit.

Connector Identification

There are 5 electrical connectors that plug into the ICU/CECU. The ICU uses only connectors A, C and D.

- Connector A - 9 pins
- Connector B - 24 pins
- Connector C - 52 pins
- Connector D - 40 pins
- Connector E - 9 pins

For an illustration of the side view of a ICU/CECU showing where the harness connectors attach into the control unit, see ICU/CECU Figure. This figure identifies connector position on the control unit as well as individual connector pin locations.

ICU/CECU

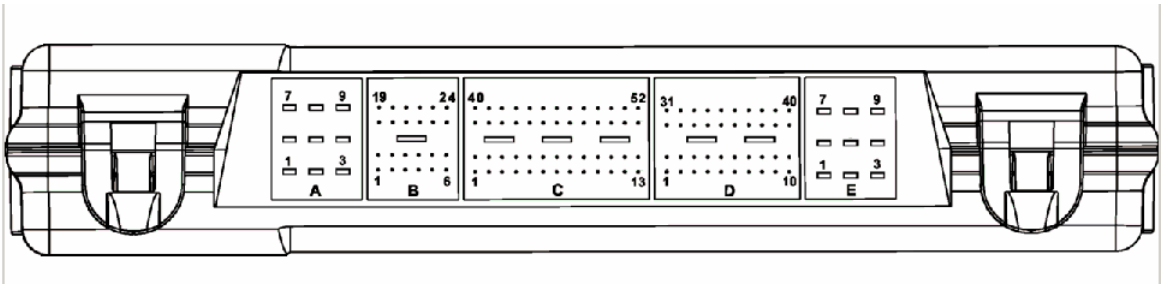

For connector face views at the harness connectors that plug into the ICU/CECU, see ICU/CECU Connector Face Views Figure. These connectors all branch from the instrument panel harness that routes behind the dash.

ICU/CECU Connector Face Views

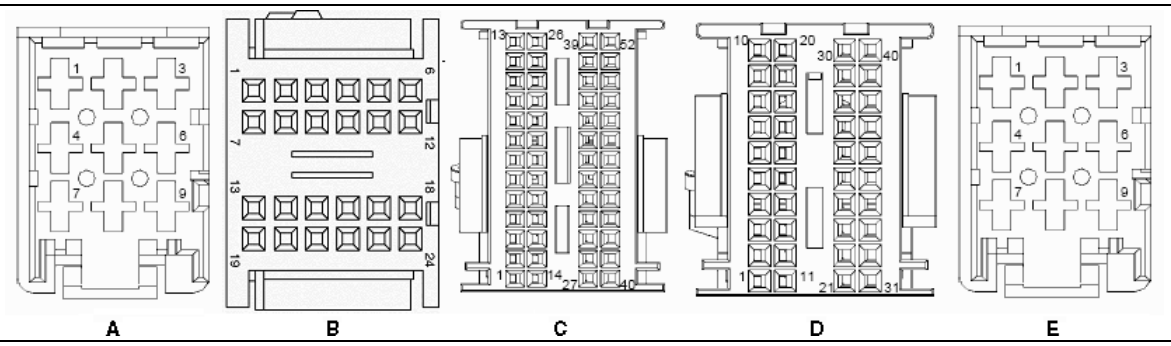

Comparison Chart - (Pinout)

Conn	Pin Number	Circuit Function	ICU	CECU
A	1	CVSG power	X	X
	2	Power - battery	X	X
	3	Cab dome lamp		X
	4	Menu control switch power		X
	5	Ground	X	X
	6	Menu control switch ground		X
	7	Dash/panel illumination	X	X
	8	Auxiliary backlighting	X	X
	9	Power - battery		X
B	1	Menu control switch encode A		X
	2	Menu control switch encode B		X
	3	Menu control switch enter		X
	4	Courtesy lights - right door jamb switch		X
	5	Brake Switch (Hydraulic)		X
	6	Dome lamp input		X
	7	Seat belt telltale		X
	8	Cruise set		X
	9	Cruise resume		X
	10	Spare digital input 1L		X
	11	Retarder select 1		X
	12	Retarder select 2		X
	13	Clutch switch		X
	14	Headlamps active		X
	15	PTO set		X
	16	PTO resume		X
	17	Engine fan override		X
	18	Regen enable		X
	19	Inhibit regen		X
	20	Spare digital input		X
	21	Spare digital input		X
	22	LVD input		X
	23	Spare digital input		X
	24	Spare digital input		X
C	1	Power supply +5V sensors	X	X
	2	Analog return	X	X
	3	PTO oil temp	X	
	3	Analog return		X
	4	K-line	X	X
	5	Dimmer input	X	X
	6	Air pressure transducer - primary	X	X
	7	Air pressure transducer - secondary	X	X
	8	Air pressure transducer - application	X	X
	9	Ammeter	X	X
	10	Air filter restriction	X	X
	11	Fuel filter restriction	X	X
	12	Fuel level sensor 1	X	X
	13	Fuel level sensor 2	X	X
	14	CVSG data	X	X
	15	CVSG return	X	X
	16	Outside air temperature	X	X
	17	Front axle temperature	X	X
	18	Rear axle temperature	X	X
	19	Center/steer axle temperature	X	X
	20	General oil temperature	X	X
	21	Transmission oil temperature - main	X	X
	22	Transmission oil temperature - auxiliary	X	X
	23	Pyrometer	X	X
	24	Brakesaver oil temperature	X	X
	25	Analog return	X	X
	26	Transfer case oil temperature	X	X
	27	Remote throttle signal		X
	28 thru 52	Spare		X
D	1	Power - ignition	X	X
	2	Courtesy lights - left door jamb switch	X	X
	3	Power - accessory	X	X
	4	Hazard	X	X
	5	Park lamp/Headlamp active	X	X
	6	High beam active	X	X
	7	Park brake active	X	X
	8	Left turn	X	X
	9	Right turn	X	X
	10	Cruise on/off		X
	11	Interaxle lock telltale	X	X
	12	Fifth wheel lock telltale	X	X
	13	Tractor ABS telltale	X	X
	14	Trailer ABS telltale	X	X
	15	Check engine telltale	X	X
	16	Stop engine telltale	X	X
	17	Spare	X	X
	18	Spare	X	X
	19	Editable telltale 1 See editable telltale table	X	X
	20	Editable telltale 2 See editable telltale table	X	X
	21	Editable telltale 3 See editable telltale table	X	X
	22	Editable telltale 4 See editable telltale table	X	X
	23	Editable telltale 5 See editable telltale table	X	
	23	Spare digital input		X
	24	Editable telltale 6 See editable telltale table	X	X
	25	Editable telltale 7 See editable telltale table	X	X
	26	Editable telltale 8 See editable telltale table	X	X
	27	Editable telltale 9 See editable telltale table	X	X
	28	Dash buzzer 1A	X	X
	29	Dash buzzer 1B	X	X

Conn	Pin Number	Circuit Function	ICU	CECU
	30	Dash buzzer 1C	X	X
	31	Dash buzzer 2	X	X
	32	Not used		X
	33	Not used		X
	34	I-CAN high	X	X
	35	I-CAN low	X	X
	36	I-CAN ground	X	X
	37	V-CAN high	X	X
	38	V-CAN low	X	X
	39	V-CAN ground	X	X
	40	V-CAN low terminated	X	X

Conn	Pin Number	Circuit Function	ICU	CECU
E	1	Idle timer relay		X
	2	Spare relay output		X
	3	Spare relay output		X
	4	Spare relay output		X
	5	Ground		X
	6	Spare relay output		X
	7	Spare relay output		X
	8	Spare relay output		X
	9	Spare relay output		X

Editable Telltale Application

Editable Telltale Location	KW Cluster	KW DWIM	PB Cluster	PB DWIM
Editable Telltale 1	Position 4	Position 1	Position 2	Position 1
Editable Telltale 2	Position 7	Position 2	Position 3	Position 2
Editable Telltale 3	Position 8	Position 5	Position 4	Position 5
Editable Telltale 4	Position 9	n/a	Position 5	Position 8
Editable Telltale 5	Position 10	n/a	Position 7	Position 9
Editable Telltale 6	Position 12	n/a	Position 8	Position 10
Editable Telltale 7	Position 13	n/a	n/a	Position 11
Editable Telltale 8	Position 14	n/a	n/a	n/a
Editable Telltale 9	Position 16	n/a	n/a	n/a

See Editable Telltale Lights for illustration of possible telltale locations.

https://truckmanualshub.com/

7 Specifications

Parameter Part Numbers. . . . . 7 - 2

Parameter Part Numbers

CECU Parameters

Parameters are used to identify to the CECU what features are present on a vehicle. The parameters can be altered by a dealer to enable, disable, or assign certain functionality to that feature.

Parameter part numbers are searchable in ECAT and allow a dealer to determine what parameters were set at the factory. Also, if adding a new feature to a vehicle, the corresponding parameter needs to be programmed to the CECU and enabled.

CECU Parameter Part Number	Parameter Description	Min. Value	Max. Value	Explanation
Q30-1005-000* Q30-1017-000**	ABS installed	0	1	Parameter controls DTC's related to ABS system. Value 0/Disabled means ABS is not installed and DTC's are disabled Value 1/Enabled means ABS is installed and DTC's are enabled.
Q30-1005-001* Q30-1017-001**	After Treatment Regeneration Function	0	1	Parameter is used to allow information from the engine to turn on the telltales for the high exhaust temperature (emission system temperature) and regeneration filter. Value 0/Disabled means not allow cluster to display DPF and HEST telltales on cluster. Value 1/Enabled means allow cluster to display DPF and HEST telltales on cluster.
Q30-1005-002* Q30-1017-002**	ATC installed	0	1	Currently has no effect on functionality. Parameter will be used to determine the presence of traction control. Value 0/Disabled means ATC is not installed. Value 1/Enabled means ATC is installed.
Q30-1005-003* Q30-1017-003**	Retarder Range Map	0	4	Parameter is used to define the engine brake levels. Value 1 means engine brake switches have two braking levels 0%, 100%. Value 2 means engine brake switches have three braking levels 0%, 50%, 100%. Value 3 means engine brake switches have four braking levels 0%, 33%, 66%, 100%. Value 4 means engine brake switches have three braking levels 0%, 33%, 66%.
Q30-1005-004* Q30-1017-004**	Clutch Switch Present	1	1	Parameter is used to determine if the clutch switch is connected to the CECU. Value 0/Disabled means clutch switch is not installed (it has an automatic transmission or is hardwired to engine). Value 1/Enabled means clutch switch is installed (it has a manual transmission and is wired to the control unit).
Q30-1005-005* Q30-1017-005**	Cruise Control Set Switch Accel or Decel	0	1	Parameter is used to define the cruise control set/resume switch functionality. Value 0/Disabled means set switch is used for accelerate, and resume switch is used for decelerate. Value 1/Enabled means set switch is used for decelerate, and resume switch is used for accelerate.
Q30-1005-006* Q30-1017-006**	Cruise Control Present	0	1	Parameter is used to determine if cruise control is installed and controls the cruise control messages to the engine. Value 0/Disabled means cruise control switches are not installed. Value 1/Enabled means cruise control switches are installed.

CECU Parameter Part Number	Parameter Description	Min. Value	Max. Value	Explanation
Q30-1005-007* Q30-1017-007**	Clock Alarm Available	0	1	Parameter is used to determine if the alarm clock will be displayed on the multifunction display. Value 0/Disabled means Alarm Clock is not available in Multifunction Display. Value 1/Enabled means Alarm Clock is available in Multifunction Display
Q30-1005-008* Q30-1017-008**	Clock Available	0	1	Parameter is used to determine if the clock will be displayed on the multifunction display. Value 0/Disabled means Clock is not available in Multifunction Display. Value 1/Enabled means Clock available in Multifunction Display
Q30-1005-009* Q30-1017-009**	Diagnostics Available	0	1	Parameter is used to determine if the diagnostics will be displayed on the multifunction display. Value 0/Disabled means Diagnostic is not available in Multifunction Display. Value 1/Enabled means Diagnostic is available in Multifunction Display
Q30-1005-010* Q30-1017-010**	Ignition Timer Available	0	1	Parameter is used to determine if the ignition timer will be displayed on the multifunction display. Value 0/Disabled means Ignition Timer is not available in Multifunction Display. Value 1/Enabled means Ignition Timer is available in Multifunction Display
Q30-1005-011* Q30-1017-011**	Languages Available	0	1	Parameter is used to determine if other languages are available on the multifunction display. Value 0/Disabled means Language selection is not available in Multifunction Display. Value 1/Enabled means Language selection is available in Multifunction Display
Q30-1005-012* Q30-1017-012**	RPM Detail Available	0	1	Parameter is used to determine if the RPM information will be displayed on the multifunction display. Value 0/Disabled means RPM information is not available in Multifunction Display. Value 1/Enabled means RPM information is available in Multifunction Display
Q30-1005-013* Q30-1017-013**	Trip Economy Available	0	1	Parameter is used to determine if the trip economy information will be displayed on the multifunction display. Value 0/Disabled means Trip Economy is not available in Multifunction Display. Value 1/Enabled means Trip Economy is available in Multifunction Display
Q30-1005-014* Q30-1017-014**	Trip Information Available	0	1	Parameter is used to determine if the trip information will be displayed on the multifunction display. Value 0/Disabled means Trip Information is not available in Multifunction Display. Value 1/Enabled means Trip Information is available in Multifunction Display
Q30-1005-015* Q30-1017-015**	Truck Information Available	0	1	Parameter is used to determine if the truck information will be displayed on the multifunction display. Value 0/Disabled means Truck Information is not available in Multifunction Display. Value 1/Enabled means Truck Information is available in Multifunction Display
Q30-1005-016* Q30-1017-016**	Multifunction Display Menus Wraparound	0	1	Parameter is used to control the scrolling in multifunction display. Value 0/Disabled means that the menu will stop when it reaches the top or the bottom of the list when scrolling. Value 1/Enabled means that the menu will wrap around when it reaches the top or the bottom of the list when scrolling.

CECU Parameter Part Number	Parameter Description	Min. Value	Max. Value	Explanation
Q30-1005-017* Q30-1017-017**	Dome Lamp Controlled By Door	0	1	Parameter is used to determine if the dome lamps are controlled by the (driver/passenger) door. Value 0/Disabled means the door does not control the dome lamps. Value 1/Enabled means the door does control the dome lamps.
Q30-1005-018* Q30-1017-018**	Dome Lamp Delay Present	0	1	Parameter is used to determine if the dome lamp delays turning off after the door is closed. Value 0/Disabled means there is no delay before the dome lamp turns off. Value 1/Enabled means there is a delay before the dome lamp turns off.
Q30-1005-019* Q30-1017-019**	Dome Lamp Dimming Present	0	1	Parameter is used to determine if the dome lamp dims out slowly after the door is closed. Value 0/Disabled means dome lamp turns off quickly after the door is closed and delay if enabled. Value 1/Enabled means dome lamp dims out slowly after the door is closed and delay if enabled.
Q30-1005-020* Q30-1017-020**	Air Filter Restriction Gauge Installed	0	1	Parameter controls the functionality (output on CVSG bus and DTC's) of the air filter restriction gauge. Value 0/Disabled means Air Filter Restriction Gauge is not installed. Value 1/Enabled means Air Filter Restriction Gauge is installed.
Q30-1005-021* Q30-1017-021**	Allison Transmission Temperature Gauge Installed	0	1	Parameter controls the functionality (output on CVSG bus and DTC's) of the Allison transmission temperature gauge. Value 0/Disabled means Allison Transmission Temperature Gauge is not installed. Value 1/Enabled means Allison Transmission Temperature Gauge is installed.
Q30-1005-022* Q30-1017-022**	Ammeter Gauge Installed	0	1	Parameter controls the functionality (output on CVSG bus and DTC's) of the ammeter gauge. Value 0/Disabled means Ammeter Gauge is not installed. Value 1/Enabled means Ammeter Gauge is installed.
Q30-1005-023* Q30-1017-023**	Auxiliary Transmission Temperature Gauge Installed	0	1	Parameter controls the functionality (output on CVSG bus and DTC's) of the auxiliary transmission temperature gauge. Value 0/Disabled means Auxiliary Transmission Temperature is not installed. Value 1/Enabled means Auxiliary Transmission Temperature is installed.
Q30-1005-024* Q30-1017-024**	Axle Temperature Front Gauge Installed	0	1	Parameter controls the functionality (output on CVSG bus and DTC's) of the front axle temperature gauge if installed. Value 0/Disabled means Axle Temperature Front Gauge is not installed. Value 1/Enabled means Axle Temperature Front Gauge is installed.
Q30-1005-025* Q30-1017-025**	Axle Temperature Rear Gauge Installed	0	1	Parameter controls the functionality (output on CVSG bus and DTC's) of the rear axle temperature gauge. Value 0/Disabled means Axle Temperature Rear Gauge is not installed. Value 1/Enabled means Axle Temperature Rear Gauge is installed.
Q30-1005-026* Q30-1017-026**	Axle Temperature Center/Steer Gauge Installed	0	1	Parameter controls the functionality (output on CVSG bus and DTC's) of the center axle temperature gauge. Value 0/Disabled means Axle Temperature Center/Steer Gauge is not installed. Value 1/Enabled means Axle Temperature Center/Steer Gauge is installed.
Q30-1005-027* Q30-1017-027**	Brake Applied Pressure Gauge Installed	0	1	Parameter controls the functionality (output on CVSG bus and DTC's) of the brake application pressure gauge. Value 0/Disabled means Brake Applied Pressure Gauge is not installed. Value 1/Enabled means Brake Applied Pressure Gauge is installed.

CECU Parameter Part Number	Parameter Description	Min. Value	Max. Value	Explanation
Q30-1005-028* Q30-1017-028**	Brakesaver Oil Temperature Gauge Installed	0	1	Parameter controls the functionality (output on CVSG bus and DTC's) of the brakesaver oil temperature gauge. Valve 0/Disabled means Brakesaver Oil Temperature Gauge is not installed. Valve 1/Enable means Brakesaver Oil Temperature Gauge is installed.
Q30-1005-029* Q30-1017-029**	Engine Coolant Temperature Gauge Installed	0	1	Parameter controls the functionality (output on CVSG bus and DTC's) of the engine coolant temperature gauge. Value 0/Disabled means Engine Coolant Temperature Gauge is not installed. Value 1/Enabled means Engine Coolant Temperature Gauge is installed.
Q30-1005-030* Q30-1017-030**	Engine Manifold Pressure (Turbo Boost) Gauge Installed	0	1	Parameter controls the functionality (output on CVSG bus and DTC's) of the manifold pressure gauge. Value 0/Disabled means Manifold Pressure Gauge is not installed. Value 1/Enabled means Manifold Pressure Gauge is installed.
Q30-1005-031* Q30-1017-031**	Engine Oil Pressure Gauge Installed	0	1	Parameter controls the functionality (output on CVSG bus and DTC's) of the engine oil pressure gauge. Value 0/Disabled means Engine Oil Pressure Gauge is not installed. Value 1/Enabled means Engine Oil Pressure Gauge is installed.
Q30-1005-032* Q30-1017-032**	Engine Oil Temperature Gauge Installed	0	1	Parameter controls the functionality (output on CVSG bus and DTC's) of the engine oil temperature gauge. Value 0/Disabled means Engine Oil Temperature Gauge is not installed. Value 1/Enabled means Engine Oil Temperature Gauge is installed.
Q30-1005-033* Q30-1017-033**	Exhaust Temperature Gauge (Pyrometer) Installed	0	1	Parameter controls the functionality (output on CVSG bus and DTC's) of the exhaust temperature gauge. Valve 0/Disabled means Exhaust Temperature Gauge is not installed. Valve 1/Enable means Exhaust Temperature Gauge is installed.
Q30-1005-034* Q30-1017-034**	Fuel Delivery Pressure Gauge Installed	0	1	Valve 0/Disabled means Fuel Delivery Pressure Gauge is not installed. Valve 1/Enable means Fuel Delivery Pressure Gauge is installed.
Q30-1005-035* Q30-1017-035**	Fuel Filter Restriction Gauge Installed	0	1	Parameter controls the functionality (output on CVSG bus and DTC's) of the fuel restriction gauge. Value 0/Disabled means Fuel Filter Restriction Gauge is not installed. Value 1/Enabled means Fuel Filter Restriction Gauge is installed.
Q30-1005-036* Q30-1017-036**	General Oil Temperature Gauge Installed	0	1	Parameter controls the functionality (output on CVSG bus and DTC's) of the general oil temperature gauge. Value 0/Disabled means General Oil Temperature Gauge is not installed. Value 1/Enabled means General Oil Temperature Gauge is installed.
Q30-1005-037* Q30-1017-037**	Primary Air Pressure Gauge Installed	0	1	Parameter controls the functionality (output on CVSG bus and DTC's) of the primary air pressure gauge. Value 0/Disabled means Primary Air Pressure Gauge is not installed. Value 1/Enabled means Primary Air Pressure Gauge is installed.
Q30-1005-038* Q30-1017-038**	Primary Fuel Level Gauge Installed	0	1	Parameter controls the functionality (output on CVSG bus and DTC's) of the primary fuel level gauge. Value 0/Disabled means Primary Fuel Level Gauge is not installed. Value 1/Enabled means Primary Fuel Level Gauge is installed.
Q30-1005-039* Q30-1017-039**	PTO Oil Temperature Gauge Installed	0	1	Valve 0/Disabled means gauge is not installed. Valve 1/Enable means gauge is installed.
Q30-1005-040* Q30-1017-040**	Secondary Air Pressure Gauge Installed	0	1	Parameter controls the functionality (output on CVSG bus and DTC's) of the secondary air pressure gauge. Value 0/Disabled means Secondary Air Pressure Gauge is not installed. Value 1/Enabled means Secondary Air Pressure Gauge is installed.

CECU Parameter Part Number	Parameter Description	Min. Value	Max. Value	Explanation
Q30-1005-041* Q30-1017-041**	Secondary Fuel Level Gauge Installed	0	1	Parameter controls the functionality (output on CVSG bus and DTC's) of the secondary fuel level gauge. Value 0/Disabled means Secondary Fuel Level Gauge is not installed. Value 1/Enabled means Secondary Fuel Level Gauge is installed.
Q30-1005-042* Q30-1017-042**	Transfer Case Oil Temperature Gauge Installed	0	1	Parameter controls the functionality (output on CVSG bus and DTC's) of the transfer case oil temperature gauge. Value 0/Disabled means Transfer Case Oil Temperature Gauge is not installed. Value 1/Enabled means Transfer Case Oil Temperature Gauge is installed.
Q30-1005-043* Q30-1017-043**	Transmission Temperature Gauge Installed	0	1	Parameter controls the functionality (output on CVSG bus and DTC's) of the transmission temperature gauge. Value 0/Disabled means Transmission Temperature Gauge is not installed. Value 1/Enabled means Transmission Temperature Gauge is installed.
Q30-1005-044* Q30-1017-044**	Voltmeter Gauge Installed	0	1	Parameter controls the functionality (output on CVSG bus and DTC's) of the voltmeter gauge. Value 0/Disabled means Voltmeter Gauge is not installed. Value 1/Enabled means Voltmeter Gauge is installed.
Q30-1005-045* Q30-1017-045**	Engine Retarder Present	0	1	Parameter is used to determine if the engine brake switch is installed. Value 0/Disabled means engine brake switches are not installed. Value 1/Enabled means engine brake switches are installed.
Q30-1005-046* Q30-1017-046**	Engine Make	0	2	Parameter is used to determine what type of engine is installed. Value 0 means the truck is equipped with CAT engine. Value 1 means the truck is equipped with CUMMINS engine. Value 2 means the truck is equipped with PACCAR engine.
Q30-1005-047* Q30-1017-047**	Engine Fan Override Present	0	1	Parameter is used to determine if the fan override switch is installed. Value 0/Disabled means engine fan override switch is not installed. Value 1/Enabled means engine fan override switch is installed.
Q30-1005-048* Q30-1017-048**	Gear Display Present	0	1	Parameter is used to determine the presence of gear display on the multifunction display. Value 0/Disabled means Gear Display functionality is not available in Multifunction Display. Value 1/Enabled means Gear Display functionality is available in Multifunction Display.
Q30-1005-050* Q30-1017-050**	Headlamp Warning Present	0	1	Parameter controls "headlamp-left-on"-warning. Value 0/Disabled means an alarm will not sound when the lights are on, the key is off and the driver door is open. Value 1/Enabled means an alarm will sound when the lights are on, key is off and the driver door is open.
Q30-1005-051* Q30-1017-051**	Change Distance Units	0	1	Parameter controls whether or not the operator can change the units in the cluster. Value 0/Disabled means the operator cannot change the units in the cluster. Value 1/Enabled means the operator can change the units in the cluster.
Q30-1005-052* Q30-1017-052**	Cluster Backlight Day Value	0	255	Parameter is used to set the intensity of the backlighting for the cluster when the lights are not on. Value 0 means minimum illumination. Value 255 means maximum illumination.

CECU Parameter Part Number	Parameter Description	Min. Value	Max. Value	Explanation
Q30-1005-053* Q30-1017-053**	CVSG Backlight Day Value	0	127	Parameter is used to set the intensity of the backlighting for the gauges when the lights are not on. Value 0 means minimum illumination. Value 127 means maximum illumination.
Q30-1005-054* Q30-1017-054**	Dash Backlight Day Value	0	255	Parameter is used to set the intensity of the backlighting for the entire dash when the lights are not on. Value 0 means minimum illumination. Value 255 means maximum illumination.
Q30-1005-055* Q30-1017-055**	Dash Dim With Dome Light	0	1	Parameter is used to determine if the dash backlighting should dim if the dome light is on. Value 0/Disabled means the functionality is disabled. Value 1/Enabled means the functionality is enabled.
Q30-1005-056* Q30-1017-056**	Dot-Matrix Backlight Day Value	0	255	Parameter is used to set the intensity of the backlighting for the multifunction display when the lights are not on. Value 0 means minimum illumination. Value 255 means maximum illumination.
Q30-1005-057* Q30-1017-057**	Cluster LCD Backlight Day Value	0	255	Parameter is used to set the intensity of the backlighting for the Liquid Crystal Display in the Tachometer and Speedometer when the lights are not on. Value 0 means minimum illumination. Value 255 means maximum illumination.
Q30-1005-058* Q30-1017-058**	Transfer Case Temperature Sensor Type	0	1	Parameter is used to determine which type of transfer case temperature sensor is installed for the transfer case temperature gauge. This determines the input range. Value 0 means Transfer Case Temperature Sensor Type = Delphi. Value 1 means Transfer Case Temperature Sensor Type = Siemens (or Continental).
Q30-1005-059* Q30-1017-059**	Park Brake Symbol In Indication Bar	0	1	Parameter is used to determine if the park brake symbol is available on the indicator bar located on the RH side of the multifunction display. Value 0/Disabled means park brake symbol will not be displayed. Value 1/Enabled means park brake symbol will be displayed.
Q30-1005-060* Q30-1017-060**	PTO Control Present	0	1	Parameter is used to determine the presence of PTO controls. (For CUMMINS engine, default value is 1 - Cruise Control PTO idle bump). Value 0/Disabled means PTO Control functionality is disabled. Value 1/Enabled means PTO Control functionality is enabled.
Q30-1005-061*	Cruise Control Set Speed Displayed	0	1	Parameter is used to display cruise control set speed on MFD. Value 0/Disabled means cruise control set speed will not be displayed. Value 1/Enabled means cruise control set speed will be displayed.
Q30-1005-062* Q30-1017-062**	After Treatment Regeneration Switch	0	1	Parameter is used to determine if the Diesel Particulate Filter (DPF) aftertreatment regeneration force or inhibit switches are installed. Value 0/Disabled means After Treatment Regeneration Switch is not installed. Value 1/Enabled means After Treatment Regeneration Switch is installed.
Q30-1005-063* Q30-1017-063**	Remote PTO Present	0	1	Parameter is used to determine if the remote PTO switches are installed (PACCAR engines only). Value 0/Disabled means Remote PTO switches are not installed. Value 1/Enabled means Remote PTO switches are wired to CECU and functionality is enabled.
Q30-1005-064* Q30-1017-064**	RPM Sweet Spot High Limit	0	3000	Parameter is used to set the high limit for RPM sweet spot bargraph displayed on the multifunction display.

CECU Parameter Part Number	Parameter Description	Min. Value	Max. Value	Explanation
Q30-1005-065* Q30-1017-065**	RPM Sweet Spot Low Limit	0	3000	Parameter is used to set the low limit for RPM sweet spot bargraph displayed on the multifunction display.
Q30-1005-066* Q30-1017-066**	Transmission Make	0	4	Parameter is used to determine the type/make of transmission. Value 0 means the truck is equipped with Manual transmission. Value 1 means the truck is equipped with Autoshift transmission. Value 2 means the truck is equipped with Ultrashift transmission. Value 3 means the truck is equipped with Freedomline transmission. Value 4 means the truck is equipped with Allison transmission.
Q30-1005-067* Q30-1017-067**	Brake Applied Pressure Sensor Installed	0	1	Parameter is used to determine if the brake application pressure sensor is installed. This parameter will effect the functionality of the brake applied gauge and cruise control. Value 0/Disabled means brake application pressure sensor is not installed. Brake applied gauge will not function and CECU will not send brake info on databus. Value 1/Enabled means brake application pressure sensor is installed. Brake applied gauge will be enabled (If "Brake Applied Pressure Gauge Installed" parameter is also enabled) and CECU will send brake info on databus.
Q30-1005-068* Q30-1017-068**	Dome Light Controlled By Low Voltage Disconnect	0	1	Parameter is used to determine if the dome lamps are controlled by the LVD. Value 0/Disabled means the dome lamps are not controlled by the LVD. Value 1/Enabled means the dome lamps are controlled by the LVD.
Q30-1005-070* Q30-1017-070**	Alarm Bell Symbol	0	2	Parameter is used to determine the status of the alarm bell symbol in the multifunction display. Value 0 means the alarm bell symbol is off. Value 1 means the alarm bell symbol is on solid. Value 2 means the alarm bell symbol is animated.
Q30-1005-071* Q30-1017-071**	Ignition Timer Maximum Time	5	90	Parameter is used to determine the maximum time the idle timer can be set to. The value can be set in one minute increments. Value 5 means five minutes. Value 90 means ninety minutes.
Q30-1005-072* Q30-1017-072**	Voltage Trim Multiplier	0	999999	Parameter is used to trim or calibrate the voltmeter. This value is the "multiplier" portion of the trim and has a range between 0 and 999999. See "Voltmeter Trim Procedure" following this chart, for steps to determine the correct value.
Q30-1005-073* Q30-1017-073**	Voltage Trim Offset	0	10000	Parameter is used to trim or calibrate the voltmeter. This value is the "offset" portion of the trim and has a range between 0 and 10000. See "Voltmeter Trim Procedure" following this chart, for steps to determine the correct value.
Q30-1005-074* Q30-1017-074**	Low Voltage Disconnect Installed	0	1	Parameter is used to determine if a low voltage disconnect system is installed. Value 0/Disabled means a LVD system is not installed. Value 1/Enabled means a LVD system is installed.
Q30-1005-075* Q30-1017-075**	Engine Fan With Park Brake Installed	0	1	Parameter is used to determine if the engine fan will turn on whenever the park brakes are turned on. Value 0/Disabled means the engine fan will not come on when the park brakes are on. Value 1/Enabled means the engine fan will come on when the park brakes are on.

CECU Parameter Part Number	Parameter Description	Min. Value	Max. Value	Explanation
Q30-1005-076* Q30-1017-076**	Primary Air Pressure on V-CAN	0	1	Parameter is used to determine if the primary air pressure is broadcast on the V-CAN. Value 0/Disabled means the primary air pressure is not broadcast on the V-CAN. Value 1/Enabled means the primary air pressure is broadcast on the V-CAN.
Q30-1005-077* Q30-1017-077**	Secondary Air Pressure on V-CAN	0	1	Parameter is used to determine if the secondary air pressure is broadcast on the V-CAN. Value 0/Disabled means the secondary air pressure is not broadcast on the V-CAN. Value 1/Enabled means the secondary air pressure is broadcast on the V-CAN.
Q30-1005-078* Q30-1017-078**	Voltage on V-CAN	0	1	Parameter is used to determine if voltage is broadcast on the V-CAN. Value 0/Disabled means voltage is not broadcast on the V-CAN. Value 1/Enable means voltage is broadcast on the V-CAN.
Q30-1005-079* Q30-1017-079**	Primary Fuel Level on V-CAN	0	1	Parameter is used to determine if the primary fuel level is broadcast on the V-CAN. Value 0/Disabled means the primary fuel level is not broadcast on the V-CAN. Value 1/Enable means the primary fuel level is broadcast on the V-CAN.
Q30-1005-082* Q30-1017-082**	Smart Wheel Installed	0	1	Parameter is used to determine if a smart wheel is installed. This parameter enables the cluster retarder lamp. This lamp is only enabled when the truck is equipped with a multiplex steering wheel. Value 0/Disabled means a smart wheel is not installed. Value 1/Enable means a smart wheel is installed.
Q30-1005-083* Q30-1017-083**	Governed Speed Limit Available	0	1	Parameter controls if the Governed speed limit transmitted by the Engine on V-CAN is displayed on the "Engine Info" MFD screen. Value 0/Disabled means the Governed Speed Limit is not Displayed Value 1/Enable means the Governed Speed Limit is displayed, if the Engine is transmitting it.
Q30-1005-084* Q30-1017-084**	Remote Accelerator Sensor Installed	0	1	Parameter controls fault logging for Remote Accelerator input (C27 of CECU). Also controls transmission of Remote Accelerator information on V-CAN. Value 0/Disabled means that no DTCs will be logged if that input is in a failure state (open, short) and "Not Available" is transmitted on V-CAN Value 1/Enable means that DTCs will be logged if that input is in a failure state (open, short). The remote accelerator values on V-CAN are populated with valid data (or "Error" if a fault is occurring on the input).
Q30-1005-085* Q30-1017-085**	Axle Temperature Steer Gauge Installed	0	1	Parameter controls fault logging of analog input and gauge outputs to CVSG. (For Peterbilt Only) Value 0/Disabled means that no DTCs will be logged if that input is in a failure state (open, short) and the gauge needle will not move if connected to the CVSG bus. Value 1/Enable means that DTCs will be logged if that input is in failure state (open, short) and the gauge needle will move when connected to the CVSG bus.

CECU Parameter Part Number	Parameter Description	Min. Value	Max. Value	Explanation
Q30-1005-086* Q30-1017-086**	Fleet ID Available	0	1	Parameter controls whether the Fleet ID is visible in the Truck Information screen in the MFD. Value 0/Disabled means the Fleet ID is not visible in the Truck Information screen. Value 1/Enable means the Fleet ID is enabled in the Truck Information screen. This requires the Fleet ID to be programmed by ESA, otherwise it will not be visible.
Q30-1005-087* Q30-1017-088**	Brake Type	0	1	Parameter controls the input used for brake signal within the CECU3, and the polarity of the ABS telltale, Value 0/Air means that the Air Brake Application analog input is used and the ABS telltale is "lit with 12V". Value 1/Enable means that the Hydraulic Brake digital input is used and the ABS telltale is "lit with 0V".
Q30-1005-088* Q30-1017-089**	Brake Vendor	0	1	Parameter controls the input used for brake signal within the CECU3, and the polarity of the ABS telltale. Value 0/Bendix means that the Air Brake Application analog input is used and the ABS telltale is "lit with 12V". Value 1/WABCO means that the Hydraulic Brake digital input is used and the ABS telltale is "lit with 0V".
Q30-1005-089* Q30-1017-087**	OAT Source	0	1	Parameter controls the signal used to populate the LCD in the Tachometer, as well as all other CECU features that use temperature as part of the algorithm. Value 0/CECU means that the analog input of the CECU is used (non-OBD engines). Value 1/Engine means that the J1939 V-CAN input from the Engine will be used. ***CAUTION: Modifying the sensor or its location can impact vehicle performance, emissions, and/or reliability.***
Q30-1005-090* Q30-1017-090**	Diesel Emissions Fluid Gauge Installed	0	1	Parameter controls fault logging and gauge needle if the DEF gauge is installed. Value 0/Disabled means that no faults will be logged and the gauge needle will not move if the gauge is installed. Value 1/Enable means that DTCs will be logged if the DEF information from the aftertreatment system is not available and the gauge needle will respond to DEF level changes.
Q30-1008-501	Editable Telltale 1 Icon ID			Used by ESA to select the Icon displayed in monitor and simulate modes. Does not effect any vehicle functions. Refer to Q30-1008 drawing.
Q30-1008-517	Editable Telltale 3 Icon ID			Used by ESA to select the Icon displayed in monitor and simulate modes. Does not effect any vehicle functions. Refer to Q30-1008 drawing.
Q30-1008-518	Editable Telltale 2 Icon ID			Used by ESA to select the Icon displayed in monitor and simulate modes. Does not effect any vehicle functions. Refer to Q30-1008 drawing.
Q30-1008-519	Editable Telltale 4 Icon ID			Used by ESA to select the Icon displayed in monitor and simulate modes. Does not effect any vehicle functions. Refer to Q30-1008 drawing.
Q30-1008-520	Editable Telltale 5 Icon ID			Used by ESA to select the Icon displayed in monitor and simulate modes. Does not effect any vehicle functions. Refer to Q30-1008 drawing.
Q30-1008-522	Editable Telltale 6 Icon ID			Used by ESA to select the Icon displayed in monitor and simulate modes. Does not effect any vehicle functions. Refer to Q30-1008 drawing.
Q30-1008-524	Editable Telltale 8 Icon ID			Used by ESA to select the Icon displayed in monitor and simulate modes. Does not effect any vehicle functions. Refer to Q30-1008 drawing.

CECU Parameter Part Number	Parameter Description	Min. Value	Max. Value	Explanation
Q30-1008-526	Editable Telltale 9 Icon ID			Used by ESA to select the Icon displayed in monitor and simulate modes. Does not effect any vehicle functions. Refer to Q30-1008 drawing.
Q30-1017-061**	Cruise Control Set Speed Display	0	2	Parameter is used to control how the Cruise Control Set Speed is displayed to the operator. Value 0/Disabled means the Cruise Control Set Speed is not shown to the displayed. Value 1/Main Highline means the Cruise Control Set Speed is displayed in the Main Highline for 3 seconds after release of the set or resume switch. Value 2/Highline Side Bar means the Cruise Control Set Speed is displayed in the right side bar of the highline while the Cruise Control is engaged.
Q30-1017-091**	Starter RPM Protection Enable	0	1	Parameter is used to control whether the Starter will be disabled when the engine is running. Value 0/Disabled means the engine RPM will be ignored when allowing the starter to engage. Value 1/Enabled means the engine RPM must be below 500 rpm for the starter to engage.
Q30-1017-092**	Starter Overcrank Protection Enable	0	1	Parameter is used to control whether the starter will be disabled due to overuse. Value 0/Disabled means the starter will not be disabled due to overuse. Value 1/Enabled means the starter will be disabled if the starter is overused (cranking for 90s without sufficient cooldown).
Q30-1017-093**	Advanced ABS Installed	0	1	Parameter is used to control whether Adaptive Cruise and Braking is supported. Value 0/Not Installed means Adaptive Cruise and Braking is not supported. Value 1/Installed means the Adaptive Cruise and Braking is supported.
Q30-1017-094**	Water In Fuel Warning Enabled	0	1	Parameter is used to control whether operator warnings for Water in Fuel are enabled. Value 0/Disabled means the warning is disabled. Value 1/Enabled means the vehicle supports detection of water in fuel and the warning is enabled.

* Valid for CECU Software Version P30-1002-XXX

** Valid for CECU Software Version P30-1008-XXX

Voltmeter Trim Procedure

Use the following steps when determining the appropriate parameter values for the Voltage Trim Multiplier and Voltage Trim Offset.

1. Turn ignition key to the ON position.
2. Make sure the Voltmeter Trim Offset and Voltmeter Trim Multiplier parameters are set to the default values. Using ESA, select 'Parameters' from the main menu screen, then select 'Standard Gauges', then scroll down to view the Voltmeter Trim Offset and Voltmeter Trim Multiplier. If the values for these parameters are not set at the default values, use ESA to reset the values as follows:
   a. Default Voltmeter Trim Offset = 5,000
   b. Default Voltmeter Trim Multiplier = 100,000

   NOTE: To correctly calibrate the voltmeter, both the Voltmeter Trim Offset and Voltmeter Trim Multiplier parameters must be reset to their default values before performing this procedure.
3. Measure the voltage at the batteries. Record the value on the worksheet as "Measured Battery Voltage Engine Off".
4. Note the displayed voltage using ESA or with the Voltmeter CVSG. Record the value on the worksheet as "Displayed Battery Voltage Engine Off".
5. Start the Engine.
6. Measure the voltage at the batteries (same place as in step 3). Record the value on the worksheet as "Measured Battery Voltage Engine Running".
7. Note the displayed voltage using ESA or with the Voltmeter CVSG. Record the value on the worksheet as "Displayed Battery Voltage Engine Running".
8. Perform the calculations on the worksheet to determine the appropriate values for the Voltage Trim Multiplier and Voltage Trim Offset.
9. Use ESA to set the parameter values to the calculated values.

Voltmeter Trim Values Worksheet

Vehicle Voltage

Procedure	Value	Worksheet Entry
STEP 3: Measured BATT Voltage Engine Off		A
STEP 6: Measured BATT Voltage Engine Running		B
STEP 4: Displayed BATT Voltage Engine Off		C
STEP 7: Displayed BATT Voltage Engine Running		D

Entry			Entry			Result	
B		-		A	=		E
D		-		C	=		F
E		+		F	=		G
C		x		G	=		H
A		-		H	=		I
I		x	1,000		=		J
J		+	5,000		=		K
G		x	100,000		=		L
K		=	Voltmeter Trim Offset Value				
L		=	Voltmeter Trim Multiplier Value				

8 How It Works

Functional Description . . . . . 8 - 2
ICU/CECU Architecture . . . . . 8 - 3
Cluster Components . . . . . 8 - 4
Commercial Vehicle Smart Gauges (CVSG) . . . . . 8 - 10
Instruments and Controls Operation . 8 - 13
Instrumentation Troubleshooting Procedures . . . . . 8 - 15
Highline Diagnostic Codes . . . . . 8 - 16

Functional Description

Instrumentation Control Unit/Cab Electronic Control Unit (ICU/CECU)

The heart of the multiplexed instrumentation system is the ICU/CECU. For the majority of Peterbilt vehicles, the ICU/CECU is located behind the center of the dash, near the radio. For the majority of Kenworth vehicles, the ICU/CECU is located behind the center console. See Control Unit Locations for illustrations depicting the physical positioning of the control unit.

Typical ICU/CECU Locations

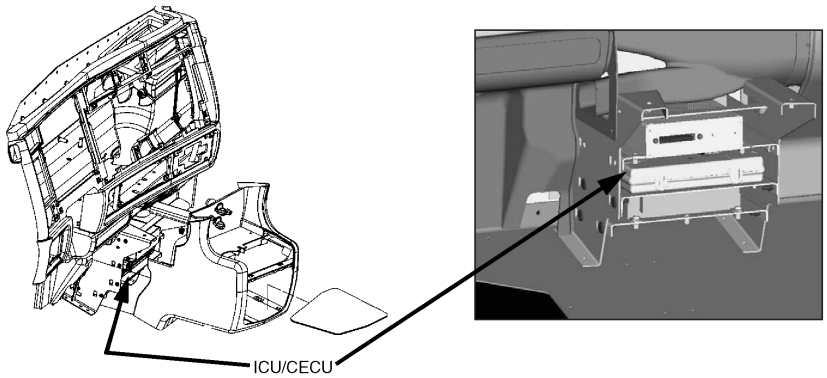

Kenworth Location

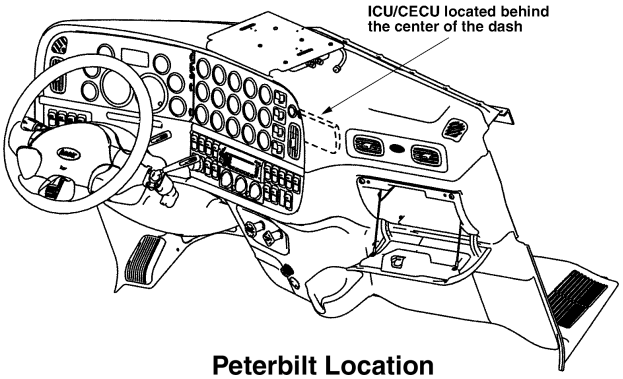

Peterbilt Location

Vehicle component inputs are sent to the ICU/CECU through the J1939 data bus or conventional wiring. The ICU/CECU interprets the various inputs and monitors/controls the functions for each input through the ICU/CECU software. Output signals from the ICU/CECU provide data for the gauges, warning lamps, audible alarms, and displays inside the cluster.

CAUTION: Don't cut or tap into green/yellow twisted pairs. Doing so will change the resistance in the J1939 circuit causing disruption of component communication on the databus. Only use approved J1939 components with validated software.

When used in conjunction with the Electronic Service Analyst (ESA) diagnostic software tool, the technician can review fault codes stored in the ICU/CECU, verify whether the instrumentation is working properly and diagnose the root cause of the problem more easily.

ICU/CECU Architecture

The software programming of the control unit can be grouped into three main types:

- Run Time (RT) - which acts as the operating system where all communication takes place.
- Programmable Logic Controller (PLC) Code - manufacturer specific programmed code and software that is developed, accessible and editable.
- Vendor Module - blocks of code that are developed for specific manufacturers to allow other features to be implemented more efficiently.

To better understand how Electronic Service Analyst (ESA) functions and why there are current limitations on some of the multiplexed features, by explaining what ESA can see. Currently ESA can look at all information that is communicated between the RT and PLC Code portions of the programming. Any signals, be they inputs, outputs, or dataline signals, sent between the RT and PLC Code are visible to ESA. These are the signals that may be monitored and simulated using ESA.

Limitations with the ESA program are found in the communications that go to the pre-developed Vendor Modules. Currently this information is not available for ESA to look at. That is why some features that have Vendor Module programming, such as the odometer and the message display, are not available to monitor and/or simulate through ESA.

CECU/CECU2 (P30-1002-XXX) and CECU3 (P30-1008-XXX) Block Diagram

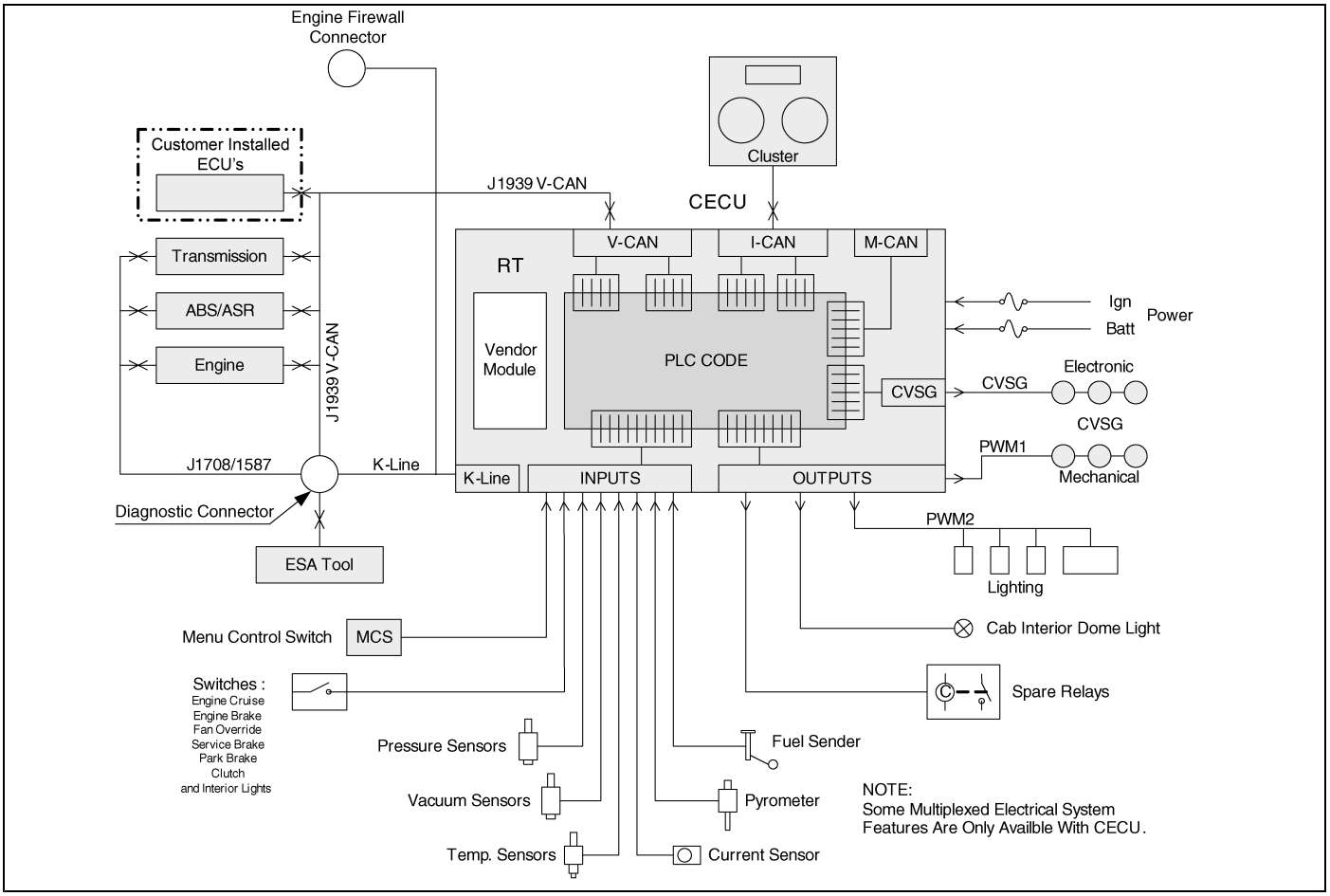

NOTE: It is possible for the CECU to receive signals via the J1939 communications line from optional customer installed ECUs.

Refer to the appropriate reference literature for any customer installed ECU.

Cluster Components

The heart of the multiplexed instrumentation system is the ICU/CECU. For the majority of Peterbilt vehicles, the ICU/CECU is located behind the center of the dash, near the radio. For the majority of Kenworth vehicles, the ICU/CECU is located behind the center console. See Control Unit Locations for illustrations depicting the physical positioning of the control unit.

Central Instrument Cluster

The central instrument cluster is the instrumentation in the dash panel that is located directly in front of the driver. The instrumentation parts in this area include:

- Speedometer (including odometer and trip meter)
- Tachometer (including engine hour meter and outside temperature display)
- Kenworth multi-function display (if equipped)
- Peterbilt driver information display (if equipped)
- Pre-installed warning lights (telltale symbols)

Some models have a one-piece integrated cluster while the instrument cluster on other models consists of separate parts.

The Multi-funtion Highline Display/Driver Information Display (if equipped), located at the top of the instrument cluster, displays vehicle information and warnings through a constant monitoring of the vehicle systems. The various functions may be accessed by navigating through menu screens using the menu control switch (rotational knob).

The central instrument cluster receives input data from the ICU/CECU via the I-CAN data bus. When the ignition key is first turned ON, the cluster performs a calibration power on self-test that can be used to troubleshoot the main instrumentation parts.

In models with separate parts, the power to the Speedometer and Tachometer is provided by the DWIM (Driver Warning and Information Module). Thus, if the connector behind the DWIM is removed, the power to these components will be removed also.

Power On Self-Test for Central Instrument Cluster

When the ignition key is first turned, the following calibration tests will be performed in the central instrument cluster parts.

- The speedometer and tachometer gauge pointers move from pointing at zero, counter-clockwise to their mechanical limit (approximately -8°), remain there for 1 second and return to pointing at zero.
- At the same time, all non-direct telltales (which are controlled by the ICU/CECU) are switched on together, and then switched off together.
- A warning sound sequence is also activated five times without a break.
- In Peterbilt models, the Driver Information Display will sequentially display warning icons. Then the display will show the last screen that was displayed before the ignition was turned off.
- In Kenworth models equipped with Multifunction Highline Display, the display will show the last screen that was displayed before the ignition was turned off.

NOTE: Before replacing the ICU/CECU or any gauges, check the wiring and fuses, and perform the diagnostic tests (Diagnostic Trouble Codes) using ESA to verify that you are not replacing a good component.

Editable Telltale Lights

The central instrument cluster includes pre-installed warning light symbols (telltales). There are two types of telltales, direct and indirect.

Direct telltales are totally controlled by the device that is issuing the warning. See Direct Wire Telltales for more information.

Indirect telltales are controlled by the ICU/CECU. Indirect telltales are turned ON and OFF during the Power On Self-Test at ignition. For these telltales, the ICU/CECU receives inputs directly from the source wiring or from the J1939 bus. If any of the indirect telltales do not turn on during the Power On Self-Test, it means that the LED in the cluster/DWIM is broken and the cluster/DWIM needs replaced because the individual LEDs are not serviceable.

In some Peterbilt models equipped with a one-piece cluster, the Icon Tray slides into the bottom of the cluster. In other models equipped with separate parts, there are two icon trays that slide into the two sides of the Driver Warning Indicator Module (DWIM). In certain Peterbilt models, some telltales may be incorporated in the Driver Information Display. These telltales will be sequenced through during the Power On Self-Test.

In Kenworth models equipped with a one piece central cluster, there are two telltale decals/trays that plug into the sides of the cluster. In other models equipped with separate parts, there are two icon trays that slide into the two sides of the Driver Warning Indicator Module (DWIM). In Kenworth models, there may be up to four telltales included in the Speedometer and Tachometer.

Incorporating the telltale icons onto removable pieces adds flexibility. This permits customizing the telltales according to the features on each chassis. In Kenworth trucks, the cluster and DWIM are shipped with a set of decals that meet 95% of the requirements for all chassis shipped. For the remaining 5%, the decals are replaced with a set of custom build trays. It is possible to remove the decals and replace them with a set of trays that can be purchased from Paccar Parts. This information is currently provided in the Body Builder Manual.

The icon content of the decal has been changing with the progressive EPA and FMVSS requirements. Thus, depending on the engine year and some other factors, decals from similar vehicles may contain different telltales.

Cluster and Telltales

Peterbilt One-Piece Cluster

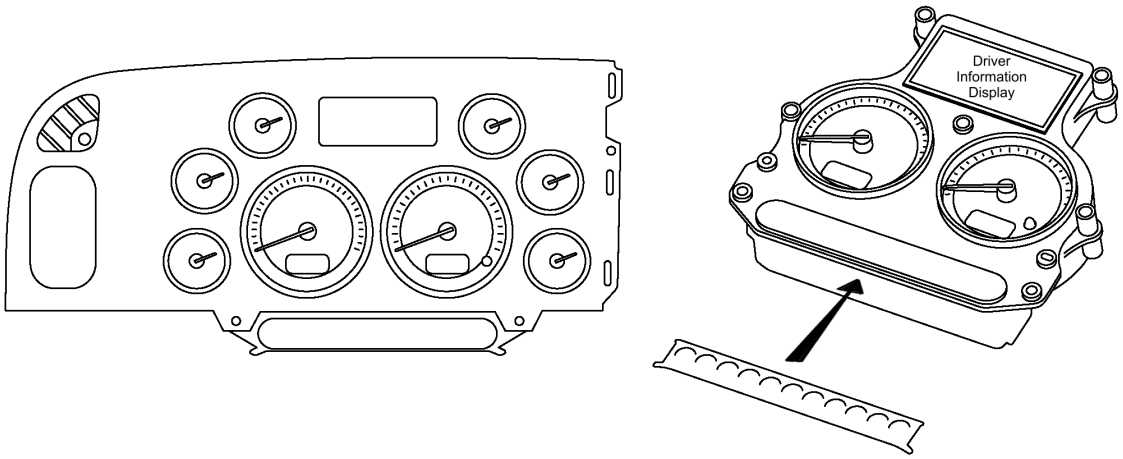

Kenworth One-Piece Cluster

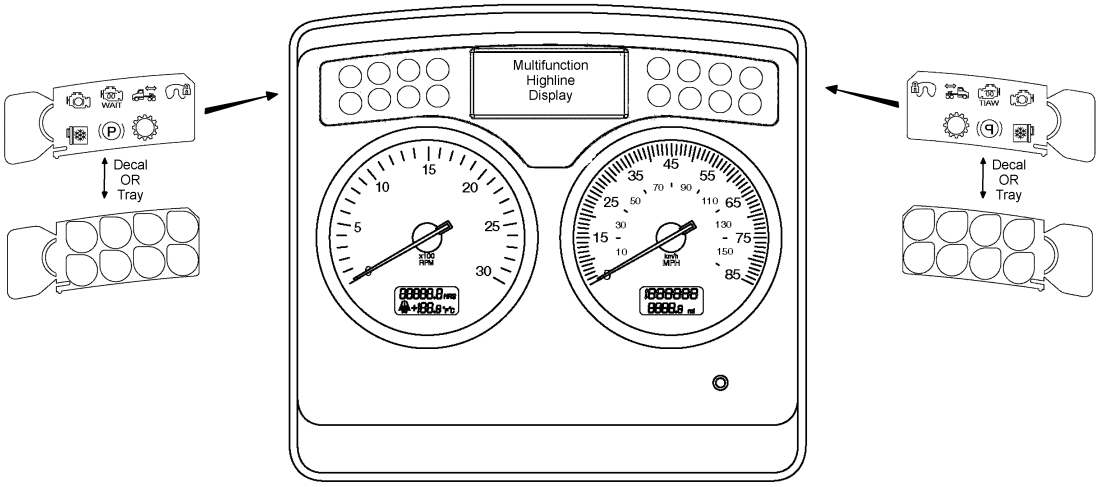

Peterbilt/Kenworth with DWIM

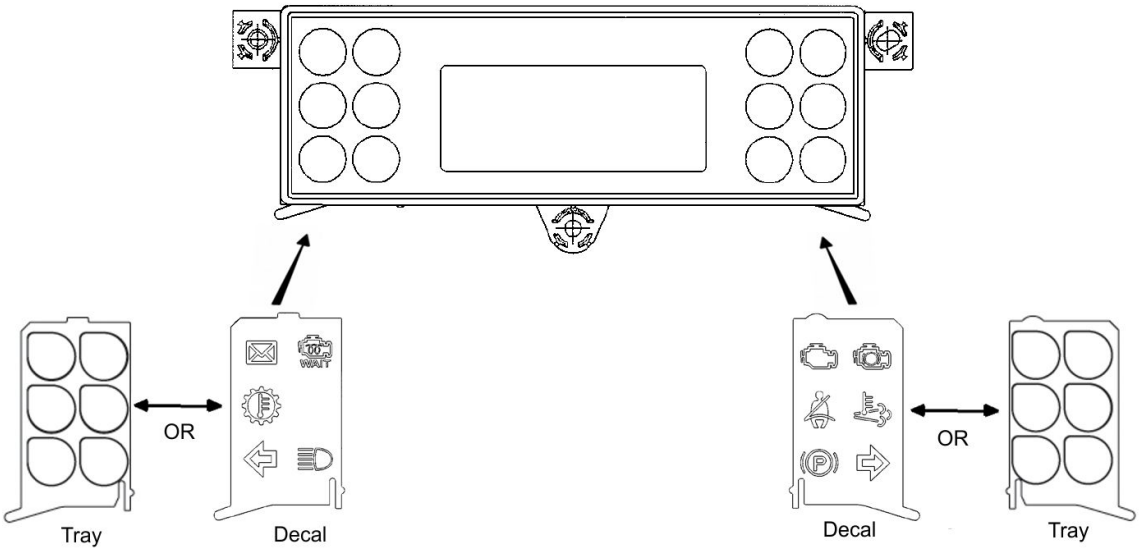

Location of Editable Telltale Lights

Peterbilt One-Piece Cluster Telltale Location

Kenworth One-Piece Cluster Telltale Location

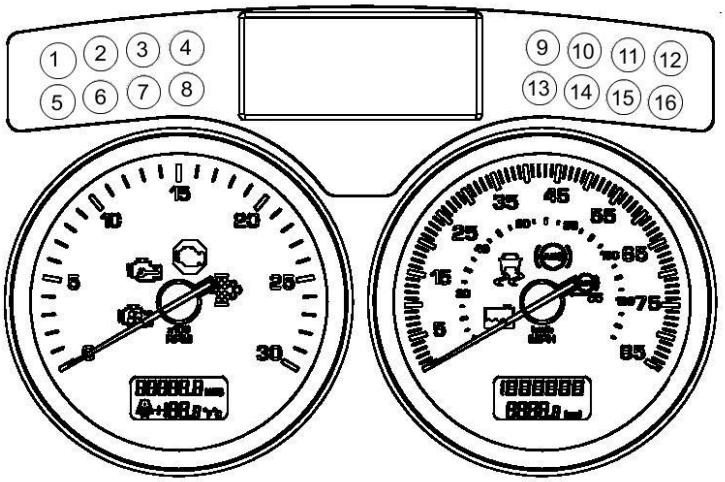

With DWIM Telltale Location

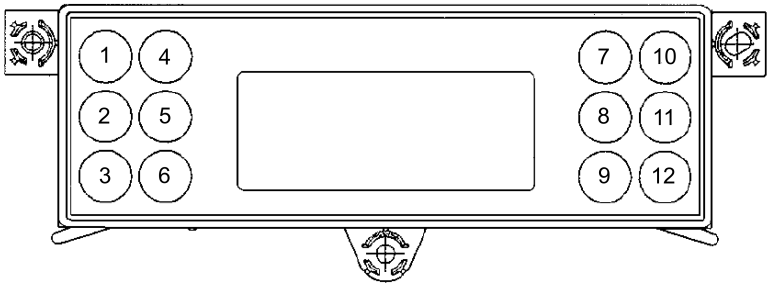

Editable Telltale Application

Editable Telltale Number	ICU Pin	CECU Pin	KW Cluster	KW DWIM	PB Cluster	PB DWIM
1	19	19	Position 4	Position 1	Position 2	Position 1
2	20	20	Position 7	Position 2	Position 3	Position 2
3	21	21	Position 8	Position 5	Position 4	Position 5
4	22	22	Position 9	n/a	Position 5	Position 8
5	23	n/a	Position 10	n/a	Position 7	Position 9
6	24	24	Position 12	n/a	Position 8	Position 10
7	25	25	Position 13	n/a	n/a	Position 11
8	26	26	Position 14	n/a	n/a	n/a
9	27	27	Position 16	n/a	n/a	n/a

Commercial Vehicle Smart Gauges (CVSG)

The right and left instrument panel gauges used with the multiplexed instrumentation are commonly referred to as Commercial Vehicle Smart Gauges (CVSG). Like the central instrument cluster, the 2-inch gauges also receive input data directly from the ICU/CECU. CVSG's are electronic and mechanical. The electronic CVSG's receive digital data from the ICU/CECU via the CVSG data bus. The mechanical gauges (i.e. suspension air pressure, etc.) are driven directly by air pressure. Both types of gauges receive input signals from the ICU/CECU via a 4-wire "daisy chained" jumper harness that links one gauge to another.

Kenworth CVSG

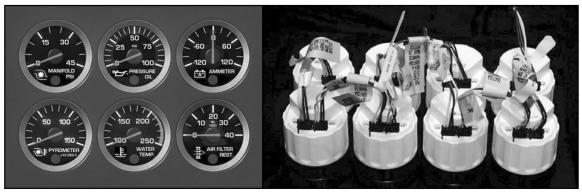

Peterbilt CVSG

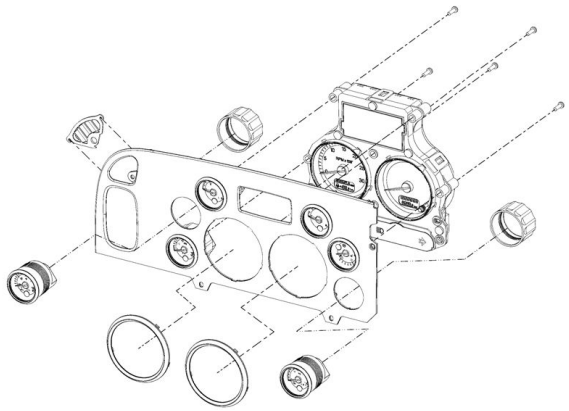

Power On Self-Test

When the ignition key is first turned ON, all the electronic 2-inch gauges will perform a calibration "power on self-test."

- Ignition key turned ON.
- The gauge pointers move from pointing at zero, counterclockwise to their mechanical limit (approx. -5°), remain there for 1 second and return to pointing at zero.
- At the same time, all LED indicators are switched on together, and then switched off together.

NOTE: The mechanical CVSG do not perform a power on self-test

CVSG Gauge Information

The 2-inch electronic gauges receive their power from the ICU/CECU. Backlighting for the 2-inch electronic gauges is sent from the ICU/CECU to the gauges via the data link (Blue wire). The data link (blue wire) is also used to deliver information between the ICU/CECU and the 2-inch gauges. The 2-inch gauges are "series" (daisy-chained) connected using 4-way jumper harnesses linking the gauges together.

- Yellow = Power wire (9-16 volts)
- Green = Ground wire (Return)
- Blue = Data link
- Brown = Backlighting (used for mechanical gauges only)

Service Information and CVSG characteristics that service technicians should be aware of:

- There are two generations of CVSGs. The first is the white CVSG where the plastic housing and nut are made with white plastic. The second is the black CVSG where the plastic housing and nut are black. Use a white nut on a white CVSG and a black nut on a black CVSG. Otherwise, both generations work exactly the same and can be intermixed on the truck.
- Specialty CVSG gauges (such as the clock, PTO hour meter, and transmission display) are stand-alone gauges and are independent of the ICU/CECU.
- Optional mechanical gauge (such as air suspension) needles are driven mechanically by air pressure. There is no red warning lamp and the backlighting is through the brown wire from the ICU/CECU (a PWM input). The 4-way jumper harness is still used to pass all 4 circuits through the gauge to the next gauge in the chain.
- If the headlamps are on and the dimmer is turned to bright, you can scan the panel and tell which electronic gauges are wired and functioning correctly.
- If part of the panel has gauges backlit while some of the 2-inch gauges are not backlit, the jumper harness wire between the gauges is probably not connected properly.
- If the red indicator lamp is on but the gauge is operational, it indicates the value is out of normal range.
- If a 2-inch electronic gauge has a short or open in the sensor wiring, the gauge needle moves 5° below the first tick mark (approximately one needle thickness).
- The Diesel Exhaust Fluid (DEF) CVSG is unique in that the telltale will flash for extreme low fluid level.
- If a 2-inch electronic gauge has power (yellow wire) and ground (green wire) but is not receiving data (blue wire), after 30 seconds of waiting for data, the red indicator lamp at the 6 o’clock position of the gauge will begin to blink. This indicates there is an open or short in the blue wire between the gauge and the ICU/CECU. Since the 2-inch gauges are "series" (daisy-chain) connected, any other gauges downstream from the gauge that has lost connection will also begin to blink their warning lights.

Direct Wire Telltales

Direct Wire Telltales are warning lights that are not controlled by the software in the CECU (not part of Multiplex system). The type of warning light (direct wire, vs multiplexed) is determined by either regulations, or space available in the Cluster and DWIM. Currently, the direct wire warning lights are made with LEDs plus some protective circuitry. All direct telltales require 12V at their positive terminal and Ground at their negative terminal to light.

The operation of the MIL and Wait to Start can be observed at ignition during the bulb check function (engine turns them on and off at ignition). If they are not working then, unplug the Cluster or DWIM and apply 12V to their connectors per the following table.

For the Direct Wire Telltale in the gauge modules listed in the following table, the telltale function can be tested by unplugging the gauge from the harness and applying voltage to the connector pairs that belong to that warning light. If the LED lights up after applying voltage to them, the problem is either the wiring (in the rest of the system), or the controlling device.

Direct Telltale

Direct Telltale	Location	Related to	Functionality	Troubleshooting
MIL (2010)	Kenworth and Peterbilt clusters after 2010, T7.	2010 Engines	Directly controlled by engine bulb check at ignition.	Cluster connector (Telltale 11) Pin 13 = 12V Pin 14 = GND DWIM connector (Telltale 7) Pin 13 = 12V Pin 14 = GND
Wait-To-Start (2010)	Kenworth and Peterbilt clusters after 2010, T7. This lamp was driven by the CECU before 2010.	2010 Engines	Directly controlled by engine bulb check at ignition.	Cluster connector (Telltale 2) Pin 8 = 12V Pin 10 = GND DWIM connector (Telltale 4) Pin 8 = 12V Pin 10 = GND
Refrigerator	Kenworth cluster.	New interior refrigerator	Light should be ON when the refrigerator is turned ON (switch located in the sleeper).	Cluster connector Pin 1 = 12V Pin 2 = GND
Lane Departure	Kenworth Direct wire telltale gauge Q43-1128-001.	ITRIS lane departure system	Refer to lane departure manual.	Pin 2 = 12V Pin 6 = GND
Service Transmission	Kenworth Direct wire telltale gauge Q43-1127-001.	Allison 1000/2000	Refer to transmission manual.	Pin 2 = 12V Pin 6 = GND
Range Inhibit	Kenworth Direct wire telltale gauge Q43-1127-001.	Allison 1000/2000	Refer to transmission manual.	Pin 4 = 12V Pin 8 = GND
Overspeed Shutdown	Kenworth Direct wire telltale gauge Q43-1127-001.	Cummins engine overspeed shutdown	ON when the shutdown valve is closed and with some test conditions. Refer to EAOS Supplement.	Pin 1 = 12V Pin 5 = GND
Cab Status	Kenworth Direct wire telltale gauge Q43-1127-001.	Cab power status indicator in firetrucks with cab power shutdown switch	Always ON when power applied to the cab.	Pin 3 = 12V Pin 7 = GND

Instruments and Controls Operation

Before attempting to repair any instrumentation problems, the technician should have a complete understanding of how the instruments and controls operate.

Air Filter Restriction Pressure - The Air Filter Restriction Pressure gauge indicates the condition of the engine air cleaner and is measured by inches of water (H_2O). A clean filter should register 7 in. H_2O (may vary with system design) and a filter whose life is over registers approximately 25 in. H_2O.

Air Starter Pressure - The Air Starter Pressure Gauge indicates the amount of air pressure in the air start reservoir.

Ammeter - The Ammeter monitors the vehicle's electrical system and makes sure the system is in balance and operating normally. If not, it may be drawing power from the alternator (positive reading) or from the batteries (negative reading). Under normal conditions the ammeter will read nearly "zero."

Axle, Drive Oil Temperature - The Drive Axle Oil Temperature gauges (front, rear, and center) indicate the temperature of the lubricant in the vehicle's axles.

Axle, Pusher Air Pressure, #1, #2, #3 - The Pusher Axle Air Pressure gauges indicate the air pressure in each of the pusher axles suspension air bags.

Axle, Tag Air Pressure - The Tag Axle Air Pressure gauge indicates the amount of air pressure in the tag axle suspension air bags.

Brake, Application Air Pressure - The Brake Application Air Pressure gauge indicates how much air pressure is being applied from the foot brake valve or trailer brake hand valve to the air brakes.

BrakeSaver Application Air Pressure (Export vehicles only) - The BrakeSaver Application Air Pressure gauge indicates the amount of air pressure applied to the BrakeSaver hand control valve.

BrakeSaver Oil Temperature (Export vehicles only) - The BrakeSaver Oil Temperature gauge indicates the temperature in the BrakeSaver. If the oil temperature exceeds the maximum limits, a red warning lamp in the gauge turns on.

Engine Coolant Temperature - The Engine Coolant Temperature gauge indicates the temperature of the engine coolant. If the coolant temperature exceeds the maximum limits, a red warning lamp in the gauge illuminates and an audible warning sounds. If the coolant temperature continues to rise, the Check Engine and/or Stop Engine lights illuminate. Under normal operating conditions the water temperature gauge should register between 165 and 205°F (74 and 90°C). Under certain conditions, somewhat higher temperatures may be acceptable. The maximum allowable temperature is 220°F (104°C) with the cooling system pressurized, except for certain engines.

Engine, Oil Pressure - If the oil pressure drops below the minimum pressure a red warning light in the gauge illuminates, the Stop Engine light illuminates and an audible alarm tone sounds.

Engine Oil Temperature - The Engine Oil Temperature gauge indicates the engine oil temperature. If the oil temperature exceeds the maximum limits, a red warning light in the gauge illuminates.

Engine Pyrometer (Export vehicles only) - The Engine Pyrometer gauge indicates engine exhaust gas temperature. Since it responds almost immediately to changes in exhaust gas temperature, the pyrometer is an excellent indicator of engine output. Monitor it in conjunction with the tachometer and manifold pressure gauge.

Fuel Filter Restriction Pressure - This gauge tells you the condition of the fuel filter by indicating the restriction from the fuel filter to the fuel pump. The restriction is measured by inches of mercury (in-Hg).

Fuel Level, Primary/Secondary (if equipped) - The Primary Fuel gauge and Secondary Fuel gauge (if equipped) indicate the approximate amount of fuel in each fuel tank. In addition to indicating empty and full, the gauge(s) also indicate the fuel level in graduated increments. When the fuel level for each tank is below 1/4 full, a red warning light in the gauge illuminates.

General Air Pressure #1, #2 - The General Air Pressure gauge(s) are used for customer installed component applications.

General Oil Temperature - The General Oil Temperature gauge(s) are used for customer installed component applications.

Manifold Pressure (Boost) - The Manifold Pressure (Boost) gauge indicates the power the engine is putting out by showing the amount of turbo boost. If the pressure indicated by the manifold pressure gauge goes down, there may be something wrong with the engine.

Manifold Pressure (Boost) - The Manifold Pressure (Boost) gauge indicates the power the engine is putting out by showing the amount of turbo boost. If the pressure indicated by the manifold pressure gauge goes down, there may be something wrong with the engine.

Primary and Secondary Air Pressure Gauge - The Primary Air Pressure gauge indicates pressure in the rear braking system. The Secondary gauge indicates pressure in the front braking system. Each gauge indicates the amount of air pressure in each system in pounds per square inch (psi). On vehicles equipped with metric air pressure gauges, the gauge faceplate includes a kPa (major) scale and psi (minor) scale. If the pressure in either or both circuits falls below 65 psi, a red warning light in the gauge illuminates and an audible alarm tone sounds when the engine is running.

Speedometer - The Speedometer indicates the vehicle speed in miles per hour (mph) and in kilometers per hour (km/h). For KW vehicles, the speedometer also includes several warning and indicator lamps.

Suspension Load Air Pressure, #1, #2 - The Suspension Load Air Pressure gauge indicates the amount of air pressure in the air suspension air bags. When the vehicle is equipped with a second Suspension Load Air pressure gauge, the #1 gauge indicates the air pressure in the driver's side air bags. The #2 gauge indicates the air pressure in the passenger's side air bags.

Tachometer - The Tachometer measures the engine speed in revolutions per minute (rpm). For KW vehicles, the speedometer also includes several warning and indicator lamps.

Tractor Brake Application Air Pressure - The Tractor Brake Application Air Pressure gauge indicates the amount of air pressure applied to the tractor brakes.

Trailer Brake Application Air Pressure - The Trailer Brake Application Air Pressure gauge indicates the amount of air pressure applied to the trailer brakes during brake foot valve and/or hand brake control valve applications.

Trailer Reservoir Air Pressure - The Trailer Reservoir Air Pressure gauge indicates the amount of air pressure in the trailer brake reservoir.

Transfer Case Oil Temperature - The Transfer Case Oil Temperature gauge indicates the temperature of the oil in the transfer case. If the oil temperature exceeds maximum limits, a red warning light in the gauge illuminates.

Transmission Oil Temperature, Auxiliary - The Auxiliary Transmission Oil Temperature gauge indicates the temperature of the oil in the auxiliary transmission.

Transmission Oil Temperature, Main - The Main Transmission Oil Temperature Gauge indicates the temperature of the oil in the transmission.

Transmission Retarder Oil Temperature - The Transmission Retarder Oil Temperature gauge indicates the temperature of the oil in the transmission retarder.

Voltmeter - The Voltmeter displays the battery voltage. Normally, it shows 12 to 14V (volts). A red warning light in the gauge illuminates when an out of range condition exists.

Instrumentation Troubleshooting Procedures

The troubleshooting procedures in this manual have been designed to assist the technician in diagnosing multiplexed instrumentation problems using the Electronic Service Analyst (ESA) hardware/software diagnostic service tool. While ESA can help the technician diagnose an instrumentation problem quickly and easily, it is not intended to substitute a technician's knowledge and experience for applying basic electrical troubleshooting skills (i.e., performing voltage, open circuit, resistance checks, etc.) when required. The troubleshooting procedures in this manual incorporate the use of the ESA diagnostic service tool and certain electrical checks the technician must be able to perform in order to correctly diagnose the problem.

Gauge Input Sources

Standard / Optional Input Source	Input Source	Sensor Type *
Air Filter Restriction Pressure	Sensor	Active
Air Starter Pressure	Mechanical	
Ammeter	Sensor	Active
Auxiliary Transmission Oil Temperature	Sensor	Passive
Brake Application Pressure	Sensor	Active
Brake Saver Application Air Pressure	Mechanical	Passive
Brake Saver Oil Temperature *(Not available with EPA 2007 emission or newer engines)*	Sensor	
Drive Axle Oil Temperature	Sensor	Passive
Diesel Exhaust Fluid	V-CAN (J1939)	
Engine Coolant Temperature	V-CAN (J1939)	Passive
Engine Oil Pressure	V-CAN (J1939)	
Engine Oil Temperature	V-CAN (J1939)	
Fuel Filter Restriction Pressure	Sensor	
Fuel Level	Sensor	Active
General Air Pressure	Mechanical	Passive
General Oil Temperature	Sensor	
Main Transmission Oil Temperature	Sensor	Passive
Manifold Pressure (Boost)	V-CAN (J1939)	Passive
Primary & Secondary Air Pressure	Sensor	
Pusher Axle Air Pressure	Mechanical	Active
Pyrometer (Exhaust Temperature) *(Not available with EPA 2007 emission or newer engines)*	Sensor	
Speedometer	V-CAN (J1939)	Passive
Suspension Load Air Pressure	Mechanical	
Tachometer	V-CAN (J1939)	
Tag Axle Air Pressure	Mechanical	
Trailer Brake Application Air Pressure	Mechanical	
Trailer Reservoir Air Pressure	Mechanical	
Transfer Case Oil Temperature	Mechanical	
Voltmeter	Internal Input Voltage	

* Sensor Types:

- Active Sensor - Has 3 wires and requires an electrical power source to operate. Output is a linear voltage.
- Passive Sensor - Has 2 wires and does not require an electrical power source to operate. Generate their output via the energy being sensed (for example: temperature).

Highline Diagnostic Codes

This section describes the Highline Text in the Diagnostic Screen and the DTC that triggered it. In the following table, the "xx" represents any two digit Failure Mode Indicator (FMI).

The Source column identifies the system/controller that the DTC relates to. Only CECU related codes have troubleshooting procedures in this publication. Refer to the following for all non-CECU related codes.

- Engine - see engine service tool and engine service manual.
- Transmission - see transmission service tool and transmission service manual.
- ABS - see ABS service tool and ABS service manual.
- DPF - see engine service tool and engine service manual.

Highline Text	Source	DTC
EGR Valve Leakage	Engine	27xx
Secondary Fuel Level	Engine	38xx
Intercooler Coolant Temperature	Engine	52xx
Two Speed Axle Switch	Engine	69xx
Park Brake Switch	Engine	70xx
Max Vehicle Speed Limit	Engine	74xx
Exhaust Trap Inlet Pressure	Engine	81xx
Vehicle Speed Sensor	Engine	84xx
Throttle Position	Engine	91xx
AUX Torque Switch	Engine	93xx
Fuel Delivery Pressure	Engine	94xx
Fuel Filter Restriction	Engine	95xx
Fuel Tank Level	Engine	96xx
Water In Fuel	Engine	97xx
Engine Oil Level	Engine	98xx
Engine Oil Filter	Engine	99xx
Engine Oil Pressure	Engine	100xx
Crankcase Pressure	Engine	101xx
Boost Pressure	Engine	102xx
Turbo Speed	Engine	103xx
Intake Manifold Air Temp	Engine	105xx
Intake Manifold Pressure	Engine	106xx
Barometric Pressure	Engine	108xx
Engine Coolant Temperature	Engine	110xx
Low Coolant Level	Engine	111xx
Water Pump	Engine	112xx
Engine Droop	Engine	113xx
Inlet Air Mass Flow Rate	Engine	132xx
Fuel Rail Pressure	Engine	157xx
Switched Power	Engine	158xx
Rated Engine Power	Engine	166xx
Alternator Potential	Engine	167xx
Battery	Engine	168xx

Highline Text	Source	DTC
Ambient Air Temperature	Engine	171xx
Air Inlet Temperature	Engine	172xx
Exhaust Gas Temperature	Engine	173xx
Fuel Temp	Engine	174xx
Engine Oil Temperature	Engine	175xx
Engine Fuel Rate	Engine	183xx
Engine Speed	Engine	190xx
Trans Output Speed	Engine	191xx
Trip Fuel	Engine	231xx
Total Distance Traveled	Engine	245xx
Clock Real Time	Engine	251xx
EGR Delta Pressure	Engine	411xx
EGR Temp	Engine	412xx
OEM AUX Temperature	Engine	441xx
Engine Percent Torque	Engine	513xx
Retarder Torque	Engine	520xx
Gear Out of Range	Engine	524xx
Reference Retarder	Engine	556xx
Throttle Switch	Engine	558xx
Torque Converter Lockup	Engine	573xx
Engine Idle Timer Override	Engine	592xx
Idle Shutdown Occurrence	Engine	593xx
Engine Idle Shutdown Alert	Engine	594xx
Cruise Enable Switch	Engine	596xx
Brake Switch	Engine	597xx
Clutch Switch	Engine	598xx
Cruise Set Switch	Engine	599xx
Cruise Decel Switch	Engine	600xx
Cruise Resume Switch	Engine	601xx
Cruise Accel Switch	Engine	602xx
Brake Pedal Switch 2	Engine	603xx
J1708 Data Link Error	Engine	608xx
System Diagnostic Code 1	Engine	611xx
System Diagnostic Code 2	Engine	612xx
System Diagnostic Code 3	Engine	615xx
5V Supply 1	Engine	620xx
Red Stop Lamp Status	Engine	623xx
Amber Stop Lamp Status	Engine	624xx
Intake Air Heater	Engine	626xx
ECU Power Loss	Engine	627xx
ECU Warning	Engine	629xx
Engine Software Error	Engine	630xx
Engine Software Error	Engine	631xx
Fuel Shutoff Valve	Engine	632xx
Fuel Control Valve	Engine	633xx
Timing Actuator	Engine	635xx
Engine Speed Signal	Engine	637xx
J1939 Datatlink	Engine	639xx
AUX Dual Output Shutdown	Engine	640xx
Turbo Actuator	Engine	641xx
Engine External Speed Command	Engine	644xx
Fan Clutch Driver	Engine	647xx
BPV Diag SLMP Data	Engine	649xx
Injector Spill Valve 1	Engine	651xx
Injector Spill Valve 2	Engine	652xx
Injector Spill Valve 3	Engine	653xx

Highline Text	Source	DTC
Injector Spill Valve 4	Engine	654xx
Injector Spill Valve 5	Engine	655xx
Injector Spill Valve 6	Engine	656xx
Injector Spill Valve 7	Engine	657xx
Injector Spill Valve 8	Engine	658xx
Injector Spill Valve 9	Engine	659xx
Injector Spill Valve 10	Engine	660xx
Injector Spill Valve 11	Engine	661xx
Injector Spill Valve 12	Engine	662xx
Starter Solenoid	Engine	677xx
8V Supply	Engine	678xx
AUX PWM Driver	Engine	697xx
AUX I/O Circuit 1	Engine	701xx
AUX I/O Circuit 2	Engine	702xx
AUX I/O Circuit 3	Engine	703xx
AUX I/O Circuit 4	Engine	704xx
AUX I/O Circuit 5	Engine	705xx
AUX I/O Circuit 6	Engine	706xx
AUX I/O Circuit 7	Engine	707xx
Speed Sensor 2	Engine	723xx
Inlet Air Heater	Engine	729xx
A/C Comp Clutch Switch	Engine	876xx
Front Axle Speed	Engine	904xx
PWM Output	Engine	923xx
Auxiliary Output 2	Engine	925xx
Auxiliary Output 3	Engine	926xx
Fuel Pump Actuator	Engine	931xx
Engine Retarder	Engine	973xx
Remote Accel	Engine	974xx
Fan Control Output	Engine	977xx
PTO Set Speed Switch	Engine	979xx
PTO Enable Switch	Engine	980xx
Remote PTO Resume Switch	Engine	982xx
Remote PTO Set Switch	Engine	984xx
A/C Pressure Switch	Engine	985xx
Fan Request Speed	Engine	986xx
Sensor Supply Voltage	Engine	1043xx
Fan Driver	Engine	1071xx
Engine Brake (Jake)	Engine	1072xx
Engine Brake (Jake)	Engine	1073xx
Exhaust Brake Actuator	Engine	1074xx
Fuel Lift Pump	Engine	1075xx
Fuel Injection Pump Calibration	Engine	1076xx
Fuel Injection Pump Control	Engine	1077xx
5V Supply 1	Engine	1079xx
5V Supply 2	Engine	1080xx
Engine Retarder Torque	Engine	1085xx
Air Supply Pressure Input	Engine	1087xx
Engine Warning State	Engine	1107xx
Engine Near Shutdown	Engine	1109xx
Engine Brake Output	Engine	1112xx
Foot Brake Switch	Engine	1121xx
Post Intercooler Temp	Engine	1131xx
ECU Temp	Engine	1136xx
Turbo Inlet Temperature	Engine	1172xx
Turbo Wastegate Actuator	Engine	1188xx

Highline Text	Source	DTC
Anti-Theft	Engine	1195xx
Anti-Theft	Engine	1196xx
Exhaust Gas Pressure	Engine	1209xx
Water Pump Temp	Engine	1212xx
Fault CAN Bus 2	Engine	1231xx
Engine Shutdown Switch	Engine	1237xx
High Fuel Leakage	Engine	1239xx
Fuel Control Valve	Engine	1244xx
Timing Actuator	Engine	1245xx
Oil Burn Valve	Engine	1265xx
Idle Shutdown	Engine	1267xx
Starter Solenoid	Engine	1321xx
Fuel Rail 1	Engine	1347xx
Fuel Rail 2	Engine	1348xx
Injector Rail	Engine	1349xx
Change Engine Oil	Engine	1378xx
Engine Oil Level	Engine	1380xx
Fuel Filter	Engine	1382xx
AUX Temp 1	Engine	1385xx
AUX Pressure	Engine	1388xx
Pressure Relief Valve	Engine	1442xx
ECU Power Relay	Engine	1485xx
Injector Boost Voltage	Engine	1542xx
Engine Derated	Engine	1569xx
Cruise Speed Out of Range	Engine	1588xx
Cruise Speed Out of Range	Engine	1590xx
Cruise Pause Switch	Engine	1633xx
Intake Air Temperature	Engine	1636xx
Fan Speed	Engine	1639xx
Auto Start Failed	Engine	1664xx
Demand Retarder	Engine	1715xx
Retarder Selection	Engine	1716xx
Catalyst Tank Level	Engine	1761xx
Maximum Retarder Speed	Engine	1780xx
YC Engine Control	Engine	1817xx
YC Brake Control	Engine	1819xx
Accel Pedal Position	Engine	2623xx
Turbo 1	Engine	2629xx
Auxiliary Output 4	Engine	2646xx
Auxiliary Output 5	Engine	2647xx
EGR Mass Flow	Engine	2659xx
Turbo 1 Inlet	Engine	2789xx
Turbo 1 Output	Engine	2790xx
EGR	Engine	2791xx
VGT Position	Engine	2795xx
Engine Injector Calibration	Engine	2797xx
Air Shutdown Actuator	Engine	2813xx
Trans Crank Enable	Engine	2900xx
Intake Valve Oil Pressure	Engine	2948xx
Intake Valve Oil Pressure	Engine	2949xx
Intake Valve Actuator 1	Engine	2950xx
Intake Valve Actuator 2	Engine	2951xx
Intake Valve Actuator 3	Engine	2952xx
Intake Valve Actuator 4	Engine	2953xx
Intake Valve Actuator 5	Engine	2954xx
Intake Valve Actuator 6	Engine	2955xx

Highline Text	Source	DTC
Coolant Driver	Engine	2988xx
Catalyst Missing	Engine	3050xx
EGR Plugged	Engine	3058xx
J1939 DPF Monitor	Engine	3064xx
Exhaust Gas Temp 1	Engine	3241xx
Particulate Trap Inlet Temp 1	Engine	3242xx
Exhaust Gas Temp 3	Engine	3245xx
Particulate Trap Outlet Temp	Engine	3246xx
Exhaust Gas Temp 2	Engine	3249xx
Particulate Trap 1 Pressure	Engine	3251xx
Particulate Trap 2 Temp	Engine	3258xx
Particulate Trap 2 Inlet Temp	Engine	3276xx
Particulate Trap 2 Outlet Temp	Engine	3280xx
Particulate Trap 2 Pressure	Engine	3285xx
Catalyst Dosing Unit	Engine	3361xx
DPF Fuel Pressure Actuator 1	Engine	3471xx
DPF Air Pressure Actuator 1	Engine	3472xx
DPF Ignition Failure	Engine	3473xx
DPF Ignition Loss	Engine	3474xx
DPF Fuel Pressure Control	Engine	3479xx
DPF Fuel Pressure Voltage	Engine	3480xx
Regen Fuel Rate	Engine	3481xx
DPF Fuel Enable Actuator	Engine	3482xx
DPF Ignition Current	Engine	3484xx
DPF Purge Air Pressure	Engine	3486xx
DPF Air Pressure Control	Engine	3487xx
DPF Purge Air Actuator	Engine	3490xx
DPF Fuel Pressure	Engine	3494xx
Sensor Supply Voltage 1	Engine	3509xx
Sensor Supply Voltage 2	Engine	3510xx
Sensor Supply Voltage 3	Engine	3511xx
Sensor Supply Voltage 4	Engine	3512xx
Sensor Supply Voltage 5	Engine	3513xx
Regen Manually Disabled	Engine	3530xx
Ambient Air Density	Engine	3555xx
DPF Fuel Injector 1 No Response	Engine	3556xx
ECU Power Output	Engine	3598xx
Engine Injector 1 Actuator 2	Engine	3659xx
Engine Injector 2 Actuator 2	Engine	3660xx
Engine Injector 3 Actuator 2	Engine	3661xx
Engine Injector 4 Actuator 2	Engine	3662xx
Engine Injector 5 Actuator 2	Engine	3663xx
Engine Injector 6 Actuator 2	Engine	3664xx
Particulate Trap Regen Inhibit Switch	Engine	3695xx
Particulate Trap Regen Force Switch	Engine	3696xx
Active Regen Switched Off	Engine	3703xx
Particulate Trap Regen Inhibited	Engine	3711xx
Particulate Trap Soot Load Percent	Engine	3719xx
Part Trap 1 Regen Not Available	Engine	3750xx
DPF Secondary Air Diff Pressure	Engine	3830xx
DPF Secondary Air Mass Flow	Engine	3832xx
NOx Limit Exceed Due to Quality	Engine	4094xx
NOx Limit Exceed Due to Quantity	Engine	4096xx
DPF Fuel Drain Voltage	Engine	4097xx

Highline Text	Source	DTC
Aftertreatment DEF Tank Low Level Indicator	Engine	5245xx
Aftertreatment SCR Operator Inducement Severity	Engine	5246xx
Electronic Trans Control 1	Engine	61442xx
Electronic Trans Control 2	Engine	61445xx
SWD Derate Lamp Data	Engine	65519xx
EXT PWM PCAC	Engine	65520xx
J1939CM DPF State	Engine	65521xx
J1939CM DPF Shutdown	Engine	65522xx
EXT PWM Back Pressure	Engine	65523xx
J1939CM DPF Post Filter	Engine	65524xx
J1939CM DPF Fail WO Engine	Engine	65525xx
J1939CM DPF Fail And Engine	Engine	65526xx
J1939CM DPF Lamp Data	Engine	65527xx
Fuel Injector 246 HI	Engine	65528xx
Fuel Injector 135 HI	Engine	65529xx
Fuel Injector 4 Lamp Data	Engine	65530xx
Fuel Injector 2 Lamp Data	Engine	65531xx
Fuel Injector 6 Lamp Data	Engine	65532xx
Fuel Injector 3 Lamp Data	Engine	65533xx
Fuel Injector 5 Lamp Data	Engine	65534xx
Fuel Injector 1 Lamp Data	Engine	65535xx
CGI Mass Flow Rate	Engine	520192xx
CGI Gas Temp	Engine	520193xx
CGI Actuator Shaft Position	Engine	520194xx
CGI Diff Pressure	Engine	520196xx
CGI Absolute Pressure	Engine	520197xx
Connect Service Tool	Engine	Any Other
Connect Service Tool	Transmission	Any Other
Diff Lock Solenoid	ABS	564xx
ASR Offroad Switch	ABS	576xx
System Diagnostic Code 4	ABS	614xx
System Voltage	ABS	627xx
ECU Fault	ABS	629xx
ECU Fault	ABS	630xx
J1939	ABS	639xx
SA LEFT Wheel Speed Sensor	ABS	789xx
SA RIGHT Wheel Speed Sensor	ABS	790xx
DA LEFT Wheel Speed Sensor	ABS	791xx
DA RIGHT Wheel Speed Sensor	ABS	792xx
AA LEFT Wheel Speed Sensor	ABS	793xx
AA RIGHT Wheel Speed Sensor	ABS	794xx
SA LEFT PMV	ABS	795xx
SA RIGHT PMV	ABS	796xx
DA LEFT PMV	ABS	797xx
DA RIGHT PMV	ABS	798xx
AA LEFT PMV	ABS	799xx
AA RIGHT PMV	ABS	800xx
Retarder Relay	ABS	801xx
Relay Diagonal 1	ABS	802xx
TCV DA Solenoid	ABS	806xx
TCV SA Solenoid	ABS	807xx
Wheel Speed Sensor Reversed	ABS	810xx
ABS Lamp Fault	ABS	811xx

Highline Text	Source	DTC
Stop Lamp Switch	ABS	1045xx
Trailer PMV	ABS	1056xx
SUSP Pressure Sensor	ABS	1059xx
Pressure Sensor	ABS	1067xx
Pressure Sensor Secondary Circuit	ABS	1068xx
Tires Size Out Of Range	ABS	1069xx
SAS Signal	ABS	1807xx
YRS Sensor	ABS	1808xx
LAS Sensor	ABS	1809xx
Connect Service Tool	ABS	Any Other
Fuel Filter Restriction	CECU	16xx
Vehicle Speed Message Missing	CECU	8409
Accel Pedal Message Missing	CECU	9109
App. Air Pressure Sensor Open	CECU	11603
App. Air Pressure Sensor Short	CECU	11604
General Brake Fault	CECU	11631
Pri. Air Pressure Sensor Open	CECU	11703
Pri. Air Pressure Sensor Short	CECU	11704
Sec. Air Pressure Sensor Open	CECU	11803
Sec. Air Pressure Sensor Short	CECU	11804
Ignition Power Circuit Fault	CECU	15802
Ignition Power Circuit Fault	CECU	15803
Ignition Power Circuit Fault	CECU	15804
Control Unit Over Voltage	CECU	16800
Control Unit Under Voltage	CECU	16801
Ambient Air Temperature	CECU	17102
Outside Temp Sensor Open	CECU	17103
Outside Temp Sensor Short	CECU	17104
Instant Economy Message Missing	CECU	18409
Engine Speed Message Missing	CECU	19009
Odometer Offset Recalculated	CECU	24510
Engine Hours Message Missing	CECU	24709
Total PTO Hours Message Missing	CECU	24809
Gauge Bus Power Open Circuit	CECU	67805
Gauge Bus Power Short Circuit	CECU	67806
Pri. Fuel Level Sensor Open	CECU	82903
Pri. Fuel Level Sensor Short	CECU	82904
Vehicle Distance Message Missing	CECU	91709
Total PTO Fuel Message Missing	CECU	102809
Instrument Bus Comm Failure	CECU	123109
ABS J1939 Failure	CECU	148109
Trans. J1939 Failure	CECU	148209
Engine J1939 Failure	CECU	148309
Dash Dimmer Switch Open	CECU	149106
Dash Dimmer Switch Short	CECU	149206
Current Sensor Fault	CECU	2579xx
Connect Service Tool	CECU	Any Other
Exhaust Trap Inlet Pressure	DPF	81xx
Vehicle Speed Sensor	DPF	84xx
Fuel Delivery Pressure	DPF	94xx
Boost Pressure	DPF	102xx
Barometric Pressure	DPF	108xx
Switched Power	DPF	158xx
Engine Fuel Rate	DPF	183xx
Engine Speed	DPF	190xx
Total Distance Traveled	DPF	245xx

Highline Text	Source	DTC
Engine Percent Torque	DPF	513xx
J1939 Datalink	DPF	639xx
AUX I/O Circuit 1	DPF	701xx
AUX I/O Circuit 2	DPF	702xx
AUX I/O Circuit 3	DPF	703xx
AUX I/O Circuit 4	DPF	704xx
AUX I/O Circuit 5	DPF	705xx
AUX I/O Circuit 6	DPF	706xx
AUX I/O Circuit 7	DPF	707xx
Air Supply Pressure Input	DPF	1087xx
Exhaust Gas Temp 1	DPF	3241xx
Exhaust Gas Temp 3	DPF	3245xx
Exhaust Gas Temp 2	DPF	3249xx
Particulate Trap 1 Pressure	DPF	3251xx
Catalyst Dosing Unit	DPF	3361xx
DPF Fuel Pressure Actuator 1	DPF	3471xx
DPF Air Pressure Actuator 1	DPF	3472xx
DPF Purge Air Pressure	DPF	3486xx
Part Trap 1 Regen Not Available	DPF	3750xx
Connect Service Tool	DPF	Any Other

https://truckmanualshub.com/

12 Troubleshooting

DIAGNOSTIC TROUBLE CODES . . . 12 - 3

TROUBLESHOOTING PROCEDURES . . . . . 12 - 14

Databus Gauge(s) Inoperative . . . 12 - 15

Primary Air Pressure Gauge Inoperative . . . . . 12 - 18

Secondary Air Pressure Gauge Inoperative . . . . . 12 - 22

Application Air Pressure Gauge Inoperative . . . . . 12 - 26

Air Filter Restriction Pressure Gauge Inoperative . . . . . 12 - 30

Fuel Filter Restriction Pressure Gauge Inoperative . . . . . 12 - 34

Ammeter Gauge Inoperative . . . . 12 - 38

Pyrometer Gauge Inoperative . . . 12 - 42

Front Drive Axle Oil Temperature Gauge . . . . . 12 - 47

Rear Drive Axle Oil Temperature Gauge Inoperative . . . . . 12 - 52

Center Drive Axle Oil Temperature Gauge Inoperative. . . . . 12 - 57

Transmission Oil Temperature Gauge Inoperative . . . . . 12 - 62

Auxiliary Transmission Oil Temperature Gauge Inoperative . . . . . 12 - 67

Transfer Case Oil Temperature Gauge Inoperative . . . . . 12 - 72

Brake Saver Oil Temperature Gauge Inoperative . . . . . 12 - 77

General Oil Temperature Gauge Inoperative . . . . . 12 - 81

Primary Fuel Gauge Inoperative . . 12 - 86

Secondary Fuel Gauge Inoperative . 12 - 90

Engine Related DTCs . . . . . 12 - 94

Outside Air Temperature Display Inoperative . . . . . 12 - 96

CVSG Supply Open or Shorted . . . 12 - 100

Dash Dimmer Input Open or Shorted, Dash Dimmer Output Shorted . . 12 - 102

Lite Diagnostic Procedure . . . . . 12 - 104

Lite Terminating Resistor Test Procedure . . . . . 12 - 105

Lite Short Circuit Test Procedure . . 12 - 106

Lite Short to Chassis Ground Test Procedure . . . . . 12 - 107

Lite Open Circuit Test Procedure . . 12 - 108

Lite Diagnostic Procedures Conclusion . . . . . 12 - 109

DIAGNOSTIC TROUBLE CODES

Introduction

ESA is a PC-based diagnostic tool that detects fault codes and helps troubleshoot the new multiplexed electrical system. ESA communicates over a data-link adapter (DLA) to the vehicle ICU/CECU.

ESA will:

- Verify instrumentation functionality
- Read fault codes from components
- Diagnose the problem using information on ServiceNet

The following chart provides a listing of possible ICU/CECU diagnostic trouble codes (DTCs) and links to their corresponding troubleshooting procedures.

DTC	ICU/CECU	Item / System	Description	Detailed Description
1603	ICU/CECU	Fuel Filter Restriction	Open in fuel filter restriction circuit	This DTC will be recorded when the control unit sees an open or short to ground at the fuel filter restriction sensor input. Some possible causes for this are a broken wire, corroded or disconnected connector, or sensor failure. The wiring for this sensor runs from the control unit located behind the cup holder through the IP harness, chassis harness and sender extension harness to the sensor on the fuel filter.
1604	ICU/CECU	Fuel Filter Restriction	Short in fuel filter restriction circuit	This DTC will be recorded when the control unit sees a short to +5V at the fuel filter restriction sensor input. Some possible causes for this are a pinched wire, water in a connector, or sensor failure. The wiring for this sensor runs from the control unit located behind the cup holder through the IP harness, chassis harness and sender extension harness to the sensor on the fuel filter.
7703	ICU/CECU	Rear Drive Oil Temp	Open in rear drive axle oil temp circuit	This DTC will be recorded when the control unit sees an open at the rear drive axle oil temperature sensor input. Some possible causes for this are a broken wire, corroded or disconnected connector, or sensor failure. The wiring for this sensor runs from the control unit located behind the cup holder through the IP harness, chassis harness and rear axle harness to the sensor on the rear drive axle.
7704	ICU/CECU	Rear Drive Oil Temp	Short in rear drive axle oil temp circuit	This DTC will be recorded when the control unit sees a short to ground at the rear drive axle oil temperature sensor input. Some possible causes for this are a pinched wire, water in a connector, or sensor failure. The wiring for this sensor runs from the control unit located behind the cup holder through the IP harness, chassis harness and rear axle harness to the sensor on the rear drive axle.
7803	ICU/CECU	Center Drive axle Oil Temp	Open in center drive axle oil temp circuit	This DTC will be recorded when the control unit sees an open at the center drive axle oil temperature sensor input. Some possible causes for this are a broken wire, corroded or disconnected connector, or sensor failure. The wiring for this sensor runs from the control unit located behind the cup holder through the IP harness, chassis harness and rear axle harness to the sensor on the center drive axle.

DTC	ICU/CECU	Item / System	Description	Detailed Description
7804	ICU/CECU	Center Drive axle Oil Temp	Short in center drive axle oil temp circuit	This DTC will be recorded when the control unit sees a short to ground at the center drive axle oil temperature sensor input. Some possible causes for this are a pinched wire, water in a connector, or sensor failure. The wiring for this sensor runs from the control unit located behind the cup holder through the IP harness, chassis harness and rear axle harness to the sensor on the center drive axle.
8409	CECU	Wheel-Based Vehicle Speed Message	Wheel Based Vehicle Speed Message missing	This DTC will be recorded when the control unit does not see the Wheel Based Vehicle Speed message from the engine, or when the message has timed out. Some possible causes for this include faulty wiring to the engine controller, incorrect engine programming or a faulty engine controller. The data bus wiring runs from the control unit located behind the cup holder through the IP harness to the engine harness.
9003	ICU/CECU	PTO Oil Temp	Open in PTO oil temp circuit	This DTC will be recorded when the control unit sees an open at the PTO oil temperature sensor input. Some possible causes for this are a broken wire, corroded or disconnected connector, or sensor failure.
9004	ICU/CECU	PTO Oil Temp	Short in PTO oil temp circuit	This DTC will be recorded when the control unit sees a short to ground at the PTO oil temperature sensor input. Some possible causes for this are a pinched wire, water in a connector, or sensor failure.
9109	CECU	Accelerator Pedal Position Message	Accelerator Pedal Position Message missing	This DTC will be recorded when the control unit does not see the Accelerator Pedal Position Speed message from the engine, or when the message has timed out. Some possible causes for this include faulty data link wiring to the engine controller, incorrect engine programming or a faulty engine controller. The data bus wiring runs from the control unit located behind the cup holder through the IP harness to the engine harness.
10703	ICU/CECU	Air Filter Restriction	Open in air filter restriction circuit	This DTC will be recorded when the control unit sees an open at the air filter restriction sensor input. Some possible causes for this are a broken wire, corroded or disconnected connector, or sensor failure. The wiring for this sensor runs from the control unit located behind the cup holder through the IP harness to the sensor on the air junction block.
10704	ICU/CECU	Air Filter Restriction	Short in air filter restriction circuit	This DTC will be recorded when the control unit sees a short to +5V at the air filter restriction sensor input. Some possible causes for this are a pinched wire, water in a connector, or sensor failure. The wiring for this sensor runs from the control unit located behind the cup holder through the IP harness to the sensor on the air junction block.

DTC	ICU/CECU	Item / System	Description	Detailed Description
11603	ICU/CECU	Application Air Pressure	Open in application air pressure circuit	This DTC will be recorded when the control unit sees an open or short to ground at the tractor brake application air pressure sensor input. Some possible causes for this are a broken wire, corroded or disconnected connector, or sensor failure. The wiring for this sensor runs from the control unit located behind the cup holder through the IP harness to the sensor on the air junction block.
11604	ICU/CECU	Application Air Pressure	Short in application air pressure circuit	This DTC will be recorded when the control unit sees a short to +5V at the tractor brake application air pressure sensor input. Some possible causes for this are a pinched wire, water in a connector, or sensor failure. The wiring for this sensor runs from the control unit located behind the cup holder through the IP harness to the sensor on the air junction block.
11703	ICU/CECU	Primary Air Pressure	Open in primary air pressure circuit	This DTC will be recorded when the control unit sees an open or short to ground at the primary air pressure sensor input. Some possible causes for this are a broken wire, corroded or disconnected connector, or sensor failure. The wiring for this sensor runs from the control unit located behind the cup holder through the IP harness to the sensor on the air junction block.
11704	ICU/CECU	Primary Air Pressure	Short in primary air pressure circuit	This DTC will be recorded when the control unit sees a short to +5V at the primary air pressure sensor input. Some possible causes for this are a pinched wire, water in a connector, or sensor failure. The wiring for this sensor runs from the control unit located behind the cup holder through the IP harness to the sensor on the air junction block.
11803	ICU/CECU	Secondary Air Pressure	Open in secondary air pressure circuit	This DTC will be recorded when the control unit sees an open or short to ground at the secondary air pressure sensor input. Some possible causes for this are a broken wire, corroded or disconnected connector, or sensor failure. The wiring for this sensor runs from the control unit located behind the cup holder through the IP harness to the sensor on the air junction block.
11804	ICU/CECU	Secondary Air Pressure	Short in secondary air pressure circuit	This DTC will be recorded when the control unit sees a short to +5V at the secondary air pressure sensor input. Some possible causes for this are a pinched wire, water in a connector, or sensor failure. The wiring for this sensor runs from the control unit located behind the cup holder through the IP harness to the sensor on the air junction block.
15802	CECU	Ignition Power	Ignition Power is in an indeterminate state	This DTC will be recorded when the control unit sees between 33% and 66% of battery voltage on the ignition pin. A possible cause for this is faulty ignition sense wiring. The ignition sense wire comes from the PD box to the control unit behind the cup holder. This sense wire is also used for other control units such as the door modules and cluster. The wiring to those control units may be the issue.

DTC	ICU/CECU	Item / System	Description	Detailed Description
15803	ICU/CECU	Ignition Power	12V is on control unit ignition pin but not on cluster ignition pin	This DTC will be recorded when the control unit sees 12V on control unit ignition pin but not on cluster ignition pin. Some possible causes for this are a broken wire, corroded or disconnected connector. Ignition power is supplied to the cluster from the power distribution box near the drivers left foot through the IP harness to the cluster.
15804	ICU/CECU	Ignition Power	12V is on cluster ignition pin but not on control unit ignition pin	This DTC will be recorded when the control unit sees 12V on cluster ignition pin but not on control unit ignition pin. Some possible causes for this are a broken wire, corroded or disconnected connector. Ignition power is supplied to the control unit from the power distribution box near the drivers left foot through the IP harness to the control unit behind the cup holder.
16800	ICU/CECU	Control Unit Battery Voltage	Over voltage	The control unit continually monitors the voltage it is supplied. If the voltage is above 15 volts the system will record this fault. Some possible causes for this fault are faulty alternator, or jump starting with to high of voltage. Power is supplied from the power distribution box near the drivers left foot through the IP harness to the control unit behind the cup holder.
16801	ICU/CECU	Control Unit Battery Voltage	Under voltage for more than 10 minutes	The control unit continually monitors the voltage it is supplied. If the voltage is below 10 volts for 10 minutes the system will record this fault. Some possible causes for this fault are low batteries, too much system load, faulty alternator, or corroded connectors. Power is supplied for the power distribution box near the drivers left foot through the IP harness to the control unit behind the cup holder.
17102	ICU/CECU	Outside Air Temp	Outside air temp message from engine error	This DTC will be recorded when the CAN signal for the outside air temperature sensor from the engine is in the invalid range. Some possible causes for this are broken wire or sensor failure. ***CAUTION: Modifying the sensor or its location can impact vehicle performance, emissions, and/or reliability.***
17103	ICU/CECU	Outside Air Temp	Open in outside air temp circuit	This DTC will be recorded when the control unit sees an open at the outside air temperature sensor input. Some possible causes for this are a broken wire, corroded or disconnected connector, or sensor failure. The wiring for this sensor runs from the control unit located behind the cup holder through the IP harness and left hand mirror harness to the sensor on the mirror.
17104	ICU/CECU	Outside Air Temp	Short in outside air temp circuit	This DTC will be recorded when the control unit sees a short to ground at the outside air temperature sensor input. Some possible causes for this are a pinched wire, water in a connector, or sensor failure. The wiring for this sensor runs from the control unit located behind the cup holder through the IP harness and left hand mirror harness to the sensor on the mirror.

DTC	ICU/CECU	Item / System	Description	Detailed Description
17131	ICU/CECU	Outside Air Temp	Outside air temp message from engine missing	This DTC will be recorded when the control unit does not receive an ambient air condition message from the engine. Some possible causes for this are a broken wire, corroded or disconnected connector, no terminating resistors, no power to the Engine system or Engine ECU failure. ***CAUTION: Modifying the sensor or its location can impact vehicle performance, emissions, and/or reliability.***
17303	ICU	Exhaust Temp	Open in exhaust temp circuit	This DTC will be recorded when the control unit sees an open at the exhaust temp sensor input. Some possible causes for this are a broken wire, corroded or disconnected connector, or sensor failure. The wiring for this sensor runs from the control unit located behind the cup holder through the IP harness and engine harness to the sensor on exhaust pipe just behind turbo.
17304	ICU	Exhaust Temp	Short in exhaust temp circuit	This DTC will be recorded when the control unit sees a short to ground at the exhaust temp sensor input. Some possible causes for this are a pinched wire, water in a connector, or sensor failure. The wiring for this sensor runs from the control unit located behind the cup holder through the IP harness and engine harness to the sensor on exhaust pipe just behind turbo.
17703	ICU/CECU	Transmission Oil Temp	Open in transmission oil temp circuit	This DTC will be recorded when the control unit sees an open at the transmission oil temperature sensor input. Some possible causes for this are a broken wire, corroded or disconnected connector, or sensor failure. The wiring for this sensor runs from the control unit located behind the cup holder through the IP harness, engine harness, chassis harness and transmission harness to the sensor on transmission.
17704	ICU/CECU	Transmission Oil Temp	Short in transmission oil temp circuit	This DTC will be recorded when the control unit sees a short to ground at the transmission oil temperature sensor input. Some possible causes for this are a pinched wire, water in a connector, or sensor failure. The wiring for this sensor runs from the control unit located behind the cup holder through the IP harness, engine harness, chassis harness and transmission harness to the sensor on transmission.
18409	CECU	Instantaneous Fuel Economy message	Instantaneous Fuel Economy message missing	This DTC will be recorded when the control unit does not see the Instantaneous Fuel Economy message from the engine, or when the message has timed out. Some possible causes for this include faulty wiring to the engine controller or a faulty/misconfigured engine controller. The data bus wiring runs from the control unit located behind the cup holder through the IP harness to the engine harness.

DTC	ICU/CECU	Item / System	Description	Detailed Description
19009	CECU	Engine Speed Message	Engine Speed message missing	This DTC will be recorded when the control unit does not see the Engine Speed message from the engine, or when the message has timed out. Some possible causes for this include faulty wiring to the engine controller or a faulty/misconfigured engine controller. The data bus wiring runs from the control unit located behind the cup holder through the IP harness to the engine harness.
23731	ICU/CECU	Engine VIN Valid for 2010 emissions compliant engines CECU3	MX Engine and CECU3 VIN mismatch	This DTC will be recorded when the VIN of the MX Engine does not match the VIN of the CECU3. This could be caused by swapping Engine controllers or CECU3's without correctly reprogramming them.
24510	ICU/CECU	Offset of Odometer	Odometer offset has been recalculated	The instrumentation system continually calculates the odometer reading using information from the engine ECU. It stores the offset between the engine ECU and instrumentation system. This offset is recalculated if the engine ECU or the control unit are replaced. This DTC will appear when the offset is recalculated.
24709	CECU	Engine Total Hours of Operation	Engine Total Hours of Operation message	This DTC will be recorded when the control unit does not see the Engine Total Hours of Operation message from the engine, or when the message has timed out. Some possible causes for this include faulty data bus wiring to the engine controller or a faulty/misconfigured engine controller. The data bus wiring runs from the control unit located behind the cup holder through the IP harness to the engine harness.
24809	CECU	Total Power Takeoff Hours	Total Power Takeoff Hours message	This DTC will be recorded when the control unit does not see the Total Power Takeoff Hours message from the engine, or when the message has timed out. Some possible causes for this include faulty data bus wiring to the engine controller or a faulty/misconfigured engine controller. The data bus wiring runs from the control unit located behind the cup holder through the IP harness to the engine harness.
44103	ICU/CECU	General Temp	Open in general oil temp circuit	This DTC will be recorded when the control unit sees an open at the general oil temperature sensor input. Some possible causes for this are a broken wire, corroded or disconnected connector, or sensor failure. The wiring for this sensor runs from the control unit located behind the cup holder through the IP harness to a connector behind the right hand gauge panel. The sensor can be used to monitor many different components, follow extension harnesses to determine sensor location.

DTC	ICU/CECU	Item / System	Description	Detailed Description
44104	ICU/CECU	General Temp	Short in general oil temp circuit	This DTC will be recorded when the control unit sees a short to ground at the general temperature sensor input. Some possible causes for this are a pinched wire, water in a connector, or sensor failure. The wiring for this sensor runs from the control unit located behind the cup holder through the IP harness to a connector behind the right hand gauge panel. The sensor can be used to monitor many different components, follow extension harnesses to determine sensor location.
44203	ICU/CECU	Aux Transmission Temp	Open in aux transmission temp circuit	This DTC will be recorded when the control unit sees an open at the auxiliary transmission oil temperature sensor input. Some possible causes for this are a broken wire, corroded or disconnected connector, or sensor failure. The wiring for this sensor runs from the control unit located behind the cup holder through the IP harness, chassis harness and sensor extension harness to the sensor on auxiliary transmission.
44204	ICU/CECU	Aux Transmission Temp	Short in aux transmission temp circuit	This DTC will be recorded when the control unit sees a short to ground at the auxiliary transmission oil temperature sensor input. Some possible causes for this are a pinched wire, water in a connector, or sensor failure. The wiring for this sensor runs from the control unit located behind the cup holder through the IP harness, chassis harness and sensor extension harness to the sensor on auxiliary transmission.
57803	ICU/CECU	Forward Drive Oil Temp	Open in forward drive axle oil temp circuit	This DTC will be recorded when the control unit sees an open at the forward drive axle oil temperature sensor input. Some possible causes for this are a broken wire, corroded or disconnected connector, or sensor failure. The wiring for this sensor runs from the control unit located behind the cup holder through the IP harness, chassis harness and rear axle harness to the sensor on the forward drive axle.
57804	ICU/CECU	Forward Drive Oil Temp	Short in forward drive axle oil temp circuit	This DTC will be recorded when the control unit sees a short to ground at the forward drive axle oil temperature sensor input. Some possible causes for this are a pinched wire, water in a connector, or sensor failure. The wiring for this sensor runs from the control unit located behind the cup holder through the IP harness, chassis harness and rear axle harness to the sensor on the forward drive axle.
67805	CECU	CVSG / MCS Supply	CVSG / MCS supply Open Load	This DTC will be recorded when the control unit sees an open load on the power supply to the CVSG bus and the Menu Control Switch. A possible cause of this failure is a broken wire leading to the 2" gauges. A common symptom of this fault is that none of the 2" gauges are working.

DTC	ICU/CECU	Item / System	Description	Detailed Description
67806	ICU/CECU	CVSG / MCS Supply	CVSG / MCS supply Shorted to ground	This DTC will be recorded when the sees a short to ground on the CVSG supply. Some possible causes for this are a pinched wire, water in a connector, bent pins on a CVSG or a failed CVSG. The wiring for CVSG runs from the control unit located behind the cup holder through the IP harness to two connectors on each side of the cluster. CVSG jumpers are used to link the remaining gauges. A common symptom of this fault is that none of the 2" gauges are working.
80404	ICU	ABS Mode	“Tractor ABS Not Installed” Input is shorted and ABS system is present.	This DTC will be recorded when the control unit “ABS Installed” parameter is disabled and it is receiving messages from an ABS system on V-CAN. If the vehicle is to be equipped with ABS enable the “ABS Installed” parameter. If the vehicle is not to be equipped with ABS remove the ABS control unit.
82903	ICU/CECU	Primary Fuel	Open in primary fuel level circuit	This DTC will be recorded when the control unit sees an open at the primary fuel level sensor input. Some possible causes for this are a broken wire, corroded or disconnected connector, or sensor failure. The wiring for this sensor runs from the control unit located behind the cup holder through the IP harness, chassis harness and sender extension harness to the sensor on fuel tank.
82904	ICU/CECU	Primary Fuel	Short in primary fuel level circuit	This DTC will be recorded when the control unit sees a short to ground at the primary fuel level sensor input. Some possible causes for this are a pinched wire, water in a connector, or sensor failure. The wiring for this sensor runs from the control unit located behind the cup holder through the IP harness, chassis harness and sender extension harness to the sensor on fuel tank.
83003	ICU/CECU	Secondary Fuel	Open in secondary fuel level circuit	This DTC will be recorded when the control unit sees an open at the secondary fuel level sensor input. Some possible causes for this are a broken wire, corroded or disconnected connector, or sensor failure. The wiring for this sensor runs from the control unit located behind the cup holder through the IP harness, firewall jumper and sender extension harness to the sensor on fuel tank.
83004	ICU/CECU	Secondary Fuel	Short in secondary fuel level circuit	This DTC will be recorded when the control unit sees a short to ground at the secondary fuel level sensor input. Some possible causes for this are a pinched wire, water in a connector, or sensor failure. The wiring for this sensor runs from the control unit located behind the cup holder through the IP harness, firewall jumper and sender extension harness to the sensor on fuel tank.
91709	CECU	High Resolution Vehicle Distance Message	High Resolution Vehicle Distance message missing	This DTC will be recorded when the control unit does not see the High Resolution Vehicle Distance message from the engine, or when the message has timed out. Some possible causes for this include faulty data bus wiring to the engine controller or a faulty engine controller. The data bus wiring runs from the control unit located behind the cup holder through the IP harness to the engine harness.

DTC	ICU/CECU	Item / System	Description	Detailed Description
102809	CECU	Total Engine PTO Fuel Used Message	Total Engine PTO Fuel Used Message missing	This DTC will be recorded when the control unit does not see the Total Engine PTO Fuel Used message from the engine, or when the message has timed out. Some possible causes for this include faulty data bus wiring to the engine controller or a faulty/misconfigured engine controller. The data bus wiring runs from the control unit located behind the cup holder through the IP harness to the engine harness.
123109	ICU/CECU	I-CAN	Control Unit cannot read messages from Cluster on I-CAN	This DTC will be recorded when the control unit cannot read messages from the cluster. Some possible causes for this are a broken wire, corroded or disconnected connector, no power to the cluster or cluster failure. The wiring for I-CAN is a twisted pair that runs from the control unit located behind the cup holder through the IP harness to the cluster.
138703	ICU	Brake Saver Oil Temp	Open in brake saver oil temp circuit	This DTC will be recorded when the control unit sees an open at the brake saver oil temperature sensor input. Some possible causes for this are a broken wire, corroded or disconnected connector, or sensor failure. The wiring for this sensor runs from the control unit located behind the cup holder through the IP harness, firewall jumper and sensor extension harness to the sensor on brake saver.
138704	ICU	Brake Saver Oil Temp	Short in brake saver oil temp circuit	This DTC will be recorded when the control unit sees a short to ground at the brake saver oil temperature sensor input. Some possible causes for this are a pinched wire, water in a connector, or sensor failure. The wiring for this sensor runs from the control unit located behind the cup holder through the IP harness, firewall jumper and sensor extension harness to the sensor on brake saver.
138803	ICU/CECU	Transfer Case Oil Temp	Open in transfer case oil temp circuit	This DTC will be recorded when the control unit sees an open at the transfer case oil temperature sensor input. Some possible causes for this are a broken wire, corroded or disconnected connector, or sensor failure. The wiring for this sensor runs from the control unit located behind the cup holder through the IP harness, firewall jumper and sensor extension harness to the sensor on transfer case.
138804	ICU/CECU	Transfer Case Oil Temp	Short in transfer case oil temp circuit	This DTC will be recorded when the control unit sees a short to ground at the transfer case oil temperature sensor input. Some possible causes for this are a pinched wire, water in a connector, or sensor failure. The wiring for this sensor runs from the control unit located behind the cup holder through the IP harness, firewall jumper and sensor extension harness to the sensor on transfer case.

DTC	ICU/CECU	Item / System	Description	Detailed Description
148109	ICU/CECU	V-CAN	Control unit cannot read messages from ABS on V-CAN	This DTC will be recorded when the control unit cannot read messages from the ABS system. Some possible causes for this are a broken wire, corroded or disconnected connector, no terminating resistors, no power to the ABS system or ABS ECU failure.
148209	ICU/CECU	V-CAN	Control Unit cannot read messages from Transmission on V-CAN	This DTC will be recorded when the control unit cannot read messages from the transmission ECU. Some possible causes for this are a broken wire, corroded or disconnected connector, no terminating resistors, no power to the Transmission or Transmission ECU failure.
148309	ICU/CECU	V-CAN	Control Unit cannot read messages from Engine on V-CAN	This DTC will be recorded when the control unit cannot read messages from the engine ECU. Some possible causes for this are a broken wire, corroded or disconnected connector, no terminating resistors, no power to the engine or engine ECU failure.
148703	ICU/CECU	Dash Light Dimmer	Open in dash dimmer input circuit	This DTC will be recorded when the control unit sees an open at the dash light dimmer control input. Some possible causes for this are a broken wire, corroded or disconnected connector, or dimmer control failure. The wiring for this control runs from the control unit located behind the cup holder through the IP harness to the control on the dash.
148704	ICU/CECU	Dash Light Dimmer	Short in dash dimmer input circuit	This DTC will be recorded when the control unit sees a short to ground at the dash light dimmer control input. Some possible causes for this are a pinched wire, water in a connector, or dimmer control failure. The wiring for this control runs from the control unit located behind the cup holder through the IP harness to the control on the dash.
149106	ICU/CECU	Dash Light Dimmer	Short in dash dimmer output #1 circuit	This DTC will be recorded when the sees a short to ground on the #1 dimmer output. Some possible causes for this are a pinched wire, water in a connector, or dimmed component failure. This output controls dimming to the left and right spare backlighting.
149206	ICU/CECU	Dash Light Dimmer	Short in dash dimmer output #2 circuit	This DTC will be recorded when the sees a short to ground on the #2 dimmer output. Some possible causes for this are a pinched wire, water in a connector, or dimmed component failure. This output controls dimming to much of the instrument illumination and backlighting.
176102	CECU	Diesel Exhaust Fluid	Diesel Exhaust Fluid Level Message Error	This DTC will be recorded when the control unit receives an invalid range on the diesel exhaust fluid level message from the engine ECU or does not receive the message in a timely manner.

DTC	ICU/CECU	Item / System	Description	Detailed Description
257903	ICU/CECU	Battery Current	Open in ammeter sensor circuit	This DTC will be recorded when the control unit sees an open at the ammeter sensor input. Some possible causes for this are a broken wire, corroded or disconnected connector, or sensor failure. The wiring for this sensor runs from the control unit located behind the cup holder through the IP harness, engine harness and ammeter extension harness to the sensor on jumper from main cab breaker to the batteries.
257904	ICU/CECU	Battery Current	Short in ammeter sensor circuit	This DTC will be recorded when the control unit sees a short at the ammeter sensor input. Some possible causes for this are pinched wire, water in a connector, or sensor failure. The wiring for this sensor runs from the control unit located behind the cup holder through the IP harness, engine harness and ammeter extension harness to the sensor on jumper from main cab breaker to the batteries.
524502	CECU	Diesel Exhaust Fluid	Diesel Exhaust Fluid Telltale Message Error	This DTC will be recorded when the control unit receives an invalid range on the diesel exhaust fluid telltale message from the engine ECU or does not receive the message in a timely manner.
524602	CECU	Diesel Exhaust Fluid	Diesel Exhaust Fluid Inducement Severity Error	This DTC will be recorded when the control unit sees a invalid value from the J1939 network for Operator Inducement Severity.

Return to Table Of Contents

TROUBLESHOOTING PROCEDURES

Introduction

This section provides troubleshooting procedures for Diagnostic Trouble Codes (DTCs) and symptoms that result when faults occur in the multiplexed electrical system.

The following procedures have been developed to assist the technician in diagnosing multiplexed problems using the Electronic Service Analyst (ESA) hardware/software diagnostic tool. It is assumed the service technician performing instrumentation repairs is knowledgeable about how to use ESA.

Databus Gauge(s) Inoperative

DTC148109, DTC148209, DTC148309 and DTC176102 V-CAN (J1939)

Symptom: One or more of the following gauges inoperative. All other non-V-CAN gauges are operational.

- Engine Oil Pressure Gauge
- Engine Oil Temperature Gauge
- Engine Coolant Temperature Gauge
- Tachometer
- Speedometer
- Diesel Exhaust Fluid Gauge

V-CAN Databus gauges receive their data from the J1939 data link via the engine ECU, which receives its data from various sensors on the engine and transmission.

NOTE: In case of a PX-6 engine, the calculated value (instead of measured value) is broadcast by the engine

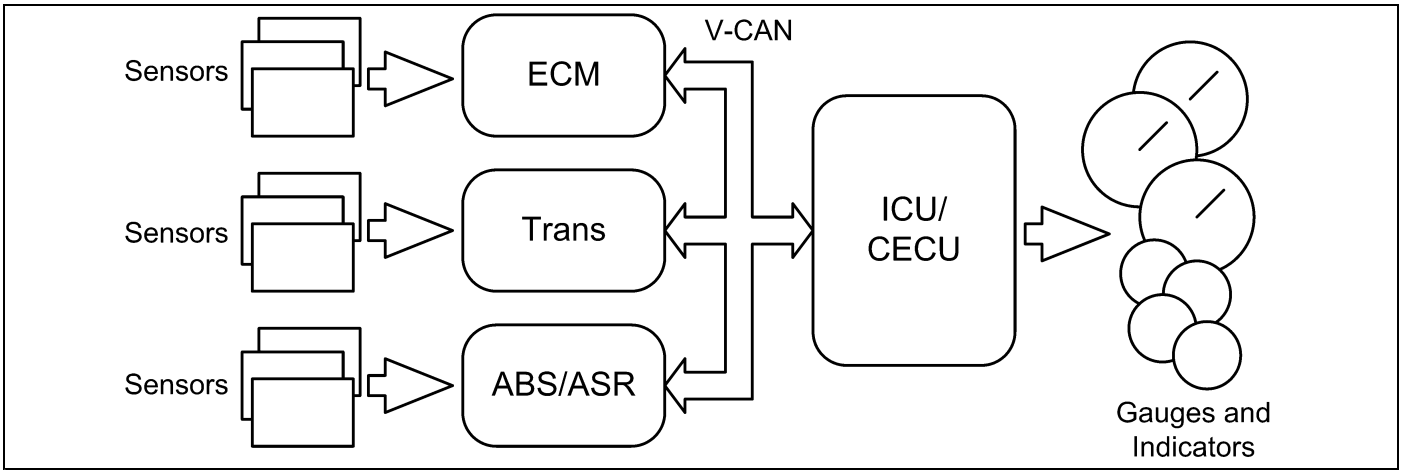

Step	Check	Result	Next Step
1	Turn ignition key ON. Start ESA, then select “Connect” to establish communication to the vehicle.		Go to **Step 2**.
2	Select “Monitor”. From the “Components” window, select all of the failed functions then select “Open”.	Gauge graphic(s) on screen display reasonable readings	Go to **Step 3**.
		Gauge graphic(s) on screen do not display reasonable readings	Go to **Step 4**.
3	Select “Simulate”. Drag the “Value” bar until the pointers on the gauge images are approximately mid-scale. Observe vehicle gauge movement.	Vehicle gauge(s) do not move. Go to **Step 3-1**. Vehicle gauge reading(s) are in the same range as the ESA gauge image(s). Go to **Step 3-7**.	Perform the following checks: *NOTE: For vehicles with a CECU, use the “Program” feature in ESA to make sure that the parameter for the inoperative gauge is enabled. An inoperative gauge may simply have its CECU parameter set to disabled.* 1. Check CVSG data link wiring: Observe Gauge position in the wiring daisy chain. a. If gauge is mounted between two other functioning gauges CVSG data link wiring is OK. Go to **Step 3-5**. b. If gauge is last gauge in daisy chain or followed by other non-functional gauges, go to **Step 3-2**. 2. Check continuity between Pin 1 on gauge harness connector and Pin 14 of the 52 Pin ICU/CECU connector C. 3. Check continuity between Pin 3 on gauge harness connector and Pin 15 of the 52 Pin ICU/CECU connector C. 4. Repair daisy chain jumper harness as necessary. 5. Once continuity on both wires exists, perform “Simulate” test again. a. If gauge functions properly during “Simulate” test, repair is complete. **Return truck to service.** b. If gauge does not function during “Simulate” test, install Test ICU/CECU and perform “Simulate” test again. i. If gauge functions properly test is complete. Install new ICU/CECU permanently. Re-test and **return truck to service.** ii. If gauge does not function properly during “Simulate” test, replace gauge. 6. Once gauge is replaced a. Verify gauge functionality. b. **Return truck to service.** 7. Is this a recheck after Step 4? a. **Yes**. Return truck to service b. **No**, Gauge and CVSG data link wiring is not the problem. Go to **Step 4.**

Step	Check	Result	Next Step
4	Select “Diagnose” to view “Active” diagnostic trouble codes.	DTC 148309 displayed – ICU/CECU cannot read messages from Engine on V-CAN.	Indicates the problem could be an open or short in the wiring from the ICU/CECU to the Engine ECU. In addition, J1939 components such as Terminating Resistors may be missing or damaged. Data from the Engine ECU may be missing or corrupting the J1939 data stream. Go to J1939 Lite Diagnostic Procedure. Correct faults found in J1939 Diagnostics section and return to **Step 2** above.
		DTC 148109 displayed – ICU/CECU cannot read messages from ABS on V-CAN.	Indicates the problem could be an open or short in the wiring from the ICU/CECU to the ABS ECU. In addition, J1939 components such as Terminating Resistors may be missing or damaged. Data from the ABS ECU may be missing or corrupting the J1939 data stream. Go to J1939 Lite Diagnostic Procedure. Correct faults found in J1939 Diagnostics section and return to **Step 2** above.
		DTC 148209 displayed – ICU/CECU cannot read messages from Transmission on V-CAN.	Indicates the problem could be an open or short in the wiring from the ICU/CECU to the Transmission ECU. In addition, J1939 components such as Terminating Resistors may be missing or damaged. Data from the Transmission ECU may be missing or corrupting the J1939 data stream. Go to J1939 Lite Diagnostic Procedure. Correct faults found in J1939 Diagnostics section and return to **Step 2** above.
		“Inactive” DTCs or No DTCs displayed.	Indicates two possible sets of causes for fault. 1. Indicates the problem could be caused by faulty data from Engine ECU. a. Connect Engine OE Diagnostic Tool to determine if engine is transmitting engine data when the engine is running. i. If data from the Engine ECU is not displayed in the OE Diagnostic Tool check for: (1) Missing signal from engine mounted sensor or Vehicle Speed sensor. (a) Faulty sensor (b) Faulty engine sensor wiring supplied by Engine OE (c) Faulty vehicle speed sensor wiring on chassis or engine harness (2) Missing signal from Engine ECU. (a) Faulty Engine ECU hardware (b) Faulty Engine ECU software ii. If data from the Engine ECU is displayed on the OE Diagnostic Tool: Check to insure Engine data has been transmitted over J1939 circuits as opposed to J1587 circuits. Go to J1939 Diagnostics. Correct faults found in J1939 Diagnostics section and return to **Step 2**. -OR Connect test Engine ECU to determine if original ECU has failed. Go to **Step 2**. 2. Indicates the problem could be intermittent in nature. Proceed with diagnosis of inactive codes while looking for loose connectors, terminals or bare wiring that might make occasional contact with metal parts or other wires. Technicians may need to manipulate connectors to find intermittent connections. Go to J1939 Diagnostics. Correct faults found in J1939 Diagnostics section and return to **Step 2** above.

Return to Table Of Contents

Primary Air Pressure Gauge Inoperative

DTC11703 and DTC11704

Symptom: Primary air pressure gauge inoperative. All other gauges are operational.

The Primary Air Pressure Gauge uses an electronic transducer (sensor) which monitors system air pressure and converts it into a voltage output that is sent to the instrumentation system. The output voltage of the sensor is proportional to the pressure it is sensing.

The following procedures have been developed to assist the technician in diagnosing multiplexed instrumentation problems using the Electronic Service Analyst (ESA) hardware/software diagnostic tool. It is assumed the service technician performing instrumentation repairs is knowledgeable about how to use ESA.

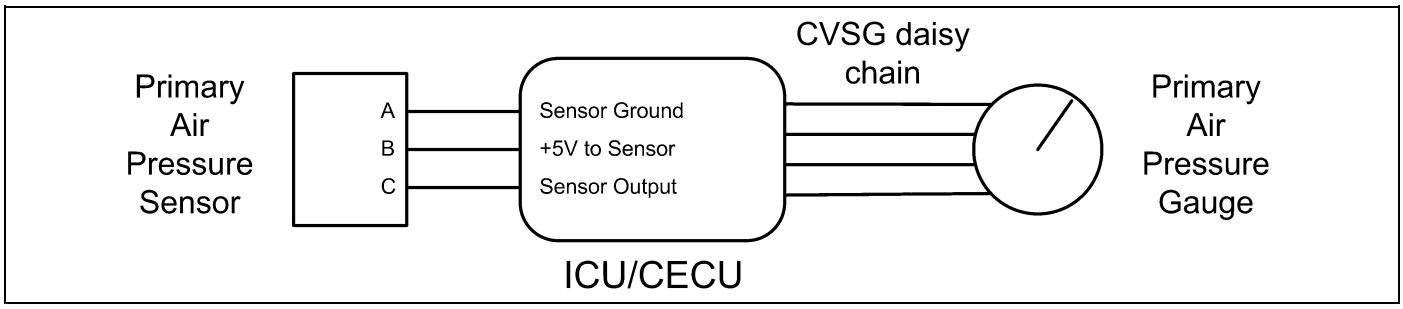

Step	Check	Result	Next Step
1	Turn ignition key ON. Start ESA, then select “Connect” to establish communication to the vehicle.		Go to **Step 2**.
2	Select “Monitor”. From the “Components” window, select “Primary Air Pressure”, then select “Open.”	Gauge graphic on screen displays reasonable reading.	Go to **Step 3**.
		Gauge graphic on screen does not display reasonable reading.	Go to **Step 4**.
3	Select “Simulate”. Drag the “Value” bar until the pointer on the gauge image is approximately mid-scale. Observe vehicle gauge movement.	Vehicle gauge does not move. Go to **Step 3-1**.	Perform the following checks: *NOTE: For vehicles with a CECU, use the "Program" feature in ESA to make sure that the parameter for the inoperative gauge is enabled. An inoperative gauge may simply have its CECU parameter set to disabled.* 1. Check CVSG data link wiring: Observe Gauge position in the wiring daisy chain. a. If gauge is mounted between two other functioning gauges CVSG data link wiring is OK. Go to **Step 3-5** b. If gauge is last gauge in daisy chain or followed by other non-functional gauges, go to **Step 3-2**. 2. Check continuity between Pin 1 on gauge harness connector and Pin 14 of the 52 Pin ICU/CECU connector C. 3. Check continuity between Pin 3 on gauge harness connector and Pin 15 of the 52 Pin ICU/CECU connector C. 4. Repair daisy chain jumper harness as necessary. 5. Once continuity on both wires exists, perform “Simulate” test again. a. If gauge functions properly during “Simulate” test, repair is complete. **Return truck to service.**
		Vehicle gauge reading is in the same range as the ESA gauge image. Go to **Step 3-7**.	

Step	Check	Result	Next Step
			b. If gauge does not function during “Simulate” test, install a known good gauge and perform “Simulate” test again. i. If gauge functions properly test is complete. Install new gauge permanently. Re-test and **return truck to service.** ii. If gauge does not function during “Simulate” test, install Test ICU/CECU and perform “Simulate” test again. (1) If gauge functions properly test is complete. Install new ICU/CECU permanently. Re-test and **return truck to service.** (2) If gauge does not function properly during “Simulate” test, replace gauge. 6. Once gauge is replaced a. Verify gauge functionality. b. **Return truck to service.** 7. Is this a recheck after **Step 5**, **Step 6** or **Step 7**? a. Yes. **Return truck to service.** b. No, Gauge and CVSG data link wiring is not the problem. Go to **Step 4**.
4	Select “Diagnose” to view “Active” primary air pressure gauge diagnostic trouble codes.	No “Active” DTCs displayed.	Indicates the problem could be a defective sensor, poor ground or no input or output voltage at sensor. Go to **Step 5**.
		DTC 11703 displayed – Open in primary air pressure circuit.	This DTC will be recorded when the control unit sees an open or short to ground at the primary air pressure sensor input. The fault is recorded when the voltage at the input is below .1 volts.
		DTC 11704 displayed – Short in primary air pressure circuit.	This DTC will be recorded when the control unit sees a short to +5V at the primary air pressure sensor input. The fault is recorded when the voltage at the input is above 4.9 volts.
5	Using a digital multimeter, check the ground, input and output voltages at the sensor connector. Pin A – Ground Pin B – Input Voltage Pin C – Output Voltage See Harness Interface Diagrams for possible sensor locations. See Connector Identification for position and identification of the electrical connectors of ICU/CECU. See ICU/CECU Pinout for terminal details of the ICU/CECU electrical connections.	(Sensor Ground) - There should be continuity between the sensor connector ground (Pin A) and a cab ground terminal. See MultiMeter Graphic below. (Sensor Input Voltage) - Input voltage from ICU/CECU to sensor connector (Pin B) should be +5 volts. See MultiMeter Graphic below. (Sensor Output Voltage) - Signal output voltage at sensor connector (Pin C) will vary depending on air pressure, but should be more than .1 volts and less than 4.9 volts. See MultiMeter Graphic and Table below. *NOTE: Do not unplug sensor connector to perform sensor output voltage check. Slide connector seal back to expose terminal ends. Use test leads with*	1. Check for continuity between sensor connector Pin A and ground terminal. a. If there is continuity between Pin A and the ground terminal, test is complete. Go to **Step 5-2**. b. If there is no continuity between Pin A and the ground terminal: i. Check for continuity between sensor connector Pin A and Pin 2 of the 52 Pin ICU/CECU connector C. ii. Check for continuity between Pin 5 of the 9 Pin ICU/CECU connector A and a cab ground terminal. iii. Repair wiring as necessary. Go to **Step 2**. 2. Check input voltage at sensor connector Pin B. a. If there is voltage at Pin B, Go to **Step 5-3**. b. If there is no voltage at Pin B, check for voltage on Pin 1 of the 52 Pin ICU/CECU connector C. i. If there is voltage on Pin 1, check continuity between Pin 1 at ICU/CECU and Pin B at sensor connector. Repair wiring as necessary. Go to **Step 2**. ii. If there is no voltage on Pin 1 at ICU/CECU, replace ICU/CECU. Go to **Step 2**. 3. Check signal output voltage at sensor connector Pin C. a. If there is no voltage at Pin C, replace sensor. Go to **Step 2**. b. If there is voltage at Pin C, Go to **Step 6**.

Step	Check	Result	Next Step
		needle point tips to probe connector terminals. Air Pressure (PSI) / Output Voltage (VDC) 150 / 4.75 75 / 2.50 60 / 2.05 30 / 1.15 0 / 0.25 *NOTE: Make sure that the system you are testing has some pressure to measure.*	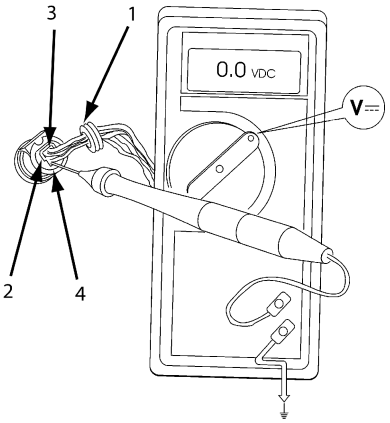 1. Connector Seal 2. Pin A 3. Pin B 4. Place MultiMeter Probe On Pin C
6	Select "Diagnose" to view primary air pressure gauge DTCs. Next, unplug the primary air pressure sensor connector at sensor. See Harness Interface Diagrams for possible sensor locations. See Connector Identification for position and identification of the electrical connectors of ICU/CECU. See ICU/CECU Pinout for terminal details of the ICU/CECU electrical connections.	DTC 11703 – Open in primary air pressure circuit is displayed as "Active."	1. Check resistance between Pin C and ground terminal. a. If there is less than 5K ohms between Pin C and the ground terminal, i. Check wiring for short from sensor to ICU/CECU. If short found, repair and go to **Step 2**. ii. Remove the 52 Pin ICU/CECU connector C and measure resistance between Pin 6 of the 52 Pin ICU/CECU connector C and ground terminal. If less than 5K ohms replace ICU/CECU and go to **Step 2**. b. If there is more than 20K ohms between Pin C and ground terminal, i. Check wiring for open from sensor to ICU/CECU. If open found, repair and go to **Step 2**. ii. Remove the "C" connector from the ICU/CECU and measure resistance between Pin 6 of the 52 Pin ICU/CECU connector C and ground terminal. If more than 20K ohms, replace ICU/CECU and go to **Step 2**.
7	Select "Diagnose" to view primary air pressure gauge DTCs. Next, unplug the primary air pressure sensor connector at sensor. See Harness Interface Diagrams for possible sensor locations. See Connector Identification for position and identification of the electrical connectors of ICU/CECU.	DTC 11704 - Short in primary air pressure circuit is displayed as "Active".	1. If the fault is still "Active" after unplugging the sensor connector, you have confirmed there is a short. This sensor wire starts at pin 6 of the 52 Pin ICU/CECU connector C and ends at pin C on the sensor connector. There is a short between the sensor wire and a power source wire. Some typical power wires to inspect are listed below (you may need to verify any power source in the main cab harness): Description / ICU/CECU Pin Power Supply Sensor +5V / Connector C, Pin 1 Dash Illumination 1 / Connector A, Pin 7 CVSG Power / Connector A, Pin 1 Each power supply ends at the following connectors: Description / Pin CVSG gauge power / 4 CVSG lighting / 2 Primary air pressure transducer / B

Step	Check	Result	Next Step	
	See ICU/CECU Pinout for terminal details of the ICU/CECU electrical connections.		Secondary air pressure	B
			Application air pressure transducer	B
			Air filter restriction	C
			For future expansion	A
			Through the Engine Harness Connector… For the Ammeter sensor	28 A
			Check for pinched or chaffed sensor and power wiring. Repair or replace wiring as necessary.**Go to Step 2**.	
		DTC 11704 - Short in primary air pressure circuit is now displayed as “Inactive.”	If DTC 11704 changes to “Inactive” after unplugging the sensor connector, you have confirmed the problem is a short to +5V in the sensor itself, not the wiring. 1. Replace sensor. Go to **Step 2**.	

Return to Table Of Contents

Secondary Air Pressure Gauge Inoperative

DTC11803 and DTC11804

Symptom: Secondary air pressure gauge inoperative. All other gauges are operational.

The Secondary Air Pressure Gauge uses an electronic transducer (sensor) which monitors system air pressure and converts it into a voltage output that is sent to the instrumentation system. The output voltage of the sensor is proportional to the pressure it is sensing.

The following procedures have been developed to assist the technician in diagnosing multiplexed instrumentation problems using the Electronic Service Analyst (ESA) hardware/software diagnostic tool. It is assumed the service technician performing instrumentation repairs is knowledgeable about how to use ESA.

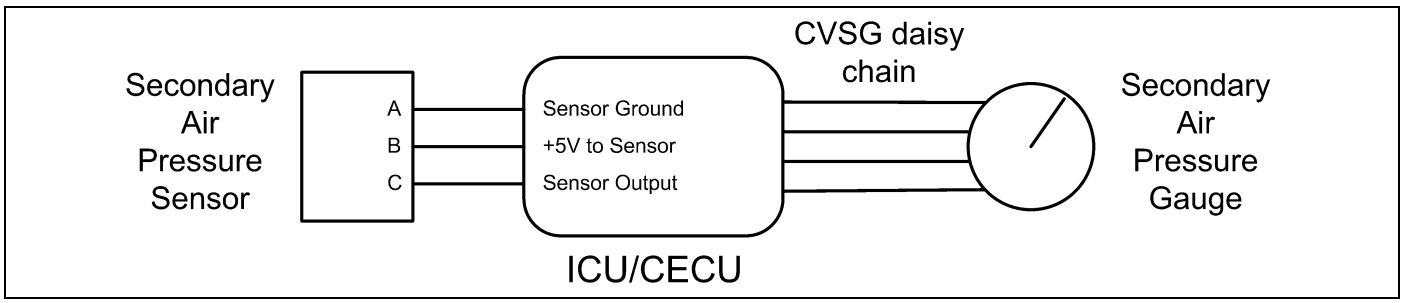

Step	Check	Result	Next Step
1	Turn ignition key ON. Start ESA, then select “Connect” to establish communication to the vehicle.		Go to **Step 2**.
2	Select “Monitor.” From the “Components” window, select “Secondary Air Pressure,” then select “Open.”	Gauge graphic on screen displays reasonable reading.	Go to **Step 3**.
		Gauge graphic on screen does not display reasonable reading.	Go to **Step 4**.
3	Select “Simulate”. Drag the “Value” bar until the pointer on the gauge image is approximately mid-scale. Observe vehicle gauge movement.	Vehicle gauge does not move. Go to **Step 3-1**.	Perform the following checks: *NOTE: For vehicles with a CECU, use the "Program" feature in ESA to make sure that the parameter for the inoperative gauge is enabled. An inoperative gauge may simply have its CECU parameter set to disabled.* 1. Check CVSG data link wiring: Observe Gauge position in the wiring daisy chain. a. If gauge is mounted between two other functioning gauges CVSG data link wiring is OK. Go to **Step 3-5**. b. If gauge is last gauge in daisy chain or followed by other non-functional gauges, go to **Step 3-2**. 2. Check continuity between Pin 1 on gauge harness connector and Pin 14 of the 52 Pin ICU/CECU connector C. 3. Check continuity between Pin 3 on gauge harness connector and Pin 15 of the 52 Pin ICU/CECU connector C. 4. Repair daisy chain jumper harness as necessary. 5. Once continuity on both wires exists, perform “Simulate” test again.
		Vehicle gauge reading is in the same range as the ESA gauge image. Go to **Step 3-7**.	

Step	Check	Result	Next Step
			a. If gauge functions properly during “Simulate” test, repair is complete. **Return truck to service.** b. If gauge does not function during “Simulate” test, install a known good gauge and perform “Simulate” test again. i. If gauge functions properly test is complete. Install new gauge permanently. Re-test and **return truck to service.** ii. If gauge does not function during “Simulate” test, install Test ICU/CECU and perform “Simulate” test again. (1) If gauge functions properly test is complete. Install new ICU/CECU permanently. Re-test and **return truck to service.** (2) If gauge does not function properly during “Simulate” test, replace gauge. 6. Once gauge is replaced a. Verify gauge functionality. b. **Return truck to service.** 7. Is this a recheck after **Step 5**, **Step 6** or **Step 7**? a. Yes. **Return truck to service.** b. No, Gauge and CVSG data link wiring is not the problem. Go to **Step 4**.
4	Select “Diagnose” to view “Active” secondary air pressure gauge diagnostic trouble codes.	No “Active” DTCs displayed.	Indicates the problem could be a defective sensor, poor ground or no input or output voltage at sensor. Go to **Step 5**.
		DTC 11803 displayed – Open in secondary air pressure circuit.	This DTC will be recorded when the control unit sees an open or short to ground at the secondary air pressure sensor input. The fault is recorded when the voltage at the input is below .1 volts.
		DTC 11804 displayed – Short in secondary air pressure circuit.	This DTC will be recorded when the control unit sees a short to +5V at the secondary air pressure sensor input. The fault is recorded when the voltage at the input is above 4.9 volts.
5	Using a digital multimeter, check the ground, input and output voltages at the sensor connector. Pin A – Ground Pin B – Input Voltage Pin C – Output Voltage See Harness Interface Diagrams for possible sensor locations. See Connector Identification for position and identification of the electrical connectors of ICU/CECU. See ICU/CECU Pinout for terminal details of the ICU/CECU electrical connections.	(Sensor Ground) - There should be continuity between the sensor connector ground (Pin A) and a cab ground terminal. See MultiMeter Graphic below. (Sensor Input Voltage) - Input voltage from ICU/CECU to sensor connector (Pin B) should be +5 volts. See MultiMeter Graphic below. (Sensor Output Voltage) - Signal output voltage at sensor connector (Pin C) will vary depending on air pressure, but should be more than .1 volts and less than 4.9 volts. See MultiMeter Graphic and Table below. *NOTE: Do not unplug sensor connector to perform sensor output voltage check. Slide connector seal back to*	1. Check for continuity between sensor connector Pin A and ground terminal. a. If there is continuity between Pin A and the ground terminal, test is complete. Go to **Step 5-2**. b. If there is no continuity between Pin A and the ground terminal: i. Check for continuity between sensor connector Pin A and Pin 2 of the 52 Pin ICU/CECU connector C. ii. Check for continuity between Pin 5 of the 9 Pin ICU/CECU connector A and a cab ground terminal. iii. Repair wiring as necessary. Go to **Step 2**. 2. Check input voltage at sensor connector Pin B. a. If there is voltage at Pin B, Go to **Step 5-3**. b. If there is no voltage at Pin B, check for voltage on Pin 1 of the 52 Pin ICU/CECU connector C. i. If there is voltage on Pin 1, check continuity between Pin 1 at ICU/CECU and Pin B at sensor connector. Repair wiring as necessary. Go to **Step 2**. ii. If there is no voltage on Pin 1 at ICU/CECU, replace ICU/CECU. Go to **Step 2**. 3. Check signal output voltage at sensor connector Pin C.

Step	Check	Result	Next Step
		expose terminal ends. Use test leads with needle point tips to probe connector terminals. Air Pressure (PSI) / Output Voltage (VDC): 150 / 4.75 75 / 2.50 60 / 2.05 30 / 1.15 0 / 0.25 *NOTE: Make sure that the system you are testing has some pressure to measure.*	a. If there is no voltage at Pin C, replace sensor. Go to **Step 2**. b. If there is voltage at Pin C, Go to **Step 6**. 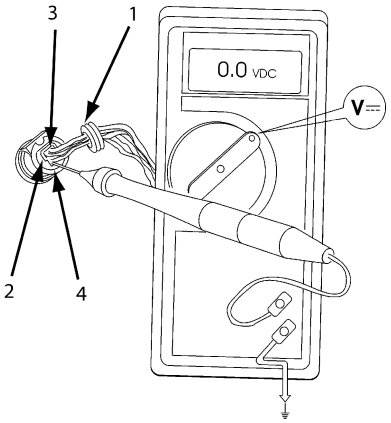 1. Connector Seal 2. Pin A 3. Pin B 4. Place MultiMeter Probe On Pin C
6	Select “Diagnose” to view secondary air pressure gauge DTCs. Next, unplug the secondary air pressure sensor connector at sensor. See Harness Interface Diagrams for possible sensor locations. See Connector Identification for position and identification of the electrical connectors of ICU/CECU. See ICU/CECU Pinout for terminal details of the ICU/CECU electrical connections.	DTC 11803 – Open in secondary air pressure circuit is displayed as “Active.”	1. Check resistance between Pin C and ground terminal. a. If there is less than 5K ohms between Pin C and the ground terminal, i. Check wiring for short from sensor to ICU/CECU. If short found, repair and go to **Step 2**. ii. Remove the 52 Pin ICU/CECU connector C and measure resistance between Pin 7 of the 52 Pin ICU/CECU connector C and ground terminal. If less than 5K ohms replace ICU/CECU and go to **Step 2**. b. If there is more than 20K ohms between Pin C and ground terminal, i. Check wiring for open from sensor to ICU/CECU. If open found, repair and go to **Step 2**. ii. Remove the “C” connector from the ICU/CECU and measure resistance between Pin 7 of the 52 Pin ICU/CECU connector C and ground terminal. If more than 20K ohms, replace ICU/CECU and go to **Step 2**.
7	Select “Diagnose” to view secondary air pressure gauge DTCs. Next, unplug the secondary air pressure sensor connector at sensor. See Harness Interface Diagrams for possible sensor locations. See Connector	DTC 11804 - Short in secondary air pressure circuit is displayed as “Active”.	1. If the fault is still “Active” after unplugging the sensor connector, you have confirmed there is a short. This sensor wire starts at pin 7 of the 52 Pin ICU/CECU connector C and ends at pin C on the sensor connector. There is a short between the sensor wire and a power source wire. Some typical power wires to inspect are listed below (you may need to verify any power source in the main cab harness): Description / ICU/CECU Pin Power Supply Sensor +5V / Connector C, Pin 1 Dash Illumination 1 / Connector A, Pin 7 CVSG Power / Connector A, Pin 1 Each power supply ends at the following connectors: Description / Pin

Step	Check	Result	Next Step	
	Identification for position and identification of the electrical connectors of ICU/CECU. See ICU/CECU Pinout for terminal details of the ICU/CECU electrical connections.		CVSG gauge power	4
			CVSG lighting	2
			Primary air pressure transducer	B
			Secondary air pressure	B
			Application air pressure transducer	B
			Air filter restriction	C
			For future expansion	A
			Through the Engine Harness Connector… For the Ammeter sensor	28 A
			Check for pinched or chaffed sensor and power wiring. Repair or replace wiring as necessary.**Go to Step 2**.	
		DTC 11804 - Short in secondary air pressure circuit is now displayed as “Inactive.”	If DTC 11804 changes to “Inactive” after unplugging the sensor connector, you have confirmed the problem is a short to +5V in the sensor itself, not the wiring. 1. Replace sensor. Go to **Step 2**.	

Return to Table Of Contents

Application Air Pressure Gauge Inoperative

DTC11603 and DTC11604

Symptom: Application air pressure gauge inoperative. All other gauges are operational.

The Application Air Pressure Gauge uses an electronic transducer (sensor) which monitors system air pressure and converts it into a voltage output that is sent to the instrumentation system. The output voltage of the sensor is proportional to the pressure it is sensing.

The following procedures have been developed to assist the technician in diagnosing multiplexed instrumentation problems using the Electronic Service Analyst (ESA) hardware/software diagnostic tool. It is assumed the service technician performing instrumentation repairs is knowledgeable about how to use ESA.

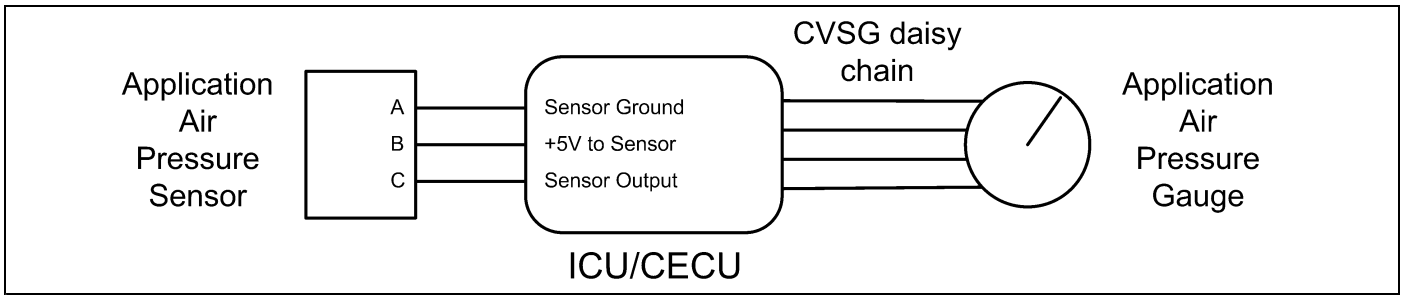

Step	Check	Result	Next Step
1	Turn ignition key ON. Start ESA, then select “Connect” to establish communication to the vehicle.		Go to **Step 2**.
2	Select “Monitor.” From the “Components” window, select “Application Air Pressure”, then select “Open.”	Gauge graphic on screen displays reasonable reading.	Go to **Step 3**.
		Gauge graphic on screen does not display reasonable reading.	Go to **Step 4**.
3	Select “Simulate”. Drag the “Value” bar until the pointer on the gauge image is approximately mid-scale. Observe vehicle gauge movement.	Vehicle gauge does not move. Go to **Step 3-1**.	Perform the following checks: *NOTE: For vehicles with a CECU, use the "Program" feature in ESA to make sure that the parameter for the inoperative gauge is enabled. An inoperative gauge may simply have its CECU parameter set to disabled.* 1. Check CVSG data link wiring: Observe Gauge position in the wiring daisy chain. a. If gauge is mounted between two other functioning gauges CVSG data link wiring is OK. Go to **Step 3-5**. b. If gauge is last gauge in daisy chain or followed by other non-functional gauges, go to **Step 3-2**. 2. Check continuity between Pin 1 on gauge harness connector and Pin 14 of the 52 Pin ICU/CECU connector C. 3. Check continuity between Pin 3 on gauge harness connector and Pin 15 of the 52 Pin ICU/CECU connector C. 4. Repair daisy chain jumper harness as necessary. 5. Once continuity on both wires exists, perform “Simulate” test again. a. If gauge functions properly during “Simulate” test, repair is complete. **Return truck to service.** b. If gauge does not function during “Simulate” test, install a known good gauge and perform “Simulate” test again. i. If gauge functions properly test is complete. Install new gauge permanently. Re-test and **return truck to service.** ii. If gauge does not function during “Simulate” test, install Test ICU/CECU and perform “Simulate” test again. (1) If gauge functions properly test is complete. Install new ICU/CECU permanently. Re-test and **return truck to service.** (2) If gauge does not function properly during “Simulate” test, replace gauge. 6. Once gauge is replaced a. Verify gauge functionality. b. **Return truck to service.** 7. Is this a recheck after **Step 5**, **Step 6** or **Step 7**? a. Yes. **Return truck to service.** b. No, Gauge and CVSG data link wiring is not the problem. Go to **Step 4**.
		Vehicle gauge reading is in the same range as the ESA gauge image. Go to **Step 3-7**.	

Step	Check	Result	Next Step
4	Select “Diagnose” to view “Active” Application air pressure gauge diagnostic trouble codes.	No “Active” DTCs displayed.	Indicates the problem could be a defective sensor, poor ground or no input or output voltage at sensor. Go to **Step 5**.
		DTC 11603 displayed – Open in application air pressure circuit.	This DTC will be recorded when the control unit sees an open or short to ground at the secondary air pressure sensor input. The fault is recorded when the voltage at the input is below .1 volts.
		DTC 11604 displayed – Short in application air pressure circuit.	This DTC will be recorded when the control unit sees a short to +5V at the secondary air pressure sensor input. The fault is recorded when the voltage at the input is above 4.9 volts.
5	Using a digital multimeter, check the ground, input and output voltages at the sensor connector. Pin A – Ground Pin B – Input Voltage Pin C – Output Voltage See Harness Interface Diagrams for possible sensor locations. See Connector Identification for position and identification of the electrical connectors of ICU/CECU. See ICU/CECU Pinout for terminal details of the ICU/CECU electrical connections.	(Sensor Ground) - There should be continuity between the sensor connector ground (Pin A) and a cab ground terminal. See MultiMeter Graphic below. (Sensor Input Voltage) - Input voltage from ICU/CECU to sensor connector (Pin B) should be +5 volts. See MultiMeter Graphic below. (Sensor Output Voltage) - Signal output voltage at sensor connector (Pin C) will vary depending on air pressure, but should be more than 0 volts and less than 5 volts. See MultiMeter Graphic and Table below. *NOTE: Do not unplug sensor connector to perform sensor output voltage check. Slide connector seal back to expose terminal ends. Use test leads with needle point tips to probe connector terminals.* Air Pressure (PSI) / Output Voltage (VDC) 150 / 4.75 75 / 2.50 60 / 2.05 30 / 1.15 0 / 0.25 *NOTE: Make sure that the system you are testing has some pressure to measure.*	1. Check for continuity between sensor connector Pin A and ground terminal. a. If there is continuity between Pin A and the ground terminal, test is complete. Go to **Step 5-2**. b. If there is no continuity between Pin A and the ground terminal: i. Check for continuity between sensor connector Pin A and Pin 2 of the 52 Pin ICU/CECU connector C. ii. Check for continuity between Pin 5 of the 9 Pin ICU/CECU connector A and a cab ground terminal. iii. Repair wiring as necessary. Go to **Step 2**. 2. Check input voltage at sensor connector Pin B. a. If there is voltage at Pin B, Go to **Step 5-3**. b. If there is no voltage at Pin B, check for voltage on Pin 1 of the 52 Pin ICU/CECU connector C. i. If there is voltage on Pin 1, check continuity between Pin 1 at ICU/CECU and Pin B at sensor connector. Repair wiring as necessary. Go to **Step 2**. ii. If there is no voltage on Pin 1 at ICU/CECU, replace ICU/CECU. Go to **Step 2**. 3. Check signal output voltage at sensor connector Pin C. a. If there is no voltage at Pin C, replace sensor. Go to **Step 2**. b. If there is voltage at Pin C, Go to **Step 6**. 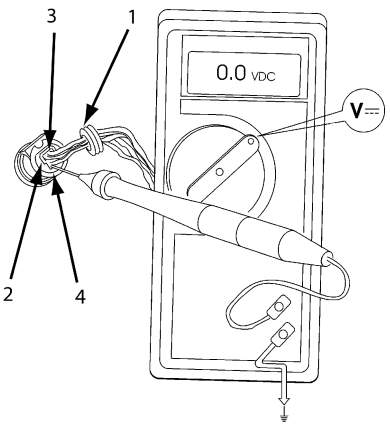 1. Connector Seal 2. Pin A 3. Pin B 4. Place MultiMeter Probe On Pin C

Step	Check	Result	Next Step
6	Select “Diagnose” to view application air pressure gauge DTCs. Next, unplug the application air pressure sensor connector at sensor. See Harness Interface Diagrams for possible sensor locations. See Connector Identification for position and identification of the electrical connectors of ICU/CECU. See ICU/CECU Pinout for terminal details of the ICU/CECU electrical connections.	DTC 11603 – Open in application air pressure circuit is displayed as “Active.”	1. Check resistance between Pin C and ground terminal. a. If there is less than 5K ohms between Pin C and the ground terminal, i. Check wiring for short from sensor to ICU/CECU. If short found, repair and go to **Step 2**. ii. Remove the “C” connector from the ICU/CECU and measure resistance between Pin 8 of the 52 Pin ICU/CECU connector C and ground terminal. If less than 5K ohms replace ICU/CECU and go to **Step 2**. b. If there is more than 20K ohms between Pin C and ground terminal, i. Check wiring for open from sensor to ICU/CECU. If open found, repair and go to **Step 2**. ii. Remove the “C” connector from the ICU/CECU and measure resistance between Pin 8 of the 52 Pin ICU/CECU connector C and ground terminal. If more than 20K ohms, replace ICU/CECU and go to **Step 2**.
7	Select “Diagnose” to view application air pressure gauge DTCs. Next, unplug the application air pressure sensor connector at sensor. See Harness Interface Diagrams for possible sensor locations. See Connector Identification for position and identification of the electrical connectors of ICU/CECU. See ICU/CECU Pinout for terminal details of the ICU/CECU electrical connections.	DTC 11604 - Short in application air pressure circuit is displayed as “Active”.	1. If the fault is still “Active” after unplugging the sensor connector, you have confirmed there is a short. This sensor wire starts at pin 8 of the 52 Pin ICU/CECU connector C and ends at pin C on the sensor connector. There is a short between the sensor wire and a power source wire. Some typical power wires to inspect are listed below (you may need to verify any power source in the main cab harness): Description / ICU/CECU Pin Power Supply Sensor +5V / Connector C, Pin 1 Dash Illumination 1 / Connector A, Pin 7 CVSG Power / Connector A, Pin 1 Each power supply ends at the following connectors: Description / Pin CVSG gauge power / 4 CVSG lighting / 2 Primary air pressure transducer / B Secondary air pressure / B Application air pressure transducer / B Air filter restriction / C For future expansion / A Through the Engine Harness Connector… / 28 For the Ammeter sensor / A Check for pinched or chaffed sensor and power wiring. Repair or replace wiring as necessary.**Go to Step 2**.
		DTC 11604 - Short in application air pressure circuit is now displayed as “Inactive.”	If DTC 11604 changes to “Inactive” after unplugging the sensor connector, you have confirmed the problem is a short to +5V in the sensor itself, not the wiring. 1. Replace sensor. Go to **Step 2**.

Return to Table Of Contents

Air Filter Restriction Pressure Gauge Inoperative

DTC10703 and DTC10704

Symptom: Air filter restriction gauge inoperative. All other gauges are operational.

The Air Filter Restriction Gauge uses an electronic transducer (sensor) to monitor vacuum pressure and converts it into a voltage output that is sent to the instrumentation system. The output voltage of the sensor is proportional to the vacuum it is sensing.

The following procedures have been developed to assist the technician in diagnosing multiplexed instrumentation problems using the Electronic Service Analyst (ESA) hardware/software diagnostic tool. It is assumed the service technician performing instrumentation repairs is knowledgeable about how to use ESA.

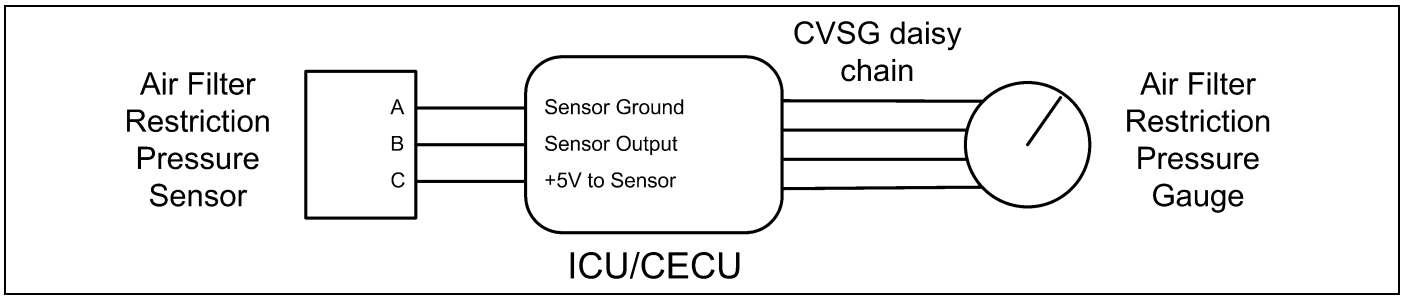

Step	Check	Result	Next Step
1	Turn ignition key ON. Start ESA, then select “Connect” to establish communication to the vehicle.		Go to **Step 2**.
2	Select “Monitor.” From the “Components” window, select “Air Filter RestrictionPressure.” then select “Open.”	Gauge graphic on screen displays reasonable reading.	Go to **Step 3**.
		Gauge graphic on screen does not display reasonable reading.	Go to **Step 4**.
3	Select “Simulate”. Drag the “Value” bar until the pointer on the gauge image is approximately mid-scale. Observe vehicle gauge movement.	Vehicle gauge does not move. Go to **Step 3-1**.	Perform the following checks: *NOTE: For vehicles with a CECU, use the "Program" feature in ESA to make sure that the parameter for the inoperative gauge is enabled. An inoperative gauge may simply have its CECU parameter set to disabled.* 1. Check CVSG data link wiring: Observe Gauge position in the wiring daisy chain. a. If gauge is mounted between two other functioning gauges CVSG data link wiring is OK. Go to **Step 3-5**. b. If gauge is last gauge in daisy chain or followed by other non-functional gauges, go to **Step 3-2**. 2. Check continuity between Pin 1 on gauge harness connector and Pin 14 of the 52 Pin ICU/CECU connector C. 3. Check continuity between Pin 3 on gauge harness connector and Pin 15 of the 52 Pin ICU/CECU connector C. 4. Repair daisy chain jumper harness as necessary. 5. Once continuity on both wires exists, perform “Simulate” test again. a. If gauge functions properly during “Simulate” test, repair is complete. **Return truck to service.** b. If gauge does not function during “Simulate” test, install a known good gauge and perform “Simulate” test again. i. If gauge functions properly test is complete. Install new gauge permanently. Re-test and **return truck to service.** ii. If gauge does not function during “Simulate” test, install Test ICU/CECU and perform “Simulate” test again. (1) If gauge functions properly test is complete. Install new ICU/CECU permanently. Re-test and **return truck to service.** (2) If gauge does not function properly during “Simulate” test, replace gauge. 6. Once gauge is replaced a. Verify gauge functionality. b. **Return truck to service.** 7. Is this a recheck after **Step 5**, **Step 6** or **Step 7**? a. Yes. **Return truck to service.** b. No, Gauge and CVSG data link wiring is not the problem. Go to **Step 4**.
		Vehicle gauge reading is in the same range as the ESA gauge image. Go to **Step 3-7**.	

Step	Check	Result	Next Step
4	Select “Diagnose” to view “Active” air filter restriction gauge diagnostic trouble codes.	No “Active” DTCs displayed.	Indicates the problem could be a defective sensor, poor ground or no input or output voltage at sensor. Go to **Step 5**.
		DTC 10703 displayed – Open in air filter restriction circuit.	This DTC will be recorded when the control unit sees an open or short to ground at the secondary air pressure sensor input. The fault is recorded when the voltage at the input is below .1 volts.
		DTC 10704 displayed – Short in air filter restriction circuit.	This DTC will be recorded when the control unit sees a short to +5V at the secondary air pressure sensor input. The fault is recorded when the voltage at the input is above 4.9 volts.
5	Using a digital multimeter, check the ground, input and output voltages at the sensor connector. Pin A – Ground Pin B – Output Voltage Pin C – Input Voltage See Harness Interface Diagrams for possible sensor locations. See Connector Identification for position and identification of the electrical connectors of ICU/CECU. See ICU/CECU Pinout for terminal details of the ICU/CECU electrical connections.	(Sensor Ground) - There should be continuity between the sensor connector ground (Pin A) and the firewall ground stud. (Sensor Input Voltage) - Input voltage from ICU/CECU to sensor connector (Pin C) should be +5 volts. See Table below. (Sensor Output Voltage) - Signal output voltage at sensor connector (Pin B) will vary depending on strength of vacuum, but should be more than .1 volts and less than 4.9 volts. See Table below. *NOTE: Do not unplug sensor connector to perform sensor output voltage check. Slide connector seal back to expose terminal ends. Use test leads with needle point tips to probe connector terminals.* Pressure (PSI) / Output Voltage (VDC) 0 / 0.5 -1.5 / 4.5 *NOTE: Make sure that the system you are testing has some pressure to measure.*	1. Check for continuity between sensor connector Pin A and ground terminal. a. If there is continuity between Pin A and the ground terminal, test is complete. Go to **Step 5-2**. b. If there is no continuity between Pin A and the ground terminal: i. Check for continuity between sensor connector Pin A and Pin 2 of the 52 Pin ICU/CECU connector C. ii. Check for continuity between Pin 5 of the 9 Pin ICU/CECU connector A and a cab ground terminal. iii. Repair wiring as necessary. Go to **Step 2**. 2. Check input voltage at sensor connector Pin C. a. If there is voltage at Pin C, Go to **Step 5-3**. b. If there is no voltage at Pin C, check for voltage on Pin 1 of the 52 Pin ICU/CECU connector C. i. If there is voltage on Pin 1, check continuity between Pin 1 at ICU/CECU and Pin C at sensor connector. Repair wiring as necessary. Go to **Step 2**. ii. If there is no voltage on Pin 1 at ICU/CECU, replace ICU/CECU. Go to **Step 2**. 3. Check signal output voltage at sensor connector Pin B. a. If there is no voltage at Pin B, replace sensor. Go to **Step 2**. b. If there is voltage at Pin B, Go to **Step 6**. 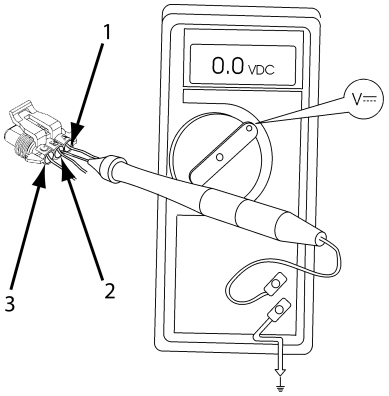 1. Pin A 2. Place MultiMeter Probe On Pin B 3. Pin C

Step	Check	Result	Next Step
6	Select “Diagnose” to view air filter restriction gauge DTCs. Next, unplug the air filter restriction sensor connector at sensor. See Harness Interface Diagrams for possible sensor locations. See Connector Identification for position and identification of the electrical connectors of ICU/CECU. See ICU/CECU Pinout for terminal details of the ICU/CECU electrical connections.	DTC 10703 – Open in air filter restriction circuit is displayed as “Active.”	1. Check resistance between Pin B and ground terminal. a. If there is less than 5K ohms between Pin B and the ground terminal, i. Check wiring for short from sensor to ICU/CECU. If short found, repair and go to **Step 2**. ii. Remove the “C” connector from the ICU/CECU and measure resistance between Pin 10 of the 52 Pin ICU/CECU connector C and ground terminal. If less than 5K ohms replace ICU/CECU and go to **Step 2**. b. If there is more than 20K ohms between Pin B and ground terminal, i. Check wiring for open from sensor to ICU/CECU. If open found, repair and go to **Step 2**. ii. Remove the “C” connector from the ICU/CECU and measure resistance between Pin 10 of the 52 Pin ICU/CECU connector C and ground terminal. If more than 20K ohms, replace ICU/CECU and go to **Step 2**.
7	Select “Diagnose” to view air filter restriction gauge DTCs. Next, unplug the air filter restriction sensor connector at sensor. See Harness Interface Diagrams for possible sensor locations. See Connector Identification for position and identification of the electrical connectors of ICU/CECU. See ICU/CECU Pinout for terminal details of the ICU/CECU electrical connections.	DTC 10704 - Short in air filter restriction circuit is displayed as “Active.”	1. If the fault is still “Active” after unplugging the sensor connector, you have confirmed there is a short. This sensor wire starts at pin 10 of the 52 Pin ICU/CECU connector C and ends at pin B on the sensor connector. There is a short between the sensor wire and a power source wire. Some typical power wires to inspect are listed below (you may need to verify any power source in the main cab harness): Description / ICU/CECU Pin Power Supply Sensor +5V / Connector C, Pin 1 Dash Illumination 1 / Connector A, Pin 7 CVSG Power / Connector A, Pin 1 Each power supply ends at the following connectors: Description / Pin CVSG gauge power / 4 CVSG lighting / 2 Primary air pressure transducer / B Secondary air pressure / B Application air pressure transducer / B Air filter restriction / C For future expansion / A Through the Engine Harness Connector… / 28 For the Ammeter sensor / A Check for pinched or chaffed sensor and power wiring. Repair or replace wiring as necessary.**Go to Step 2**.
		DTC 10704 - Short in air filter restriction circuit is now displayed as “Inactive.”	If DTC 11704 changes to “Inactive” after unplugging the sensor connector, you have confirmed the problem is a short to +5V in the sensor itself, not the wiring. 1. Replace sensor. Go to **Step 2**.

Return to Table Of Contents

Fuel Filter Restriction Pressure Gauge Inoperative

DTC1603 and DTC1604

Symptom: Fuel filter restriction gauge inoperative. All other gauges are operational.

The Fuel Filter Restriction Gauge uses an electronic transducer (sensor) to monitor vacuum pressure and converts it into a voltage output that is sent to the instrumentation system. The output voltage of the sensor is proportional to the vacuum it is sensing.

The following procedures have been developed to assist the technician in diagnosing multiplexed instrumentation problems using the Electronic Service Analyst (ESA) hardware/software diagnostic tool. It is assumed the service technician performing instrumentation repairs is knowledgeable about how to use ESA.

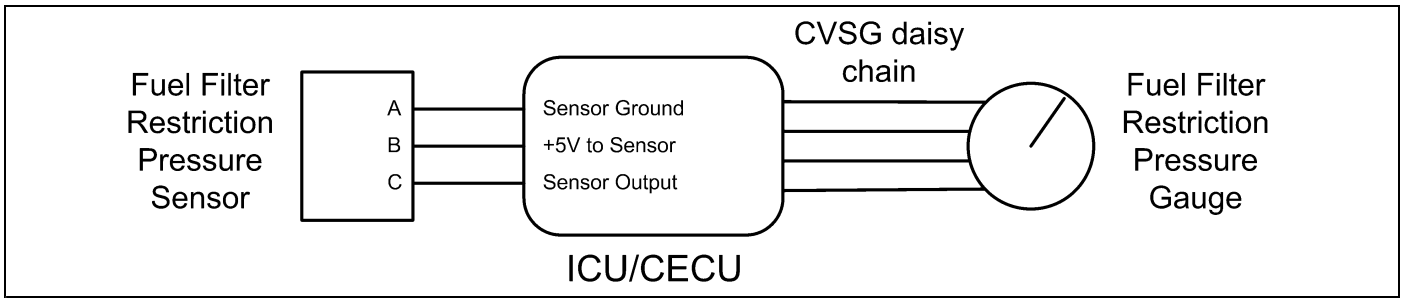

Step	Check	Result	Next Step
1	Turn ignition key ON. Start ESA, then select “Connect” to establish communication to the vehicle.		Go to **Step 2**.
2	Select “Monitor.” From the “Components” window, select “Fuel Filter Restriction Pressure,” then select “Open.”	Gauge graphic on screen displays reasonable reading.	Go to **Step 3**.
		Gauge graphic on screen does not display reasonable reading.	Go to **Step 4**.
3	Select “Simulate”. Drag the “Value” bar until the pointer on the gauge image is approximately mid-scale. Observe vehicle gauge movement.	Vehicle gauge does not move. Go to **Step 3-1**.	Perform the following checks: *NOTE: For vehicles with a CECU, use the "Program" feature in ESA to make sure that the parameter for the inoperative gauge is enabled. An inoperative gauge may simply have its CECU parameter set to disabled.* 1. Check CVSG data link wiring: Observe Gauge position in the wiring daisy chain. a. If gauge is mounted between two other functioning gauges CVSG data link wiring is OK. Go to **Step 3-5**. b. If gauge is last gauge in daisy chain or followed by other non-functional gauges, go to **Step 3-2**. 2. Check continuity between Pin 1 on gauge harness connector and Pin 14 of the 52 Pin ICU/CECU connector C. 3. Check continuity between Pin 3 on gauge harness connector and Pin 15 of the 52 Pin ICU/CECU connector C. 4. Repair daisy chain jumper harness as necessary. 5. Once continuity on both wires exists, perform “Simulate” test again. a. If gauge functions properly during “Simulate” test, repair is complete. **Return truck to service.** b. If gauge does not function during “Simulate” test, install a known good gauge and perform “Simulate” test again. i. If gauge functions properly test is complete. Install new gauge permanently. Re-test and **return truck to service.** ii. If gauge does not function during “Simulate” test, install Test ICU/CECU and perform “Simulate” test again. (1) If gauge functions properly test is complete. Install new ICU/CECU permanently. Re-test and **return truck to service.** (2) If gauge does not function properly during “Simulate” test, replace gauge. 6. Once gauge is replaced a. Verify gauge functionality. b. **Return truck to service.** 7. Is this a recheck after **Step 5**, **Step 6** or **Step 7**? a. Yes. **Return truck to service.** b. No, Gauge and CVSG data link wiring is not the problem. Go to **Step 4**.
		Vehicle gauge reading is in the same range as the ESA gauge image. Go to **Step 3-7**.	

Step	Check	Result	Next Step
4	Select “Diagnose” to view “Active” fuel filter restriction gauge diagnostic trouble codes.	No “Active” DTCs displayed.	Indicates the problem could be a defective sensor, poor ground or no input or output voltage at sensor. Go to **Step 5**.
		DTC 1603 displayed – Open in application air pressure circuit.	This DTC will be recorded when the control unit sees an open or short to ground at the secondary air pressure sensor input. The fault is recorded when the voltage at the input is below .1 volts.
		DTC 1604 displayed – Short in application air pressure circuit.	This DTC will be recorded when the control unit sees a short to +5V at the secondary air pressure sensor input. The fault is recorded when the voltage at the input is above 4.9 volts.
5	Using a digital multimeter, check the ground, input and output voltages at the sensor connector. Pin A – Ground Pin B – Input Voltage Pin C – Output Voltage See Harness Interface Diagrams for possible sensor locations. See Connector Identification for position and identification of the electrical connectors of ICU/CECU. See ICU/CECU Pinout for terminal details of the ICU/CECU electrical connections.	(Sensor Ground) - There should be continuity between the sensor connector ground (Pin A) and the firewall ground stud. (Sensor Input Voltage) - Input voltage from ICU/CECU to sensor connector (Pin B) should be +5 volts. See Table below. (Sensor Output Voltage) - Signal output voltage at sensor connector (Pin C) will vary depending on strength of vacuum, but should be more than .1 volts and less than 4.9 volts. See Table below. *NOTE: Do not unplug sensor connector to perform sensor output voltage check. Slide connector seal back to expose terminal ends. Use test leads with needle point tips to probe connector terminals.* Pressure (PSI) / Output Voltage (VDC) 0 / 0.5 -1.5 / 4.5 *NOTE: Make sure that the system you are testing has some pressure to measure.*	1. Check for continuity between sensor connector Pin A and ground terminal. a. If there is continuity between Pin A and the ground terminal, test is complete. Go to **Step 5-2**. b. If there is no continuity between Pin A and the ground terminal: i. Check for continuity between sensor connector Pin A and Pin 2 of the 52 Pin ICU/CECU connector C. ii. Check for continuity between Pin 5 of the 9 Pin ICU/CECU connector A and a cab ground terminal. iii. Repair wiring as necessary. Go to **Step 2**. 2. Check input voltage at sensor connector Pin B. a. If there is voltage at Pin B, Go to **Step 5-3**. b. If there is no voltage at Pin B, check for voltage on Pin 1 of the 52 Pin ICU/CECU connector C. i. If there is voltage on Pin 1, check continuity between Pin 1 at ICU/CECU and Pin B at sensor connector. Repair wiring as necessary. Go to **Step 2**. ii. If there is no voltage on Pin 1 at ICU/CECU, replace ICU/CECU. Go to **Step 2**. 3. Check signal output voltage at sensor connector Pin C. a. If there is no voltage at Pin C, replace sensor. Go to **Step 2**. b. If there is voltage at Pin C, Go to **Step 6**. 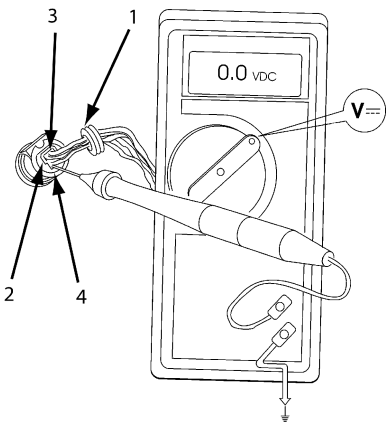 1. Connector Seal 2. Pin A 3. Pin B 4. Place MultiMeter Probe On Pin C

Step	Check	Result	Next Step
6	Select “Diagnose” to view fuel filter restriction gauge DTCs. Next, unplug the fuel filter restriction sensor connector at sensor. See Harness Interface Diagrams for possible sensor locations. See Connector Identification for position and identification of the electrical connectors of ICU/CECU. See ICU/CECU Pinout for terminal details of the ICU/CECU electrical connections.	DTC 1603 – Open in fuel filter restriction circuit is displayed as “Active.”	1. Check resistance between Pin C and ground terminal. a. If there is less than 5K ohms between Pin C and the ground terminal, i. Check wiring for short from sensor to ICU/CECU. If short found, repair and go to **Step 2**. ii. Remove the “C” connector from the ICU/CECU and measure resistance between Pin 11 of the 52 Pin ICU/CECU connector C and ground terminal. If less than 5K ohms replace ICU/CECU and go to **Step 2**. b. If there is more than 20K ohms between Pin C and ground terminal, i. Check wiring for open from sensor to ICU/CECU. If open found, repair and go to **Step 2**. ii. Remove the “C” connector from the ICU/CECU and measure resistance between Pin 11 of the 52 Pin ICU/CECU connector C and ground terminal. If more than 20K ohms, replace ICU/CECU and go to **Step 2**.
7	Select “Diagnose” to view fuel filter restriction gauge DTCs. Next, unplug the fuel filter restriction sensor connector at sensor. See Harness Interface Diagrams for possible sensor locations. See Connector Identification for position and identification of the electrical connectors of ICU/CECU. See ICU/CECU Pinout for terminal details of the ICU/CECU electrical connections.	DTC 1604 - Short in fuel filter restriction circuit is displayed as “Active.”	1. If the fault is still “Active” after unplugging the sensor connector, you have confirmed there is a short. This sensor wire starts at pin 11 of the 52 Pin ICU/CECU connector C, continues through pin D3 (Chassis Harness firewall connector) and ends at pin C on the sensor connector. There is a short between the sensor wire and a power source wire. Some typical power wires to inspect are listed below (you may need to verify any power source in the main cab harness): Description / ICU/CECU Pin Power Supply Sensor +5V / Connector C, Pin 1 Dash Illumination 1 / Connector A, Pin 7 CVSG Power / Connector A, Pin 1 Each power supply ends at the following connectors: Description / Pin CVSG gauge power / 4 CVSG lighting / 2 Primary air pressure transducer / B Secondary air pressure / B Application air pressure transducer / B Air filter restriction / C For future expansion / A Through the Engine Harness Connector… / 28 For the Ammeter sensor / A Check for pinched or chaffed sensor and power wiring. Repair or replace wiring as necessary.**Go to Step 2**.
		DTC 1604 - Short in fuel filter restriction circuit is now displayed as “Inactive.”	If DTC 1604 changes to “Inactive” after unplugging the sensor connector, you have confirmed the problem is a short in the sensor itself, not the wiring. 1. Replace sensor. Go to **Step 2**.

Return to Table Of Contents

Ammeter Gauge Inoperative

DTC257903 and DTC257904

Symptom: Ammeter gauge inoperative. All other gauges are operational.

The Ammeter Gauge uses a contactless sensor using Hall Effect. The sensor is positioned on the cab feed wire inside the battery box, or for firewall mounted circuit breakers, near the firewall.

The following procedures have been developed to assist the technician in diagnosing multiplexed instrumentation problems using the Electronic Service Analyst (ESA) hardware/software diagnostic tool. It is assumed the service technician performing instrumentation repairs is knowledgeable about how to use ESA.

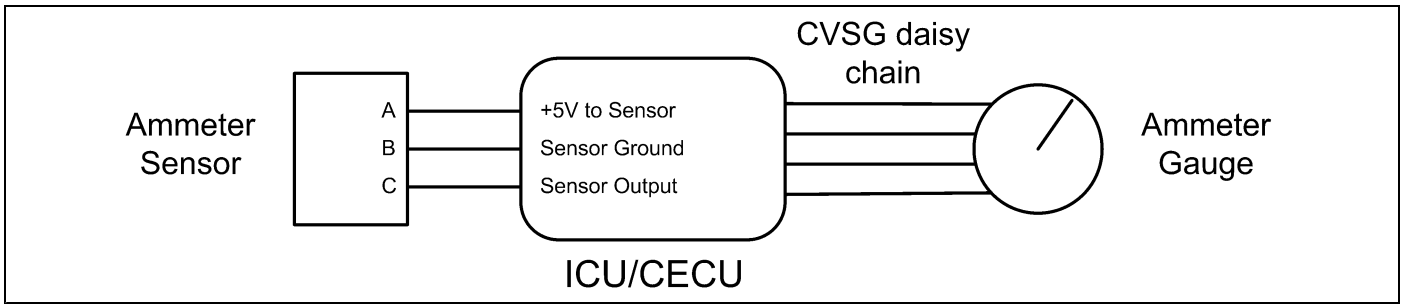

Step	Check	Result	Next Step
1	Turn ignition key ON. Start ESA, then select “Connect” to establish communication to the vehicle.		Go to **Step 2**.
2	Select “Monitor.” From the “Components” window, select “Ammeter,” then select “Open.”	Gauge graphic on screen displays reasonable reading.	Go to **Step 3**.
		Gauge graphic on screen does not display reasonable reading.	Go to **Step 4**.
3	Select “Simulate”. Drag the “Value” bar until the pointer on the gauge image is approximately mid-scale. Observe vehicle gauge movement.	Vehicle gauge does not move. Go to **Step 3-1**.	Perform the following checks: *NOTE: For vehicles with a CECU, use the "Program" feature in ESA to make sure that the parameter for the inoperative gauge is enabled. An inoperative gauge may simply have its CECU parameter set to disabled.* 1. Check CVSG data link wiring: Observe Gauge position in the wiring daisy chain. a. If gauge is mounted between two other functioning gauges CVSG data link wiring is OK. Go to **Step 3-5**. b. If gauge is last gauge in daisy chain or followed by other non-functional gauges, go to **Step 3-2**. 2. Check continuity between Pin 1 on gauge harness connector and Pin 14 of the 52 Pin ICU/CECU connector C. 3. Check continuity between Pin 3 on gauge harness connector and Pin 15 of the 52 Pin ICU/CECU connector C. 4. Repair daisy chain jumper harness as necessary. 5. Once continuity on both wires exists, perform “Simulate” test again. a. If gauge functions properly during “Simulate” test, repair is complete. **Return truck to service.** b. If gauge does not function during “Simulate” test, install a known good gauge and perform “Simulate” test again. i. If gauge functions properly test is complete. Install new gauge permanently. Re-test and **return truck to service.** ii. If gauge does not function during “Simulate” test, install Test ICU/CECU and perform “Simulate” test again. (1) If gauge functions properly test is complete. Install new ICU/CECU permanently. Re-test and **return truck to service.** (2) If gauge does not function properly during “Simulate” test, replace gauge. 6. Once gauge is replaced a. Verify gauge functionality. b. **Return truck to service.** 7. Is this a recheck after **Step 5**, **Step 6** or **Step 7**? a. Yes. **Return truck to service.** b. No, Gauge and CVSG data link wiring is not the problem. Go to **Step 4**.
		Vehicle gauge reading is in the same range as the ESA gauge image. Go to **Step 3-7**.	

Step	Check	Result	Next Step
4	Select “Diagnose” to view “Active” ammeter diagnostic trouble codes.	No “Active” DTCs displayed.	Indicates the problem could be a defective sensor, poor ground or no input or output voltage at sensor. Go to **Step 5**.
		DTC 257903 displayed - Open in ammeter sensor circuit.	This DTC will be recorded when the control unit sees an open or short to ground at the secondary air pressure sensor input. The fault is recorded when the voltage at the input is below .1 volts.
		DTC 257904 displayed - Short in ammeter sensor circuit.	This DTC will be recorded when the control unit sees a short to +5V at the secondary air pressure sensor input. The fault is recorded when the voltage at the input is above 4.9 volts.
5	Using a digital multimeter, check the ground, input and output voltages at the sensor connector. Pin A – Input Voltage Pin B – Ground Pin C – Output Voltage See Harness Interface Diagrams for possible sensor locations. See Connector Identification for position and identification of the electrical connectors of ICU/CECU. See ICU/CECU Pinout for terminal details of the ICU/CECU electrical connections.	(Sensor Ground) - There should be continuity between the sensor connector ground (Pin B) and the firewall ground stud. (Sensor Input Voltage) - Input voltage from ICU/CECU to sensor connector (Pin A) should be +5 volts. (Sensor Output Voltage) - Signal output voltage at sensor connector (Pin C) will vary depending on the amperage, but should be more than 0 volts and less than 5 volts. See Table below. *NOTE: Do not unplug sensor connector to perform sensor output voltage check. Slide connector seal back to expose terminal ends. Use test leads with needle point tips to probe connector terminals.*	1. Check for continuity between sensor connector Pin B and ground terminal. a. If there is continuity between Pin B and the ground terminal, test is complete. Go to **Step 5-2**. b. If there is no continuity between Pin B and the ground terminal i. Check for continuity between terminal B and Pin 9 of the 52 Pin ICU/CECU connector C. ii. Check for continuity between Pin 5 of the 9 Pin ICU/CECU connector A and a cab ground terminal. iii. Repair wiring as necessary. Go to **Step 5-1**. 2. Check input voltage at sensor connector Pin A. a. If there is voltage at Pin A, Go to **Step 5-3**. b. If there is no voltage at Pin A, check for voltage on Pin 1 of the 52 Pin ICU/CECU connector C. i. If there is voltage on Pin 1, check continuity between Pin 1 at ICU/CECU and Pin A at sensor connector. Repair wiring as necessary. Go to **Step 5-2**. ii. If there is no voltage on Pin 1 at ICU/CECU, replace ICU/CECU. Go to **Step 2**. 3. Check signal output voltage at sensor connector Pin C. a. If there is no voltage at Pin C, replace sensor. Go to **Step 2**. b. If there is voltage at Pin C, check for voltage on Pin 9 of the 52 Pin ICU/CECU connector C. i. If voltage is present on Pin 9 at ICU/CECU connector, replace ICU/CECU. Go to **Step 2**. ii. If there is no voltage on Pin 9 at ICU/CECU connector, Go to **Step 6**. 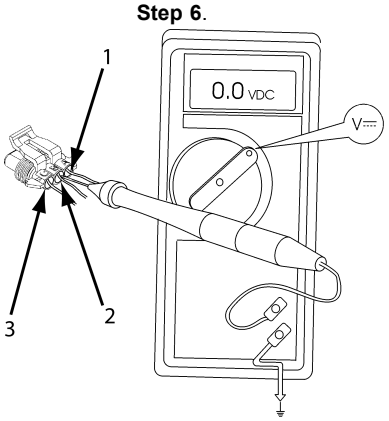 1. Place MultiMeter Probe On Pin C 2. Pin B

Average Range	Output Voltage (VDC)
120	4.5
60	3.5
0	2.5
-60	1.5
-120	0.5

Step	Check	Result	Next Step
6	Select “Diagnose” to view ammeter gauge DTCs. Next, unplug the ammeter connector at sensor. See Harness Interface Diagrams for possible sensor locations. See Connector Identification for position and identification of the electrical connectors of ICU/CECU. See ICU/CECU Pinout for terminal details of the ICU/CECU electrical connections.	DTC 257903 – Open in ammeter sensor circuit is displayed as “Active.”	1. Using a jumper wire, jump across sensor harness connector Pins B and C. 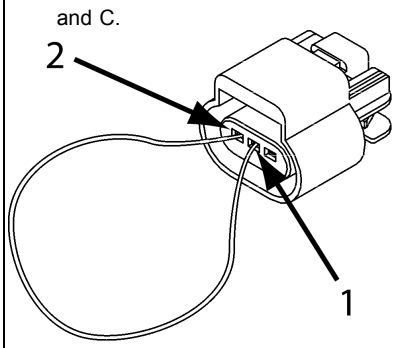 1. Pin B 2. Pin C a. If an “Active” DTC 257904 - Short in ammeter sensor circuit is now displayed, you have confirmed there is not an open in the sensor output voltage wire to the ICU/CECU. The original fault (DTC 257903) was logged because there is an open in the ammeter sensor itself, not the wiring. Replace sensor. Go to **Step 2**. b. If DTC 257904 is not displayed, there is an open circuit in the wire between sensor connector Pin C and Pin 9 of the 52 Pin ICU/CECU connector C. Repair wiring as necessary. Go to **Step 2**. **Alternate test method:** Check for continuity between sensor connector Pin C (sensor output voltage) and Pin 9 of the 52 Pin ICU/CECU connector C. 1. If there is no continuity, repair wiring as necessary. After repairs, DTC 257903 should now be displayed as “Inactive.” 2. If there is continuity between sensor connector Pin C and Pin 9 of the 52 Pin ICU/CECU connector C, the open circuit is in the sensor itself, not in the wiring. Replace sensor.
7	Select “Diagnose” to view ammeter gauge DTCs. Next, unplug the ammeter connector at sensor. See Harness Interface Diagrams for possible sensor locations. See Connector Identification for position and identification of the electrical connectors of ICU/CECU. See ICU/CECU Pinout for terminal details of the ICU/CECU electrical connections.	DTC 257904 - Short in ammeter sensor circuit is displayed as “Active.”	If the fault is still “Active” after unplugging the sensor connector, you have confirmed there is a short to ground between Pin C (sensor output voltage) and Pin 9 of the 52 Pin ICU/CECU connector C 1. Check for a pinched or chaffed wire between Pin C (sensor output voltage) and Pin 9 of the 52 Pin ICU/CECU connector C. Repair wiring as necessary. Go to **Step 2**.
		DTC 257904 - Short in ammeter sensor circuit is now displayed as “Inactive.”	If DTC 257904 changes to “Inactive” after unplugging the sensor connector, you have confirmed the problem is a short in the sensor itself, not the wiring. 1. Replace sensor. Go to **Step 2**.

Return to Table Of Contents

Pyrometer Gauge Inoperative

DTC17303 and DTC17304

Symptom: Pyrometer gauge inoperative. All other gauges are operational.

The Pyrometer Gauge uses a thermocouple sensor to measure engine exhaust gas temperature after it leaves the turbo.

The following procedures have been developed to assist the technician in diagnosing multiplexed instrumentation problems using the Electronic Service Analyst (ESA) hardware/software diagnostic tool. It is assumed the service technician performing instrumentation repairs is knowledgeable about how to use ESA.

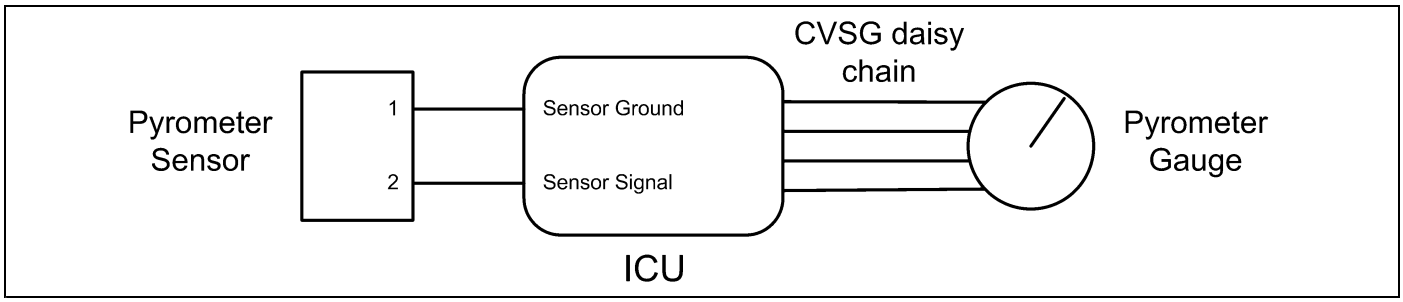

Step	Check	Result	Next Step
1	Turn ignition key ON. Start ESA, then select “Connect” to establish communication to the vehicle.		Go to **Step 2**.
2	Select “Monitor.” From the “Components” window, select “Exhaust Temperature,” then select “Open.”	Gauge graphic on screen displays reasonable reading.	Go to **Step 3**.
		Gauge graphic on screen does not display reasonable reading.	Go to **Step 4**.
3	Select “Simulate”. Drag the “Value” bar until the pointer on the gauge image is approximately mid-scale. Observe vehicle gauge movement.	Vehicle gauge does not move. Go to **Step 3-1**. Vehicle gauge reading is in the same range as the ESA gauge image. Go to **Step 3-7**.	Perform the following checks: 1. Check CVSG data link wiring: Observe Gauge position in the wiring daisy chain. 2. If gauge is mounted between two other functioning gauges CVSG data link wiring is OK. go to **Step 3-5**. a. If gauge is last gauge in daisy chain or followed by other non-functional gauges, go to **Step 3-2**. b. Check continuity between Pin 1 on gauge harness connector and Pin 14 of the 52 Pin ICU connector C. 3. Check continuity between Pin 3 on gauge harness connector and Pin 15 of the 52 Pin ICU connector C. 4. Repair daisy chain jumper harness as necessary. 5. Once continuity on both wires exists, perform “Simulate” test again. a. If gauge functions properly during “Simulate” test, repair is complete. **Return truck to service.** b. If gauge does not function during “Simulate” test, install Test ICU and perform “Simulate” test again. i. If gauge functions properly test is complete. Install new ICU permanently. Re-test and **return truck to service.** ii. If gauge does not function properly during “Simulate” test, replace gauge. 6. Once gauge is replaced. a. Verify gauge functionality. b. **Return truck to service.** 7. Is this a recheck after Step 5, Step 6 or Step 7? a. Yes. **Return truck to service.** b. No, Gauge and CVSG data link wiring is not the problem. Go to **Step 4**.
4	Select “Diagnose” to view “Active” ammeter diagnostic trouble codes.	DTC 17303 displayed – Open in exhaust temp circuit.	Indicates the problem could be an open in the wiring from the ICU to the pyrometer sensor or a defective sensor. Go to **Step 5**, and if necessary, **Step 6**.
		DTC 17304 displayed - Short in exhaust temp circuit.	Indicates the problem could be a short to ground in the wiring from the ICU to the pyrometer sensor or a defective sensor. Go to **Step 5**, and if necessary, **Step 7**.

Step	Check	Result	Next Step
5	Unplug pyrometer harness connector at sensor. Using a digital multimeter, check continuity on ground and signal wire at sensor connector. Pin 1 – Ground Pin 2 - Signal See Harness Interface Diagrams for possible sensor locations. See Connector Identification for position and identification of the electrical connectors of ICU/CECU. See ICU/CECU Pinout for terminal details of the ICU/CECU electrical connections.	(Sensor Ground) - There should be continuity between the sensor connector ground wire (Pin 1) and a cab ground terminal. (Signal) - There should be continuity between the sensor connector signal wire (Pin 2) and Pin 23 of the 52 Pin ICU connector C.	1. Check for continuity between sensor connector Pin 1 and a cab ground terminal. a. If there is continuity between Pin 1 and the ground terminal, test is complete. Go to **Step 5-2**. b. If there is no continuity between Pin 1 and the ground terminal, repair wiring as necessary. Go to **Step 5-1**. 2. Check for continuity between sensor connector Pin 2 and Pin 23 of the 52 Pin ICU connector C. a. If there is continuity between Pin 2 and Pin 23, test is complete. Go to **Step 6**. b. If there is no continuity between Pin 2 and Pin 23 at ICU, repair wiring as necessary. Go to **Step 5-2**. **Alternate test method:** Resistance in the pyrometer sensor (thermocouple) signal wire changes as exhaust temperature increases/decreases. 1. By unplugging the pyrometer sensor harness connector and connecting a resistor decade box (i.e.Ametek PST2000 Tester), or an appropriate resistor to Pins 1 and 2, you can simulate the sensor by dialing in a known resistance. 2. Observe vehicle gauge reading on dash. 3. If gauge needle moves to approximately the same temperature as in the table below, the problem is a defective pyrometer sensor. See Table below.

Temp		Resistance
°C	°F	Ohms
-40	-40	169.7
-20	-4	185.1
0	32	200.5
25	77	219.6
50	122	238.5
100	212	275.9
150	302	312.7
200	392	349.0
250	482	384.6
300	572	419.7
350	662	454.2
400	752	488.1
450	842	521.4
500	932	554.1
600	1112	617.8
700	1292	679.2
800	1472	738.2
900	1652	794.9
1000	1832	849.2

Step	Check	Result	Next Step
6	Select “Diagnose” to view exhaust temperature gauge DTCs. Unplug pyrometer harness connector at sensor. See Harness Interface Diagrams for possible sensor locations. See Connector Identification for position and identification of the electrical connectors of ICU/CECU. See ICU/CECU Pinout for terminal details of the ICU/CECU electrical connections.	DTC 17303 - Open in exhaust temp circuit is displayed as “Active.”	1. Using a jumper wire, jump across sensor harness connector Pins 1 and 2. 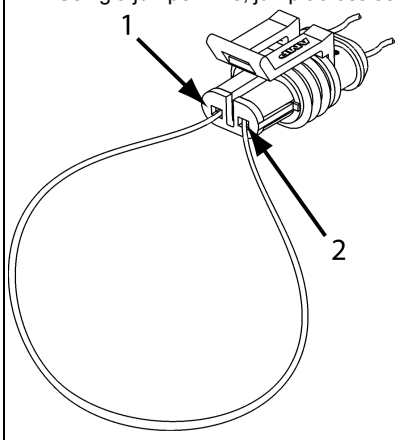 1. Pin 1 2. Pin 2 a. If an “Active” DTC 17304 - Short in exhaust temp circuit is now displayed, you have confirmed there is not an open in the sensor signal wire to the ICU. The original fault (DTC 17303) was logged because there is an open in the pyrometer sensor itself, not the wiring. Replace sensor. b. If DTC 17304 is not displayed, there is an open circuit in the signal wire between sensor connector Pin 2 and Pin 23 of the 52 Pin ICU connector C. Repair wiring as necessary. **Alternate test method:** Check for continuity between sensor connector Pin 2 (sensor signal) and Pin 23 of the 52 Pin ICU connector C. 1. If there is no continuity, repair wiring as necessary. After repairs, DTC 17303 should now be displayed as “Inactive.” 2. If there is continuity between sensor connector Pin 2 and Pin 23 of the 52 Pin ICU connector C, the open circuit is in the sensor itself, not in the wiring. Replace sensor.
7	Select “Diagnose” to view exhaust temperature gauge DTCs. Next, unplug the pyrometer harness connector at sensor. See Harness Interface Diagrams for possible sensor locations. See Connector Identification for position and identification of the electrical connectors of ICU/CECU. See ICU/CECU Pinout for terminal details of	DTC 17304 - Short in exhaust temp circuit is displayed as “Active.”	If the fault is still “Active” after unplugging the sensor connector, you have confirmed there is a short to ground between Pin 2 (sensor signal) and Pin 23 of the 52 Pin ICU connector C. 1. Check for a pinched or chaffed wire between Pin 2 (sensor signal) and Pin 23 of the 52 Pin ICU connector C. Repair wiring as necessary. Go to **Step 2**.
		DTC 17304 - Short in exhaust temp circuit is now displayed as “Inactive.”	If DTC 17304 changes to “Inactive” after unplugging the sensor connector, you have confirmed the problem is a short in the sensor itself, not the wiring. 1. Replace sensor. Go to **Step 2**.

Step	Check	Result	Next Step
	the ICU/CECU electrical connections.		

Return to Table Of Contents

Front Drive Axle Oil Temperature Gauge

DTC57803 and DTC57804

Symptom: Front drive axle oil temperature gauge inoperative. All other gauges are operational.

The Front Drive Axle Oil Temperature Gauge uses a thermistor sensor to measure axle oil temperature.

The following procedures have been developed to assist the technician in diagnosing multiplexed instrumentation problems using the Electronic Service Analyst (ESA) hardware/software diagnostic tool. It is assumed the service technician performing instrumentation repairs is knowledgeable about how to use ESA.

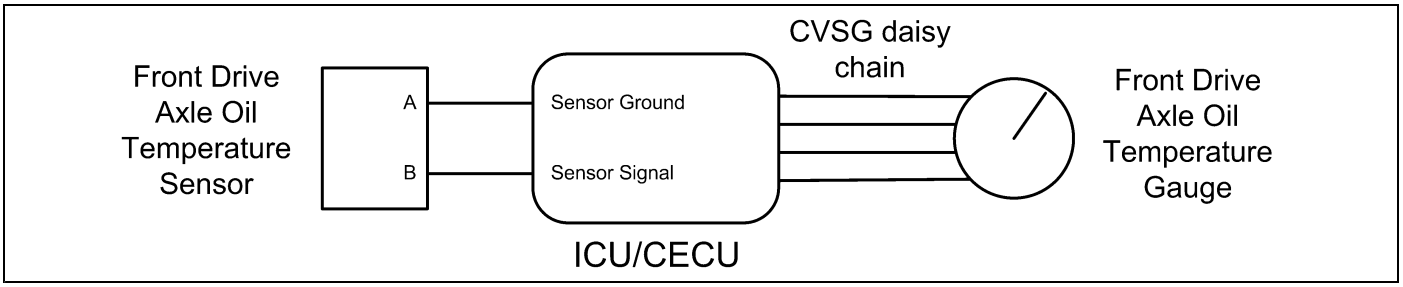

Step	Check	Result	Next Step
1	Turn ignition key ON. Start ESA, then select “Connect” to establish communication to the vehicle.		Go to **Step 2**.
2	Select “Monitor.” From the “Components” window, select “Front Drive Axle Oil Temperature,” then select “Open.”	Gauge graphic on screen displays reasonable reading.	Go to **Step 3**.
		Gauge graphic on screen does not display reasonable reading.	Go to **Step 4**.
3	Select “Simulate”. Drag the “Value” bar until the pointer on the gauge image is approximately mid-scale. Observe vehicle gauge movement.	Vehicle gauge does not move. Go to **Step 3-1**. Vehicle gauge reading is in the same range as the ESA gauge image. Go to **Step 3-7**.	Perform the following checks: *NOTE: For vehicles with a CECU, use the "Program" feature in ESA to make sure that the parameter for the inoperative gauge is enabled. An inoperative gauge may simply have its CECU parameter set to disabled.* 1. Check CVSG data link wiring: Observe Gauge position in the wiring daisy chain. a. If gauge is mounted between two other functioning gauges CVSG data link wiring is OK. Go to **Step 3-5**. b. If gauge is last gauge in daisy chain or followed by other non-functional gauges, go to **Step 3-2**. 2. Check continuity between Pin 1 on gauge harness connector and Pin 14 of the 52 Pin ICU/CECU connector C. 3. Check continuity between Pin 3 on gauge harness connector and Pin 15 of the 52 Pin ICU/CECU connector C. 4. Repair daisy chain jumper harness as necessary. 5. Once continuity on both wires exists, perform “Simulate” test again. a. If gauge functions properly during “Simulate” test, repair is complete. **Return truck to service.** b. If gauge does not function during “Simulate” test, install a known good gauge and perform “Simulate” test again. i. If gauge functions properly test is complete. Install new gauge permanently. Re-test and **return truck to service.** ii. If gauge does not function during “Simulate” test, install Test ICU/CECU and perform “Simulate” test again. (1) If gauge functions properly test is complete. Install new ICU/CECU permanently. Re-test and **return truck to service.** (2) If gauge does not function properly during “Simulate” test, replace gauge. 6. Once gauge is replaced. a. Verify gauge functionality. b. **Return truck to service.** 7. Is this a recheck after **Step 5**, **Step 6** or **Step 7**? a. Yes. **Return truck to service.** b. No, Gauge and CVSG data link wiring is not the problem. Go to **Step 4**.

Step	Check	Result	Next Step
4	Select “Diagnose” to view front drive axle temperature gauge diagnostic trouble codes.	DTC 57803 displayed - Open in axle 1 oil temp circuit.	Indicates the problem could be an open in the wiring from the ICU/CECU to the pyrometer sensor or a defective sensor. Go to **Step 5**, and if necessary, **Step 6**.
		DTC 57804 displayed - Short in axle 1 oil temp circuit.	Indicates the problem could be a short to ground in the wiring from the ICU/CECU to the sensor or a defective sensor. Go to **Step 5**, and if necessary, **Step 7**.
5	Unplug oil temperature harness connector at sensor. Using a digital multimeter, check continuity on ground and signal wire at sensor connector. Pin A – Ground Pin B - Signal See Harness Interface Diagrams for possible sensor locations. See Connector Identification for position and identification of the electrical connectors of ICU/CECU. See ICU/CECU Pinout for terminal details of the ICU/CECU electrical connections.	(Sensor Ground) - There should be continuity between the sensor connector ground wire (Pin A) and a cab ground terminal. (Signal) - There should be continuity between the sensor connector signal wire (Pin B) and Pin 17 of the 52 Pin ICU/CECU connector C.	1. Check for continuity between sensor connector Pin A and firewall ground stud. a. If there is continuity between Pin A and the ground terminal, test is complete. Go to **Step 5-2**. b. If there is no continuity between Pin A and the ground terminal, repair wiring as necessary. Go to **Step 5-1**. 2. Check for continuity between sensor connector Pin B and Pin 17 of the 52 Pin ICU/CECU connector C. a. If there is continuity between Pin B and Pin 17, test is complete. Go to **Step 6**. b. If there is no continuity between Pin B and Pin 17 at ICU/CECU, repair wiring as necessary. Go to **Step 5-2**. **Alternate test method:** Resistance in the oil temperature sensor (thermistor) signal wire changes as oil temperature increases/decreases. 1. By unplugging the oil temperature sensor harness connector and connecting a resistor decade box (i.e., Ametek PST2000 Tester), or an appropriate resistor to Pins A and B, you can simulate the sensor by dialing in a known resistance. 2. Observe vehicle gauge reading on dash. 3. If gauge needle moves to approximately the same temperature as in the table below, the problem is a defective oil temperature sensor. See table below.

Temp °F	Resistance Ohms
-40	100,856
-22	52,594
-4	28,582
14	16,120
32	9,399
50	5,658
68	3,511
86	2,240
104	1,465
122	980.3
140	670.9
158	468.7
176	333.8
194	241.8
212	178.03
230	133.08
248	100.91
266	77.54
284	60.32

Step	Check	Result	Next Step	
			302	47.46
			320	37.75
			338	30.32
			356	24.58
			374	20.11
			392	16.58
6	Select “Diagnose” to view front drive axle temperature gauge DTCs. Unplug oil temperature harness connector at sensor. See Harness Interface Diagrams for possible sensor locations. See Connector Identification for position and identification of the electrical connectors of ICU/CECU. See ICU/CECU Pinout for terminal details of the ICU/CECU electrical connections.	DTC 57803 - Open in axle 1 oil temp circuit is displayed as “Active.”	1. Using a jumper wire, jump across sensor harness connector Pins A and B. 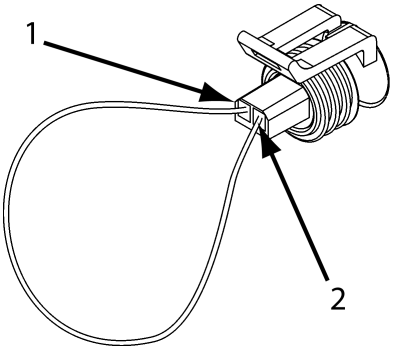 1. Pin B 2. Pin A a. If an “Active” DTC 57804 - Short in axle 1 temp circuit is now displayed, you have confirmed there is not an open in the sensor signal wire to the ICU/CECU. The original fault (DTC 57803) was logged because there is an open in the oil temperature sensor itself, not the wiring. Replace sensor. Go to **Step 2**. b. If DTC 57804 is not displayed, there is an open circuit in the signal wire between sensor connector Pin B and Pin 17 of the 52 Pin ICU/CECU connector C. Repair wiring as necessary. Go to **Step 2**. **Alternate test method:** Check for continuity between sensor connector Pin B (sensor signal) and Pin 17 of the 52 Pin ICU/CECU connector C. 1. If there is no continuity, repair wiring as necessary. After repairs, DTC 57803 should now be displayed as “Inactive.” 2. If there is continuity between sensor connector Pin B and Pin 17 of the 52 Pin ICU/CECU connector C, the open circuit is in the sensor itself, not in the wiring. Replace sensor.	
7	Select “Diagnose” to view front drive axle temperature gauge DTCs. Next, unplug the oil temperature harness connector at sensor. See Harness Interface Diagrams for possible sensor locations. See Connector Identification for position and identification of the	DTC 57804 - Short in axle 1 oil temp circuit is displayed as “Active.”	If the fault is still “Active” after unplugging the sensor connector, you have confirmed there is a short to ground between Pin B (sensor signal) and Pin 17 of the 52 Pin ICU/CECU connector C. 1. Check for a pinched or chaffed wire between Pin B (sensor signal) and Pin 17 of the 52 Pin ICU/CECU connector C. Repair wiring as necessary. Go to **Step 2**.	
		DTC 57804 - Short in axle 1 temp circuit is now displayed as “Inactive.”	If DTC 57804 changes to “Inactive” after unplugging the sensor connector, you have confirmed the problem is a short in the sensor itself, not the wiring. 1. Replace sensor. Go to **Step 2**.	

Step	Check	Result	Next Step
	electrical connectors of ICU/CECU. See ICU/CECU Pinout for terminal details of the ICU/CECU electrical connections.		

Return to Table Of Contents

Rear Drive Axle Oil Temperature Gauge Inoperative

DTC7703 and DTC7704

Symptom: Rear drive axle oil temperature gauge inoperative. All other gauges are operational.

The Rear Drive Axle Oil Temperature Gauge uses a thermistor sensor to measure axle oil temperature.

The following procedures have been developed to assist the technician in diagnosing multiplexed instrumentation problems using the Electronic Service Analyst (ESA) hardware/software diagnostic tool. It is assumed the service technician performing instrumentation repairs is knowledgeable about how to use ESA.

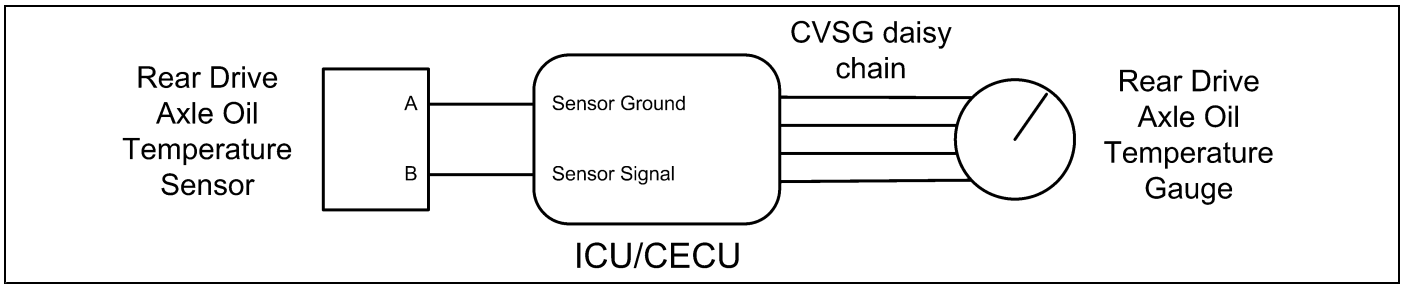

Step	Check	Result	Next Step
1	Turn ignition key ON. Start ESA, then select “Connect” to establish communication to the vehicle.		Go to **Step 2**.
2	Select “Monitor.” From the “Components” window, select “Rear Drive Axle Oil Temperature,” then select “Open.”	Gauge graphic on screen displays reasonable reading.	Go to **Step 3**.
		Gauge graphic on screen does not display reasonable reading.	Go to **Step 4**.
3	Select “Simulate”. Drag the “Value” bar until the pointer on the gauge image is approximately mid-scale. Observe vehicle gauge movement.	Vehicle gauge does not move. Go to **Step 3-1**. Vehicle gauge reading is in the same range as the ESA gauge image. Go to **Step 3-7**.	Perform the following checks: *NOTE: For vehicles with a CECU, use the "Program" feature in ESA to make sure that the parameter for the inoperative gauge is enabled. An inoperative gauge may simply have its CECU parameter set to disabled.* 1. Check CVSG data link wiring: Observe Gauge position in the wiring daisy chain. a. If gauge is mounted between two other functioning gauges CVSG data link wiring is OK. Go to **Step 3-5**. b. If gauge is last gauge in daisy chain or followed by other non-functional gauges, go to **Step 3-2**. 2. Check continuity between Pin 1 on gauge harness connector and Pin 14 of the 52 Pin ICU/CECU connector C. 3. Check continuity between Pin 3 on gauge harness connector and Pin 15 of the 52 Pin ICU/CECU connector C. 4. Repair daisy chain jumper harness as necessary. 5. Once continuity on both wires exists, perform “Simulate” test again. a. If gauge functions properly during “Simulate” test, repair is complete. **Return truck to service.** b. If gauge does not function during “Simulate” test, install a known good gauge and perform “Simulate” test again. i. If gauge functions properly test is complete. Install new gauge permanently. Re-test and **return truck to service.** ii. If gauge does not function during “Simulate” test, install Test ICU/CECU and perform “Simulate” test again. (1) If gauge functions properly test is complete. Install new ICU/CECU permanently. Re-test and **return truck to service.** (2) If gauge does not function properly during “Simulate” test, replace gauge. 6. Once gauge is replaced. a. Verify gauge functionality. b. **Return truck to service.** 7. Is this a recheck after **Step 5**, **Step 6** or **Step 7**? a. Yes. **Return truck to service.** b. No, Gauge and CVSG data link wiring is not the problem. Go to **Step 4**.

Step	Check	Result	Next Step
4	Select “Diagnose” to view rear drive axle temperature gauge diagnostic trouble codes.	DTC 7703 displayed - Open in axle 2 oil temp circuit.	Indicates the problem could be an open in the wiring from the ICU/CECU to the sensor or a defective sensor. Go to **Step 5**, and if necessary, **Step 6**.
		DTC 7704 displayed - Short in axle 2 oil temp circuit.	Indicates the problem could be a short to ground in the wiring from the ICU/CECU to the sensor or a defective sensor. Go to **Step 5**, and if necessary, **Step 7**.
5	Unplug oil temperature harness connector at sensor. Using a digital multimeter, check continuity on ground and signal wire at sensor connector. Pin A – Ground Pin B - Signal See Harness Interface Diagrams for possible sensor locations. See Connector Identification for position and identification of the electrical connectors of ICU/CECU. See ICU/CECU Pinout for terminal details of the ICU/CECU electrical connections.	(Sensor Ground) - There should be continuity between the sensor connector ground wire (Pin A) and a cab ground terminal. (Signal) - There should be continuity between the sensor connector signal wire (Pin B) and Pin 18 of the 52 Pin ICU/CECU connector C.	1. Check for continuity between sensor connector Pin A and firewall ground stud. a. If there is continuity between Pin A and the ground terminal, test is complete. Go to **Step 5-2**. b. If there is no continuity between Pin A and the ground terminal, repair wiring as necessary. Go to **Step 5-1**. 2. Check for continuity between sensor connector Pin B and Pin 18 of the 52 Pin ICU/CECU connector C. a. If there is continuity between Pin B and Pin 18, test is complete. Go to **Step 6**. b. If there is no continuity between Pin B and Pin 18 at ICU/CECU, repair wiring as necessary. Go to **Step 5-2**. **Alternate test method:** Resistance in the oil temperature sensor (thermistor) signal wire changes as oil temperature increases/decreases. 1. By unplugging the oil temperature sensor harness connector and connecting a resistor decade box (i.e., Ametek PST2000 Tester), or an appropriate resistor to Pins A and B, you can simulate the sensor by dialing in a known resistance. 2. Observe vehicle gauge reading on dash. 3. If gauge needle moves to approximately the same temperature as in the table below, the problem is a defective oil temperature sensor. See table below.

Temp °F	Resistance Ohms
-40	100,856
-22	52,594
-4	28,582
14	16,120
32	9,399
50	5,658
68	3,511
86	2,240
104	1,465
122	980.3
140	670.9
158	468.7
176	333.8
194	241.8
212	178.03
230	133.08
248	100.91
266	77.54
284	60.32
302	47.46

Step	Check	Result	Next Step	
			320	37.75
			338	30.32
			356	24.58
			374	20.11
			392	16.58
6	Select “Diagnose” to view rear drive axle temperature gauge DTCs. Unplug oil temperature harness connector at sensor. See Harness Interface Diagrams for possible sensor locations. See Connector Identification for position and identification of the electrical connectors of ICU/CECU. See ICU/CECU Pinout for terminal details of the ICU/CECU electrical connections.	DTC 7703 - Open in axle 2 oil temp circuit is displayed as “Active.”	1. Using a jumper wire, jump across sensor harness connector Pins A and B. 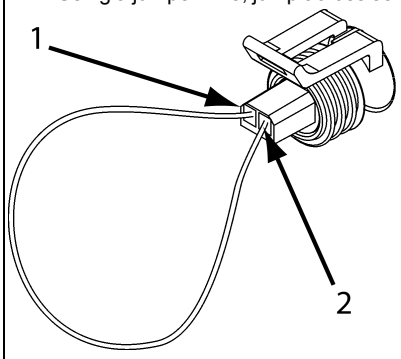 1. Pin B 2. Pin A a. If an “Active” DTC 7704 - Short in axle 2 temp circuit is now displayed, you have confirmed there is not an open in the sensor signal wire to the ICU/CECU. The original fault (DTC 7703) was logged because there is an open in the oil temperature sensor itself, not the wiring. Replace sensor. Go to **Step 2**. b. If DTC 7704 is not displayed, there is an open circuit in the signal wire between sensor connector Pin B and Pin 18 of the 52 Pin ICU/CECU connector C. Repair wiring as necessary. Go to **Step 2**. **Alternate test method:** Check for continuity between sensor connector Pin B (sensor signal) and Pin 18 of the 52 Pin ICU/CECU connector C. 1. If there is no continuity, repair wiring as necessary. After repairs, DTC 7703 should now be displayed as “Inactive.” 2. If there is continuity between sensor connector Pin B and Pin 18 of the 52 Pin ICU/CECU connector C, the open circuit is in the sensor itself, not in the wiring. Replace sensor.	
7	Select “Diagnose” to view rear drive axle temperature gauge DTCs. Next, unplug the oil temperature harness connector at sensor. See Harness Interface Diagrams for possible sensor locations. See Connector Identification for position and identification of the	DTC 7704 - Short in axle 2 oil temp circuit is displayed as “Active.”	If the fault is still “Active” after unplugging the sensor connector, you have confirmed there is a short to ground between Pin B (sensor signal) and Pin 18 of the 52 Pin ICU/CECU connector C. 1. Check for a pinched or chaffed wire between Pin B (sensor signal) and Pin 18 of the 52 Pin ICU/CECU connector C. Repair wiring as necessary. Go to **Step 2**.	
		DTC 7704 - Short in axle 2 oil temp circuit is now displayed as “Inactive.”	If DTC 7704 changes to “Inactive” after unplugging the sensor connector, you have confirmed the problem is a short in the sensor itself, not the wiring. 1. Replace sensor. Go to **Step 2**.	

Step	Check	Result	Next Step
	electrical connectors of ICU/CECU. See ICU/CECU Pinout for terminal details of the ICU/CECU electrical connections.		

Return to Table Of Contents

Center Drive Axle Oil Temperature Gauge Inoperative

DTC7803 and DTC7804

Symptom: Center drive axle oil temperature gauge inoperative. All other gauges are operational.

The Center Drive Axle Oil Temperature Gauge uses a thermistor sensor to measure axle oil temperature.

The following procedures have been developed to assist the technician in diagnosing multiplexed instrumentation problems using the Electronic Service Analyst (ESA) hardware/software diagnostic tool. It is assumed the service technician performing instrumentation repairs is knowledgeable about how to use ESA.

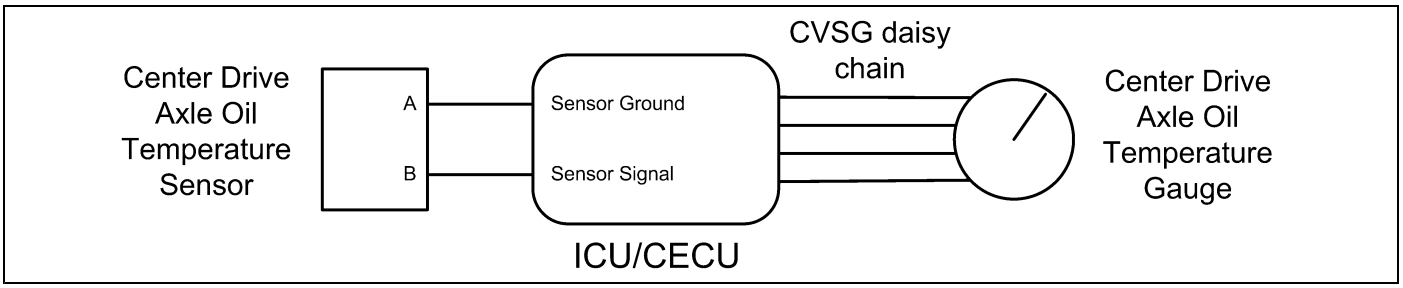

Step	Check	Result	Next Step
1	Turn ignition key ON. Start ESA, then select “Connect” to establish communication to the vehicle.		Go to **Step 2**.
2	Select “Monitor.” From the “Components” window, select “Center Drive Axle Oil Temperature,” then select “Open.”	Gauge graphic on screen displays reasonable reading.	Go to **Step 3**.
		Gauge graphic on screen does not display reasonable reading.	Go to **Step 4**.
3	Select “Simulate”. Drag the “Value” bar until the pointer on the gauge image is approximately mid-scale. Observe vehicle gauge movement.	Vehicle gauge does not move. Go to **Step 3-1**. Vehicle gauge reading is in the same range as the ESA gauge image. Go to **Step 3-7**.	Perform the following checks: *NOTE: For vehicles with a CECU, use the "Program" feature in ESA to make sure that the parameter for the inoperative gauge is enabled. An inoperative gauge may simply have its CECU parameter set to disabled.* 1. Check CVSG data link wiring: Observe Gauge position in the wiring daisy chain. a. If gauge is mounted between two other functioning gauges CVSG data link wiring is OK. Go to **Step 3-5**. b. If gauge is last gauge in daisy chain or followed by other non-functional gauges, go to **Step 3-2**. 2. Check continuity between Pin 1 on gauge harness connector and Pin 14 of the 52 Pin ICU/CECU connector C. 3. Check continuity between Pin 3 on gauge harness connector and Pin 15 of the 52 Pin ICU/CECU connector C. 4. Repair daisy chain jumper harness as necessary. 5. Once continuity on both wires exists, perform “Simulate” test again. a. If gauge functions properly during “Simulate” test, repair is complete. **Return truck to service.** b. If gauge does not function during “Simulate” test, install a known good gauge and perform “Simulate” test again. i. If gauge functions properly test is complete. Install new gauge permanently. Re-test and **return truck to service.** ii. If gauge does not function during “Simulate” test, install Test ICU/CECU and perform “Simulate” test again. (1) If gauge functions properly test is complete. Install new ICU/CECU permanently. Re-test and **return truck to service.** (2) If gauge does not function properly during “Simulate” test, replace gauge. 6. Once gauge is replaced. a. Verify gauge functionality. b. **Return truck to service.** 7. Is this a recheck after **Step 5**, **Step 6** or **Step 7**? a. Yes. **Return truck to service.** b. No, Gauge and CVSG data link wiring is not the problem. Go to **Step 4**.

Step	Check	Result	Next Step
4	Select “Diagnose” to view center drive axle temperature gauge diagnostic trouble codes.	DTC 7803 displayed - Open in axle 3 oil temp circuit.	Indicates the problem could be an open in the wiring from the ICU/CECU to the sensor or a defective sensor. Go to **Step 5**, and if necessary, **Step 6**.
		DTC 7804 displayed - Short in axle 3 oil temp circuit.	Indicates the problem could be a short to ground in the wiring from the ICU/CECU to the sensor or a defective sensor. Go to **Step 5**, and if necessary, **Step 7**.
5	Unplug oil temperature harness connector at sensor. Using a digital multimeter, check continuity on ground and signal wire at sensor connector. Pin A – Ground Pin B - Signal See Harness Interface Diagrams for possible sensor locations. See Connector Identification for position and identification of the electrical connectors of ICU/CECU. See ICU/CECU Pinout for terminal details of the ICU/CECU electrical connections.	(Sensor Ground) - There should be continuity between the sensor connector ground wire (Pin A) and a cab ground terminal. (Signal) - There should be continuity between the sensor connector signal wire (Pin B) and Pin 19 of the 52 Pin ICU/CECU connector C.	1. Check for continuity between sensor connector Pin A and firewall ground stud. a. If there is continuity between Pin A and the ground terminal, test is complete. Go to **Step 5-2**. b. If there is no continuity between Pin A and the ground terminal, repair wiring as necessary. Go to **Step 5-1**. 2. Check for continuity between sensor connector Pin B and Pin 19 of the 52 Pin ICU/CECU connector C. a. If there is continuity between Pin B and Pin 19, test is complete. Go to **Step 6**. b. If there is no continuity between Pin B and Pin 19 at ICU/CECU, repair wiring as necessary. Go to **Step 5-2**. **Alternate test method:** Resistance in the oil temperature sensor (thermistor) signal wire changes as oil temperature increases/decreases. 1. By unplugging the oil temperature sensor harness connector and connecting a resistor decade box (i.e., Ametek PST2000 Tester), or an appropriate resistor to Pins A and B, you can simulate the sensor by dialing in a known resistance. 2. Observe vehicle gauge reading on dash. 3. If gauge needle moves to approximately the same temperature as in the table below, the problem is a defective oil temperature sensor. See table below.

Temp °F	Resistance Ohms
-40	100,856
-22	52,594
-4	28,582
14	16,120
32	9,399
50	5,658
68	3,511
86	2,240
104	1,465
122	980.3
140	670.9
158	468.7
176	333.8
194	241.8
212	178.03
230	133.08
248	100.91
266	77.54
284	60.32
302	47.46

Step	Check	Result	Next Step	
			320	37.75
			338	30.32
			356	24.58
			374	20.11
			392	16.58
6	Select “Diagnose” to view center drive axle temperature gauge DTCs. Unplug oil temperature harness connector at sensor. See Harness Interface Diagrams for possible sensor locations. See Connector Identification for position and identification of the electrical connectors of ICU/CECU. See ICU/CECU Pinout for terminal details of the ICU/CECU electrical connections.	DTC 7803 - Open in axle 3 oil temp circuit is displayed as “Active.”	1. Using a jumper wire, jump across sensor harness connector Pins A and B. 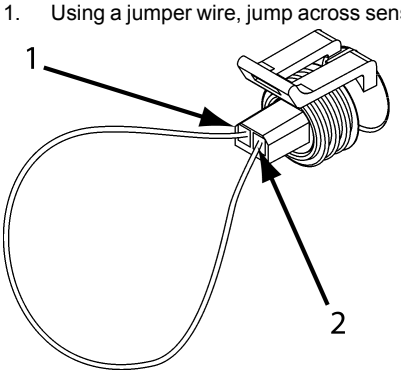 1. Pin B 2. Pin A a. If an “Active” DTC 7804 - Short in axle 3 temp circuit is now displayed, you have confirmed there is not an open in the sensor signal wire to the ICU/CECU. The original fault (DTC 7803) was logged because there is an open in the oil temperature sensor itself, not the wiring. Replace sensor. Go to **Step 2**. b. If DTC 7804 is not displayed, there is an open circuit in the signal wire between sensor connector Pin B and Pin 19 of the 52 Pin ICU/CECU connector C. Repair wiring as necessary. Go to **Step 2**. **Alternate test method:** Check for continuity between sensor connector Pin B (sensor signal) and Pin 19 of the 52 Pin ICU/CECU connector C. 1. If there is no continuity, repair wiring as necessary. After repairs, DTC 7803 should now be displayed as “Inactive.” 2. If there is continuity between sensor connector Pin B and Pin 19 of the 52 Pin ICU/CECU connector C, the open circuit is in the sensor itself, not in the wiring. Replace sensor.	
7	Select “Diagnose” to view center drive axle temperature gauge DTCs. Next, unplug the oil temperature harness connector at sensor. See Harness Interface Diagrams for possible sensor locations. See Connector Identification for position and identification of the	DTC 7804 - Short in axle 3 oil temp circuit is displayed as “Active.”	If the fault is still “Active” after unplugging the sensor connector, you have confirmed there is a short to ground between Pin B (sensor signal) and Pin 19 of the 52 Pin ICU/CECU connector C. 1. Check for a pinched or chaffed wire between Pin B (sensor signal) and Pin 19 of the 52 Pin ICU/CECU connector C. Repair wiring as necessary. Go to **Step 2**.	
		DTC 7804 - Short in axle 3 oil temp circuit is now displayed as “Inactive.”	If DTC 77804 changes to “Inactive” after unplugging the sensor connector, you have confirmed the problem is a short in the sensor itself, not the wiring. 1. Replace sensor. Go to **Step 2**.	

Step	Check	Result	Next Step
	electrical connectors of ICU/CECU. See ICU/CECU Pinout for terminal details of the ICU/CECU electrical connections.		

Return to Table Of Contents

Transmission Oil Temperature Gauge Inoperative

DTC17703 and DTC17704

Symptom: Transmission oil temperature gauge inoperative. All other gauges are operational.

The Transmission Oil Temperature Gauge uses a thermistor sensor to measure transmission oil temperature.

The following procedures have been developed to assist the technician in diagnosing multiplexed instrumentation problems using the Electronic Service Analyst (ESA) hardware/software diagnostic tool. It is assumed the service technician performing instrumentation repairs is knowledgeable about how to use ESA.

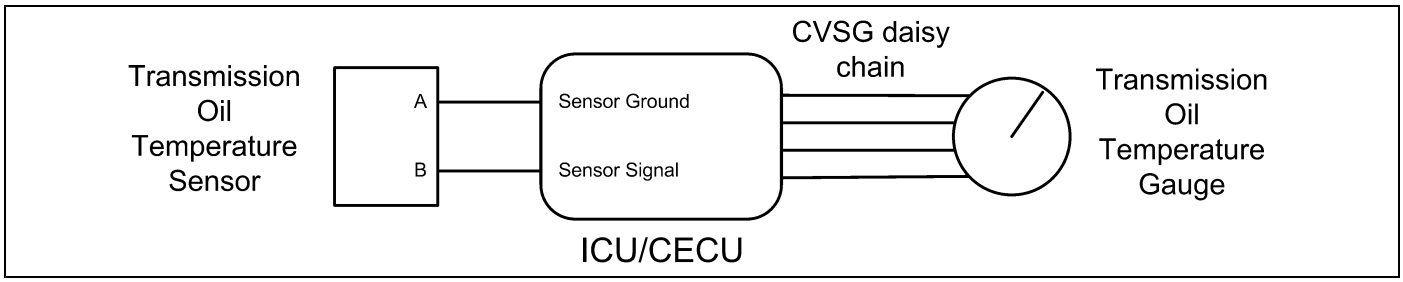

Step	Check	Result	Next Step
1	Turn ignition key ON. Start ESA, then select “Connect” to establish communication to the vehicle.		Go to **Step 2**.
2	Select “Monitor.” From the “Components” window, select “Transmission Oil Temperature,” then select “Open.”	Gauge graphic on screen displays reasonable reading.	Go to **Step 3**.
		Gauge graphic on screen does not display reasonable reading.	Go to **Step 4**.
3	Select “Simulate”. Drag the “Value” bar until the pointer on the gauge image is approximately mid-scale. Observe vehicle gauge movement.	Vehicle gauge does not move. Go to **Step 3-1**. Vehicle gauge reading is in the same range as the ESA gauge image. Go to **Step 3-7**.	Perform the following checks: *NOTE: For vehicles with a CECU, use the "Program" feature in ESA to make sure that the parameter for the inoperative gauge is enabled. An inoperative gauge may simply have its CECU parameter set to disabled.* 1. Check CVSG data link wiring: Observe Gauge position in the wiring daisy chain. a. If gauge is mounted between two other functioning gauges CVSG data link wiring is OK. Go to **Step 3-5**. b. If gauge is last gauge in daisy chain or followed by other non-functional gauges, go to **Step 3-2**. 2. Check continuity between Pin 1 on gauge harness connector and Pin 14 of the 52 Pin ICU/CECU connector C. 3. Check continuity between Pin 3 on gauge harness connector and Pin 15 of the 52 Pin ICU/CECU connector C. 4. Repair daisy chain jumper harness as necessary. 5. Once continuity on both wires exists, perform “Simulate” test again. a. If gauge functions properly during “Simulate” test, repair is complete. **Return truck to service.** b. If gauge does not function during “Simulate” test, install a known good gauge and perform “Simulate” test again. i. If gauge functions properly test is complete. Install new gauge permanently. Re-test and **return truck to service.** ii. If gauge does not function during “Simulate” test, install Test ICU/CECU and perform “Simulate” test again. (1) If gauge functions properly test is complete. Install new ICU/CECU permanently. Re-test and **return truck to service.** (2) If gauge does not function properly during “Simulate” test, replace gauge. 6. Once gauge is replaced. a. Verify gauge functionality. b. **Return truck to service.** 7. Is this a recheck after **Step 5**, **Step 6** or **Step 7**? a. Yes. **Return truck to service.** b. No, Gauge and CVSG data link wiring is not the problem. Go to **Step 4**.

Step	Check	Result	Next Step
4	Select “Diagnose” to view main transmission oil temperature gauge diagnostic trouble codes.	DTC 17703 displayed – Open in transmission oil temp circuit.	Indicates the problem could be an open in the wiring from the ICU/CECU to the sensor or a defective sensor. Go to **Step 5**, and if necessary, **Step 6**.
		DTC 17704 displayed – Short in transmission oil temp circuit.	Indicates the problem could be a short to ground in the wiring from the ICU/CECU to the sensor or a defective sensor. Go to **Step 5**, and if necessary, **Step 7**.
5	Unplug oil temperature harness connector at sensor. Using a digital multimeter, check continuity on ground and signal wire at sensor connector. Pin A – Ground Pin B - Signal See Harness Interface Diagrams for possible sensor locations. See Connector Identification for position and identification of the electrical connectors of ICU/CECU. See ICU/CECU Pinout for terminal details of the ICU/CECU electrical connections.	(Sensor Ground) - There should be continuity between the sensor connector ground wire (Pin A) and a cab ground terminal. (Signal) - There should be continuity between the sensor connector signal wire (Pin B) and Pin 21 of the 52 Pin ICU/CECU connector C.	1. Check for continuity between sensor connector Pin A and firewall ground stud. a. If there is continuity between Pin A and the ground terminal, test is complete. Go to **Step 5-2**. b. If there is no continuity between Pin A and the ground terminal, repair wiring as necessary. Go to **Step 5-1**. 2. Check for continuity between sensor connector Pin B and Pin 21 of the 52 Pin ICU/CECU connector C. a. If there is continuity between Pin B and Pin 21, test is complete. Go to **Step 6**. b. If there is no continuity between Pin B and Pin 21 at ICU/CECU, repair wiring as necessary. Go to **Step 5-2**. **Alternate test method:** Resistance in the oil temperature sensor (thermistor) signal wire changes as oil temperature increases/decreases. 1. By unplugging the oil temperature sensor harness connector and connecting a resistor decade box (i.e., Ametek PST2000 Tester), or an appropriate resistor to Pins A and B, you can simulate the sensor by dialing in a known resistance. 2. Observe vehicle gauge reading on dash. 3. If gauge needle moves to approximately the same temperature as in the table below, the problem is a defective oil temperature sensor. See table below.

Temp °F	Resistance Ohms
-40	100,856
-22	52,594
-4	28,582
14	16,120
32	9,399
50	5,658
68	3,511
86	2,240
104	1,465
122	980.3
140	670.9
158	468.7
176	333.8
194	241.8
212	178.03
230	133.08
248	100.91
266	77.54
284	60.32
302	47.46

Step	Check	Result	Next Step	
			320	37.75
			338	30.32
			356	24.58
			374	20.11
			392	16.58
6	Select “Diagnose” to view transmission temperature gauge DTCs. Unplug oil temperature harness connector at sensor. See Harness Interface Diagrams for possible sensor locations. See Connector Identification for position and identification of the electrical connectors of ICU/CECU. See ICU/CECU Pinout for terminal details of the ICU/CECU electrical connections.	DTC 17703 - Open in transmission oil temp circuit is displayed as “Active.”	1. Using a jumper wire, jump across sensor harness connector Pins A and B. 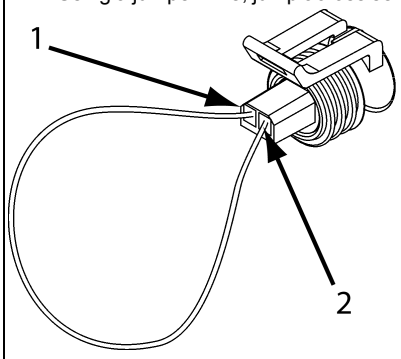 1. Pin B 2. Pin A a. If an “Active” DTC 17704 - Short in transmission temp circuit is now displayed, you have confirmed there is not an open in the sensor signal wire to the ICU/CECU. The original fault (DTC 17703) was logged because there is an open in the oil temperature sensor itself, not the wiring. Go to **Step 2**. b. If DTC 17704 is not displayed, there is an open circuit in the signal wire between sensor connector Pin B and Pin 21 of the 52 Pin ICU/CECU connector C. Repair wiring as necessary. Go to **Step 2**. **Alternate test method:** Check for continuity between sensor connector Pin B (sensor signal) and Pin 21 of the 52 Pin ICU/CECU connector C. 1. If there is no continuity, repair wiring as necessary. After repairs, DTC 17703 should now be displayed as “Inactive.” 2. If there is continuity between sensor connector Pin B and Pin 21 of the 52 Pin ICU/CECU connector C, the open circuit is in the sensor itself, not in the wiring. Replace sensor.	
7	Select “Diagnose” to view transmission temperature gauge DTCs. Next, unplug the oil temperature harness connector at sensor. See Harness Interface Diagrams for possible sensor locations. See Connector Identification for position and identification of the	DTC 17704 - Short in transmission oil temp circuit is displayed as “Active.”	If the fault is still “Active” after unplugging the sensor connector, you have confirmed there is a short to ground between Pin B (sensor signal) and Pin 21 of the 52 Pin ICU/CECU connector C. 1. Check for a pinched or chaffed wire between Pin B (sensor signal) and Pin 21 of the 52 Pin ICU/CECU connector C. Repair wiring as necessary. Go to **Step 2**.	
		DTC 17704 - Short in transmission oil temp circuit is now displayed as “Inactive.”	If DTC 17704 changes to “Inactive” after unplugging the sensor connector, you have confirmed the problem is a short in the sensor itself, not the wiring. 1. Replace sensor. Go to **Step 2**.	

Step	Check	Result	Next Step
	electrical connectors of ICU/CECU. See ICU/CECU Pinout for terminal details of the ICU/CECU electrical connections.		

Return to Table Of Contents

Auxiliary Transmission Oil Temperature Gauge Inoperative

DTC44203 and DTC44204

Symptom: Auxiliary transmission oil temperature gauge inoperative. All other gauges are operational.

The Auxiliary Transmission Oil Temperature Gauge uses a thermistor sensor to measure transmission oil temperature.

The following procedures have been developed to assist the technician in diagnosing multiplexed instrumentation problems using the Electronic Service Analyst (ESA) hardware/software diagnostic tool. It is assumed the service technician performing instrumentation repairs is knowledgeable about how to use ESA.

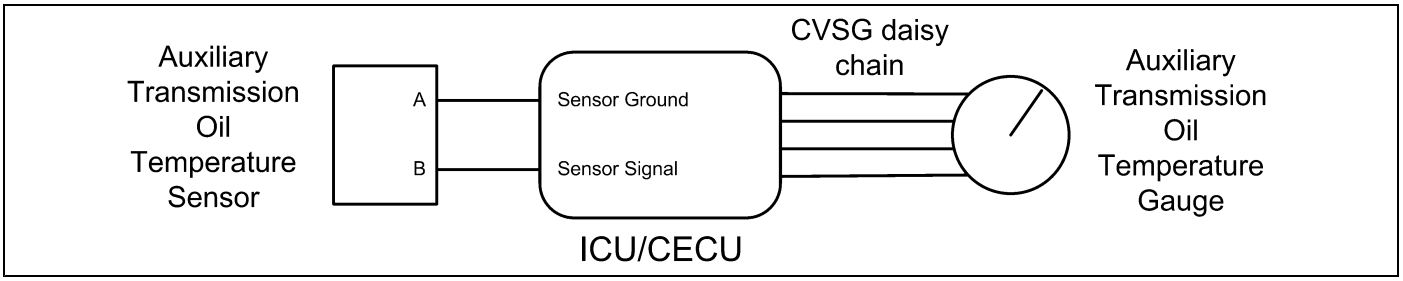

Step	Check	Result	Next Step
1	Turn ignition key ON. Start ESA, then select “Connect” to establish communication to the vehicle.		Go to **Step 2**.
2	Select “Monitor.” From the “Components” window, select “Auxiliary Transmission Oil Temperature,” then select “Open.”	Gauge graphic on screen displays reasonable reading.	Go to **Step 3**.
		Gauge graphic on screen does not display reasonable reading.	Go to **Step 4**.
3	Select “Simulate”. Drag the “Value” bar until the pointer on the gauge image is approximately mid-scale. Observe vehicle gauge movement.	Vehicle gauge does not move. Go to **Step 3-1**. Vehicle gauge reading is in the same range as the ESA gauge image. Go to **Step 3-7**.	Perform the following checks: *NOTE: For vehicles with a CECU, use the "Program" feature in ESA to make sure that the parameter for the inoperative gauge is enabled. An inoperative gauge may simply have its CECU parameter set to disabled.* 1. Check CVSG data link wiring: Observe Gauge position in the wiring daisy chain. a. If gauge is mounted between two other functioning gauges CVSG data link wiring is OK. Go to **Step 3-5**. b. If gauge is last gauge in daisy chain or followed by other non-functional gauges, go to **Step 3-2**. 2. Check continuity between Pin 1 on gauge harness connector and Pin 14 of the 52 Pin ICU/CECU connector C. 3. Check continuity between Pin 3 on gauge harness connector and Pin 15 of the 52 Pin ICU/CECU connector C. 4. Repair daisy chain jumper harness as necessary. 5. Once continuity on both wires exists, perform “Simulate” test again. a. If gauge functions properly during “Simulate” test, repair is complete. **Return truck to service.** b. If gauge does not function during “Simulate” test, install a known good gauge and perform “Simulate” test again. i. If gauge functions properly test is complete. Install new gauge permanently. Re-test and **return truck to service.** ii. If gauge does not function during “Simulate” test, install Test ICU/CECU and perform “Simulate” test again. (1) If gauge functions properly test is complete. Install new ICU/CECU permanently. Re-test and **return truck to service.** (2) If gauge does not function properly during “Simulate” test, replace gauge. 6. Once gauge is replaced. a. Verify gauge functionality. b. **Return truck to service.** 7. Is this a recheck after **Step 5**, **Step 6** or **Step 7**? a. Yes. **Return truck to service.** b. No, Gauge and CVSG data link wiring is not the problem. Go to **Step 4**.

Step	Check	Result	Next Step
4	Select "Diagnose" to view auxiliary transmission oil temperature gauge diagnostic trouble codes.	DTC 44203 displayed - Open in aux transmission temp circuit.	Indicates the problem could be an open in the wiring from the ICU/CECU to the sensor or a defective sensor. Go to **Step 5**, and if necessary, **Step 6**.
		DTC 44204 displayed - Short in aux transmission temp circuit.	Indicates the problem could be a short to ground in the wiring from the ICU/CECU to the sensor or a defective sensor. Go to **Step 5**, and if necessary, **Step 7**.
5	Unplug oil temperature harness connector at sensor. Using a digital multimeter, check continuity on ground and signal wire at sensor connector. Pin A – Ground Pin B - Signal See Harness Interface Diagrams for possible sensor locations. See Connector Identification for position and identification of the electrical connectors of ICU/CECU. See ICU/CECU Pinout for terminal details of the ICU/CECU electrical connections.	(Sensor Ground) - There should be continuity between the sensor connector ground wire (Pin A) and a cab ground terminal. (Signal) - There should be continuity between the sensor connector signal wire (Pin B) and Pin 22 of the 52 Pin ICU/CECU connector C.	1. Check for continuity between sensor connector Pin A and firewall ground stud. a. If there is continuity between Pin A and the ground terminal, test is complete. Go to **Step 5-2**. b. If there is no continuity between Pin A and the ground terminal, repair wiring as necessary. Go to **Step 5-1**. 2. Check for continuity between sensor connector Pin B and Pin 22 of the 52 Pin ICU/CECU connector C. a. If there is continuity between Pin B and Pin 22, test is complete. Go to **Step 6**. b. If there is no continuity between Pin B and Pin 22 at ICU/CECU, repair wiring as necessary. Go to **Step 5-2**. **Alternate test method:** Resistance in the oil temperature sensor (thermistor) signal wire changes as oil temperature increases/decreases. 1. By unplugging the oil temperature sensor harness connector and connecting a resistor decade box (i.e., Ametek PST2000 Tester), or an appropriate resistor to Pins A and B, you can simulate the sensor by dialing in a known resistance. 2. Observe vehicle gauge reading on dash. 3. If gauge needle moves to approximately the same temperature as in the table below, the problem is a defective oil temperature sensor. See table below.

Temp °F	Resistance Ohms
-40	100,856
-22	52,594
-4	28,582
14	16,120
32	9,399
50	5,658
68	3,511
86	2,240
104	1,465
122	980.3
140	670.9
158	468.7
176	333.8
194	241.8
212	178.03
230	133.08
248	100.91

Step	Check	Result	Next Step	
			266	77.54
			284	60.32
			302	47.46
			320	37.75
			338	30.32
			356	24.58
			374	20.11
			392	16.58
6	Select “Diagnose” to view auxiliary transmission temperature gauge DTCs. Unplug oil temperature harness connector at sensor. See Harness Interface Diagrams for possible sensor locations. See Connector Identification for position and identification of the electrical connectors of ICU/CECU. See ICU/CECU Pinout for terminal details of the ICU/CECU electrical connections.	DTC 44203 - Open in aux transmission temp circuit is displayed as “Active.”	1. Using a jumper wire, jump across sensor harness connector Pins A and B. 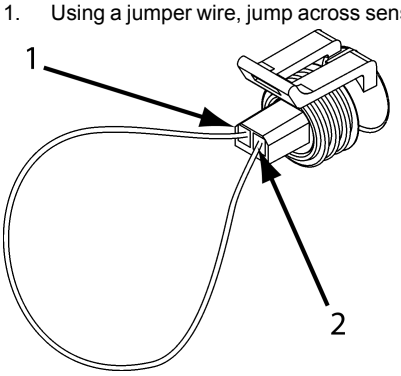 1. Pin B 2. Pin A a. If an “Active” DTC 44204 - Short in transmission temp circuit is now displayed, you have confirmed there is not an open in the sensor signal wire to the ICU/CECU. The original fault (DTC 44203) was logged because there is an open in the oil temperature sensor itself, not the wiring. Go to **Step 2**. b. If DTC 44204 is not displayed, there is an open circuit in the signal wire between sensor connector Pin B and Pin 22 of the 52 Pin ICU/CECU connector C. Repair wiring as necessary. Go to **Step 2**. **Alternate test method:** Check for continuity between sensor connector Pin B (sensor signal) and Pin 22 of the 52 Pin ICU/CECU connector C. 1. If there is no continuity, repair wiring as necessary. After repairs, DTC 44203 should now be displayed as “Inactive.” 2. If there is continuity between sensor connector Pin B and Pin 22 of the 52 Pin ICU/CECU connector C, the open circuit is in the sensor itself, not in the wiring. Replace sensor.	
7	Select “Diagnose” to view auxiliary transmission temperature gauge DTCs. Next, unplug the oil temperature harness connector at sensor. See Harness Interface Diagrams for possible sensor locations.	DTC 44204 - Short in aux transmission temp circuit is displayed as “Active.”	If the fault is still “Active” after unplugging the sensor connector, you have confirmed there is a short to ground between Pin B (sensor signal) and Pin 22 of the 52 Pin ICU/CECU connector C. 1. Check for a pinched or chaffed wire between Pin B (sensor signal) and Pin 22 of the 52 Pin ICU/CECU connector C. Repair wiring as necessary. Go to **Step 2**.	
		DTC 44204 - Short in aux transmission temp circuit is now displayed as “Inactive.”	If DTC 44204 changes to “Inactive” after unplugging the sensor connector, you have confirmed the problem is a short in the sensor itself, not the wiring. 1. Replace sensor. Go to **Step 2**.	

Step	Check	Result	Next Step
	See Connector Identification for position and identification of the electrical connectors of ICU/CECU. See ICU/CECU Pinout for terminal details of the ICU/CECU electrical connections.		

Return to Table Of Contents

Transfer Case Oil Temperature Gauge Inoperative

DTC138803 and DTC138804

Symptom: Transfer case oil temperature gauge inoperative. All other gauges are operational.

The Transfer Case Oil Temperature Gauge uses a thermistor sensor to measure the oil temperature.

The following procedures have been developed to assist the technician in diagnosing multiplexed instrumentation problems using the Electronic Service Analyst (ESA) hardware/software diagnostic tool. It is assumed the service technician performing instrumentation repairs is knowledgeable about how to use ESA.

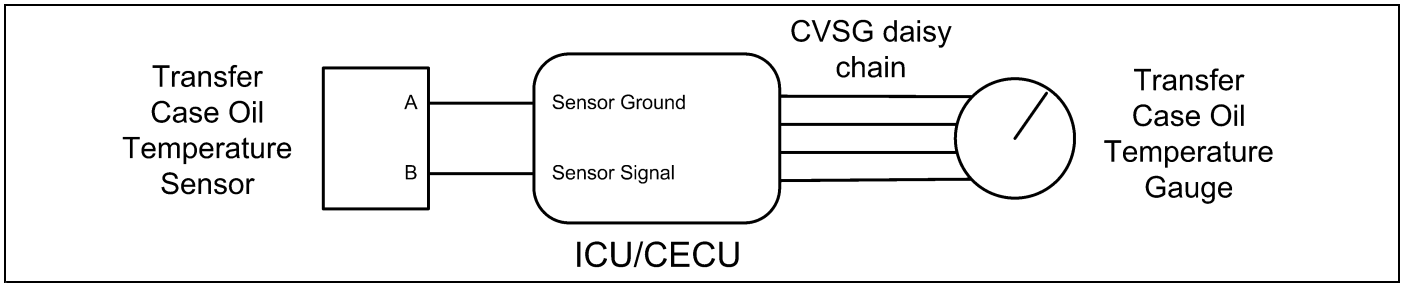

Step	Check	Result	Next Step
1	Turn ignition key ON. Start ESA, then select “Connect” to establish communication to the vehicle.		Go to **Step 2**.
2	Select “Monitor.” From the “Components” window, select “Transfer Case Oil Temperature,” then select “Open.”	Gauge graphic on screen displays reasonable reading.	Go to **Step 3**.
		Gauge graphic on screen does not display reasonable reading.	Go to **Step 4**.
3	Select “Simulate”. Drag the “Value” bar until the pointer on the gauge image is approximately mid-scale. Observe vehicle gauge movement.	Vehicle gauge does not move. Go to **Step 3-1**. Vehicle gauge reading is in the same range as the ESA gauge image. Go to **Step 3-7**.	Perform the following checks: *NOTE: For vehicles with a CECU, use the "Program" feature in ESA to make sure that the parameter for the inoperative gauge is enabled. An inoperative gauge may simply have its CECU parameter set to disabled.* 1. Check CVSG data link wiring: Observe Gauge position in the wiring daisy chain. a. If gauge is mounted between two other functioning gauges CVSG data link wiring is OK. Go to **Step 3-5**. b. If gauge is last gauge in daisy chain or followed by other non-functional gauges, go to **Step 3-2**. 2. Check continuity between Pin 1 on gauge harness connector and Pin 14 of the 52 Pin ICU/CECU connector C. 3. Check continuity between Pin 3 on gauge harness connector and Pin 15 of the 52 Pin ICU/CECU connector C. 4. Repair daisy chain jumper harness as necessary. 5. Once continuity on both wires exists, perform “Simulate” test again. a. If gauge functions properly during “Simulate” test, repair is complete. **Return truck to service.** b. If gauge does not function during “Simulate” test, install a known good gauge and perform “Simulate” test again. i. If gauge functions properly test is complete. Install new gauge permanently. Re-test and **return truck to service.** ii. If gauge does not function during “Simulate” test, install Test ICU/CECU and perform “Simulate” test again. (1) If gauge functions properly test is complete. Install new ICU/CECU permanently. Re-test and **return truck to service.** (2) If gauge does not function properly during “Simulate” test, replace gauge. 6. Once gauge is replaced. a. Verify gauge functionality. b. **Return truck to service.** 7. Is this a recheck after **Step 5**, **Step 6** or **Step 7**? a. Yes. **Return truck to service.** b. No, Gauge and CVSG data link wiring is not the problem. Go to **Step 4**.

Step	Check	Result	Next Step
4	Select “Diagnose” to view transfer case oil temperature gauge diagnostic trouble codes.	DTC 138803 displayed - Open in transfer case oil temp circuit.	Indicates the problem could be an open in the wiring from the ICU/CECU to the sensor or a defective sensor. Go to **Step 5**, and if necessary, **Step 6**.
		DTC 138804 displayed - Short in transfer case oil temp circuit.	Indicates the problem could be a short to ground in the wiring from the ICU/CECU to the sensor or a defective sensor. Go to **Step 5**, and if necessary, **Step 7**.
5	Unplug oil temperature harness connector at sensor. Using a digital multimeter, check continuity on ground and signal wire at sensor connector. Pin A – Ground Pin B - Signal See Harness Interface Diagrams for possible sensor locations. See Connector Identification for position and identification of the electrical connectors of ICU/CECU. See ICU/CECU Pinout for terminal details of the ICU/CECU electrical connections.	(Sensor Ground) - There should be continuity between the sensor connector ground wire (Pin A) and a cab ground terminal. (Signal) - There should be continuity between the sensor connector signal wire (Pin B) and Pin 26 of the 52 Pin ICU/CECU connector C.	1. Check for continuity between sensor connector Pin A and firewall ground stud. a. If there is continuity between Pin A and the ground terminal, test is complete. Go to **Step 5-2**. b. If there is no continuity between Pin A and the ground terminal, repair wiring as necessary. Go to **Step 5-1**. 2. Check for continuity between sensor connector Pin B and Pin 26 of the 52 Pin ICU/CECU connector C. a. If there is continuity between Pin B and Pin 26, test is complete . Go to **Step 6**. b. If there is no continuity between Pin B and Pin 26 at ICU/CECU, repair wiring as necessary. Go to **Step 5-2**. **Alternate test method:** Resistance in the oil temperature sensor (thermistor) signal wire changes as oil temperature increases/decreases. 1. By unplugging the oil temperature sensor harness connector and connecting a resistor decade box (i.e., Ametek PST2000 Tester), or an appropriate resistor to Pins A and B, you can simulate the sensor by dialing in a known resistance. 2. Observe vehicle gauge reading on dash. 3. If gauge needle moves to approximately the same temperature as in the table below, the problem is a defective oil temperature sensor. See table below.

Temp °F	Resistance Ohms
-40	100,856
-22	52,594
-4	28,582
14	16,120
32	9,399
50	5,658
68	3,511
86	2,240
104	1,465
122	980.3
140	670.9
158	468.7
176	333.8
194	241.8
212	178.03
230	133.08
248	100.91
266	77.54
284	60.32
302	47.46

Step	Check	Result	Next Step	
			320	37.75
			338	30.32
			356	24.58
			374	20.11
			392	16.58
6	Select “Diagnose” to view transfer case temperature gauge DTCs. Unplug oil temperature harness connector at sensor. See Harness Interface Diagrams for possible sensor locations. See Connector Identification for position and identification of the electrical connectors of ICU/CECU. See ICU/CECU Pinout for terminal details of the ICU/CECU electrical connections.	DTC 138803 - Open in transfer case oil temp circuit is displayed as “Active.”	1. Using a jumper wire, jump across sensor harness connector Pins A and B. 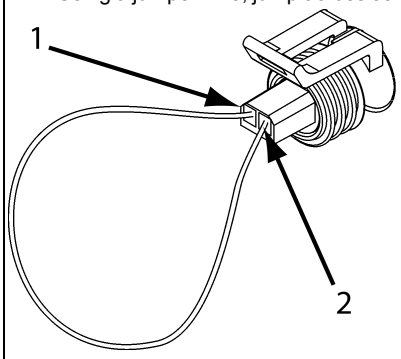 1. Pin B 2. Pin A a. If an “Active” DTC 138804 - Short in transfer case oil temp circuit is now displayed, you have confirmed there is not an open in the sensor signal wire to the ICU. The original fault (DTC 138803) was logged because there is an open in the oil temperature sensor itself, not the wiring. Go to **Step 2**. b. If DTC 138804 is not displayed, there is an open circuit in the signal wire between sensor connector Pin B and Pin 26 of the 52 Pin ICU/CECU connector C. Repair wiring as necessary. Go to **Step 2**. **Alternate test method:** Check for continuity between sensor connector Pin B (sensor signal) and Pin 26 of the 52 Pin ICU/CECU connector C. 1. If there is no continuity, repair wiring as necessary. After repairs, DTC 138803 should now be displayed as “Inactive.” 2. If there is continuity between sensor connector Pin B and Pin 26 of the 52 Pin ICU/CECU connector C, the open circuit is in the sensor itself, not in the wiring. Replace sensor.	
7	Select “Diagnose” to view transfer case oil temperature gauge DTCs. Next, unplug the oil temperature harness connector at sensor. See Harness Interface Diagrams for possible sensor locations. See Connector Identification for position and identification of the	DTC 138804 - Short in transfer case oil temp circuit is displayed as “Active.”	A . If the fault is still “Active” after unplugging the sensor connector, you have confirmed there is a short to ground between Pin B (sensor signal) and Pin 26 of the 52 Pin ICU/CECU connector C. 1. Check for a pinched or chaffed wire between Pin B (sensor signal) and Pin 26 of the 52 Pin ICU/CECU connector C. Repair wiring as necessary. Go to **Step 2**.	
		DTC 138804 - Short in transfer case oil temp circuit is now displayed as “Inactive.”	If DTC 138804 changes to “Inactive” after unplugging the sensor connector, you have confirmed the problem is a short in the sensor itself, not the wiring. 1. Replace sensor. Go to **Step 2**.	

Step	Check	Result	Next Step
	electrical connectors of ICU/CECU. See ICU/CECU Pinout for terminal details of the ICU/CECU electrical connections.		

Return to Table Of Contents

https://truckmanualshub.com/

Brake Saver Oil Temperature Gauge Inoperative

DTC138703 and DTC138704

Symptom: Brake saver oil temperature gauge inoperative. All other gauges are operational.

The Brake Saver Oil Temperature Gauge uses a thermistor sensor to measure the engine retarder oil temperature.

The following procedures have been developed to assist the technician in diagnosing multiplexed instrumentation problems using the Electronic Service Analyst (ESA) hardware/software diagnostic tool. It is assumed the service technician performing instrumentation repairs is knowledgeable about how to use ESA.

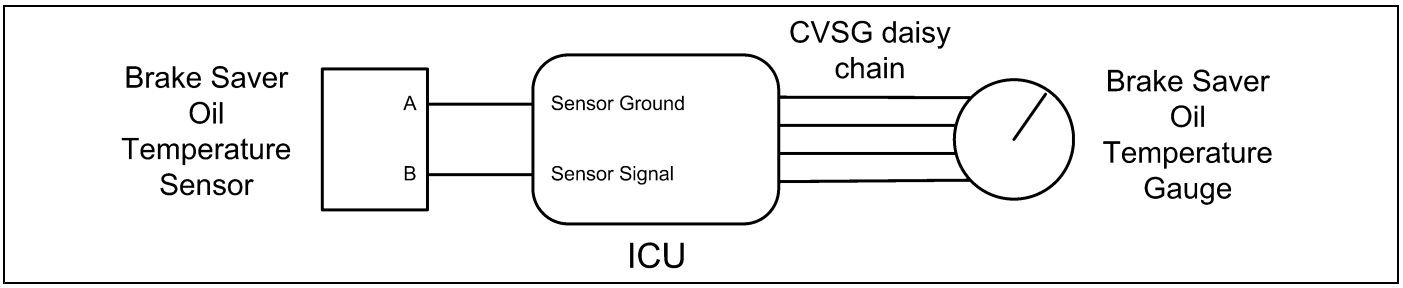

Step	Check	Result	Next Step
1	Turn ignition key ON. Start ESA, then select “Connect” to establish communication to the vehicle.		Go to **Step 2**.
2	Select “Monitor.” From the “Components” window, select “Brake Saver Oil Temperature,” then select “Open.”	Gauge graphic on screen displays reasonable reading.	Go to **Step 3**.
		Gauge graphic on screen does not display reasonable reading.	Go to **Step 4**.
3	Select “Simulate”. Drag the “Value” bar until the pointer on the gauge image is approximately mid-scale. Observe vehicle gauge movement.	Vehicle gauge does not move. Go to **Step 3-1**. Vehicle gauge reading is in the same range as the ESA gauge image. Go to **Step 3-7**.	Perform the following checks: 1. Check CVSG data link wiring: Observe Gauge position in the wiring daisy chain. a. If gauge is mounted between two other functioning gauges CVSG data link wiring is OK. Go to **Step 3-5**. b. If gauge is last gauge in daisy chain or followed by other non-functional gauges, go to **Step 3-2**. 2. Check continuity between Pin 1 on gauge harness connector and Pin 14 of the 52 Pin ICUconnector C. 3. Check continuity between Pin 3 on gauge harness connector and Pin 15 of the 52 Pin ICUconnector C. 4. Repair daisy chain jumper harness as necessary. 5. Once continuity on both wires exists, perform “Simulate” test again. a. If gauge functions properly during “Simulate” test, repair is complete. **Return truck to service.** b. If gauge does not function during “Simulate” test, install a known good gauge and perform “Simulate” test again. i. If gauge functions properly test is complete. Install new gauge permanently. Re-test and **return truck to service.** ii. If gauge does not function during “Simulate” test, install Test ICU and perform “Simulate” test again. (1) If gauge functions properly test is complete. Install new ICU permanently. Re-test and **return truck to service.** (2) If gauge does not function properly during “Simulate” test, replace gauge. 6. Once gauge is replaced. a. Verify gauge functionality. b. **Return truck to service.** 7. Is this a recheck after **Step 5**, **Step 6** or **Step 7**? a. Yes. **Return truck to service.** b. No, Gauge and CVSG data link wiring is not the problem. Go to **Step 4**.
4	Select “Diagnose” to view brake saver oil temperature gauge diagnostic trouble codes.	DTC 138703 displayed - Open in brake saver oil temp circuit.	Indicates the problem could be an open in the wiring from the ICU/CECU to the sensor or a defective sensor. Go to **Step 5**, and if necessary, **Step 6**.
		DTC 138704 displayed - Short in brake saver oil temp circuit.	Indicates the problem could be a short to ground in the wiring from the ICU/CECU to the sensor or a defective sensor. Go to **Step 5**, and if necessary, **Step 7**.

Step	Check	Result	Next Step
5	Unplug oil temperature harness connector at sensor. Using a digital multimeter, check continuity on ground and signal wire at sensor connector. Pin A – Ground Pin B - Signal See Harness Interface Diagrams for possible sensor locations. See Connector Identification for position and identification of the electrical connectors of ICU/CECU. See ICU/CECU Pinout for terminal details of the ICU/CECU electrical connections.	(Sensor Ground) - There should be continuity between the sensor connector ground wire (Pin A) and a cab ground terminal. (Signal) - There should be continuity between the sensor connector signal wire (Pin B) and Pin 24 of the 52 Pin ICU/CECU connector C.	1. Check for continuity between sensor connector Pin A and firewall ground stud. a. If there is continuity between Pin A and the ground terminal, test is complete. Go to **Step 5-2**. b. If there is no continuity between Pin A and the ground terminal, repair wiring as necessary. Go to **Step 5-1**. 2. Check for continuity between sensor connector Pin B and Pin 24 of the 52 Pin ICU/CECU connector C. a. If there is continuity between Pin B and Pin 24, test is complete. Go to **Step 6**. b. If there is no continuity between Pin B and Pin 24 at ICU/CECU, repair wiring as necessary. Go to **Step 5-2**. **Alternate test method:** Resistance in the oil temperature sensor (thermistor) signal wire changes as oil temperature increases/decreases. 1. By unplugging the oil temperature sensor harness connector and connecting a resistor decade box (i.e., Ametek PST2000 Tester), or an appropriate resistor to Pins A and B, you can simulate the sensor by dialing in a known resistance. 2. Observe vehicle gauge reading on dash. 3. If gauge needle moves to approximately the same temperature as in the table below, the problem is a defective oil temperature sensor. See table below.

Temp °F	Resistance Ohms
-40	100,856
-22	52,594
-4	28,582
14	16,120
32	9,399
50	5,658
68	3,511
86	2,240
104	1,465
122	980.3
140	670.9
158	468.7
176	333.8
194	241.8
212	178.03
230	133.08
248	100.91
266	77.54
284	60.32
302	47.46
320	37.75
338	30.32
356	24.58
374	20.11
392	16.58

Step	Check	Result	Next Step
6	Select “Diagnose” to view brake saver oil temperature gauge DTCs. Unplug oil temperature harness connector at sensor. See Harness Interface Diagrams for possible sensor locations. See Connector Identification for position and identification of the electrical connectors of ICU/CECU. See ICU/CECU Pinout for terminal details of the ICU/CECU electrical connections.	DTC 138703 - Open in brake saver oil temp circuit is displayed as “Active.”	1. Using a jumper wire, jump across sensor harness connector Pins A and B. 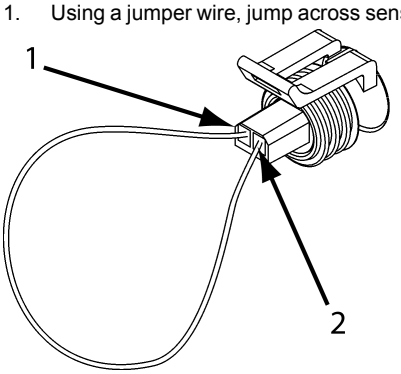 1. Pin B 2. Pin A a. If an “Active” DTC 138704 - Short in brake saver oil temp circuit is now displayed, you have confirmed there is not an open in the sensor signal wire to the ICU. The original fault (DTC 138703) was logged because there is an open in the oil temperature sensor itself, not the wiring. Go to **Step 2**. b. If DTC 138704 is not displayed, there is an open circuit in the signal wire between sensor connector Pin B and Pin 24 of the 52 Pin ICU connector C. Repair wiring as necessary. Go to **Step 2**. **Alternate test method:** Check for continuity between sensor connector Pin B (sensor signal) and Pin 24 of the 52 Pin ICU connector C. 1. If there is no continuity, repair wiring as necessary. After repairs, DTC 138703 should now be displayed as “Inactive.” 2. If there is continuity between sensor connector Pin B and Pin 24 of the 52 Pin ICU/CECU connector C, the open circuit is in the sensor itself, not in the wiring. Replace sensor.
7	Select “Diagnose” to view brake saver oil temperature gauge DTCs. Next, unplug the oil temperature harness connector at sensor. See Harness Interface Diagrams for possible sensor locations. See Connector Identification for position and identification of the electrical connectors of ICU/CECU. See ICU/CECU Pinout for terminal details of the ICU/CECU electrical connections.	DTC 138704 - Short in brake saver oil temp circuit is displayed as “Active.”	If the fault is still “Active” after unplugging the sensor connector, you have confirmed there is a short to ground between Pin B (sensor signal) and Pin 24 of the 52 Pin ICU connector C. 1. Check for a pinched or chaffed wire between Pin B (sensor signal) and Pin 24 of the 52 Pin ICU connector C. Repair wiring as necessary. Go to **Step 2**.
		DTC 138704 - Short in brake saver oil temp circuit is now displayed as “Inactive.”	If DTC 138704 changes to “Inactive” after unplugging the sensor connector, you have confirmed the problem is a short in the sensor itself, not the wiring. 1. Replace sensor. Go to **Step 2**.

Return to Table Of Contents

General Oil Temperature Gauge Inoperative

DTC44103 and DTC44104

Symptom: General oil temperature gauge inoperative. All other gauges are operational.

The General Oil Temperature Gauge uses a thermistor sensor to measure the oil temperature for some optional components.

The following procedures have been developed to assist the technician in diagnosing multiplexed instrumentation problems using the Electronic Service Analyst (ESA) hardware/software diagnostic tool. It is assumed the service technician performing instrumentation repairs is knowledgeable about how to use ESA.

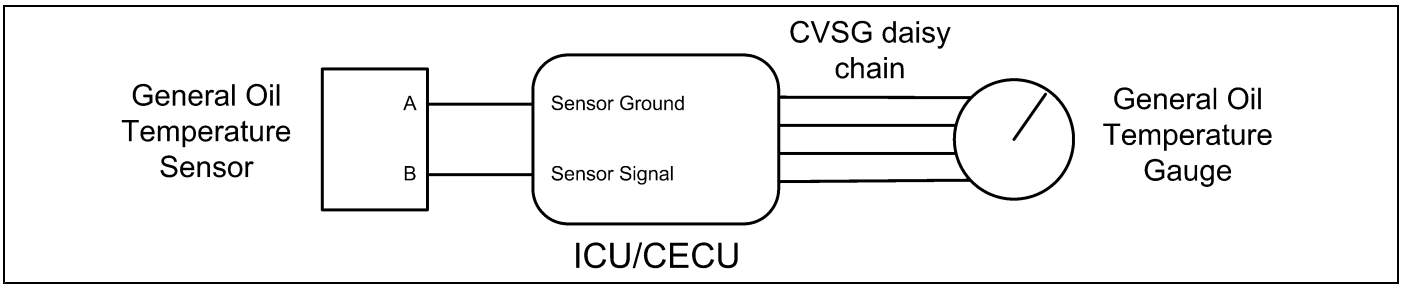

Step	Check	Result	Next Step
1	Turn ignition key ON. Start ESA, then select “Connect” to establish communication to the vehicle.		Go to **Step 2**.
2	Select “Monitor.” From the “Components” window, select “General Oil Temperature,” then select “Open.”	Gauge graphic on screen displays reasonable reading.	Go to **Step 3**.
		Gauge graphic on screen does not display reasonable reading.	Go to **Step 4**.
3	Select “Simulate”. Drag the “Value” bar until the pointer on the gauge image is approximately mid-scale. Observe vehicle gauge movement.	Vehicle gauge does not move. Go to **Step 3-1**. Vehicle gauge reading is in the same range as the ESA gauge image. Go to **Step 3-7**.	Perform the following checks: *NOTE: For vehicles with a CECU, use the "Program" feature in ESA to make sure that the parameter for the inoperative gauge is enabled. An inoperative gauge may simply have its CECU parameter set to disabled.* 1. Check CVSG data link wiring: Observe Gauge position in the wiring daisy chain. a. If gauge is mounted between two other functioning gauges CVSG data link wiring is OK. go to **Step 3-5**. b. If gauge is last gauge in daisy chain or followed by other non-functional gauges, go to **Step 3-2**. 2. Check continuity between Pin 1 on gauge harness connector and Pin 14 of the 52 Pin ICU/CECU connector C. 3. Check continuity between Pin 3 on gauge harness connector and Pin 15 of the 52 Pin ICU/CECU connector C. 4. Repair daisy chain jumper harness as necessary. 5. Once continuity on both wires exists, perform “Simulate” test again. a. If gauge functions properly during “Simulate” test, repair is complete. **Return truck to service.** b. If gauge does not function during “Simulate” test, install a known good gauge and perform “Simulate” test again. i. If gauge functions properly test is complete. Install new gauge permanently. Re-test and **return truck to service.** ii. If gauge does not function during “Simulate” test, install Test ICU/CECU and perform “Simulate” test again. (1) If gauge functions properly test is complete. Install new ICU/CECU permanently. Re-test and **return truck to service.** (2) If gauge does not function properly during “Simulate” test, replace gauge. 6. Once gauge is replaced. a. Verify gauge functionality. b. **Return truck to service.** 7. Is this a recheck after **Step 5**, **Step 6** or **Step 7**? a. Yes. **Return truck to service.** b. No, Gauge and CVSG data link wiring is not the problem. Go to **Step 4**.

Step	Check	Result	Next Step
4	Select “Diagnose” to view general oil temperature gauge diagnostic trouble codes.	DTC 44103 displayed - Open in general oil temp circuit.	Indicates the problem could be an open in the wiring from the ICU/CECU to the sensor or a defective sensor. Go to **Step 5**, and if necessary, **Step 6**.
		DTC 44104 displayed - Short in general oil temp circuit.	Indicates the problem could be a short to ground in the wiring from the ICU/CECU to the sensor or a defective sensor. Go to **Step 5**, and if necessary, **Step 7**.
5	Unplug oil temperature harness connector at sensor. Using a digital multimeter, check continuity on ground and signal wire at sensor connector. Pin A – Ground Pin B - Signal See Harness Interface Diagrams for possible sensor locations. See Connector Identification for position and identification of the electrical connectors of ICU/CECU. See ICU/CECU Pinout for terminal details of the ICU/CECU electrical connections.	(Sensor Ground) - There should be continuity between the sensor connector ground wire (Pin A) and a cab ground terminal. (Signal) - There should be continuity between the sensor connector signal wire (Pin B) and Pin 20 of the 52 Pin ICU/CECU connector C.	1. Check for continuity between sensor connector Pin A and firewall ground stud. a. If there is continuity between Pin A and the ground terminal, test is complete. Go to **Step 5-2**. b. If there is no continuity between Pin A and the ground terminal, repair wiring as necessary. Go to **Step 5-1**. 2. Check for continuity between sensor connector Pin B and Pin 20 of the 52 Pin ICU/CECU connector C. a. If there is continuity between Pin B and Pin 20, test is complete. Go to **Step 6**. b. If there is no continuity between Pin B and Pin 20 at ICU/CECU, repair wiring as necessary. Go to **Step 5-2**. **Alternate test method:** Resistance in the oil temperature sensor (thermistor) signal wire changes as oil temperature increases/decreases. 1. By unplugging the oil temperature sensor harness connector and connecting a resistor decade box (i.e., Ametek PST2000 Tester), or an appropriate resistor to Pins A and B, you can simulate the sensor by dialing in a known resistance. 2. Observe vehicle gauge reading on dash. 3. If gauge needle moves to approximately the same temperature as in the table below, the problem is a defective oil temperature sensor. See table below.

Temp °F	Resistance Ohms
-40	100,856
-22	52,594
-4	28,582
14	16,120
32	9,399
50	5,658
68	3,511
86	2,240
104	1,465
122	980.3
140	670.9
158	468.7
176	333.8
194	241.8
212	178.03
230	133.08
248	100.91
266	77.54
284	60.32
302	47.46

Step	Check	Result	Next Step	
			320	37.75
			338	30.32
			356	24.58
			374	20.11
			392	16.58
6	Select “Diagnose” to view general oil temperature gauge DTCs. Unplug oil temperature harness connector at sensor. See Harness Interface Diagrams for possible sensor locations. See Connector Identification for position and identification of the electrical connectors of ICU/CECU. See ICU/CECU Pinout for terminal details of the ICU/CECU electrical connections.	DTC 44103 - Open in general oil temp circuit is displayed as “Active.”	1. Using a jumper wire, jump across sensor harness connector Pins A and B. 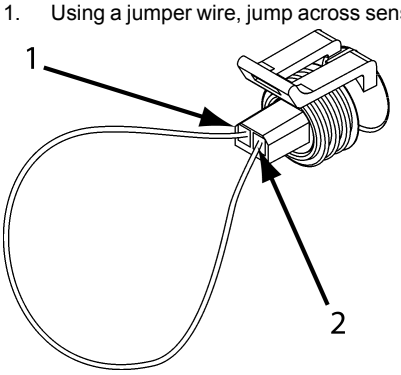 1. Pin B 2. Pin A a. If an “Active” DTC 44104 - Short in general oil temp circuit is now displayed, you have confirmed there is not an open in the sensor signal wire to the ICU/CECU. The original fault (DTC 44103) was logged because there is an open in the oil temperature sensor itself, not the wiring. Go to **Step 2**. b. If DTC 44104 is not displayed, there is an open circuit in the signal wire between sensor connector Pin B and Pin 20 of the 52 Pin ICU/CECU connector C. Repair wiring as necessary. Go to **Step 2**. **Alternate test method:** Check for continuity between sensor connector Pin B (sensor signal) and Pin 20 of the 52 Pin ICU/CECU connector C. 1. If there is no continuity, repair wiring as necessary. After repairs, DTC 44103 should now be displayed as “Inactive.” 2. If there is continuity between sensor connector Pin B and Pin 20 of the 52 Pin ICU/CECU connector C, the open circuit is in the sensor itself, not in the wiring. Replace sensor.	
7	Select “Diagnose” to view general oil temperature gauge DTCs. Next, unplug the oil temperature harness connector at sensor. See Harness Interface Diagrams for possible sensor locations. See Connector Identification for position and identification of the	DTC 44104 - Short in general oil temp circuit is displayed as “Active.”	If the fault is still “Active” after unplugging the sensor connector, you have confirmed there is a short to ground between Pin B (sensor signal) and Pin 20 of the 52 Pin ICU/CECU connector C. 1. Check for a pinched or chaffed wire between Pin B (sensor signal) and Pin 20 of the 52 Pin ICU/CECU connector C. Repair wiring as necessary. Go to **Step 2**.	
		DTC 44104 - Short in general oil temp circuit is now displayed as “Inactive.”	If DTC 44104 changes to “Inactive” after unplugging the sensor connector, you have confirmed the problem is a short in the sensor itself, not the wiring. 1. Replace sensor. Go to **Step 2**.	

Step	Check	Result	Next Step
	electrical connectors of ICU/CECU. See ICU/CECU Pinout for terminal details of the ICU/CECU electrical connections.		

Return to Table Of Contents

Primary Fuel Gauge Inoperative

DTC82903 and DTC82904

Symptom: Primary fuel gauge inoperative. All other gauges are operational.

The Primary Fuel Level Gauge uses a variable resistor sensor to measure the fuel level in the tank.

The following procedures have been developed to assist the technician in diagnosing multiplexed instrumentation problems using the Electronic Service Analyst (ESA) hardware/software diagnostic tool. It is assumed the service technician performing instrumentation repairs is knowledgeable about how to use ESA.

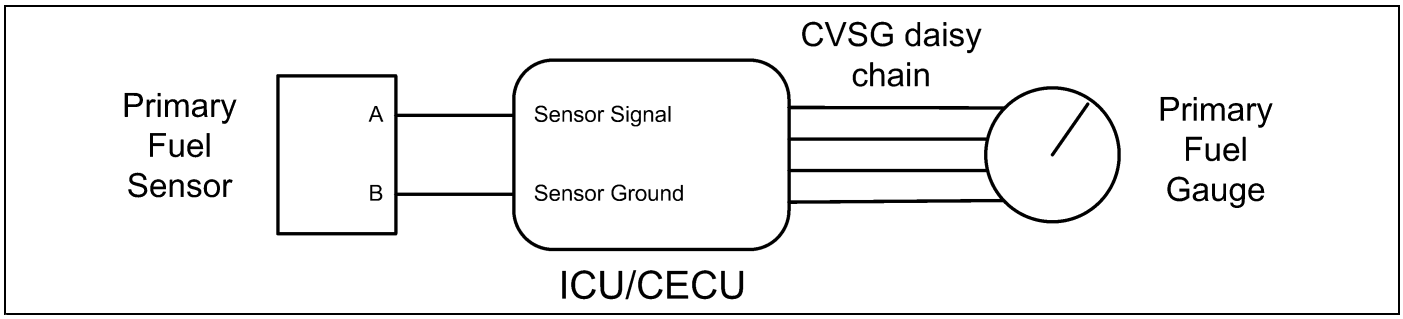

Step	Check	Result	Next Step
1	Turn ignition key ON. Start ESA, then select “Connect” to establish communication to the vehicle.		Go to **Step 2**.
2	Select “Monitor.” From the “Components” window, select “Primary Fuel Gauge,” then select “Open.”	Gauge graphic on screen displays reasonable reading.	Go to **Step 3**.
		Gauge graphic on screen does not display reasonable reading.	Go to **Step 4**.
3	Select “Simulate”. Drag the “Value” bar until the pointer on the gauge image is approximately mid-scale. Observe vehicle gauge movement.	Vehicle gauge does not move. Go to **Step 3-1**. Vehicle gauge reading is in the same range as the ESA gauge image. Go to **Step 3-7**.	Perform the following checks: *NOTE: For vehicles with a CECU, use the "Program" feature in ESA to make sure that the parameter for the inoperative gauge is enabled. An inoperative gauge may simply have its CECU parameter set to disabled.* 1. Check CVSG data link wiring: Observe Gauge position in the wiring daisy chain. a. If gauge is mounted between two other functioning gauges CVSG data link wiring is OK. go to **Step 3-5**. b. If gauge is last gauge in daisy chain or followed by other non-functional gauges, go to **Step 3-2**. 2. Check continuity between Pin 1 on gauge harness connector and Pin 14 of the 52 Pin ICU/CECU connector C. 3. Check continuity between Pin 3 on gauge harness connector and Pin 15 of the 52 Pin ICU/CECU connector C. 4. Repair daisy chain jumper harness as necessary. 5. Once continuity on both wires exists, perform “Simulate” test again. a. If gauge functions properly during “Simulate” test, repair is complete. **Return truck to service.** b. If gauge does not function during “Simulate” test, install a known good gauge and perform “Simulate” test again. i. If gauge functions properly test is complete. Install new gauge permanently. Re-test and **return truck to service.** ii. If gauge does not function during “Simulate” test, install Test ICU/CECU and perform “Simulate” test again. (1) If gauge functions properly test is complete. Install new ICU/CECU permanently. Re-test and **return truck to service.** (2) If gauge does not function properly during “Simulate” test, replace gauge. 6. Once gauge is replaced. a. Verify gauge functionality. b. **Return truck to service.** 7. Is this a recheck after **Step 5**, **Step 6** or **Step 7**? a. Yes. **Return truck to service.** b. No, Gauge and CVSG data link wiring is not the problem. Go to **Step 4**.

Step	Check	Result	Next Step
4	Select “Diagnose” to view primary fuel gauge diagnostic trouble codes.	DTC 82903 displayed - Open in primary fuel level circuit.	Indicates the problem could be an open in the wiring from the ICU/CECU to the sensor or a defective sensor. Go to **Step 5**, and if necessary, **Step 6**.
		DTC 82904 displayed - Short in primary fuel level circuit.	Indicates the problem could be a short to ground in the wiring from the ICU/CECU to the sensor or a defective sensor. Go to **Step 5**, and if necessary, **Step 7**.
5	Unplug fuel gauge harness connector at sensor. Using a digital multimeter, check continuity on ground and signal wire at sensor connector. Pin A – Signal Pin B - Ground See Harness Interface Diagrams for possible sensor locations. See Connector Identification for position and identification of the electrical connectors of ICU/CECU. See ICU/CECU Pinout for terminal details of the ICU/CECU electrical connections.	(Sensor Ground) - There should be continuity between the sensor connector ground wire (Pin B) and a cab ground terminal. (Signal) - There should be continuity between the sensor connector signal wire (Pin A) and Pin 12 of the 52 Pin ICU/CECU connector C.	1. Check for continuity between sensor connector Pin B and firewall ground stud. a. If there is continuity between Pin B and the ground terminal, test is complete. Go to **Step 5-2**. b. If there is no continuity between Pin B and the ground terminal, repair wiring as necessary. Go to **Step 5-1**. 2. Check for continuity between sensor connector Pin A and Pin 12 of the 52 Pin ICU/CECU connector C. a. If there is continuity between Pin A and Pin 12, test is complete. Go to **Step 6**. b. If there is no continuity between Pin A and Pin 12 at ICU/CECU, repair wiring as necessary. Go to **Step 5-2**. **Alternate test method:** Resistance in the fuel level sensor signal wire changes as the fuel level changes. 1. By unplugging the fuel gauge sensor harness connector and connecting a resistor decade box (i.e. Ametek PST2000 Tester), or an appropriate resistor to Pins A and B, you can simulate the sensor by dialing in a known resistance. 2. Observe vehicle gauge reading on dash. 3. If gauge needle moves to approximately the same level as in the table below, the problem is a defective fuel level sensor. See Table below.
			Fuel Level / **Resistance Ohms** Empty / 240 1/4 Full / 154 1/2 Full / 103 3/4 Full / 65 Full / 33
6	Select “Diagnose” to view primary fuel gauge DTCs. Unplug fuel gauge harness connector. See Harness Interface Diagrams for possible sensor locations. See Connector Identification for position and identification of the electrical connectors of ICU/CECU. See ICU/CECU Pinout for terminal details of	DTC 82903 - Open in primary fuel level circuit is displayed as “Active.”	1. Using a jumper wire, jump across sensor harness connector Pins A and B. 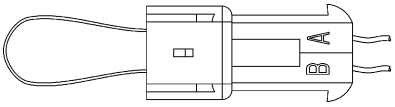 If an “Active” DTC 82904 - Short in primary fuel level circuit is now displayed, you have confirmed there is not an open in the sensor signal wire to the ICU/CECU. The original fault (DTC 82903) was logged because there is an open in the sensor itself, not the wiring. Go to **Step 2**. If DTC 82904 is not displayed, there is an open circuit in the signal wire between sensor connector Pin A and Pin 12 of the 52 Pin ICU/CECU connector C. Repair wiring as necessary. Go to **Step 2**. **Alternate test method:** Check for continuity between sensor connector Pin A (sensor signal) and Pin 12 of the 52 Pin ICU/CECU connector C. 1. If there is no continuity, repair wiring as necessary. After repairs, DTC 82903 should now be displayed as “Inactive.”

Step	Check	Result	Next Step
	the ICU/CECU electrical connections.		2. If there is continuity between sensor connector Pin A and Pin 12 of the 52 Pin ICU/CECU connector C, the open circuit is in the sensor itself, not in the wiring. Replace sensor.
7	Select “Diagnose” to view primary fuel level gauge DTCs. Next, unplug the fuel gauge harness connector at sensor. See Harness Interface Diagrams for possible sensor locations. See Connector Identification for position and identification of the electrical connectors of ICU/CECU. See ICU/CECU Pinout for terminal details of the ICU/CECU electrical connections.	DTC 82904 - Short in primary fuel level circuit is displayed as “Active.”	If the fault is still “Active” after unplugging the sensor connector, you have confirmed there is a short to ground between Pin A (sensor signal) and Pin 12 of the 52 Pin ICU/CECU connector C. 1. Check for a pinched or chaffed wire between Pin A (sensor signal) and Pin 12 of the 52 Pin ICU/CECU connector C, Repair wiring as necessary. Go to **Step 2**.
		DTC 82904 - Short in primary fuel level circuit is now displayed as “Inactive.”	If DTC 82904 changes to “Inactive” after unplugging the sensor connector, you have confirmed the problem is a short in the sensor itself, not the wiring. 1. Replace sensor. Go to **Step 2**.

Return to Table Of Contents

Secondary Fuel Gauge Inoperative

DTC83003 and DTC83004

Symptom: Secondary fuel gauge inoperative. All other gauges are operational.

The Secondary Fuel Level Gauge uses a variable resistor sensor to measure the fuel level in the tank.

The following procedures have been developed to assist the technician in diagnosing multiplexed instrumentation problems using the Electronic Service Analyst (ESA) hardware/software diagnostic tool. It is assumed the service technician performing instrumentation repairs is knowledgeable about how to use ESA.

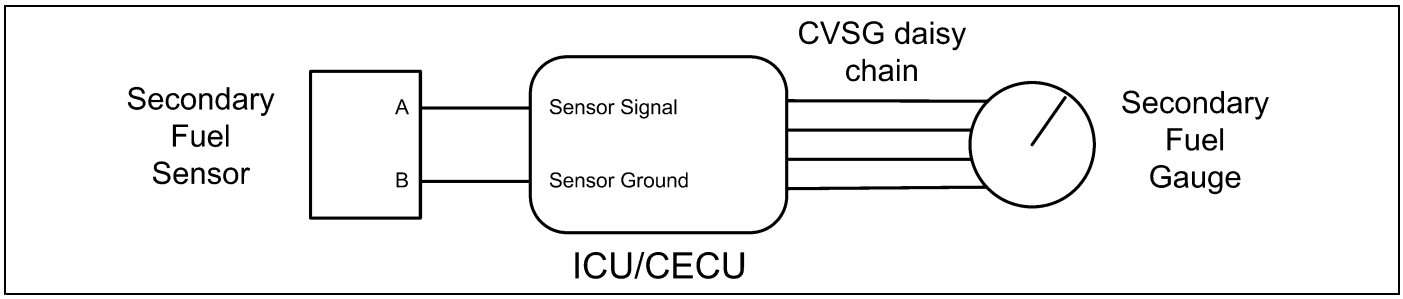

Step	Check	Result	Next Step
1	Turn ignition key ON. Start ESA, then select “Connect” to establish communication to the vehicle.		Go to **Step 2**.
2	Select “Monitor.” From the “Components” window, select “Secondary Fuel Gauge,” then select “Open.”	Gauge graphic on screen displays reasonable reading.	Go to **Step 3**.
		Gauge graphic on screen does not display reasonable reading.	Go to **Step 4**.
3	Select “Simulate”. Drag the “Value” bar until the pointer on the gauge image is approximately mid-scale. Observe vehicle gauge movement.	Vehicle gauge does not move. Go to **Step 3-1**. Vehicle gauge reading is in the same range as the ESA gauge image. Go to **Step 3-7**.	Perform the following checks: *NOTE: For vehicles with a CECU, use the "Program" feature in ESA to make sure that the parameter for the inoperative gauge is enabled. An inoperative gauge may simply have its CECU parameter set to disabled.* 1. Check CVSG data link wiring: Observe Gauge position in the wiring daisy chain. a. If gauge is mounted between two other functioning gauges CVSG data link wiring is OK. go to **Step 3-5**. b. If gauge is last gauge in daisy chain or followed by other non-functional gauges, go to **Step 3-2**. 2. Check continuity between Pin 1 on gauge harness connector and Pin 14 of the 52 Pin ICU/CECU connector C. 3. Check continuity between Pin 3 on gauge harness connector and Pin 15 of the 52 Pin ICU/CECU connector C. 4. Repair daisy chain jumper harness as necessary. 5. Once continuity on both wires exists, perform “Simulate” test again. a. If gauge functions properly during “Simulate” test, repair is complete. **Return truck to service.** b. If gauge does not function during “Simulate” test, install a known good gauge and perform “Simulate” test again. i. If gauge functions properly test is complete. Install new gauge permanently. Re-test and **return truck to service.** ii. If gauge does not function during “Simulate” test, install Test and perform “Simulate” test again. (1) If gauge functions properly test is complete. Install new ICU/CECU permanently. Re-test and **return truck to service.** (2) If gauge does not function properly during “Simulate” test, replace gauge. 6. Once gauge is replaced. a. Verify gauge functionality. b. **Return truck to service.** 7. Is this a recheck after **Step 5**, **Step 6** or **Step 7**? a. Yes. **Return truck to service.** b. No, Gauge and CVSG data link wiring is not the problem. Go to **Step 4**.

Step	Check	Result	Next Step
4	Select “Diagnose” to view secondary fuel gauge diagnostic trouble codes.	DTC 83003 displayed - Open in secondary fuel level circuit.	Indicates the problem could be an open in the wiring from the ICU/CECU to the sensor or a defective sensor. Go to **Step 5**, and if necessary, **Step 6**.
		DTC 83004 displayed - Short in secondary fuel level circuit.	Indicates the problem could be a short to ground in the wiring from the ICU/CECU to the sensor or a defective sensor. Go to **Step 5**, and if necessary, **Step 7**.
5	Unplug fuel gauge harness connector at sensor. Using a digital multimeter, check continuity on ground and signal wire at sensor connector. Pin A – Signal Pin B - Ground See Harness Interface Diagrams for possible sensor locations. See Connector Identification for position and identification of the electrical connectors of ICU/CECU. See ICU/CECU Pinout for terminal details of the ICU/CECU electrical connections.	(Sensor Ground) - There should be continuity between the sensor connector ground wire (Pin B) and a cab ground terminal. (Signal) - There should be continuity between the sensor connector signal wire (Pin A) and Pin 13 of the 52 Pin ICU/CECU connector C.	1. Check for continuity between sensor connector Pin B and firewall ground stud. a. If there is continuity between Pin B and the ground terminal, test is complete. Go to **Step 5-2**. b. If there is no continuity between Pin B and the ground terminal, repair wiring as necessary. Go to **Step 5-1**. 2. Check for continuity between sensor connector Pin A and Pin 13 of the 52 Pin ICU/CECU connector C. a. If there is continuity between Pin A and Pin 13, test is complete. Go to **Step 6**. b. If there is no continuity between Pin A and Pin 13 at ICU/CECU, repair wiring as necessary. Go to **Step 5-2**. **Alternate test method:** Resistance in the fuel level sensor signal wire changes as the fuel level changes. 1. By unplugging the fuel gauge sensor harness connector and connecting a resistor decade box (i.e. Ametek PST2000 Tester), or an appropriate resistor to Pins A and B, you can simulate the sensor by dialing in a known resistance. 2. Observe vehicle gauge reading on dash. 3. If gauge needle moves to approximately the same level as in the table below, the problem is a defective fuel level sensor. See Table below.
			Fuel Level / **Resistance Ohms** Empty / 240 1/4 Full / 154 1/2 Full / 103 3/4 Full / 65 Full / 33
6	Select “Diagnose” to view secondary fuel gauge DTCs. Unplug fuel gauge harness connector. See Harness Interface Diagrams for possible sensor locations. See Connector Identification for position and identification of the electrical connectors of ICU/CECU. See ICU/CECU Pinout for terminal details of	DTC 83003 - Open in secondary fuel level circuit is displayed as “Active.”	1. Using a jumper wire, jump across sensor harness connector Pins A and B. 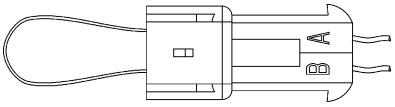 If an “Active” DTC 83004 - Short in secondary fuel level circuit is now displayed, you have confirmed there is not an open in the sensor signal wire to the ICU/CECU. The original fault (DTC 83003) was logged because there is an open in the sensor itself, not the wiring. Go to **Step 2**. If DTC 83004 is not displayed, there is an open circuit in the signal wire between sensor connector Pin A and Pin 13 of the 52 Pin ICU/CECU connector C. Repair wiring as necessary. Go to **Step 2**. **Alternate test method:** Check for continuity between sensor connector Pin A (sensor signal) and Pin 13 of the 52 Pin ICU/CECU connector C. 1. If there is no continuity, repair wiring as necessary. After repairs, DTC 83003 should now be displayed as “Inactive.”

Step	Check	Result	Next Step
	the ICU/CECU electrical connections.		2. If there is continuity between sensor connector Pin A and Pin 13 of the 52 Pin ICU/CECU connector C, the open circuit is in the sensor itself, not in the wiring. Replace sensor.
7	Select “Diagnose” to view secondary fuel level gauge DTCs. Next, unplug the fuel gauge harness connector at sensor. See Harness Interface Diagrams for possible sensor locations. See Connector Identification for position and identification of the electrical connectors of ICU/CECU. See ICU/CECU Pinout for terminal details of the ICU/CECU electrical connections.	DTC 83004 - Short in secondary fuel level circuit is displayed as “Active.”	If the fault is still “Active” after unplugging the sensor connector, you have confirmed there is a short to ground between Pin A (sensor signal) and Pin 13 of the 52 Pin ICU/CECU connector C. 1. Check for a pinched or chaffed wire between Pin A (sensor signal) and Pin 13 of the 52 Pin ICU/CECU connector C. Repair wiring as necessary.
		DTC 83004 - Short in secondary fuel level circuit is now displayed as “Inactive.”	If DTC 83004 changes to “Inactive” after unplugging the sensor connector, you have confirmed the problem is a short in the sensor itself, not the wiring. 1. Replace sensor. Go to **Step 2**.

Return to Table Of Contents

Engine Related DTCs

DTC8409, DTC9109, DTC17102, DTC17131, DTC18409, DTC19009, DTC24709, DTC24809, DTC91709, DTC102809, DTC524502 and DTC524602

Symptom: numerous engine related components inoperative.

The ICU/CECU obtains many of its inputs from V-CAN (J1939) datalink communications. The DTCs listed above are all generated when an Engine Control Module databused message is not received.

The following procedures have been developed to assist the technician in diagnosing multiplexed instrumentation problems using the Electronic Service Analyst (ESA) hardware/software diagnostic tool. It is assumed the service technician performing instrumentation repairs is knowledgeable about how to use ESA.

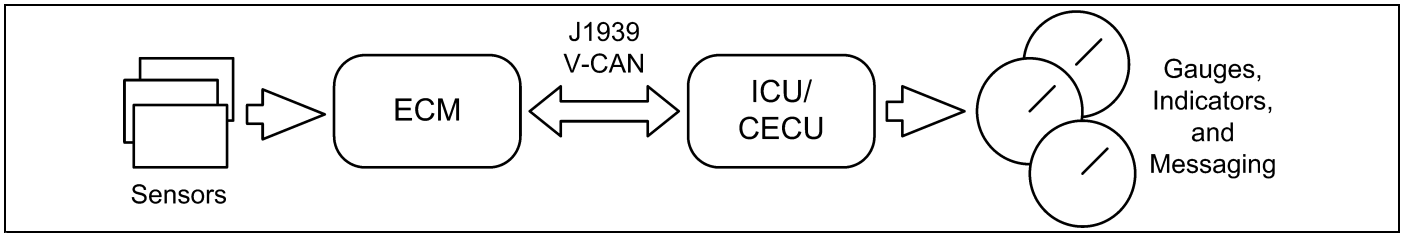

Step	Check	Result	Next Step
1	Turn ignition key ON. Start ESA, then select “Connect” to establish communication to the vehicle.		Go to **Step 2**.
2	Select “Diagnose” to view any Engine Control Module diagnostic trouble codes.	Numerous Engine Control Module message DTCs are present and occurred at the same time.	Most likely, there was or is some J1939 communication failure between the Engine Control Module and CECU. Go to J1939 Lite Diagnostic Procedure.
		Only a single or few Engine related DTCs are present.	If there was J1939 communication loss, more codes would have been recorded. Most likely these codes concern individual sensor failures or sensor to ECM faults. Please reference your OEM engine service information for specific engine electrical concerns.

Return to Table Of Contents

Outside Air Temperature Display Inoperative

DTC17103 and DTC17104

Symptom: Outside air temperature display inoperative or inaccurate.

The Outside Air Temperature display uses a thermistor sensor in the driver's side mirror to measure the outside air temperature.

The following procedures have been developed to assist the technician in diagnosing multiplexed instrumentation problems using the Electronic Service Analyst (ESA) hardware/software diagnostic tool. It is assumed the service technician performing instrumentation repairs is knowledgeable about how to use ESA.

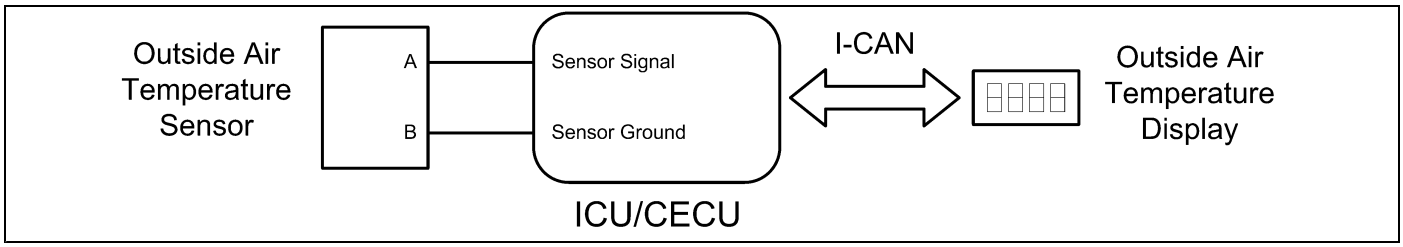

Step	Check	Result	Next Step
1	Turn ignition key ON. Start ESA, then select "Connect" to establish communication to the vehicle.		Go to **Step 2**.
2	Select "Monitor". From the cluster portion of the "Components" window, select "Outside Air Temperature. *NOTE: Monitor mode is only available if vehicle has a CECU. For an ICU, go directly to **Step 3**.*	Gauge graphic on ESA screen displays correct reading. This means the sensor to control unit is operational.	Go to **Step 3**.
		Gauge graphic on ESA screen displays an inaccurate reading.	Go to **Step 4**.
3	Select "Simulate". From the cluster portion of the "Components" window, select "Cluster Test" and observe the outside air temperature display.	Outside air temperature does not function during Cluster test or does not function properly.	Replace Gauge Cluster.
		Outside air temperature display proceeds through its test pattern as described in the Cluster Test description. This means the control unit to Gauge Cluster communication is operational.	For CECU: Verify gauge is still not working properly. If not, install a test CECU and test again. For ICU: Go to **Step 4**
4	Select "Diagnose" to view outside air temperature diagnostic trouble codes.	No Diagnostic trouble codes	Go to **Step 5**.
		DTC 17103 displayed. Open in outside air temperature circuit. Indicates the problem could be an open in the wiring from the ICU/CECU to the sensor or a defective sensor.	Go to **Step 6**.
		DTC 17104 displayed. Short in outside air temperature circuit. Indicates the problem could be a short to ground in the wiring from the ICU/CECU to the sensor or a defective sensor.	Go to **Step 7**.
5	Unplug outside air temperature harness connector at mirror harness to instrument panel harness connector. Using a digital multimeter, check the resistance of the sensor, the continuity on ground and signal wire at sensor connector. Pin A – Signal Pin B – Ground See Harness Interface Diagrams for possible sensor locations. See Connector Identification for position and identification of the	(Sensor Resistance) – Determine the real temperature. The resistance of the sensor should match the table below. NOTE: the best way to get the real temperature is to put the sensor in a cup of crushed ice and water. (Sensor Ground) - There should be continuity between the sensor connector ground wire (Pin B) and the firewall ground stud. (Signal) – There should be continuity between the sensor connector signal wire (Pin A) and Pin 16 of the 52 Pin ICU/CECU connector C.	1. Measure the sensor resistance a. If sensor resistance is correct. Go to **Steps 5-2** and **5-3**. b. If incorrect replace sensor. 2. Check for continuity between sensor connector Pin B and the ground terminal. a. If there is continuity between Pin B and the ground terminal, test is complete. Go to **Step 7**. b. If there is no continuity between Pin B and the ground terminal, repair wiring as necessary. Go to **Step 5-1**. 3. Check for continuity between sensor connector Pin A and Pin 16 of the 52 Pin ICU/CECU connector C. a. If there is continuity between Pin A and Pin 16 of the 52 Pin ICU/CECU connector C, test is complete. Go to **Step 6**.

Resistance Ohms	Temp °C	Temp °F
390,000	-40	-40
180,000	-28.5	-20
91,000	-18	0
47,000	-6.5	20
27,000	4	39
15,000	16	61
10,000	25	77
9,100	27	81
5,600	39	102

Step	Check	Result			Next Step
	electrical connectors of ICU/CECU. See ICU/CECU Pinout for terminal details of the ICU/CECU electrical connections.	3,900 2,400 1,800 910	48 61.5 69.5 91.5	118 142 157 197	b. If there is no continuity between Pin A and Pin 16 , repair wiring as necessary. Go to **Step 5-2**. **Alternate test method:** Resistance in the outside temperature sensor (thermistor) signal wire changes as the outside air temperature increases/decreases. 1. By unplugging the outside air temperature harness connector at the mirror harness to instrument panel harness connector and connecting a resistor decade box (i.e. Ametek PST2000 Tester) or an appropriate resistor to Pins A and B, you can simulate the sensor by dialing in a known resistance. a. While performing the test, observe the temperature display on the dash. b. If the display reads approximately the same temperature as in the table on the previous page, the problem is a defective sensor.
6	Select “Diagnose” to view outside air temperature DTCs. Unplug outside air temperature harness connector at mirror harness to instrument panel harness connector. See Harness Interface Diagrams for possible sensor locations. See Connector Identification for position and identification of the electrical connectors of ICU/CECU. See ICU/CECU Pinout for terminal details of the ICU/CECU electrical connections.	DTC 17103 – Open in outside air temperature circuit is displayed as “Active”.			1. Using a jumper wire, jump across sensor harness connector Pin A and B. a. If an “Active” DTC 17104 – Short in outside air temperature circuit is now displayed, you have confirmed there is not an open in the sensor signal wire to the ICU/CECU. The original fault (DTC 17103) was logged because there is an open in the sensor itself, not the wiring. Replace the sensor. Go to **Step 2**. b. If DTC 17104 is not displayed, there is an open circuit in the signal wire between sensor connector Pin A and Pin 16 of the 52 Pin ICU/CECU connector C. Repair wiring as necessary. Go to **Step 2**.

Step	Check	Result	Next Step
7	Select “Diagnose” to view outside air temperature DTCs. Unplug outside air temperature harness connector at mirror harness to instrument panel harness connector. See Harness Interface Diagrams for possible sensor locations. See Connector Identification for position and identification of the electrical connectors of ICU/CECU. See ICU/CECU Pinout for terminal details of the ICU/CECU electrical connections.	DTC 17104 – Short in outside air temperature circuit is displayed as “Active”.	If the fault is still “Active” after unplugging the sensor connector, you have confirmed there is a short to ground between Pin A (sensor signal) and Pin 16 of the 52 Pin ICU/CECU connector C. 1. Check for a pinched or chaffed wire between Pin A (sensor signal) and Pin 16 of the 52 Pin ICU/CECU connector C. Repair wiring as necessary. Go to **Step 2**.
		DTC 17104 – Short in outside air temperature circuit is now displayed as “Inactive”.	If DTC 17104 changes to “Inactive” after unplugging the sensor connector, you have confirmed the problem is a short in the sensor itself, not the wiring. Replace the sensor. Go to **Step 2**.

Return to Table Of Contents

CVSG Supply Open or Shorted

DTC67805 and DTC67806

Symptom: CVSG (2" Commercial Vehicle Smart Gauges) are inoperative.

The CVSG supply is daisy chained from one gauge to another. The ICU/CECU monitors the supply to these gauges and will issue a trouble code if the supply is either open or shorted.

The following procedures have been developed to assist the technician in diagnosing multiplexed instrumentation problems using the Electronic Service Analyst (ESA) hardware/software diagnostic tool. It is assumed the service technician performing instrumentation repairs is knowledgeable about how to use ESA.

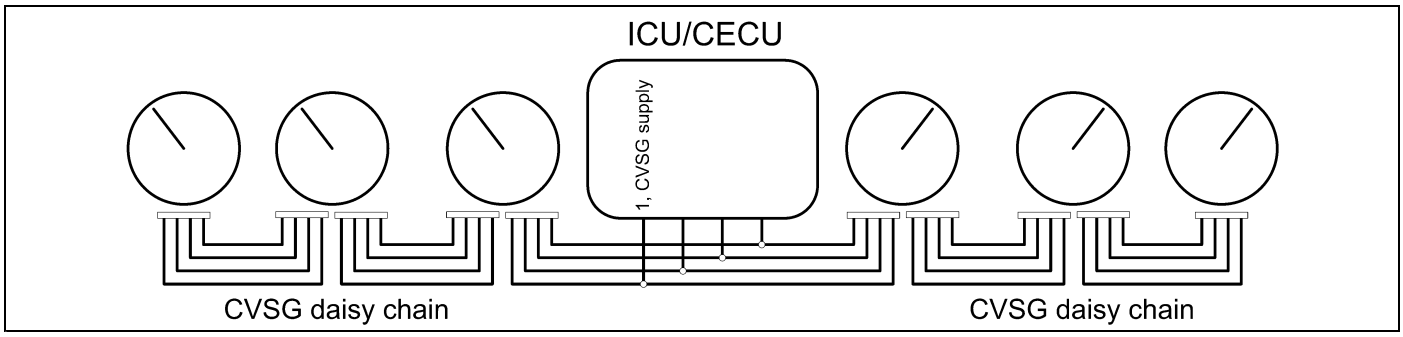

Step	Check	Result	Next Step
1	Turn ignition key ON. Start ESA, then select “Connect” to establish communication to the vehicle.		Go to **Step 2**.
2	Select “Monitor.” From the “Components” window, select some of the suspect functions.	Gauge graphic(s) on screen display reasonable readings.	The gauges do not have an active open or short in the CVSG supply. Intermittent causes may include a pinched wire, loose connection, bent or corroded pins on the CVSG supply circuit.
		Gauge graphic(s) on screen do not display readings.	Go to **Step 3**.
3	Select “Diagnose” to view “Active” diagnostic trouble codes.	DTC 67805 displayed –CECU sees an open load on the CVSG power supply circuit.	Go to **Step 4**.
		DTC 67806 displayed – ICU/CECU has a short to ground on the CVSG power supply circuit.	Go to **Step 5**.
4	Test for CVSG voltage supply at Pin 1 of the 9 Pin ICU/CECU connector A.	No voltage at Pin 1 of the 9 Pin CECU connector A.	Replace CECU and retest.
		Voltage at Pin 1 of the 9 Pin CECU connector A.	Go to **Step 5**.
5	Disconnect the 4 Pin CVSG daisy chain connector. Check continuity between Pin 1 of the 9 Pin ICU/CECU connector A and pin 4 of the CVSG daisy chain connector.	No continuity.	Repair and replace circuits as necessary.
		Continuity exists.	Reconnect the CVSG daisy chain. Make sure the connection is properly seated and there are no bent or misaligned pins. If the gauges remain inoperative, the First CVSG in the daisy chain is faulty. Replace as necessary.

Return to Table Of Contents

Dash Dimmer Input Open or Shorted, Dash Dimmer Output Shorted

DTC148703, DTC148704, DTC149106 and DTC149206

Symptom: dash dimmer inoperative.

The Dash Dimmer input signal comes from the driver controlled dimmer rheostat. The ICU/CECU reads the resistance of the signal to determine the dimming request and varies the voltage output to control the illumination brightness.

The following procedures have been developed to assist the technician in diagnosing multiplexed instrumentation problems using the Electronic Service Analyst (ESA) hardware/software diagnostic tool. It is assumed the service technician performing instrumentation repairs is knowledgeable about how to use ESA.

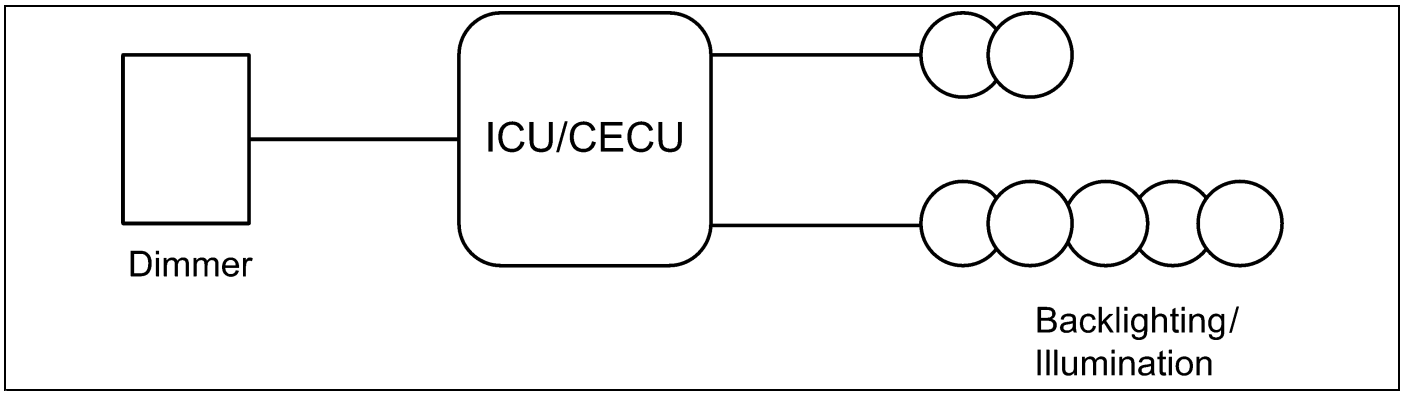

Step	Check	Result	Next Step
1	Turn ignition key ON. Start ESA, then select “Connect” to establish communication to the vehicle.		Go to **Step 2**.
2	Select “Monitor”. From the switch portion of the “Components” window, select “Dimmer”	Graphic on screen does not display reading.	Go to **Step 3**.
		Graphic on screen displays reasonable reading as the Dimmer rheostat is operated. Dimmer input to the ICU/CECU is good.	Go to **Step 7**.
3	Select “Diagnose” to view dash dimmer input related diagnostic trouble codes.	DTC 148703 displayed – Open in dash dimmer input circuit.	Indicates the problem could be an open in the wiring from the ICU/CECU to the rheostat or a defective rheostat. Go to **Step 4**.
		DTC 148704 displayed – Short in dash dimmer input circuit.	Indicates the problem could be a short to ground in the wiring from the ICU/CECU to the rheostat or a defective rheostat. Go to **Step 6**.
4	Connect a jumper wire from Pin 5 of the 52 Pin ICU/CECU connector C to Pin 3 of the dimmer control switch.	DTC 148703 is no longer active.	The open exists in the wiring from Pin 5 of the 52 Pin ICU/CECU connector C to Pin 3 of the dimmer control switch. You may confirm this by checking the continuity of this circuit. Replace wiring and retest. Alternate test method: Resistance at Pin 5 of the 52 Pin ICU/CECU connector C should vary between 390 ohms and 1390 ohms as the dimmer switch is operated. 1. Unplug of the 52 Pin ICU/CECU connector C from the control unit. Measure the resistance from Pin 5 of the 52 Pin ICU/CECU connector C to ground. a. If the resistance at Pin 5 varies between 390 ohms and 1390 ohms as the dimmer switch is operated, the dimmer switch and circuit to the ICU/CECU checks out fine. Check for a loose or bent pin at Pin 5 of the ICU/CECU connector. b. If resistance is missing or not within range at Pin 5 and circuit has continuity, Dimmer switch may be faulty, Go to **Step 5**.
	Select Clear DTCs.	DTC 148703 is still active.	Dimmer control switch may be faulty. Go to **Step 5**.
5	Measure the resistance between Pin 3 and Pin 9 of the Dimmer switch.	The resistance varies between 390 ohms and 1390 ohms as the dimmer switch is operated.	The dimmer switch is operational. Check all electrical connections to make sure that there are no bent pins, corroded terminals, or broken wires. Make sure that all electrical connections are firmly seated. Retest vehicle.
		Resistance reading is missing or not within range (390 ohms to 1390 ohms)	Dimmer switch is faulty, replace the switch and retest.
6	Unplug the Dimmer connector at the rheostat control switch. Pin 3 – Dimmer Signal to the control unit Select clear DTCs.	DTC 148704 is no longer active.	The short to ground is probably the result of a faulty connection at the dimmer control switch or the switch itself. Repair as necessary.
		DTC 148704 is still active.	Short to ground is in the circuit from Pin 5 of the 52 Pin ICU/CECU connector C to Pin 3 of the dimmer control switch. Repair and retest.
7	Select “Diagnose” to view dash dimmer output related diagnostic trouble codes.	DTC 149106 displayed – Short in dash dimmer output circuit 1.	Dimmer output 1 from Pin 7 of the 9 Pin ICU/CECU connector A feeds many instrumentation and component backlighting.
		DTC 149206 displayed – Short in dash dimmer output circuit 2.	Dimmer output 2 from Pin 8 of the 9 Pin ICU/CECU connector A routes to only the left and right spare backlight connectors. Check wiring for possible short to ground conditions and repair as necessary.

Return to Table Of Contents

Lite Diagnostic Procedure

J1939

Symptom: Multiple V-CAN (J1939) Databus Gauge(s) Inoperative or Automated Transmission not shifting properly

V-CAN Databus gauges receive their data from the J1939 data link via the engine ECU, which receives its data from various sensors on the engine and transmission.

The following procedures have been developed to assist the technician in diagnosing V-CAN Diagnostic Trouble Codes using typical shop diagnostic equipment. It is assumed the service technician performing instrumentation repairs is knowledgeable about how to use a Volt-Ohm Meter.

- The procedures will also determine whether the system terminating resistors meet required resistance specifications.
- Perform the tests in order and record the resistance readings for each test.
- Failure of any of the following procedures will render the J1939 data link inoperative.
- See the following illustration for the overall J1939 schematic.

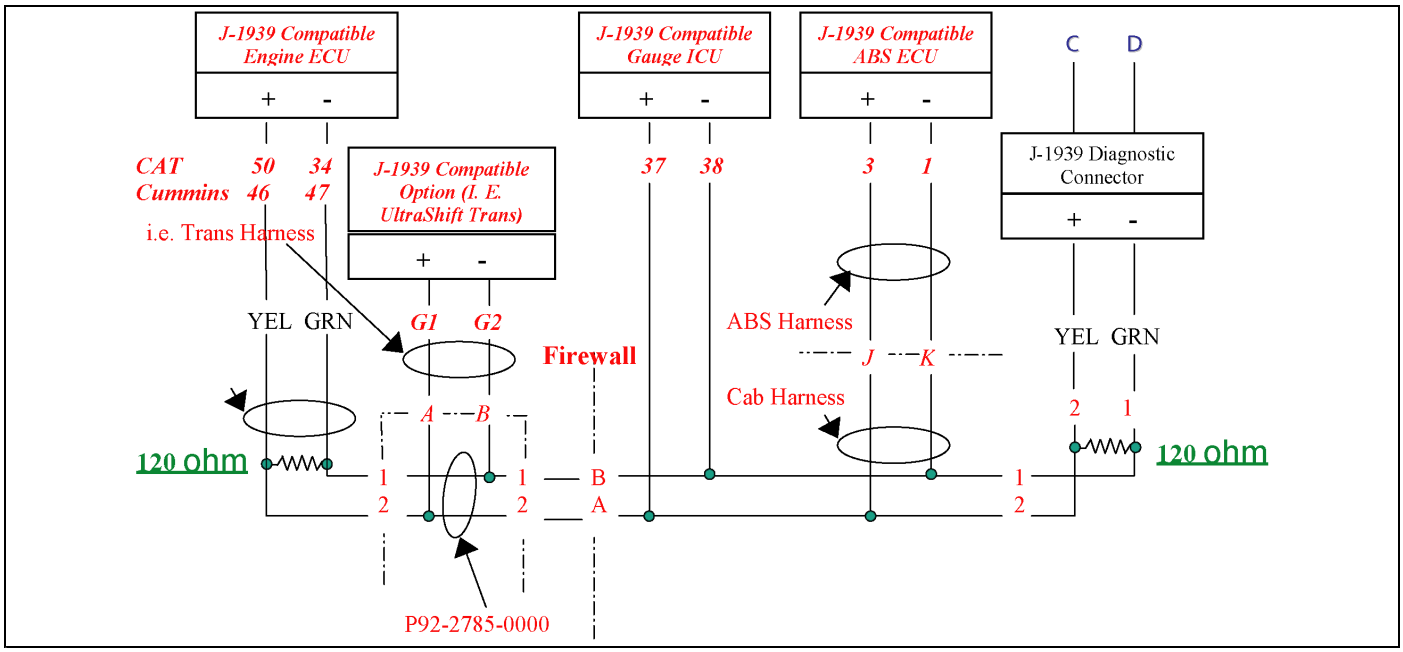

Return to Table Of Contents

Lite Terminating Resistor Test Procedure

J1939

Disconnect Resistors from blue resistor holders and test resistance (approximately 120 ohm) of each resistor across terminals as shown. If OK, then go to the next step.

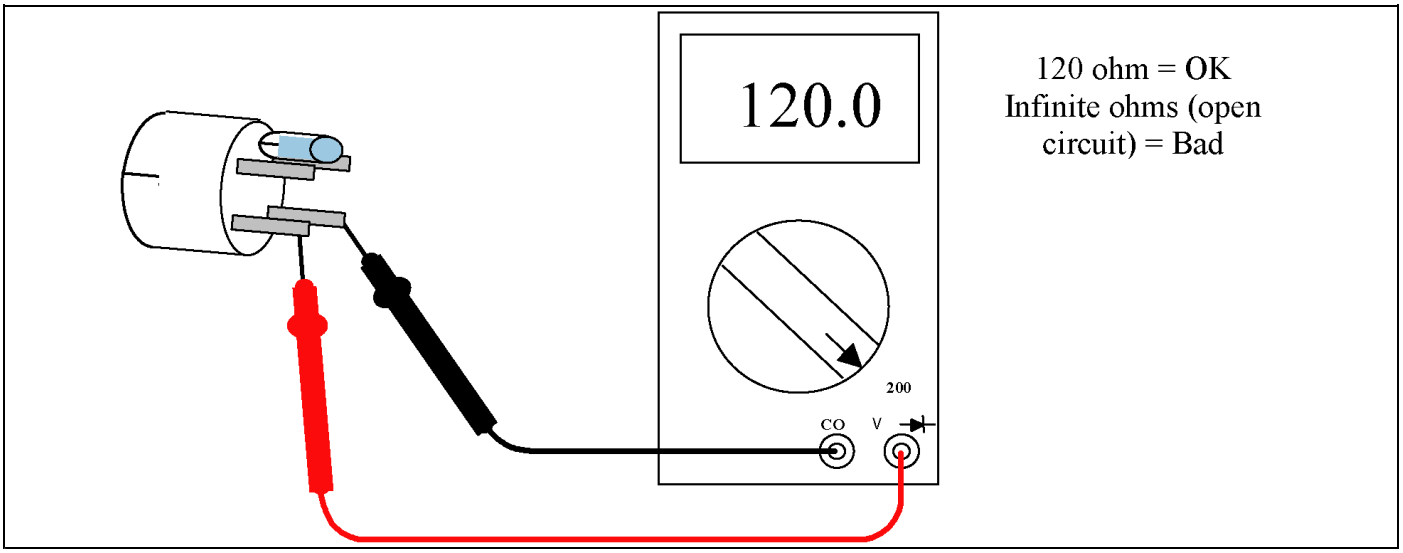

Return to Table Of Contents

Lite Short Circuit Test Procedure

J1939

Disconnect all connectors labeled with ***Red Bold (Italic)*** text at the component itself (i.e., engine and ABS ECU's). Leave Terminating Resistors disconnected. Insure all remaining connectors are properly latched.

- Test circuit continuity at terminals 1 and 2 labeled in Red (light) text.
- Resistance reading should be zero or no reading indicating open circuit.
- Any resistance reading indicates an undesirable short circuit condition.

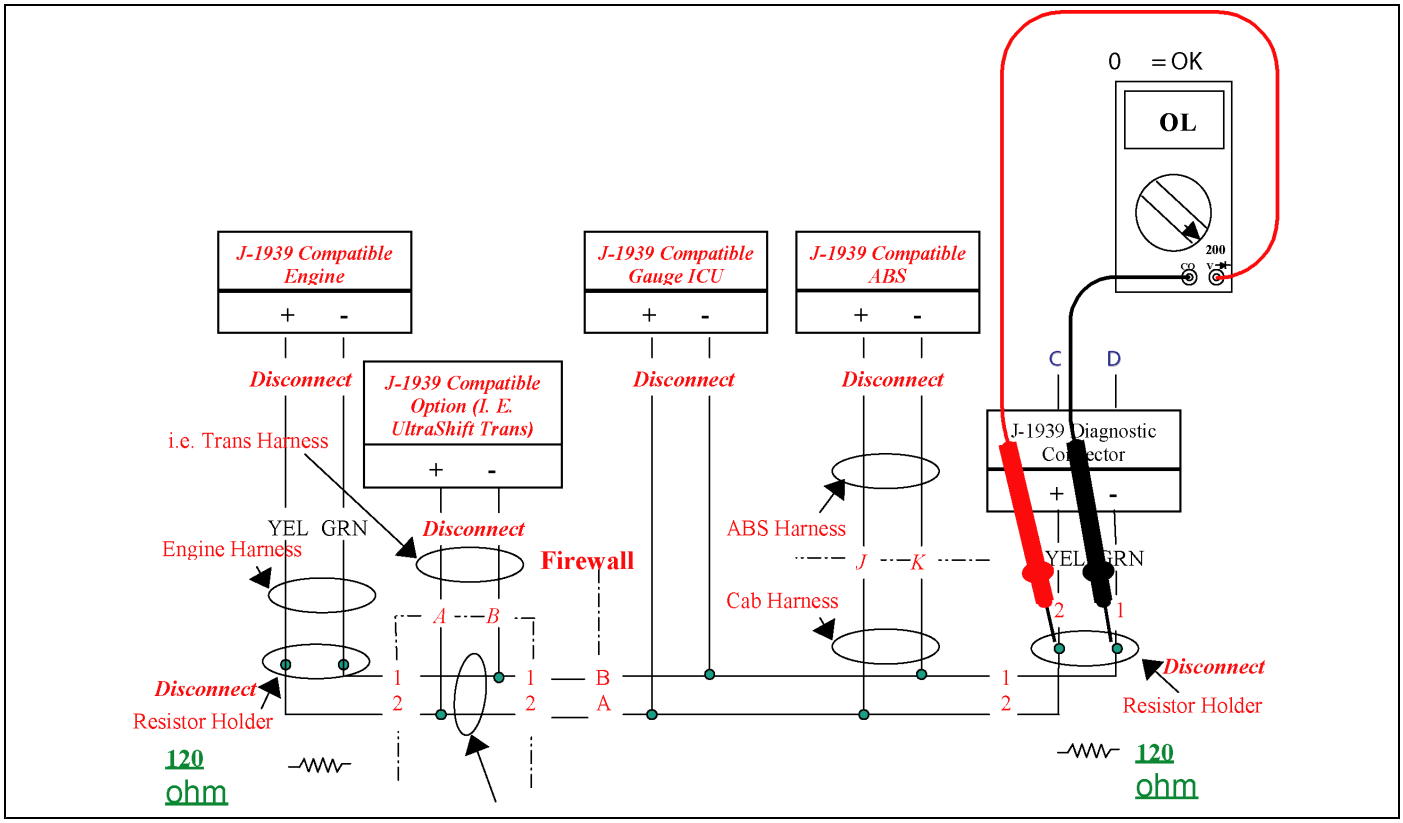

Return to Table Of Contents

Lite Short to Chassis Ground Test Procedure

J1939

- Insure all connectors labeled with ***Red (Bold Italic)*** text (i.e., engine and ABS ECU's) remain disconnected. Leave Terminating Resistors disconnected. Insure all remaining connectors are properly latched.
- Test circuit continuity at terminal 2 labeled in Red (light) text with Chassis Ground.
- Move red lead and test circuit continuity at terminal 1 labeled in Red (light) text with Chassis Ground.
- Resistance reading should be zero or no reading indicating open circuit.
- Any resistance reading indicates an undesirable short circuit condition.

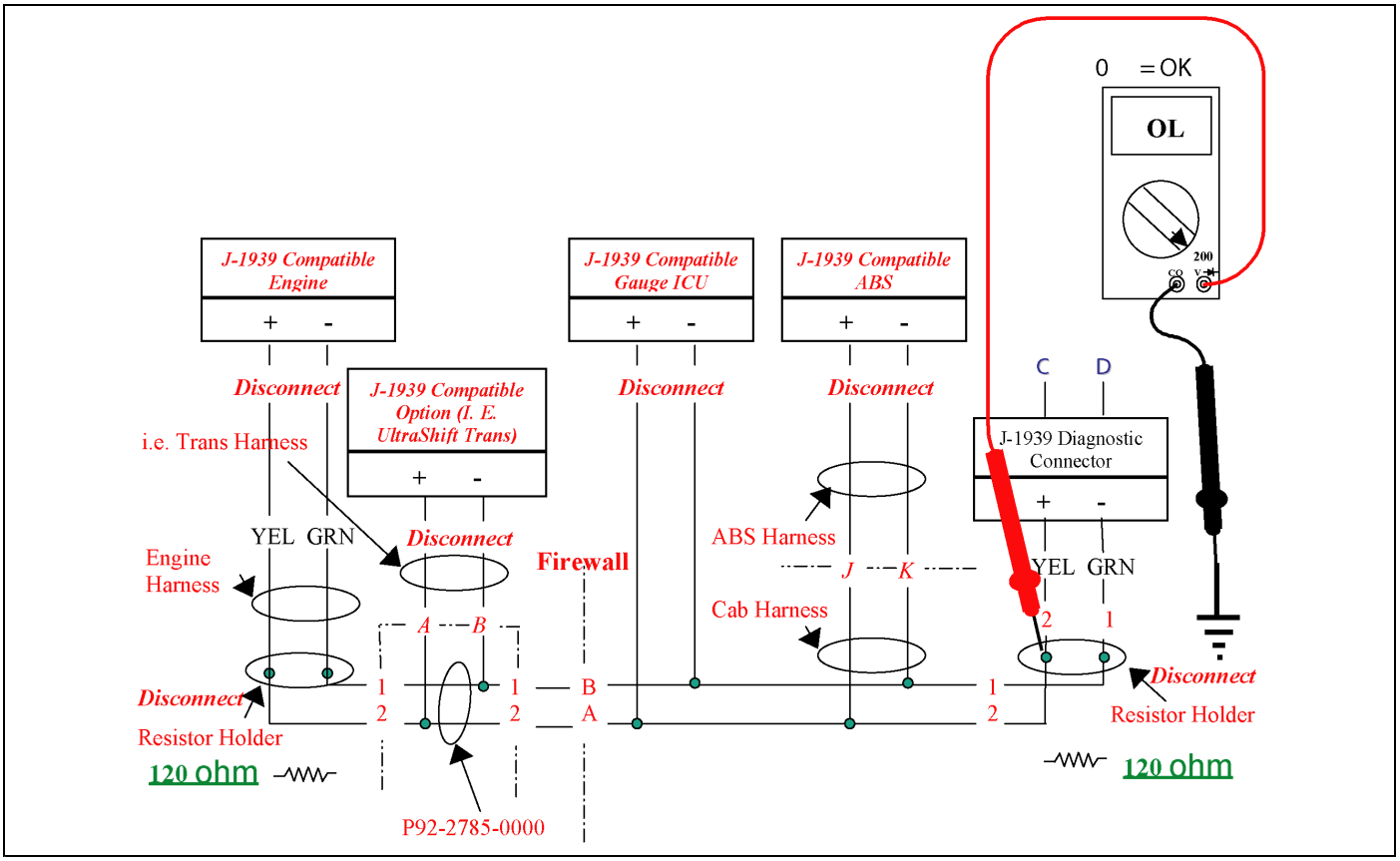

Return to Table Of Contents

Lite Open Circuit Test Procedure

J1939

- Insure all connectors labeled with ***Red (Bold Italic)*** text (i.e., engine and ABS ECU's) remain disconnected.
- Reinstall the Terminating Resistors.
- Insure all remaining connectors are properly latched.
- Resistance reading should be zero or no reading indicating open circuit.
- Test circuit resistance at terminals labeled in **Blue (Heavy block)** text. Circuit resistance should be approximately 60 ohm.
- Re-test at each of the connectors labeled with *Red (Italic)* text (i.e., engine and ABS ECU's)
- Resistance reading of zero or no reading indicates open circuit, check for cut wires or loose connections.
- Resistance reading significantly higher than 60 ohm indicates possible corrosion at terminal connectors.

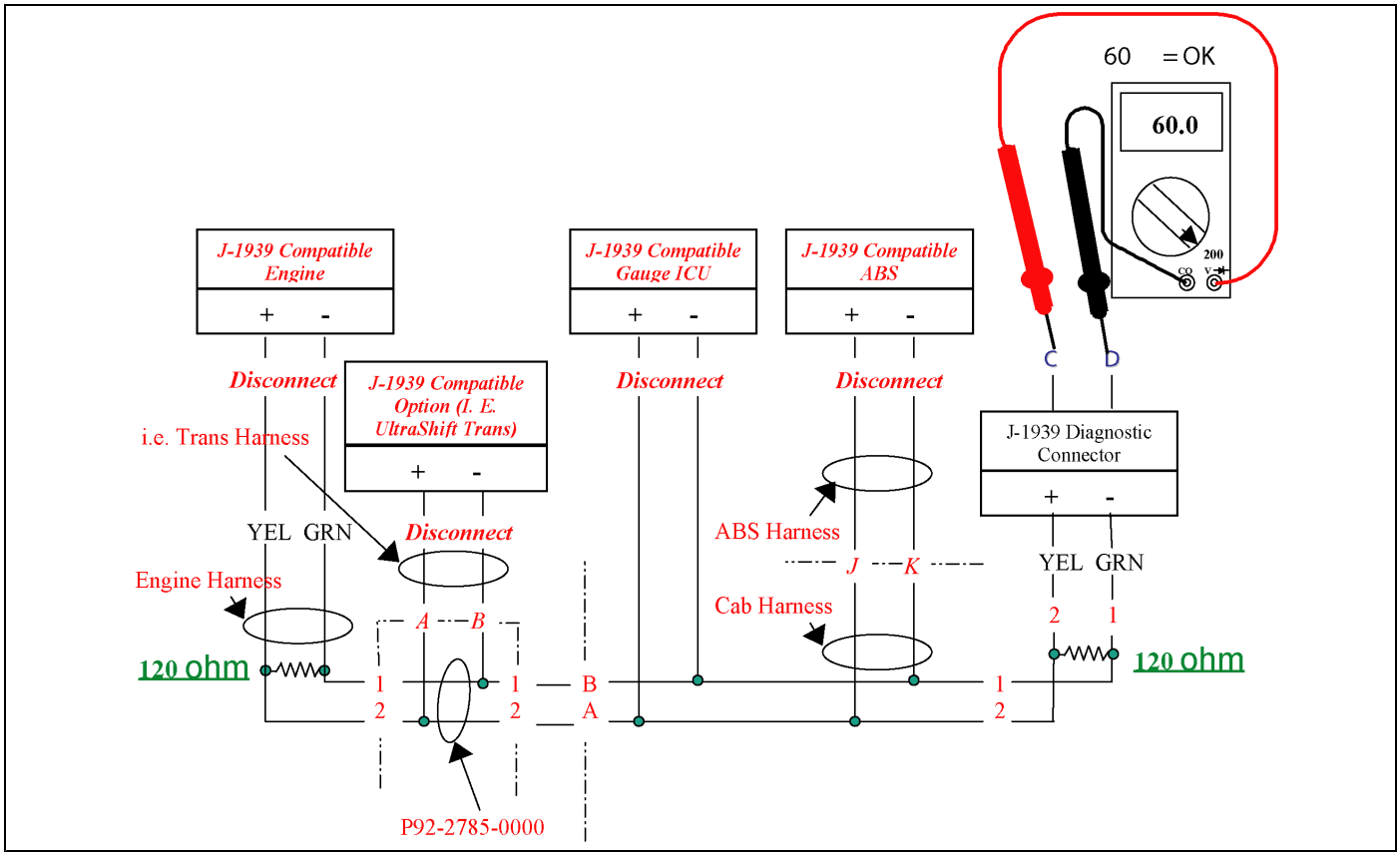

Return to Table Of Contents

Lite Diagnostic Procedures Conclusion

J1939

- Once all of the preceding tests are completed and passed, reconnect the J1939 compatible components and test the system for functionality with appropriate ECU diagnostic tools.
  - Caterpillar has J1939 Communication test built into diagnostic screen
- If diagnostic tools will not communicate with ECU's, check for power and ground to diagnostic tool.
- Verify engine ECU parameters are programmed to communicate using J1939
- If ECU settings, vehicle J1939 wiring, and power and ground to diagnostic tool are OK and communication is still impossible, then the ECU is suspected to be malfunctioning. Either replace the ECU with a test unit or contact the ECU manufacturer for assistance.

Return to Table Of Contents

https://truckmanualshub.com/

https://truckmanualshub.com/

13 Glossary

Acronyms and Abbreviations . . . . 13 - 2

Acronyms and Abbreviations

ABS	Anti-lock Brakes System
ATC	Automatic Traction Control
CECU	Cab Electronic Control Unit
CVSG	Commercial Vehicle Smart Gauges
CAN	Controller Area Network
DLA	Data Link Adapter
DTC	Diagnostic Trouble Code
DEF	Diesel Emissions Fluid
DPF	Diesel Particulate Filter
DWIM	Driver Warning and Information Module
ECAT	Electronic Catalog
ESA	Electronic Service Analyst
ECU	Engine Control Unit
EGR	Exhaust Gas Recirculation
FMI	Failure Mode indicator
HEST	High Exhaust System Temperature
IP	Instrument Panel
ICU	Instrumentation Control Unit
KW	Kenworth
LCD	Liquid Crystal Display
LVD	Low Voltage Disconnect
MCS	Menu Control Switch
MFD	Multi Function Display
OBD	On Board Diagnostics
PB	Peterbilt
PTO	Power Take Off
PLC	Programmable Logic Controller
PWM	Pulse Width Modulation
RT	Run Time
USB	Universal Serial Bus
VIN	Vehicle Identiofication Number

https://truckmanualshub.com/

Index

A
Air filter restriction pressure gauge inoperative
- DTC10703 12-30
- DTC10704 12-30

Ammeter gauge inoperative
- DTC257903 12-38
- DTC257904 12-38

Application air pressure gauge inoperative
- DTC11603 12-26
- DTC11604 12-26

Auxiliary transmission oil temperature gauge inoperative
- DTC44203 12-67
- DTC44204 12-67

B
Brake saver oil temperature gauge inoperative
- DTC138703 12-77
- DTC138704 12-77

C
Center drive axle oil temperature gauge inoperative
- DTC7803 12-57
- DTC7804 12-57

Cluster Components 8-4

Commercial Vehicle Smart Gauges (CVSG) 8-10

Control Unit
- Build dates 2-4
- Comparison chart 2-7
- Functional description 8-2
- Identification 2-5
- Location 3-2

CVSG supply open or shorted
- DTC67805 12-100
- DTC67806 12-100

D
Dash dimmer input open or shorted
- DTC148703 12-102
- DTC148704 12-102
- DTC149106 12-102
- DTC149206 12-102

Dash dimmer output shorted
- DTC148703 12-102
- DTC148704 12-102
- DTC149106 12-102
- DTC149206 12-102

Databus gauge(s) inoperative
- DTC148109 12-15
- DTC148209 12-15
- DTC148309 V-CAN (J1939) 12-15

Diagnostic trouble codes 12-3
- DTC102809 12-11
- DTC10703 12-4
- DTC10704 12-4
- DTC11603 12-5
- DTC11604 12-5
- DTC116703 12-5
- DTC11704 12-5
- DTC11803 12-5
- DTC11804 12-5
- DTC123109 12-11
- DTC138703 12-11
- DTC138704 12-11
- DTC138803 12-11
- DTC138804 12-11
- DTC148109 12-12
- DTC148209 12-12
- DTC148309 12-12
- DTC148703 12-12
- DTC148704 12-12
- DTC149106 12-12
- DTC149206 12-12
- DTC15802 12-5
- DTC15803 12-6
- DTC15804 12-6
- DTC1603 12-3
- DTC1604 12-3
- DTC16800 12-6
- DTC16801 12-6
- DTC17102 12-6
- DTC17103 12-6
- DTC17104 12-6
- DTC17131 12-7
- DTC17303 12-7
- DTC17304 12-7
- DTC176102 12-12
- DTC17703 12-7
- DTC17704 12-7
- DTC18409 12-7
- DTC19009 12-8
- DTC23731 12-8
- DTC24510 12-8
- DTC24709 12-8
- DTC24809 12-8
- DTC257903 12-13
- DTC2579034 12-13
- DTC44103 12-8
- DTC44104 12-9
- DTC44203 12-9
- DTC44204 12-9
- DTC524502 12-13
- DTC524602 12-13
- DTC57803 12-9
- DTC57804 12-9
- DTC67805 12-9
- DTC67806 12-10
- DTC7703 12-3
- DTC7704 12-3
- DTC7803 12-3
- DTC7804 12-4
- DTC80404 12-10
- DTC82903 12-10
- DTC82904 12-10
- DTC83003 12-10
- DTC83004 12-10
- DTC8409 12-4
- DTC9003 12-4
- DTC9004 12-4
- DTC9109 12-4
- DTC91709 12-10

Direct Wire Telltales 8-12

Disabled gauges 5-2

E
Editable Telltale 8-6
Application 8-9
Configuration 8-7
Location 8-8
Electronic Service Analyst (ESA) 2-2
Administration 4-11
Diagnose 4-5
Highlights 4-3
History 2-2
Monitor 4-6
Navigating 4-5
New features 4-4
Program 4-8
Simulate 4-7
What is ESA 4-2
What's new 4-2
Why ESA 4-3
Engine related DTCs
DTC102809 12-94
DTC18409 12-94
DTC19009 12-94
DTC24709 12-94
DTC24809 12-94
DTC8409 12-94
DTC9109 12-94
DTC91709 12-94
Exploded View 3-2

F
Front drive axle oil temperature gauge
DTC57803 12-47
DTC57804 12-47
Fuel filter restriction pressure gauge inoperative
DTC1603 12-34
DTC1604 12-34

G
General Information 5-2
General oil temperature gauge inoperative
DTC44103 12-81
DTC44104 12-81

H
Harness Interface Diagrams 5-3
Harness interface diagrams 5-3
Highline Diagnostic Codes 8-16

I
ICU/CECU
Architecture 8-3
Block diagram 8-3
Comparison chart 5-7
Connector face views 5-6
Connector identification 5-6
ICU/CECU details 5-6
Side view 5-6
Important Notes 1-2
Instruments and Controls 8-13

L
Lite diagnostic procedure (J1939) 12-104
Lite diagnostic procedures conclusion (J1939) 12-109
Lite open circuit test procedure (J1939) 12-108
Lite short circuit test procedure (J1939) 12-106
Lite short to chassis ground test procedure (J1939) 12-107
Lite terminating resistor test procedure (J1939) 12-105

O
Out-of-Date software warning 4-11
Outside air temperature display inoperative
DTC17103 12-96
DTC17104 12-96

P
Parameter
Backing up 4-9
Part numbers 7-2
Retrieving 4-9
Power On Self-Test 8-5
Primary air pressure gauge inoperative
DTC11703 12-18
DTC11704 12-18
Primary fuel gauge inoperative
DTC82903 12-86
DTC82904 12-86
Pyrometer gauge inoperative
DTC17303 12-42
DTC17304 12-42

R
Rear drive axle oil temperature gauge inoperative
DTC7703 12-52
DTC7704 12-52

S
Secondary air pressure gauge inoperative
DTC11803 12-22
DTC11804 12-22
Secondary fuel gauge inoperative
DTC83003 12-90
DTC83004 12-90
Service manual link 4-6
Service Manual Update 5-2
Service Resources 5-2
Disabled gauges 5-2
Harness interface diagram 5-3
ICU/CECU details 5-6
Service manual update 5-2
Voltmeter trim values worksheet 7-12
Service resources
Voltmeter trim procedure 7-12
Specifications 7-2

T

Transfer case oil
temperature gauge
inoperative
DTC138803 12-72
DTC138804 12-72
Transmission oil
temperature gauge
inoperative
DTC17703 12-62
DTC17704 12-62
Troubleshooting 12-3

V

Voltmeter Trim Values 7-12