https://truckmanualshub.com/ 1

HYDREMA

Hydrema

912E 912ES 912HM

COMPACT DUMP TRUCKS

NEW HYDREMA 912E–SERIES

Compact, highly mobile and Off-road superior.

The articulated and compact dump trucks with supreme performance, easy to use, low weight and great durability. Provides efficiency and operating qualities - every day, year after year.

In 1983 Hydrema launched their first compact dump truck. Today these small, agile and robust dump trucks drive all over the globe.

Stability and handling

The reason for the succes of the Hydrema 912 dump truck is found in the articulated pivot steer chassis. The center pivot and hydraulic stabilizers keep the machine stable and safe by automatically transferring the weight to where it is needed.

The chassis ensures that all wheels constantly track, and the standard twin tires gives outstanding traction with minimum ground damage. The pivot, which is centrally placed, increases manoeuvrability with a low turning radius and better positioning characteristics.

Easy to operate

Operating the 912E-series is easy, and the driver becomes familiar with the machine functions and manoeuvrability in no time. User friendly controls, high driving visibility and a well-designed cabin, secures the best working conditions.

A well proven 6 speed ZF Soft-Shift transmission offers full auto or manual shift. This intelligent transmission will automatically shift 2 gears in the right conditions to smoothly increase acceleration regardless of the payload.

Strong but fuel efficient

A state of the art Cummins engine offers some of the best power to weight ratio on the market. Whether the machine is working on steep gradients or poor ground conditions, the 912E-series has the power to cope.

The high torque offers more power at lower revs, which improves fuel economy and noise levels. Positive for both environmental and financial reasons.

https://truckmanualshub.com/ 3

Working in difficult ground conditions

The unique combination of compact design, high stability, extreme traction and power gives the 912E-series extremely good driving skills even in rough and muddy conditions.

Where other dump trucks give up, the Hydrema 912 keeps going, which gives the driver a major advantage. That is why it is chosen for many different uses and for jobs with low accessability.

Proven quality and reliability

The 912 is well-known for its robustness, low maintenance costs and wide usage possibilities. It is engineered and produced to give many years of solid performance, and combined with its easy operation qualities, makes it particularly suitable for rental applications.

Many machine configurations

Depending on your need and requirements, the machine range and configuration possibilities give many different options. Examples of configuration options are: MultiTip, Multichassis (without body), suspended front axle or different tires.

The 180º MultiTip increases working productivity

A popular optional feature is the MultiTip version of the 912, where the dump truck can turn the body 180º degrees and deliver the payload anywhere in the area.

MultiTip makes several working situations easier. For example when tipping a certain amount of payload sideways, whilst moving forward.

ADVANTAGES

- High mobility due to center pivot steering and hydraulic stabilizers.
- Quality made. Heavy duty construction. Built to last.
- Low weight and chassis design gives very low ground pressure.
- Strong Cummins QSB 4.5 stage 3b motor with catalysator. Great torque.
- Extremely user friendly and easy to operate. High operator comfort and safety.

DRIVING COMFORT AND SERVICE AREAS

Optimal visibility, comfort and accessibility.

Optimal operator comfort

The cab is spacious and offers high visibility and a soft touch interior. All the instrumentation is ergonomically placed and the seat and arm rests are fully adjustable to suit the individual.

Overall vibration is reduced by liquid filled engine suspension points.

An airconditioning system is incorporated as standard, with 8 air nozzles placed throughout the cab. The cab is also fitted with automatic entry/exit lighting for safer night time operation.

Easy service access

Opening the large bonnet gives easy access to the different service points on the motor, oil level, hydraulic system etc.

The two front fenders have integrated storage and built-in batteries.

TECHNICAL DATA

Developed and built to last.

Chassis

Articulated chassis in a heavy-duty robot-welded construction. 912E has rigid integral axles, whilst 912ES and HM have a sprung front axle suspended in heavy-duty pivot bearings and two spring cylinders. Pivot with pendulum bar and double hydraulic stabilizer with the option of locking the oscillation movement. The pivot is fitted with large spherical pivot bearings. The fuel tank and hydraulic tank are integrated into the front chassis.
Oscillation: +/- 12º

Steering

Hydrostatic Load Sensing pivot steering with 2 double acting cylinders. Priority valve and integrated emergency steering. Control cylinders with damping.
Max. steering agle: +/- 35º

Axles

Rigid axles are fixed on 912E, whilst the front axle is sprung on 912ES. The axles have planetary reduction in the wheel hubs and separate oil chambers for the hubs. The front axle has automatic limited-slip differential lock and the rear axle has electro-hydraulically activated 100% differential lock.

Dumper body

5.6 m^3 body fabricated in robotically welded high tensile steel.

Transmission

ZF WG115 6-speed fully automatic »ERGOPOWER« with full electronic control. 6 forward/3 reverse gears. Electronically controlled pressure on each clutch ensures completely smooth gear shifts without any loss of tractive effort. It is possible to shift manually using push buttons on the joystick. Constant 4WD.

Brakes

Dual-circuit hydraulic servo system with immersed brake discs on each wheel. Self-adjusting and maintenance-free.
Handbrake: Maintenance-free, »Fail-safe« parking brake with electro-hydraulic activation of the wet disc brakes on the front axle.

Hydraulic system

Hydraulic pump with 84 l/min for tipping function and with priority valve for steering function. Separate hydraulic pump for brakes and pivot stabilizers.

Engine

Cummins QSB 4.5L Stage 3b engine with catalytic converter. 16 valve common rail turbo diesel with intercooler, electronically variable turbo charger, EGR valve and DOC (diesel oxidation catalyst).
Max power: 105 kW (141 hp) at 2000 rpm. Max. torque: 620 Nm at 1500 rpm.

Fuel

Diesel. 140 L fuel tank integrated into the front chassis.

Noise levels

LpA: (inside) 70 db(A)
LwA: (outside) 104 db(A)

Cabin

Spacious ROPS / FOPS approved cab with cab suspension. Mechanical air-suspended seat. Adjustable steering wheel.

MultiTip (optional)

Compact slewing system with rapid dumping at the rear and to both sides. The slewing system is supported in a robust ball-bearing slewing ring. Pivotal movement takes place by means of 2 double acting cylinders. Tipping function by means of 2 single acting telescopic cylinders.

Well equipped and many options.

STANDARD EQUIPMENT

Tires: 600/55 - 26.5 Twin
Front axle: Limited slip differential lock
Rear axle: 100% electro-hydraulic differential lock
Suspended front axle (only 912ES and 912HM)
12V and 24V power outlets in cab
Wiper with interval control - front / rear
Sunshade - front
Handlamp
Red lighting effect inside cab (for night use)
Suspended cab
Automatic air-conditioning
Headrest
Rotating beacon
Radio with CD and MP3
Exterior mirrors with heating - front
Seat heating
Steering wheel knob
Automatic driving lights
8 Megabeam working lights
Cruise control
Automatic tipping speed adjustment
Automatic tipping brake
Oscillation lock
Rear view system with monitor in cab

OPTIONAL EQUIPMENT

180° MultiTip
Air-suspended seat
Extra rotating beacon light
Towing hook – fork type
Tires 17,5 x 25 EM
Bio-oil
Automatic body return
Engine preheater
Reinforced body
Rear light protection
Extended upper edge on body
3-point hitch
Reverse camera
Centralized lubrication system
Electrically adjustable exterior mirrors
Xenon working lights
Pendulum lock
Warning triangle
Radio remote control

The 912 will match most tracked dumpers in soft going and is very fuel efficient and reliable with low running costs and good resale values. We run a large fleet of Hydrema trucks and find the machines are perfect for teaming up with our 13 -20t excavators. "

Dimensions.

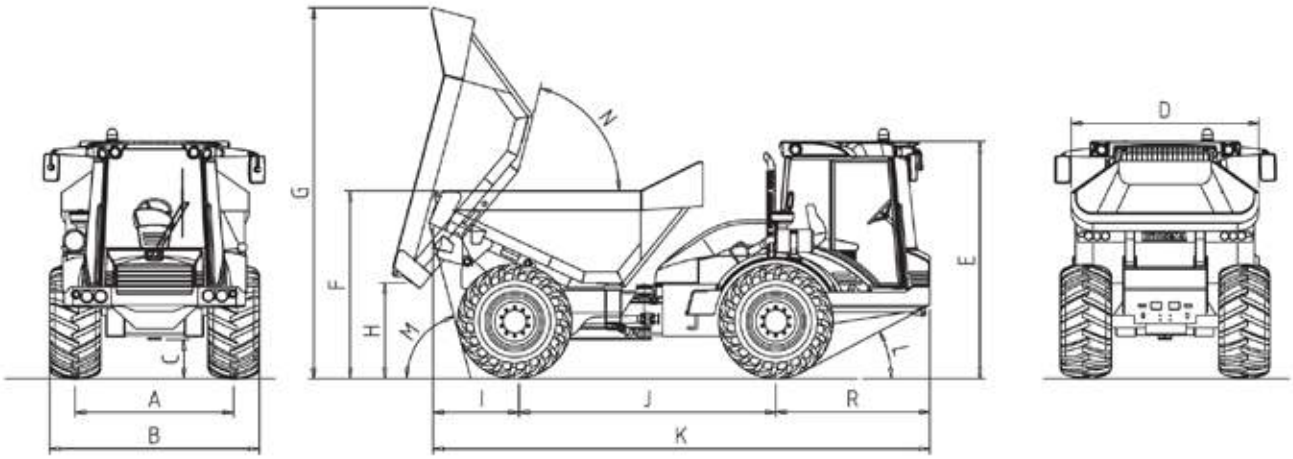

			912E		912ES		912HM			
			Std.tip	MultiTip	Std.tip	MultiTip	Std.tip	Std.tip	MultiTip	MultiTip
	Tires		600/55-26,5	600/55-26,5	600/55-26,5	600/55-26,5	800/45x30.5	600/60x30.5	800/45x30.5	600/60x30.5
	Total weight	kg	17270	17730	17540	18000	18260	17970	18720	18430
	Unladen weight	kg	7270	7730	7540	8000	8260	7970	8720	8430
	Load capacity	kg	10000	10000	10000	10000	10000	10000	10000	10000
	Ground pressure (full load)	kg/cm²	1.24	1.25	1.25	1.27	0.87	1.15	0.88	1.16
A.	Track	mm	1860	1860	1860	1860	2060	1940	2060	1940
B.	Total width	mm	2470	2470	2470	2470	2870	2540	2870	2540
C.	Ground clearance	mm	450	450	450	450	520	520	520	520
D.	Width, dump body	mm	2210	2210	2210	2210	2210	2210	2210	2210
E.	Total height	mm	2750	2750	2790	2790	2865	2865	2865	2865
F.	Loading height	mm	2170	2320	2210	2360	2330	2330	2480	2480
G.	Max. height for tipping	mm	4215	4450	4255	4490	4370	4370	4610	4610
H.	Tipping clearance	mm	1050	1200	1090	1240	1210	1210	1360	1360
I.	Overhang, rear	mm	1000	920	1000	920	1000	1000	920	920
J.	Wheelbase	mm	3080	3080	3080	3080	3080	3080	3080	3080
K.	Overall length	mm	5870	5950	5870	5950	5870	5870	5950	5950
L.	Approach angle, front	°	27	27	28	28	30	30	30	30
M.	Departure angle, rear	°	73	73	73	79	74	74	74	74
N.	Tipping angle	°	75	67	75	67	75	75	67	67
R.	Overhang, front	mm	1870	1870	1870	1870	1870	1870	1870	1870
	Capacity	m³	5.6	5.6	5.6	5.6	5.6	5.6	5.6	5.6
	Turning radius	m	6.1	6.1	6.1	6.1	6.3	6.1	6.3	6.1
	Speed (empty)	mph								
	Speed (full load)	mph								

HYDREMA EXPORT
Call +44 01765 641 940

MORE INFO
www.hydrema.com

HYDREMA