https://truckmanualshub.com/

中力

CQD12SSD
Reach Truck
Operation Manual

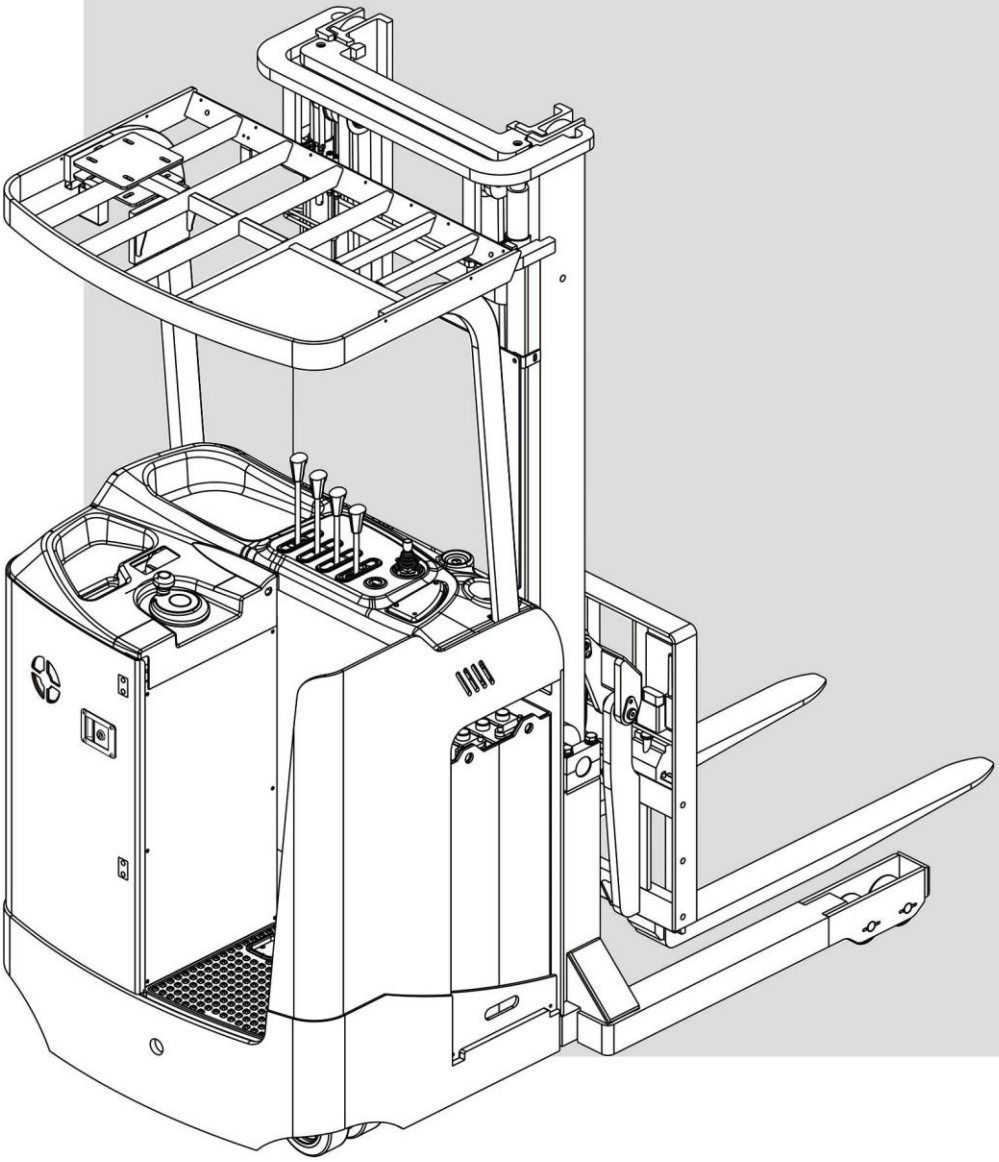

CE

CE CERTIFICATE

EP EQUIPMENT CO.,LTD. is one of the world's leading companies manufacture, design material handling equipment and provide related service. With over 100,000m^2 plant it produces over 100,000 trucks per year, and provides professional, effective and optimized material handling solutions worldwide, until now it has developed three major kinds of business:

· Material handling equipment: Focus on electric forklift and warehouse equipment
·OEM parts: Global parts supply
·Imow industry,online: One stop industrial products supply

Guided by our customer-oriented concept, EP has developed service centers in more than 30 countries around the world, from which customers are able to receive timely local service. Moreover, 95% of warranty parts can be shipped out within 24 hours after been ordered. Through our online after-sales service system, customers can process their warranty claims, order spare parts and consult the operation manuals, maintenance materials and spare parts catalogs.

With business all over the world, EP has thousands of employees and hundreds of agents worldwide to provide our global customers with prompt local service.

Based on the concept of sharing economy , EP also offer rental service for various logistics equipment. Adhering to the idea "Making the leasing of logistic equipment more simple", EP is devoted to providing customized one-stop leasing solutions for our customers with our high quality, reasonable price and prompt rental service.

EP's mission&vision is " Let more people apply the electrical material handling equipment to relieve the intensity of labour" and "Let's grow together".

EP EQUIPMENT CO., LTD
Address: XIAQUAN, DIPU, ANJI, ZHEJIANG, CHINA
Tel: + 86-0571-28023920
Fax: + 86-0571-28035616
Website: www.ep-ep.com
Email: service@ep-ep.com

https://truckmanualshub.com/

Foreword

Thanks for purchasing our reach trucks.

The present original operating instructions are designed to provide sufficient instruction for the safe operation and maintenance of the truck. Please be sure to read this operator manual carefully if you are operator or are in charge of the truck,before you operate and service the truck. Only in this way can you protect yourself and make the truck play a role as much as possible.

Our trucks are subject to ongoing development, so maybe there are some differences between your product and the description in this manual. And the operator manual details will be different because of customer's special requirements.

If you have any questions ,please keep in touch with the sales department of E-P Equipment or let the dealer know.

Notes:

1. This manual is used for operation and maintenance , the detail parameters, size a nd specifications in context is only for reference , the real parameters will depend on sale files.
2. Manual pictures for reference only, the real car shall prevail, and shall not affect the manual use.
3.Manual pictures only sign for one of the models in this series models.

COPYRIGHT OF THESE OPERATING INSTRUCTIONS REMAINS WITH EP EQUIPMENT CO.,LTD

OM3317 07.17

WARNING!

TO PREVENT SETIOUS RISK OF INJURY TO YOUORSELF AND OTHERS OBSERVE THE FOLLOWING SAFETY INSTRUCTIONS.

These trucks may become hazardous if adequate maintenance is neglected. Therefore, adequate maintenance facilities, trained personnel and procedures should be provided.

Maintenance and inspection shall be performed in conformance with the following practices:

1. A scheduled planned maintenance,lubrication and inspection system should be followed.

2. Only qualified and authorized personnel shall be permitted to maintain, repair, adjust, and inspect truck.

3. Before leaving the truck:
– Do not park the truck on an incline.
– Fully lower the load forks.
– Set the key switch to the "OFF" position and remove the key.

4. Before starting to operate truck:
– Be in operating position
– Place directional control in neutral
– Before operating truck, check functions of lift systems, directional control,speed control,steering, warning devices and brakes.

5. Do not use open flame to check lever, or for leakage of electrolyte and fluids or oil. Do not use open pans of fuel or flammable cleaning fluids for cleaning parts.

6. Brakes,steering mechanisms, control mechanisms,guards and safety devices shall be inspected regularly and maintained in legible condition.

7. Capacity, operation and maintenance instruction plates or decals shall be maintained in legible condition.

8. All parts of lift mechanisms shall be inspected to maintain them in safe operating condition.

9. All hydraulic systems shall be regularly inspected and maintained in conformance with good practice. Cylinders, valves and other similar parts shall be checked to assure that "drift" has not developed to the extent that it would create a hazard.

https://truckmanualshub.com/

10. Truck shall be kept in a clean condition to minimize fire hazards facilitate detection of loose or detective parts.

11. Modifications and additions which affect capacity and safe truck operation shall not be performed by the customer or user without manufacturers prior written approval. Capacity, operation and maintenance plates or decals shall be changed accordingly.

https://truckmanualshub.com/

Catalog

Correct use and Application 1

1. Truck Description 2
1.1Application 2
1.2 Truck Assemblies 3
1.3 Standard Version Specifications 5
1.3.1 Performance data for standard Reach Trucks 5
1.3.2 Dimensions 5
1.4 Identification points and data plates 10
1.4.1 Truck data plate 12
1.4.2 Capacity chart .....错误!未定义书签。

2. Commissioning 13
2.1 Using the truck for the First Time 13
2.2 During brake-in 13

3.Operation 14
3.1 Safety Regulations for the Operation of trucks 14
3.2 Controls and Displays 15
3.2.1 Control panel controls and displays 15
3.2.2 Display unit controls and displays 17
3.3 Run the truck 19
3.3.1 Checking and Preparing 19
3.3.2 To prepare the truck for operation 19
3.4 Industrial Truck Operation 20
3.4.1 Safety regulations for truck operation 20
3.4.2 Travel, Steering, Braking 21
3.4.3 Lifting and depositing loads 23
3.5 Parking the truck securely 24

4.Battery Maintenance & Charging 25
4.1 Safety regulations for handling acid batteries 25
4.2 Battery type & dimension .....错误!未定义书签。
4.3 Exposing the battery .....错误!未定义书签。
4.4 Charging the battery 25
4.5 Battery removal and installation 26
4.6 Battery maintenance 27

5.Truck Maintenance 28
5.1 Operational safety and environmental protection 28
5.2Maintenance Safety Regulations 28
5.3 Servicing and inspection 29

https://truckmanualshub.com/

5.3.1 Maintenance Checklist 30
5.3.2 Lubrication Schedule.....32
5.3.3 Maintenance Instructions 33
5.4 Decommissioning the truck.....35
5.4.1Prior to decommissioning 35
5.4.2 Restoring the truck to operation after decommissioning 35
5.5 Safety checks to be performed at regular intervals and following any unusual incidents 36
5.6 Final de-commissioning, disposal 36

6.Troubleshooting 37

https://truckmanualshub.com/

Correct use and Application

The truck described in the present operator manual is an industrial truck designed for lifting and transporting load units.
It must be used, operated and serviced in accordance with the present instructions. Any other type of use is beyond the scope of application and can result in damage to personnel, the truck or property. In particular, avoid overloading the truck with loads which are too heavy or placed on one side. The data plate attached to the truck or the load diagram are binding for the maximum load capacity. The truck must not be used in fire or explosion endangered areas, or areas threatened by corrosion or excessive dust.

Proprietor responsibilities

For the purposes of the present operator manual the “proprietor” is defined as any natural or legal person who either uses the truck himself, or on whose behalf it is used. In special cases (e.g. leasing or renting) the proprietor is considered the person who, in accordance with existing contractual agreements between the owner and user of the truck, is charged with operational duties.
The proprietor must ensure that the truck is used only for the purpose it is intended for and that danger to life and limb of the user and third parties are excluded.
Furthermore, accident prevention regulations, safety regulations and operating, servicing and repair guidelines must be followed. The proprietor must ensure that all truck users have read and understood this operator manual.
Failure to comply with the operator manual shall invalidate the warranty. The same applies if improper work is carried out on the truck by the customer or third parties without the permission of the manufacturer’s customer service department.

Adding accessories

The mounting or installation of additional equipment which affects or enhances the performance of the truck requires the written permission of the manufacturer. Local authority approval may also need to be obtained.
Local authority approval does not however constitute the manufacturer’s approval.

https://truckmanualshub.com/

1. Truck Description

1.1Application

The series is an electric standing, clear view reach truck. It is designed for internal and external use to lift and transport goods. Open bottom pallets or pallets with transverse boards can be lifted inside or outside the area of the load wheels or roll cage. Loads can be stacked, unstacked and transported over long distances.
The capacity can be obtained from the data plate.

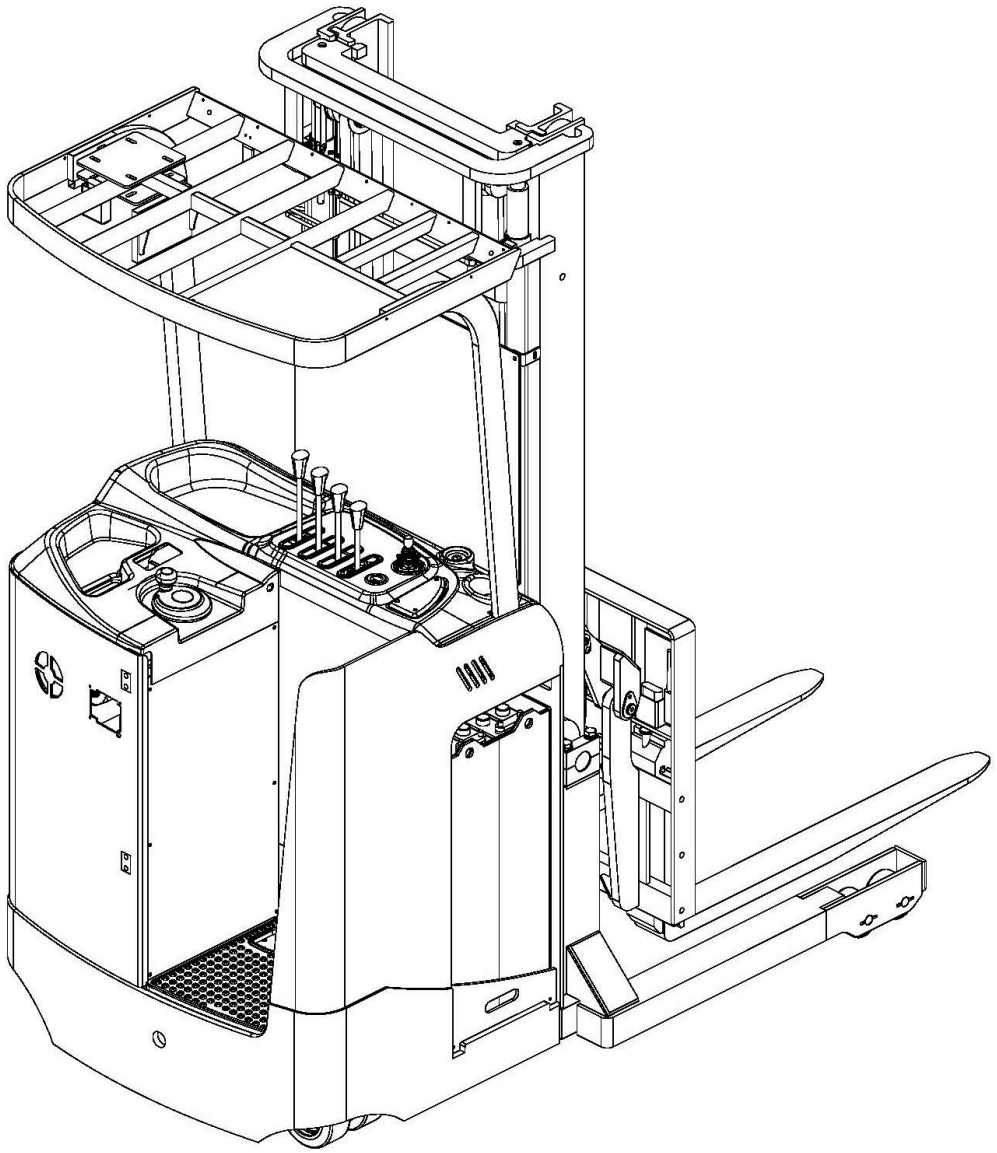

1.2 Truck Assemblies

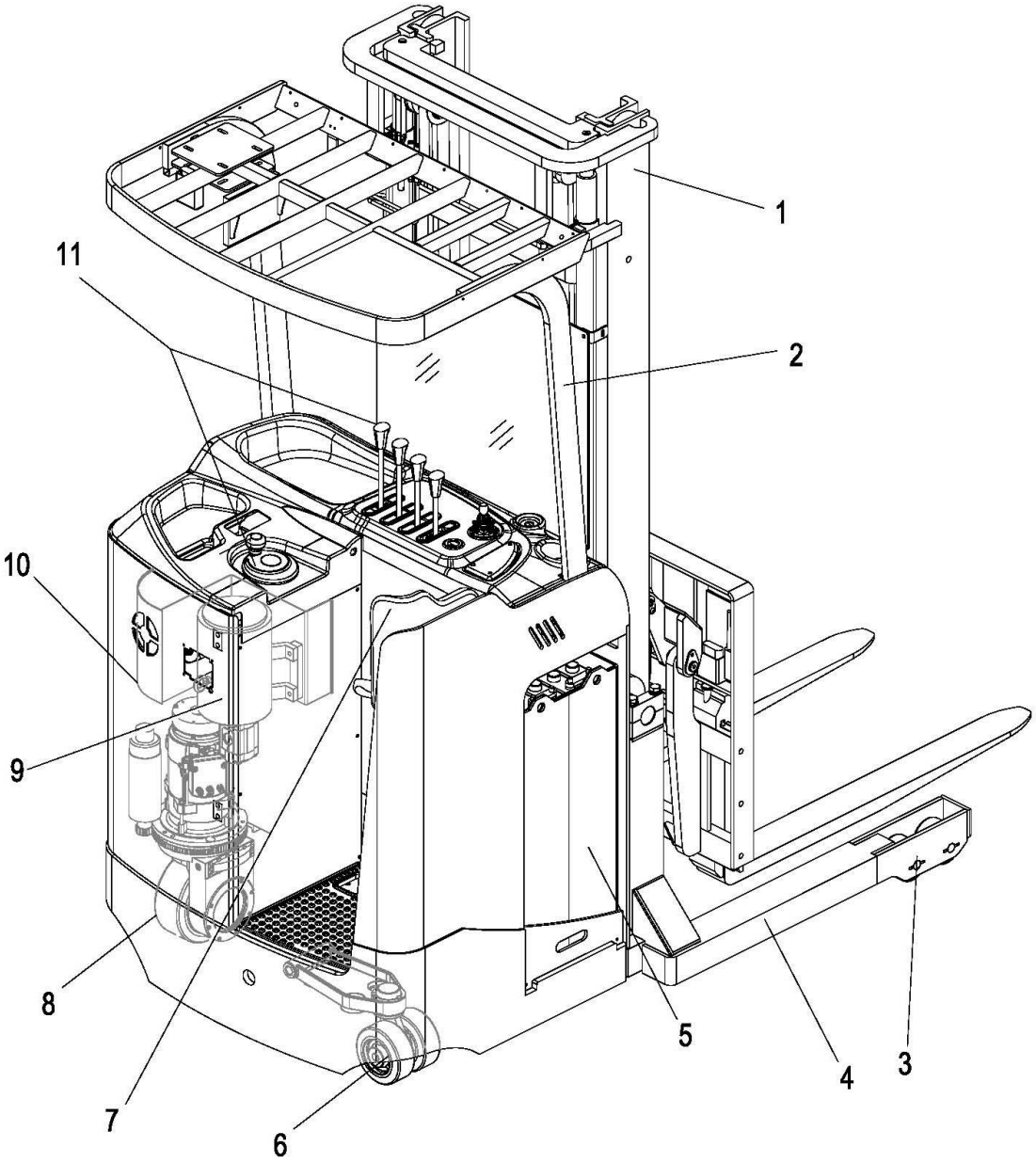

Item	Component	Item	Component
1	Mast	7	Cushion
2	Overhead guard	8	Drive wheel
3	Load wheel	9	Pump motor
4	Frame	10	Tank
5	Battery	11	Control panel
6	Balance wheel		

Safety mechanisms: An enclosed truck geometry with rounded edges ensures safe handling of the truck. The driver is protected by the overhead guard (2). Pressing the Emergency brake switch disconnects all electrical functions in hazardous situations.The drive wheel (8) and the load wheels (3) are protected by a solid skirt.
Line brake safety devices in the lift cylinders limit the load lowering speed in the event of a hydraulic system failure.

Drive: The entire drive unit is enclosed in the truck chassis.
The electronic traction controller ensures the smooth rotation of the drive motor and as a result smooth driving, powerful acceleration.

Brake system: The braking system consists of two independent braking systems.The truck can be braked gently and wear-free by switching to the opposite travel direction.The truck can be braked by taking your foot off the drive pedal(coasting brake).

Steering system: Extremely smooth steering with three phase drive system.The steering wheel is integrated in the control panel. The position of the steered drive wheel is shown in the control panel display unit. The maximum steer angle is ±90°.

Operator position: The driver’s position is ergonomically designed with ample legroom. The driver's seat can be adjusted to suit the driver.

Controls and Displays： The functions are activated via ergonomic thumb movement to ensure fatigue-free operation without stressing the wrists; sensitive application of travel and hydraulic movements to spare and position the goods precisely.Driver's display unit for all important driver information such as steering wheel position, truck status reports (e.g. faults), battery capacity and time etc..

Hydraulic system： All hydraulic operations are controlled by a sturdy, maintenance-free AC motor with no wear parts and with a flanged low emission gear pump.The varying oil requirements are controlled by the speed of the motor.

Electrical system: Highly efficient three phase technology with energy retention for the drive motor provides high travel speeds and better use of energy.

Mast support: The mast support is mounted on support rollers. A single telescopic reach cylinder extends and retracts the support.

For controls options see chapter three.

1.3 Standard Version Specifications

Technical specification details in accordance with VDI2198. Technical modifications and additions reserved.

1.3.1 Performance data for standard Reach Trucks

Item	Description		CQD12SSD	Unit
	Drive unit		Battery	
	Operator type		Standing	
Q	Load capacity		2645	lb.
c	Load center		23.6	in.
	Travel speed, laden/ unladen		5.2/5.6	mph
	Lifting speed, laden/ unladen		51.2/88.6	fpm
	Lowering speed, laden/ unladen		88.6/84.6	fpm
	Reaching speed, laden / unladen		39.37/39.37	fpm
	Maximum gradeability, laden/ unladen		8/10	％
	Service weight (With battery)		See Form 3	lb.
	Loading	Unladen, Front / Rear, fork advanced	3626/2442	lb.
		Unladen, Front / Rear, fork retracted	4281/2061	lb.
		Laden, Front / Rear, fork advanced	1205/7244	lb.
		Laden, Front / Rear, fork retracted	3320/5191	lb.
	Drive motor rating S2 60 min.		5.3	kW
	Lift motor rating at S3 15%		11	kW
	Battery voltage/ rated capacity (5h)		See Form 2	V/Ah
	Battery weight		See Form 2	lb.

1.3.2 Dimensions

Item	Description	CQD12SSD	Unit
y	Wheelbase	61.9	in.
h_1	Height, mast lowered	See Form 1	in.
h_2	Free lift	See Form 1	in.
h_3	Lift height	See Form 1	in.
h_4	Height, mast extended	See Form 1	in.
h_7	Seat height/standing height	13.5	in.

h_8	Height of wheel arms	5.1	in.
l_1	Overall length	See Form 4	in.
l_2	Length to face of forks	See Form 4	in.
b_1/ b_2	Overall width	42.4/50.3	in.
s/e/l	Fork dimensions	1.5/3.9/42.1	in.
b_3	Fork Frame width	31.5	in.
b_5	Distance between fork-arms	7.8-30.7	in.
b_4	Distance between wheel arms/loading surfaces	42.4	in.
α/β	Tilt of mast/fork carriage forward/backward	2/4	°
l_4	Reach distance	See Form 4	in.
m_1	Ground clearance, laden, below mast	2	in.
m_2	The minimum ground clearance of frame	2	in.
Ast	Aisle width[1)], 1000×1200 pallet crossways	See Form 4	in.
Ast	Aisle width[1)], 800×1200 pallet lengthways	See Form 4	in.
Wa	Outer turning radius	72.6	in.
l_7	Length across wheel arms（exclusive fork ）	77.7	in.
	Tyre type	PU/PU	
	Tyre size, driving wheels	10.2×4.1	in.
	Tyre size, loading wheels	4×2.8	in.
	Tyre size, caster wheels	7×2.8	in.
	Wheels, number driving，caster/loading (x=drive wheels)	1×，2/4	
b_{10}	Track width, front,driving side	20.5	in.
b_{11}	Track width,rear,loading side	46.4	in.

1） Including safety distance a = 200 mm
2） Sound pressure level at the driver’s ear 75 dB(A)

Form 1: Standard mast types

Mast Types	Lowered mast height	Free lift	Lift	Extended mast height
	h1	h2	h3	h4
Duplex ZT	75.6	0	106.3	143.3
	81.5	0	118.1	155.1
	87.4	0	129.9	166.9
	93.3	0	143.3	178.7
	101.2	0	157.5	194.5
	107.1	0	169.3	206.3
Triplex DZ	76.4	39.4	157.5	194.3
	83.1	46.1	177.2	214
	87	50	189	226
	89.6	52.6	196.9	233.9
	96.1	59.1	216.5	253.5

Form 2：Battery (48V)

NO.	Battery Capacity（Ah）	Battery Weight（lb.）
1	345	1235
2	360	1367
3	420	1629
4	450	1629
5	465	1629

Form 3: Service weight （include battery）(lb.)

Mast types	Mast height（in.）	Service weight（lb.）
		CQD12SSD
Two Stage Mast	106.3	5875.3
	118.1	5897.3
	129.9	5919.4
	143.3	5941.4
	157.5	5963.4
	169.3	5985.5
Three Stage Mast	157.5	6404.4
	177.2	6437.4
	189	6459.5
	196.9	6470.5
	216.5	6503.6

Form 3: Length across wheel arms

Mast types		Two Stage Mast	Three Stage Mast
Overall length（minimum）（in.）	l_1	99.7	100.2
Aisle width for pallets 1000 × 1200 crossways（in.）	Ast	114.4	114.8
Aisle width for pallets 800 × 1200 lengthways（in.）	Ast	116.3	116.8
Aisle width for pallets 1000 × 1200 lengthways（in.）	Ast	118.3	118.7
Aisle width for pallets 800 × 1200 crossways（in.）	Ast	109.3	109.6

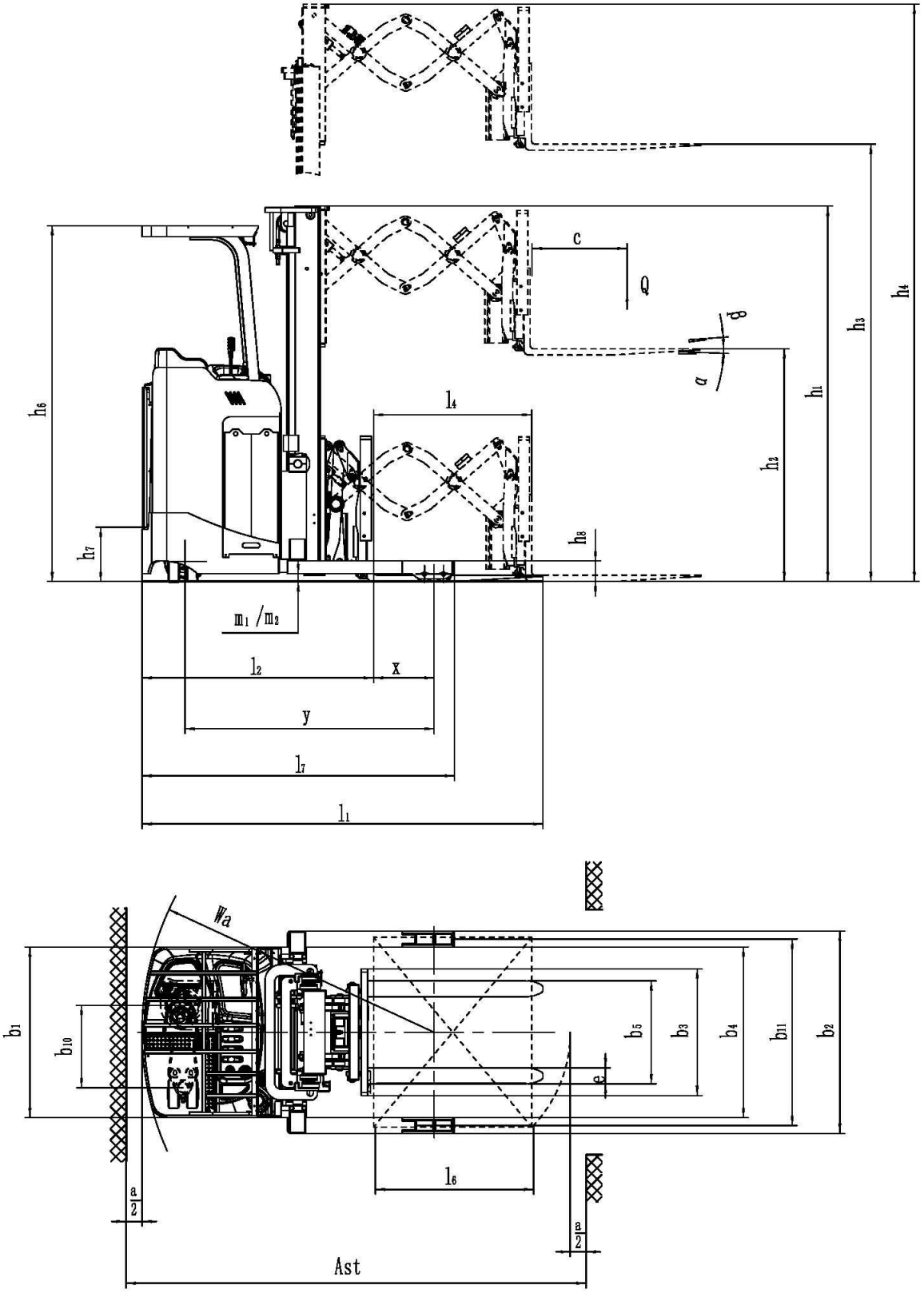
c
Q
h4
h3
h1
h2
h6
h7
h8
l4
m1 /m2
l2
x
y
l7
l1
Wa
b1
b10
b5
b3
b4
b11
b2
e
l6
a/2
a/2
Ast

1.4 Identification points and data plates

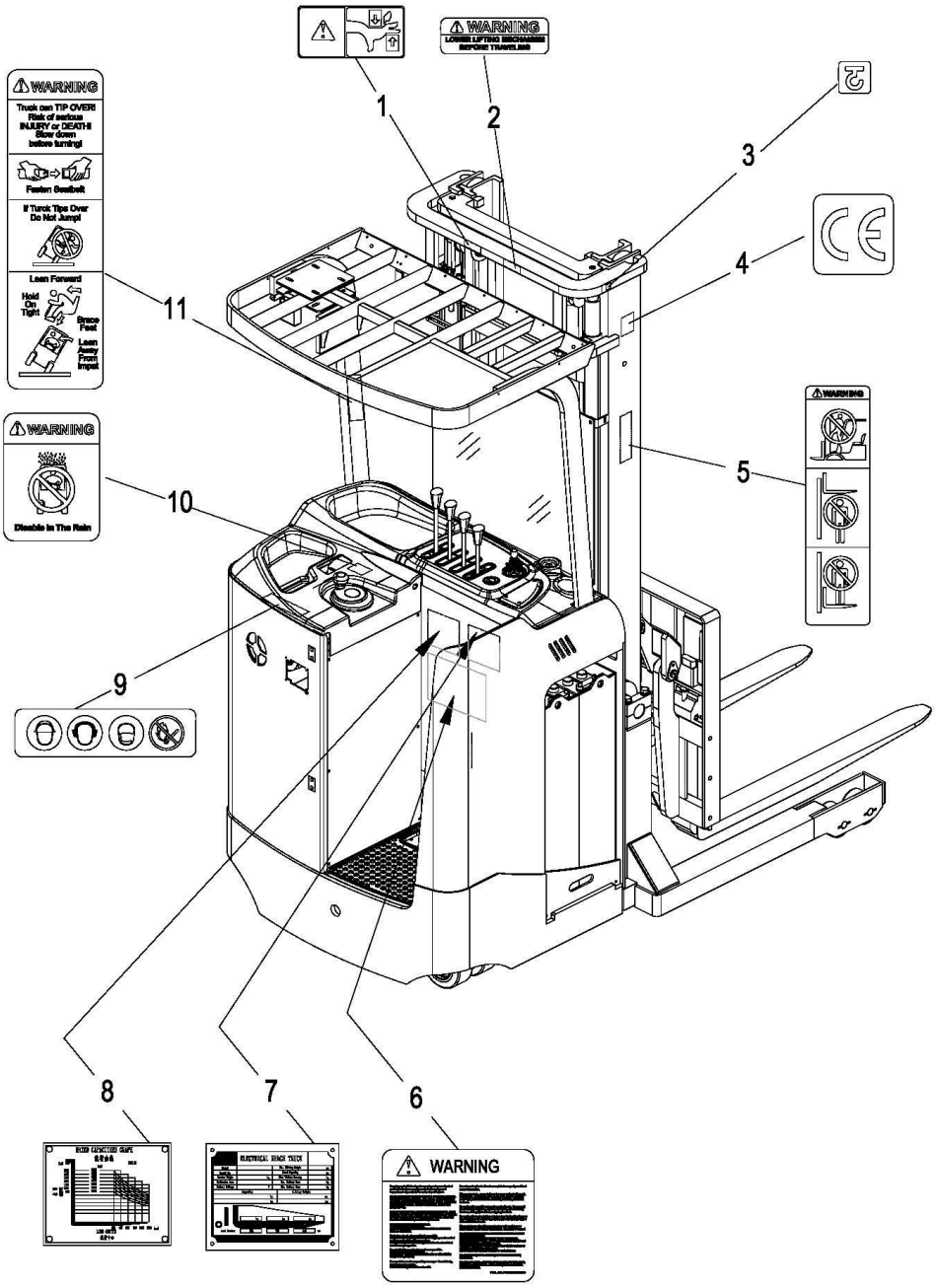

Item	Description
1	“Never put your hands in inner and outer mast.“ warning
2	Warning decal
3	Strap points for crane lifting
4	CE decal
5	“Never stand ” warning
6	Operator warning decal
7	Truck data plate
8	Capacity chart
9	Security mark
10	“Don't drive in rain.“ warning
11	Operator warning

1.4.1 Truck Data Plate

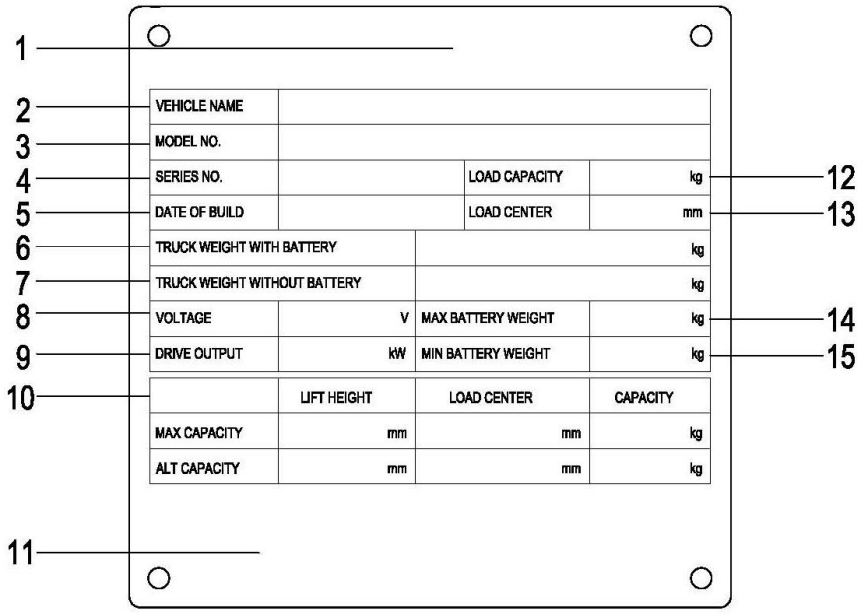

Item	Description	Item	Description
1	Manufacturer	9	Drive output(kw)
2	Vehicle name	10	load-lift height table
3	Model no.	11	License no.
4	Serial no.	12	Load capacity(kg)
5	Date of build	13	Load center(mm)
6	Truck weight with battery(kg)	14	Max. allowable battery weight(kg)
7	Truck weight without battery(kg)	15	Min. allowable battery weight(kg)
8	Voltage(V)		

For queries regarding the truck or ordering spare parts please quote the truck serial number(4).

2. Commissioning

2.1 Using the truck for the First Time

Only operate the truck with battery current.
Preparing the truck for operation after delivery or transport.
Procedure

- Check the equipment is complete.
- Check the hydraulic oil level.
- Install the battery if necessary (where required), (see "4.5 Battery removal and installation") do not damage battery cable.
- Charge the battery, (see "4.4 Charging the battery").

When the truck is parked the surface of the tyres will flatten. The flattening will disappear after a short period of operation.

2.2 During brake-in

We recommended operating the machine under light load conditions for the first stage of operation to get the most from it. Especially the requirements given below should be observed while the machine is in a stage of 100 hours of operation.

- Must prevent the new battery from over discharging when early used. **Please charging when remain power less than 20%.**
- Perform specified preventive maintenance services carefully and completely.
- Avoid sudden stop, starts or turns.
- Oil changes and lubrication are recommended to do earlier than specified.
- Limited load is 70～80% of the rated load.

3.Operation

3.1 Safety Regulations for the Operation of trucks

Driver authorisation: The truck may only be used by suitably trained personnel, who have demonstrated to the proprietor or his representative that they can drive and handle loads and have been authorised to operate the truck by the proprietor or his representative.

Driver's rights, obligations and responsibilities: The driver must be informed of his duties and responsibilities and be instructed in the operation of the truck and shall be familiar with the operator manual . The driver shall be afforded all due rights . Safety shoes must be worn with pedestrian operated trucks.

Unauthorised Use of truck: The driver is responsible for the truck during the time it is in use. He shall prevent unauthorised persons from driving or operating the truck. It is forbidden to carry passengers or lift personnel.

Damage and Faults: The supervisor must be immediately informed of any damage or faults to the truck. trucks not safe for operation (e.g. wheel or brake problems) must not be used until they have been rectified.

Repairs: The driver must not carry out any repairs or alterations to the truck without the necessary training and authorisation to do so. The driver must never disable or adjust safety mechanisms or switches.

Hazardous area: A hazardous area is defined as the area in which a person is at risk due to truck movement, lifting operations, the load handler (e.g. forks or attachments) or the load itself. This also includes areas which can be reached by falling loads or own operating equipment.

- Unauthorised persons must be kept away from the hazardous area.
- Where there is anger to personnel, a warning must be sounded with sufficient notice.
- If unauthorised personnel are still within the hazardous area the truck shall be brought to a halt immediately.

Safety Devices and Warning Signs: Safety devices, warning signs and warning instructions shall be strictly observed.

Conditions for application: Ambient temperature:during operation: 5 ℃ to 40 ℃

The truck must be specially equipped and approved for continuous use in environments with temperatures below 5 °C or in cold stores respectively with extreme temperatures or humidity changes.

3.2 Controls and Displays

3.2.1 Control panel controls and displays

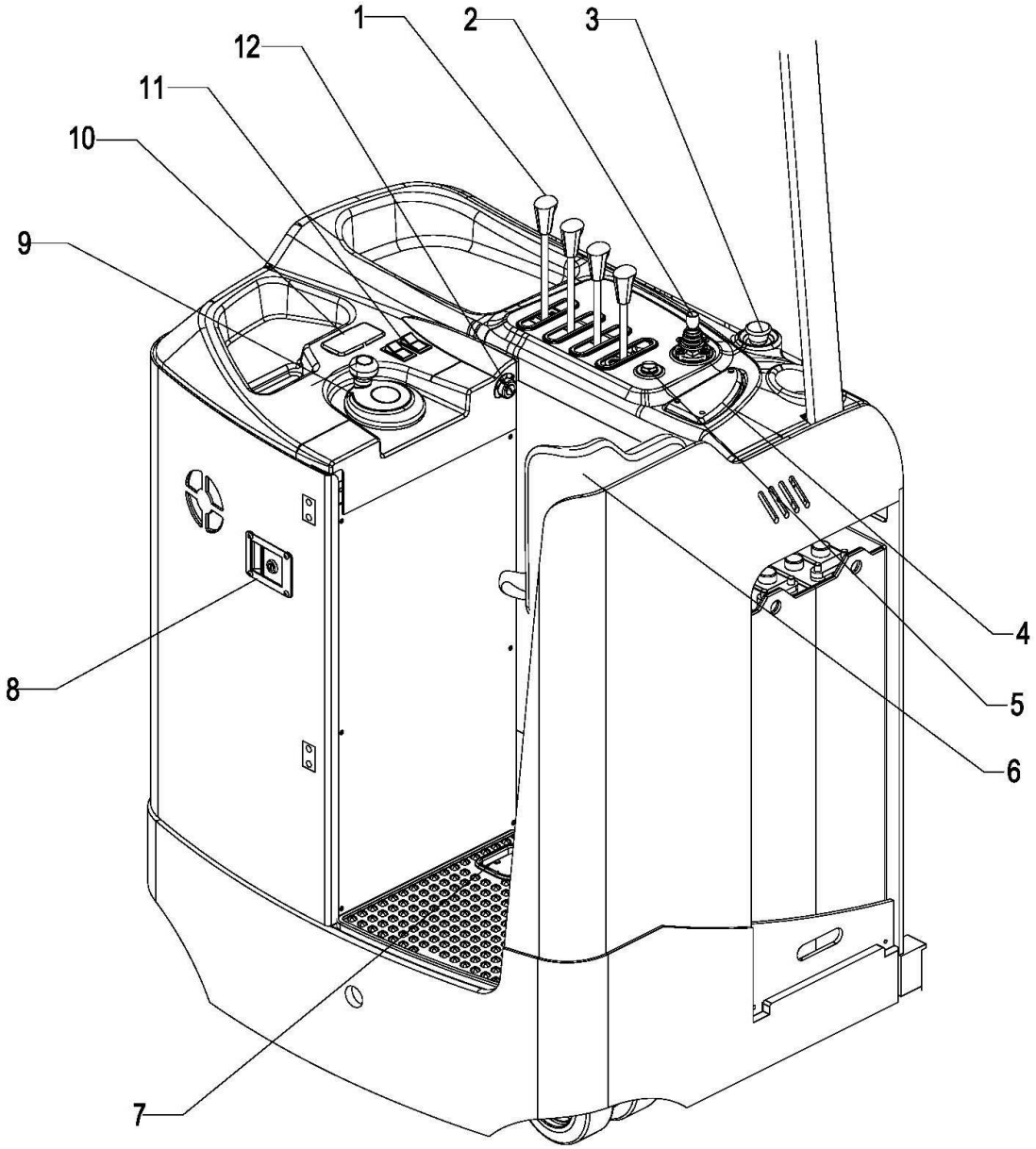

Item	Control / Display	Function
1	Hydraulic control handle	Function operation: • Load handler lift/lower • Mast support extend / retract • Fork forward or backward tilt • Sideshift left / right
2	Travel switch	Select the required driving direction.
3	Emergency brake switch	Disconnects the supply current, deactivates all electrical functions, causing the truck to brake automatically.
4	Foam Pad	For the driver rely on.
5	"Horn" button	Activates the horn.
6	Cushion	For the driver rely on.
7	Drive pedal	• Not applied: Travel inhibited, truck decelerates. • Applied: Travel released.
8	Lock	Close the backdoor
9	Steering wheel	Steers the truck in the required direction.
10	Display unit	Operating information and warning message display.
11	Light switch (optional)	Switch on or off the light.
12	Key switch	Switches control current on and off. Removing the key prevents the truck from being switched on by unauthorised personnel.

3.2.2 Display unit controls and displays

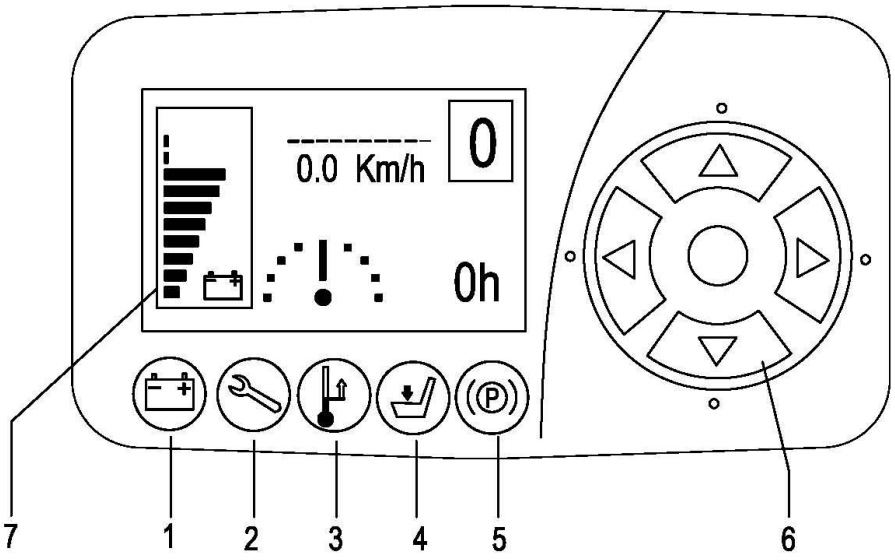

1 Low battery alarm lamp

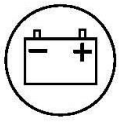

When the electricity is too low, the lamp will illuminate.Must prevent the battery from over discharging , please charging.

---

2 Fault alarm lamp

When the order picker has fault, the lamp will illuminate.At this time, the Information display area of LCD screen will display the warning and fault indication .

---

3 Temperature alarm lamp

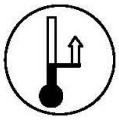

When overuse makes the temperature of drive motor high, the lamp will illuminate.At the moment,in order to preventing the motor from being burned out,please don't use the reach truck temporarily.And when the temperature drop,continue to use.

---

4 Drive pedal alarm lamp

When you don't step on the drive pedal, the lamp will illuminate.

---

5 Brake alarm lamp

Pressing the emergency brake switch,stop driving.The lamp will illuminate.

6 Function keys

Use the "left" button to adjust the speed mode;Use the "down" button to switch the driving mode. Use the "middle" to code.

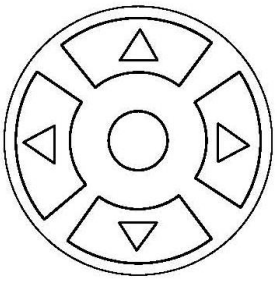

7 LCD screen

Power display area

It will display the rate of charge here.Each cell represents 10% charge,a total of 10 lattice.

For example, figure shows the reach truck has 80% charge.

Information display area

Displays the warning and fault indication(**see 6.1 Error Message,Page 35**)

Speed display area

Displays possible travel speeds.Unit:Km/h .

Steering display area

Use the steering wheel to steer the truck outside narrow aisles.The position of the drive wheel is shown here,area:+/- 90° .

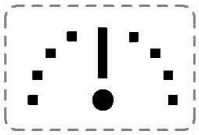

Driving mode display area

" 0h " ： High speed;

" " ： Crawl speed.

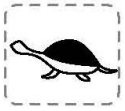

Speed mode display area

Four modes : Mode 1、Mode 2、Mode 3 and Mode 4 .

Switch the mode:Press the left button of Function keys(6) to switch the mode.

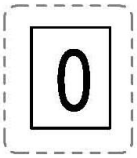

3.3 Run the truck

3.3.1 Checking and Preparing

Checks and operations to be performed before starting daily work

• Visually inspect the entire truck (in particular wheels and load handler) for obvious damage.
• Visually inspect the battery attachment and cable connections.
• Check the load handler for visible damage such as cracks, bent or severely worn load forks.
• Test the warning device.
• Make sure the load chains are evenly tensioned.
• Check whether the normal function of all safety devices.

Warning!
Before the truck can be commissioned, operated or a load unit lifted, the driver must ensure that there is nobody within the hazardous area.

3.3.2 To prepare the truck for operation

• Insert the key in the key switch and turn it to the “ON” position .
• Test horn.
• Check the operation of the foot switch.

3.4 Industrial Truck Operation

3.4.1 Safety regulations for truck operation

Travel routes and work areas: Only use lanes and routes specifically designated for truck traffic. Unauthorised third parties must stay away from work areas. Loads must only be stored in places specially designated for this purpose.

Driving conduct: The driver must adapt the travel speed to local conditions. The truck must be driven at slow speed when negotiating bends or narrow passageways, when passing through swing doors and at blind spots. The driver must always observe an adequate braking distance between the forklift truck and the vehicle in front and must be in control of the truck at all times. Abrupt stopping (except in emergencies), rapid U turns and overtaking at dangerous or blind spots are not permitted. It is forbidden to lean out of or reach beyond the working and operating area.

Travel visibility: The driver must look in the direction of travel and must always have a clear view of the route ahead. Loads that affect visibility must be positioned at the rear of the truck. If this is not possible, a second person must walk in front of the truck as a lookout.

Negotiating slopes and inclines: Negotiating slopes or inclines is only permitted if such roads are clean and have a non-slip surface and providing such journeys are safely undertaken in accordance with the technical specifications for the truck in question. The truck must always be driven with the load unit facing uphill. The industrial truck must not be turned, operated at an angle or parked on inclines or slopes. Inclines must only be negotiated at slow speed, with the driver ready to brake at any moment.

Negotiating lifts and docks: Lifts and docks must only be used if they have sufficient capacity, are suitable for driving on and authorised for truck traffic by the owner. The driver must satisfy himself of the above before entering these areas. The truck must enter lifts with the load in front and must take up a position which does not allow it to come into contact with the walls of the lift shaft.
Persons riding in the lift with the forklift truck must only enter the lift after the truck has come to a rest and must leave the lift before the truck.

Nature of loads to be carried: The operator must make sure that the load is in a satisfactory condition. Only carry loads that are positioned safely and carefully. Use suitable precautions, e.g. a load guard, to prevent parts of the load from tipping or falling down.

3.4.2 Travel, Steering, Braking

Do not drive the truck unless the panels are closed and properly locked.
When you start up the truck the drive pedal must be applied.

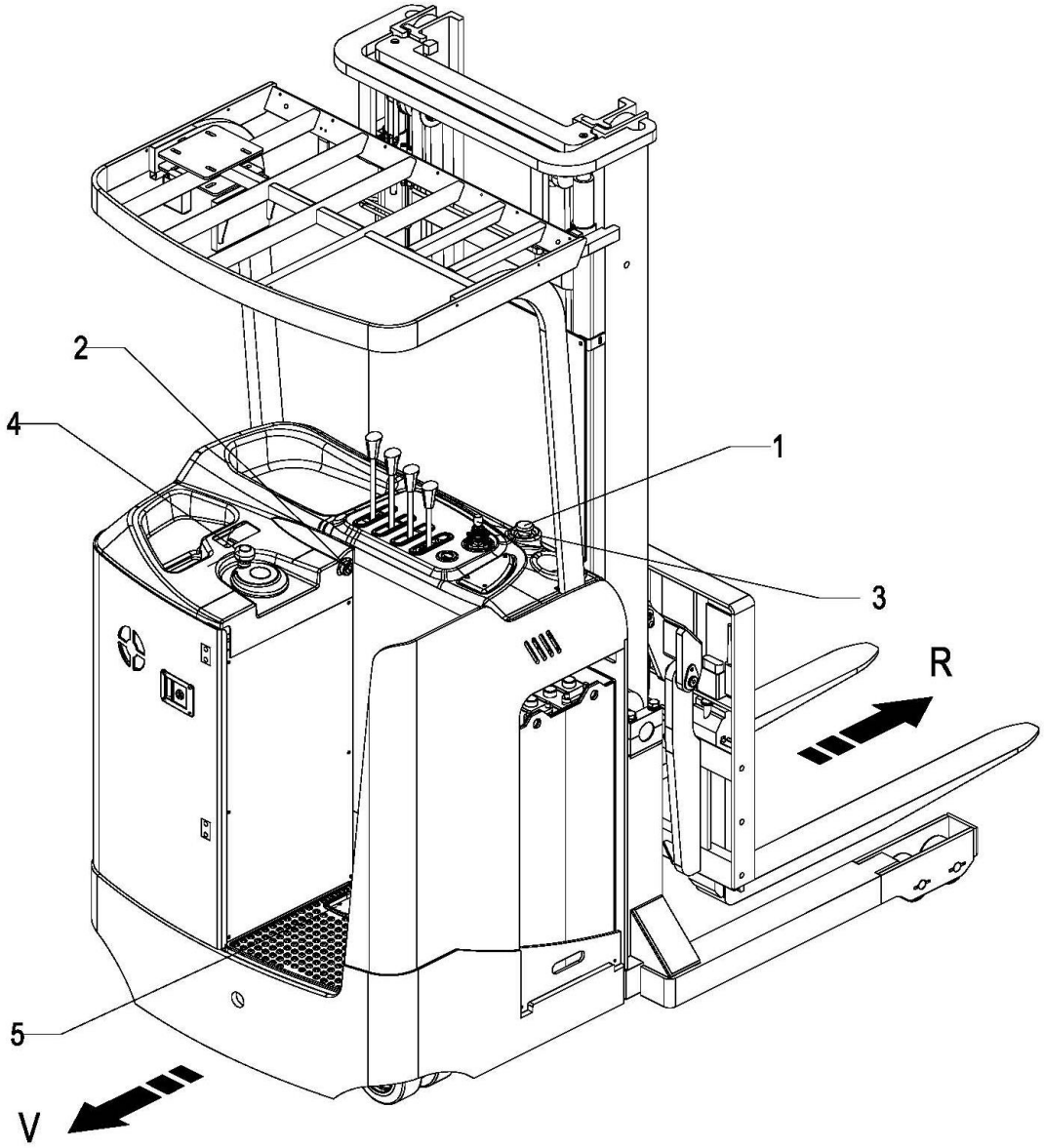

1.Driving

• Insert the key in the key switch and turn it to the “ON” position .

• Use the travel switch (3) to select the required driving direction.

Back = the drive direction (V), the main travel direction.

Forward = the load direction (R) .

• apply the drive pedal (5).

Warning!

• The truck can only be moved with or without a load when the mast support is retracted, the mast tilted back and the load handler lowered.

• You should only travel in the load direction (R) for shunting and lifting or depositing a load.

2.Steering

Use steering wheel (4) to steer the truck in the required direction.The drive wheel position is indicated in the driver’s display.

3.Braking

The brake pattern of the truck depends largely on the ground conditions. The driver must take this into account when operating the truck.

The driver must be looking ahead when travelling. If there is no hazard, brake moderately to avoid moving the load .

The truck can brake in four different ways:

- with the reversing brake
- with the coasting brake
- with the emergency brake
- with the service brake

• With the reversing brake

While the truck is travelling press the travel switch (3). It switches to the opposite travel direction and the truck decelerates through the traction current controller until it starts to move in the opposite direction.

• With the coasting brake

Not apply the drive pedal (5): Travel inhibited, truck decelerates.

Warning!

This method of braking only acts as a parking brake and not as a service brake.

• With the emergency brake

Press the emergency brake switch（1）. The truck brakes until it comes to a halt.

Warning!

The emergency brake switch (1) must only be used in dangerous situations.

3.4.3 Lifting and depositing loads

Before raising a load, the driver must ensure that it is correctly palletised and that the capacity of the truck is not exceeded.

- Insert the forks as far as possible underneath the load.

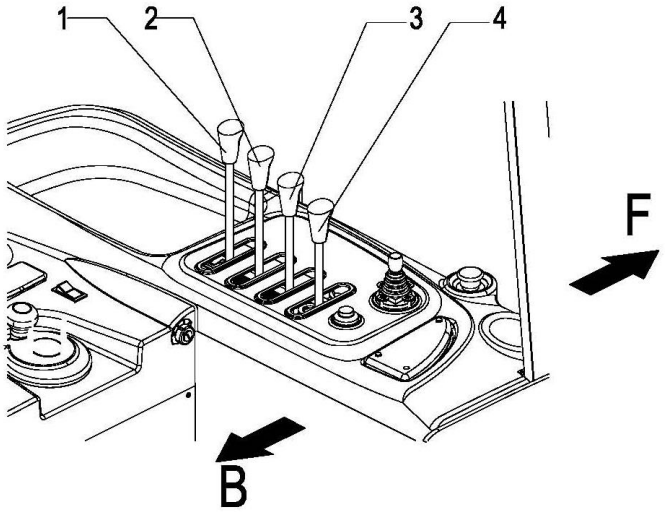

1.Lifting - Lowering

Do not reach into the mast. Do not allow anyone to stand underneath a raised load.

Lifting

Pull the control lever (1) towards direction (B) until you reach the desired lift height.

The lifting speed is determined by the inclination of the control lever.

Lowering

Pull the control lever (1) towards direction (F) until you reach the desired height.

The lowering speed is determined by the inclination of the control lever.

2.Extending - Retracting

Do not reach between the mast and the battery cover.

Extending

Move the control lever (2) in direction (F) to extend the mast support forward.

Retracting

Move the control lever (2) in direction (B) to retract the mast support backward.

3.Forward - Backward Tilting

Do not reach between the mast and the battery cover.

Tilting Forward

To tilt forward, push the control lever (3) in direction (F).

Tilting Backward

To tilt backward, push the control lever (3) in direction (B).

4.Left - Right Sideshift

The references to left and right are based on the load handler as viewed from the operator's position.

Sideshift Left

Push the control lever (4) in direction (F).

Sideshift Right

Push the control lever (4) in direction (B).

3.5 Parking the truck securely

When you leave the truck it must be securely parked even if you only intend to leave it for a short time.

• Lower the load completely and position it horizontally.
• Retract the mast support fully.
• Turn off the key switch and remove the key(1).

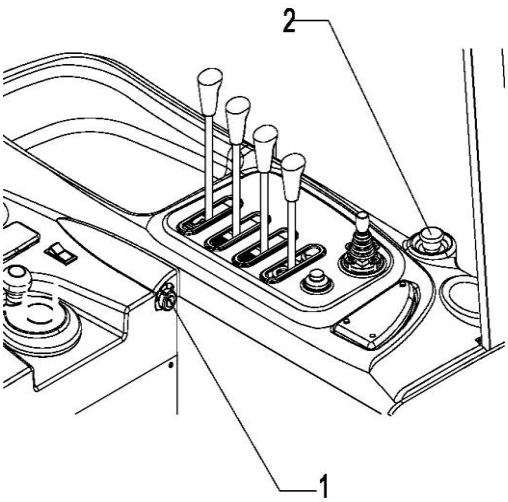

Warning!
Do not park the truck on a slope. The load must always be lowered to the ground.

https://truckmanualshub.com/

4.Battery Maintenance & Charging

4.1 Safety regulations for handling acid batteries

Park the truck securely before carrying out any work on the batteries.

Maintenance personnel : Batteries may only be charged, serviced or replaced by trained personnel .The present operator manual and the manufacturer 's instructions concerning batteries and charging stations must be observed when carrying out the work.

Fire protection :

• Smoking and naked flames must be avoided when working with batteries.
• Wherever a truck is parked for charging there shall be no inflammable material or operating fluids capable of creating sparks within 2 metres around the truck.
• The area must be well ventilated.
• Fire protection equipment must be provided.

Battery Disposal: Batteries may only be disposed of in accordance with national environmental protection regulations or disposal laws. The manufacturer's disposal instructions must be followed.

Warning!
The weight and dimensions of the battery have considerable affect on the operational safety of the truck. Battery equipment may only be replaced with the agreement of the manufacturer.

4.2 Charging the battery

• Expose the battery(See 4.3 Expose the battery).

Safety regulations for Charging

• Please charge in the well-ventilated and appointed site.
• Mark 'no smoking' on charging.
• ahead of charging，please examine wire and pin whether good or not. When wire and pin are damaged，please do not charge.
• When charging, the tops of the battery cells must be exposed to provide sufficient ventilation.

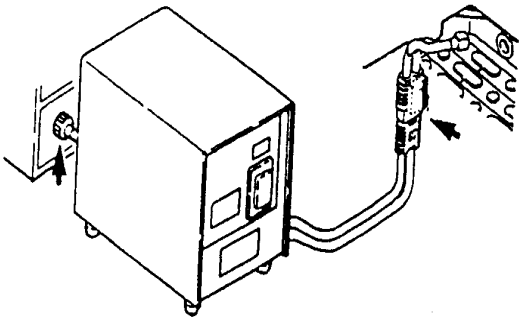

• In charging，electrical source switch or battery pin are not close，or，which destroys pin and electrical units as a rule， first press the stopping button on the charger，then unfix the pin.

Charging step

• Check whether the condition is according with "Safety regulations for Charging the battery".
• Park the Reach Truck securely(See 3.5 Parking the Truck securely).
• Remove the battery plug
• Connect the battery plug with the charging lead of the stationary charger and turn on the charger.

It is essential to follow the safety regulations of the battery and charging station manufacturers.

4.3 Battery removal and installation

Warning! To prevent short circuits, batteries with exposed terminals or connectors must be covered with a rubber mat. When replacing a battery with a crane, make sure the crane has sufficient capacity (see battery weight on the battery data plate on the container). The lifting gear must exert a vertical pull so that the battery container is not compressed. Hooks must be fitted in such a way that when the crane lifting harness is slackened, they do not fall onto the battery cells.

• Place the battery plug or the battery cable in such a way that they will not get caught on the truck when the battery is removed.
• The battery bracket (1)aim side door and make it with the bottom of the battery box at the same level height
• Remove guard of the battery box(2),remove guard of the battery bracket(3),pull the battery box into the battery bracket ,plug guard of the battery bracket(3).
• Remove the battery.

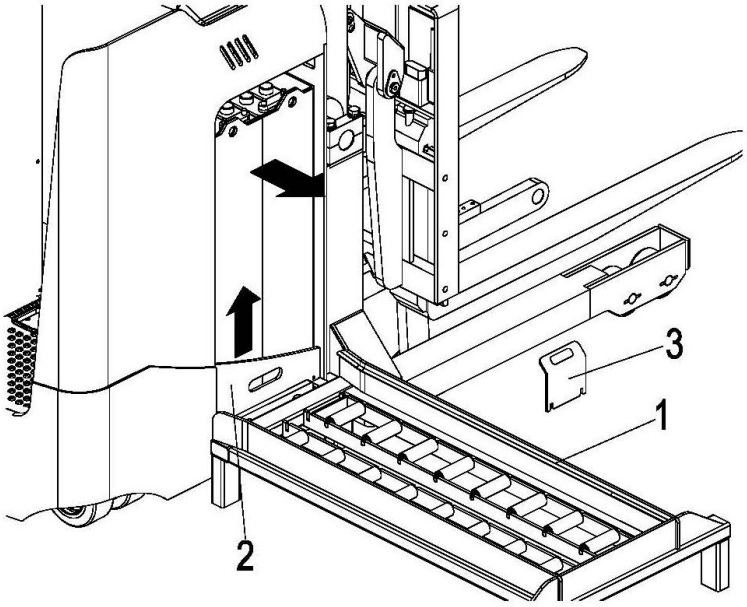

https://truckmanualshub.com/

4.4 Battery maintenance

Do not overuse battery:

• If you use up the energy of battery till the forklift immovability, you will shorten its working hours.

• Shower for battery appears need for charge，please charge it quickly.

Battery maintenance:

The battery cell covers must be kept dry and clean. The terminals and cable shoes must be clean, secure and have a light coating of dielectric grease.Batteries with non insulated terminals must be covered with a non slip insulation mat.

Warning!

1. Do not use dry cloth or fibre cloth to clean the battery，avoiding static to bring the explosion.
2. Unfixing battery plug.
3. Cleaning with wet cloth.
4. Wearing glasses for protecting eyes rubber overshoes and rubber glove.

Battery storage：

If batteries are taken out of service for a lengthy period they should be stored in the fully charged condition in a dry, frost-free room. To ensure the battery is always ready for use a choice of charging methods can be made:

• a monthly equalising charge as in point 4.2.

5.Truck Maintenance

5.1 Operational safety and environmental protection

• The servicing and inspection operations contained in this chapter must be performed in accordance with the intervals indicated in the servicing checklists.

• Any modification to the truck assemblies, in particular the safety mechanisms, is prohibited. The operational speeds of the truck must not be changed under any circumstances.

• Only original spare parts have been certified by our quality assurance department. To ensure safe and reliable operation of the truck, use only the manufacturer's spare parts. Used parts, oils and fuels must be disposed of in accordance with the relevant environmental protection regulations. For oil changes, contact the manufacturer’s specialist department.

• Upon completion of inspection and servicing, carry out the activities listed in the “Recommissioning” section.

5.2Maintenance Safety Regulations

Maintenance personnel

trucks must only be serviced and maintained by the manufacturer’s trained personnel. The manufacturer’s service department has field technicians specially trained for these tasks. We therefore recommend a maintenance contract with the manufacturer’s local service centre.

Lifting and jacking up

When a truck is to be lifted, the lifting gear must only be secured to the points specially provided for this purpose.

When jacking up the truck, take appropriate measures to prevent the truck from slipping or tipping over (e.g. wedges, wooden blocks).

You may only work underneath a raised load handler if it is supported by a sufficiently strong chain.

Cleaning

Do not use flammable liquids to clean the truck.

Prior to cleaning, all safety measures required to prevent sparking (e.g. through short circuits) must be taken. For battery-operated trucks, the battery connector must be removed. Only weak suction or compressed air and non-conductive antistatic brushes may be used for cleaning electric or electronic assemblies.

If the truck is to be cleaned with a water jet or a high-pressure cleaner, all electrical and electronic components must be carefully covered beforehand as moisture can cause malfunctions.

Do not clean with pressurised water.

After cleaning the truck, carry out the activities detailed in the “Recommissioning ” section.

Electrical System

Only suitably trained personnel may operate on the truck's electrical system.

Before working on the electrical system, take all precautionary measures to avoid – electric shocks.

For battery-operated trucks, also de-energise the truck by removing the battery connector.

Welding

To avoid damaging electric or electronic components, remove these from the truck before performing welding operations.

Settings

When repairing or replacing electric or electronic components or assemblies, always note the truck-specific settings.

Tyres

The quality of tyres affects the stability and performance of the truck. When replacing factory fitted tyres only used original manufacturer's spare parts, as otherwise the data plate specifications will not be kept.

When changing wheels and tyres, ensure that the truck does not slew (e.g. when replacing wheels always left and right simultaneously).

Hydraulic hoses

The hoses must be replaced every six years. When replacing hydraulic components, also replace the hoses in the hydraulic system.

5.3 Servicing and inspection

Thorough and expert servicing is one of the most important requirements for the safe operation of the truck. Failure to perform regular servicing can lead to truck failure and poses a potential hazard to personnel and equipment.

The service intervals stated are based on single shift operation under normal operating conditions. They must be reduced accordingly if the truck is to be used in conditions of extreme dust, temperature fluctuations or multiple shifts.

The following maintenance checklist states the tasks and intervals after which they should be carried out. Maintenance intervals are defined as:

W = Every 50 service hours, at least weekly

A = Every 500 operating hours

B = Every 1000 operating hours, or at least annually

C = Every 2000 operating hours, or at least annually

W service intervals are to be performed by the customer.

In the run-in period - after approx. 100 service hours - or after repair work, the owner must check the wheel nuts/bolts and re-tighten if necessary.

5.3.1 Maintenance Checklist

		Maintenance interval ●			
		W	A	B	C
Braking	Check magnetic brake air gap.			●	
	Test service and load brakes.			●	
Electrical system	Test instruments, displays and control switches.			●	
	Test warning and safety device.			●	
	Make sure wire connections are secure and check for damage.			●	
	Test micro switch setting.			●	
	Check contactors and relays.			●	
	Fix the motor and cable.			●	
Power supply	Visually inspect battery.			●	
	Visually inspect battery plug.			●	
	Check battery cable connections are secure, grease terminals if necessary.			●	
Travel	Check transmission for noise and leakage.			●	
	Check travel mechanism, adjust and lubricate if necessary.			●	
	Check wheels for wear and damage.			●	
	Check wheel suspension and attachments.			●	
	Check drive support plate.			●	
	Change transmission oil.				●
Truck frame	Check chassis for damage.			●	
	Check labels.			●	
	Check mast attachment.			●	
	Make sure overhead guard is secure and check for damage.			●	
	Check moving mast holder and wear rails.			●	
	Check driver’s seat.			●	
	Test restraint systems.			●	
Hydraulic operations	Test hydraulic system.			●	
	Check that hose and pipe lines and their connections are secure, check for leaks and damage.			●	
	Check cylinders and piston rods for damage and leaks, and make sure they are secure.			●	
	Check hydraulic oil level.			●	
	Replace hydraulic oil.				●

		Maintenance interval ●			
		W	A	B	C
Lifting	Check lifting chains and chain guides for wear, adjust and grease			●	
	Check fork tines and fork carrier for wear and damage.			●	
	Perform sight check of rollers, sliding elements, and stops			●	
Steering system	Test electric steering.			●	
	Check steering toothing for wear and lubricate.			●	
Lubrication	Grease the vehicle in accordance with the lubrication schedule.			●	

5.3.2 Lubrication Schedule

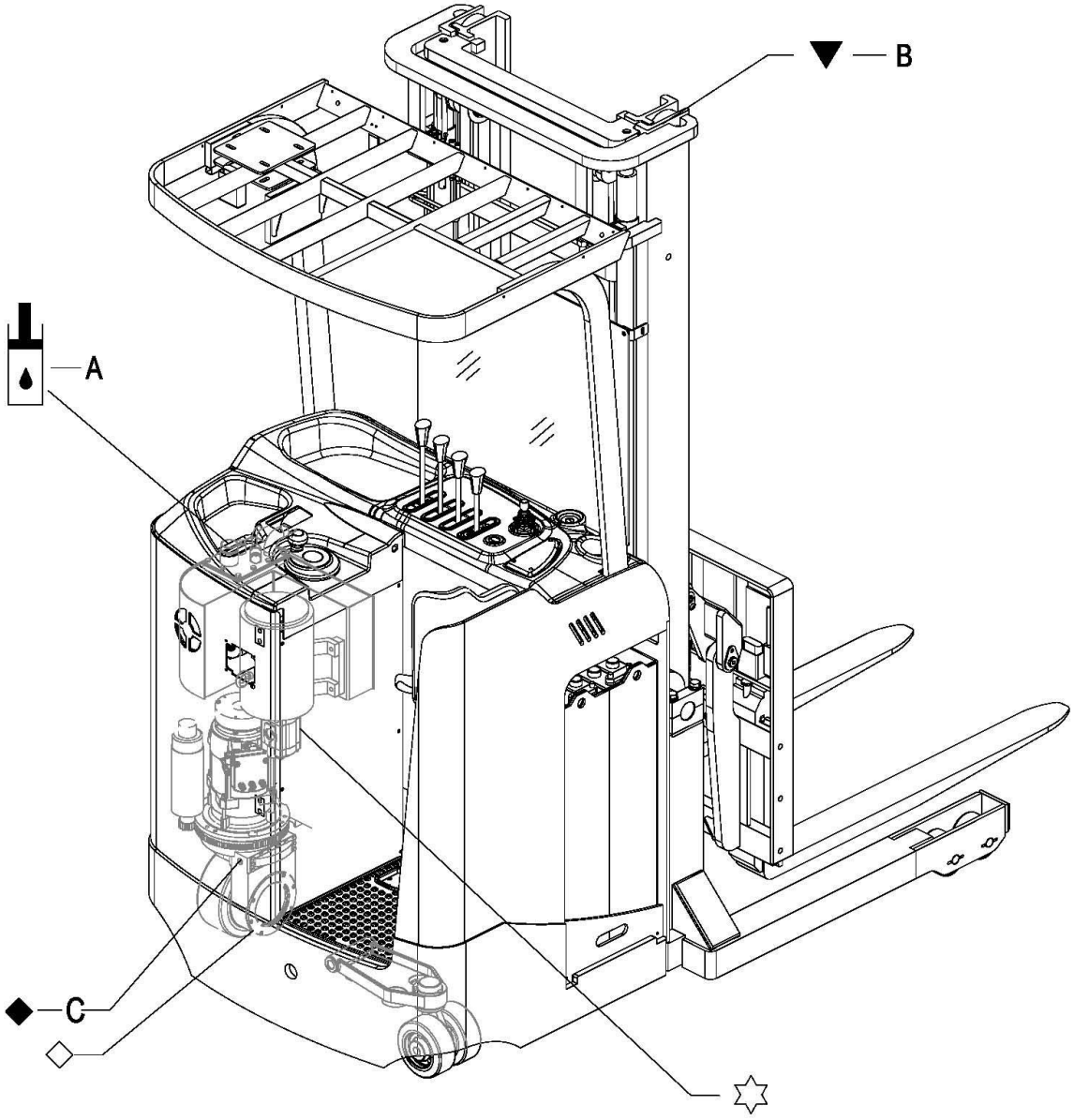

▼ Contact surfaces

Hydraulic oil filler neck

Hydraulic oil drain plug

◆ Transmission oil filler neck

◇ Transmission oil drain plug

Consumables

Handling consumables type material: Consumables must always be handled correctly. Follow the manufacturer's instructions.

Improper handling is hazardous to health, life and the environment. Consumables must only be stored in appropriate containers. They may be flammable and must therefore not come into contact with hot components or naked flames.

Only use clean containers when filling up with consumables. Do not mix consumables of different grades. The only exception to this is when mixing is expressly stipulated in the Operating Instructions.

Avoid spillage. Spilled liquids must be removed immediately with suitable bonding agents and the bonding agent/consumable mixture must be disposed of in accordance with regulations.

Code	Description	Used for
A	L-HM46#	Hydraulic oil
B	Polylub GA352P	Lubrication grease
C	80W-90GL-5	Gear oil

5.3.3 Maintenance Instructions

Prepare the truck for maintenance and repairs

All necessary safety measures must be taken to avoid accidents when carrying out maintenance and repairs. The following preparations must be made:

• Park the truck securely (See 3.5 Parking the truck securely).
• Remove the key to prevent the truck from accidentally starting.
• When working under a raised lift truck, secure it to prevent it from tipping or sliding away.

Replacing the drive wheel

The drive wheel must only be replaced by authorised service personnel.

Check the hydraulic oil level

It is going to add hydraulic oil when you heard explosion sound from pipe during lifting.

• Prepare the truck for maintenance and repairs (See 5.3.3 Maintenance Instructions).
• Opening the cover.
• Add hydraulic oil of the correct grade (See 5.3.2 Lubrication Schedule) .

Add hydraulic oil till you cant hear explosion sound during lifting.

Warning!
Forbid adding hydraulic oil within impurity.

https://truckmanualshub.com/

Installation is the reverse order.

Check transmission oil level

• Prepare the truck for maintenance and repairs (See 5.3.3 Maintenance Instructions).
• Open the cover (See 5.3.3 Maintenance Instructions).
• Check the transmission oil level, it should be at the control plug level (See 5.3.2 Lubrication Schedule).
• If necessary add transmission oil of the correct grade (See 5.3.2 Lubrication Schedule).
Installation is the reverse order.

Warning!
Forbid adding transmission oil within impurity.

Recommissioning

The truck may only be recommissioned after cleaning or repair work, once the following operations have been performed.
• Test horn.
• Test Emergency brake switch.
• Test brake.
• Lubricate the truck in accordance with the maintenance schedule.

5.4 Decommissioning the truck

If the truck is to be decommissioned for more than two months , e.g. for operational reasons,it must be parked in a frost-free and dry location and all necessary measures must be taken before, during and after decommissioning as described.
On decommissioning the truck must be jacked up so that all the wheels are clear of the ground. This is the only way of ensuring that the wheels and wheel bearings are not damaged.
If the truck is to be out of service for more than 6 months , further measures must be taken in consultation with the manufacturer's service department.

5.4.1Prior to decommissioning

• Thoroughly clean the truck.
• Check the brakes.
• Check the hydraulic oil level and replenish as necessary (See 5.3.3 Maintenance Instructions).
• Apply a thin layer of oil or grease to any non-painted mechanical components.
• Lubricate the truck in accordance with the maintenance schedule (See 5.3.2 Lubrication Schedule).
• Charge the battery (See 4.4Charging the battery).
• Disconnect the battery, clean it and apply grease to the terminals.
In addition, follow the battery manufacturer's instructions.
• Spay all exposed electrical contacts with a suitable contact spray.

Warning！
Charge every months:
– Charge the battery.
Battery powered trucks:
The battery must be charged at regular intervals to avoid depletion of the battery through self-discharge. The sulfation would destroy the battery.

5.4.2 Restoring the truck to operation after decommissioning

• Thoroughly clean the truck.
• Lubricate the truck in accordance with the maintenance schedule (See 5.3.2 Lubrication Schedule).
• Clean the battery, grease the terminals and connect the battery.
• Charge the battery (See 4.4 Charging the battery).
• Check hydraulic oil for condensed water and replace if necessary.
• Run the truck (see 3.3 Run the truck).

Battery powered trucks:
If there are switching problems in the electrical system, apply contact spray to the exposed contacts and remove any oxide layers on the contacts of the operating controls by applying them repeatedly.
Perform several brake tests immediately after re-commissioning the truck.

5.5 Safety checks to be performed at regular intervals and following any unusual incidents

Carry out a safety check in accordance with national regulations. We have a special safety department with trained personnel to carry out such checks. The truck must be inspected at least annually (refer to national regulations) or after any unusual event by a qualified inspector. The inspector shall assess the condition of the truck from purely a safety viewpoint, without regard to operational or economic circumstances. The inspector shall be sufficiently instructed and experienced to be able to assess the condition of the truck and the effectiveness of the safety mechanisms based on the technical regulations and principles governing the inspection of trucks.

A thorough test of the truck must be undertaken with regard to its technical condition from a safety aspect. The truck must also be examined for damage caused by possible improper use. A test report shall be provided. The test results must be kept for at least the next 2 inspections.

The owner is responsible for ensuring that faults are immediately rectified.
A test plate is attached to the truck as proof that it has passed the safety inspection. This plate indicates the due date for the next inspection.

5.6 Final de-commissioning, disposal

Final, proper decommissioning or disposal of the truck must be performed in accordance with the regulations of the country of application. In particular, regulations governing the disposal of batteries, fuels and electronic and electrical systems must be observed.

6.Troubleshooting

This chapter is designed to help the user identify and rectify basic faults or the results of incorrect operation. When locating a fault, proceed in the order shown in the table.

Fault	Possible cause	Action
Truck does not start.	• Battery connector not connected. • Key switch in “OFF” position • Battery charge too low • Faulty fuse • truck in charge mode	• Check the battery connector and connect if necessary. • Set key switch to “I” • Check battery charge, charge battery if Necessary • Test fuses • Interrupt charging
Load can not be lifted	• Hydraulic oil level too low • Excessive load	• Check the hydraulic oil level • Note maximum capacity (see data plate)

If the fault cannot be rectified after carrying out the remedial procedure, notify the manufacturer ’ s service department ,as any further troubleshooting can only be performed by specially trained and qualified service personnel.