BODY

TABLE OF CONTENTS

	page
BODY	
WARNING	
SAFETY PRECAUTIONS AND WARNINGS	1
DIAGNOSIS AND TESTING	
WATER LEAKS	1
WIND NOISE	3
STANDARD PROCEDURE	
BODY LUBRICATION	3
HEAT STAKING	3
BUZZ, SQUEAK & RATTLE	4
PLASTIC BODY PANEL REPAIR	5
SPECIFICATIONS - TORQUE	13
SPECIAL TOOLS	
BODY	16
TAILGATE	17
DOOR - FRONT	26
DOORS - REAR	52
EXTERIOR	79
HOOD	112
INSTRUMENT PANEL	122
INTERIOR	148
PAINT	178
SEATS	181
STATIONARY GLASS	203
SUNROOF - SERVICE INFORMATION	213
WEATHERSTRIP/SEALS	238
BODY STRUCTURE	257

BODY

WARNING

SAFETY PRECAUTIONS AND WARNINGS

WARNING: Use an osha approved breathing filter when spraying paint or solvents in a confined area. Personal injury can result.

- **Avoid prolonged skin contact with petroleum or alcohol – based cleaning solvents. Personal injury can result.**
- **Do not stand under a hoisted vehicle that is not properly supported on safety stands. Personal injury can result.**

CAUTION: When holes must be drilled or punched in an inner body panel, verify depth of space to the outer body panel, electrical wiring, or other components. Damage to vehicle can result.

- **Do not weld exterior panels unless combustible material on the interior of vehicle is removed from the repair area. Fire or hazardous conditions, can result.**
- **Always have a fire extinguisher ready for use when welding.**
- **Disconnect the negative (-) cable clamp from the battery when servicing electrical components that are live when the ignition is OFF. Damage to electrical system can result.**
- **Do not use abrasive chemicals or compounds on painted surfaces. Damage to finish can result.**
- **Do not use harsh alkaline based cleaning solvents on painted or upholstered surfaces. Damage to finish or color can result.**
- **Do not hammer or pound on plastic trim panel when servicing interior trim. Plastic panels can break.**

DIAGNOSIS AND TESTING

WATER LEAKS

Water leaks can be caused by poor sealing, improper body component alignment, body seam porosity, missing plugs, or blocked drain holes. Centrifugal and gravitational force can cause water to drip from a location away from the actual leak point, making leak detection difficult. All body sealing points should be water tight in normal wet-driving conditions. Water flowing downward from the front of the vehicle should not enter the passenger or luggage

compartment. Moving sealing surfaces will not always seal water tight under all conditions. At times, side glass or door seals will allow water to enter the passenger compartment during high pressure washing or hard driving rain (severe) conditions. Overcompensating on door or glass adjustments to stop a water leak that occurs under severe conditions can cause premature seal wear and excessive closing or latching effort. After completing a repair, water test vehicle to verify leak has stopped before returning vehicle to use.

VISUAL INSPECTION BEFORE WATER LEAK TESTS

Verify that floor and body plugs are in place, body drains are clear, and body components are properly aligned and sealed. If component alignment or sealing is necessary, refer to the appropriate section of this group for proper procedures.

WATER LEAK TESTS

WARNING: DO NOT USE ELECTRIC SHOP LIGHTS OR TOOLS IN WATER TEST AREA. PERSONAL INJURY CAN RESULT.

When the conditions causing a water leak have been determined, simulate the conditions as closely as possible.

- If a leak occurs with the vehicle parked in a steady light rain, flood the leak area with an open-ended garden hose.
- If a leak occurs while driving at highway speeds in a steady rain, test the leak area with a reasonable velocity stream or fan spray of water. Direct the spray in a direction comparable to actual conditions.
- If a leak occurs when the vehicle is parked on an incline, hoist the end or side of the vehicle to simulate this condition. This method can be used when the leak occurs when the vehicle accelerates, stops or turns. If the leak occurs on acceleration, hoist the front of the vehicle. If the leak occurs when braking, hoist the back of the vehicle. If the leak occurs on left turns, hoist the left side of the vehicle. If the leak occurs on right turns, hoist the right side of the vehicle. For hoisting recommendations (Refer to LUBRICATION & MAINTENANCE/HOISTING - STANDARD PROCEDURE).

WATER LEAK DETECTION

To detect a water leak point-of-entry, do a water test and watch for water tracks or droplets forming on the inside of the vehicle. If necessary, remove interior trim covers or panels to gain visual access to the leak area. If the hose cannot be positioned without being held, have someone help do the water test.

Some water leaks must be tested for a considerable length of time to become apparent. When a leak appears, find the highest point of the water track or drop. The highest point usually will show the point of entry. After leak point has been found, repair the leak and water test to verify that the leak has stopped.

Locating the entry point of water that is leaking into a cavity between panels can be difficult. The trapped water may splash or run from the cavity, often at a distance from the entry point. Most water leaks of this type become apparent after accelerating, stopping, turning, or when on an incline.

MIRROR INSPECTION METHOD

When a leak point area is visually obstructed, use a suitable mirror to gain visual access. A mirror can also be used to deflect light to a limited-access area to assist in locating a leak point.

BRIGHT LIGHT LEAK TEST METHOD

Some water leaks in the luggage compartment can be detected without water testing. Position the vehicle in a brightly lit area. From inside the darkened luggage compartment inspect around seals and body seams. If necessary, have a helper direct a drop light over the suspected leak areas around the luggage compartment. If light is visible through a normally sealed location, water could enter through the opening.

PRESSURIZED LEAK TEST METHOD

When a water leak into the passenger compartment cannot be detected by water testing, pressurize the passenger compartment and soap test exterior of the vehicle. To pressurize the passenger compartment, close all doors and windows, start engine, and set heater control to high blower in HEAT position. If engine can not be started, connect a charger to the battery to ensure adequate voltage to the blower. With interior pressurized, apply dish detergent solution to suspected leak area on the exterior of the vehicle. Apply detergent solution with spray device or soft

bristle brush. If soap bubbles occur at a body seam, joint, seal or gasket, the leak entry point could be at that location.

WIND NOISE

Wind noise is the result of most air leaks. Air leaks can be caused by poor sealing, improper body component alignment, body seam porosity, or missing plugs in the engine compartment or door hinge pillar areas. All body sealing points should be airtight in normal driving conditions. Moving sealing surfaces will not always seal airtight under all conditions. At times, side glass or door seals will allow wind noise to be noticed in the passenger compartment during high cross winds. Over compensating on door or glass adjustments to stop wind noise that occurs under severe conditions can cause premature seal wear and excessive closing or latching effort. After a repair procedure has been performed, test vehicle to verify noise has stopped before returning vehicle to use.

VISUAL INSPECTION BEFORE TESTS

Verify that floor and body plugs are in place and body components are aligned and sealed. If component alignment or sealing is necessary, refer to the appropriate section of this group for proper procedures.

ROAD TESTING WIND NOISE

1. Drive the vehicle to verify the general location of the wind noise.
2. Apply 50 mm (2 in.) masking tape in 150 mm (6 in.) lengths along weatherstrips, weld seams or moldings. After each length is applied, drive the vehicle. If noise goes away after a piece of tape is applied, remove tape, locate, and repair defect.

POSSIBLE CAUSE OF WIND NOISE

- Moldings standing away from body surface can catch wind and whistle.
- Gaps in sealed areas behind overhanging body flanges can cause wind-rushing sounds.
- Misaligned movable components.
- Missing or improperly installed plugs in pillars.
- Weld burn through holes.

STANDARD PROCEDURE

BODY LUBRICATION

All mechanisms and linkages should be lubricated when necessary. This will maintain ease of operation and provide protection against rust and excessive wear. The weatherstrip seals should be lubricated to prolong their life as well as to improve door sealing.

All applicable exterior and interior vehicle operating mechanisms should be inspected and cleaned. Pivot/sliding contact areas on the mechanisms should then be lubricated.

1. When necessary, lubricate the operating mechanisms with the specified lubricants.
2. Apply silicone lubricant to a cloth and wipe it on door seals to avoid over-spray that can soil passenger's clothing.
3. Before applying lubricant, the component should be wiped clean. After lubrication, any excess lubricant should be removed.
4. The hood latch, latch release mechanism, latch striker, and safety latch should be lubricated periodically.
5. The door lock cylinders should be lubricated twice each year (preferably autumn and spring).
   - Spray a small amount of lock cylinder lubricant directly into the lock cylinder.
   - Apply a small amount to the key and insert it into the lock cylinder.
   - Rotate it to the locked position and then back to the unlocked position several times.
   - Remove the key. Wipe the lubricant from it with a clean cloth to avoid soiling of clothing.

HEAT STAKING

1. Remove trim panel.
2. Bend or move the trim panel components at the heat staked joints. Observe the heat staked locations and/or component seams for looseness.

3. Heat stake the components.
   a. If the heat staked or component seam location is loose, hold the two components tightly together and using a soldering gun with a flat tip, melt the material securing the components together. Do not over heat the affected area, damage to the exterior of the trim panel may occur.
   b. If the heat staked material is broken or missing, use a hot glue gun to apply new material to the area to be repaired. The panels that are being heat staked must be held together while the applying the glue. Once the new material is in place, it may be necessary to use a soldering gun to melt the newly applied material. Do not over heat the affected area, damage to the exterior of the trim panel may occur.
4. Allow the repaired area to cool and verify the repair.
5. Install trim panel.

BUZZ, SQUEAK & RATTLE

Buzz, Squeak & Rattles (BSR) may be caused by any one or more of the following and may be corrected as indicated:

- Loose fasteners should be tightened to specifications.
- Damaged or missing clips should be replaced.
- Damaged trim panels should be replaced.
- Incorrectly installed trim panels should be reinstalled properly.

Many BSR complaints such as loose trim, can be serviced using the Mopar® Parts BSR Noise Reduction Kit. This kit contains various tapes including foam, flock and anti-squeak used to eliminate noises caused by metal, plastic and vinyl components. Long life lubricants and greases can also be used on a variety of components. Refer to the Buzz, Squeak & Rattle Kit table for material contents and usage.

Buzz, Squeak & Rattle Kit

ITEM	FEATURES	APPLICATIONS	SERVICE TEMP
Itch And Squeak Tape	An abrasion resistant material thin enough to conform to most irregular surfaces. Stops most itches and squeaks.	Between metal and metal, metal and plastic, metal and vinyl, vinyl and plastic. Interior. Examples: Trim panels and bezels.	-40° to 225° Fahrenheit (-40° to 107° Celsius)
Black Nylon Flock	Nylon Flock with an aggressive acrylic adhesive. Provides for cushioning and compression fit, also isolates components. Water-resistant.	Between metal and metal, metal and plastic, vinyl and plastic. Examples: Pull cups, bezels, clips, ducts, top cover to glass, cowl panel.	-40° to 180° Fahrenheit (-40° to 82° Celsius)
High Density Urethane Foam	Tear resistant, highly resilient and durable.	Between metal and metal, metal and plastic. Water-resistant. Examples: I/P, heavy metal rattles, isolating brackets.	-40° to 180° Fahrenheit (-40° to 82° Celsius)
Open Cell Foam Tape	Soft foam conforms to irregular surfaces.	Wire harness and connector wrap. Examples: Seals, gasket, wiring, heat ducts.	-40° to 180° Fahrenheit (-40° to 82° Celsius)
Closed Cell Low Density Foam Tape	Soft, conformable. Water-resistant.	Wherever bulk is needed. Prevents closing flutters and rattles when applied to door watershield. Examples: Door, I/P.	-40° to 180° Fahrenheit (-40° to 82° Celsius)

ITEM	FEATURES	APPLICATIONS	SERVICE TEMP
NYE® Grease 880	Long life.	Suspensions. Examples: Strut busings, sway bars.	-40° to 390° Fahrenheit (-40° to 200° Celsius)
Krytox® Oil	Long life. Will not dry out or harm plastics or rubber.	When access is not possible, oil will migrate to condition. Vinyl, rubber, plastic, metal. Examples: Convertible top bushings, pull cups trim panel inserts.	-30° to 400° Fahrenheit (-34° to 205° Celsius)
Krytox® Grease	Long life. Will not dry out or harm plastics or rubber.	Vinyl, rubber, plastic, metal, glass. Examples: Weather-strips, backlite and windshield moldings.	-30° to 400° Fahrenheit (-34° to 205° Celsius)

PLASTIC BODY PANEL REPAIR

There are many different types of plastics used in today's automotive environment. We group plastics in three different categories: Rigid, Semi-Rigid, and Flexible. Any of these plastics may require the use of an adhesion promoter for repair. These types of plastic are used extensively on DaimlerChrysler Motors vehicles. Always follow repair material manufacturer's plastic identification and repair procedures.

Rigid Plastics:

Examples of rigid plastic use: Fascias, Hoods, Doors, and other Body Panels, which include SMC, ABS, and Polycarbonates.

Semi-Rigid Plastics:

Examples of semi-rigid plastic use: Interior Panels, Under Hood Panels, and other Body Trim Panels.

Flexible Plastics:

Examples of flexible plastic use: Fascias, Body Moldings, and upper and lower Fascia Covers.

Repair Procedure:

The repair procedure for all three categories of plastics is basically the same. The one difference is the material used for the repair. The materials must be specific for each substrate, rigid repair material for rigid plastic repair, semi-rigid repair material for semi-rigid plastic repair and flexible repair material for flexible plastic repair.

Adhesion Promoter/Surface Modifier:

Adhesion Promoters/Surface Modifiers are required for certain plastics. All three categories may have plastics that require the use of adhesion promoter/surface modifiers. Always follow repair material manufacturer's plastic identification and repair procedures.

SAFETY PRECAUTION AND WARNINGS

WARNING:

- **Eye protection should be used when servicing components. Personal injury can result.**
- **Use an OSHA approved breathing mask when mixing epoxy, grinding, and spraying paint or solvents in a confined area. Personal injury can result.**
- **Avoid prolonged skin contact with resin, petroleum, or alcohol based solvents. Personal injury can result.**
- **Do not venture under a hoisted vehicle that is not properly supported on safety stands. Personal injury can result.**

NOTE:
- **When holes must be drilled or cut in body panels, verify locations of internal body components and electrical wiring. Damage to vehicle can result.**
- **Do not use abrasive chemicals or compounds on undamaged painted surfaces around repair areas. Damage to finish can result.**

RIGID, SEMI-RIGID, AND FLEXIBLE PLASTIC PARTS TYPES

CODE	FAMILY NAME	COMMON TRADE NAME	TYPICAL APPLICATION
ASA	ACRYLONITRILE STYRENE ACRYLITE	LURAN S	CONSOLES, GRILLES
ABS	ACRYLONITRILE BUTADIENE STYRENE	TERLURAN	″A″ PILLARS, CONSOLES, GRILLES
ABS/PC	ABS/PC ALLOY	PULSE, PROLOY, BAYBLEND	DOORS, INSTRUMENT PANELS
ABS/PVC	ABS/PV ALLOY	PROLOY, PULSE, LUSTRAN, CYCLOVIN	DOOR PANELS, GRILLES, TRIM
BMC	BULK MOLDING COMPOUND	BMC	FENDER EXTENSIONS
EMA	EHTYLENE METHYL ACRYLATE/IONOMER	SURLYN, EMA, IONOMER	BUMPER GUARDS, PADS
METTON	METTON	METTON	GRILLES, KICK PANELS, RUNNING BOARDS
MPPO	MODIFIED POLYPHENYLENE OXIDE	MPPO	SPOILER ASSEMBLY
PA	POLYAMID	ZYTEL, VYDYNE, PA, MINLON	FENDERS, QUARTER PANELS
PET	THERMOPLASTIC POLYESTER	RYNITE	TRIM
PBT/PPO	PBT/PPO ALLOY	GERMAX	CLADDINGS
PBTP	POLYBUTYLENE THEREPTHALATE	PBT, PBTP, POCAN, VALOX	WHEEL COVERS, FENDERS, GRILLES
PBTP/EEBC	POLYBUTYLENE THEREPTHALATE/EEBC ALLOY	BEXLOY, ″M″, PBTP/EEBC	FASCIAS, ROCKER PANEL, MOLDINGS
PC	POLYCARBONATE	LEXAN, MERLON, CALIBRE, MAKROLON PC	TAIL LIGHT LENSES, IP TRIM, VALANCE PANELS
PC/ABS	PC/ABS ALLOY	GERMAX, BAY BLENDS, PULSE	DOORS, INSTRUMENT PANELS
PPO	POLYPHENYLENE OXIDE	AZDEL, HOSTALEN, MARLEX, PRFAX, NORYL, GTX, PPO	INTERIOR TRIM, DOOR PANELS, SPLASH SHIELDS, STEERING COLUMN SHROUD
PPO/PA	POLYPHENYLENE/ POLYAMID	PPO/PA, GTX 910	FENDERS, QUARTER PANELS
PR/FV	FIBERGLASS REINFORCED PLASTIC	FIBERGLASS, FV, PR/FV	BODY PANELS
PS	POLYSTYRENE	LUSTREX, STYRON, PS	DOOR PANELS, DASH PANELS
RTM	RESIN TRANSFER MOLDING COMPOUND	RTM	BODY PANELS

CODE	FAMILY NAME	COMMON TRADE NAME	TYPICAL APPLICATION
SMC	SHEET MOLDED COMPOUND	SMC	BODY PANELS
TMC	TRANSFER MOLDING COMPOUND	TMC	GRILLES
UP	UNSATURATED POLYESTER (THERMOSETTING)	SMC, BMC, TMC, ZMC, IMC, XSMC, UP	GRILLE OPENING PANEL, LIFTGATES, FLARESIDE FENDERS, FENDER EXTENSIONS
EEBC	ETHER/ESTER BLOCKED CO-POLYMER	EEBC	BUMPERS
EEBC/PBTP	EEBC/POLYBUTYLENE TEREPTHALATE	EEBC, PBTP, BEXLOY	BUMPER, ROCKER PANELS
EMPP	ETHYLENE MODIFIED POLYPROPYLENE	EMPP	BUMPER COVERS
EPDM	ETHYLENE/ PROPROPYLENE DIENE MONOMER	EPDM, NORDEL, VISTALON	BUMPERS
EPM	ETHYLENE/ PROPROPYLENE CO-POLYMER	EPM	FENDERS
MPU	FOAM POLYURETHANE	MPU	SPOILERS
PE	POLYETHYLENE	ALATHON, DYLAN, LUPOLEN, MARLEX	-
PP	POLYPROPYLENE (BLENDS)	NORYL, AZDEL, MARLOX, DYLON, PRAVEX	INNER FENDER, SPOILERS, KICK PANELS
PP/EPDM	PP/EPDM ALLOY	PP/EPDM	SPOILERS, GRILLES
PUR	POLYURETHANE	COLONELS, PUR, PU	FASCIAS, BUMPERS
PUR/PC	PUR/PC ALLOY	TEXIN	BUMPERS
PVC	POLYVINYL CHLORIDE	APEX, GEON, VINYLITE	BODY MOLDINGS, WIRE INSULATION, STEERING WHEELS
RIM	REACTION INJECTED MOLDED POLYURETHANE	RIM, BAYFLEX	FRONT FASCIAS, MODULAR WINDOWS
RRIM	REINFORCED REACTION INJECTED MOLDED	PUR, RRIM	FASCIAS, BODY PANELS, BODY TRIMS
TPE	THERMO POLYETHYLENE	TPE, HYTREL, BEXLOY-V	FASCIAS, BUMPERS, CLADDINGS
TPO	THERMOPOLYOLEFIN	POLYTROPE, RENFLEX, SANTOPRENE, VISAFLEX, ETA, APEX, TPO, SHIELDS, CLADDINGS	BUMPERS, END CAPS, TELCAR, RUBBER, STRIPS, SIGHT, INTERIOR B POST
TPP	THERMO-POLYPROPYLENE	TPP	BUMPERS
TPU	THERMOPOLYURETHANE, POLYESTER	TPU, HYTREL, TEXIN, ESTANE	BUMPERS, BODY SIDE, MOLDINGS, FENDERS, FASCIAS

PANEL SECTIONING

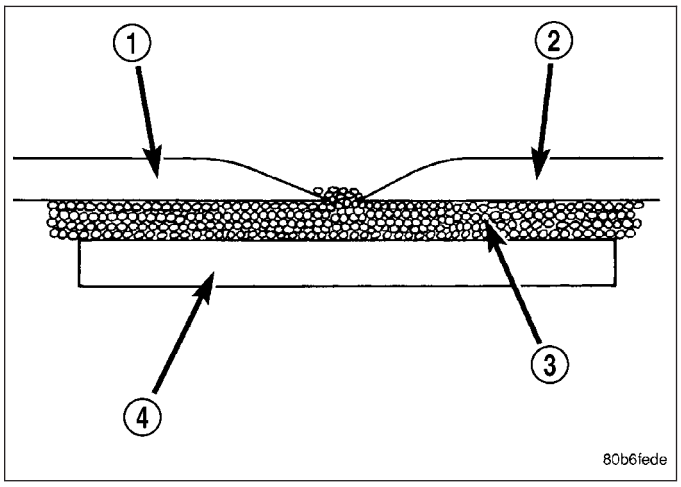

If it is required to section a large panel for a plastic repair, it will be necessary to reinforce the panel. To bond two plastic panels together, a reinforcement must overlap both panels. The panels must be “V’d” at a 20 degree angle. The area to be reinforced should be washed, then sanded. Be sure to wipe off any excess soap and water when finished. Lightly sand or abrade the plastic with an abrasive pad or sandpaper. Blow off any dust with compressed air or wipe with a clean dry rag.

When bonding plastic panels, Follow repair material manufacturers recommendations. Be sure that enough adhesive has been applied to allow squeeze out and to fill the full bond line. Once the pieces have been brought together, do not move them until the adhesive is cured. The assembly can be held together with clamps, rivets, etc. A faster cure can be obtained by heating with a heat lamp or heat gun. After the parts have been bonded and have had time to cure, rough sand the seam and apply the final adhesive filler to the area being repaired. Smooth the filler with a spreader, wooden tongue depressor, or squeegee. For fine texturing, a small amount of water can be applied to the filler surface while smoothing. The cured filler can be sanded as necessary and, as a final step, cleanup can be done with soapy water. Wipe the surface clean with a dry cloth allowing time for the panel to dry before moving on with the repair.

PANEL REINFORCEMENT

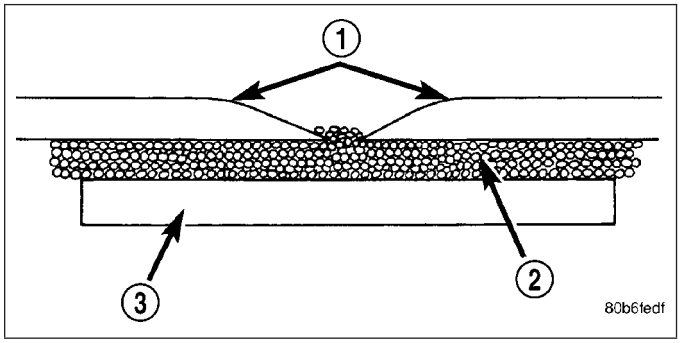

Structural repair procedures for rigid panels with large cracks and holes will require a reinforcement backing. Reinforcements can be made with several applications of glass cloth saturated with structural adhesive. Semi-rigid or flexible repair materials should be used for semi-rigid or flexible backing reinforcement and. Open meshed fiberglass dry wall tape can be used to form a reinforcement. The dry wall tape allows the resin to penetrate through and make a good bond between the panel and the adhesive. Structurally, the more dry wall tape used, the stronger the repair.

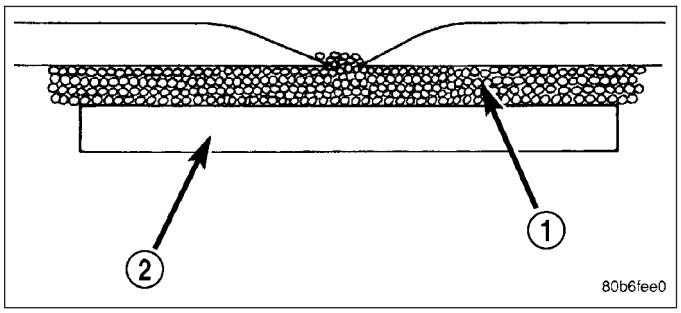

Another kind of repair that can be done to repair large cracks and holes is to use a scrap piece of similar plastic and bond with structural adhesive. The reinforcement should cover the entire break and should have a generous amount of overlap on either side of the cracked or broken area.

When repairing plastic, the damaged area is first “V’d” out, or beveled. Large bonding areas are desirable when repairing plastic because small repairs are less likely to hold permanently. Beveling the area around a crack at a 20 degree angle will increase the bonding surface for a repair. It is recommended that sharp edges be avoided because the joint may show through after the panel is refinished.

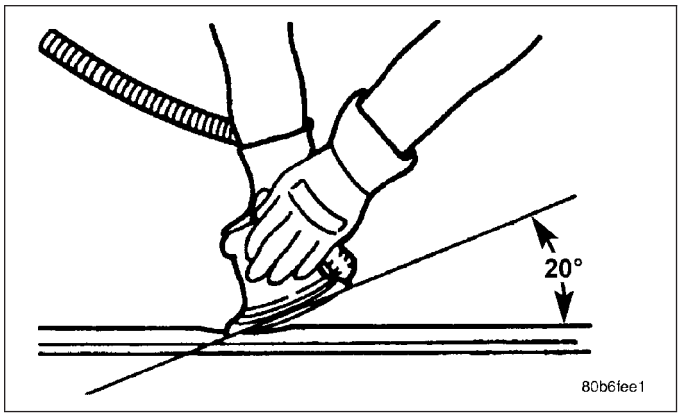

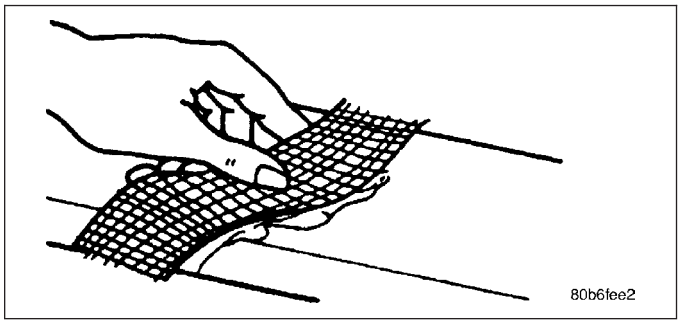

- Panel repair for both flexible and rigid panels are basically the same. The primary difference between flexible panel repair and rigid panel repair is in the adhesive materials used.
- The technician should first decide what needs to be done when working on any type of body panel. One should determine if it is possible to return the damage part to its original strength and appearance without exceeding the value of the replacement part.
- When plastic repairs are required, it is recommended that the part be left on the vehicle when every possible. That will save time, and the panel will remain stationary during the repair. Misalignment can cause stress in the repair areas and can result in future failure.

VISUAL INSPECTION

Composite materials can mask the severity of an accident. Adhesive bond lines, interior structure of the doors, and steel structures need to be inspected carefully to get a true damage assessment. Close inspection may require partial removal of interior trim or inner panels.

Identify the type of repair: Puncture or Crack - Damage that has penetrated completely through the panel. Damage is confined to one general area; a panel section is not required. However, a backer panel, open fiberglass tape, or matted material must be bonded from behind.

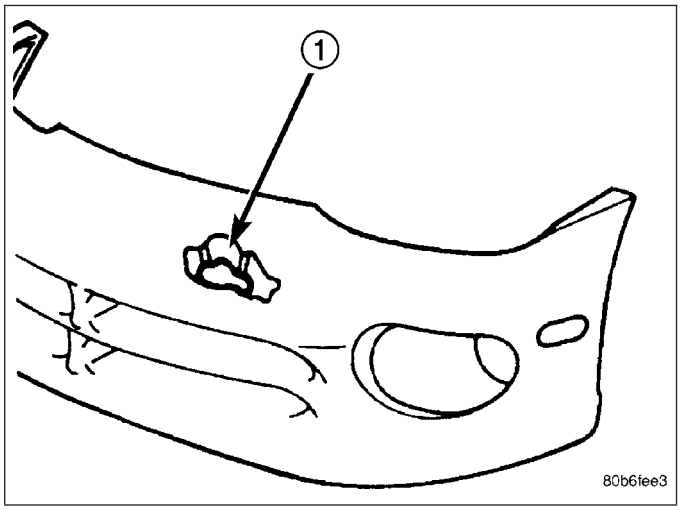

PANEL SURFACE PREPARATION

If a body panel has been punctured, cracked, or crushed, the damaged area must be removed from the panel to achieve a successful repair. All spider web cracks leading away from a damaged area must be stopped or removed. To stop a running crack in a panel, drill a 6 mm (0.250 in.) hole at the end of the crack farthest away from the damage. If spider web cracks can not be stopped, the panel would require replacement. The surfaces around the damaged area should be stripped of paint and freed from wax and oil. Scuff surfaces around repair area with 360 grit wet/dry sandpaper, or equivalent, to assure adhesion of repair materials.

PATCHING PANELS

An panel that has extensive puncture type damage can be repaired by cutting out the damaged material. Use a suitable reciprocating saw or cut off wheel to remove the section of the panel that is damaged. The piece cut out can be used as a template to shape the new patch. It is not necessary to have access to the back of the panel to install a patch. Bevel edges of cutout at 20 degrees to expose a larger bonding area on the outer side. This will allow for an increased reinforcement areas.

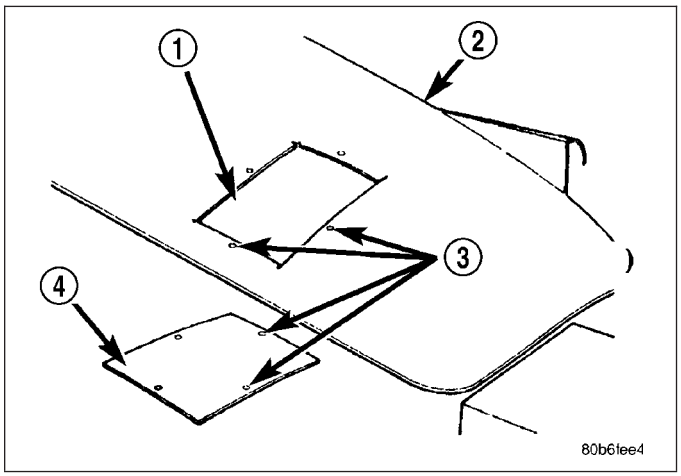

PANEL PATCH FABRICATIONS

A patch can be fabricated from any rigid fiberglass panel that has comparable contour with the repair area. Lift gates and fenders can be used to supply patch material. If existing material is not available or compatible, a patch can be constructed with adhesive and reinforcement mesh (dry wall tape). Perform the following operation if required:

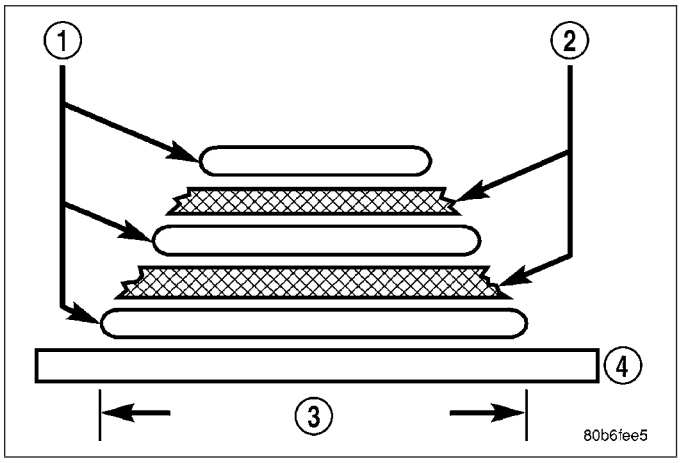

1. Cover waxed paper or plastic with adhesive backed nylon mesh (dry wall tape) larger than the patch required.
2. Tape waxed paper or plastic sheet with mesh to a surface that has a compatible contour to the repair area.
3. Apply a liberal coat of adhesive over the reinforcement mesh. If necessary apply a second or third coat of adhesive and mesh after first coat has cured. The thickness of the patch should be the same as the repair area.
4. After patch has cured, peel waxed paper or plastic from the back of the patch.
5. If desired, a thin film coat of adhesive can be applied to the back of the patch to cover mesh for added strength.

PANEL PATCH INSTALLATION

1. Make a paper or cardboard pattern the size and shape of the cutout hole in the panel.
2. Trim 3 mm (0.125 in.) from edges of pattern so patch will have a gap between connecting surfaces.
3. Using the pattern as a guide, cut the patch to size.
4. Cut scrap pieces of patch material into 50 mm (2 in.) squares to use as patch supports to sustain the patch in the cutout.
5. Drill 4 mm (0.160 in.) holes 13 mm (0.5 in.) in from edge of cutout hole.
6. Drill 4 mm (0.160 in.) holes 13 mm (0.5 in.) away from edge of patch across from holes drilled around cutout.
7. Drill 3 mm (0.125 in.) holes in the support squares 13 mm (0.5 in.) from the edge in the center of one side.

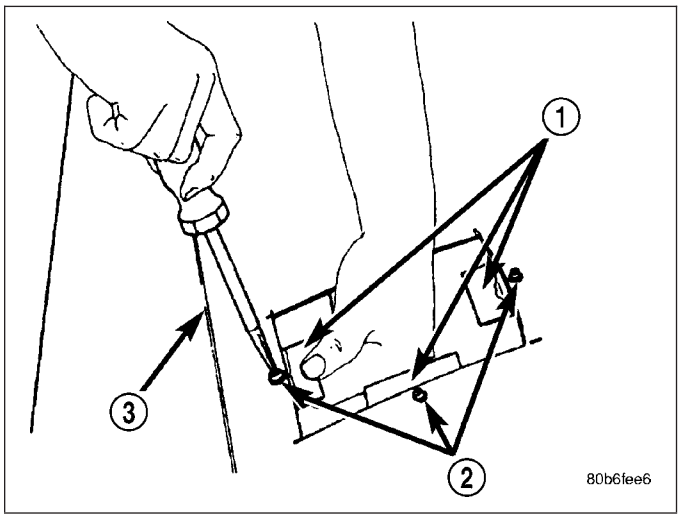

8. Scuff the backside of the body panel around the cutout hole with a scuff pad or sandpaper.
9. Mix enough adhesive to cover one side of all support squares.
10. Apply adhesive to cover one side of all support squares.
11. Using number 8 sheet metal screws, secure support squares to back side of body panel with adhesive sandwiched between the panel and squares.
12. Position patch in cutout against support squares and adjust patch until the gap is equal along all sides.
13. Drill 3 mm (0.125 in.) holes in the support squares through the pre-drilled holes in the patch.

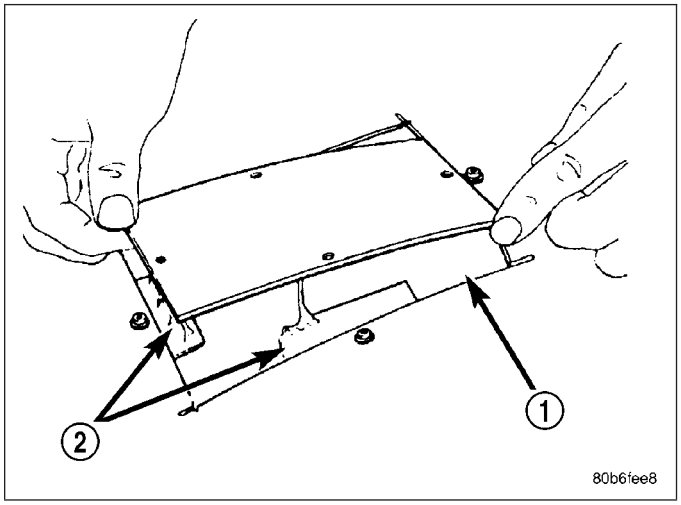

14. Apply a coat of adhesive to the exposed ends of the support squares.

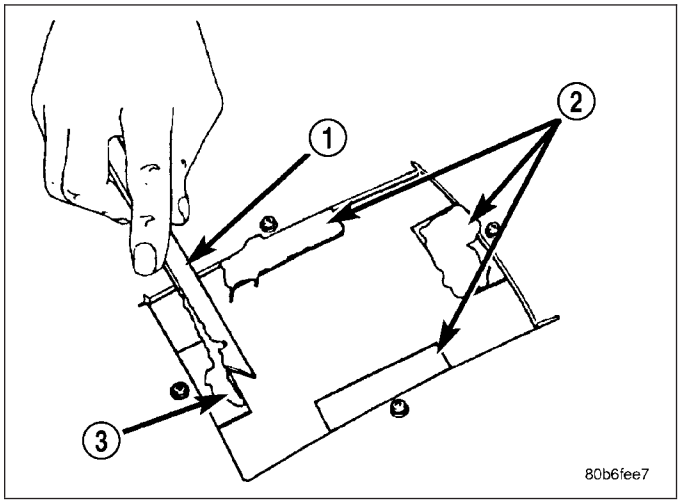

15. Install screws to hold the patch to support squares. Tighten screws until patch surface is flush with panel surface.
16. Allow adhesive to cure, and remove all screws.

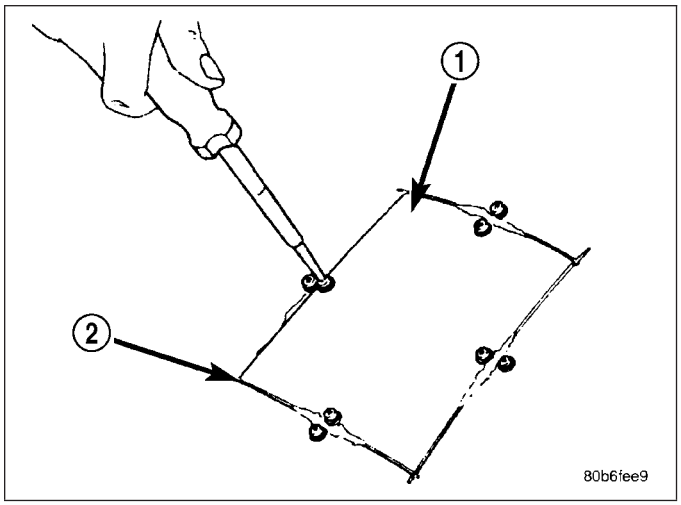

17. Using a 125 mm (5 in.) 24 grit disc grinder, grind a 50 mm (2 in.) to 75 mm (3 in.) wide and 2 mm (0.080 in.) deep path across the gaps around the patch. With compressed air, blow dust from around patch.

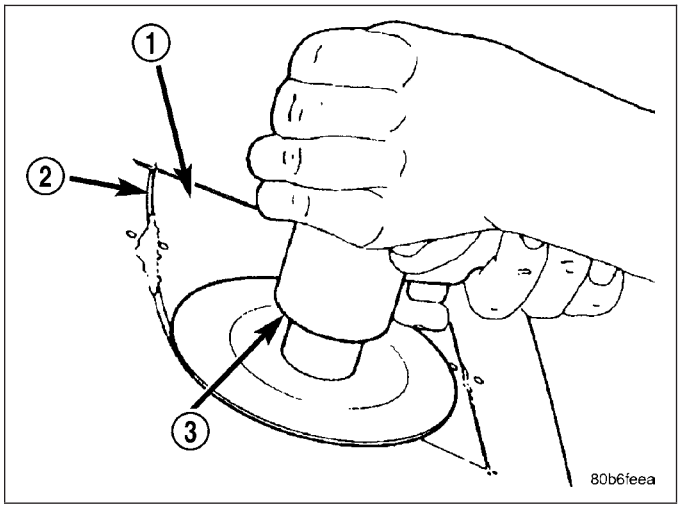

18. Apply adhesive backed nylon mesh (dry wall tape) over gaps around patch.
19. Mix enough adhesive to cover the entire patch area.

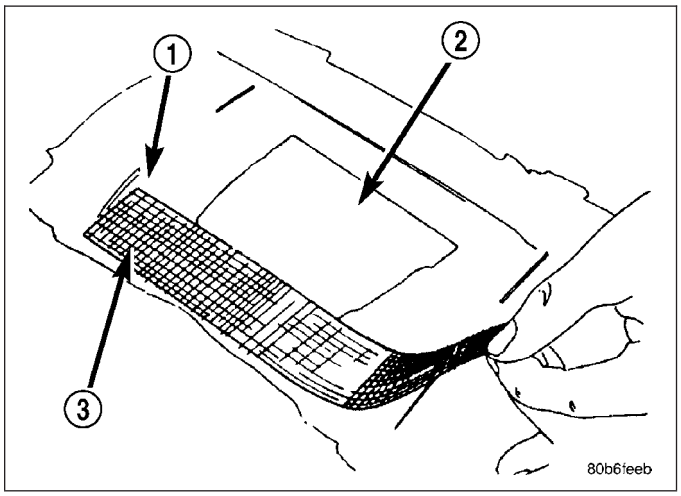

20. Apply adhesive over the mesh around patch, and smooth epoxy with a wide spreader to reduce finish grinding. Use two to three layers of mesh and adhesive to create a stronger repair.

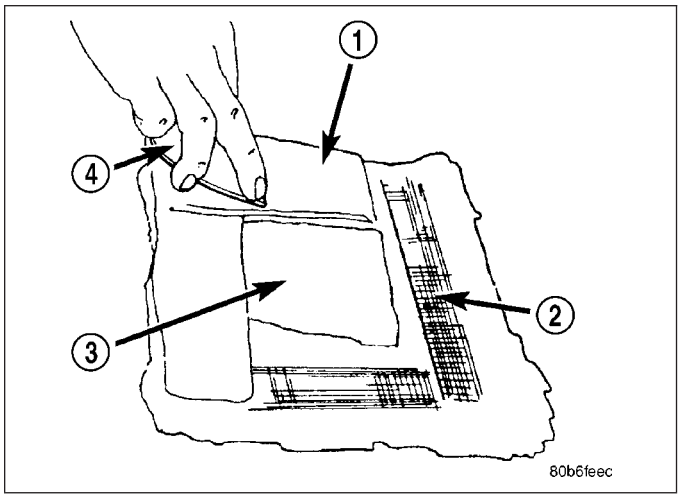

PATCHED PANEL SURFACING

After patch panel is installed, the patch area can be finished using the same methods as finishing other types of body panels. If mesh material is exposed in the patched area, grind surface down, and apply a coat of high quality rigid plastic body filler. Prime, block sand, and paint as required.

SPECIFICATIONS - TORQUE

Torque specifications

Description	N·m	Ft. Lbs.	In. Lbs.
A-pillar trim/grab handle bolts	6	—	55
Body Isolator/cab bolts	81	60	—
Cargo box bolts	108	80	—
Cargo box tie down/cleat bolts	34	25	—
Center seat assembly nuts*	25	18	—
Center seat cushion/hinge bolts*	20	15	—
Center seat back hinge to storage bin bolts*	25	18	—
Center seat back free pivot hinge bolt*	25	18	—
Center seat back inertia hinge pivot bolt*	10	—	89
Center seat inertia hinge to seat back bolts*	25	18	—
Fender bolts - front lower	9	—	80
Fender bolts - lower inside	17	13	—
Fender to hinge support bolts	11	8	—
Fender to upper fender rail bolts	9	—	80
Footmans loop bolts	12	9	—
Front center seat nuts*	25	18	—
Front door glass lift plate nuts	10	—	89
Front door hinge to a-pillar nuts	28	21	—
Front door hinge to door nuts/bolts	28	21	—
Front door inside handle bolt	9	—	80
Front door latch adjustment screw	3	—	30
Front door latch assembly bolts	10	—	89
Front door latch striker bolts	28	21	—

Description	N·m	Ft. Lbs.	In. Lbs.
Front door latch striker bolts	28	21	—
Front door regulator bolts	10	—	89
Front door regulator stabilizer nuts	10	—	89
Front door remote handle actuator nuts	10	—	89
Front door run channel screws	10	—	89
Front seat assembly front bolts*	28	30	—
Front seat assembly rear bolts*	40	30	—
Front seat track nuts*	25	18	—
Fuel fill door bolts	9	—	80
Hood hinge to fender rail bolts	20	15	—
Hood latch bolts	11	8	—
Hood latch striker/safety catch bolts	11	8	—
Hood hinge to hood nuts	23	17	—
Instrument panel center bracket bolts	12	9	—
Instrument panel column support bolts	14	10	—
Instrument panel side mounting bolts	12	9	—
Instrument panel top bolts	12	9	—
Load floor nuts	25	18	—
Load floor/rear seat bolts	40	30	—
Lower seat belt anchor bolt - quad cab	40	30	—
Overhead/b-pillar grab handle bolts	6	—	55
Radiator and condenser to radiator crossmember bolts	8	—	75
Radiator upper crossmember bolts	28	21	—
Rear door glass lift plate nuts	10	—	89
Rear door glass run channels	10	—	89
Rear door hinge to b-pillar bolts	28	21	—
Rear door hinge to door bolts/nuts	28	21	—
Rear door inside handle bolt	9	—	80
Rear door latch adjustment screw	3	—	30
Rear door latch bolts	10	—	89
Rear door latch striker bolts	28	21	—
Rear door regulator bolts	10	—	89
Rear door regulator stabilizer nuts	10	—	89
Rear door remote handle actuator nuts	10	—	89
Rear fender bottom screws	7	—	60
Rear fender nuts	7	—	60
Rear fender support bracket bolts	11	8	—
Rear seat assembly bolts*	40	30	—
Rear seat back hinge bolts*	25	18	—
Rear seat cushion hinge bolts*	32	24	—
Rear shoulder belt anchor bolts	40	30	—
Rear view mirror set screw	1	—	15
Shifter knob nut	27	20	—
Side view mirror nuts	7	—	60

Description	N·m	Ft. Lbs.	In. Lbs.
Tailgate check cable bolt	23	17	—
Tailgate hinge/pivot screws	34	25	—
Tailgate latch bolts	23	17	—
Tailgate latch striker	34	25	—
Tailgate release handle nuts	7	—	60

NOTE: *Seat fasteners should be discarded and replaced with new fasteners during assembly.

SPECIAL TOOLS

BODY

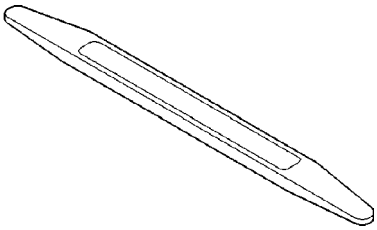

Trim Stick C-4755

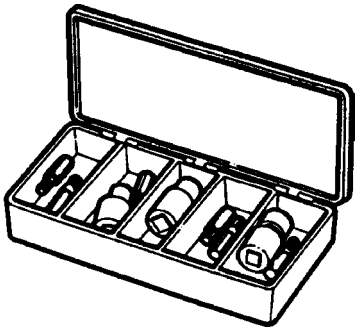

TORX BIT SET C-4794-B

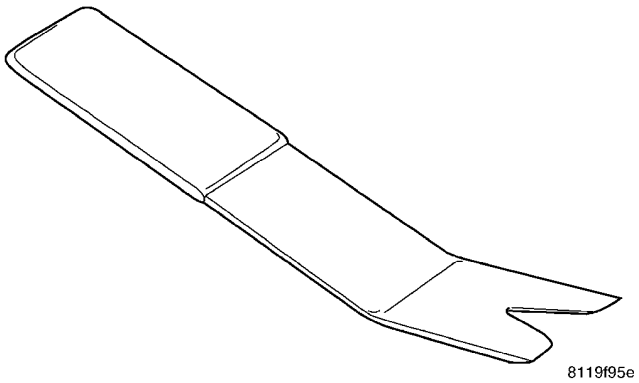

REMOVER, MOLDINGS C-4829-A

TAILGATE

TABLE OF CONTENTS

	page
CABLE-CHECK	
REMOVAL	17
INSTALLATION	18
COVER	
REMOVAL	19
INSTALLATION	19
HINGE	
REMOVAL	20
INSTALLATION	20
LATCH	
REMOVAL	21
INSTALLATION	21
LATCH STRIKER	
REMOVAL	22
INSTALLATION	23
RELEASE HANDLE	
REMOVAL	23
INSTALLATION	24
TAILGATE	
REMOVAL	24
INSTALLATION	25

CABLE-CHECK

REMOVAL

1. Open the tailgate and locate the tailgate check cable (3) on the left and right of the cargo box below the tailgate striker (1) as necessary.
2. Pry the cable lock tab(s) (4) outward using a screwdriver or flat bladed tool (2) and remove the tailgate check cable(s) from the cargo box.

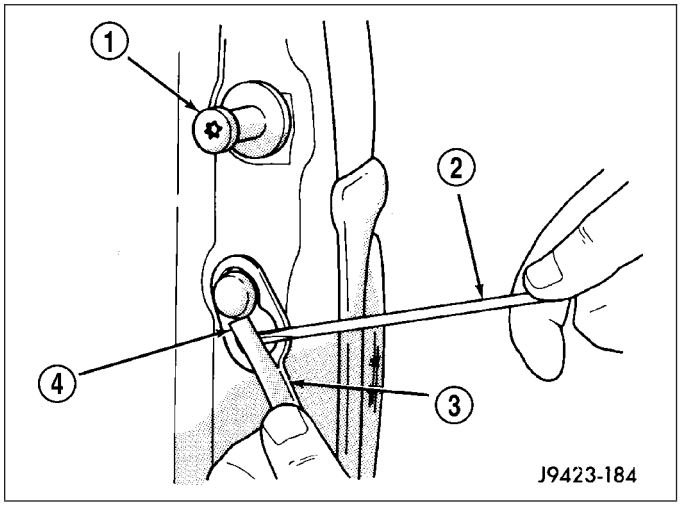

3. Remove the bolt (1) that secures the tailgate check cable (2) to the left and right side of the tailgate (3) as necessary.
4. Remove the tailgate check cable(s) from the tailgate.

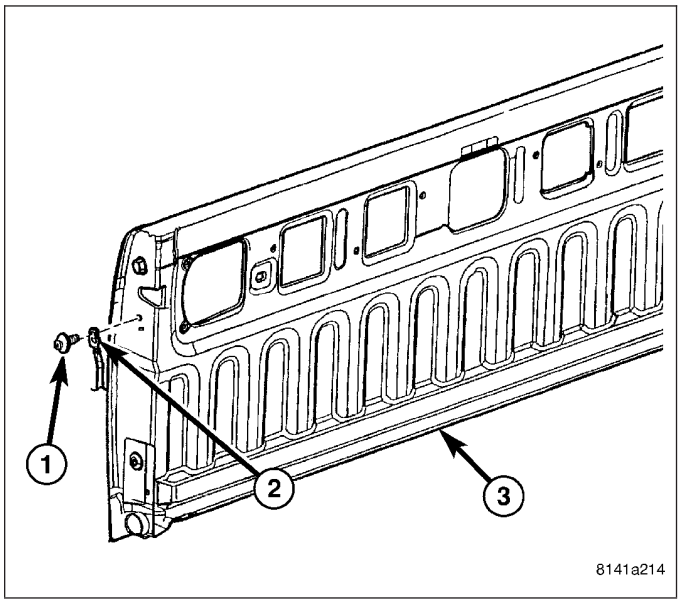

INSTALLATION

1. Position the tailgate check cable (2) onto the left and right side of the tailgate (3) as necessary.
2. Install the bolt (1) that secures the small end of the tailgate check cable(s) to the tailgate. Tighten the bolt(s) to 23 N·m (17 ft. lbs.).

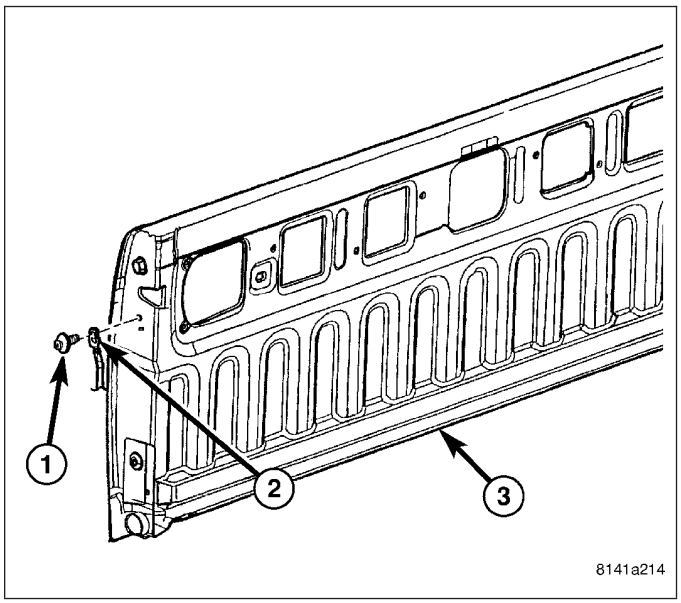

3. Position the tailgate check cable (3) to the left and right side of the cargo box below the tailgate striker (3) as necessary.
4. Install the large end of the tailgate check cable(s) onto the cargo box. Make sure that the cable lock tab(s) (4) fully engage.

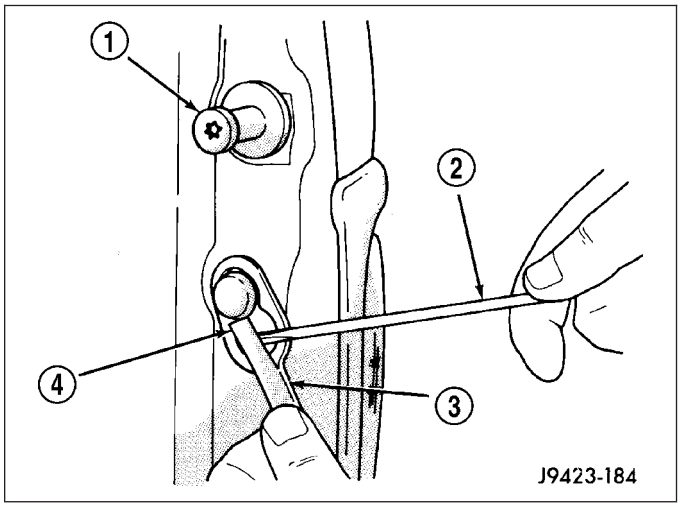

COVER

REMOVAL

1. Open the tailgate (1) and remove the tailgate liner, if equipped.
2. Remove the ten bolts (2) that secure the tailgate cover (3) to the inside of the tailgate and remove the cover.

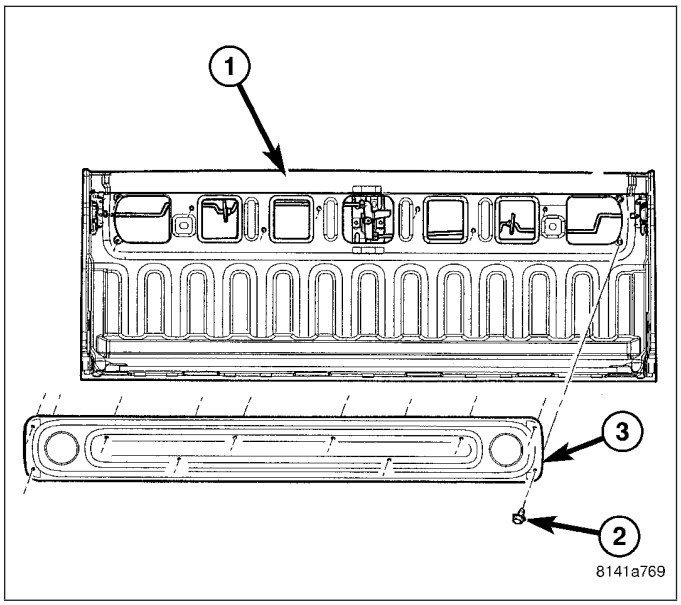

INSTALLATION

1. Position the tailgate cover (3) onto the inside of the tailgate (1).
2. Install the ten bolts (2) that secure the tailgate cover to the tailgate. Tighten the bolts securely.
3. If equipped, install the tailgate liner onto the tailgate.

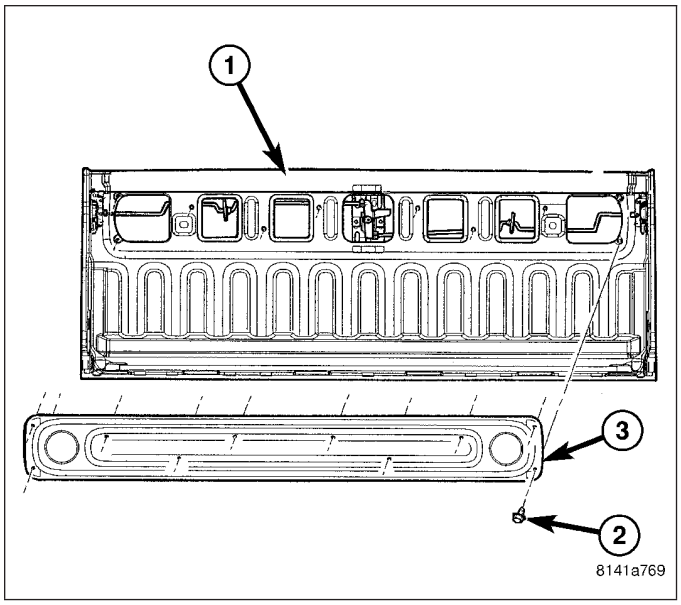

HINGE

REMOVAL

1. Remove the tailgate (Refer to 23 - BODY/TAILGATE/TAILGATE - REMOVAL).
2. If required, remove the bushing (3) from each tailgate hinge (1).
3. Remove the two bolts (4) that secure each tailgate hinge (1) to the cargo box (2) and remove the hinge(s) as necessary.

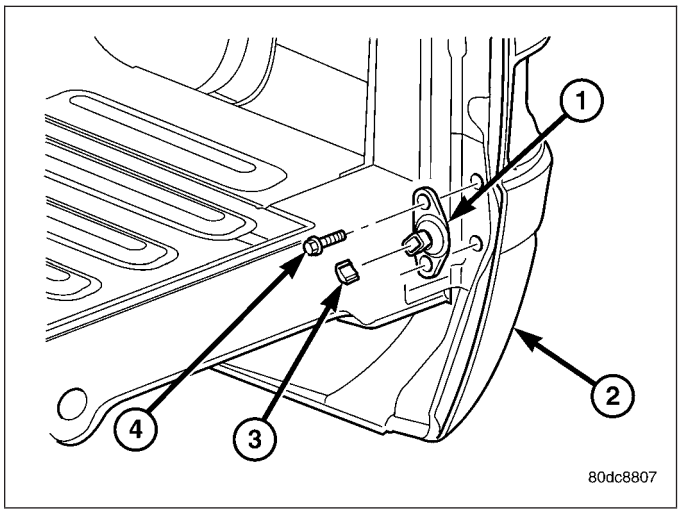

INSTALLATION

1. Position the tailgate hinge(s) onto the cargo box (2) as necessary.
2. Install the two bolts (4) that secure each tailgate hinge to the cargo box. Tighten the bolts to 34 N·m (25 ft. lbs.).
3. If removed, install the bushing (3) onto each tailgate hinge.
4. Install the tailgate (Refer to 23 - BODY/TAILGATE/TAILGATE - INSTALLATION).

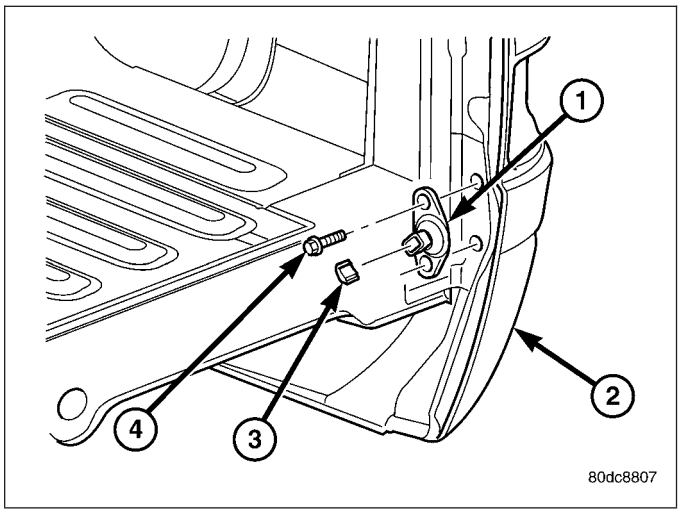

LATCH

REMOVAL

1. Open the tailgate and remove the tailgate liner, if equipped.
2. Remove the ten bolts (5) that secure the tailgate cover (4) to the inside of the tailgate and remove the cover.
3. Using a grease pencil or equivalent, mark the actuator rod (3) at the control (2) for the latch (1) being serviced.
4. Disconnect the actuator rod from the control.

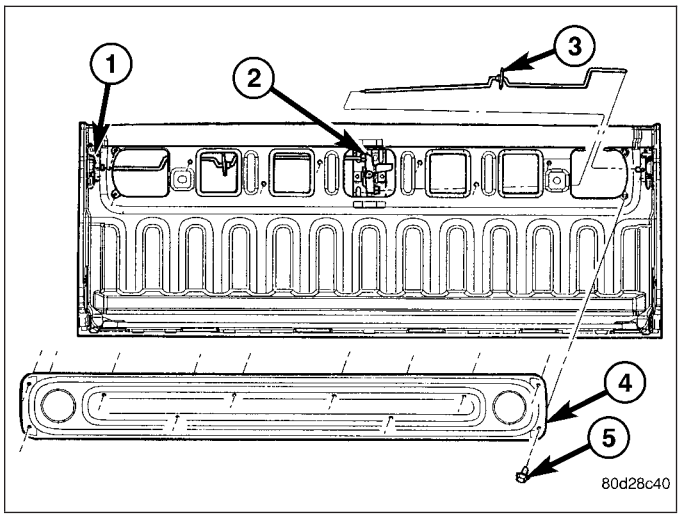

5. Remove the two bolts (7 and 8) that secure the latch (5) to the tailgate (4) and position the tailgate check cable (6) out of the way.
6. Remove the latch and actuator rod from the tailgate as an assembly.
7. If required, remove the actuator rod from the latch.

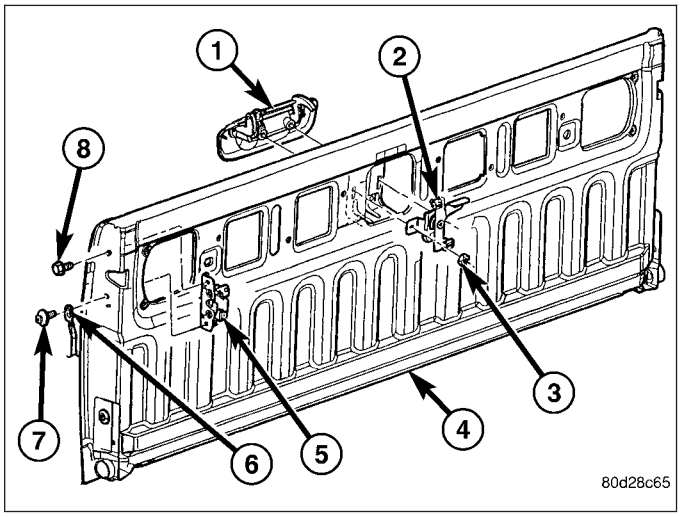

INSTALLATION

1. If removed, install the actuator rod onto the latch (5) being serviced.
2. Install the latch and actuator rod into the tailgate (4) as an assembly.
3. Position the tailgate check cable (6) onto the tailgate and install the two bolts (7 and 8) that secure the latch and the check cable to the tailgate. Tighten the bolts to 23 N·m (17 ft. lbs.).

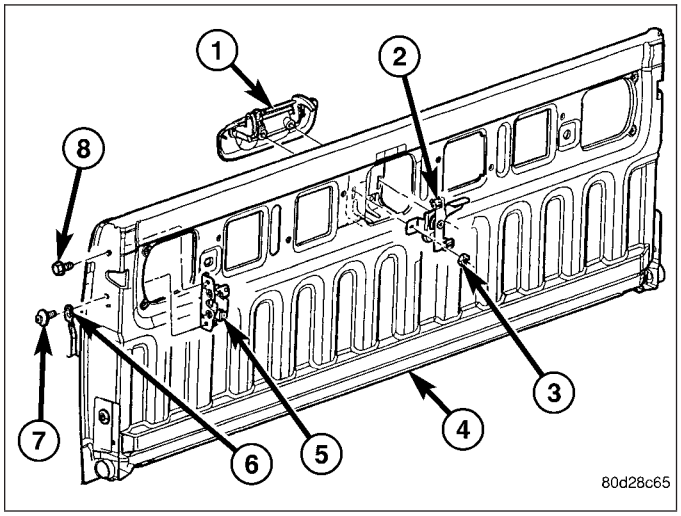

4. Locate the actuator rod (3) to the control (2) using the reference mark made during the removal procedure and connect the rod to the control.
5. Position the tailgate cover (4) onto the inside of the tailgate.
6. Install the ten bolts (5) that secure the tailgate cover to the tailgate. Tighten the bolts securely.
7. If equipped, install the tailgate liner onto the tailgate.

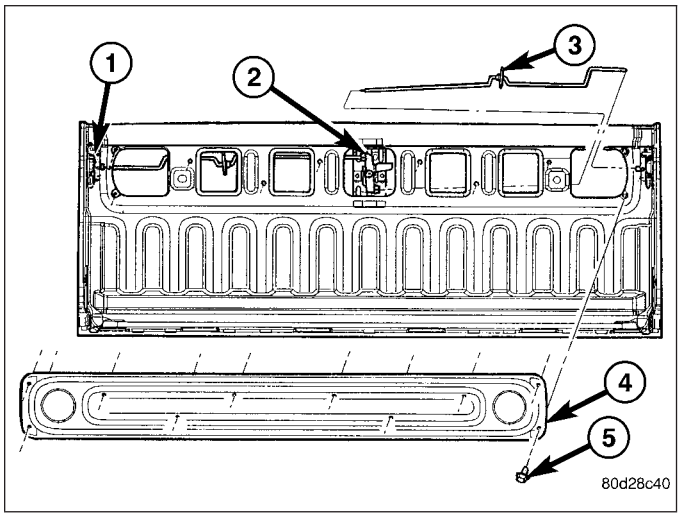

LATCH STRIKER

REMOVAL

1. Open the tailgate and using a grease pencil or equivalent, mark the location of the tailgate striker (1) being serviced.
2. Remove the striker from the cargo box (2).

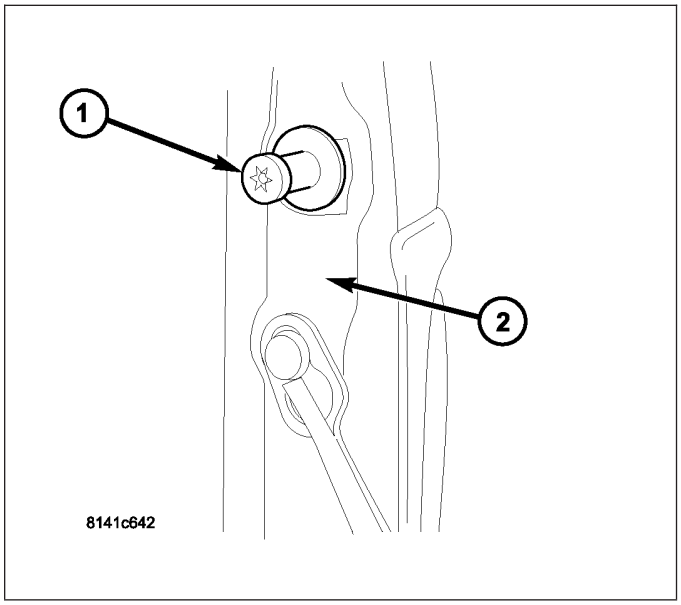

INSTALLATION

1. Position the striker (1) onto the cargo box (2) using the reference mark made during the removal procedure.
2. Tighten the striker to 34 N·m (25 ft. lbs.).

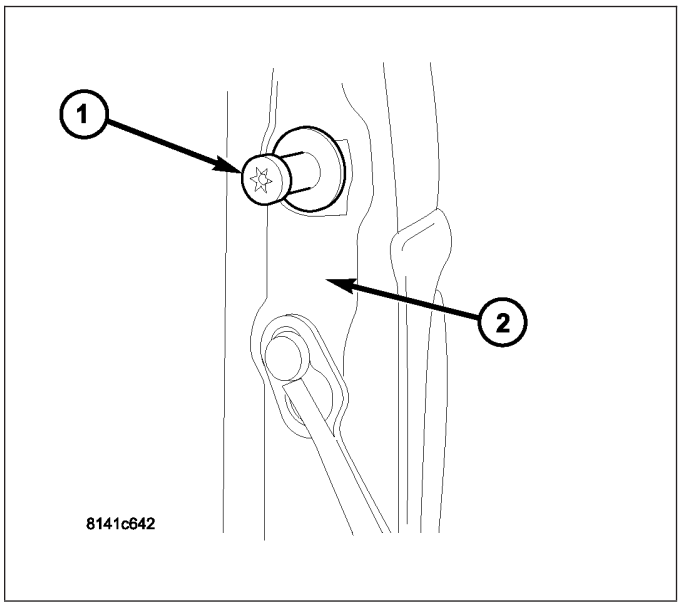

RELEASE HANDLE

REMOVAL

1. Open the tailgate and remove the tailgate liner, if equipped.
2. Remove the ten bolts (5) that secure the tailgate cover (4) to the inside of the tailgate and remove the cover.
3. Using a grease pencil or equivalent, mark the location of the actuator rods (3) at the control (2).
4. Disconnect the actuator rods from the control.

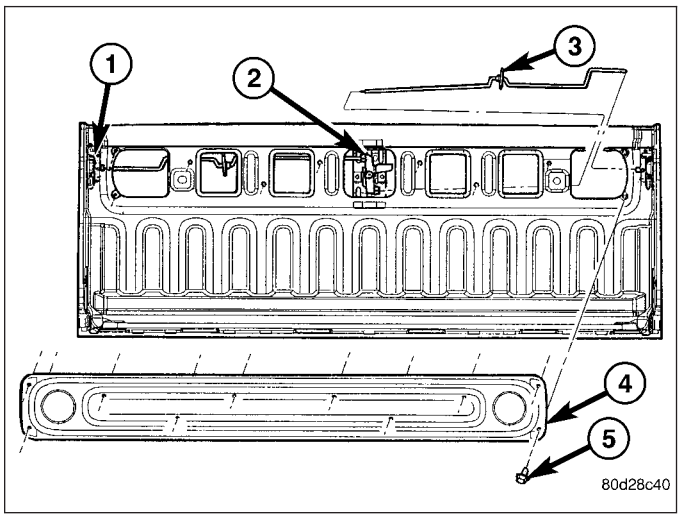

5. Remove the two nuts (3) that secure the release handle (1) and the control (2) to the tailgate (4).
6. Remove the control and the release handle from the tailgate.

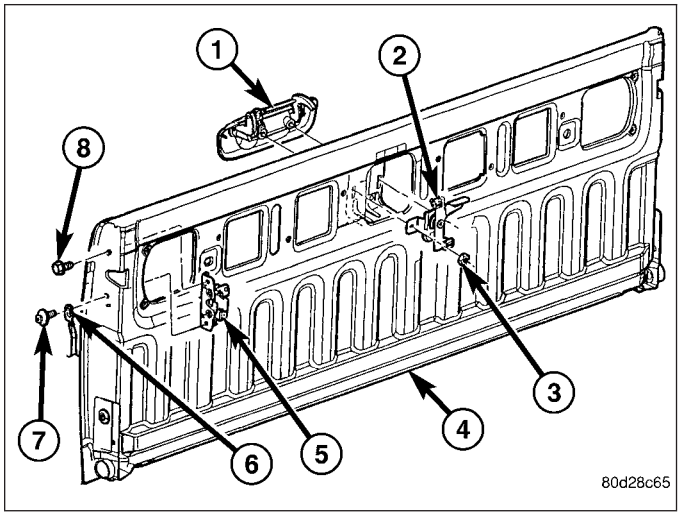

INSTALLATION

1. Position the release handle and the control onto the tailgate.
2. Install the two nuts that secure the release handle and control to the tailgate. Tighten the nuts to 7 N·m (60 in. lbs.).

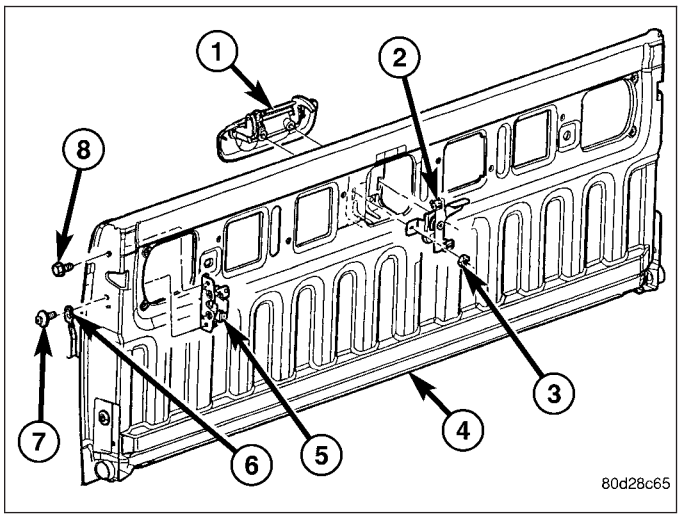

3. Locate the actuator rods (3) to the control (2) using the reference marks made during the removal procedure and connect the rods to the control.
4. Position the tailgate cover (4) onto the inside of the tailgate.
5. Install the ten bolts (5) that secure the tailgate cover to the tailgate. Tighten the bolts securely.
6. If equipped, install the tailgate liner onto the tailgate.

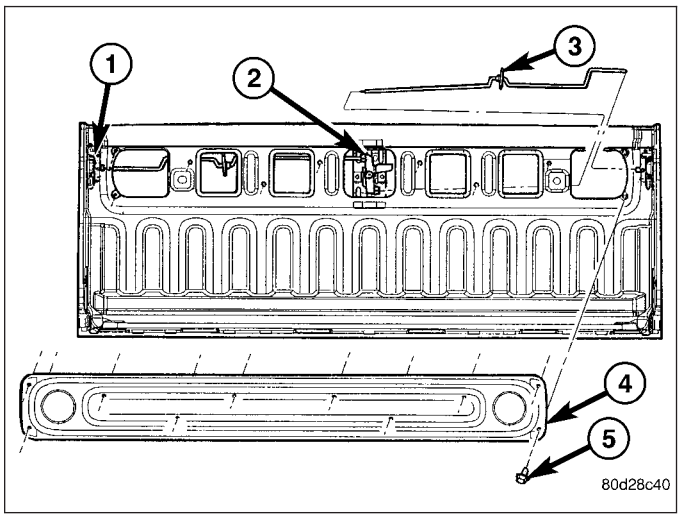

TAILGATE

REMOVAL

1. Open the tailgate (4).
2. Disconnect the tailgate check cables (3) from the cable bolts (2) locate below each tailgate striker (1) (Refer to 23 - BODY/TAILGATE/CHECK CABLE - REMOVAL).
3. Partially close the tailgate so that the notch in the right side tailgate pivot aligns with the flats on the right side tailgate hinge.
4. Lift the tailgate upward and disconnect the tailgate pivot from the right side tailgate hinge.
5. Carefully slide the tailgate to the right and disconnect it from the left side tailgate hinge and remove the tailgate.
6. If required, remove the bushing (5) from each tailgate hinge.

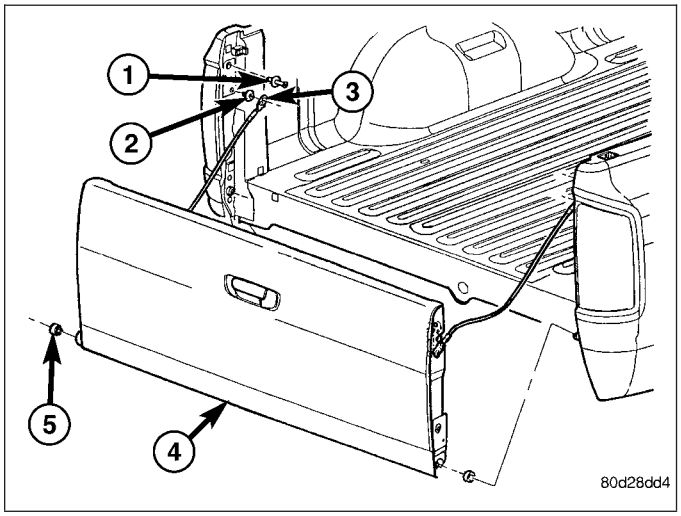

INSTALLATION

1. If removed, install the bushing (5) onto each tailgate hinge.
2. Position the tailgate (4) onto the left side tailgate hinge.
3. Partially close the tailgate so that the notch in the right side tailgate pivot aligns with the flats on the right side tailgate hinge.
4. Lower the tailgate onto the right side tailgate hinge.
5. Connect the tailgate check cables (3) to the cable bolts (2) located below each tailgate striker (1) (Refer to 23 - BODY/TAILGATE/CHECK CABLE - INSTALLATION).

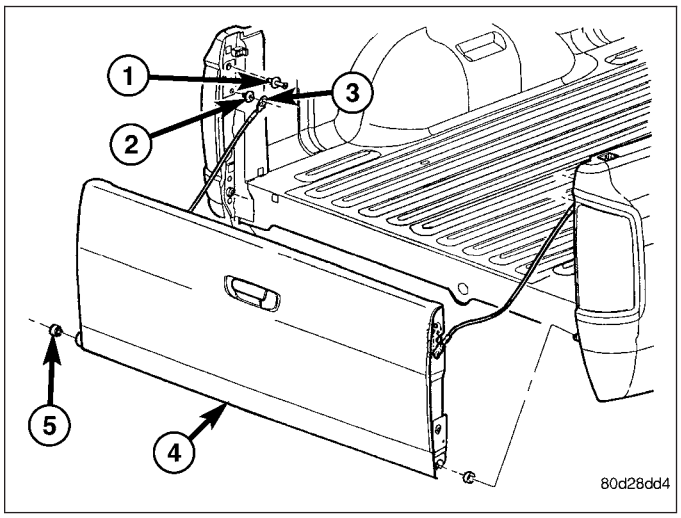

DOOR - FRONT

TABLE OF CONTENTS

page

DOOR
REMOVAL 26
INSTALLATION 27
ADJUSTMENTS 27
DOOR GLASS
REMOVAL 31
INSTALLATION 32
EXTERIOR HANDLE
REMOVAL 33
INSTALLATION 33
GLASS RUN CHANNEL
REMOVAL
FRONT-ALL MODELS 34
REAR-QUAD CAB 34
REAR-STANDARD CAB 35
INSTALLATION
FRONT-ALL MODELS 35
REAR-QUAD CAB 36
REAR-STANDARD CAB 36
HINGE
REMOVAL 37
INSTALLATION 37
INTERIOR HANDLE ACTUATOR
REMOVAL 38
INSTALLATION 38
LATCH
REMOVAL 39
INSTALLATION 40
ADJUSTMENTS 41
LATCH STRIKER
REMOVAL 41
INSTALLATION 42
ADJUSTMENTS 42
LOCK CYLINDER
REMOVAL 43
INSTALLATION 43
TRIM PANEL
REMOVAL 44
INSTALLATION 45
WATERDAM
REMOVAL 46
INSTALLATION 46
WINDOW REGULATOR - POWER
REMOVAL 47
INSTALLATION 48
WINDOW REGULATOR - MANUAL
REMOVAL 49
INSTALLATION 50
SIDE VIEW MIRROR FLAG
REMOVAL 51
INSTALLATION 51

DOOR

REMOVAL

1. Disconnect and isolate the negative battery cable.
2. Disconnect the door wire harness connector (5) from the body wire harness (7).
3. Using a grease pencil or equivalent, mark the location of the door hinges (2 and 6) on the door (4).

NOTE: The epoxy bonded washers do not need to be separated from the hinges. If the washers are removed, the door may need to be re-adjusted.

4. Support the door with a suitable lifting device and remove the two nuts (1) and two bolts (8) that secure the door to the hinges.
5. Carefully remove the door from the hinges.
6. If required, remove the two studs (3) from the door.

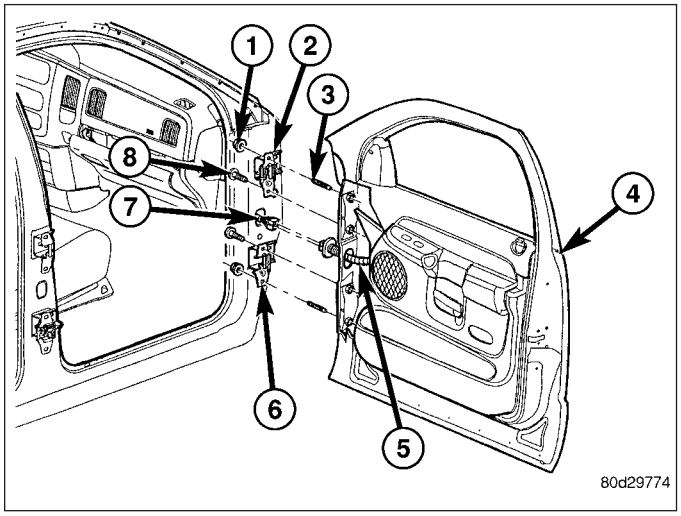

INSTALLATION

1. If removed, install the two studs (3) into the door (4).
2. Carefully position the door onto the hinges (2 and 6) and support the door with a suitable lifting device.

NOTE: If the epoxy bonded washers are separated from the hinges, the door may need to be adjusted.

3. If removed, install the epoxy bonded washers.
4. Loosely install the two nuts (1) and the two bolts (8) that secure the door to the hinges.
5. Align the door to the hinges using the reference marks made during the removal procedure and tighten the nuts and bolts to 28 N·m (21 ft. lbs.).

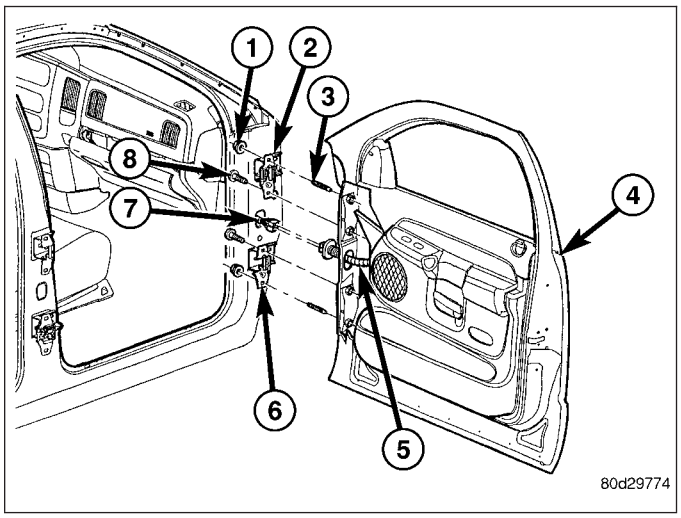

6. Connect the door wire harness (5) to the body wire harness (7).
7. Reconnect the negative battery cable.
8. If necessary, adjust the door (Refer to 23 - BODY/DOOR-FRONT - ADJUSTMENTS).

ADJUSTMENTS

NOTE: For quad cab vehicles, it is recommended that you adjust the rear door before adjusting the front door. (Refer to 23 - BODY/DOORS - REAR/DOOR - ADJUSTMENTS)

- **Door adjustment measurements should be taken from stationary or welded body panels like the roof, rocker or quarter panels.**
- **During adjustment procedures, it is recommended that all the hinge fasteners be loosened except for the upper most fasteners. Adjustments can be made using the upper bolts to hold the door with final torque of the fasteners occurring after correct door positioning is achieved.**
- **A suitable body sealant should be used when removing or moving the hinges.**

FORE/AFT

NOTE: Fore/aft (lateral) door adjustment is done by loosening the hinge to the hinge pillar fasteners one hinge at a time and moving the door to the correct position.

1. Support the door with a suitable lifting device.
2. Loosen the upper (4) and lower (3) hinge to hinge pillar fasteners. (Refer to 23 - BODY/DOOR - FRONT/HINGE - REMOVAL)
3. Adjust the door to the correct position. (Refer to 23 - BODY/BODY STRUCTURE/GAP AND FLUSH - SPECIFICATIONS)
4. Tighten the upper hinge bolt (1) to hinge pillar to 28 N·m (21 ft. lbs.).
5. Tighten the lower hinge bolt (2) to hinge pillar to 28 N·m (21 ft. lbs.).
6. Tighten the remaining hinge to hinge pillar bolts (3) and (4) to 28 N·m (21 ft. lbs.).

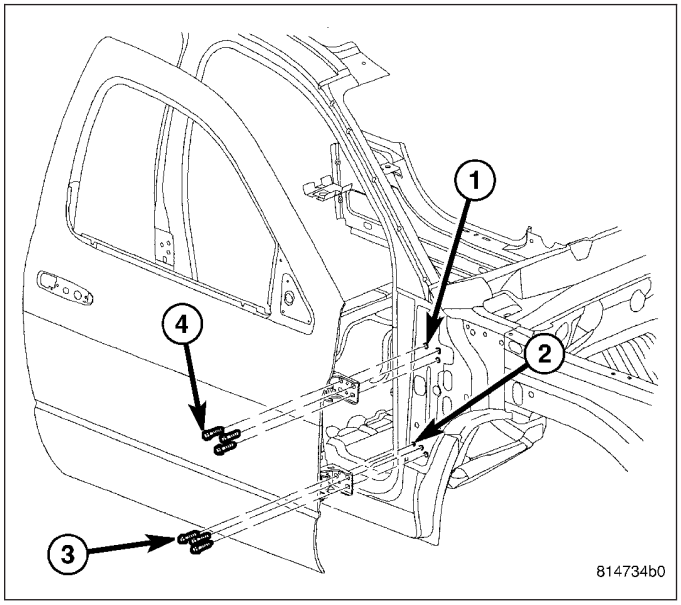

UP/DOWN

NOTE: Up/down door adjustment is done by loosening either the hinge to the hinge pillar fasteners or the hinge to door fasteners and moving the door to the correct position.

NOTE: When adjustment of the door requires the loosening of the door to hinge fasteners, it will be necessary to separate the epoxy bonded washers with a chisel or other suitable tool.

NOTE: When the up/down adjustments are done correctly, the top of the door is positioned over flush to the roof. (Refer to 23 - BODY/BODY STRUCTURE/GAP AND FLUSH - SPECIFICATIONS)

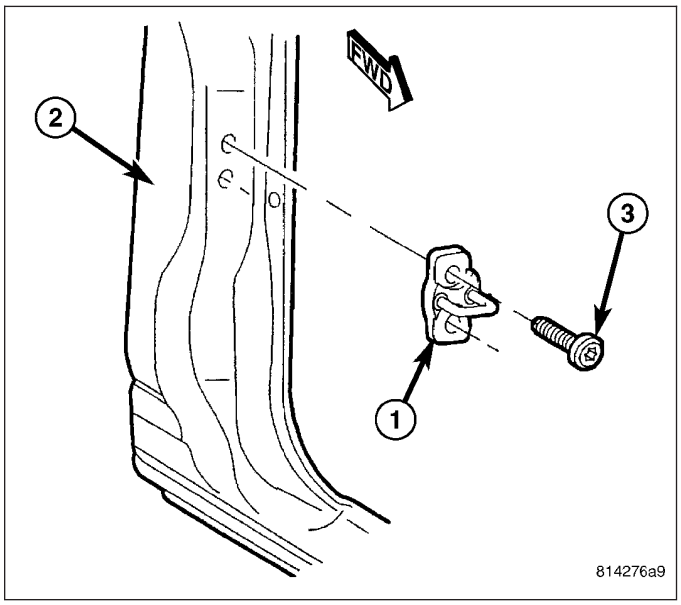

1. Support the door with a suitable lifting device.
2. Loosen the latch striker bolts (3). (Refer to 23 - BODY/DOOR - FRONT/LATCH STRIKER - REMOVAL)
3. If necessary, Loosen the hinge to door fasteners (1) and (8). (Refer to 23 - BODY/DOOR - FRONT/DOOR - REMOVAL)

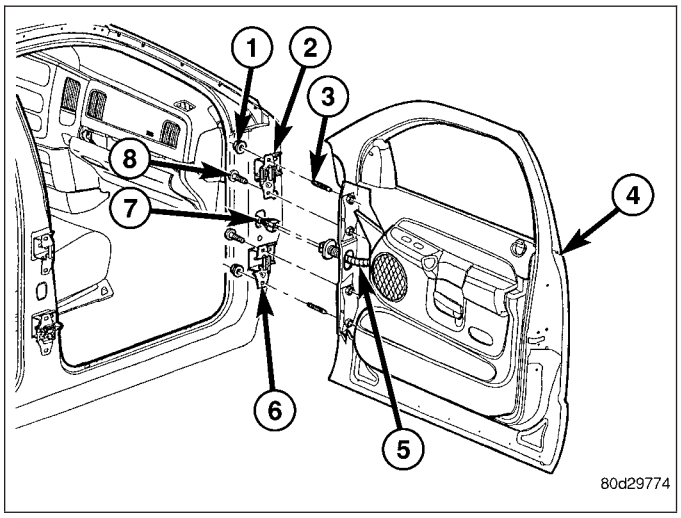

4. If necessary, loosen the hinge to hinge pillar fasteners (3) and (4). (Refer to 23 - BODY/DOOR - FRONT/HINGE - REMOVAL)

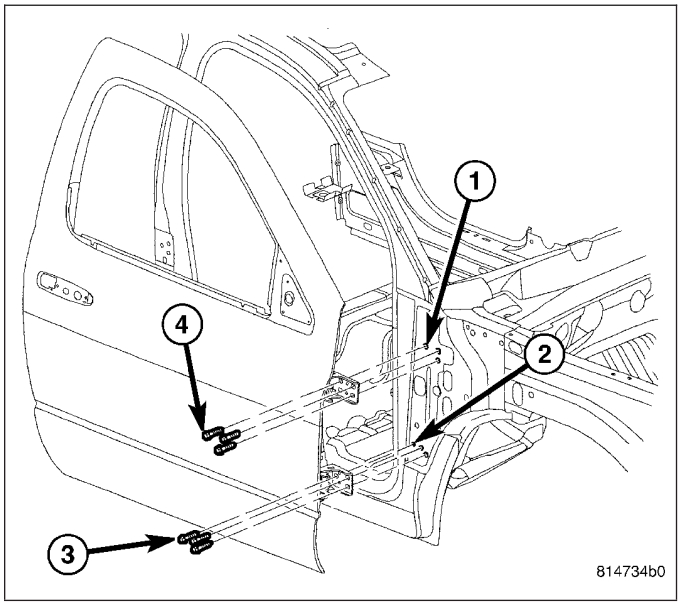

5. Adjust the door to the correct position. (Refer to 23 - BODY/BODY STRUCTURE/GAP AND FLUSH - SPECIFICATIONS)
6. Tighten the door to hinges fasteners to 28 N·m (21 ft. lbs.).

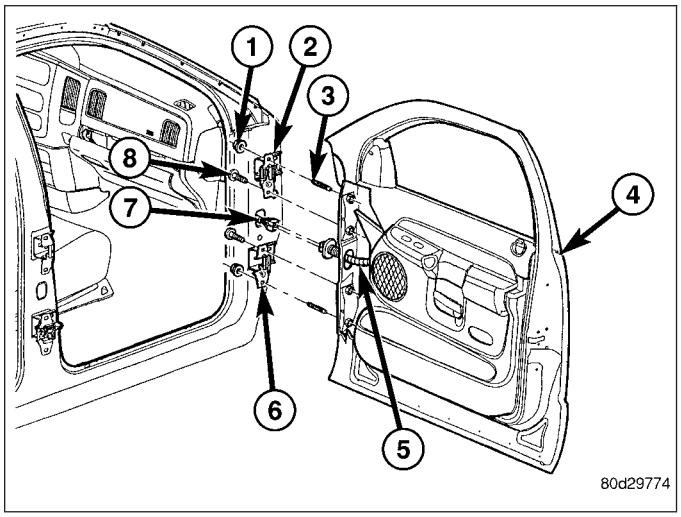

7. Tighten the upper hinge bolt (1) to hinge pillar to 28 N·m (21 ft. lbs.).
8. Tighten the lower hinge bolt (2) to hinge pillar to 28 N·m (21 ft. lbs.).
9. Tighten the remaining hinge to hinge pillar bolts (3) and (4) to 28 N·m (21 ft. lbs.).

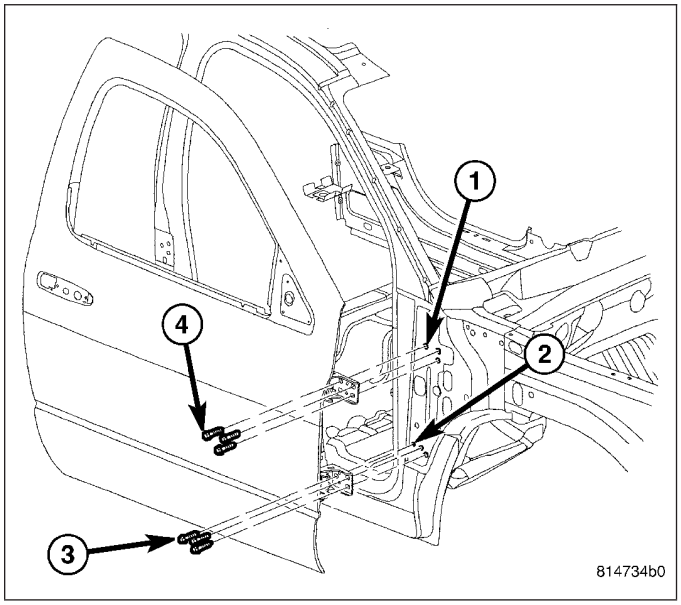

10. Tighten the latch striker bolts. (Refer to 23 - BODY/DOOR - FRONT/LATCH STRIKER - INSTALLATION)

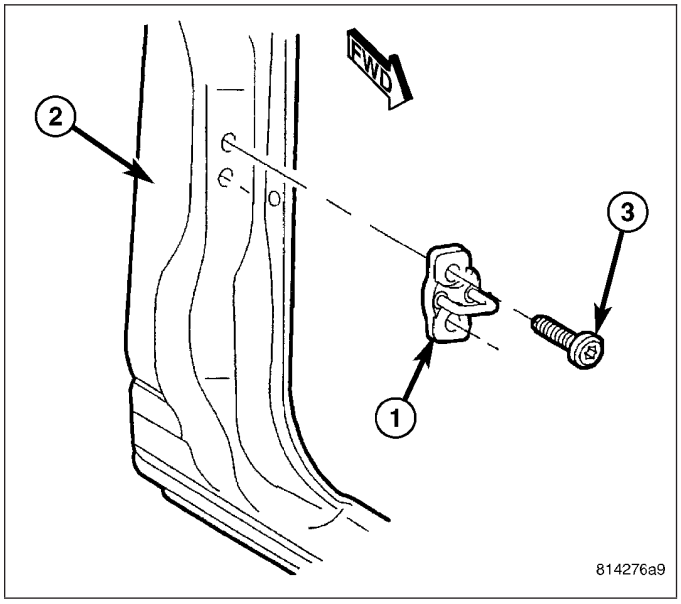

IN/OUT

NOTE: In/out door adjustment is done by loosening the hinge to door fasteners one hinge at a time and moving the door to the correct position.

NOTE: When adjustment of the door requires the loosening of the door to hinge fasteners, it will be necessary to separate the epoxy bonded washers with a chisel or other suitable tool.

1. Support the door with a suitable lifting device.
2. Loosen the latch striker bolts (3). (Refer to 23 - BODY/DOOR - FRONT/LATCH STRIKER - REMOVAL)

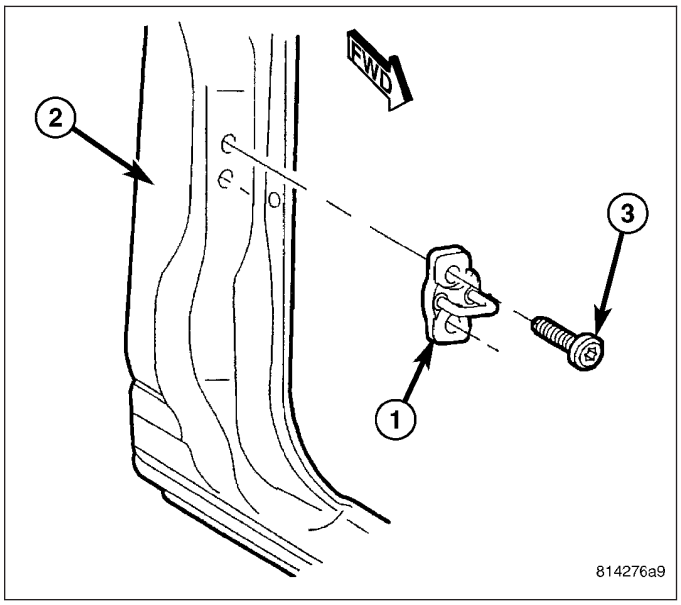

3. Loosen the hinge to door fasteners. (Refer to 23 - BODY/DOOR - FRONT/DOOR - REMOVAL)
4. Adjust the door to the correct position. (Refer to 23 - BODY/BODY STRUCTURE/GAP AND FLUSH - SPECIFICATIONS)
5. Tighten the door to hinges fasteners to 28 N·m (21 ft. lbs.).

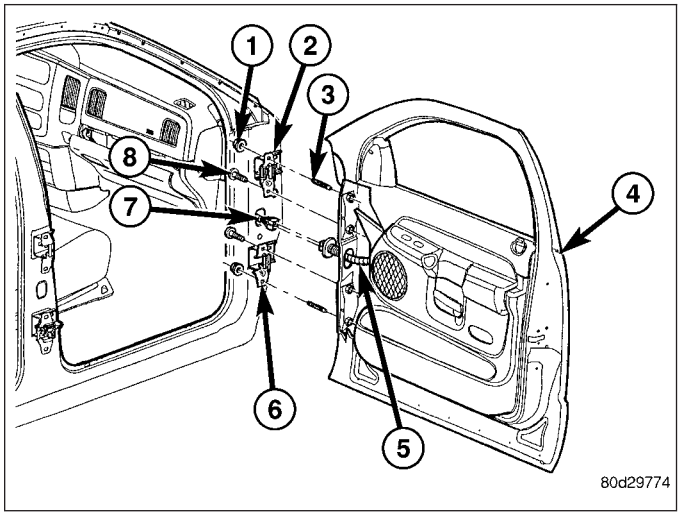

6. Tighten the latch striker bolts (3). (Refer to 23 - BODY/DOOR - FRONT/LATCH STRIKER - INSTALLATION)

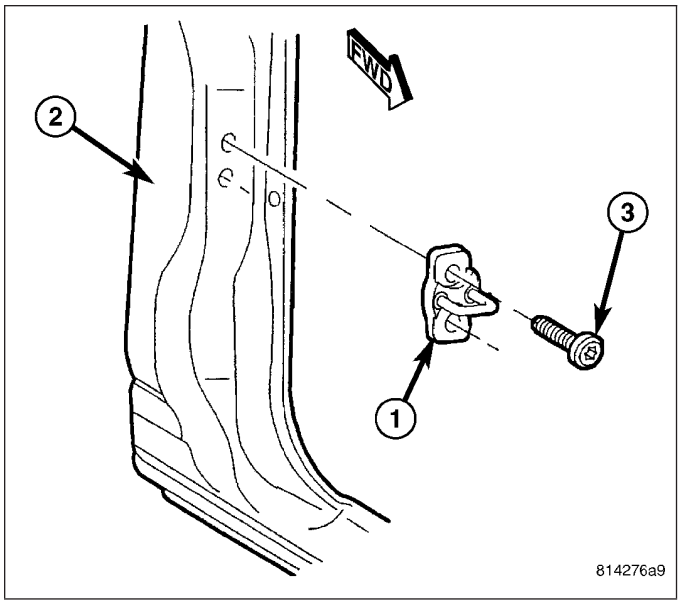

DOOR GLASS

REMOVAL

1. Remove the inner belt molding (Refer to 23 - BODY/WEATHERSTRIP/SEALS/FRONT DOOR INNER BELT WEATHERSTRIP - REMOVAL).
2. Remove the waterdam (Refer to 23 - BODY/DOOR - FRONT/WATERDAM - REMOVAL).
3. Reinstall the manual window crank or reconnect the electric window switch to the door wire harness (depending on application) and raise the door glass to the position shown.
4. Remove the two nuts (1) that secure the door glass to the window regulator (2) through the two sight windows (3 and 4) and disengage the door glass from the regulator.

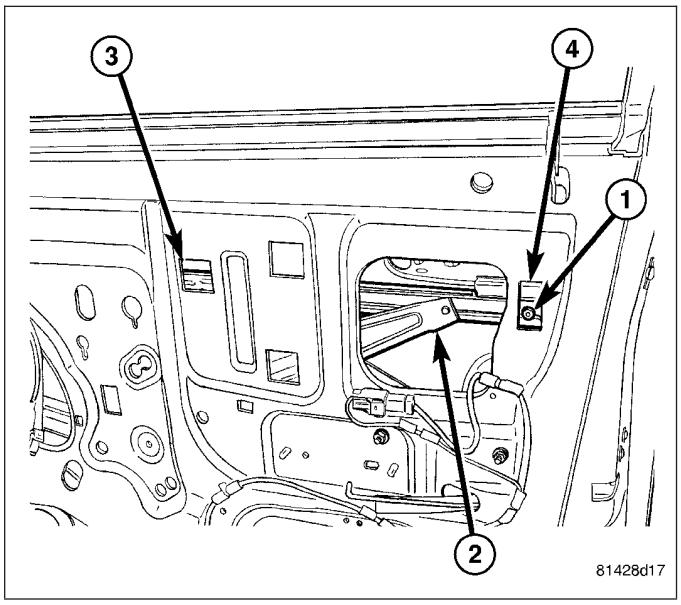

5. Remove the two bolts (2 and 3) that secure the front glass run channel (1) to the door (5) and remove the run channel through the door panel opening (4).
6. Disengage the door glass from the window regulator and lower the glass into the door.
7. Carefully rotate the door glass within the door and remove the glass from the window opening.

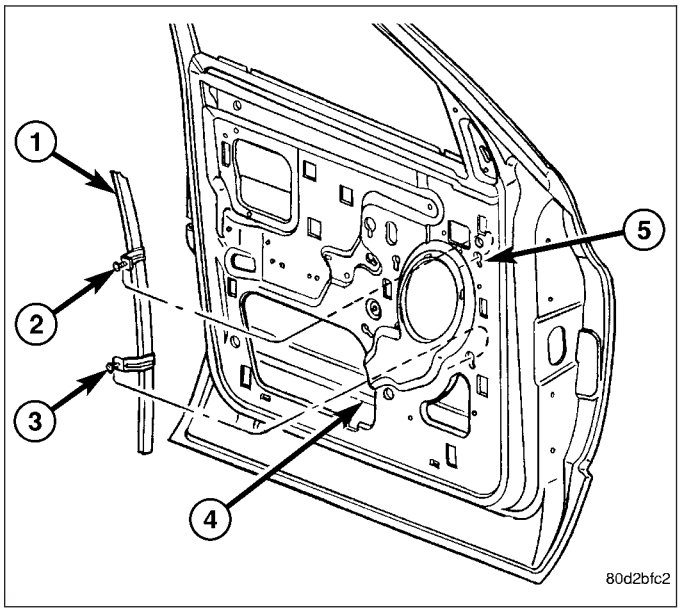

INSTALLATION

1. Carefully lower the door glass into the door (5) through the window opening.
2. Rotate the door glass into position and engage it to the window regulator.
3. Position the front glass run channel (1) into the door through the door panel opening (4).
4. Engage the two bolts (2 and 3) that secure the front glass run channel to the door. Tighten the bolts to 10 N·m (89 in. lbs.).

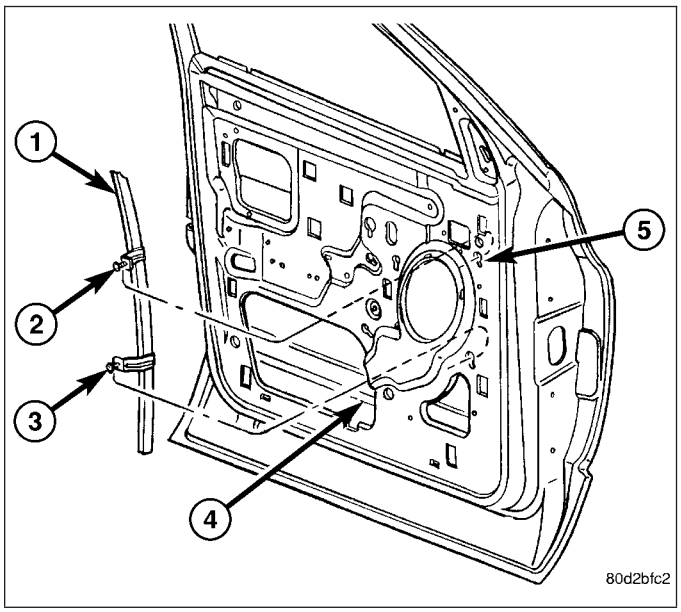

5. Install the two nuts (1) that secure the door glass to the window regulator (2) through the two sight windows (3 and 4). Tighten the nuts to 10 N·m (89 in. lbs.).
6. Lower the door glass into the door and remove the manual window crank or disconnect the electric window switch from the door wire harness (depending on application).
7. Install the waterdam (Refer to 23 - BODY/DOOR - FRONT/WATERDAM - INSTALLATION).
8. Install the inner belt molding (Refer to 23 - BODY/ WEATHERSTRIP/SEALS/FRONT DOOR INNER BELT WEATHERSTRIP - INSTALLATION).

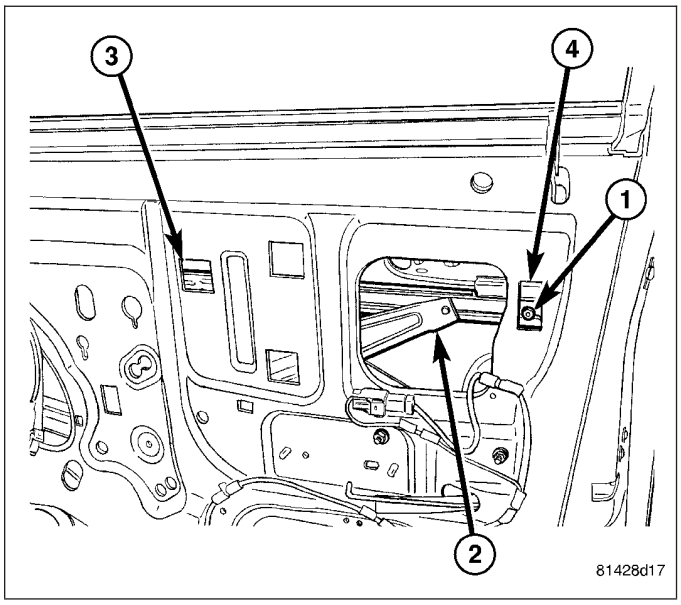

EXTERIOR HANDLE

REMOVAL

1. Disconnect and isolate the negative battery cable.
2. Remove the door glass (Refer to 23 - BODY/DOOR - FRONT/DOOR GLASS - REMOVAL).
3. If equipped, disconnect the exterior handle wire lead (7) from the door wire harness connector (3).
4. Disconnect the actuator rods (6 and 8) for the door latch (5) from the exterior handle (1).
5. Remove the two nuts (2) that secure the exterior handle to the door (4) and remove the handle.

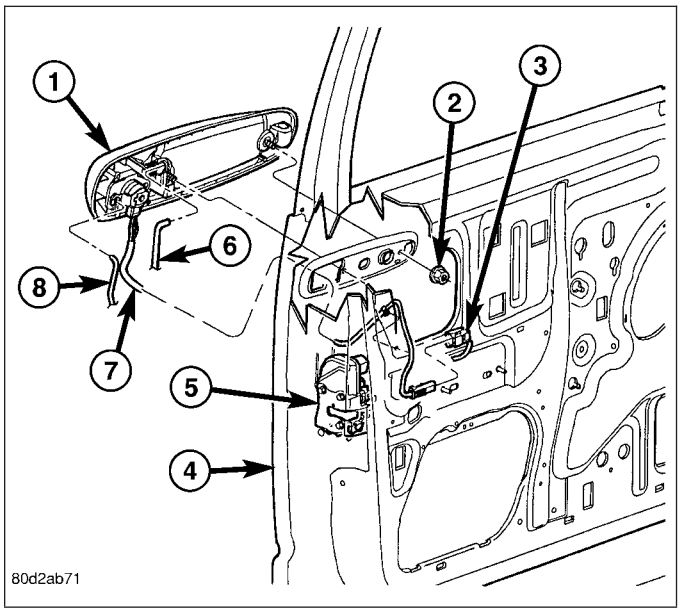

INSTALLATION

1. Position the exterior handle (1) into the door (4).
2. Install the two nuts (2) that secure the exterior handle to the door. Tighten the nuts to 10 N·m (89 in. lbs.).
3. Connect the actuator rods (6 and 8) for the door latch (5) to the exterior handle.
4. If equipped, connect the exterior handle wire lead (7) to the door wire harness connector (3).
5. Install the door glass (Refer to 23 - BODY/DOOR - FRONT/DOOR GLASS - INSTALLATION).
6. Reconnect the negative battery cable.

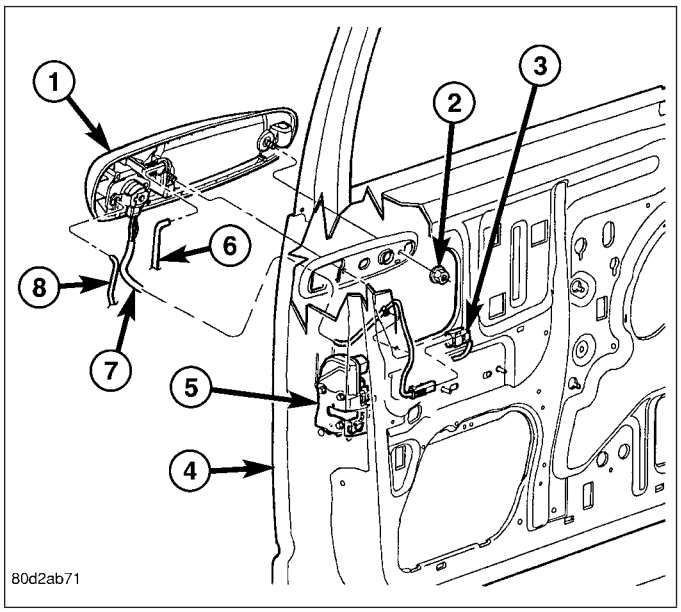

GLASS RUN CHANNEL

REMOVAL

FRONT-ALL MODELS

1. Raise the window glass to the full up position and remove the window regulator (Refer to 23 - BODY/ DOOR - FRONT/WINDOW REGULATOR - REMOVAL).
2. Loosen the two bolts (2 and 3) that secure the front glass run channel (1) to the door (5).
3. Slide the front glass run channel upward and disengage it from the door.
4. Remove the front glass run channel from the door through the door panel opening (4).
5. If required, remove the weatherstrip from the front glass run channel.

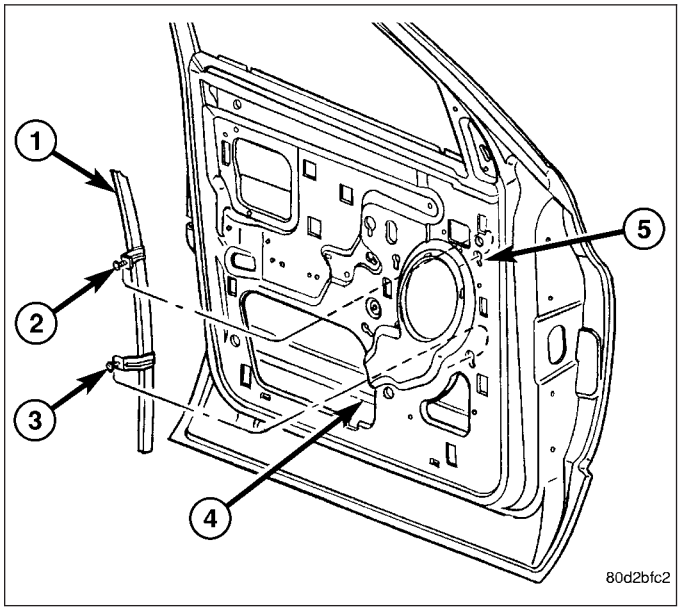

REAR-QUAD CAB

1. Raise the window glass to the full up position and remove the window regulator (Refer to 23 - BODY/ DOOR - FRONT/WINDOW REGULATOR - REMOVAL).
2. Remove the lower bolt (1) that secures the rear glass run channel (3) to the door.
3. Loosen the upper bolt (4) that secures the rear glass run channel to the door.
4. Slide the rear glass run channel upward and disengage the upper screw from the door.
5. Remove the rear glass run channel from the door through the door panel opening (2).
6. If required, remove the weatherstrip from the rear glass run channel.

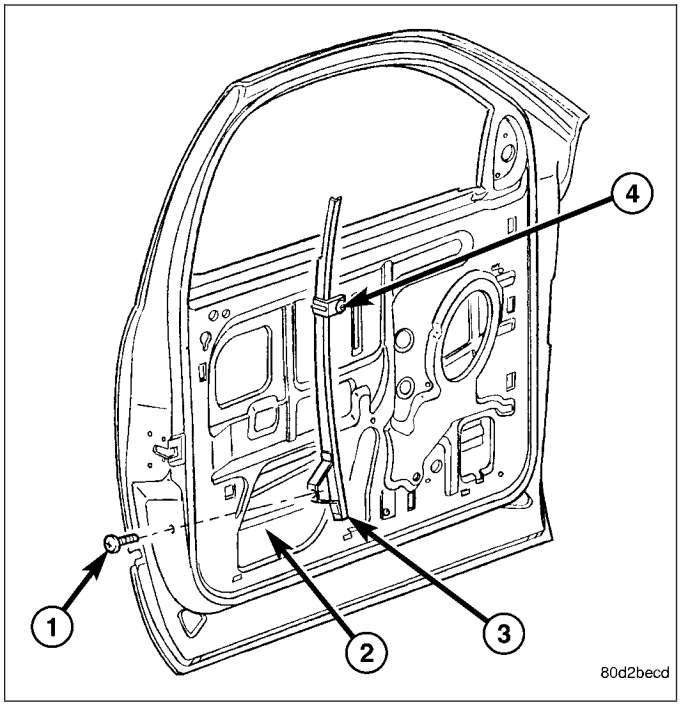

REAR-STANDARD CAB

1. Raise the window glass to the full up position and remove the window regulator (Refer to 23 - BODY/DOOR - FRONT/WINDOW REGULATOR - REMOVAL).
2. Remove the two bolts (1) that secure the rear glass run channel (2) to the door.
3. Remove the rear glass run channel from the door through the door panel opening (3).
4. If required, remove the weatherstrip from the rear glass run channel.

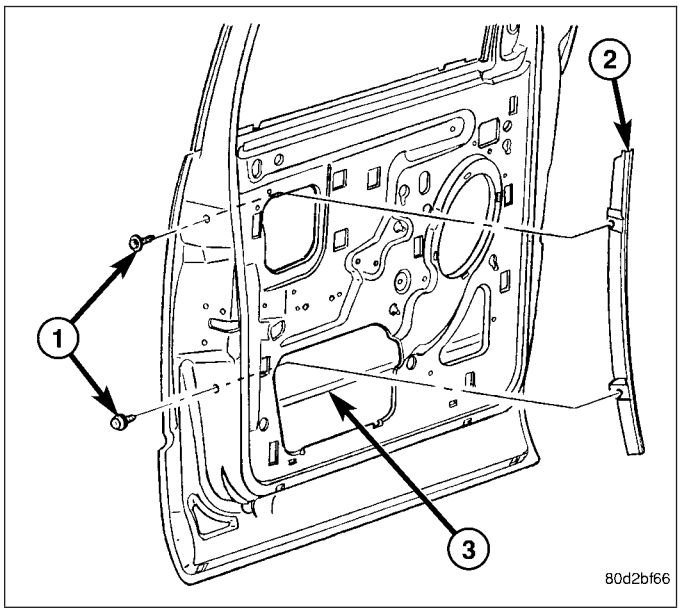

INSTALLATION

FRONT-ALL MODELS

1. If removed, install the weatherstrip onto the front glass run channel (1).
2. Position the front glass run channel into the door (5) through the door panel opening (4).
3. Engage the two bolts (2 and 3) that secure the front glass run channel to the door. Tighten the bolts to 10 N·m (89 in. lbs.).
4. Install the window regulator and verify correct window operation (Refer to 23 - BODY/DOOR - FRONT/WINDOW REGULATOR - INSTALLATION).

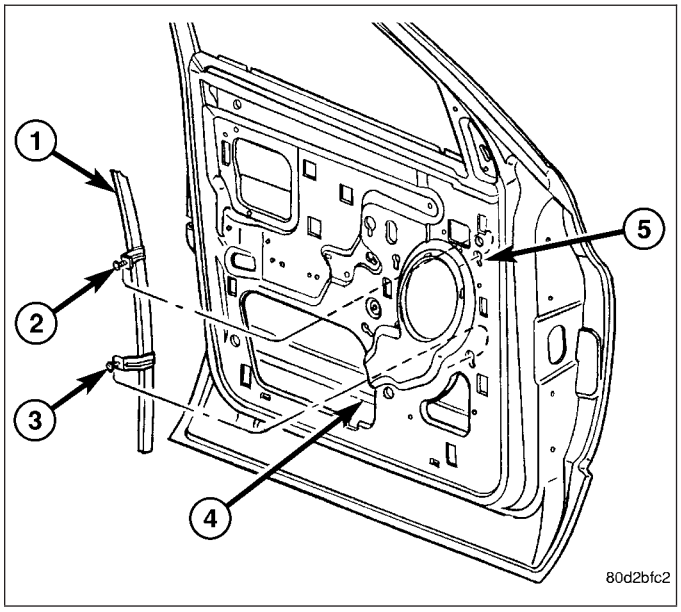

REAR-QUAD CAB

1. If removed, install the weatherstrip onto the rear glass run channel (3).
2. Position the rear glass run channel into the door through the door panel opening (2).
3. Engage the upper bolt (4) that secures the rear glass run channel to the door.
4. Install the lower bolt (1) that secures the rear glass run channel to the door. Tighten both the upper and lower bolts to 10 N·m (89 in. lbs.).
5. Install the window regulator and verify correct window operation (Refer to 23 - BODY/DOOR - FRONT/WINDOW REGULATOR - INSTALLATION).

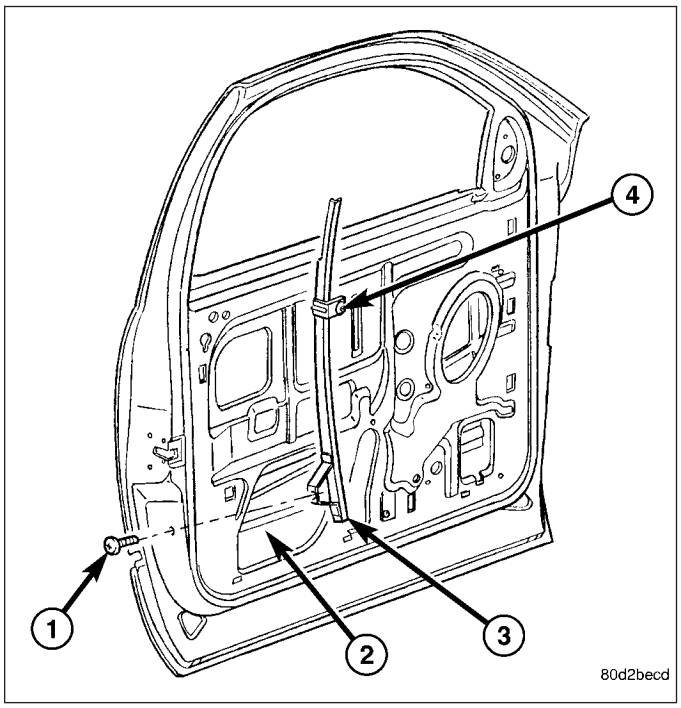

REAR-STANDARD CAB

1. If removed, install the weatherstrip onto the rear glass run channel (2).
2. Position the rear glass run channel into the door through the door panel opening (3).
3. Install the two bolts (1) that secure the rear glass run channel to the door. Tighten the bolts to 10 N·m (89 in. lbs.).
4. Install the window regulator and verify correct window operation (Refer to 23 - BODY/DOOR - FRONT/WINDOW REGULATOR - INSTALLATION).

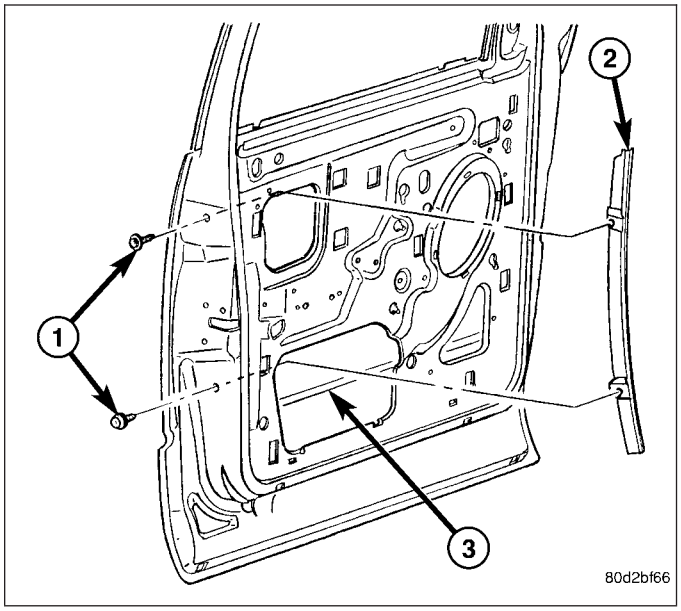

HINGE

REMOVAL

1. Remove the door. (Refer to 23 - BODY/DOOR - FRONT/DOOR - REMOVAL)
2. Using a grease pencil or equivalent, mark the hinge location and remove the bolts (3) and (4).

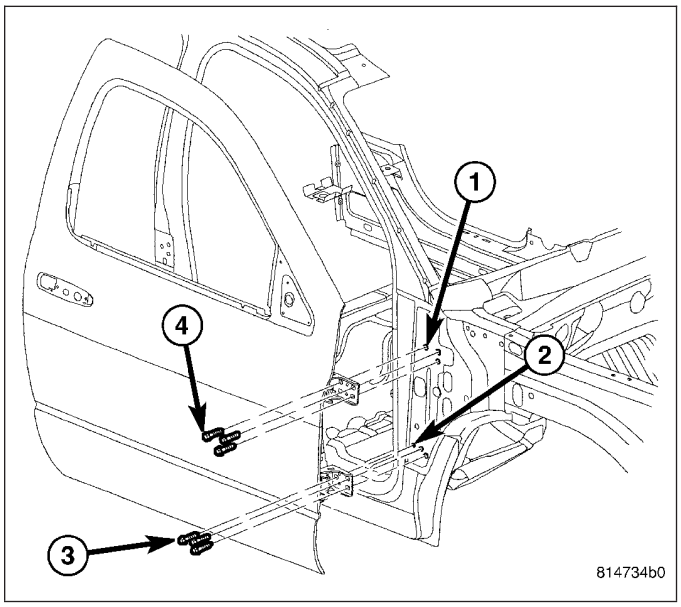

INSTALLATION

NOTE: A suitable body sealant should be used when removing or moving the hinges.

1. Install the hinges and bolts.
2. Tighten the upper hinge bolt (1) to hinge pillar to 28 N·m (21 ft. lbs.).
3. Tighten the lower hinge bolt (2) to hinge pillar to 28 N·m (21 ft. lbs.).
4. Tighten the remaining hinge to hinge pillar bolts (3) and (4) to 28 N·m (21 ft. lbs.).
5. Install the door. (Refer to 23 - BODY/DOOR - FRONT/DOOR - INSTALLATION)

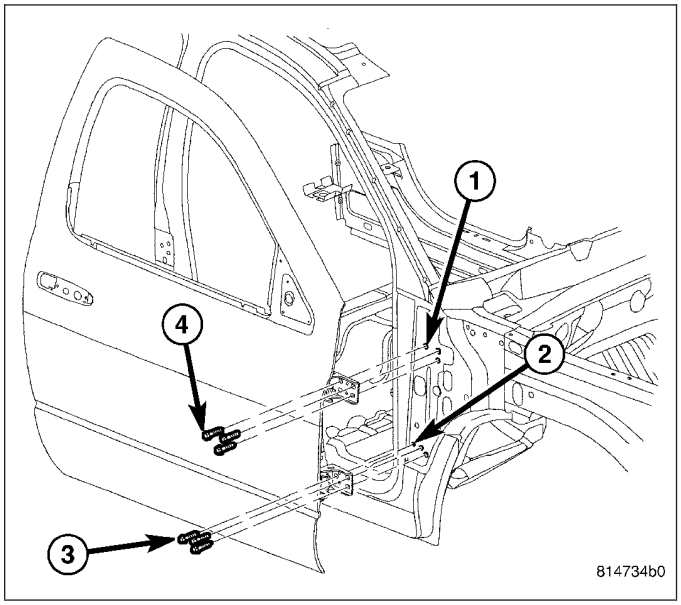

INTERIOR HANDLE ACTUATOR

REMOVAL

1. Remove the door trim panel (Refer to 23 - BODY/DOOR - FRONT/TRIM PANEL - REMOVAL).
2. Position the waterdam out of the way and disconnect the actuator rod (3) from interior door handle actuator (5) and the door latch (2), if necessary.
3. Remove the two nuts (4) that secure the interior door handle actuator to the door (1) and remove the actuator.

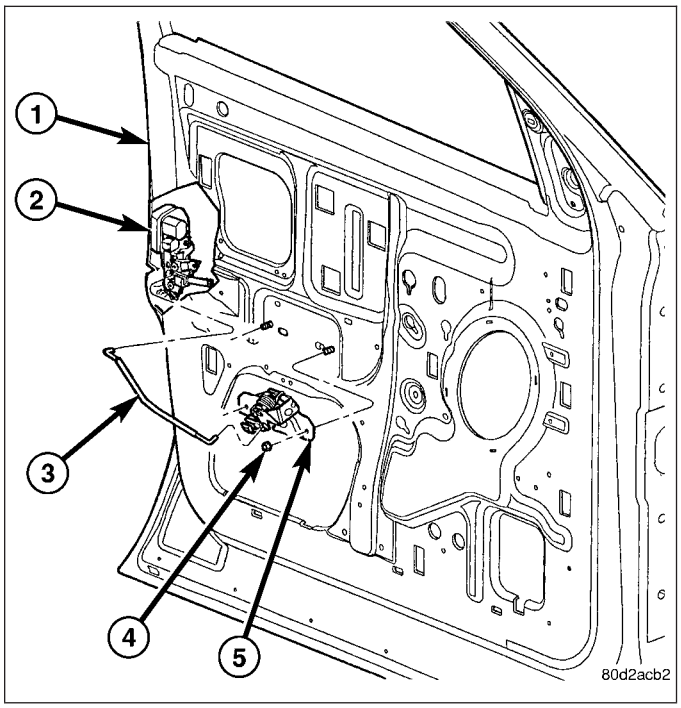

INSTALLATION

1. Position the interior door handle actuator (5) onto the door (1).
2. Install the two nuts (4) that secure the interior door handle actuator to the door. Tighten the nuts to 10 N·m (89 in. lbs.).
3. Connect the actuator rod (3) to the interior door handle actuator and the door latch (2), if removed.
4. Reposition the waterdam and install the door trim panel (Refer to 23 - BODY/DOOR - FRONT/TRIM PANEL - INSTALLATION).

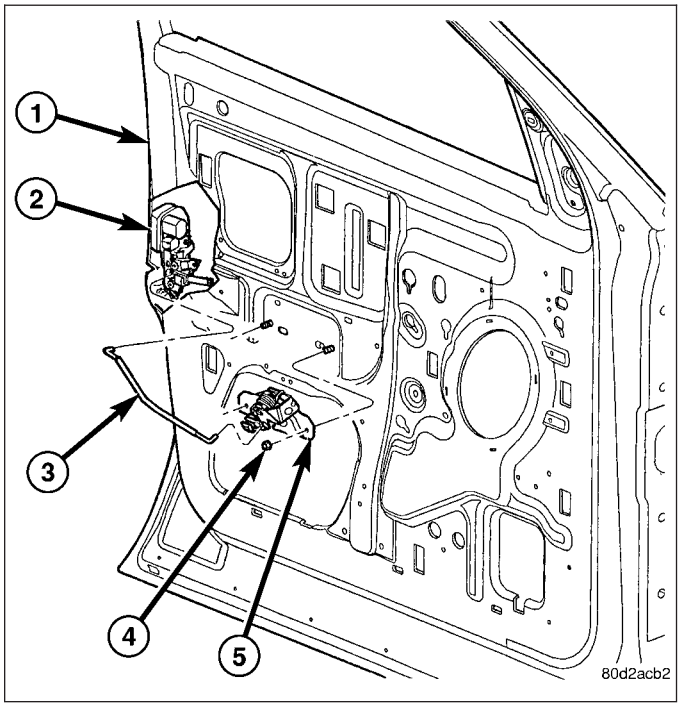

LATCH

REMOVAL

1. Raise the window to the full up position and remove the door trim panel (Refer to 23 - BODY/ DOOR - FRONT/TRIM PANEL - REMOVAL).
2. Position the waterdam out of the way and disconnect the actuator rod (3) from the door latch (2) and the interior door handle actuator (5) and remove the rod.

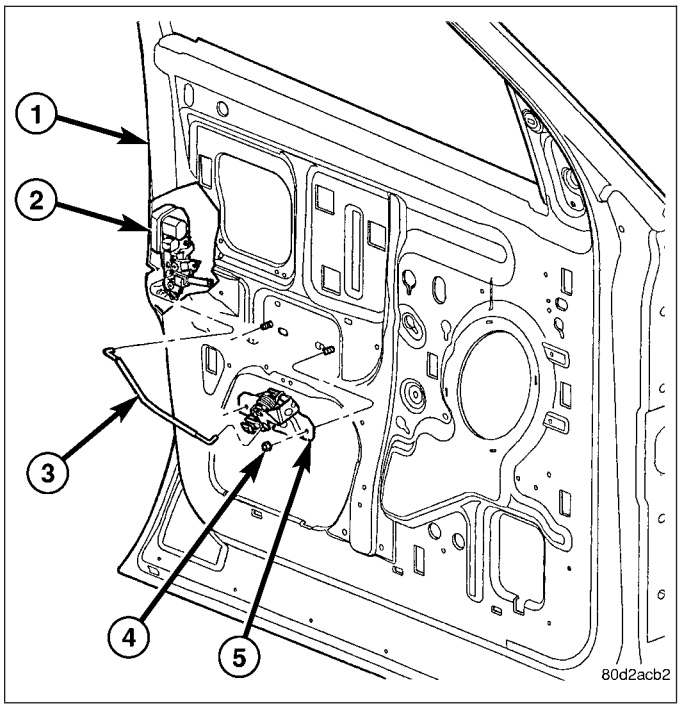

3. Disconnect the door wire harness connector (2) from the door latch (3).
4. Remove the three bolts (4) that secure the door latch to the door (1) and remove the latch.

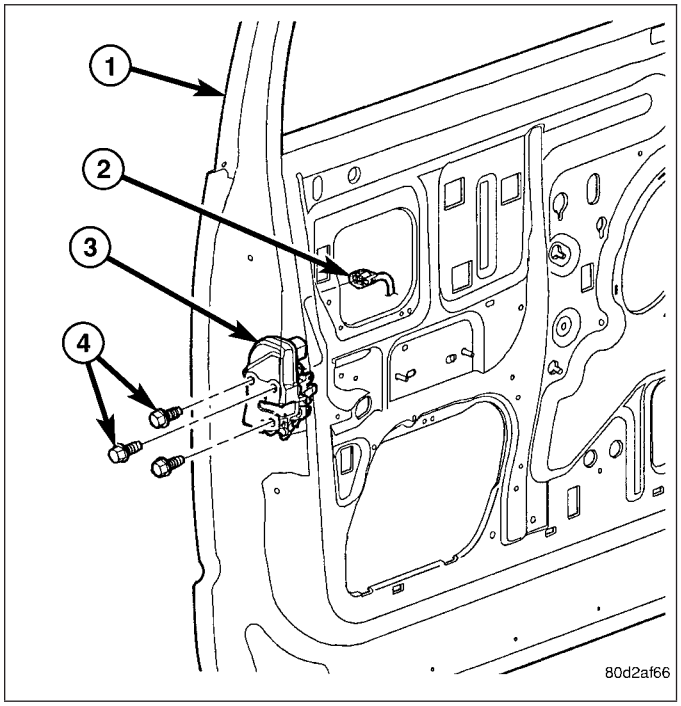

INSTALLATION

1. Position the door latch (3) into the door (1).
2. Install the three bolts (4) that secure the door latch to the door. Tighten the bolts to 10 N·m (89 in. lbs.).
3. Connect the door wire harness connector (2) to the door latch.

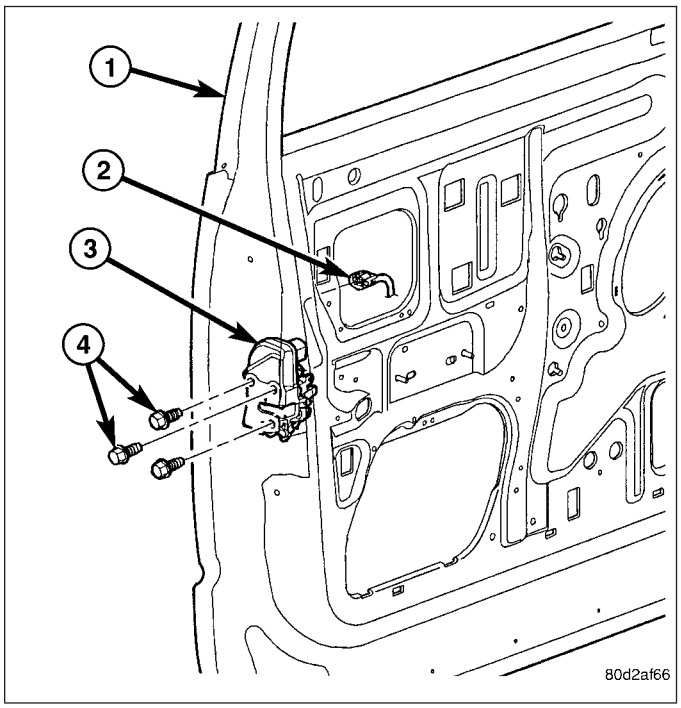

4. Connect the actuator rod (3) to the door latch (2) and the interior door handle actuator (5).
5. Reposition the waterdam to the door (1) and install the door trim panel (Refer to 23 - BODY/DOOR - FRONT/TRIM PANEL - INSTALLATION).
6. If necessary, adjust the latch (Refer to 23 - BODY/DOOR - FRONT/LATCH - ADJUSTMENTS).

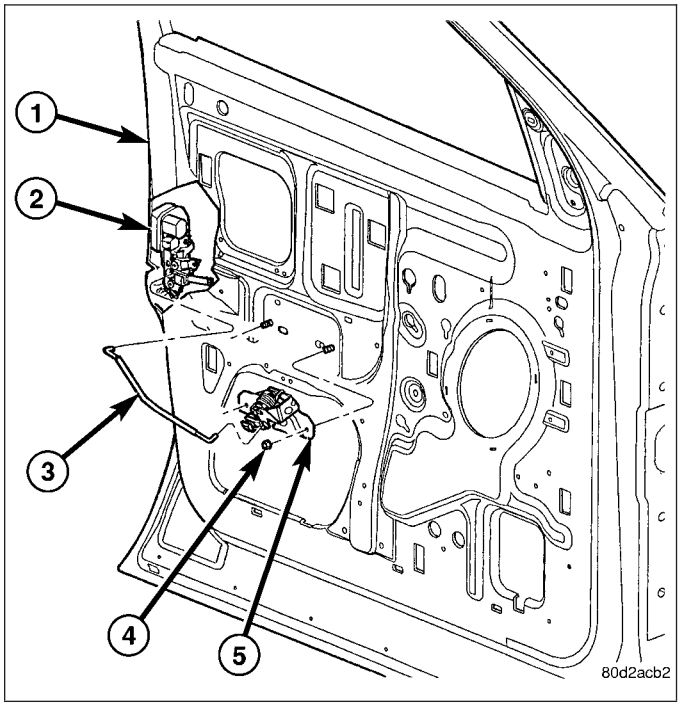

ADJUSTMENTS

1. Locate the access hole in the door to adjust the door latch (1) and remove the mylar tape (2).
2. Loosen the adjustment screw (3).
3. Operate the door handles several times to reduce any possible linkage binding and tighten the adjustment screw to 3 N·m (30 in. lbs.).
4. Operate the door handles again to verify proper operation and reinstall the mylar tape.

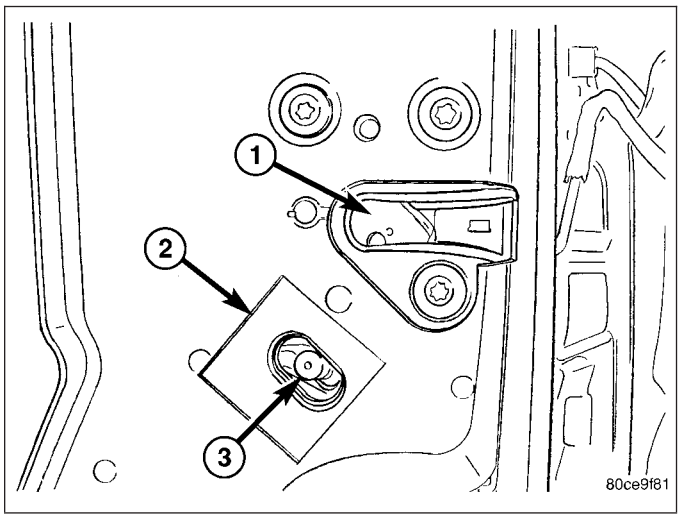

LATCH STRIKER

REMOVAL

1. Using a grease pencil or equivalent, mark the location of the door latch striker (1) on the B-pillar (2).
2. Remove the two bolts (3) that secure the door latch striker to the B-pillar and remove the striker.

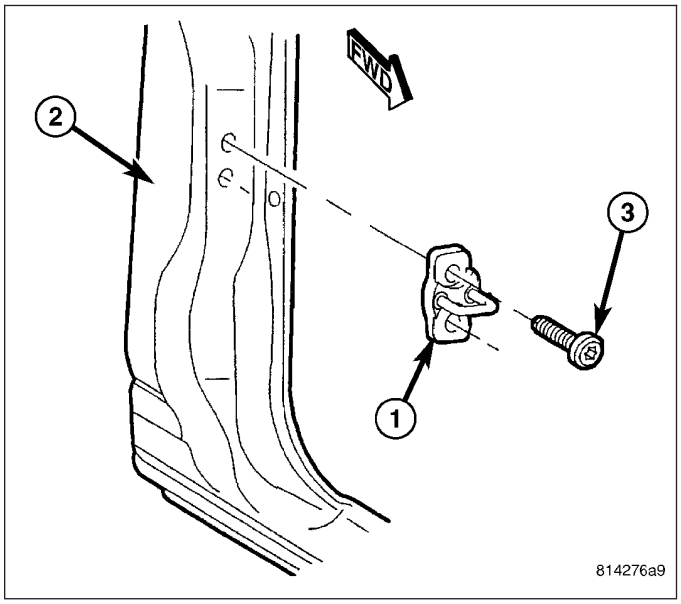

INSTALLATION

1. Position the door latch striker (1) onto the B-pillar (2) and loosely install the two bolts (3).
2. Align the door latch striker to the B-pillar using the reference marks made during the removal procedure and tighten the bolts to 28 N·m (21 ft. lbs.).
3. If necessary, adjust the door latch striker (Refer to 23 - BODY/DOOR - FRONT/LATCH STRIKER - ADJUSTMENTS).

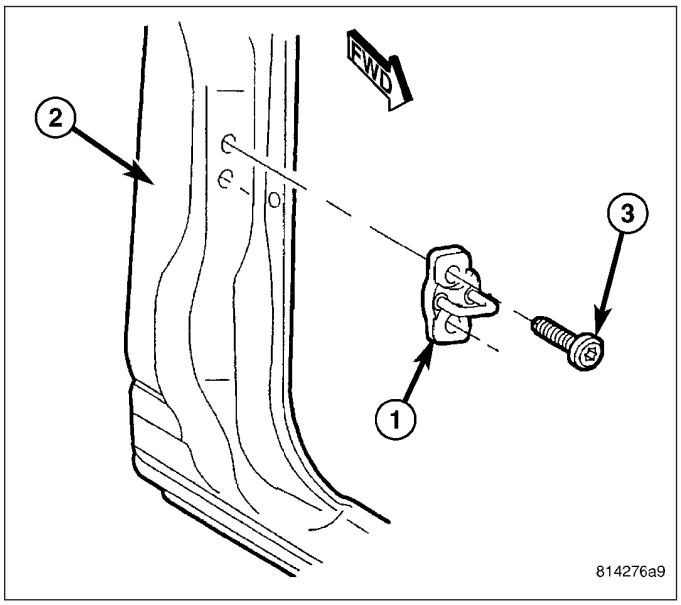

ADJUSTMENTS

1. Using a grease pencil or equivalent, mark the location of the door latch striker (1) on the B-pillar (2) to aid in adjustment.
2. Loosen the two bolts (3) that secure the door latch striker to the B-pillar.
3. To adjust the rear gap and flush measurement, change the position of the door latch striker and then tighten the two bolts to 28 N·m (21 ft. lbs.) (Refer to 23 - BODY/BODY STRUCTURE/GAP AND FLUSH - SPECIFICATIONS).
4. Verify correct door and latch position.

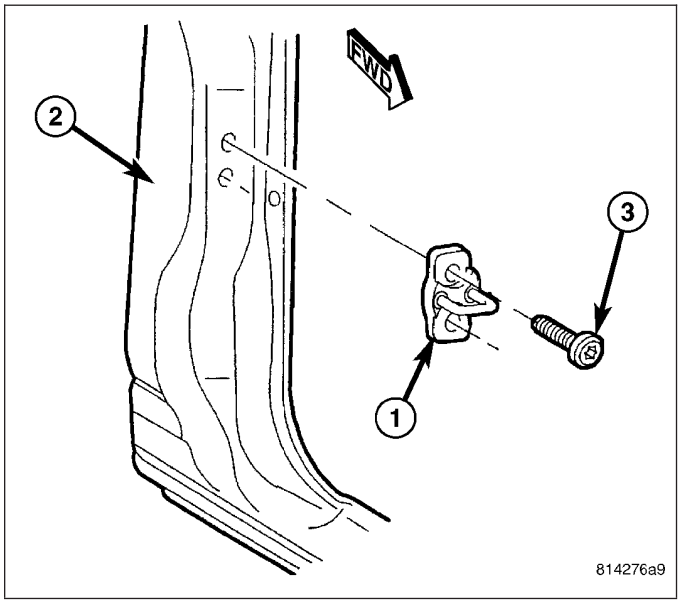

LOCK CYLINDER

REMOVAL

1. Remove the exterior door handle (1) (Refer to 23 - BODY/DOOR - FRONT/EXTERIOR HANDLE - REMOVAL).
2. Remove the clip (3) that secures the lock cylinder lever (5) and the electric lock switch (4), if equipped, to the door lock cylinder (6).
3. Remove the screw (2) that secures the door lock cylinder to the exterior handle and remove the lock cylinder.

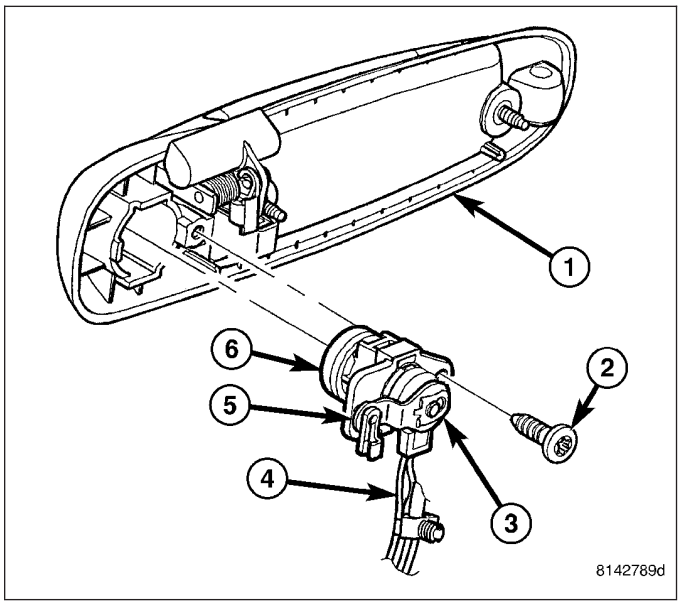

INSTALLATION

1. Position the door lock cylinder (6) into the exterior door handle (1).
2. Install the screw (2) that secures the door lock cylinder to the exterior door handle. Tighten the screw securely.
3. Install the electric lock switch (4), if equipped, and the lock cylinder lever (5) to the door lock cylinder.
4. Install the clip (3) that secures the lock cylinder lever and the electric lock switch, if equipped, to the door lock cylinder.
5. Install the exterior door handle (Refer to 23 - BODY/DOOR - FRONT/EXTERIOR HANDLE - INSTALLATION).

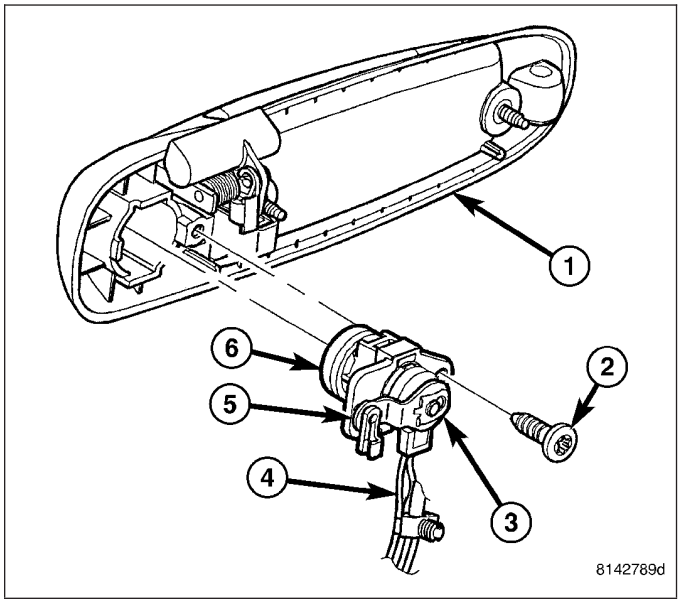

TRIM PANEL

REMOVAL

1. Remove the screw (1) that secures the interior door handle (2) to the interior door handle actuator (3).
2. Remove the interior door handle from the interior door handle actuator.

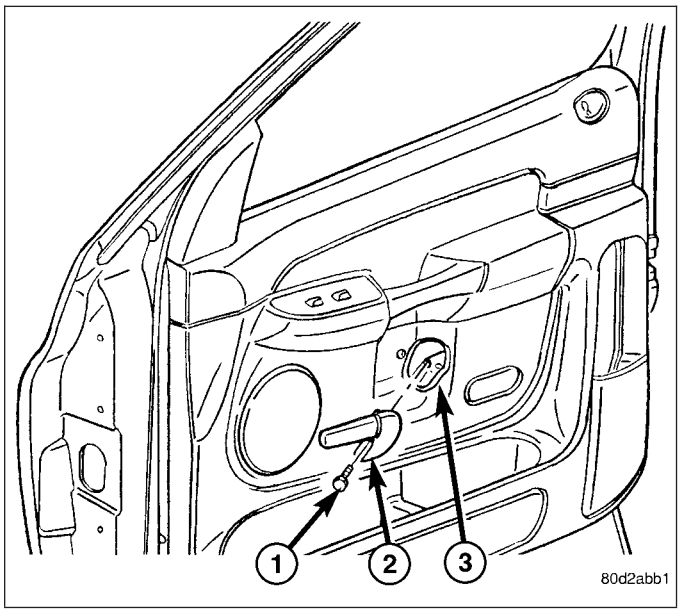

3. If equipped, remove the manual window crank (1) using a window crank removal tool (2).

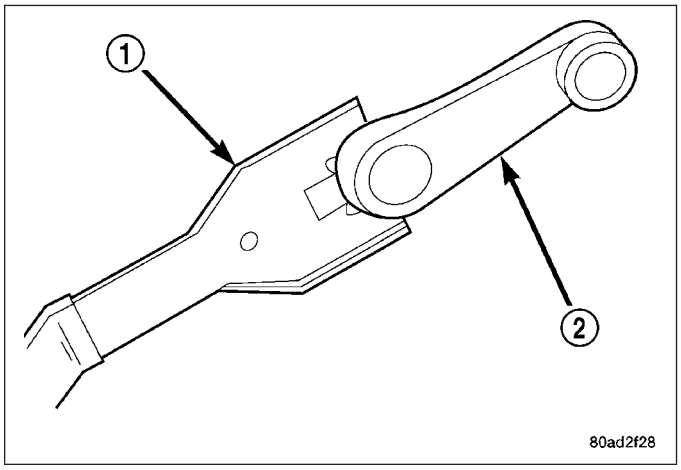

4. Remove the two screws (2) that secure the door trim panel (3) to the two screw inserts (1).
5. Remove the two screws (4) that secure the door trim panel to the bottom of the door.

CAUTION: The door trim panel is attached to the door by molded plastic retaining clips that are integral to the door trim panel. Do not pull the door trim panel directly off of the door or damage to the trim panel and/or the power switch assembly will occur.

6. Lift the door trim panel straight upward to disconnect the molded plastic retaining clips (5) from the door.

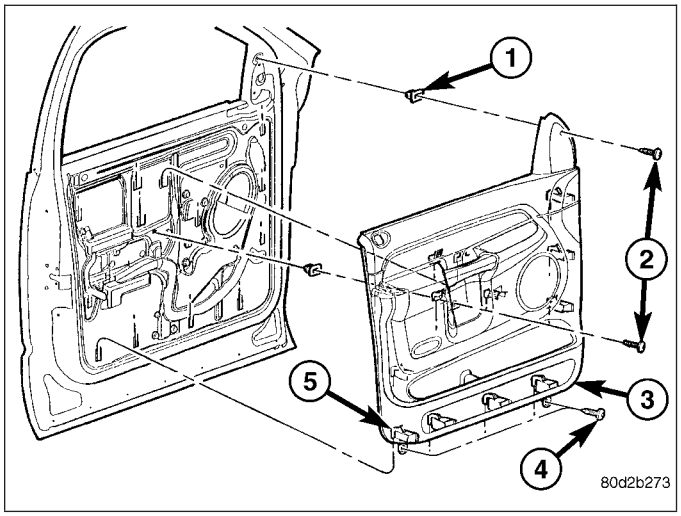

7. If equipped, disconnect the door wire harness from the power door switch assembly and remove the door trim panel.

INSTALLATION

1. If equipped, connect the door wire harness to the power door switch assembly.

CAUTION: The door trim panel is attached to the door by molded plastic retaining clips that are integral to the door trim panel. Do not force the door trim panel onto the door or damage to the trim panel and/or the power switch assembly will occur.

2. Position the door trim panel (3) and align the molded plastic retaining clips (5) to the door.
3. Push the door trim panel straight downward until all of the retaining clips are fully engaged to the door.
4. Install the two screws (2) that secure the door trim panel to the two screw inserts (1).
5. Install the two screws (4) that secure the door trim panel to the bottom of the door.
6. if equipped, install the manual window crank.

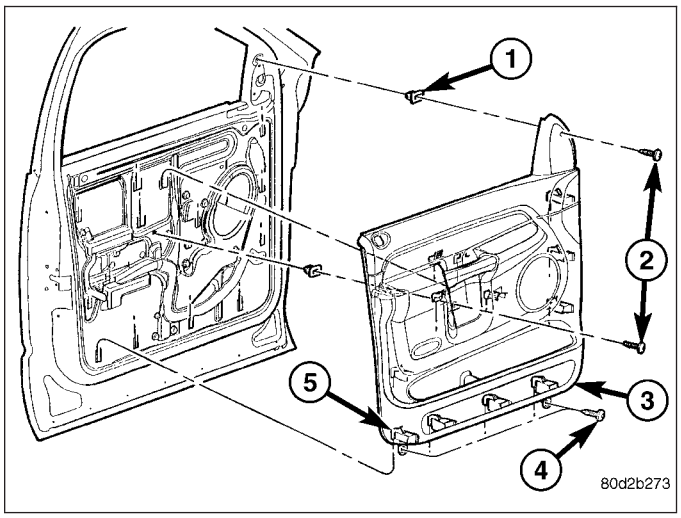

7. Position the interior door handle (2) onto the interior door handle actuator (3).
8. Install the screw (1) that secures the interior door handle to the interior door handle actuator. Tighten the screw securely.

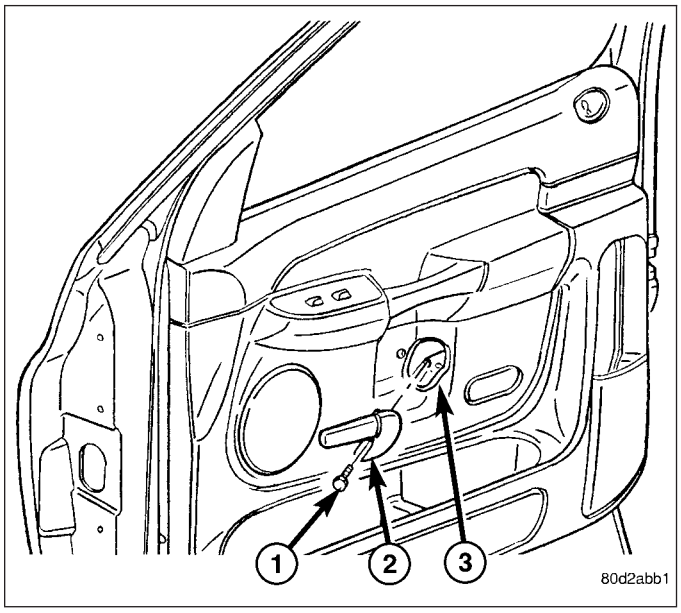

WATERDAM

REMOVAL

1. Remove the interior door handle actuator (Refer to 23 - BODY/DOOR - FRONT/INTERIOR HANDLE ACTUATOR - REMOVAL).
2. Remove the speaker (Refer to 8 - ELECTRICAL/ AUDIO/SPEAKER - REMOVAL).

CAUTION: Do not allow the waterdam adhesive to become contaminated with dirt or other foreign substances. If the waterdam becomes contaminated or damaged, replace it.

3. Carefully remove the waterdam (1) from around the perimeter of the door (2).
4. Separate the waterdam from the interior handle actuator rod and the door wire harness (if equipped) and remove the waterdam.

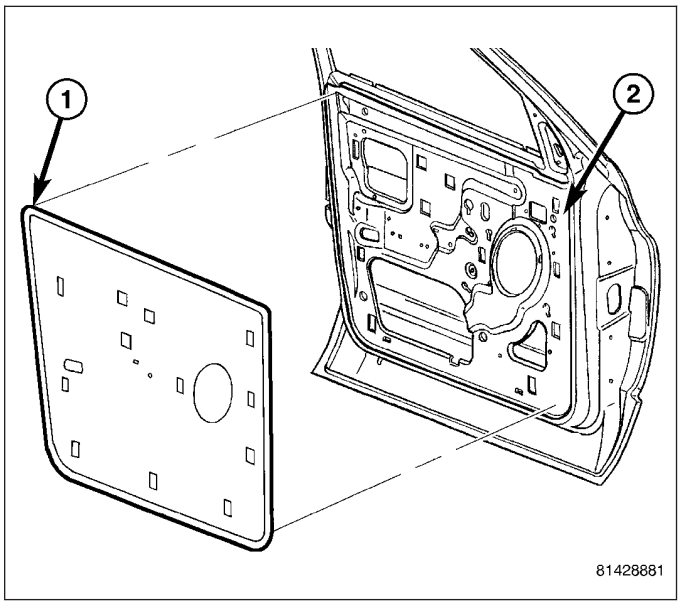

INSTALLATION

CAUTION: Do not allow the waterdam or adhesive to become contaminated with dirt or other foreign substances. If the waterdam becomes contaminated or damaged, replace it.

NOTE: Be sure that the waterdam is fully sealed around the perimeter of the door.

1. Position the interior handle actuator rod and the wire harness (if equipped) through the holes in the waterdam (1) and install the waterdam to the door (2).
2. Install the speaker (Refer to 8 - ELECTRICAL/AUDIO/SPEAKER - INSTALLATION)
3. Install the interior door handle actuator (Refer to 23 - BODY/DOOR - FRONT/INTERIOR HANDLE ACTUATOR - INSTALLATION).

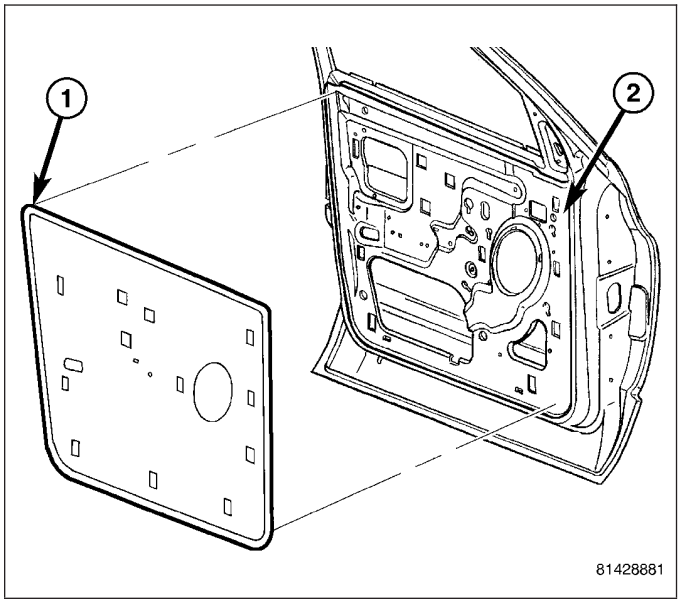

WINDOW REGULATOR - POWER

REMOVAL

1. Remove the inner belt molding (Refer to 23 - BODY/WEATHERSTRIP/SEALS/FRONT DOOR INNER BELT WEATHERSTRIP - REMOVAL).
2. Remove the waterdam (Refer to 23 - BODY/DOOR - FRONT/WATERDAM - REMOVAL).
3. Remove the electric window switch from the door trim panel and connect it to the door wire harness (Refer to 8 - ELECTRICAL/POWER WINDOWS/ POWER WINDOW SWITCH - REMOVAL).
4. Raise the door glass to the position shown.
5. Remove the two nuts (1) that secure the door glass to the window regulator (2) through the two sight windows (3 and 4) and disengage the door glass from the regulator.
6. Position the door glass to the full up position and secure the glass using a wooden wedge or an equivalent.

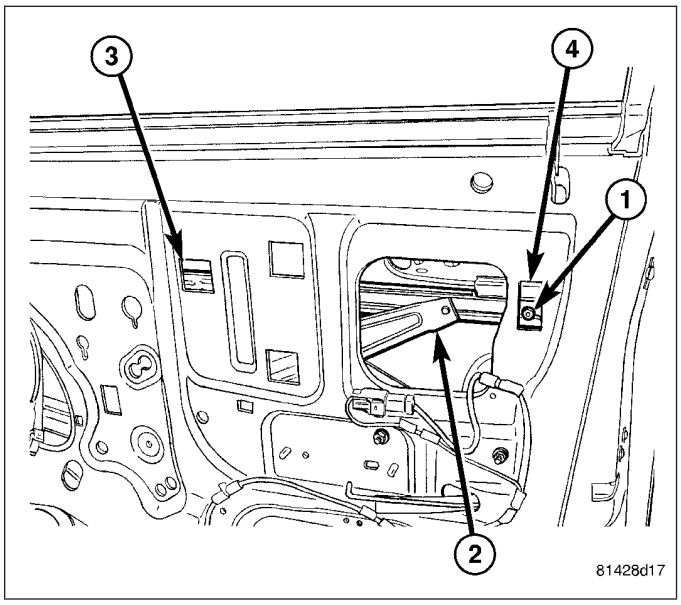

7. Lower the window regulator (4) and remove the two nuts (3) that secure the regulator stabilizer (1) to the door (2).
8. Remove the bolt (5) that secures the window regulator to the door and loosen the other two regulator bolts (7).
9. Slide the window regulator upward and disengage the two regulator bolts from the door.
10. Remove the window regulator through the opening in the door and disconnect the door wire harness (6).

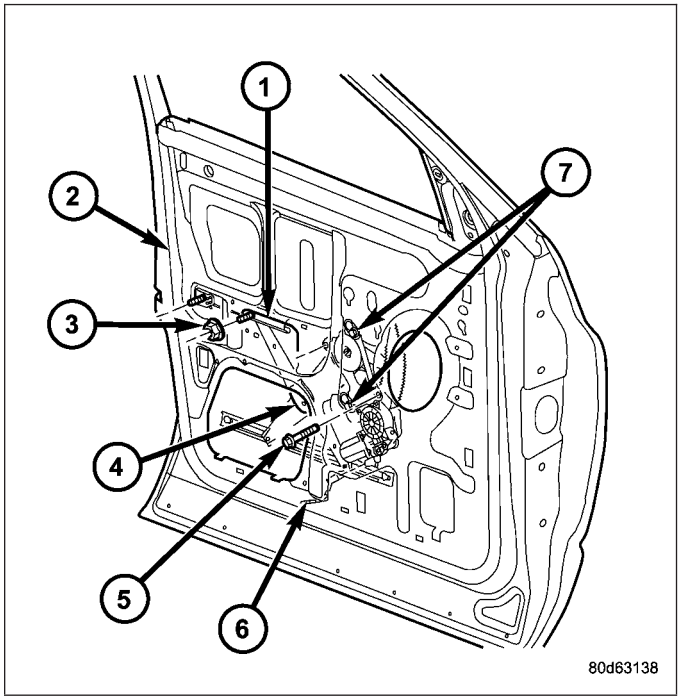

INSTALLATION

1. Connect the door wire harness (6) to the window regulator (4) and install the regulator through the opening in the door (2).
2. Engage the two regulator bolts (7) to the door.
3. Install the bolt (5) that secure the window regulator to the door and tighten all three regulator bolts to 10 N·m (89 in. lbs.).
4. Position the regulator stabilizer (1) into the door and install the two nuts (3). Tighten the nuts to 10 N·m (89 in. lbs.).

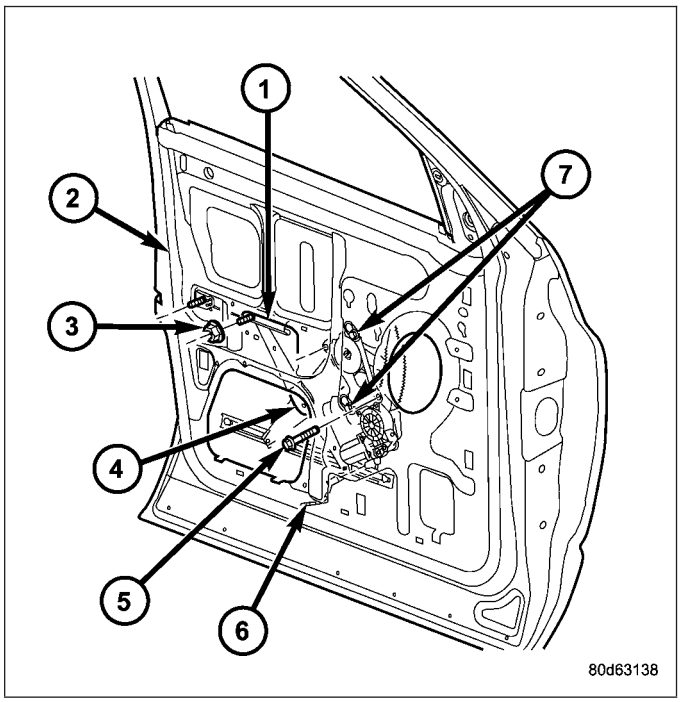

5. Raise the window regulator (2) to the position shown.
6. Support the window glass and remove the wooden wedge or equivalent.
7. Position the window glass to the window regulator and install the two nuts (1) thought the two sight windows (3 and 4). Tighten the nuts to 10 N·m (89 in. lbs.).
8. Disconnect the electric window switch from the door wire harness and reinstall the switch onto the door trim panel (Refer to 8 - ELECTRICAL/POWER WINDOWS/POWER WINDOW SWITCH - INSTALLATION).
9. Install the waterdam (Refer to 23 - BODY/DOOR - FRONT/WATERDAM - INSTALLATION).
10. Install the inner belt molding (Refer to 23 - BODY/WEATHERSTRIP/SEALS/FRONT DOOR INNER BELT WEATHERSTRIP - INSTALLATION).

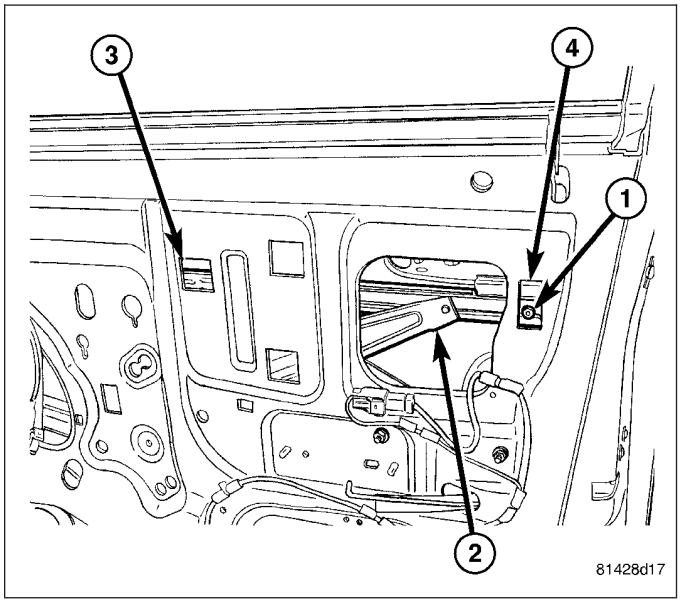

WINDOW REGULATOR - MANUAL

REMOVAL

1. Remove the inner belt molding (Refer to 23 - BODY/WEATHERSTRIP/SEALS/FRONT DOOR INNER BELT WEATHERSTRIP - REMOVAL).
2. Remove the waterdam (Refer to 23 - BODY/DOOR - FRONT/WATERDAM - REMOVAL).
3. Reinstall the manual window crank and raise the door glass to the position shown.
4. Remove the two nuts (1) that secure the door glass to the window regulator (2) through the two sight windows (3 and 4) and disengage the door glass from the regulator.
5. Position the door glass to the full up position and secure the glass using a wooden wedge or an equivalent.

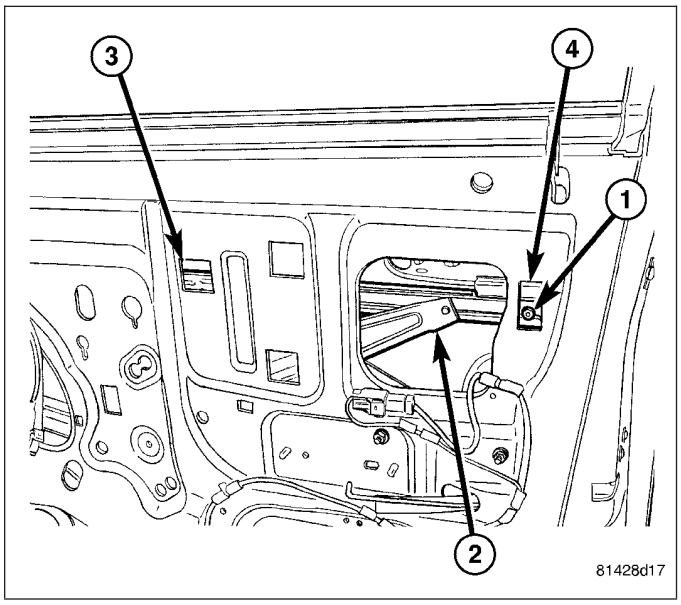

6. Lower the window regulator (4) and remove the two nuts (3) that secure the regulator stabilizer (1) to the door (2).
7. Remove the two bolts (5) that secure the window regulator to the door and loosen the other two regulator bolts (6).
8. Slide the window regulator upward and disengage the two regulator bolts from the door.
9. Remove the window regulator through the opening in the door.

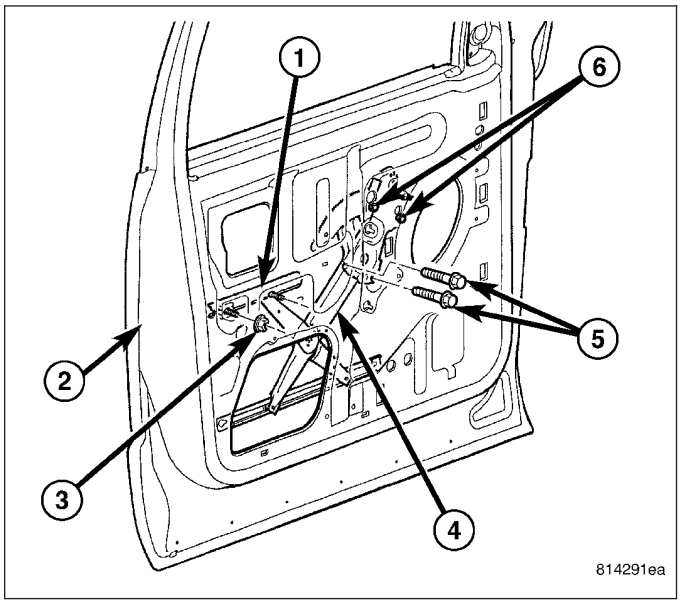

INSTALLATION

1. Install the window regulator (4) through the opening in the door (2).
2. Engage the two regulator bolts (6) to the door.
3. Install the two bolt (5) that secure the window regulator to the door and tighten all four regulator bolts to 10 N·m (89 in. lbs.).
4. Position the regulator stabilizer (1) into the door and install the two nuts (3). Tighten the nuts to 10 N·m (89 in. lbs.).

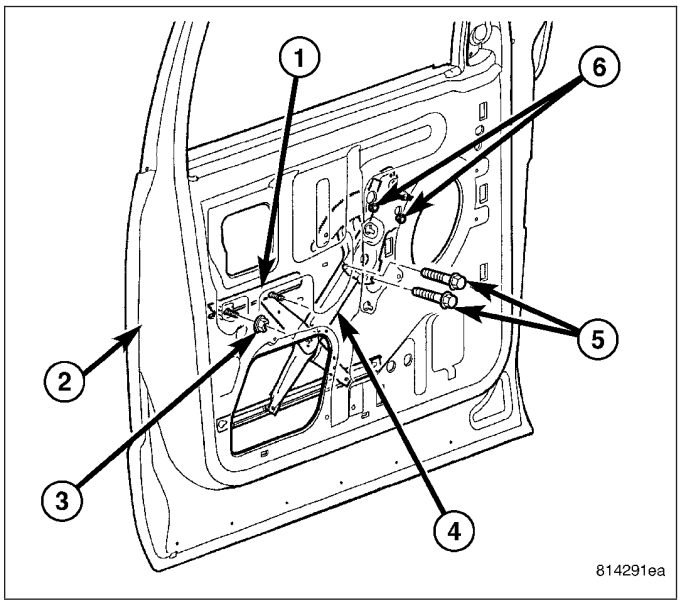

5. Raise the window regulator (2) to the position shown and remove the manual window crank.
6. Support the window glass and remove the wooden wedge or equivalent.
7. Position the window glass to the window regulator and install the two nuts (1) thought the two sight windows (3 and 4). Tighten the nuts to 10 N·m (89 in. lbs.).
8. Install the waterdam (Refer to 23 - BODY/DOOR - FRONT/WATERDAM - INSTALLATION).
9. Install the inner belt molding (Refer to 23 - BODY/ WEATHERSTRIP/SEALS/FRONT DOOR INNER BELT WEATHERSTRIP - INSTALLATION).

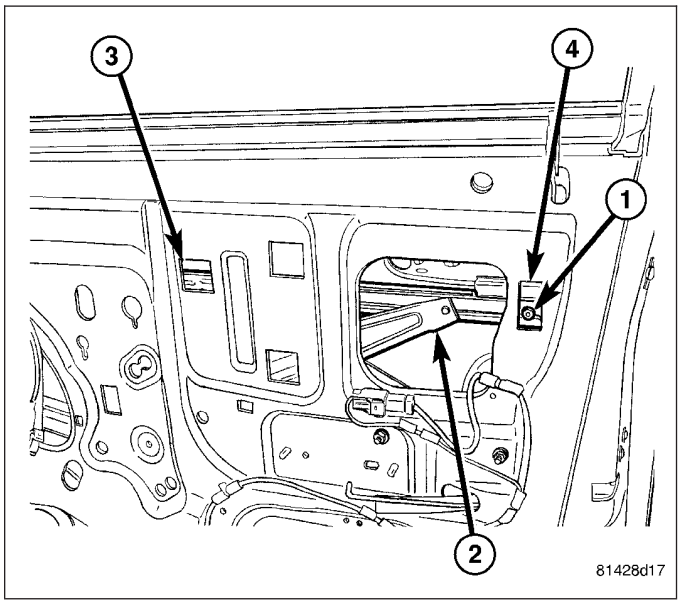

SIDE VIEW MIRROR FLAG

REMOVAL

1. Remove the door trim panel (4) (Refer to 23 - BODY/DOOR - FRONT/TRIM PANEL - REMOVAL).

CAUTION: Do not use a drill to remove the heat stakes. The remaining portions of the heat stake studs are needed for installation purposes. Failure to follow this caution may require door trim panel replacement.

2. Remove the heat stakes (3) using a razor knife or equivalent.
3. Release the tabs (2) and remove the mirror flag (1) from the door trim panel.

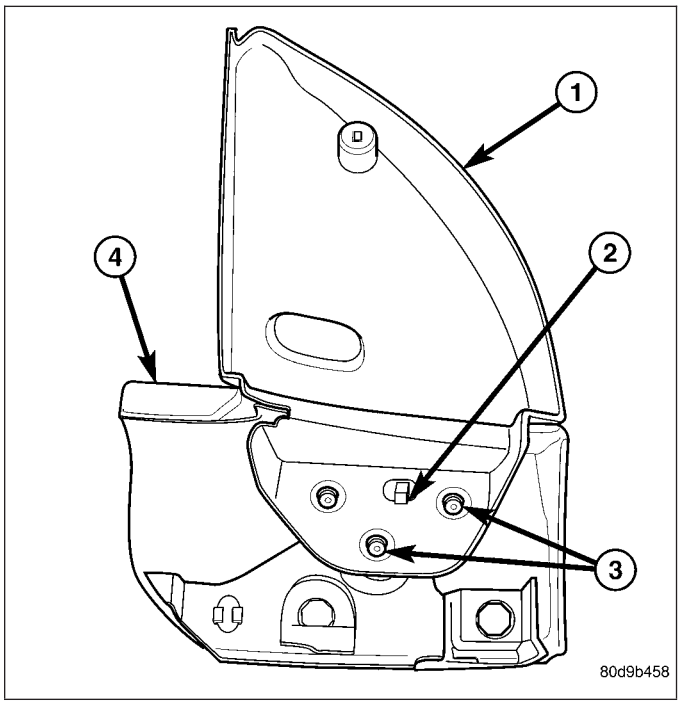

INSTALLATION

NOTE: Clean any excess heat stake material off of the heat stake studs to aid in mirror flag installation.

1. Install the mirror flag (1) over the tabs (2) and install the screws (3) into the heat stake studs.
2. Install the door trim panel (4) (Refer to 23 - BODY/DOOR - FRONT/TRIM PANEL - INSTALLATION)

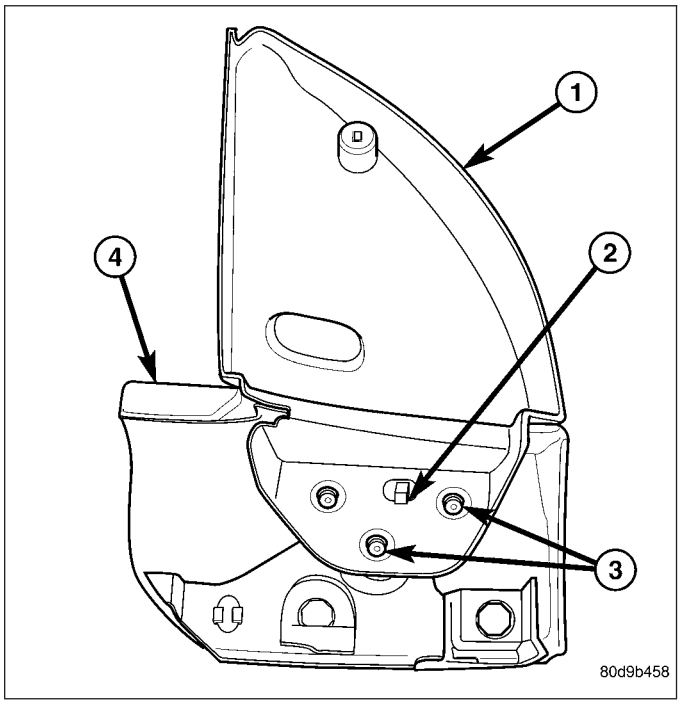

DOORS - REAR

TABLE OF CONTENTS

	page
DOOR	
REMOVAL	52
INSTALLATION	53
ADJUSTMENTS	53
DOOR GLASS	
REMOVAL	58
INSTALLATION	59
EXTERIOR HANDLE	
REMOVAL	60
INSTALLATION	61
GLASS RUN CHANNEL	
REMOVAL	
FRONT	61
REAR	62
INSTALLATION	
FRONT	62
REAR	63
HINGE	
REMOVAL	63
INSTALLATION	66
INTERIOR HANDLE ACTUATOR	
REMOVAL	68
INSTALLATION	68
LATCH	
REMOVAL	69
INSTALLATION	70
ADJUSTMENTS	71
LATCH STRIKER	
REMOVAL	71
INSTALLATION	72
ADJUSTMENTS	72
TRIM PANEL	
REMOVAL	73
INSTALLATION	74
WATERDAM	
REMOVAL	74
INSTALLATION	75
WINDOW REGULATOR - POWER	
REMOVAL	75
INSTALLATION	76
WINDOW REGULATOR - MANUAL	
REMOVAL	77
INSTALLATION	78

DOOR

REMOVAL

1. Disconnect and isolate the negative battery cable.
2. Disconnect the door wire harness connector (5) from the body wire harness (8).
3. Using a grease pencil or equivalent, mark the location of the door hinges (2 and 7) on the door (4).

NOTE: The epoxy bonded washers do not need to be separated from the hinges. If the washers are removed, the door may need to be re-adjusted.

4. Support the door with a suitable lifting device and remove the two nuts (1) and two bolts (9) that secure the door to the hinges.
5. Carefully remove the door from the hinges.
6. If required, remove the two studs (3 and 6) from the door.

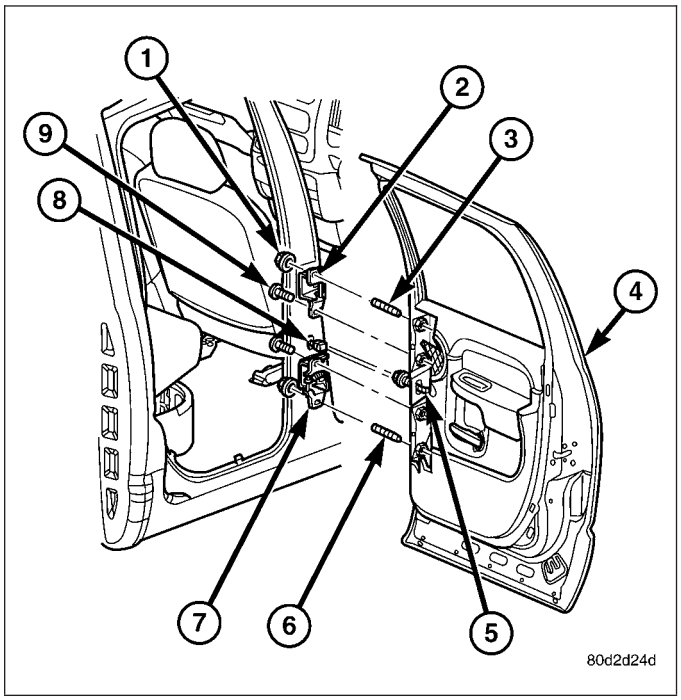

INSTALLATION

1. If removed, install the two studs (3 and 6) into the door (4).
2. Carefully position the door onto the hinges (2 and 7) and support the door with a suitable lifting device.

NOTE: If the epoxy bonded washers are separated from the hinges, the door may need to be adjusted.

3. If removed, install the epoxy bonded washers.
4. Loosely install the two nuts (1) and the two bolts (9) that secure the door to the hinges.
5. Align the door to the hinges using the reference marks made during the removal procedure and tighten the nuts and bolts to 28 N·m (21 ft. lbs.).
6. Connect the door wire harness (5) to the body wire harness (8).
7. Reconnect the negative battery cable.
8. If necessary, adjust the door (Refer to 23 - BODY/DOORS - REAR/DOOR - ADJUSTMENTS).

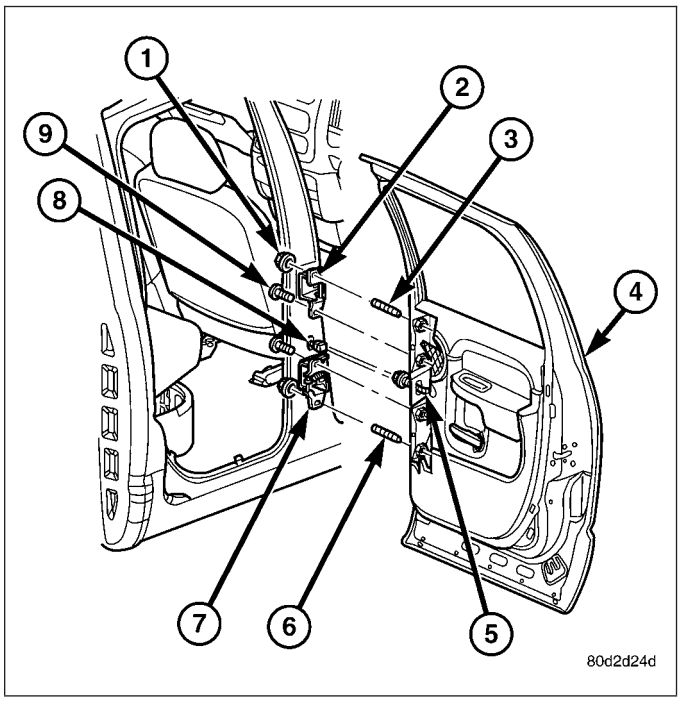

ADJUSTMENTS

NOTE: For quad cab vehicles, it is recommended that you adjust the rear door before adjusting the front door.

- **Door adjustment measurements should be taken from stationary or welded body panels like the roof, rocker or quarter panels.**
- **During adjustment procedures, it is recommended that all the hinge fasteners be loosened except for the upper most fasteners. Adjustments can be made using the upper fasteners to hold the door with final torque of the fasteners occurring after correct door positioning is achieved.**

FORE/AFT

NOTE: Fore/aft (lateral) door adjustment is done by loosening the hinge to the hinge pillar fasteners one hinge at a time and moving the door to the correct position.

1. Support the door with a suitable lifting device.
2. Loosen the hinge to hinge pillar fasteners (5) and (6). (Refer to 23 - BODY/DOORS - REAR/HINGE - REMOVAL)
3. Adjust the door to the correct position. (Refer to 23 - BODY/BODY STRUCTURE/GAP AND FLUSH - SPECIFICATIONS)
4. Tighten the upper hinge bolt (2) to 28 N·m (21 ft. lbs.).
5. Tighten the upper hinge bolt (1) to 28 N·m (21 ft. lbs.).
6. Tighten the upper hinge bolt (3) to 28 N·m (21 ft. lbs.).
7. Tighten the lower hinge bolt (4) to 28 N·m (21 ft. lbs.).

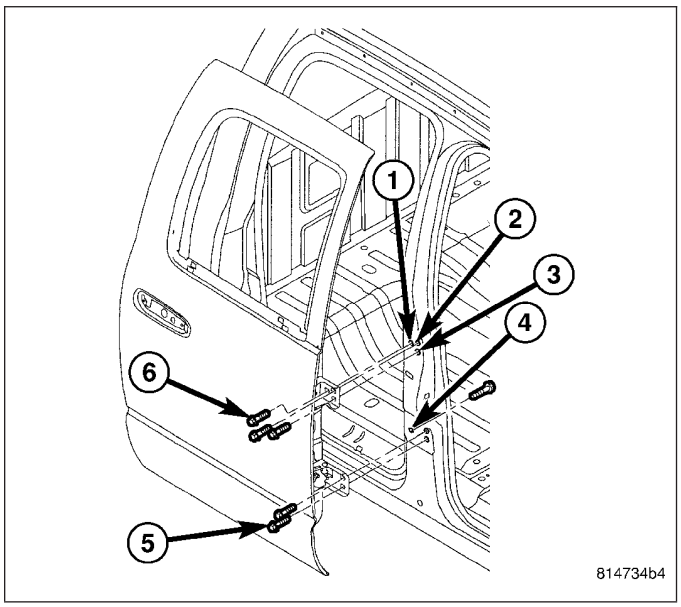

8. Tighten the remaining hinge pillar fasteners to 28 N·m (21 ft. lbs.). (Refer to 23 - BODY/DOORS - REAR/HINGE - INSTALLATION)

NOTE: Use a suitable body sealer on the hinge to body mating surfaces.

UP/DOWN

NOTE: Up/down door adjustment is done by loosening either the hinge to the hinge pillar fasteners or the hinge to door fasteners and moving the door to the correct position.

NOTE: When adjustment of the door requires the loosening of the door to hinge fasteners, it will be necessary to separate the epoxy bonded washers with a chisel or other suitable tool.

NOTE: When the up/down adjustments are done correctly, the top of the door is positioned over flush to the roof. (Refer to 23 - BODY/BODY STRUCTURE/GAP AND FLUSH - SPECIFICATIONS)

1. Support the door with a suitable lifting device.
2. Remove the latch striker (1). (Refer to 23 - BODY/DOORS - REAR/LATCH STRIKER - REMOVAL)
3. If necessary, loosen the hinge to hinge pillar fasteners (Refer to 23 - BODY/DOORS - REAR/HINGE - REMOVAL)

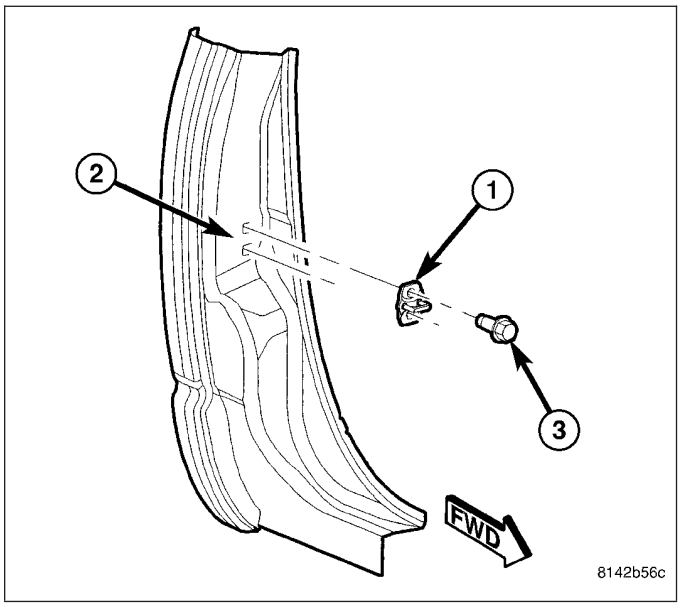

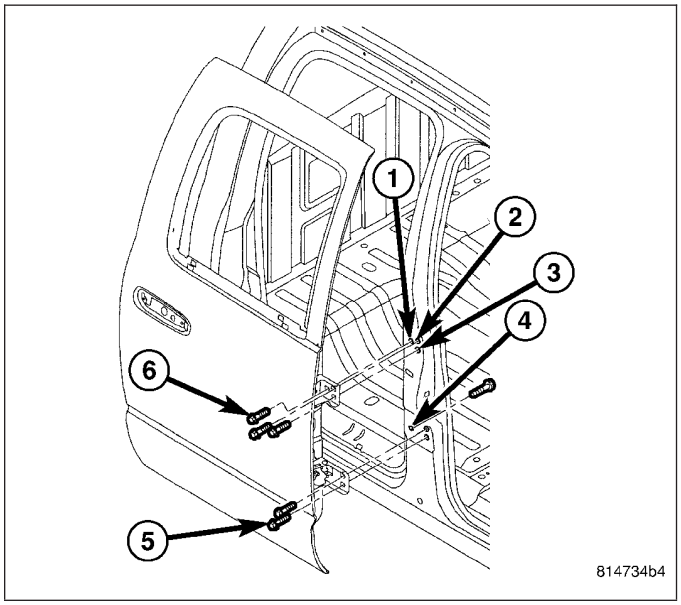

4. If necessary, loosen the hinge to door fasteners. (Refer to 23 - BODY/DOORS - REAR/DOOR - REMOVAL)
5. Adjust the door to the correct position. (Refer to 23 - BODY/BODY STRUCTURE/GAP AND FLUSH - SPECIFICATIONS)

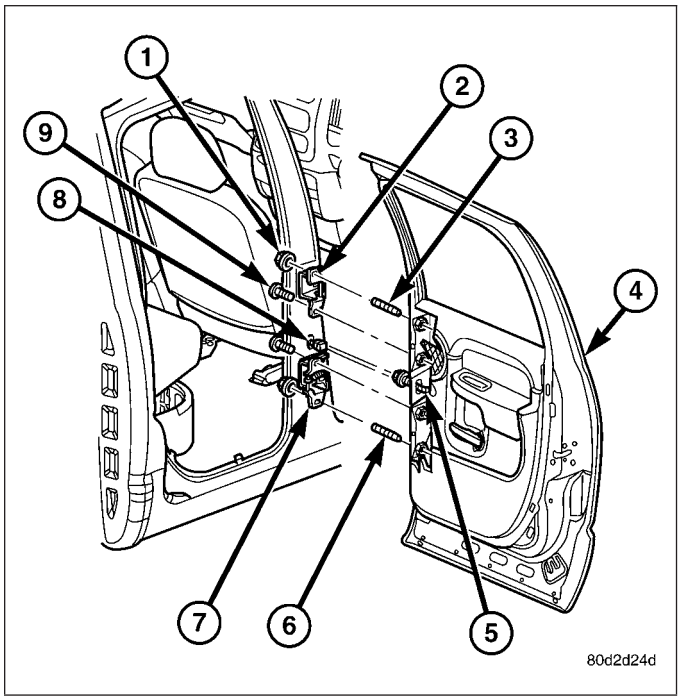

6. If necessary, tighten the hinge to pillar bolts.
   a. Tighten the upper hinge bolt (2) to 28 N·m (21 ft. lbs.).
   b. Tighten the upper hinge bolt (1) to 28 N·m (21 ft. lbs.).
   c. Tighten the upper hinge bolt (3) to 28 N·m (21 ft. lbs.).
   d. Tighten the lower hinge bolt (4) to 28 N·m (21 ft. lbs.).
   e. Tighten the remaining hinge pillar fasteners to 28 N·m (21 ft. lbs.). (Refer to 23 - BODY/DOORS - REAR/HINGE - INSTALLATION)

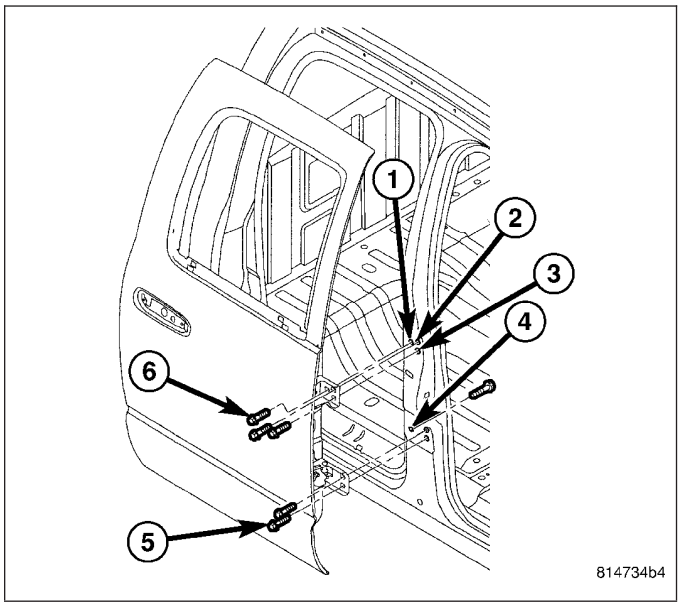

7. Tighten the door to hinge fasteners and (9) to 28 N·m (21 ft. lbs.). (Refer to 23 - BODY/DOORS - REAR/HINGE - INSTALLATION)

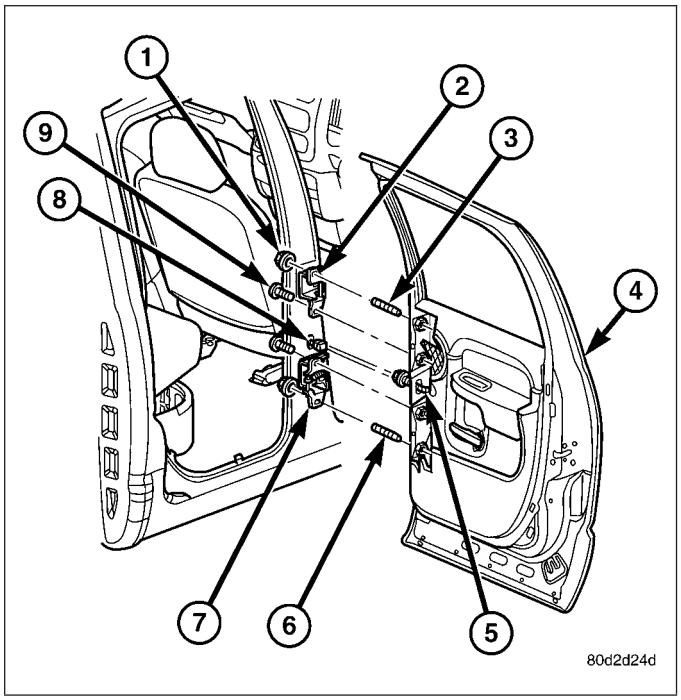

8. Install the latch striker. (Refer to 23 - BODY/DOORS - REAR/LATCH STRIKER - INSTALLATION)

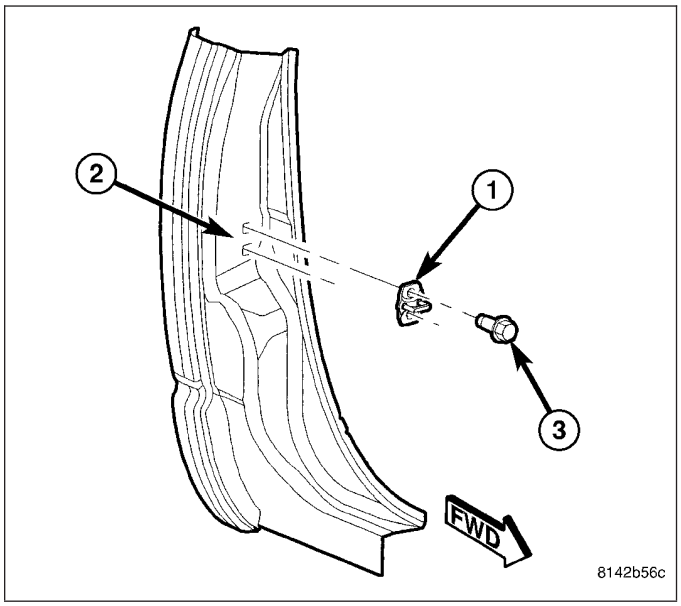

IN/OUT

NOTE: In/out door adjustment is done by loosening the hinge to door fasteners one hinge at a time and moving the door to the correct position.

NOTE: When adjustment of the door requires the loosening of the door to hinge fasteners, it will be necessary to separate the epoxy bonded washers with a chisel or other suitable tool.

1. Support the door with a suitable lifting device.
2. Remove the latch striker. (Refer to 23 - BODY/DOORS - REAR/LATCH STRIKER - REMOVAL)

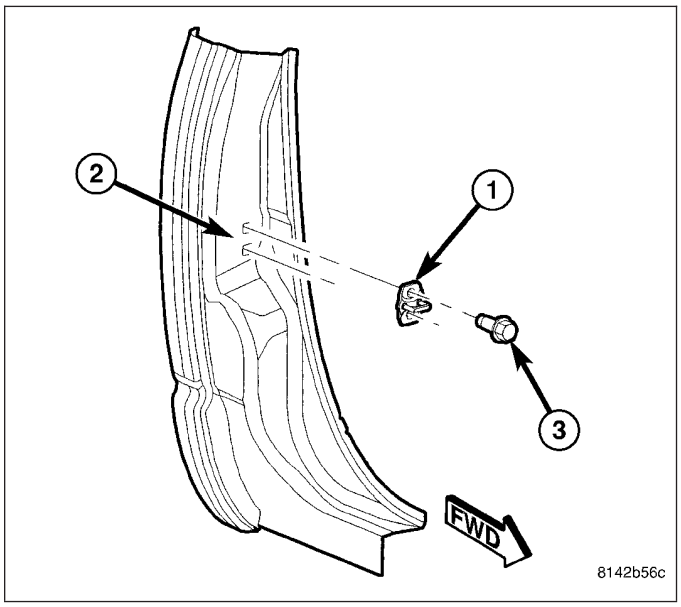

3. Loosen the hinge to door fasteners (1) and (9). (Refer to 23 - BODY/DOORS - REAR/DOOR - REMOVAL)
4. Adjust the front of the door to the correct position. (Refer to 23 - BODY/BODY STRUCTURE/GAP AND FLUSH - SPECIFICATIONS)
5. Tighten the door to hinges fasteners to 28 N·m (21 ft. lbs.).

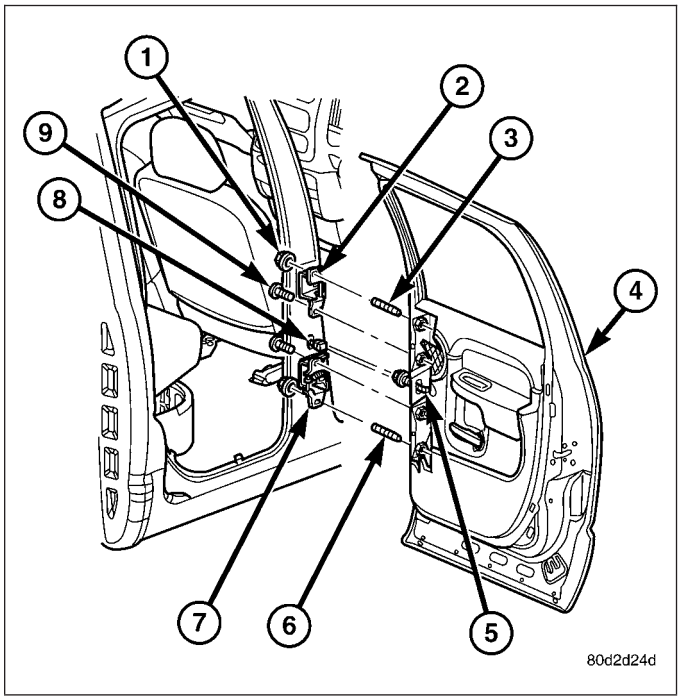

6. Install the latch striker. (Refer to 23 - BODY/DOORS - REAR/LATCH STRIKER - INSTALLATION)

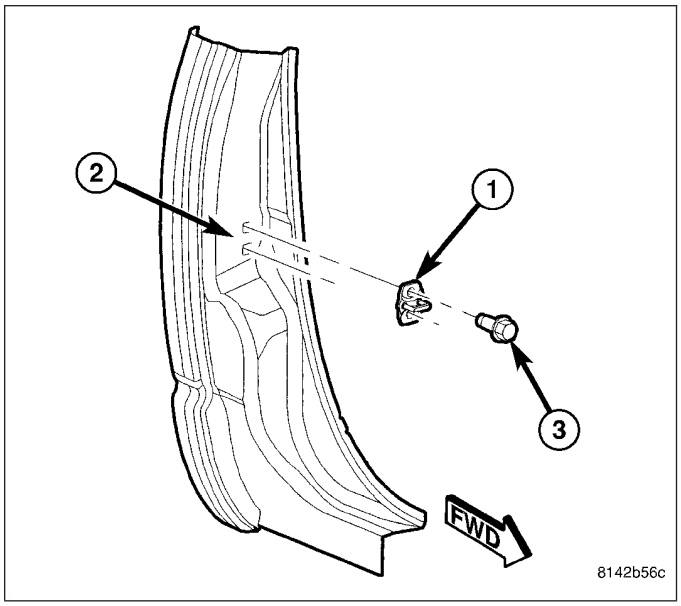

DOOR GLASS

REMOVAL

1. Remove the inner belt molding (Refer to 23 - BODY/WEATHERSTRIP/SEALS/REAR DOOR INNER BELT MOLDING - REMOVAL).
2. Remove the waterdam (Refer to 23 - BODY/DOORS - REAR/WATERDAM - REMOVAL).
3. Install the manual window crank or reconnect the electric window switch to the door wire harness (depending on application) and raise the door glass to the position shown.
4. Remove the two nuts (1) that secure the door glass (2) to the window regulator (3) through the speaker opening (4) and the sight window (5) and disengage the door glass from the regulator.

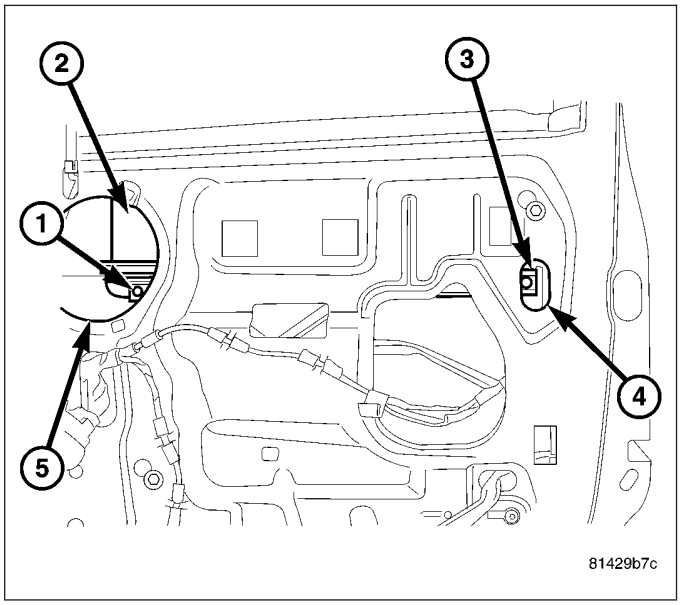

5. Remove the two bolts (1) that secure the front glass run channel (2) to the door and remove the run channel through the door panel opening.
6. Disengage the door glass from the window regulator and lower the glass into the door.
7. Carefully rotate the door glass within the door and remove the glass from the window opening.

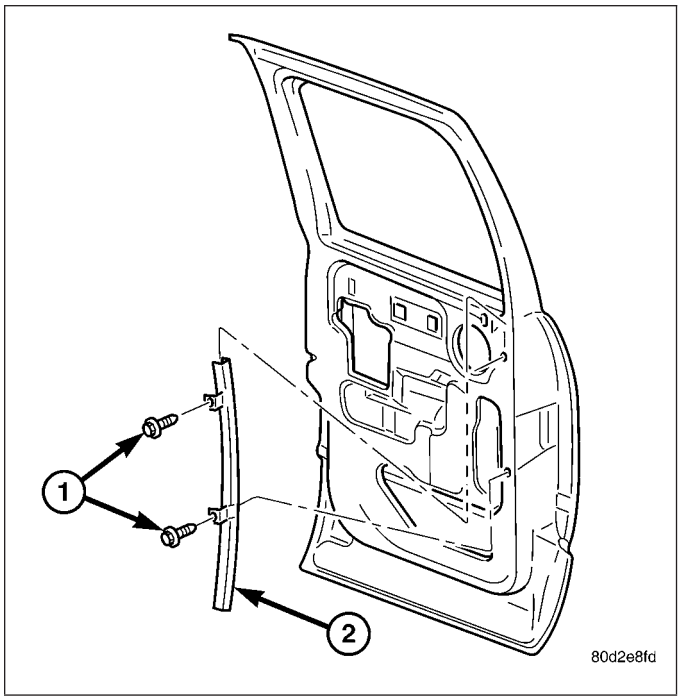

INSTALLATION

1. Carefully lower the door glass into the door through the window opening.
2. Rotate the door glass into position and engage it to the window regulator.
3. Position the front glass run channel (1) into the door through the door panel opening.
4. Install the two bolts (1) that secure the front glass run channel to the door. Tighten the bolts to 10 N·m (89 in. lbs.).

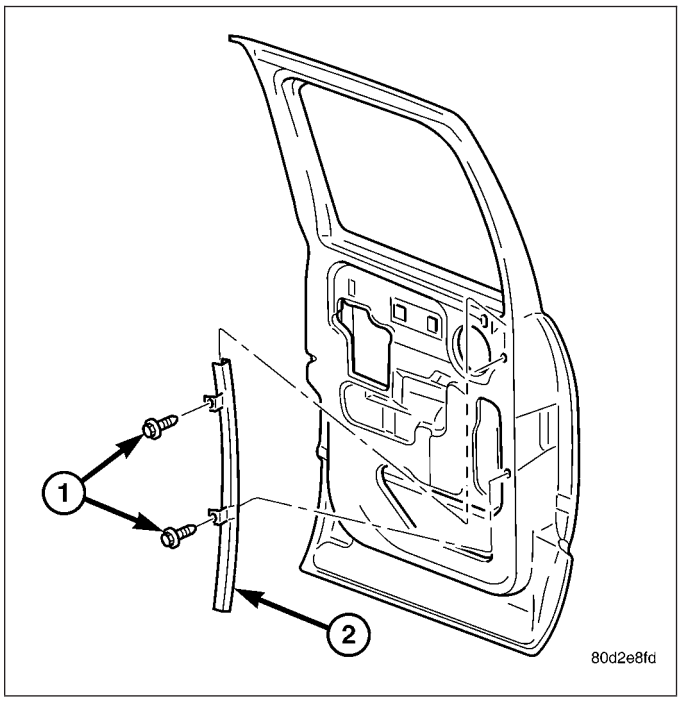

5. Install the two nuts (1) that secure the door glass (2) to the window regulator (3) through the sight window (4) and the speaker opening (5). Tighten the nuts to 10 N·m (89 in. lbs.).
6. Lower the door glass into the door and remove the manual window crank or disconnect the electric window switch from the door wire harness (depending on application).
7. Install the waterdam (Refer to 23 - BODY/DOORS - REAR/WATERDAM - INSTALLATION).
8. Install the inner belt molding (Refer to 23 - BODY/ WEATHERSTRIP/SEALS/REAR DOOR INNER BELT MOLDING - INSTALLATION).

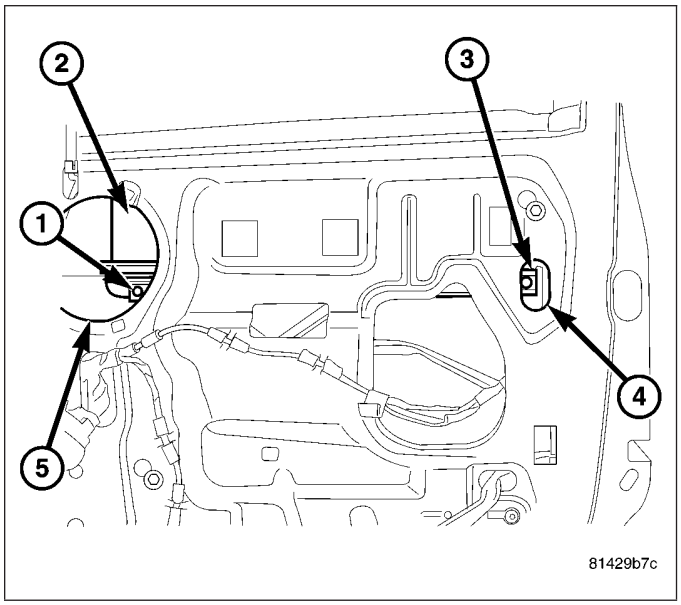

EXTERIOR HANDLE

REMOVAL

1. Remove the front glass run channel (Refer to 23 - BODY/DOORS - REAR/GLASS RUN CHANNEL - REMOVAL).
2. Disconnect the actuator rod (1) from the exterior door handle (2).
3. Remove the two nuts (3) that secure the exterior door handle to the door and remove the handle.

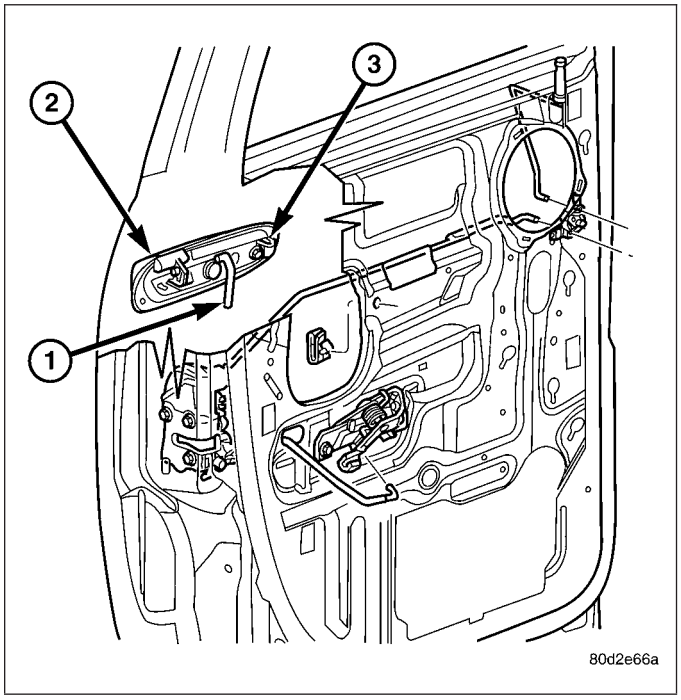

INSTALLATION

1. Position the exterior handle (2) into the door.
2. Install the two nuts (3) that secure the exterior handle to the door. Tighten the nuts to 10 N·m (89 in. lbs.).
3. Connect the actuator rod (1) to the exterior handle.
4. Install the front glass run channel (Refer to 23 - BODY/DOORS - REAR/GLASS RUN CHANNEL - INSTALLATION).

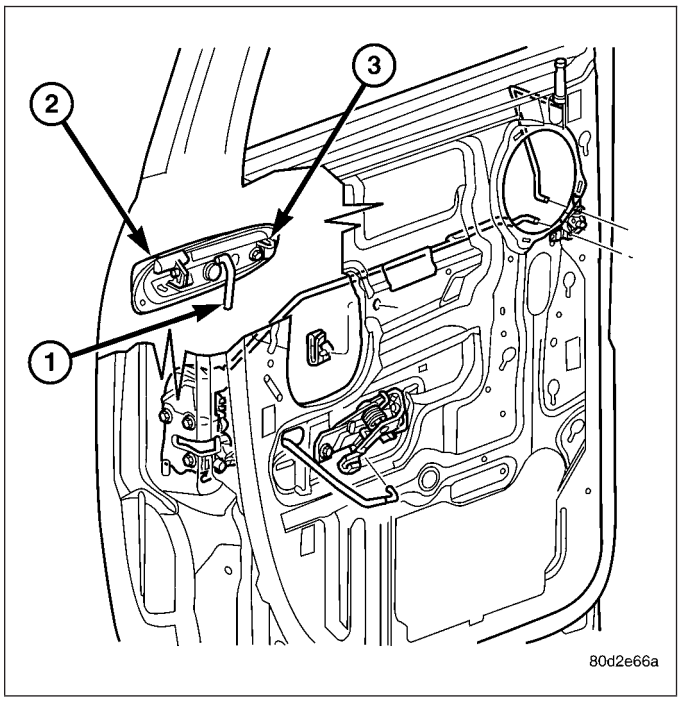

GLASS RUN CHANNEL

REMOVAL

FRONT

1. Raise the window glass to the full up position and remove the window regulator (Refer to 23 - BODY/DOORS - REAR/WINDOW REGULATOR - REMOVAL).
2. Remove the two bolts (1) that secure the front glass run channel (2) to the door and remove the run channel through the door panel opening.
3. If required, remove the weatherstrip from the front glass run channel.

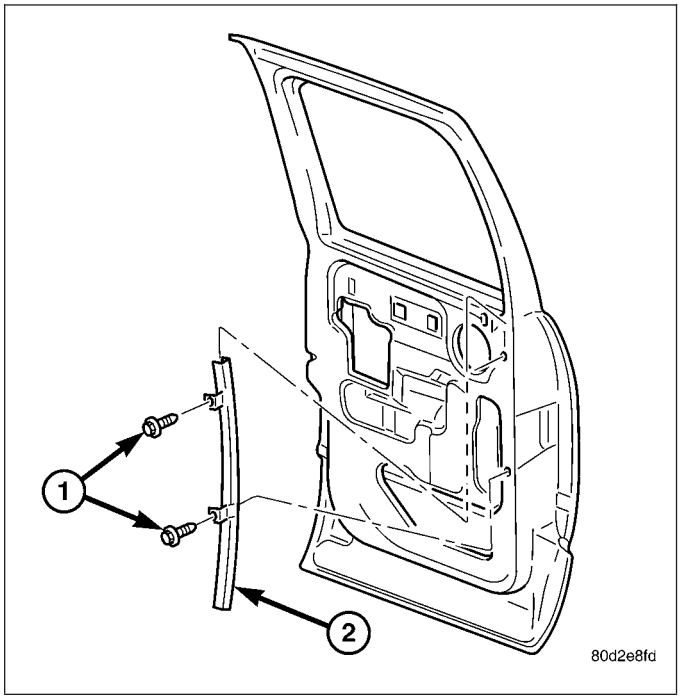

REAR

1. Raise the window glass to the full up position and remove the window regulator (Refer to 23 - BODY/ DOORS - REAR/WINDOW REGULATOR - REMOVAL).
2. Remove the two bolts (2) that secure the rear glass run channel (1) to the door and remove the run channel through the door panel opening.
3. If required, remove the weatherstrip from the rear glass run channel.

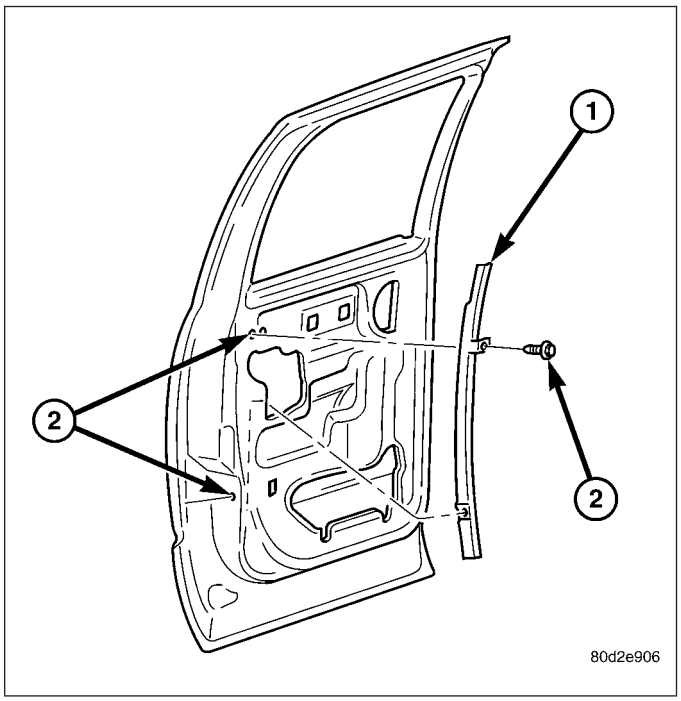

INSTALLATION

FRONT

1. If removed, install the weatherstrip onto the front glass run channel (2).
2. Position the front glass run channel into the door through the door panel opening.
3. Install the two bolts (1) that secure the front glass run channel to the door. Tighten the bolts to 10 N·m (89 in. lbs.).
4. Install the window regulator and verify correct window operation (Refer to 23 - BODY/DOORS - REAR/WINDOW REGULATOR - INSTALLATION).

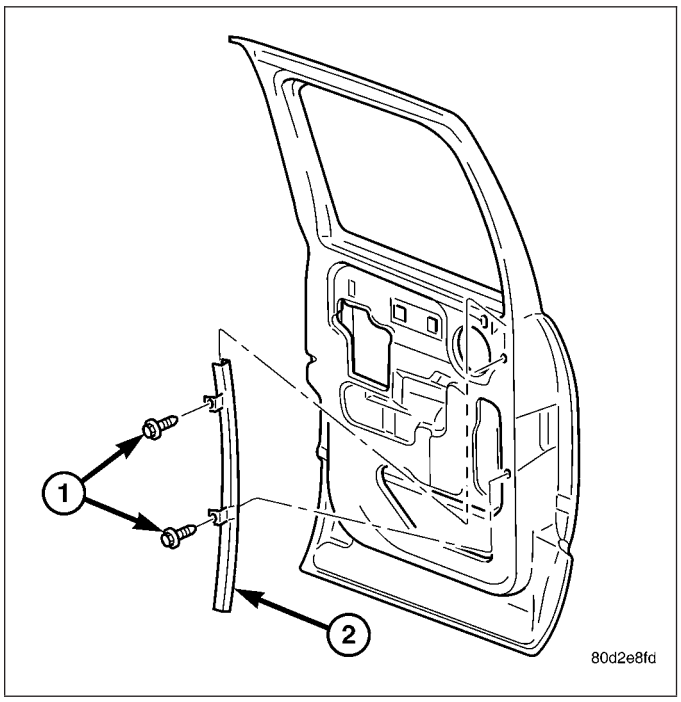

REAR

1. If removed, install the weatherstrip onto the rear glass run channel (1).
2. Position the rear glass run channel into the door through the door panel opening.
3. Install the two bolts (2) that secure the rear glass run channel to the door. Tighten the bolts to 10 N·m (89 in. lbs.).
4. Install the window regulator and verify correct window operation (Refer to 23 - BODY/DOORS - REAR/WINDOW REGULATOR - INSTALLATION).

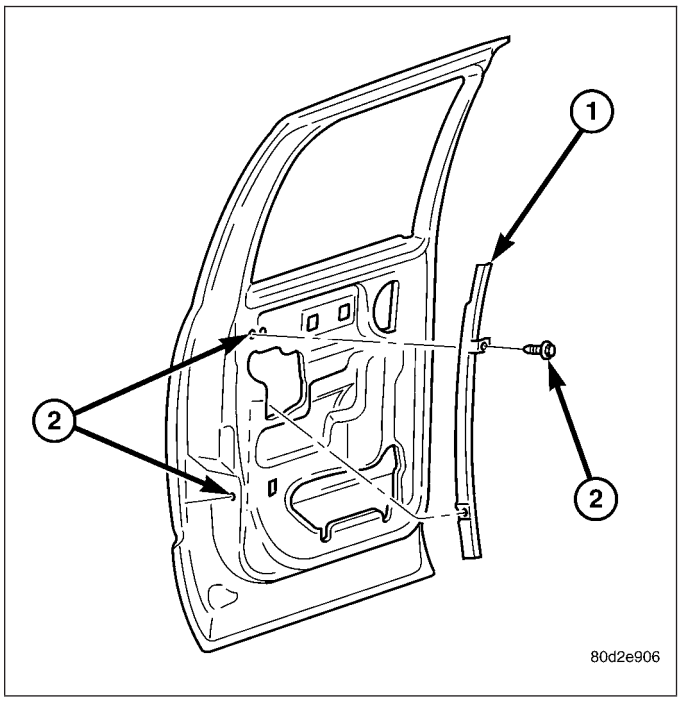

HINGE

REMOVAL

NOTE: It is not necessary to remove the door to replace the hinges if they are replaced one at a time.

NOTE: The epoxy coated washers should not be removed from the hinge. If the washers are removed the door may have to be re-adjusted.

1. Open the front door

UPPER HINGE

1. Using a grease pencil or equivalent, mark the position of the hinge (2) on the door and b-pillar.
2. Remove the nut (1) and bolt (9) attaching the hinge (2) to the door.

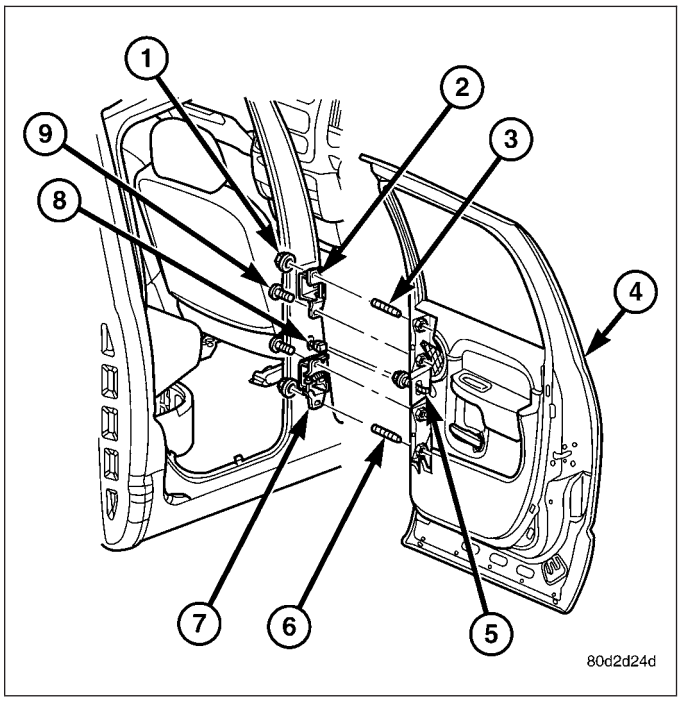

3. Remove the three bolts (6) attaching the hinge to the b-pillar and remove the hinge.

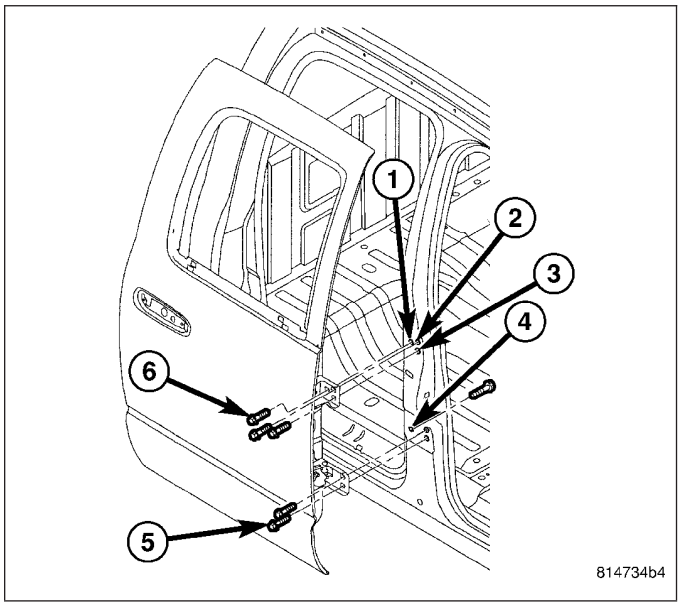

LOWER HINGE

1. Using a grease pencil or equivalent, mark the position of the hinge on the door and b-pillar.
2. Remove the lower b-pillar trim. (Refer to 23 - BODY/INTERIOR/B-PILLAR LOWER TRIM - REMOVAL)
3. Remove the nut (1) and bolt (9) attaching the hinge to the door.

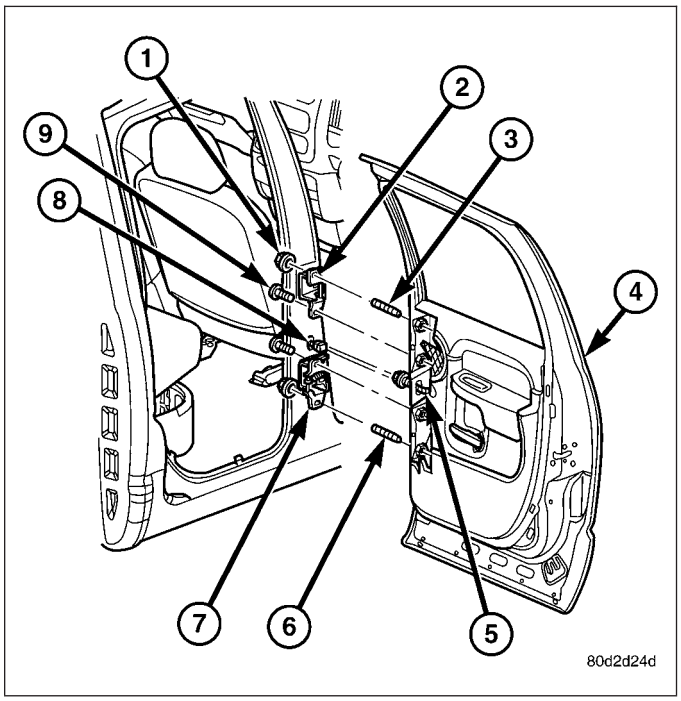

4. Remove the two bolts (5) attaching the hinge to the b-pillar.
5. From the inside of the vehicle remove the remaining bolt (4) attaching the hinge to the b-pillar and remove the hinge.

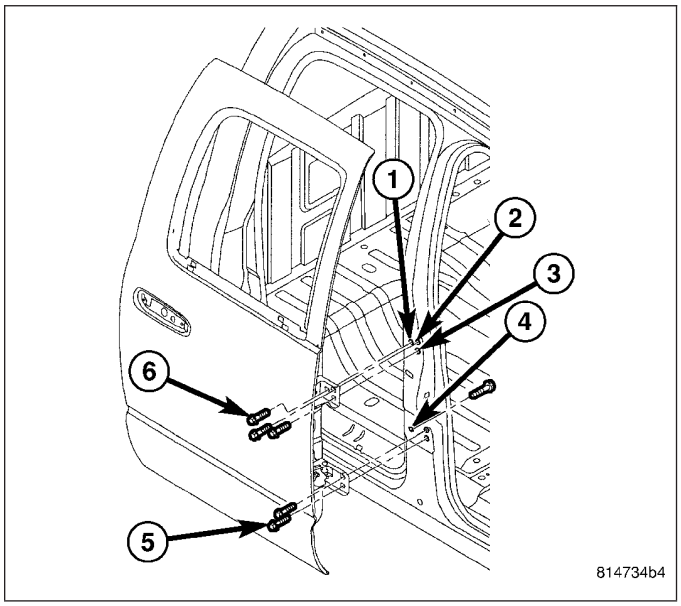

INSTALLATION

UPPER HINGE

1. Install the hinge to door washers, if there were removed previously, nut (1) and bolt (9) and tighten to 28 N·m (21 ft. lbs.).

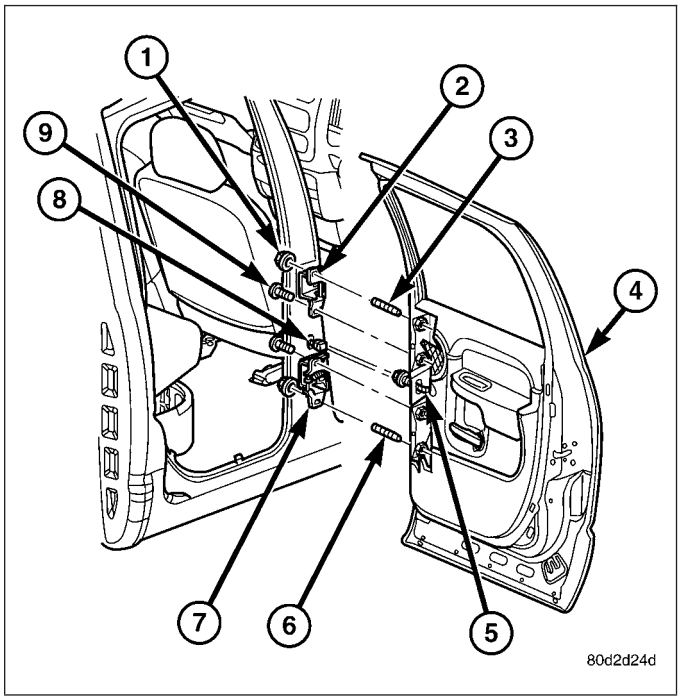

2. Tighten the upper hinge bolt (2) to 28 N·m (21 ft. lbs.).
3. Tighten the upper hinge bolt (1) to 28 N·m (21 ft. lbs.).
4. Tighten the upper hinge bolt (3) to 28 N·m (21 ft. lbs.).
5. Adjust the door if needed. (Refer to 23 - BODY/ DOORS - REAR/DOOR - ADJUSTMENTS)

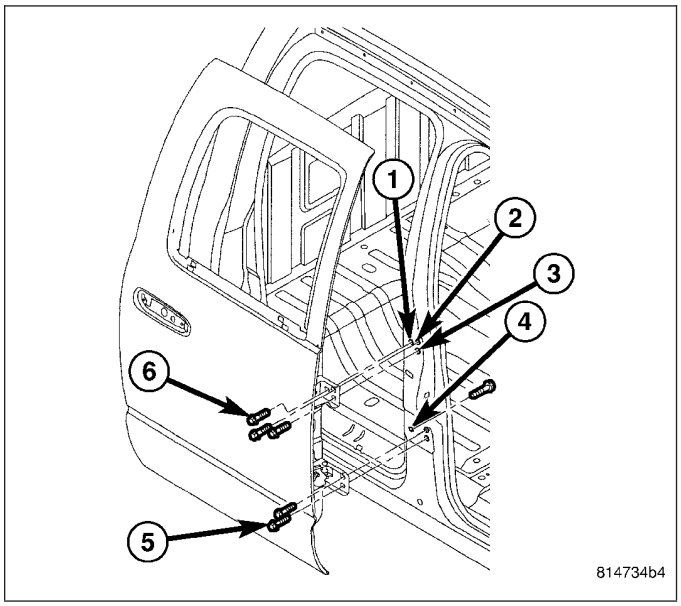

LOWER HINGE

1. Install the hinge and install the b-pillar bolts.
2. Tighten the upper hinge bolt (2) to 28 N·m (21 ft. lbs.).
3. Tighten the upper hinge bolt (1) to 28 N·m (21 ft. lbs.).
4. Tighten the upper hinge bolt (3) to 28 N·m (21 ft. lbs.).

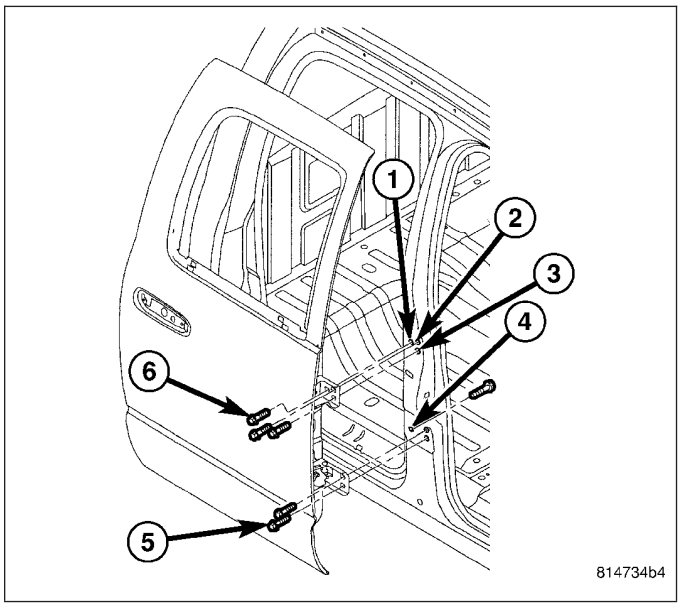

5. Install the hinge to door washers, if there were removed previously, nut and bolt and tighten to 28 N·m (21 ft. lbs.).
6. Adjust the door if needed. (Refer to 23 - BODY/DOORS - REAR/DOOR - ADJUSTMENTS)
7. Install the lower b-pillar trim. (Refer to 23 - BODY/INTERIOR/B-PILLAR LOWER TRIM - INSTALLATION)

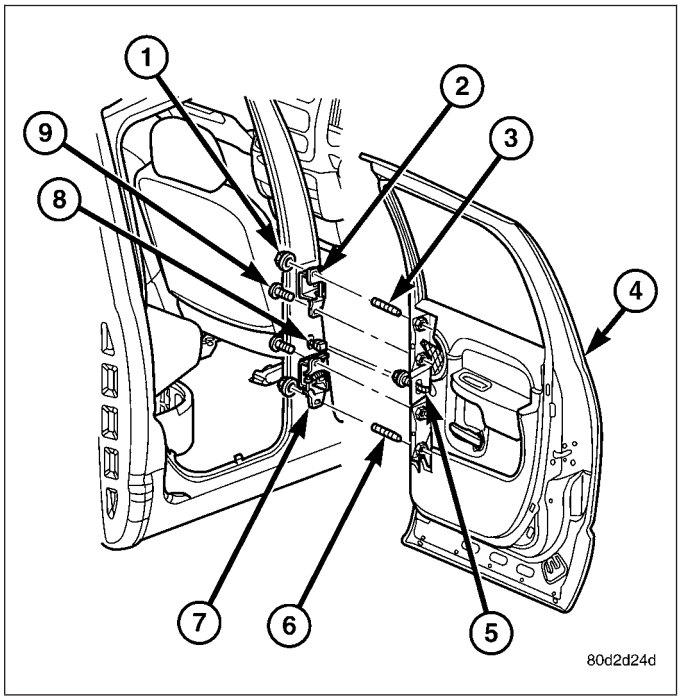

INTERIOR HANDLE ACTUATOR

REMOVAL

1. Remove the door trim panel (Refer to 23 - BODY/DOORS - REAR/TRIM PANEL - REMOVAL).
2. Position the waterdam out of the way and disconnect the actuator rod (2) from interior door handle actuator (3).
3. Remove the two bolts (1) that secure the interior door handle actuator to the door and remove the actuator.

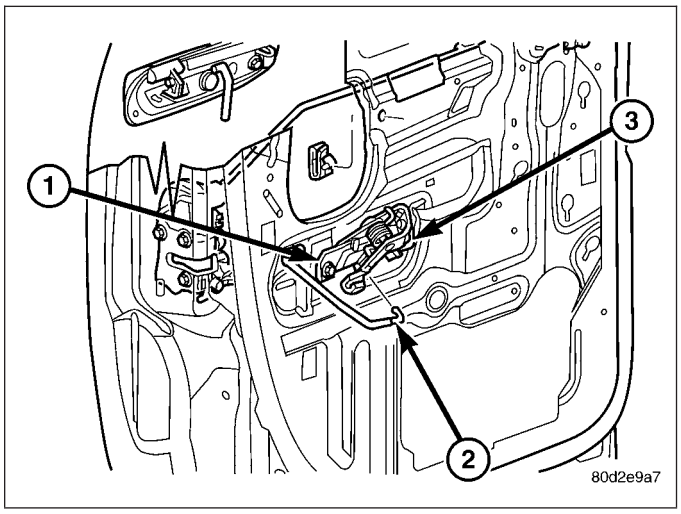

INSTALLATION

1. Position the interior door handle actuator (3) onto the door.
2. Install the two bolts (1) that secure the interior door handle actuator to the door. Tighten the bolts to 10 N·m (89 in. lbs.).
3. Connect the actuator rod (2) to the interior door handle actuator.
4. Reposition the waterdam and install the door trim panel (Refer to 23 - BODY/DOORS - REAR/TRIM PANEL - INSTALLATION).

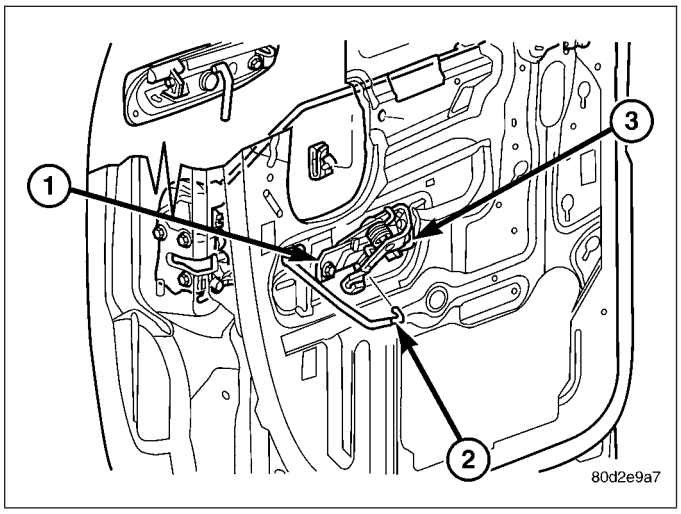

LATCH

REMOVAL

1. Raise the window to the full up position and remove the door trim panel (Refer to 23 - BODY/ DOORS - REAR/TRIM PANEL - REMOVAL).
2. Position the waterdam out of the way and disconnect the actuator rod (1) from the interior door handle actuator (2) and the door latch (5) and remove the rod.
3. Disconnect the two actuator rods (3 and 4) from the door latch.

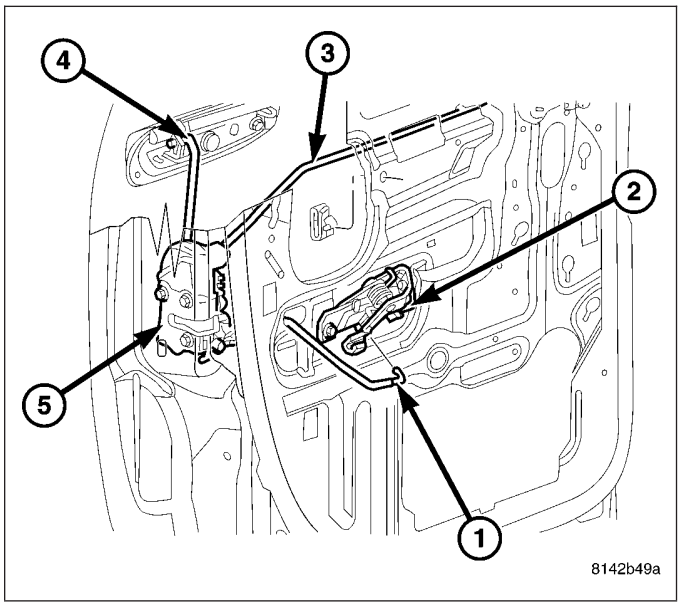

4. Disconnect the door wire harness connector (2) from the door latch (3).
5. Remove the three bolts (4) that secure the door latch to the door (1) and remove the latch.

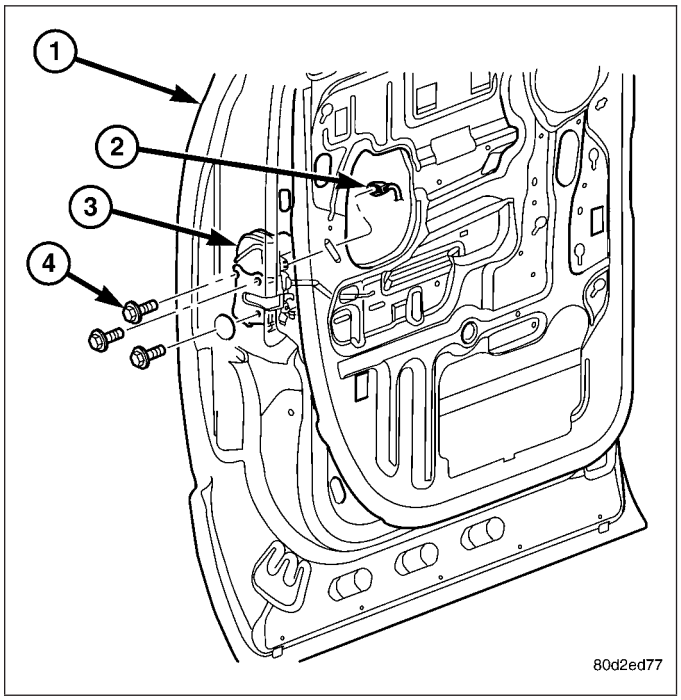

INSTALLATION

1. Position the door latch (3) into the door (1).
2. Install the three bolts (4) that secure the door latch to the door. Tighten the bolts to 10 N·m (89 in. lbs.).
3. Connect the door wire harness connector (2) to the door latch.

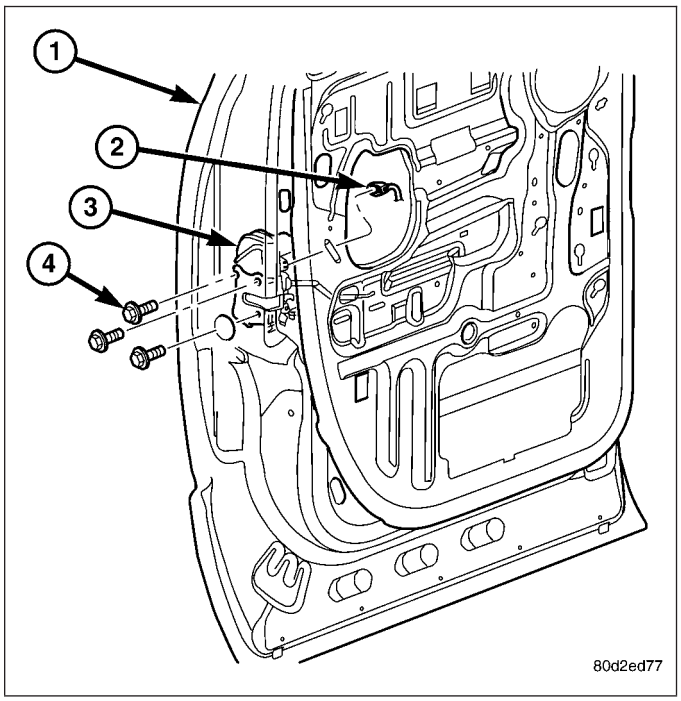

4. Connect the two actuator rods (3 and 4) to the door latch (5)
5. Connect the actuator rod (1) to the door latch and the interior door handle actuator (2).
6. Reposition the waterdam to the door and install the door trim panel (Refer to 23 - BODY/DOORS - REAR/TRIM PANEL - INSTALLATION).
7. If necessary, adjust the latch (Refer to 23 - BODY/DOORS - REAR/LATCH - ADJUSTMENTS).

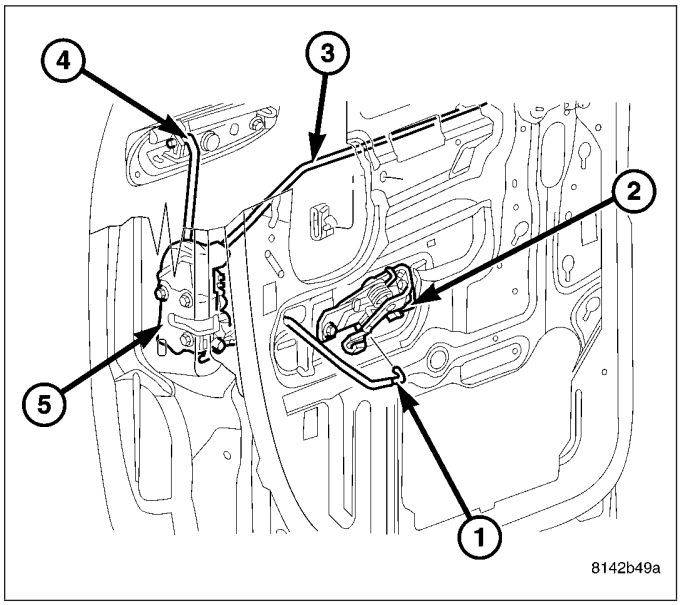

ADJUSTMENTS

1. Locate the access hole in the door to adjust the door latch (1) and remove the mylar tape (2).
2. Loosen the adjustment screw (3).
3. Operate the door handles several times to reduce any possible linkage binding and tighten the adjustment screw to 3 N·m (30 in. lbs.).
4. Operate the door handles again to verify proper operation and reinstall the mylar tape.

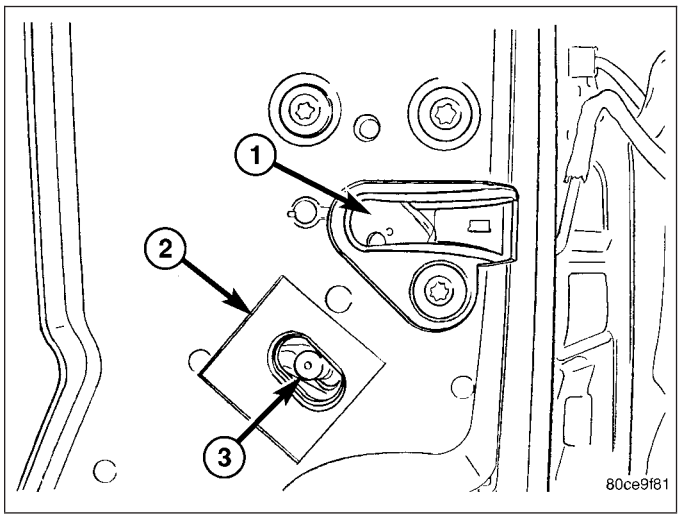

LATCH STRIKER

REMOVAL

1. Using a grease pencil or equivalent, mark the location of the door latch striker (1) on the C-pillar (2).
2. Remove the two bolts (3) that secure the door latch striker to the C-pillar and remove the striker.

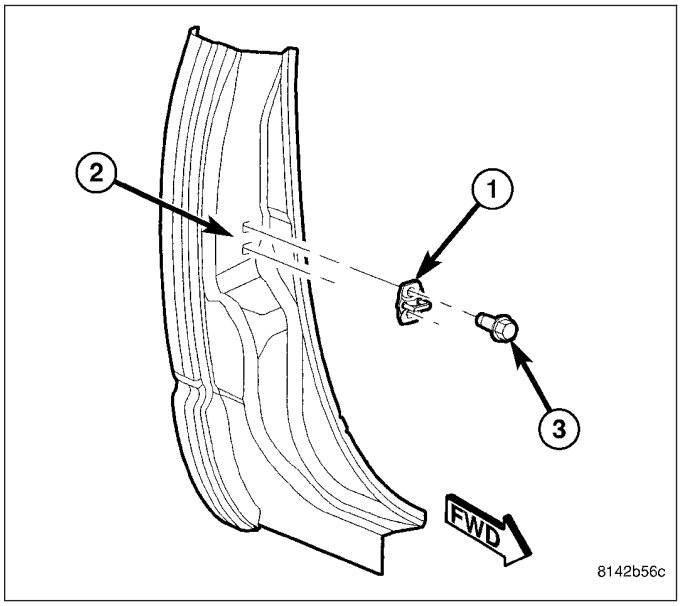

INSTALLATION

1. Position the door latch striker (1) onto the C-pillar (2) and loosely install the two bolts (3).
2. Align the door latch striker to the C-pillar using the reference marks made during the removal procedure and tighten the bolts to 28 N·m (21 ft. lbs.).
3. If necessary, adjust the door latch striker (Refer to 23 - BODY/DOORS - REAR/LATCH STRIKER - ADJUSTMENTS).

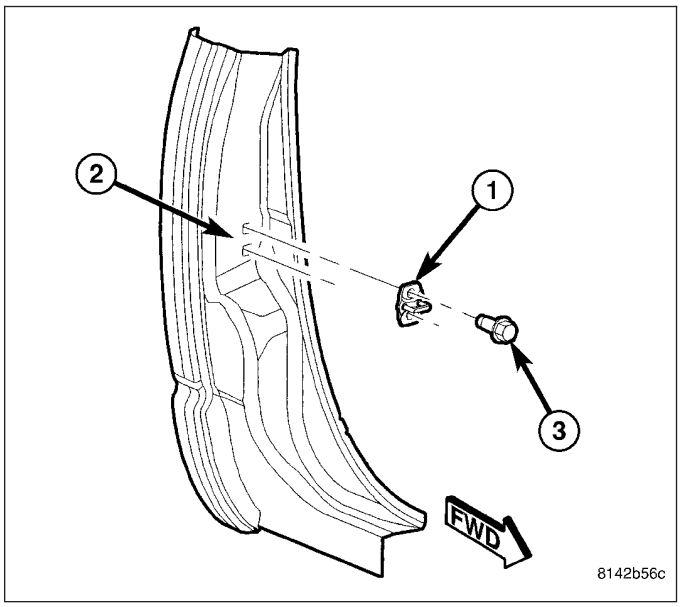

ADJUSTMENTS

1. Using a grease pencil or equivalent, mark the location of the door latch striker (1) on the C-pillar (2) to aid in adjustment.
2. Loosen the two bolts (3) that secure the door latch striker to the C-pillar.
3. To adjust the rear gap and flush measurement, change the position of the door latch striker and then tighten the two bolts to 28 N·m (21 ft. lbs.) (Refer to 23 - BODY/BODY STRUCTURE/GAP AND FLUSH - SPECIFICATIONS).
4. Verify correct door and latch position.

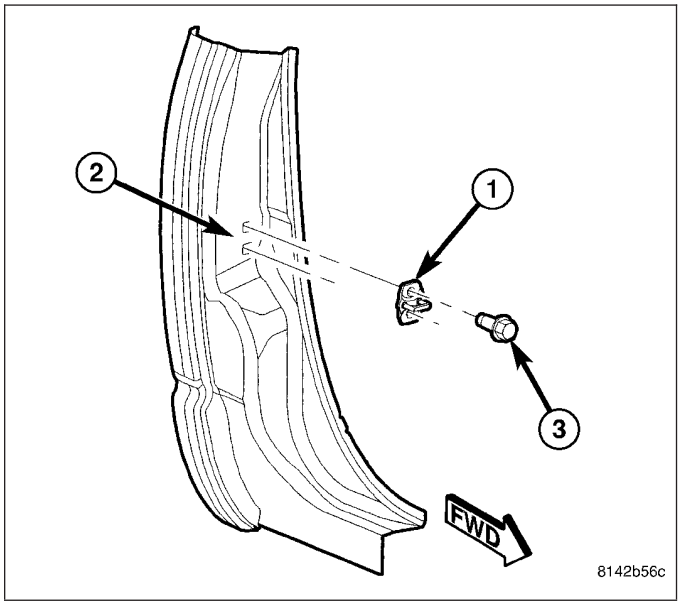

TRIM PANEL

REMOVAL

1. Remove the screw (3) that secures the interior door handle (2) to the interior door handle actuator (1).
2. Remove the interior door handle from the interior door handle actuator.

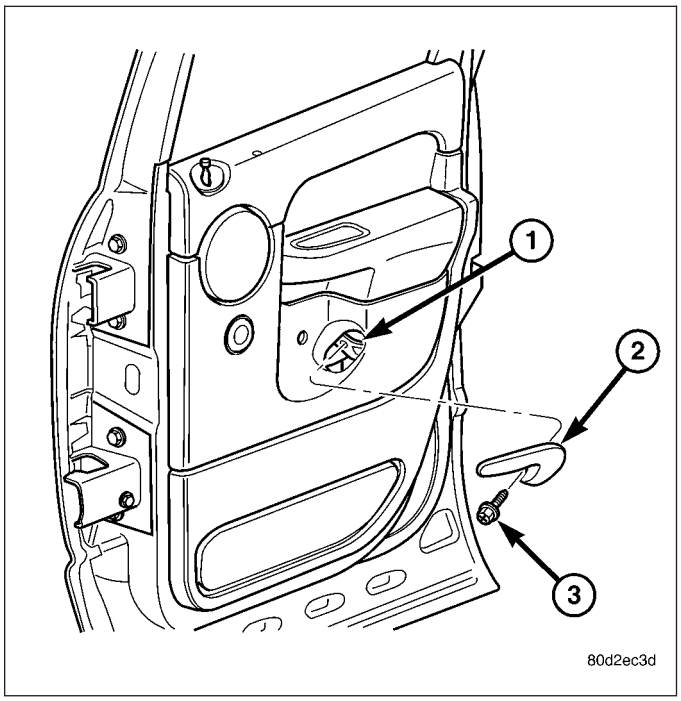

3. If equipped, remove the manual window crank (1) using a window crank removal tool (2).

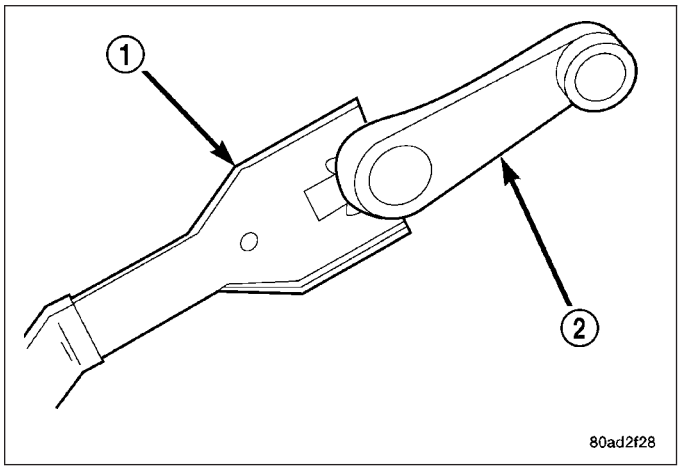

4. Remove the screw (4) that secures the door trim panel (5) to the screw insert located in the center of the door (1).

CAUTION: The door trim panel is attached to the door by molded plastic retaining clips that are integral to the door trim panel. Do not pull the door trim panel directly off of the door or damage to the trim panel and/or the power switch assembly will occur.

5. Lift the door trim panel straight upward to disconnect the molded plastic retaining clips (3) from the door.
6. If equipped, disconnect the door wire harness (2) from the power door switch assembly and remove the door trim panel.

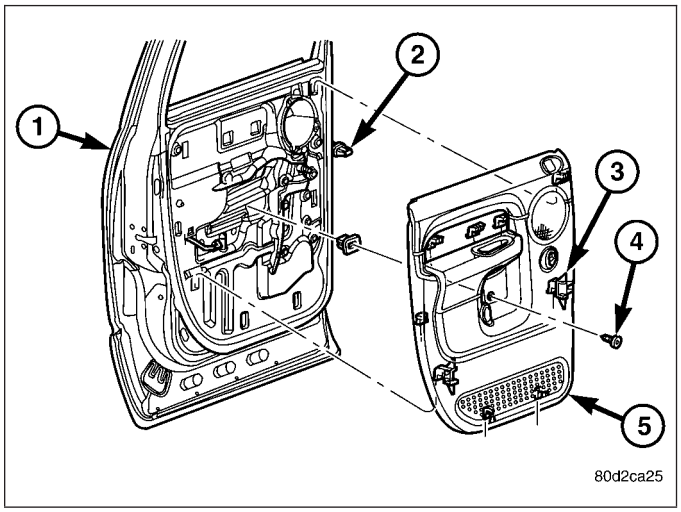

INSTALLATION

1. If equipped, connect the door wire harness (2) to the power door switch assembly.

CAUTION: The door trim panel is attached to the door by molded plastic retaining clips that are integral to the door trim panel. Do not force the door trim panel onto the door or damage to the trim panel and/or the power switch assembly will occur.

2. Position the door trim panel (5) and align the molded plastic retaining clips (3) to the door (1).
3. Push the door trim panel straight downward until all of the retaining clips are fully engaged to the door.
4. Install the screw (4) that secures the door trim panel to the screw insert located in the center of the door.
5. if equipped, install the manual window crank.

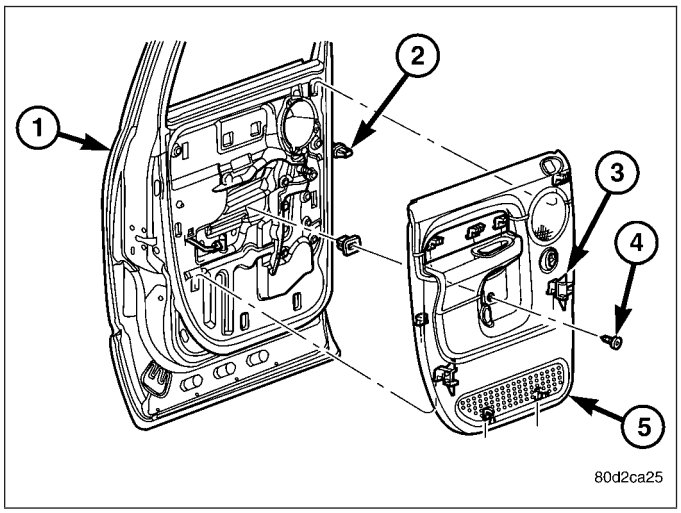

WATERDAM

REMOVAL

1. Remove the interior door handle actuator (Refer to 23 - BODY/DOORS - REAR/INTERIOR HANDLE ACTUATOR - REMOVAL).
2. Remove the speaker (Refer to 8 - ELECTRICAL/ AUDIO/SPEAKER - REMOVAL).

CAUTION: Do not allow the waterdam adhesive to become contaminated with dirt or other foreign substances. If the waterdam becomes contaminated or damaged, replace it.

3. Carefully remove the waterdam (1) from around the perimeter of the rear door (2).
4. Separate the waterdam from the interior handle actuator rod and the door wire harness (if equipped) and remove the waterdam.

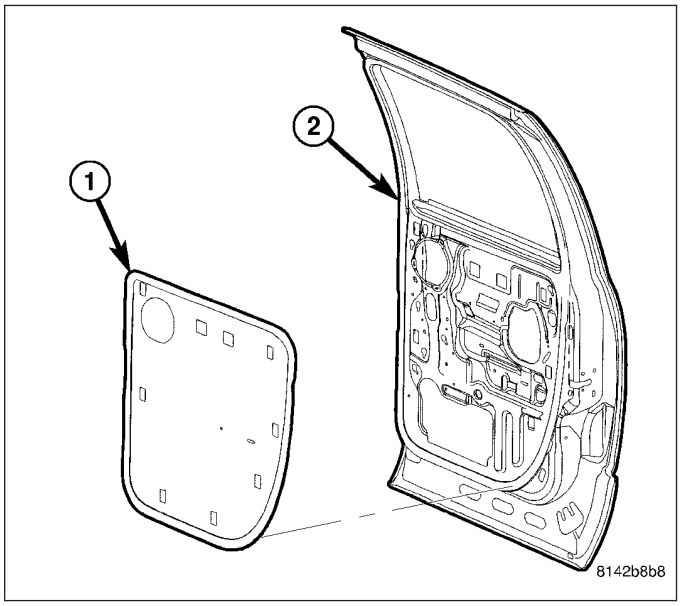

INSTALLATION

CAUTION: Do not allow the waterdam or adhesive to become contaminated with dirt or other foreign substances. If the waterdam becomes contaminated or damaged, replace it.

NOTE: Be sure that the waterdam is fully sealed around the perimeter of the door.

1. Position the interior handle actuator rod and the wire harness (if equipped) through the holes in the waterdam (1) and install the waterdam to the door (2).
2. Install the speaker (Refer to 8 - ELECTRICAL/AUDIO/SPEAKER - INSTALLATION)
3. Install the interior door handle actuator (Refer to 23 - BODY/DOORS - REAR/INSIDE HANDLE ACTUATOR - INSTALLATION).

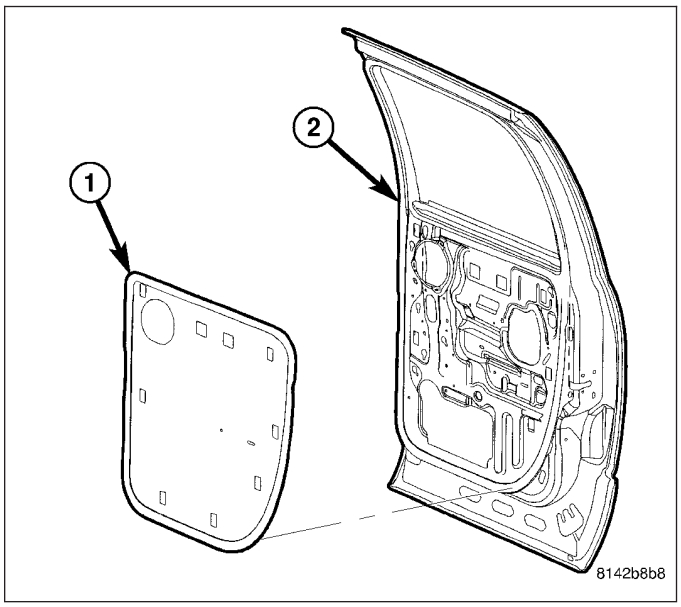

WINDOW REGULATOR - POWER

REMOVAL

1. Remove the inner belt molding (Refer to 23 - BODY/WEATHERSTRIP/SEALS/REAR DOOR INNER BELT MOLDING - REMOVAL).
2. Remove the waterdam (Refer to 23 - BODY/DOORS - REAR/WATERDAM - REMOVAL).
3. Remove the electric window switch from the door trim panel and connect it to the door wire harness (Refer to 8 - ELECTRICAL/POWER WINDOWS/POWER WINDOW SWITCH - REMOVAL).
4. Raise the door glass to the position shown.
5. Remove the two nuts (1) that secure the door glass (2) to the window regulator (3) through the speaker opening (4) and the sight window (5) and disengage the door glass from the regulator.
6. Position the door glass to the full up position and secure the glass using a wooden wedge or an equivalent.

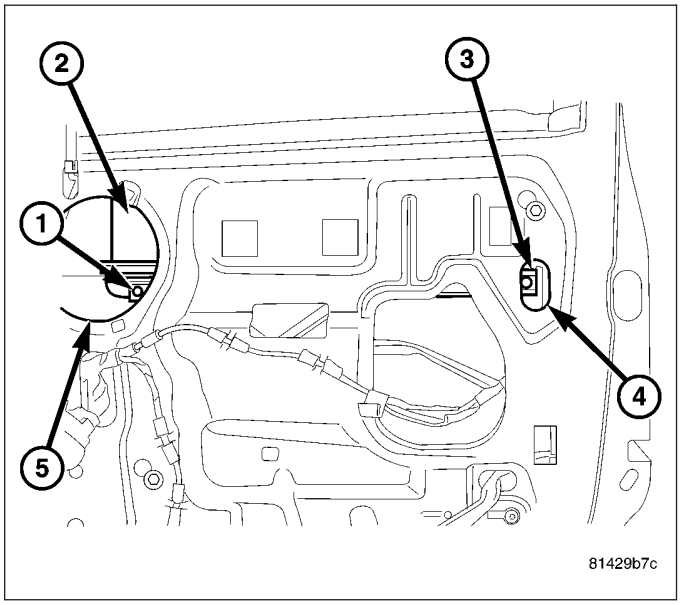

7. Lower the window regulator (2) and remove the two nuts that secure the regulator stabilizer to the door.
8. Remove the lower bolt (1) that secures the window regulator to the door and loosen the other two regulator bolts.
9. Slide the window regulator upward and disengage the two regulator bolts from the door.
10. Remove the window regulator through the opening in the door and disconnect the door wire harness (3).

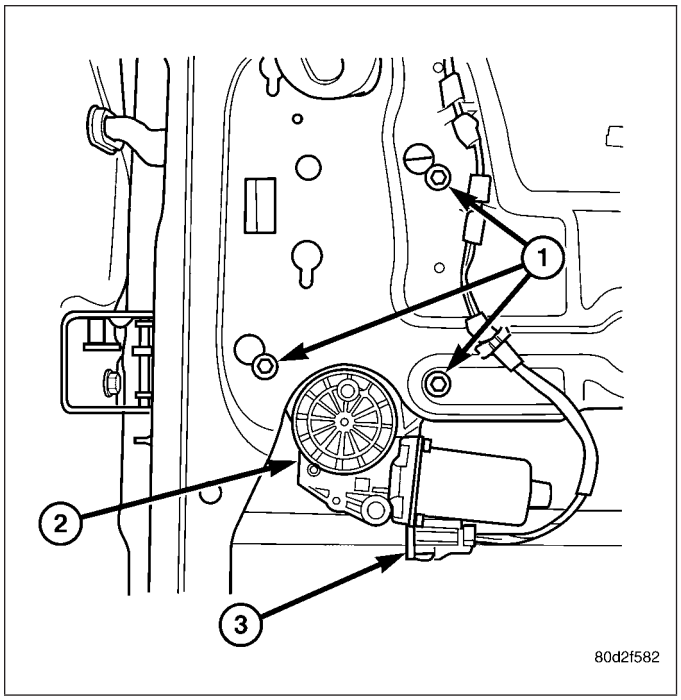

INSTALLATION

1. Connect the door wire harness (3) to the window regulator (2) and install the regulator through the opening in the door.
2. Engage the two upper regulator bolts (1) to the door.
3. Install the lower regulator bolt that secures the window regulator to the door and tighten all three regulator bolts to 10 N·m (89 in. lbs.).
4. Position the regulator stabilizer into the door and install the two nuts. Tighten the nuts to 10 N·m (89 in. lbs.).

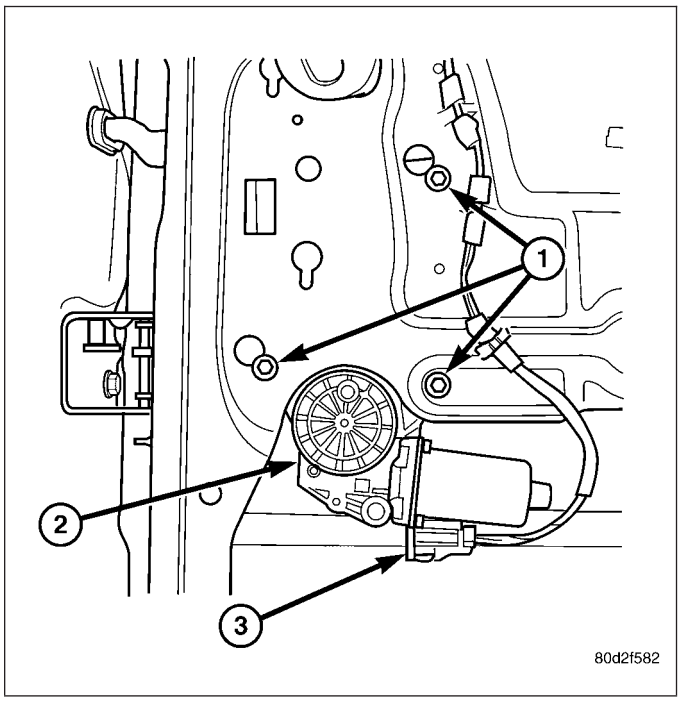

5. Raise the window regulator (3) to the position shown.
6. Support the door glass (2) and remove the wooden wedge or equivalent.
7. Position the door glass to the window regulator and install the two nuts (1) that secure the door glass to the window regulator (3) through the sight window (4) and the speaker opening (5). Tighten the nuts to 10 N·m (89 in. lbs.).
8. Disconnect the electric window switch from the door wire harness and reinstall the switch onto the door trim panel (Refer to 8 - ELECTRICAL/POWER WINDOWS/POWER WINDOW SWITCH - INSTALLATION).
9. Install the waterdam (Refer to 23 - BODY/DOORS - REAR/WATERDAM - INSTALLATION).
10. Install the inner belt molding (Refer to 23 - BODY/WEATHERSTRIP/SEALS/REAR DOOR INNER BELT MOLDING - INSTALLATION).

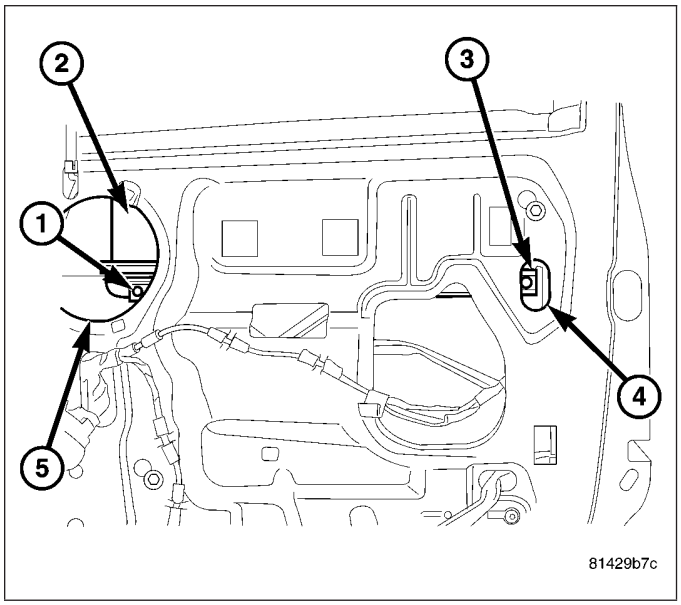

WINDOW REGULATOR - MANUAL

REMOVAL

1. Remove the inner belt molding (Refer to 23 - BODY/WEATHERSTRIP/SEALS/REAR DOOR INNER BELT MOLDING - REMOVAL).
2. Remove the waterdam (Refer to 23 - BODY/DOORS - REAR/WATERDAM - REMOVAL).
3. Reinstall the manual window crank and raise the door glass to the position shown.
4. Remove the two nuts (1) that secure the door glass (2) to the window regulator (3) through the speaker opening (4) and the sight window (5) and disengage the door glass from the regulator.
5. Position the door glass to the full up position and secure the glass using a wooden wedge or an equivalent.

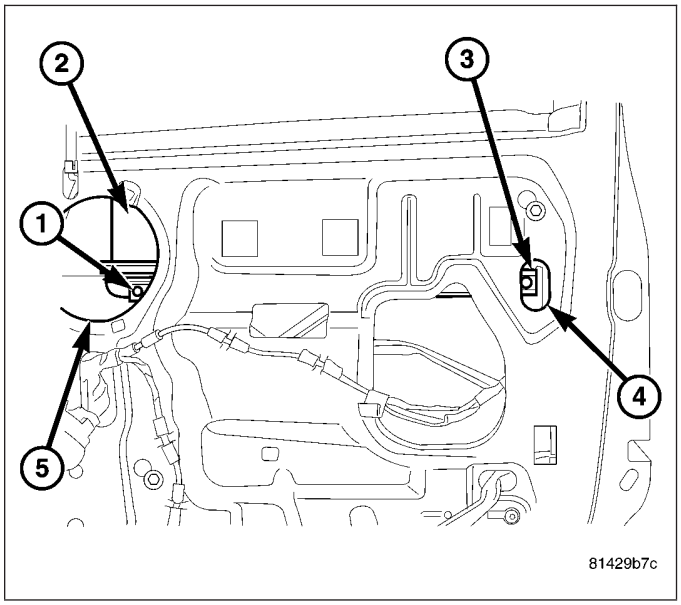

6. Lower the window regulator (5) and remove the two nuts (3) that secure the regulator stabilizer (4) to the door (1).
7. Remove the two bolts (2) that secure the window regulator to the door and loosen the other two regulator bolts (6).
8. Slide the window regulator upward and disengage the two regulator bolts from the door.
9. Remove the window regulator through the opening in the door.

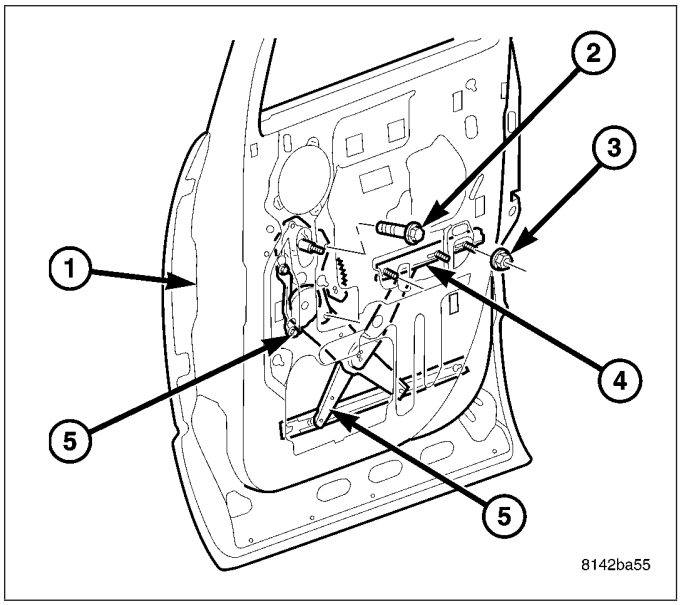

INSTALLATION

1. Install the window regulator (5) through the opening in the door (1).
2. Engage the two regulator bolts (6) to the door.
3. Install the two bolts (2) that secure the window regulator to the door and tighten all four regulator bolts to 10 N·m (89 in. lbs.).
4. Position the regulator stabilizer (4) onto the door and install the two nuts (3). Tighten the nuts to 10 N·m (89 in. lbs.).

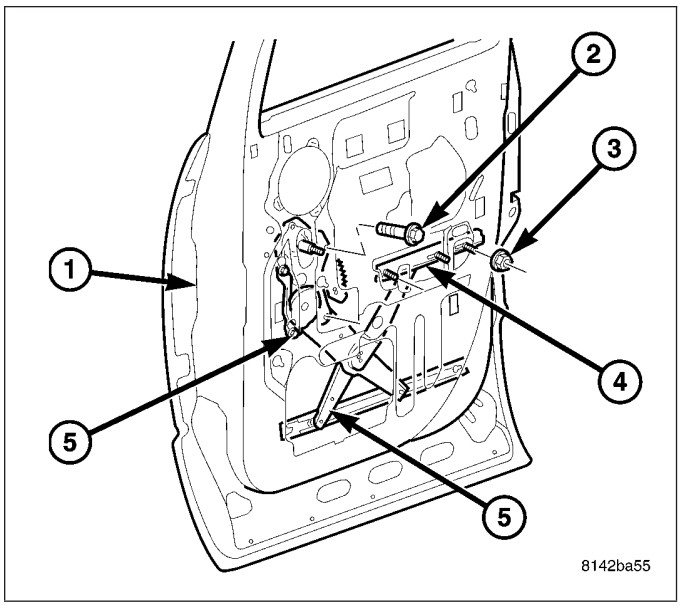

5. Raise the window regulator (3) to the position shown and remove the manual window crank.
6. Support the door glass (2) and remove the wooden wedge or equivalent.
7. Position the door glass to the window regulator and install the two nuts (1) that secure the door glass to the window regulator through the sight window (4) and the speaker opening (5). Tighten the nuts to 10 N·m (89 in. lbs.).
8. Install the waterdam (Refer to 23 - BODY/DOORS - REAR/WATERDAM - INSTALLATION).
9. Install the inner belt molding (Refer to 23 - BODY/WEATHERSTRIP/SEALS/REAR DOOR INNER BELT MOLDING - INSTALLATION).

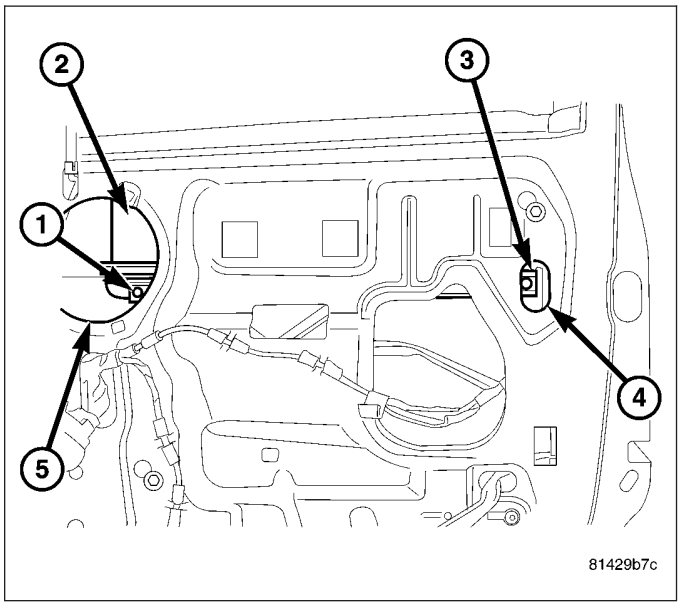

EXTERIOR

TABLE OF CONTENTS

page

BODY ISOLATORS
REMOVAL 80
INSTALLATION 80
BODY SIDE MOLDINGS
REMOVAL 81
INSTALLATION 81
CARGO BOX
REMOVAL 82
INSTALLATION 83
CARGO BOX - TIE DOWN
REMOVAL 84
INSTALLATION 84
COWL GRILLE
REMOVAL 85
INSTALLATION 85
EXTERIOR NAME PLATES
REMOVAL 86
INSTALLATION 87
FRONT FENDER
REMOVAL 88
INSTALLATION 88
FUEL FILL DOOR
REMOVAL 89
INSTALLATION 89
GRILLE
REMOVAL 90
INSTALLATION 90
GRILLE FRAME
REMOVAL 91
INSTALLATION 91
REAR FENDER-QUAD CAB MODELS
REMOVAL 92
INSTALLATION 93
SIDE VIEW MIRROR
REMOVAL 95
INSTALLATION 96
SIDE VIEW MIRROR GLASS
REMOVAL 96
INSTALLATION 98
UPPER RADIATOR CROSSMEMBER
REMOVAL 99
INSTALLATION 100
FRONT WHEELHOUSE SPLASH SHIELD
REMOVAL 100
INSTALLATION 101
REAR WHEELHOUSE SPLASH SHIELD
REMOVAL 101
INSTALLATION 102
BELLY PAN-SRT-10
REMOVAL 102
INSTALLATION 103
CLADDING-BODY SIDE - BOX - SRT-10
REMOVAL 103
INSTALLATION 104
CLADDING-BODY SIDE - CAB - SRT-10
REMOVAL 106
INSTALLATION 106
CLADDING-BODY SIDE - DOOR - SRT-10
REMOVAL 107
INSTALLATION 108
CLADDING-BODY SIDE - FENDER SRT-10
REMOVAL 109
INSTALLATION 109
SPOILER - SRT-10
REMOVAL
WITHOUT CARGO BOX COVER 110
WITH CARGO BOX COVER 110
INSTALLATION
WITHOUT CARGO BOX COVER 111
WITH CARGO BOX COVER 111

BODY ISOLATORS

REMOVAL

NOTE: Quad Cab model shown in the illustration. Body isolators for Regular cab models are similar.

1. Loosen all cab to frame mounting bolts (5) (six Regular cab, eight Quad Cab).
2. Remove the mounting bolts and rebound cushions (3) as necessary.

NOTE: If servicing the rear isolators (2), remove the reinforcement plates (6) and the washers (4).

3. Using a floor jack and wooden block under the cab sill (1), lift the body to gain access to the isolators and remove the isolators as necessary.

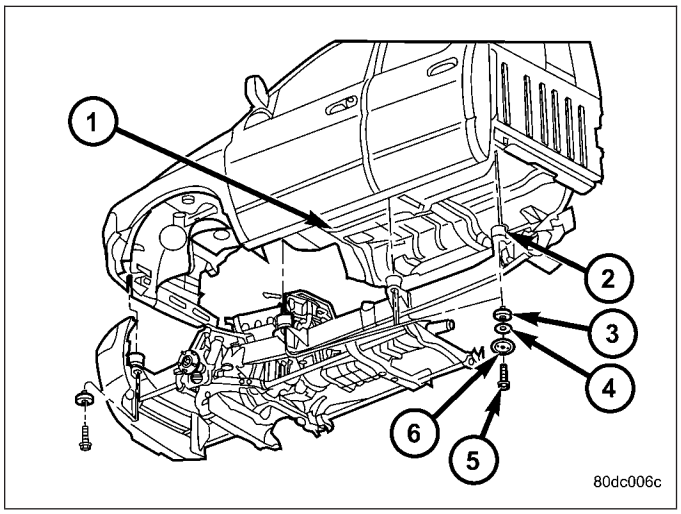

INSTALLATION

NOTE: Quad Cab model shown in the illustration. Body isolators for Regular cab models are similar.

1. Position the isolators (2) under the cab as necessary.

CAUTION: If servicing the rear isolators, install the reinforcement plates (6) and the washers (4).

2. Lower the cab onto the isolators and install the mounting bolts (5) and rebound cushions (3) as necessary (six Regular cab, eight Quad Cab).
3. Tighten the mounting bolts to 81 N·m (60 ft. lbs.).

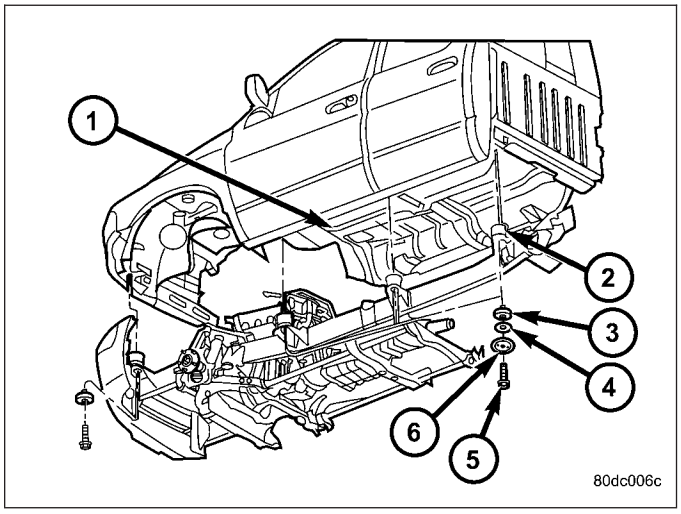

BODY SIDE MOLDINGS

REMOVAL

NOTE: Quad Cab model shown in the illustration. Body side moldings for Regular cab models are similar.

1. As a guide for installation, apply a length of masking tape on the rocker panels (1), parallel to the top edge and, to one end of the body side molding (2 and 3) being removed

CAUTION: Do not exceed 52° C (120° F) when heating the moldings or rocker panels. Failure to follow this caution may result in damage to the moldings and/or the vehicle paint finish.

2. If the temperature is below 21° C (70° F), warm the body side moldings with a heat lamp or heat gun.

NOTE: The body side moldings are attached to the cab with adhesive tape.

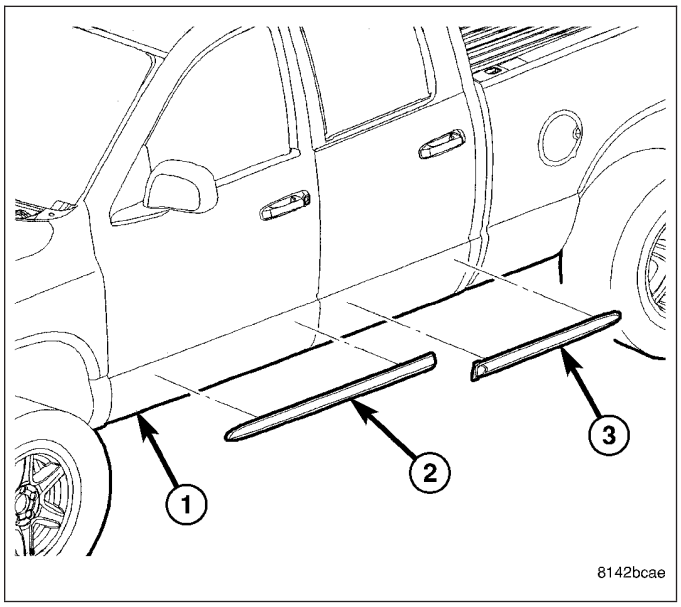

3. Using a trim stick C-4755 or equivalent, carefully remove the moldings from the rocker panels, as necessary.

INSTALLATION

NOTE: Quad Cab model shown in the illustration. Body side moldings for Regular cab models are similar.

1. Thoroughly clean all residue from the molding attachment areas of the rocker panels (1).
2. Wipe the attachment areas with a clean, lint-free cloth, moistened with a 50% solution of water and alcohol and then wipe dry the areas immediately with a dry, lint-free cloth.

CAUTION: Do not exceed 52° C (120° F) when heating the moldings or rocker panels. Failure to follow this caution may result in damage to the moldings and/or the vehicle paint finish.

NOTE: If ambient temperatures are below 21° C (70° F), warm the body side molding and rocker panel with a heat lamp or gun to assure proper adhesion.

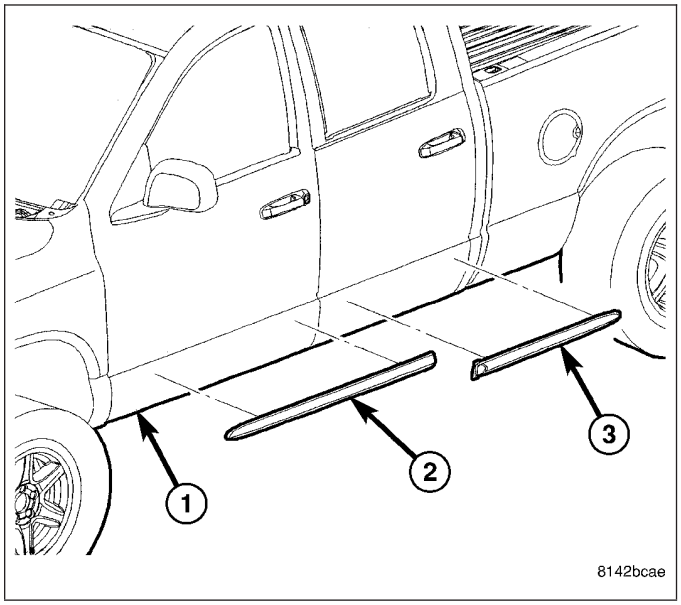

3. Remove the protective covering from the back of the body side molding (2 and 3) and position the molding onto the rocker panel using the previously installed guide tape.

NOTE: To ensure proper molding adhesion, apply consistent and uniform pressure of approximately 40 p.s.i. over the entire surface of each body side molding.

4. Install the body side molding onto the rocker panel.

CARGO BOX

REMOVAL

NOTE: Long cargo box shown in illustration. Short cargo box similar.

1. Remove the screws (1) that secure the fuel filler (2) to the cargo box (3).
2. Remove the fuel filler from the cargo box and position it out of the way.
3. If necessary, remove the fuel filler door from the cargo box (Refer to 23 - BODY/EXTERIOR/FUEL FILL DOOR - REMOVAL).

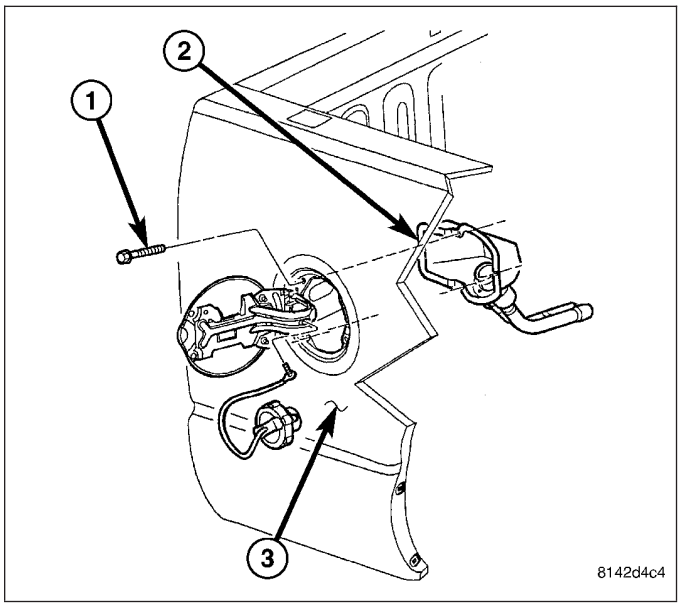

4. Disconnect the tail lamp wire harness from the underbody wire harness (Refer to 8 - ELECTRICAL/CONNECTOR/GROUND/SPLICE LOCATION - DESCRIPTION).
5. If necessary, remove the tail lamp units and wire harness from the cargo box (Refer to 8 - ELECTRICAL/LAMPS/LIGHTING - EXTERIOR/TAIL LAMP UNIT - REMOVAL).
6. If necessary, remove the tailgate (Refer to 23 - BODY/TAILGATE/TAILGATE - REMOVAL).
7. If necessary, remove the rear bumper (Refer to 13 - FRAME & BUMPERS/BUMPERS/REAR BUMPER - REMOVAL).
8. Remove the bolts (3) that secure the cargo box (1) to the frame (2) (six short box, eight long box) and remove the cargo box.

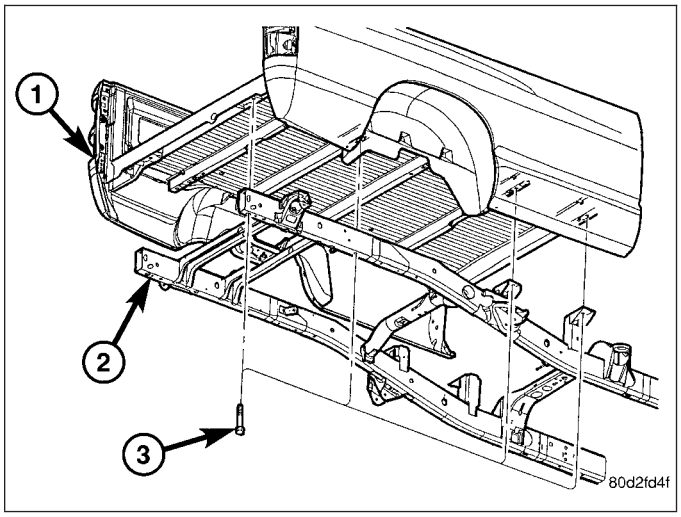

INSTALLATION

NOTE: Long cargo box shown in illustration. Short cargo box similar.

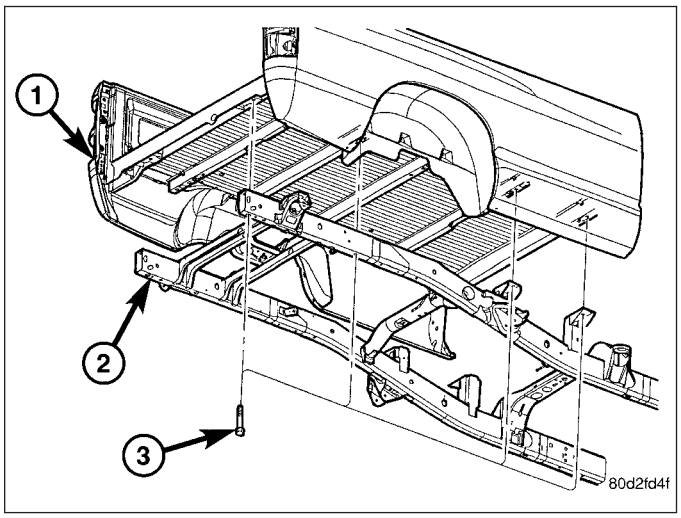

1. Position the cargo box (1) onto the frame (2) and loosely install the bolts (3) (six short box, eight long box).
2. Align the cargo box to the cab and tighten the bolts to 108 N·m (80 ft. lbs.).
3. If removed, install tail lamp units and wire harness onto the cargo box (Refer to 8 - ELECTRICAL/ LAMPS/LIGHTING - EXTERIOR/TAIL LAMP UNIT - INSTALLATION).
4. Connect the tail lamp wire harness to the under-body wire harness (Refer to 8 - ELECTRICAL/ CONNECTOR/GROUND/SPLICE LOCATION - DESCRIPTION).
5. If removed, install the tailgate (Refer to 23 - BODY/TAILGATE/TAILGATE - INSTALLATION).
6. If removed, install the rear bumper (Refer to 13 - FRAME & BUMPERS/BUMPERS/REAR BUMPER - INSTALLATION).

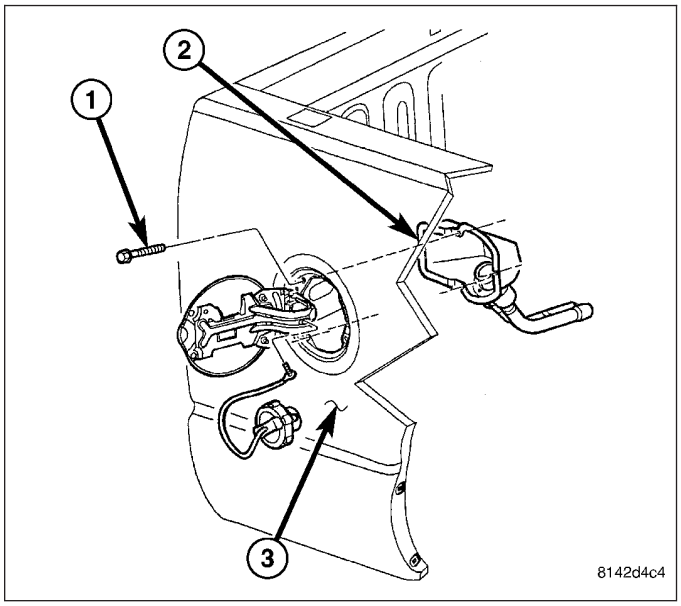

7. If removed, install the fuel filler door (Refer to 23 - BODY/EXTERIOR/FUEL FILL DOOR - INSTALLATION).
8. Position the fuel filler (2) to the cargo box (3).
9. Install the screws (1) that secure the fuel filler to the cargo box. Tighten the screws to 2.2 N·m 20 in. lbs.).

CARGO BOX - TIE DOWN

REMOVAL

1. Remove the two bolts (1) that secure each cargo box tie down (2) to the cargo bed and remove the cleats as necessary.

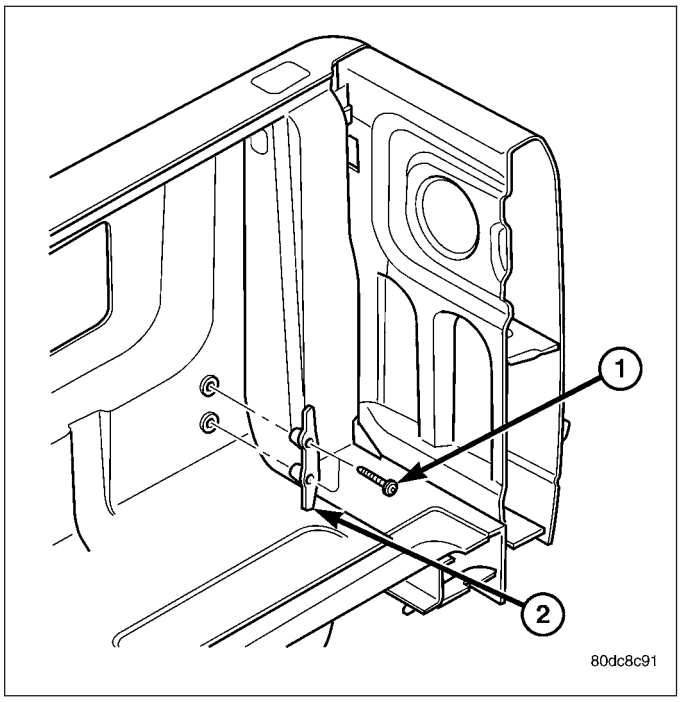

INSTALLATION

1. Position the cargo box tie downs (2) to the cargo box as necessary.
2. Install the two bolts (1) that secure each cargo box tie down to the cargo box. Tighten the bolts to 34 N·m (25 ft. lbs.).

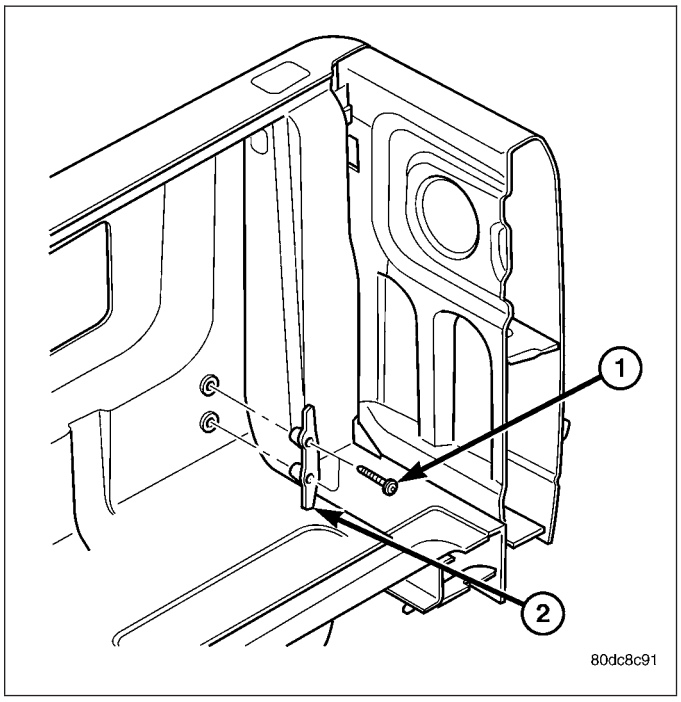

COWL GRILLE

REMOVAL

1. Remove the wiper arms (Refer to 8 - ELECTRICAL/WIPERS/WASHERS/WIPER ARMS - REMOVAL).
2. Disconnect the cowl plenum washer hose from the washer supply hose at the molded plastic in-line fitting (Refer to 8 - ELECTRICAL/WIPERS/WASHERS/WASHER HOSES/TUBES - DESCRIPTION).
3. Remove the cowl weather seal from the front of the dash panel and the cowl grille (2).
4. Remove the six push pin fasteners (1) that secure the front of the cowl grille to the dash panel.
5. Remove the two screws (3) that secure the rear corners of the cowl grille to the dash panel and remove the grille.
6. If necessary, remove the washer nozzles and the cowl plenum washer hose from the cowl grille (Refer to 8 - ELECTRICAL/WIPERS/WASHERS/WASHER NOZZLE - REMOVAL).

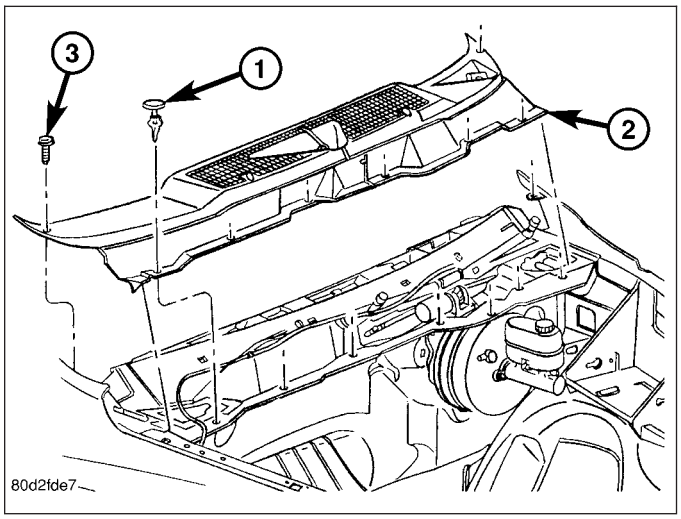

INSTALLATION

1. If removed, install the washer nozzles and the cowl plenum washer hose onto the cowl grille (2) (Refer to 8 - ELECTRICAL/WIPERS/WASHERS/WASHER NOZZLE - INSTALLATION).
2. Position the cowl grille onto the dash panel.
3. Install the two screws (3) and the six push-pin fasteners (1) that secure the cowl grille to the dash panel.
4. Install the cowl weather seal onto the front of the dash panel and the cowl grille.
5. Connect the cowl plenum washer hose to the washer supply hose at the molded plastic in-line fitting (Refer to 8 - ELECTRICAL/WIPERS/WASHERS/WASHER HOSES/TUBES - DESCRIPTION).
6. Install the wiper arms (Refer to 8 - ELECTRICAL/WIPERS/WASHERS/WIPER ARMS - INSTALLATION).

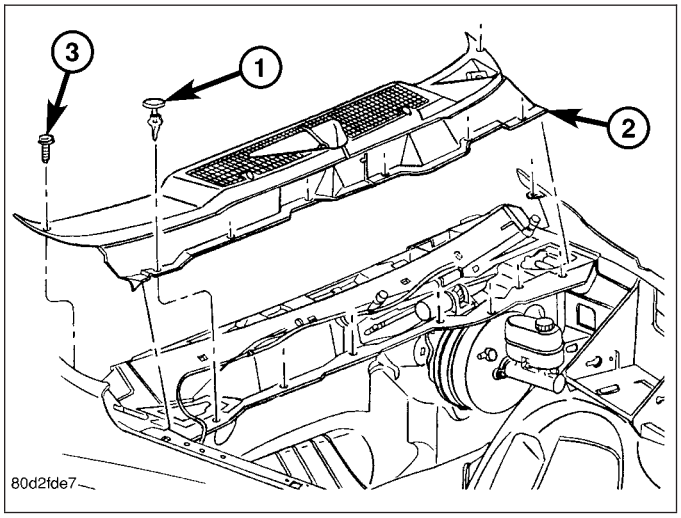

EXTERIOR NAME PLATES

REMOVAL

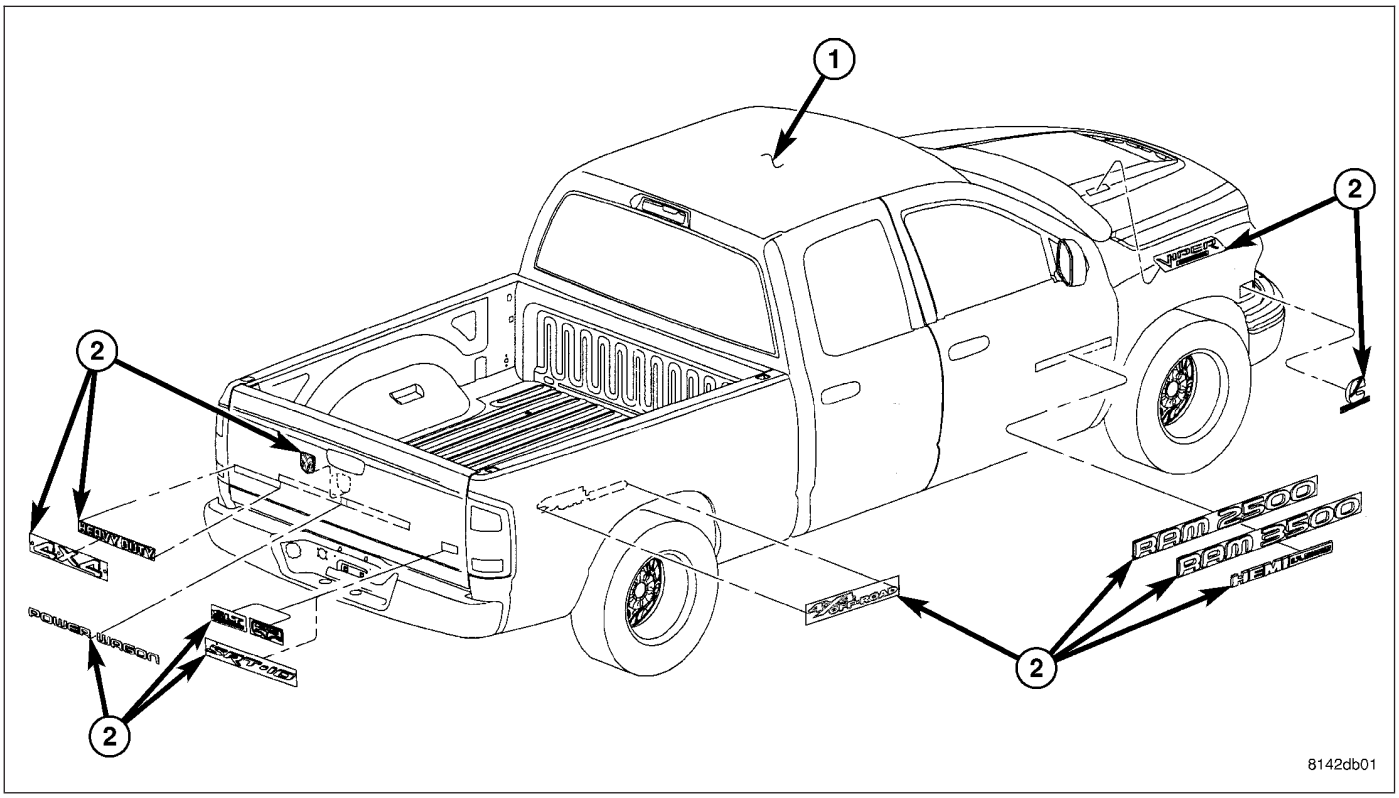

NOTE: Quad Cab model shown in the illustration. Exterior name plates and decals for Regular cab models are similar. Exterior name plate and decal usage vary by model.

1. As a guide for installation, apply a length of masking tape on the body (1), parallel to the top edge and, to one end of the name plate or decal (2) being removed.

CAUTION: Do not exceed 52° C (120° F) when heating name plates, decals or body panels. Failure to follow this caution may result in damage to the name plates, decals and/or the vehicle paint finish.

2. If the temperature is below 21° C (70° F), warm the name plate or decal with a heat lamp or heat gun.

NOTE: The exterior name plates are attached to the body with adhesive tape.

3. Using a trim stick C-4755 or equivalent, carefully remove the name plate or decal from the body panel, as necessary.

INSTALLATION

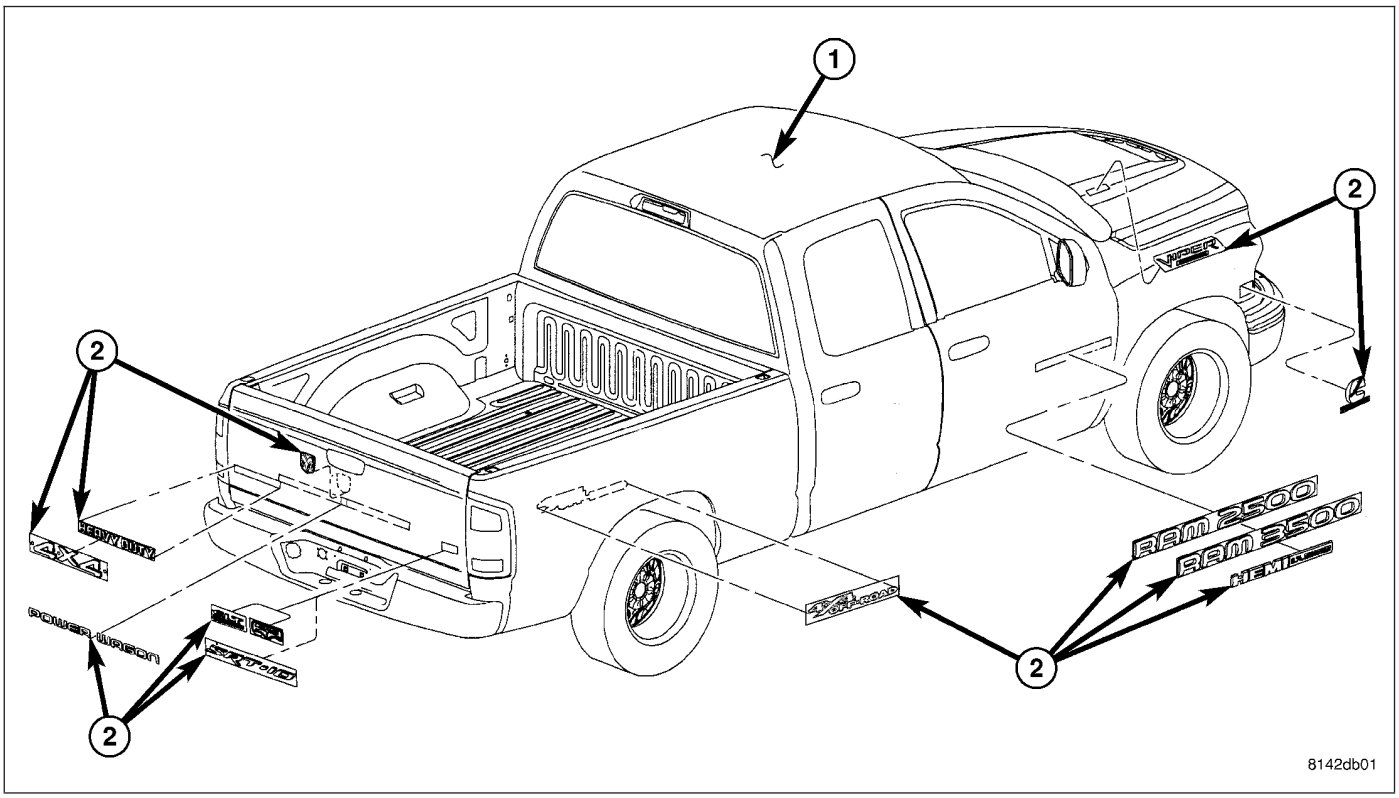

NOTE: Quad Cab model shown in the illustration. Exterior name plates and decals for Regular cab models are similar. Exterior name plate and decal usage vary by model.

1. Thoroughly clean all residue from the name plate or decal attachment areas of the body (1).
2. Wipe the attachment areas with a clean, lint-free cloth, moistened with a 50% solution of water and alcohol and then wipe dry the areas immediately with a dry, lint-free cloth.

CAUTION: Do not exceed 52° C (120° F) when heating name plates, decals or body panels. Failure to follow this caution may result in damage to the name plates, decals and/or the vehicle paint finish.

NOTE: If ambient temperatures are below 21° C (70° F), warm the name plate or decal and body panel with a heat lamp or gun to assure proper adhesion.

3. Remove the protective covering from the back of name plate or decal (2) and position the name plate or decal onto the body using the previously installed guide tape.

NOTE: To ensure proper name plate or decal adhesion, apply consistent and uniform pressure of approximately 40 p.s.i. over the entire surface of each name plate or decal.

4. Install the name plate or decal onto the body.

FRONT FENDER

REMOVAL

1. Remove the radio antenna (Refer to 8 - ELECTRICAL/AUDIO/ANTENNA BODY & CABLE - REMOVAL).
2. Remove the battery tray (depending on fender being serviced) (Refer to 8 - ELECTRICAL/BATTERY SYSTEM/TRAY - REMOVAL).
3. Remove the cowl grille (Refer to 23 - BODY/EXTERIOR/COWL GRILLE - REMOVAL).
4. Remove the headlamp unit (Refer to 8 - ELECTRICAL/LAMPS/LIGHTING - EXTERIOR/HEADLAMP UNIT - REMOVAL).
5. Remove the wheelhouse splash shield (Refer to 23 - BODY/EXTERIOR/FRONT WHEELHOUSE SPLASH SHIELD - REMOVAL).
6. Remove the bolts (1, 2, 3, 5 and 6) that secure the front fender (7) to body.
7. Carefully remove the front fender from the body and remove the plastic inserts (4), if required.

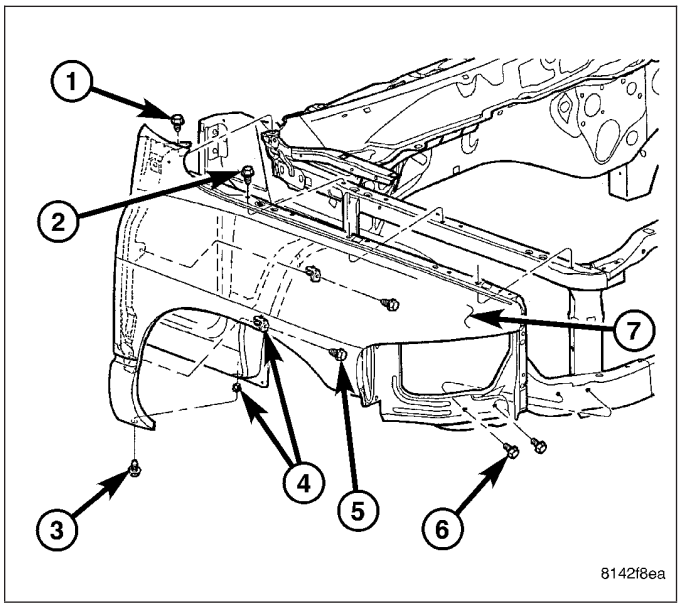

INSTALLATION

1. If required, install new plastic inserts (4) into the front fender (7).
2. Position the front fender onto the body and loosely install all fender retaining bolts.
3. Align the front fender and add shims, if required (Refer to 23 - BODY/BODY STRUCTURE/GAP AND FLUSH - SPECIFICATIONS).
4. Tighten the bolts (2 and 6) to 9 N·m (80 in. lbs.).
5. Tighten the bolts (1, 3 and 5) to 17 N·m (13 ft. lbs.).
6. Install the wheelhouse splash shield (Refer to 23 - BODY/EXTERIOR/FRONT WHEELHOUSE SPLASH SHIELD - INSTALLATION).
7. Install the headlamp unit (Refer to 8 - ELECTRICAL/LAMPS/LIGHTING - EXTERIOR/HEADLAMP UNIT - INSTALLATION).
8. Install the cowl grille (Refer to 23 - BODY/EXTERIOR/COWL GRILLE - INSTALLATION).

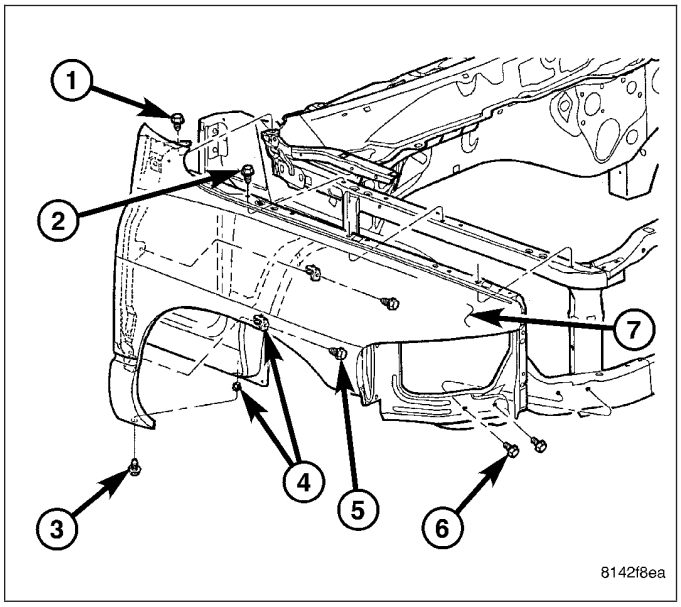

9. Install the battery tray, if required (Refer to 8 - ELECTRICAL/BATTERY SYSTEM/TRAY - INSTALLATION).
10. Install the antenna (Refer to 8 - ELECTRICAL/AUDIO/ANTENNA BODY & CABLE - INSTALLATION).

FUEL FILL DOOR

REMOVAL

1. Open the fuel filler door (1).
2. Remove the two bolts (2) that secure the fuel filler door to the cargo box and remove the door.

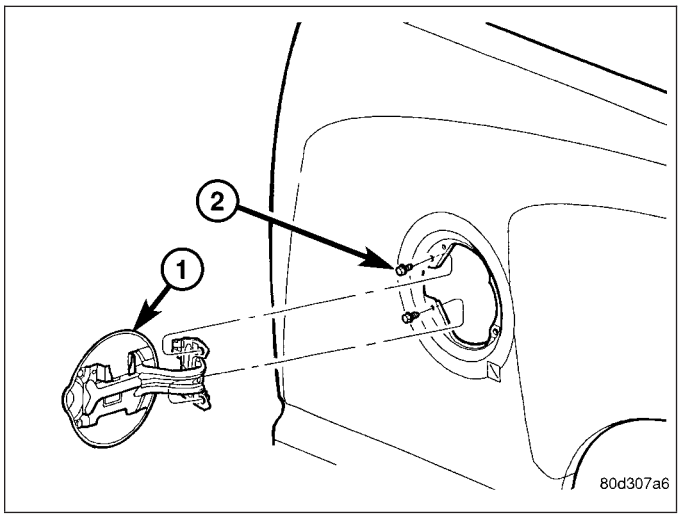

INSTALLATION

1. Position and align the fuel filler door (1) to the cargo box.
2. Install the two bolts (2) that secure the fuel filler door to the cargo box. Tighten the bolts to 9 N·m (80 in. lbs.).

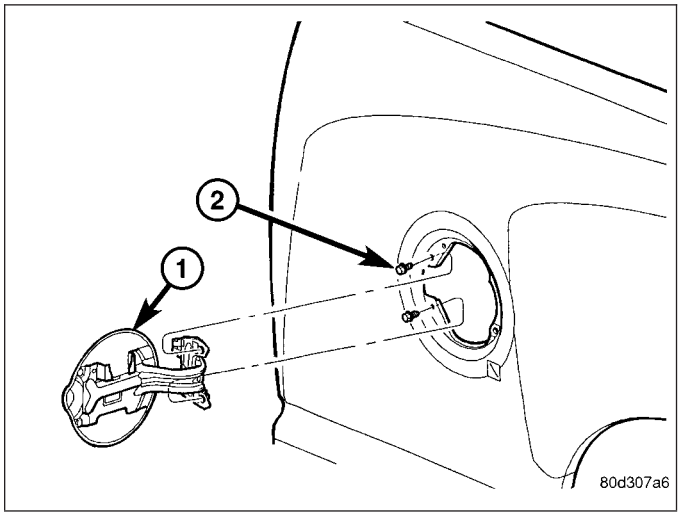

GRILLE

REMOVAL

1. Open the hood (2) and remove the six screws (5) that secure the grille (3) to the grille frame (4).
2. Remove the six nuts (1) that secure the grille to the hood and remove the grille.
3. If required, remove the grille frame from the hood (Refer to 23 - BODY/EXTERIOR/GRILLE FRAME - REMOVAL).

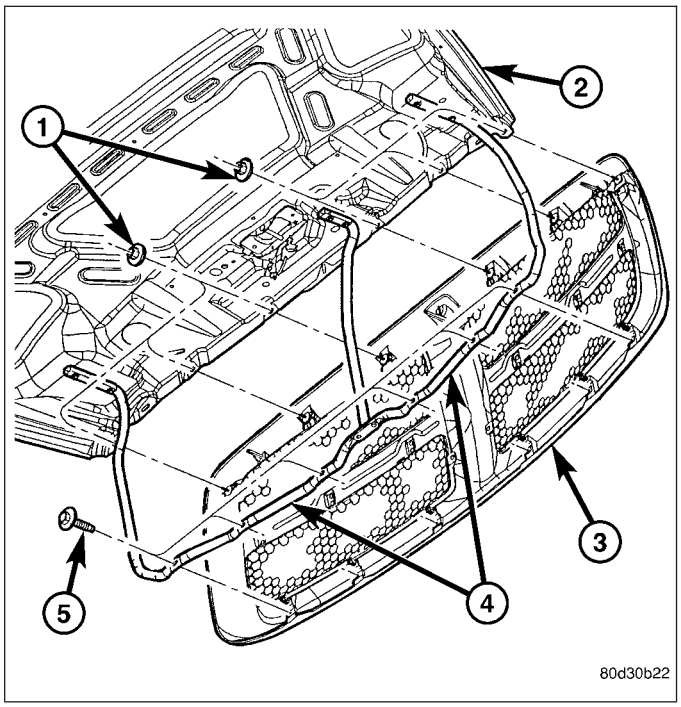

INSTALLATION

1. If removed, install the grille frame (4) (Refer to 23 - BODY/EXTERIOR/GRILLE FRAME - INSTALLATION).
2. Position and align the grille (3) onto the hood (2)
3. Install the six nuts (1) that secure the grille to the hood. Tighten the nuts to 5 N·m (44 in. lbs.).
4. Install the six screws (5) that secure the grille to the grille frame. Tighten the screws to 2.2 N·m (20 in. lbs.).

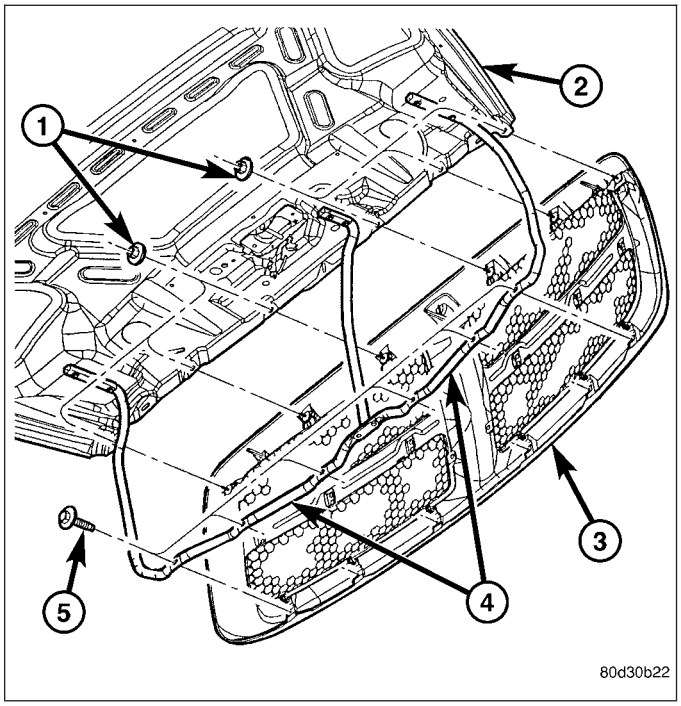

GRILLE FRAME

REMOVAL

1. Remove the grille (Refer to 23 - BODY/EXTERIOR/ GRILLE - REMOVAL).
2. Remove the six screws (3) that secure the grille frame (2) to the hood (1) and remove the frame.

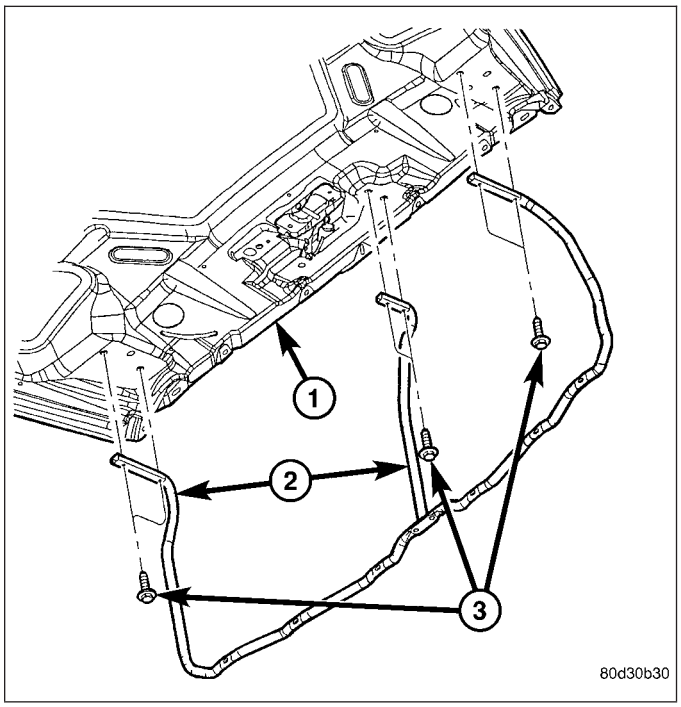

INSTALLATION

1. Position the grille frame (2) onto the hood (1).
2. Install the six screws (3) that secure the grille frame to the hood. Tighten the screws to 5 N·m (44 in. lbs.).
3. Install the grille (Refer to 23 - BODY/EXTERIOR/ GRILLE - INSTALLATION).

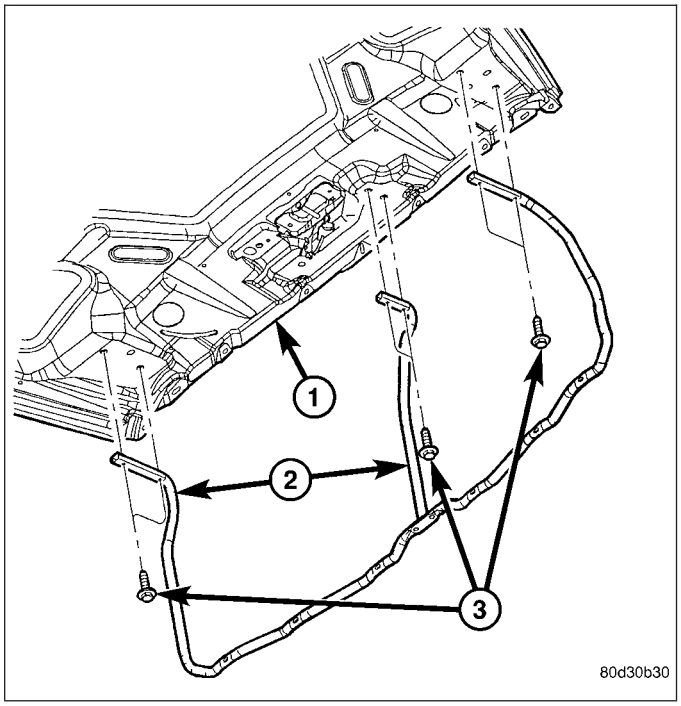

REAR FENDER-QUAD CAB MODELS

REMOVAL

1. Disconnect and isolate the negative battery cable.
2. Remove the tail lamp unit (Refer to 8 - ELECTRICAL/LAMPS/LIGHTING - EXTERIOR/TAIL LAMP UNIT - REMOVAL).
3. Remove the rear wheelhouse splash shield (Refer to 23 - BODY/EXTERIOR/REAR WHEELHOUSE SPLASH SHIELD - REMOVAL).
4. Remove the two marker lamp units from the rear fender (Refer to 8 - ELECTRICAL/LAMPS/LIGHTING - EXTERIOR/MARKER LAMP UNIT - REMOVAL).
5. Remove the two nuts (2) that secure the rear fender to the cargo box near the tail lamp opening (1).

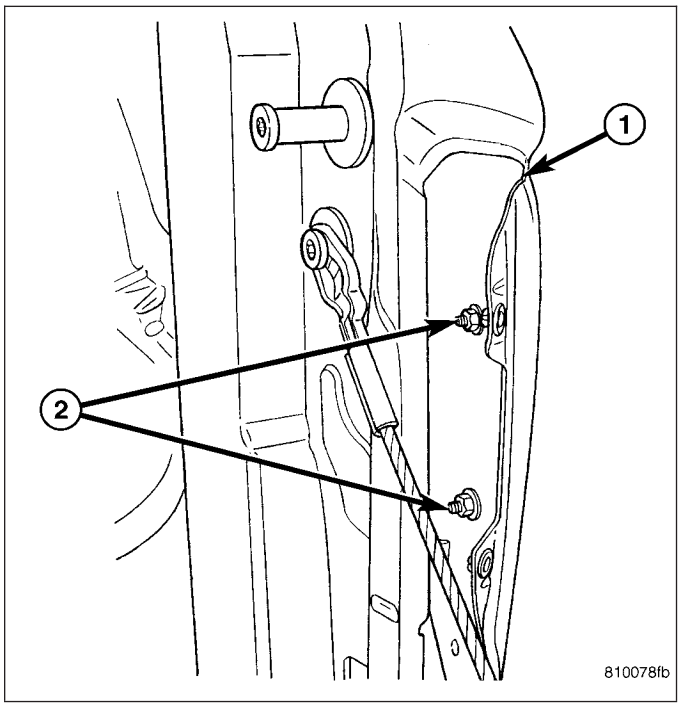

6. Raise and support the vehicle.
7. Remove the two nuts (1) that secure the rear fender to the rear of the cargo box inner panel (2).
8. Remove the four bolts that secure the bottom edges of the rear fender to the cargo box.

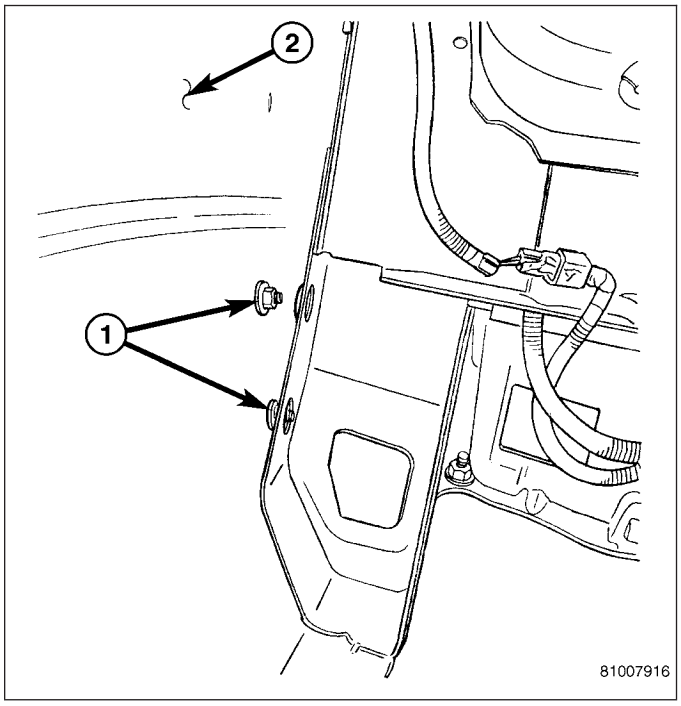

9. Remove the four nuts (2) secure the front of the rear fender to the cargo box inner panel (1)

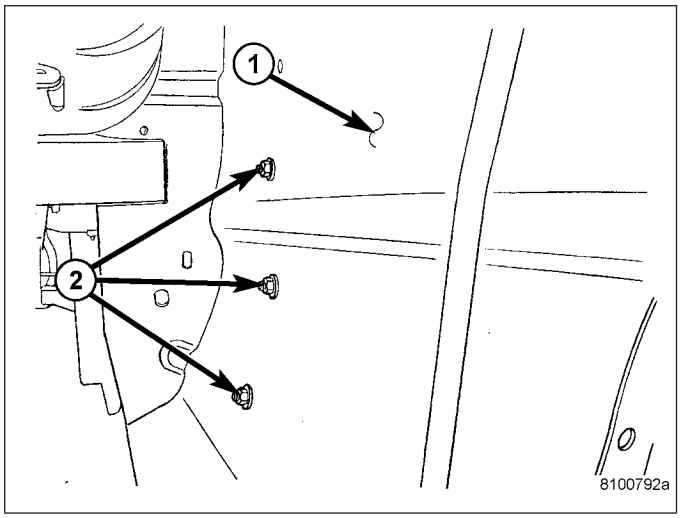

10. Loosen the three bolts (3) on each of the two fender support brackets (1) located on the cargo box outer panel (2).

CAUTION: Prior to removing the rear fenders, mask off the surrounding cargo box areas to avoid damage to the cargo box painted surfaces.

11. Lift the rear fender straight up and off of the two support brackets and remove the fender.

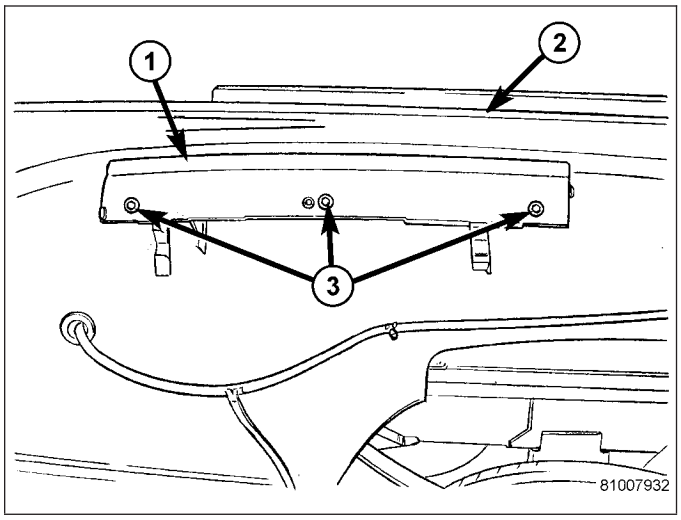

INSTALLATION

CAUTION: Prior to installing the rear fenders, mask off the surrounding areas to avoid damage to the cargo box painted surfaces.

1. Carefully position the rear fender onto the three bolts (3) on each of the two support brackets (1) located on the cargo box outer panel (2).

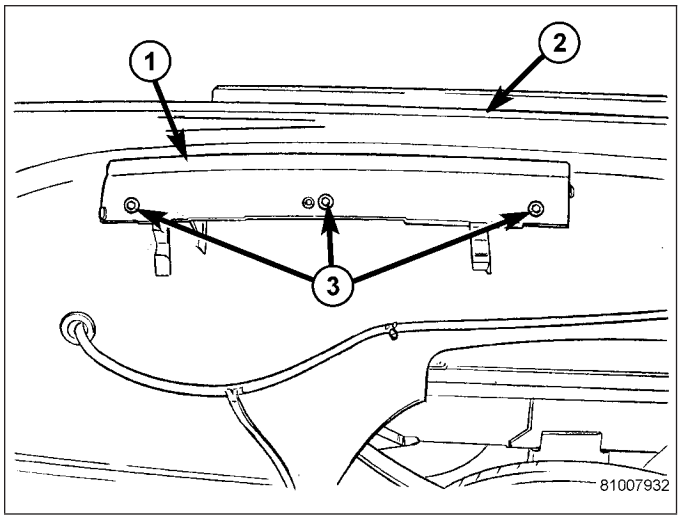

2. Install the four nuts (2) that secure the front of the rear fender to the cargo box inner panel (1). Tighten the nuts to 7 N·m (60 in. lbs.).

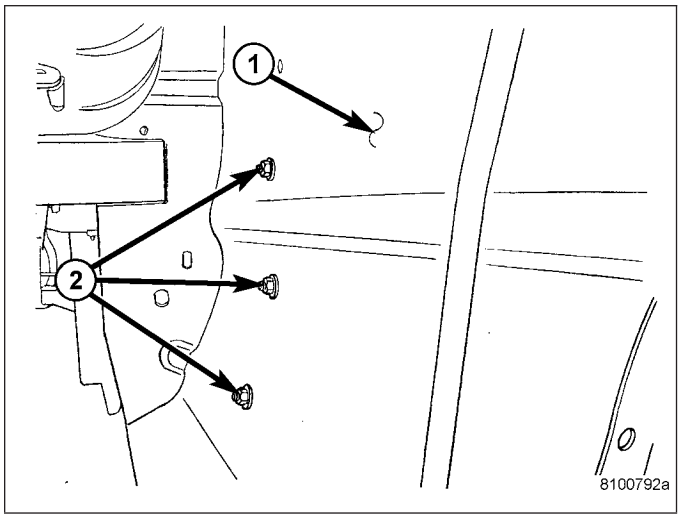

3. Install the two nuts (1) that secure the rear fender to the rear of the cargo box inner panel (2). Tighten the nuts to 7 N·m (60 in. lbs.).
4. Install the four bolts that secure the bottom edges of the rear fender to the cargo box. Tighten the bolts to 7 N·m (60 in. lbs.).
5. Tighten the three bolts on each of the two support brackets to 11 N·m (8 ft. lbs.).

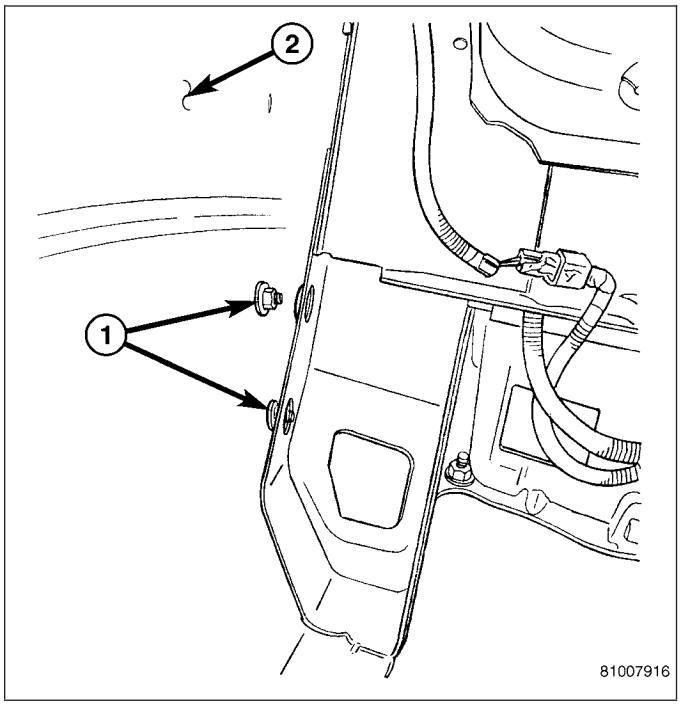

6. Lower the vehicle.
7. Install the two nuts (2) that secure the rear fender to the cargo box near the tail lamp opening (1). Tighten the nuts to 7 N·m (60 in. lbs.).
8. Install the two marker lamp units onto the rear fender (Refer to 8 - ELECTRICAL/LAMPS/LIGHTING - EXTERIOR/MARKER LAMP UNIT - INSTALLATION).
9. Install the rear wheelhouse splash shield (Refer to 23 - BODY/EXTERIOR/REAR WHEELHOUSE SPLASH SHIELD - INSTALLATION).
10. Install the tail lamp unit (Refer to 8 - ELECTRICAL/LAMPS/LIGHTING - EXTERIOR/TAIL LAMP UNIT - INSTALLATION).
11. Reconnect the negative battery cable.

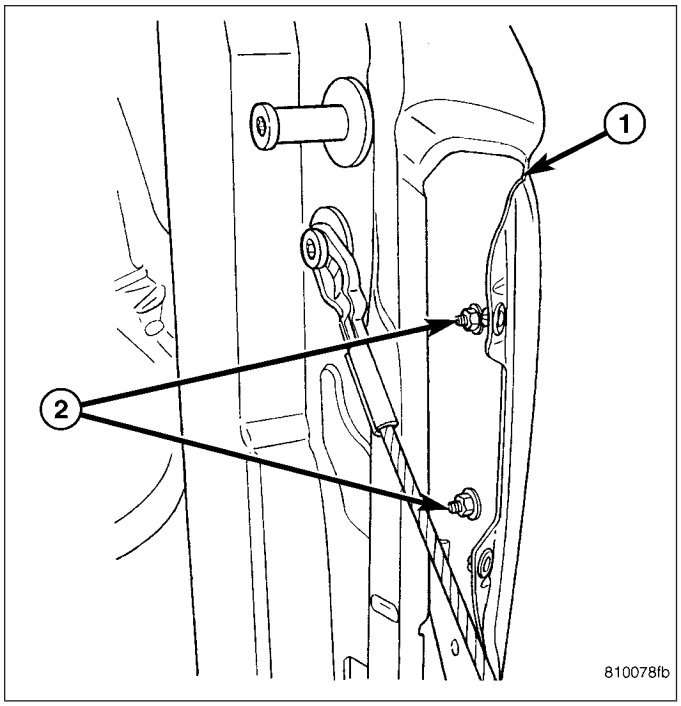

SIDE VIEW MIRROR

REMOVAL

1. Remove the door trim panel (Refer to 23 - BODY/DOOR - FRONT/TRIM PANEL - REMOVAL).
2. Disconnect the wire harness connector (3) from the mirror (1).
3. Remove the three nuts (2) that secure the mirror to the door and carefully remove the mirror.

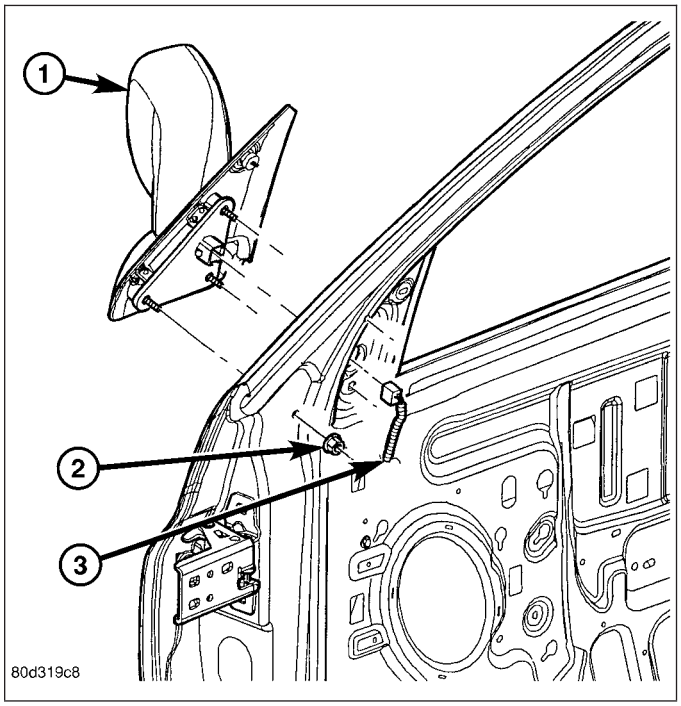

INSTALLATION

1. Position the mirror (1) onto the door.
2. Install the three nuts (2) that secure the mirror to the door. Tighten the nuts to 7 N·m (60 in. lbs.).
3. Connect the wire harness connector (3) to the mirror.
4. Install the door trim panel (Refer to 23 - BODY/DOOR - FRONT/TRIM PANEL - INSTALLATION).

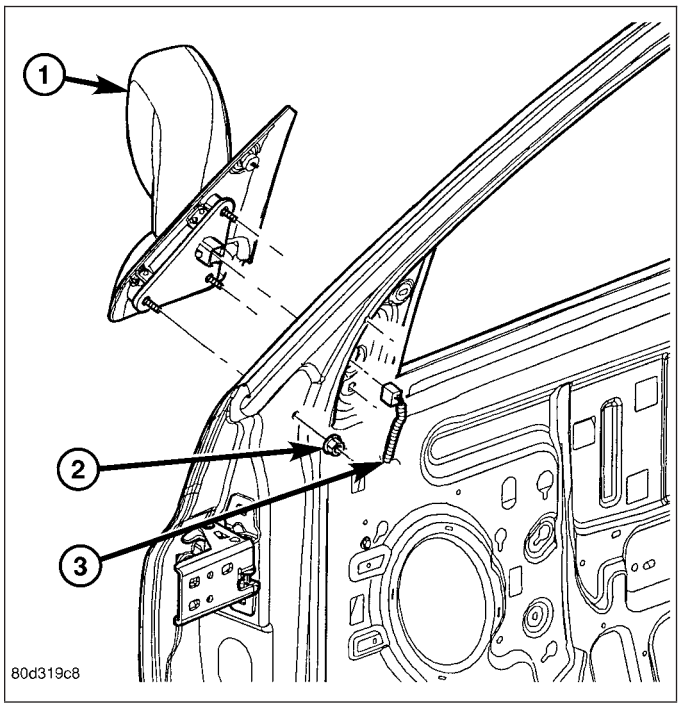

SIDE VIEW MIRROR GLASS

REMOVAL

STANDARD MIRROR

WARNING: Always wear eye and hand protection when servicing the mirror assembly. Failure to observe this warning may result in personal injury from broken glass.

1. Position the glass (3) in the mirror (2) as shown to access the two outboard mirror housing retainer clips (1).

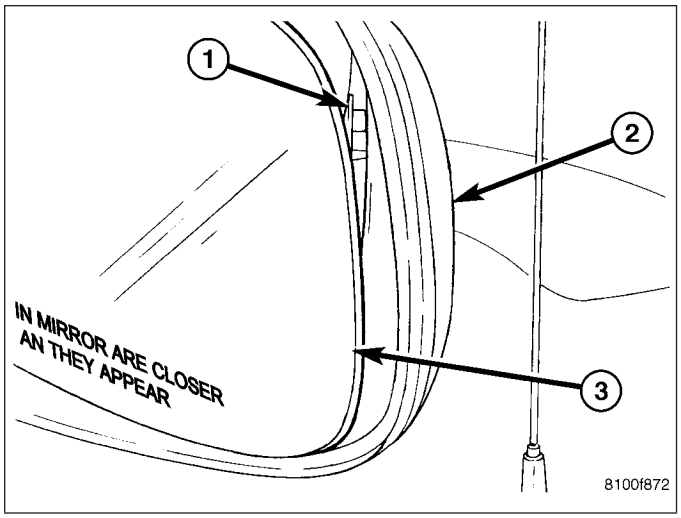

2. Disengage the three mirror housing retainer clips (2) (start with the two outboard clips) and remove the cover.

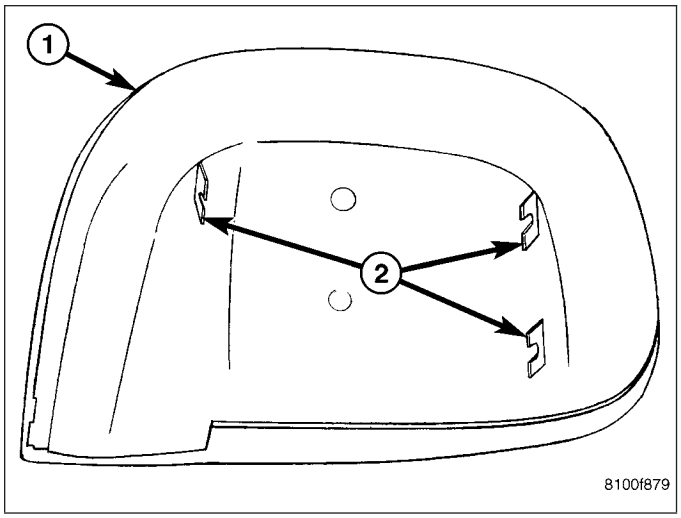

3. Disengage the lower glass retainer clip (2) from the mirror motor.
4. Slide the mirror glass (1) upward from the mirror motor and remove the glass from the motor.

NOTE: When disconnecting the wire harness connectors from the heated mirror glass terminals, note the location of each connector and its respective terminal for installation reference.

5. If equipped with heated mirrors, disconnect the wire harness connectors from the mirror glass.

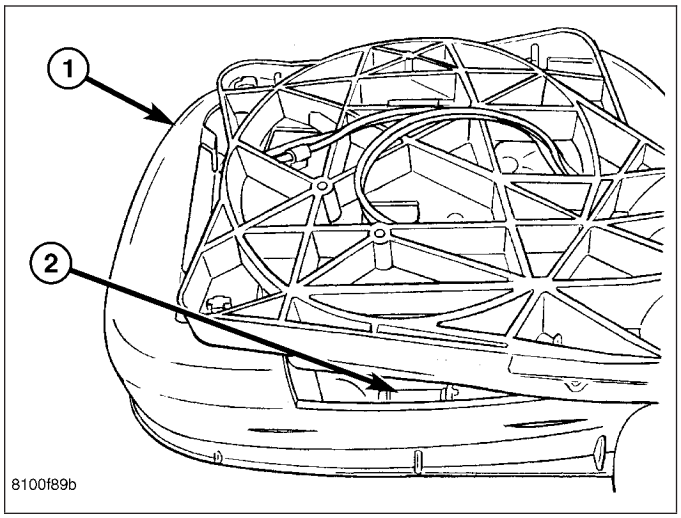

TOW PACKAGE MIRROR

1. Position the glass (3) in the mirror (1) as shown to access the inboard mirror glass retainer clip (2).

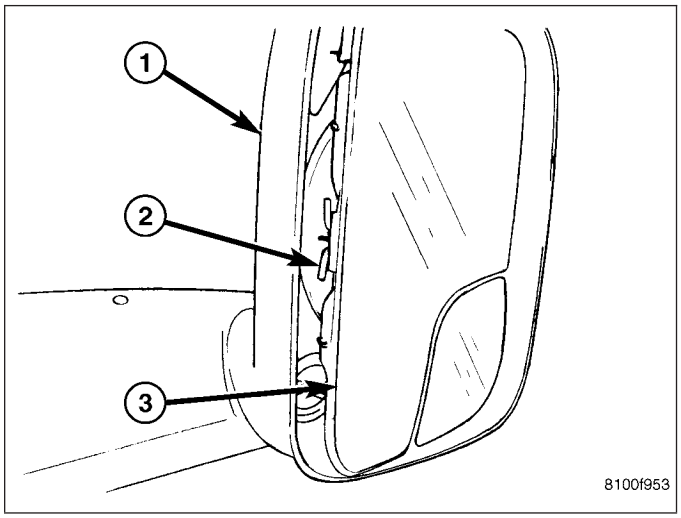

2. Disengage the retainer clip (3) and separate the mirror glass (2) from the mirror motor.

NOTE: When disconnecting the wire harness connectors from the heated mirror glass terminals, note the location of each connector and its respective terminal for installation reference.

3. If equipped with heated mirrors, disconnect the wire harness connectors (1) from the mirror glass.

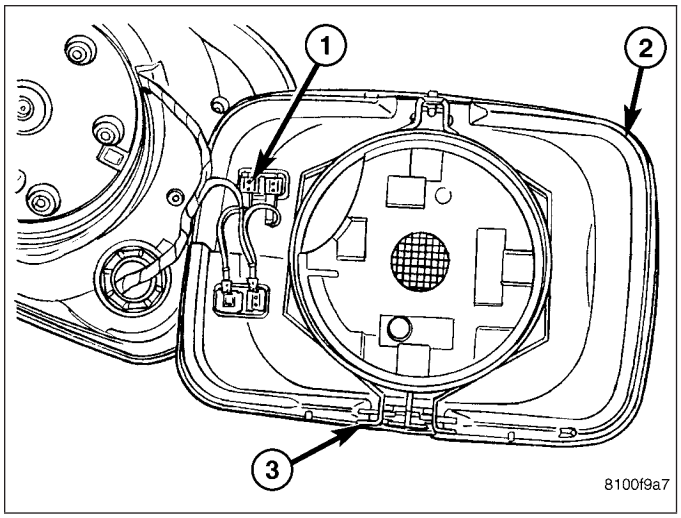

INSTALLATION

STANDARD MIRROR

NOTE: Connect each heated mirror glass electrical connector to its respective mirror terminal as noted during the Removal procedure, if equipped.

1. If equipped, connect the wire harness connectors to the heated glass mirror terminals (3).
2. Position the mirror glass (1) so that the four alignment holes (4) are over the four feet of the mirror motor.

NOTE: Pressure must be applied equally over the center portion of the mirror glass to engage the retainer clip fully.

3. Engage the upper retainer clip (2) to the top of the mirror motor and slide the mirror glass downward until the lower retainer clip is fully engaged.

4. Position the mirror housing (1) onto the mirror and fully engage the three retainer clips (2).

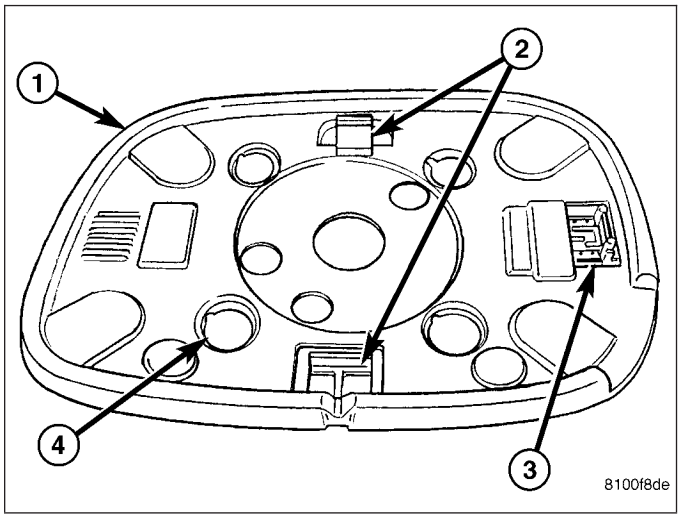

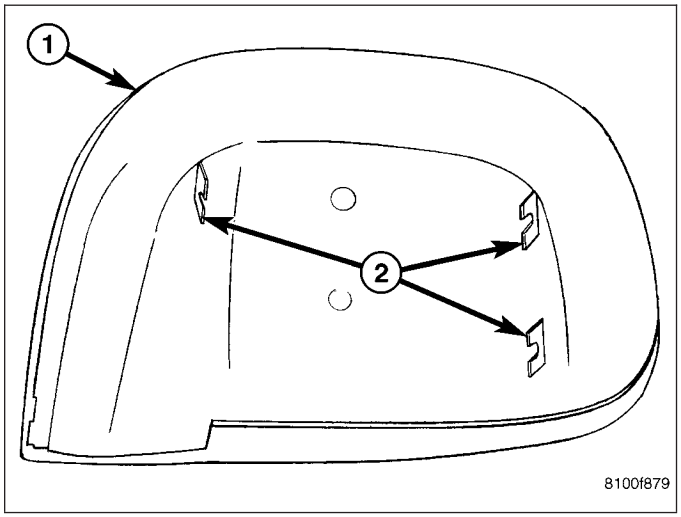

TOW PACKAGE MIRROR

NOTE: Connect each heated mirror glass electrical connector to its respective mirror terminal as noted during the Removal procedure, if equipped.

1. If equipped, connect the wire harness connectors to the heated glass mirror terminals (1).

NOTE: Pressure must be applied equally over the center portion of the mirror glass to engage the retainer clip fully.

2. Install the mirror glass (2) onto the mirror motor and fully engage the retainer clip (3).

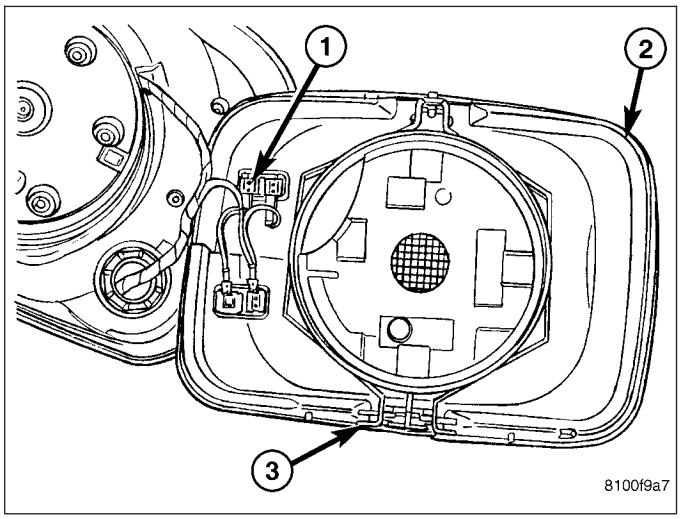

UPPER RADIATOR CROSSMEMBER

REMOVAL

1. Remove the hood latch from the upper radiator crossmember (3) and position the latch out of the way (Refer to 23 - BODY/HOOD/LATCH - REMOVAL).
2. Remove the bolts (1 and 2) that secure the A/C condenser and the radiator to the upper radiator crossmember.

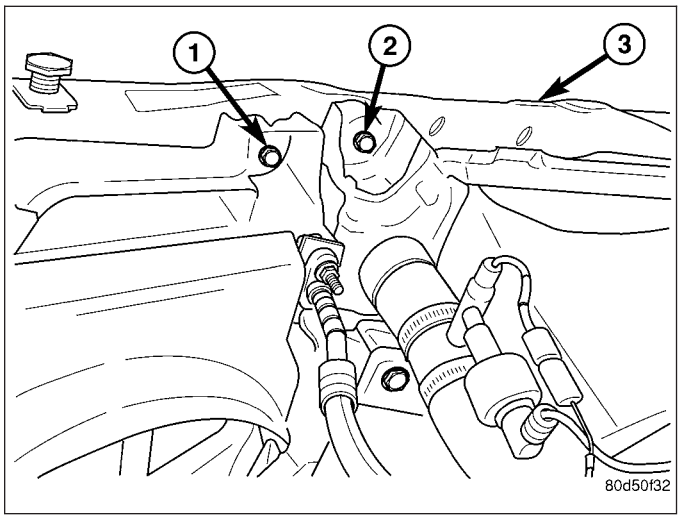

3. Remove the four bolts (1 and 3) that secure the upper radiator crossmember (2) to the fender rails and remove the crossmember.

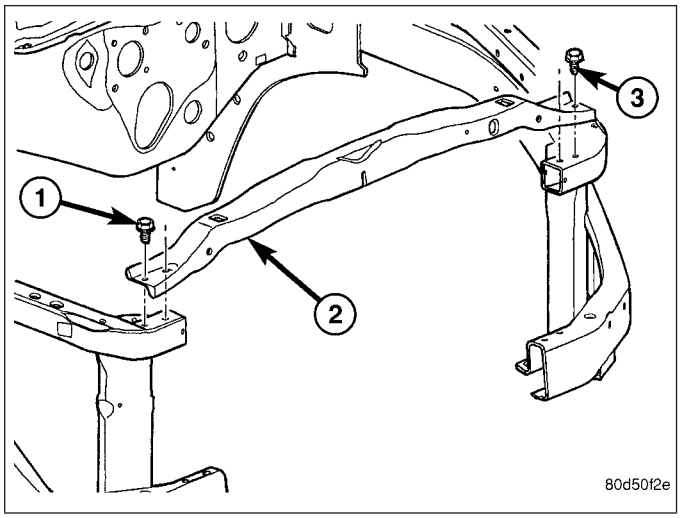

INSTALLATION

1. Position and align the upper radiator crossmember (2) to the fender rails.
2. Install the four bolts (1 and 3) that secure the upper radiator crossmember to the fender rails. Tighten the bolts to 28 N·m (21 ft. lbs.).

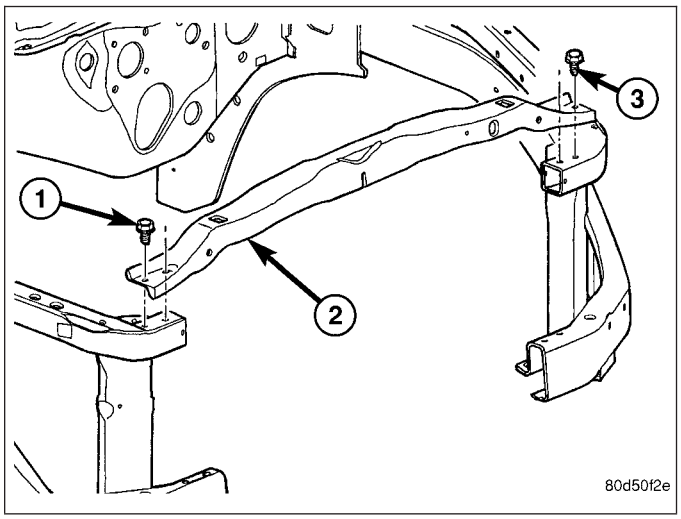

3. Install the bolts (1 and 2) that secure the A/C condenser and the radiator to the upper radiator crossmember (3). Tighten the bolts to 8 N·m (75 in. lbs.).
4. Install the hood latch (Refer to 23 - BODY/HOOD/LATCH - INSTALLATION).

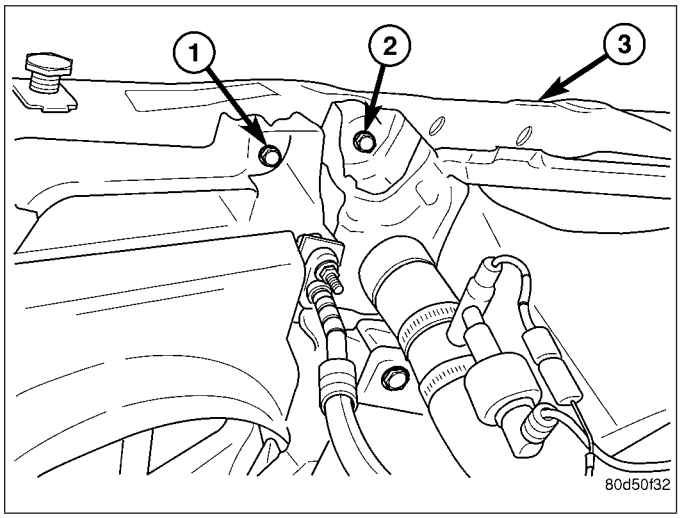

FRONT WHEELHOUSE SPLASH SHIELD

REMOVAL

1. Open the hood and disengage any wiring or component retaining clips from the front splash shield (4) (depending on application and shield being serviced).
2. Raise and support the vehicle.
3. Remove the eight screws (3) that secure the front splash shield to the fender rail (1) and the front fender (2).
4. Disconnect the front splash shield from the support bracket located on the front bumper and remove the splash shield.

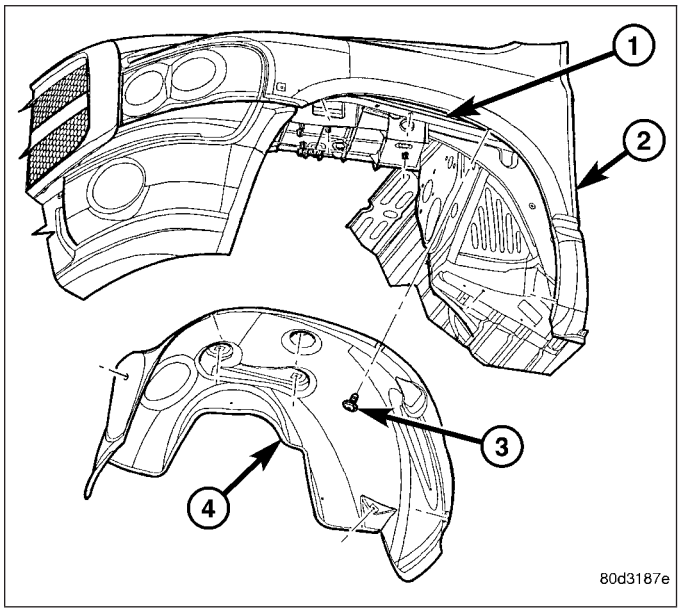

INSTALLATION

1. Install the front edge of the front splash shield (4) into the support bracket located on the front bumper.
2. Position the front splash shield onto the fender rail (1) and the front fender (2).
3. Install the eight screws (3) that secure the front splash shield to the fender rail and the front fender. Tighten the screws to 5 N·m (44 in. lbs.).
4. Lower the vehicle and engage any wiring or component retaining clips to the front splash shield (depending on application and shield being serviced).

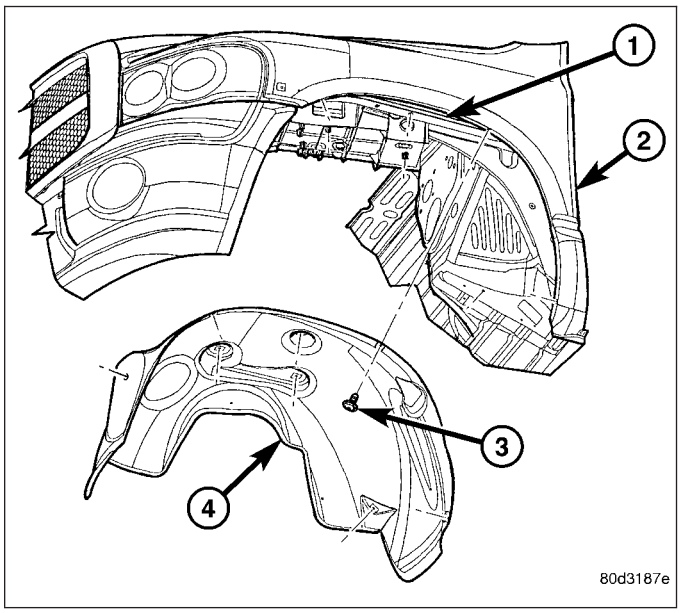

REAR WHEELHOUSE SPLASH SHIELD

REMOVAL

1. Raise and support the vehicle.
2. Remove the three screws (2) that secure the rear splash shield (3) to the cargo box (1) and remove the splash shield.

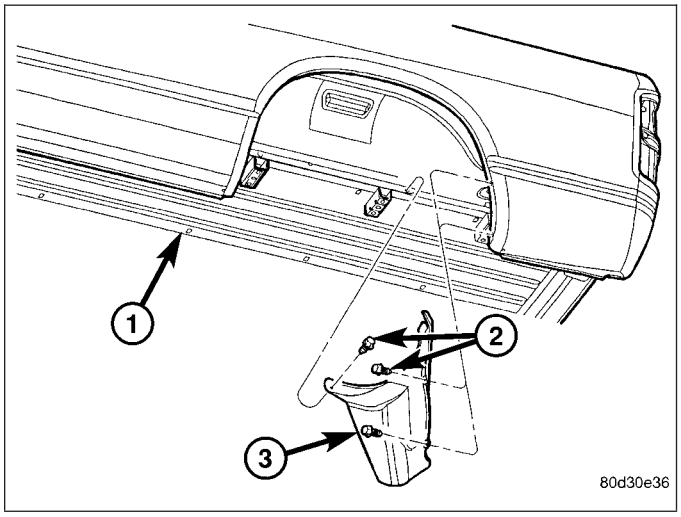

INSTALLATION

1. Position the rear splash shield (3) onto the cargo box (1).
2. Install the three screws (2) that secure the rear splash shield to the cargo box. Tighten the screws to 5 N·m (44 in. lbs.).
3. Lower the vehicle.

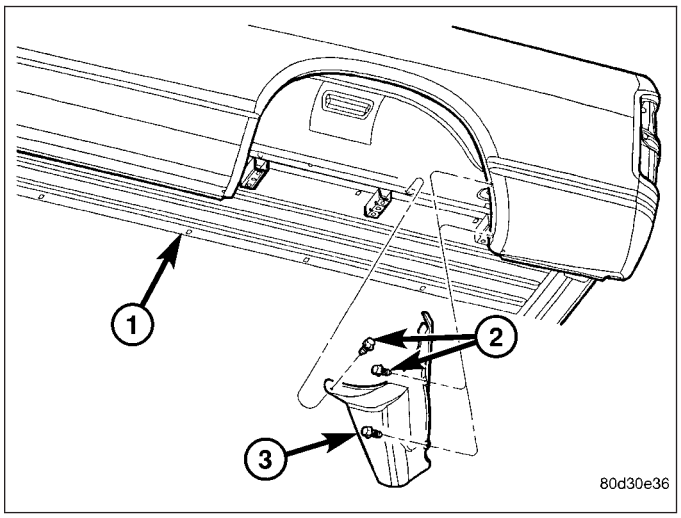

BELLY PAN-SRT-10

REMOVAL

1. Remove the fifteen screws (1) that secure the belly pan to the front bumper (2) and the vehicle underbody.
2. Remove the belly pan from under the front of the vehicle.

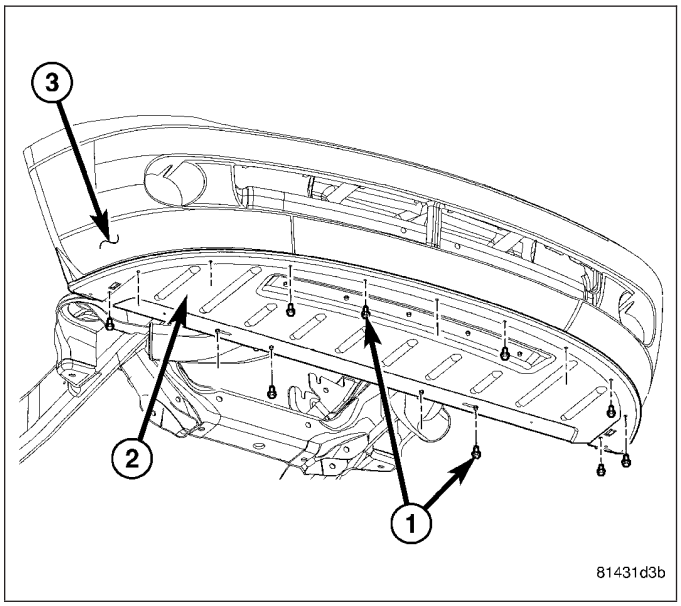

INSTALLATION

1. Position the belly pan (2) under the front of the vehicle.
2. Install the fifteen screws (1) that secure the belly pan to the front bumper (3) and the vehicle underbody. Tighten the screws securely.

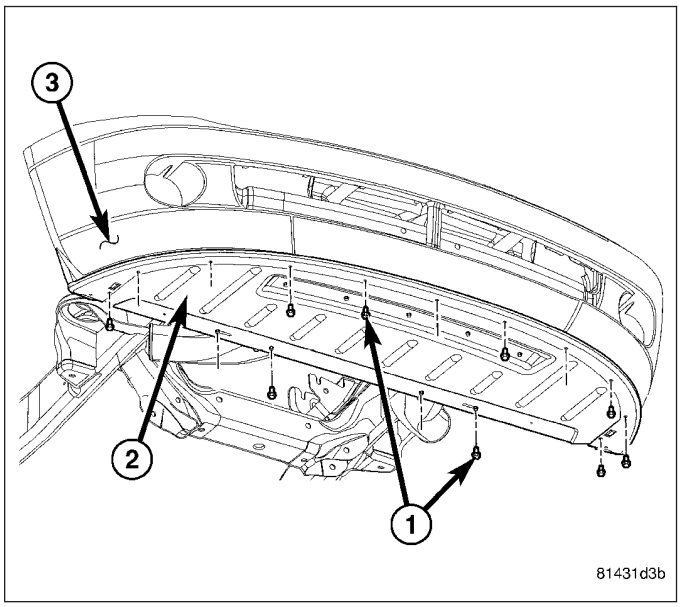

CLADDING-BODY SIDE - BOX - SRT-10

REMOVAL

1. As a guide for installation, apply a length of masking tape on the cargo box (2), parallel to the top edge of the body side cladding (1)
.

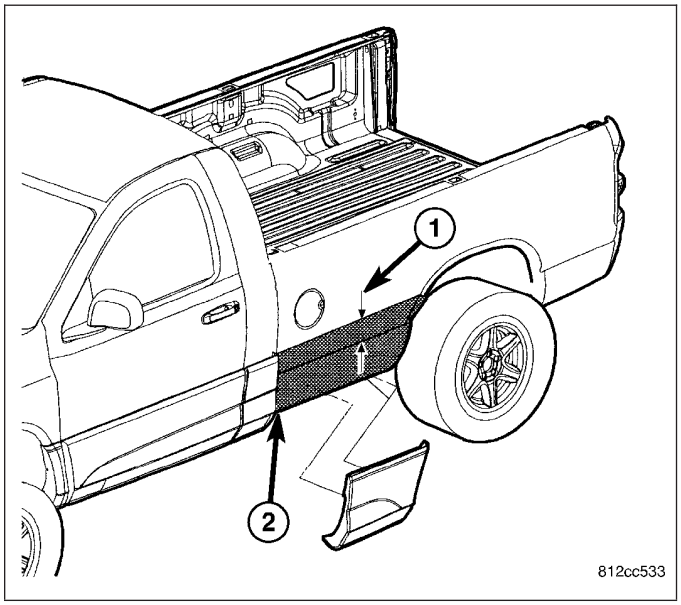

2. Remove the three screws (1, 2 and 3) that secure the body side cladding to the rear of the cargo box.

CAUTION: Do not exceed 52° C (120° F) when heating the cladding or body panels. Failure to follow this caution may result in damage to the cladding and/or the vehicle paint finish.

3. If the temperature is below 21° C (70° F), warm the body side cladding with a heat lamp or heat gun.

NOTE: The body side cladding is attached to the cargo box with adhesive tape and w-type retainers. If required, apply 3M™ General Purpose Adhesive Cleaner or equivalent onto the cladding area to help loosen the adhesive tape.

4. Using a trim stick C-4755 or equivalent, disengage the w-clip retainers and remove and discard the cladding.

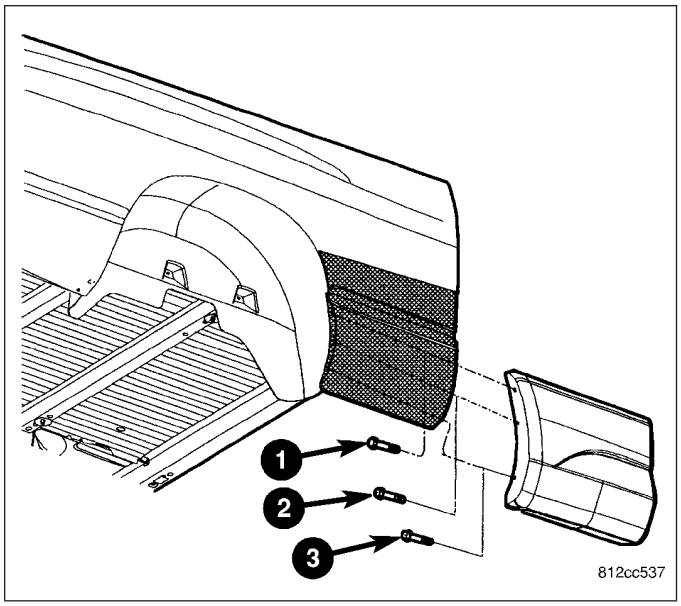

INSTALLATION

1. Using 3M™ General Purpose Adhesive Cleaner or equivalent, remove any adhesive tape residue from the cargo box.

NOTE: Install new cladding within 20 minutes of body panel cleaning.

2. Wipe the attachment areas (2) with a clean, lint-free cloth, moistened with a 50% solution of water and alcohol, starting 120 mm (4.75 in.) above the character line (1) and then wipe dry the areas immediately with a dry, lint-free cloth.

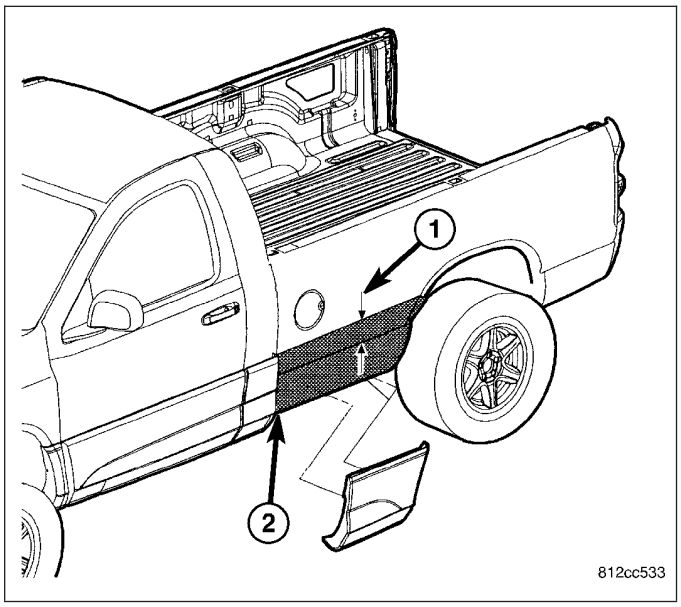

CAUTION: Do not exceed 52° C (120° F) when heating the cladding or body panels. Failure to follow this caution may result in damage to the cladding and/or the vehicle paint finish.

NOTE: If ambient temperatures are below 21° C (70° F), warm the body side cladding and body panel with a heat lamp or gun to assure proper adhesion.

3. Remove the protective covering from the adhesive tape (3) on the back of the body side cladding (1) and position the cladding onto the cargo box using the previously installed guide tape.

NOTE: To ensure proper cladding adhesion, apply consistent and uniform pressure of approximately 40 p.s.i. over the entire surface of the cladding.

4. Install the body side cladding onto the cab. Fully seat the w-clip retainers (2).

5. Install the three screws that secure the body side cladding to the rear of the cargo box in the sequence shown. Tighten the screws to 5 N·m (44 in. lbs.).

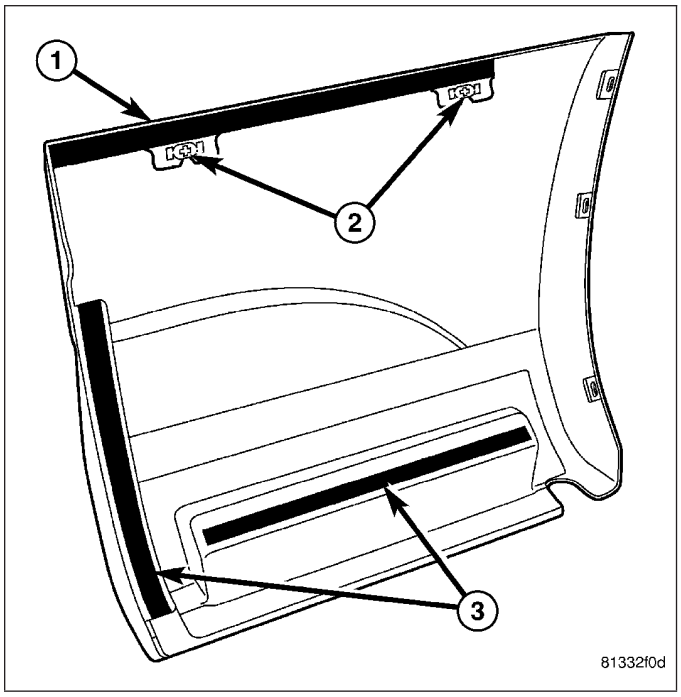

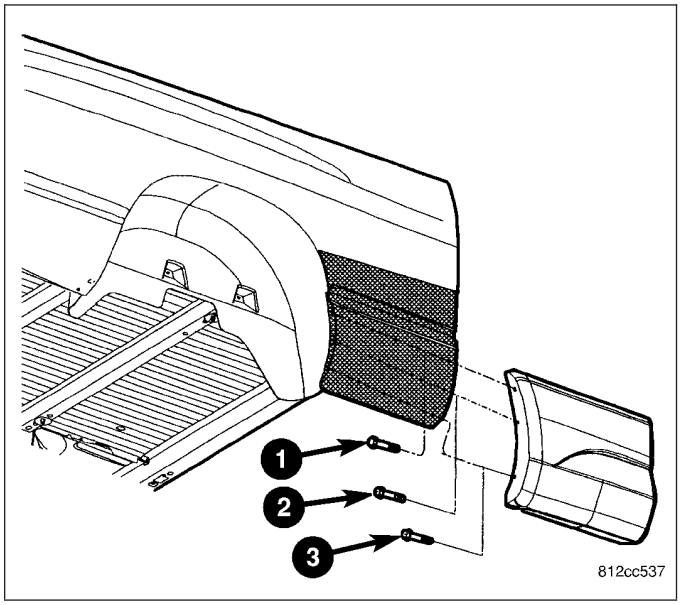

CLADDING-BODY SIDE - CAB - SRT-10

REMOVAL

1. As a guide for installation, apply a length of masking tape on the cab (2), parallel to the top edge of the body side cladding (1).

CAUTION: Do not exceed 52° C (120° F) when heating the cladding or body panels. Failure to follow this caution may result in damage to the cladding and/or the vehicle paint finish.

2. If the temperature is below 21° C (70° F), warm the body side cladding with a heat lamp or heat gun.

NOTE: The body side cladding is attached to the cab with adhesive tape. If required, apply 3M™ General Purpose Adhesive Cleaner or equivalent onto the cladding area to help loosen the adhesive tape.

3. Using a trim stick C-4755 or equivalent, remove and discard the cladding.

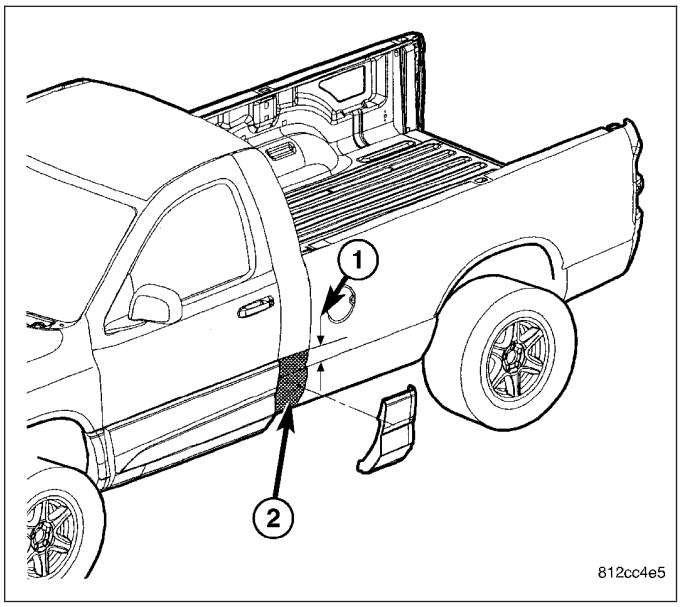

INSTALLATION

1. Using 3M™ General Purpose Adhesive Cleaner or equivalent, remove any adhesive tape residue from the cab.

NOTE: Install new cladding within 20 minutes of body panel cleaning.

2. Wipe the attachment area (2) with a clean, lint-free cloth, moistened with a 50% solution of water and alcohol, starting 120 mm (4.75 in.) above the character line (1) and then wipe dry the area immediately with a dry, lint-free cloth.

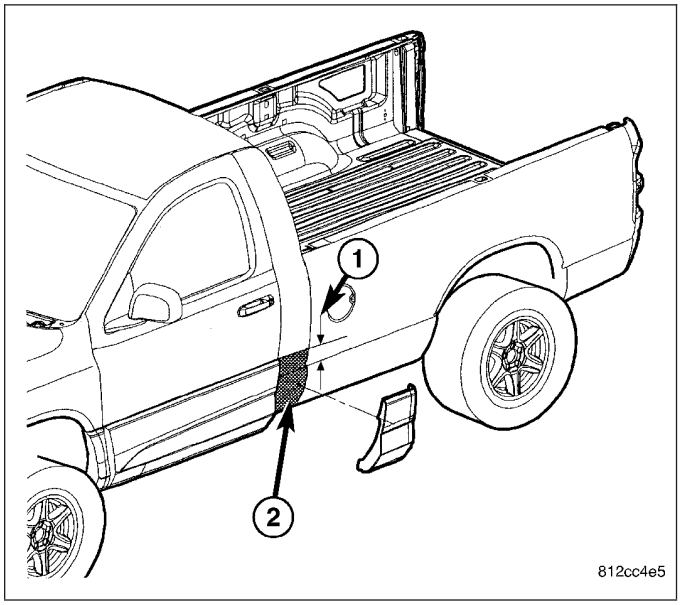

CAUTION: Do not exceed 52° C (120° F) when heating the cladding or body panels. Failure to follow this caution may result in damage to the cladding and/or the vehicle paint finish.

NOTE: If ambient temperatures are below 21° C (70° F), warm the body side cladding and body panel with a heat lamp or gun to assure proper adhesion.

3. Remove the protective covering from the adhesive tape on the back of the body side cladding (1) and position the cladding onto the cab using the previously installed guide tape.

NOTE: To ensure proper cladding adhesion, apply consistent and uniform pressure of approximately 40 p.s.i. over the entire surface of the cladding.

4. Install the body side cladding onto the cab.

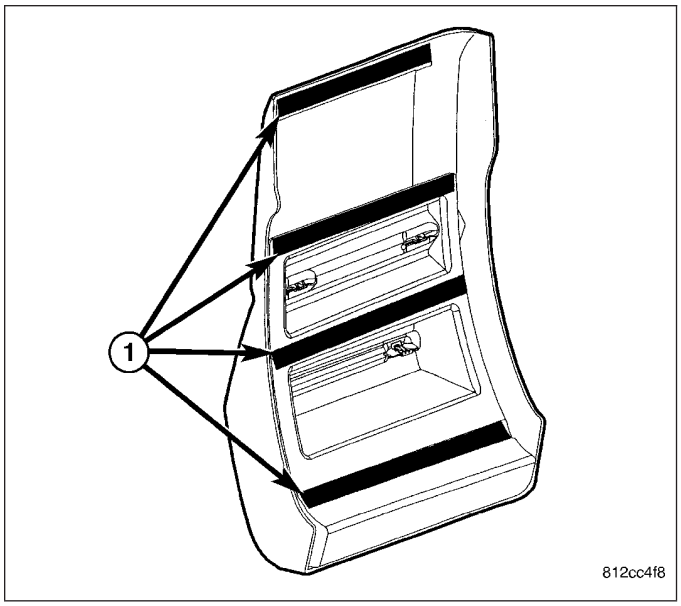

CLADDING-BODY SIDE - DOOR - SRT-10

REMOVAL

1. As a guide for installation, apply a length of masking tape on the door (2), parallel to the top edge of the body side cladding (1).

CAUTION: Do not exceed 52° C (120° F) when heating the cladding or body panels. Failure to follow this caution may result in damage to the cladding and/or the vehicle paint finish.

2. If the temperature is below 21° C (70° F), warm the body side cladding with a heat lamp or heat gun.

NOTE: The body side cladding is attached to the door panel with adhesive tape and push-pin type retainers. If required, apply 3M™ General Purpose Adhesive Cleaner or equivalent onto the cladding area to help loosen the adhesive tape.

3. Using a trim stick C-4755 or equivalent, disengage the push-pin retainers and remove and discard the cladding.

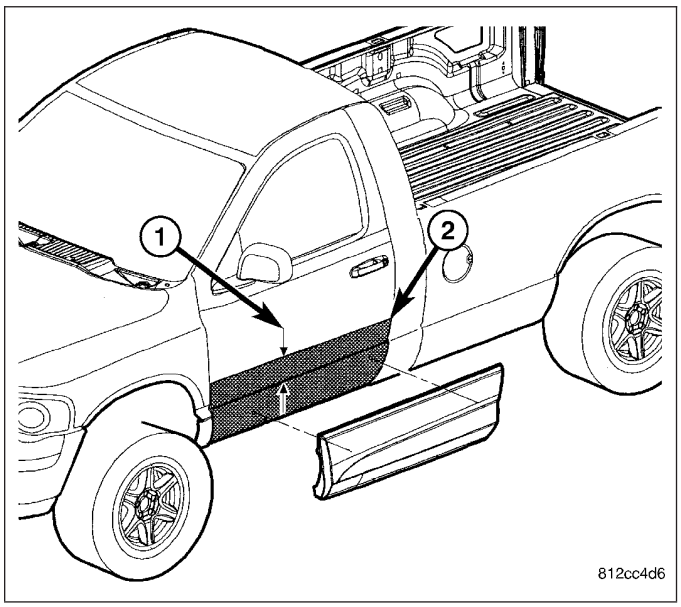

INSTALLATION

1. Using 3M™ General Purpose Adhesive Cleaner or equivalent, remove any adhesive tape residue from the door panel.

NOTE: Install new cladding within 20 minutes of body panel cleaning.

2. Wipe the attachment area (2) with a clean, lint-free cloth, moistened with a 50% solution of water and alcohol, starting 120 mm (4.75 in.) above the character line (1) and then wipe dry the area immediately with a dry, lint-free cloth.

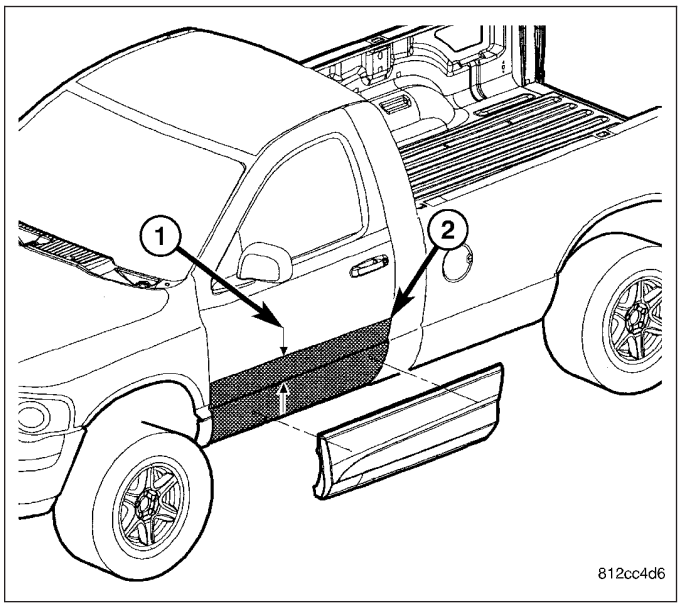

CAUTION: Do not exceed 52° C (120° F) when heating the cladding or body panels. Failure to follow this caution may result in damage to the cladding and/or the vehicle paint finish.

NOTE: If ambient temperatures are below 21° C (70° F), warm the body side cladding and body panel with a heat lamp or gun to assure proper adhesion.

3. Remove the protective covering from the adhesive tape on the back of the body side cladding (2) and position the cladding onto the door panel using the previously installed guide tape.

NOTE: To ensure proper cladding adhesion, apply consistent and uniform pressure of approximately 40 p.s.i. over the entire surface of the cladding.

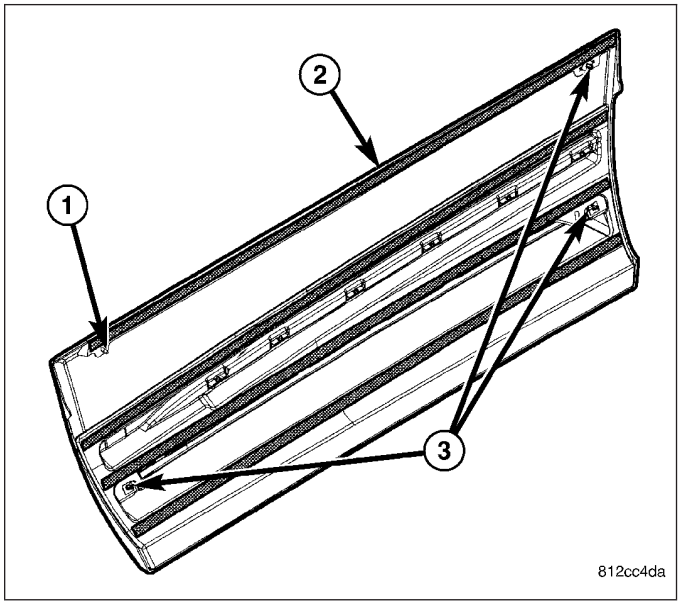

4. Install the body side cladding onto the door panel using the locating pin (1). Fully engage the push-pin retainers (3).

CLADDING-BODY SIDE - FENDER SRT-10

REMOVAL

1. As a guide for installation, apply a length of masking tape on the body panel, parallel to the top edge and, to one end of the body side cladding (1).
2. Remove the two screws (3) that secure the body side cladding to the front fender (2).

CAUTION: Do not exceed 52° C (120° F) when heating the cladding or body panels. Failure to follow this caution may result in damage to the cladding and/or the vehicle paint finish.

3. If the temperature is below 21° C (70° F), warm the body side cladding with a heat lamp or heat gun.

NOTE: The body side cladding is attached to the body panel with adhesive tape. If required, apply 3M™ General Purpose Adhesive Cleaner or equivalent onto the cladding area to help loosen the adhesive tape.

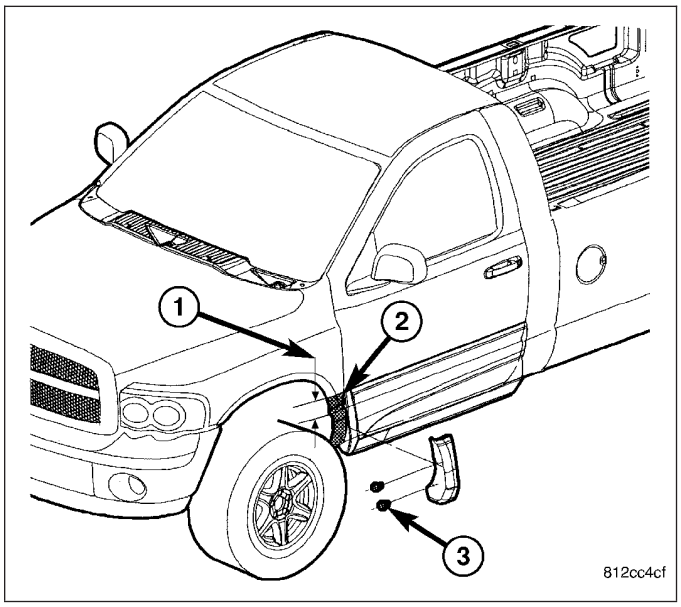

4. Using a trim stick C-4755 or equivalent, remove and discard the cladding.

INSTALLATION

1. Using 3M™ General Purpose Adhesive Cleaner or equivalent, remove any adhesive tape residue from the front fender.

NOTE: Install new cladding within 20 minutes of body panel cleaning.

2. Wipe the attachment area (2) with a clean, lint-free cloth, moistened with a 50% solution of water and alcohol, starting 120 mm (4.75 in.) above the character line (1) and then wipe dry the area immediately with a dry, lint-free cloth.

CAUTION: Do not exceed 52° C (120° F) when heating the cladding or body panels. Failure to follow this caution may result in damage to the cladding and/or the vehicle paint finish.

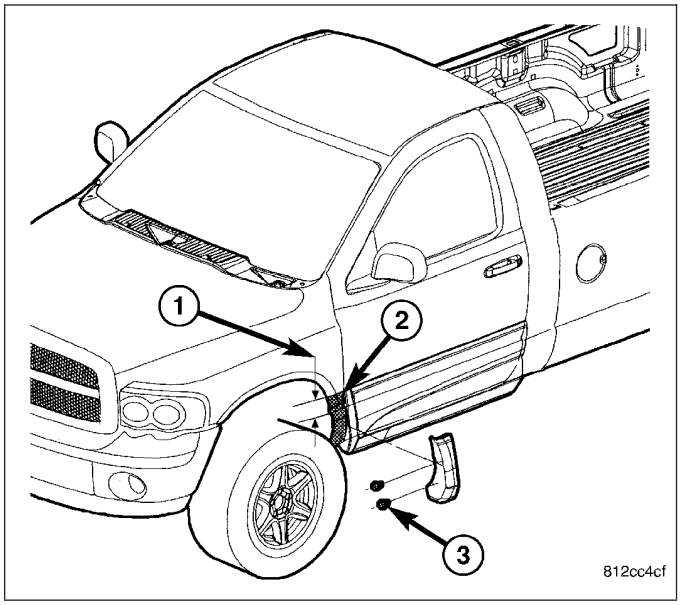

NOTE: If ambient temperatures are below 21° C (70° F), warm the body side cladding and body panel with a heat lamp or gun to assure proper adhesion.

3. Remove the protective covering from the back of the body side cladding and position the cladding onto the front fender using the previously installed guide tape.

NOTE: To ensure proper cladding adhesion, apply consistent and uniform pressure of approximately 40 p.s.i. over the entire surface of the cladding.

4. Install the body side cladding onto the front fender.

5. Install the two screws (3) that secure the body side cladding to the front fender. Tighten the screws to 5 N·m (44 in. lbs.).

SPOILER - SRT-10

REMOVAL

WITHOUT CARGO BOX COVER

1. Remove the two bolts (2) that secure the spoiler to the rear of the cargo box.
2. Slide the spoiler rearward to disengage the two studs (1) and remove the spoiler.
3. If required, remove the two nuts that secure the two studs to the rear of the cargo box and remove the studs.

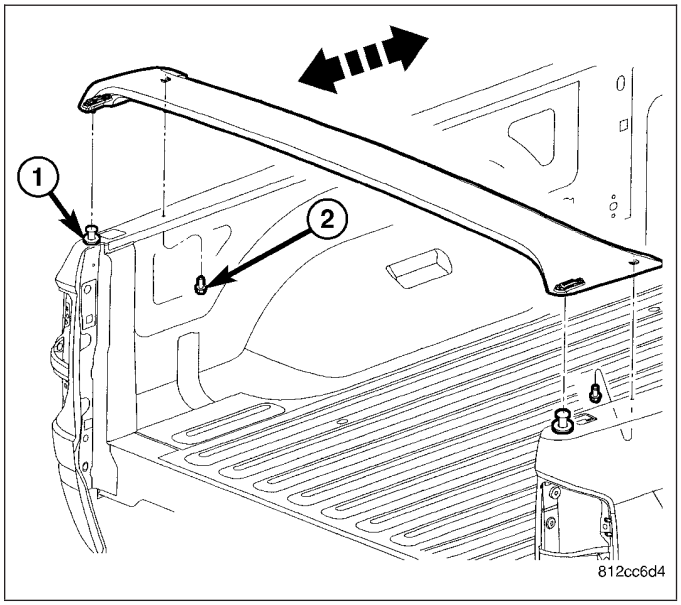

WITH CARGO BOX COVER

1. Remove the five nuts (1) that secure the spoiler (2) to the cargo box cover (3).
2. Remove the spoiler from the cargo box cover
.

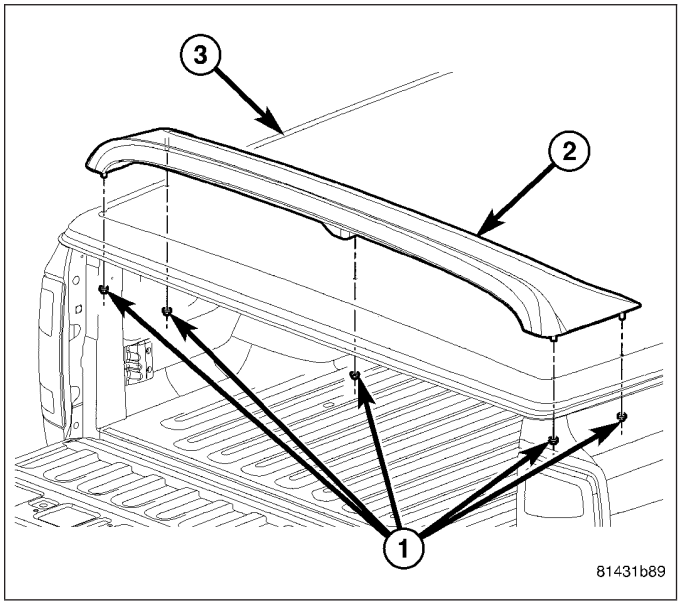

INSTALLATION

WITHOUT CARGO BOX COVER

1. If removed, position the two studs (1) onto the rear of the cargo box and install the retaining nuts. Tighten the nuts to 9 N·m (80 in. lbs.).
2. Position the spoiler over the two studs and slide the spoiler forward until the studs fully engage.
3. Install the two bolts (2) that secure the spoiler to the rear of the cargo box. Tighten the bolts to 6 N·m (50 in. lbs.).

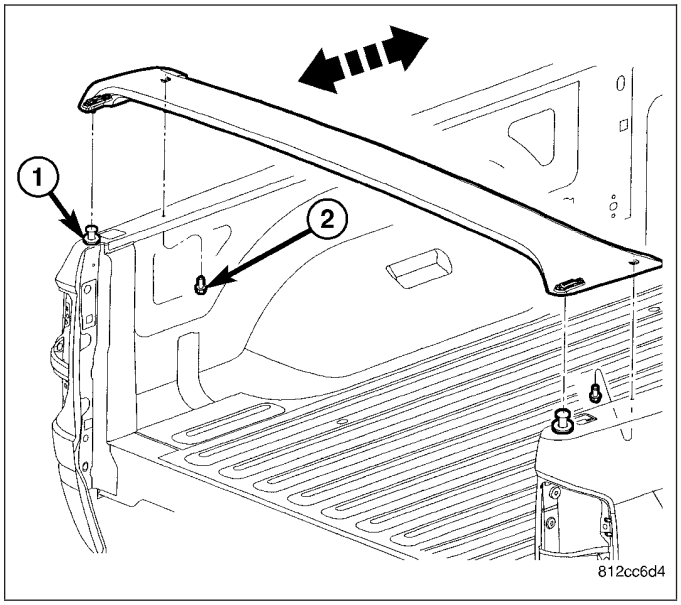

WITH CARGO BOX COVER

1. Position the spoiler (2) onto the rear of the cargo box cover (3).
2. Install the five nuts (1) that secure the spoiler to the cargo box cover. Tighten the nuts to 9 N·m (80 in. lbs.).

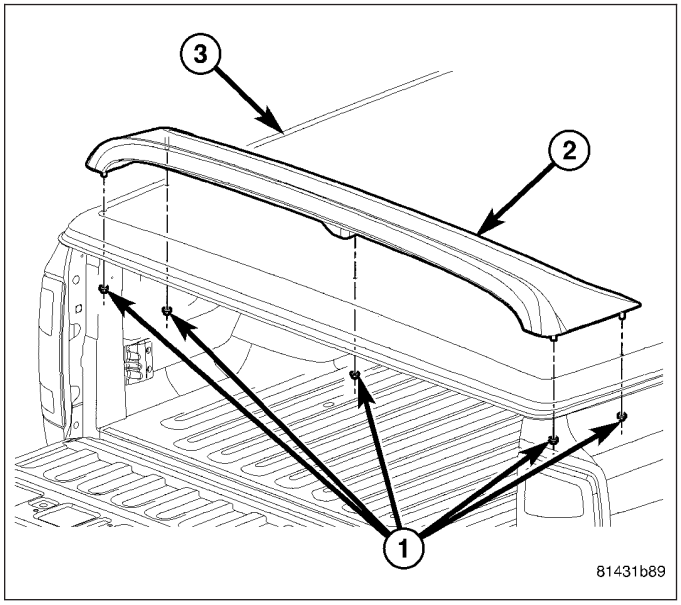

HOOD

TABLE OF CONTENTS

page

BEZEL-HOOD SRT-10
REMOVAL 112
INSTALLATION 113
HINGE
REMOVAL 114
INSTALLATION 115
HOOD
REMOVAL 116
INSTALLATION 116
LATCH
REMOVAL 117
INSTALLATION 117

page

LATCH RELEASE CABLE/HANDLE ASSEMBLY
REMOVAL
REMOVAL 118
INSTALLATION 118
LATCH STRIKER / SECONDARY CATCH
REMOVAL 119
INSTALLATION 119
SUPPORT CYLINDER
REMOVAL 120
INSTALLATION 121

BEZEL-HOOD SRT-10

REMOVAL

NOTE: If the hood scoop bezel is removed for any reason, it should be replaced.

1. Remove the four nuts that secure the hood scoop bezel to the hood.

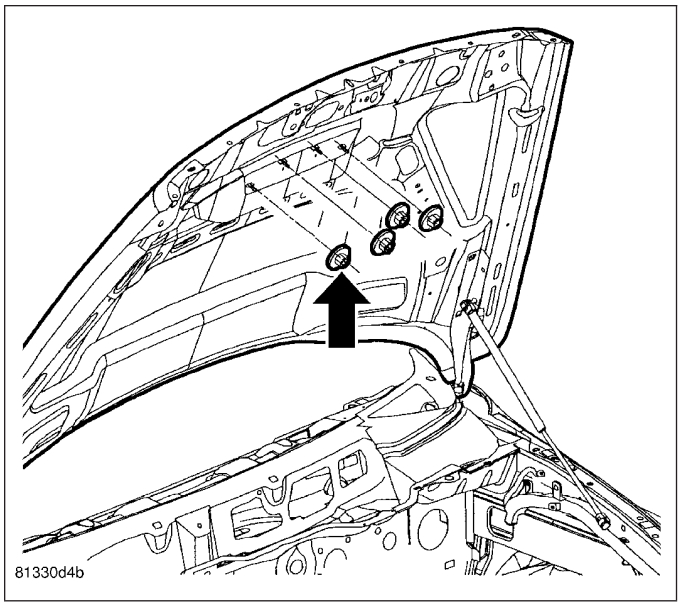

2. Using a trim stick C-4755 or equivalent, disengage the upper retaining clips (2) for the hood scoop bezel (3) from the hood scoop (1).

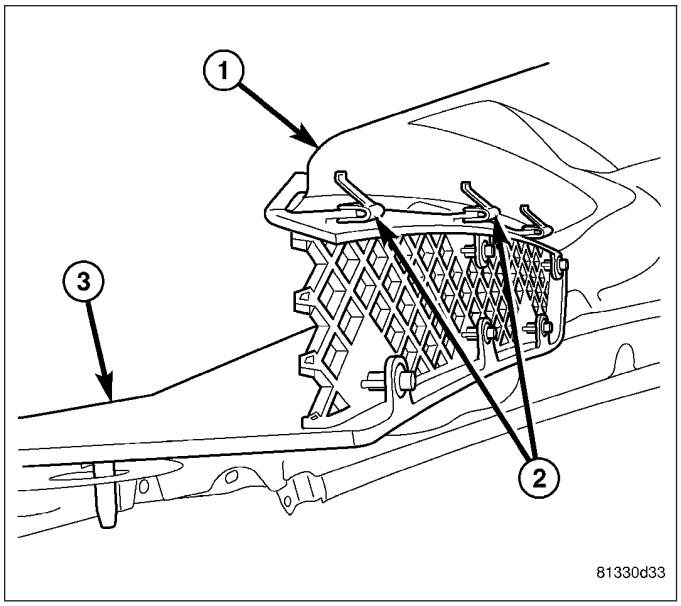

3. Rotate the front of the hood scoop bezel upward, toward the rear of the hood to separate the upper retaining clips from the hood scoop.

CAUTION: If the upper retaining clips come off of the bezel during removal, DO NOT open the hood. This will help prevent the retaining clips from becoming lost inside the hood.

NOTE: If required, use a magnet to remove any retaining clips that may have fallen off of the hood scoop bezel during removal.

4. Remove the hood scoop bezel from the hood.

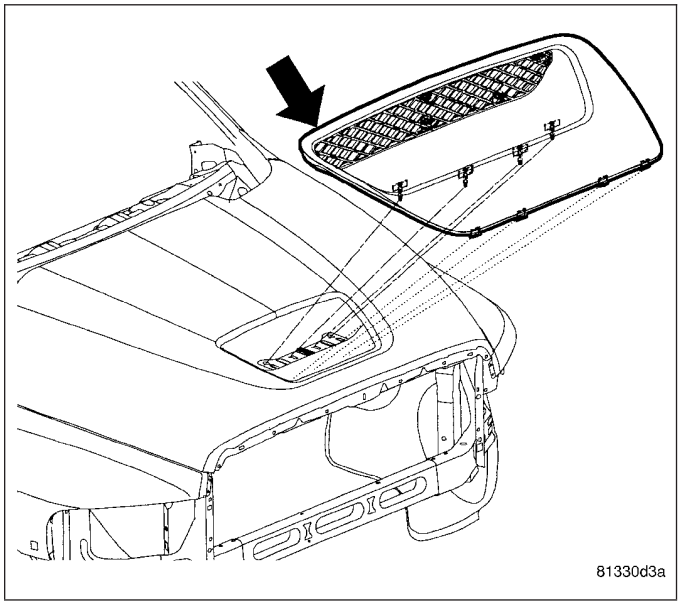

INSTALLATION

NOTE: If the hood scoop bezel is removed for any reason, it should be replaced.

1. Position the hood scoop bezel (3) into the hood scoop (1) and rotate it forward and downward to engage the upper retaining clips (2) to the hood scoop as shown.

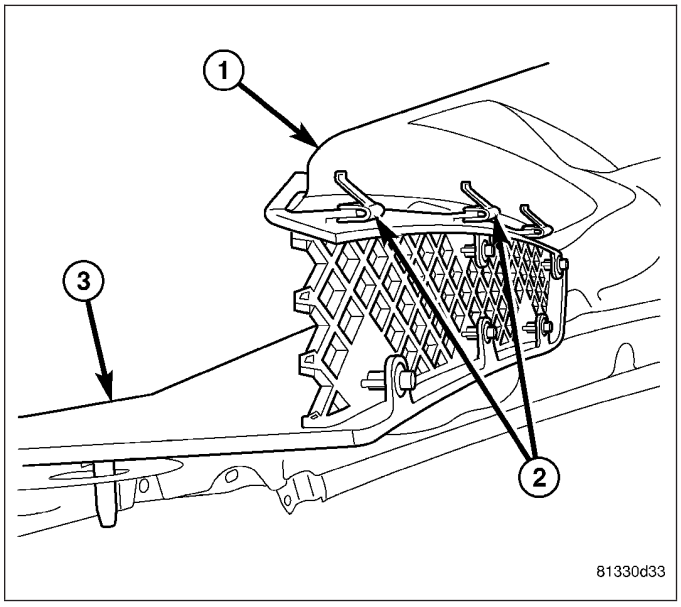

2. Install the four nuts that secure the hood scoop bezel to the hood. Tighten the nuts securely.

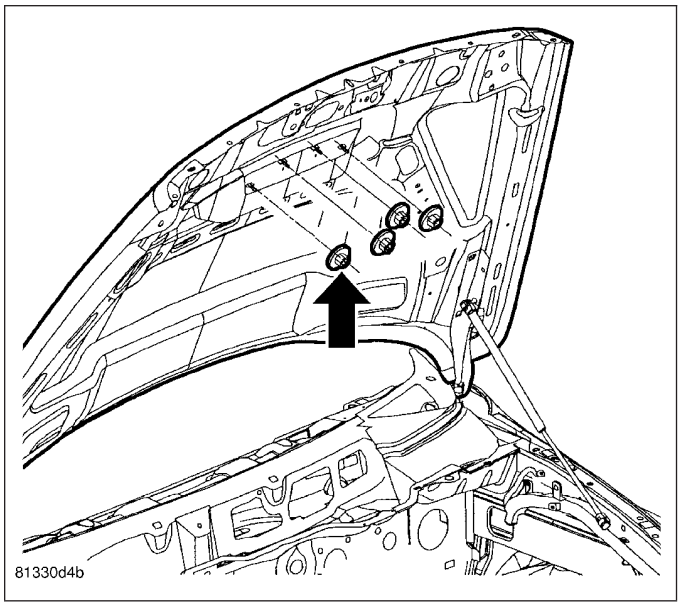

HINGE

REMOVAL

NOTE: It is not necessary to remove the hood to replace the hood hinges. Hood hinges can be replaced one at a time.

1. Remove the cowl grille (Refer to 23 - BODY/EXTERIOR/COWL GRILLE - REMOVAL).
2. Using a grease pencil or equivalent, mark the position of the hood hinge (3) on the hood for the hinge being serviced.
3. Support the hood and disconnect the support cylinder from the hood (Refer to 23 - BODY/HOOD/SUPPORT CYLINDER - REMOVAL).
4. Remove the two nuts that secure the hood to the hood hinge.
5. Remove the bolt (2) that secures the front fender (1) to the hood hinge.

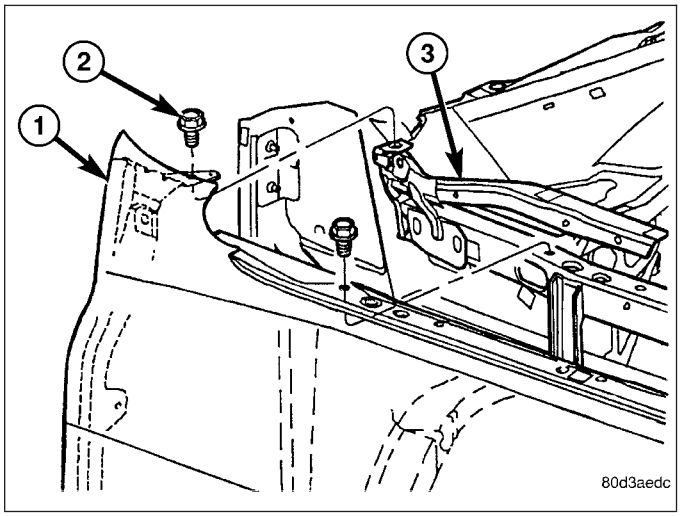

6. Remove the wheelhouse splash shield (Refer to 23 - BODY/EXTERIOR/FRONT WHEELHOUSE SPLASH SHIELD - REMOVAL).
7. Remove the bolts (3) that secure the hood hinge (2) to the fender rail (1).
8. Slide the hood hinge forward and remove the hinge.

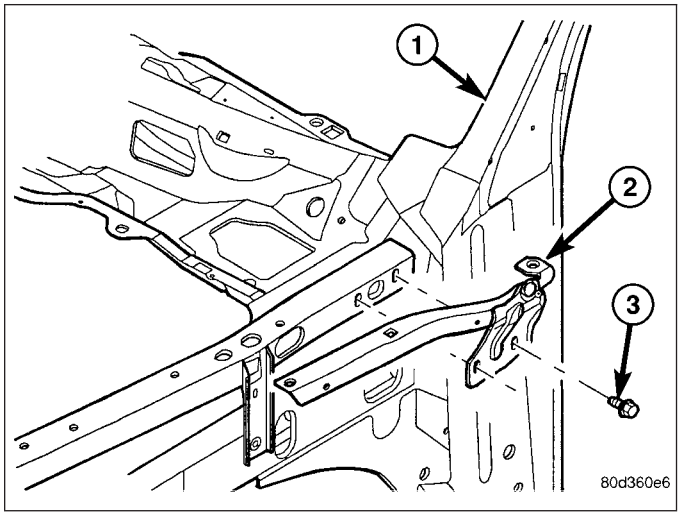

INSTALLATION

NOTE: It is not necessary to remove the hood to replace the hood hinges. Hood hinges can be replaced one at a time.

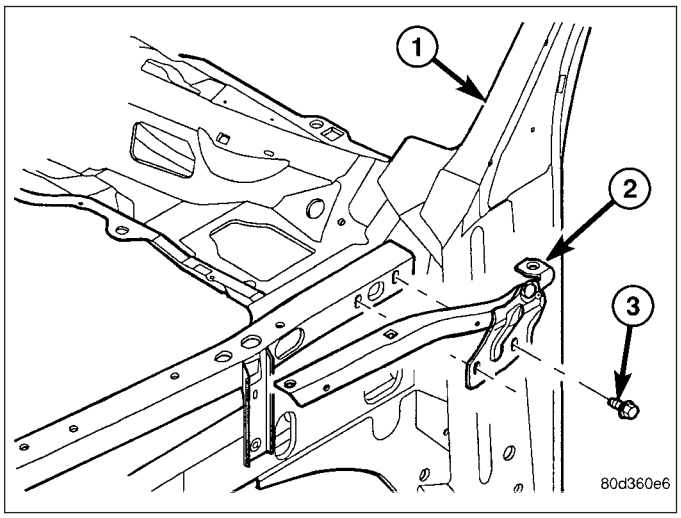

1. Position the hood hinge (2) onto the fender rail (1) and slide it rearward to its installed location.
2. Install the bolts (3) that secure the hood hinge to the fender rail. Tighten the bolts to 20 N·m (15 ft. lbs.).

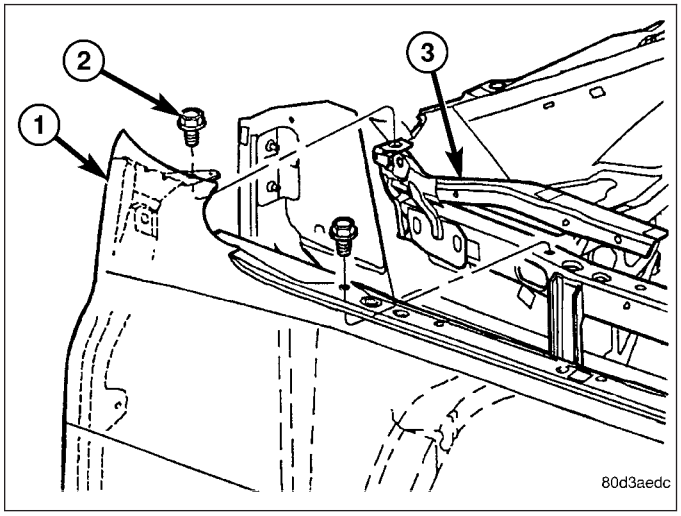

3. Install the bolt (2) that secures the front fender (1) to the hood hinge (3). Tighten the bolt to 17 N·m (13 ft. lbs.).
4. Loosely install the two nuts that secure the hood to the hood hinge.
5. Align the hood to the hood hinge using the reference marks made during the Removal procedure and tighten the nuts to 23 N·m (17 ft. lbs.).
6. Install the support cylinder (Refer to 23 - BODY/HOOD/SUPPORT CYLINDER - INSTALLATION).
7. If required, adjust the hood to the correct position (Refer to 23 - BODY/BODY STRUCTURE/GAP AND FLUSH - SPECIFICATIONS).
8. Install the wheelhouse splash shield (Refer to 23 - BODY/EXTERIOR/FRONT WHEELHOUSE SPLASH SHIELD - INSTALLATION).
9. Install the cowl grille (Refer to 23 - BODY/EXTERIOR/COWL GRILLE - INSTALLATION).

HOOD

REMOVAL

1. Disconnect and isolate the negative battery cable.
2. Remove the underhood lamp unit and the ambient temperature sensor from the hood (1) (Refer to 8 - ELECTRICAL/LAMPS/LIGHTING - EXTERIOR/UNDERHOOD LAMP UNIT - REMOVAL) and (Refer to 8 - ELECTRICAL/OVERHEAD CONSOLE/SENSOR-AMBIENT TEMPERATURE - REMOVAL).
3. If required, remove the grille and the grille frame from the hood (Refer to 23 - BODY/EXTERIOR/GRILLE - REMOVAL) and (Refer to 23 - BODY/EXTERIOR/GRILLE FRAME - REMOVAL).
4. Using a grease pencil or equivalent, mark the position of the hood hinges (2) on the hood.
5. Support the hood and disconnect the support cylinders from the hood (Refer to 23 - BODY/HOOD/SUPPORT CYLINDER - REMOVAL).
6. Remove the two nuts (3) that secure the hood to each hood hinge and remove the hood.

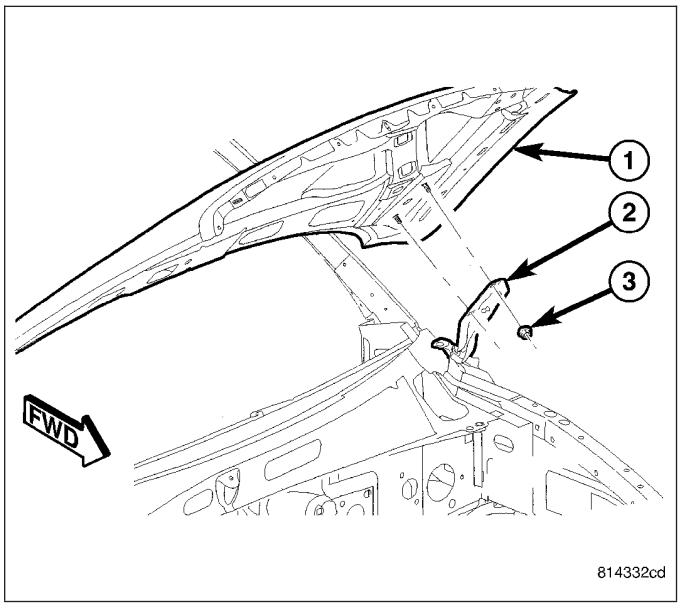

INSTALLATION

1. Position the hood (1) onto the hood hinges (2) and loosely install the two nuts (3) that secure the hood to each hood hinge.
2. Align the hood to the hood hinges using the reference marks made during the Removal procedure and tighten the nuts to 23 N·m (17 ft. lbs.).
3. Install the support cylinders to the hood (Refer to 23 - BODY/HOOD/SUPPORT CYLINDER - INSTALLATION).
4. If removed, install the grille frame and the grille to the hood (Refer to 23 - BODY/EXTERIOR/GRILLE FRAME - INSTALLATION) and (Refer to 23 - BODY/EXTERIOR/GRILLE - INSTALLATION).
5. Install the underhood lamp unit and the ambient temperature sensor to the hood (Refer to 8 - ELECTRICAL/LAMPS/LIGHTING - EXTERIOR/UNDERHOOD LAMP UNIT - INSTALLATION) and (Refer to 8 - ELECTRICAL/OVERHEAD CONSOLE/SENSOR-AMBIENT TEMPERATURE - INSTALLATION).
6. Reconnect the negative battery cable.
7. If required, adjust the hood to the correct position (Refer to 23 - BODY/BODY STRUCTURE/GAP AND FLUSH - SPECIFICATIONS).

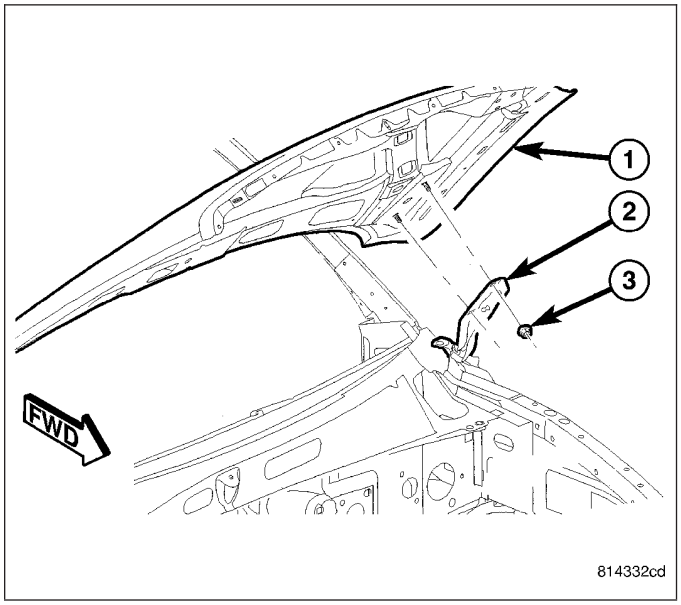

LATCH

REMOVAL

1. Using a grease pencil or equivalent, mark the position of the hood latch (1) on the upper radiator crossmember.
2. Remove the two bolts (3) that secure the hood latch to the upper radiator crossmember.
3. Disconnect the hood latch cable (2) from the hood latch and remove the latch.

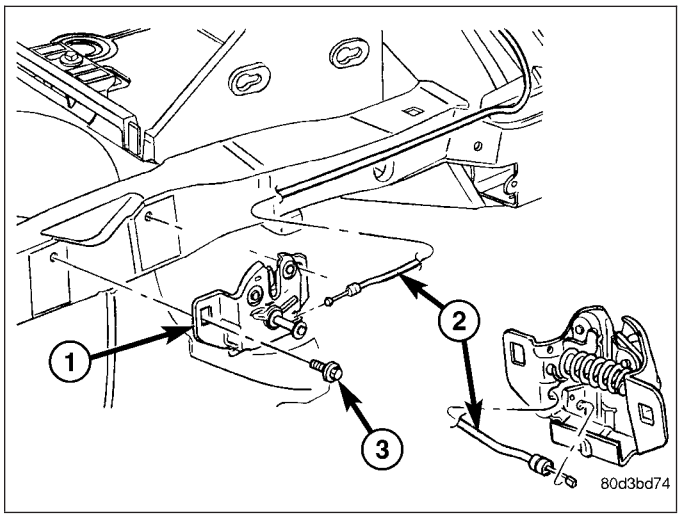

INSTALLATION

1. Connect the hood latch cable (2) to the hood latch (1).
2. Position the hood latch to the upper radiator crossmember and loosely install the two bolts (1) that secure the latch to the crossmember.
3. Align the hood latch to the upper radiator crossmember using the reference marks made during the Removal procedure and tighten the bolts to 11 N·m (8 ft. lbs.).
4. If required, adjust the hood to the correct position (Refer to 23 - BODY/BODY STRUCTURE/GAP AND FLUSH - SPECIFICATIONS).

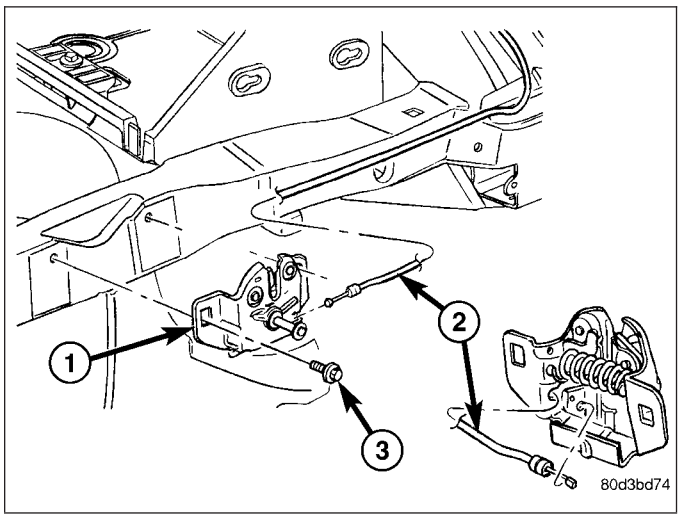

LATCH RELEASE CABLE/HANDLE ASSEMBLY

REMOVAL

REMOVAL

1. Remove the hood latch (Refer to 23 - BODY/HOOD/LATCH - REMOVAL).
2. Remove the battery tray from the left side of the engine compartment (Refer to 8 - ELECTRICAL/BATTERY SYSTEM/TRAY - REMOVAL).
3. Remove the three hood release cable retainers from the upper radiator crossmember and the left fender rail.
4. From inside the vehicle, remove the two bolts (1) that secure the hood release handle (2) to the instrument panel bracket (3).
5. Remove the grommet (4) from the cowl panel and remove the hood release cable and handle assembly.

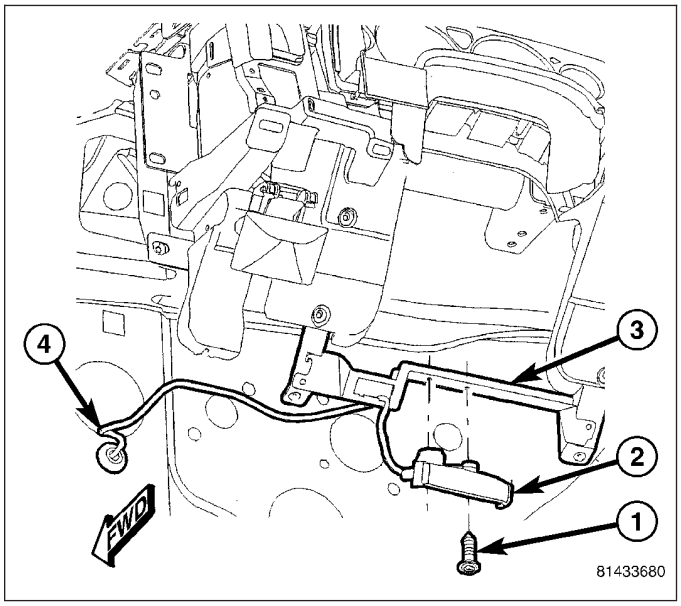

INSTALLATION

1. Route the hood release cable through the cowl panel and install the grommet (4).
2. Position the hood release handle (2) onto the instrument panel bracket (3).
3. Install the two bolts (1) that secure the hood release handle to the instrument panel bracket. Tighten the bolts to 9 N·m (80 in. lbs.).
4. Route the hood release cable along the left fender rail and the upper radiator crossmember and install the three hood release cable retainers.
5. Install the battery tray to the left side of the engine compartment (Refer to 8 - ELECTRICAL/BATTERY SYSTEM/TRAY - INSTALLATION).
6. Install the hood latch (Refer to 23 - BODY/HOOD/LATCH - INSTALLATION).

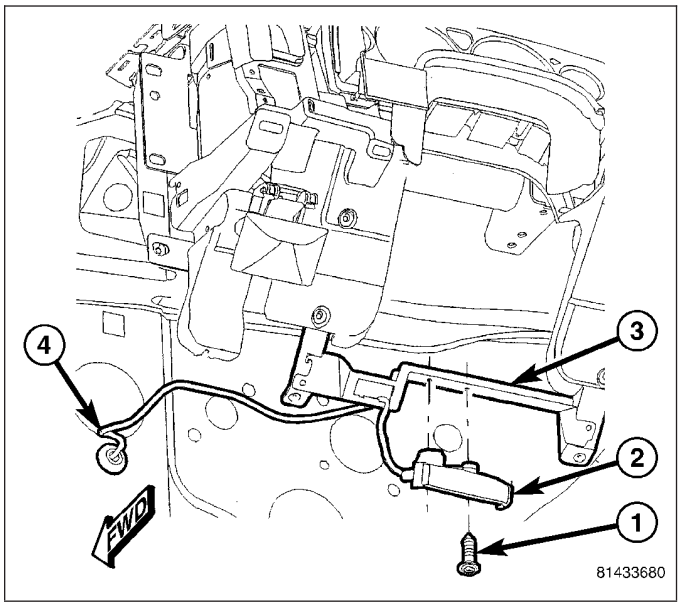

LATCH STRIKER / SECONDARY CATCH

REMOVAL

1. Disconnect the release handle (4) from the secondary hood latch and striker assembly (2) and remove the handle from the grille frame (5).
2. Remove the two bolts (3) that secure the secondary hood latch and striker assembly to the hood and remove the assembly.

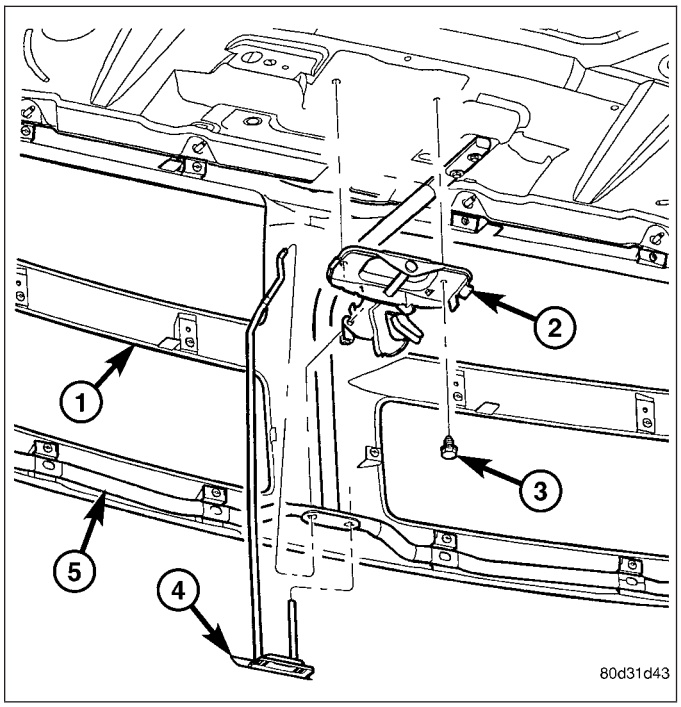

INSTALLATION

1. Position the secondary hood latch and striker assembly (2) to the hood.
2. Install the two bolts (3) that secure the secondary hood latch and striker assembly to the hood. Tighten the bolts to 11 N·m (8 ft. lbs.).
3. Install the release handle (4) through the grille frame (5) and connect it to the secondary hood latch.
4. If required, adjust the hood to the correct position (Refer to 23 - BODY/BODY STRUCTURE/GAP AND FLUSH - SPECIFICATIONS).

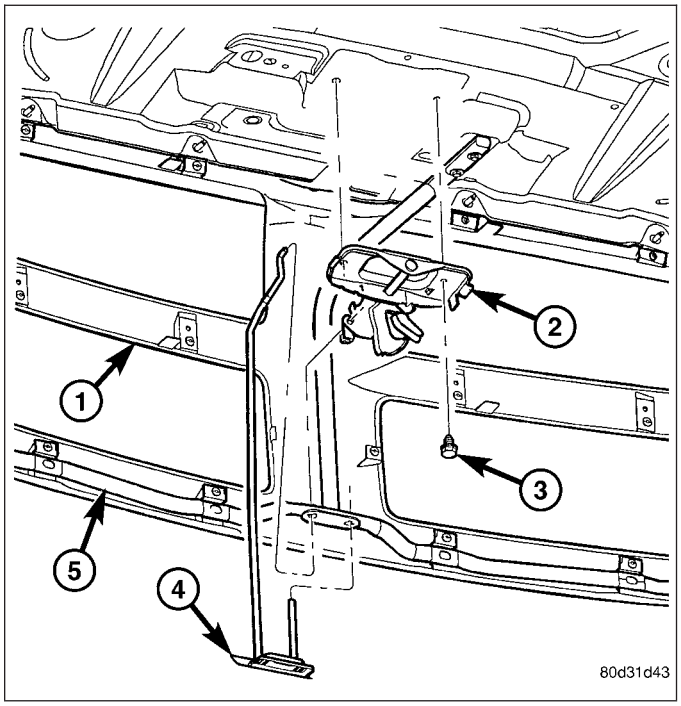

SUPPORT CYLINDER

REMOVAL

NOTE: The hood support cylinders can be replaced one at a time.

1. Open and support the hood.

CAUTION: Do not pull on the hood support cylinders at the middle of the support cylinder during removal. Failure to follow this caution can result in damage to the hood support cylinders.

2. Using a small flat bladed tool, or equivalent (3), release the retaining clip (2) at each end of the support cylinder while carefully pulling the ball socket (1) away from the ball stud (4).

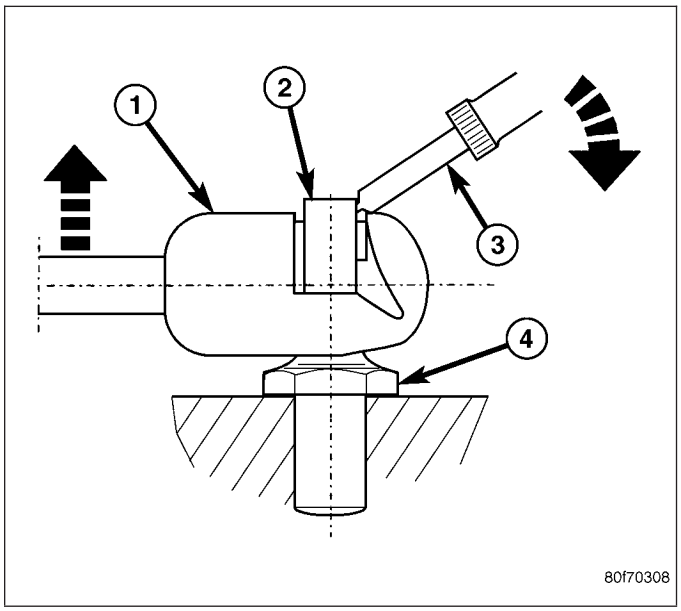

NOTE: Lift the clips (1) only enough to release the ball studs (3).

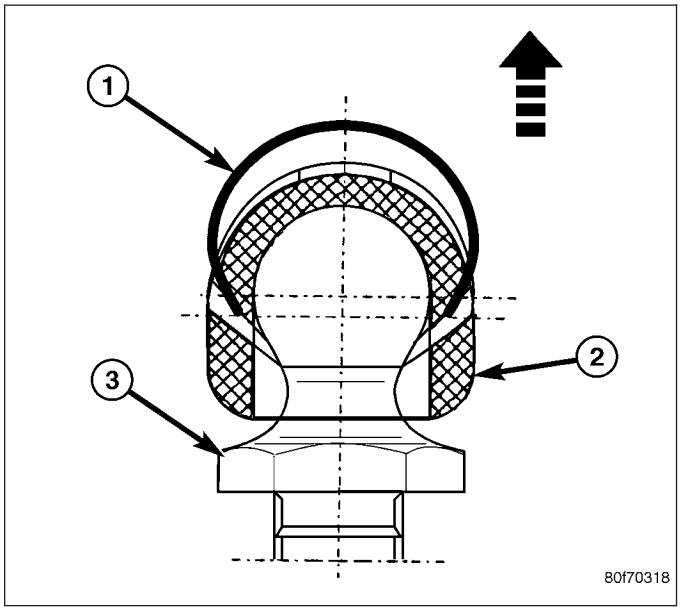

3. Disconnect the hood support cylinder (5) from the hood (1) and the fender rail (3).
4. If required, remove the upper ball stud (2) from hood and the lower ball stud (4) from the fender rail.

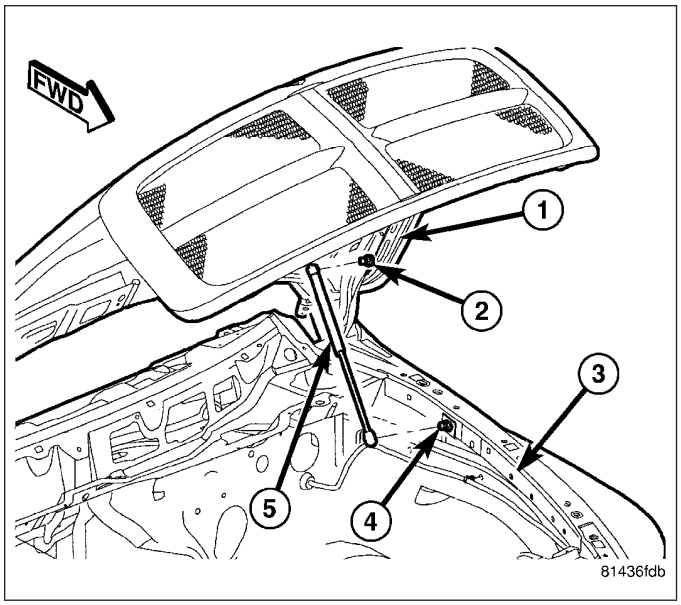

INSTALLATION

1. If removed, install the upper ball stud (2) onto the hood (1) and the lower ball stud (4) onto the fender rail (3). Install the ball studs securely.

CAUTION: Do not push on the hood support cylinders at the middle of the support cylinder during installation. Failure to follow this caution can result in damage to the hood support cylinders.

NOTE: Install the hood support cylinders with the cylinder end connected to the hood as shown.

NOTE: If required, only release each retaining clip enough to install the ball socket onto the ball stud.

2. Install the hood support cylinder (5) over the upper and lower ball studs and fully engage the retaining clips.

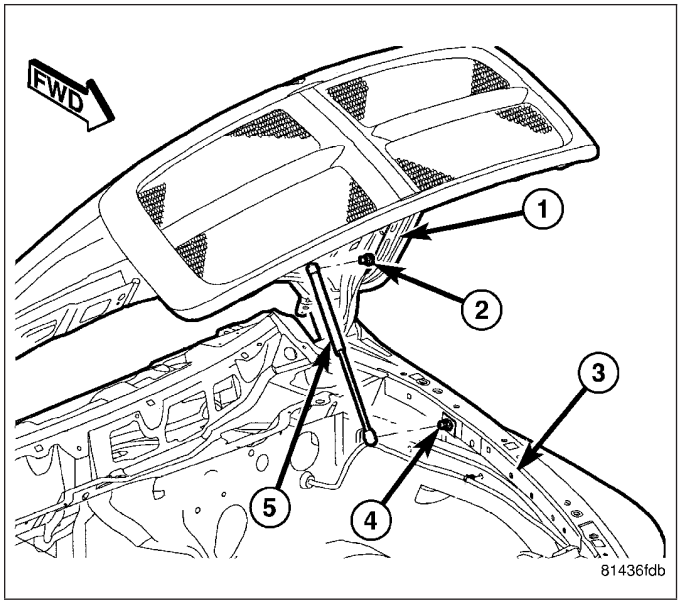

INSTRUMENT PANEL

TABLE OF CONTENTS

page

ASH RECEIVER
REMOVAL 122
INSTALLATION 123
CLUSTER BEZEL
REMOVAL 123
INSTALLATION 124
CUP HOLDER
REMOVAL 124
INSTALLATION 127
GLOVE BOX
REMOVAL 128
INSTALLATION 128
GLOVE BOX LATCH
REMOVAL 129
INSTALLATION 130
INSTRUMENT PANEL ASSEMBLY
REMOVAL 130
INSTALLATION 135
INSTRUMENT PANEL CENTER BEZEL
REMOVAL 138
INSTALLATION 139
INSTRUMENT PANEL DRIVER SIDE BEZEL
REMOVAL 139
INSTALLATION 140
INSTRUMENT PANEL LOWER SURROUND
REMOVAL 140
INSTALLATION 141
INSTRUMENT PANEL HEADLAMP SWITCH BEZEL
REMOVAL 141
INSTALLATION 142
INSTRUMENT PANEL TOP COVER
REMOVAL 142
INSTALLATION 143
STEERING COLUMN OPENING COVER
REMOVAL 143
INSTALLATION 144
STEERING COLUMN OPENING SUPPORT BRACKET
REMOVAL 144
INSTALLATION 145
STORAGE BIN
REMOVAL 146
INSTALLATION 147

ASH RECEIVER

REMOVAL

1. Open the ash receiver (3) and apply force in a downward motion to disengage the locking tabs (1) from the instrument panel (2).
2. Roll the ash receiver further downward and remove it from the instrument panel.

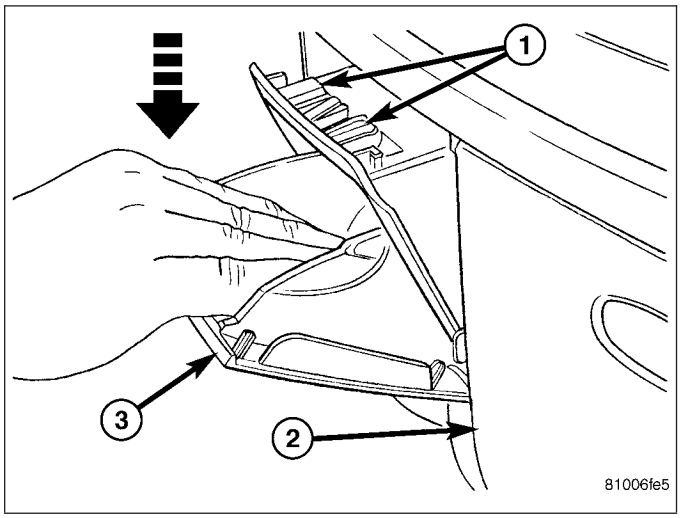

INSTALLATION

1. Position the bottom of the ash receiver (3) into the opening of the instrument panel (2).
2. Pivot the ash receiver upward and fully seat the retaining clips (1) into the instrument panel.

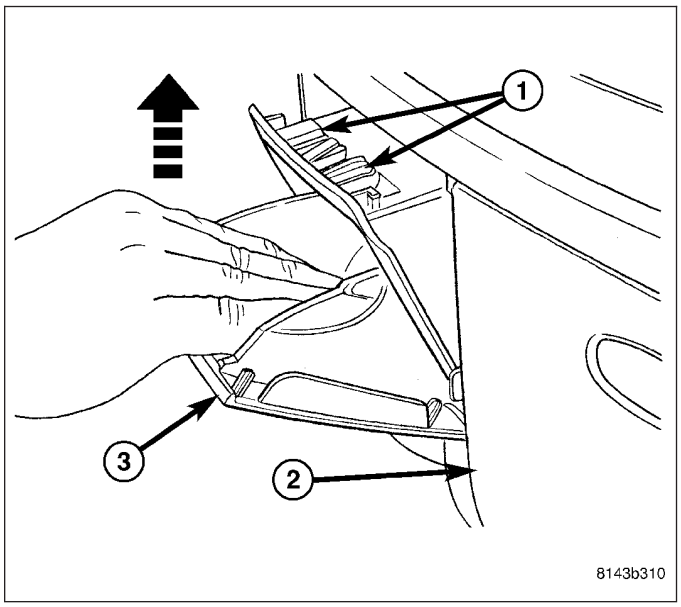

CLUSTER BEZEL

REMOVAL

WARNING: On vehicles equipped with airbags, disable the airbag system before attempting any steering wheel, steering column, seat belt tensioner, or instrument panel component diagnosis or service. Disconnect and isolate the battery negative (ground) cable, then wait two minutes for the airbag system capacitor to discharge before performing further diagnosis or service. This is the only sure way to disable the airbag system. Failure to take the proper precautions could result in accidental airbag deployment and possible personal injury or death.

1. Disconnect and isolate the negative battery cable.
2. Remove the headlamp switch bezel (Refer to 23 - BODY/INSTRUMENT PANEL/INSTRUMENT PANEL SWITCH BEZEL - REMOVAL).
3. Remove the instrument panel center bezel (Refer to 23 - BODY/INSTRUMENT PANEL/INSTRUMENT PANEL CENTER BEZEL - REMOVAL).
4. Remove the two screws (2) that secure the top of the instrument cluster bezel (3) to the instrument panel (1).
5. Using a trim stick C-4755 or equivalent, disengage the two retainer clips (4) that secure the bottom of the instrument cluster bezel to the instrument panel.
6. Carefully disengage the instrument cluster bezel from the instrument panel opening and remove the bezel.

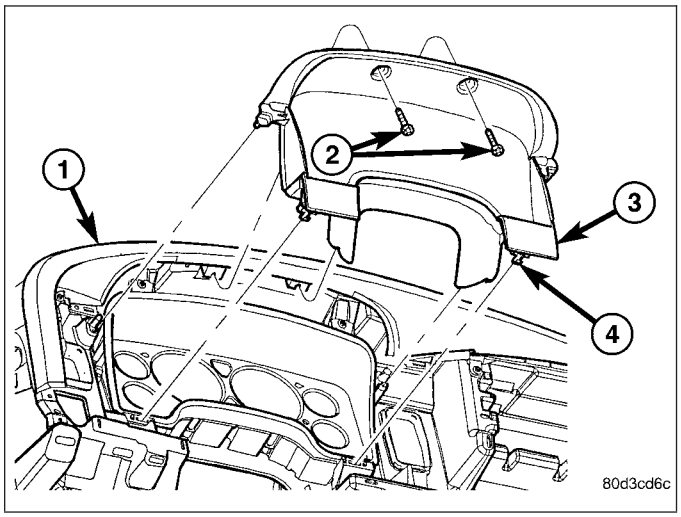

INSTALLATION

1. Position the instrument cluster bezel (3) into the opening of the instrument panel (1). Make sure to align the bosses over the posts located on the left and right side of the instrument cluster opening.
2. Install the instrument cluster bezel onto the instrument panel and fully engage the two retainer clips (4) to the instrument panel.
3. Install the two screws (2) that secure the instrument cluster bezel to the instrument pane. Tighten the screws to 2 N·m (17 in. lbs.).
4. Install the center bezel (Refer to 23 - BODY/INSTRUMENT PANEL/INSTRUMENT PANEL CENTER BEZEL - INSTALLATION).
5. Install the headlamp switch bezel (Refer to 23 - BODY/INSTRUMENT PANEL/INSTRUMENT PANEL SWITCH BEZEL - INSTALLATION).
6. Reconnect the negative battery cable.

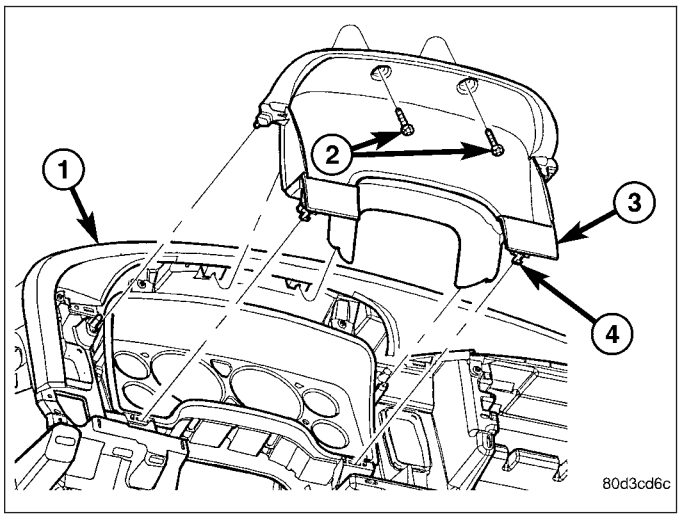

CUP HOLDER

REMOVAL

WARNING: On vehicles equipped with airbags, disable the airbag system before attempting any steering wheel, steering column, seat belt tensioner, or instrument panel component diagnosis or service. Disconnect and isolate the battery negative (ground) cable, then wait two minutes for the airbag system capacitor to discharge before performing further diagnosis or service. This is the only sure way to disable the airbag system. Failure to take the proper precautions could result in accidental airbag deployment and possible personal injury or death.

NOTE: A storage bin replaces the cup holder in the instrument panel when the vehicle is equipped with a floor console.

NOTE: If the cup holder is binding or sticking, (refer to - Cup Holder Binds or Sticks Repair Procedure) before replacing the cup holder.

1. Remove the center bezel (Refer to 23 - BODY/INSTRUMENT PANEL/INSTRUMENT PANEL CENTER BEZEL - REMOVAL).
2. Remove the airbag control module cover (Refer to 8 - ELECTRICAL/RESTRAINTS/COVER-AIRBAG CONTROL MODULE - REMOVAL).
3. Remove the four screws (1) that secure the cup holder (2) to the instrument panel.

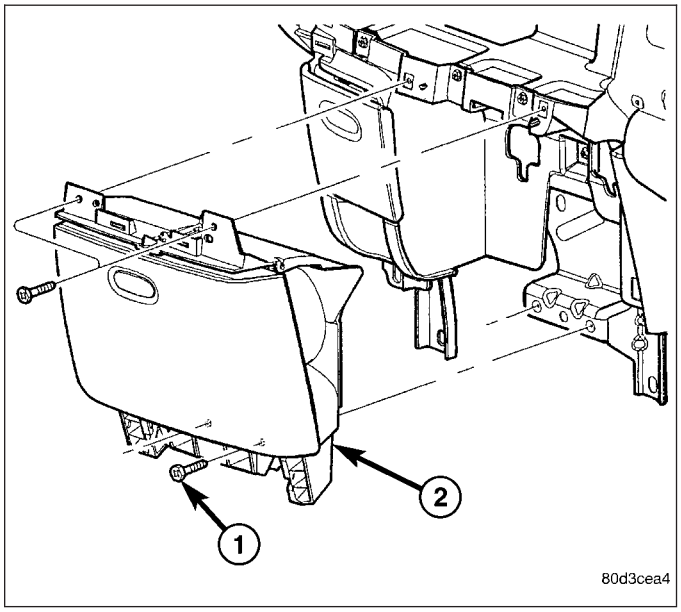

4. Open the cup holder (2) and remove the two screws (1) that secure the cup holder to the instrument panel.
5. Remove the cup holder from the vehicle.

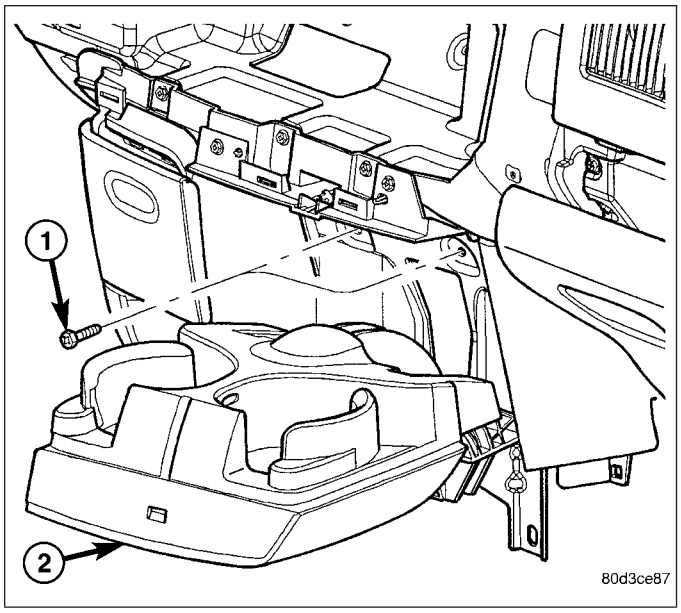

Cup Holder Binds or Sticks Repair Procedure

1. Using a trim stick C-4755 or equivalent, gently pry on each side of the Airbag Control Module (ACM) cover located under the cup holder and remove the ACM cover.
2. Operated the cup holder with the ACM cover removed. If the cup holder now operates freely, there is an interference between the ACM cover and bottom of the cup holder. If the cup holder binds with the ACM cover removed, proceed to Step 6.
3. Install the ACM cover and inspect the area where the cup holder and the ACM cover come together (3). There must be a gap between the ACM cover and the bottom of the cup holder. If the ACM cover is in contact with cup holder, try realigning the cover by pushing the bottom of the cover towards the front. if this provides a gap and the cup holder now operates freely, the repair is complete. If the gap cannot be achieved by adjusting the ACM cover proceed to the next step.

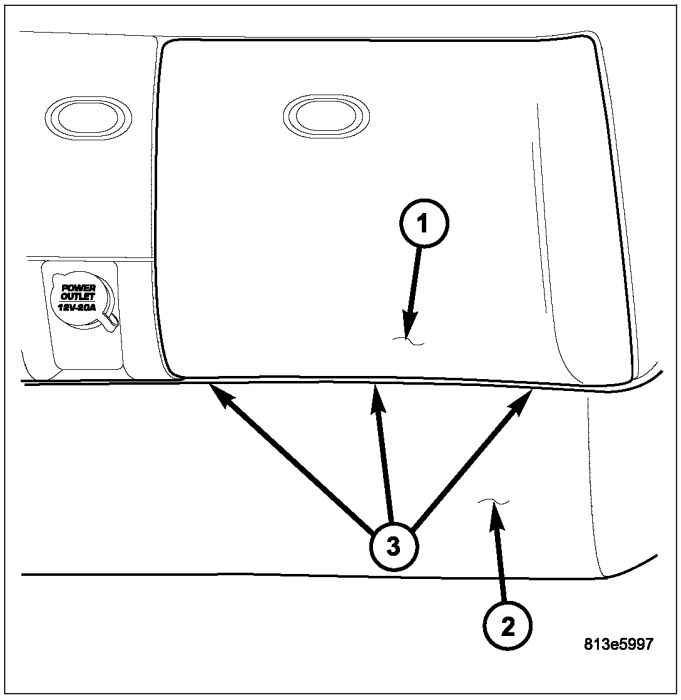

4. The ACM wire harness (1) runs rearward along the left side of the tunnel under the carpet. Rub your hand along the carpet in the area of the bottom of the ACM cover and feel for the harness. If the harness can be felt, it may be pushing the ACM cover upward and into the cup holder. If this is happening it may be necessary to reroute the harness or remove carpet padding from the area.
5. Roll the carpet back and make sure that there are no plastic retainers in the area that could cause the interference. If a retainer is present remove it. Make sure that the harness is not sitting on a raised portion of the floor. If it is, reroute the harness to a lower area on the floor. Remove the any carpet padding from the area where the harness contacts the carpet to gain additional clearance. This should provide the clearance needed. and complete the repair.

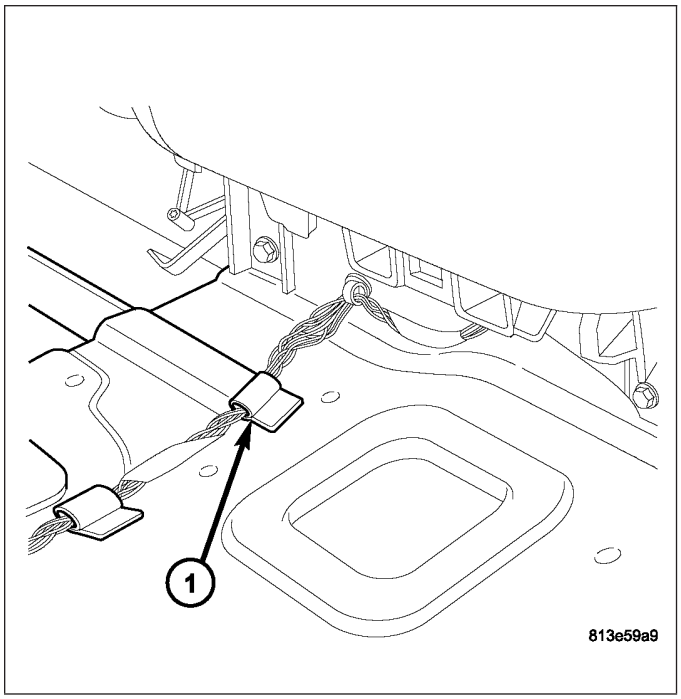

6. Remove the cup holder.
7. Operate the cup holder out of the vehicle. If the cup holder still binds it must be replaced. If it operates freely, inspect the metal bracket (1) where the cup holder fasteners attach as shown. If the bracket is bent, it could cause the cup holder to twist or distort when the screws are installed. Straighten the bracket and install the cup holder. If the cup holder operates freely the repair is complete. if the cup holder still binds, it must be replaced.

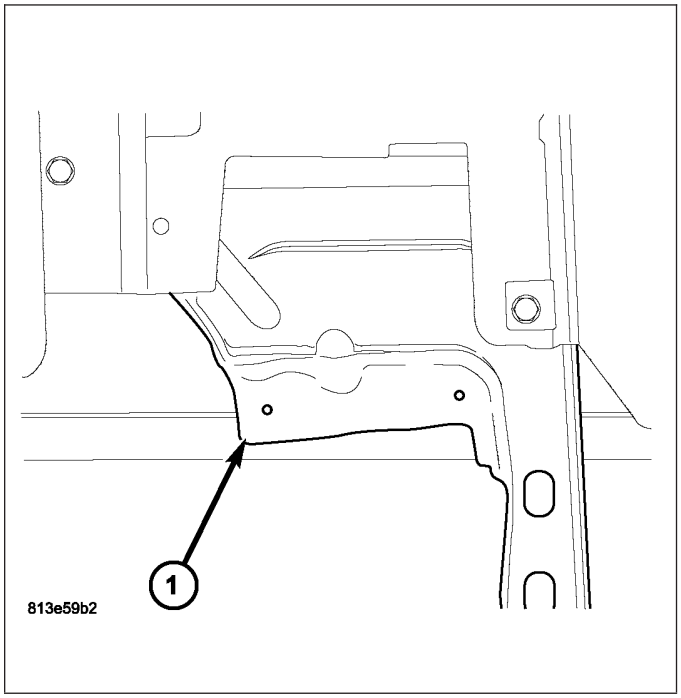

INSTALLATION

NOTE: A storage bin replaces the cup holder in the instrument panel when the vehicle is equipped with a floor console.

1. Position the cup holder (2) into the instrument panel.
2. Install the four screws (1) that secure the cup holder to the instrument panel. Tighten the screws to 2.2 N·m (20 in. lbs.).

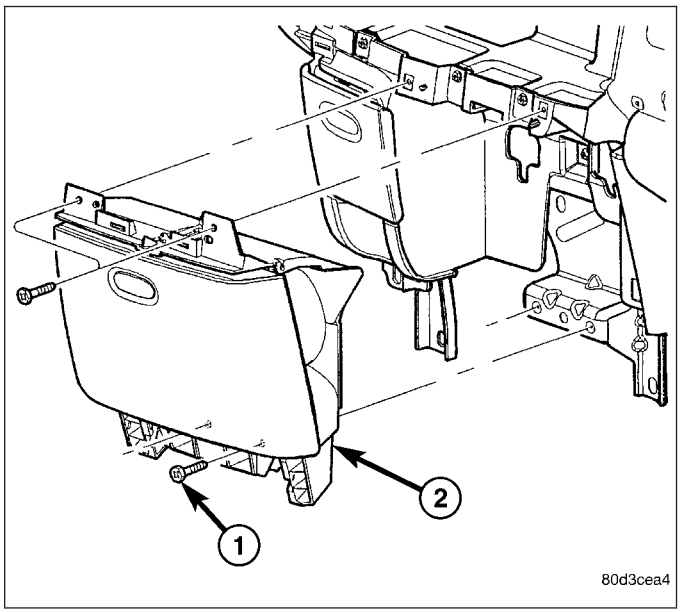

3. Open the cup holder (1) and install the two screws (2) that secure the cup holder to the instrument panel. Tighten the screws to 2.2 N·m (20 in. lbs.).
4. Install the center bezel (Refer to 23 - BODY/INSTRUMENT PANEL/INSTRUMENT PANEL CENTER BEZEL - INSTALLATION).
5. Install the airbag control module cover (Refer to 8 - ELECTRICAL/RESTRAINTS/COVER-AIRBAG CONTROL MODULE - INSTALLATION).

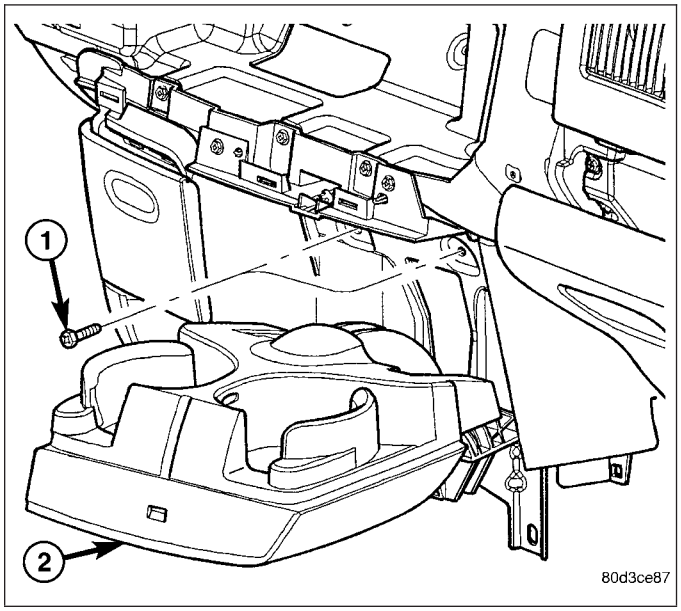

GLOVE BOX

REMOVAL

1. Open the glove box (1).
2. Release the two glove box stops (2) and lower the glove box downward past the stops.
3. Disengage the glove box hinges from the instrument panel and remove the glove box.

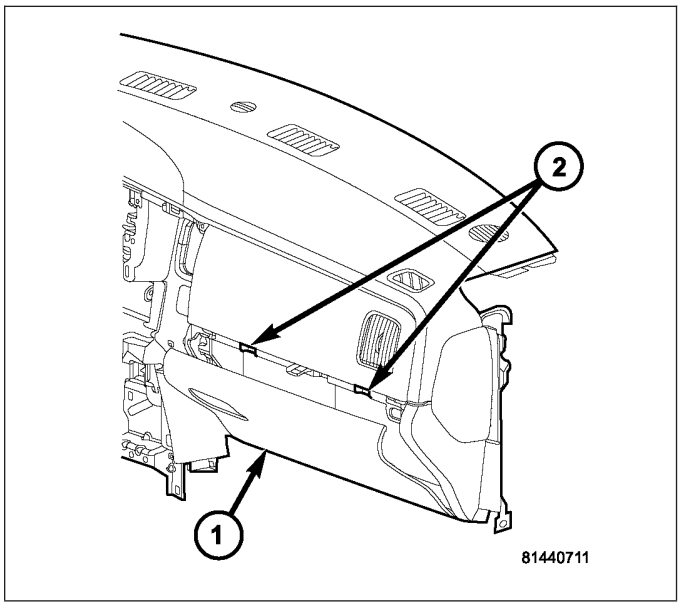

INSTALLATION

1. Engage the hinges of the glove box (1) to the instrument panel.
2. Press downward on the back edge of the glove box bin and raise the glove box past the two stops (2).
3. Close the glove box.

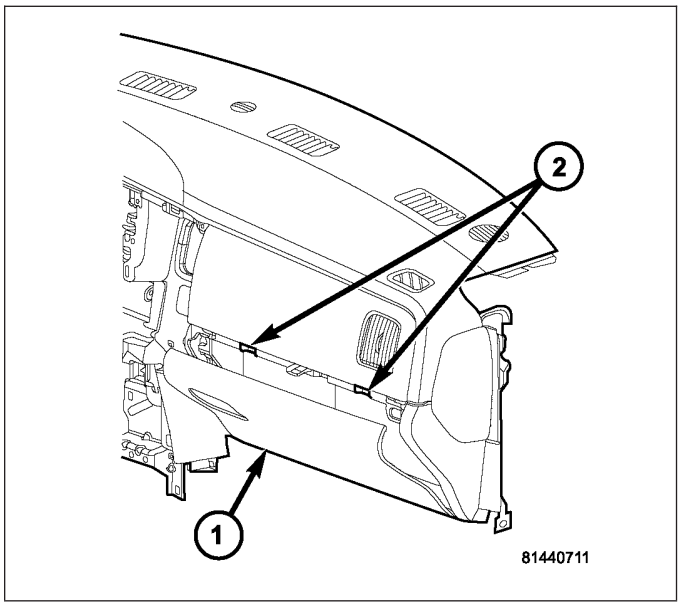

GLOVE BOX LATCH

REMOVAL

1. Remove the glove box and place it on a workbench (Refer to 23 - BODY/INSTRUMENT PANEL/ GLOVE BOX - REMOVAL).
2. Remove the 15 screws (1) that secure the glove box bin (2) and the inner glove box door panel (3) to the outer glove box door panel (4).
3. Remove the glove box bin and the inner glove box door panel from the outer glove box door panel.

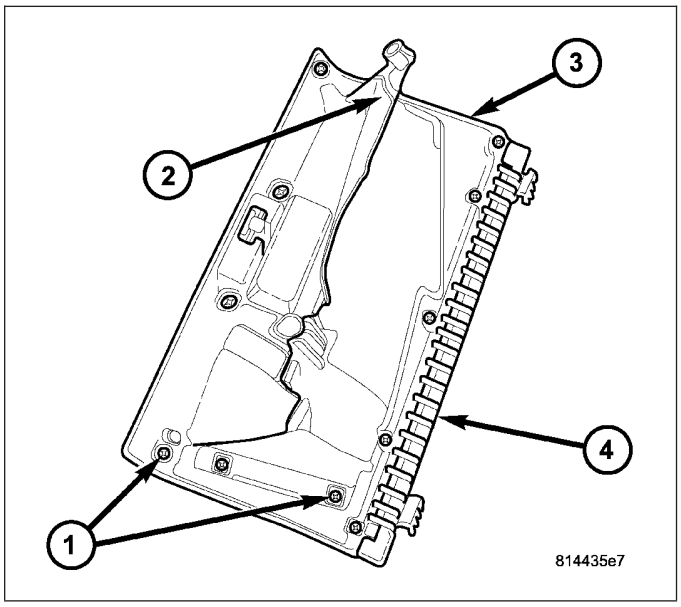

4. Remove the two screws (1) that secure the glove box latch (2) to the outer glove box door panel (3) and remove the latch.

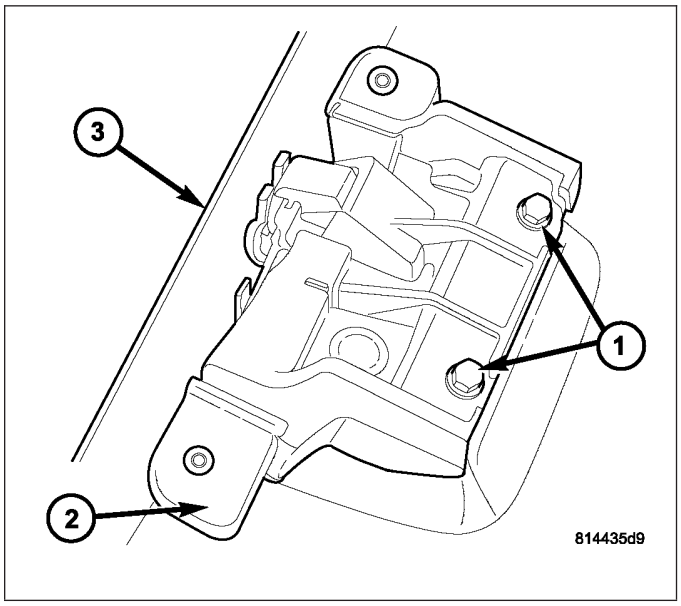

INSTALLATION

1. Position the glove box latch (2) into the outer glove box door panel (3).
2. Install the two screws (1) that secure the glove box latch to the outer glove box door panel. Tighten the screws to 2 N·m (17 in. lbs.).

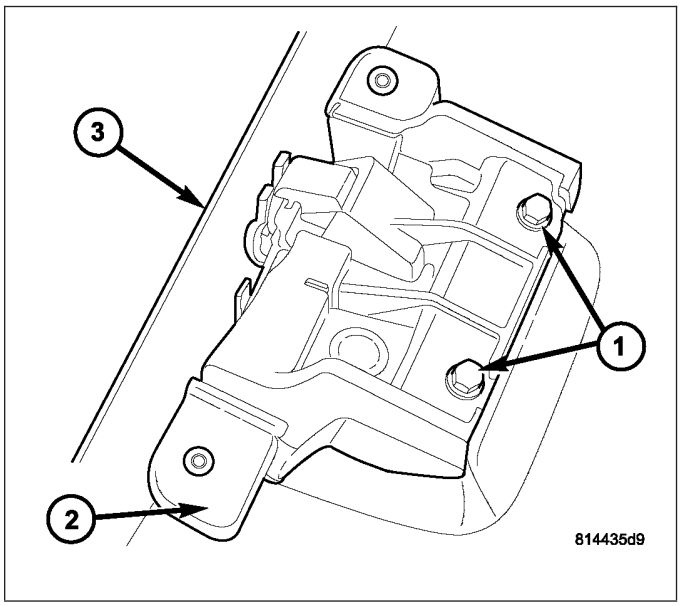

3. Position the inner glove box door panel (3) and the glove box bin (2) onto the outer glove box door panel (4).
4. Install the fifteen screws (1) that secure the inner glove box door panel and the glove box bin to the outer glove box door panel. Tighten the screws to 2 N·m (17 in. lbs.).
5. Install the glove box (Refer to 23 - BODY/INSTRUMENT PANEL/GLOVE BOX - INSTALLATION).

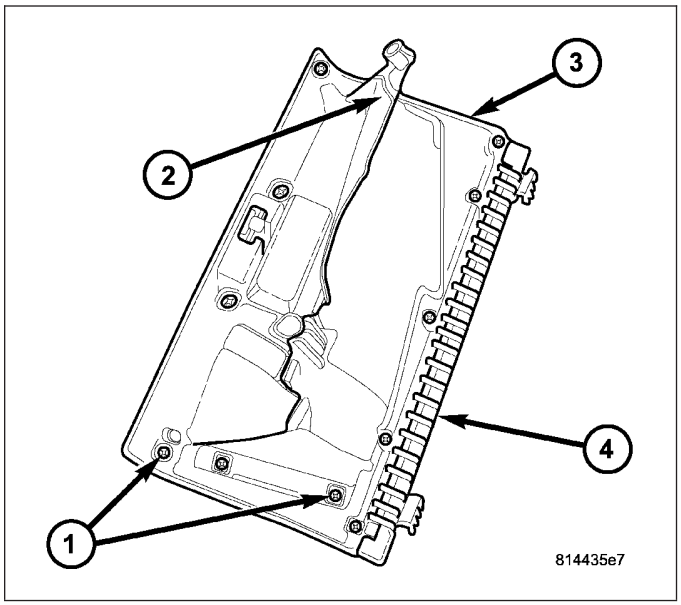

INSTRUMENT PANEL ASSEMBLY

REMOVAL

WARNING: On vehicles equipped with airbags, disable the airbag system before attempting any steering wheel, steering column, seat belt tensioner, or instrument panel component diagnosis or service. Disconnect and isolate the battery negative (ground) cable, then wait two minutes for the airbag system capacitor to discharge before performing further diagnosis or service. This is the only sure way to disable the airbag system. Failure to take the proper precautions could result in accidental airbag deployment and possible personal injury or death.

1. Disconnect and isolate the negative battery cable.
2. Remove the left a-pillar trim (Refer to 23 - BODY/INTERIOR/A-PILLAR TRIM/GRAB HANDLE - REMOVAL).
3. Remove the instrument panel top cover (Refer to 23 - BODY/INSTRUMENT PANEL/INSTRUMENT PANEL TOP COVER - REMOVAL).
4. Disconnect the headliner wire harness connector located at the a-pillar.
5. Using a trim stick C-4755 or equivalent, from the notch on the bottom, remove the left instrument panel side cover.
6. Remove the left cowl trim panel (Refer to 23 - BODY/INTERIOR/COWL TRIM - REMOVAL).
7. Remove the steering column (Refer to 19 - STEERING/COLUMN - REMOVAL).
8. Remove the two bolts (3) that secure the steering column support bracket (2) to the instrument panel (1).

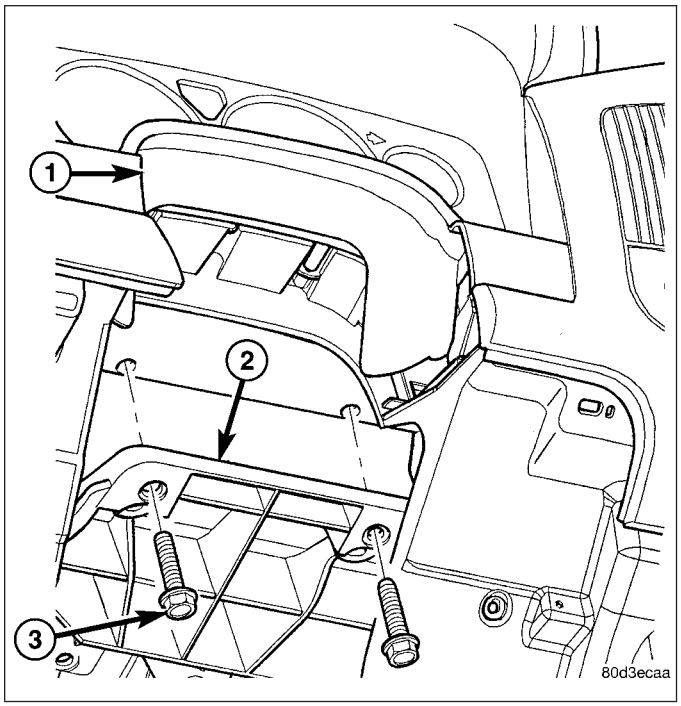

9. Remove the park brake release handle actuator rod (Refer to 5 - BRAKES/PARKING BRAKE/RELEASE - REMOVAL).
10. Disconnect the instrument panel wire harness connector (2) located above the brake pedal from the bulkhead wire harness connector (1).

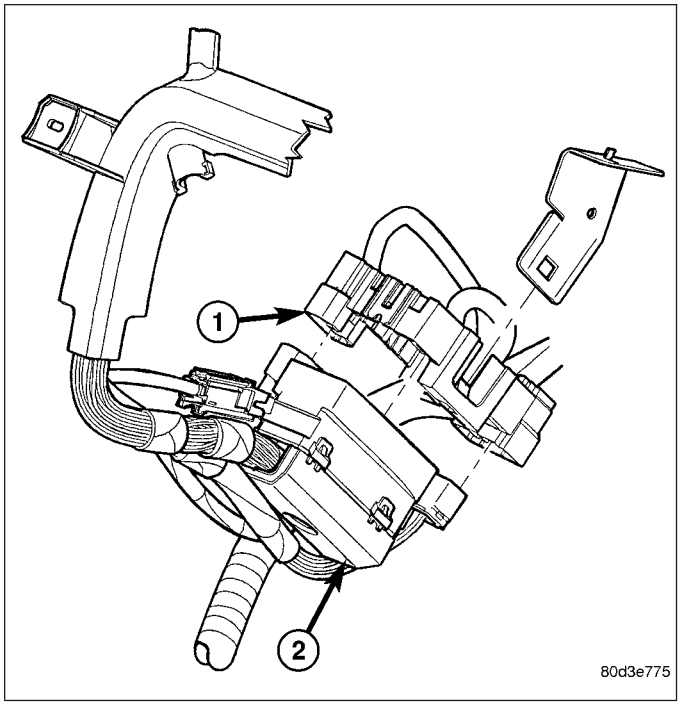

11. Remove the instrument panel drivers side bezel (Refer to 23 - BODY/INSTRUMENT PANEL/INSTRUMENT PANEL DRIVERS SIDE BEZEL - REMOVAL).
12. Remove the three bolts (3) that secure the left side of the instrument panel (2) to the dash panel (1).

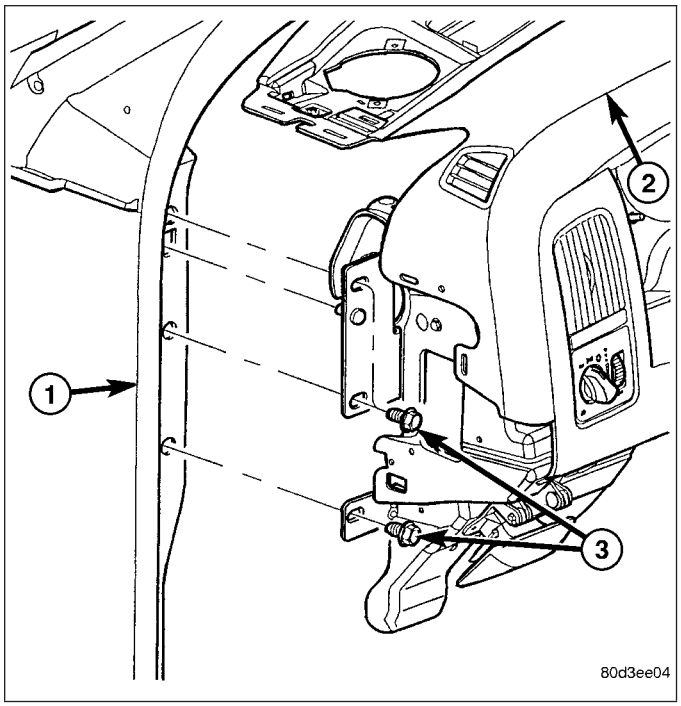

13. Remove the floor console, if equipped (Refer to 23 - BODY/INTERIOR/FLOOR CONSOLE - REMOVAL).
14. Remove the air bag control module cover, if equipped (Refer to 8 - ELECTRICAL/RESTRAINTS/AIRBAG CONTROL MODULE - REMOVAL).
15. Disconnect the air bag control module electrical connector (Refer to 8 - ELECTRICAL/RESTRAINTS/AIRBAG CONTROL MODULE - REMOVAL).
16. Remove the two bolts (2) that secure the instrument panel (1) to the center of the floor panel.

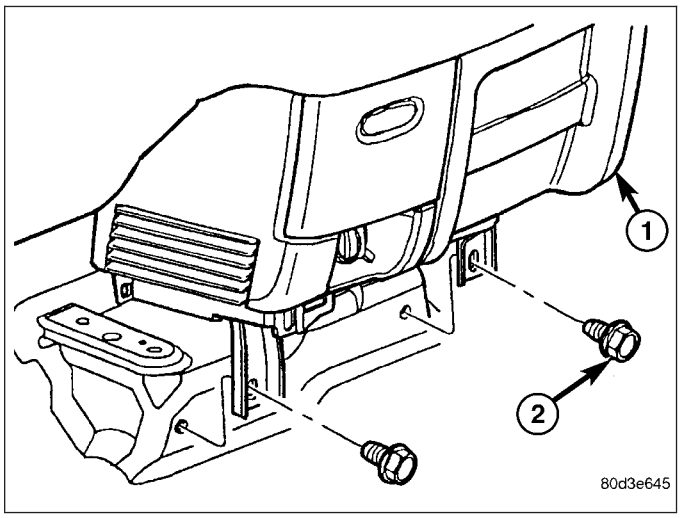

17. Remove the right cowl trim cover (Refer to 23 - BODY/INTERIOR/COWL TRIM - REMOVAL).
18. Disconnect the two instrument panel wire harness connectors from the two body wire harness connectors (1) located on the right side of the cowl panel (2).

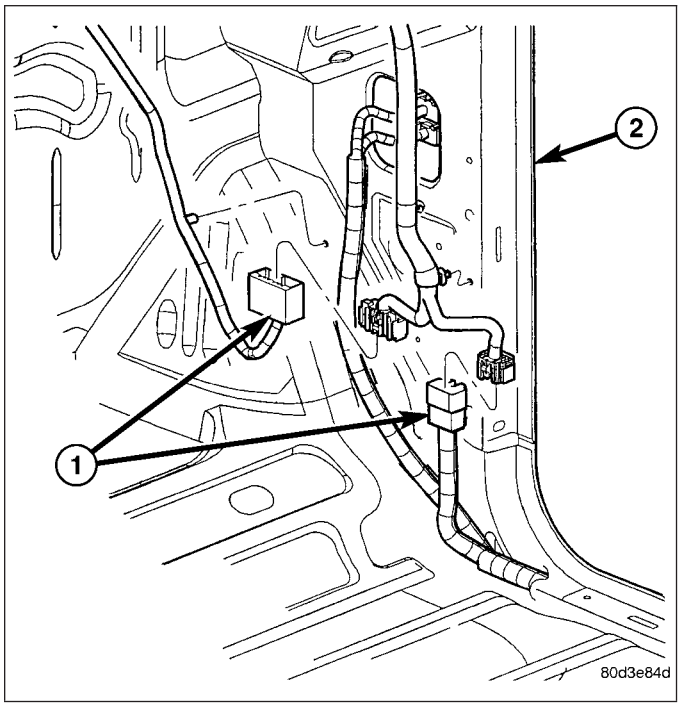

19. Disconnect the antenna coaxial cable connector (1) from the radio coaxial cable connector (2) located on the right side of the cowl panel.

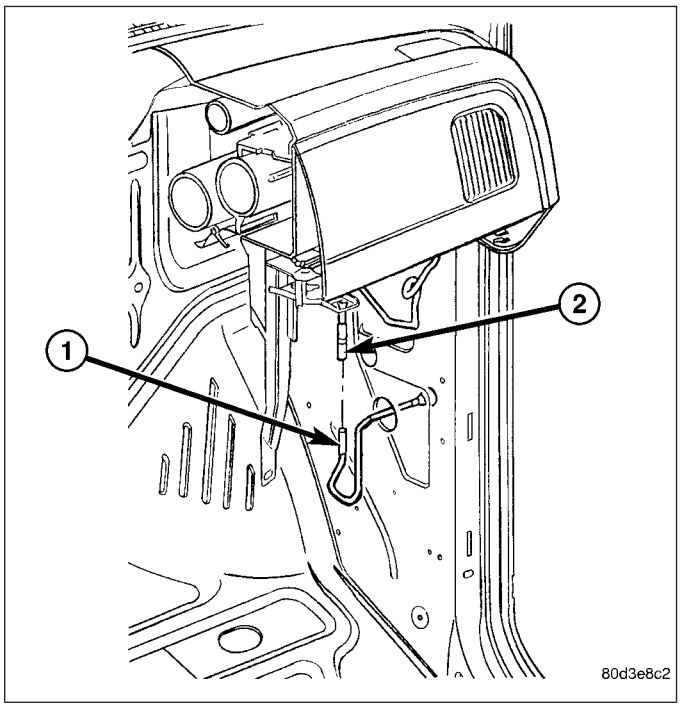

20. Remove the one bolt (2) that secures the instrument panel (3) to the HVAC housing (1) below the glove box opening (4).

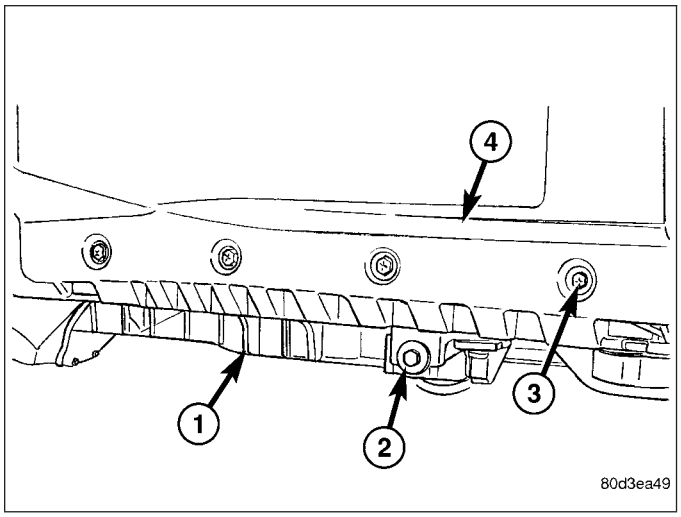

21. Using a trim stick C-4755 or equivalent, from the notch on the bottom, remove the right instrument panel side cover (4) from the instrument panel (1).
22. Remove the right a-pillar trim (Refer to 23 - BODY/INTERIOR/A-PILLAR TRIM/GRAB HANDLE - REMOVAL).
23. Remove the three bolts (5) that secure the right side instrument panel bracket (2) to the dash panel (3).

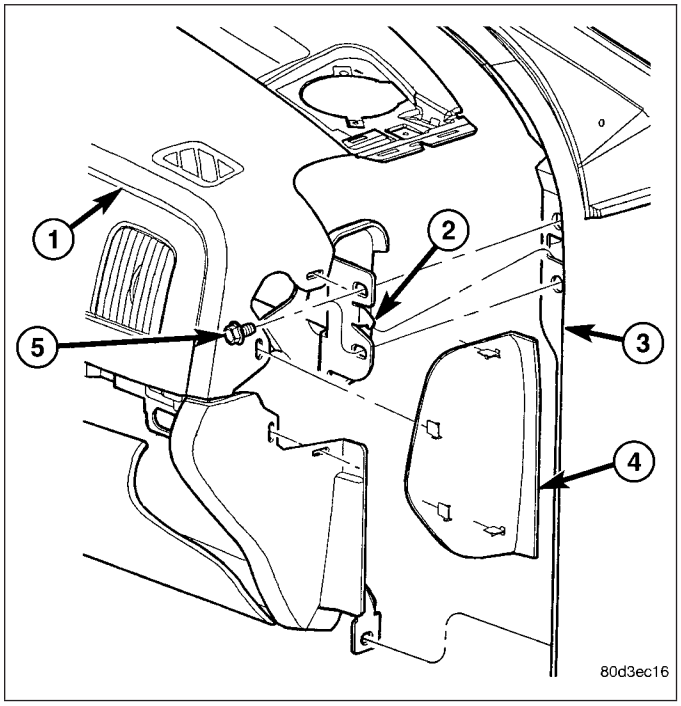

24. Remove the four screws (2) that secure the instrument panel (5) to the top of the cowl panel (1).
25. Remove the two bolts (4) that secure the instrument panel to the top of the cowl panel.
26. With the help of an assistant, lift the instrument panel up and off of the cowl panel and remove the instrument panel from the vehicle.
27. If required, remove the four plastic screws inserts (4) from the top of the cowl panel.

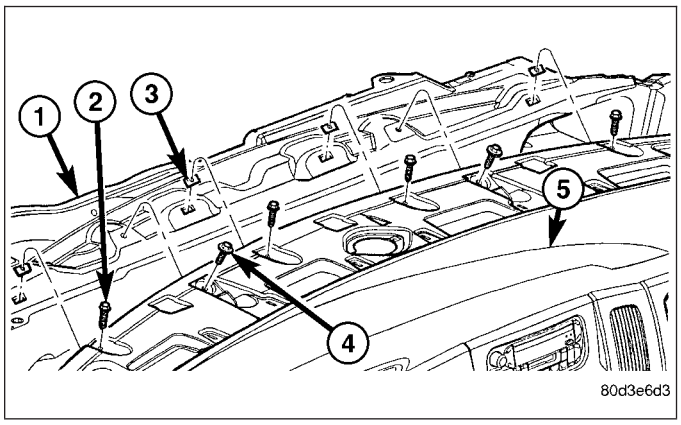

INSTALLATION

1. If removed, install the four plastic screw inserts (4) into the top of the cowl panel (1).
2. With the help of an assistant, position the instrument panel (6) into the vehicle and install the right side guide pin and the left side guide hook to the sides of the cowl panel.
3. Install the two bolts (4) that secure the instrument panel to the top of the cowl panel. Tighten the bolts to 12 N·m (9 ft. lbs.).
4. Install the four screws (2) that secure the instrument panel to the top of the cowl panel. Tighten the screws to 2.2 N·m (20 in. lbs.).

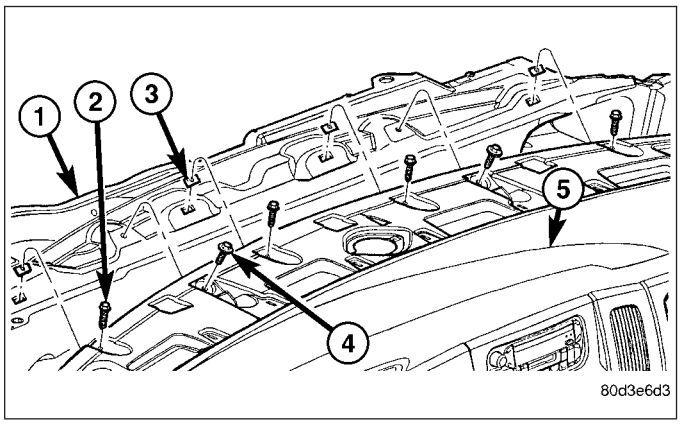

5. Install the three bolts (5) that secure the right side instrument panel bracket (2) to the cowl panel (3). Tighten the bolts to 12 N·m (9 ft. lbs.).
6. Install the right a-pillar trim (Refer to 23 - BODY/INTERIOR/A-PILLAR TRIM - INSTALLATION).
7. Install the right instrument panel side cover (4).

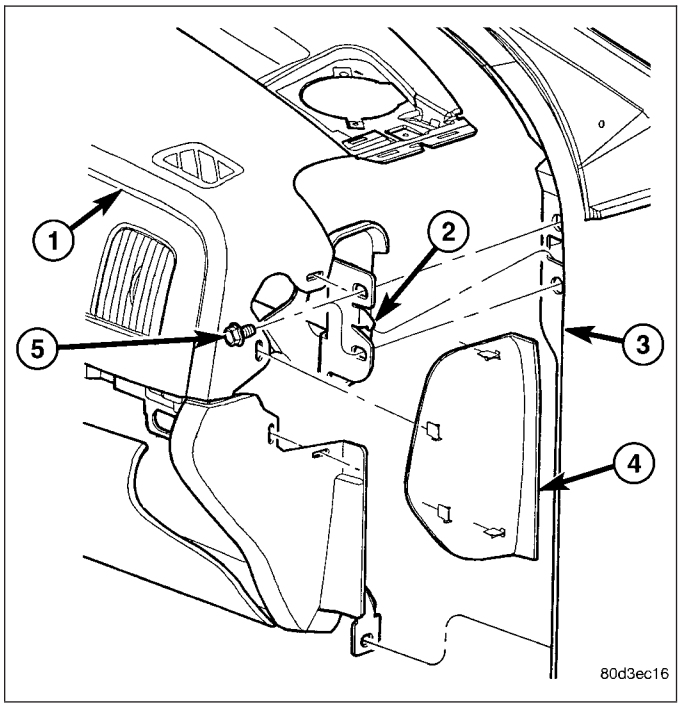

8. Install the one bolt (2) that secures the instrument panel (3) to the HVAC housing (1) below the glove box opening (4). Tighten the bolt securely.

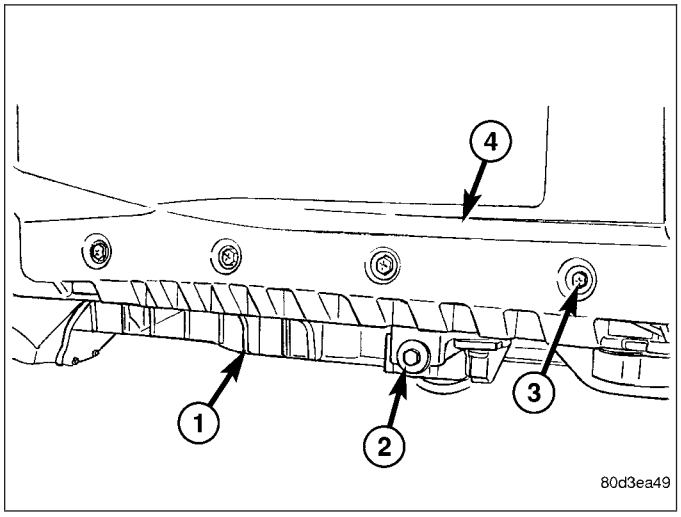

9. Connect the radio coaxial cable connector (2) to the antenna coaxial cable connector (1) located on the right side of the cowl panel.

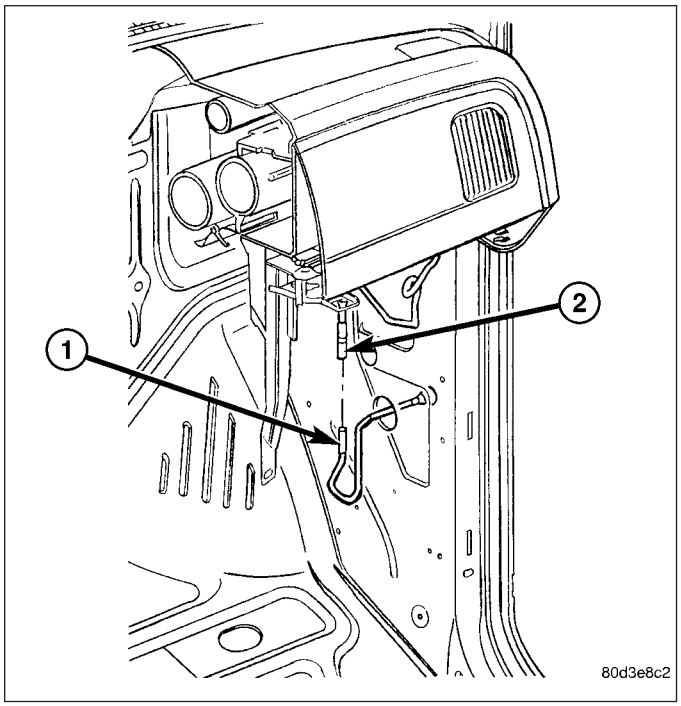

10. Connect the two instrument panel wire harness connectors to the two body wire harness connectors (1) located on the right side of the cowl panel (2).
11. Install the right cowl trim panel (Refer to 23 - BODY/INTERIOR/COWL TRIM - INSTALLATION).

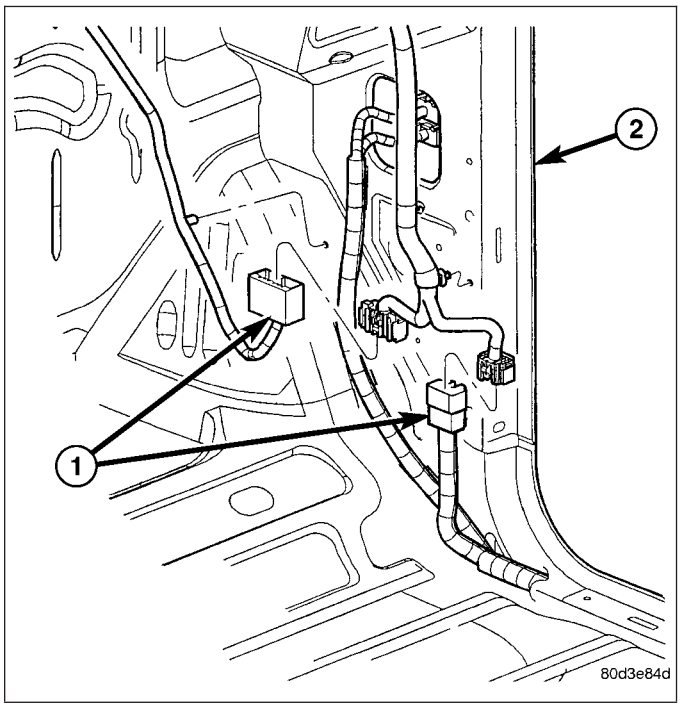

12. Install the two bolts (2) that secure the instrument panel (1) to the center of the floor panel. Tighten the bolts to 12 N·m (9 ft. lbs.).
13. Connect the air bag control module electrical connector (Refer to 8 - ELECTRICAL/RESTRAINTS/AIRBAG CONTROL MODULE - INSTALLATION).
14. Install the air bag control module cover, if equipped (Refer to 8 - ELECTRICAL/RESTRAINTS/AIRBAG CONTROL MODULE - INSTALLATION).
15. Install the floor console, if equipped (Refer to 23 - BODY/INTERIOR/FLOOR CONSOLE - INSTALLATION).

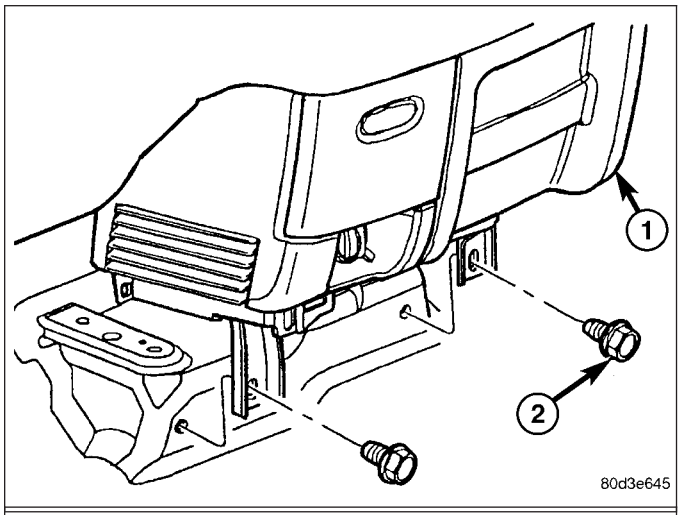

16. Install the three bolts (3) that secure the left side of the instrument panel (2) to the dash panel (1). Tighten the bolts to 12 N·m (9 ft. lbs.).
17. Install the instrument panel drivers side bezel (Refer to 23 - BODY/INSTRUMENT PANEL/INSTRUMENT PANEL DRIVERS SIDE BEZEL - INSTALLATION).
18. Install the left cowl trim panel (Refer to 23 - BODY/INTERIOR/COWL TRIM - INSTALLATION).

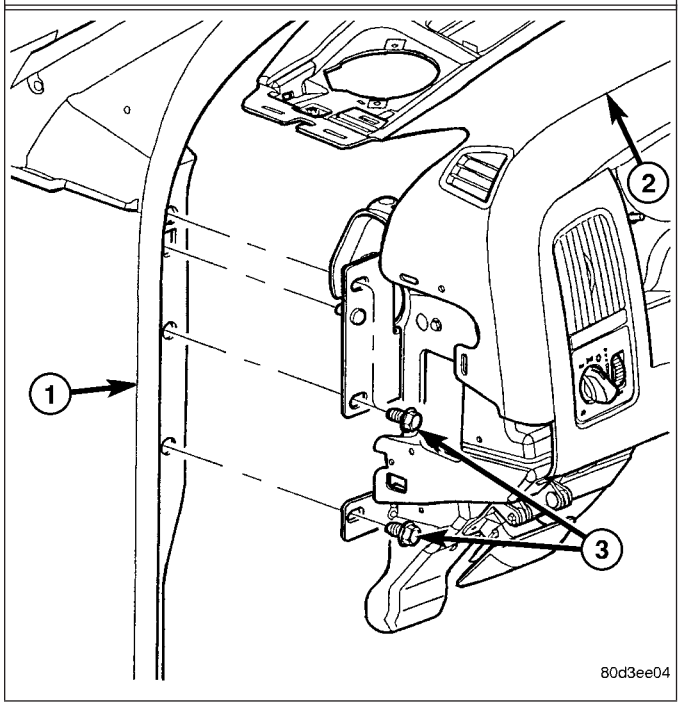

19. Connect the instrument panel wire harness connector (2) located above the brake pedal to the bulkhead wire harness connector (1).
20. Install the park brake release handle actuator rod (Refer to 5 - BRAKES/PARKING BRAKE/RELEASE - INSTALLATION).

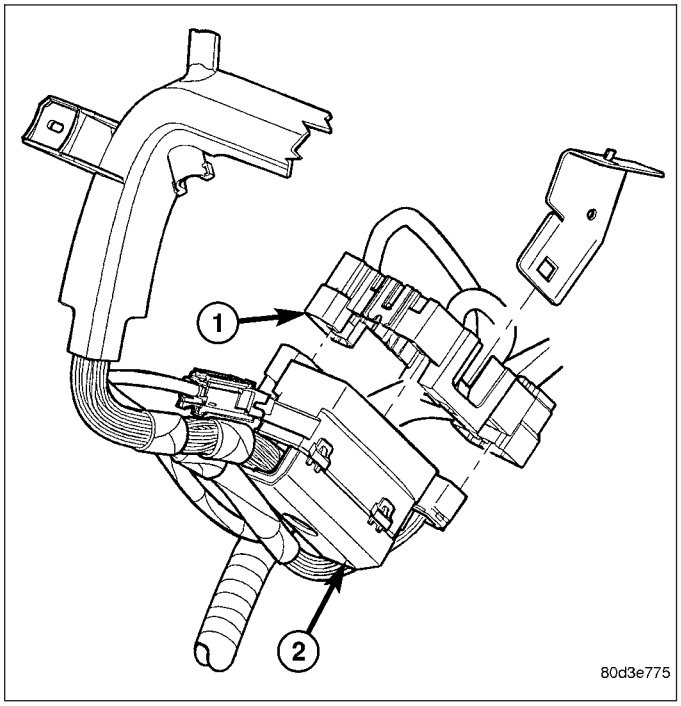

21. Install the two bolts (3) that secure the steering column support bracket (2) to the instrument panel (1). Tighten the bolts to 14 N·m (10 ft. lbs.).
22. Install the steering column (Refer to 19 - STEERING/COLUMN - INSTALLATION).
23. Install the left cowl trim cover (Refer to 23 - BODY/INTERIOR/COWL TRIM - INSTALLATION).
24. Install the left instrument panel side cover.
25. Connect the headliner wire harness connector located at the a-pillar.
26. Install the instrument panel top cover (Refer to 23 - BODY/INSTRUMENT PANEL/INSTRUMENT PANEL TOP COVER - INSTALLATION).
27. Install the left a-pillar trim (Refer to 23 - BODY/INTERIOR/A-PILLAR TRIM - INSTALLATION).
28. Reconnect the negative battery cable.

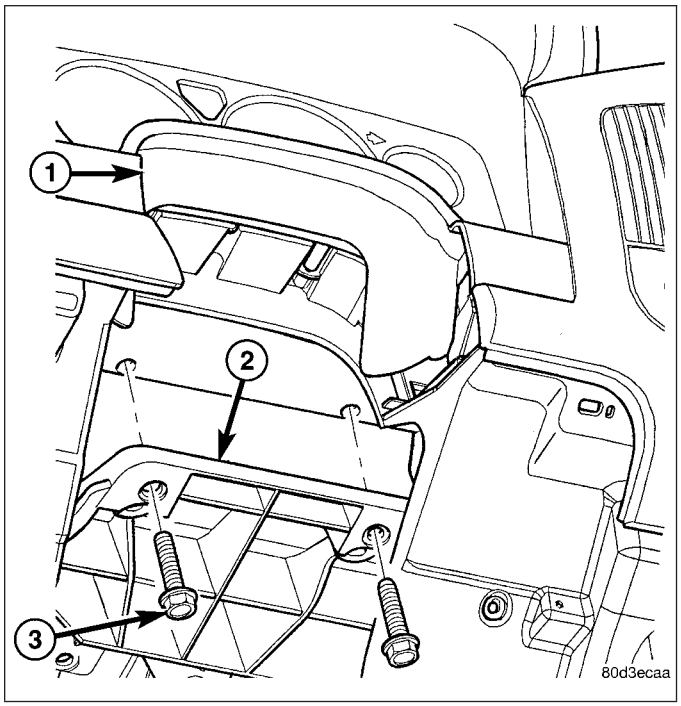

INSTRUMENT PANEL CENTER BEZEL

REMOVAL

WARNING: On vehicles equipped with airbags, disable the airbag system before attempting any steering wheel, steering column, seat belt tensioner, or instrument panel component diagnosis or service. Disconnect and isolate the battery negative (ground) cable, then wait two minutes for the airbag system capacitor to discharge before performing further diagnosis or service. This is the only sure way to disable the airbag system. Failure to take the proper precautions could result in accidental airbag deployment and possible personal injury or death.

1. Disconnect and isolate the negative battery cable.
2. Remove the steering column opening cover (Refer to 23 - BODY/INSTRUMENT PANEL/STEERING COLUMN OPENING COVER - REMOVAL).

CAUTION: When servicing the instrument center bezel, use tape or another suitable material to protect the cup holder and ash receiver from cosmetic damage.

3. Open the ashtray and the cup holder.
4. Remove the screw (3) that secures the instrument panel center bezel (2) to the instrument panel (1).
5. Using a trim stick C-4755 or equivalent, disengage the retainer clips that secure the instrument panel center bezel to the instrument panel.

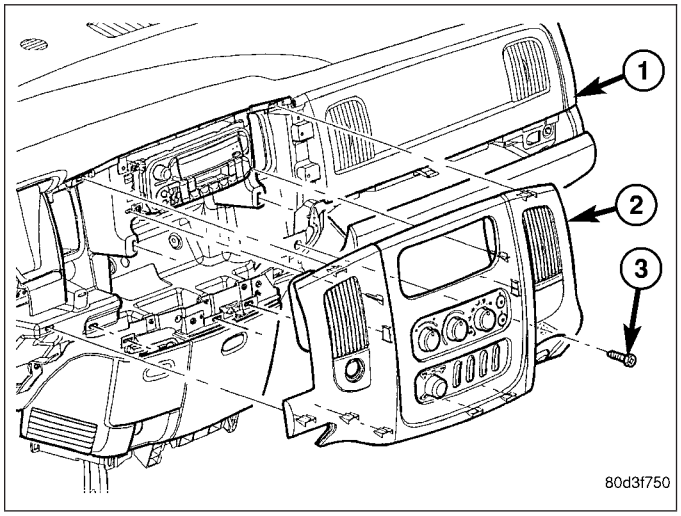

6. Disconnect the wire harness connectors and remove the center bezel from the vehicle.

INSTALLATION

1. Position the instrument panel center bezel (2) near the instrument panel (1) and connect the wire harness connectors.
2. Install the instrument panel center bezel onto the instrument panel and fully engage the retainer clips.
3. Install the screw (3) that secures the instrument panel center bezel to the instrument panel. Tighten the screw to 2 N·m (17 in. lbs.).
4. Install the steering column opening cover (Refer to 23 - BODY/INSTRUMENT PANEL/STEERING COLUMN OPENING COVER - INSTALLATION).
5. Reconnect the negative battery cable.

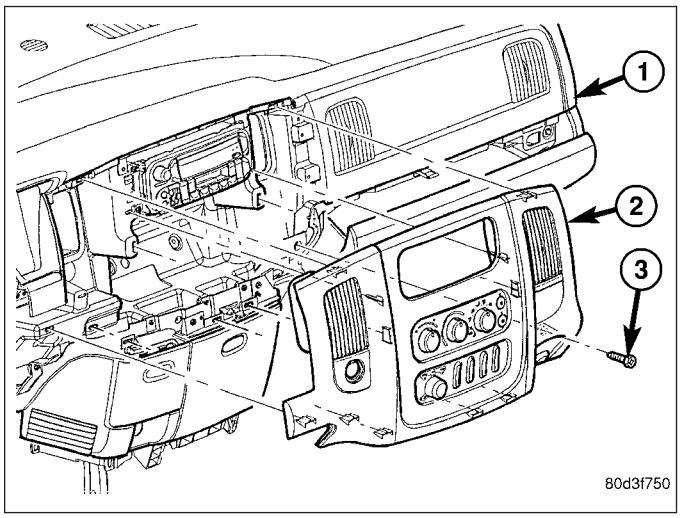

INSTRUMENT PANEL DRIVER SIDE BEZEL

REMOVAL

WARNING: On vehicles equipped with airbags, disable the airbag system before attempting any steering wheel, steering column, seat belt tensioner, or instrument panel component diagnosis or service. Disconnect and isolate the battery negative (ground) cable, then wait two minutes for the airbag system capacitor to discharge before performing further diagnosis or service. This is the only sure way to disable the airbag system. Failure to take the proper precautions could result in accidental airbag deployment and possible personal injury or death.

1. Disconnect and isolate the negative battery cable.
2. Using a trim stick C-4755 or equivalent, from the notch on the bottom, remove the left instrument panel side cover.
3. Remove the left cowl trim panel (Refer to 23 - BODY/INTERIOR/COWL TRIM - REMOVAL).
4. Remove the two screws (1) that secure the lower driver side instrument panel bezel (4) to the instrument panel.
5. Using a trim stick C-4755 or equivalent, disengage the retaining clips that secure the top of the lower driver side instrument panel bezel to the instrument panel.
6. Tilt the top of the lower driver side instrument panel bezel downward and, If equipped, disconnect the wire harness connector (3) from the adjustable pedal switch (2).
7. Remove the lower driver side instrument panel bezel from the lower retaining hooks and remove the bezel.

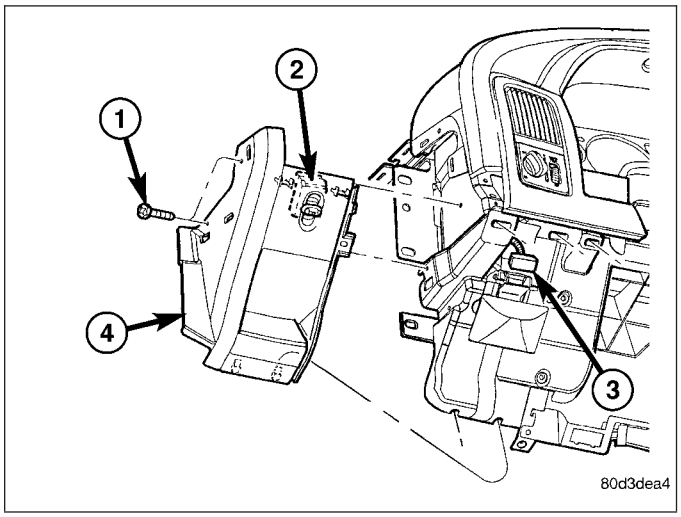

INSTALLATION

1. Position the lower driver side instrument panel bezel onto the lower retaining hoods located on the instrument panel.
2. If equipped, connect the wire harness connector (3) to the adjustable pedal switch (2).
3. Tilt the top of the lower driver side instrument panel bezel upward and fully engage the bezel retaining clips to the instrument panel.
4. Install the two screws (1) that secure the lower driver side instrument panel bezel to the instrument panel. Tighten the screws to 2 N·m (17 in. lbs.).
5. Install the left side cowl trim panel (Refer to 23 - BODY/INTERIOR/COWL TRIM - INSTALLATION).
6. Install the left instrument panel side cover.
7. Reconnect the negative battery cable.

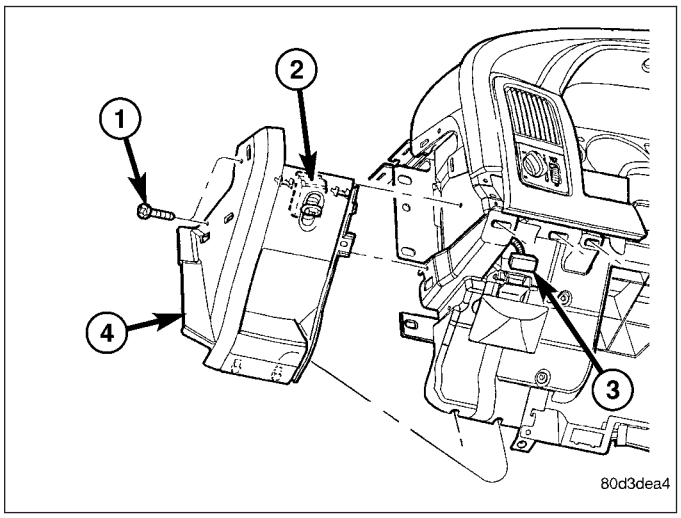

INSTRUMENT PANEL LOWER SURROUND

REMOVAL

WARNING: On vehicles equipped with airbags, disable the airbag system before attempting any steering wheel, steering column, seat belt tensioner, or instrument panel component diagnosis or service. Disconnect and isolate the battery negative (ground) cable, then wait two minutes for the airbag system capacitor to discharge before performing further diagnosis or service. This is the only sure way to disable the airbag system. Failure to take the proper precautions could result in accidental airbag deployment and possible personal injury or death.

1. Disconnect and isolate the negative battery cable.
2. Using a trim stick C-4755 or equivalent, from the notch on the bottom, remove the right instrument panel side cover.
3. Remove the right side cowl trim panel (Refer to 23 - BODY/INTERIOR/COWL TRIM - REMOVAL).
4. Remove the glove box (Refer to 23 - BODY/INSTRUMENT PANEL/GLOVE BOX - REMOVAL).
5. Remove the cup holder or storage bin (depending on application) (Refer to 23 - BODY/INSTRUMENT PANEL/CUP HOLDER - REMOVAL) or (Refer to 23 - BODY/INSTRUMENT PANEL/STORAGE BIN - REMOVAL).
6. Remove the ash receiver (Refer to 23 - BODY/INSTRUMENT PANEL/ASH RECEIVER - REMOVAL).
7. Remove the steering column opening cover (Refer to 23 - BODY/INSTRUMENT PANEL/STEERING COLUMN OPENING COVER - REMOVAL).

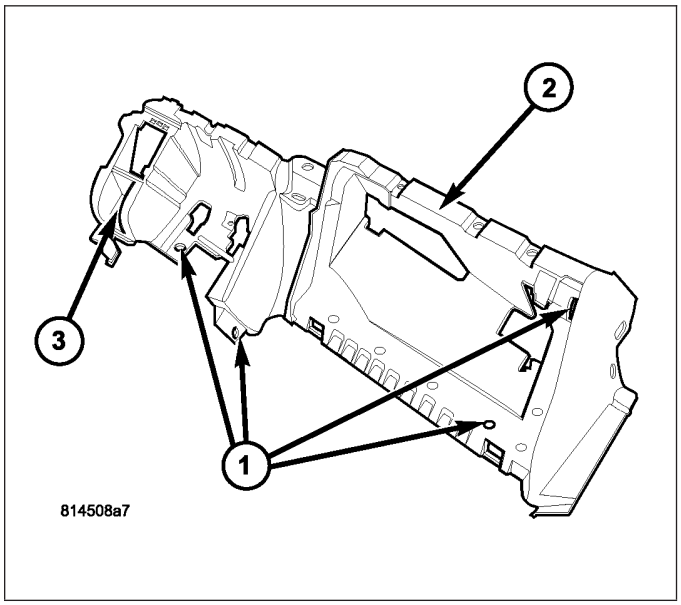

8. Remove the twenty one screws (1) that secure the instrument panel lower surround (2) to the instrument panel and support.
9. Disconnect the wire harness connector for the 12V power outlet (3) and remove the instrument panel lower surround.

INSTALLATION

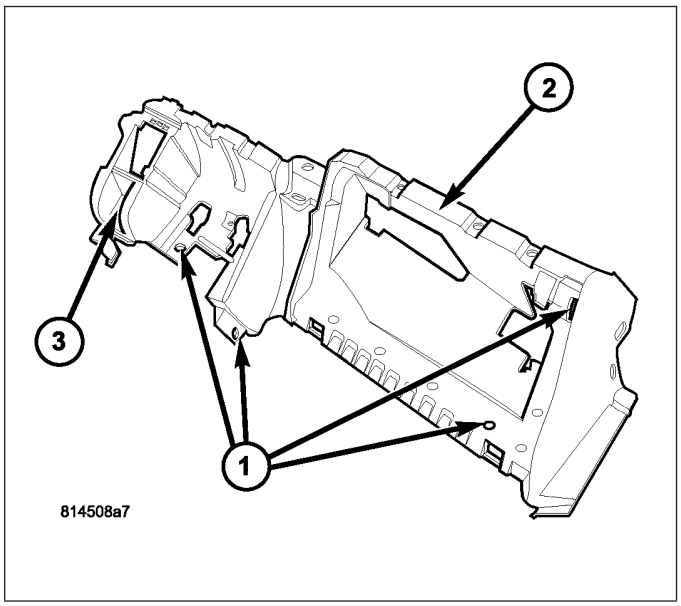

1. Position the instrument panel lower surround (2) to the instrument panel and connect the wire harness connector for the 12V power outlet (3).
2. Install the instrument panel lower surround onto the instrument panel and install the twenty one screws (1). Tighten the screws to 2.2 N·m (20 in. lbs.).
3. Install the steering column opening cover (Refer to 23 - BODY/INSTRUMENT PANEL/STEERING COLUMN OPENING COVER - INSTALLATION).
4. Install the ash receiver (Refer to 23 - BODY/INSTRUMENT PANEL/ASH RECEIVER - INSTALLATION).
5. Install the cup holder or storage bin (depending on application) (Refer to 23 - BODY/INSTRUMENT PANEL/CUP HOLDER - INSTALLATION) or (Refer to 23 - BODY/INSTRUMENT PANEL/STORAGE BIN - INSTALLATION).
6. Install the glove box (Refer to 23 - BODY/INSTRUMENT PANEL/GLOVE BOX - INSTALLATION).
7. Install the right side cowl trim panel (Refer to 23 - BODY/INTERIOR/COWL TRIM - INSTALLATION).
8. Install the right instrument panel side cover.
9. Reconnect the negative battery cable.

INSTRUMENT PANEL HEADLAMP SWITCH BEZEL

REMOVAL

WARNING: On vehicles equipped with airbags, disable the airbag system before attempting any steering wheel, steering column, seat belt tensioner, or instrument panel component diagnosis or service. Disconnect and isolate the battery negative (ground) cable, then wait two minutes for the airbag system capacitor to discharge before performing further diagnosis or service. This is the only sure way to disable the airbag system. Failure to take the proper precautions could result in accidental airbag deployment and possible personal injury or death.

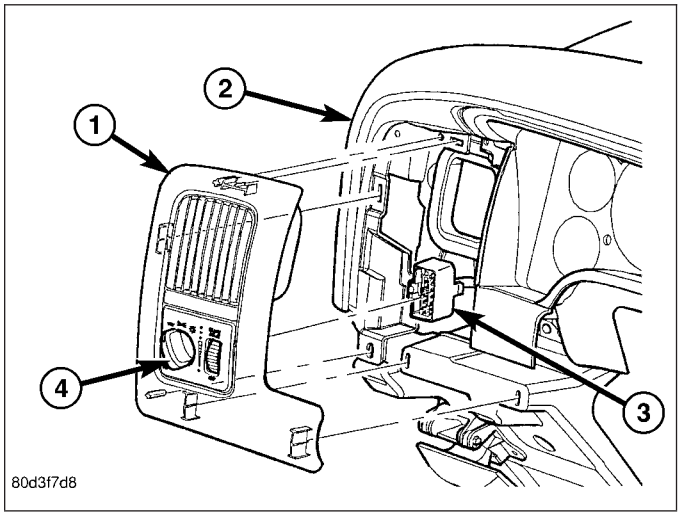

1. Disconnect and isolate the negative battery cable.
2. Using a trim stick C-4755 or equivalent, disengage the top retainer clips on the steering column opening cover and the lower drivers side bezel.
3. Using a trim stick C-4755 or equivalent, disengage the retainer clips that secure the headlamp switch bezel (1) to the instrument panel (2).
4. Disconnect the wire harness connector (3) from the headlamp switch (4) and remove the switch bezel.

INSTALLATION

1. Position the headlamp switch bezel (1) to the instrument panel (2).
2. Connect the wire harness connector (3) to the headlamp switch (4).
3. Install the switch bezel onto the instrument panel and fully engage the retainer clips.
4. fully engage the retainer clips on the steering column opening cover and the lower drivers side bezel.
5. Reconnect the negative battery cable.

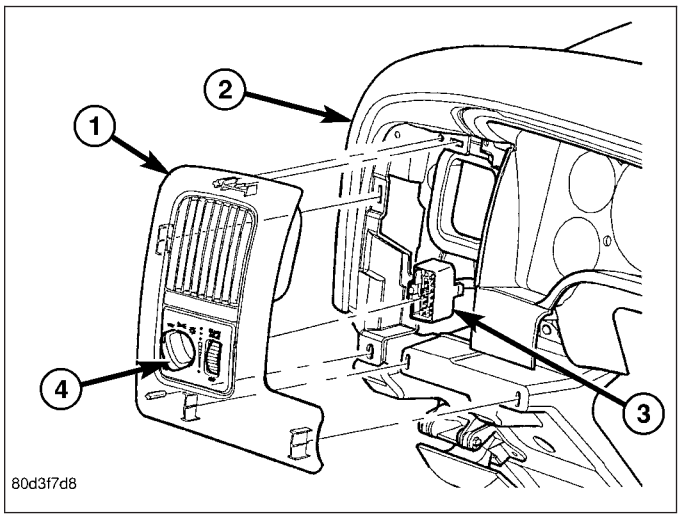

INSTRUMENT PANEL TOP COVER

REMOVAL

1. Using a trim stick C-4755 or equivalent, disengage the eight retainer clips (1) that secure the rear of the instrument panel top cover (2) to the top of the instrument panel (3).
2. Pull the instrument panel top cover rearward to release the five retainer clips (4) that secure the front of the instrument panel top cover to the top of the instrument panel and remove the cover.

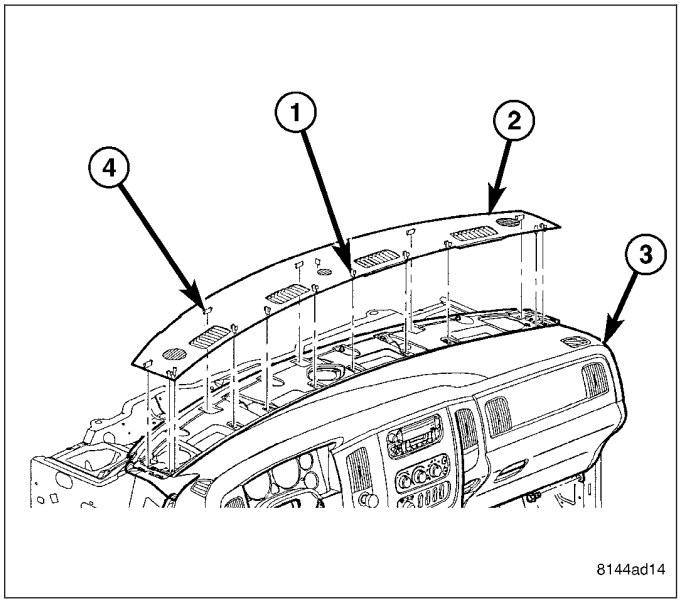

INSTALLATION

1. Position the instrument panel top cover (2) to the top of the instrument panel (3) and engage the five retainer clips (4) that secure the cover to the instrument panel.
2. Engage the eight retainer clips (1) that secure the instrument panel top cover to the top of the instrument panel by firmly pushing down on the top cover at each retainer clip location.

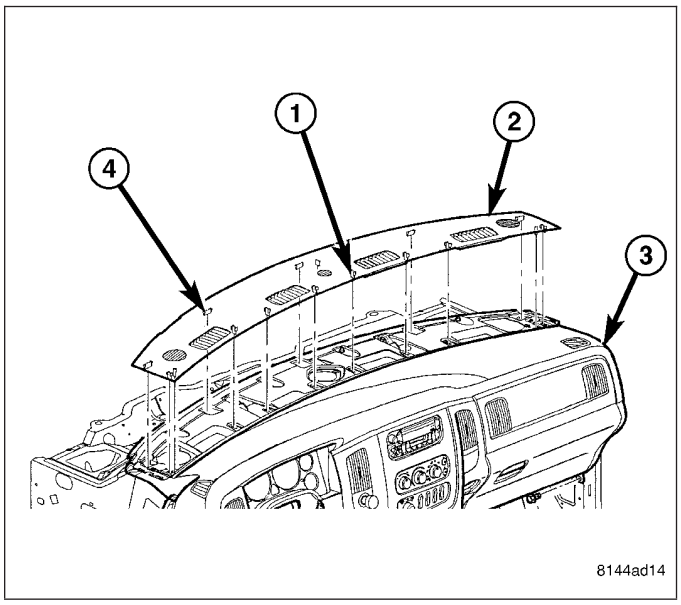

STEERING COLUMN OPENING COVER

REMOVAL

1. Remove the two screws (1) that secure the bottom of the steering column opening cover (2) to the instrument panel.
2. Using a trim stick C-4755 or equivalent, release the two retainer clips that secure the top of the steering column opening cover to the instrument panel and remove the cover.

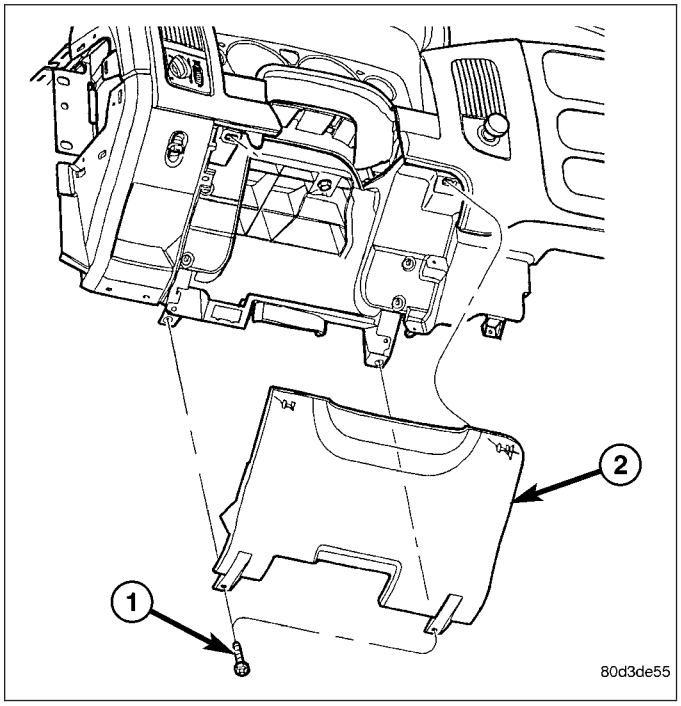

INSTALLATION

1. Position the steering column opening cover (2) to the instrument panel and fully engage the two upper retainer clips to the instrument panel.
2. Install the two screws (1) that secure the steering column opening cover to the instrument panel. Tighten the screws to 2.2 N·m (20 in. lbs.).

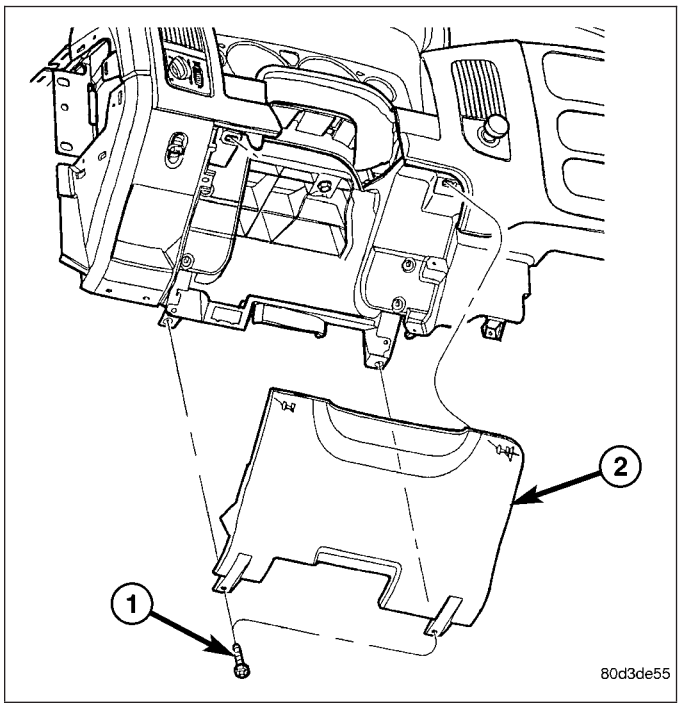

STEERING COLUMN OPENING SUPPORT BRACKET

REMOVAL

1. Remove the steering column opening cover from the instrument panel (1) (Refer to 23 - BODY/INSTRUMENT PANEL/STEERING COLUMN OPENING COVER - REMOVAL).
2. Remove the hood release handle from the steering column opening support bracket (2) (Refer to 23 - BODY/HOOD/LATCH RELEASE CABLE - REMOVAL).
3. Disengage the retaining tabs that secure the data link connector (3) to the steering column opening support bracket and remove the data link connector from the bracket.

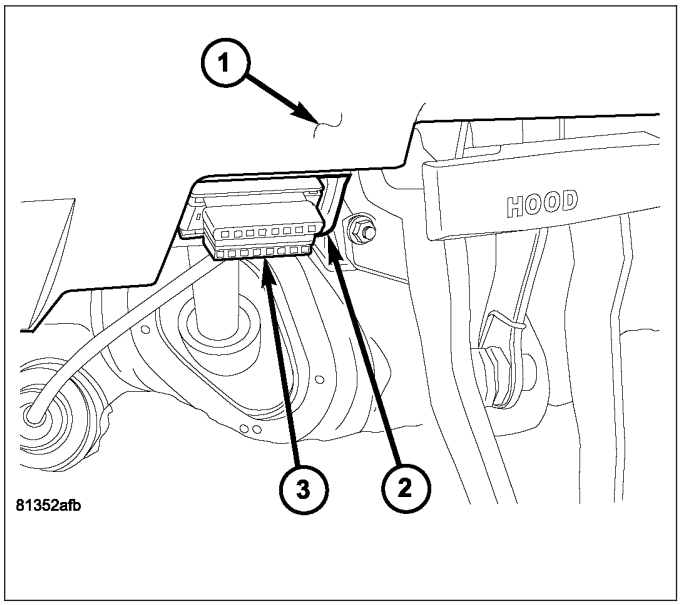

4. Remove the two screws (4) that secure the steering column opening support bracket (3) to the instrument panel (2).
5. Slide the steering column opening support bracket upward to disengage the two locating tabs (1) and remove the bracket.

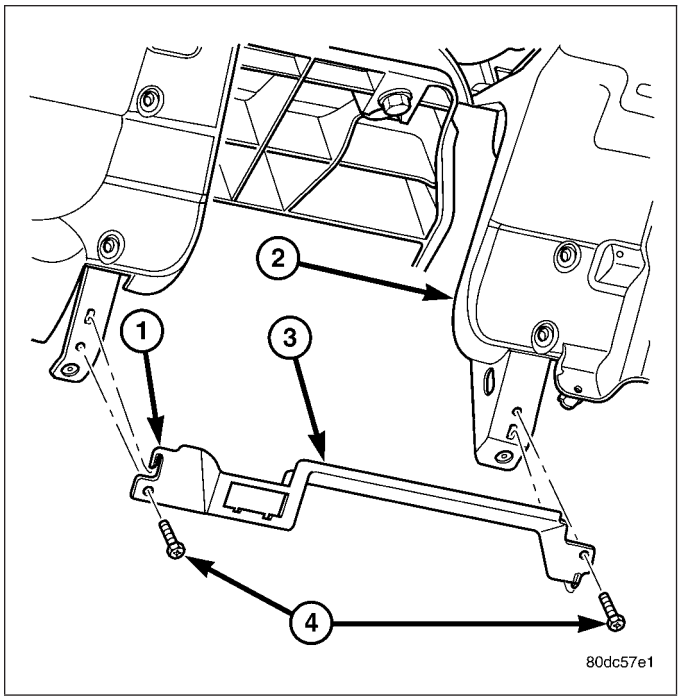

INSTALLATION

1. Position the steering column opening bracket (3) onto the instrument panel (2) and engage to the two locating tabs (1).
2. Install the two screws (4) that secure the steering column opening bracket to the instrument panel. Tighten the screws to 2.2 N·m (20 in. lbs.).

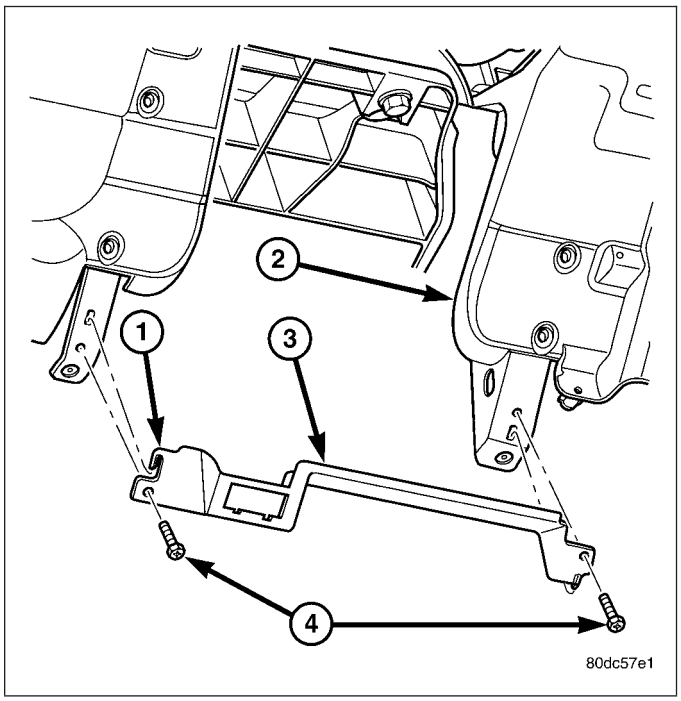

3. Position the data link connector (3) into the opening in the steering column opening bracket (2) and fully engage the retaining tabs that secure the connector to the bracket.
4. Install the hood release handle (Refer to 23 - BODY/HOOD/LATCH RELEASE CABLE - INSTALLATION).
5. Install the steering column opening cover onto the instrument panel (1) (Refer to 23 - BODY/INSTRUMENT PANEL/STEERING COLUMN OPENING COVER - INSTALLATION).

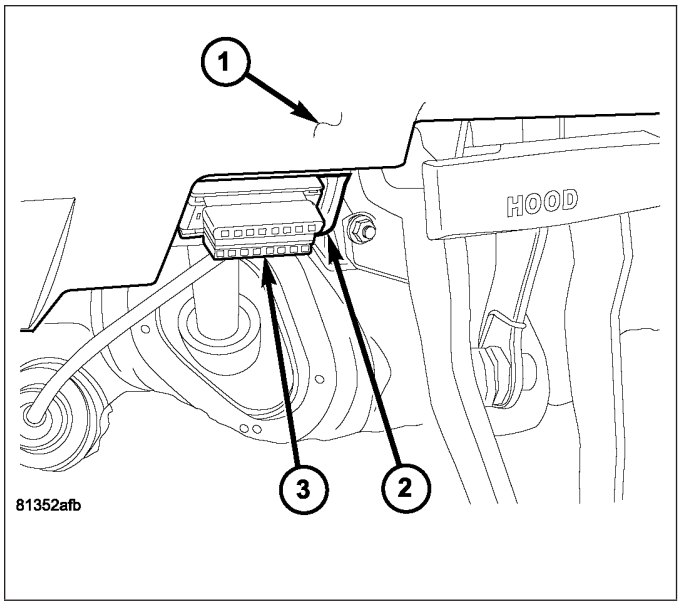

STORAGE BIN

REMOVAL

WARNING: On vehicles equipped with airbags, disable the airbag system before attempting any steering wheel, steering column, seat belt tensioner, or instrument panel component diagnosis or service. Disconnect and isolate the battery negative (ground) cable, then wait two minutes for the airbag system capacitor to discharge before performing further diagnosis or service. This is the only sure way to disable the airbag system. Failure to take the proper precautions could result in accidental airbag deployment and possible personal injury or death.

NOTE: A storage bin replaces the cup holder in the instrument panel when the vehicle is equipped with a floor console.

1. Remove the instrument panel center bezel (Refer to 23 - BODY/INSTRUMENT PANEL/INSTRUMENT PANEL CENTER BEZEL - REMOVAL).
2. Remove the floor console (Refer to 23 - BODY/INTERIOR/FLOOR CONSOLE - REMOVAL).
3. Remove the four screws (1) that secure the storage bin (2) to the instrument panel and remove the bin.

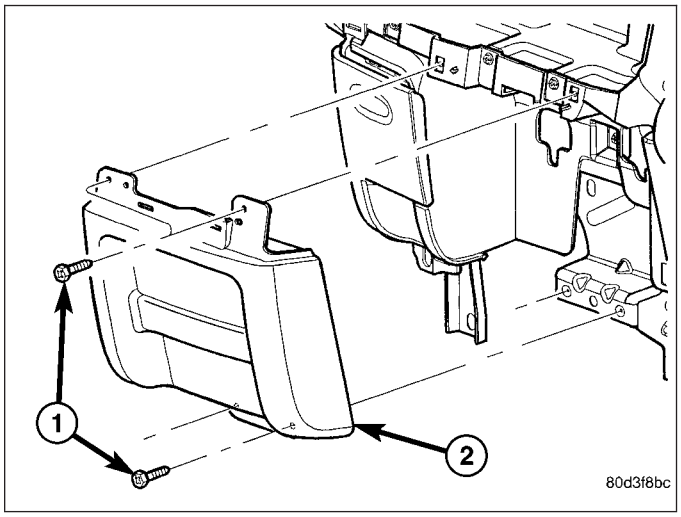

INSTALLATION

NOTE: A storage bin replaces the cup holder in the instrument panel when the vehicle is equipped with a floor console.

1. Position the storage bin (2) into the instrument panel.
2. Install the four screws (1) that secure the storage bin to the instrument panel. Tighten the screws to 2.2 N·m (20 in. lbs.).
3. Install the floor console (Refer to 23 - BODY/INTERIOR/FLOOR CONSOLE - INSTALLATION).
4. Install the instrument panel center bezel (Refer to 23 - BODY/INSTRUMENT PANEL/INSTRUMENT PANEL CENTER BEZEL - INSTALLATION).

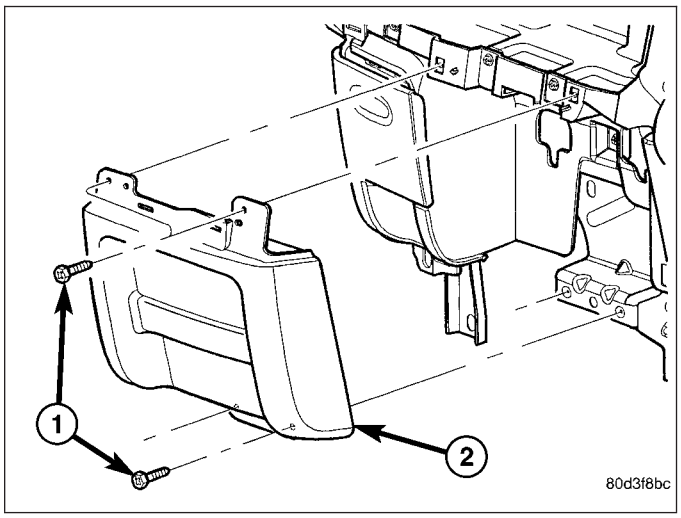

INTERIOR

TABLE OF CONTENTS

	page
INTERIOR	
CAUTION	148
4WD FLOOR SHIFT BOOT	
REMOVAL	149
INSTALLATION	149
A-PILLAR TRIM/GRAB HANDLE	
REMOVAL	150
INSTALLATION	151
B-PILLAR GRAB HANDLE	
REMOVAL	151
INSTALLATION	152
B-PILLAR LOWER TRIM	
REMOVAL	152
INSTALLATION	153
B-PILLAR UPPER TRIM	
REMOVAL	154
INSTALLATION	156
C-PILLAR LOWER TRIM	
REMOVAL	157
INSTALLATION	158
C-PILLAR UPPER TRIM	
REMOVAL	158
INSTALLATION	159
CARPETS AND FLOOR MATS	
REMOVAL	159
INSTALLATION	161
COAT HOOK	
REMOVAL	162
INSTALLATION	163
COWL TRIM	
REMOVAL	163
INSTALLATION	164
FLOOR CONSOLE	
REMOVAL	164
INSTALLATION	165
HEADLINER	
REMOVAL	166
INSTALLATION	167
LOAD FLOOR	
REMOVAL	167
INSTALLATION	168
LOAD FLOOR SUPPORT CYLINDER	
REMOVAL	169
INSTALLATION	170
REAR CAB BACK PANEL TRIM	
REMOVAL	170
INSTALLATION	172
REAR DOOR SILL TRIM COVER	
REMOVAL	173
INSTALLATION	173
REAR VIEW MIRROR	
REMOVAL	173
INSTALLATION	
INSTALLATION	174
REAR VIEW MIRROR MOUNTING BRACKET	174
SUN VISOR	
REMOVAL	175
INSTALLATION	175
SUN VISOR SUPPORT	
REMOVAL	176
INSTALLATION	176
BODY VENT	
REMOVAL	177
INSTALLATION	177

INTERIOR

CAUTION

CAUTION:: Do not attempt to remove interior trim panels or moldings without first removing the necessary adjacent trim panels or moldings. To avoid damaging the trim panels, ensure that all the fasteners are removed or disengaged before attempting to remove interior trim panels or moldings. Trim panels are somewhat flexible but can be damaged if handled improperly.

4WD FLOOR SHIFT BOOT

REMOVAL

1. Using a small flat-bladed tool, remove the insert (2) from the top of the shift knob (1).
2. Remove the nut (3) that secures the shift knob to the gear shift lever.

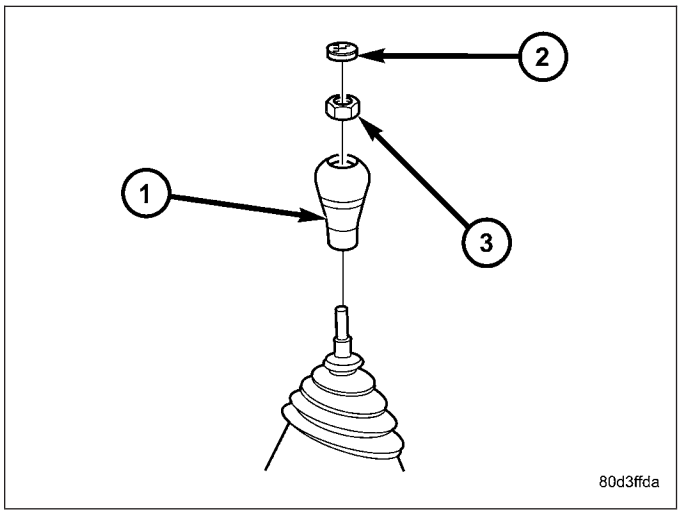

3. Remove the gear shift knob (2).
4. Using a trim stick C-4755 or equivalent, disengage the retaining tabs that secure the gear shift boot (3) to the floor console (1) and remove the boot.

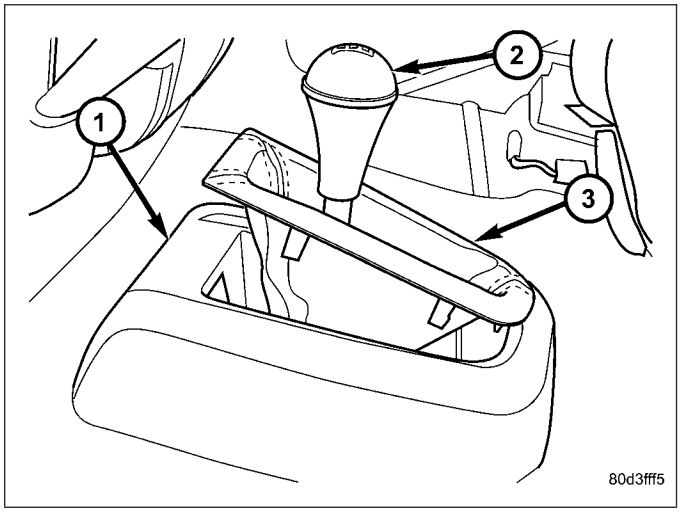

INSTALLATION

1. Position the gear shift boot (3) over the gear shift lever.
2. Engage the retaining tabs that secure the gear shift boot to the floor console (1).
3. Install the shift knob (2) over the gear shift lever.

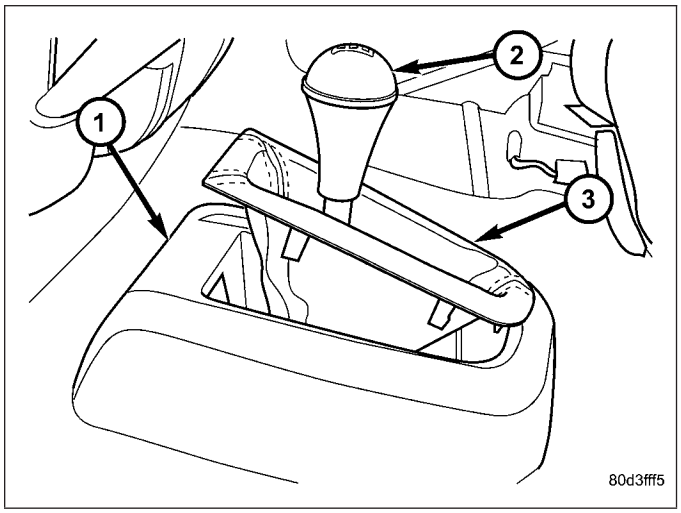

4. Install the nut (3) that secures the shift knob (1) to the gear shift lever. Tighten the nut to 27 N·m (20 ft. lbs.).
5. Install the insert (2) into the top of the shift knob.

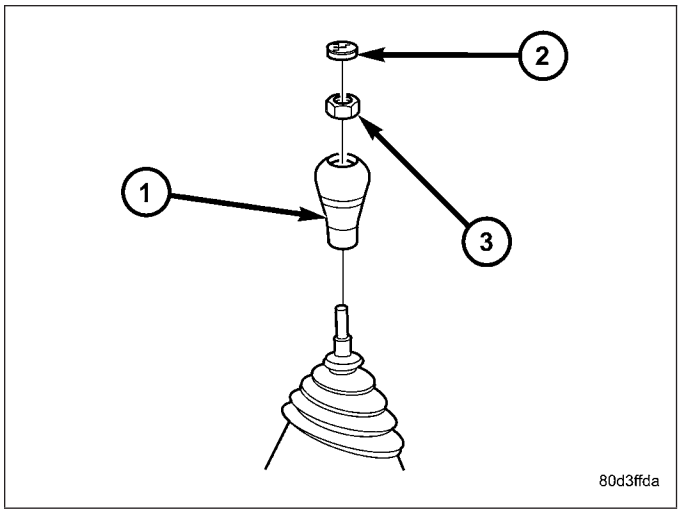

A-PILLAR TRIM/GRAB HANDLE

REMOVAL

1. Using a small flat-bladed tool, carefully open the two fastener covers (3) located in the a-pillar trim panel (2).
2. Remove the two bolts (4) that secure the a-pillar trim panel to the a-pillar (1) and remove the trim panel.

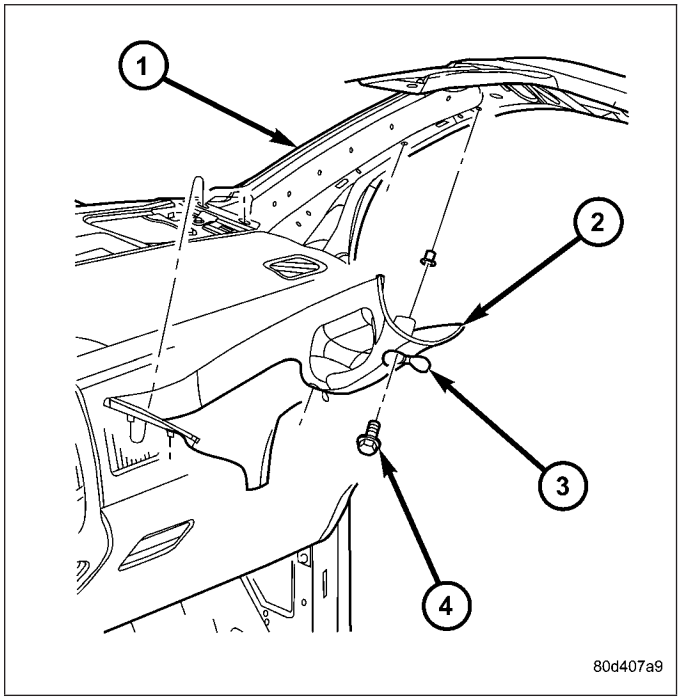

INSTALLATION

1. Position the locating tab of the A-pillar trim panel (2) into the slot located in the top of the instrument panel.
2. Install the A-pillar trim panel onto the A-pillar (1) and install the two bolts (4). Tighten the bolts to 6 N·m (55 in. lbs.).
3. Close the two fastener covers (3) located in the A-pillar trim panel.

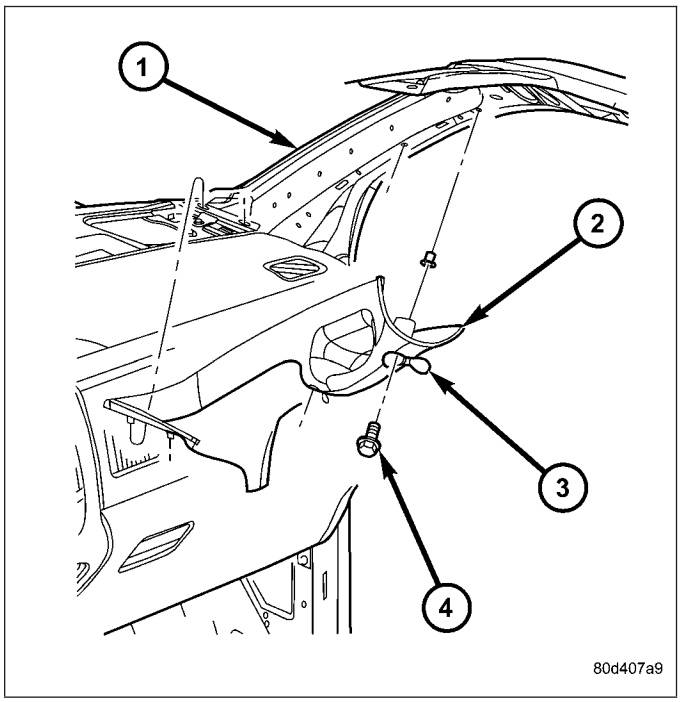

B-PILLAR GRAB HANDLE

REMOVAL

1. Using a small flat-bladed tool, carefully open the two fastener covers (2) located on the grab handle (1).
2. Remove the two bolts (3) that secure the grab handle to the B-pillar and remove the grab handle.

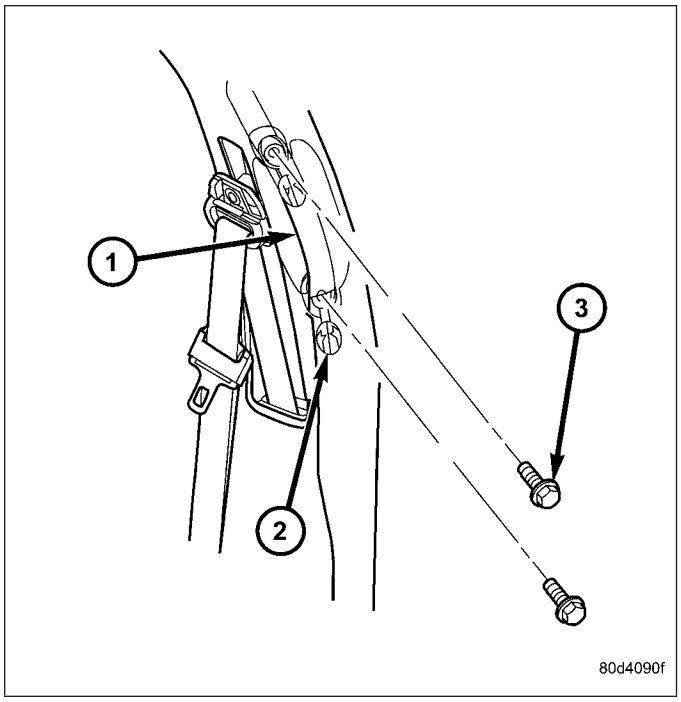

INSTALLATION

1. Install the grab handle (1) onto the B-pillar and install the two bolts (3). Tighten the bolts to 6 N·m (55 in. lbs.).
2. Close the two fastener covers (2) located on the grab handle.

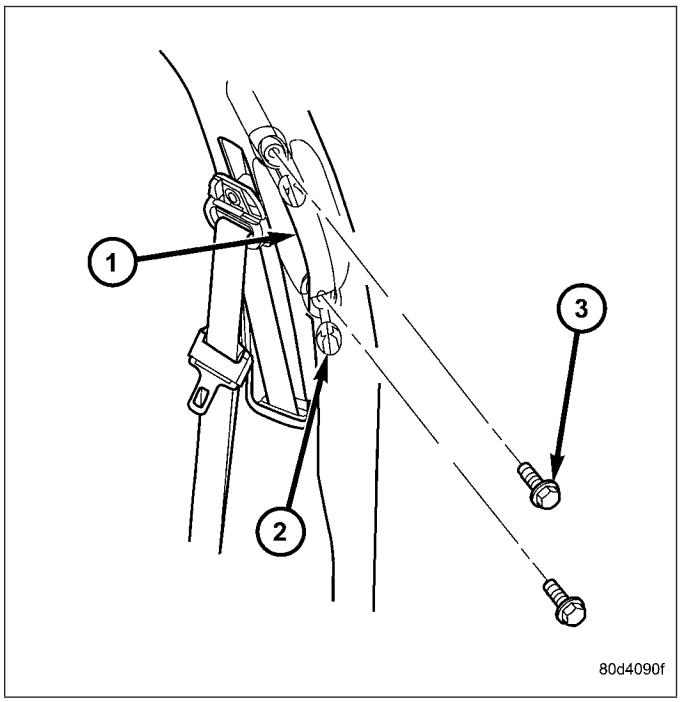

B-PILLAR LOWER TRIM

REMOVAL

REGULAR CAB

1. Remove the cowl trim panel (Refer to 23 - BODY/INTERIOR/COWL TRIM - REMOVAL).
2. Remove the upper B-pillar trim panel (Refer to 23 - BODY/INTERIOR/B-PILLAR UPPER TRIM - REMOVAL).
3. Remove the bolt (2) that secures the seat belt (1) to the bottom of the B-pillar (4) and position the seat belt out of the way.
4. Using a trim stick C-4755 or equivalent, disengage the retaining tabs that secure the lower B-pillar trim panel (3) to the B-pillar.
5. Remove the seat belt from the lower B-pillar trim panel through the slot provided and remove the trim panel.

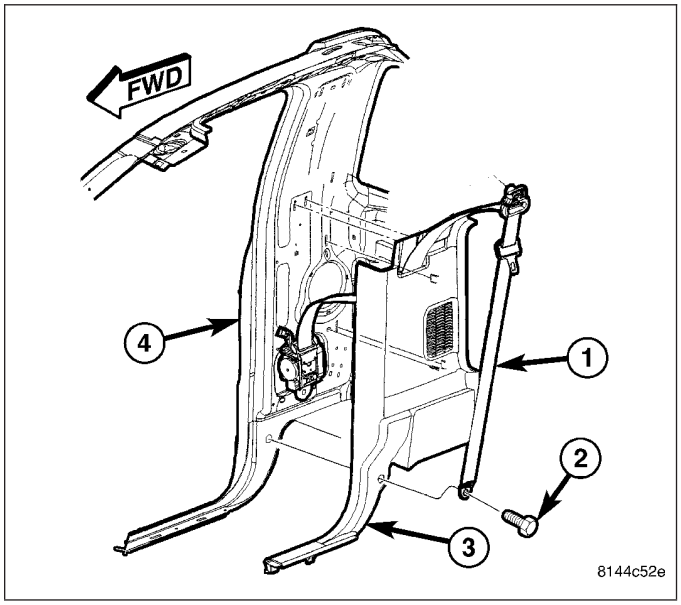

QUAD CAB

1. Remove the cowl trim panel (Refer to 23 - BODY/INTERIOR/COWL TRIM - REMOVAL).
2. Remove the rear door sill trim cover (Refer to 23 - BODY/INTERIOR/REAR DOOR SILL TRIM COVER - REMOVAL).
3. Remove the upper B-pillar trim panel (Refer to 23 - BODY/INTERIOR/B-PILLAR UPPER TRIM - REMOVAL).
4. Using a trim stick C-4755 or equivalent, disengage the retaining tabs that secure the lower B-pillar trim panel (1) to the B-pillar (2).
5. Remove the seat belt (3) from the lower B-pillar trim panel through the slot provided and remove the trim panel.

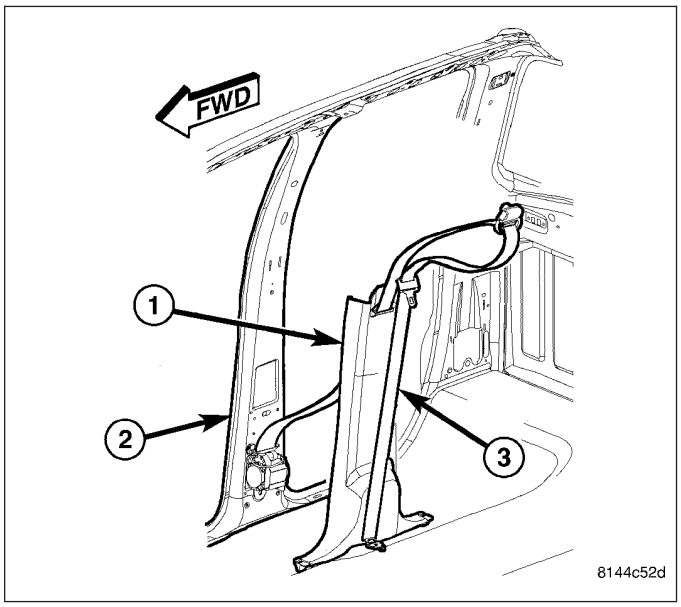

INSTALLATION

REGULAR CAB

1. Route the seat belt (1) through the slot in the lower B-pillar trim panel (3) and position the trim panel to the B-pillar (4).
2. Engage the retaining tabs that secure the lower B-pillar trim panel to the B-pillar.
3. Install the bolt (2) that secures the seat belt to the bottom of the B-pillar. Tighten the bolt to 40 N·m (29 ft. lbs.).
4. Install the upper B-pillar trim panel (Refer to 23 - BODY/INTERIOR/B-PILLAR UPPER TRIM - INSTALLATION).
5. Install the cowl trim panel (Refer to 23 - BODY/INTERIOR/COWL TRIM - INSTALLATION).

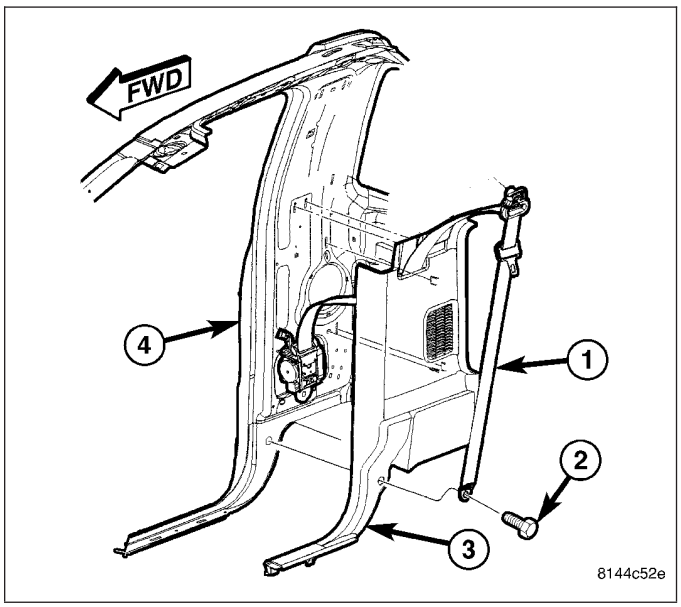

QUAD CAB

1. Route the seat belt (3) through the slot in the lower B-pillar trim panel (1) and position the trim panel to the B-pillar (2).
2. Engage the retaining tabs that secure the lower B-pillar trim panel to the B-pillar.
3. Install the upper B-pillar trim panel (Refer to 23 - BODY/INTERIOR/B-PILLAR UPPER TRIM - INSTALLATION).
4. Install the rear door sill trim cover (Refer to 23 - BODY/INTERIOR/DOOR SILL TRIM COVER - INSTALLATION).
5. Install the cowl trim panel (Refer to 23 - BODY/INTERIOR/COWL TRIM - INSTALLATION).

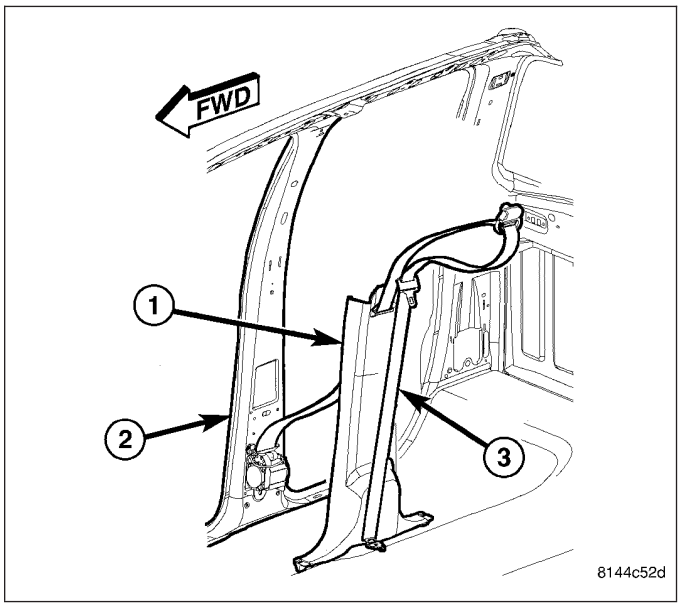

B-PILLAR UPPER TRIM

REMOVAL

REGULAR CAB

1. Remove the cap (1) and then the bolt (2) that secures the seat belt (3) to the top of the B-pillar (4) and position the seat belt out of the way.
2. Using a trim stick C-4755 or equivalent, disengage the retaining tabs that secure the upper B-pillar trim panel (5) to the B-pillar and remove the trim panel.

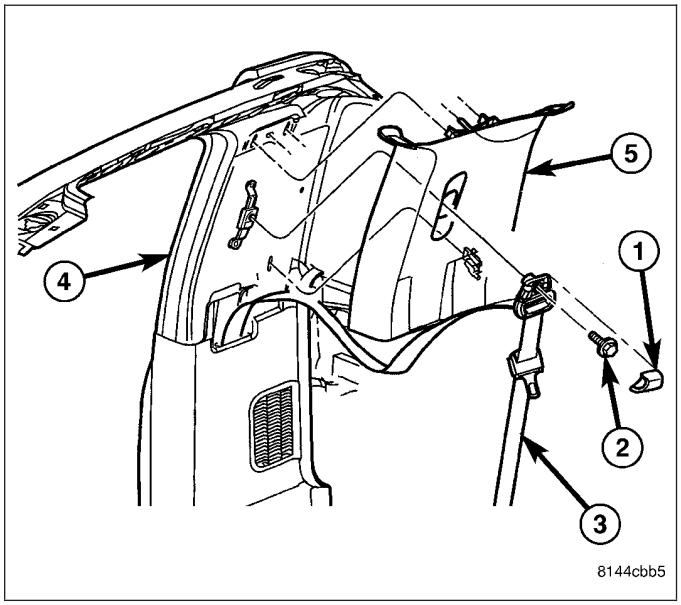

QUAD CAB

1. Using a small flat-bladed tool, carefully open the two fastener covers (2) located on the grab handle (1).
2. Remove the two bolts (3) that secure the grab handle to the B-pillar and remove the grab handle.

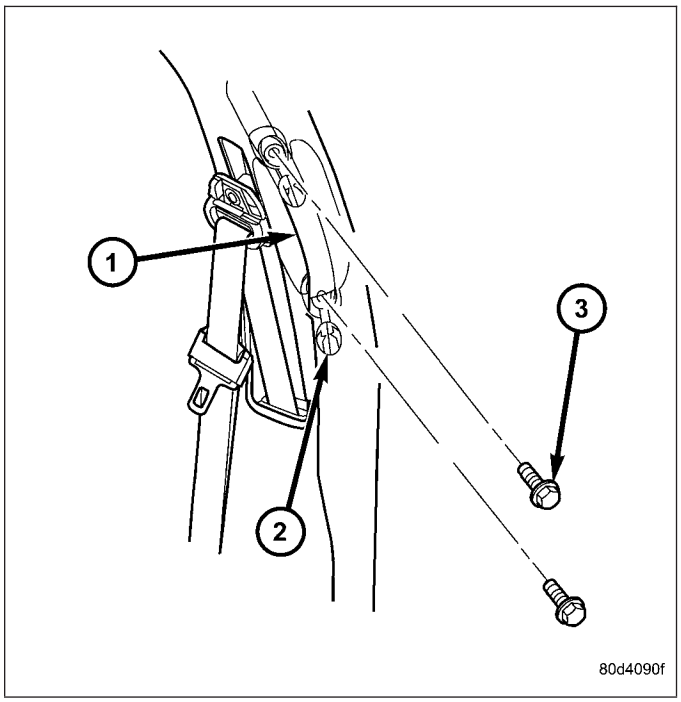

3. Remove the cap (1) and the bolt (2) that secures the seat belt (3) to the top of the B-pillar (4) and position the seat belt out of the way.
4. Using a trim stick C-4755 or equivalent, disengage the retaining tabs that secure the upper B-pillar trim panel (5) to the B-pillar and remove the trim panel.

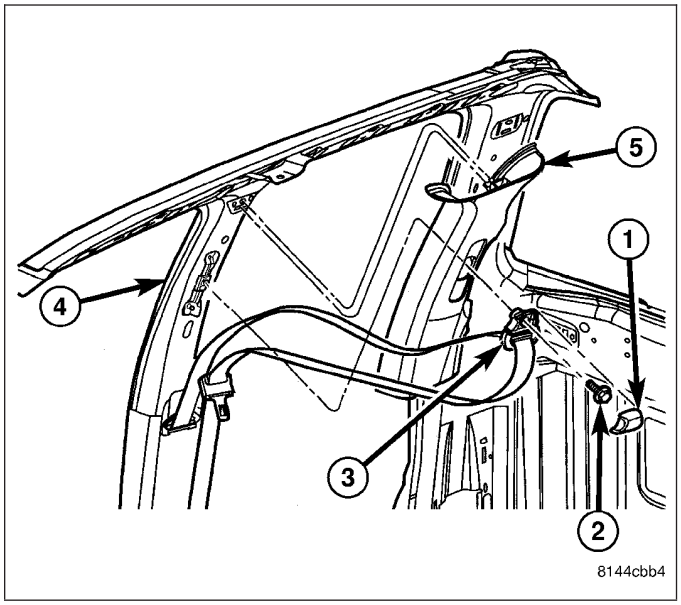

INSTALLATION

REGULAR CAB

1. Position the upper B-pillar trim panel (5) to the B-pillar (4).
2. Engage the retaining tabs that secure the upper B-pillar trim panel to the B-pillar.
3. Install the bolt (2) that secures the seat belt (3) to the top of the B-pillar. Tighten the bolt to 40 N·m (29 ft. lbs.).
4. Install the cap (1) onto the seat belt.

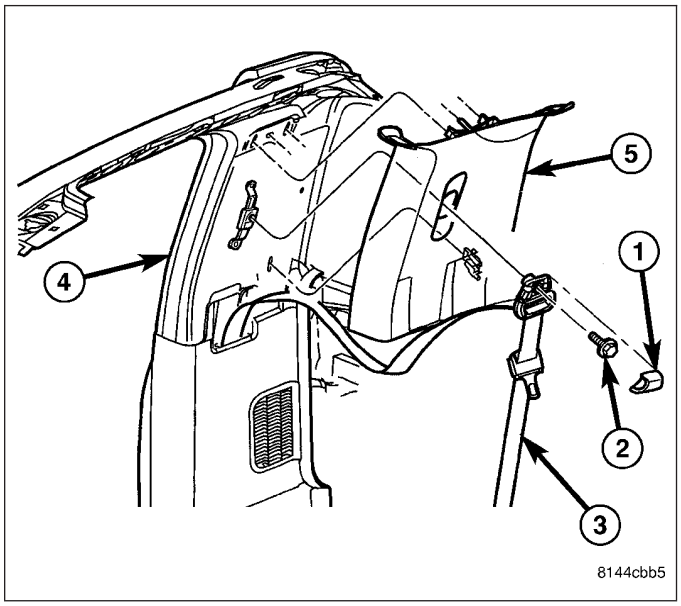

QUAD CAB

1. Position the upper B-pillar trim panel (5) to the B-pillar (4).
2. Engage the retaining tabs that secure the upper B-pillar trim panel to the B-pillar.
3. Install the bolt (2) that secures the seat belt (3) to the top of the B-pillar. Tighten the bolt to 40 N·m (29 ft. lbs.).
4. Install the cap (1) onto the seat belt.

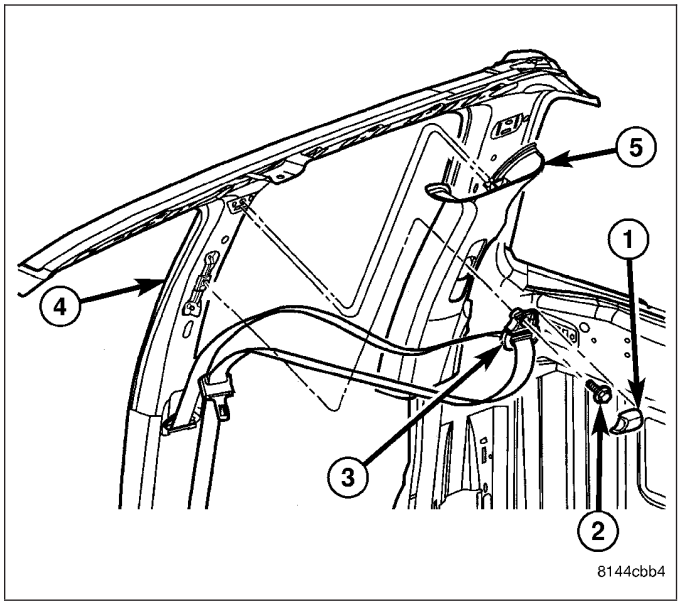

5. Install the grab handle (1) onto the B-pillar and install the two bolts (3). Tighten the bolts to 6 N·m (55 in. lbs.).
6. Close the two fastener covers (2) located on the grab handle.

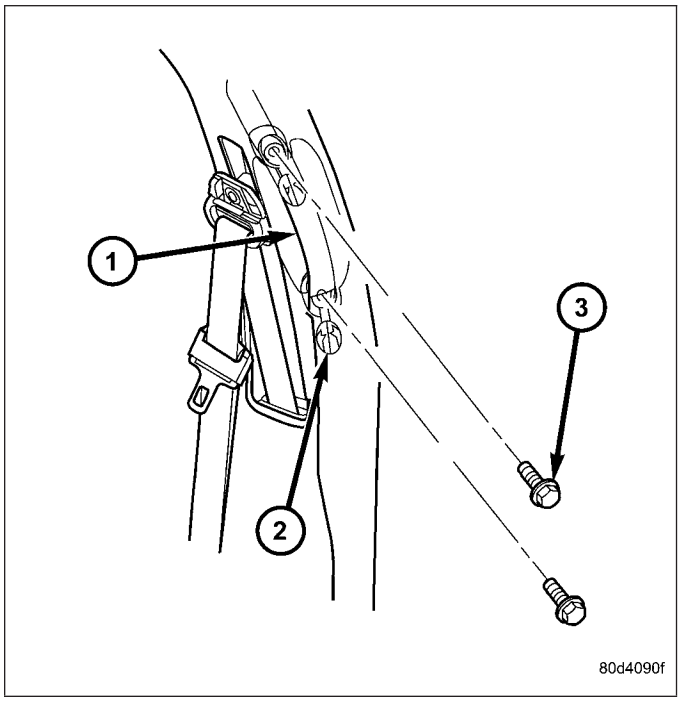

C-PILLAR LOWER TRIM

REMOVAL

1. Remove the upper C-pillar trim panel (Refer to 23 - BODY/INTERIOR/C-PILLAR TRIM - REMOVAL).
2. Remove the bolt (3) that secures the seat belt (2) to the bottom of the C-pillar (4) and position the seat belt out of the way.
3. Using a trim stick C-4755 or equivalent, disengage the retaining tabs that secure the lower C-pillar trim panel (1) to the C-pillar.
4. Remove the seat belt from the lower C-pillar trim panel through the slot provided and remove the trim panel.

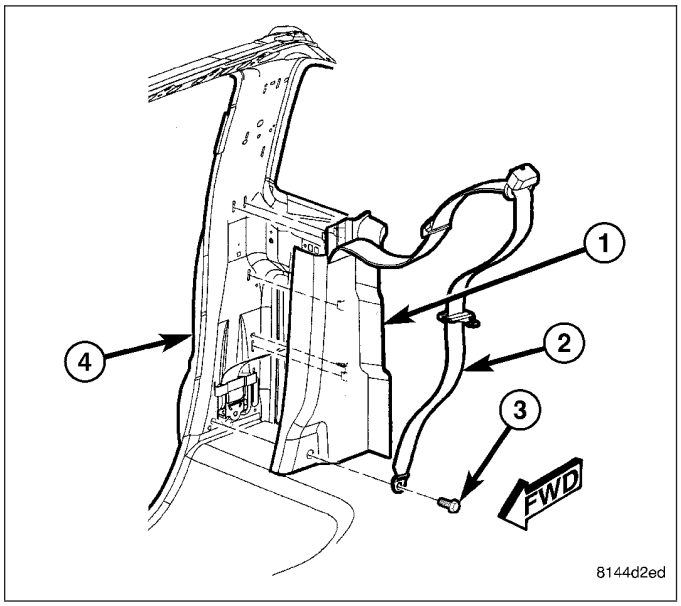

INSTALLATION

1. Route the seat belt (2) through the slot in the lower C-pillar trim panel (1) and position the trim panel to the C-pillar (4).
2. Engage the retaining tabs that secure the lower C-pillar trim panel to the C-pillar.
3. Install the bolt (3) that secures the seat belt to the bottom of the C-pillar. Tighten the bolt to 40 N·m (29 ft. lbs.).
4. Install the upper C-pillar trim panel (Refer to 23 - BODY/INTERIOR/C-PILLAR UPPER TRIM - INSTALLATION).

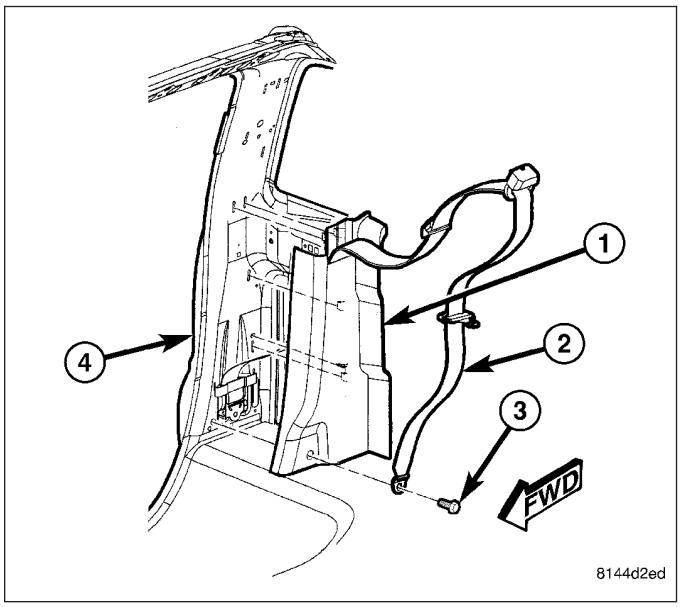

C-PILLAR UPPER TRIM

REMOVAL

1. Remove the cap (1) and then the bolt (2) that secures the seat belt (3) to the top of the C-pillar (4) and position the seat belt out of the way.
2. Using a trim stick C-4755 or equivalent, disengage the retaining tabs that secure the upper C-pillar trim panel (5) to the C-pillar and remove the trim panel.

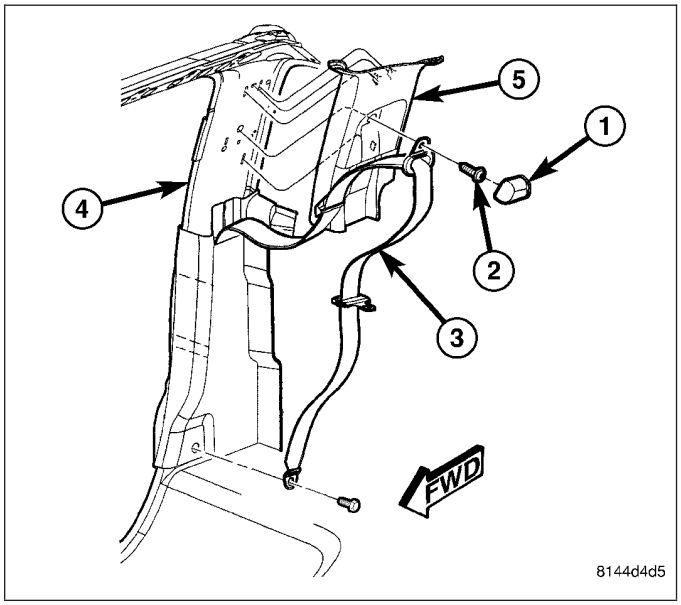

INSTALLATION

1. Position the upper C-pillar trim panel (5) to the C-pillar (4).
2. Engage the retaining tabs that secure the upper C-pillar trim panel to the C-pillar.
3. Install the bolt (2) that secures the seat belt (3) to the top of the C-pillar. Tighten the bolt to 40 N·m (29 ft. lbs.).
4. Install the cap (1) onto the seat belt.

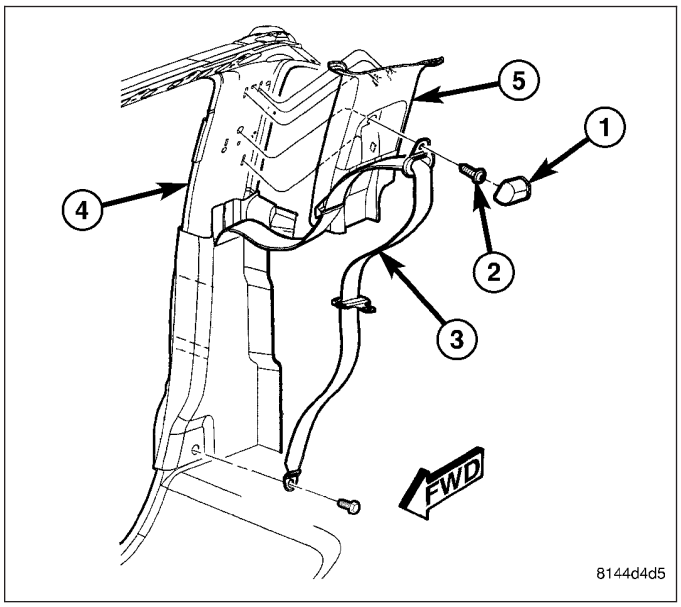

CARPETS AND FLOOR MATS

REMOVAL

NOTE: Carpet for Quad Cab model shown. Regular cab similar.

1. Remove the front seats (Refer to 23 - BODY/SEATS/SEAT - FRONT - REMOVAL).
2. If equipped, remove the floor console (Refer to 23 - BODY/INTERIOR/FLOOR CONSOLE - REMOVAL).
3. If equipped, remove the three bolts (1) that secure the rear storage compartment (2) to the floor panel (3) and remove the storage compartment from the rear trim panel (4).

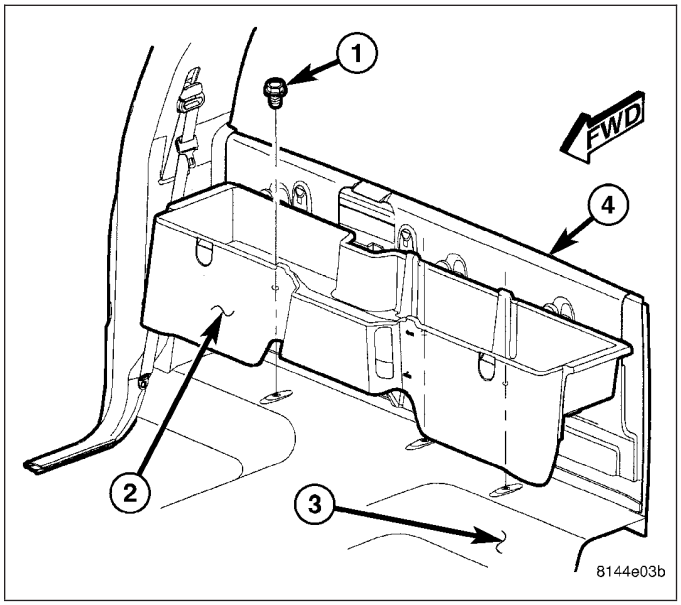

4. On Quad Cab models, remove the rear seats (1) (Refer to 23 - BODY/SEATS/SEAT - REAR - REMOVAL).
5. On Quad Cab models, remove the rear cup holder (2) using a trim stick C-4755 or equivalent.

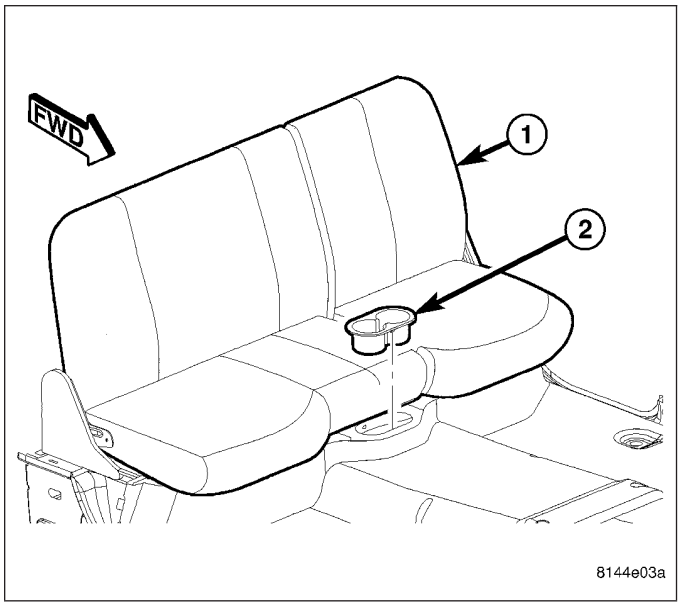

6. Remove the lower B-pillar trim panels (Refer to 23 - BODY/INTERIOR/B-PILLAR LOWER TRIM - REMOVAL).
7. On Quad Cab models, remove the bolt that secures the lower seat belt anchor to the floor panel near the B-pillars (Refer to 8 - ELECTRICAL/ RESTRAINTS/SEAT BELT & RETRACTOR - REMOVAL).
8. Remove the retaining screw (1) that secures the jack assembly (2) to the floor panel (3) and remove the jack assembly.
9. Remove the two bolts (4) that secure the jack assembly to the floor panel.

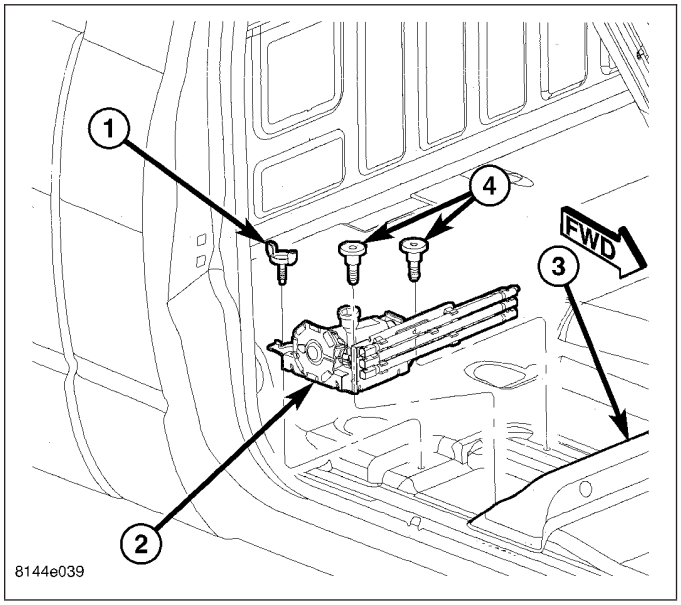

10. On Quad Cab models, remove the eleven push-pin fasteners (1) that secure the rear of the carpet (2) to the floor panel (3).
11. Remove the carpet from the vehicle.

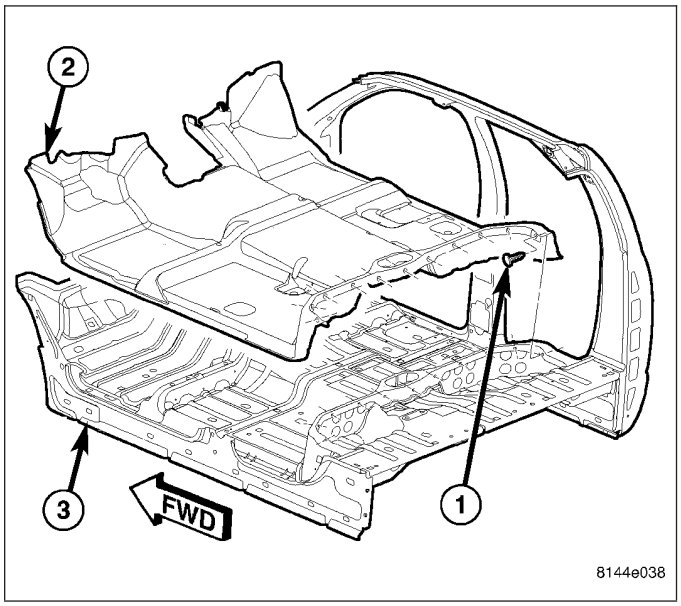

INSTALLATION

NOTE: Carpet for Quad Cab model shown. Regular cab similar.

1. Position the carpet (2) into the vehicle.
2. On Quad Cab models, install the eleven push-pin fasteners (1) that secure the carpet to the floor panel (3).

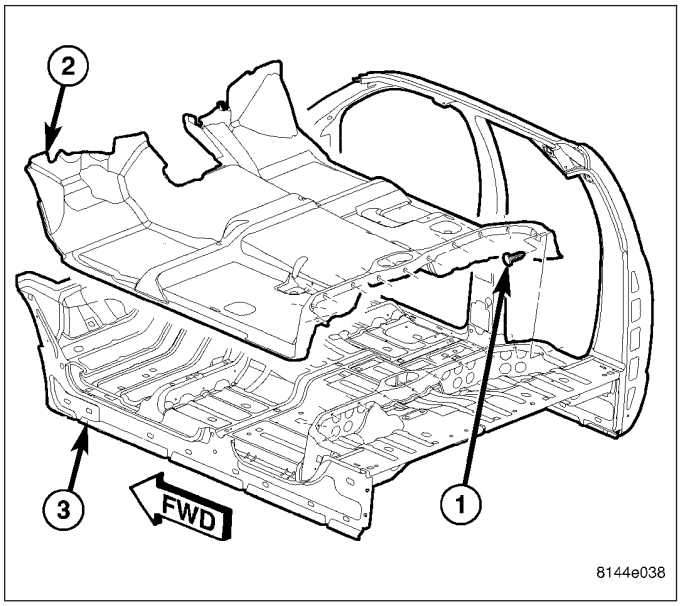

3. Install the two bolts (4) that secure the jack assembly (2) to the floor panel (3).
4. Position the jack assembly onto the two bolts and install the retaining screw (1). Tighten the screw securely.
5. On Quad Cab models, install the bolt that secures the lower seat belt anchors the floor panel near the B-pillars (Refer to 8 - ELECTRICAL/RESTRAINTS/ SEAT BELT & RETRACTOR - INSTALLATION). Tighten the bolt to 40 N·m (29 ft. lbs.).
6. Install the lower B-pillar trim panels (Refer to 23 - BODY/INTERIOR/B-PILLAR LOWER TRIM - INSTALLATION).

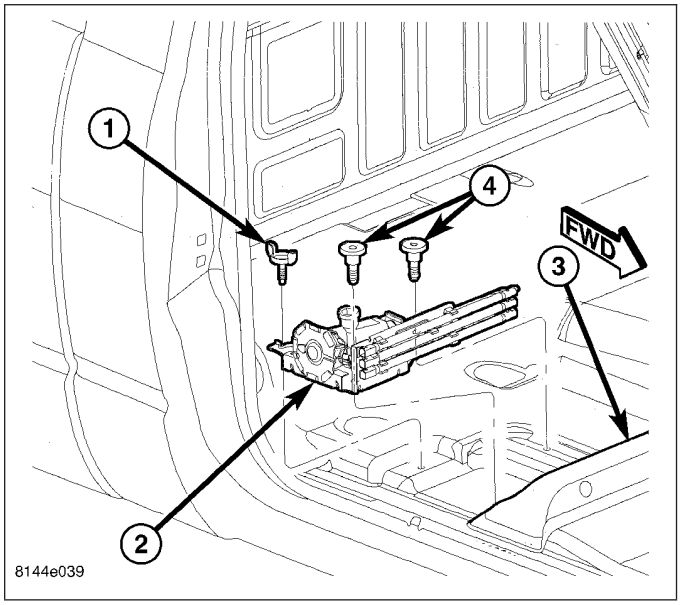

7. On Quad Cab models, install the rear seat (1) (Refer to 23 - BODY/SEATS/SEAT - INSTALLATION).
8. On Quad Cab models, install the rear cup holder (2).

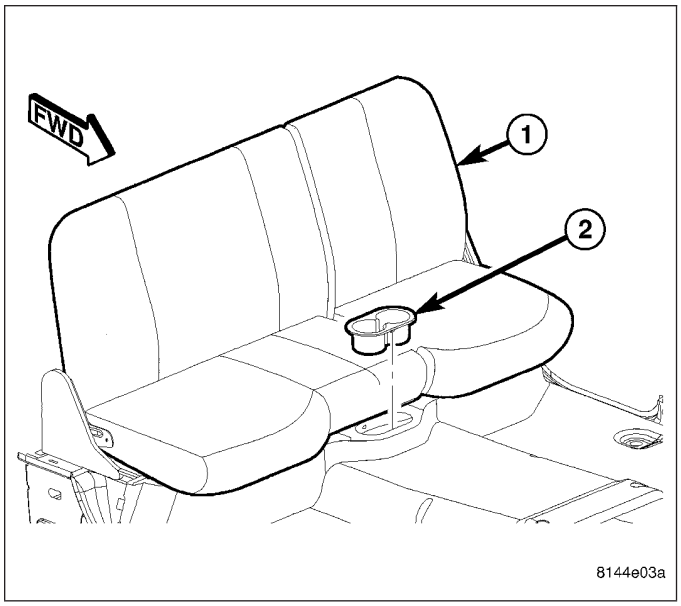

9. If equipped, position the rear storage compartment (2) onto the rear cab trim panel (4) and install the three bolts (1). Tighten the bolts to 6 N·m (55 in. lbs.).
10. If equipped, install the floor console (Refer to 23 - BODY/INTERIOR/FLOOR CONSOLE - INSTALLATION).
11. Install the front seats (Refer to 23 - BODY/SEATS/SEAT - FRONT - INSTALLATION).

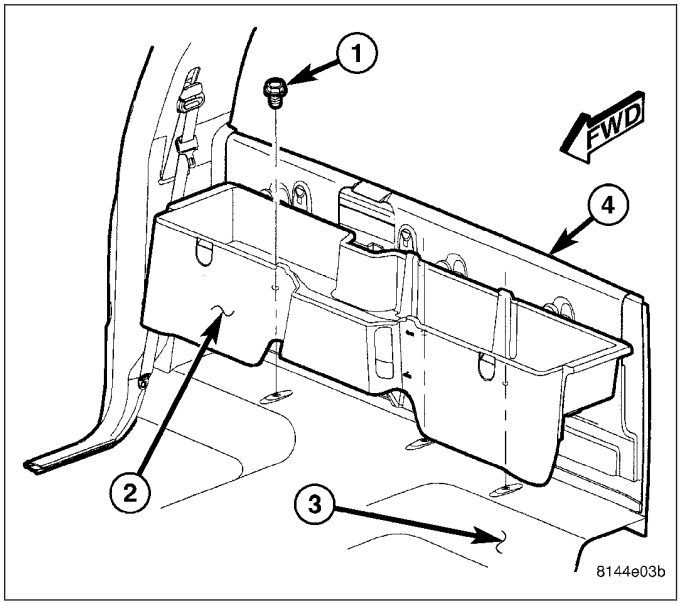

COAT HOOK

REMOVAL

1. Using a trim stick C-4755 or equivalent, disengage the release clip (2) as shown and remove the coat hook (1) from the headliner (3)

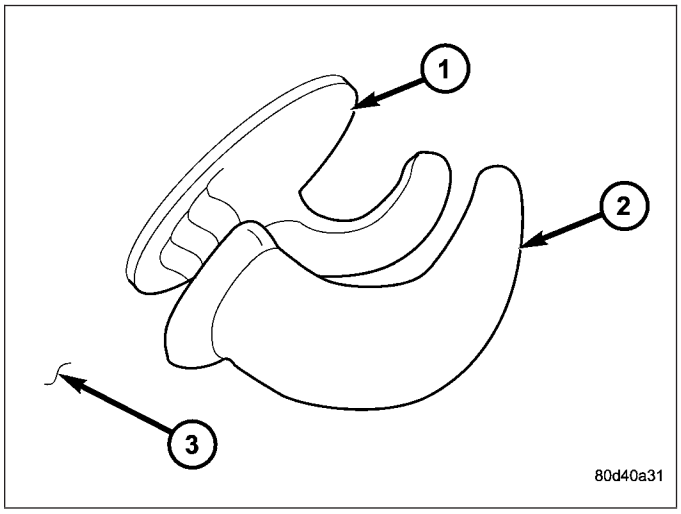

INSTALLATION

1. Position the coat hook (1) through the headliner (3) and fully seat the base of the support to the roof panel.
2. Engage the release clip (2).

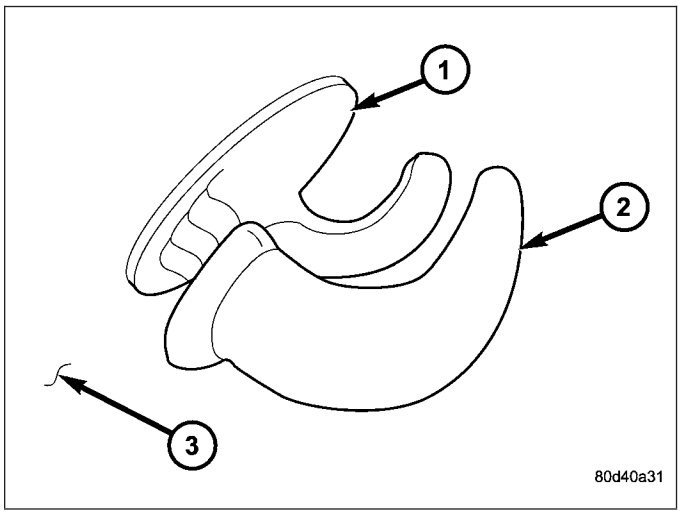

COWL TRIM

REMOVAL

1. Using a trim stick C-4755 or equivalent, disengage the retaining tabs of the cowl trim panel (1) from the retainer clips (2) in the door sill (3).
2. Pull the cowl trim panel rearward and remove it from the vehicle.

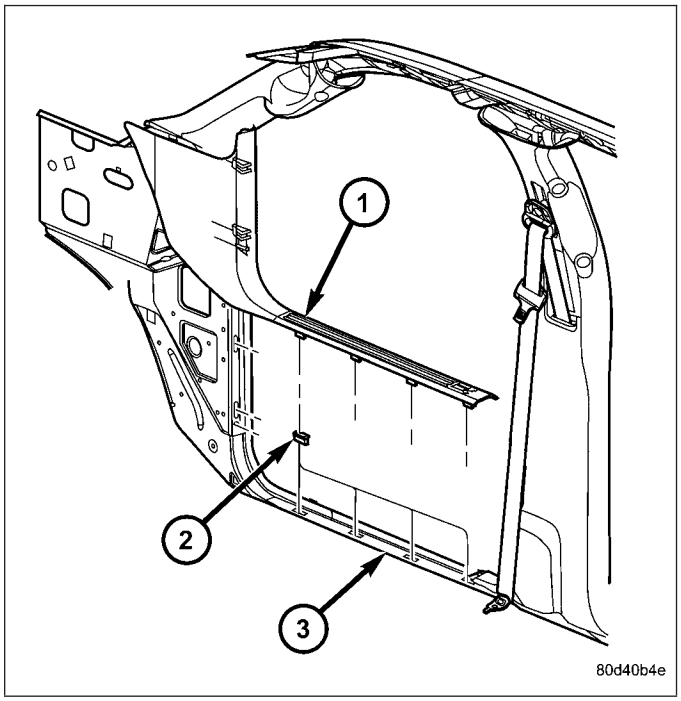

INSTALLATION

1. Position the cowl trim panel (1) onto the door sill (2).
2. Push the cowl trim panel forward and then engage the retaining tabs that secure the sill trim panel to the rear door sill.

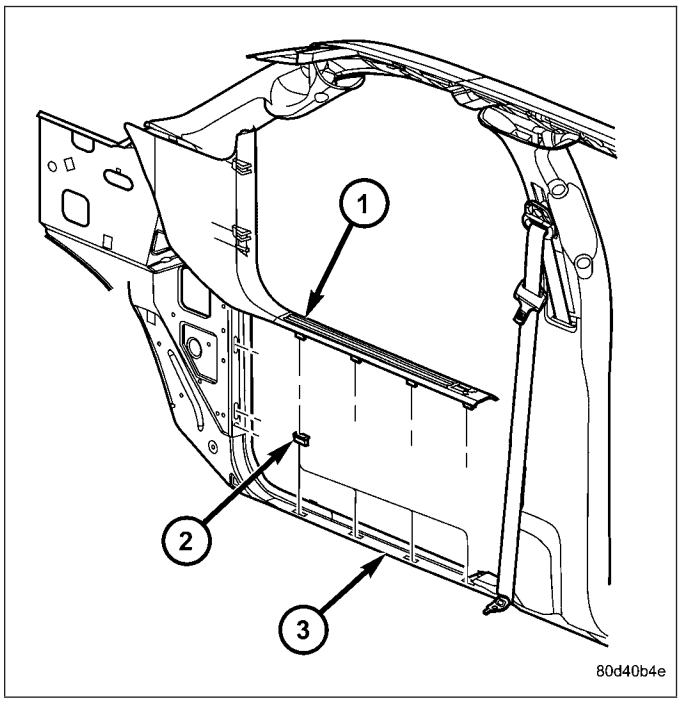

FLOOR CONSOLE

REMOVAL

1. If equipped, remove the 4WD gear shift boot (Refer to 23 - BODY/INTERIOR/4WD FLOOR SHIFT BOOT - REMOVAL).
2. If equipped with a manual transmission, remove the transmission gear shift lever extension.
3. Using a trim stick C-4755 or equivalent, disengage the retaining tabs that secure the manual transmission gear shift boot or storage bin (2) (depending on application) to the floor console (4) and remove the boot or storage bin.
4. Remove the three inserts (1 and 3) from the floor console.

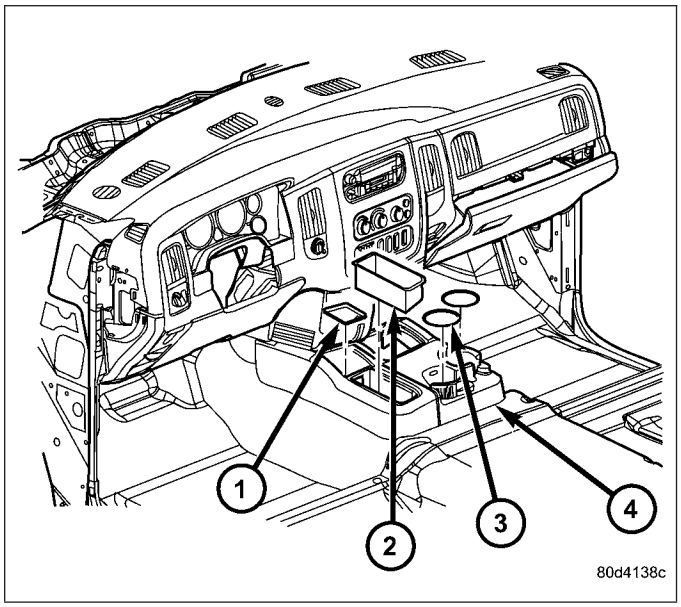

5. Remove the three bolts (3) that secure the floor console (2) to the floor panel.
6. Lift up the rear of the floor console to clear the gear shift lever (4), if equipped.
7. Slide the floor console rearward and remove it from the instrument panel (1).

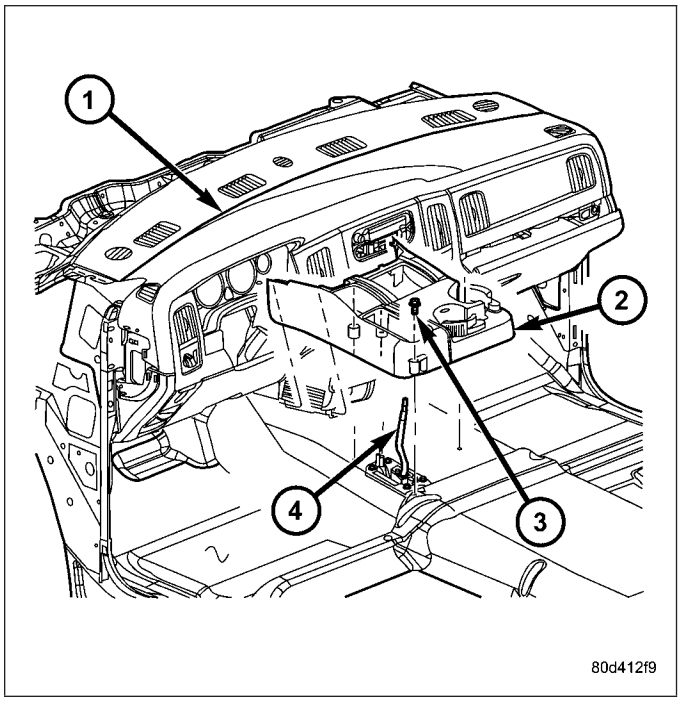

INSTALLATION

1. Position the front of the floor console (2) under the instrument panel (1).
2. Lower the back of the floor console over the gear shift lever (4) (if equipped) and install the three screws (3). Tighten the screws to 6 N·m (55 in. lbs.).

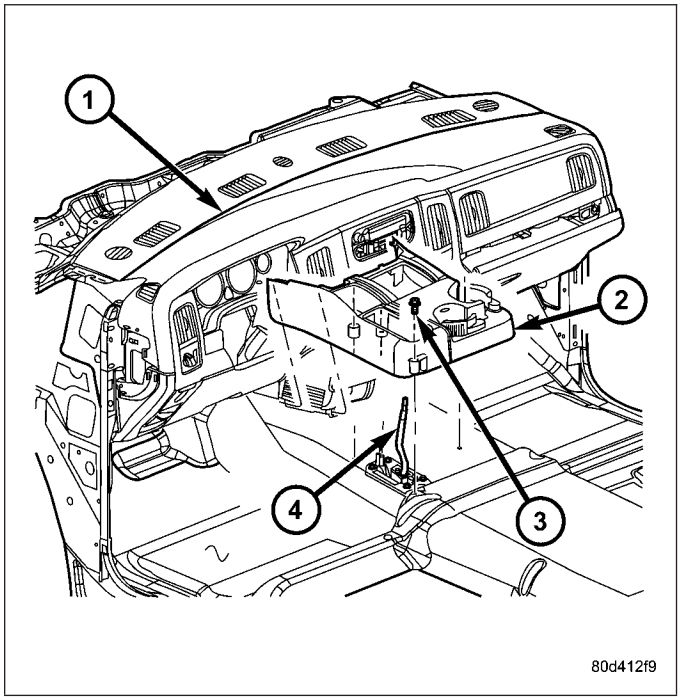

3. Install the three inserts (1 and 3) into the floor console (4).
4. Position the manual transmission gear shift boot or storage bin (2) (depending on application) onto the floor console and engage the retaining tabs.
5. If equipped with a manual transmission, install the transmission gear shift lever extension.
6. If equipped, install the 4WD gear shift boot (Refer to 23 - BODY/INTERIOR/4WD FLOOR SHIFT BOOT - INSTALLATION).

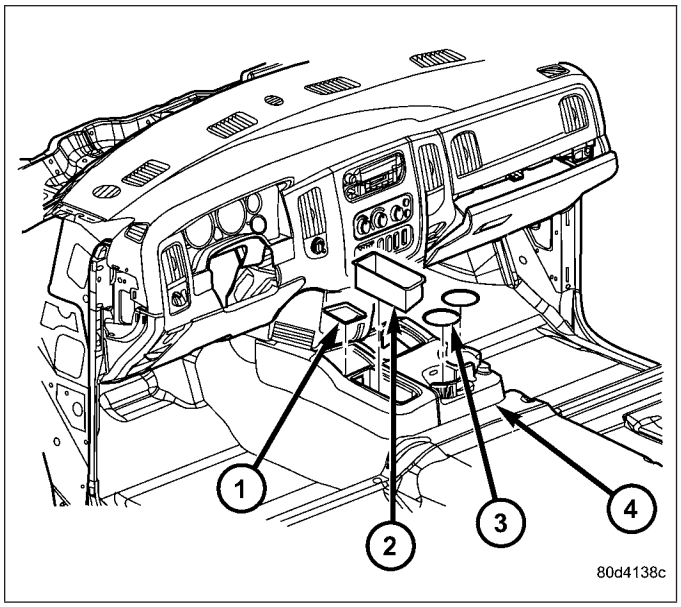

HEADLINER

REMOVAL

NOTE: Headliner for Quad Cab model shown. Regular cab similar.

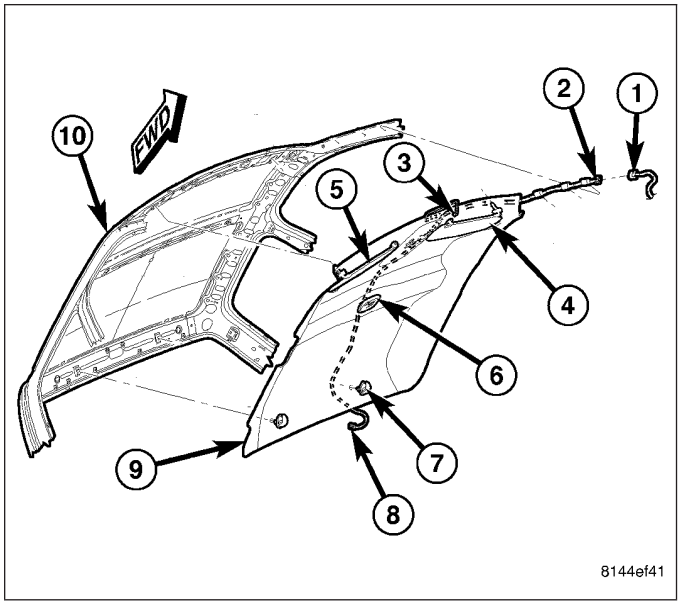

1. Remove the A-pillar trim panels (Refer to 23 - BODY/INTERIOR/A-PILLAR TRIM - REMOVAL).
2. Remove the upper B-pillar trim panels (Refer to 23 - BODY/INTERIOR/B-PILLAR UPPER TRIM - REMOVAL).
3. On Quad Cab models, remove the upper C-pillar trim panels (Refer to 23 - BODY/INTERIOR/C-PILLAR TRIM - REMOVAL).
4. Disconnect the wire harness connector (1) located at the left A-pillar from the headliner wire harness (2).
5. Disconnect the headliner wire harness connector (3) from the inside rear view mirror.
6. Remove the overhead console (Refer to 8 - ELECTRICAL/OVERHEAD CONSOLE - REMOVAL).
7. Remove the sun visors (4) (Refer to 23 - BODY/INTERIOR/SUN VISOR - REMOVAL).
8. Remove the sun visor supports (5) (Refer to 23 - BODY/INTERIOR/SUN VISOR SUPPORT - REMOVAL).
9. Remove the dome lamp (6) (Refer to 8 - ELECTRICAL/LAMPS/LIGHTING - INTERIOR/DOME LAMP - REMOVAL).
10. Remove the two coat hooks (7) (Refer to 23 - BODY/INTERIOR/COAT HOOK - REMOVAL).
11. Lower the rear of the headliner (9) downward from the roof panel (9) and disconnect the headliner wire harness connector (8) from the center high mounted stop lamp.
12. Lower the front of the headliner downward and remove the headliner through the passenger door opening.

INSTALLATION

NOTE: Headliner for Quad Cab model shown. Regular cab similar.

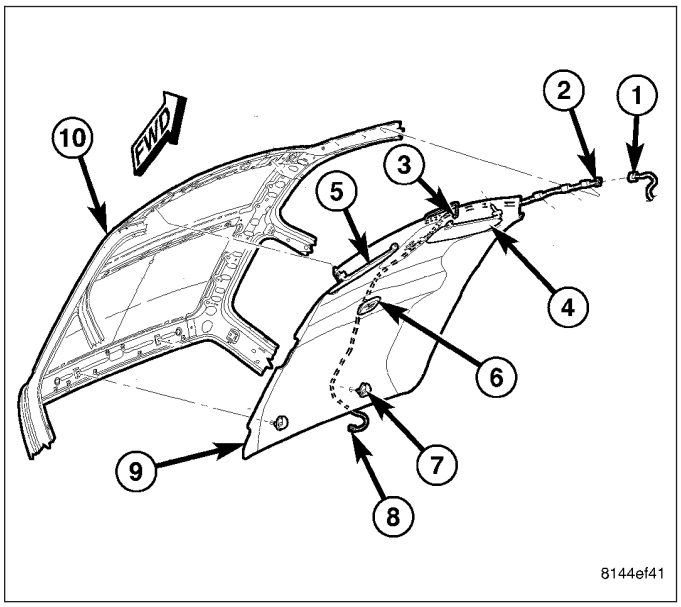

1. Position the headliner (9) into the vehicle through the passenger door opening.
2. Connect the headliner wire harness connector (8) to the center high mounted stop lamp.
3. Raise the rear of the headliner upward and install the two coat hooks (7) (Refer to 23 - BODY/INTERIOR/COAT HOOK - INSTALLATION).
4. Raise the front of the headliner upward and install the sun visor supports (5) (Refer to 23 - BODY/INTERIOR/SUN VISOR SUPPORT - INSTALLATION).
5. Install the sun visors (4) (Refer to 23 - BODY/INTERIOR/SUN VISOR - INSTALLATION).
6. Install the dome lamp (6) (Refer to 8 - ELECTRICAL/LAMPS/LIGHTING - INTERIOR/DOME LAMP - INSTALLATION).
7. Install the overhead console (Refer to 8 - ELECTRICAL/OVERHEAD CONSOLE - INSTALLATION).
8. Connect the headliner wire harness connector (3) to the inside rear view mirror
9. Connect the headliner wire harness (2) to the wire harness connector (1) located at the left A-pillar.
10. On Quad Cab models, install the upper C-pillar trim panel (Refer to 23 - BODY/INTERIOR/C-PILLAR TRIM - INSTALLATION).
11. Install the upper B-pillar trim panels (Refer to 23 - BODY/INTERIOR/B-PILLAR UPPER TRIM - INSTALLATION).
12. Install the upper A-pillar trim panels. (Refer to 23 - BODY/INTERIOR/A-PILLAR TRIM - INSTALLATION).

LOAD FLOOR

REMOVAL

1. Move the rear seat cushion (1) to the up position.
2. Remove the two nuts (2) that secure the rear of the load floor (3) to the floor panel.

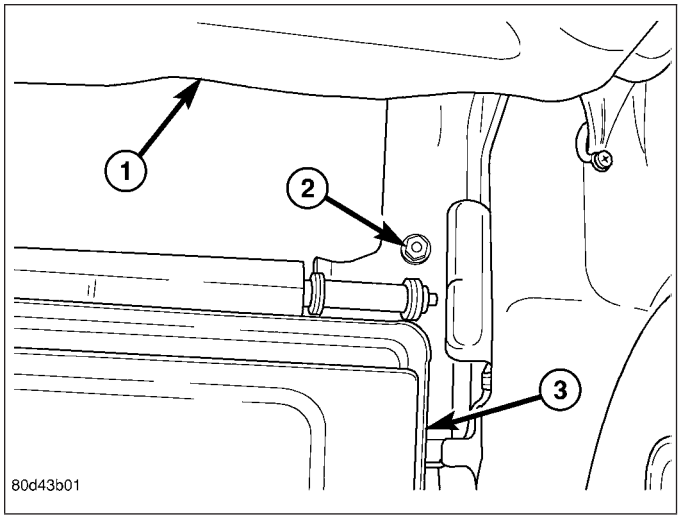

3. Move the load floor (2) to the up position.
4. Remove the two bolts (3) that secure the load floor to the floor panel (1) and remove the load floor.
5. If required, remove the support cylinder (4) (Refer to 23 - BODY/INTERIOR/LOAD FLOOR SUPPORT CYLINDER - REMOVAL).

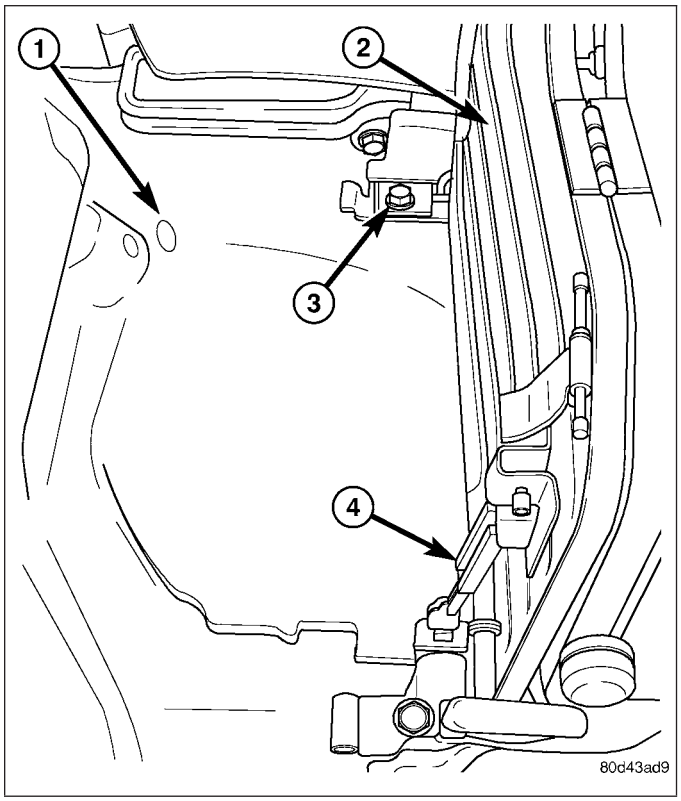

INSTALLATION

1. If removed, install the load floor support cylinder (4) (Refer to 23 - BODY/INTERIOR/LOAD FLOOR SUPPORT CYLINDER - INSTALLATION).
2. Position the load floor (2) into the vehicle and install the two bolts (3) that secure it to the floor panel (1). Tighten the bolts to 40 N·m (29 ft. lbs.).

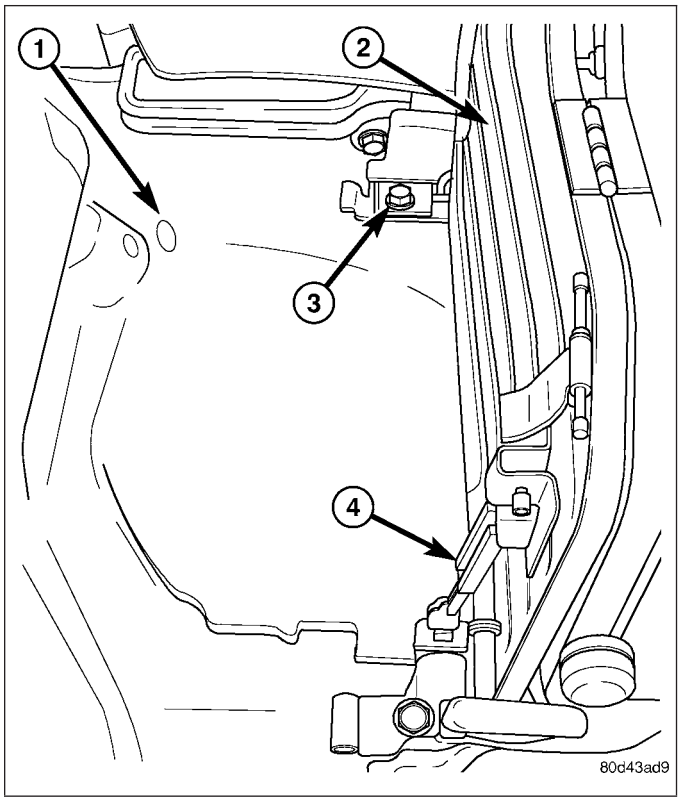

3. Move the load floor (3) to the down position and install the two nuts (2) that secure the load floor to the floor panel. Tighten the nuts to 25 N·m (18 ft. lbs.).
4. Move the rear seat cushion (1) to the down position.

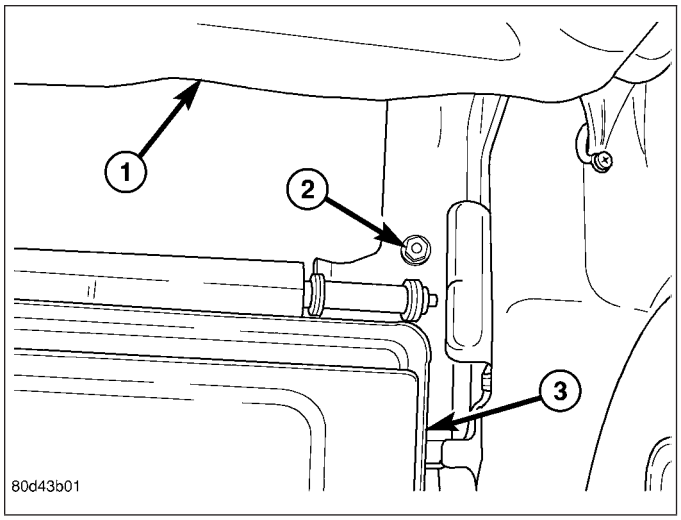

LOAD FLOOR SUPPORT CYLINDER

REMOVAL

1. Open the load floor (2).
2. Remove the snap clips and retaining pins (1).
3. Remove the support cylinder (3).

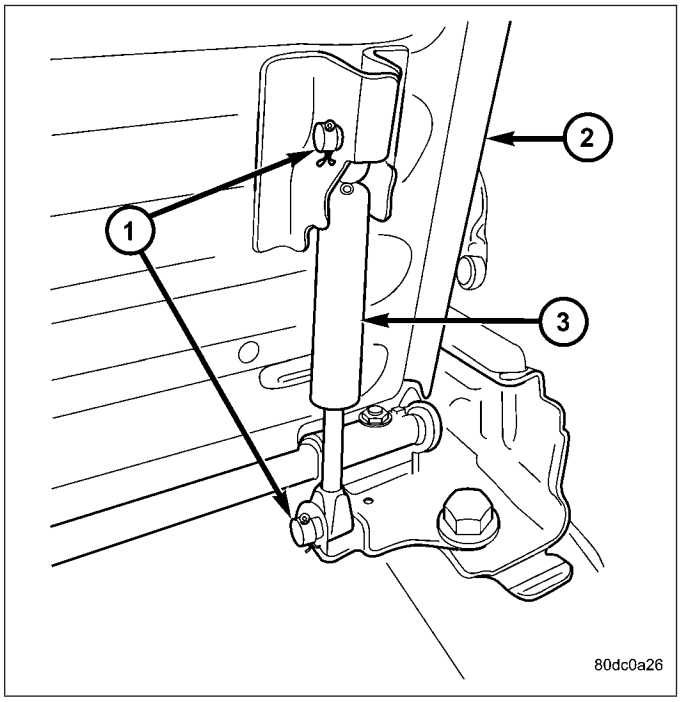

INSTALLATION

NOTE: Install the support cylinder with the cylinder end connected at the top as shown.

1. Position the load floor support cylinder (3) onto the load floor (2).
2. Install the retaining pins and snap clips (1).

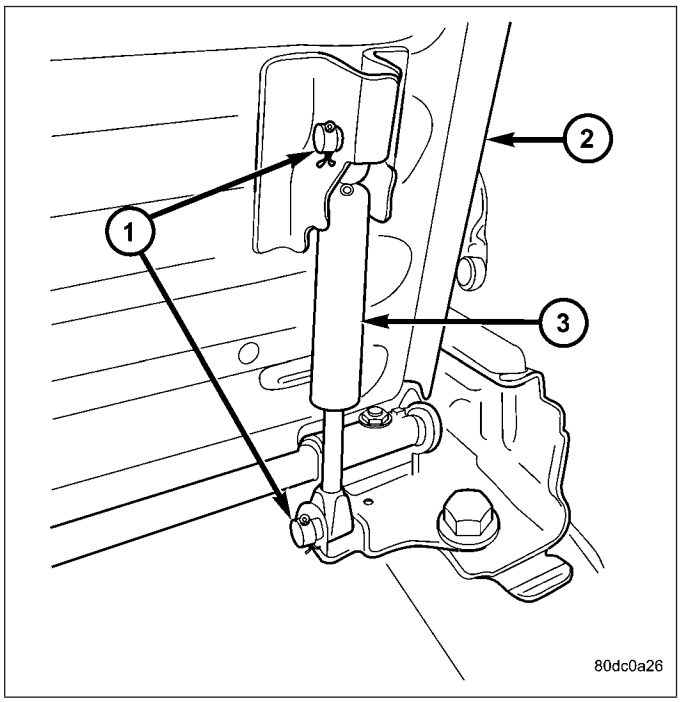

REAR CAB BACK PANEL TRIM

REMOVAL

1. If equipped, remove the three bolts (1) that secure the rear storage compartment (2) to the floor panel (3) and remove the storage compartment from the rear cab trim panel (4).

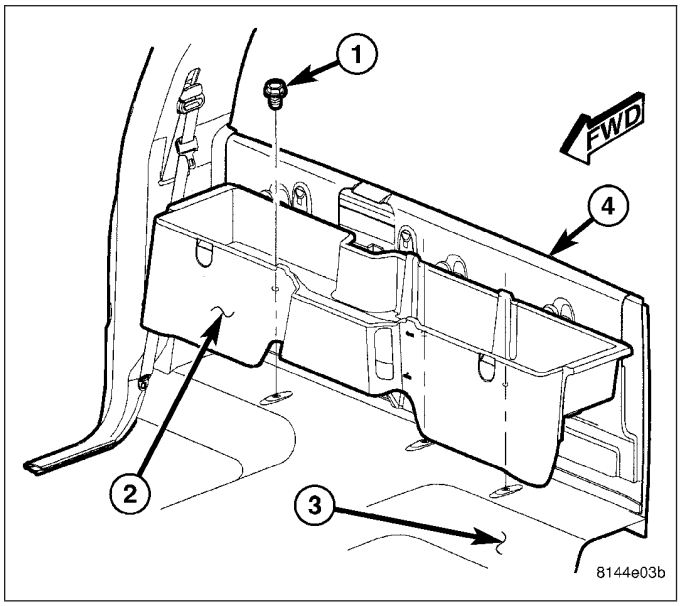

2. If equipped, using a trim stick C-4755 or equivalent, disengage the latch (4) for the utility hook cover (3) and open the cover to gain access to the screw (1) that secures the utility hook (2) to the rear cab back panel.

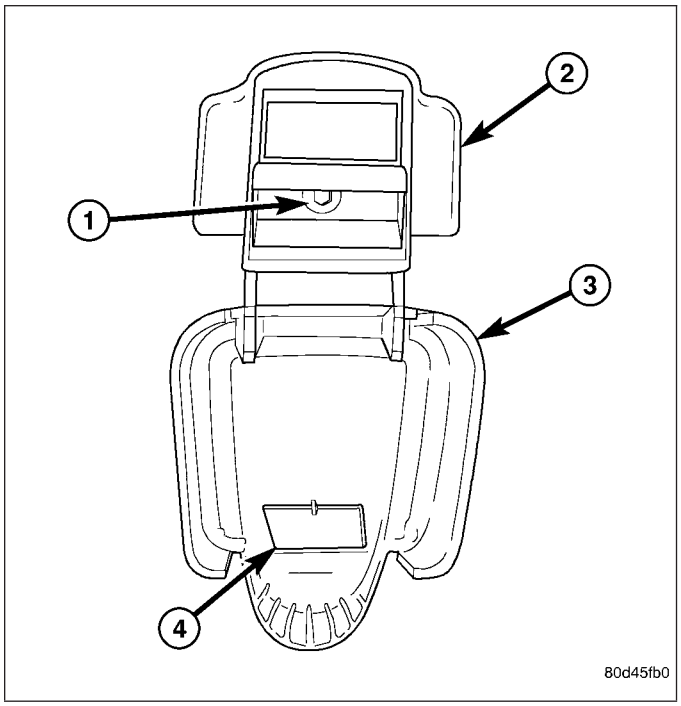

3. On Regular cab models, remove the lower B-pillar trim panels (Refer to 23 - BODY/INTERIOR/B-PILLAR LOWER TRIM - REMOVAL).
4. On Regular cab models, remove the utility hook (3) or the storage bin latch (4) (depending on application) from the rear cab trim panel (1) and remove the trim panel.

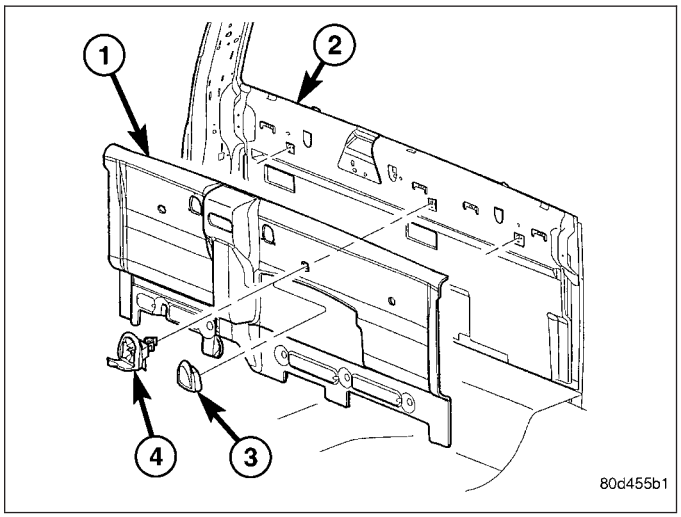

5. On Quad Cab models, remove the child seat tether straps from the rear cab back panel (2) (Refer to 8 - ELECTRICAL/RESTRAINTS/CHILD TETHER - REMOVAL).
6. On Quad Cab models, remove the center seat belt trim bezel (Refer to 8 - ELECTRICAL/RESTRAINTS/SEAT BELT & RETRACTOR - REMOVAL).
7. On Quad Cab models, remove the lower C-pillar trim panels (Refer to 23 - BODY/INTERIOR/C-PILLAR TRIM - REMOVAL).
8. On Quad Cab models, remove the two push-pin fasteners (1 and 4) that secure the rear cab trim panel (3) to the rear cab back panel and remove the trim panel.

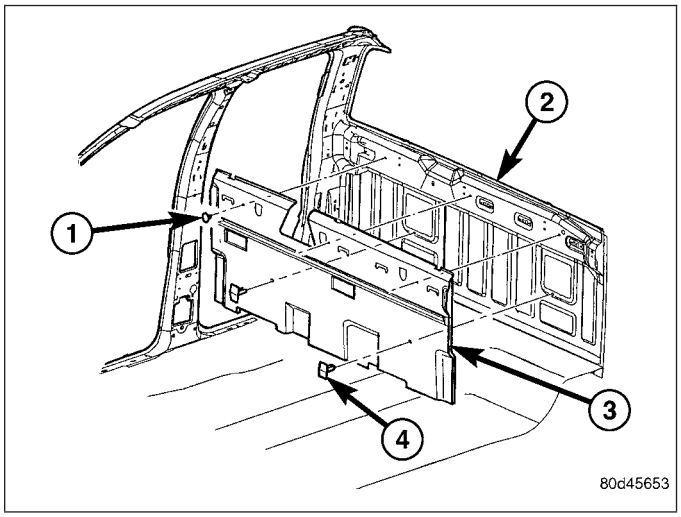

INSTALLATION

1. On Quad Cab models, position the rear cab trim panel (3) onto the rear cab back panel (2) and install the two push-pin fasteners (1 and 4).
2. On Quad Cab models, install the lower C-pillar trim panels (Refer to 23 - BODY/INTERIOR/C-PILLAR TRIM - INSTALLATION).
3. On Quad Cab models, install the center seat belt trim bezel (Refer to 8 - ELECTRICAL/RESTRAINTS/SEAT BELT & RETRACTOR - INSTALLATION.
4. On Quad Cab models, install the child seat tether straps (Refer to 8 - ELECTRICAL/RESTRAINTS/CHILD TETHER - INSTALLATION).

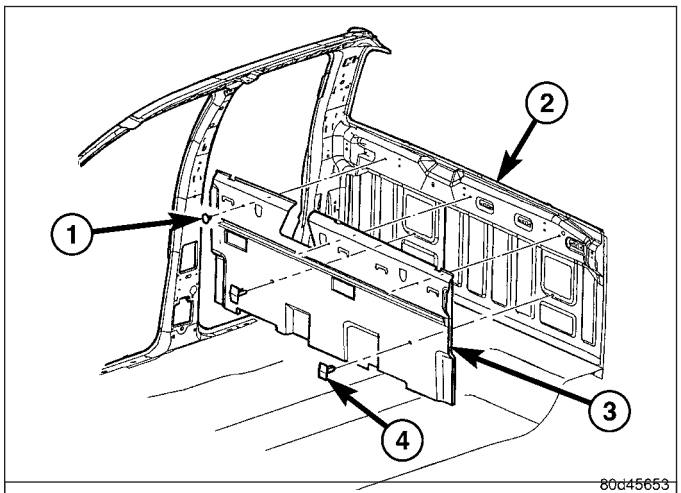

5. On Regular cab models, position the rear cab trim panel (1) onto the rear cab back panel (2) and install the utility hook (3) or the storage bin latch (4) (depending on application).
6. On Regular cab models, install the lower B-pillar trim panels (Refer to 23 - BODY/INTERIOR/B-PILLAR LOWER TRIM - INSTALLATION).

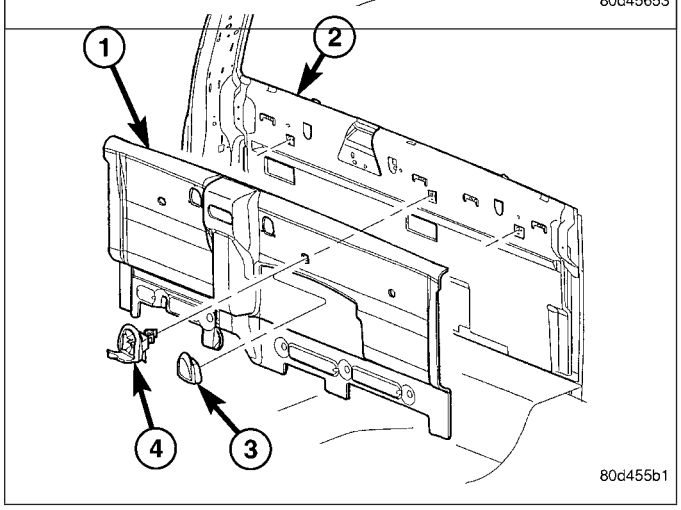

7. If equipped, position the rear storage compartment (2) onto the rear cab trim panel (4) and install the three bolts (1). Tighten the bolts to 6 N·m (55 in. lbs.).

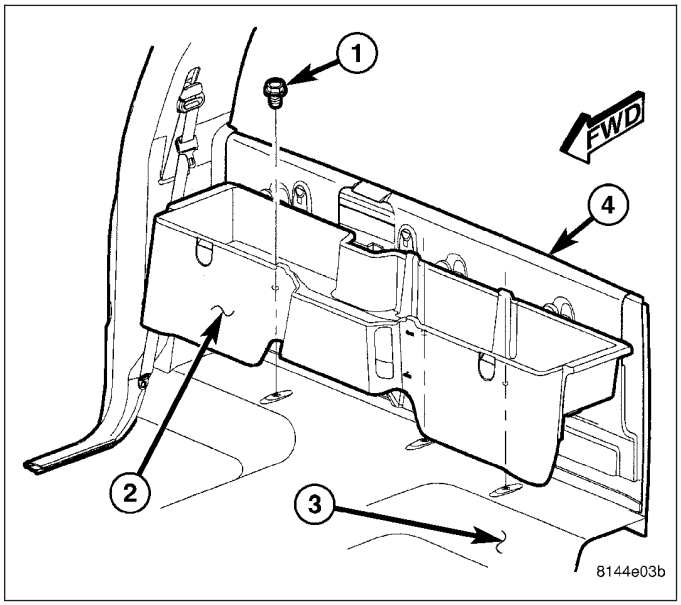

REAR DOOR SILL TRIM COVER

REMOVAL

1. Using a trim stick C-4755 or equivalent, disengage the retaining tabs of the sill trim panel (1) from the retainer clips in the rear door sill (2) and remove the trim panel.

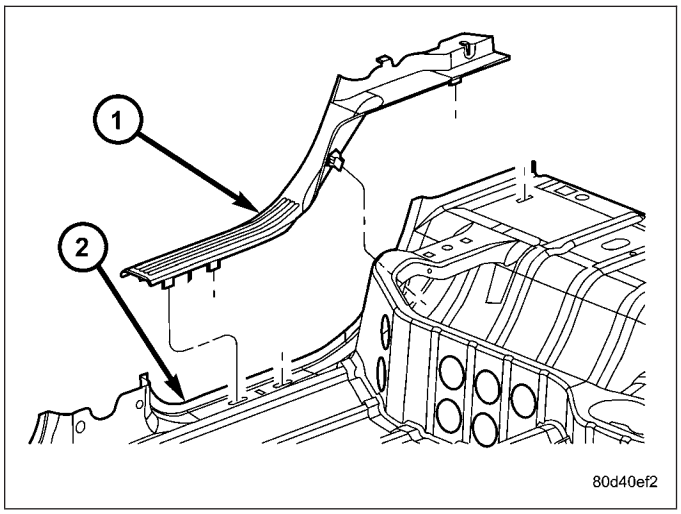

INSTALLATION

1. Position the sill trim panel (1) onto the rear door sill (2).
2. Engage the retaining tabs that secure the sill trim panel to the rear door sill.

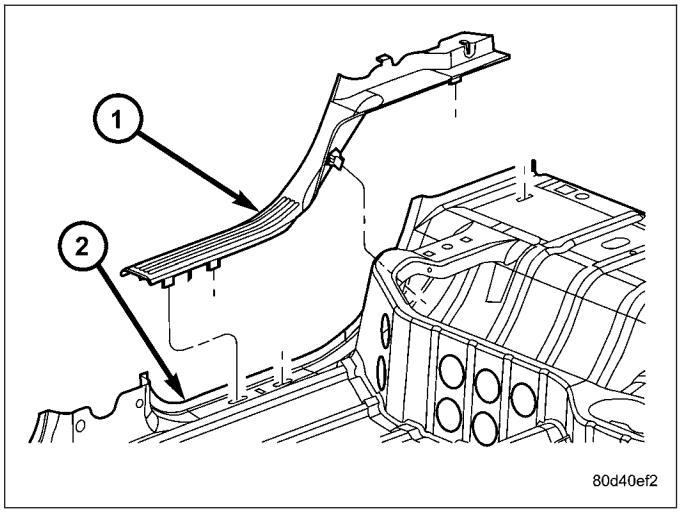

REAR VIEW MIRROR

REMOVAL

1. If equipped, disconnect the wire harness connector (1) from the rear view mirror (3).
2. Loosen the set screw (2) that secures the rear view mirror to the mounting bracket (4).
3. Slide the base of the rear view mirror upward and remove the mirror from the mounting bracket.
4. If required, remove the mirror mounting bracket from the windshield (5).

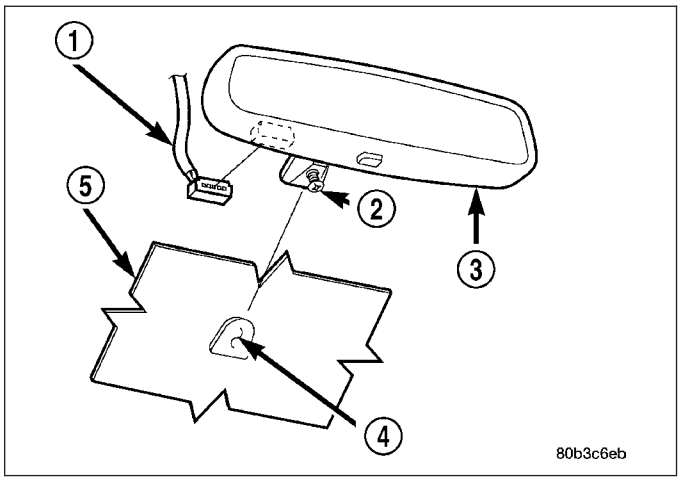

INSTALLATION

INSTALLATION

1. If required, install the mounting bracket (4) to the windshield (5) (Refer to 23 - BODY/INTERIOR/ REAR VIEW MIRROR - REAR VIEW MIRROR MOUNTING BRACKET - INSTALLATION).
2. Position the base of the rear view mirror (3) onto the mounting bracket and slide the mirror downward until it is fully engaged on the mounting bracket.
3. Tighten the set screw (2) that secures the rear view mirror to the mounting bracket to 1 N·m (15 in. lbs.).
4. If equipped, connect the wire harness connector (1) to the rear view mirror.

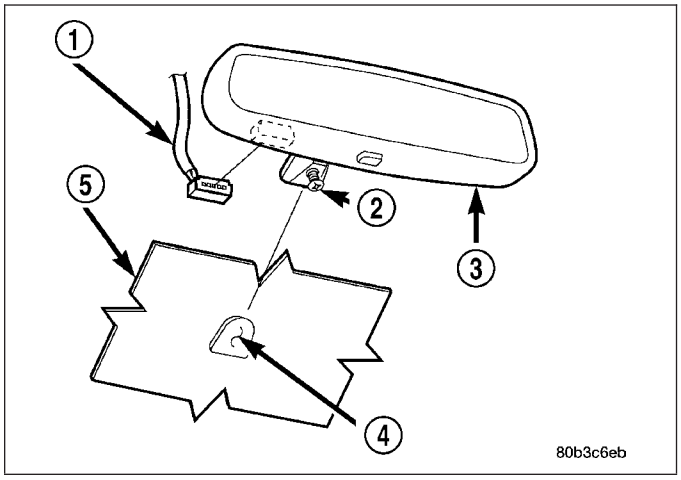

REAR VIEW MIRROR MOUNTING BRACKET

1. Mark the position for the mirror mounting bracket (4) on the outside of the windshield glass (5) with a wax pencil.
2. Clean the bracket contact area on the glass. Use a mild powdered cleanser on a cloth saturated with isopropyl (rubbing) alcohol. Finally, clean the glass with a paper towel dampened with alcohol.
3. Sand the surface on the mounting bracket with a fine grit sandpaper. Wipe the mounting bracket surface clean with a paper towel.
4. Apply accelerator to the surface on the mounting bracket according to the following instructions:
   a. Crush the vial to saturate the felt applicator.
   b. Remove the paper sleeve.
   c. Apply accelerator to the contact surface on the mounting bracket.
   d. Allow the accelerator to dry for five minutes.
   e. Do not touch the bracket contact surface after the accelerator has been applied.

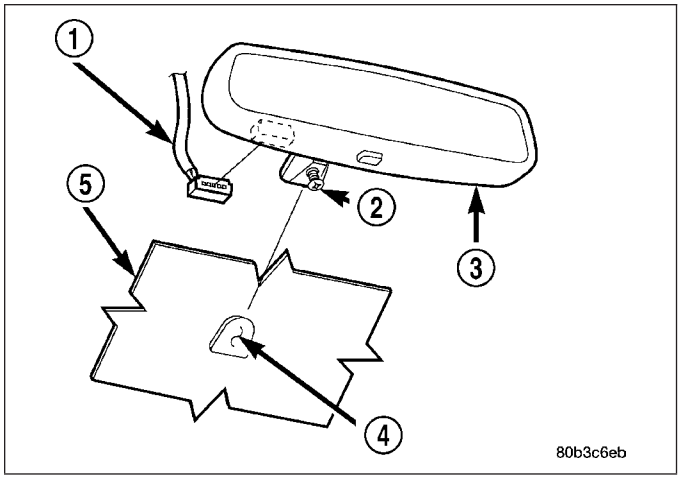

5. Apply adhesive accelerator to the bracket contact surface on the windshield glass. Allow the accelerator to dry for one minute. Do not touch the glass contact surface after the accelerator has been applied.
6. Install the mounting bracket according to the following instructions:
   a. Apply one drop of adhesive at the center of the bracket contact-surface on the windshield glass.
   b. Apply an even coat of adhesive to the contact surface on the mounting bracket.
   c. Align the mounting bracket with the marked position on the windshield glass.
   d. Press and hold the mounting bracket in place for at least one minute.

NOTE: Verify that the mirror mounting bracket is correctly aligned, because the adhesive will cure rapidly.

7. Allow the adhesive to cure for 8-10 minutes. Remove any excess adhesive with an alcohol-dampened cloth.
8. Allow the adhesive to cure for an additional 8-10 minutes before installing the rear view mirror (3) (Refer to 23 - BODY/INTERIOR/REAR VIEW MIRROR - INSTALLATION).

SUN VISOR

REMOVAL

1. Remove the three screws (1) that secure each sun visor (2) to the roof panel and remove the visor from the headliner (3).
2. If equipped, disconnect the wire harness connector for the illuminated vanity mirror (4).

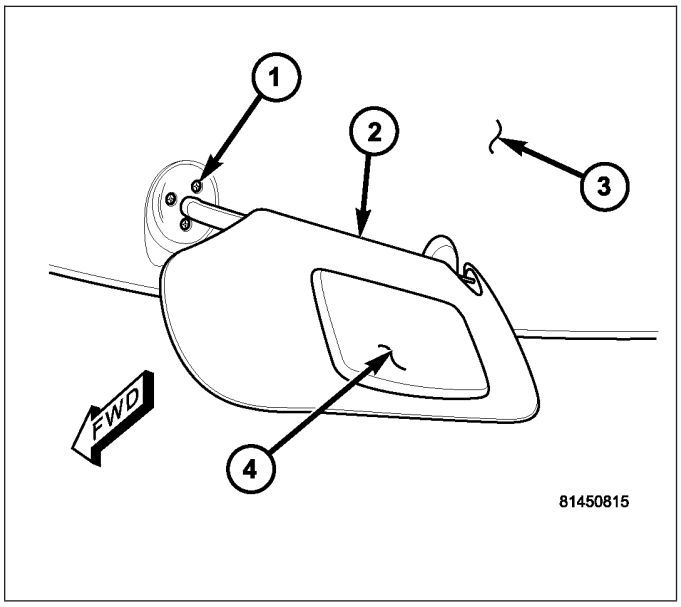

INSTALLATION

1. If equipped, connect the wire harness connector for the illuminated vanity mirror (4).
2. Position the sun visor (2) onto the headliner (3).
3. Install the three screws (1) that secure each sun visor to the roof panel. Tighten the screws to 2.2 N·m (20 in. lbs.).

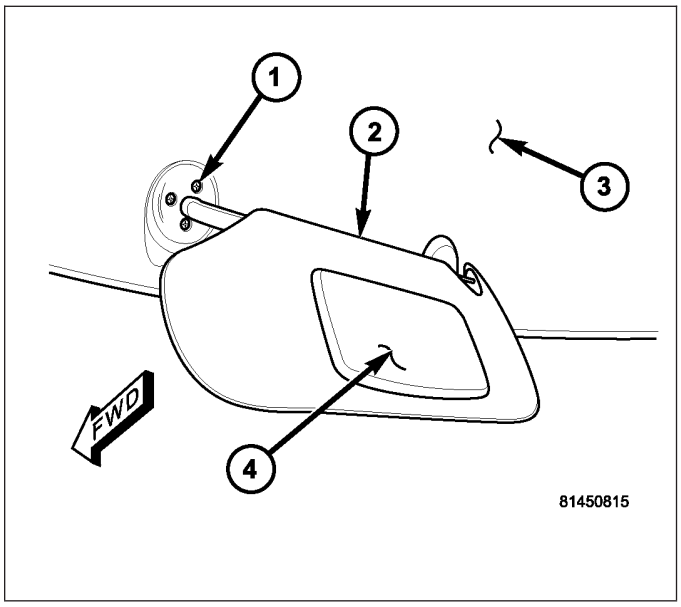

SUN VISOR SUPPORT

REMOVAL

1. Using a trim stick C-4755 or equivalent, disengage the release clip (3) as shown and remove the sun visor support (1) from the headliner (2)

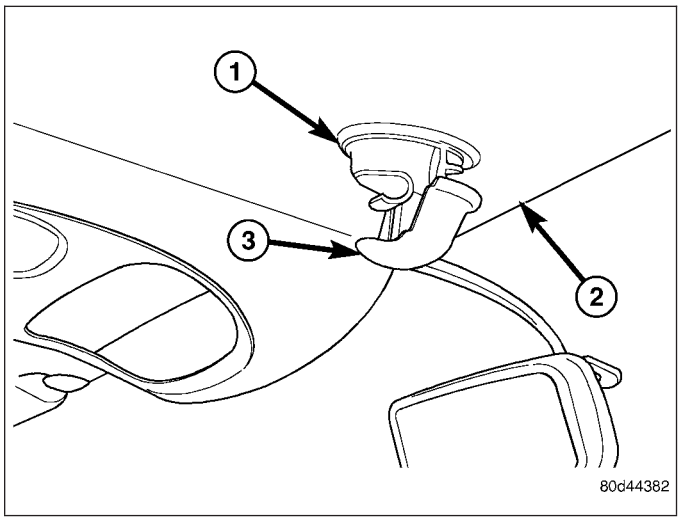

INSTALLATION

1. Position the sun visor support (1) through the headliner (2) and fully seat the base of the support to the roof panel.
2. Engage the release clip (3).

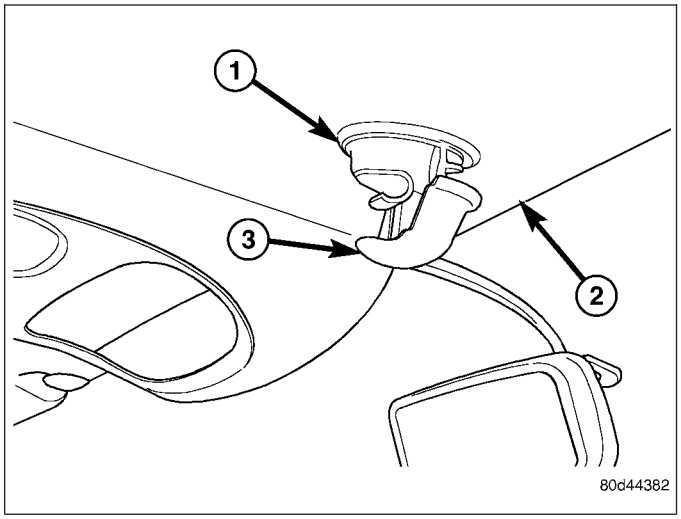

BODY VENT

REMOVAL

1. Remove the rear cab trim panel (Refer to 23 - BODY/INTERIOR/REAR CAB BACK PANEL TRIM - REMOVAL)
2. Disengage the retaining tabs (1) that secure the body vent (3) to the cab back panel (2).
3. Remove the vent through the opening in the cab back panel.

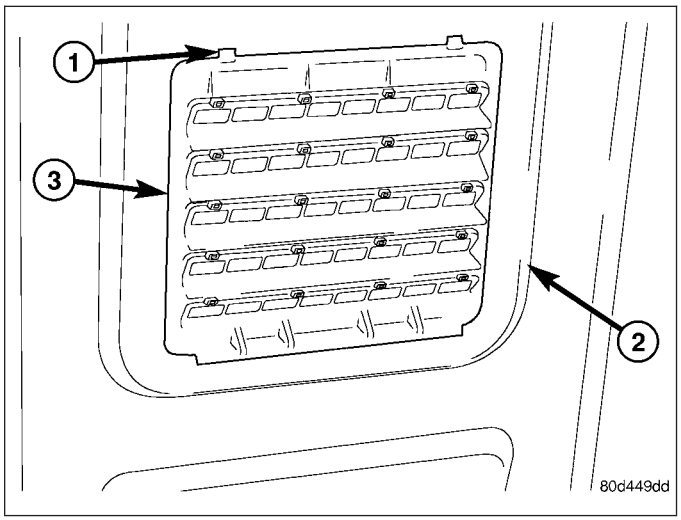

INSTALLATION

1. Position the body vent (3 into the opening of the cab back panel (2).
2. Install the body vent into the cab back panel and fully engage the retaining tabs (1).
3. Install the rear cab trim panel (Refer to 23 - BODY/INTERIOR/REAR CAB BACK PANEL TRIM - INSTALLATION).

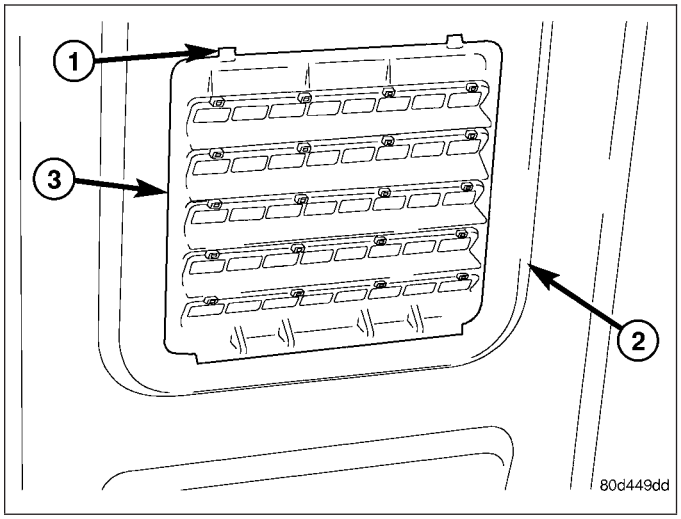

PAINT

TABLE OF CONTENTS

page

PAINT
SPECIFICATIONS
PAINT CODES 178
PAINT CODE
DESCRIPTION 179
BASECOAT/CLEARCOAT FINISH
DESCRIPTION 179

page

PAINT TOUCH-UP
DESCRIPTION 179
STANDARD PROCEDURE
PAINT TOUCH-UP 179
FINESSE SANDING/BUFFING AND POLISHING
DESCRIPTION 180

PAINT

SPECIFICATIONS

PAINT CODES

CAUTION: Due to possible late model change of paint colors, always check each vehicle for its paint code(s) (Refer to VEHICLE DATA/VEHICLE INFORMATION/VEHICLE CERTIFICATION LABEL - DESCRIPTION) or (Refer to VEHICLE DATA/VEHICLE INFORMATION/BODY CODE PLATE - DESCRIPTION) and (Refer to 23 - BODY/PAINT/PAINT CODE - DESCRIPTION).

EXTERIOR COLORS

EXTERIOR COLOR	DAIMLERCHRYSLER CODE
Deep Molten Red Pearlcoat	BR8
Flame Red Clearcoat	PR4
Light Almond Pearl Metallic Clearcoat	ZKJ
Wildwood Green Pearlcoat	CGJ
Atlantic Blue Pearlcoat	ZBJ
Patriot Blue Pearlcoat	WBT/WB7
Mineral Gray Metallic Clearcoat	CDM
Bright Silver Metallic Clearcoat	WSB/WS2
Black Clearcoat	DX8
Bright White Clearcoat	GW7

INTERIOR COLORS

INTERIOR COLOR	DAIMLERCHRYSLER CODE
Taupe	L5
Dark Slate Gray	DV

PAINT CODE

DESCRIPTION

Exterior vehicle body color(s) are identified on the Vehicle Certification Label (Refer to VEHICLE DATA/VEHICLE INFORMATION/VEHICLE CERTIFICATION LABEL - DESCRIPTION) or the Body Code Plate (Refer to VEHICLE DATA/VEHICLE INFORMATION/BODY CODE PLATE - DESCRIPTION).

The first digit of the paint code listed on the vehicle indicates the sequence of application, i.e.: P = primary coat, Q = secondary coat. The color names provided in the Paint and Trim Code Description chart are the same color names used on most repair product containers (Refer to 23 - BODY/PAINT - SPECIFICATIONS).

BASECOAT/CLEARCOAT FINISH

DESCRIPTION

The original equipment paint finish is a multi step process that involves cleaning, applying electro de-position (E-coat), anti-chip primer, basecoat, and clearcoat steps.

CAUTION: Do not use abrasive chemicals, abrasive compounds or harsh alkaline based cleaning solvents on the painted surfaces of a vehicle. Failure to follow this caution can result in damage to vehicle finish.

On most vehicles a two-part paint application (basecoat/clearcoat) is used. Color paint that is applied to primer is called basecoat. A clear coat paint is then applied to protect the basecoat from ultraviolet light and to provide a durable high-gloss finish.

PAINT TOUCH-UP

DESCRIPTION

If the painted metal surface of a vehicle becomes scratched or chipped, it should be touched-up as soon as possible to avoid corrosion.

WARNING: Use an OSHA approved respirator and safety glasses when spraying paint or solvents in a confined area. Failure to follow this warning may result in possible personal injury or death.

When repairing painted metal surfaces, for best results, use MOPAR® Scratch Filler/Primer, Touch-Up Paints and Clear Top Coat (Refer to VEHICLE DATA/VEHICLE INFORMATION/BODY CODE PLATE - DESCRIPTION) for Body Code Plate information.

STANDARD PROCEDURE

PAINT TOUCH-UP

1. Scrape any loose paint and corrosion from inside the scratch or chip.

WARNING: Avoid prolonged skin contact with petroleum or alcohol–based cleaning solvents. Failure to follow this warning can result in possible personal injury or death.

2. Clean affected area with MOPAR® Tar/Road Oil Remover or equivalent, and allow to dry.
3. Fill the inside of the scratch or chip with a coat of filler/primer. Do not overlap primer onto good surface finish. The applicator brush should be wet enough to puddle-fill the scratch or chip without running. Do not stroke brush applicator on body surface. Allow the filler/primer to dry hard.
4. Cover the filler/primer with color touch-up paint. Do not overlap touch-up color onto the original color coat around the scratch or chip. Butt the new color to the original color, if possible. Do not stroke applicator brush on body surface. Allow touch-up paint to dry hard.
5. On vehicles without clearcoat, the touch-up color can be lightly finesse sanded (1500 grit) and polished with rubbing compound.

6. On vehicles with clearcoat, apply clear top coat to touch-up paint with the same technique as described in Step 4. Allow clear top coat to dry hard. If desired, the clearcoat can be lightly finesse sanded (1500 grit) and polished with rubbing compound.

FINESSE SANDING/BUFFING AND POLISHING

DESCRIPTION

CAUTION: Do not remove more than 0.5 mils of clearcoat finish when sanding, hand buffing or polishing. Basecoat paint must retain clearcoat for durability.

CAUTION: If the finish has been finesse sanded in the past, it cannot be repeated. Failure to follow this caution can result in damage to vehicle finish.

NOTE: Finesse sanding should only be performed by a trained automotive paint technician.

Minor acid etching, orange peel, or smudging in a clearcoat or single-stage finish can be reduced with light finesse sanding, hand buffing and polishing. Use a Paint Thickness Gauge #PR-ETG-2X or equivalent to determine clearcoat or single-stage paint thickness before and after the repair.

SEATS

TABLE OF CONTENTS

page

CENTER SEAT
REMOVAL 182
INSTALLATION 183
CENTER ARMREST / SEAT BACK
REMOVAL 184
INSTALLATION 184
CENTER SEAT BACK INERTIA HINGE COVER
REMOVAL 185
INSTALLATION 186
CENTER SEAT BACK HINGE
REMOVAL 187
INSTALLATION 189
CENTER SEAT BACK LID
REMOVAL 190
INSTALLATION 190
CENTER SEAT CUSHION
REMOVAL 190
INSTALLATION 191
CENTER SEAT CUSHION COVER
REMOVAL 191
INSTALLATION 191
UNDER SEAT STORAGE BIN LID
REMOVAL 191
INSTALLATION 192
UNDER SEAT STORAGE BIN
REMOVAL 192
INSTALLATION 192
UNDER SEAT STORAGE BIN COVERING
REMOVAL 192
INSTALLATION 192
UNDER SEAT STORAGE BIN LATCH
REMOVAL 192
INSTALLATION 193
HEADREST
REMOVAL 193
INSTALLATION 193
HEADREST SLEEVE
REMOVAL 193
INSTALLATION 193
SEAT - FRONT
REMOVAL 193
INSTALLATION 194
LUMBAR SUPPORT HANDLE/BEZEL
REMOVAL 195
INSTALLATION 196
SEAT BACK CUSHION / COVER - FRONT
REMOVAL 197
INSTALLATION 197
SEAT CUSHION / COVER - FRONT
REMOVAL 197
INSTALLATION 197
SEAT TRACK
REMOVAL 197
INSTALLATION 197
SEAT - REAR
REMOVAL 198
INSTALLATION 199
SEAT BACK - REAR
REMOVAL 200
INSTALLATION 200
SEAT BACK CUSHION / COVER - REAR
REMOVAL 200
INSTALLATION 200
SEAT CUSHION / COVER - REAR
REMOVAL 201
INSTALLATION 201
SEAT CUSHION FRAME - REAR
REMOVAL 201
INSTALLATION 201
SEAT BACK REAR - FOOTMANS LOOP BRACKETS
REMOVAL 202
INSTALLATION 202

CENTER SEAT

REMOVAL

NOTE: Do not reuse the seat fasteners, always replace with new ones.

1. Remove and discard the front bolts (4).
2. Position the seats forward, remove the rear bolts (2) and discard.
3. Disconnect the 12v power supply electrical connector (3 - if equipped).

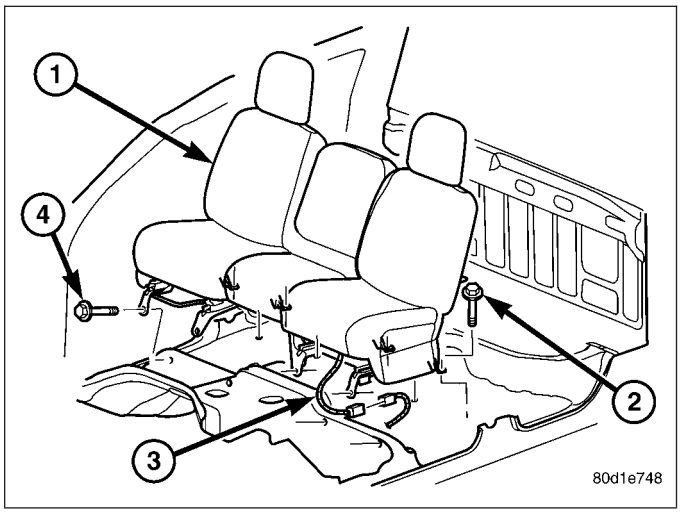

4. Fold the seat backs forward and roll the seat assembly (1) back in the vehicle.
5. Remove the nuts (2 and 4) attaching the center seat (1) to the drivers seat and the passenger seat and discard.

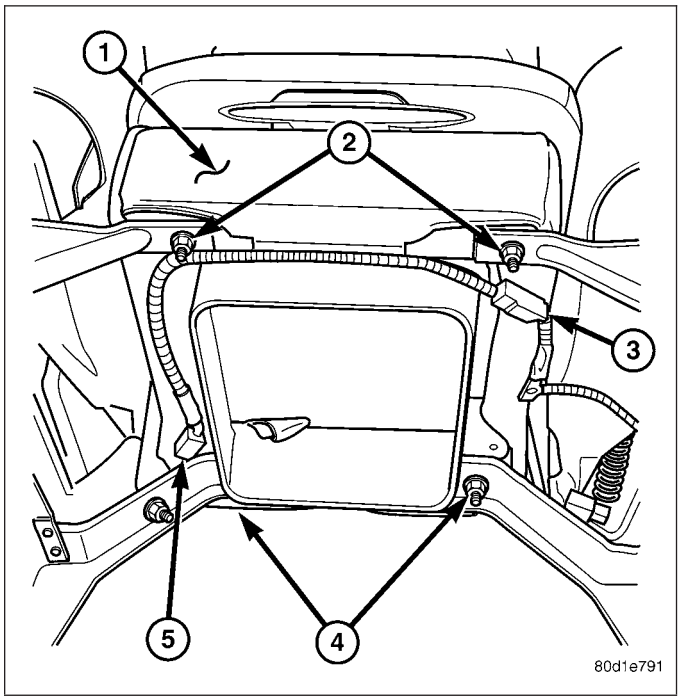

6. Remove the nuts (4) attaching the center seat (2) to the drivers seat (3) and the passenger seat in the rear of the seat and discard.
7. Disconnect the electrical connector (1 - if equipped).
8. Roll the seat assembly forward and remove the center seat portion.

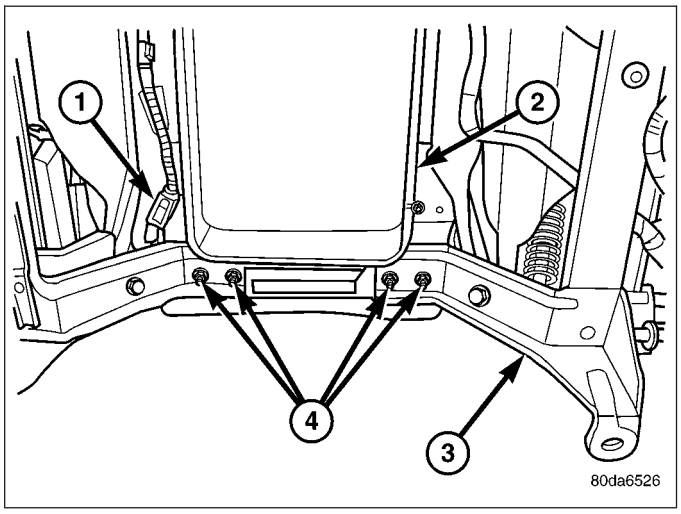

INSTALLATION

NOTE: Do not reuse the seat fasteners, always replace with new ones.

1. Install the center seat (2) and roll the seat assembly back in the vehicle.
2. Install new nuts (4) attaching the center seat to the drivers (3) and passenger seat.
3. Connect the electrical connector (1 - if equipped).
4. Tighten the nuts (4) to 25 N·m (18 ft. lbs.).

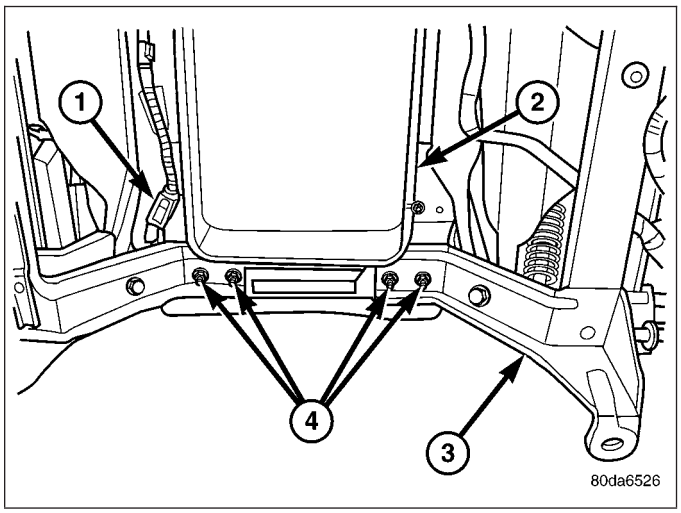

5. Install new nuts (2 and 4) attaching the center seat to the drivers (3) and passenger seat.
6. Tighten the nuts (4) to 25 N·m (18 ft. lbs.).
7. Connect the electrical connector (3 and 5 - if equipped).

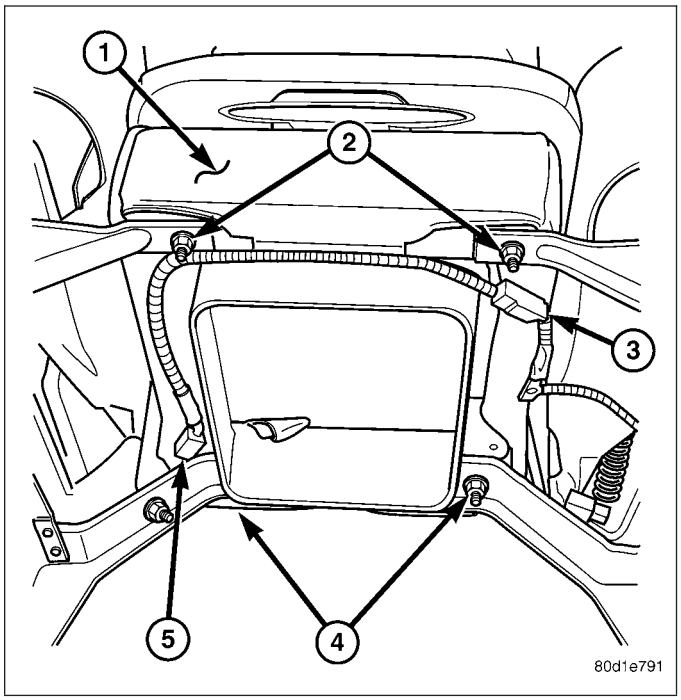

8. Roll the seat assembly forward and install new rear bolts (2).
9. Connect the 12v power supply electrical connector (3 - if equipped).
10. Tighten the rear bolts to 40 N·m (30 ft. lbs.).
11. Fold the seat backs up and slide the seats to the rear.
12. Install new front bolts (4) and tighten to 28 N·m (21 ft. lbs.).

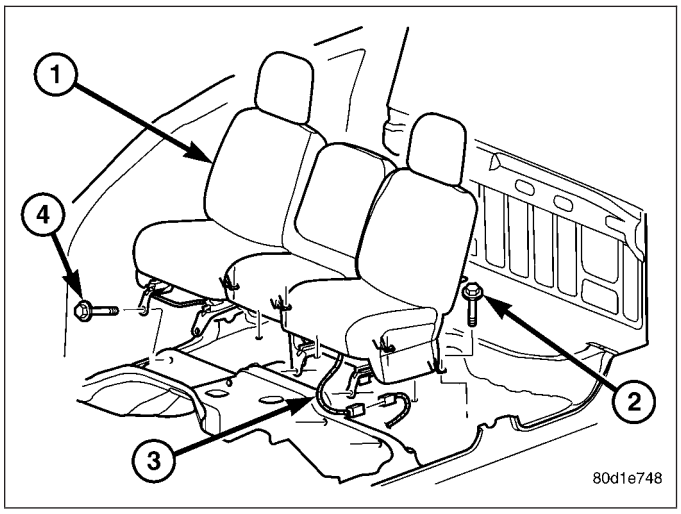

CENTER ARMREST / SEAT BACK

REMOVAL

NOTE: Do not reuse the seat fasteners, always replace with new ones.

1. Remove the center seat (Refer to 23 - BODY/SEATS/SEAT - CENTER - REMOVAL).
2. Disconnect the storage bin/cushion cover j-straps and position aside.
3. Remove and discard the hinge bolts (2) and separate the seat back from the storage bin/cushion (1).

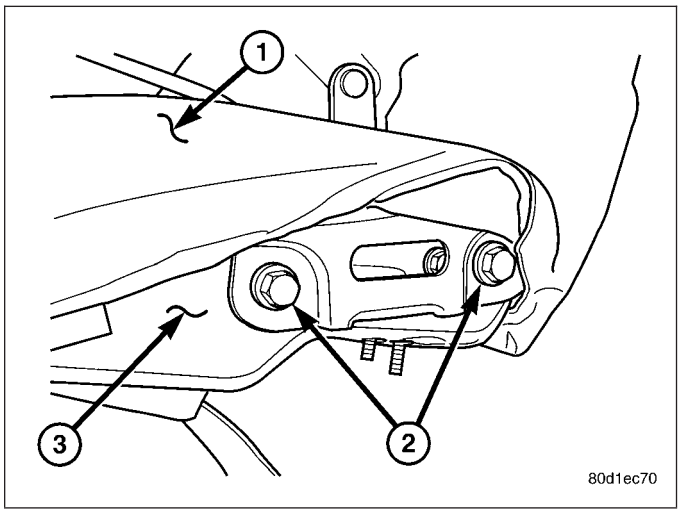

INSTALLATION

NOTE: Do not reuse the seat fasteners, always replace with new ones.

1. Install the seat back onto the storage bin/cushion (1) and install new hinge bolts (2).
2. Tighten the hinge to storage bin/cushion bolts (2) to 25 N·m (18 ft. lbs.).
3. Connect the storage bin/cushion cover j-straps.
4. Install the center seat (Refer to 23 - BODY/SEATS/SEAT - CENTER - INSTALLATION).

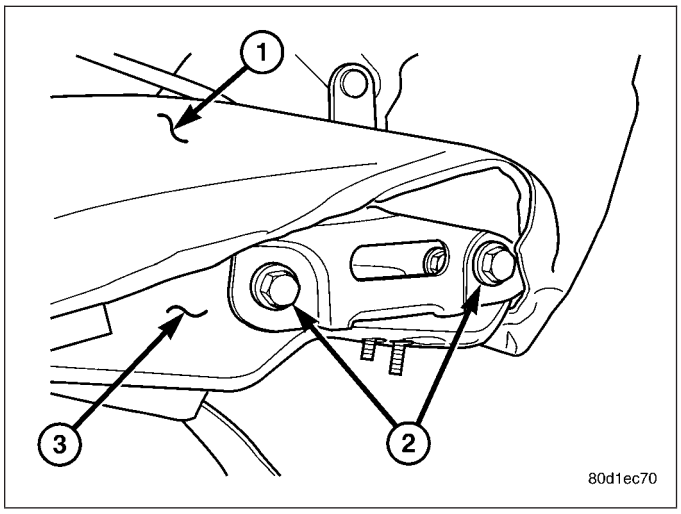

CENTER SEAT BACK INERTIA HINGE COVER

REMOVAL

NOTE: Free pivot hinge cover is removed with the free pivot hinge (Refer to 23 - BODY/SEATS/CENTER SEAT BACK HINGE - REMOVAL).

1. For the inertia hinge cover disconnect the zip strip (1).
2. Position aside the storage bin/cushion cover (4).
3. Remove the pivot bolt (5).

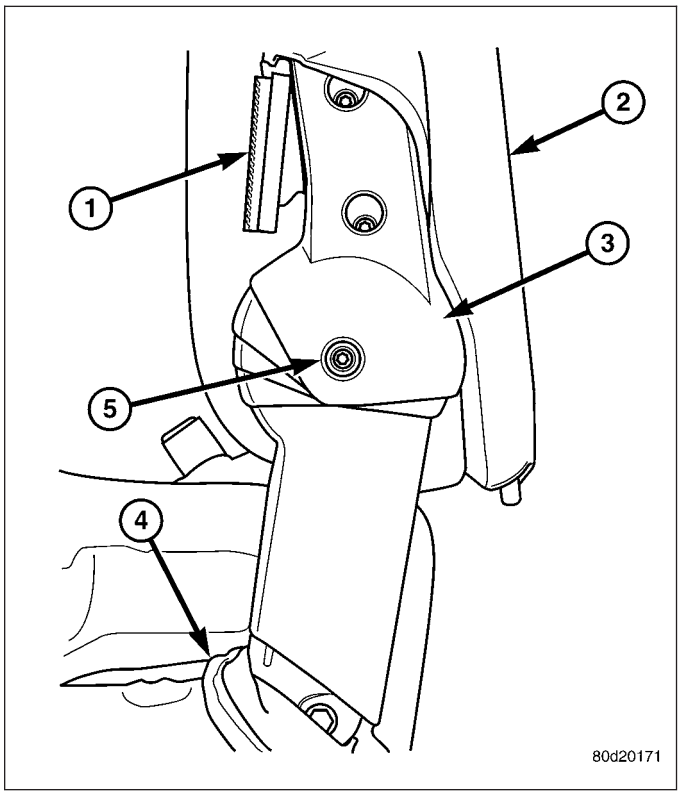

4. Open the hinge cover at the bottom and remove the hinge cover (1).

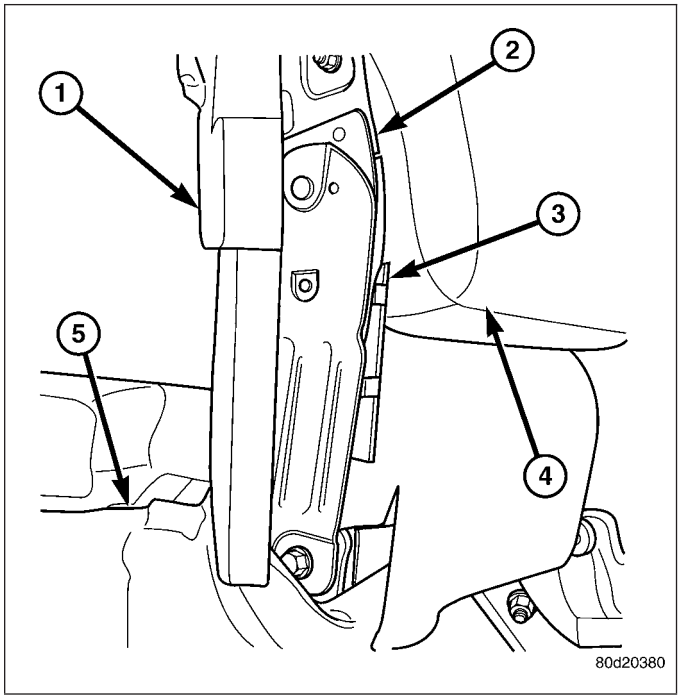

INSTALLATION

NOTE: Free pivot hinge cover is installed with the free pivot hinge (Refer to 23 - BODY/SEATS/CENTER SEAT BACK HINGE - INSTALLATION).

1. Position the hinge cover (1) over the hinge (2) and close over the lock tabs (3).

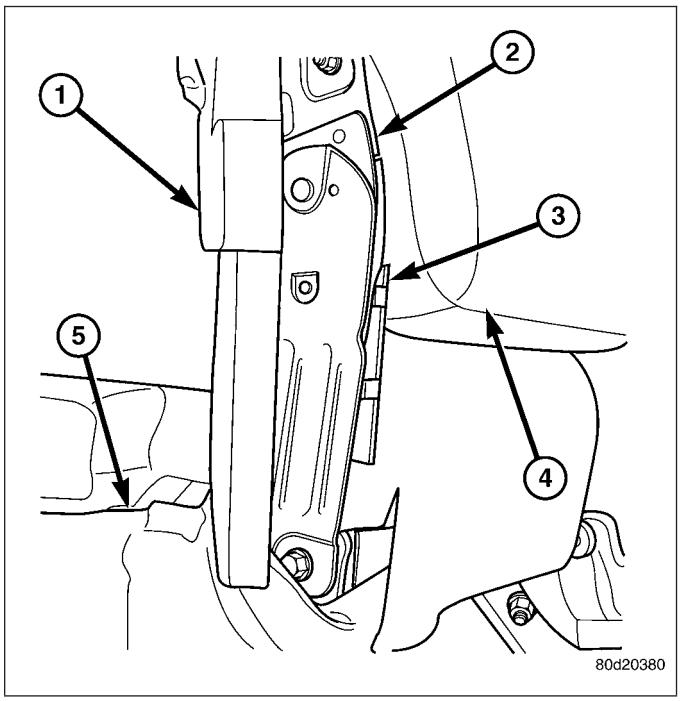

2. Install the pivot bolt (5) and tighten to 10 N·m (89 in. lbs.).
3. Reposition the storage bin/cushion cover (4).
4. Connect the zip strip (1).

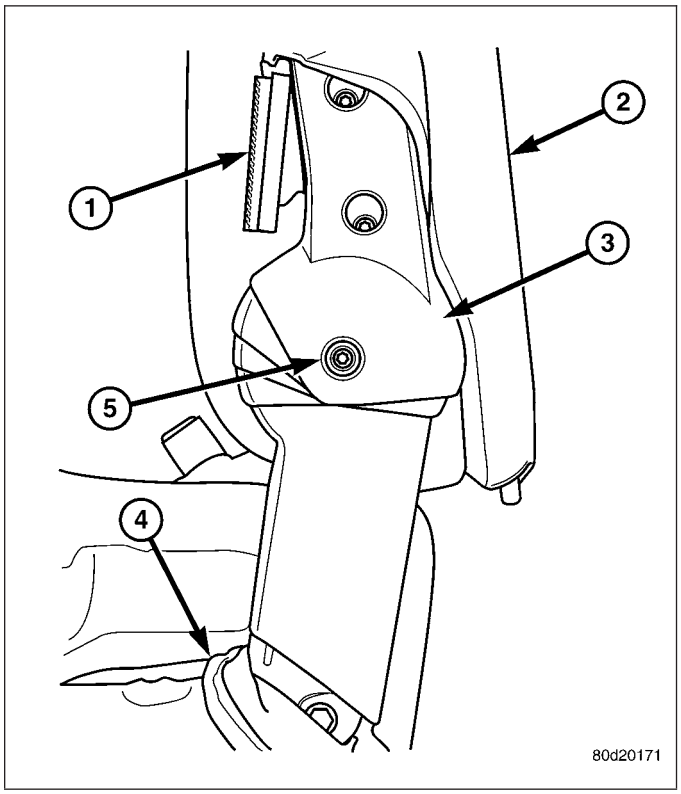

CENTER SEAT BACK HINGE

REMOVAL

FREE PIVOT/HINGE COVER

NOTE: Do not reuse the seat fasteners, always replace with new ones.

1. Remove the seat back (Refer to 23 - BODY/SEATS/CENTER ARMREST/SEAT BACK - REMOVAL).
2. Disconnect the storage bin/cushion cover j-strap and position aside.
3. Remove and discard the pivot bolt (1).

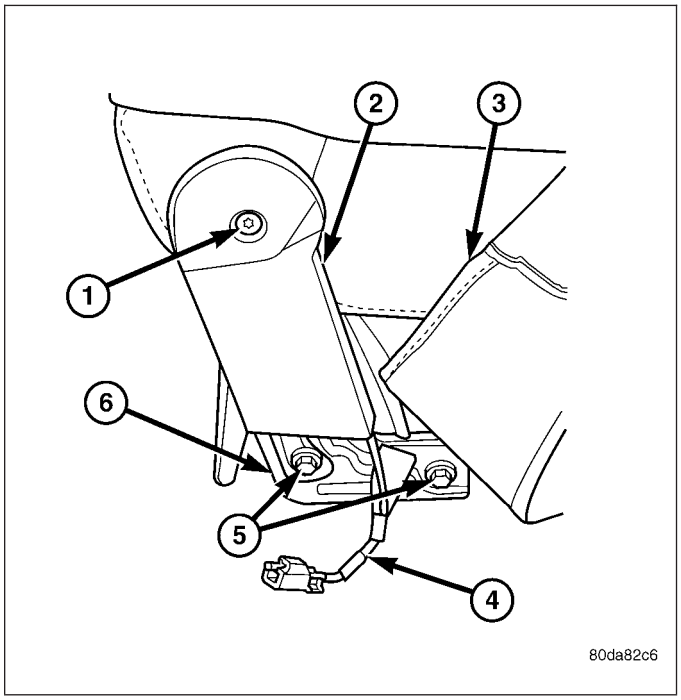

4. Remove the hinge spacer (2).

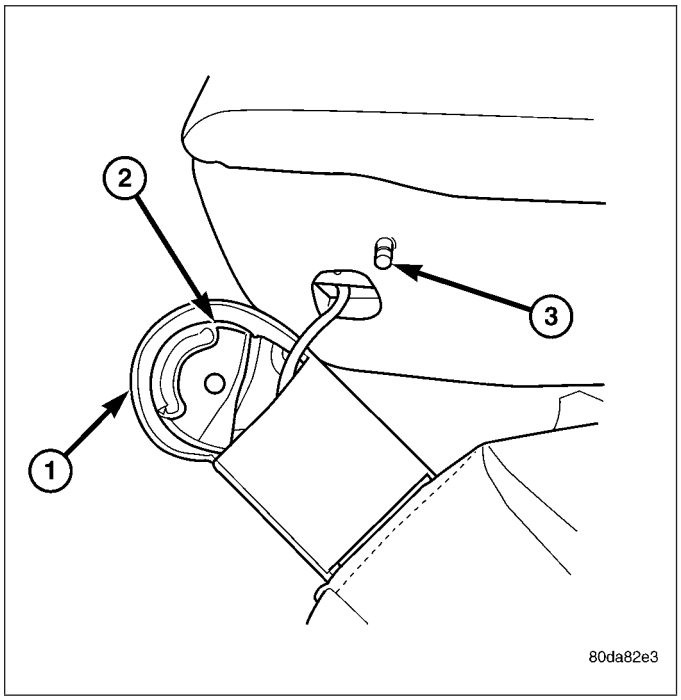

5. Open the hinge cover flap (1) and remove the wire harness (5 - if equipped).
6. Remove the cover (3) from the hinge (4).

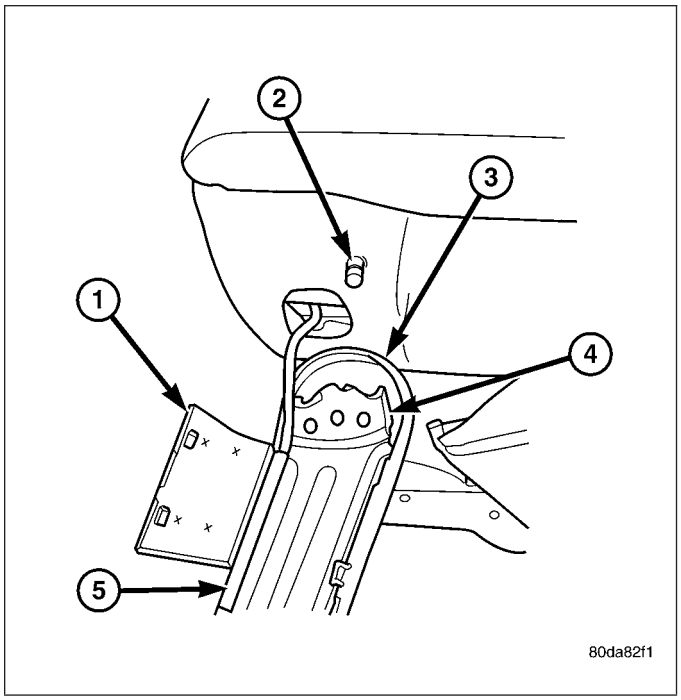

INERTIA HINGE

NOTE: Do not reuse the seat fasteners, always replace with new ones.

1. Remove the seat back (Refer to 23 - BODY/SEATS/CENTER ARMREST/SEAT BACK - REMOVAL).
2. Remove the seat back inertia hinge cover (Refer to 23 - BODY/SEATS/CENTER SEAT BACK INERTIA HINGE COVER - REMOVAL).
3. Remove and discard the inertia hinge bolts (1) and remove the hinge (3).

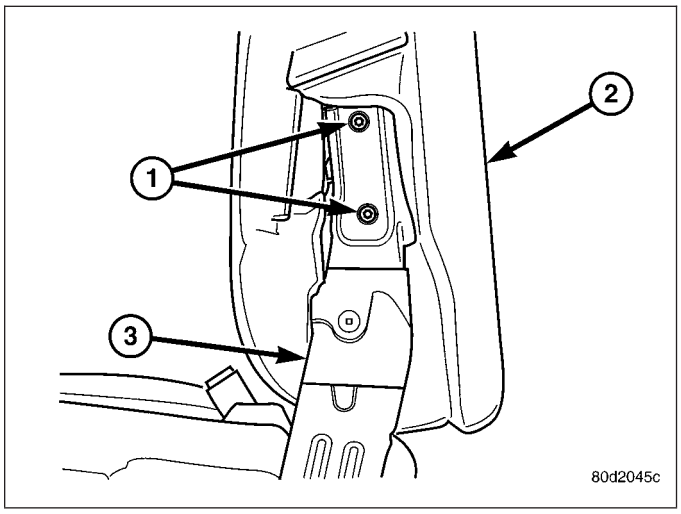

INSTALLATION

FREE PIVOT HINGE/COVER

NOTE: Do not reuse the seat fasteners, always replace with new ones.

1. Position the pivot hinge cover (3) over the pivot hinge (4) and install the 12v power supply harness (5 - if equipped) into the channel.

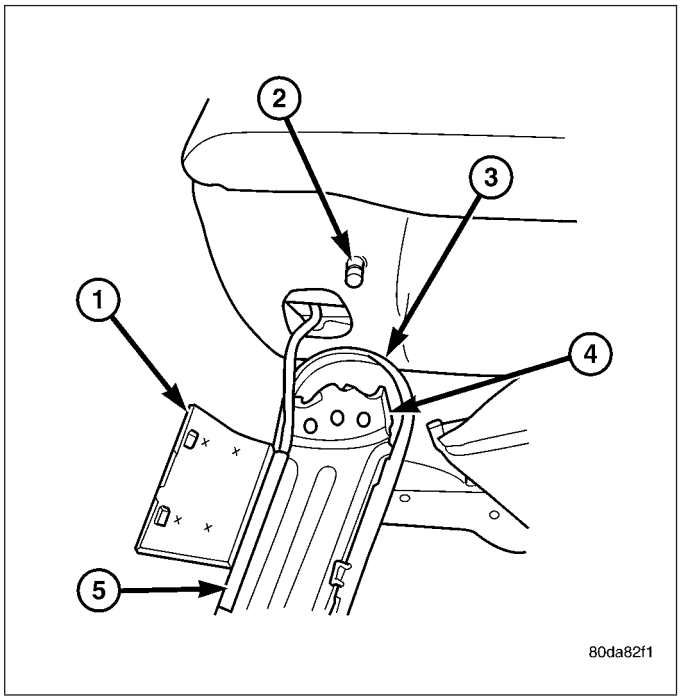

2. Close the hinge cover (1) flat and position the spacer (2) into place.
3. Align the stop pin (3) with the spacer (2) and hinge (1) and install the assembly onto the seat back.

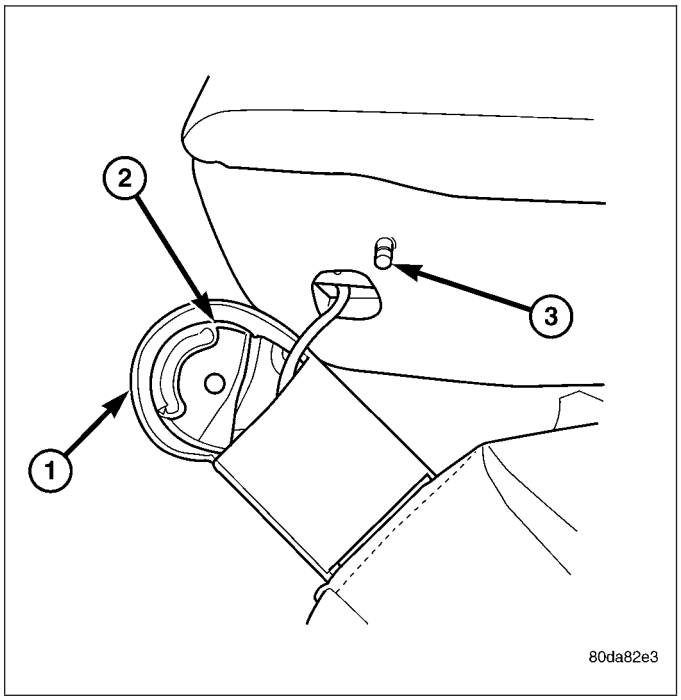

4. Install a new pivot bolt (1) and tighten to 25 N·m (18 ft. lbs.).
5. Install the center seat back (Refer to 23 - BODY/SEATS/CENTER ARMREST/SEAT BACK - INSTALLATION).

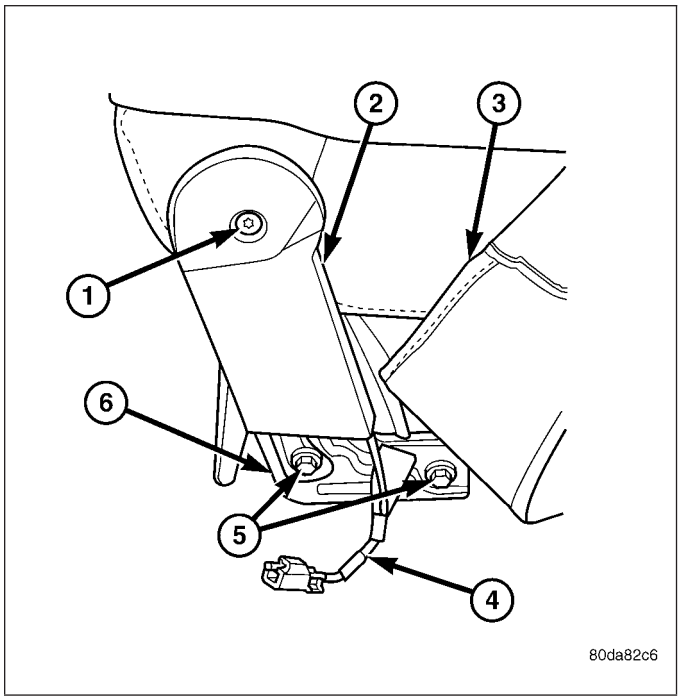

INERTIA HINGE

NOTE: Do not reuse the seat fasteners, always replace with new ones.

1. Install the inertia hinge (3) onto the center seat back (2) and install new bolts (1).
2. Tighten the bolts (1) to 25 N·m (18 ft. lbs.).
3. Install the seat back inertia hinge covers (Refer to 23 - BODY/SEATS/CENTER SEAT BACK INERTIA HINGE COVER - INSTALLATION).
4. Install the center seat back (Refer to 23 - BODY/SEATS/CENTER ARMREST/SEAT BACK - INSTALLATION).

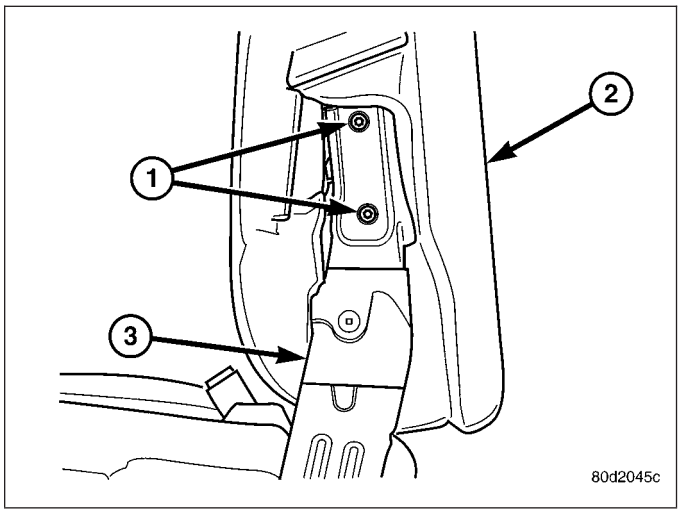

CENTER SEAT BACK LID

REMOVAL

1. Open the center armrest/seat back.
2. Remove the four screws attaching the hinge to the storage bin/cushion and remove the lid.

INSTALLATION

1. Position the center seat back lid onto the storage bin/cushion and install the screws.

CENTER SEAT CUSHION

REMOVAL

1. Remove the center seat. (Refer to 23 - BODY/SEATS/CENTER SEAT - REMOVAL)

2. Remove the center armrest/seat back. (Refer to 23 - BODY/SEATS/CENTER ARMREST / SEAT BACK - REMOVAL)

INSTALLATION

1. Install the center armrest/seat back. (Refer to 23 - BODY/SEATS/CENTER ARMREST / SEAT BACK - INSTALLATION)
2. Install the center seat. (Refer to 23 - BODY/SEATS/CENTER SEAT - INSTALLATION)

CENTER SEAT CUSHION COVER

REMOVAL

1. Remove the center seat cushion or underseat storage bin lid. (Refer to 23 - BODY/SEATS/CENTER SEAT CUSHION/UNDERSEAT STORAGE BIN LID - REMOVAL)
2. Disconnect the zip strips and remove the cover from the cushion.

INSTALLATION

1. Install the cover over the center seat cushion and connect the zip strips.
2. Install the center seat cushion or under seat storage bin lid. (Refer to 23 - BODY/SEATS/CENTER SEAT CUSHION/UNDER SEAT STORAGE BIN LID - INSTALLATION)

UNDER SEAT STORAGE BIN LID

REMOVAL

NOTE: Do not reuse the seat fasteners, always replace with new ones.

1. Open the center seat cushion/storage bin.
2. Position the seat cushion cover aside, remove the hinge bolts (2) and discard.
3. Remove the seat cushion (4).

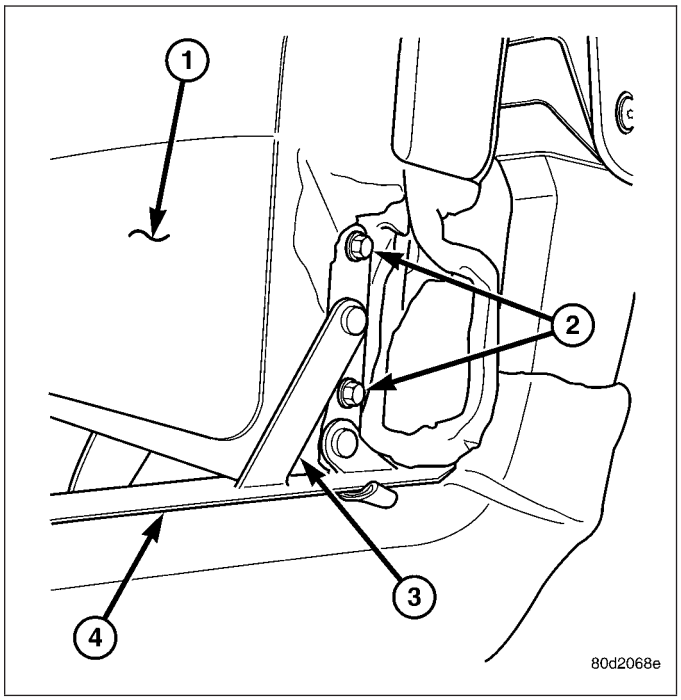

INSTALLATION

NOTE: Do not reuse the seat fasteners, always replace with new ones.

1. Position the center seat cushion (4) on the hinges (3) and install new bolts (2).
2. Tighten the bolts (2) to 20 N·m (15 ft. lbs.).
3. Position the cushion cover back over the hinges.

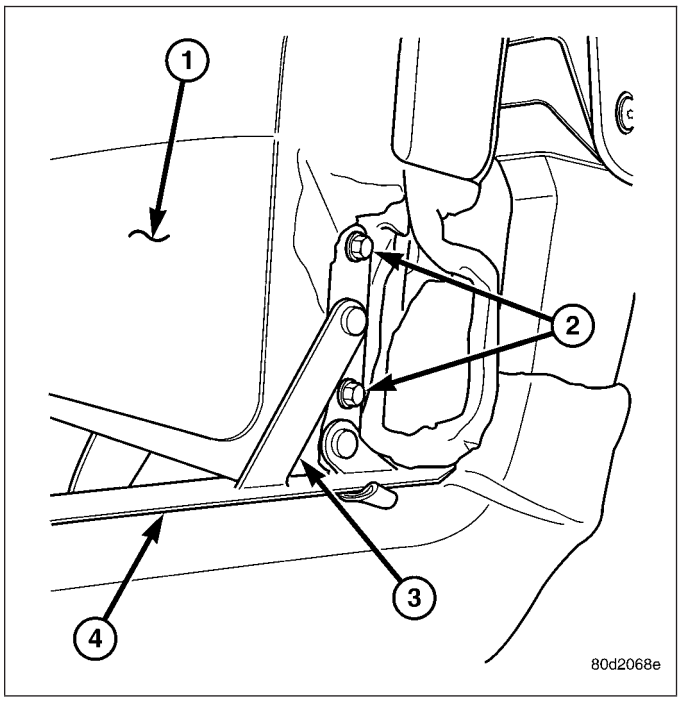

UNDER SEAT STORAGE BIN

REMOVAL

1. Remove the amplifier, if equipped. (Refer to 8 - ELECTRICAL/AUDIO/AMPLIFIER - REMOVAL)
2. Remove the center seat cushion. (Refer to 23 - BODY/SEATS/CENTER SEAT CUSHION - REMOVAL)
3. Remove the six screws and remove the bin.

INSTALLATION

1. Install the bin over the seat cushion hinges and install the six screws.
2. Install the center seat cushion. (Refer to 23 - BODY/SEATS/CENTER SEAT CUSHION - INSTALLATION)
3. Install the amplifier, if equipped. (Refer to 8 - ELECTRICAL/AUDIO/AMPLIFIER - INSTALLATION)

UNDER SEAT STORAGE BIN COVERING

REMOVAL

1. Remove the under seat storage bin. (Refer to 23 - BODY/SEATS/UNDER SEAT STORAGE BIN - REMOVAL)
2. Disconnect the j-straps and remove the cover.

INSTALLATION

1. Install the storage bin cover and connect the j-straps.
2. Install the under seat storage bin. (Refer to 23 - BODY/SEATS/UNDER SEAT STORAGE BIN - INSTALLATION)

UNDER SEAT STORAGE BIN LATCH

REMOVAL

1. Open the under seat storage bin.
2. Remove the two screws and remove the latch assembly.

INSTALLATION

1. Install the latch assembly and install the screws.

HEADREST

REMOVAL

1. Raise the headrest.
2. Press the headrest release button and remove the headrest.

INSTALLATION

1. Position the headrest.
2. Press the release button and install the headrest.

HEADREST SLEEVE

REMOVAL

1. Remove the headrest. (Refer to 23 - BODY/SEATS/HEADREST - REMOVAL)
2. Grasp the sleeves and pull up and out of the seat back to remove.

INSTALLATION

1. Position each headrest sleeve into correct seat back hole and press into place fully.
2. Install the headrest. (Refer to 23 - BODY/SEATS/HEADREST - INSTALLATION)

SEAT - FRONT

REMOVAL

NOTE: Do not reuse the seat fasteners, always replace with new ones.

1. Remove and discard the front bolts (4).
2. Position the seats (1) forward, remove the rear bolts (2) and discard.
3. Disconnect the 12v power supply electrical connector (5 - if equipped).

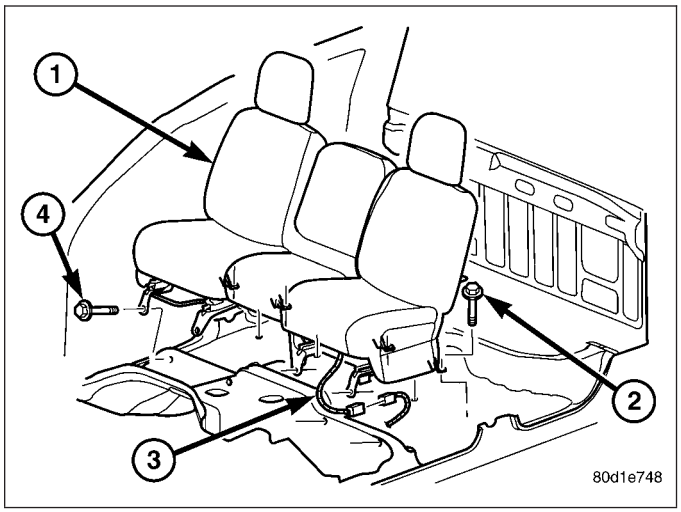

4. Fold the seat backs forward and roll the seat assembly back in the vehicle.
5. Remove and discard the nuts (2 and 4) on either the driver or passenger side.

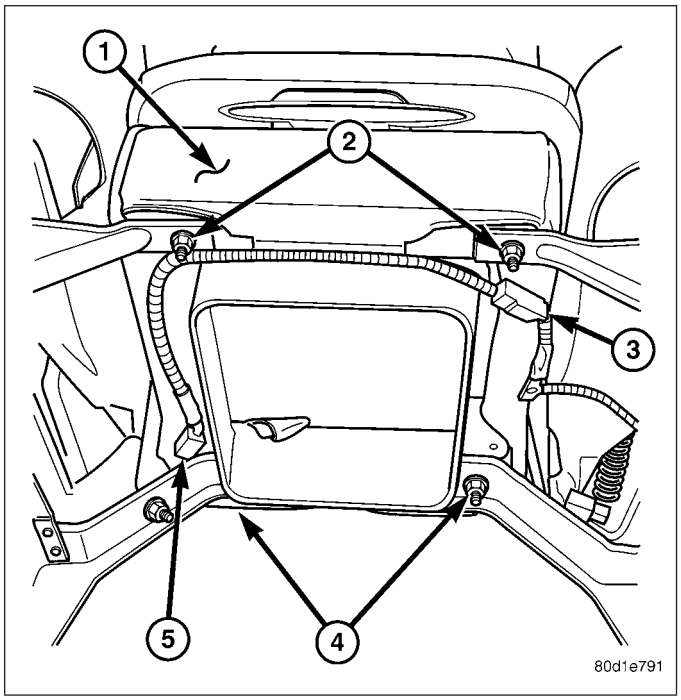

6. Separate the seat assembly by removing and discarding the nuts (4) on either the drivers or passengers seat.
7. Remove each section of the seat assembly from the vehicle.

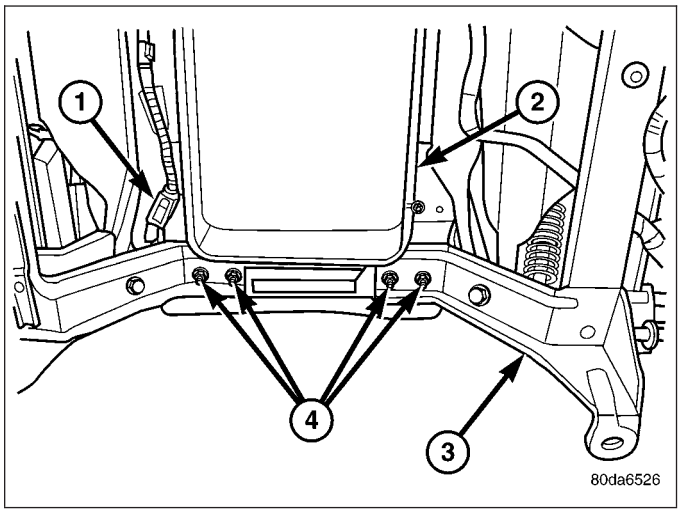

INSTALLATION

NOTE: Do not reuse the seat fasteners, always replace with new ones.

1. Position each seat section into the vehicle and tip back.
2. Install the nuts (4) attaching the center seat section (2) to the other seat, and tighten to 25 N·m (18 ft. lbs.).

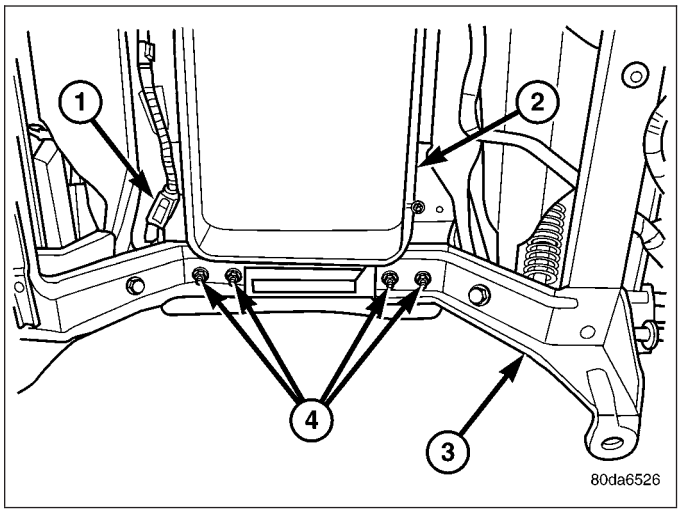

3. Install the nuts (2 and 4) attaching the center seat section to the other seat, and tighten to 25 N·m (18 ft. lbs.).

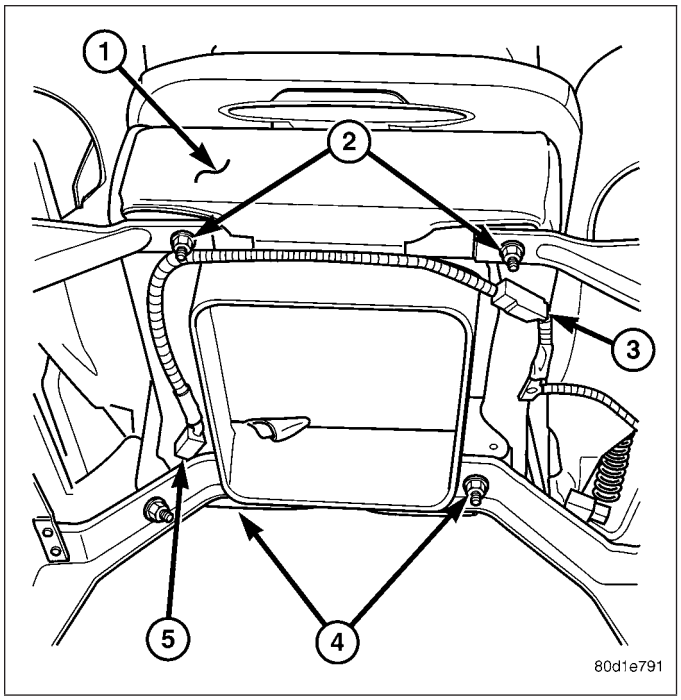

4. Roll the seat assembly forward and install new rear bolts (2). Tighten the bolts (2) to 40 N·m (30 ft. lbs.).
5. Connect the 12v power supply electrical connector (3 - if equipped).
6. Fold the seat backs up and slide the seats (1) to the rear.
7. Install new front bolts (4) and tighten to 28 N·m (21 ft. lbs.).

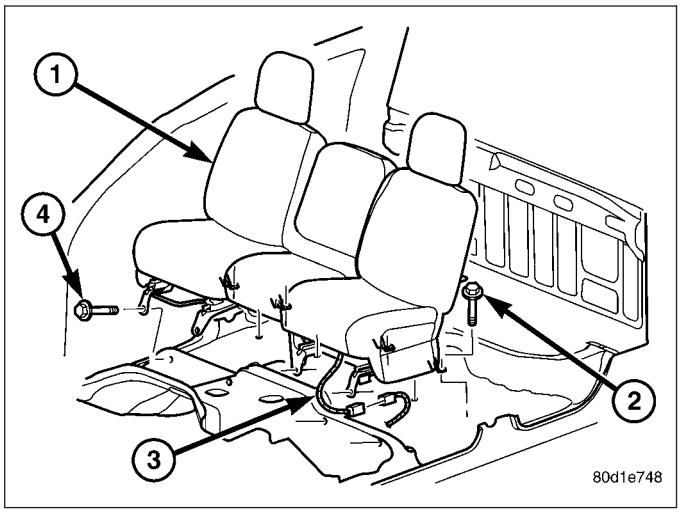

LUMBAR SUPPORT HANDLE/BEZEL

REMOVAL

CAUTION: Care must be taken not to damage the handle or bezel surface when removing.

1. Using a trim stick (special tool #C-4755) or equivalent, pry the manual lumbar knob out of the bezel surround.

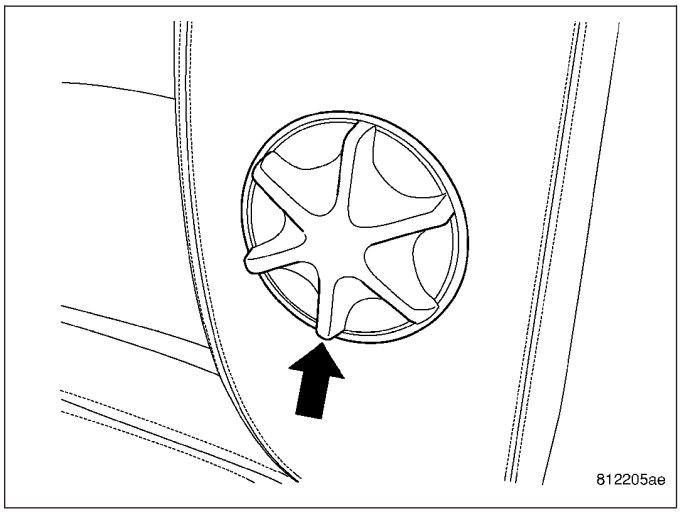

2. Remove the bezel retaining screws (2) and remove the bezel (3).

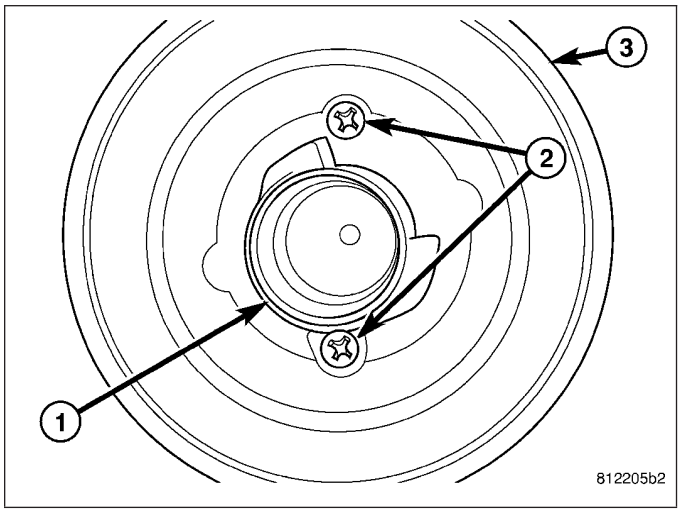

INSTALLATION

1. Align the bezel (3) to the seat back and install the screws (2).

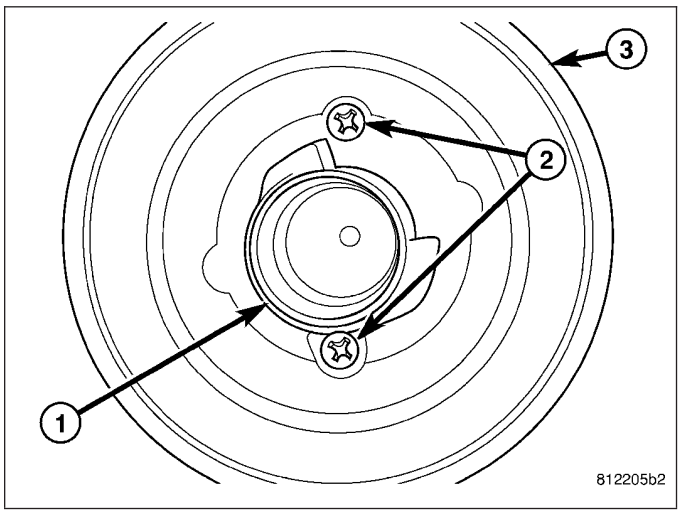

2. Snap the manual lumbar knob onto the shaft of the drive mechanism into the bezel surround.

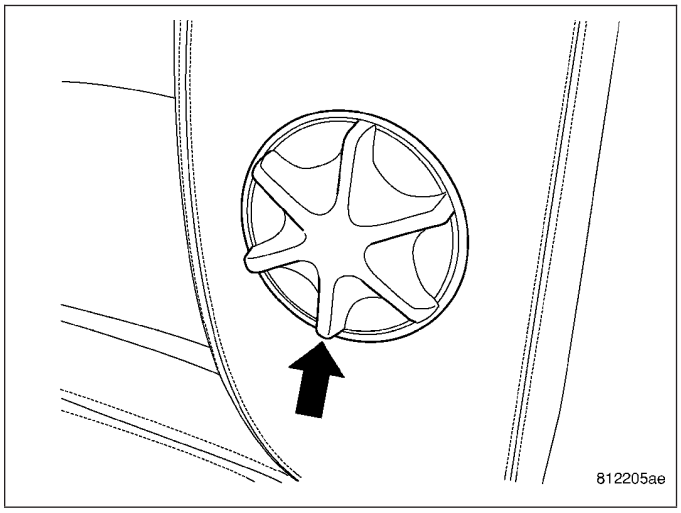

SEAT BACK CUSHION / COVER - FRONT

REMOVAL

1. Remove the front seat (Refer to 23 - BODY/SEATS/SEAT - FRONT - REMOVAL).
2. Remove the lumbar handle and bezel (if equipped) (Refer to 23 - BODY/SEATS/LUMBAR SUPPORT HANDLE/ BEZEL - REMOVAL).
3. Remove the headrest sleeves (Refer to 23 - BODY/SEATS/HEADREST SLEEVE - REMOVAL).
4. Unzip the zip strip at the lower end of the seat back and remove the seat back cover and cushion.

INSTALLATION

1. Install the seat back cushion and cover onto the seat frame assembly.
2. Connect the zip strip at the bottom of the seat back.
3. Install the headrest sleeves. (Refer to 23 - BODY/SEATS/HEADREST SLEEVE - INSTALLATION)
4. Install the lumbar bezel and handle, if equipped. (Refer to 23 - BODY/SEATS/LUMBAR SUPPORT HANDLE/ BEZEL - INSTALLATION)
5. Install the seat. (Refer to 23 - BODY/SEATS/SEAT - FRONT - INSTALLATION)

SEAT CUSHION / COVER - FRONT

REMOVAL

1. Remove the front seat. (Refer to 23 - BODY/SEATS/SEAT - FRONT - REMOVAL)
2. Remove the screw and remove the recliner handle.
3. Remove the two screws and remove the power seat controls, if equipped, and disconnect the electrical connector.
4. Remove the seat track. (Refer to 23 - BODY/SEATS/SEAT TRACK - REMOVAL)
5. Disconnect the j-straps and remove the seat cushion and cover.

INSTALLATION

1. Position the seat cushion and cover onto the frame assembly and connect the j-straps.
2. Install the seat track. (Refer to 23 - BODY/SEATS/SEAT TRACK - INSTALLATION)
3. Connect the power seat control switch electrical connector, if equipped.
4. Install the power seat control switch and install the two screws, if equipped.
5. Install the recliner handle and install the screw.
6. Install the front seat. (Refer to 23 - BODY/SEATS/SEAT - FRONT - INSTALLATION)

SEAT TRACK

REMOVAL

1. Remove the front seat. (Refer to 23 - BODY/SEATS/SEAT - FRONT - REMOVAL)
2. Disconnect the heated seat electrical connectors, if equipped.
3. Remove the four nuts attaching the seat track to the seat and remove the track.

INSTALLATION

1. Position the seat track onto the seat and install the four nuts.
2. Tighten the four nuts to 25 N·m (18 ft. lbs.).
3. Connect the heated seat electrical connectors, if equipped.
4. Install the seat. (Refer to 23 - BODY/SEATS/SEAT - FRONT - INSTALLATION)

SEAT - REAR

REMOVAL

1. Remove the load floor (Refer to 23 - BODY/INTERIOR/LOAD FLOOR - REMOVAL).
2. Fold the rear seat cushions up and remove the rear bolts (1, 3, and 5).

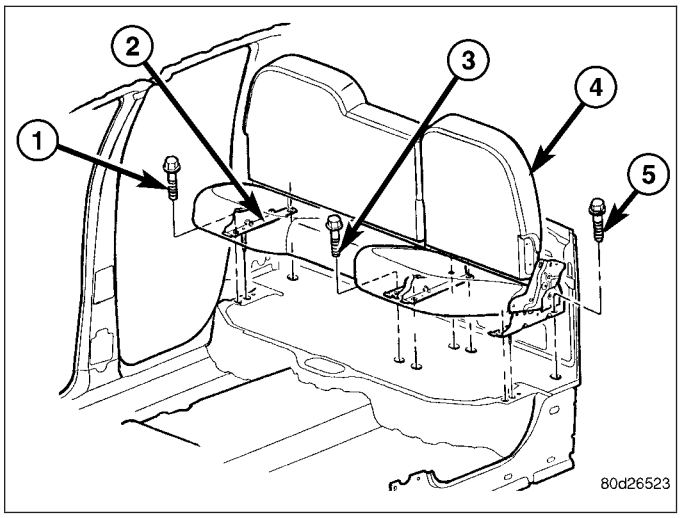

3. Lift each seat assembly up and disengage the seat back frame hooks (1 and 3) from the footmans loops (2 and 4) bolted to the rear cab back.
4. Remove the seats from the vehicle.

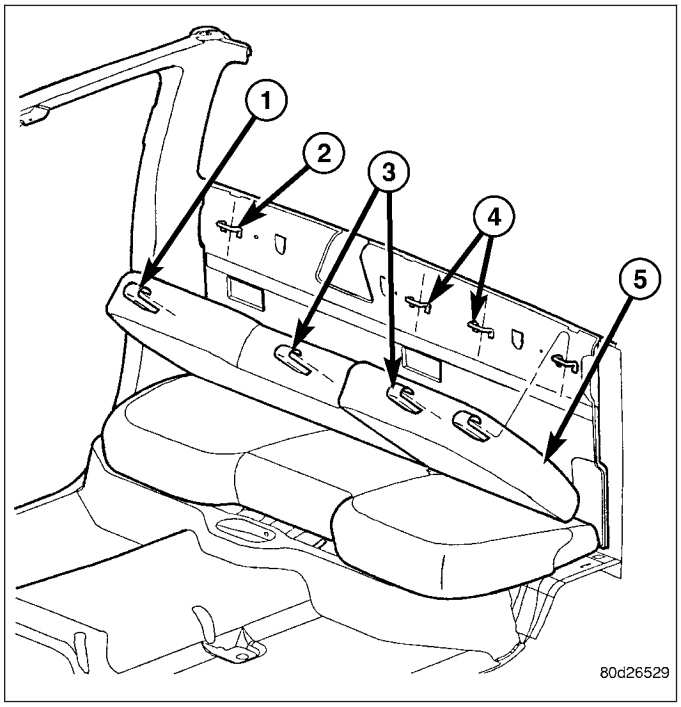

INSTALLATION

1. Install the seats into the vehicle and engage the seat back frame hooks (1 and 3) with the footmans loops (2 and 4) in the cab back panel.

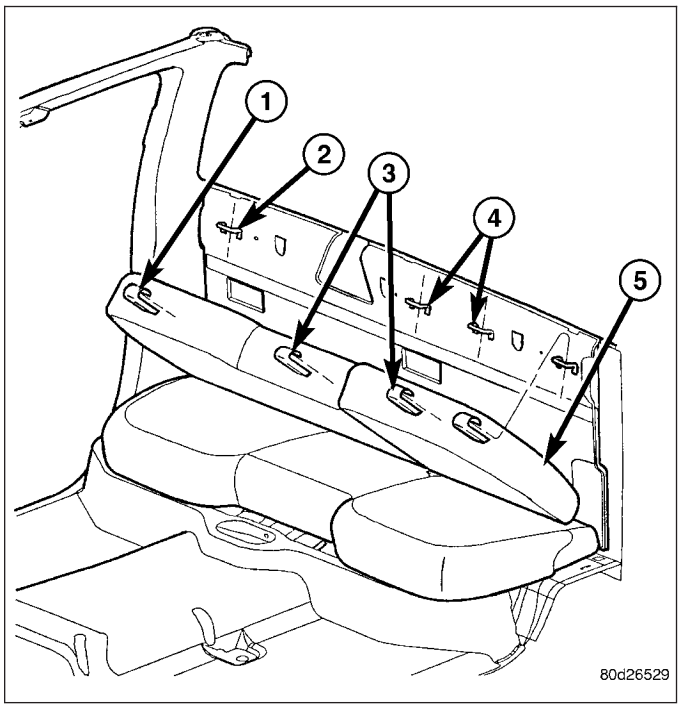

2. Install the rear seat bolts (1, 3, and 5) and tighten to 40 N·m (30 ft. lbs.).
3. Install the load floor (Refer to 23 - BODY/INTERIOR/LOAD FLOOR - INSTALLATION).

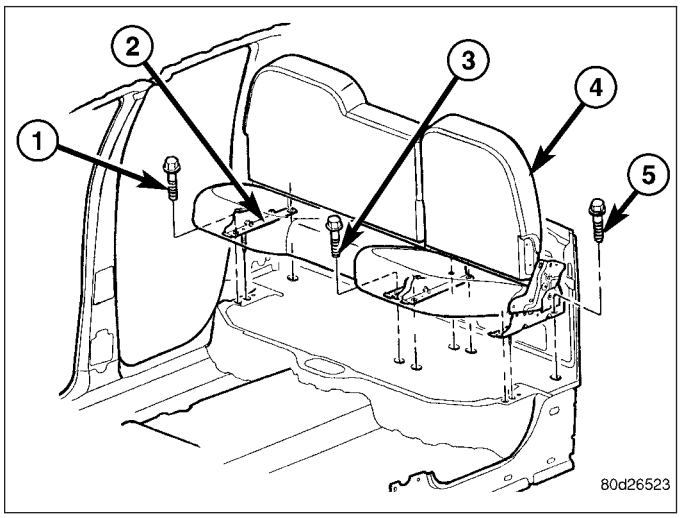

SEAT BACK - REAR

REMOVAL

1. Remove the rear seat (Refer to 23 - BODY/SEATS/SEAT - REAR - REMOVAL).
2. Remove the seat back bolts (1) and remove the seat back (4).

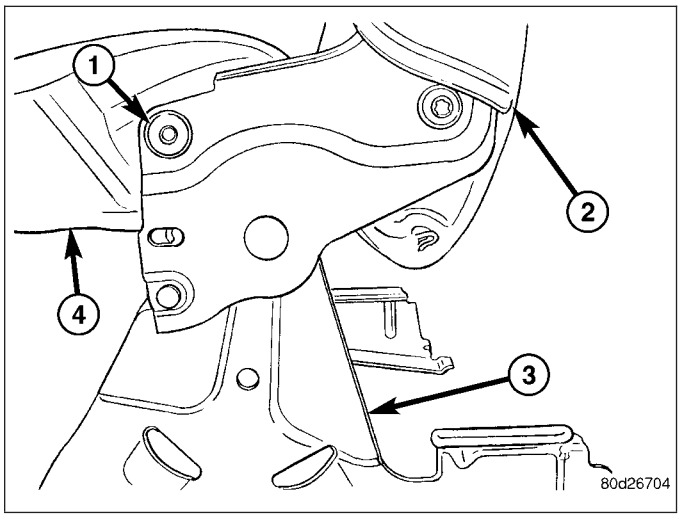

INSTALLATION

1. Install the seat back (4) and install the bolts (1).
2. Tighten the bolts (1) to 25 N·m (18 ft. lbs.).
3. Install the rear seat (Refer to 23 - BODY/SEATS/SEAT - REAR - INSTALLATION).

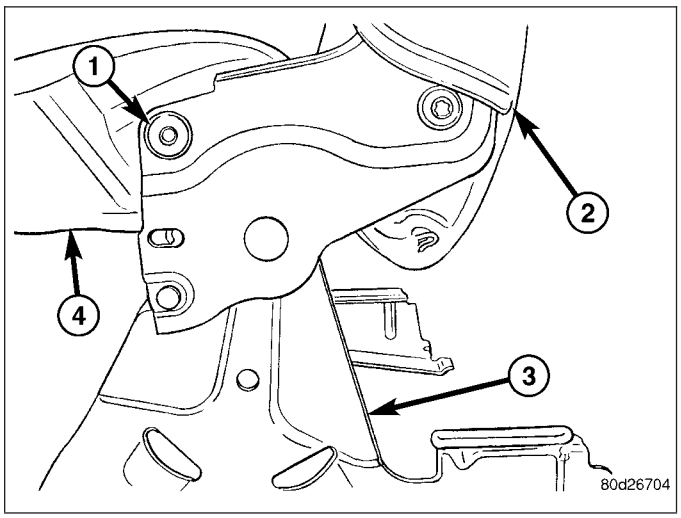

SEAT BACK CUSHION / COVER - REAR

REMOVAL

1. Remove the rear seat back. (Refer to 23 - BODY/SEATS/SEAT BACK - REAR - REMOVAL)
2. Remove the headrest sleeves. (Refer to 23 - BODY/SEATS/HEADREST SLEEVE - REMOVAL)
3. Unzip the zip strip at the bottom of the seat back and remove the cover.

INSTALLATION

1. Install the seat back cover and connect the zip strip.
2. Install the headrest sleeves. (Refer to 23 - BODY/SEATS/HEADREST SLEEVE - INSTALLATION)
3. Install the seat back. (Refer to 23 - BODY/SEATS/SEAT BACK - REAR - INSTALLATION)

SEAT CUSHION / COVER - REAR

REMOVAL

1. Remove the rear seat. (Refer to 23 - BODY/SEATS/SEAT - REAR - REMOVAL)
2. Separate the zip strip at the rear of the seat cushion and remove the cushion and cover.

INSTALLATION

1. Install the seat cushion and cover over the cushion frame assembly and connect the zip strip.
2. Install the seat. (Refer to 23 - BODY/SEATS/SEAT - REAR - INSTALLATION)

SEAT CUSHION FRAME - REAR

REMOVAL

1. Remove the seat cushion/cover (Refer to 23 - BODY/SEATS/SEAT CUSHION/COVER - REAR - REMOVAL).
2. Remove the bolts (3) and remove the seat cushion frame (2).

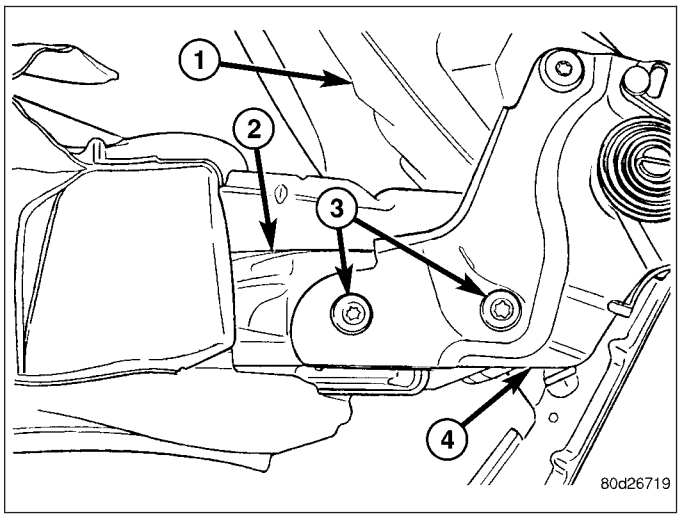

INSTALLATION

1. Install the seat cushion frame (2) onto the rear seat cushion hinges (4).
2. Install the bolts (3) and tighten to 32 N·m (24 ft. lbs.).
3. Install the seat cushion/cover (Refer to 23 - BODY/SEATS/SEAT CUSHION / COVER - REAR - INSTALLATION).

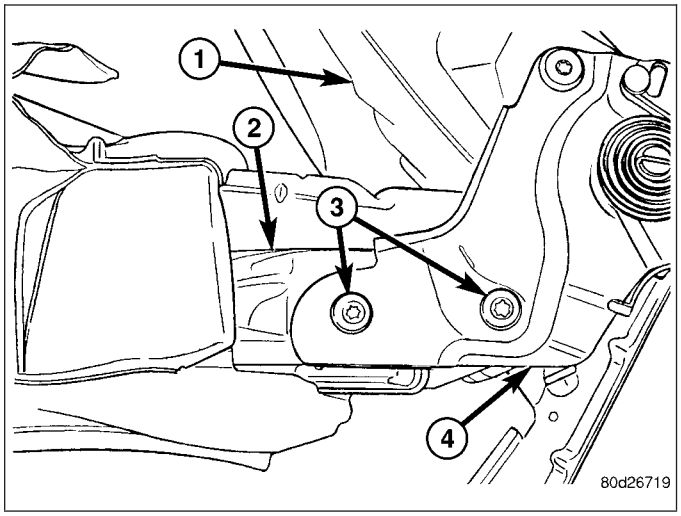

SEAT BACK REAR - FOOTMANS LOOP BRACKETS

REMOVAL

1. Remove the rear seat (Refer to 23 - BODY/SEATS/SEAT - REAR - REMOVAL).
2. Remove bolts (2) and remove the loop (1).

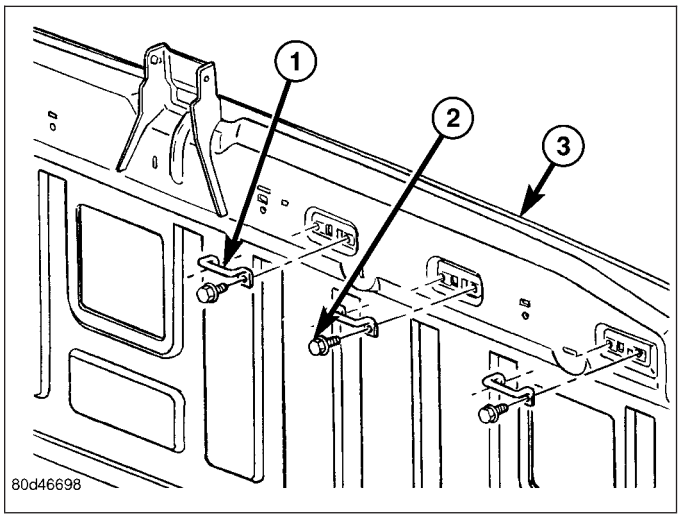

INSTALLATION

1. Install the loop (1) and install the bolts (2).
2. Tighten the bolts (2) to 12 N·m (9 ft. lbs.).
3. Install the seat (Refer to 23 - BODY/SEATS/SEAT - REAR - INSTALLATION).

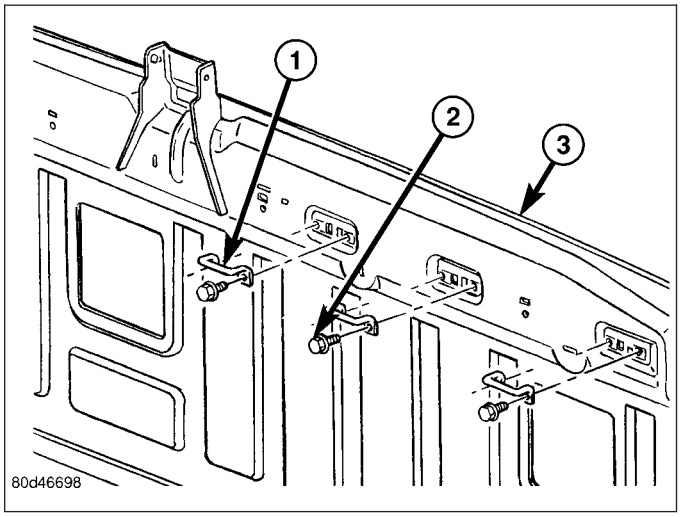

STATIONARY GLASS

TABLE OF CONTENTS

	page
BACKLITE	
REMOVAL	203
INSTALLATION	204
BACKLITE VENT GLASS	
REMOVAL	206
INSTALLATION	206
WINDSHIELD	
WARNING	
WINDSHIELD SAFETY PRECAUTIONS	207
REMOVAL	207
INSTALLATION	209

BACKLITE

REMOVAL

CAUTION: It is difficult to salvage the backlite during the removal operation. The backlite is part of the structural support for the roof. The urethane bonding used to secure the glass to the fence is difficult to cut or clean from any surface. Since the molding is set in urethane, it is unlikely it would be salvaged. Before removing the backlite, check the availability from the parts supplier.

NOTE: The backlite is attached to the window frame with urethane adhesive. The urethane adhesive is applied cold and seals the surface area between the window opening and the glass. The primer adheres the urethane adhesive to the backlite.

1. Roll down door glass.
2. Remove headliner (9) (Refer to 23 - BODY/INTERIOR/HEADLINER - REMOVAL).
3. On standard cab models remove the upper b-pillar trim (5) (Refer to 23 - BODY/INTERIOR/B-PILLAR UPPER TRIM - REMOVAL).

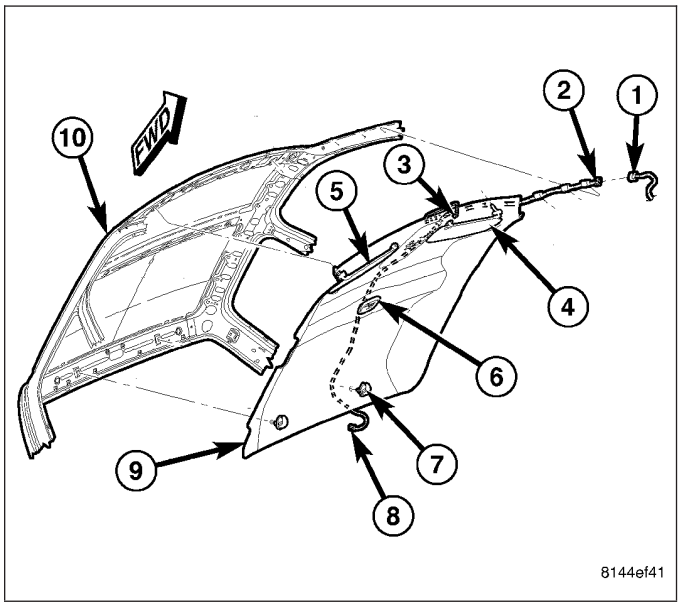

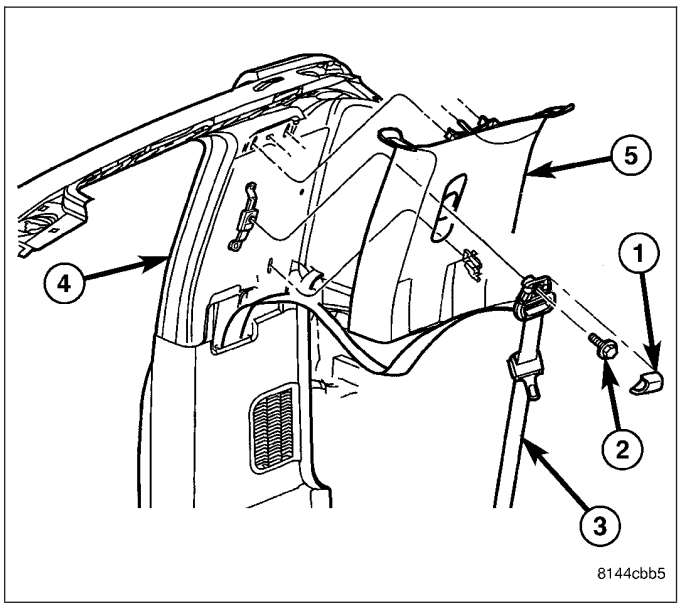

4. On quad cab models remove the upper c-pillar trim (5) (Refer to 23 - BODY/INTERIOR/C-PILLAR UPPER TRIM - REMOVAL).

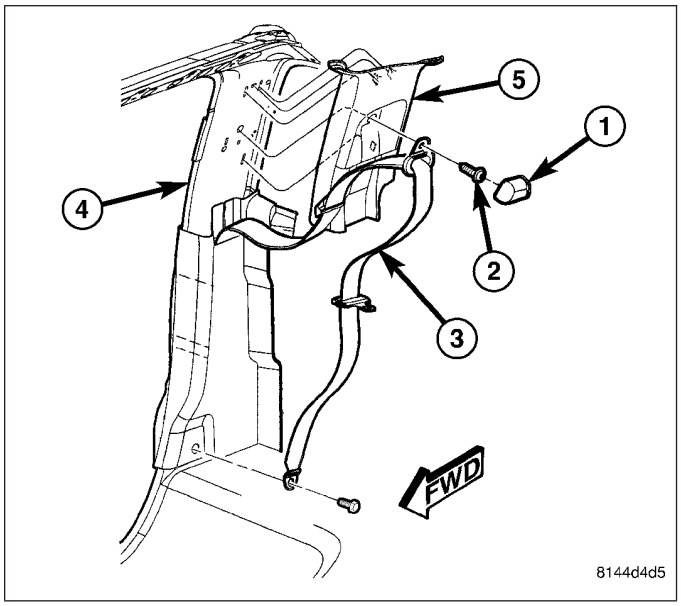

5. Bend backlite retaining tab (2) inward against glass.
6. Disconnect the rear window defogger electrical connector (if equipped).
7. Using a suitable pneumatic knife from inside the vehicle, cut urethane holding backlite frame to opening fence.
8. Separate glass (1) from vehicle.

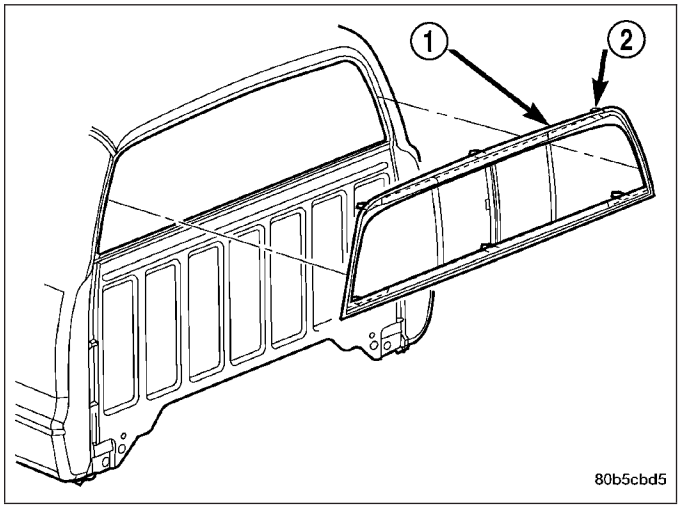

INSTALLATION

1. Clean urethane adhesive from around backlite opening fence.
2. If necessary, apply black-out primer to outer edge of replacement backlite frame (1).
3. If black-out primer was pre-applied on backlite, clean bonding surface with Isopropyl alcohol and clean lint free cloth. Allow 3 minutes for drying time.
4. Apply black-out primer to backlite opening fence.
5. Apply a 13 mm (0.5 in.) bead of urethane (4) around the perimeter of the window frame bonding surface (1).

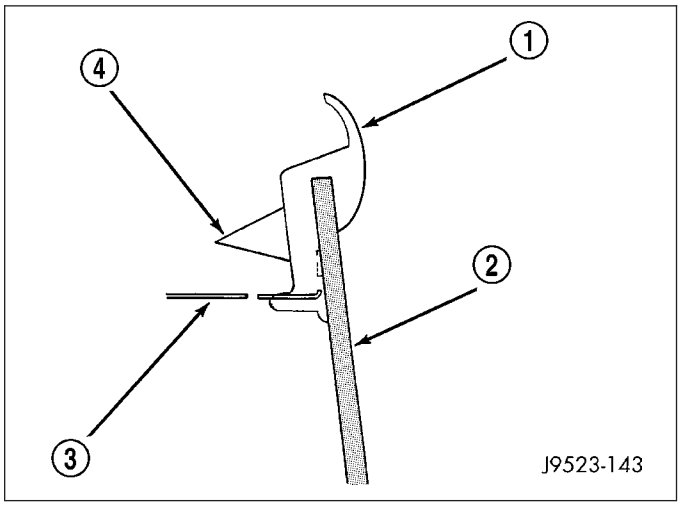

6. Set glass (1) on lower fence and move glass forward into opening.
7. Firmly push glass (1) against rear window glass opening fence.
8. Bend tabs around edges of backlite opening fence to retain glass.
9. Clean excess urethane from exterior with MOPAR®, Super Clean or equivalent.
10. Allow urethane to cure at least 24 hours (full cure is 72 hours).
11. Water test to verify repair before returning vehicle to service.
12. Connect the rear window defogger electrical connector, if equipped.

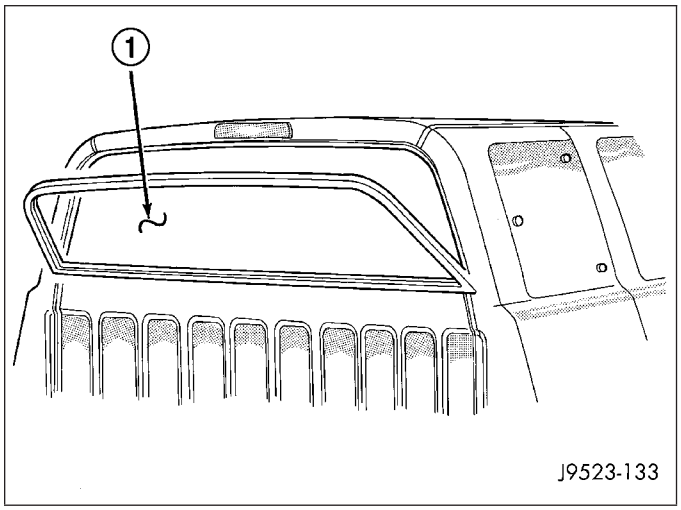

13. On standard cab models, install the upper b-pillar trim (5) (Refer to 23 - BODY/INTERIOR/B-PILLAR UPPER TRIM - INSTALLATION).

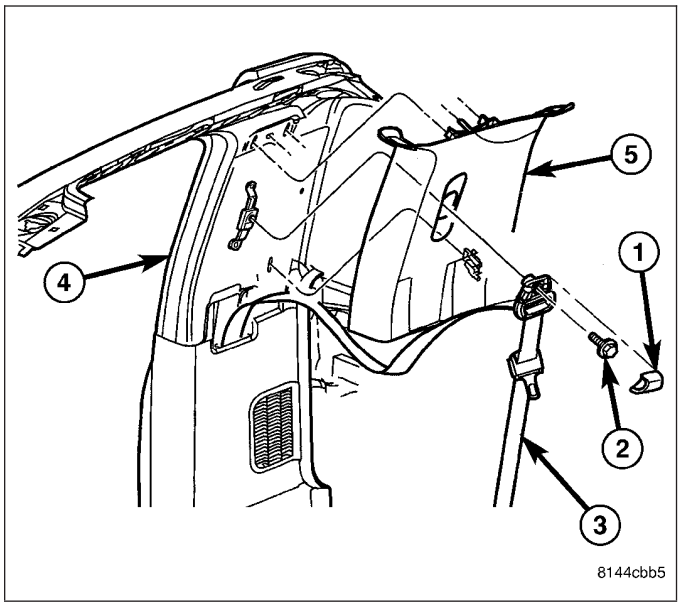

14. On quad cab models, install the upper c-pillar trim (5) (Refer to 23 - BODY/INTERIOR/C-PILLAR UPPER TRIM - INSTALLATION).

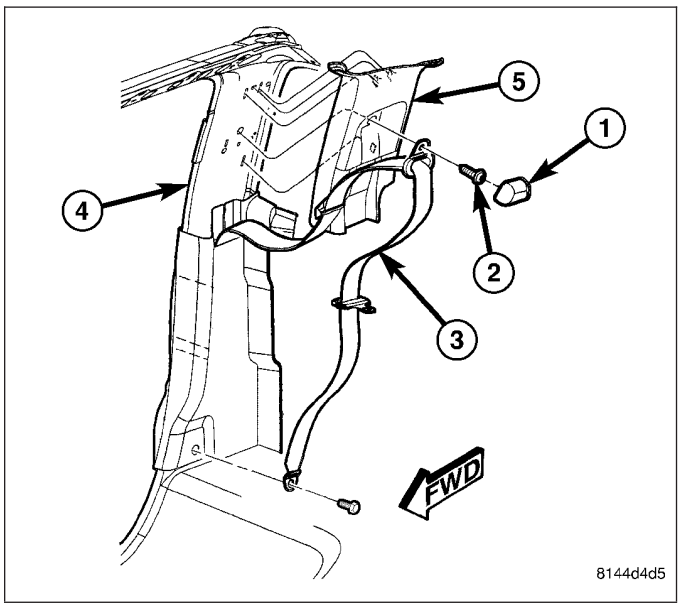

15. Install the headliner (9) (Refer to 23 - BODY/INTERIOR/HEADLINER - INSTALLATION).

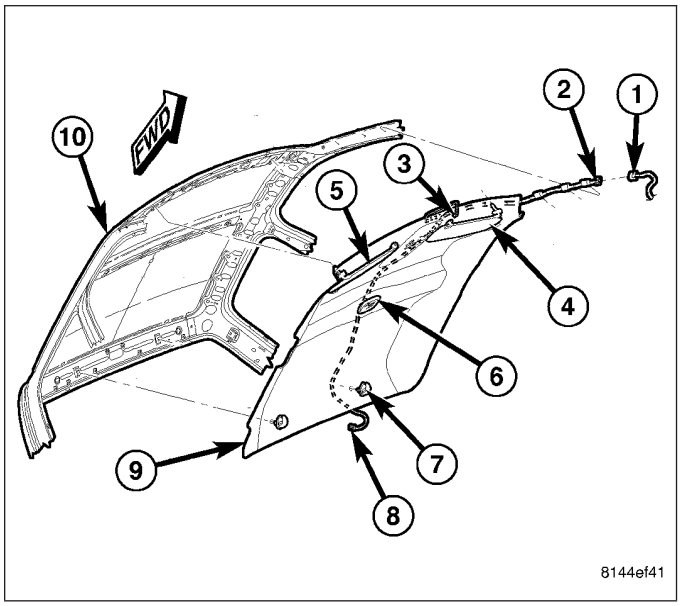

BACKLITE VENT GLASS

REMOVAL

1. Slide the upper run channel (1) out of the window frame (2).
2. Slide the vent glass (3) upward to remove from the lower window frame (2).
3. Lower the glass (3) out of the upper window frame (2) and remove.

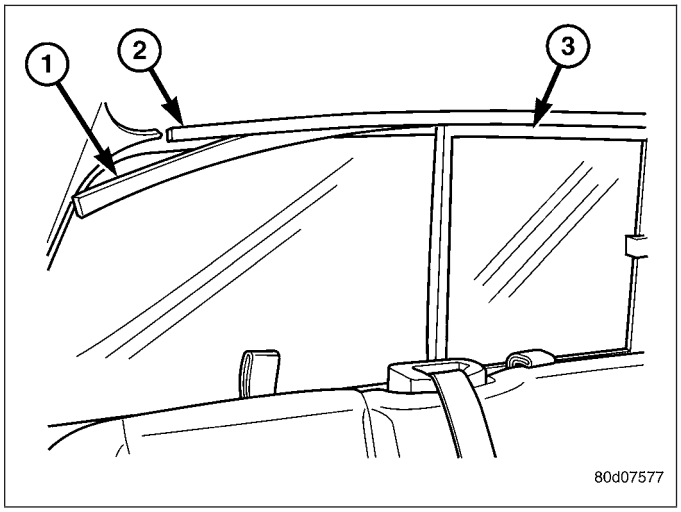

INSTALLATION

1. Slide the vent glass (3) upper edge into window frame (2) and insert the lower edge into the lower molding.
2. Position the upper run channel (1) into the window frame (2) and slide it into place.
3. Verify vent glass (3) operation.

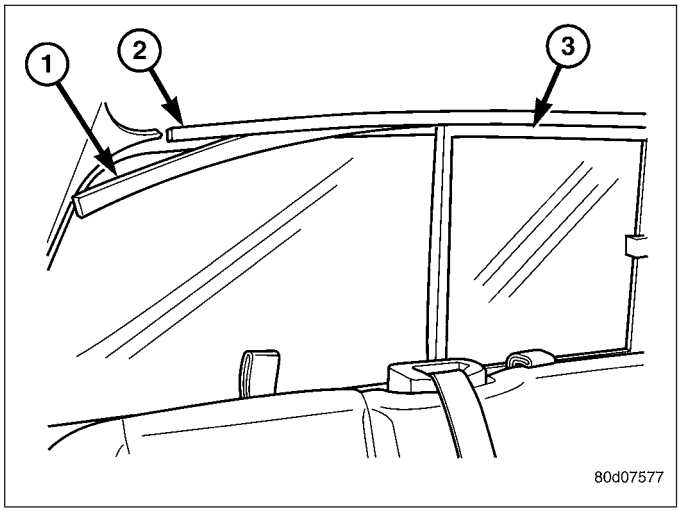

WINDSHIELD

WARNING

WINDSHIELD SAFETY PRECAUTIONS

Do not operate the vehicle within 24 hours of windshield installation. It takes at least 24 hours for urethane adhesive to cure. If it is not cured, the windshield may not perform properly in an accident.

- **Urethane adhesives are applied as a system. Use glass cleaner, glass prep solvent, glass primer, PVC (vinyl) primer and pinch weld (fence) primer provided by the adhesive manufacturer. If not, structural integrity could be compromised.**
- **DaimlerChrysler does not recommend glass adhesive by brand. Technicians should review product labels and technical data sheets, and use only adhesives that their manufactures warranty and will restore a vehicle to the requirements of fmvss 212. Technicians should also insure that primers and cleaners are compatible with the particular adhesive used.**
- **Be sure to refer to the urethane manufacturer's directions for curing time specifications and do not use adhesive after its expiration date.**
- **Vapors that are emitted from the urethane adhesive or primer could cause personal injury or death. Use them in a well-ventilated area.**
- **Skin contact with urethane adhesive should be avoided. Personal injury or death may result.**
- **Always wear eye and hand protection when working with glass.**

Protect all painted and trimmed surfaces from coming in contact with urethane or primers.

Be careful not to damage painted surfaces when removing moldings or cutting urethane around windshield.

REMOVAL

1. Remove inside rear view mirror (3) (Refer to 23 - BODY/INTERIOR/REAR VIEW MIRROR - REMOVAL).

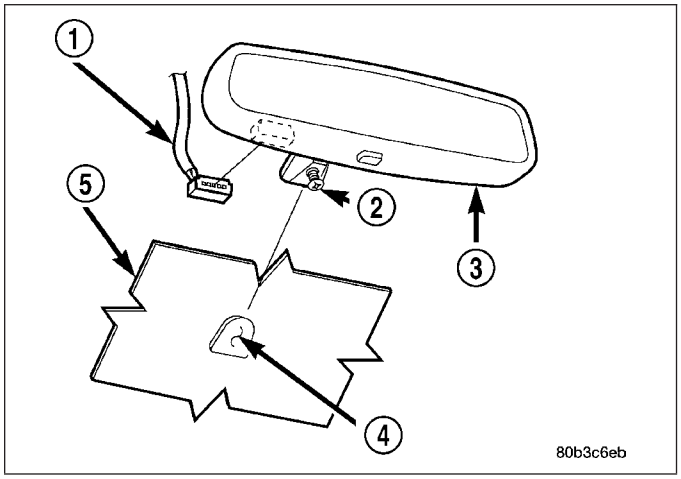

2. Remove cowl grill (2) (Refer to 23 - BODY/EXTERIOR/COWL GRILLE - REMOVAL).

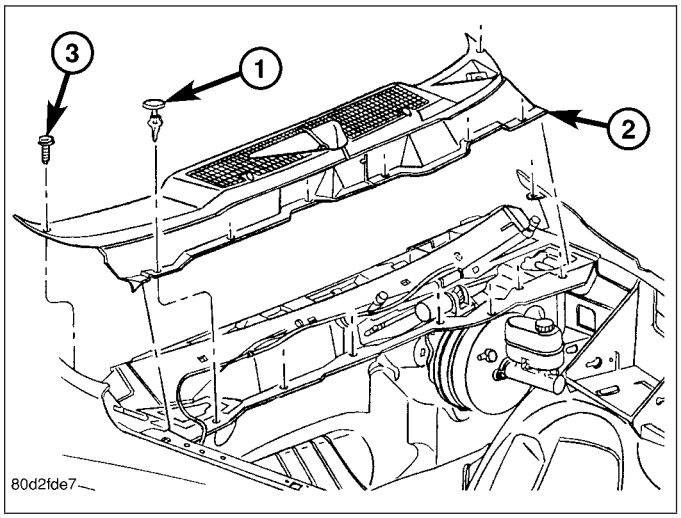

3. Remove the a-pillar weatherstrip retainer (1) (Refer to 23 - BODY/WEATHERSTRIP/SEALS/A-PILLAR WEATHERSTRIP RETAINER - REMOVAL).

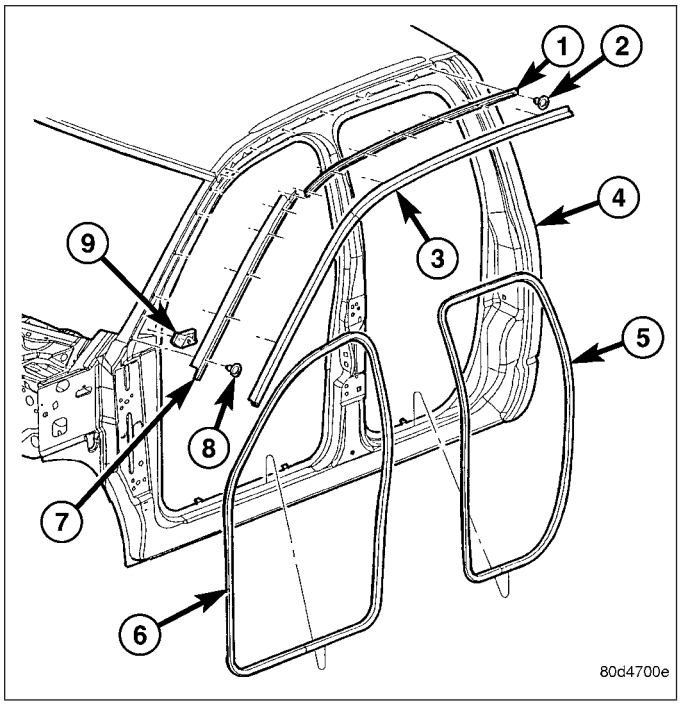

4. Remove the a-pillar trim panels (2) (Refer to 23 - BODY/INTERIOR/A-PILLAR TRIM - REMOVAL).

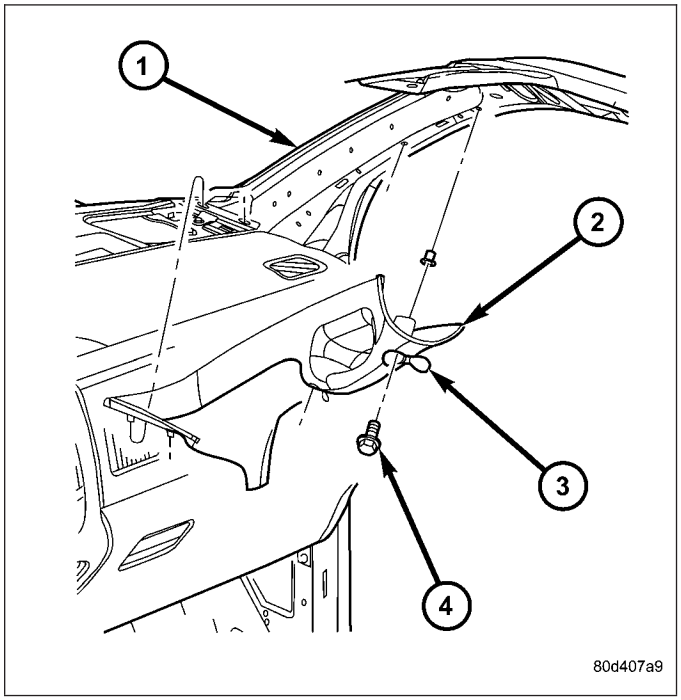

5. Remove the headliner (9) and from the inside of the vehicle, cut the upper urethane bonding from around windshield upper edge using a suitable sharp cold knife (C-4849). A pneumatic cutting device can be used but is not recommended (Refer to 23 - BODY/INTERIOR/HEADLINER - REMOVAL).
6. From the outside of the vehicle, cut urethane bonding from the remaining sides of the windshield using a suitable sharp cold knife (C-4849). A pneumatic cutting device can be used but is not recommended.
7. Separate windshield from vehicle.

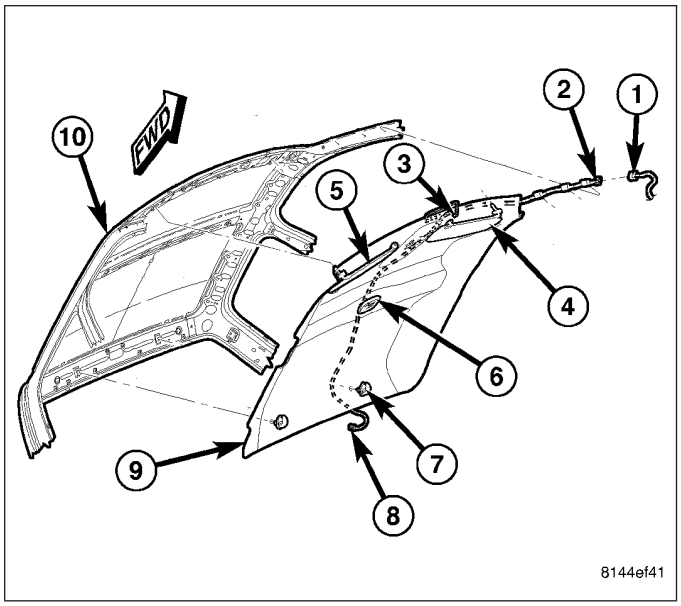

INSTALLATION

WARNING: Allow the urethane at least 24 hours to cure before returning the vehicle to use.

CAUTION: Roll down the left and right front door glass and open the rear glass slider (if available) before installing windshield. This is to avoid pressurizing the passenger compartment if a door is slammed before the urethane is cured. The potential for water leaks can result.

The windshield fence should be cleaned of most of its old urethane bonding material. A small amount of old urethane, approximately 1-2 mm in height, should remain on the fence. Do not grind off or completely remove all old urethane from the fence, the paint finish and bonding strength will be adversely affected.

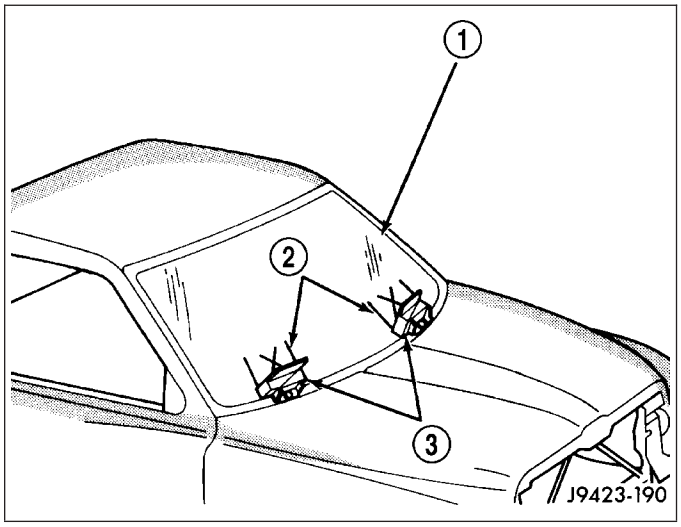

1. Place replacement windshield (1) into windshield opening and position glass in the center of the opening against the support spacers (3). Mark the outside surface of the glass at the support spacers (3) with a grease pencil or pieces of masking tape and ink pen to use as a reference (2) for installation. Remove replacement windshield from windshield opening.

2. Position the windshield (1) inside up on a suitable work surface with two padded, wood 10 cm by 10 cm by 50 cm (4 in. by 4 in. by 20 in.) blocks (3), placed parallel 75 cm (2.5 ft.) apart.
3. Clean inside of windshield with MOPAR® Glass Cleaner and lint-free cloth.
4. Apply clear glass primer 25 mm (1 in.) wide around perimeter of windshield and wipe with a new clean and dry lint- free cloth.
5. Apply black-out primer onto the glass using the windshield molding as a guide. The primer should be 15 mm (5/8 in.) wide on the top and sides of the glass and 25 mm (1 in.) on the bottom of windshield. Allow at least three minutes drying time.

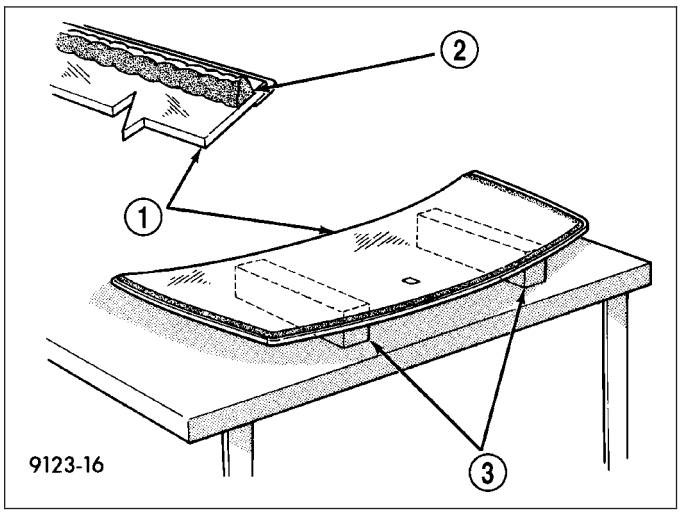

6. Locate **NEW** support spacers (3) on support brackets and adjust to lowest height.

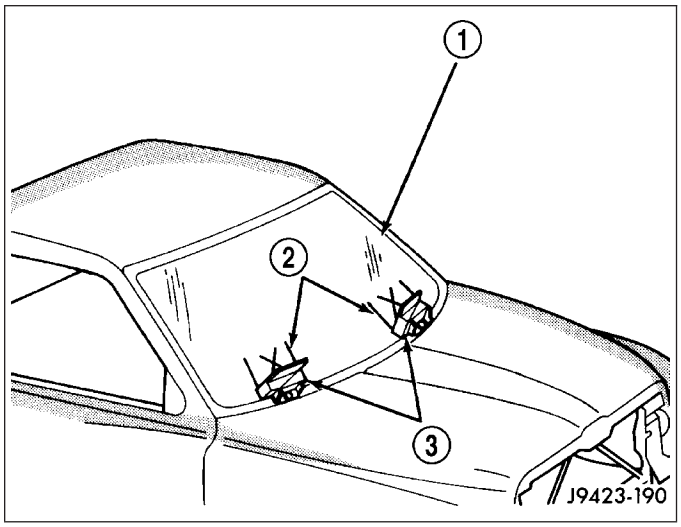

7. Position seven new foam spacers (4 and 3) on the inside surface of the windshield, flush with the lower and side edges.
8. Position three new foam spacers (1) on the inside surface of the windshield, at a minimum distance of 3 mm (0.12 in.) from the top edge of the windshield.

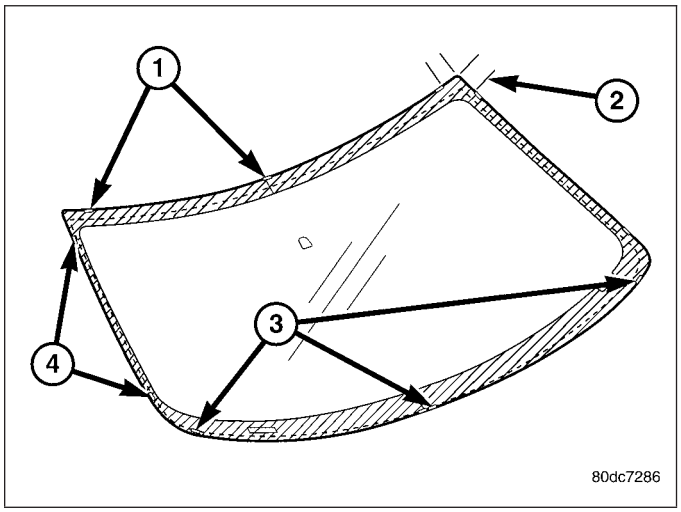

9. The urethane bead should be shaped in a triangular cross-section, this can be achieved by notching the tip of the applicator.

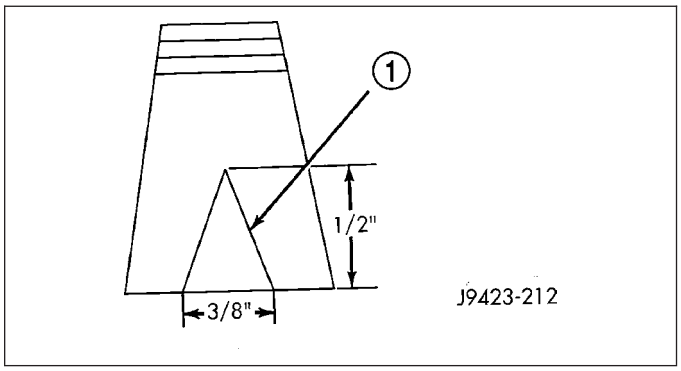

10. Apply a 13 mm (1/2 in.) high and 10 mm (3/8 in.) wide bead of urethane around the perimeter of windshield (2). At the top, apply the bead 7 mm (1/4 in.) inboard from the glass edge. On the other three sides apply the bead 14 mm (0.55 in.) inboard from the glass edge.

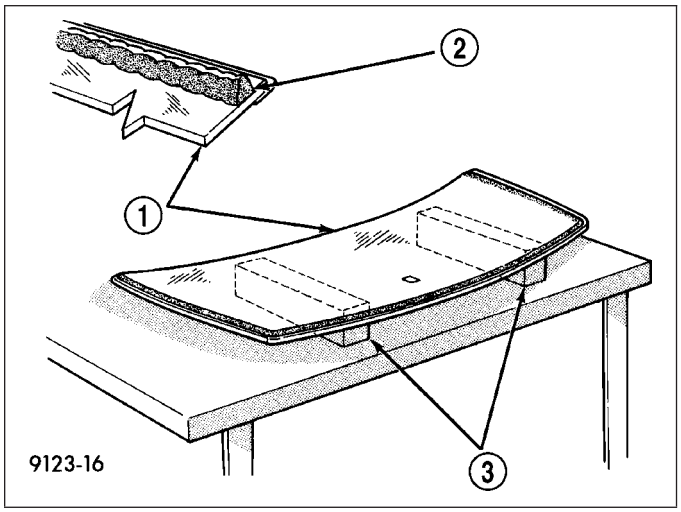

11. Install the a-pillar trim (2) (Refer to 23 - BODY/INTERIOR/A-PILLAR TRIM - INSTALLATION).

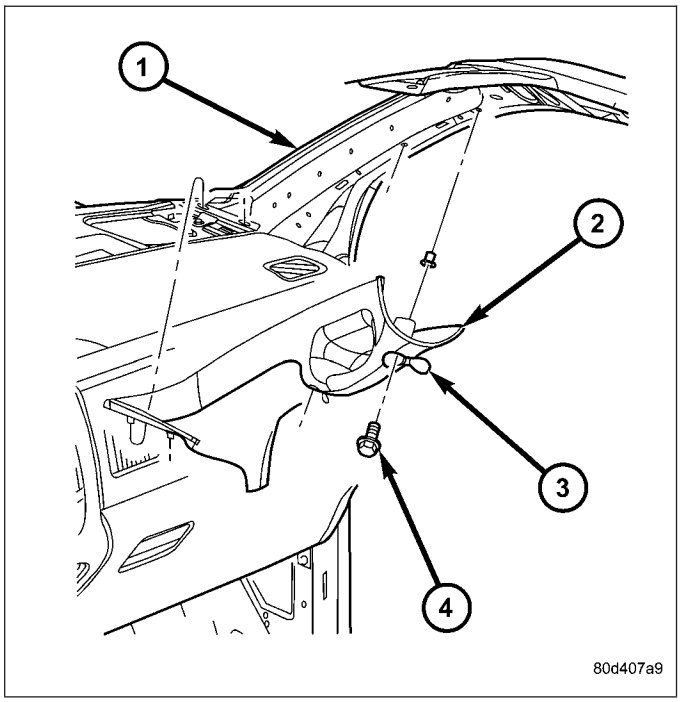

12. With the aid of a helper, position the windshield (2) over the windshield opening. Align the reference marks at the bottom of the windshield to the support spacers (3).
13. Slowly lower windshield glass (2) to the fence opening guiding the lower corners into proper position. Beginning at the bottom and continuing to the top, push glass (2) onto fence along the A-Pillars. Push windshield (2) inward to the fence at the bottom corners.
14. Push windshield (2) upward, setting the windshield to roof gap to 1.5 mm (0.06 in.) to 3 mm (0.12 in.) and ratchet up the adjustable support brackets.
15. Using clean water, lightly mist the support spacers (3).

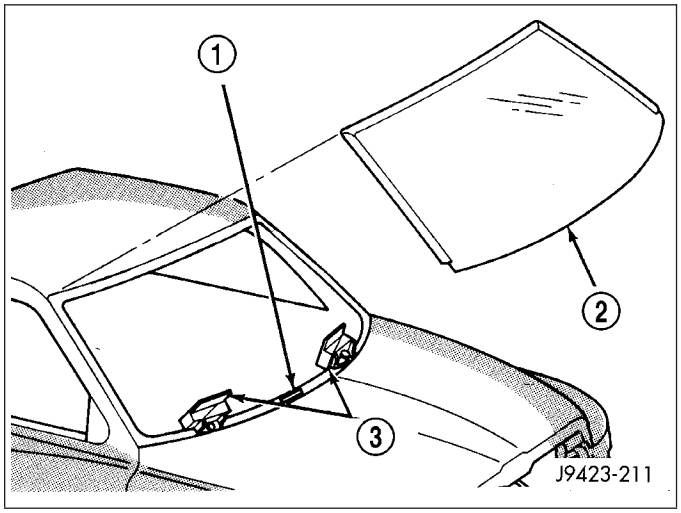

16. Clean excess urethane from exterior with MOPAR® Super Clean or equivalent.

17. Install cowl grill (2) (Refer to 23 - BODY/EXTERIOR/COWL GRILLE - INSTALLATION).

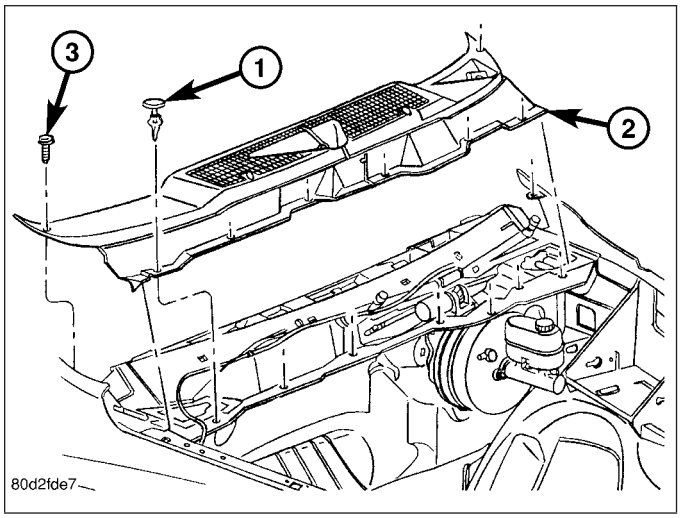

18. Install rear view mirror support bracket (4) (Refer to 23 - BODY/INTERIOR/REAR VIEW MIRROR - INSTALLATION).
19. Install rear view mirror (3) (Refer to 23 - BODY/INTERIOR/REAR VIEW MIRROR - INSTALLATION).

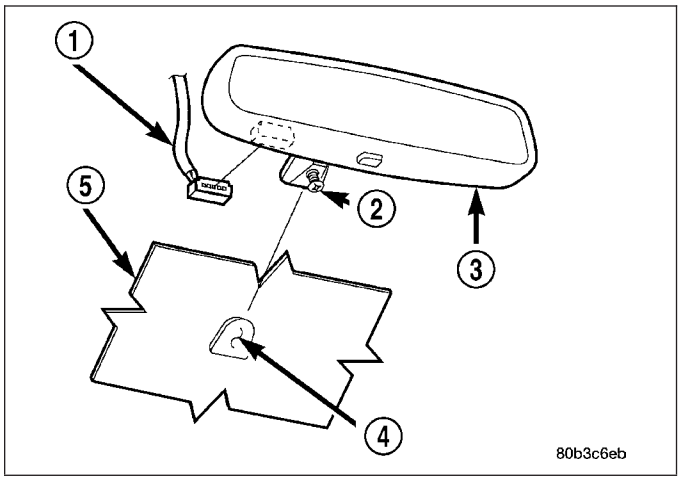

20. Install the a-pillar weatherstrip retainer (1) (Refer to 23 - BODY/WEATHERSTRIP/SEALS/A-PILLAR WEATHERSTRIP RETAINER - INSTALLATION)
21. After urethane has cured, remove tape strips and water test windshield to verify repair.

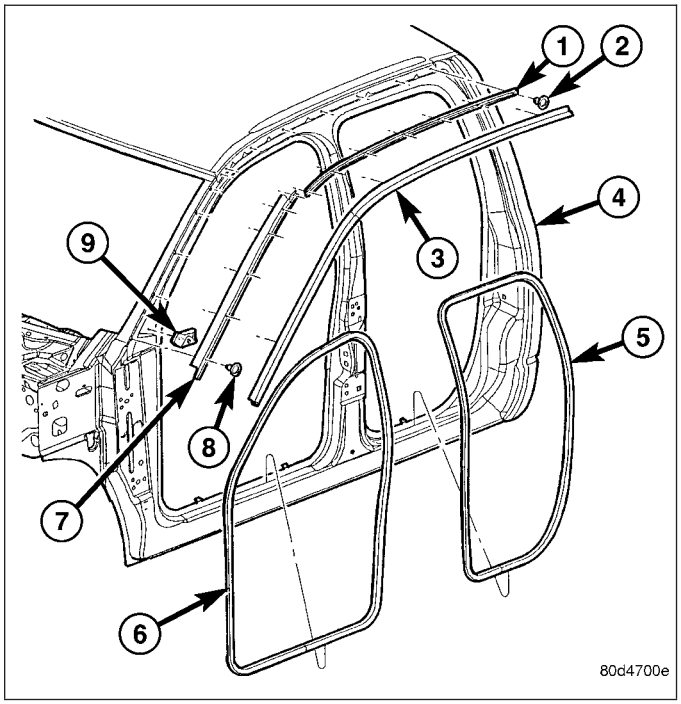

SUNROOF - SERVICE INFORMATION

TABLE OF CONTENTS

page

SUNROOF - SERVICE INFORMATION
DESCRIPTION 214
OPERATION 215
DIAGNOSIS AND TESTING
POWER TOP - SUNROOF 216
SUNROOF 216
ASSEMBLY-MODULE
REMOVAL 219
INSTALLATION 221
CHANNEL-DRAIN
REMOVAL 222
INSTALLATION 223
COVER-GUIDE MECHANISM
REMOVAL 224
INSTALLATION 225
DEFLECTOR-WIND
REMOVAL 225
INSTALLATION 226
GLASS
REMOVAL 227
INSTALLATION 228
ADJUSTMENTS
ADJUSTMENT 229
GUIDE-SUNROOF GLASS
REMOVAL 230
INSTALLATION 231
HOSE-DRAIN
REMOVAL 233
INSTALLATION 234
MOTOR
DESCRIPTION 234
SUNSHADE
REMOVAL 235
INSTALLATION 236
SWITCH-SUNROOF
DESCRIPTION 236
TRIM RING
REMOVAL 237
INSTALLATION 237

SUNROOF - SERVICE INFORMATION

DESCRIPTION

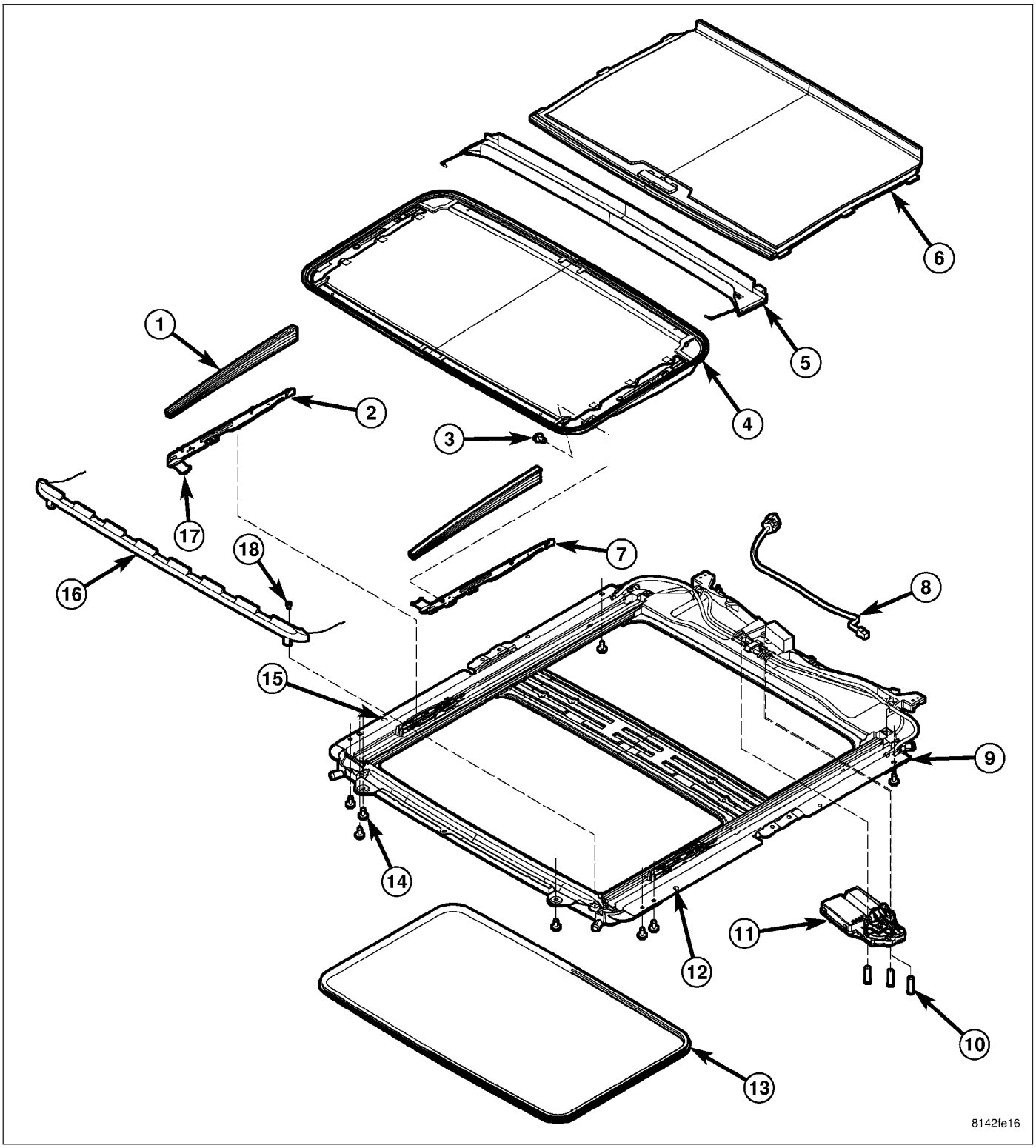

EXPLODED VIEW

Parts List

1 - MECHANISM COVERS (2)	10 - MOTOR FASTENERS (3)
2 - RIGHT HAND GLASS GUIDE	11 - SUNROOF MOTOR/MODULE ASSEMBLY
3 - GLASS FASTENERS (4)	12 - ALIGNMENT HOLE
4 - GLASS ASSEMBLY	13 - TRIM RING
5 - DRAIN CHANNEL	14 - ASSEMBLY FASTENERS (8)
6 - SUNSHADE	15 - ALIGNMENT HOLE
7 - LEFT SUNROOF GLASS GUIDE	16 - WIND DEFLECTOR
8 - WIRE HARNESS	17 - GLASS GUIDE FOOT
9 - SUNROOF ASSEMBLY	18 - WIND DEFLECTOR STRAP SCREWS (2)

The power sunroof system allows the sunroof to be opened, closed or placed in the vent position electrically by actuating a switch in the overhead console. The sunroof system receives battery feed through a fuse in the Power Distribution Center (PDC). The sunroof will operate normally with the key in any position while the Accessory Delay system is active.

The sunroof glass panel tilts upward at the rear for ventilation and slides rearward under the roof when open. The panel seals flush with the roof in the closed position to eliminate wind noise. The sunroof includes a manual-sliding sunshade to cover the deep-tinted glass panel.

In addition to the standard power sunroof operation, this vehicle offers several additional features. There is an express (one-touch) opening and closing feature as well as Excessive Force Limitation (EFL). The EFL function detects obstacles trapped between the glass and the vehicle roof during a closing motion. Upon sensing an obstacle the EFL function will reverse direction of the glass to allow removal of the obstacle.

The main components of the power sunroof system are:

- The motor/module assembly
- The power sunroof glass and frame assembly
- The power sunroof switch
- The manual-sliding sunshade

OPERATION

This vehicle has a vent, tilt and slide power sunroof system with express (one-touch) open and closing feature. The sunroof system receives constant battery feed through a fuse in the Power Distribution Center (PDC). The sunroof will operate normally with the key in any position while the Accessory Delay system is active. If the sunroof is moving when the key is turned to the START position (crank engine), all motions stop until the key is released, then the previously requested sunroof motion will resume. The sunroof will also complete a requested motion if the Accessory Delay system goes inactive while the motion is in progress.

A combination push-button and rocker switch module mounted in the overhead console controls sunroof operation. The sunroof switch is a rocker design with a push button in the center of the two halves of the rocker. Pressing the rocker towards the front of the car commands the sunroof closed. Pressing the rocker towards the rear of the car commands the sunroof open. Pressing the center push button commands the sunroof up into the vent position (Rear of sunroof glass raises above the vehicle roof with glass still covering the sunroof opening). All switch commands operate with the glass starting in any position. (Refer to 8 - ELECTRICAL/POWER TOP/SWITCH - OPERATION) for additional information.

An electronic control system, integral to the motor/module assembly, provides the express open and close functions. Pressing the ″open″ or ″close″ end of the rocker switch moves the sunroof glass panel to the full open or full closed position, respectively. During express closing, anytime an obstacle is detected in the way of the glass, the motor will stop and reverse travel to avoid pinching an occupant’s finger, ice in the track, etc. This function is called Excessive Force Limitation (EFL). There are two methods of overriding the EFL function.

1. When three EFL events occur without the glass being allowed to fully close, the next close attempt will only move while the close switch is continuously actuated. This allows the sunroof to be forced closed if multiple close attempts fail.

2. If the sunroof close switch is continuously actuated during an EFL event, through the reversal, and during a two second wait time, then continuing to hold the close switch will cause the roof to move towards close with the EFL protection disabled. This allows the sunroof to be forced closed if it is known that a reversal will occur.

While in EFL override, the closing motion will cease if the sunroof switch is released at any time.

The motor/module is programmed to learn the speed required to drive the panel based on position and recalibrates itself as needed. If the sunroof becomes uncalibrated, it will only respond to the vent switch. If the vent switch is pressed, the glass will move toward vent; if the switch is released, all motion stops. In the event that the sunroof system becomes uncalibrated perform the sunroof position calibration procedure, (Refer to 8 - ELECTRICAL/ POWER TOP/MOTOR - STANDARD PROCEDURE -SUNROOF POSITION CALIBRATION).

DIAGNOSIS AND TESTING

POWER TOP - SUNROOF

Any diagnosis of the power sunroof system should begin with the use of a scan tool and the proper Diagnostic Procedures Information. The scan tool can provide confirmation that the Controller Area Network (CAN) Data Bus is functional, that all of the electronic modules are sending and receiving the proper messages on the CAN Data Bus, and that the power sunroof motor is being sent the proper hard wired output by the sunroof switch.

For complete circuit diagrams, refer to the appropriate wiring information. The wiring information includes wiring diagrams, proper wire and connector repair procedures, details of wire harness routing and retention, connector pin-out information and location views for the various wire harness connectors, splices and grounds.

Refer to the appropriate diagnostic information.

SUNROOF

Refer to SUNROOF DIAGNOSIS CHART for possible causes. Before beginning sunroof diagnostics verify that all other power accessories are in proper operating condition. If not, a common electrical problem may exist. Refer to Wiring Diagrams, in this publication for circuit, splice and component descriptions. Check the condition of the circuit protection (20 amp circuit breaker in the Junction Block). Inspect all wiring connector pins for proper engagement and continuity. Check for battery voltage at the power sunroof controller, refer to Wiring Diagrams, for circuit information. If battery voltage of more than 10 volts is detected at the controller, proceed with the following tests (the controller will not operate at less than 10 volts).

Before beginning diagnosis for wind noise or water leaks, verify that the problem was not caused by releasing the control switch before the sunroof was fully closed. The sunroof module has a water-management system. If however, the sunroof glass is in a partial closed position, high pressure water may be forced beyond the water management system boundaries and onto the headlining.

Every time the sunroof module loses power it must be initialized. This is done by connecting power to the sunroof and moving the sunroof toward the closed position. When initialization occurs a slight “kick” in the sunroof module will be seen and heard. This is the indication that the sunroof module is initialized

SUNROOF DIAGNOSIS CHART

SYMPTOM	POSSIBLE CAUSE
Sunroof motor inoperative.	Faulty control switch. Faulty circuit ground between sunroof module, control switch, and body harness. Faulty power circuit between sunroof module, control switch, and body harness. Faulty sunroof drive motor. Faulty sunroof module.
Audible whine when switch is depressed, sunroof does not operate.	Faulty sunroof drive motor. Binding cable.
Audible clicking or ratcheting when switch is pressed, sunroof does not operate.	Broken or worn drive cable. Worn drive motor gear. Mechanisms not synchronized.
Sunroof vents and opens, but does not close.	Broken or disengaged trough guide Binding cable. Faulty circuit. Faulty control switch. Faulty sunroof module. Faulty drive motor.
Sunroof vents, but does not open.	Binding cable or mechanism. Faulty circuit. Faulty switch. Faulty sunroof module.
Sunroof does not vent	Binding cable or mechanism. Faulty circuit. Faulty control switch. Faulty sunroof module.
Sunroof water leak.	Drain tubes clogged or kinked or disconnected from the sunroof. Glass panel improperly adjusted. Faulty glass panel seal.
Gurgling sound from sunroof	Low spot in drain hose routing, allowing water to stand.
Wind noise from sunroof.	Glass panel compression to the roof opening not consistent. Wind deflector not deploying properly. Glass not installed or adjusted properly. Faulty glass panel seal.

SYMPTOM	POSSIBLE CAUSE
Buzz, Squeak, Rattles from sunroof	Loose or broken attaching hardware. No lubrication in track. Worn or broken mechanism. Cables bunched or kinked.
Sunshade will not function or does not operate smoothly	Sunshade feet are broken. Sunshade feet are in the wrong track. Track obstructions or interference. Trim lace incorrectly installed in track.
Glass movement not consistent or glass does not operate smoothly	Glass and Track timing. Glass and Track alignment. Cables and Guide alignment.
Broken or jammed guide mechanism	Mechanism cover was not installed correctly.

WATER DRAINAGE AND WIND NOISE DIAGNOSIS

The sliding glass panel is designed to seal water entry with a snug fit between the roof and the seal. The fit can be checked by inserting a business card or equivalent, between the roof and the seal. The piece of paper should have some resistance when pulled out when the glass panel is in the closed position. The sunroof housing will drain off a minimum amount of water. Excessive wind noise could result if the gap clearances are exceeded. The sunroof glass panel may need to be adjusted. (Refer to 23 - BODY/SUNROOF/GLASS PANEL - ADJUSTMENTS)

Adequate drainage is provided by a drain trough in the sunroof housing which encircles the sliding glass panel and leads to drain hoses. If a wet headliner or other water leak complaints are encountered, before performing any adjustments, first ensure that the drainage system is not plugged or disconnected. Use a pint container to pour water into the sunroof housing drain trough. If water flow is restricted, use compressed air to blow out any material plugging the drain system. Retest system again.

To further check for a disconnected drain hose:

NOTE: Care must be taken not to fold or kink the headliner upon removal.

1. Lower headliner as necessary to gain access to sunroof housing drain tubes. (Refer to 23 - BODY/INTERIOR/HEADLINER - REMOVAL)
2. Repair as necessary.

ASSEMBLY-MODULE

REMOVAL

WARNING: The Excessive Force Limitation (EFL) feature must be calibrated any time a sunroof motor/module is replaced with a new component. Failure to perform this procedure could result in vehicle damage and/or personal injury. (Refer to 8 - ELECTRICAL/POWER TOP/MOTOR - STANDARD PROCEDURE - EXCESSIVE FORCE LIMITATION (EFL) CALIBRATION) for the appropriate procedure.

1. Move glass panel to the fully closed position.
2. Disconnect and isolate the battery negative cable.
3. Remove headliner (Refer to 23 - BODY/INTERIOR/ HEADLINER - REMOVAL).
4. Disconnect the sunroof wire harness electrical connector.

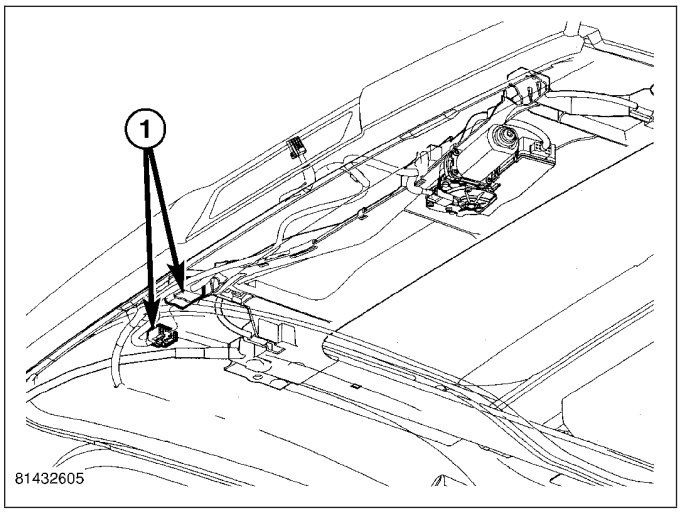

5. Disconnect the four drain tubes (1) from sunroof housing.

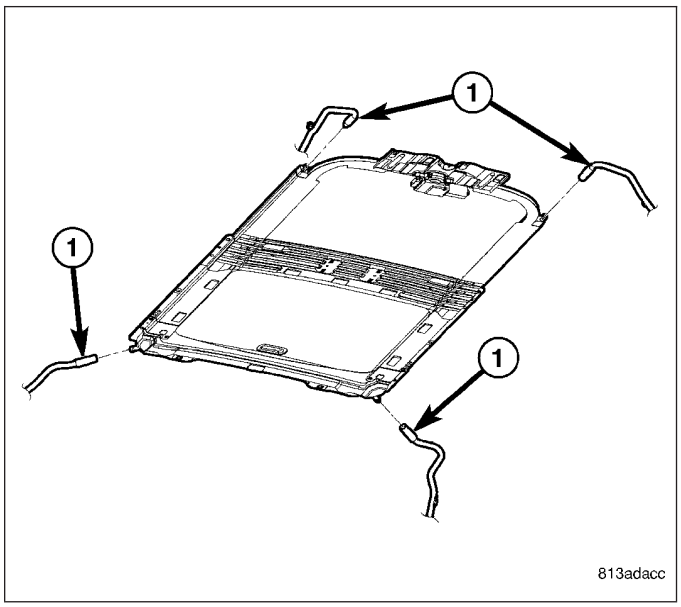

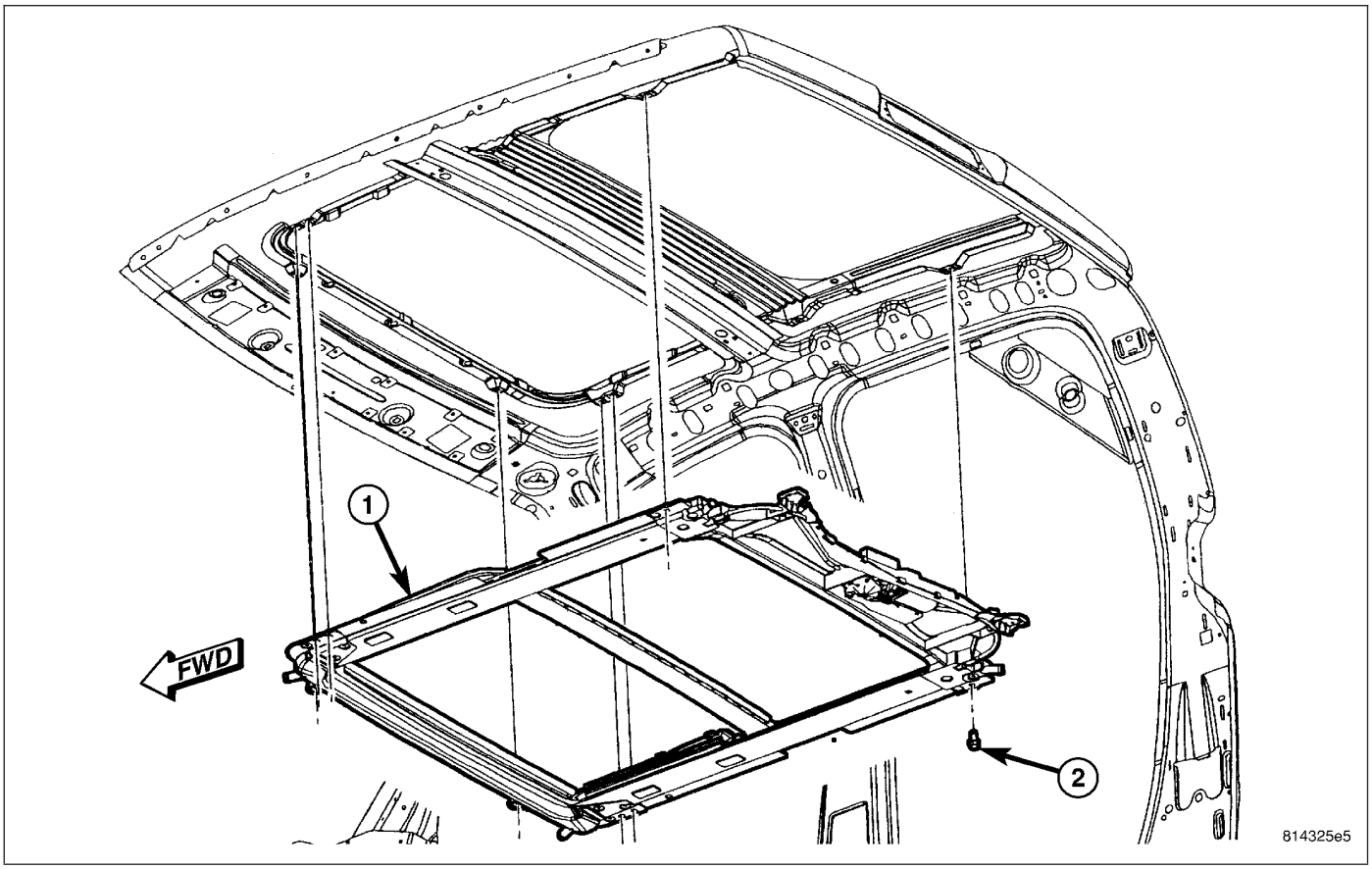

6. With the aid of a helper, support the sunroof and remove the eight fasteners (2) attaching sunroof assembly (1) to roof panel.
7. Remove the sunroof (1) from vehicle.

INSTALLATION

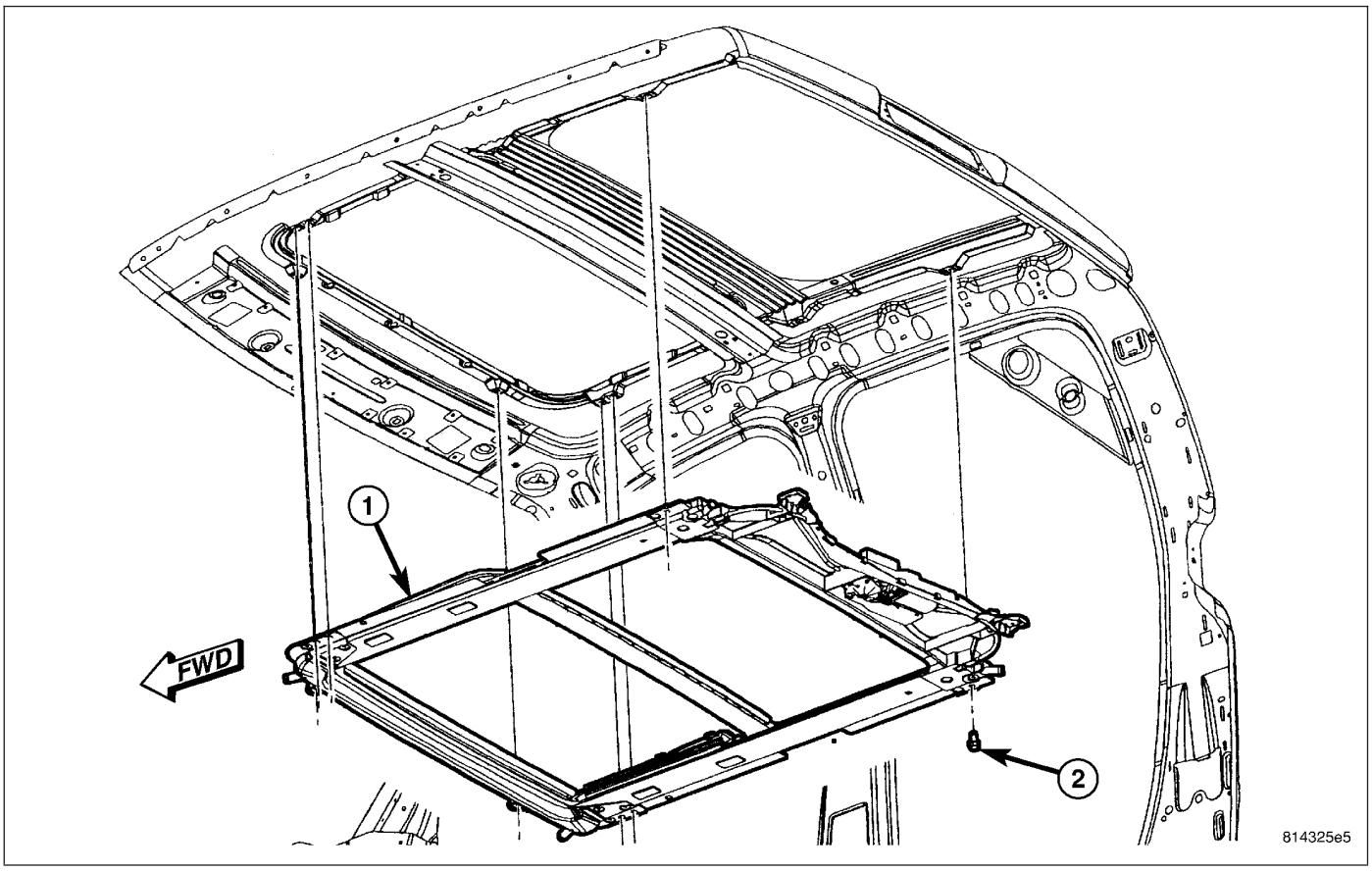

WARNING: The Excessive Force Limitation (EFL) feature must be calibrated any time a sunroof motor/module is replaced with a new component. Failure to perform this procedure could result in vehicle damage and/or personal injury. (Refer to 8 - ELECTRICAL/POWER TOP/MOTOR - STANDARD PROCEDURE - EXCESSIVE FORCE LIMITATION (EFL) CALIBRATION) for the appropriate procedure.

1. Verify that glass panel is loose and slightly retracted.
2. Raise sunroof module assembly (1) and guide it carefully into position.
3. Hand start the eight screws (2).
4. Position special tool # 9582 pins through the locating holes and confirm the module assembly is properly aligned.
5. Tighten the attaching screws (2) to 9 N·m (80 in. lbs.) and remove the special tool.
6. Connect the electrical connector (1).

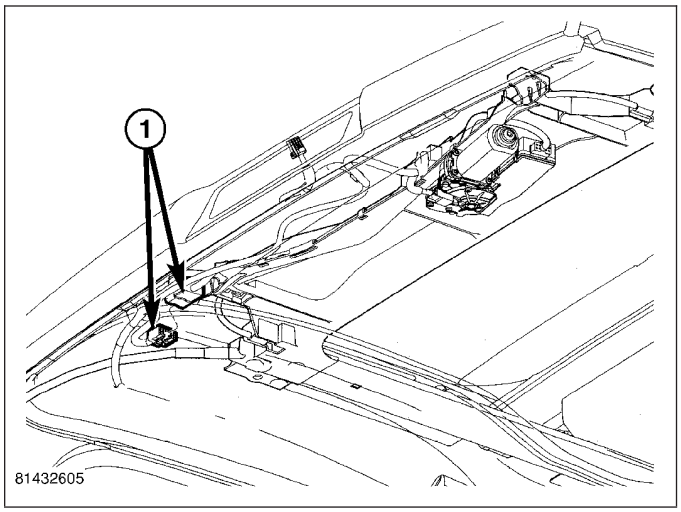

7. Connect the drain tubes to the sunroof (1).
8. Adjust the sunroof glass. (Refer to 23 - BODY/ SUNROOF/GLASS PANEL - ADJUSTMENTS)
9. Connect battery negative cable.
10. Install the vehicle headliner, (Refer to 23 - BODY/ INTERIOR/HEADLINER - INSTALLATION).
11. Perform the sunroof position calibration, (Refer to 8 - ELECTRICAL/POWER TOP/MOTOR - STANDARD PROCEDURE - SUNROOF POSITION CALIBRATION).
12. Perform the Excessive Force Limitation (EFL) calibration, (Refer to 8 - ELECTRICAL/POWER TOP/ MOTOR - STANDARD PROCEDURE - EXCESSIVE FORCE LIMITATION (EFL) CALIBRATION).
13. Verify proper operation of the power sunroof system.

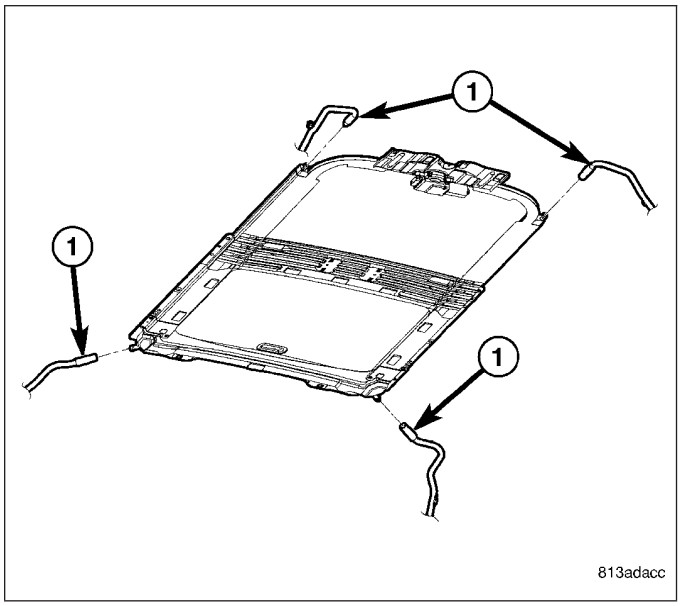

CHANNEL-DRAIN

REMOVAL

1. Remove glass panel (2). (Refer to 23 - BODY/ SUNROOF/GLASS PANEL - REMOVAL)
2. Separate the drain channel arms (2) from the guide mechanisms (1) one at a time.

CAUTION: Do not pry the channel arms apart at the same time or you could break the drain channel.

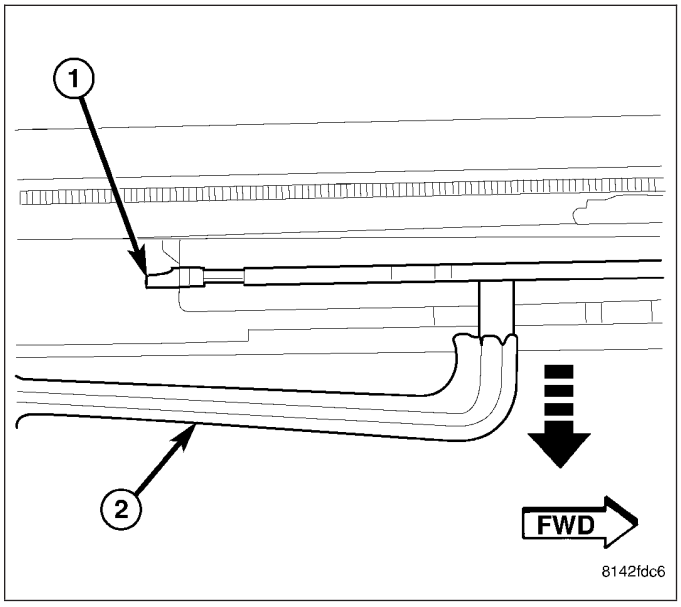

3. Carefully slide the drain channel (1) forward to the notches (2) in the frame and remove from the vehicle.

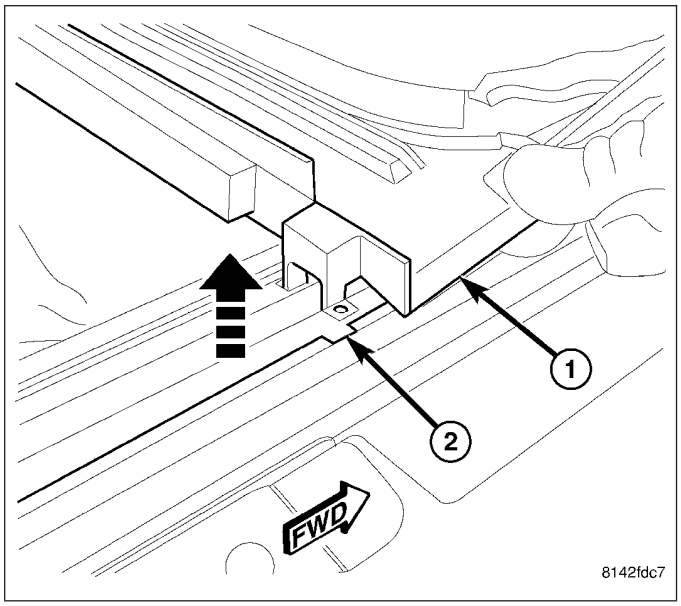

INSTALLATION

1. Carefully position the drain channel (1) into the notches (2) in the frame and slide rearward.

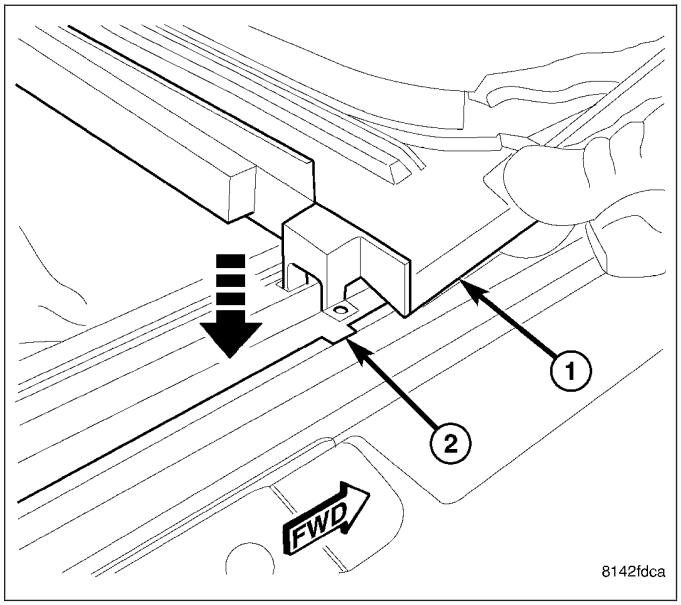

2. Install the drain channel arms (2) into the mechanism (1) holes one at a time with the reinforcements on the inside of mechanism arms.

CAUTION: Do not pry the channel arms apart at the same time or you could break the drain channel.

3. Install the sunroof glass. (Refer to 23 - BODY/SUNROOF/GLASS PANEL - INSTALLATION)

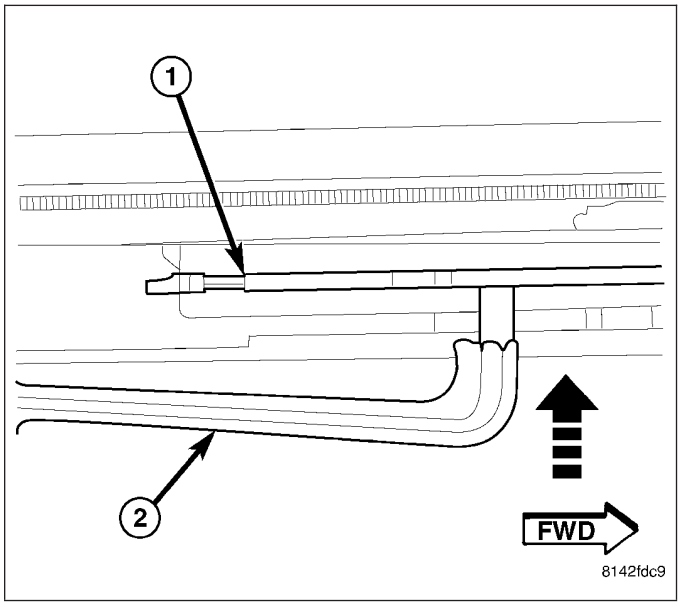

COVER-GUIDE MECHANISM

REMOVAL

1. Move the glass panel to the full closed position.
2. Slide sunshade rearward to the open position.
3. Separate the mechanism covers (2) from the tabs (1) on the glass panel.

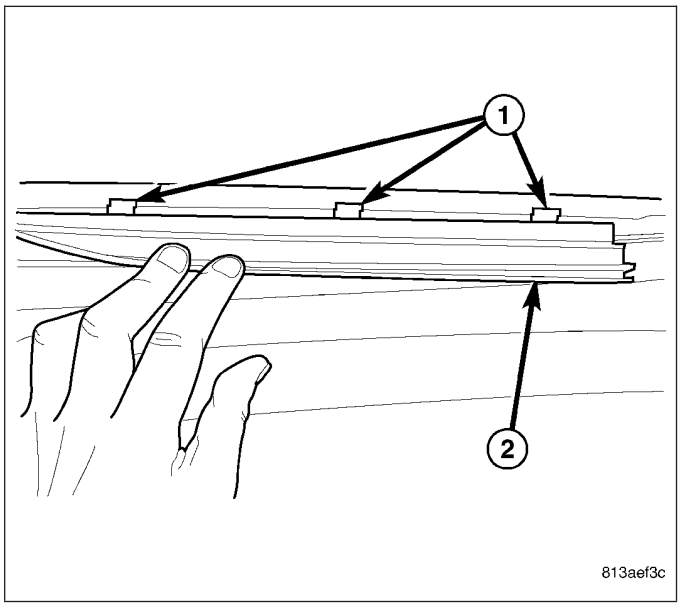

4. Hold both mechanism covers down and open the sunroof fully.
5. Slide the mechanism covers (1) out the front of the guide in the frame (2).

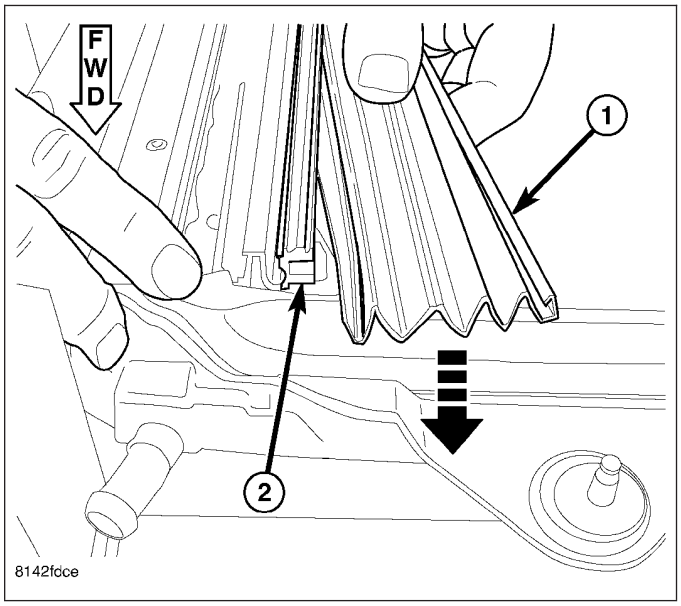

INSTALLATION

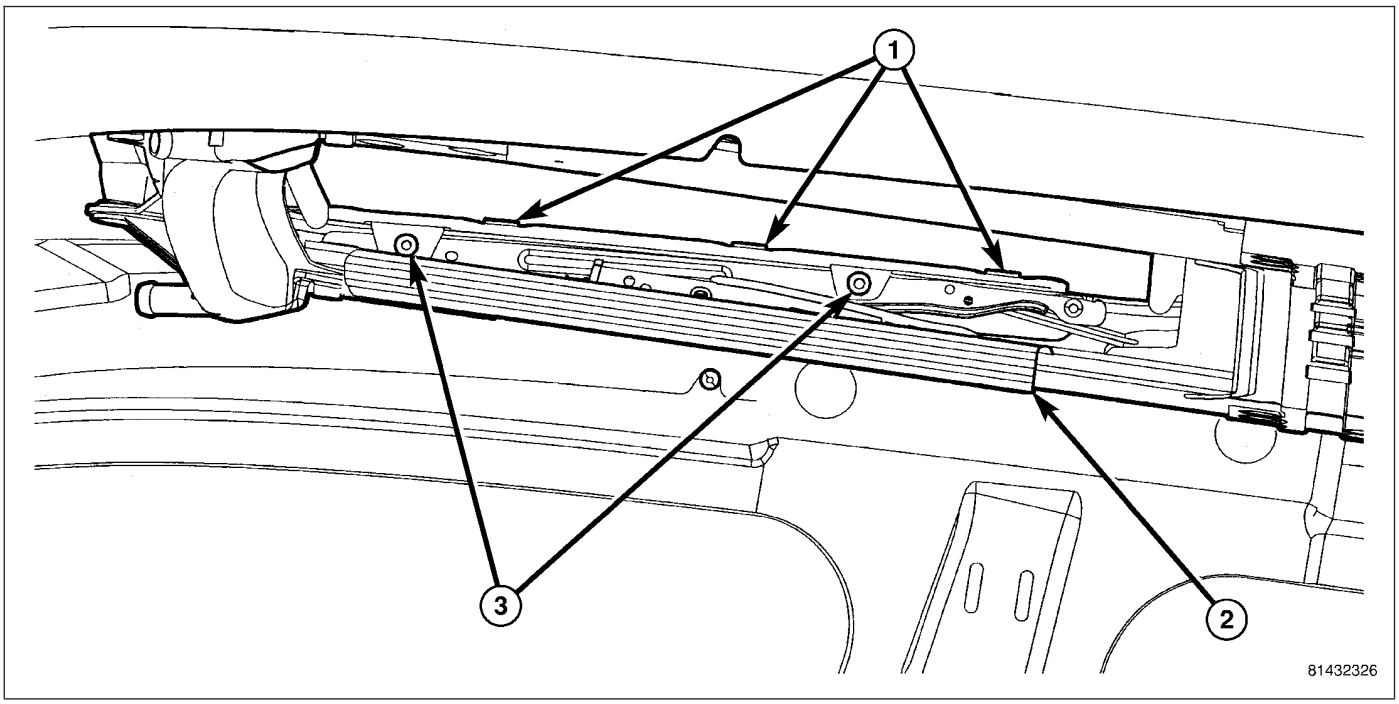

1. With the sunroof in the open position, snap the mechanism cover (2) into the lower guide channel.
2. Hold down each cover and close the sunroof.
3. Snap the upper portion of the cover (2) into the retaining clips (1) on the glass panel between the locating features.

DEFLECTOR-WIND

REMOVAL

1. Open the sunroof fully.
2. Remove the strap screws (2) from the beam area release the strap (3).

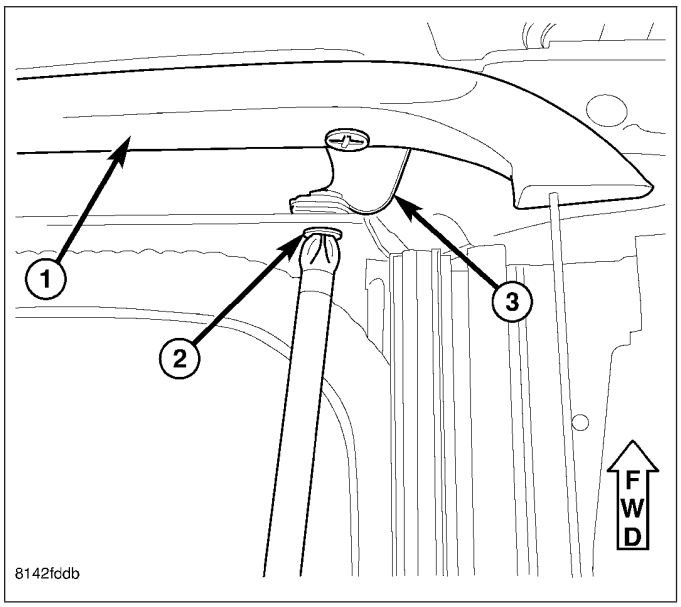

3. Rotate the deflector up and remove springs (2) from the holes in the frame (1).

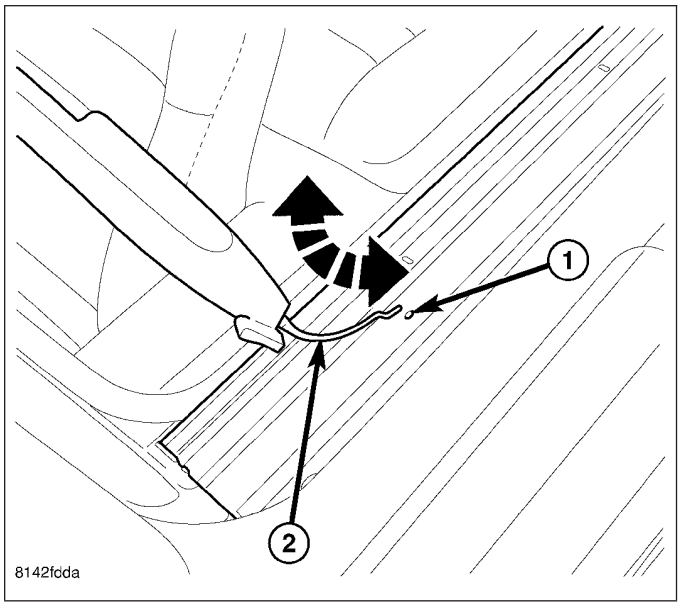

INSTALLATION

1. Position the deflector spring arms (2) into the holes of the frame (1).

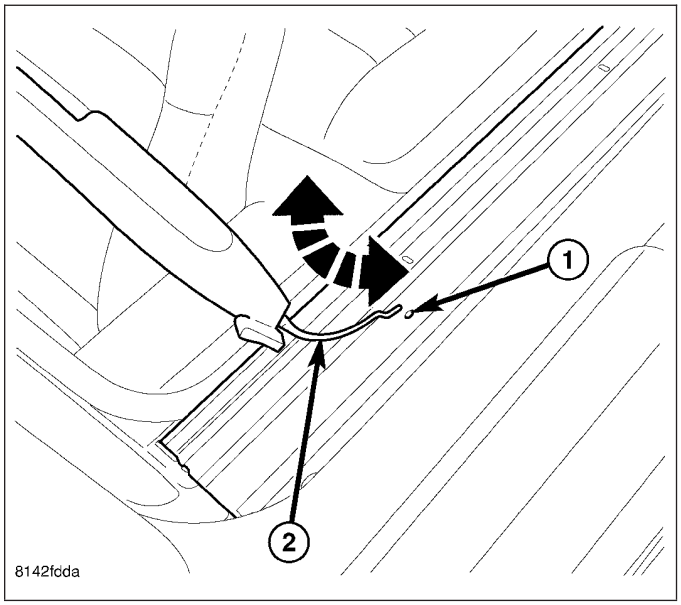

2. Rotate the deflector down, attach the straps (3) and install the strap screws (2) into the front beam.
3. Verify sunroof operation and alignment.

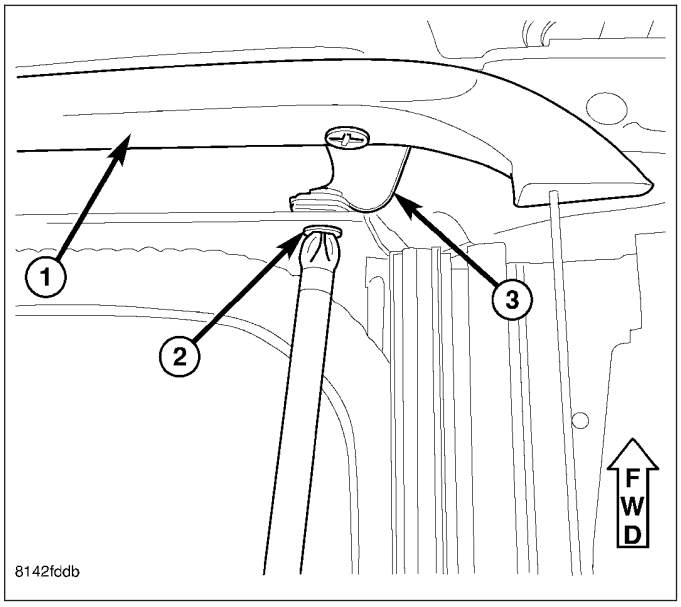

GLASS

REMOVAL

1. Move the glass panel (2) to the full closed position.
2. Slide sunshade rearward to the open position.
3. Separate the mechanism covers (2) from the tabs (1) on the glass panel.

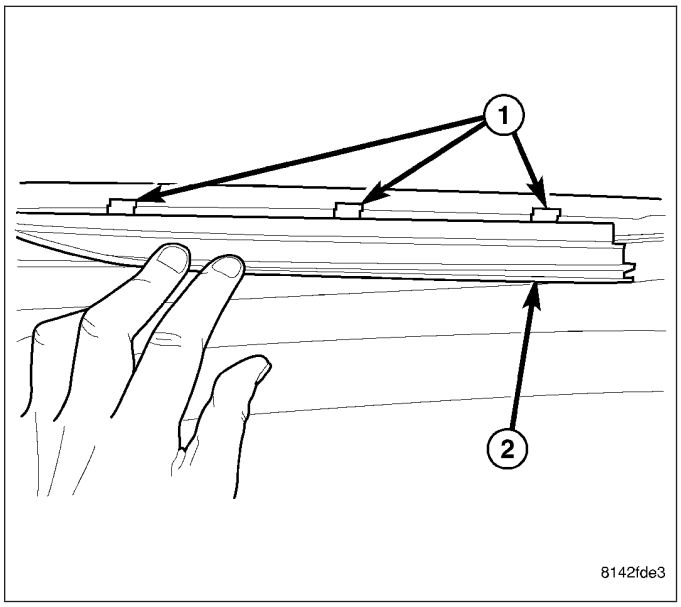

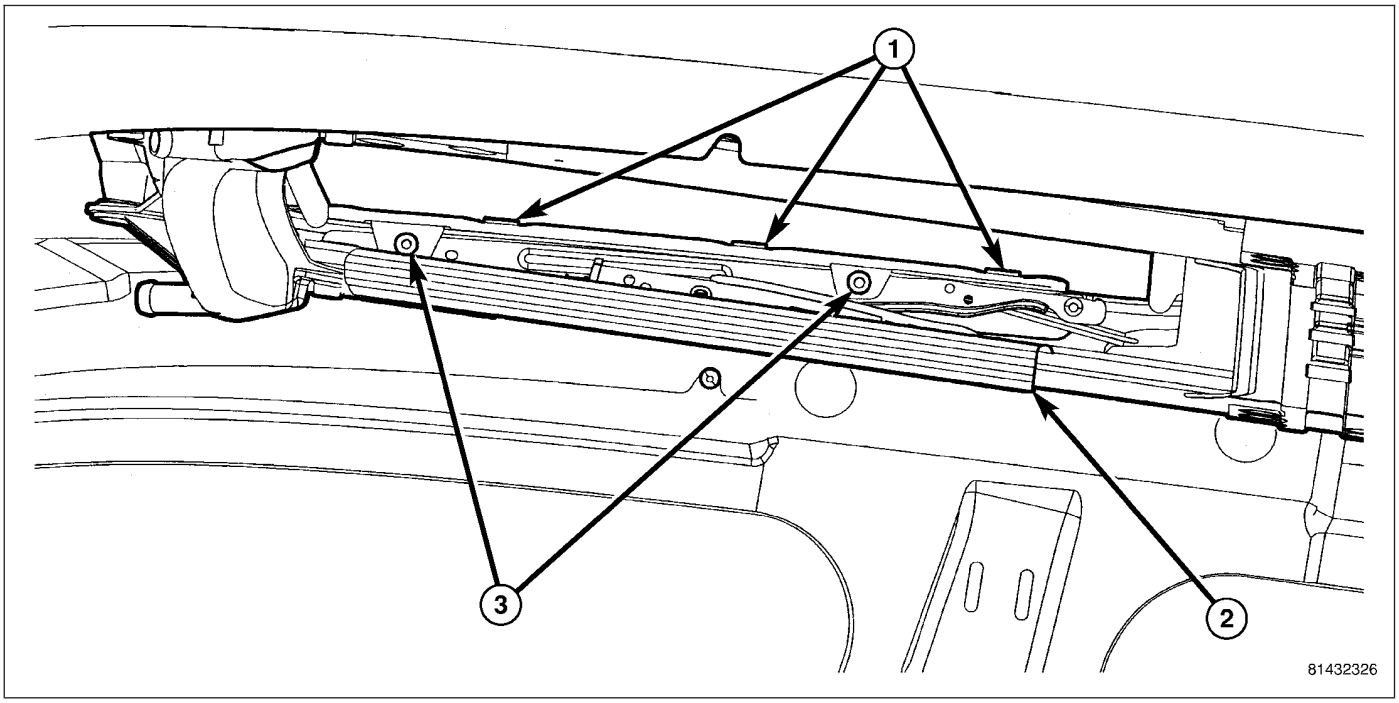

4. Remove the glass panel screws (3).
5. Lift off glass panel and remove from vehicle.

INSTALLATION

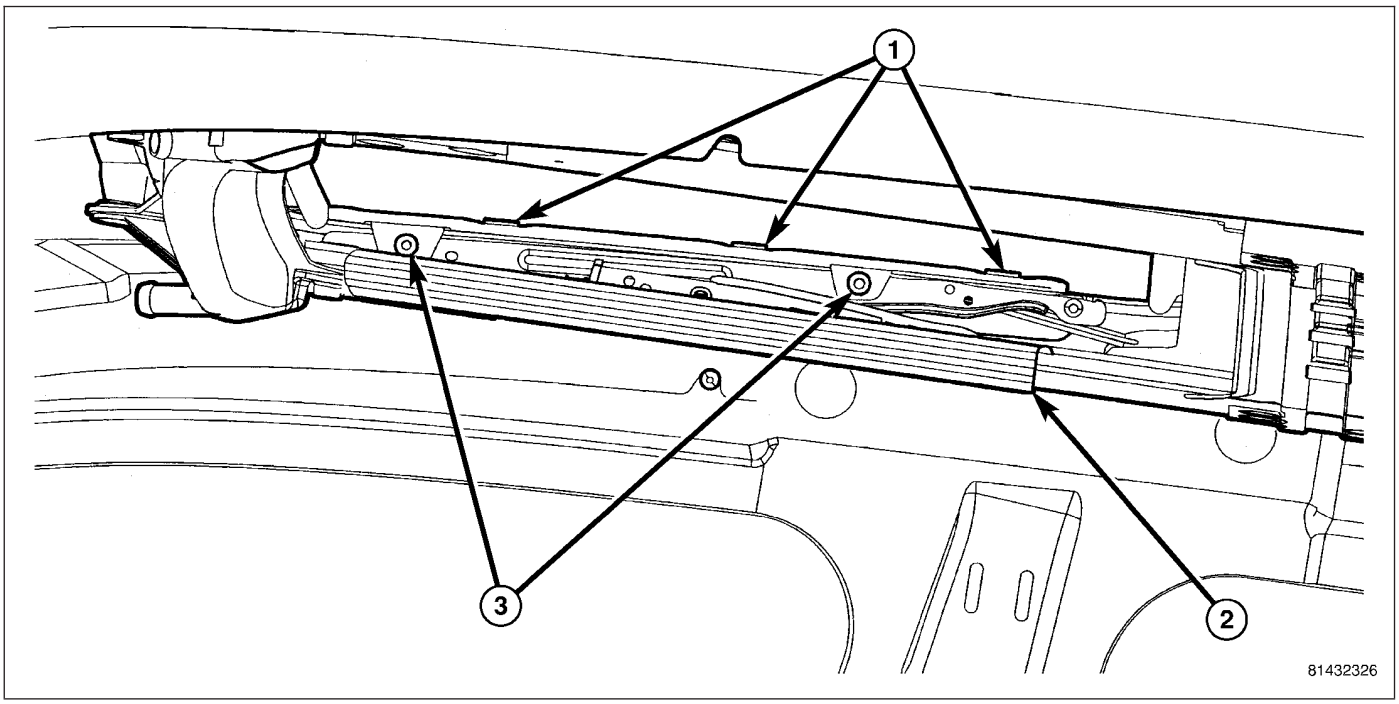

1. Position glass panel on to mechanism lift arms.

CAUTION: Verify that the retaining tabs are located on the INSIDE of the guide mechanism arms.

2. Start the attaching screws (3).
3. Connect a 12v power supply and verify that the sunroof is in the closed position.
4. Adjust sunroof glass to fit flush with roof line (Refer to 23 - BODY/SUNROOF/GLASS PANEL - ADJUSTMENTS).
5. Tighten the screws (3) to 3.5 N·m (30 in. lbs.).
6. Position the mechanism covers (2) over the glass tabs (1) between the locating features and seat fully.
7. Verify sunroof operation and alignment.

ADJUSTMENTS

ADJUSTMENT

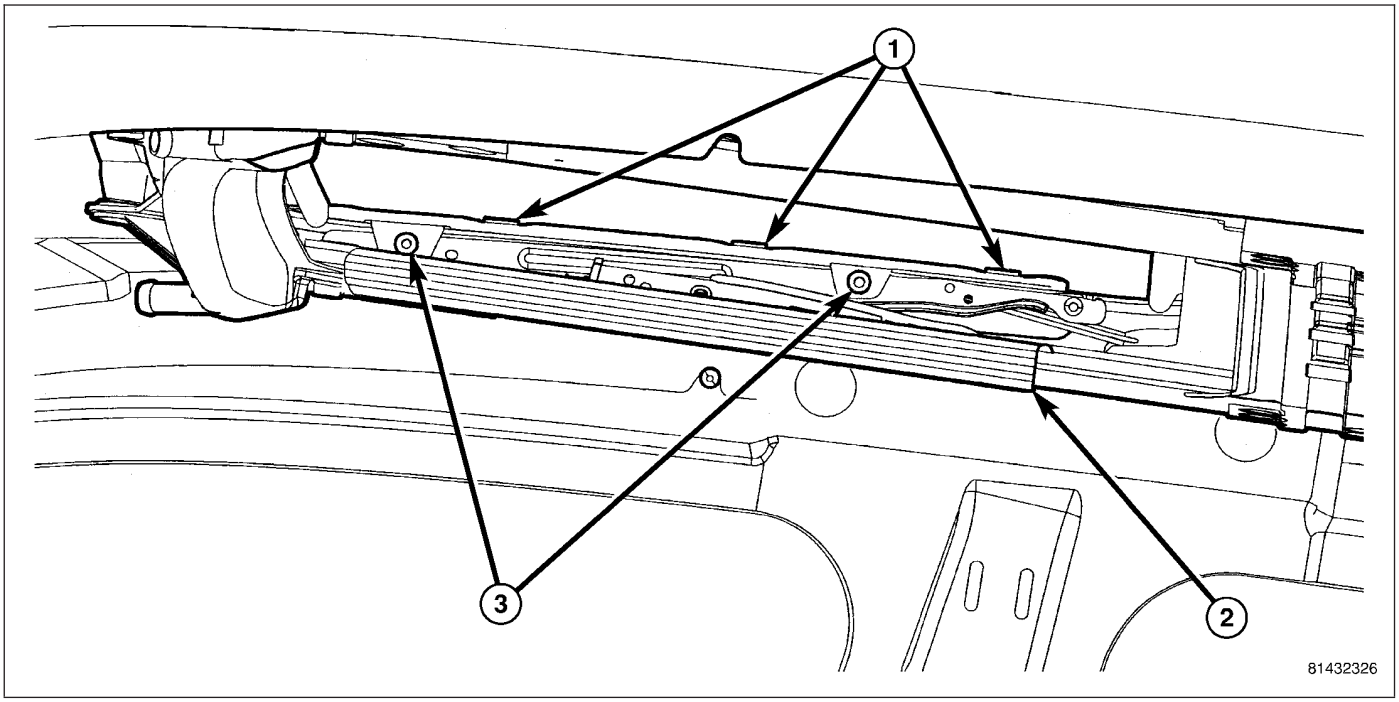

1. Move the sunshade rearward to the open position.
2. Separate the mechanism covers (2) from the tabs (1) on the glass panel.
3. Verify the sunroof glass panel is in the fully closed position.
4. Loosen the forward attaching screws (3) on each side enough to permit the front of the glass to adjust up or down.
5. Adjust the front surface of the sunroof glass panel 0.00 mm to 2 mm (0.00 in. to 0.08 in.) **below** the top surface of the roof.
6. Tighten the front glass panel attaching screws to 3.5 N·m (30 in. lbs.).
7. Loosen the rear screws (3) on each side enough to make the rear adjustment.
8. Adjust the rear surface of the sunroof glass panel 0.00 mm to 2 mm (0.03 in. to 0.08 in.) **above** the top surface of the roof.
9. Tighten the rear glass panel attaching screws to 3.5 N·m (30 in. lbs.).
10. Check for proper fit. If not OK, repeat glass panel adjustment.
11. Position the mechanism covers (2) over the glass tabs (1) between the locating features and seat fully.
12. Verify sunroof operation and alignment.

GUIDE-SUNROOF GLASS

REMOVAL

1. Place the sunroof in the vent position.
2. Remove the sunroof assembly. (Refer to 23 - BODY/SUNROOF/ASSEMBLY-MODULE - REMOVAL)
3. Remove the motor. (Refer to 8 - ELECTRICAL/ POWER TOP - SUNROOF SERVICE INFO/MOTOR/MODULE-SUNROOF - REMOVAL)
4. Remove the glass. (Refer to 23 - BODY/SUNROOF/GLASS - REMOVAL)
5. Remove the wind deflector. (Refer to 23 - BODY/ SUNROOF/DEFLECTOR-WIND - REMOVAL)
6. Separate the drain channel arms (2) from the guide mechanisms (1) one at a time.

CAUTION: Do not pry the channel arms apart at the same time or you could break the drain channel.

7. Slide the drain channel rearward out of the way.

8. Remove the hard stop screw from the frame.

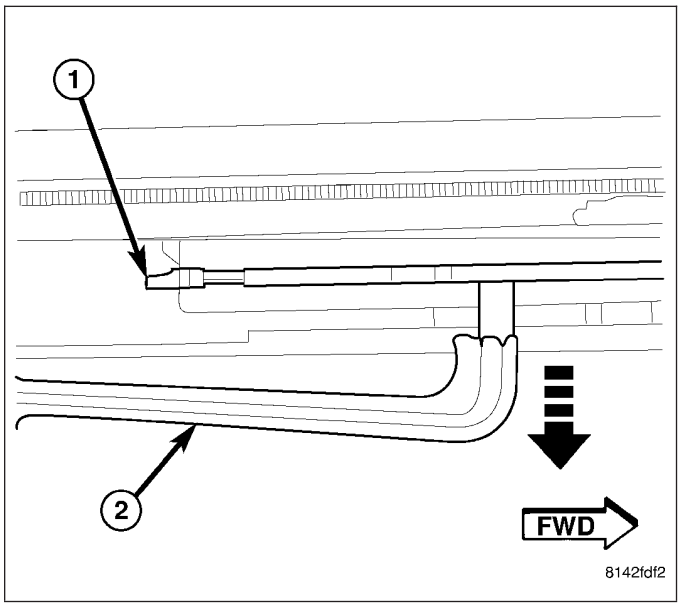

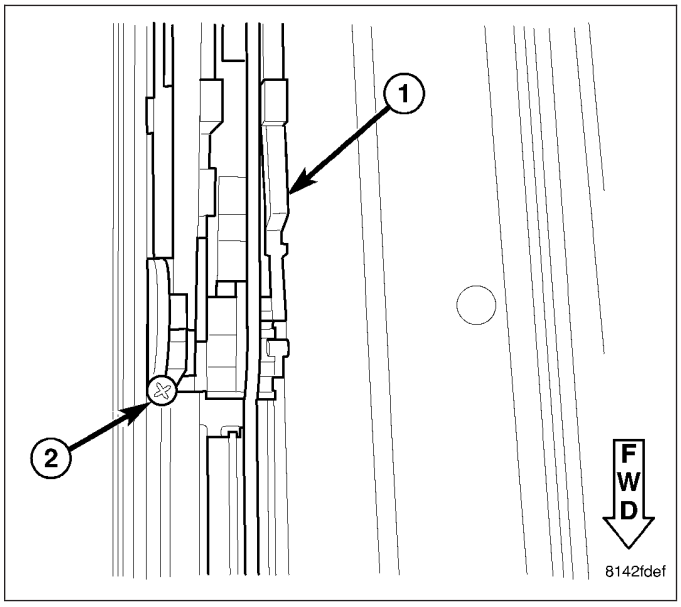

9. push the drive cable and guide plate forward past the hard stop screw location until the glass guide comes loose.

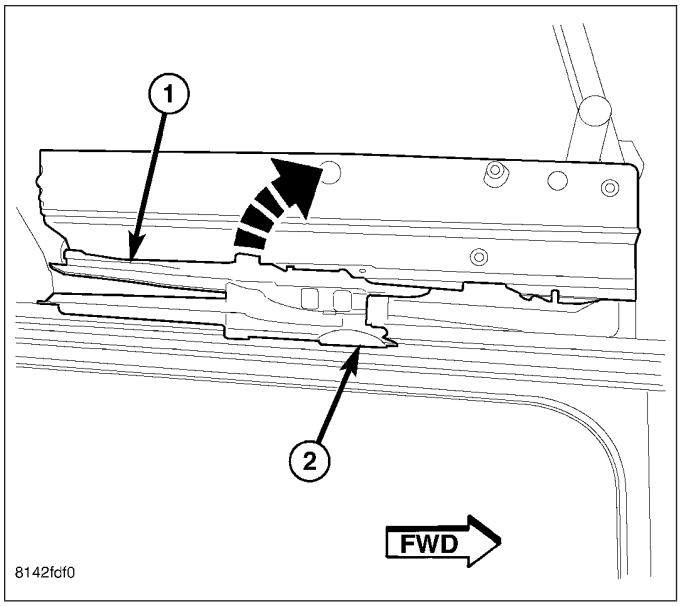

10. Rotate the guide (1) up and out of the front beam (3) and release the front foot (2) from the channel guide.

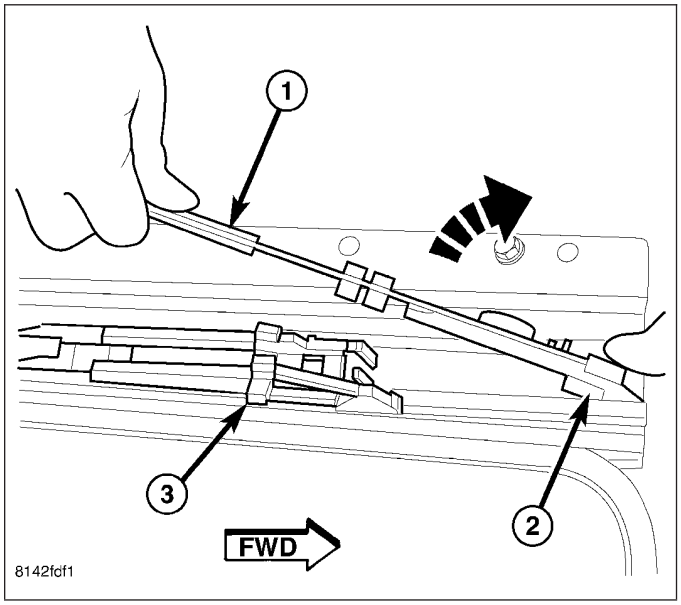

INSTALLATION

1. With the drive cable plate aligned insert the front foot (2) into the guide channel and engage the feet with the front beam (3).

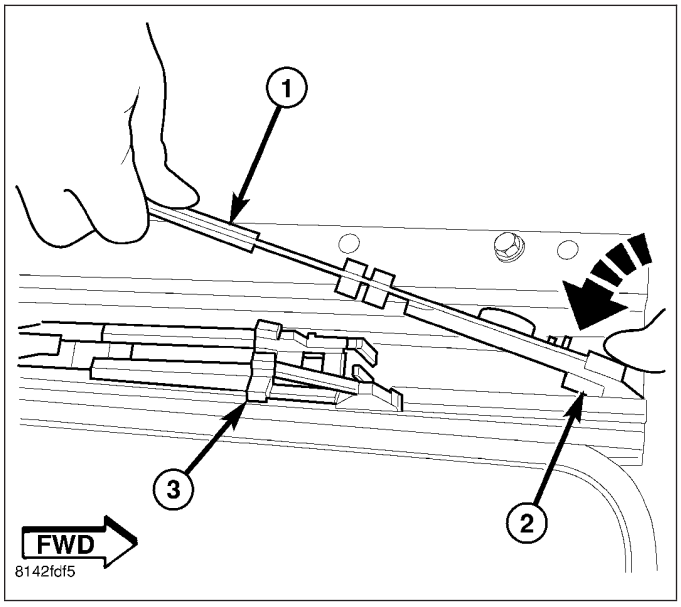

2. Rotate the guide plate (1) inboard until the feet of the guide are engaged into the front beam (2).

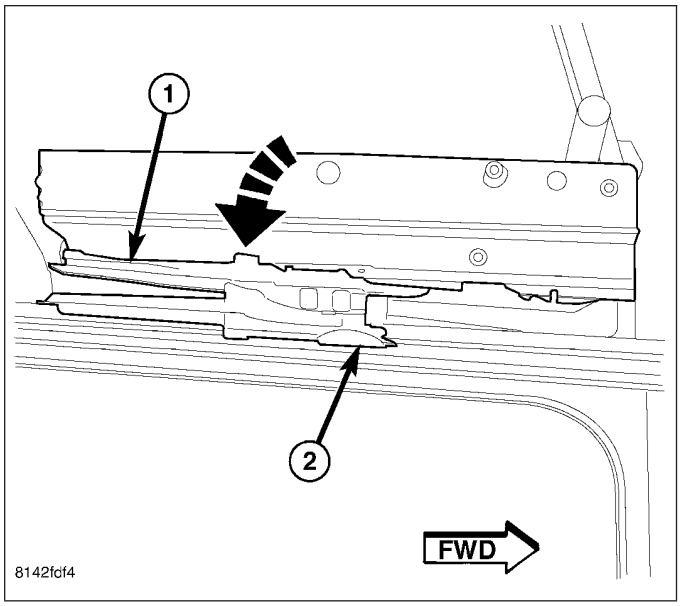

3. Push the guide assembly (1) and drive cable rearward past the hard stop location.
4. Install the hard stop screw (2) and push the drive cable and guide assembly (1) up against the hard stop screw (2).
5. Verify that the opposite guide assembly is also positioned up against the hard stop screw.
6. Install the wind deflector as necessary. (Refer to 23 - BODY/SUNROOF/DEFLECTOR-WIND - INSTALLATION)
7. Install the motor as necessary. (Refer to 8 - ELECTRICAL/POWER TOP - SUNROOF SERVICE INFO/MOTOR/MODULE-SUNROOF - INSTALLATION)

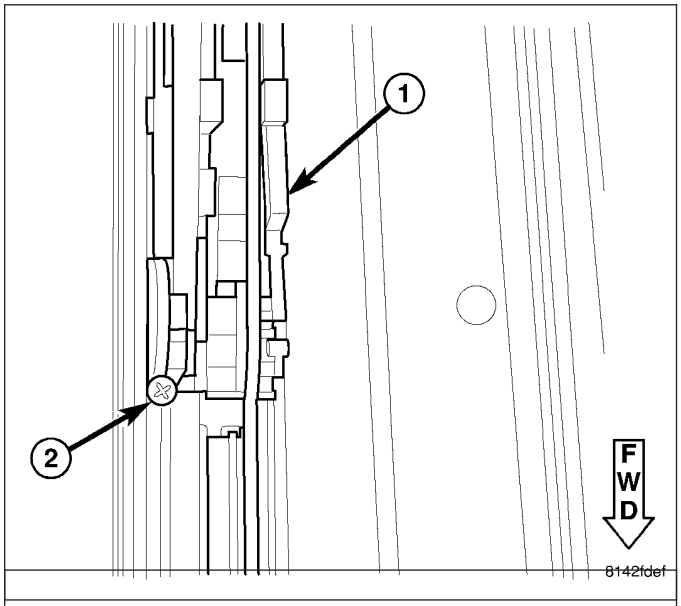

8. Install the drain channel arms (2) into the mechanism (1) holes one at a time with the reinforcements on the inside of mechanism arms.

CAUTION: Do not pry the channel arms apart at the same time or you could break the drain channel.

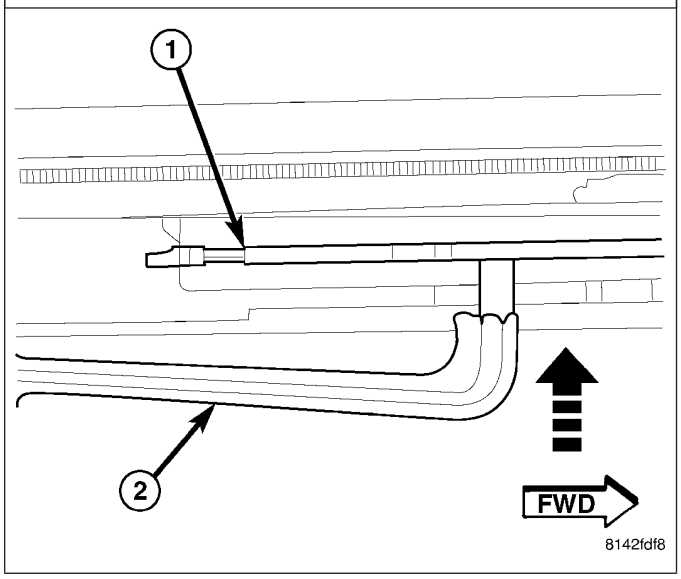

9. Install the sunroof assembly into the vehicle. (Refer to 23 - BODY/SUNROOF/ASSEMBLY-MODULE - INSTALLATION)
10. Perform the sunroof position calibration, (Refer to 8 - ELECTRICAL/POWER TOP/MOTOR - STANDARD PROCEDURE - SUNROOF POSITION CALIBRATION).
11. Perform the Excessive Force Limitation (EFL) calibration, (Refer to 8 - ELECTRICAL/POWER TOP/MOTOR - STANDARD PROCEDURE - EXCESSIVE FORCE LIMITATION (EFL) CALIBRATION).
12. Install the glass as necessary. (Refer to 23 - BODY/SUNROOF/GLASS - INSTALLATION)

13. Adjust sunroof glass to fit flush with roof line (Refer to 23 - BODY/SUNROOF/GLASS PANEL - ADJUSTMENTS).
14. Verify proper operation of the power sunroof system.

HOSE-DRAIN

REMOVAL

FRONT HOSES

1. Remove headliner (Refer to 23 - BODY/INTERIOR/HEADLINER - REMOVAL).
2. Disconnect the drain hose from the sunroof housing (1).
3. Separate the lower tube from the grommet in the body (3).
4. Drain any liquid from hose connection, if necessary.
5. Release the clips (2) and remove the tube.

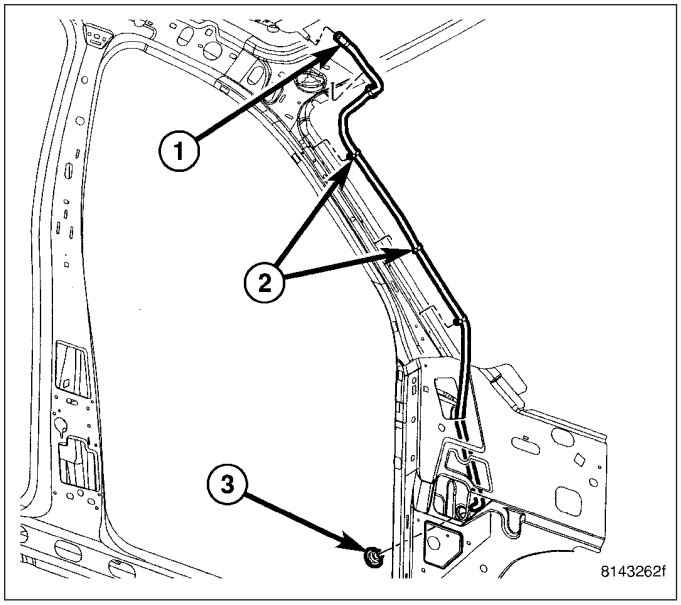

REAR HOUSING HOSE

1. Remove headliner (Refer to 23 - BODY/INTERIOR/HEADLINER - REMOVAL).
2. Disconnect the drain hose from the sunroof housing (1).* Front tube shown, rear tube similar.
3. Drain any liquid from hose connection, if necessary.
4. Release the push pin fasteners (2) and separate the lower tube from the grommet in the body (3).

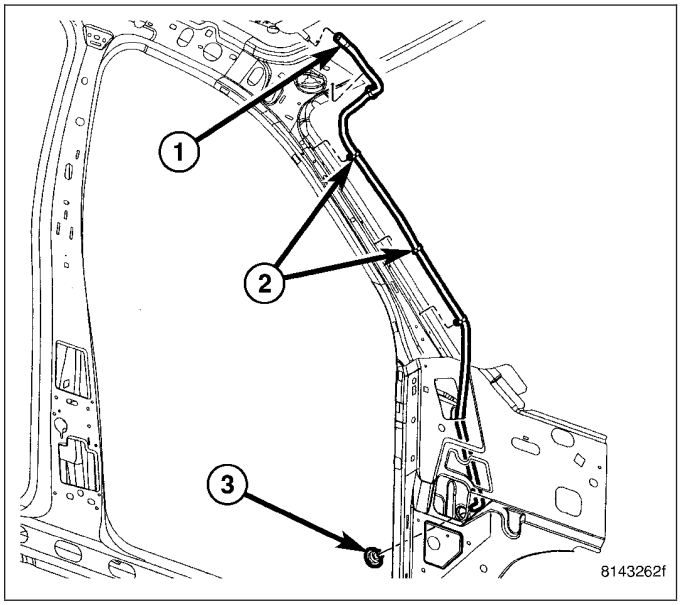

INSTALLATION

FRONT HOSES

1. Position the lower portion through the grommet in the body (3).
2. Connect the new drain tube to the sunroof housing (1) and test drainage.
3. Position the tube support clips (2) and seat fully.
4. Install headliner (Refer to 23 - BODY/INTERIOR/ HEADLINER - INSTALLATION).

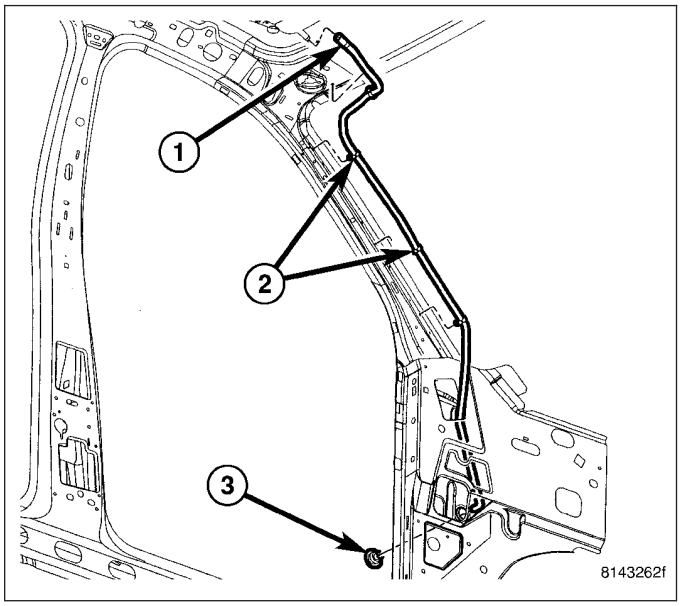

REAR HOUSING HOSE

1. Install the rear tube and seat the push pin fasteners (2) fully. * Front tube shown, rear similar.
2. Position the lower portion through the grommet in the body (3).
3. Connect the new drain tube to the sunroof housing (1) and test drainage.
4. Install headliner (Refer to 23 - BODY/INTERIOR/ HEADLINER - INSTALLATION).

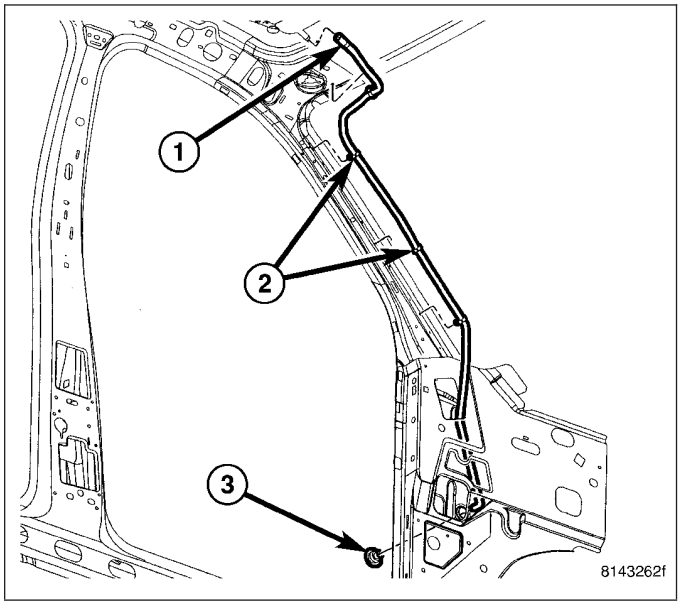

MOTOR

DESCRIPTION

For service information refer to (Refer to 8 - ELECTRICAL/POWER TOP/MOTOR - DIAGNOSIS AND TESTING).

SUNSHADE

REMOVAL

1. Remove the drain channel. (Refer to 23 - BODY/ SUNROOF/CHANNEL-DRAIN - REMOVAL)
2. Push up the front center of the sunshade (1) to pop out the front two feet.

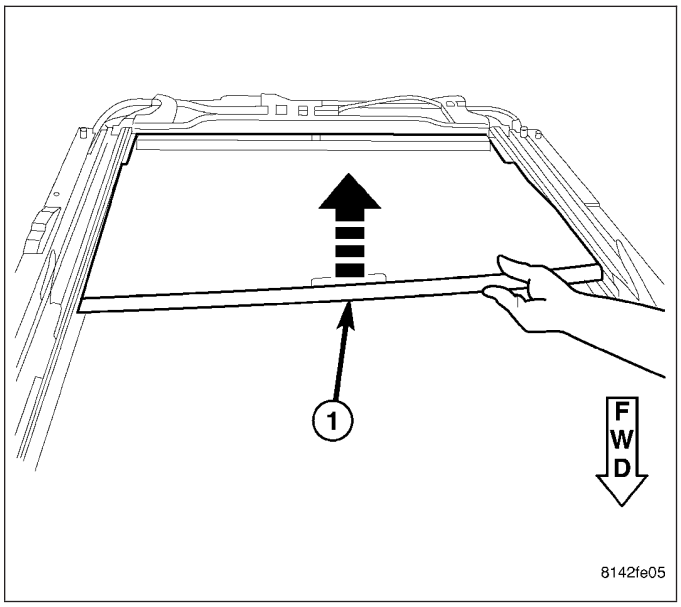

3. Rotate the sunshade (2) so that the other feet (1) are removed from the guide track.

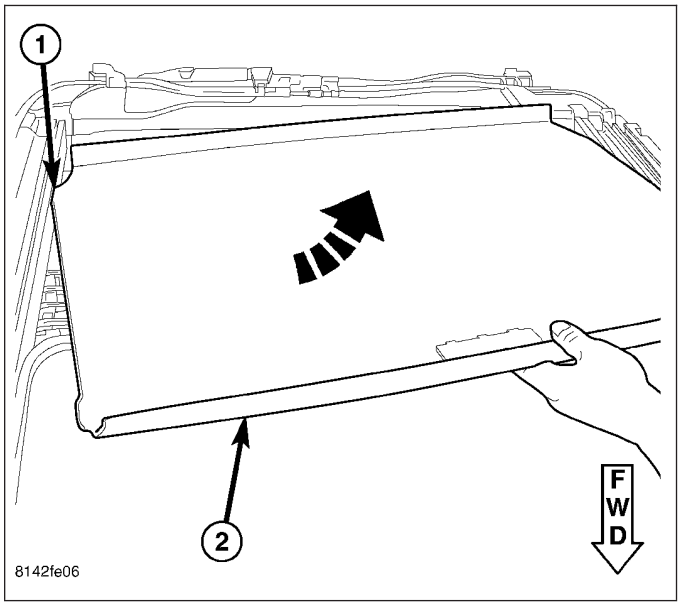

INSTALLATION

1. Verify the sunshade track is free of obstructions like the trim lace/ring.
2. Start with sunshade (2) at an angle with one foot (1) in the track.
3. Rotate the sunshade so the other rear foot is in the track as well as the 2 other feet (3) on the same side as the first foot.

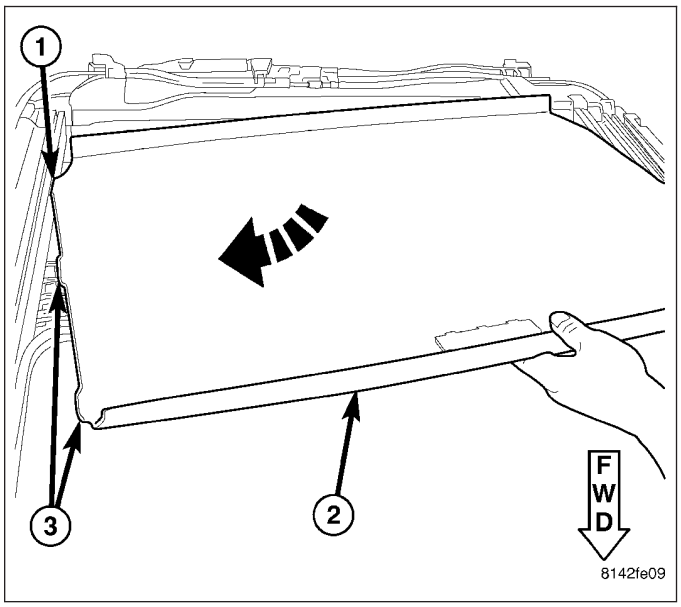

4. To insert the remaining two feet (2) apply force to the middle front of sunshade (3) and guide them into the track.
5. Check that all the feet are in the right track and verify sunshade operation.
6. Install the drain channel. (Refer to 23 - BODY/ SUNROOF/CHANNEL-DRAIN - INSTALLATION)

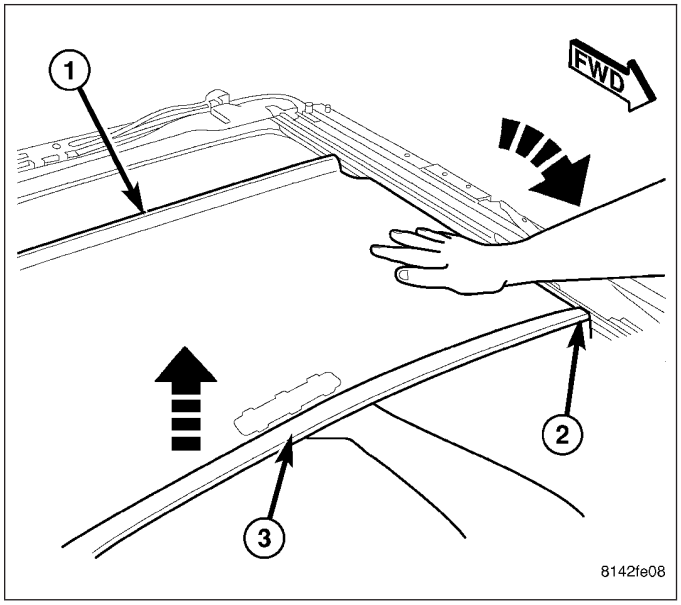

SWITCH-SUNROOF

DESCRIPTION

For service information refer to (Refer to 8 - ELECTRICAL/POWER TOP/SWITCH - DIAGNOSIS AND TESTING).

TRIM RING

REMOVAL

1. Remove the headliner. (Refer to 23 - BODY/INTERIOR/HEADLINER - REMOVAL)
2. Remove the 12 nuts (1) and roll the trim ring off the headliner off the retaining flanges (2).

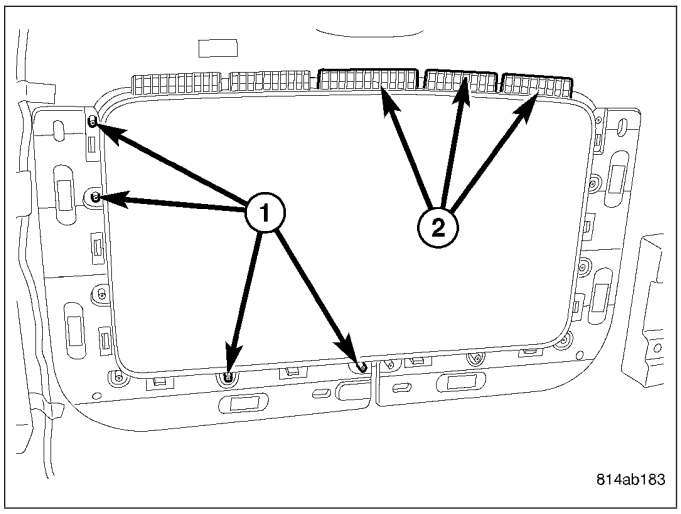

INSTALLATION

1. Position trim ring support flanges (2) over the headliner and seat the trim ring fully.
2. Install the 12 nuts (1) onto the support studs.

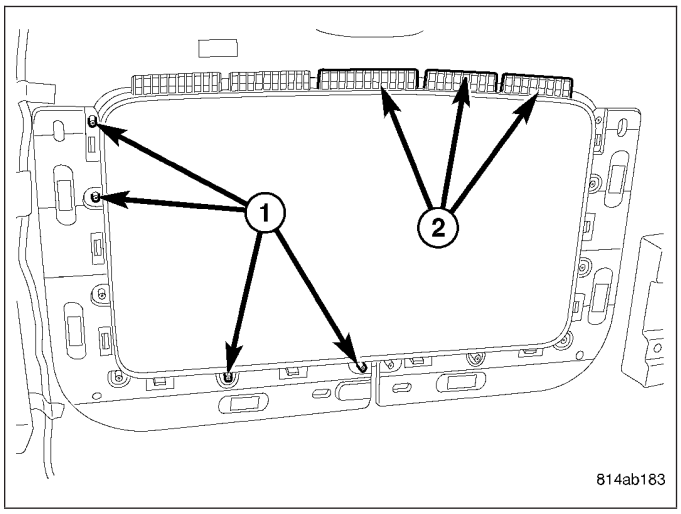

WEATHERSTRIP/SEALS

TABLE OF CONTENTS

	page
A-PILLAR WEATHERSTRIP RETAINER	
REMOVAL	238
INSTALLATION	239
DRIP RAIL WEATHERSTRIP	
REMOVAL	239
INSTALLATION	240
DOOR OPENING SEAL	
REMOVAL	240
INSTALLATION	244
DRIP RAIL WEATHERSTRIP RETAINER	
REMOVAL	247
INSTALLATION	248
FRONT DOOR GLASS RUN WEATHERSTRIP	
REMOVAL	248
INSTALLATION	249
FRONT DOOR OUTER BELT MOLDING	
REMOVAL	250
INSTALLATION	251
FRONT DOOR INNER BELT MOLDING	
REMOVAL	251
INSTALLATION	252
REAR DOOR GLASS RUN WEATHERSTRIP	
REMOVAL	253
INSTALLATION	253
REAR DOOR OUTER BELT MOLDING	
REMOVAL	254
INSTALLATION	254
REAR DOOR INNER BELT MOLDING	
REMOVAL	255
INSTALLATION	255

A-PILLAR WEATHERSTRIP RETAINER

REMOVAL

1. Remove the drip rail weatherstrip retainer (1) (Refer to 23 - BODY/WEATHERSTRIP/SEALS/ DRIP RAIL WEATHERSTRIP - REMOVAL).
2. Remove the five screws (8) and remove the A-pillar weatherstrip retainer (7).

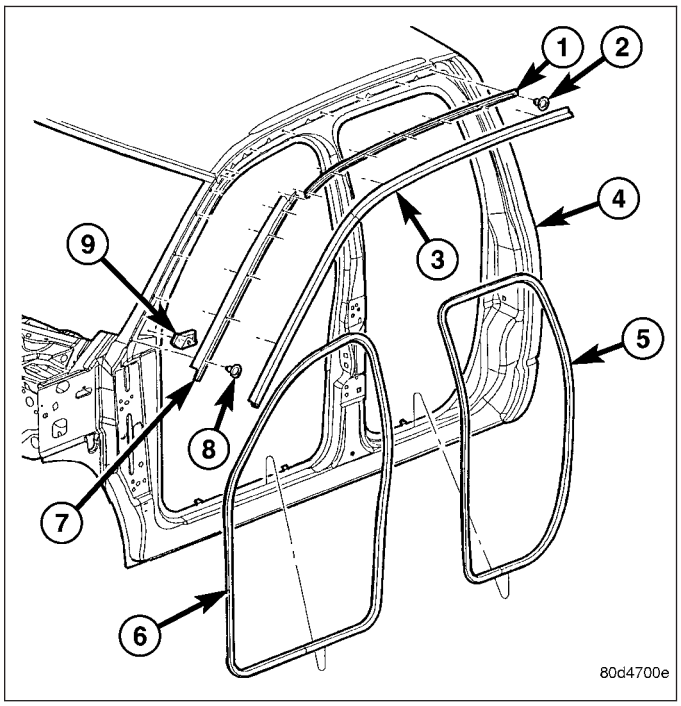

INSTALLATION

1. Install the A-pillar weatherstrip retainer (7) and install the screws (8).
2. Install the drip rail weatherstrip retainer (1) (Refer to 23 - BODY/WEATHERSTRIP/SEALS/DRIP RAIL WEATHERSTRIP - INSTALLATION).

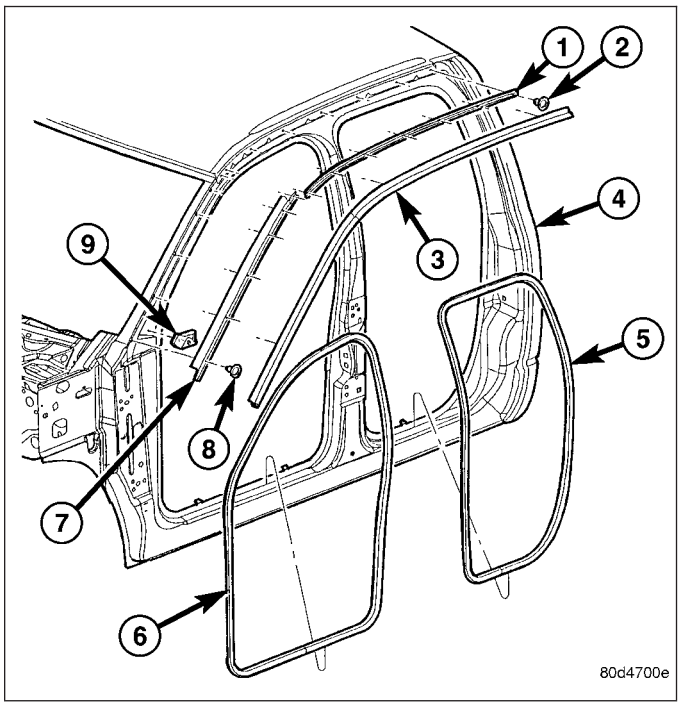

DRIP RAIL WEATHERSTRIP

REMOVAL

1. Open the doors and separate the weatherstrip (3) from the drip rail and a-pillar retainers (1 and 7).

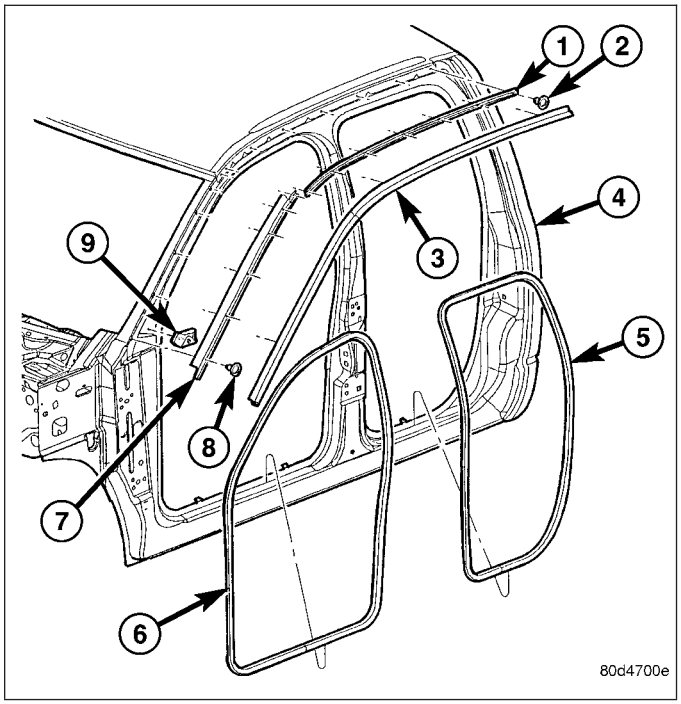

INSTALLATION

1. Position the weatherstrip (3) onto the drip rail and a-pillar retainers (1 and 7) and seat fully.

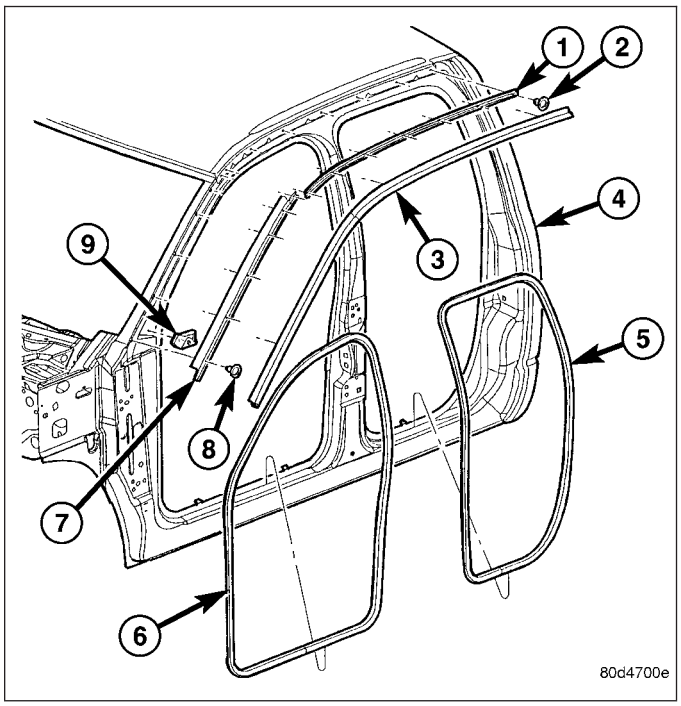

DOOR OPENING SEAL

REMOVAL

FRONT DOOR SEAL

1. Remove the cowl trim panel (1) (Refer to 23 - BODY/INTERIOR/COWL TRIM - REMOVAL).

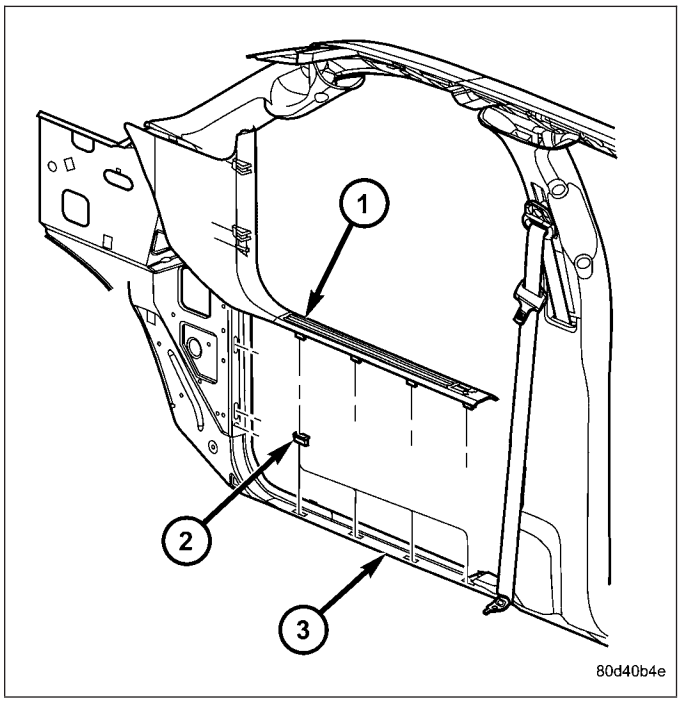

2. If vehicle is a **Standard Cab**, remove the lower b-pillar trim panel (3) (Refer to 23 - BODY/INTERIOR/B-PILLAR LOWER TRIM - REMOVAL).

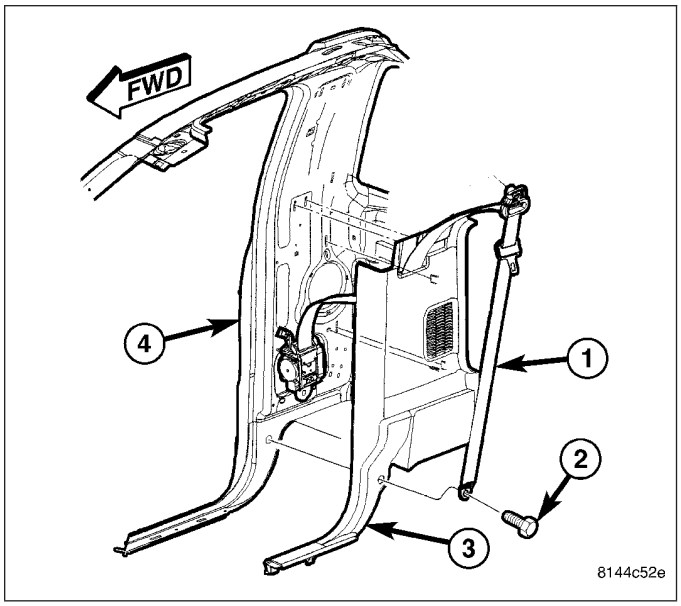

3. If vehicle is a **Quad Cab**, remove the lower b-pillar trim panel (1) (Refer to 23 - BODY/INTERIOR/B-PILLAR LOWER TRIM - REMOVAL).

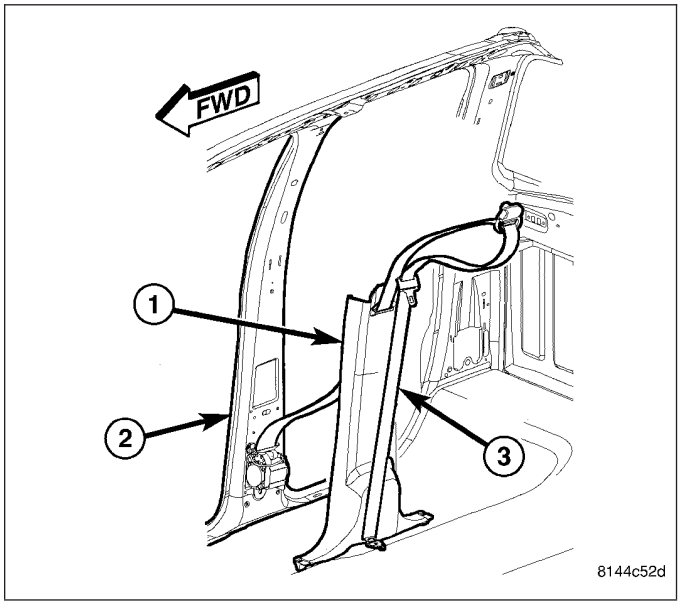

4. Separate the front door opening seal (6) from the door opening flange.

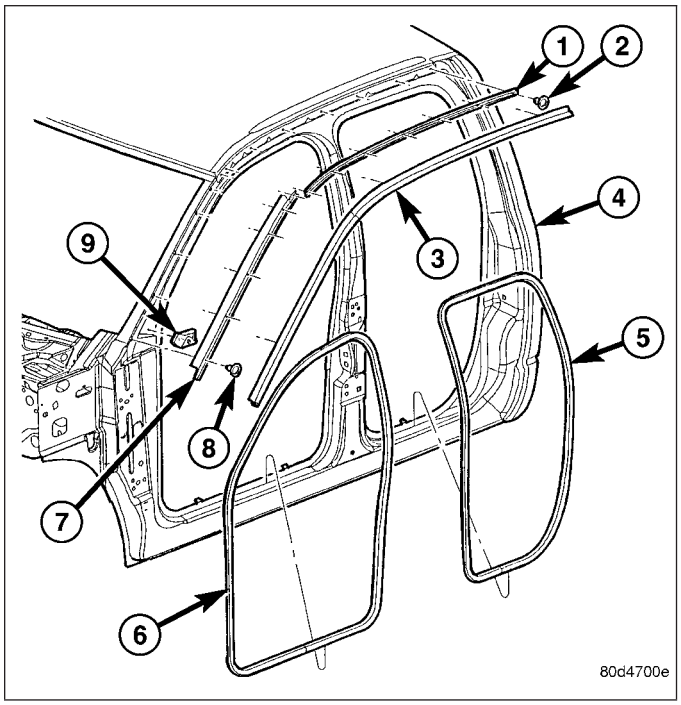

REAR DOOR SEAL

1. Remove the lower b-pillar trim panel (1) (Refer to 23 - BODY/INTERIOR/B-PILLAR LOWER TRIM - REMOVAL).

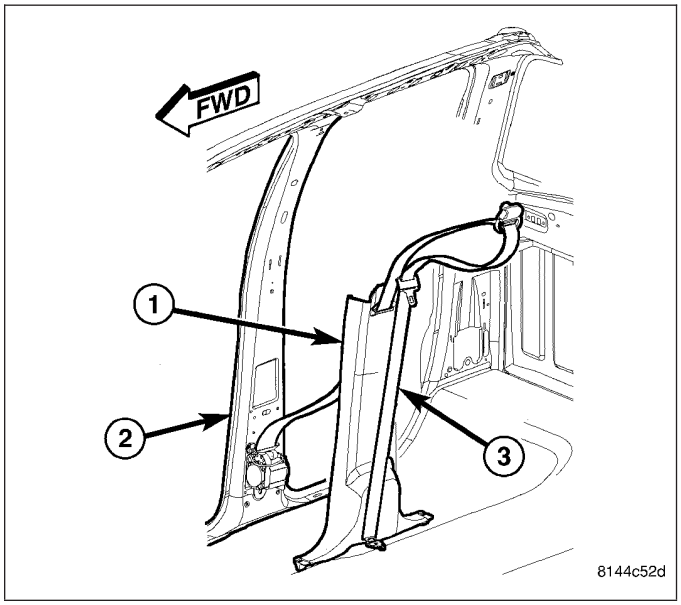

2. Remove the lower c-pillar trim (1) (Refer to 23 - BODY/INTERIOR/C-PILLAR TRIM - REMOVAL).

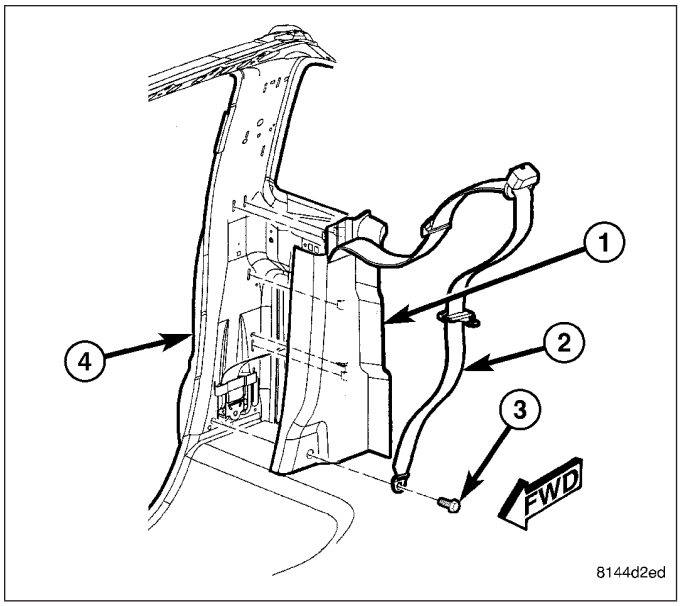

3. Separate the rear door opening seal (5) from the door opening flange.

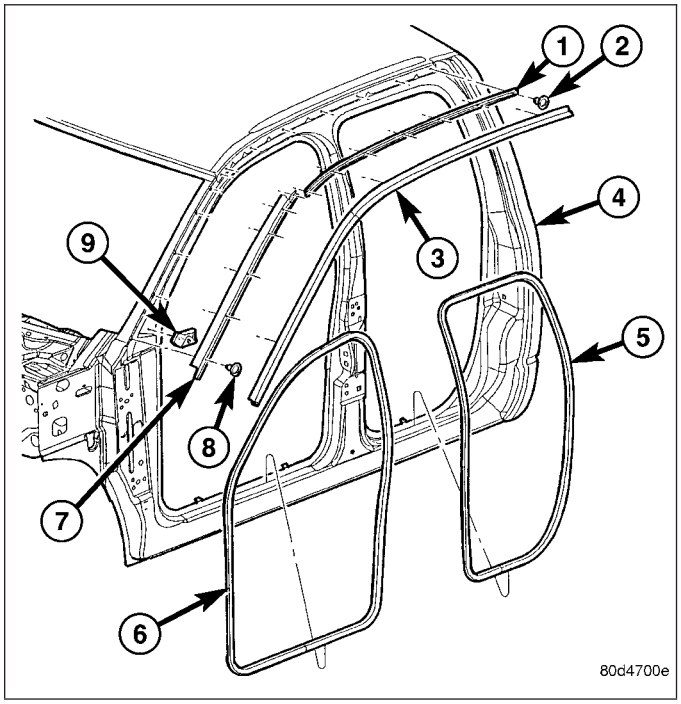

INSTALLATION

FRONT DOOR SEAL

1. Position the front door seal (6) to the bottom of the door opening, with bulb facing outboard, starting the installation at the center of the lower flange. Press the seal onto the sill flange and work around the perimeter of the door opening until fully seated. Work in one direction, smoothing the seal to avoid puckers or wrinkles.

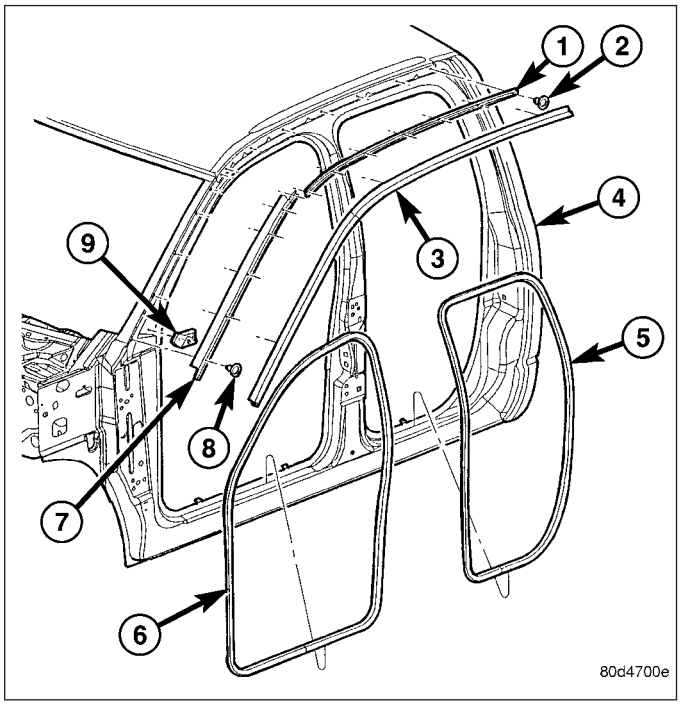

2. If vehicle is a **Standard Cab**, install the lower b-pillar trim (3) (Refer to 23 - BODY/INTERIOR/B-PILLAR LOWER TRIM - INSTALLATION).

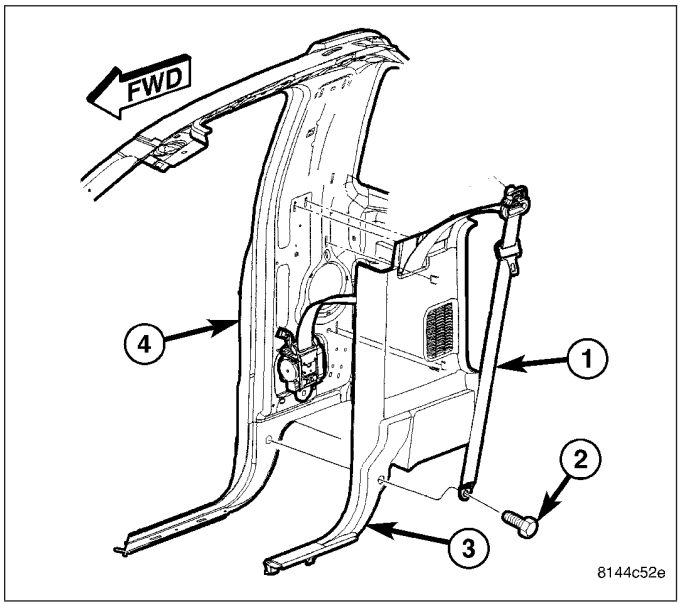

3. If vehicle is a **Quad Cab**, install the lower b-pillar trim (1) (Refer to 23 - BODY/INTERIOR/B-PILLAR LOWER TRIM - INSTALLATION).

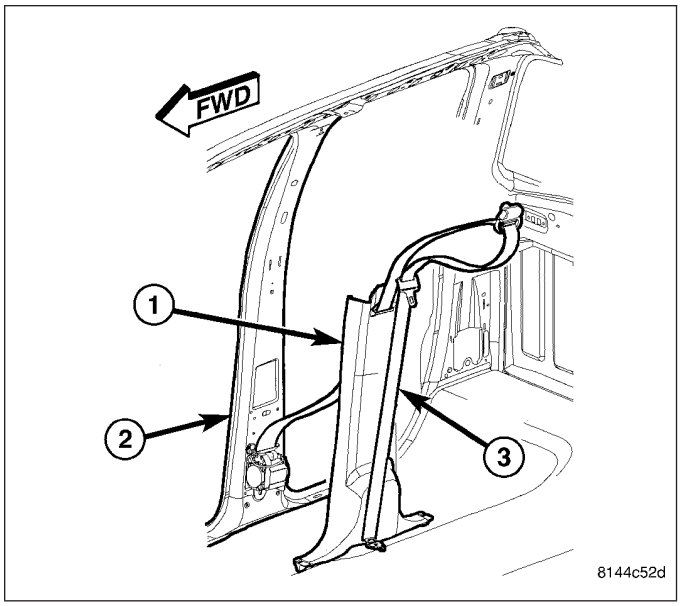

4. Install the cowl trim panel (1) (Refer to 23 - BODY/INTERIOR/COWL TRIM - INSTALLATION)

NOTE: When installing a new weatherstrip on the front door opening, remove the tear strip starting at the splice and moving around the front of the door to the back of the opening.

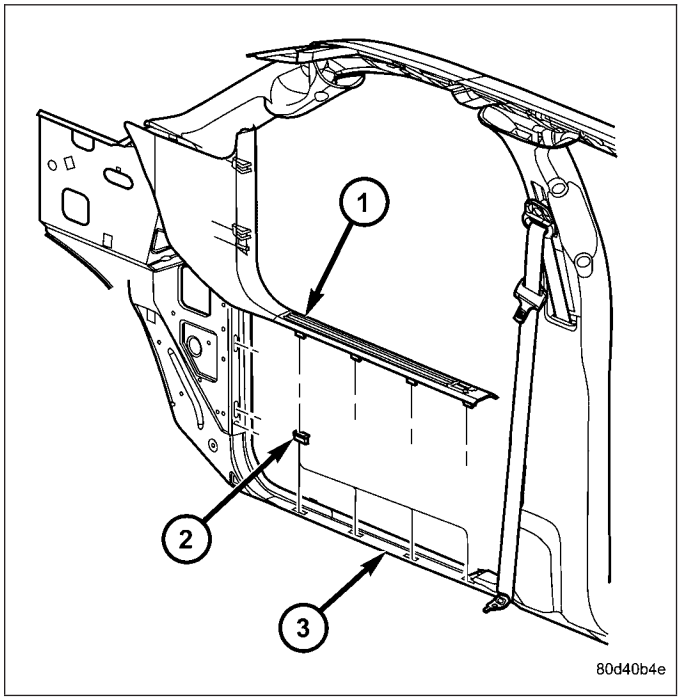

REAR DOOR SEAL

1. Position the rear door seal to the bottom of the door opening, with bulb facing outboard, starting the installation at the center of the lower flange. Press the seal onto the sill flange and work around the perimeter of the door opening until fully seated. Work in one direction, smoothing the seal to avoid puckers or wrinkles.

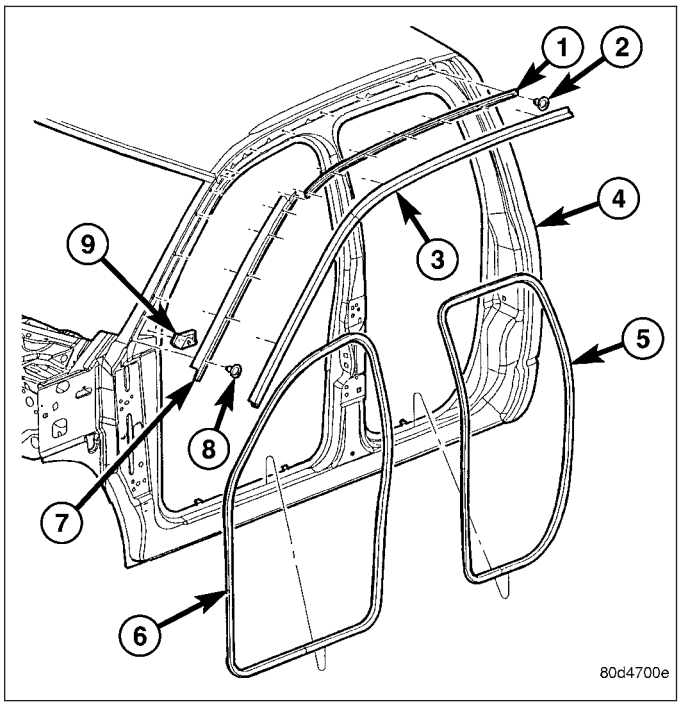

2. Install the lower c-pillar trim (1) (Refer to 23 - BODY/INTERIOR/C-PILLAR TRIM - INSTALLATION).

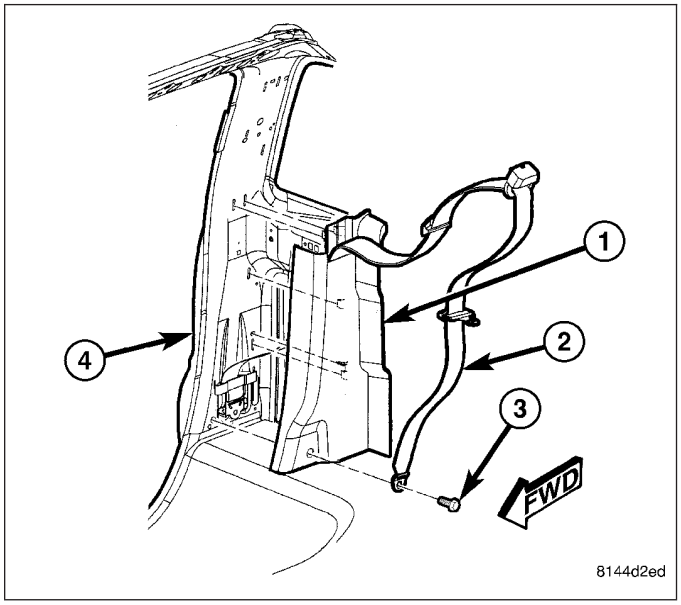

3. Install the lower b-pillar trim (1) (Refer to 23 - BODY/INTERIOR/B-PILLAR LOWER TRIM - INSTALLATION).

NOTE: When installing a new weatherstrip on the rear door opening, remove the tear strip starting at the splice and moving around the back of the door to the front of the opening.

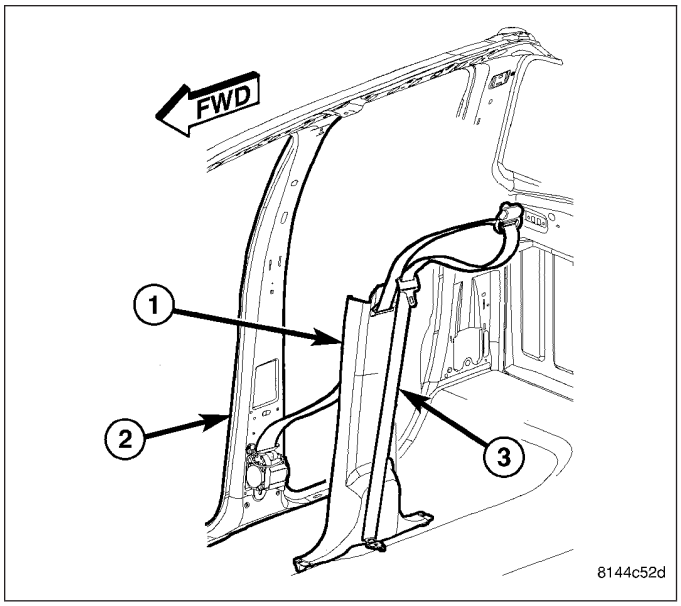

DRIP RAIL WEATHERSTRIP RETAINER

REMOVAL

1. Separate the drip rail weatherstrip (3) from the weatherstrip retainer (1).
2. Remove the seven screws (2) and remove the retainer (1).

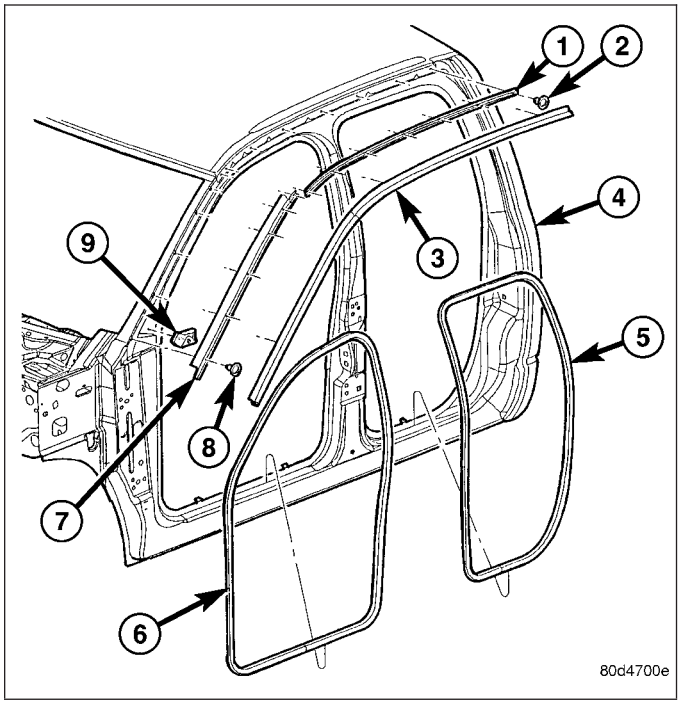

INSTALLATION

1. Install the weatherstrip retainer (1) and install the seven screws (2).
2. Position the weatherstrip (3) over the retainer flange and seat fully.

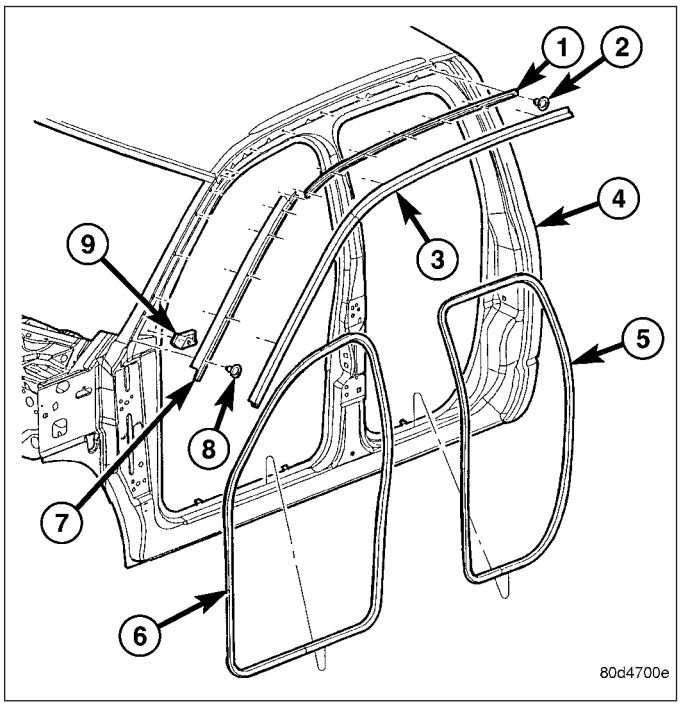

FRONT DOOR GLASS RUN WEATHERSTRIP

REMOVAL

1. Remove the door glass (Refer to 23 - BODY/DOOR - FRONT/DOOR GLASS - REMOVAL).

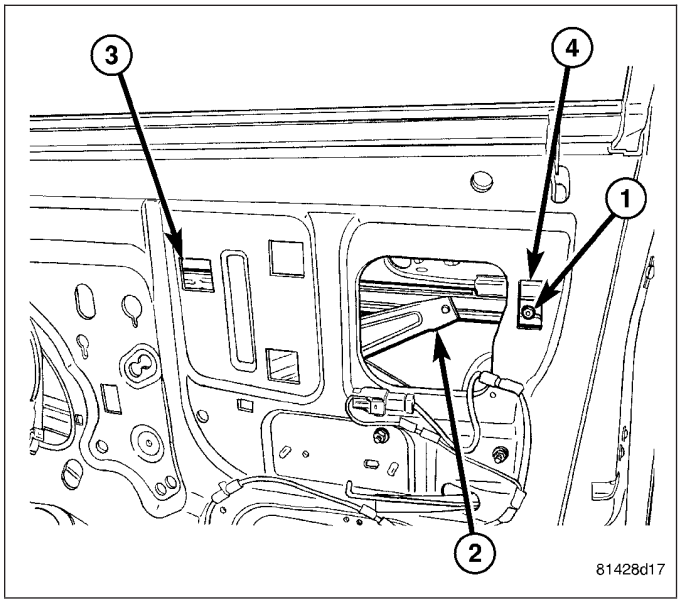

2. Separate the front door glass run weatherstrip (2) out of the door frame (5) and remove through the window opening.

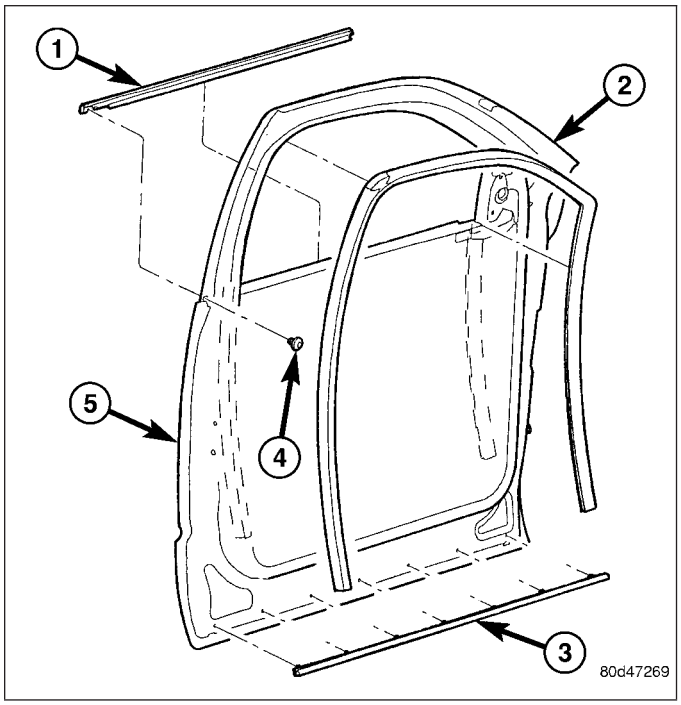

INSTALLATION

NOTE: A mixture of soap and water may be used to aid installation of the weatherstrip into the corners.

1. Position the front door glass run weatherstrip (2) into the door (5) through the window opening.
2. Position the weatherstrip into the upper corners and seat firmly.
3. From back to front, seat the weatherstrip between the corners and then down the sides firmly.

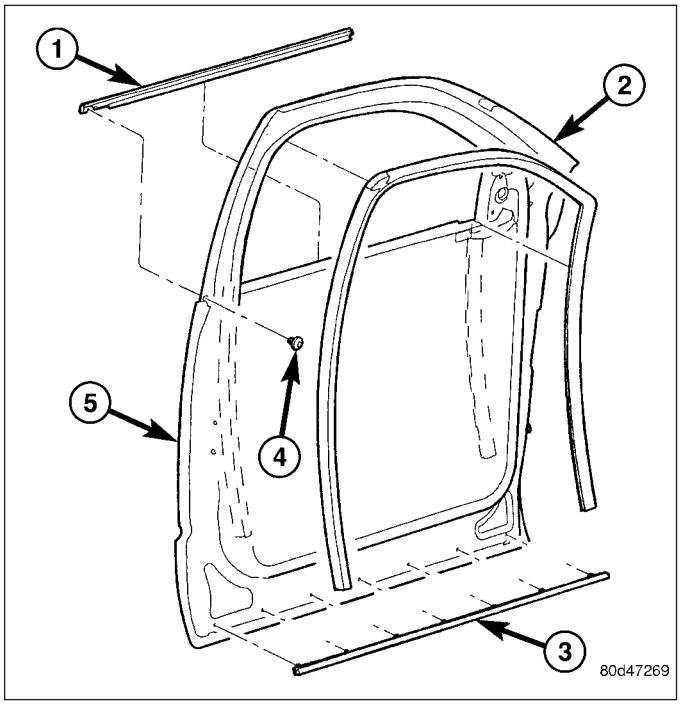

4. Install the door glass (Refer to 23 - BODY/DOOR - FRONT/DOOR GLASS - INSTALLATION).

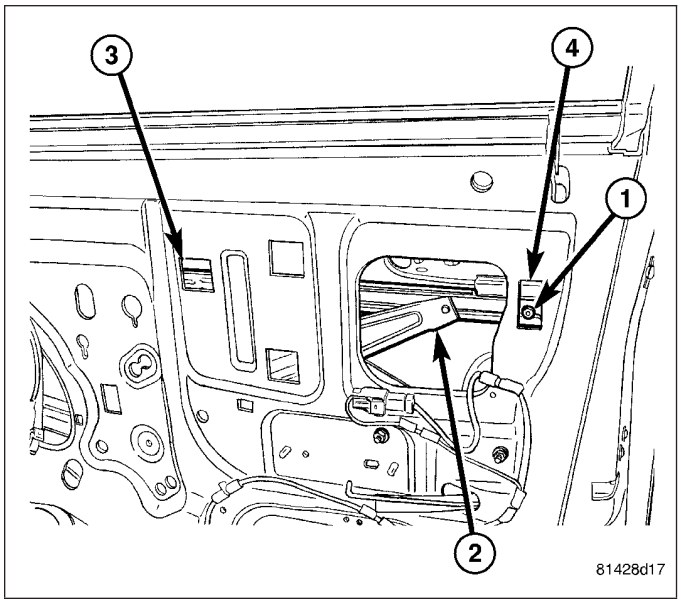

FRONT DOOR OUTER BELT MOLDING

REMOVAL

1. Remove the screw (4) and separate the belt molding (1) from the door (5) flange from the back to the front.

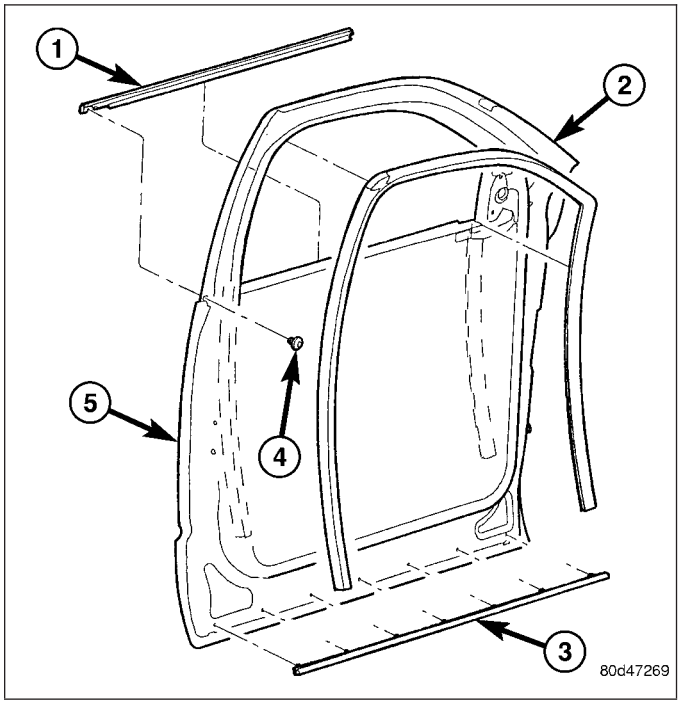

INSTALLATION

1. Position the belt molding (1) onto the door (5) flange and seat fully.
2. Install the screw (4).

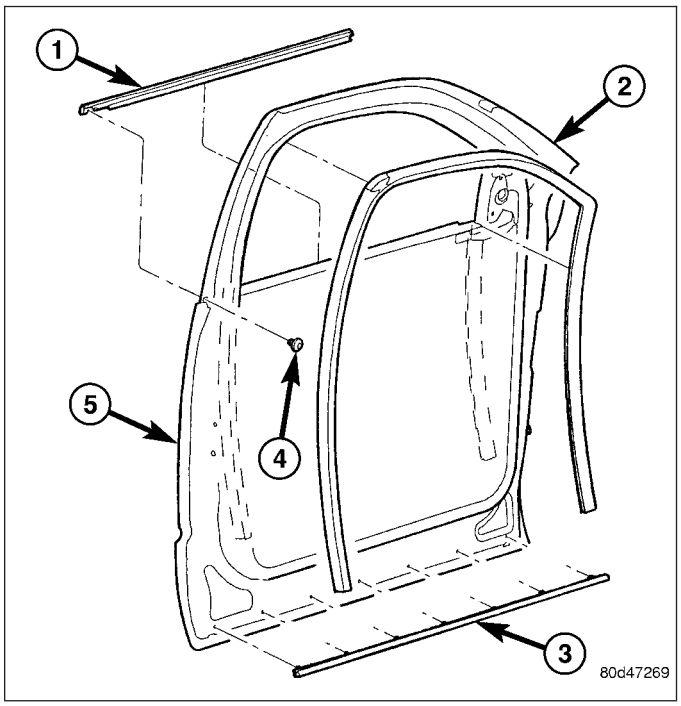

FRONT DOOR INNER BELT MOLDING

REMOVAL

1. Remove the door trim panel (3) (Refer to 23 - BODY/DOOR - FRONT/TRIM PANEL - REMOVAL)

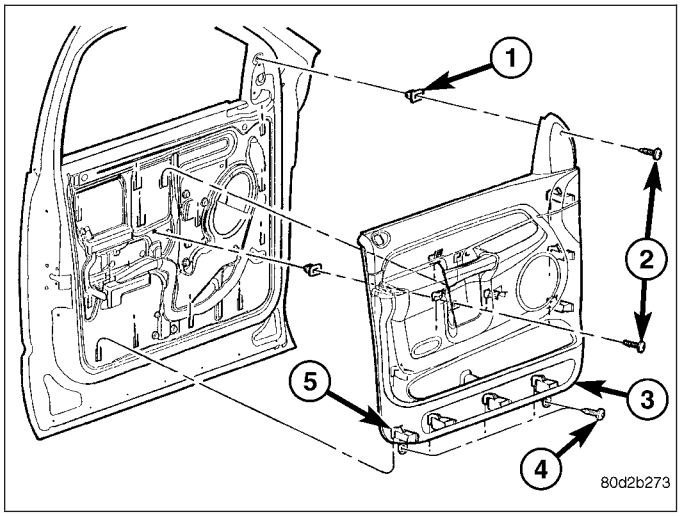

2. Separate the belt molding (1) from the door (3) mounting flange from the back to the front.

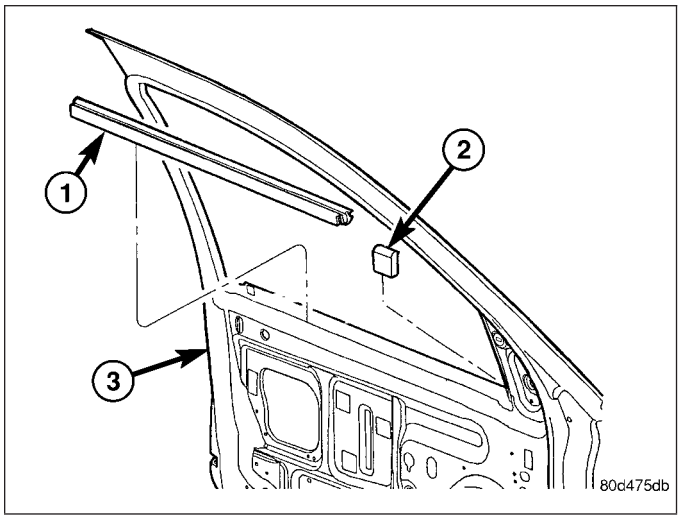

INSTALLATION

1. Position the belt molding (1) and seat onto the door (3) mounting flange fully.

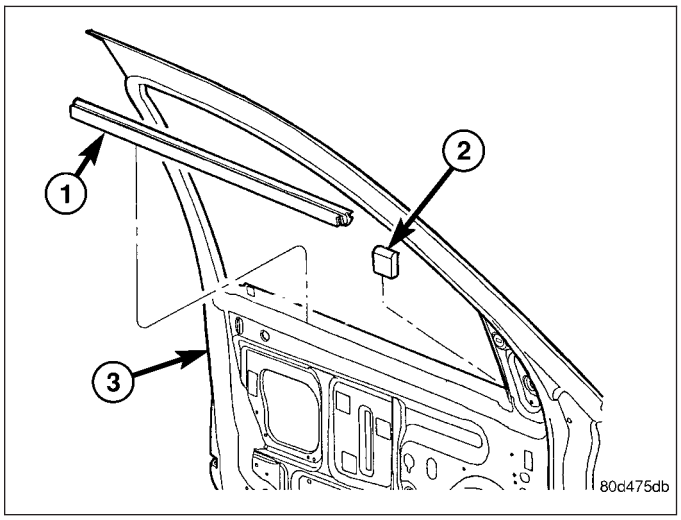

2. Install the door trim panel (3) (Refer to 23 - BODY/ DOOR - FRONT/TRIM PANEL - INSTALLATION).

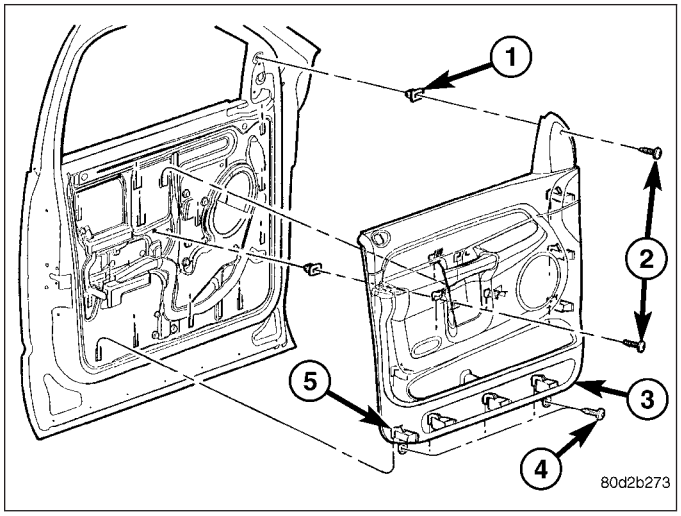

REAR DOOR GLASS RUN WEATHERSTRIP

REMOVAL

1. Lower the glass.
2. Separate the rear door glass run weatherstrip (5) out of the door frame (2) and remove through the window opening.

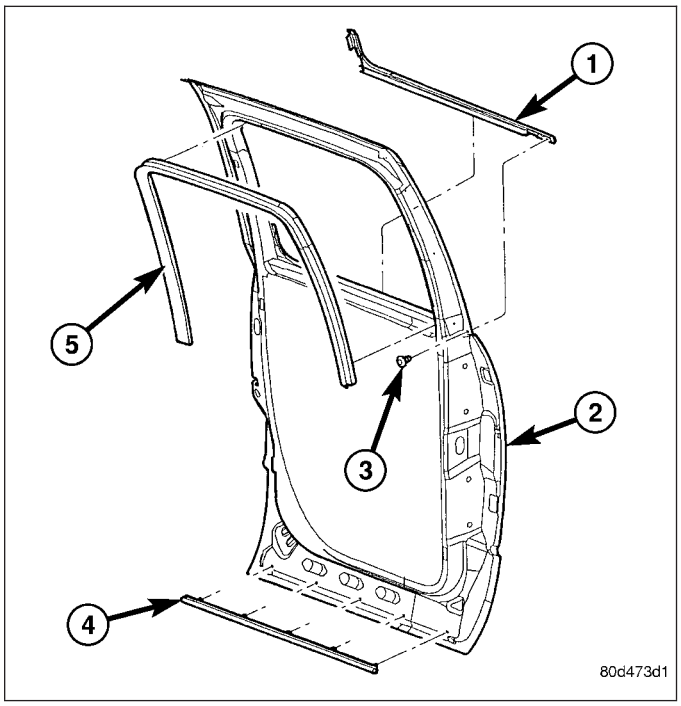

INSTALLATION

NOTE: A mixture of soap and water may be used to aid installation of the weatherstrip into the corners.

1. Position the rear door glass run weatherstrip (5) into the door (2) through the window opening.
2. Position the weatherstrip (5) into the upper corners and seat firmly.
3. From back to front, seat the weatherstrip (5) between the corners and then down the sides firmly.

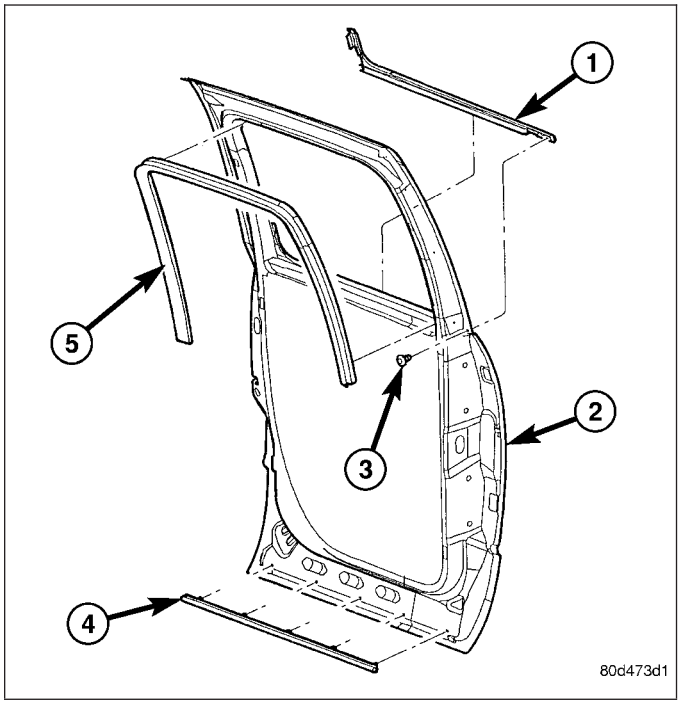

REAR DOOR OUTER BELT MOLDING

REMOVAL

1. Remove the screw (3) and separate the belt molding (1) from the door (2) flange from the back to the front.

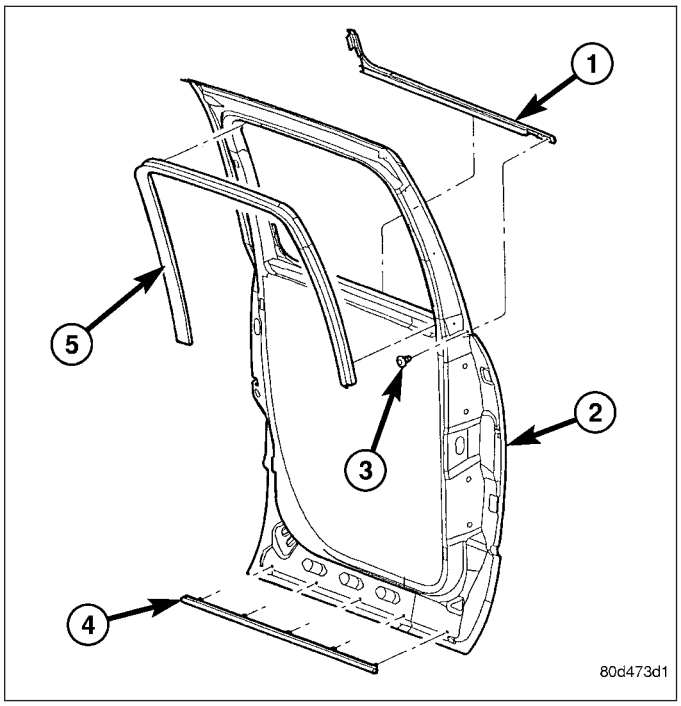

INSTALLATION

1. Position the belt molding (1) onto the door (2) flange and seat fully.
2. Install the screw (3).

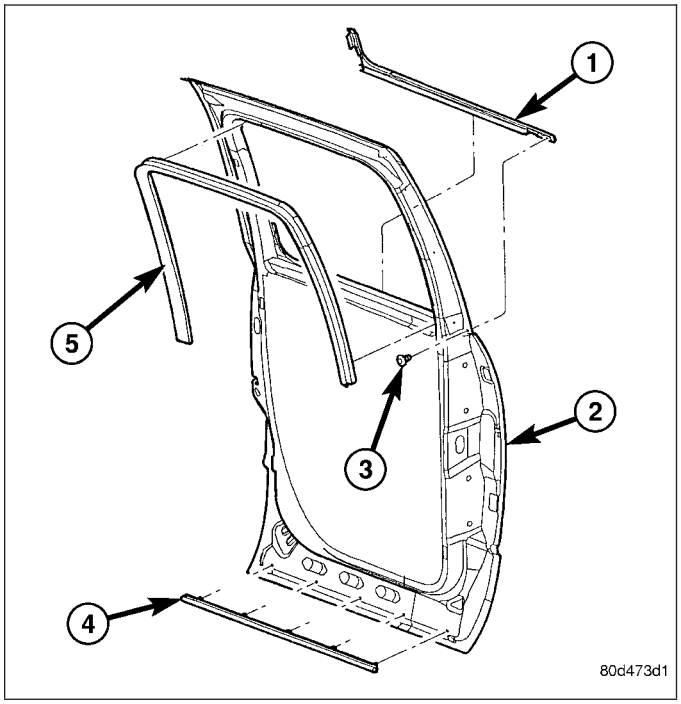

REAR DOOR INNER BELT MOLDING

REMOVAL

1. Remove the door trim panel (5) (Refer to 23 - BODY/DOORS - REAR/TRIM PANEL - REMOVAL).

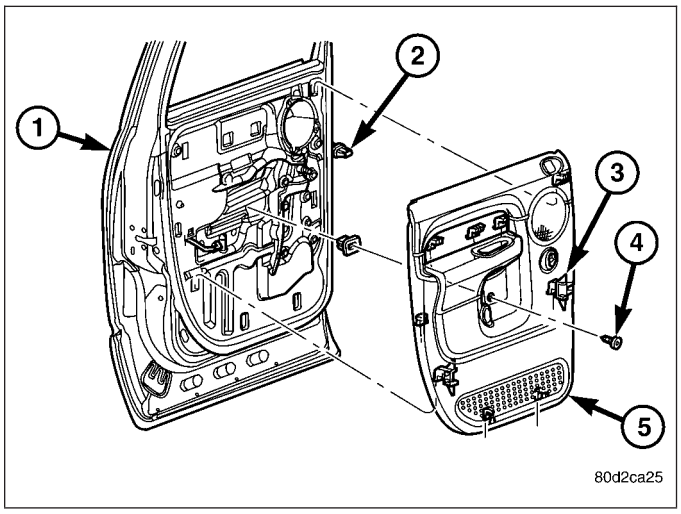

2. Separate the belt molding (2) from the rear door mounting flange from the back to the front.

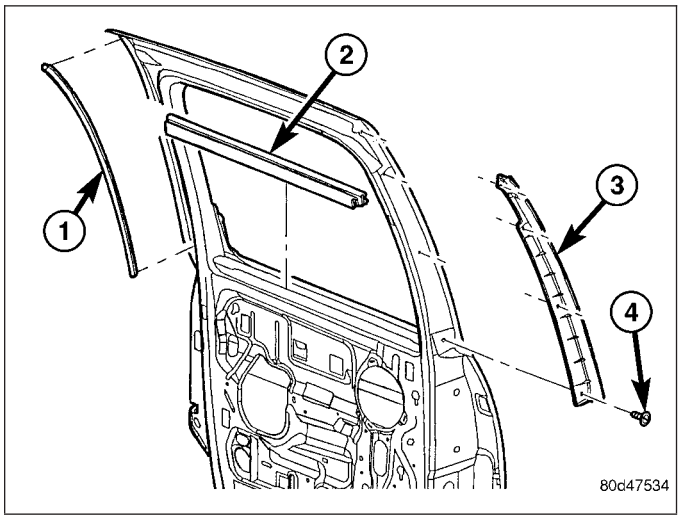

INSTALLATION

1. Position the belt molding (2) and seat onto the rear door mounting flange fully.

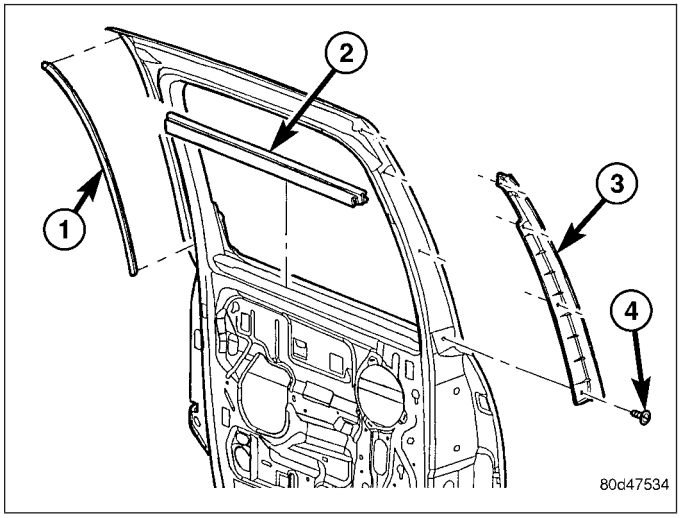

2. Install the door trim panel (5) (Refer to 23 - BODY/ DOORS - REAR/TRIM PANEL - INSTALLATION).

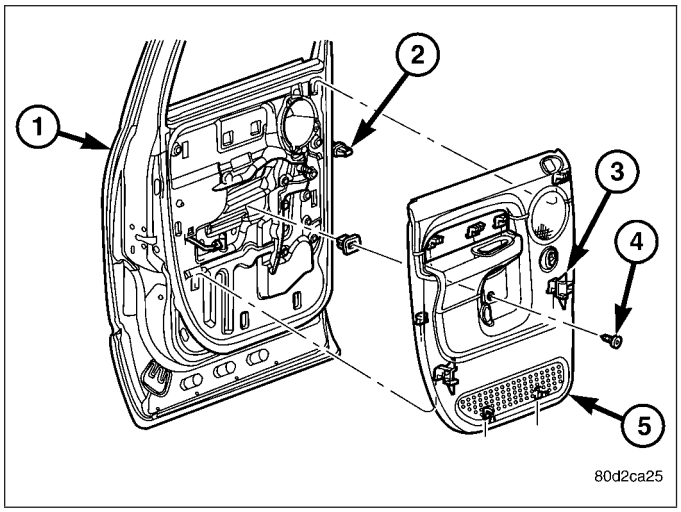

BODY STRUCTURE

TABLE OF CONTENTS

page

GAP AND FLUSH
SPECIFICATIONS 257
OPENING DIMENSIONS
SPECIFICATIONS 261
SEALER LOCATIONS
SPECIFICATIONS 264
STRUCTURAL ADHESIVE LOCATIONS
SPECIFICATIONS 274
WELD LOCATIONS
SPECIFICATIONS 282

GAP AND FLUSH

SPECIFICATIONS

GAP & FLUSH DIMENSIONS INDEX

DESCRIPTION	FIGURE
STANDARD CAB	1
QUAD CAB	2
PICKUP BOX	3

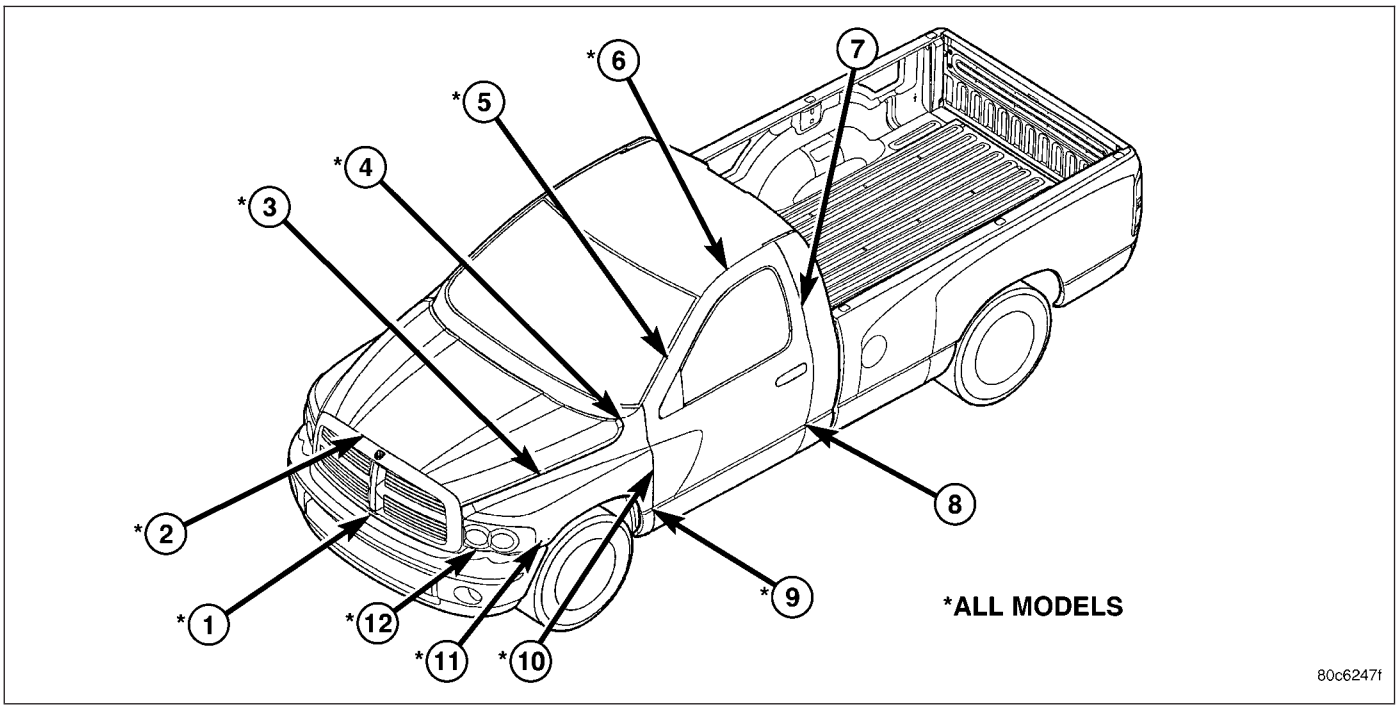

Fig. 1 GAP & FLUSH - STANDARD CAB

NOTE: All measurements are in mm. O/F = Over Flush. U/F = Under Flush.			
DIMENSION	DESCRIPTION	GAP	FLUSH
*1	Bumper to grille	19.0 ± 3.0	—
*2	Hood to grille	1.5 ± 1.0 Parallel within 2.0	U/F 0.75 ± 1.75
*3	Fender to hood	6.0 ± 2.0 Parallel within 1.0	U/F 3.2 ± 1.5 (Underflush from front of hood to start of hockey stick area only)
*4	Fender to hood (Up/Down surface only)	6.0 ± 1.5 Parallel within 1.0	0.0 ± 1.5
*5	Front door to windshield	—	O/F 20.5 ± 1.5 (Base of windshield) O/F 9.0 ± 1.5 (Top of windshield)
*6	Roof to front door	—	U/F 6.0 ± 1.5 Parallel within 1.5
7	Quarter to front door	5.0 ± 1.5 Parallel within 1.0	0.0 ± 1.5
8	Front door to quarter character line alignment	—	Up/Down 0.0 ± 1.5
*9	Front door to fender character line alignment	—	Up/Down 0.0 ± 1.5
*10	Front door to fender	5.0 ± 1.5 Parallel within 1.0	0.0 ± 1.5
*11	Bumper to fender	19.0 ± 3.0 Parallel within 3.0	O/F 5.0 ± 5.0 (SLT) O/F 14.0 ± 5.0 (SPORT)
*12	Bumper to headlamp	19.0 ± 4.0	—
* ALL MODELS			

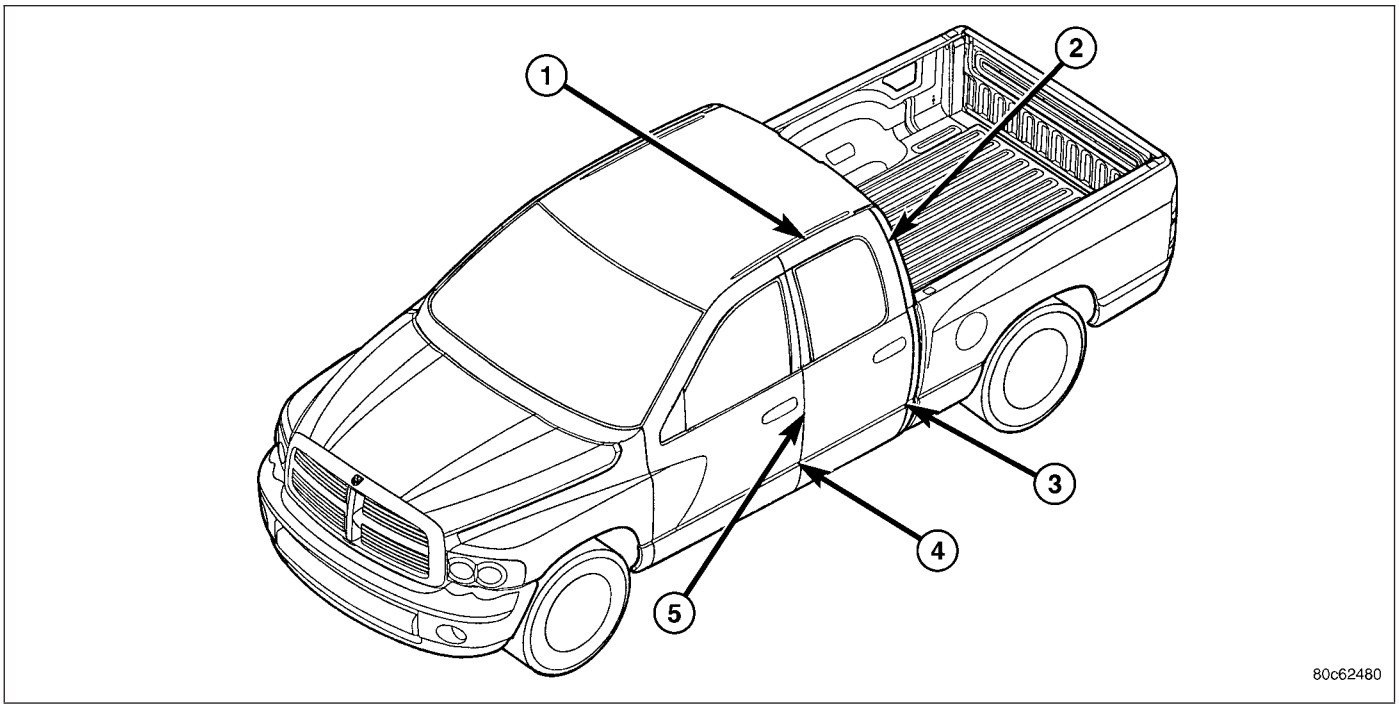

Fig. 2 GAP & FLUSH - QUAD CAB

NOTE: All measurements are in mm. O/F = Over Flush. U/F = Under Flush.			
DIMENSION	DESCRIPTION	GAP	FLUSH
1	Roof to rear door	—	U/F 6.0 ± 1.5 Parallel within 1.5
2	Quarter to rear door	5.0 ± 1.5 Parallel within 2.0	0.0 ± 1.5
3	Rear door to quarter character line alignment	—	Up/Down 0.0 ± 1.5
4	Rear door to front door character line alignment	—	Up/Down 0.0 ± 1.5
5	Rear door to front door	5.0 ± 1.5 Parallel within 2.0	0.0 ± 1.5

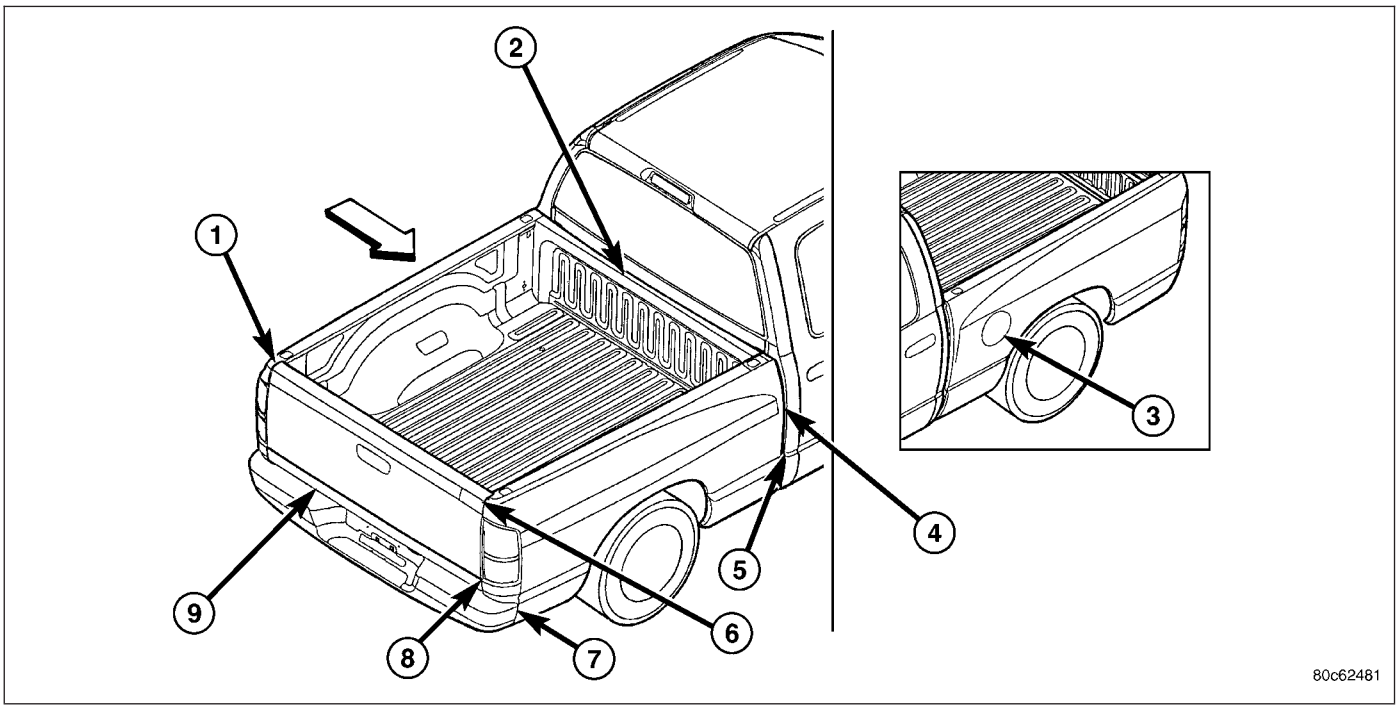

Fig. 3 GAP & FLUSH - PICKUP BOX

NOTE:
All measurements are in mm. O/F = Over Flush. U/F = Under Flush.

DIMENSION	DESCRIPTION	GAP	FLUSH
1	Tailgate to outer box (Up/Down surface only)	—	0.0 ± 1.5 Parallel within 1.0
2	Cab Back to box front	31.0 ± 5.0 Parallel within 3.0	—
3	Fuel door to outer box	5.0 ± 1.5 Parallel within 1.0	0.0 ± 1.5
4	Cab to box side	31.0 ± 5.0 Parallel within 3.0	4.0 ± 2.5 (Standard Cab) O/F 5.0 ± 2.5 (Quad Cab)
5	Cab to box character line alignment	—	Up/Down 0.0 ± 3.0
6	Tailgate to outer box	5.0 ± 2.0 Parallel within 1.0	U/F 1.5 ± 1.5
7	Bumper to outer box	24.75 ± 5.0 (F/A) 23.75 ± 5.0 (C/C) Parallel within 5.0	—
8	Tailgate to outer box character line adjustment	—	Up/Down 0.0 ± 1.5
9	Bumper to tailgate	30.25 ± 3.0 Parallel within 4.0	—

OPENING DIMENSIONS

SPECIFICATIONS

BODY OPENING DIMENSIONS INDEX

DESCRIPTION	FIGURE
WINDSHIELD OPENING	4
DOOR OPENING - STANDARD CAB	5
DOOR OPENINGS - QUAD CAB	6
REAR WINDOW OPENING	7
ENGINE COMPARTMENT/FRONT STRUCTURE	8

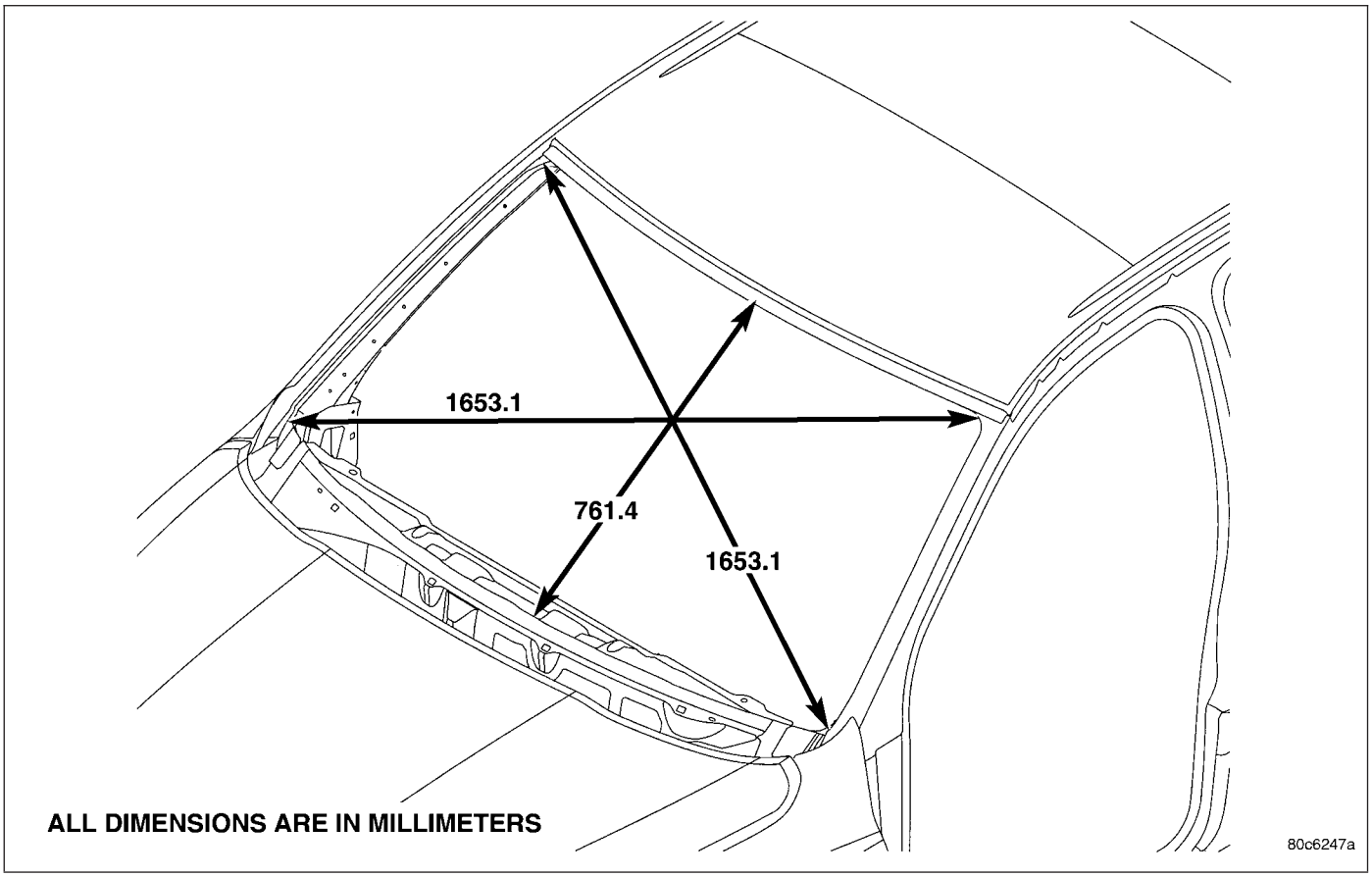

Fig. 4 WINDSHIELD OPENING

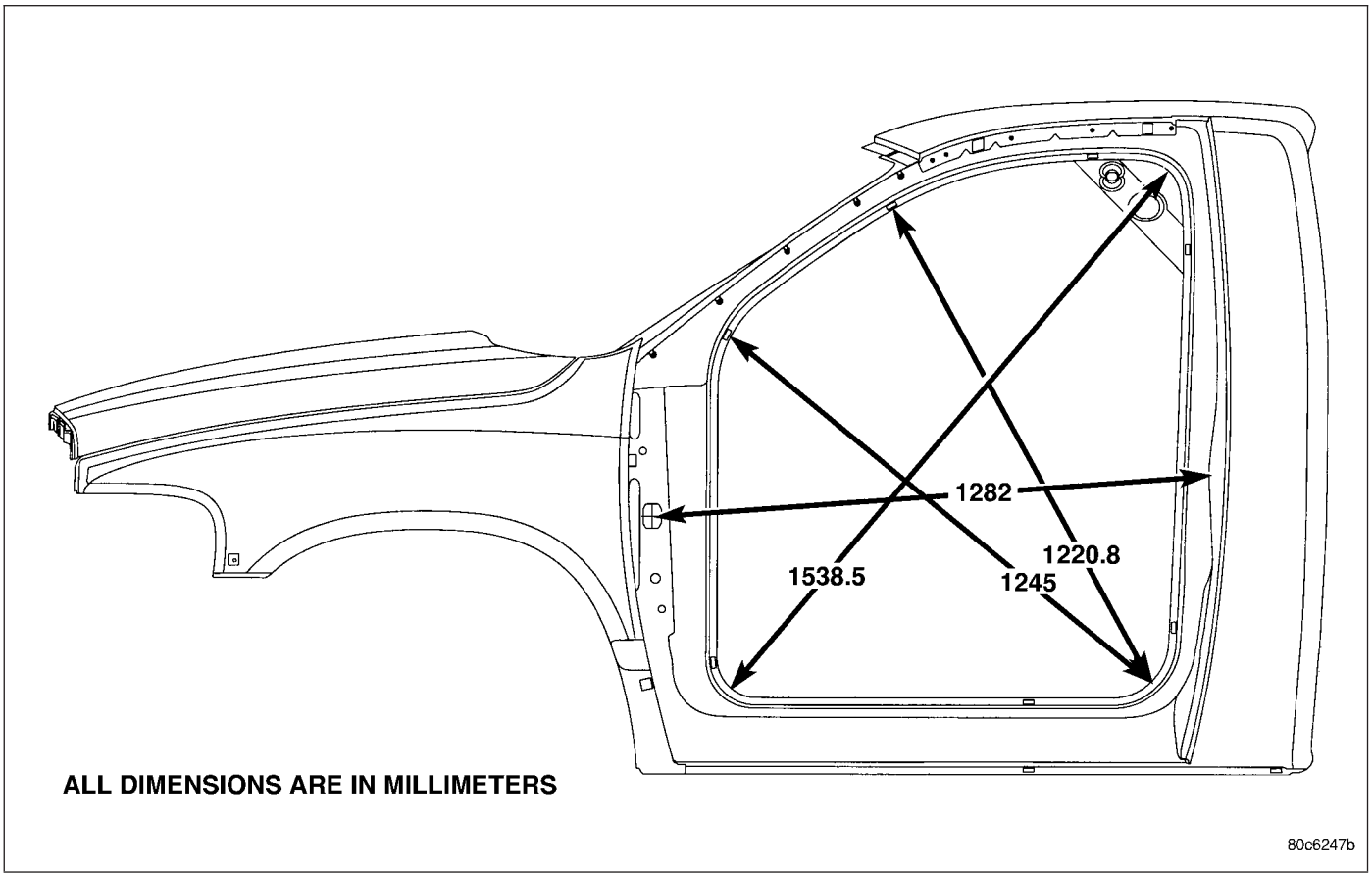

Fig. 5 DOOR OPENING - STANDARD CAB

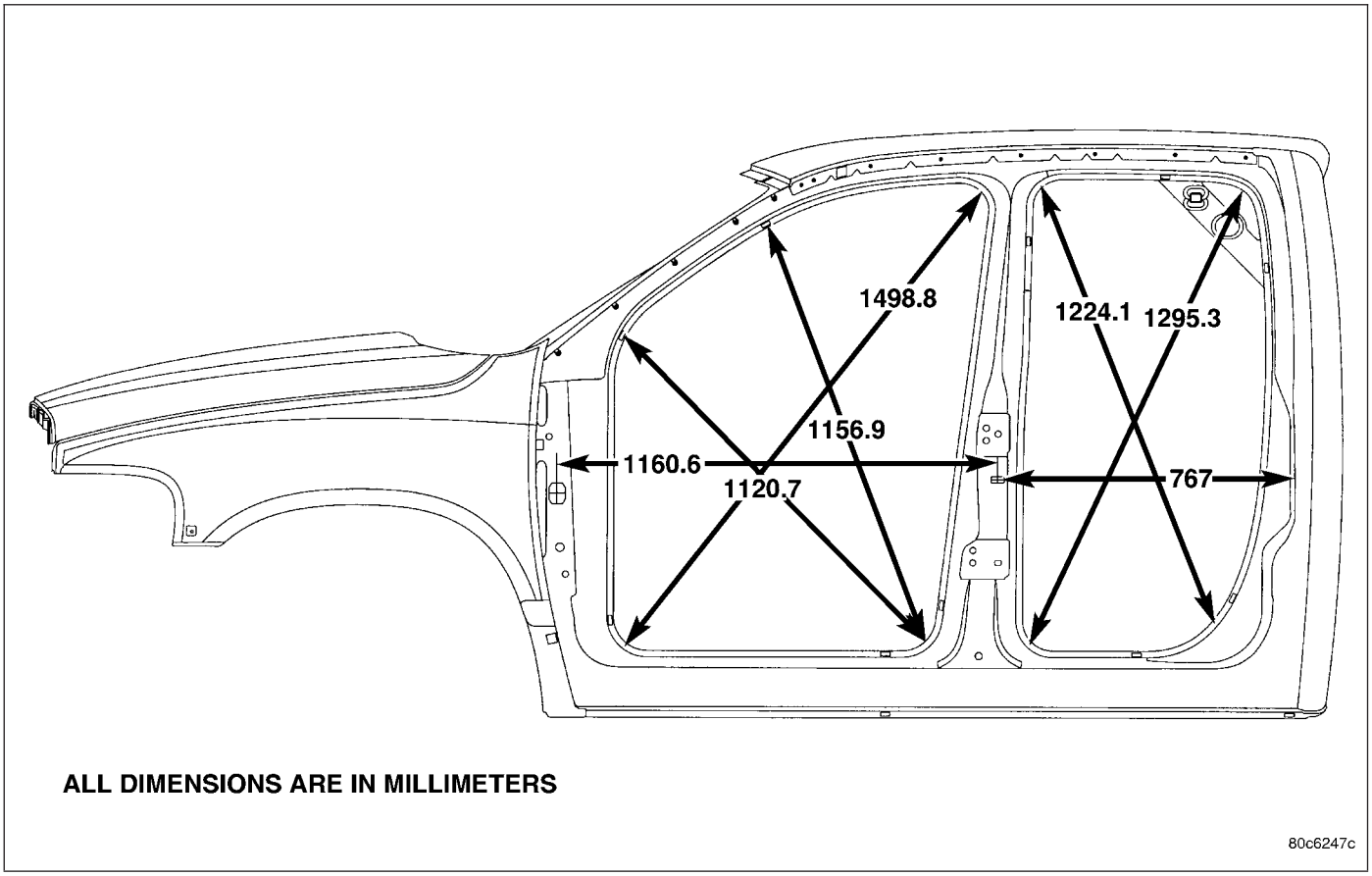

Fig. 6 DOOR OPENINGS - QUAD CAB

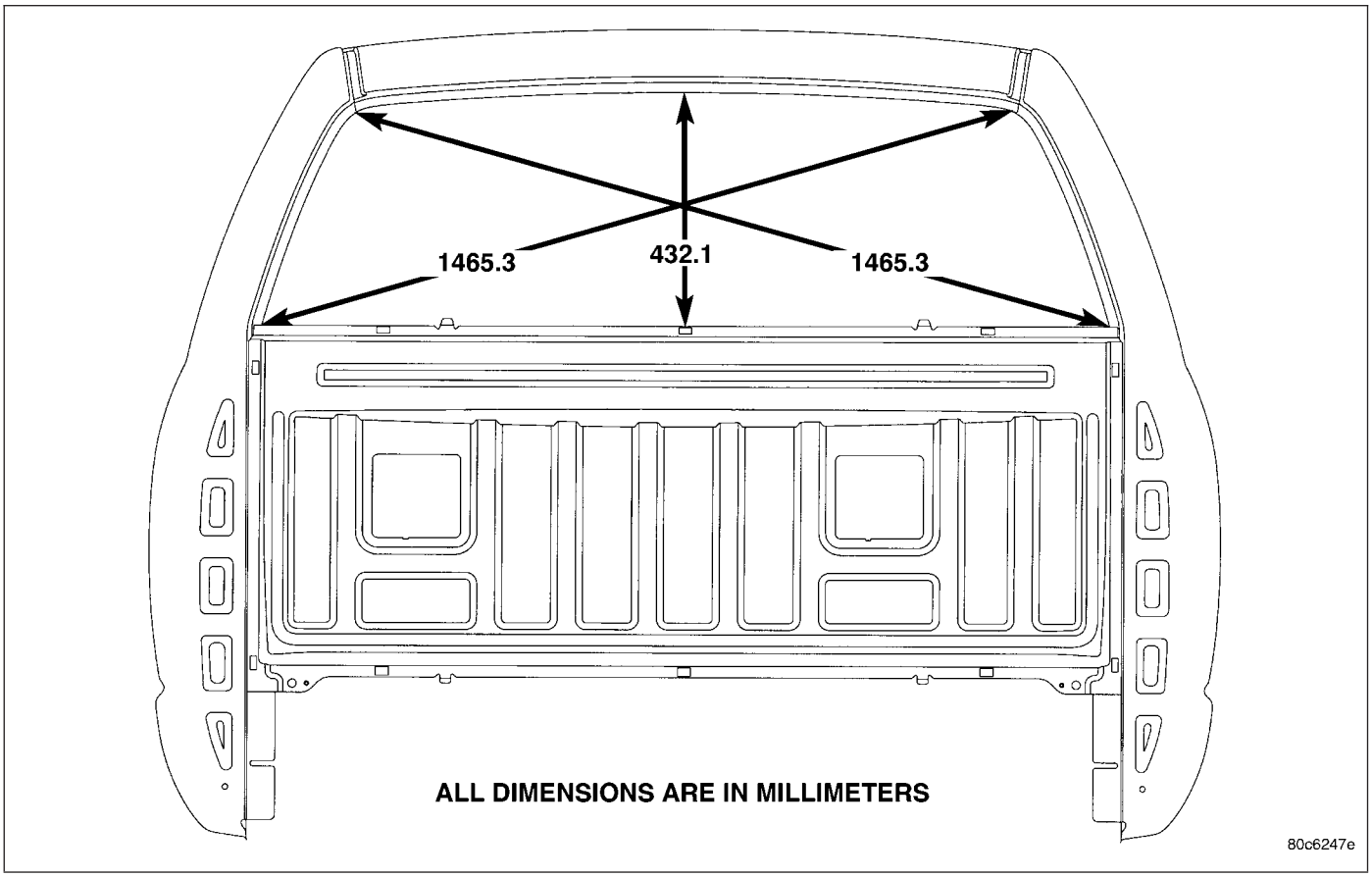

Fig. 7 REAR WINDOW OPENING

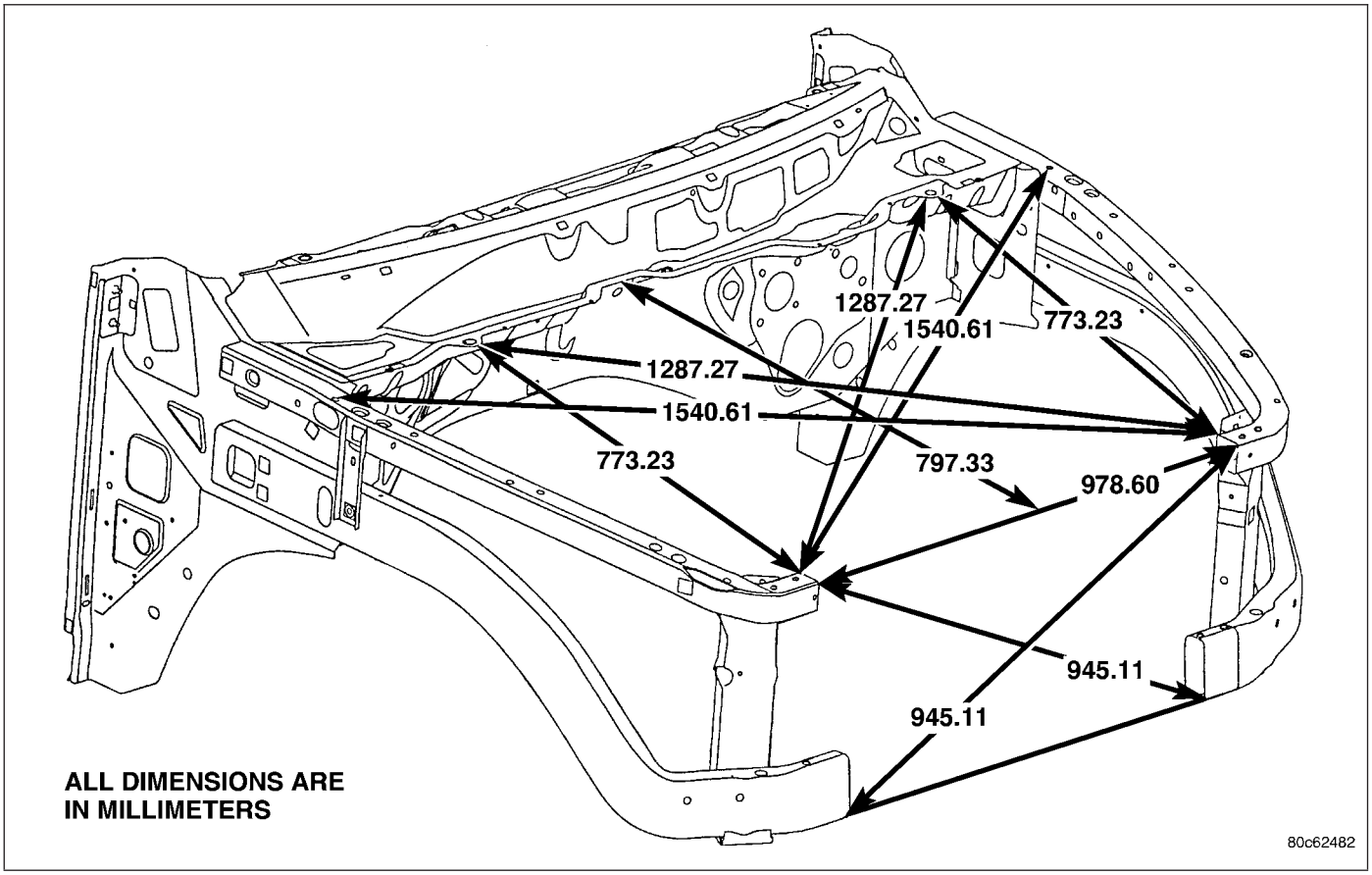

Fig. 8 ENGINE COMPARTMENT/FRONT STRUCTURE

SEALER LOCATIONS

SPECIFICATIONS

INDEX

DESCRIPTION	FIGURE
LOWER WINDSHIELD PILLAR, LOWER PLENUM AND COWL BAR	9
DASH PANEL, LOWER PLENUM AND COWL SIDE PANEL	10
LOWER DASH PANEL, LOWER COWL SIDE AND FLOOR PAN SUPPORT	11
ROOF PANEL, OUTER BODY SIDE APERTURE AND BACKLITE	12
CAB BACK, BODY SIDE APERTURE - REAR AND BACKLITE LOWER CORNER	13
LOWER DASH PANEL AND FLOOR PAN	14
FLOOR PAN AND BODY SIDE APERTURE	15
FRONT FLOOR PAN AND REAR PAN	16
FLOOR PAN TO CAB BACK	17
PICKUP BOX	18

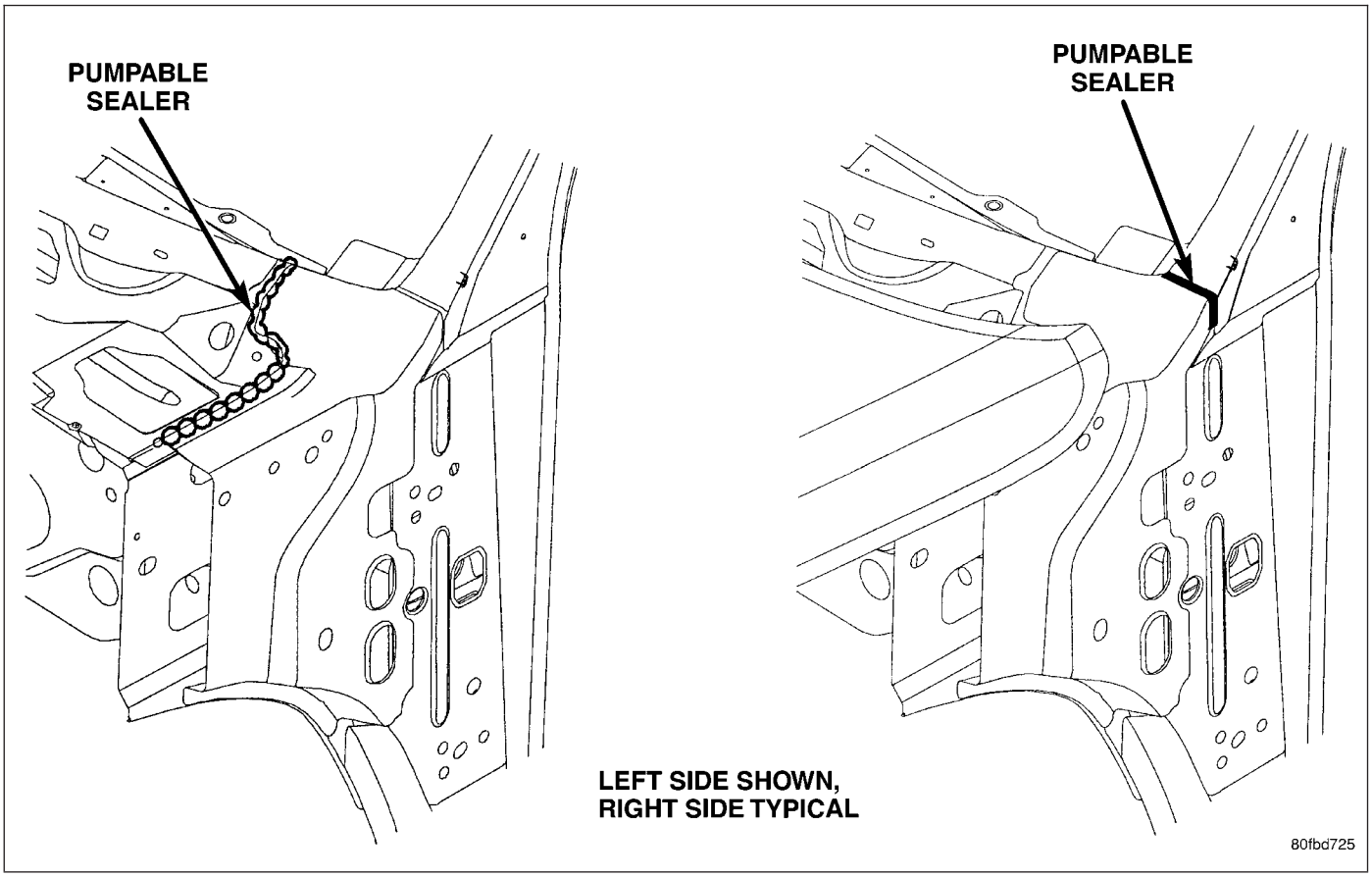

Fig. 9 LOWER WINDSHIELD PILLAR

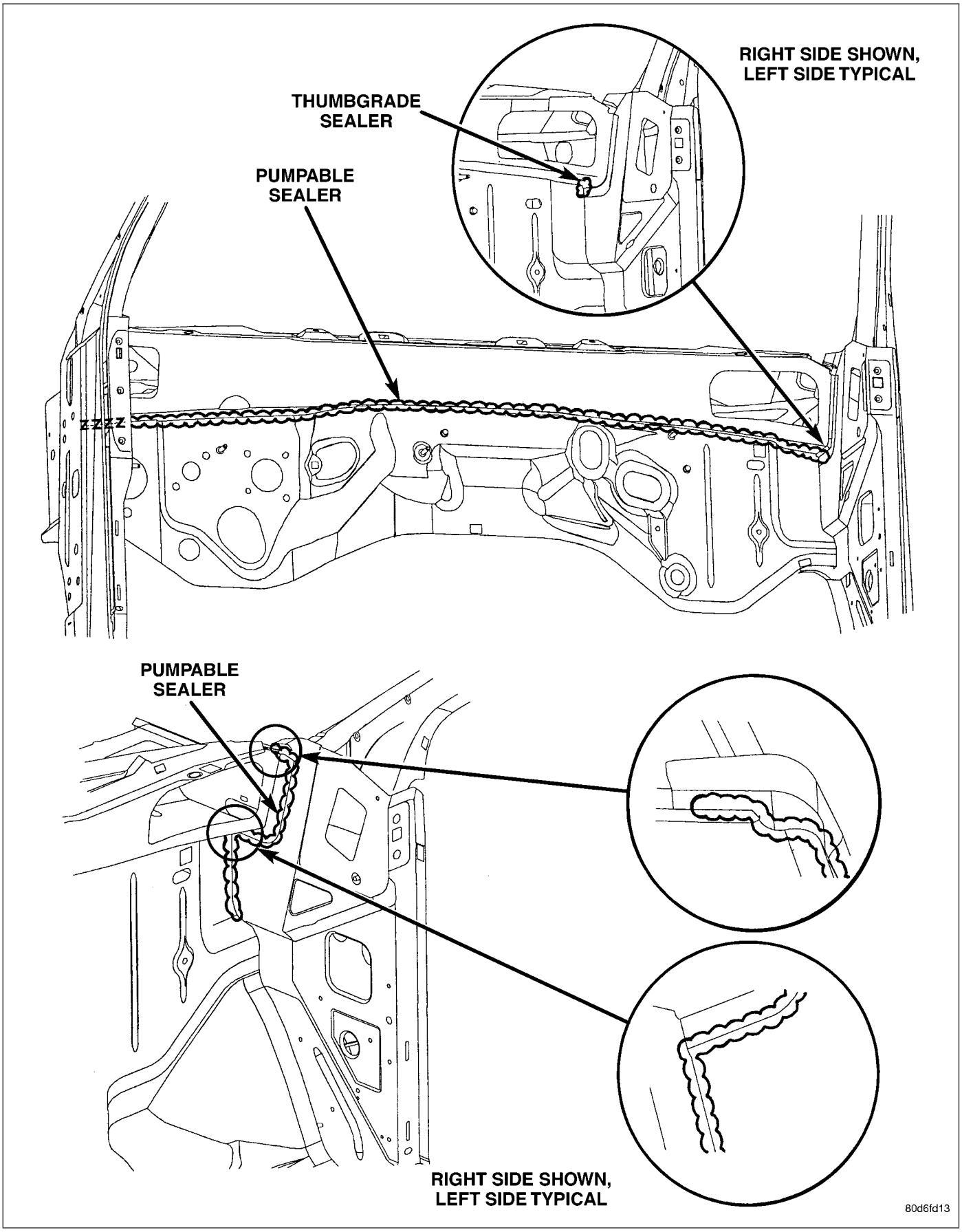

Fig. 10 DASH PANEL

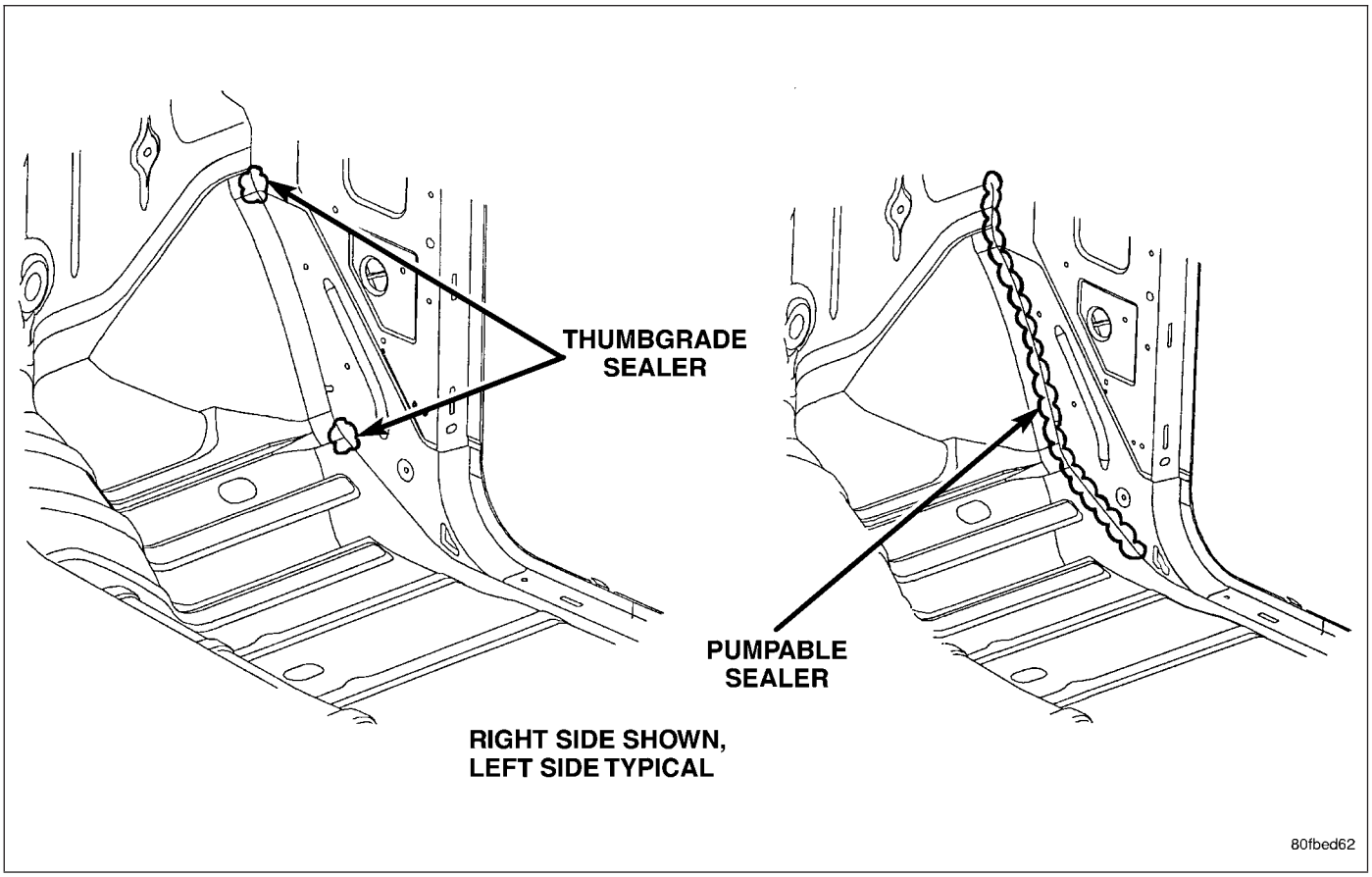

Fig. 11 LOWER DASH PANEL

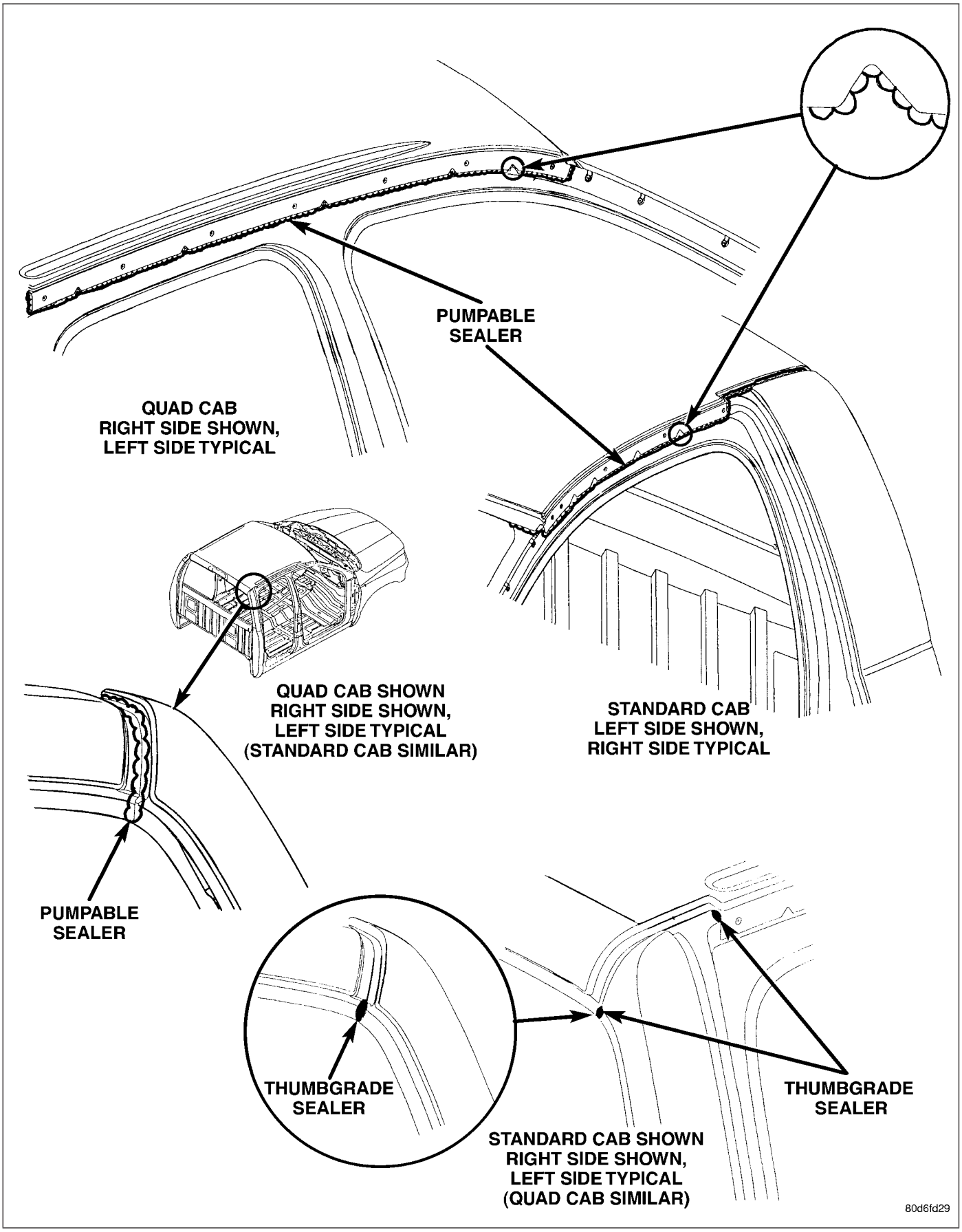

Fig. 12 ROOF PANEL

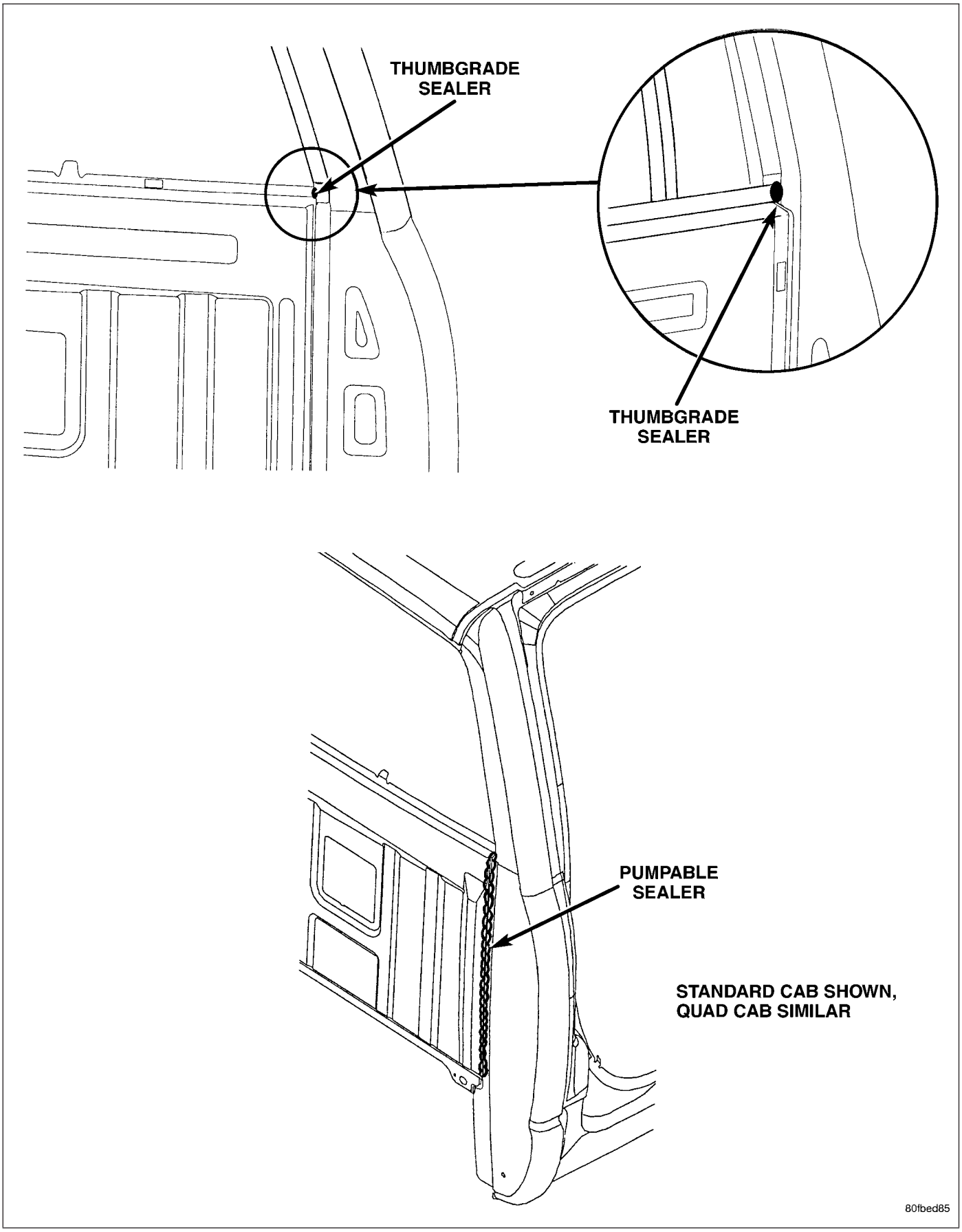

Fig. 13 CAB BACK PANEL

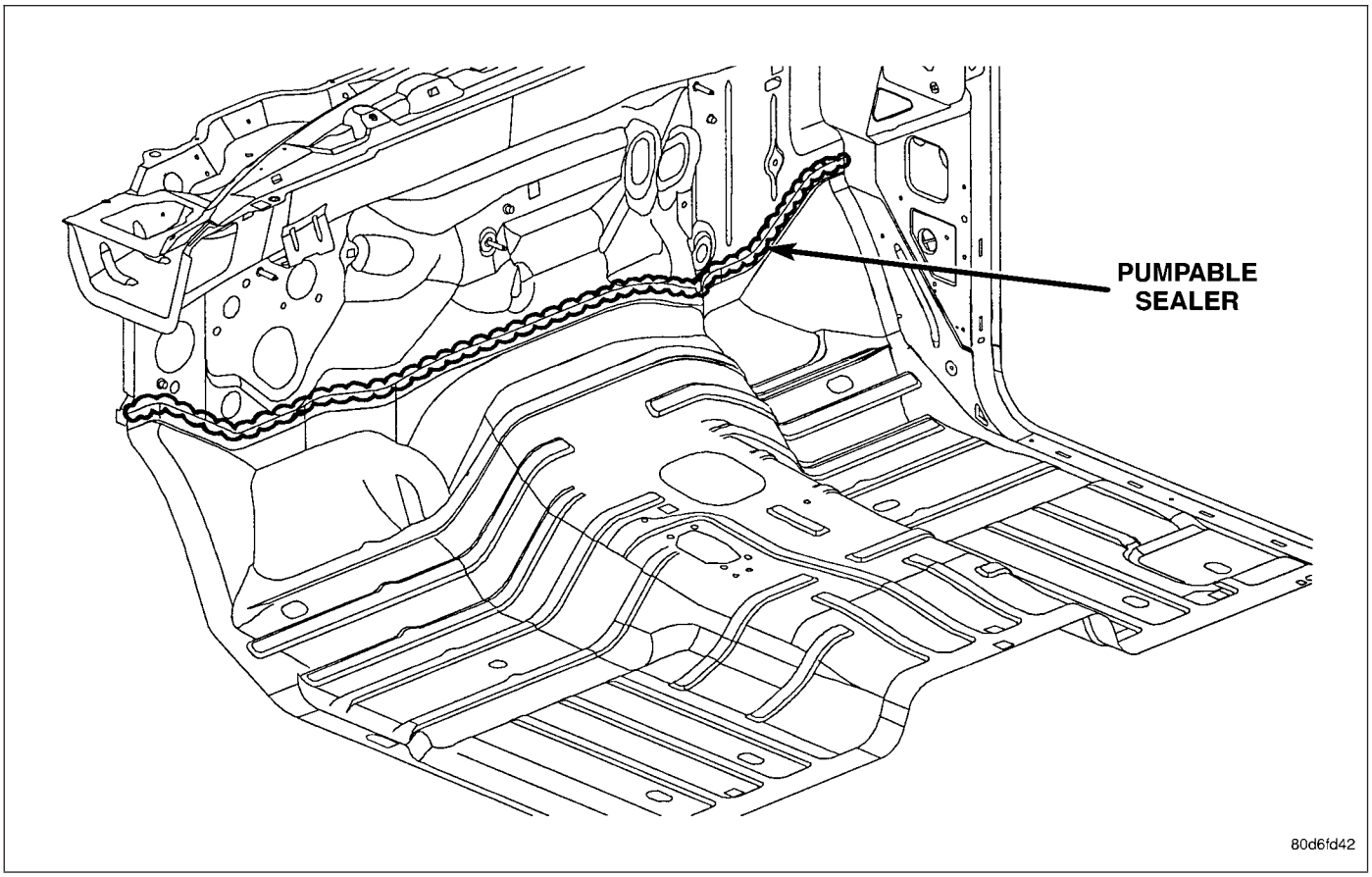

Fig. 14 LOWER DASH PANEL

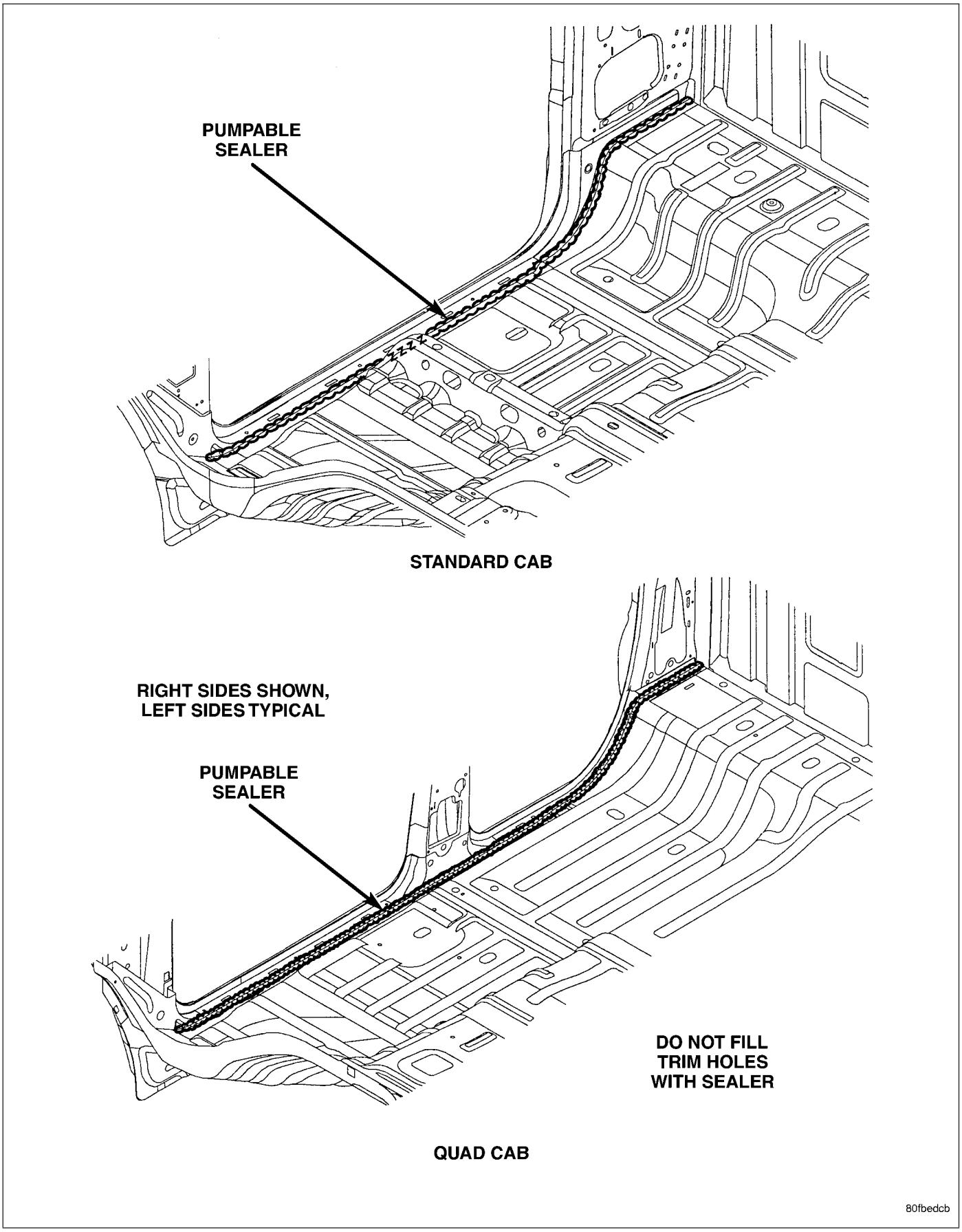

Fig. 15 FLOOR PAN

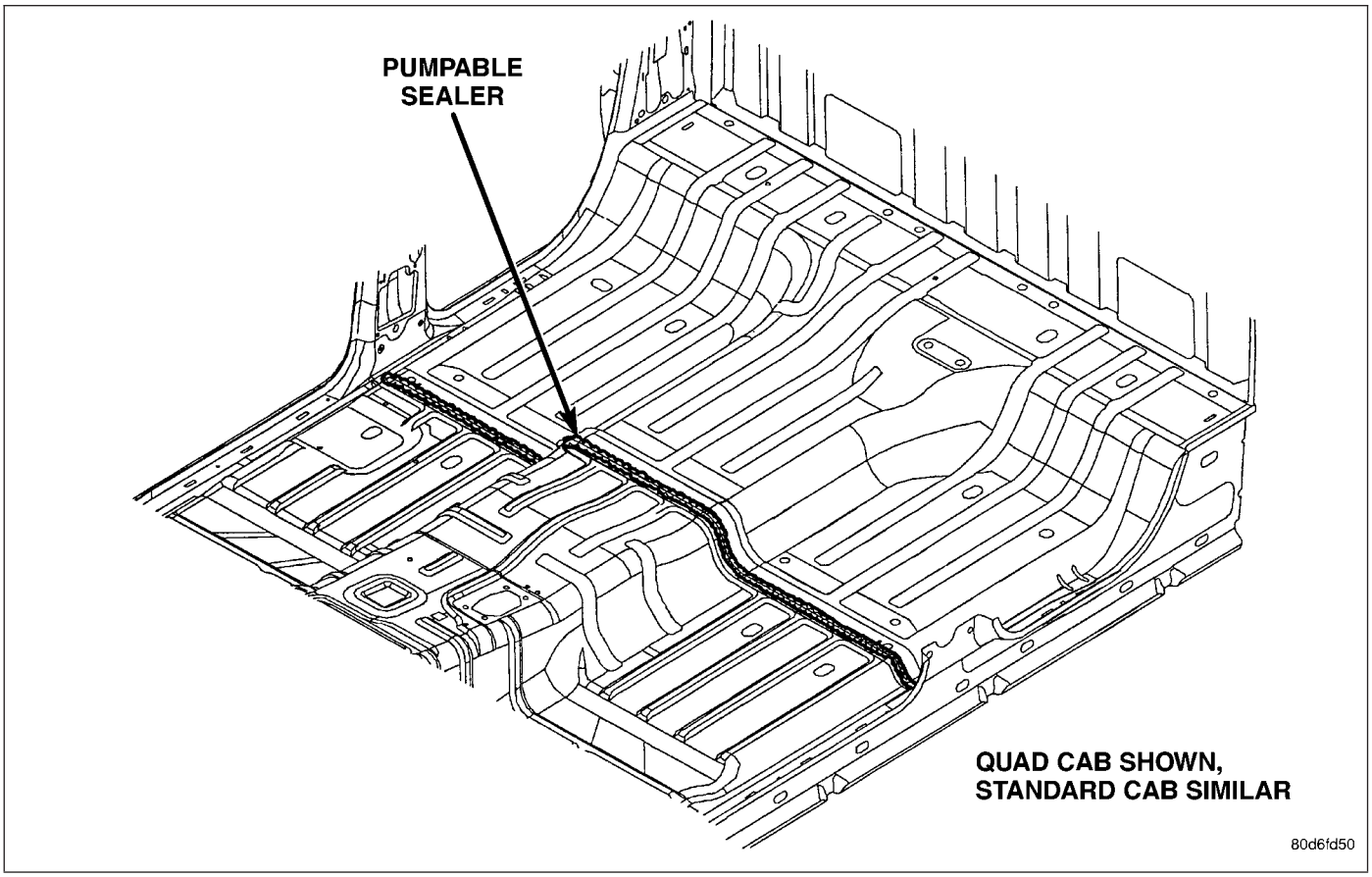

Fig. 16 FRONT FLOOR PAN

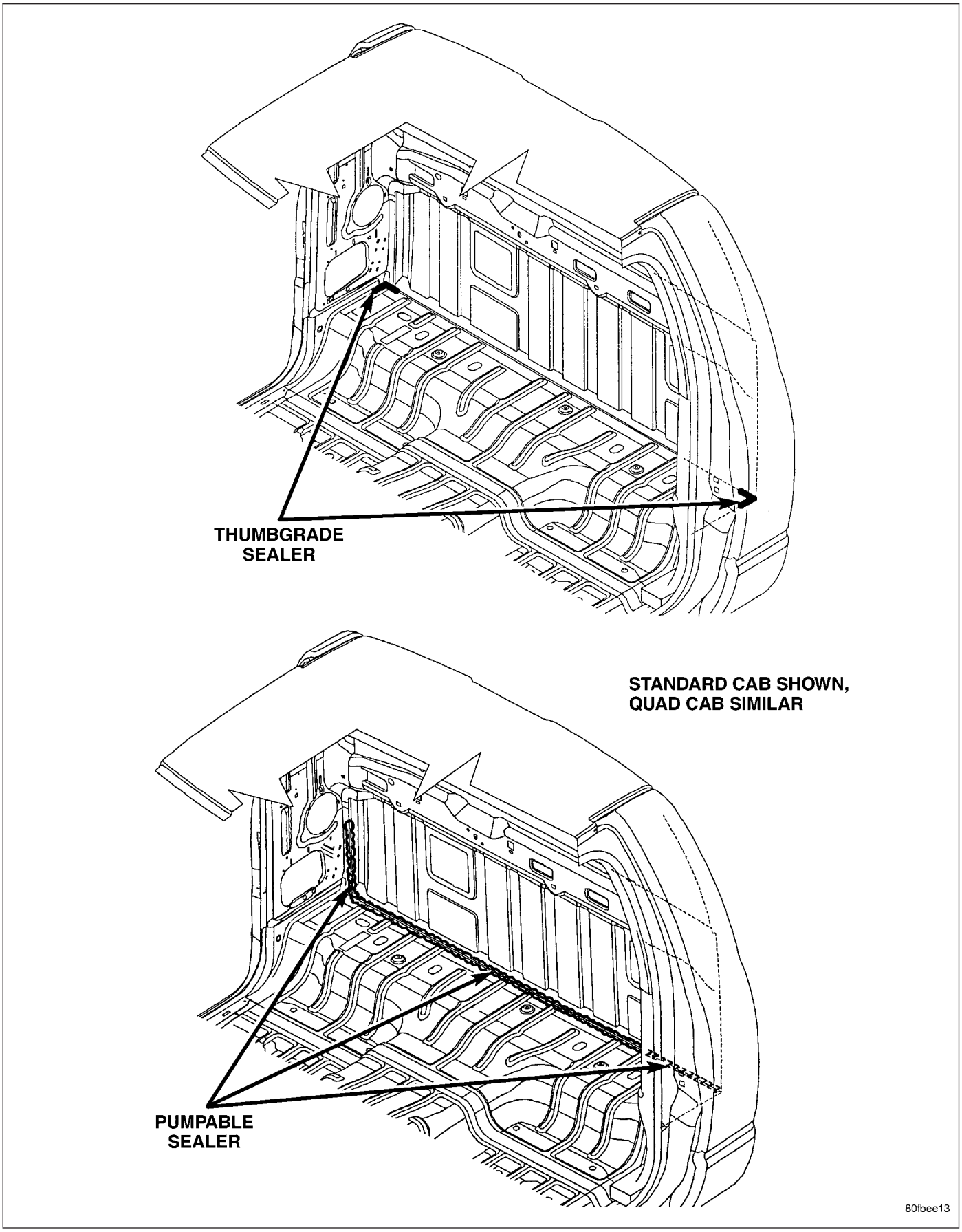

Fig. 17 FLOOR PAN

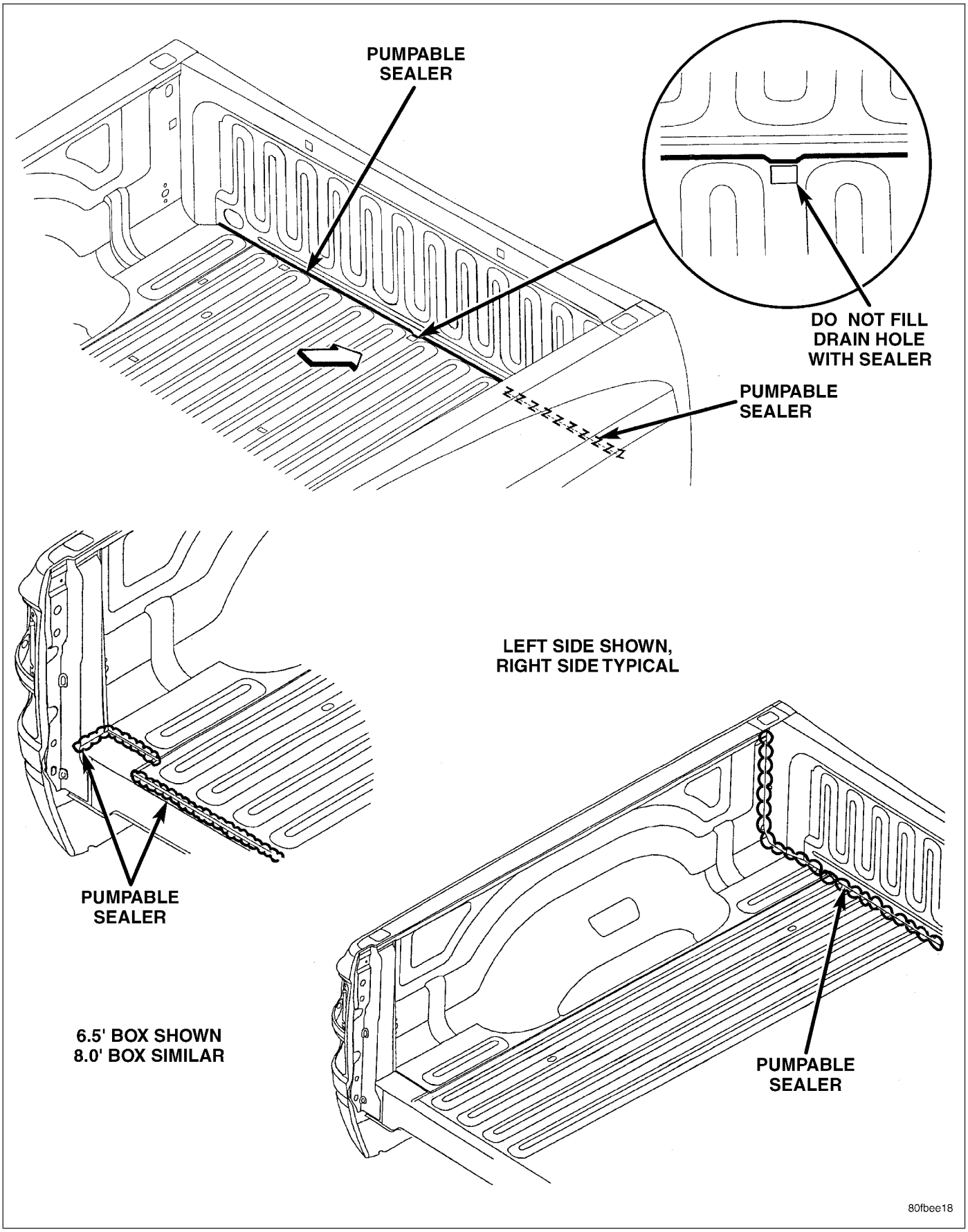

Fig. 18 PICKUP BOX

STRUCTURAL ADHESIVE LOCATIONS

SPECIFICATIONS

INDEX

DESCRIPTION	FIGURE
FLOOR PAN AND SEAT MOUNTING FRONT CROSSMEMBER	19
FRONT FENDER	20
FLOOR PAN	21
INNER WHEELHOUSE TO INNER BOX SIDE PANEL	22
INNER BOX SIDE PANEL TO OUTER BOX SIDE PANEL	23
INNER WHEELHOUSE, CROSSMEMBERS AND CROSSMEMBER END SUPPORT BRACKET TO INNER BOX SIDE PANEL	24
INNER BOX SIDE PANEL TO OUTER BOX SIDE PANEL	25
INNER DOOR PANEL TO OUTER DOOR PANEL - FRONT DOOR (QUAD CAB)	26
INNER DOOR PANEL TO OUTER DOOR PANEL - FRONT DOOR (STANDARD CAB)	27
INNER DOOR PANEL TO OUTER DOOR PANEL - REAR DOOR (QUAD CAB)	28
SILL RAIL - STD CAB	29
SILL RAIL - QUAD CAB	30

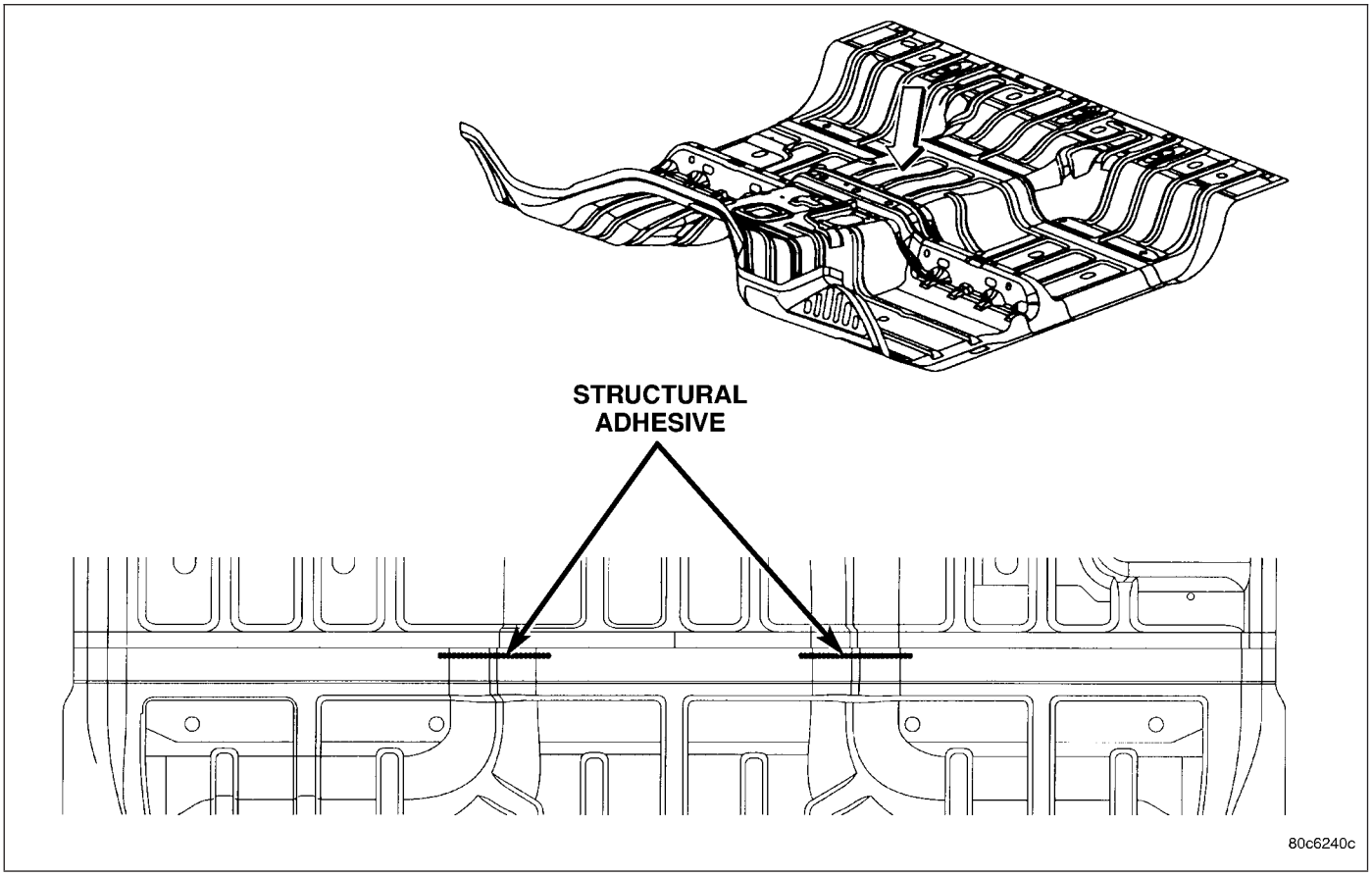

Fig. 19 FLOOR PAN

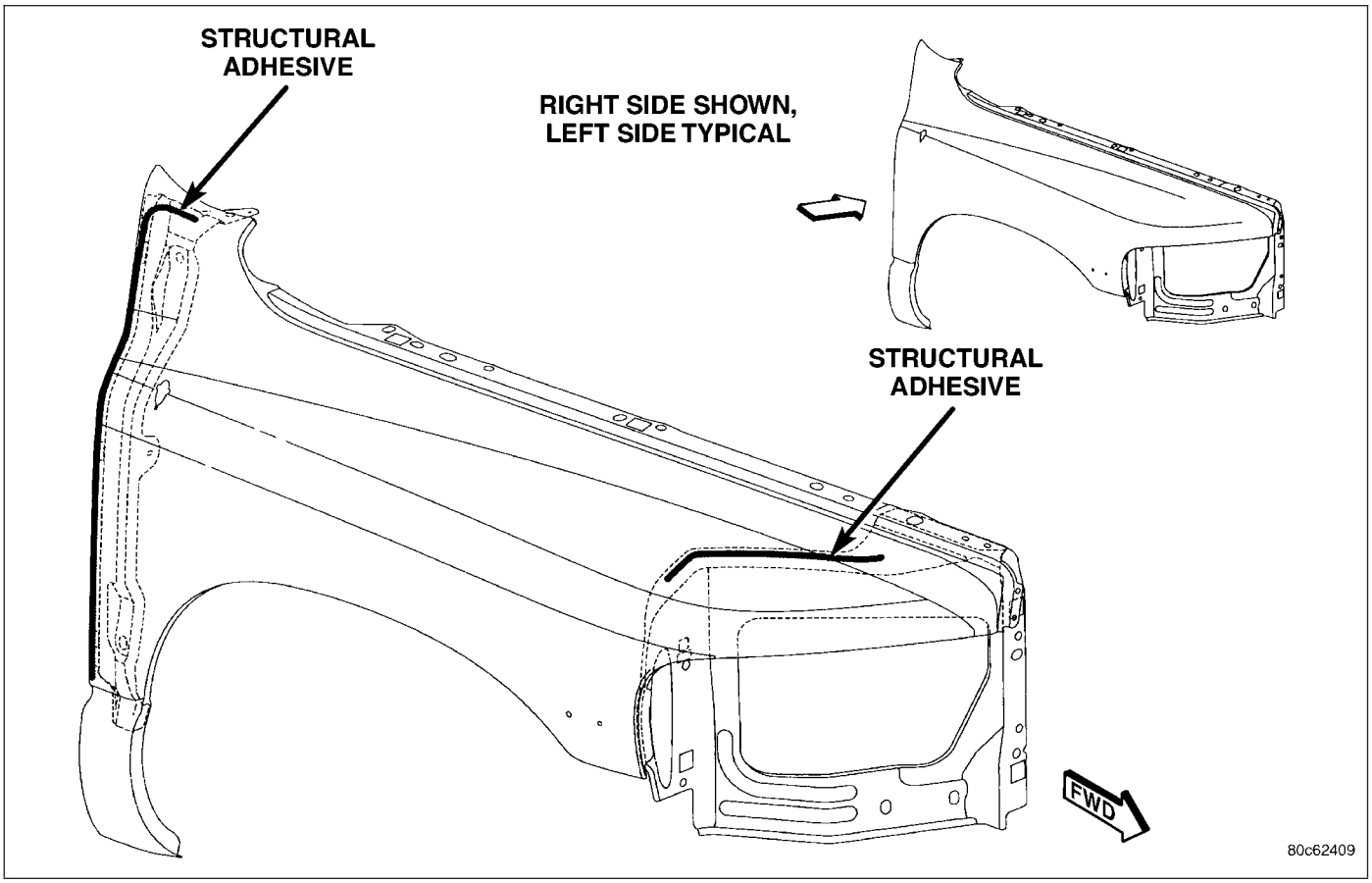

Fig. 20 FRONT FENDER

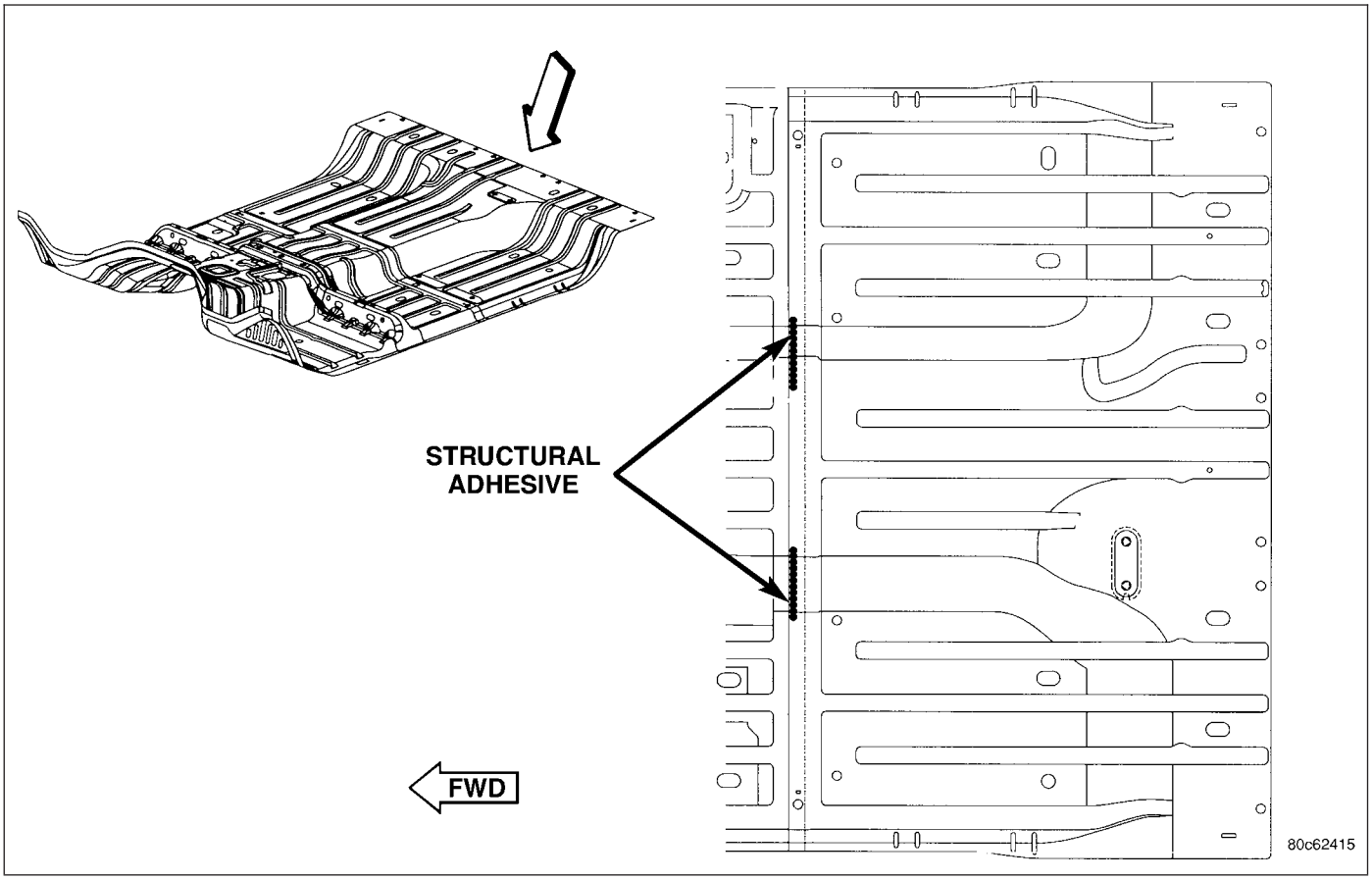

Fig. 21 FLOOR PAN

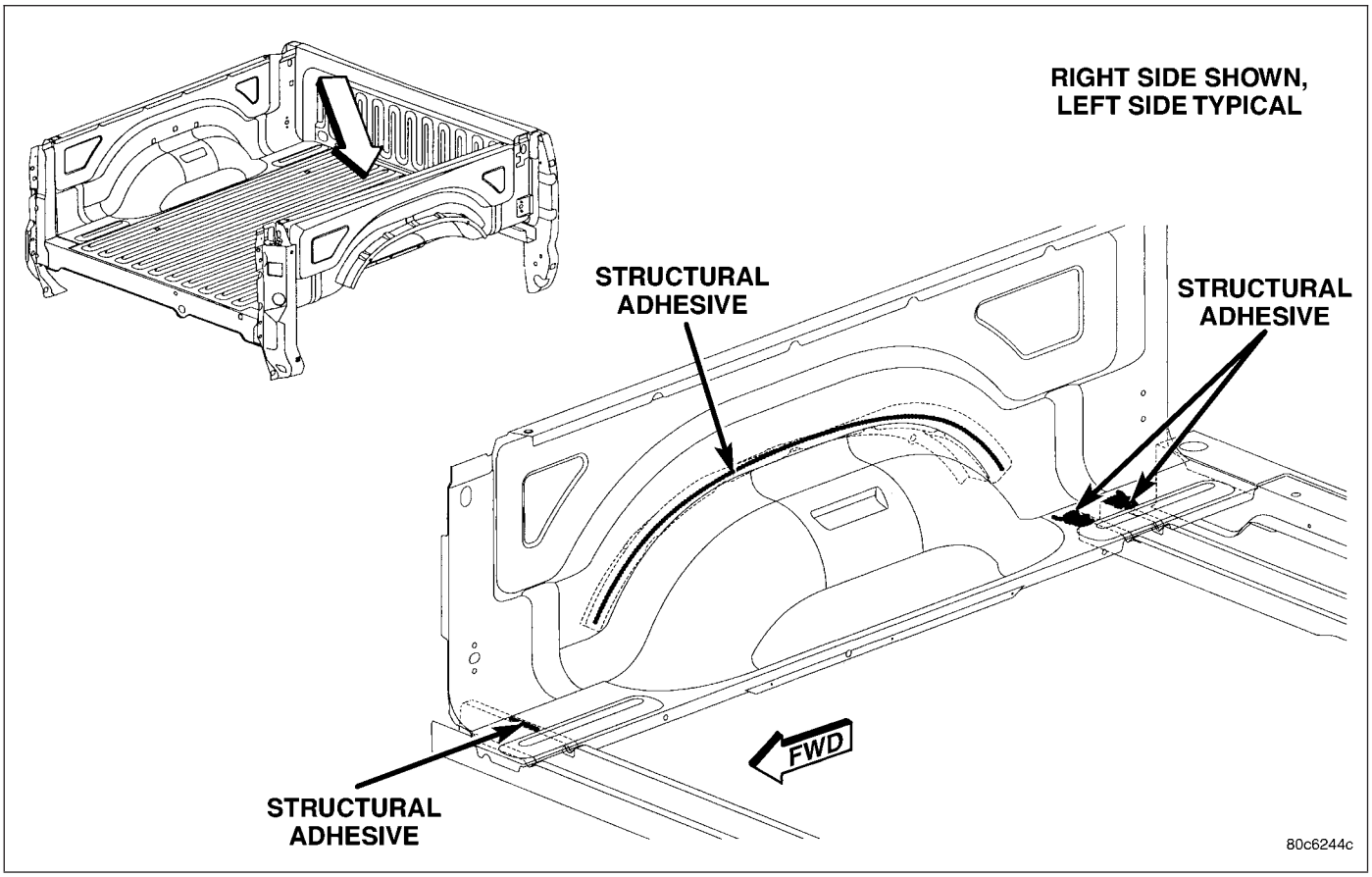

Fig. 22 INNER WHEELHOUSE

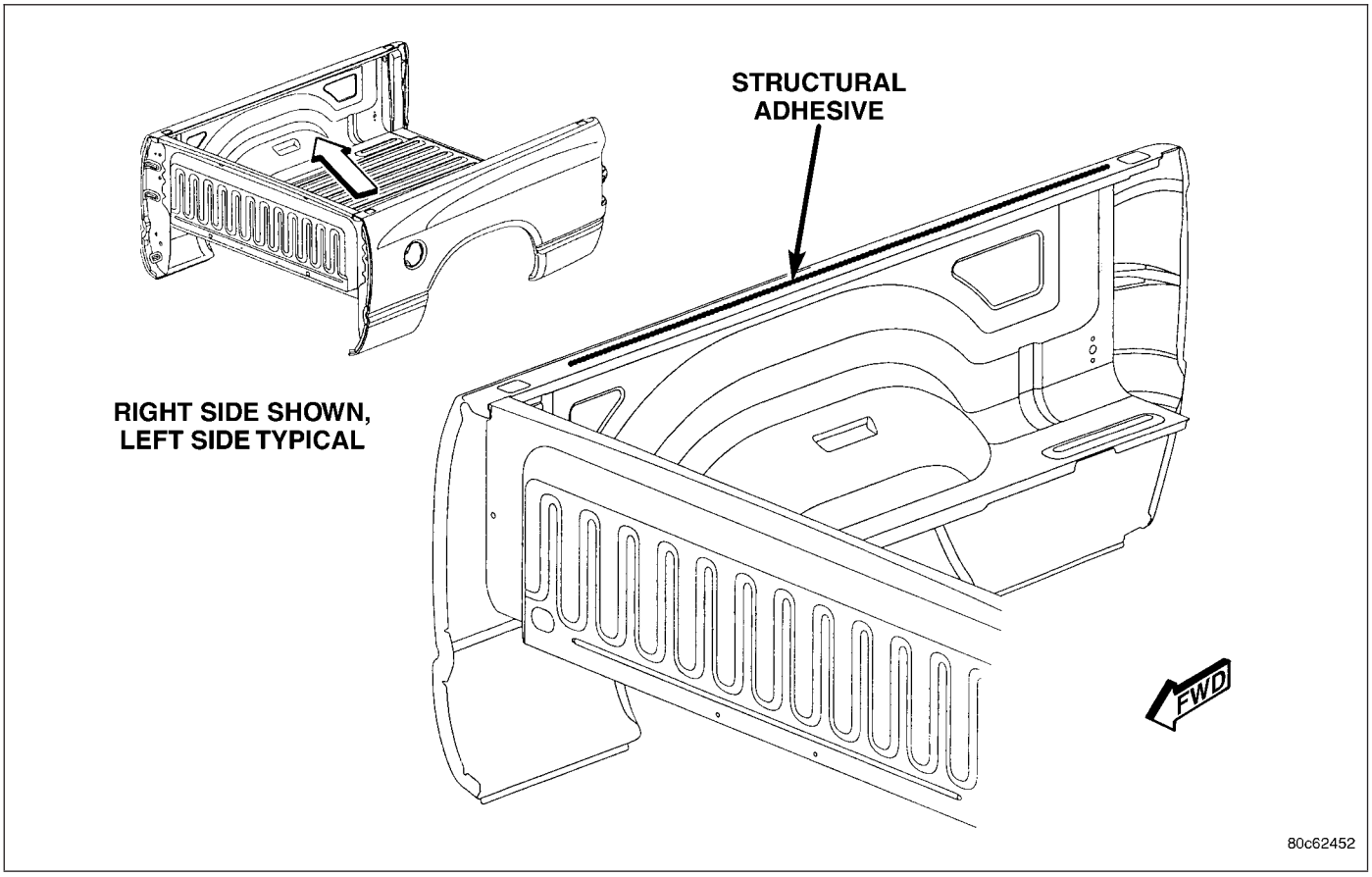

Fig. 23 INNER BOX SIDE PANEL

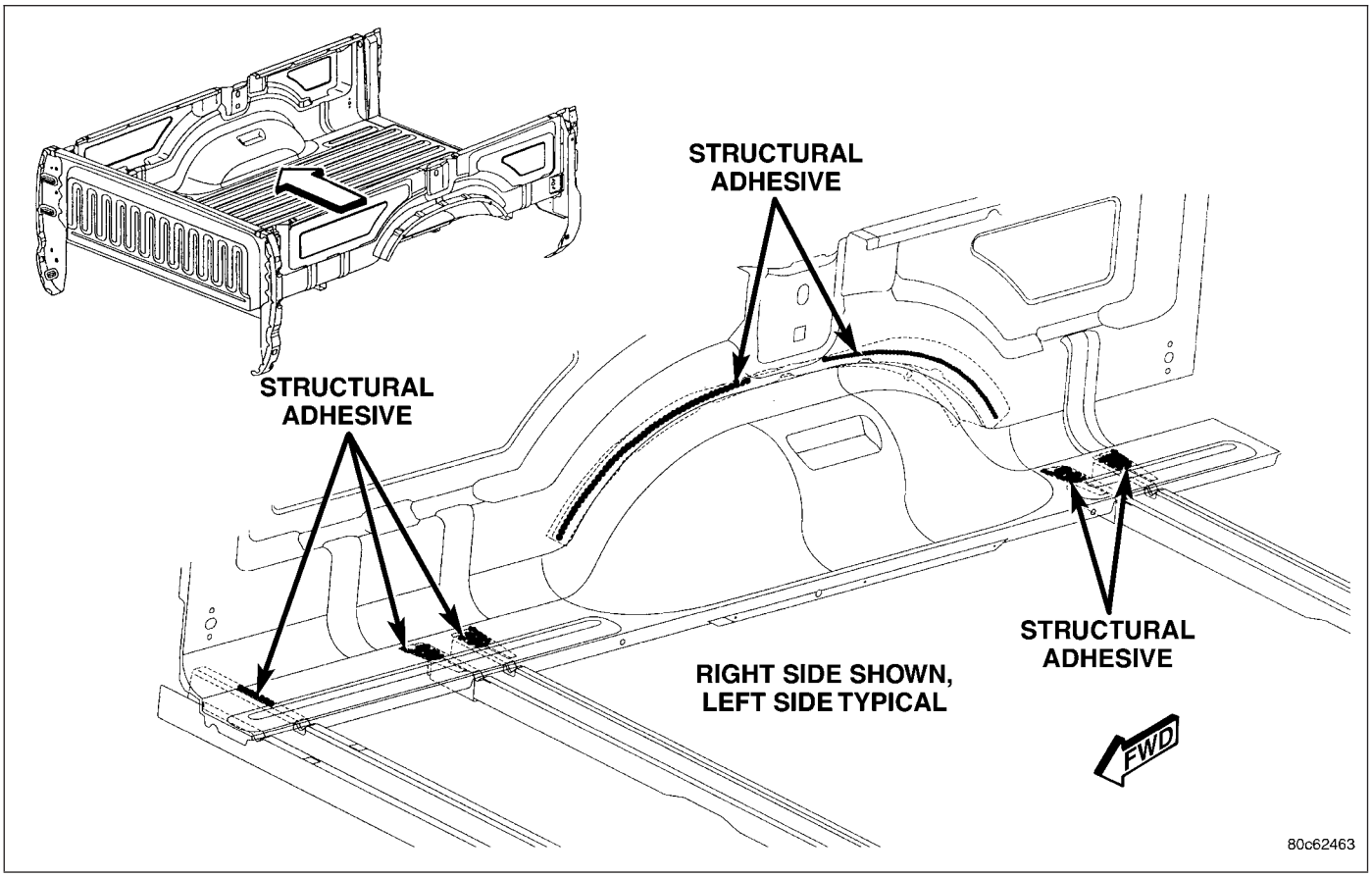

Fig. 24 INNER WHEELHOUSE

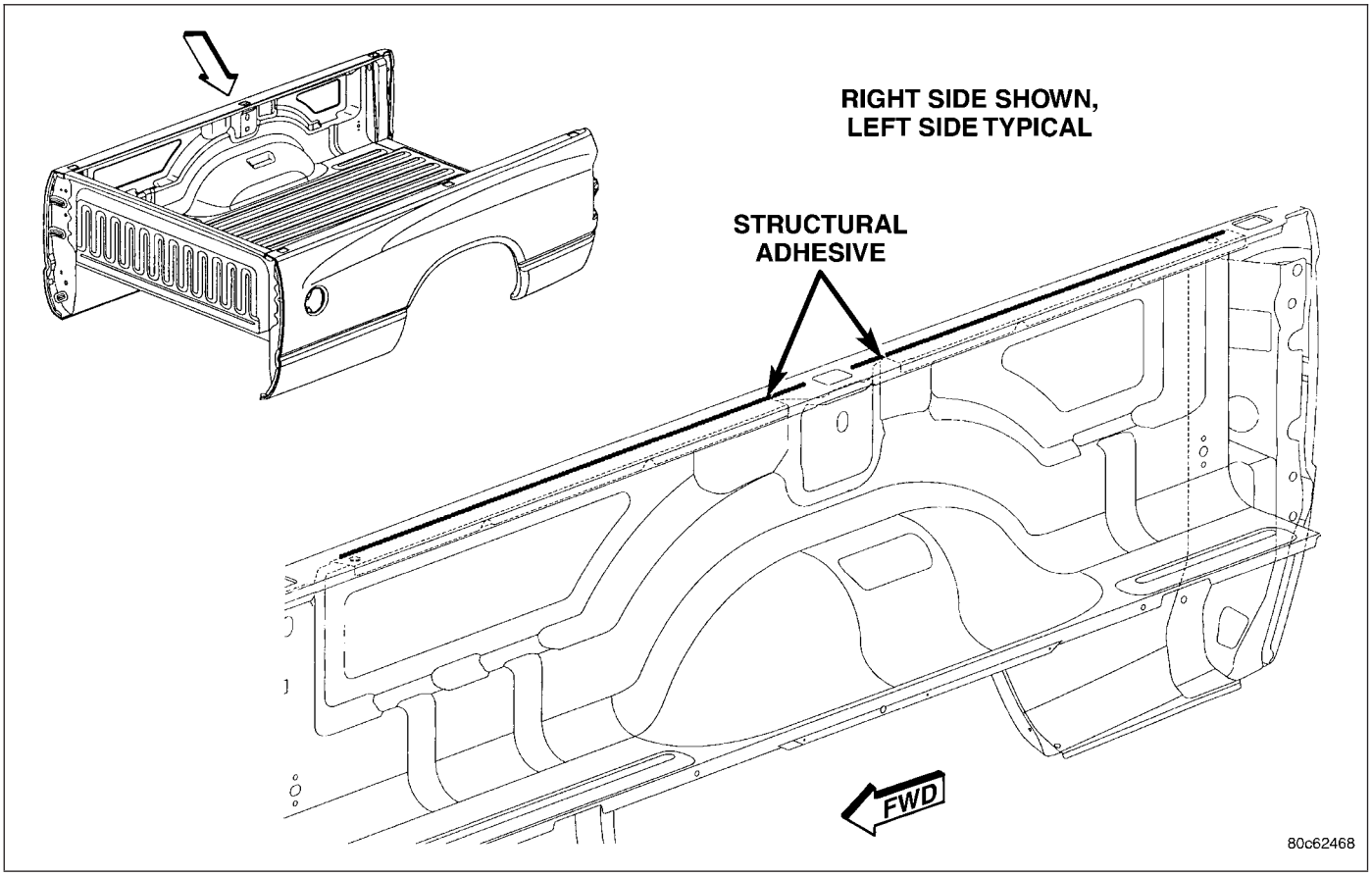

Fig. 25 INNER BOX SIDE PANEL

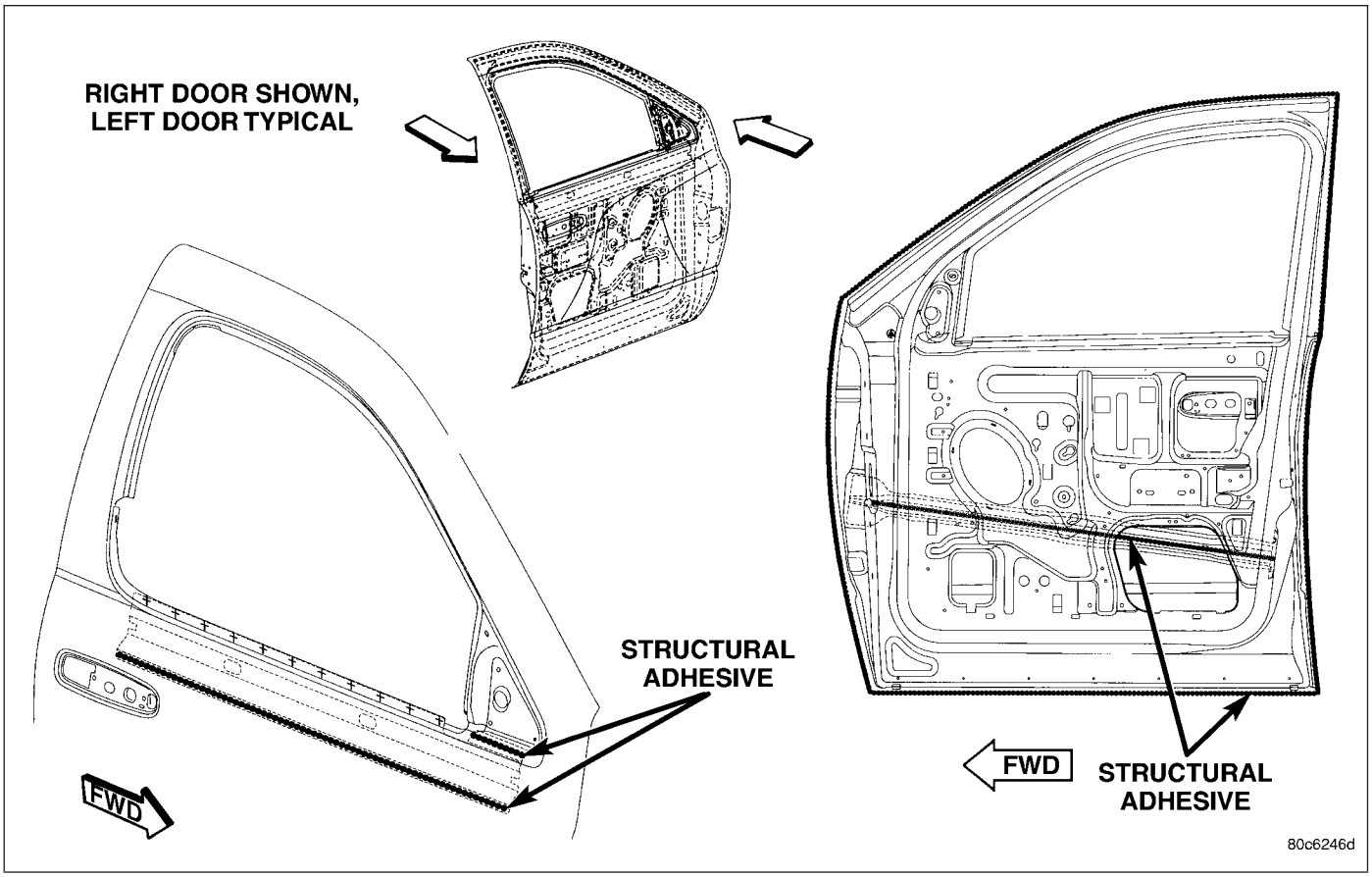

Fig. 26 INNER DOOR PANEL

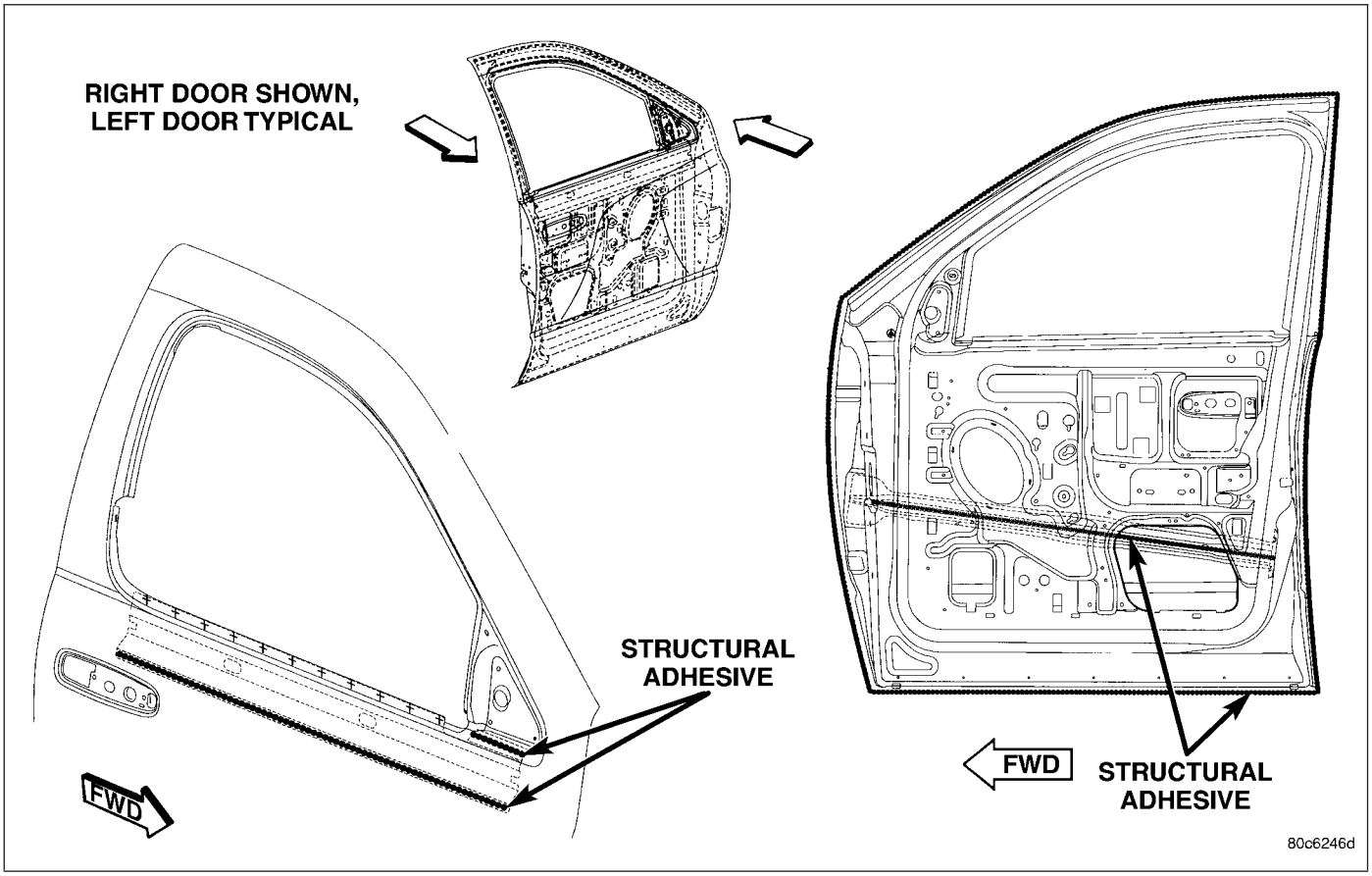

Fig. 27 INNER DOOR PANEL

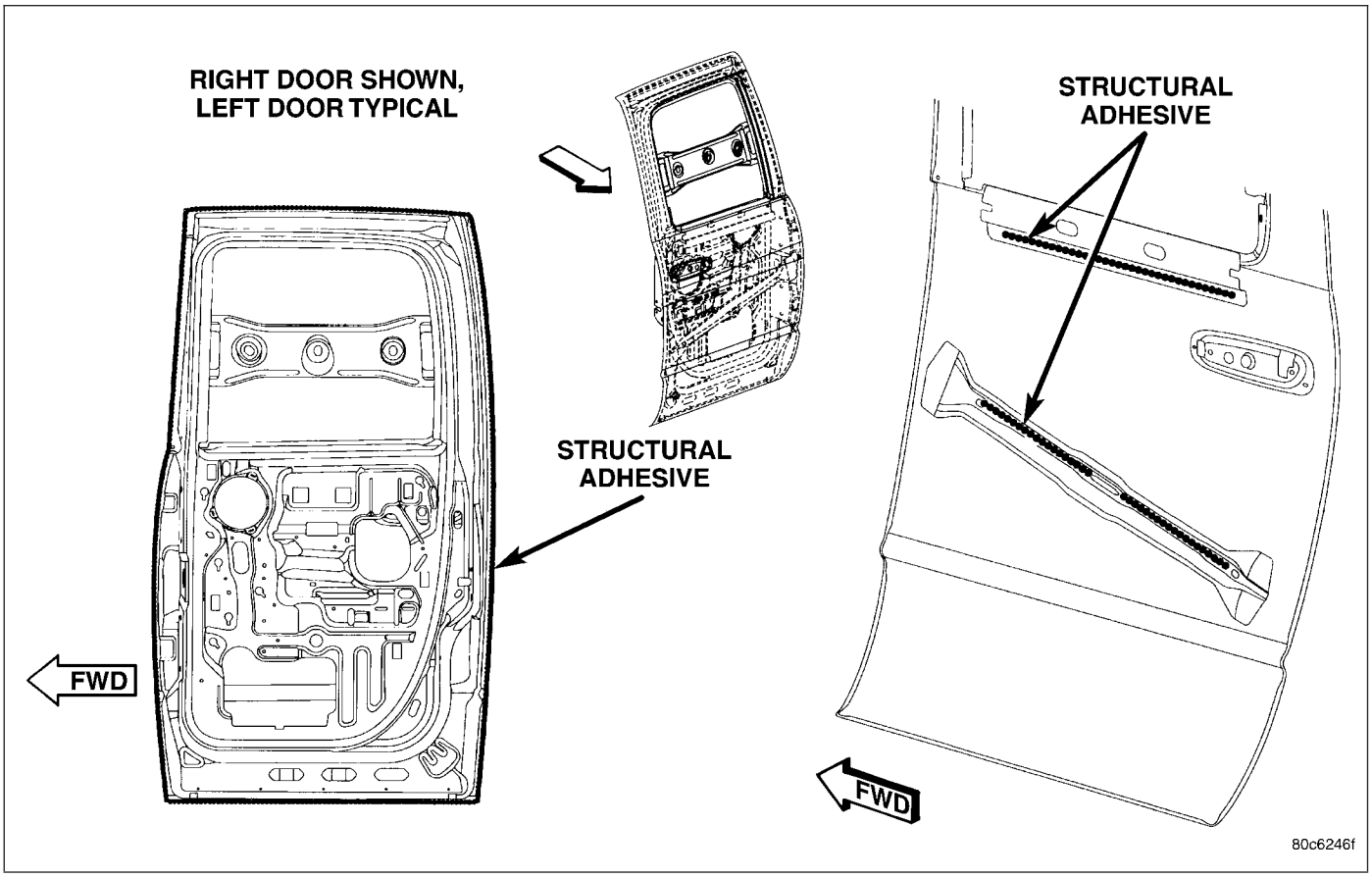

Fig. 28 REAR DOOR INNER PANEL

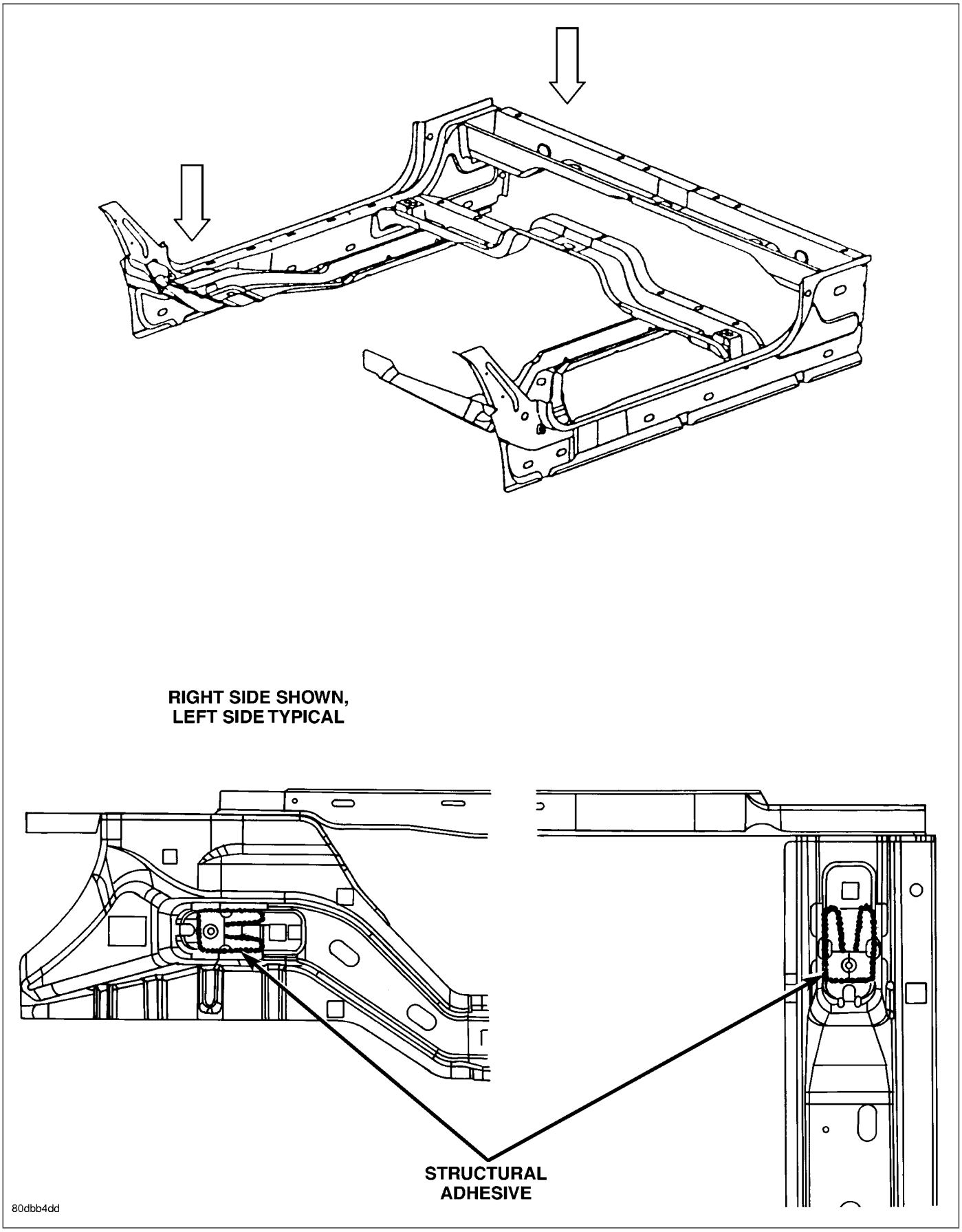

Fig. 29 SILL RAIL - STD CAB

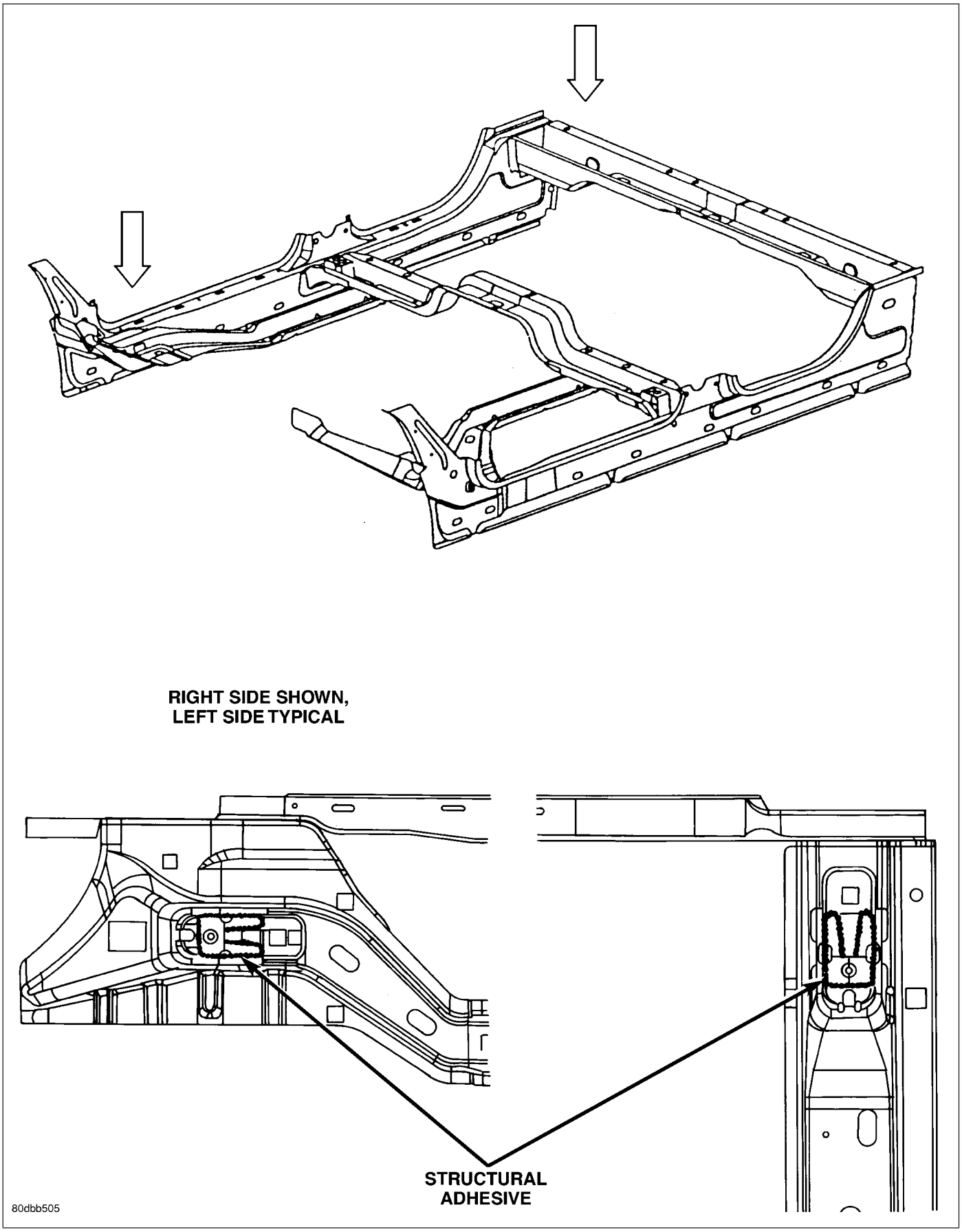

Fig. 30 SILL RAIL - QUAD CAB

WELD LOCATIONS

SPECIFICATIONS

INDEX

DESCRIPTION	FIGURE
FENDER BRACE, CLOSURE TUBE AND FRAME MOUNTING BRACKET TO FRONT FENDER SUPPORT, FRONT FENDER AND RADIATOR TUBE	31
STEERING COLUMN SUPPORT, CONNECTOR WIRING BRACKET AND WELD NUTS TO LOWER PLENUM PANEL	32
WIPER ATTACHING WELD NUTS AND VACUUM RESERVOIR ATTACHING STUDS TO COWL PAR PANEL	33
DASH PANEL TO FRONT FLOOR PAN	34
DASH PANEL TO LOWER PLENUM PANEL	35
LOWER PLENUM PANEL TO COWL BACK PANEL	36
FRONT FENDER AND RADIATOR TUBE DASH PANEL, INSTRUMENT PANEL MOUNTING BRACKET, AND WELD NUTS TO COWL SIDE PANEL - LEFT SIDE	37
DASH PANEL, LOWER PLENUM PANEL AND COWL PANEL BAR TO COWL SIDE PANEL - LEFT SIDE	38
FRONT FENDER AND RADIATOR TUBE DASH PANEL, INSTRUMENT PANEL MOUNTING BRACKET AND WELD NUTS TO COWL SIDE PANEL - RIGHT SIDE	39
DASH PANEL, LOWER PLENUM PANEL AND COWL PANEL BAR TO COWL SIDE PANEL - RIGHT SIDE	40
REINFORCEMENT AND HEADLAMP MOUNTING PANEL TO OUTER FENDER PANEL	41
SEAT MOUNTING FRONT BRACKETS TO SEAT MOUNTING FRONT CROSSMEMBER TO FRONT FLOOR PAN	42
AIR BAG MODULE BRACKET SHIFTER MOUNTING PLATE AND REAR FLOOR PANE TO FRONT FLOOR PAN	43
RIGHT TO LEFT REAR FLOOR CROSSMEMBER AND RIGHT TO LEFT SEAT MOUNTING CROSSMEMBER	44
REAR FLOOR CROSSMEMBER, SEAT MOUNTING CROSSMEMBER AND UNDERBODY SUPPORT TO FLOOR SILL	45
SEAT MOUNTING FRONT CROSSMEMBER TO FRONT FLOOR PAN TO UNDERBODY SUPPORT	46
FRONT SEAT MOUNTING CROSSMEMBERS TO FRONT SEAT MOUNTING BRACKET TO FRONT FLOOR PAN	47
REAR FLOOR CROSSMEMBERS TO REAR FLOOR PAN	48
FLOOR SILL TO FRONT SEAT MOUNTING CROSSMEMBER, FRONT AND REAR FLOOR PAN	49
AIR BAG MODULE BRACKET, SHIFTER MOUNTING PLATE AND FRONT SEAT MOUNTING CROSSMEMBER TO FRONT FLOOR PAN	50
REAR SEAT MIDDLE MOUNTING PLATE TO REAR FLOOR PAN TO FRONT FLOOR PAN	51
REAR FLOOR CROSSMEMBER, SEAT MOUNTING CROSSMEMBER AND UNDERBODY SUPPORT TO FLOOR SILL	52
LEFT REAR CROSSMEMBER TO RIGHT REAR CROSSMEMBER TO REAR FLOOR PAN	53
STORAGE BIN TO RIGHT AND LEFT REAR FLOOR CROSSMEMBER TO REAR FLOOR PAN	54

DESCRIPTION	FIGURE
RIGHT REAR FRONT SEAT MOUNTING CROSSMEMBER TO LEFT REAR FRONT SEAT MOUNTING CROSSMEMBER TO REAR FLOOR PAN	55
FRONT SEAT MOUNTING FRONT CROSSMEMBER AND STORAGE BIN TO FLOOR SILL TO FRONT AND REAR FLOOR PAN	56
FRONT SEAT MOUNTING FRONT CROSSMEMBER TO UNDERBODY SUPPORT TO FRONT FLOOR PAN	57
A-PILLAR REINFORCEMENT TO INNER BODY SIDE APERTURE TO OUTER BODY SIDE APERTURE	58
A-PILLAR REINFORCEMENT TO FRONT APERTURE EXTENSION TO INNER BODY SIDE APERTURE TO OUTER BODY SIDE APERTURE	59
INNER BODY SIDE APERTURE TO OUTER BODY SIDE APERTURE	60
SHOULDER BELT REINFORCEMENT TO INNER BODY SIDE APERTURE TO OUTER BODY SIDE APERTURE	61
FRONT PILLAR TAPPING PLATES TO INNER BODY SIDE APERTURE TO OUTER BODY SIDE APERTURE	62
INNER BODY SIDE APERTURE TO OUTER BODY SIDE APERTURE	63
C-PILLAR BAFFLE AND OUTER BODY SIDE APERTURE TO INNER BODY SIDE APERTURE	64
A-PILLER REINFORCEMENT TO INNER BODY SIDE APERTURE TO OUTER BODY SIDE APERTURE	65
FRONT EXTENSION PLATE TO INNER BODY SIDE APERTURE TO OUTER BODY SIDE APERTURE TO A-PILLAR REINFORCEMENT	66
OUTER BODY SIDE APERTURE TO INNER BODY SIDE APERTURE	67
B-PILLAR REINFORCEMENT TO INNER BODY SIDE APERTURE TO OUTER BODY SIDE APERTURE	68
UPPER B-PILLAR TAPPING PLATE AND LOWER B-PILLAR TAPPING PLATE TO OUTER BODY SIDE APERTURE	69
UPPER A-PILLAR TAPPING PLATE AND LOWER A-PILLAR TAPPING PLATE TO INNER BODY SIDE APERTURE	70
SEAT BELT MOUNTING PLATES AND REINFORCEMENTS TO INNER BODY SIDE APERTURE	71
OUTER BODY SIDE APERTURE TO INNER BODY SIDE APERTURE	72
C-PILLAR REINFORCEMENTS AND SHOULDER BELT MOUNTING REINFORCEMENT TO INNER BODY SIDE APERTURE TO OUTER BODY SIDE APERTURE	73
SEAT BELT RETRACTOR PLATE TO FLOOR SILL TO INNER BODY SIDE APERTURE TO OUTER BODY SIDE APERTURE	74
FLOOR SILL TO INNER BODY SIDE APERTURE TO OUTER BODY SIDE APERTURE	75
BACK REINFORCEMENT AND CAB BACK PANEL TO REAR FLOOR CROSSMEMBER AND INNER BODY SIDE APERTURE TO OUTER BODY SIDE APERTURE	76
CAB BACK REINFORCEMENT TO CAB BACK PANEL (CHILD TETHERS)	77
COWL SIDE PANEL TO INNER BODY SIDE APERTURE TO OUTER BODY SIDE APERTURE	78
OUTER ROOF PANEL TO OUTER BODY SIDE APERTURE	79
ROOF HEADER TO OUTER ROOF PANEL TO A-PILLAR REINFORCEMENT TO INNER BODY SIDE APERTURE TO OUTER BODY SIDE APERTURE	80
REAR ROOF HEADER TO OUTER ROOF PANEL TO INNER BODY SIDE APERTURE TO OUTER BODY SIDE APERTURE	81
OUTER BODY SIDE APERTURE TO CAB BACK PANEL TO FLOOR SILL, INNER BODY SIDE APERTURE TO FLOOR SILL	82

DESCRIPTION	FIGURE
OUTER BODY SIDE APERTURE TO INNER BODY SIDE APERTURE TO FLOOR SILL	83
REAR FLOOR CROSSMEMBER AND CAB BACK REINFORCEMENT TO CAB BACK PANEL TO INNER BODY SIDE APERTURE	84
CAB BACK REINFORCEMENT TO CAB BACK PANEL	85
CENTER SHOULDER BELT REINFORCEMENT AND TAPPING PLATES TO CAB BACK REINFORCEMENT	86
A-PILLAR REINFORCEMENT TO COWL SIDE PANEL TO OUTER BODY SIDE APERTURE/APERTURE EXTENSION TO COWL SIDE PANEL	87
B-PILLAR REINFORCEMENT TO OUTER ROOF PANEL TO OUTER BODY SIDE APERTURE	88
FRONT ROOF HEADER TO OUTER ROOF PANEL/ROOF BOW TO INNER BODY SIDE APERTURE/FRONT ROOF HEADER TO A-PILLAR REINFORCEMENT	89
INNER BODY SIDE APERTURE TO REAR ROOF HEADER AND OUTER BODY SIDE APERTURE TO OUTER ROOF PANEL	90
FRONT CROSSMEMBER, WHEELHOUSE CROSSMEMBER AND BRACKET SUPPORT CROSSMEMBER TO BOX FLOOR PAN	91
LONG CROSSMEMBER AND FLOOR BOX CROSS SILL TO BOX FLOOR PAN	92
TAPPING PLATES AND SUPPORT BRACKETS TO REAR CROSS BOX SILL, FRONT WHEELHOUSE, LONG AND BRACKET SUPPORT CROSSMEMBERS	93
STAKE POCKET REINFORCEMENTS AND TIE DOWN REINFORCEMENTS TO INNER BOX SIDE PANEL	94
OUTER BOX SIDE REINFORCEMENT BRACES NUT PLATES TO OUTER BOX SIDE PANEL MOUNTING	95
OUTER WHEELHOUSE TO OUTER BOX SIDE PANEL	96
WELD NUT STRIKER CAGE NUT, OUTER BOX SIDE PANEL AND NUT PLATE TO BOX SIDE TAILGATE REINFORCEMENT	97
FRONT BOX PANEL TO FRONT INNER STAKE POCKET REINFORCEMENT TO FRONT BOX SIDE PANEL	98
FRONT CROSSMEMBER TO FRONT BOX SIDE PANEL AND BOX FLOOR PANEL TO BOX FRONT PANEL	99
BOX FLOOR PANEL AND INNER WHEELHOUSE PANEL TO INNER BOX SIDE PANEL	100
FRONT CROSSMEMBER AND END SUPPORT BRACKET TO LONG CROSSMEMBER TO INNER BOX SIDE PANEL/STAKE POCKET REINFORCEMENT AND BOX FLOOR SILL TO OUTER TAILGATE PILLAR TO INNER TAILGATE PILLAR	101
STAKE POCKET REINFORCEMENT AND BOX FLOOR SILL CROSSMEMBER TO INNER TAILGATE PILLAR	102
INNER TAILGATE PILLAR PANEL TO INNER BOX SIDE PANEL TO TIE DOWN MOUNTING REINFORCEMENT	103
BOX FLOOR SILL CROSSMEMBER TO INNER BOX SIDE PANEL	104
INNER TAILGATE PILLAR TO TAILGATE BOX SIDE REINFORCEMENT TO OUTER TAILGATE PILLAR	105
BOX SIDE PANEL AND OUTER TAILGATE PILLAR TO OUTER BOX SIDE PANEL	106
FRONT BOX PANEL TO OUTER BOX SIDE PANEL	107
INNER BOX SIDE PANEL AND INNER TAILGATE PILLAR TO OUTER BOX SIDE PANEL	108
OUTER WHEELHOUSE PANEL TO INNER WHEELHOUSE PANEL	109
FRONT CROSSMEMBER, LONG CROSSMEMBER, AND WHEELHOUSE CROSSMEMBER TO FLOOR PAN	110
WHEELHOUSE CROSSMEMBER, LONG CROSSMEMBER AND REAR CROSS BOX SILL TO BOX FLOOR PAN	111

DESCRIPTION	FIGURE
FRONT AND CENTER STAKE POCKET REINFORCEMENTS AND TIE DOWN MOUNTING REINFORCEMENT TO INNER BOX SIDE PANEL	112
OUTER FRONT AND CENTER STAKE POCKET REINFORCEMENT AND OUTER TIE DOWN MOUNTING REINFORCEMENT TO INNER BOX SIDE PANEL	113
OUTER WHEELHOUSE AND OUTER BRACE MOUNTING REINFORCEMENT TO OUTER BOX SIDE PANEL	114
TAILGATE BOX SIDE PIVOT REINFORCEMENT TO OUTER BOX SIDE PANEL	115
FRONT BOX SIDE PANEL TO FRONT CROSSMEMBER TO INNER BOX SIDE PANEL	116
FRONT BOX SIDE PANEL TO BOX FRONT PANEL TO INNER BOX SIDE PANEL/ FRONT STAKE POCKET REINFORCEMENT TO FRONT BOX SIDE PANEL TO BOX FRONT PANEL	117
BOX FRONT PANEL TO BOX FLOOR PANEL	118
BOX FLOOR PANEL TO INNER BOX SIDE PANEL	119
LONG CROSSMEMBERS TO CROSSMEMBER END SUPPORT BRACKETS TO INNER BOX SIDE PANEL	120
INNER WHEELHOUSE PANEL TO INNER BOX SIDE PANEL	121
TAILGATE PILLAR OUTER PANEL TO TAILGATE PILLAR INNER PANEL TO INNER BOX SIDE PANEL	122
REAR SILL CROSS BOX TO TAILGATE PILLAR OUTER PANEL AND INNER BOX SIDE PANEL	123
OUTER BOX SIDE PANEL TO BOX FRONT PANEL AND BOX FRONT SIDE PANEL	124
STAKE POCKET REINFORCEMENTS TO INNER BOX SIDE PANEL TO OUTER BOX SIDE PANEL	125
TAILGATE PIVOT REINFORCEMENT AND INNER TAILGATE PILLAR TO INNER BOX SIDE PANEL TO OUTER BOX SIDE PANEL	126
INNER WHEELHOUSE TO OUTER WHEELHOUSE/TAILGATE PIVOT REINFORCEMENT TO OUTER TAILGATE PILLAR TO INNER TAILGATE PILLAR	127
OUTER TAILGATE PILLAR TO OUTER BOX SIDE PANEL	128
INNER DOOR PANEL TO OUTER DOOR PANEL - FRONT DOOR (QUAD CAB)	129
INNER DOOR PANEL TO OUTER DOOR PANEL - FRONT DOOR (STANDARD CAB)	130
INNER DOOR PANEL TO OUTER DOOR PANEL - REAR DOOR (QUAD CAB)	131

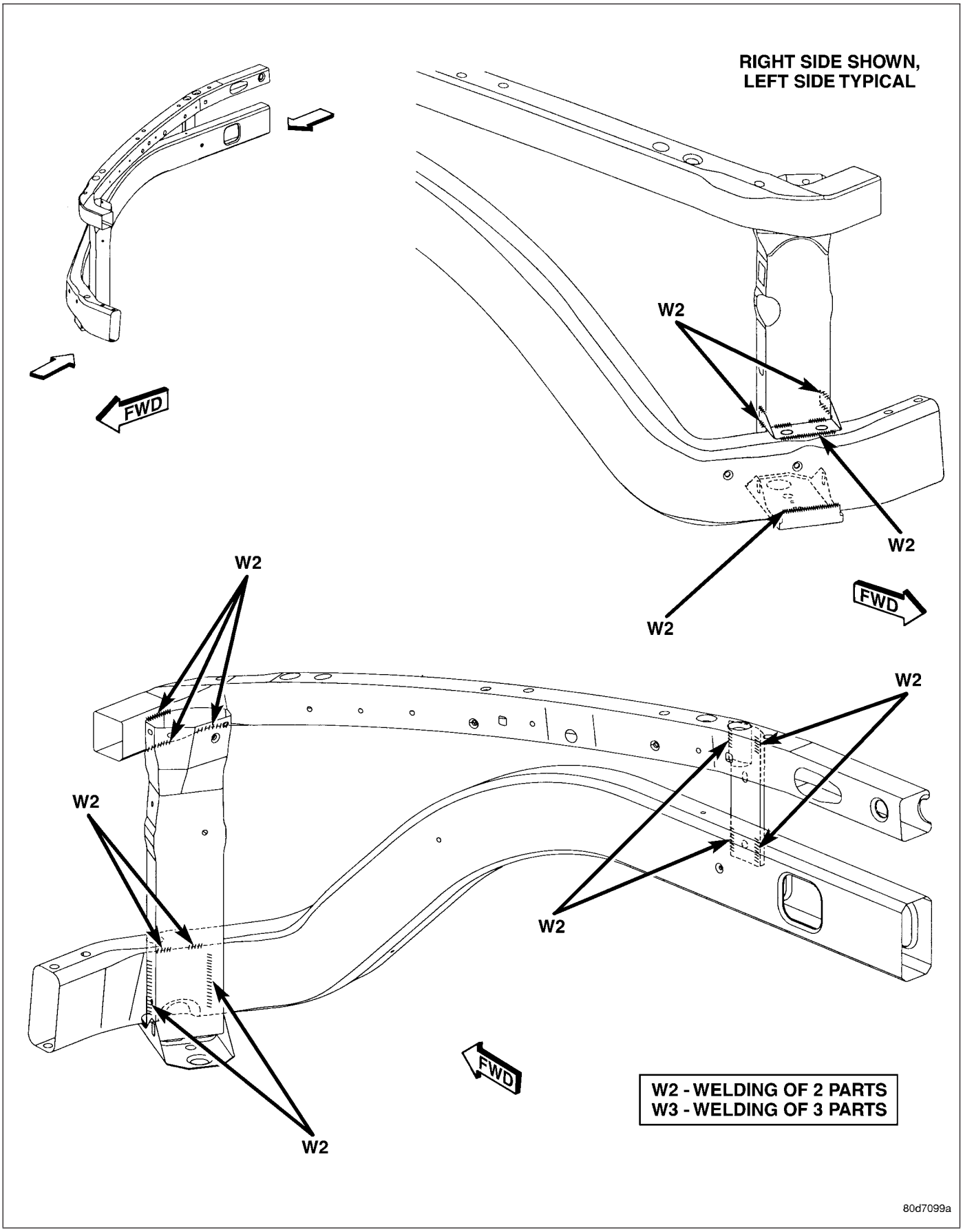

Fig. 31 FENDER BRACE

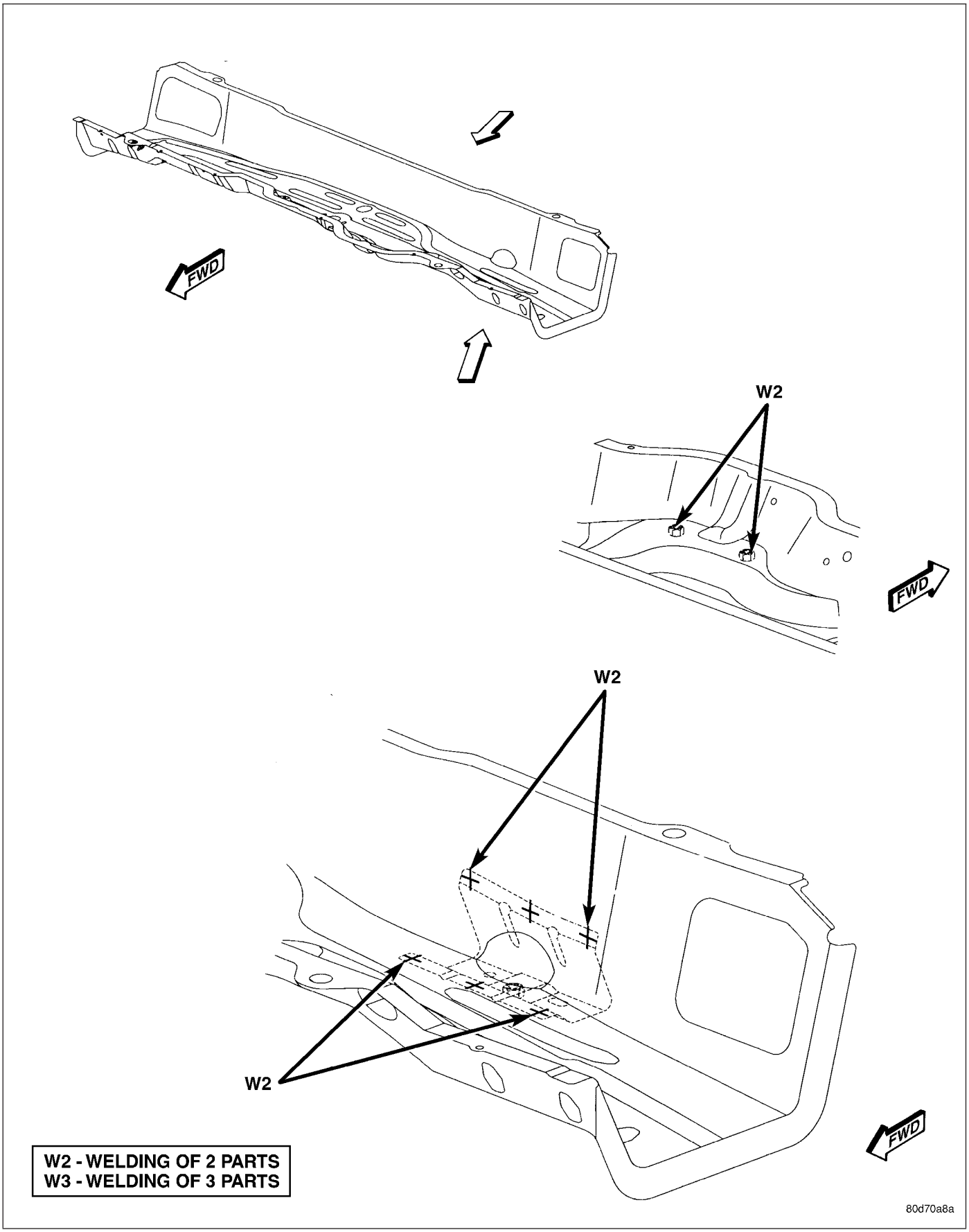

Fig. 32 STEERING COLUMN SUPPORT

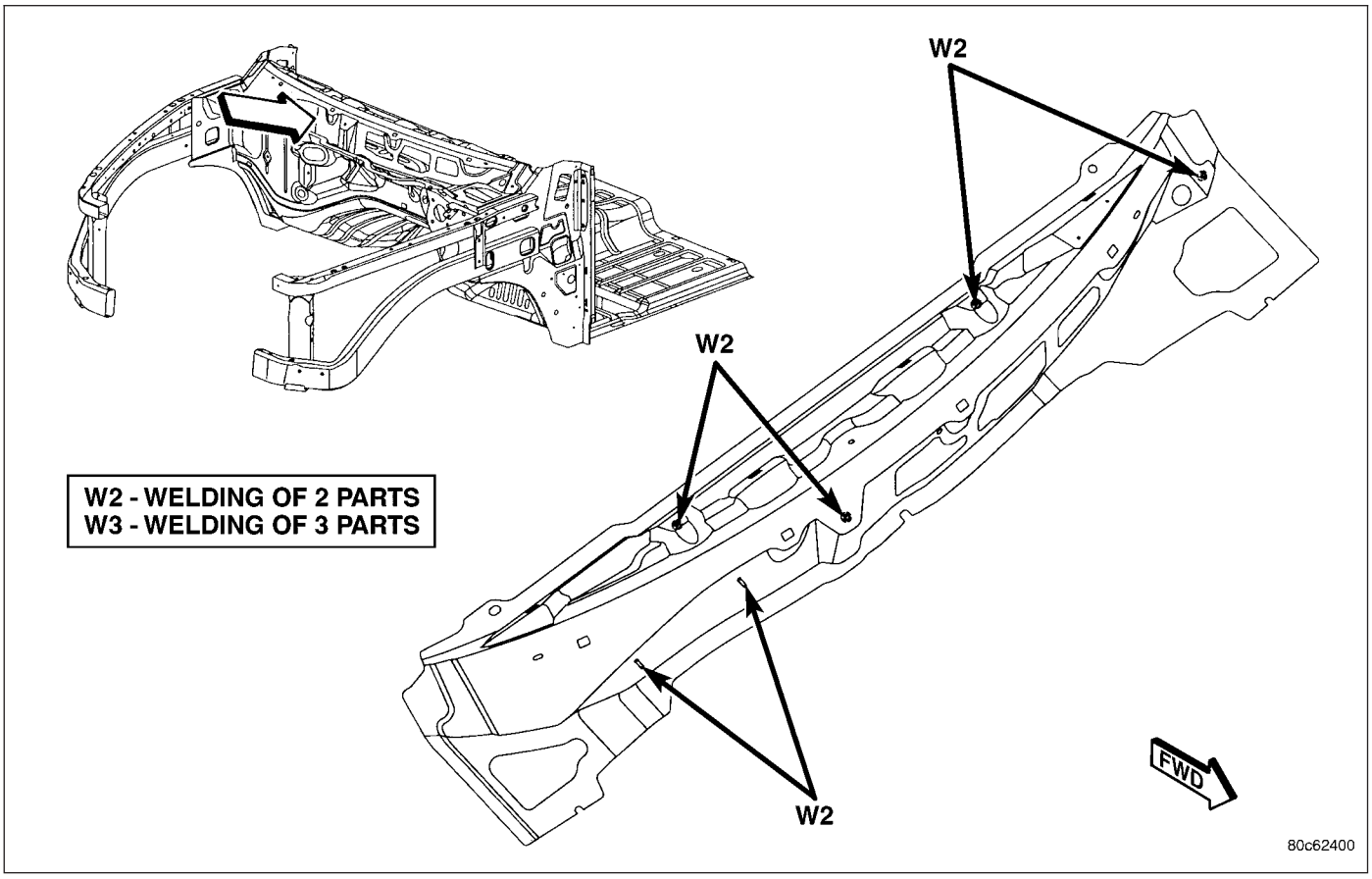

Fig. 33 WIPER ATTACHING WELD NUTS

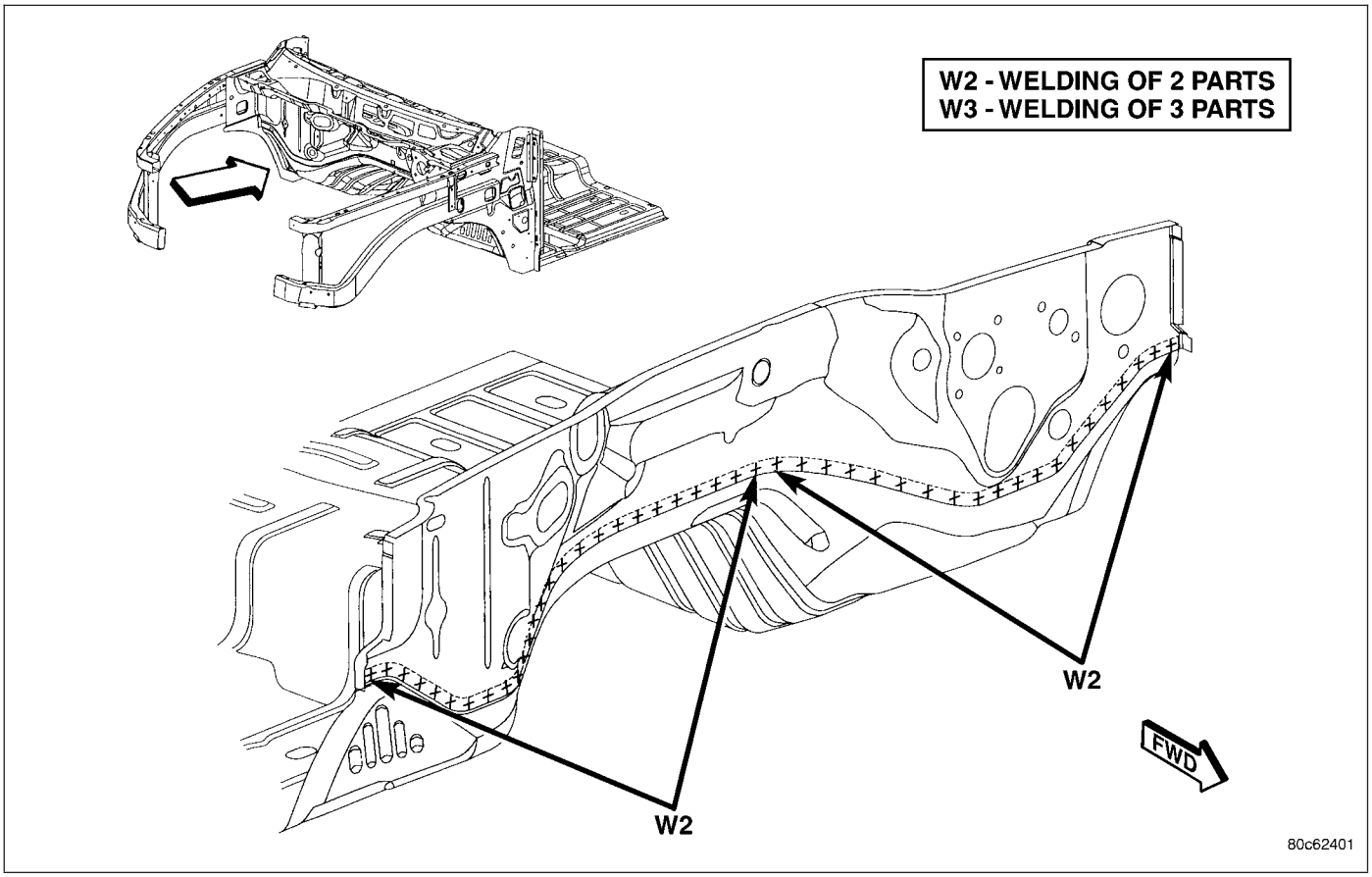

Fig. 34 DASH PANEL

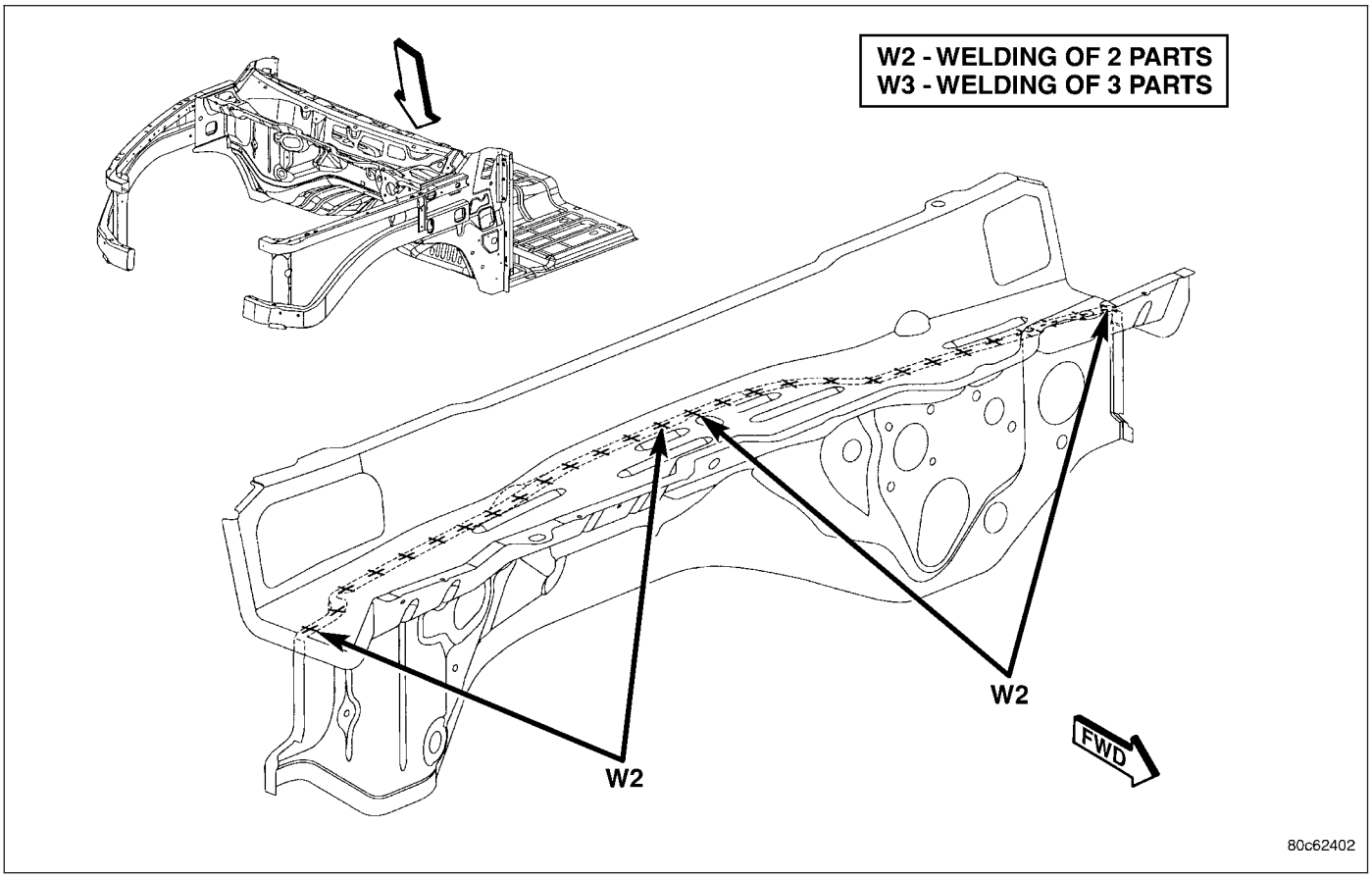

Fig. 35 DASH PANEL

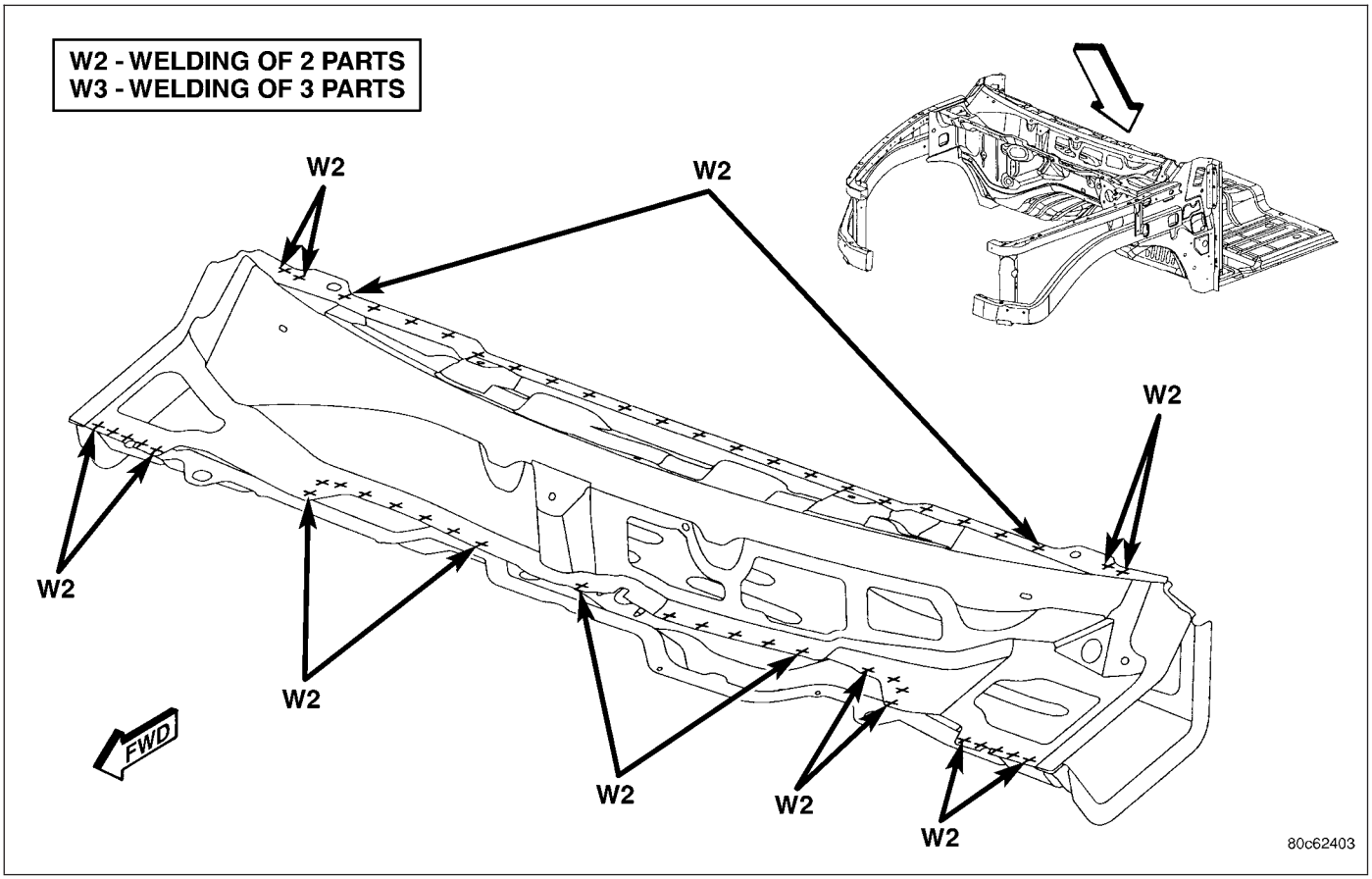

Fig. 36 LOWER PLENUM PANEL

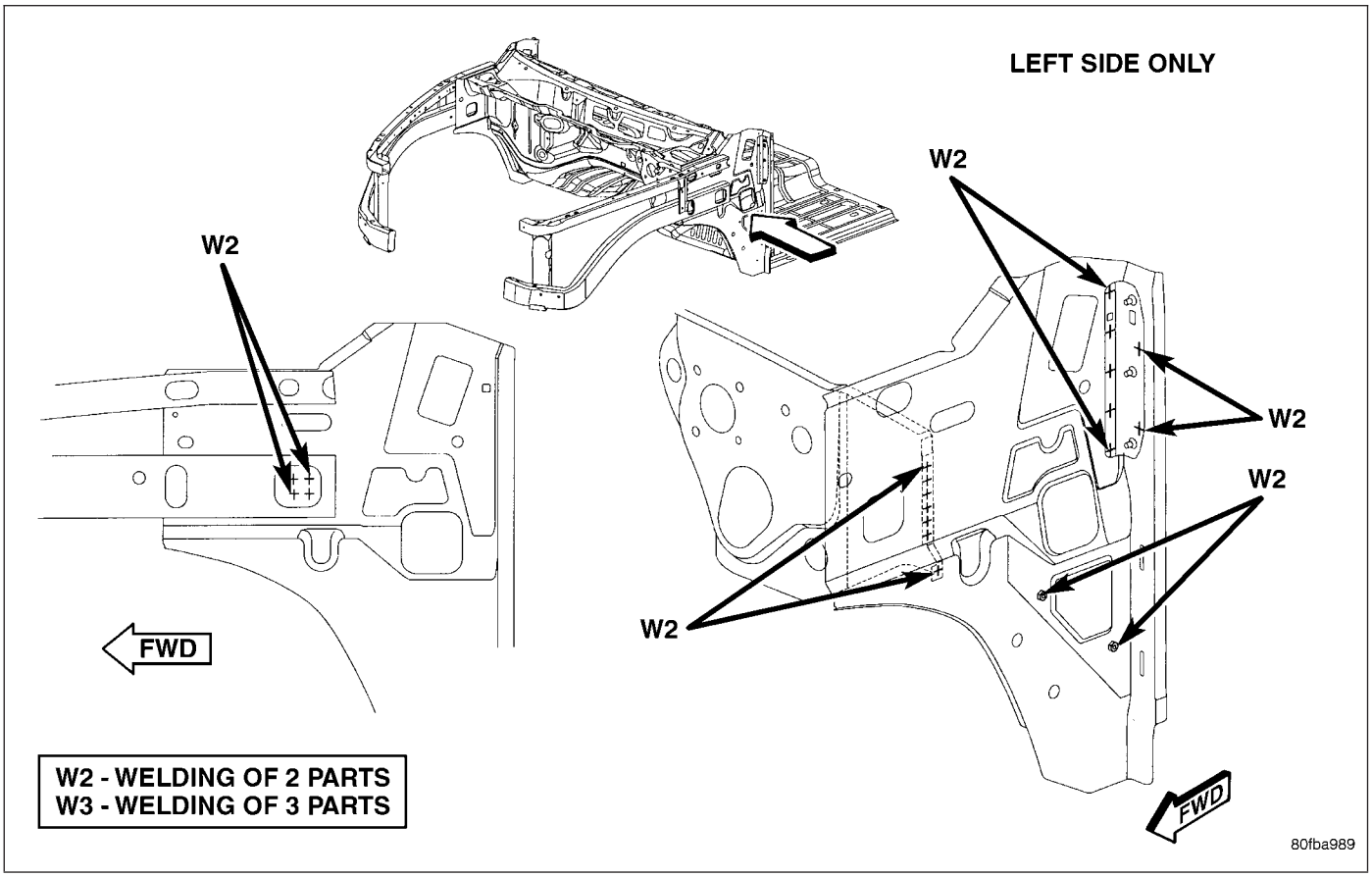

Fig. 37 FRONT FENDER

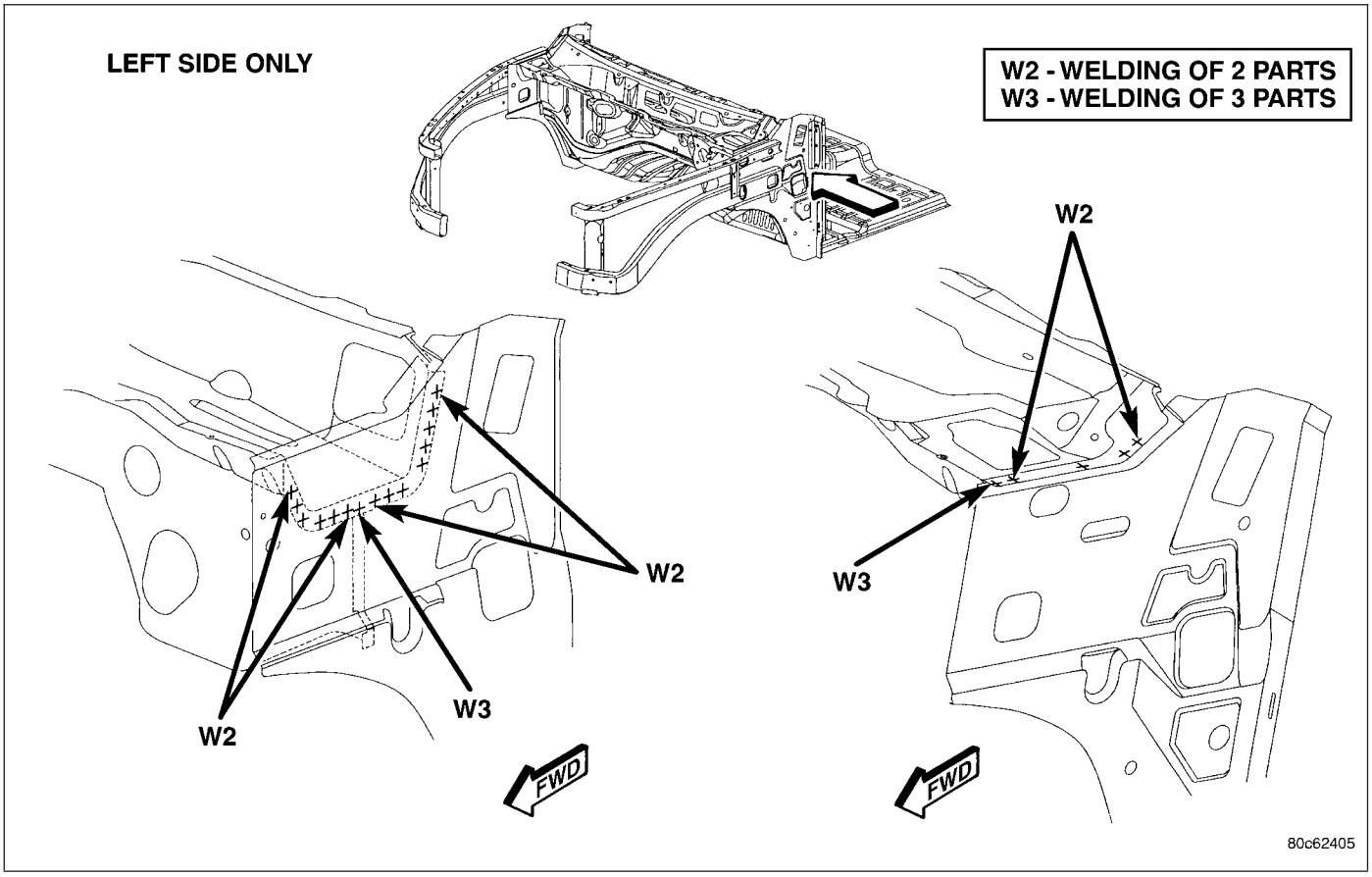

Fig. 38 DASH PANEL

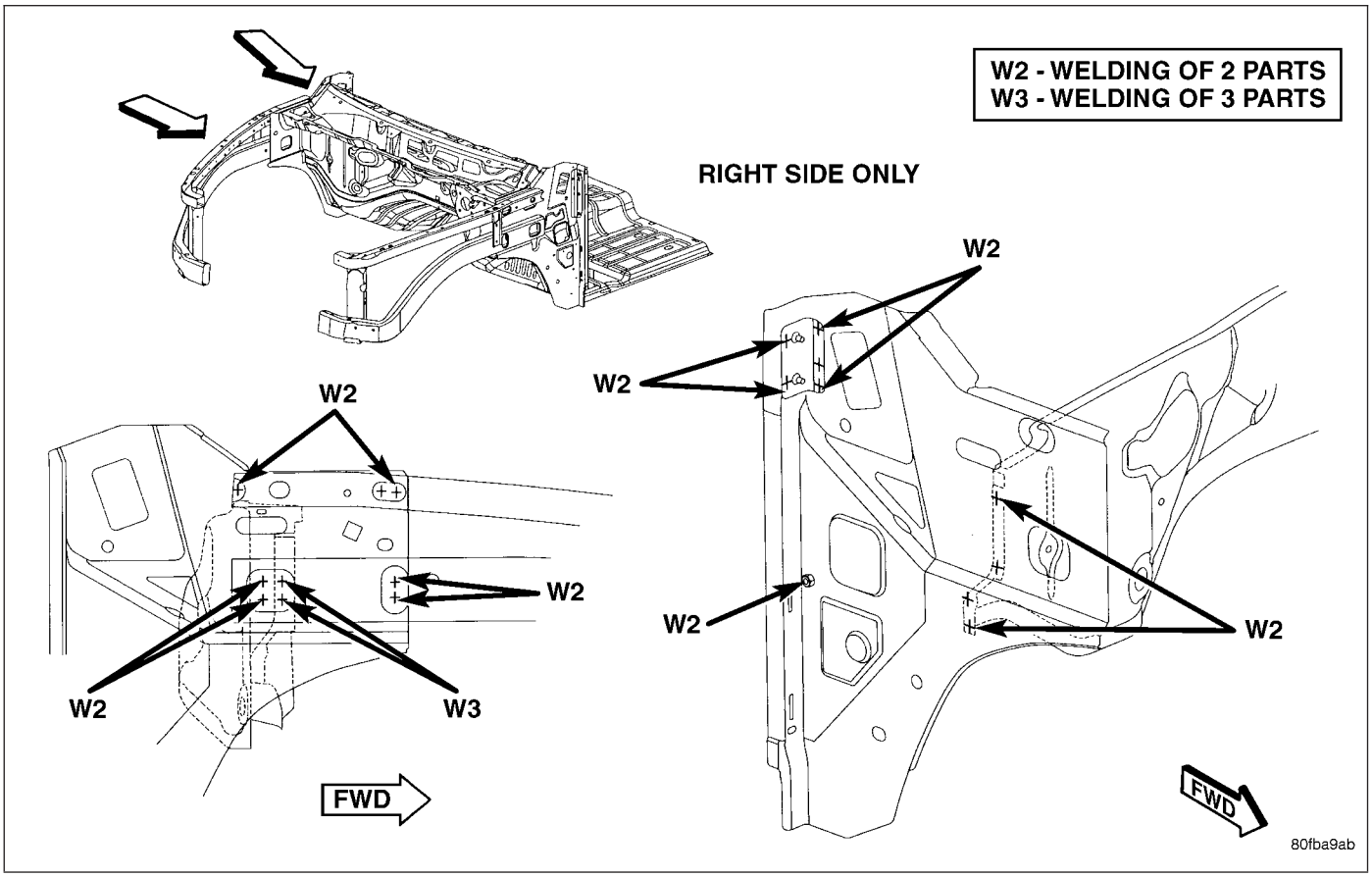

Fig. 39 FRONT FENDER

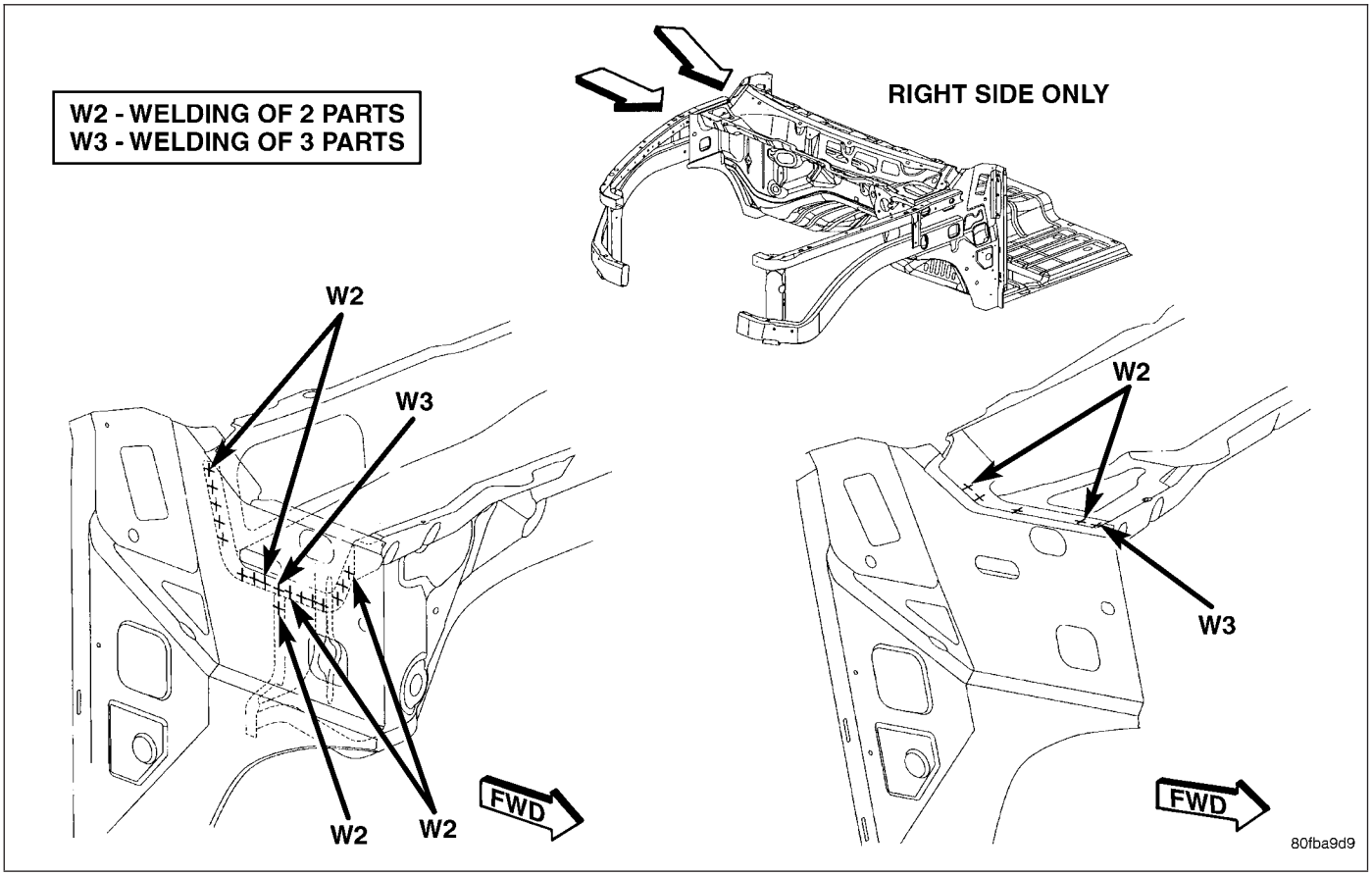

Fig. 40 DASH PANEL

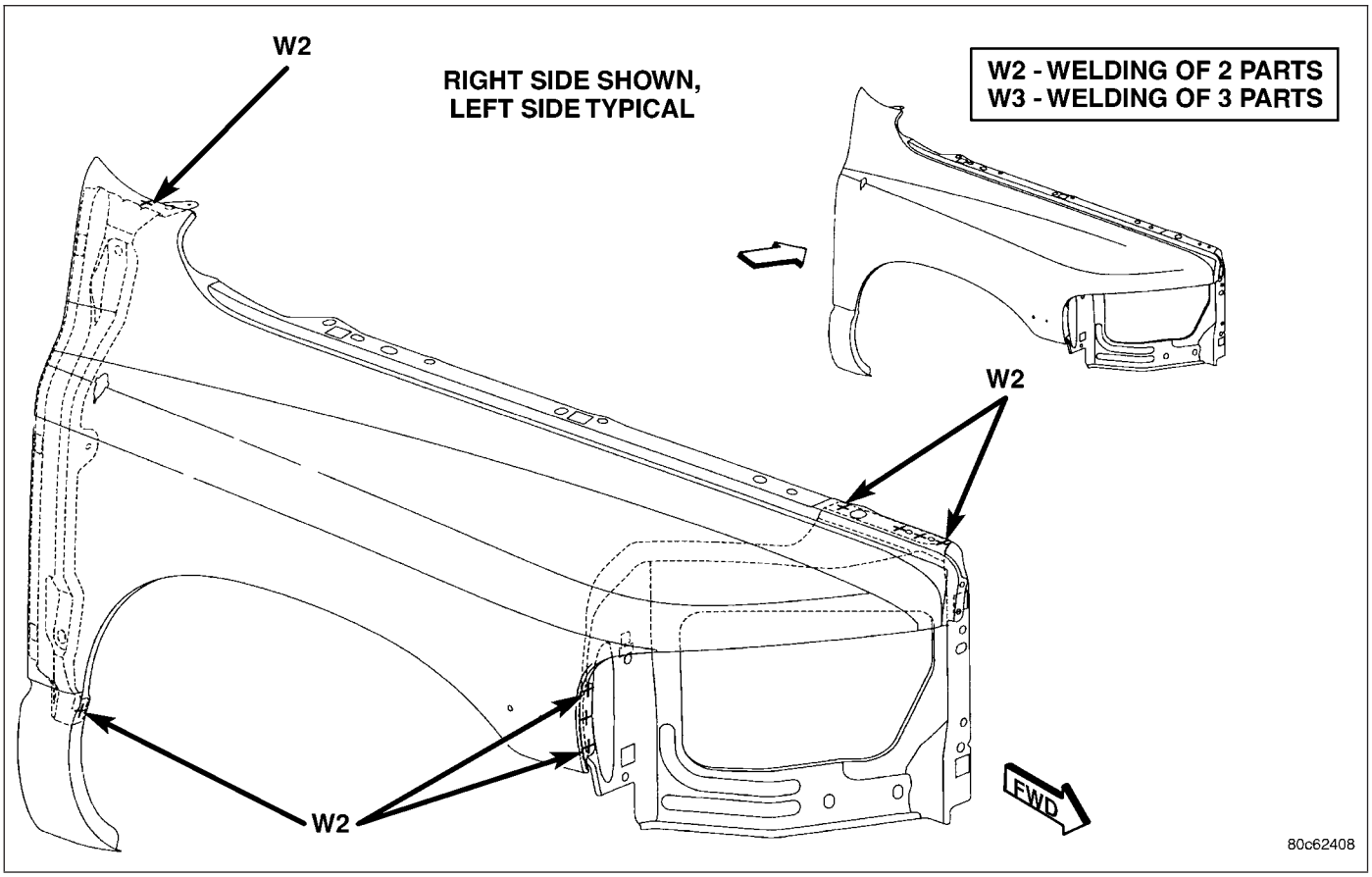

Fig. 41 HEADLAMP MOUNTING PANEL

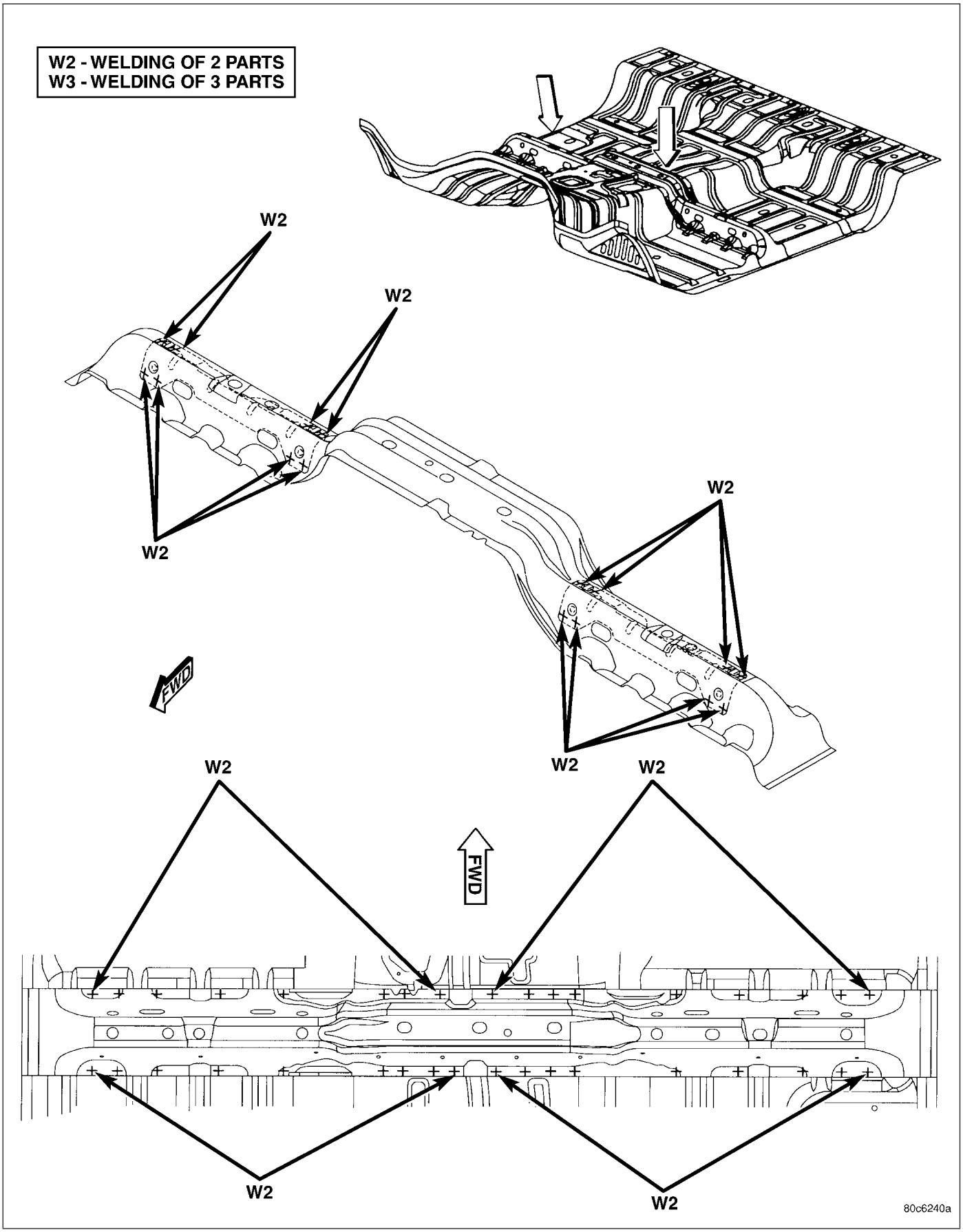

Fig. 42 SEAT MOUNTING FRONT BRACKETS - STANDARD CAB

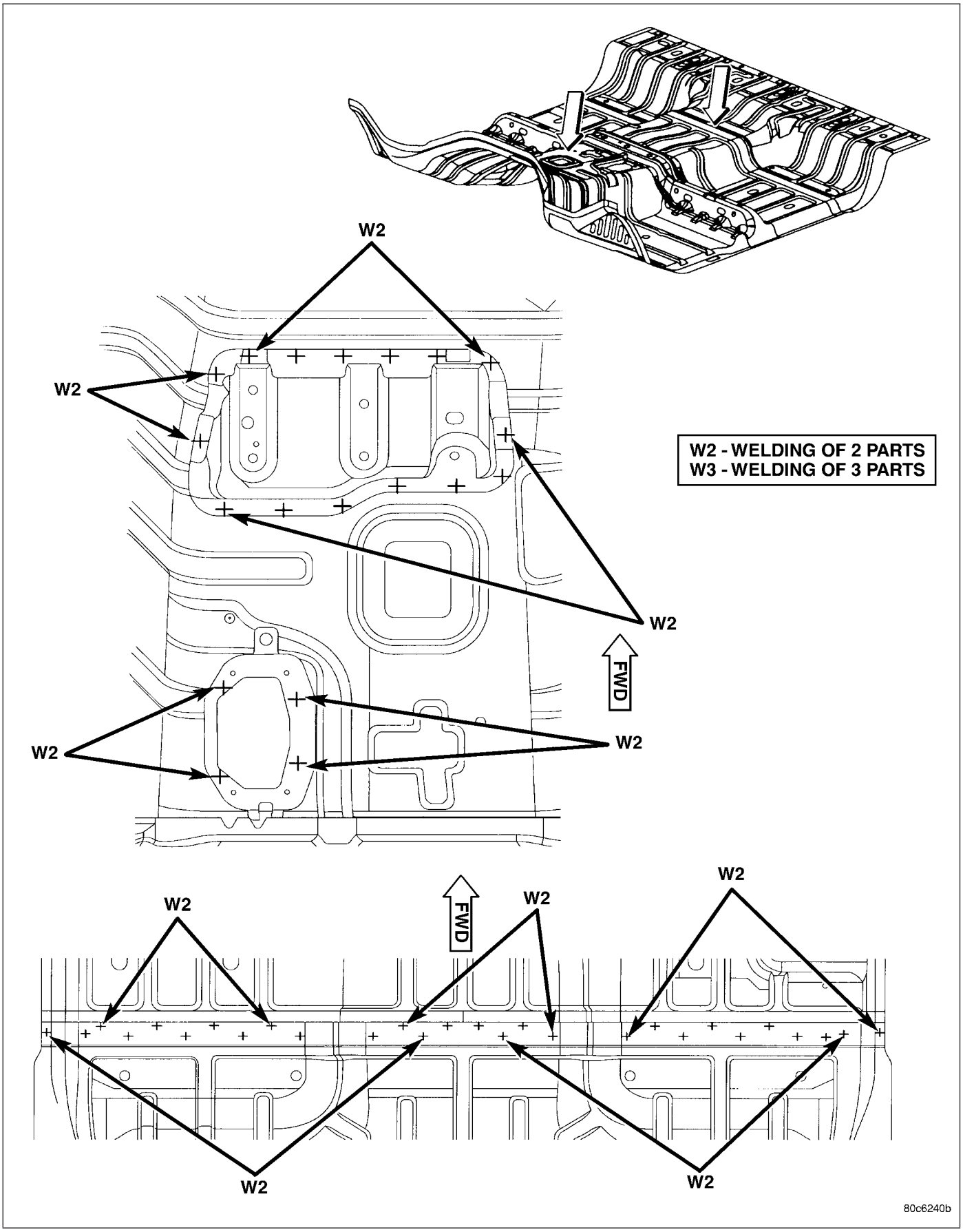

Fig. 43 AIR BAG MODULE BRACKET - STANDARD CAB

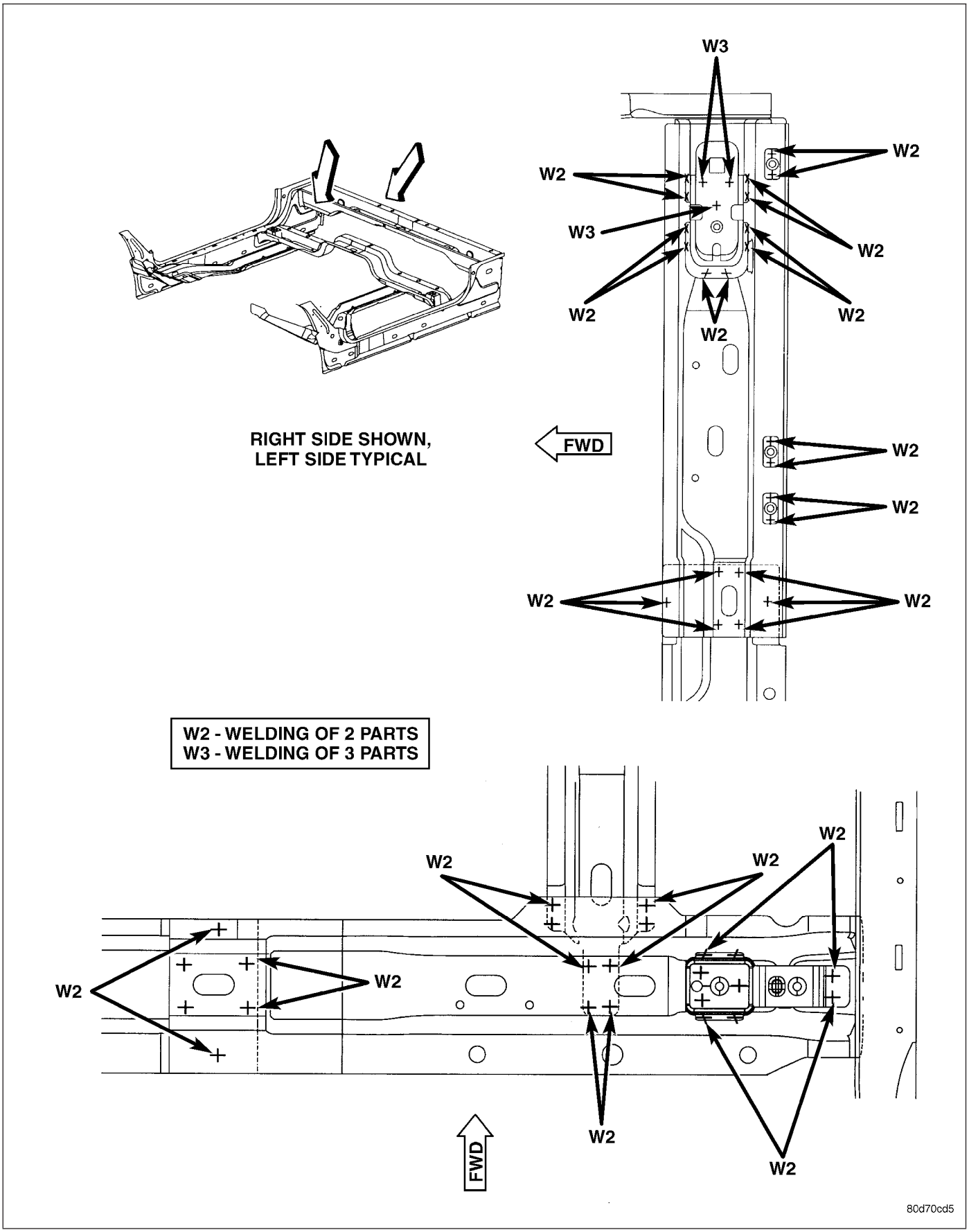

Fig. 44 RIGHT TO LEFT REAR FLOOR CROSSMEMBER - STANDARD CAB

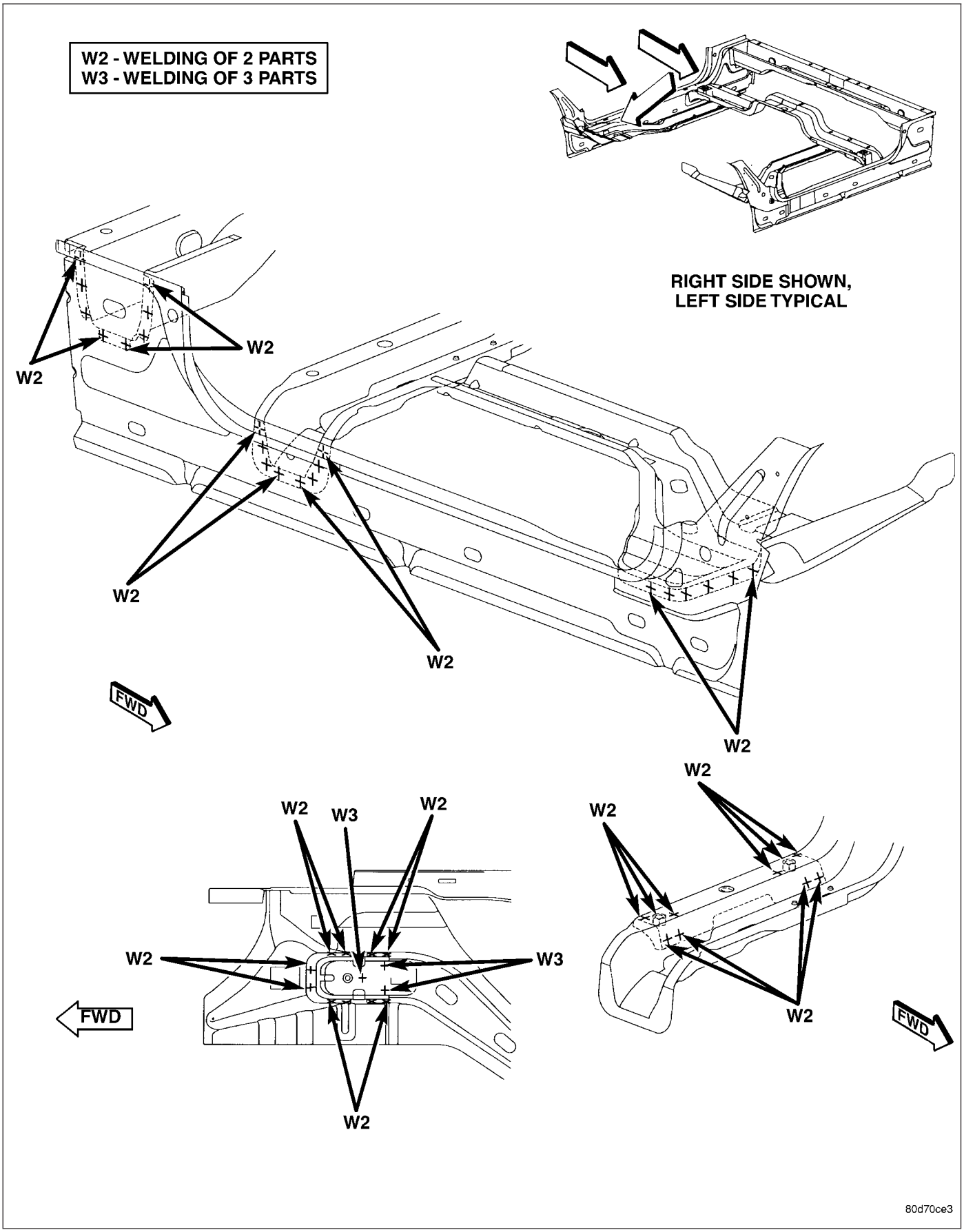

Fig. 45 REAR FLOOR CROSSMEMBER - STANDARD CAB

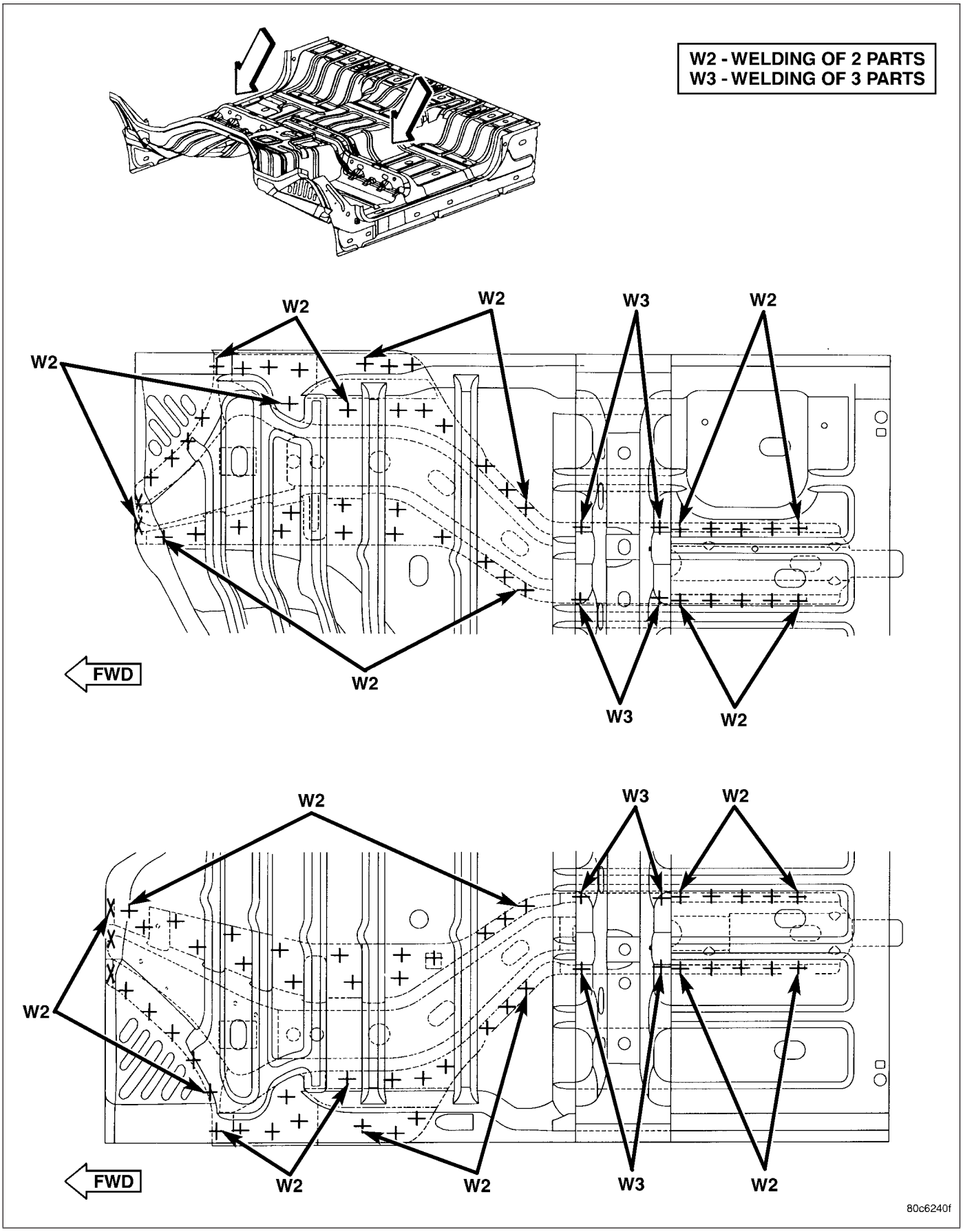

Fig. 46 SEAT MOUNTING FRONT CROSSMEMBER - STANDARD CAB

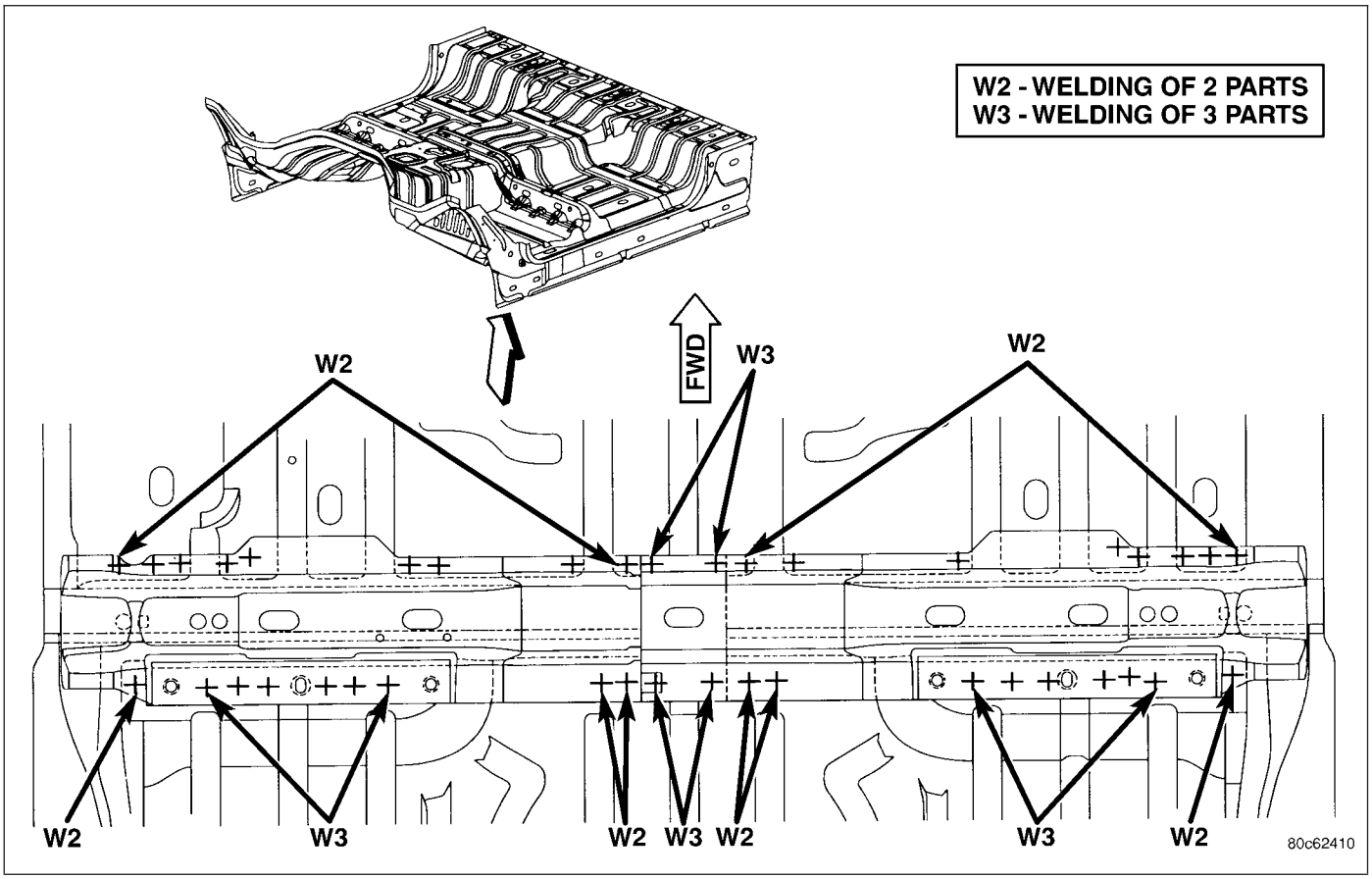

Fig. 47 FRONT SEAT MOUNTING CROSSMEMBERS - STANDARD CAB

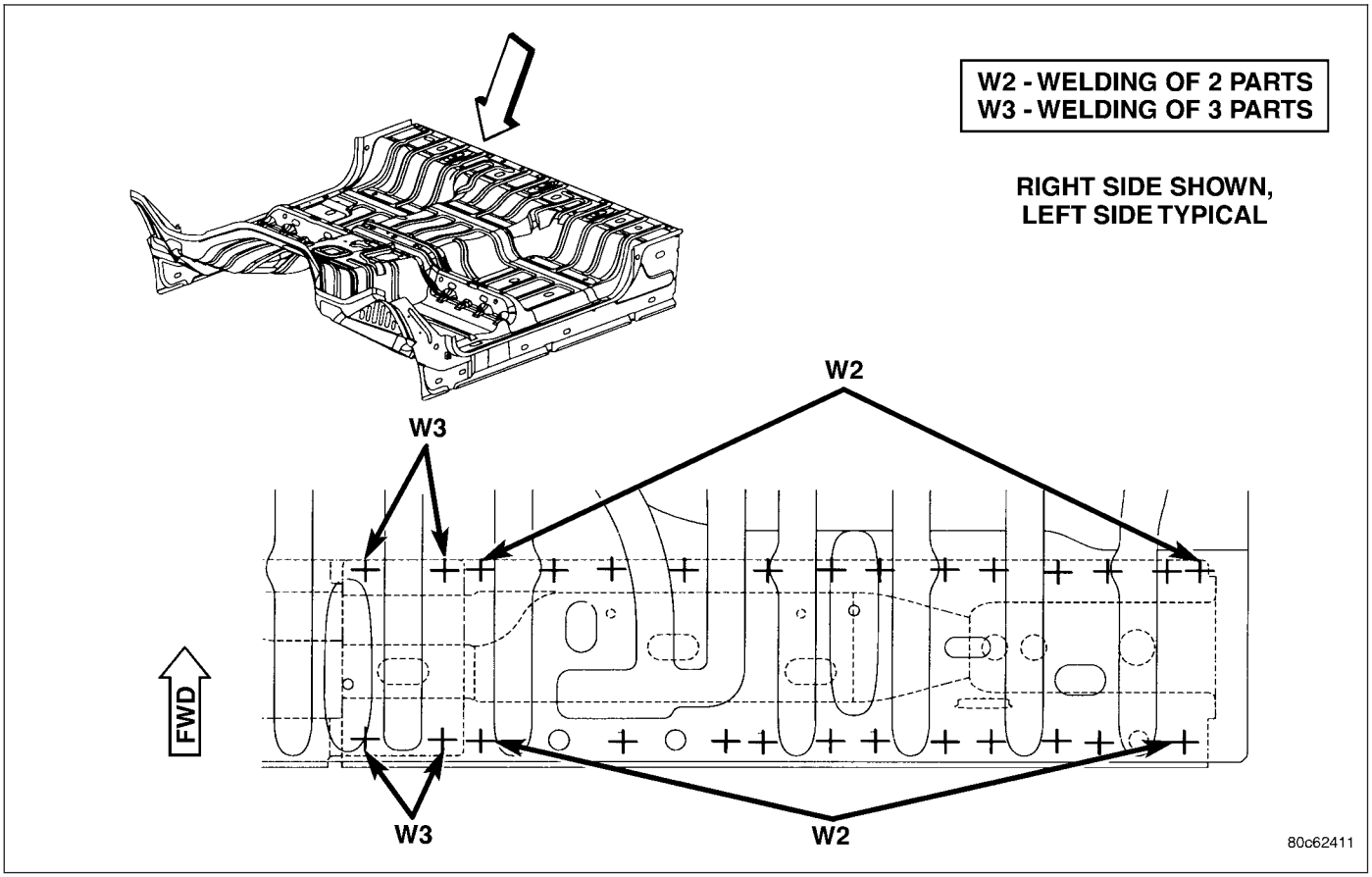

Fig. 48 REAR FLOOR CROSSMEMBERS - STANDARD CAB

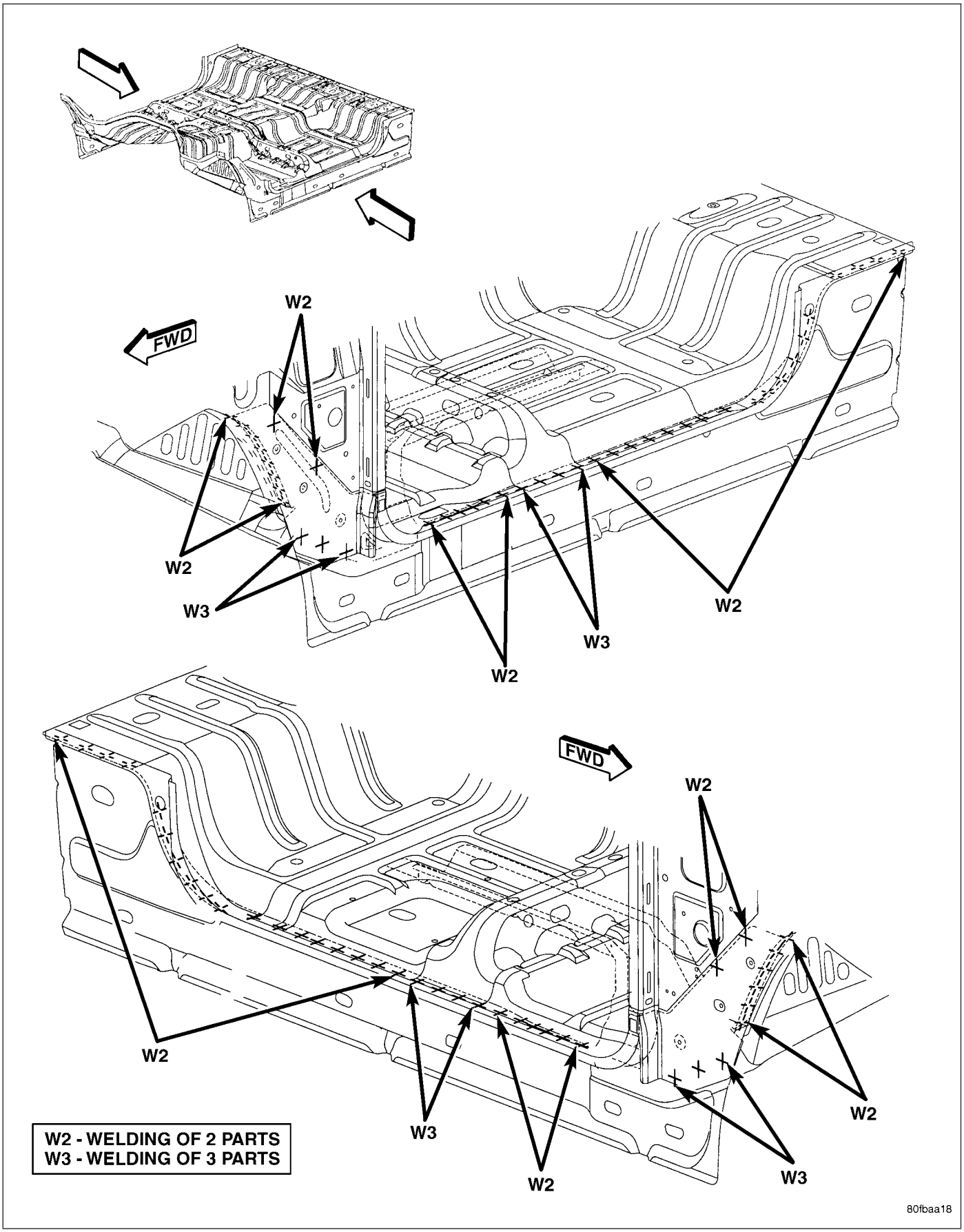

Fig. 49 FLOOR SILL - STANDARD CAB

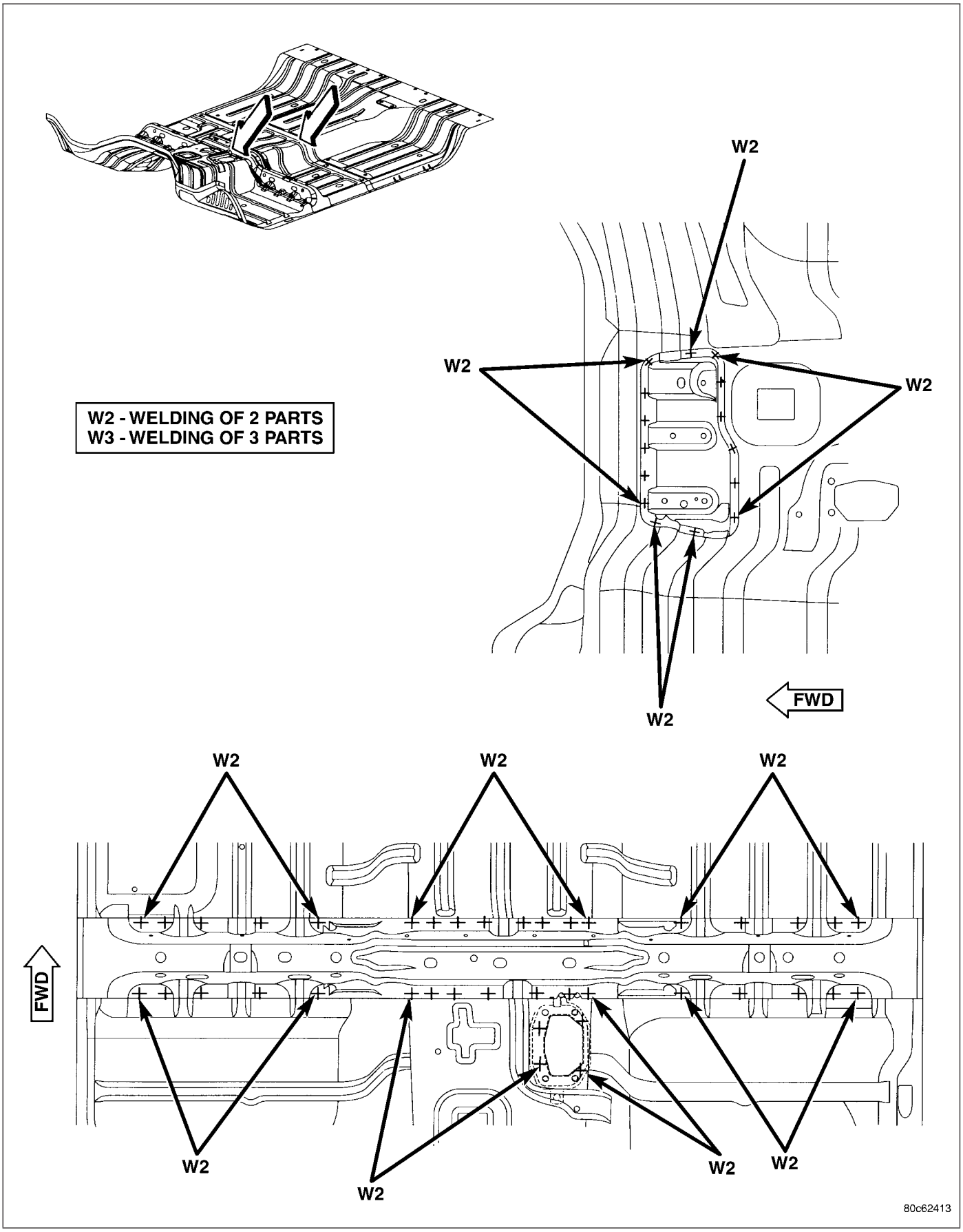

Fig. 50 AIR BAG MODULE BRACKET - QUAD CAB

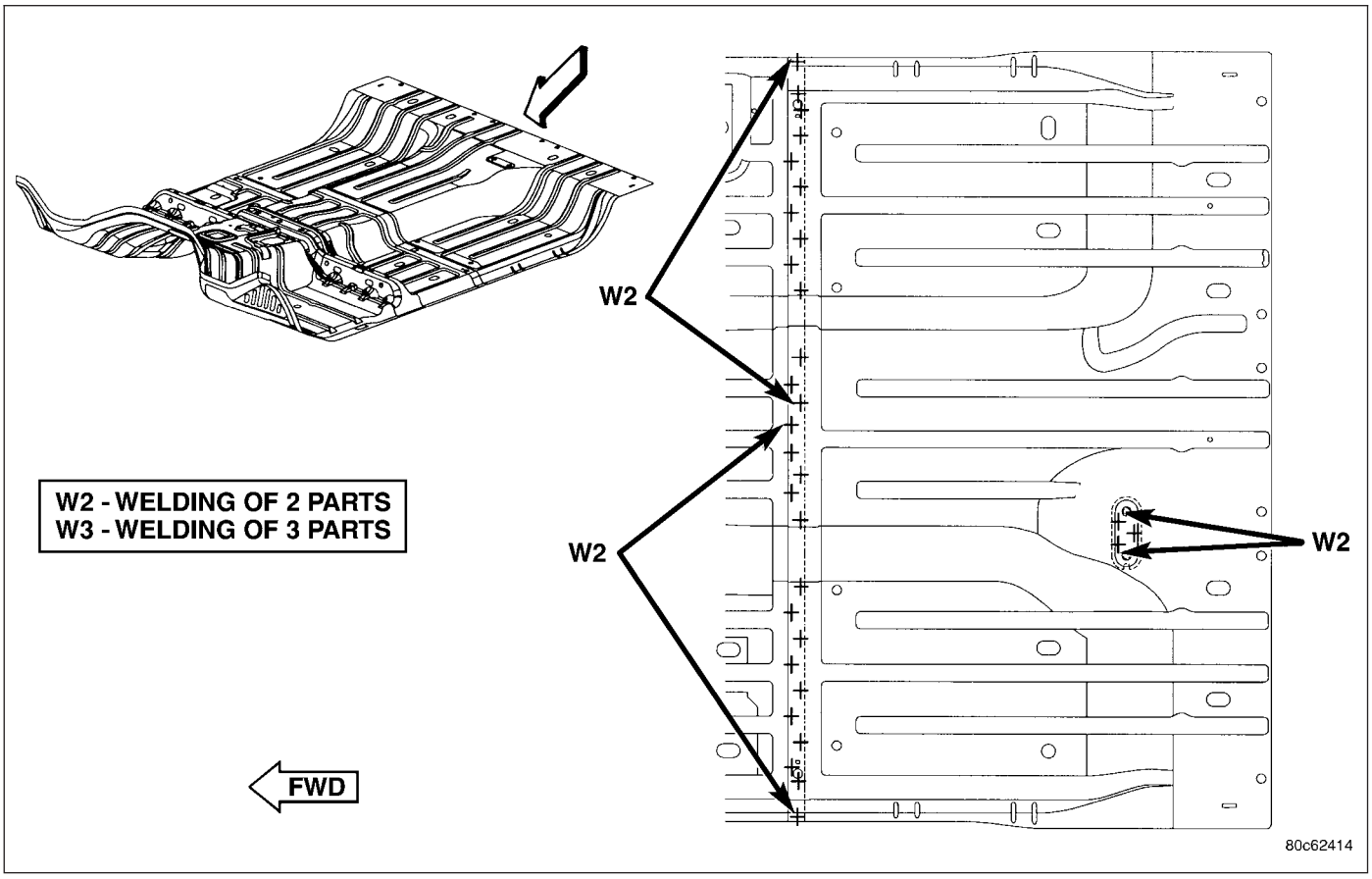

Fig. 51 REAR SEAT MIDDLE MOUNTING PLATE - QUAD CAB

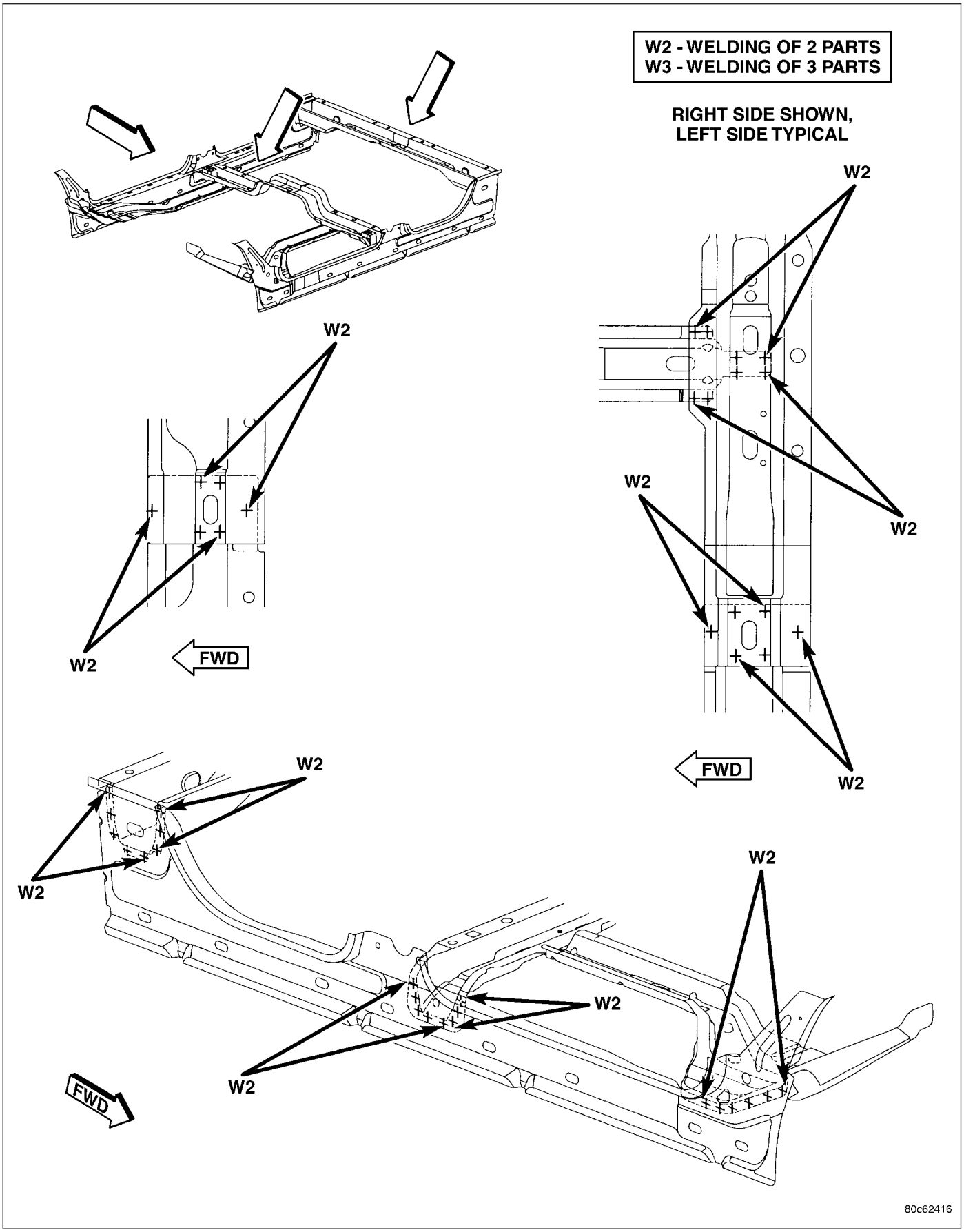

Fig. 52 REAR FLOOR CROSSMEMBER - QUAD CAB

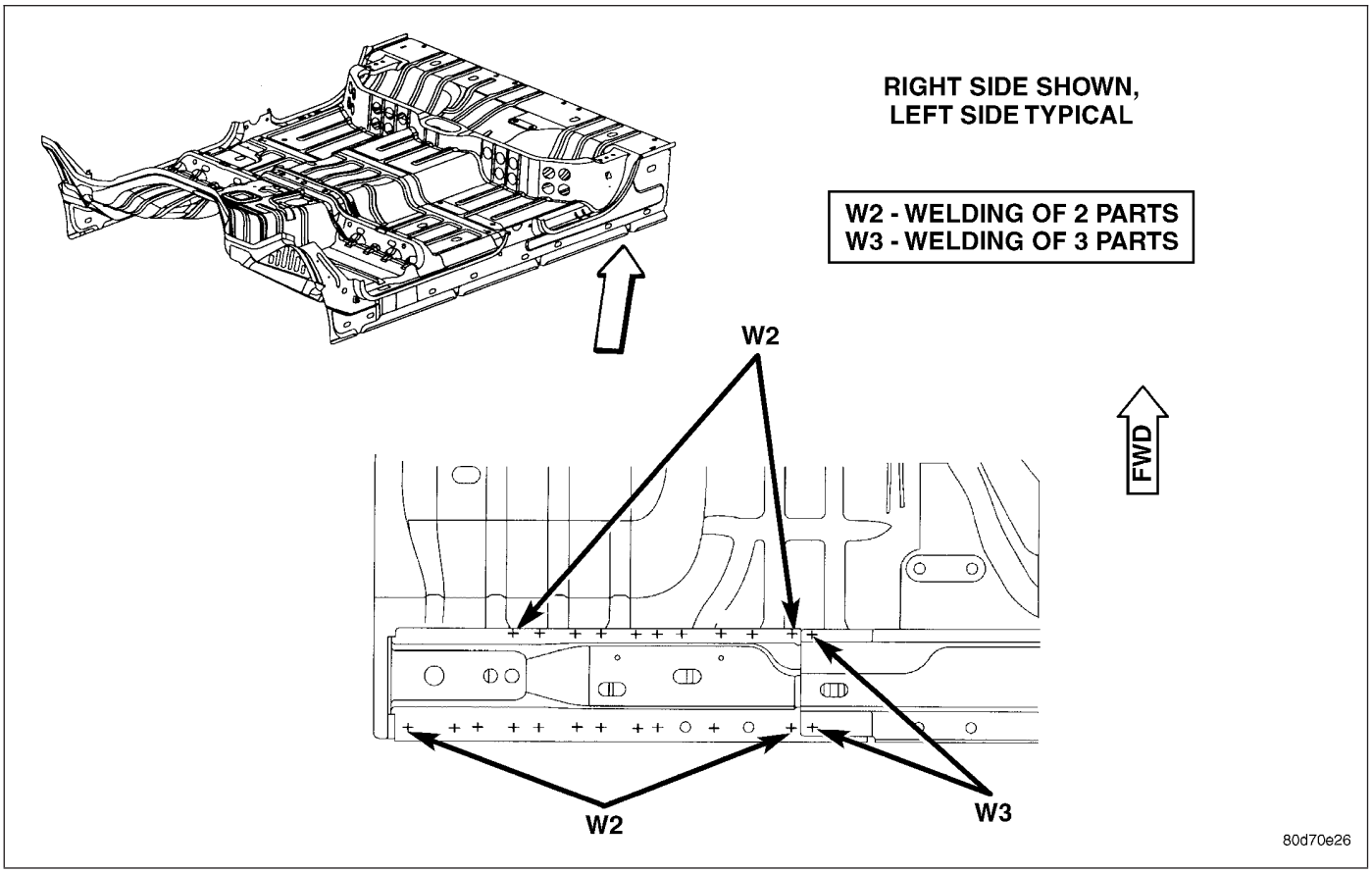

Fig. 53 LEFT REAR CROSSMEMBER - QUAD CAB

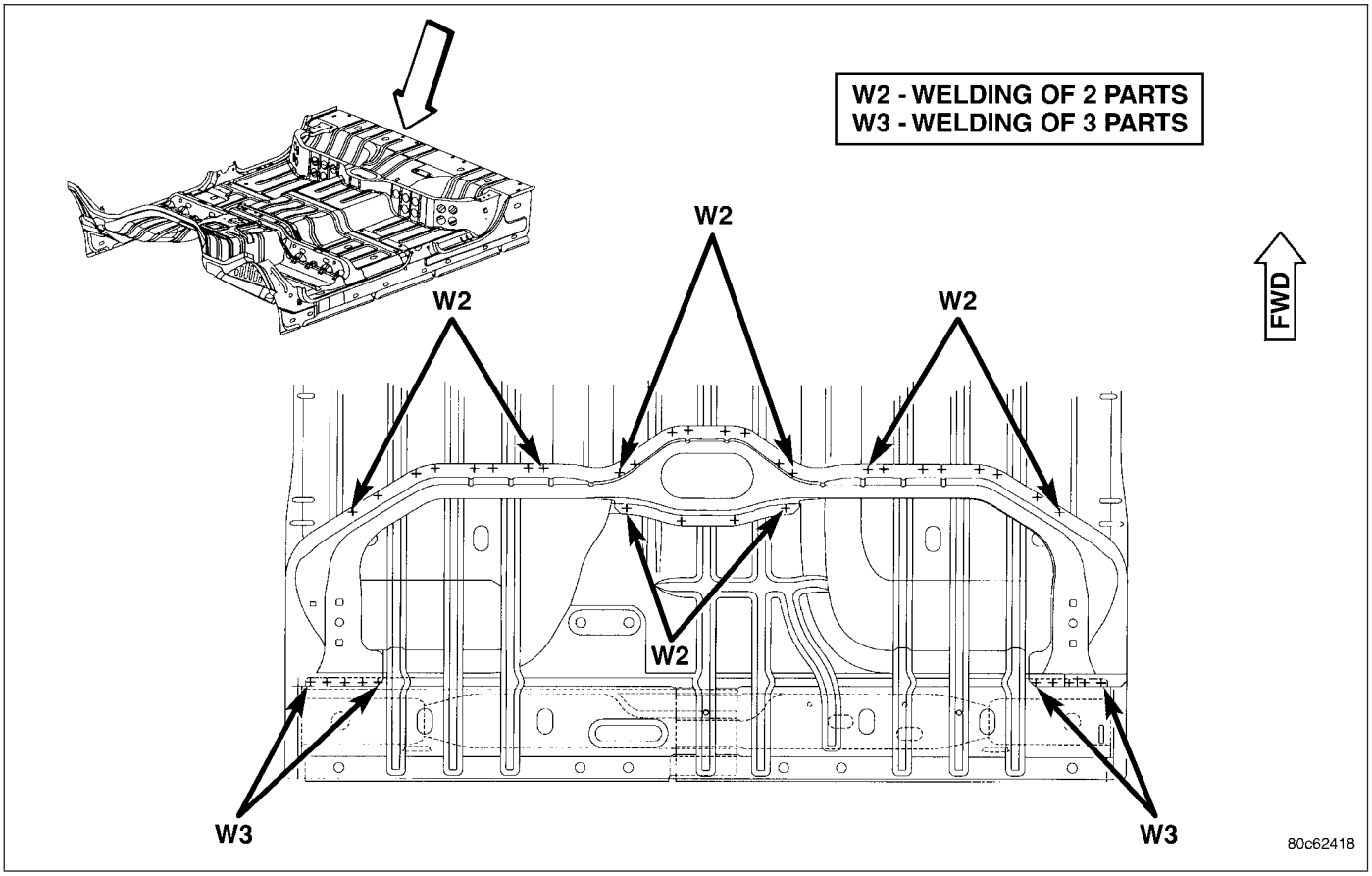

Fig. 54 STORAGE BIN - QUAD CAB

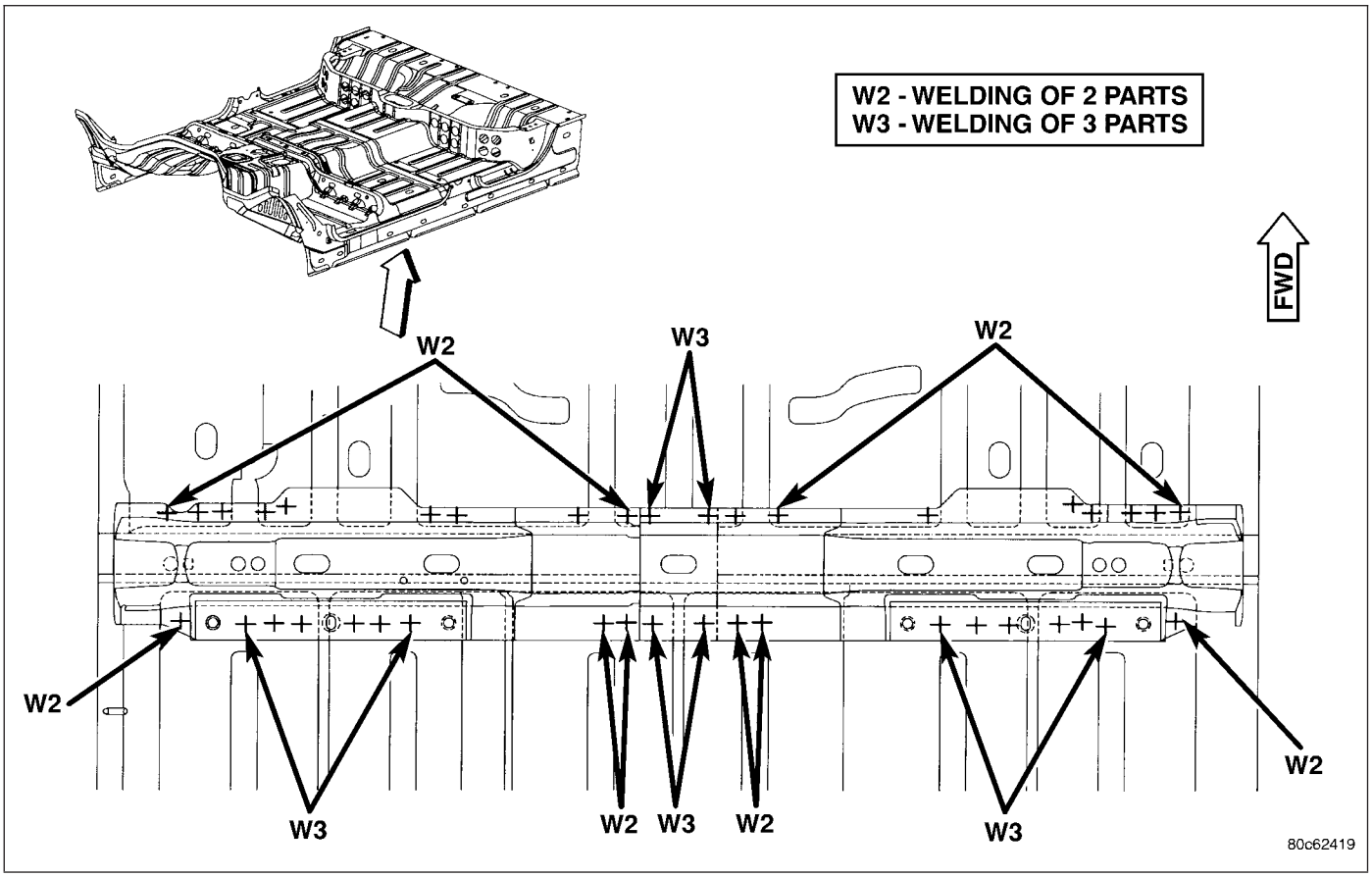

Fig. 55 RIGHT REAR FRONT SEAT MOUNTING CROSSMEMBER - QUAD CAB

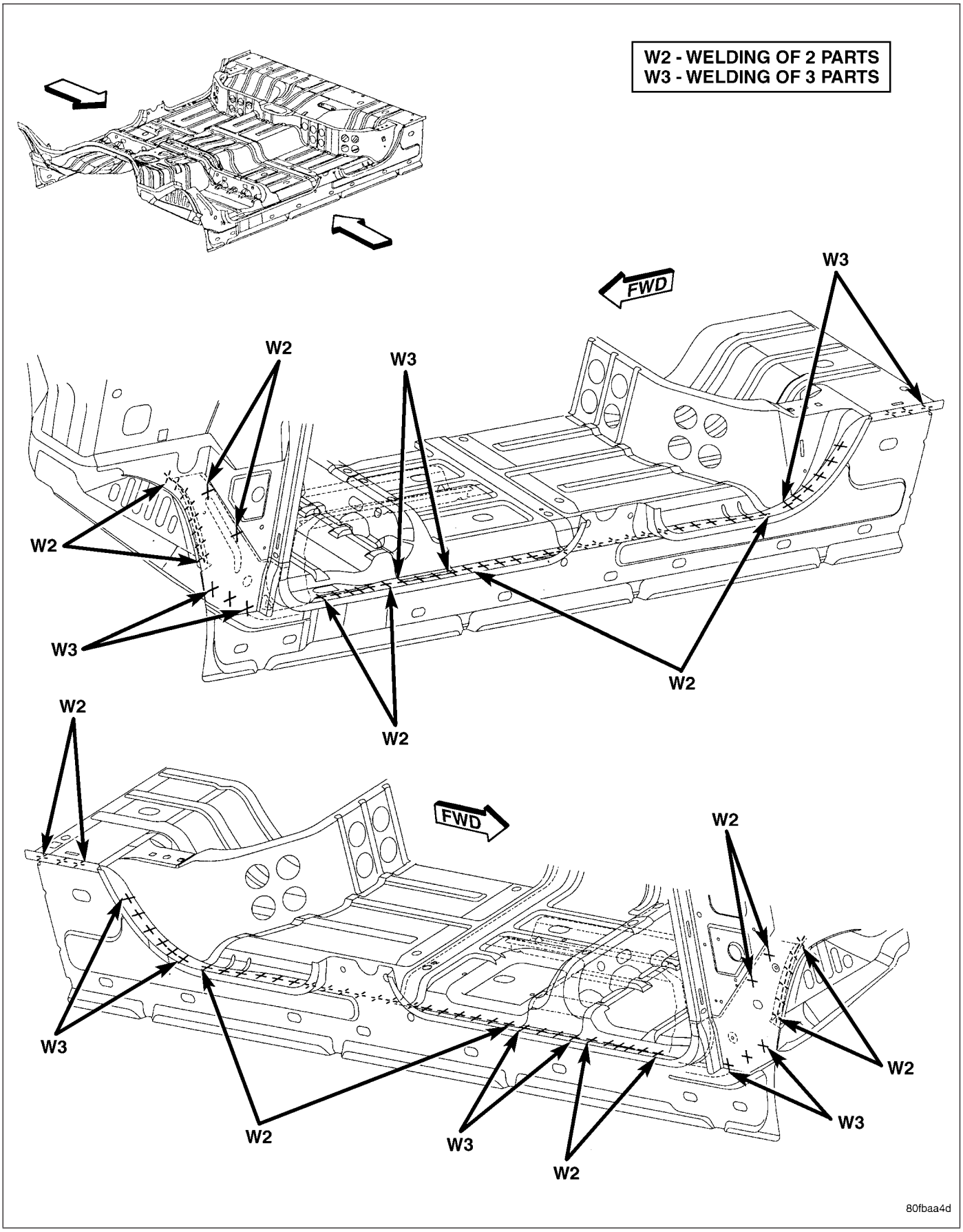

Fig. 56 FRONT SEAT MOUNTING FRONT CROSSMEMBER - QUAD CAB

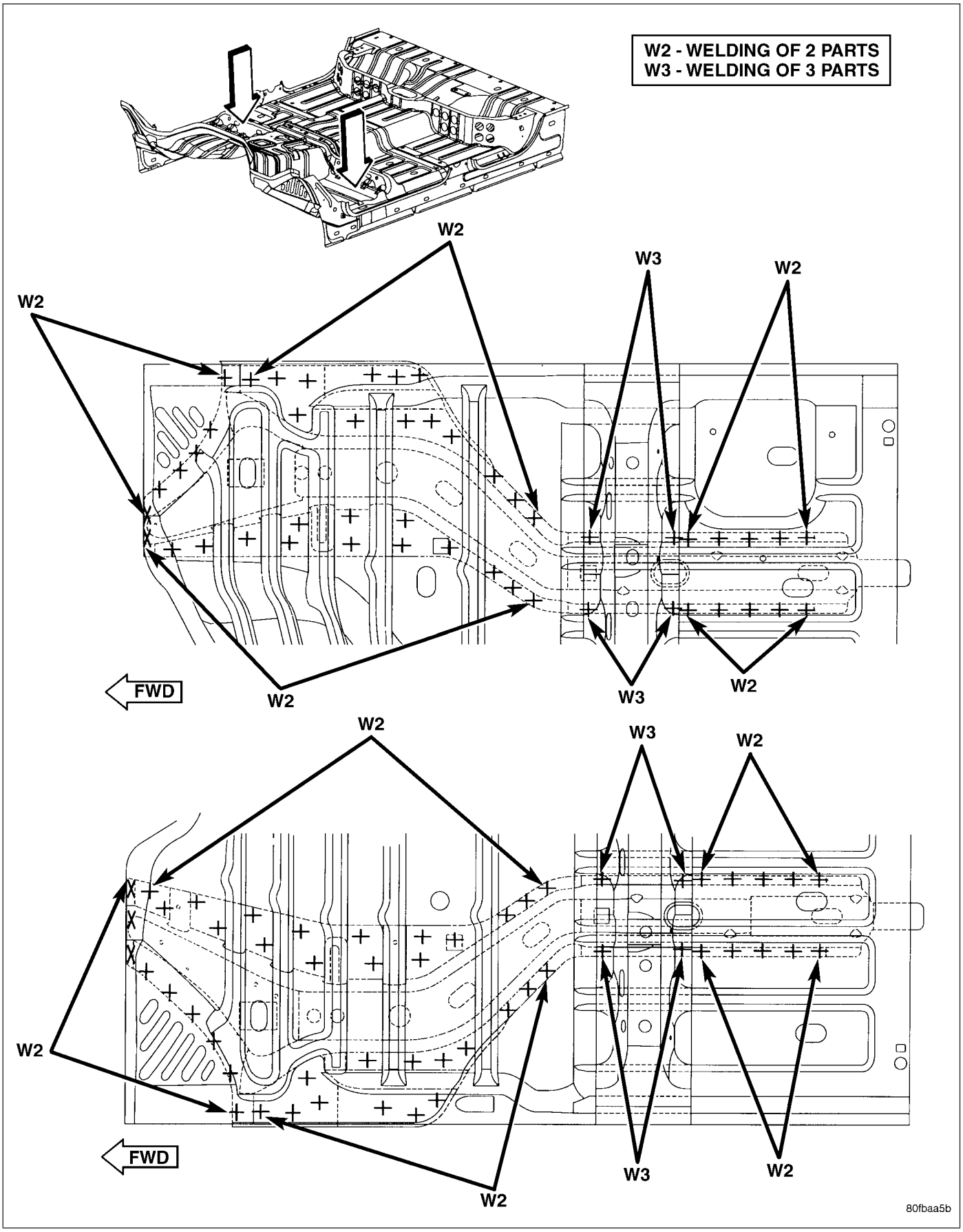

Fig. 57 FRONT SEAT MOUNTING FRONT CROSSMEMBER

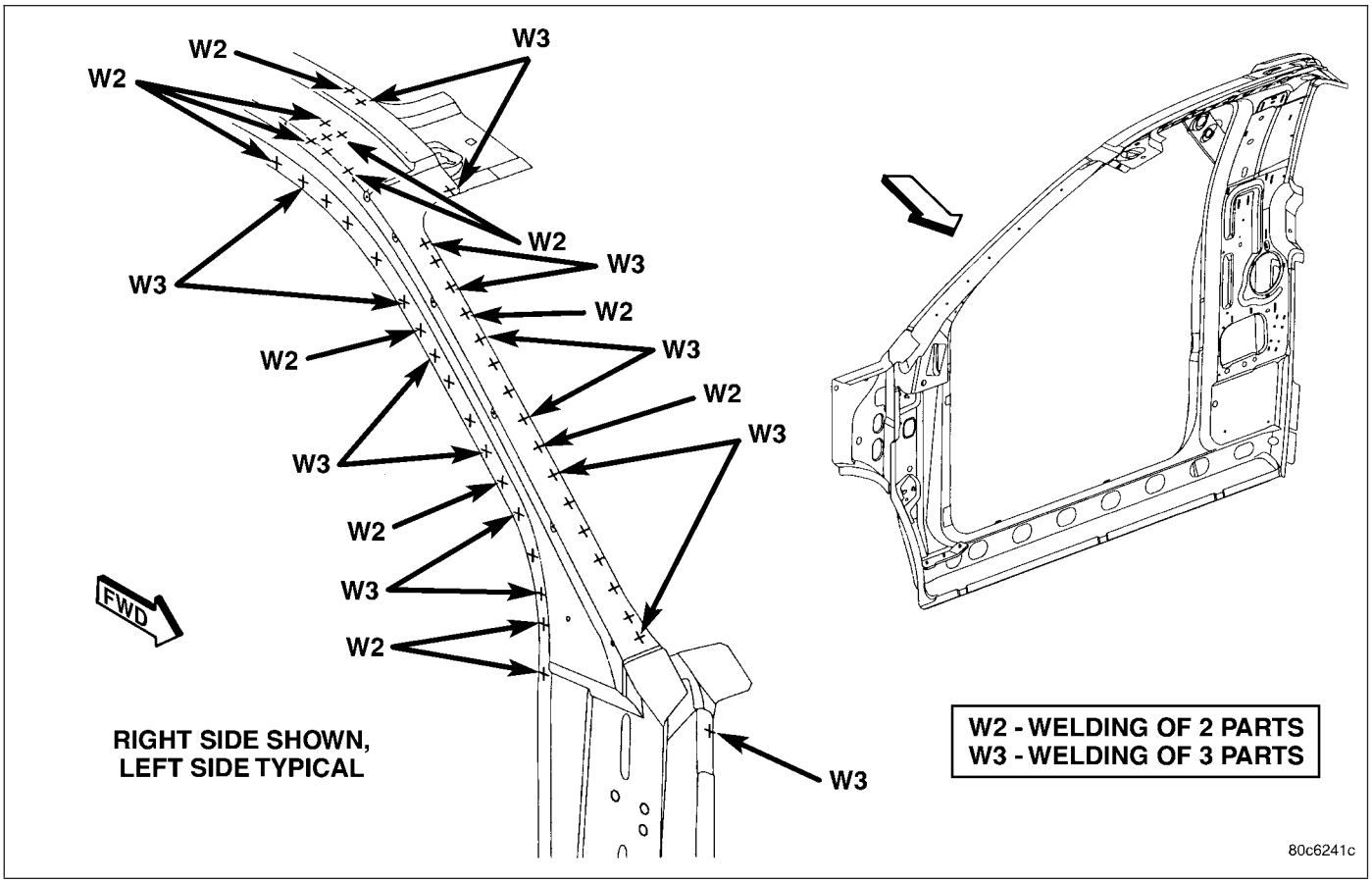

Fig. 58 A-PILLAR REINFORCEMENT - STANDARD CAB

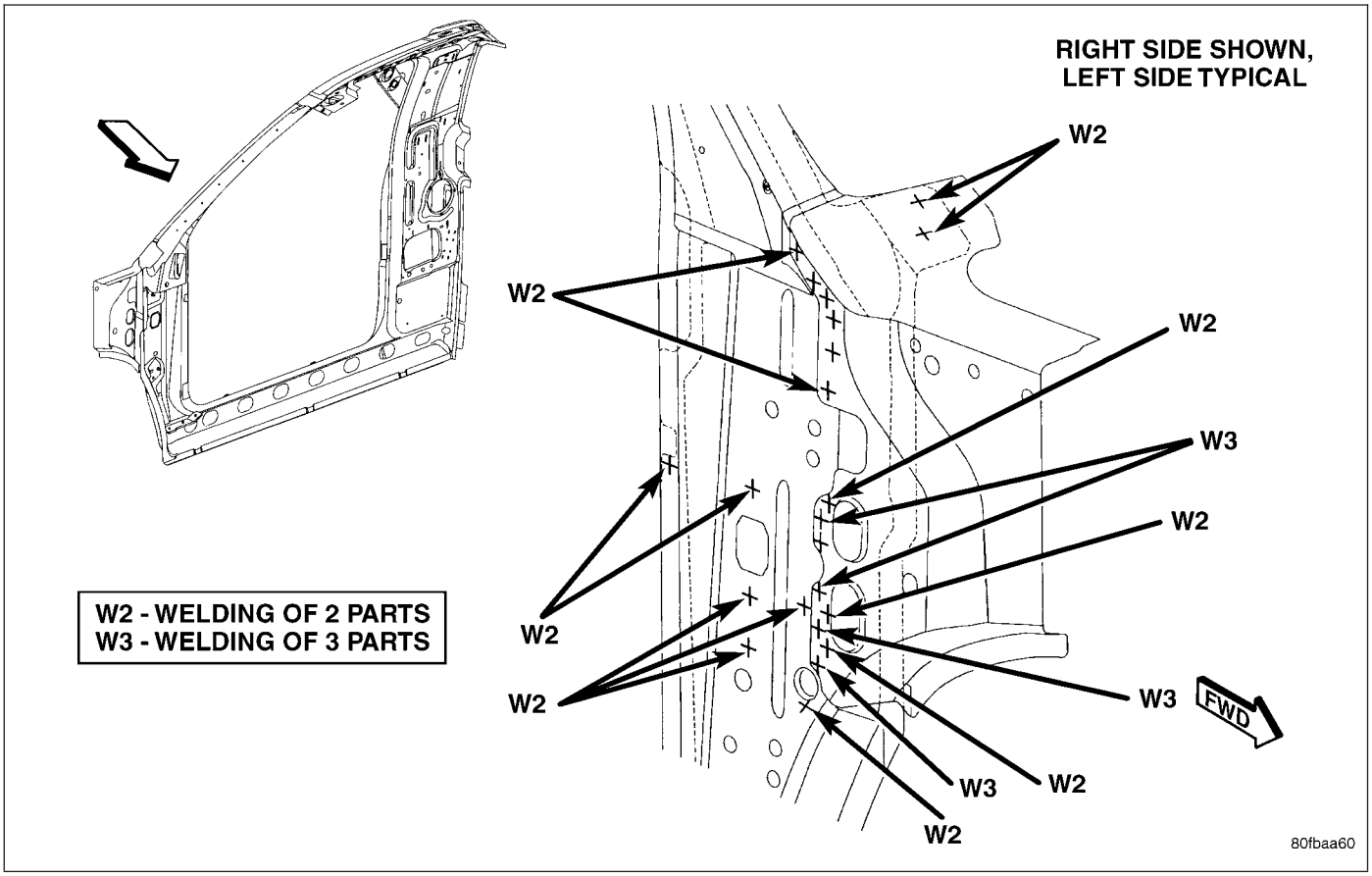

Fig. 59 A-PILLAR REINFORCEMENT - STANDARD CAB

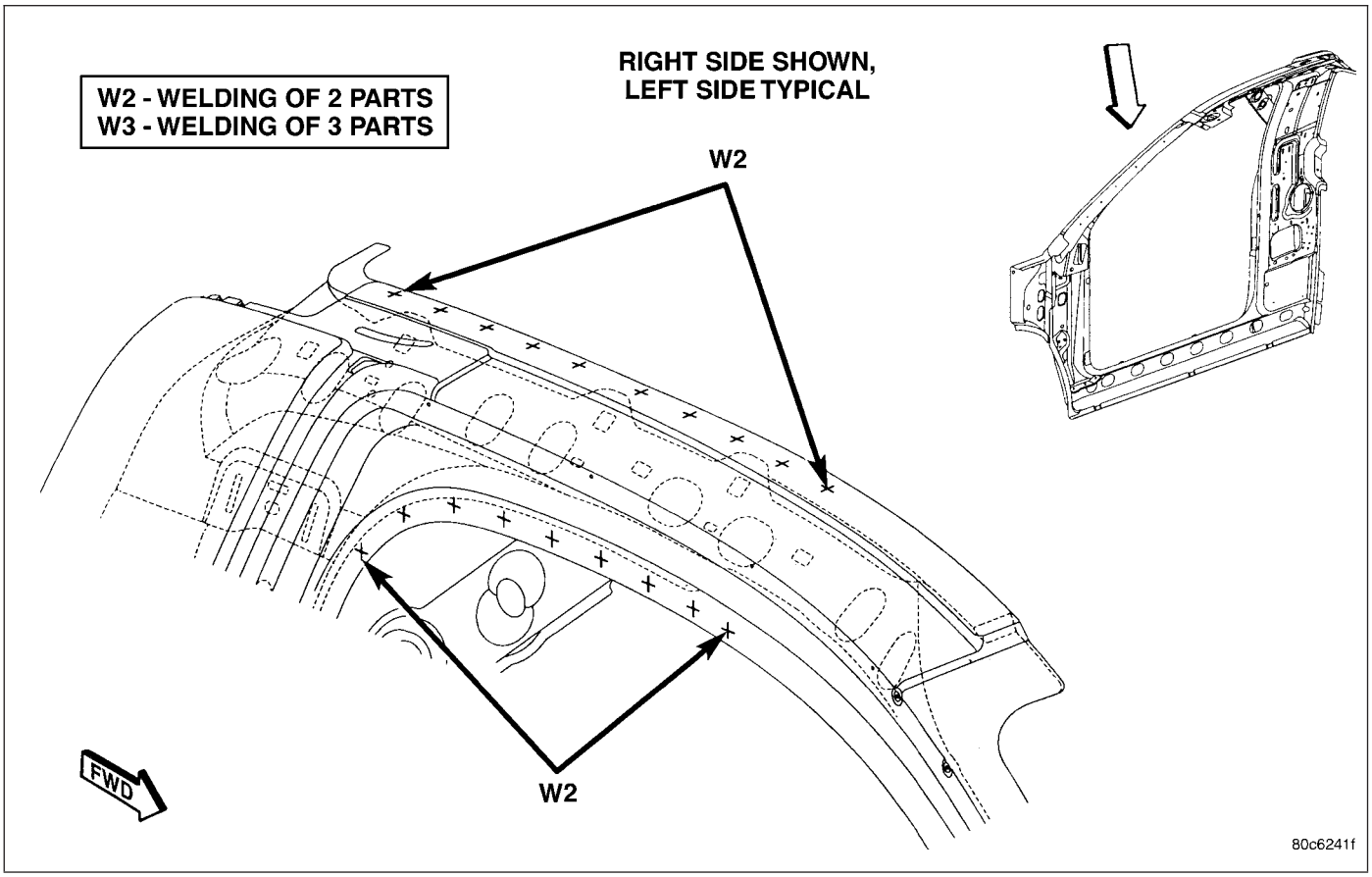

Fig. 60 INNER BODY SIDE APERTURE - STANDARD CAB

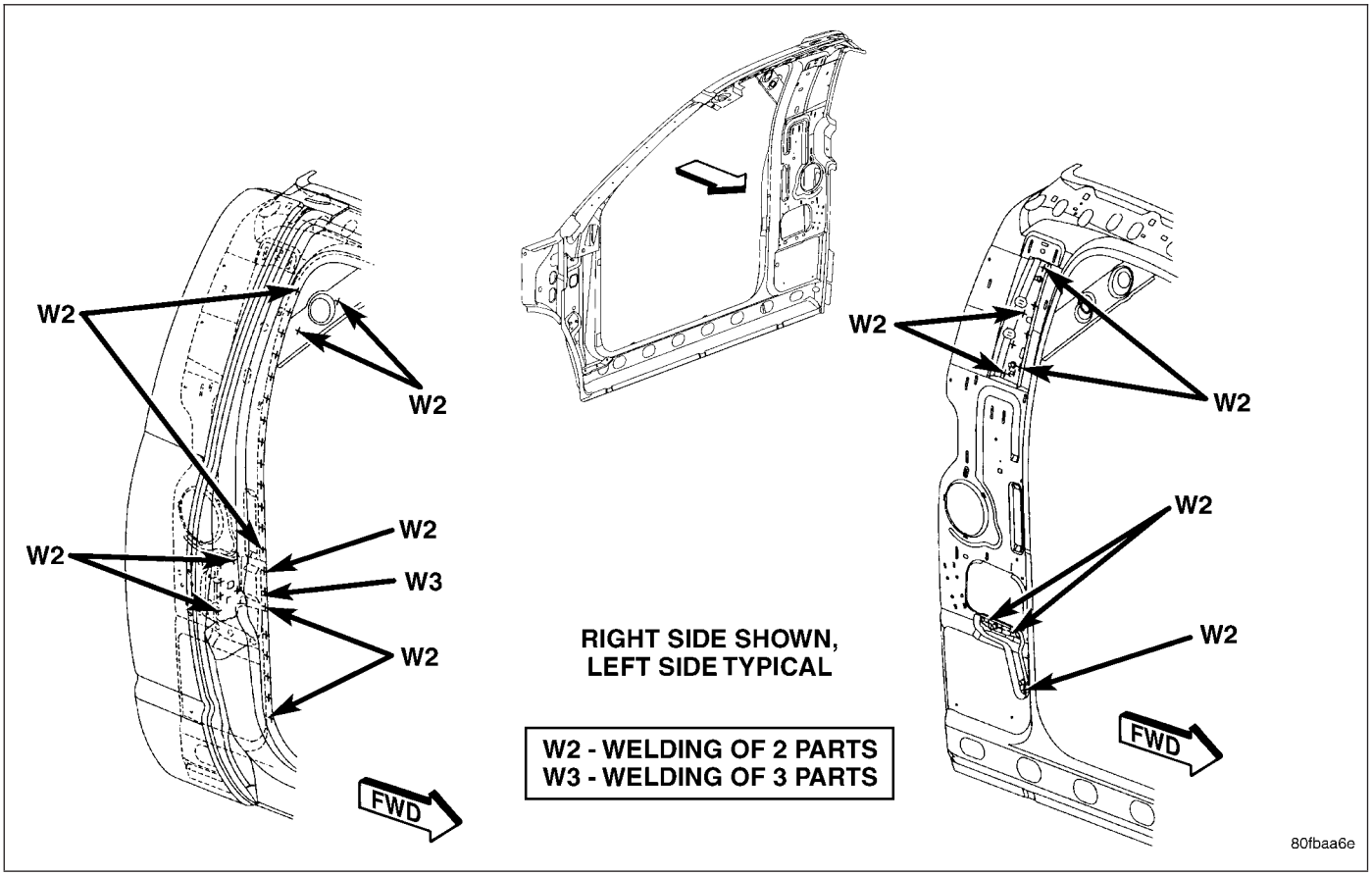

Fig. 61 SHOULDER BELT REINFORCEMENT - STANDARD CAB

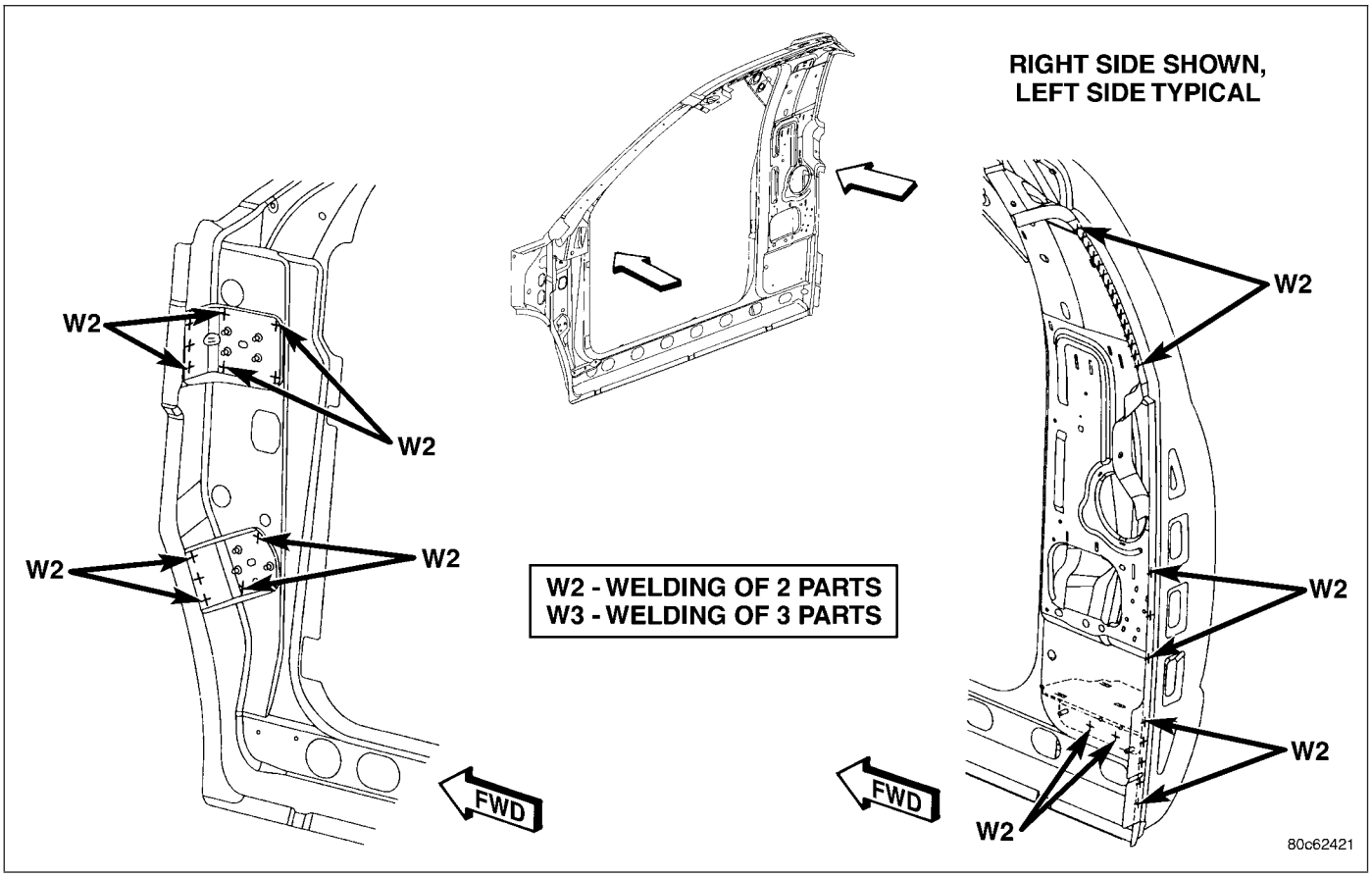

Fig. 62 FRONT PILLAR TAPPING PLATES - STANDARD CAB

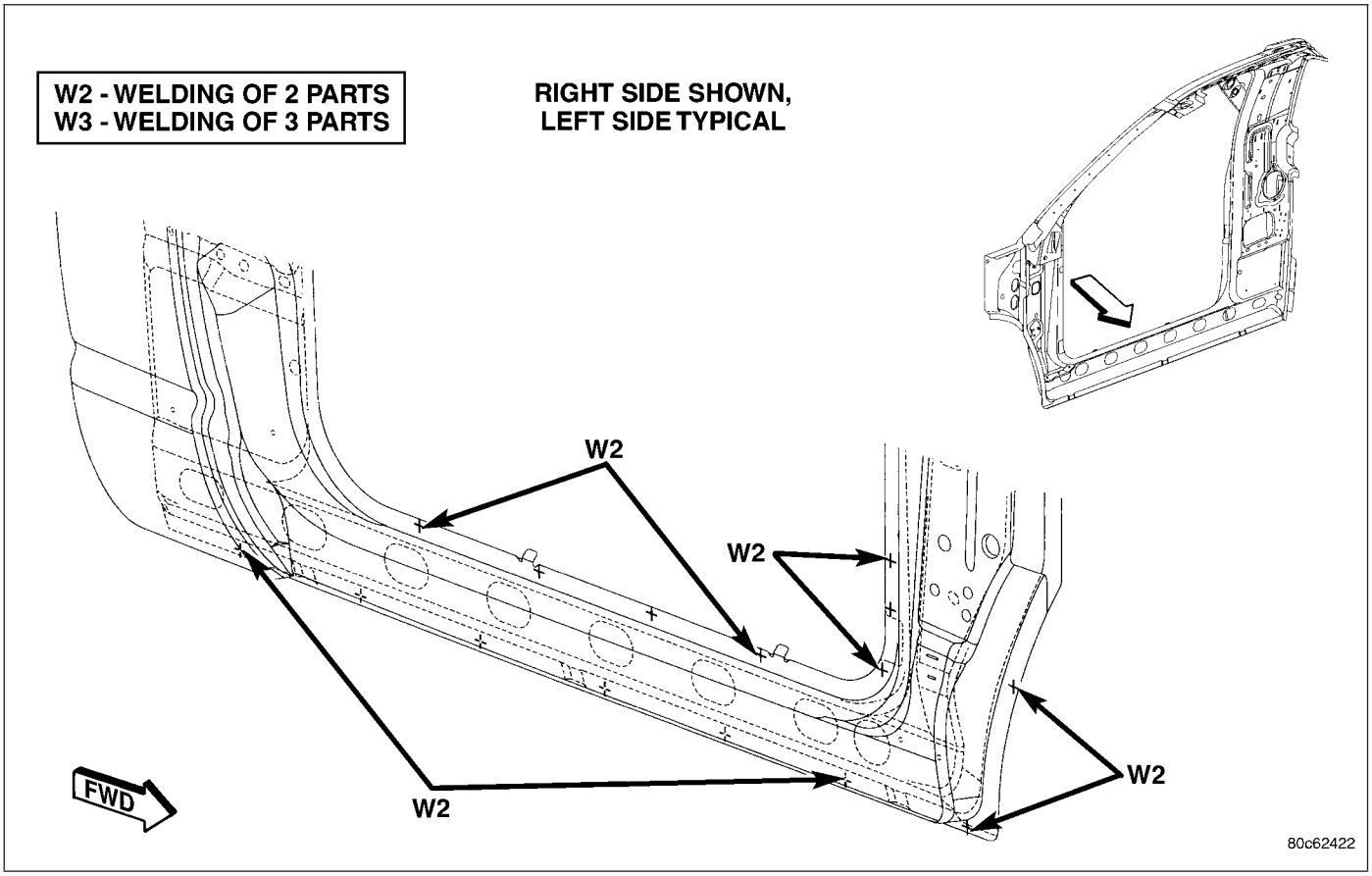

Fig. 63 INNER BODY SIDE APERTURE - STANDARD CAB

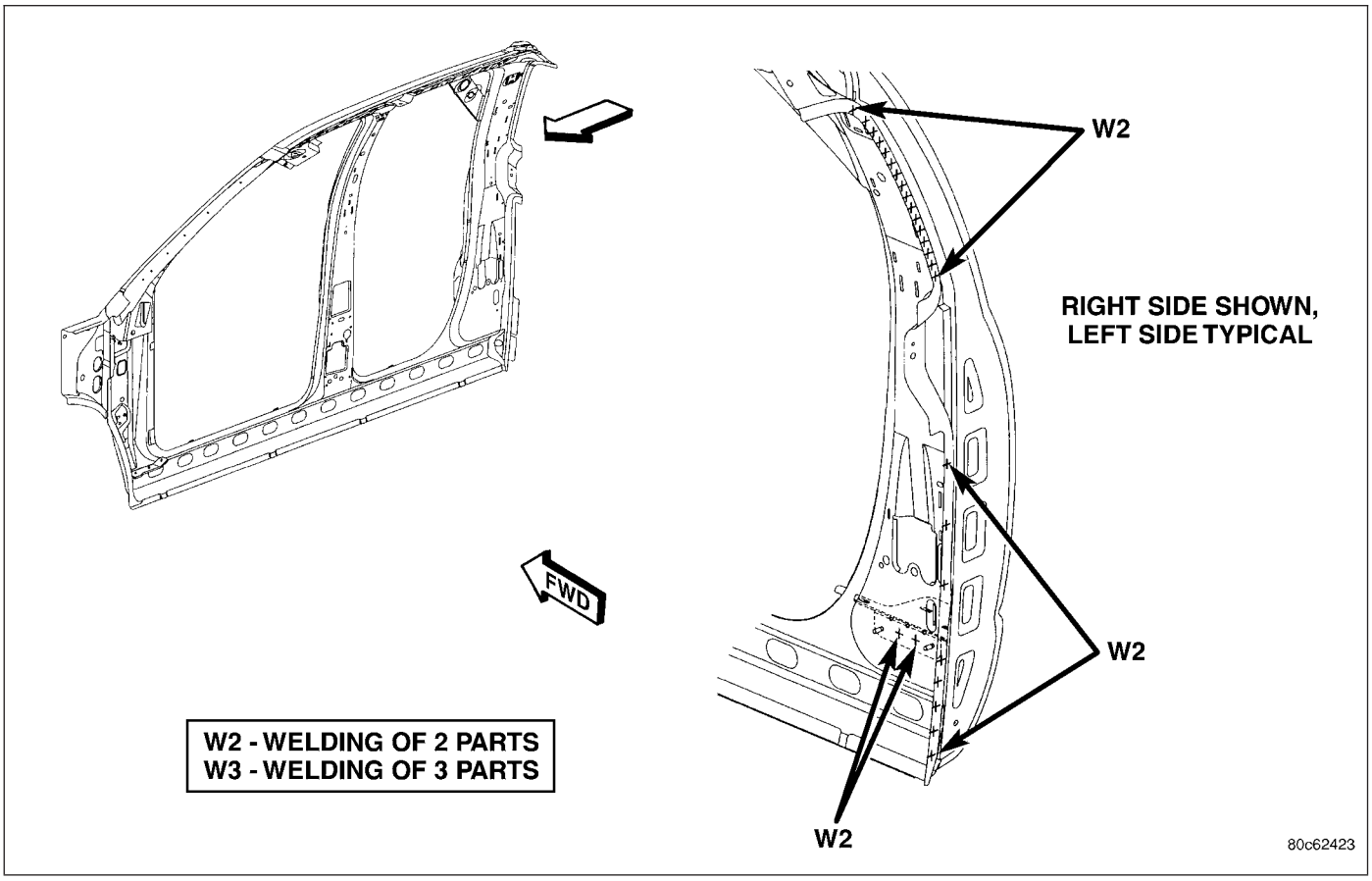

Fig. 64 C-PILLAR BAFFLE - QUAD CAB

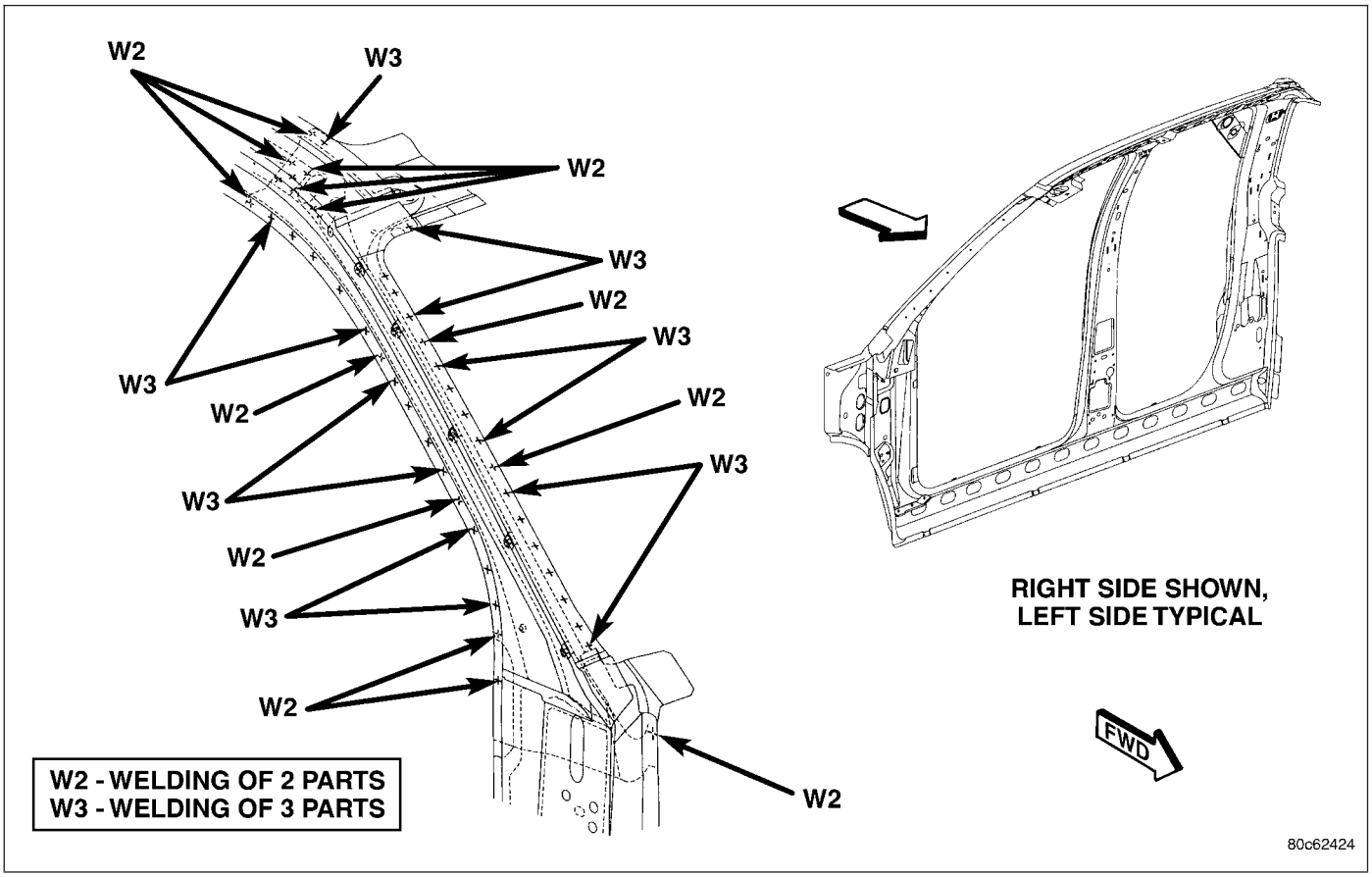

Fig. 65 A-PILLAR REINFORCEMENT - QUAD CAB

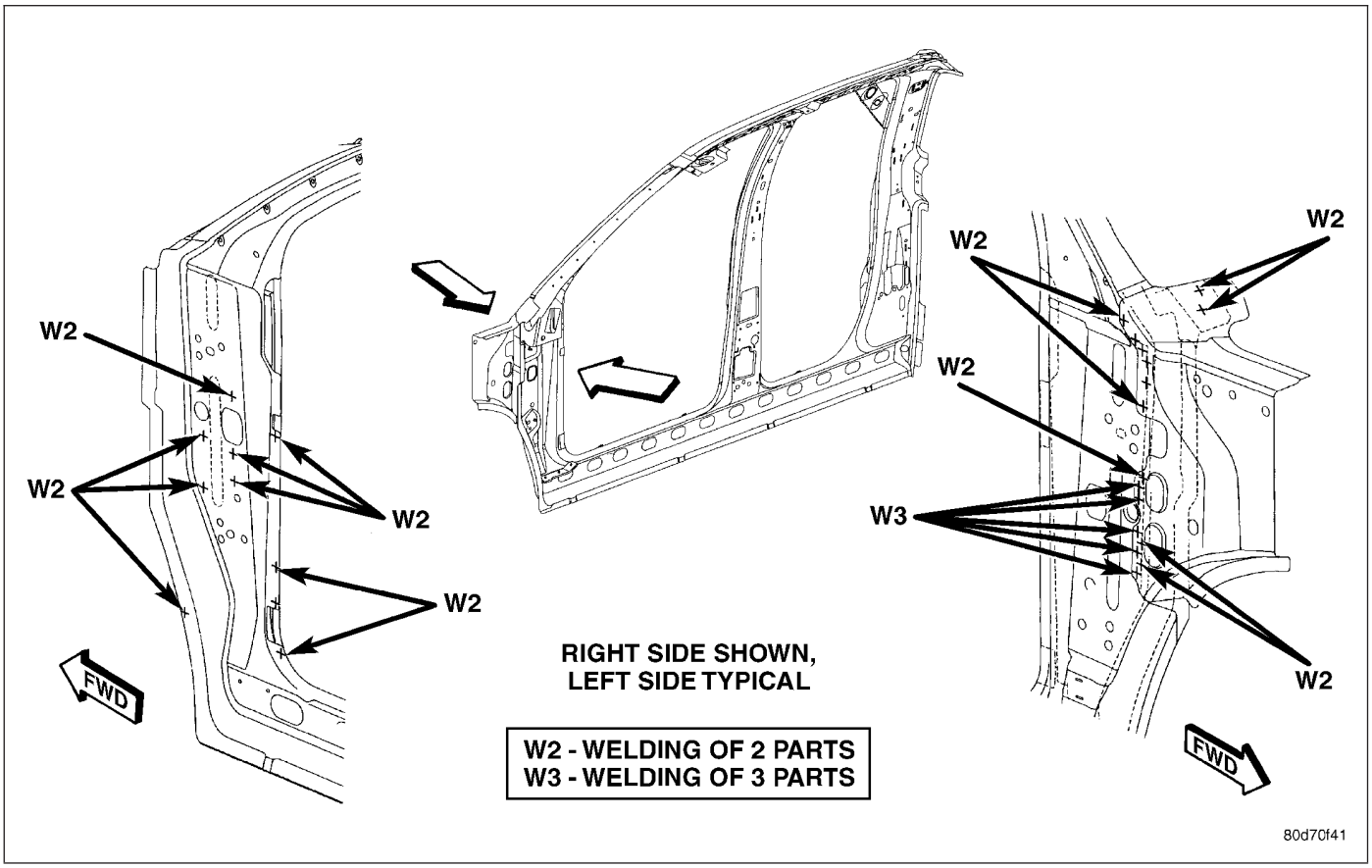

Fig. 66 FRONT EXTENSION PLATE - QUAD CAB

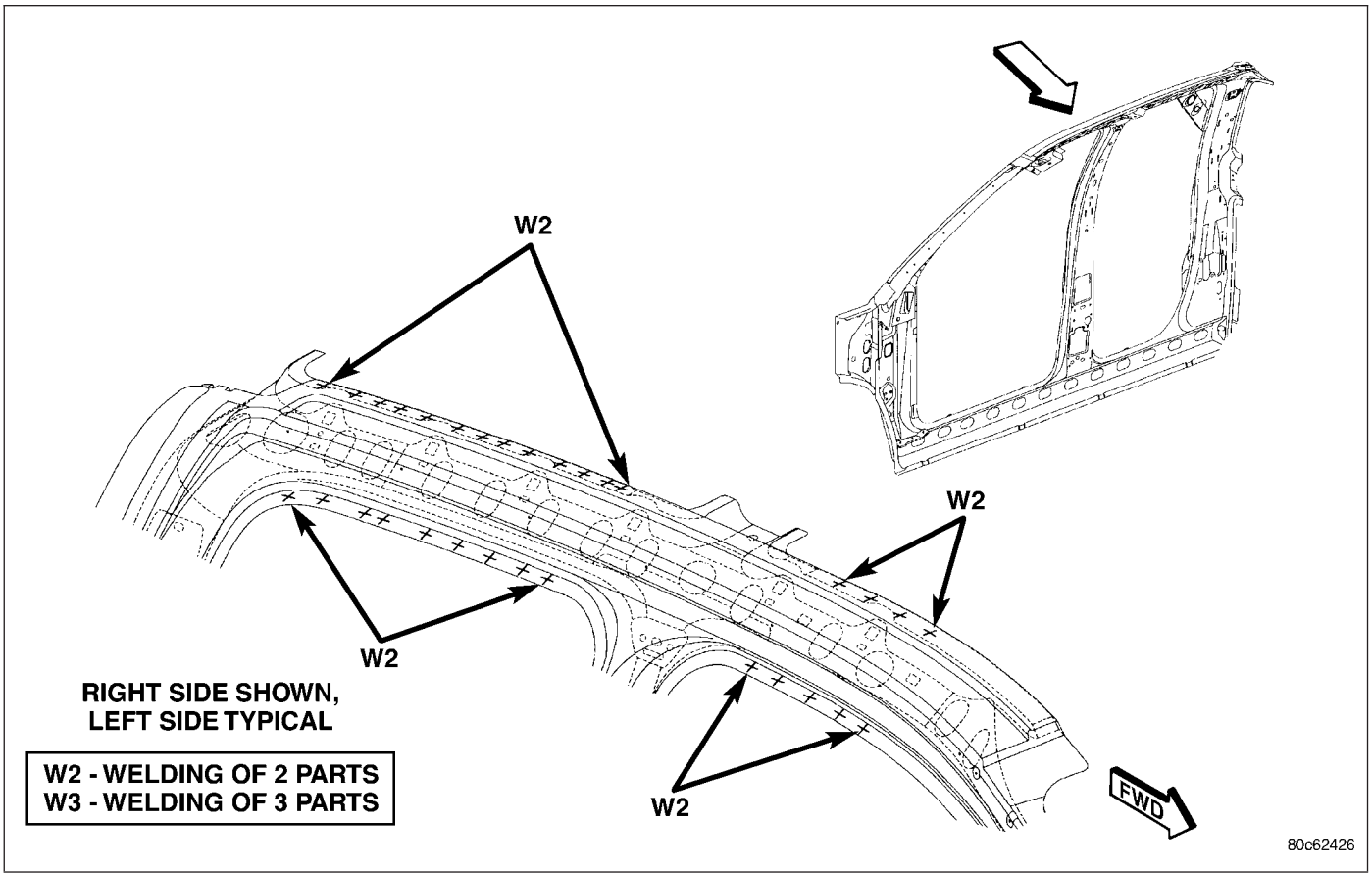

Fig. 67 OUTER BODY SIDE APERTURE - QUAD CAB

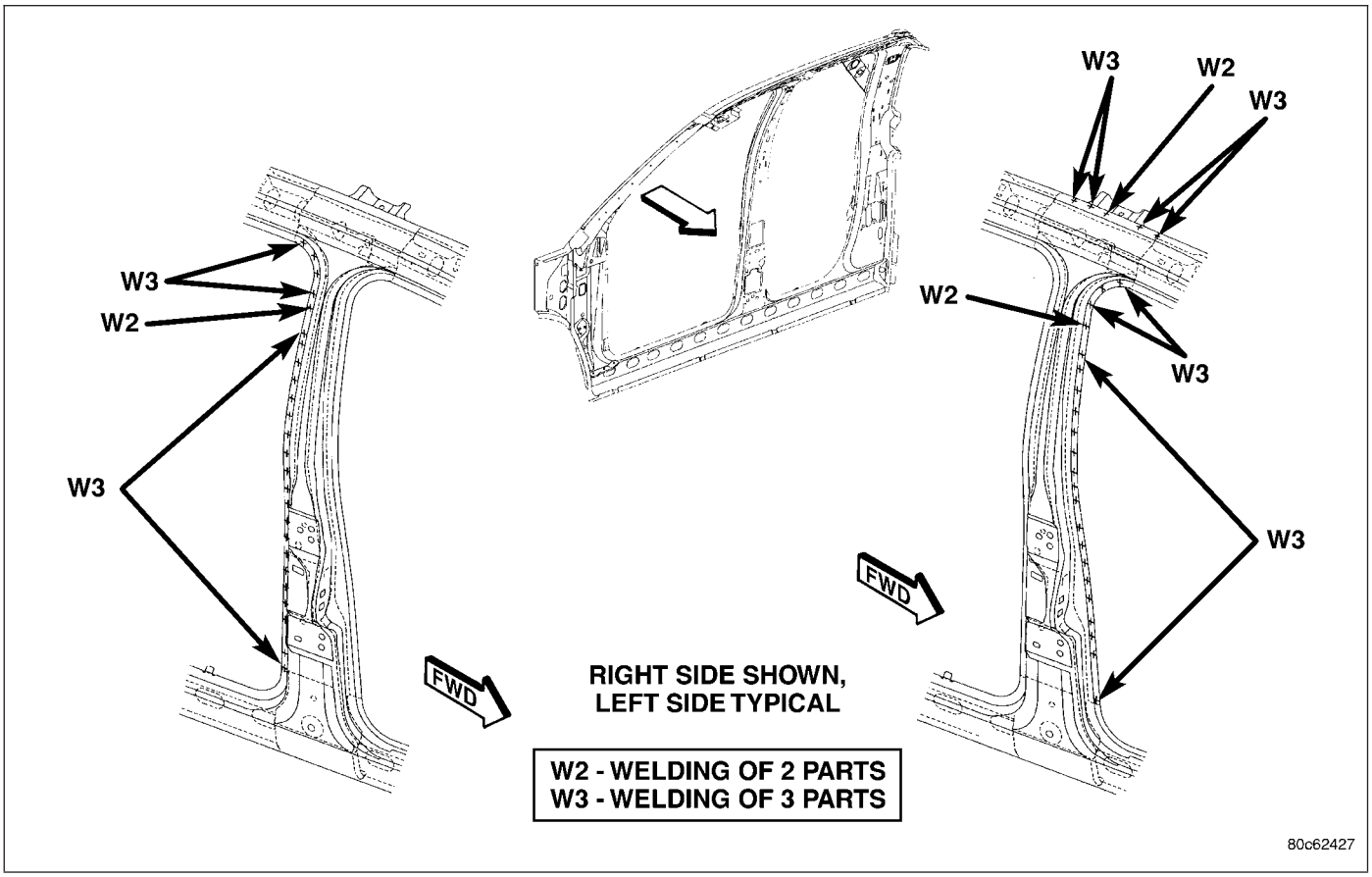

Fig. 68 B-PILLAR REINFORCEMENT - QUAD CAB

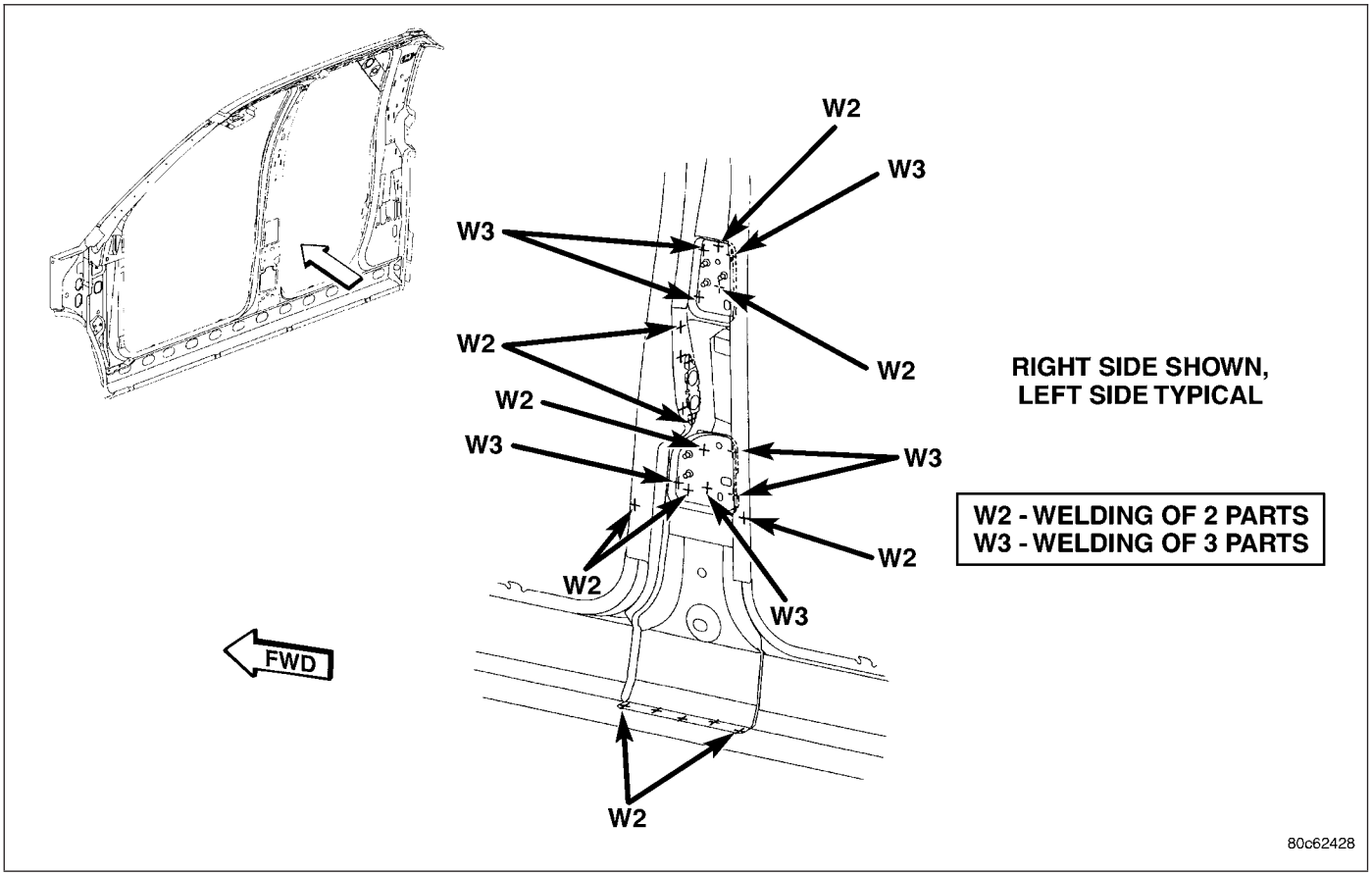

Fig. 69 UPPER TAPPING PLATE - QUAD CAB

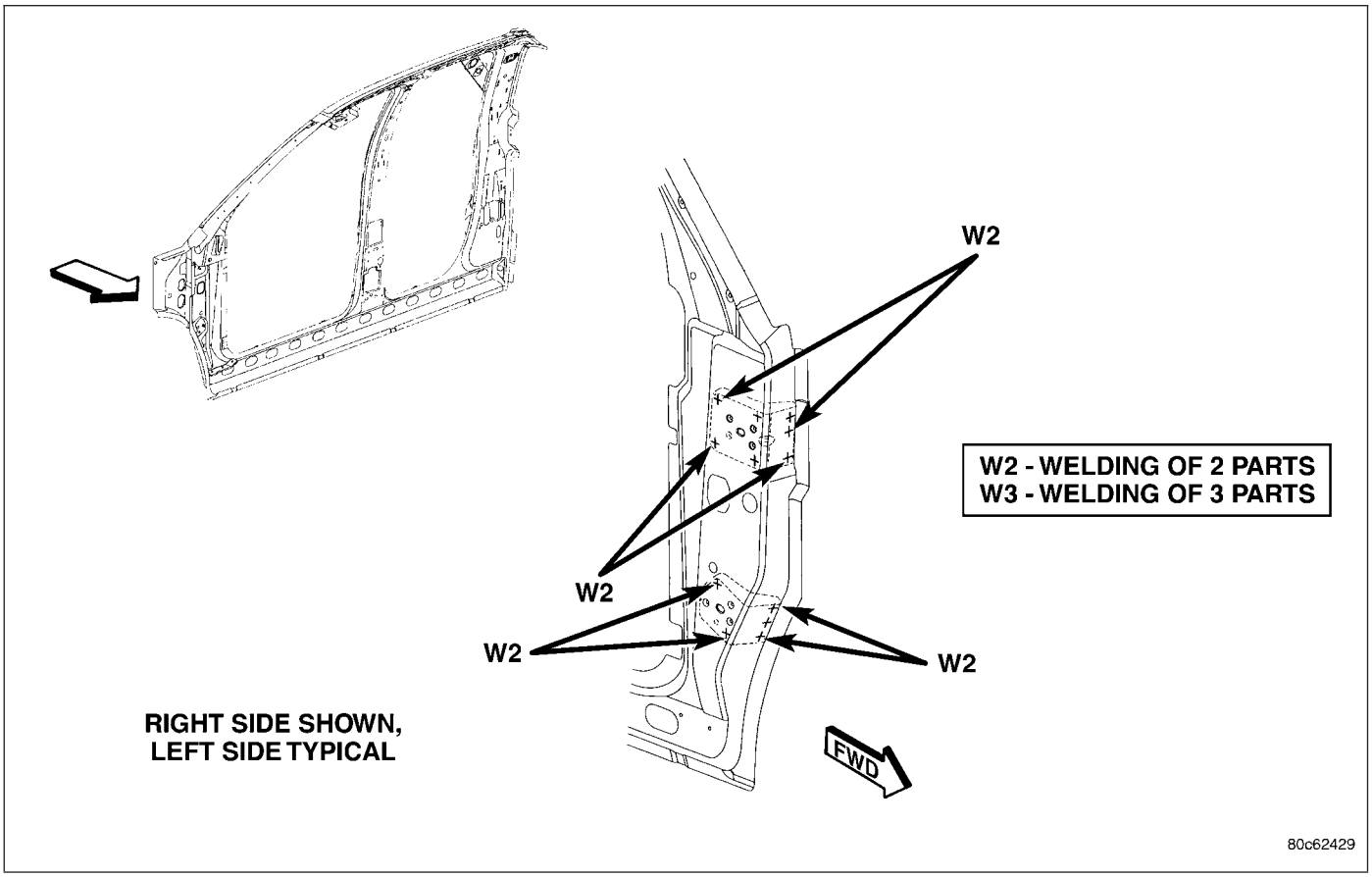

Fig. 70 UPPER A-PILLAR TAPPING PLATE - QUAD CAB

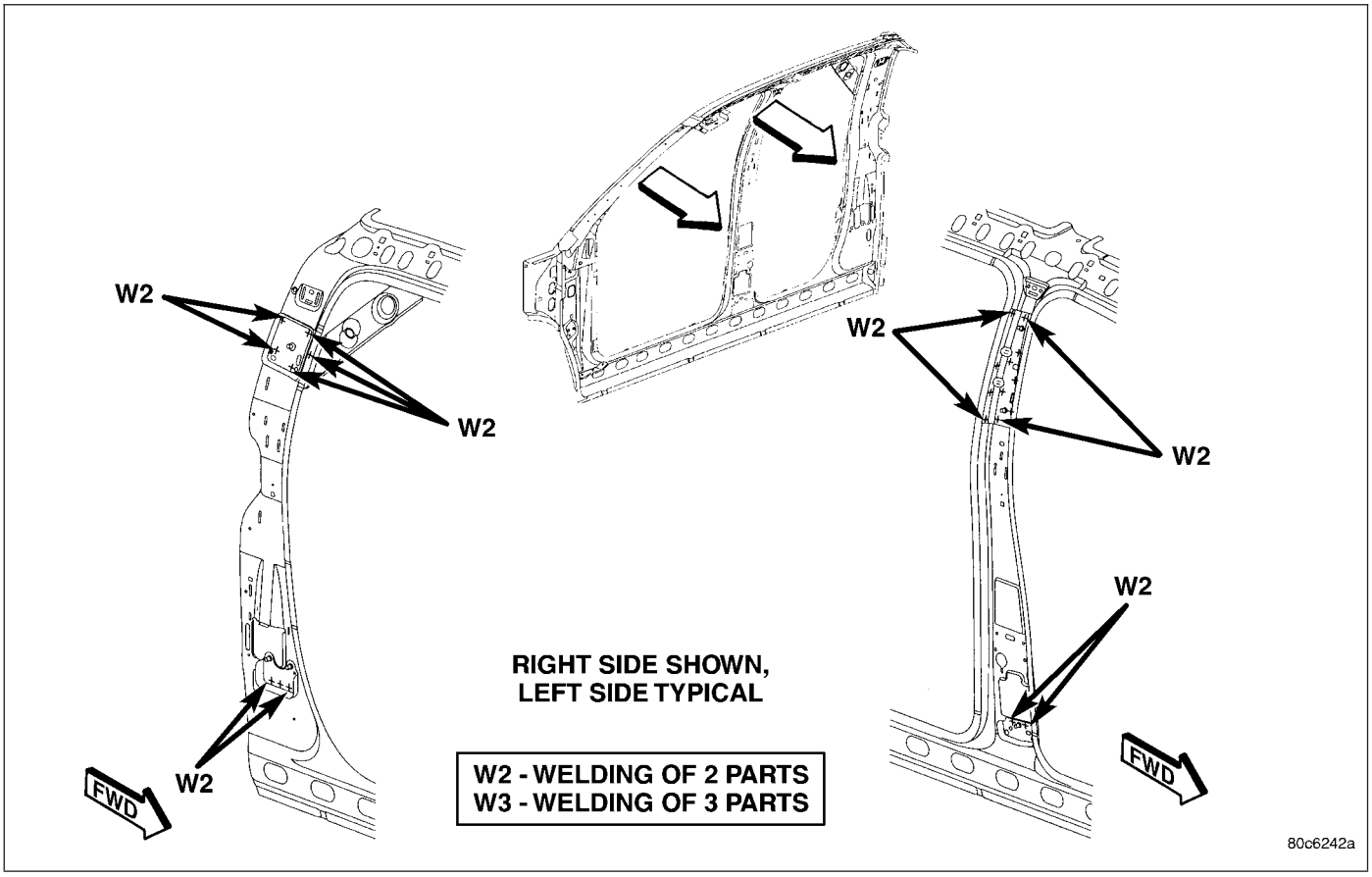

Fig. 71 SEAT BELT MOUNTING PLATES - QUAD CAB

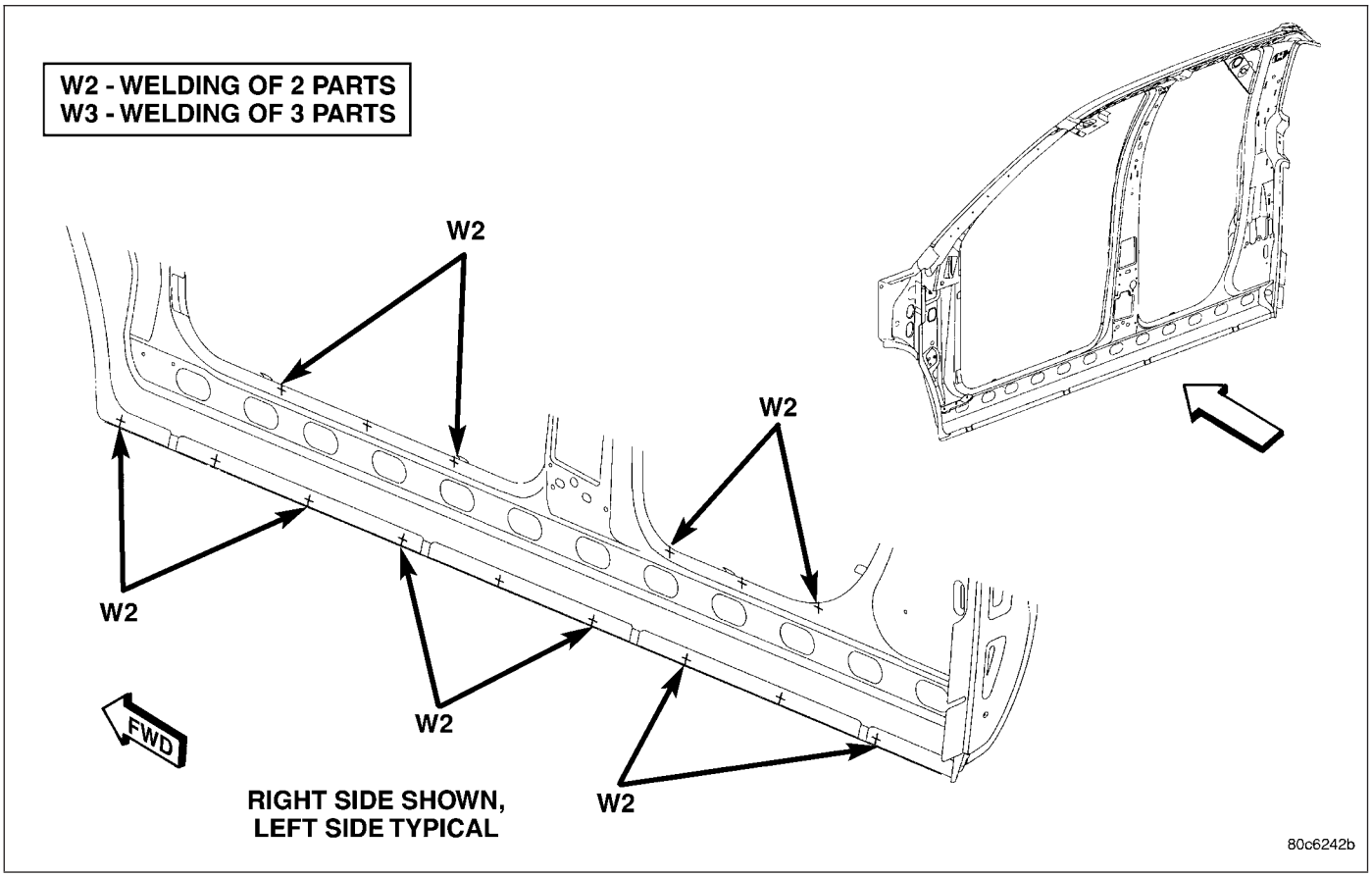

Fig. 72 OUTER BODY SIDE APERTURE - QUAD CAB

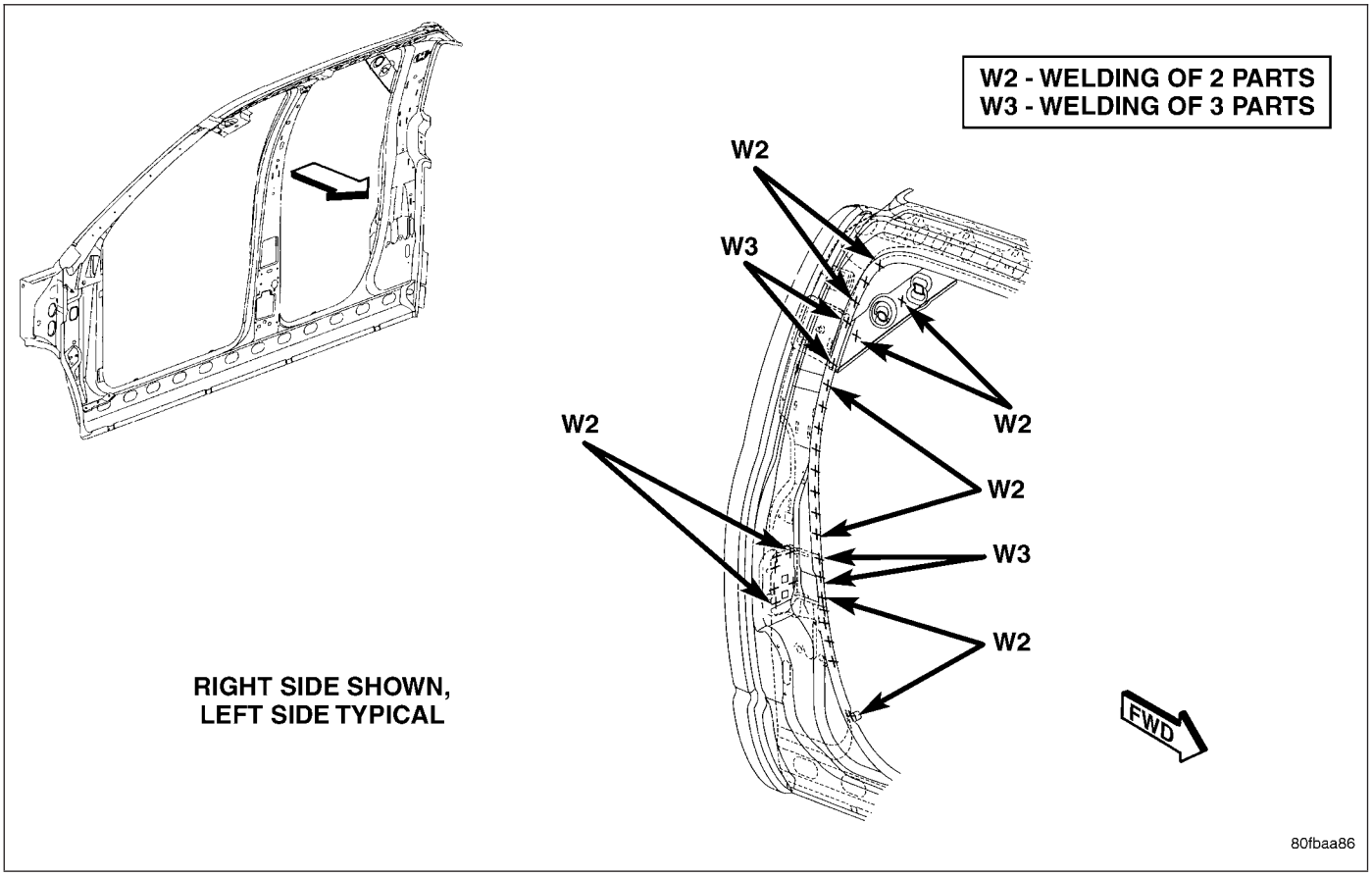

Fig. 73 C-PILLAR REINFORCEMENT - QUAD CAB

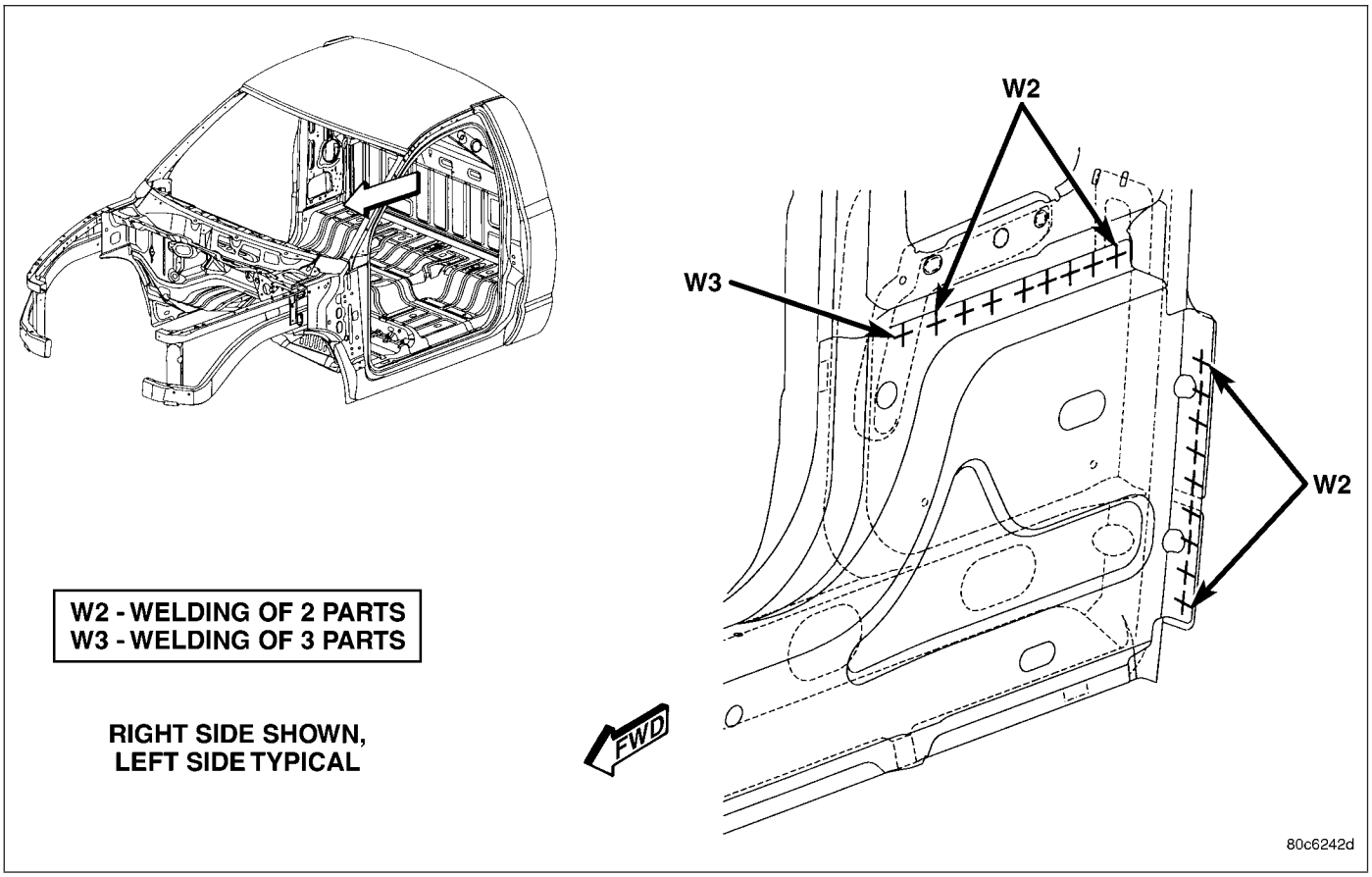

Fig. 74 SEAT BELT RETRACTOR PLATE - STANDARD CAB

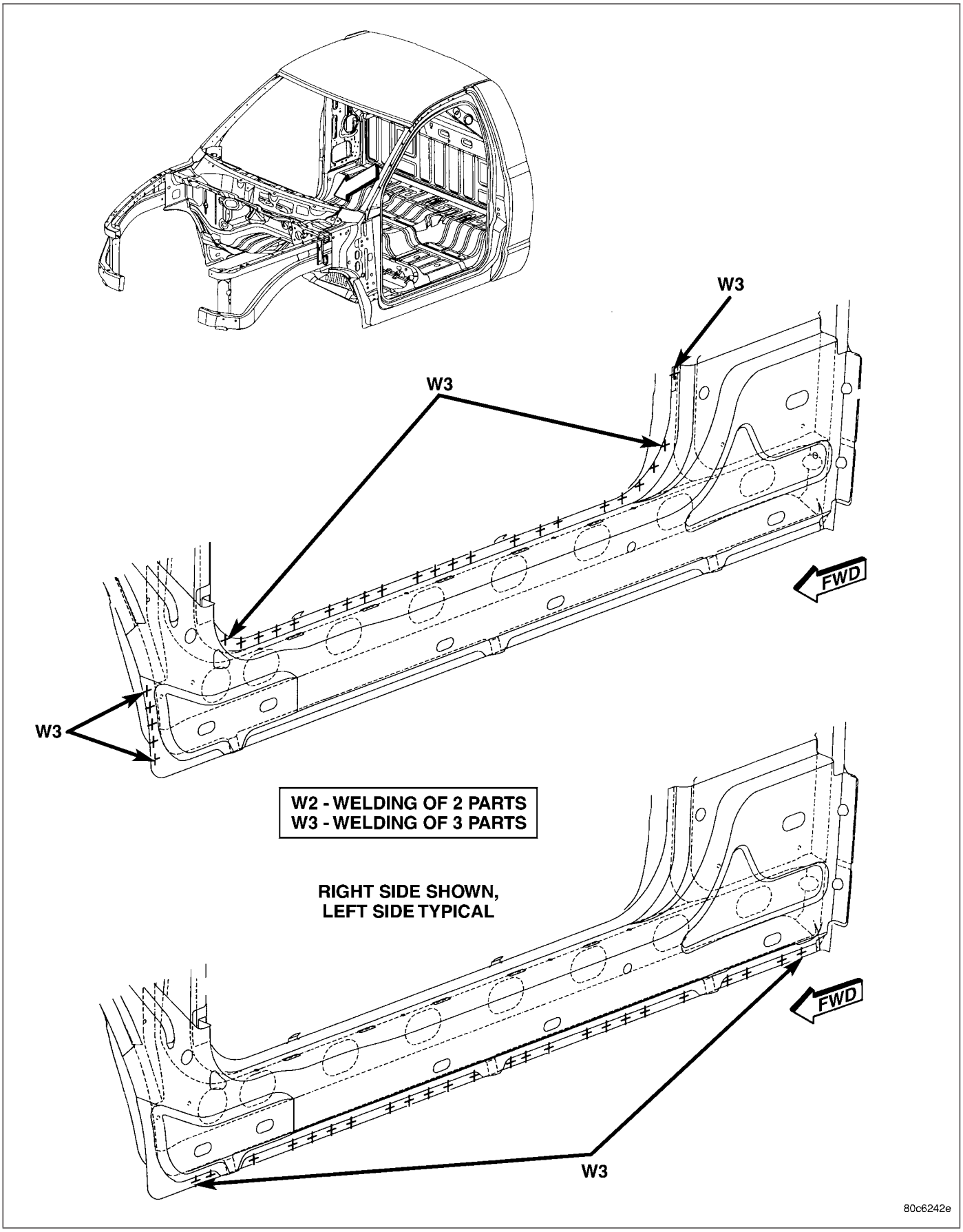

Fig. 75 FLOOR SILL - STANDARD CAB

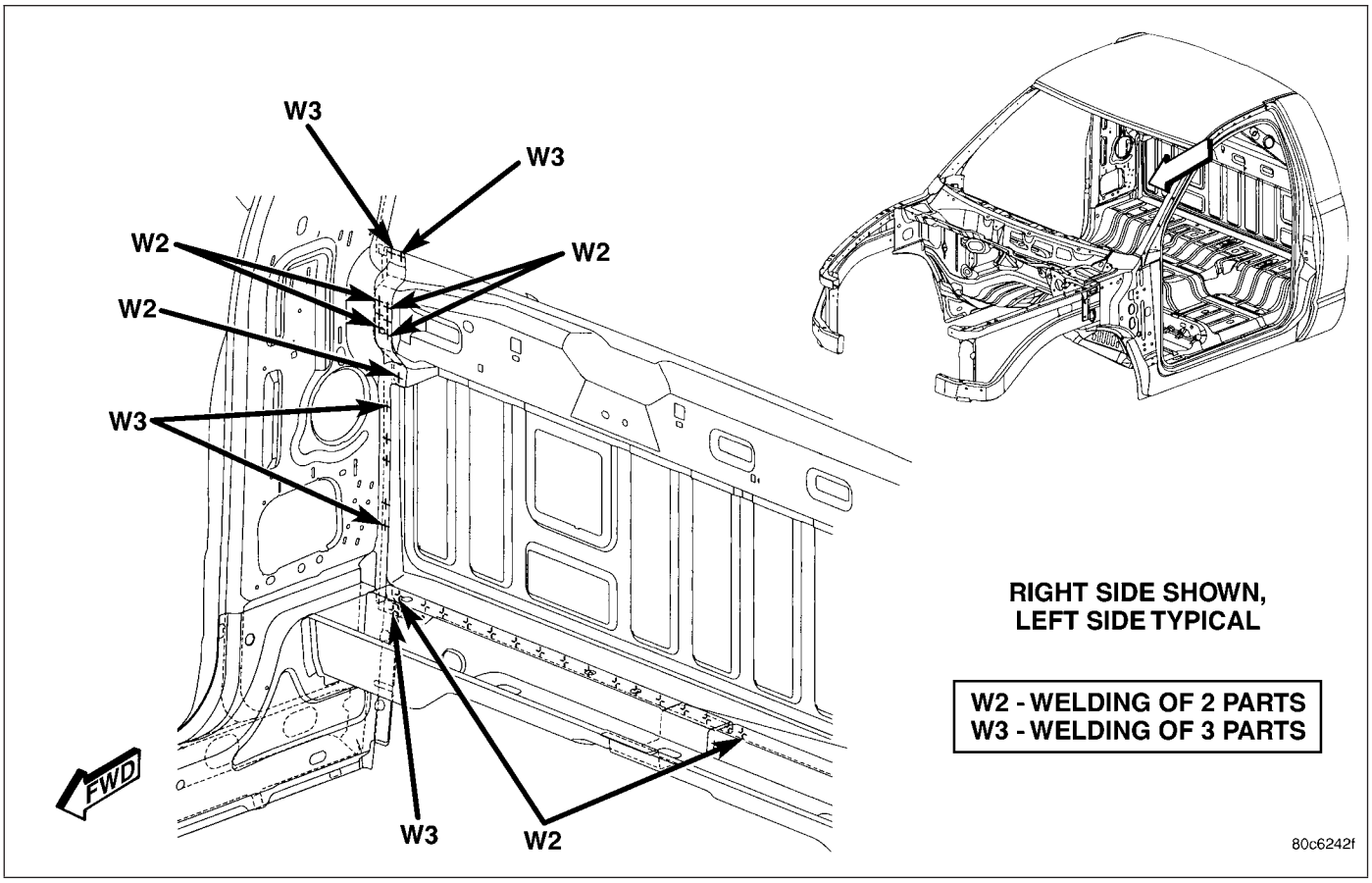

Fig. 76 BACK REINFORCEMENT - STANDARD CAB

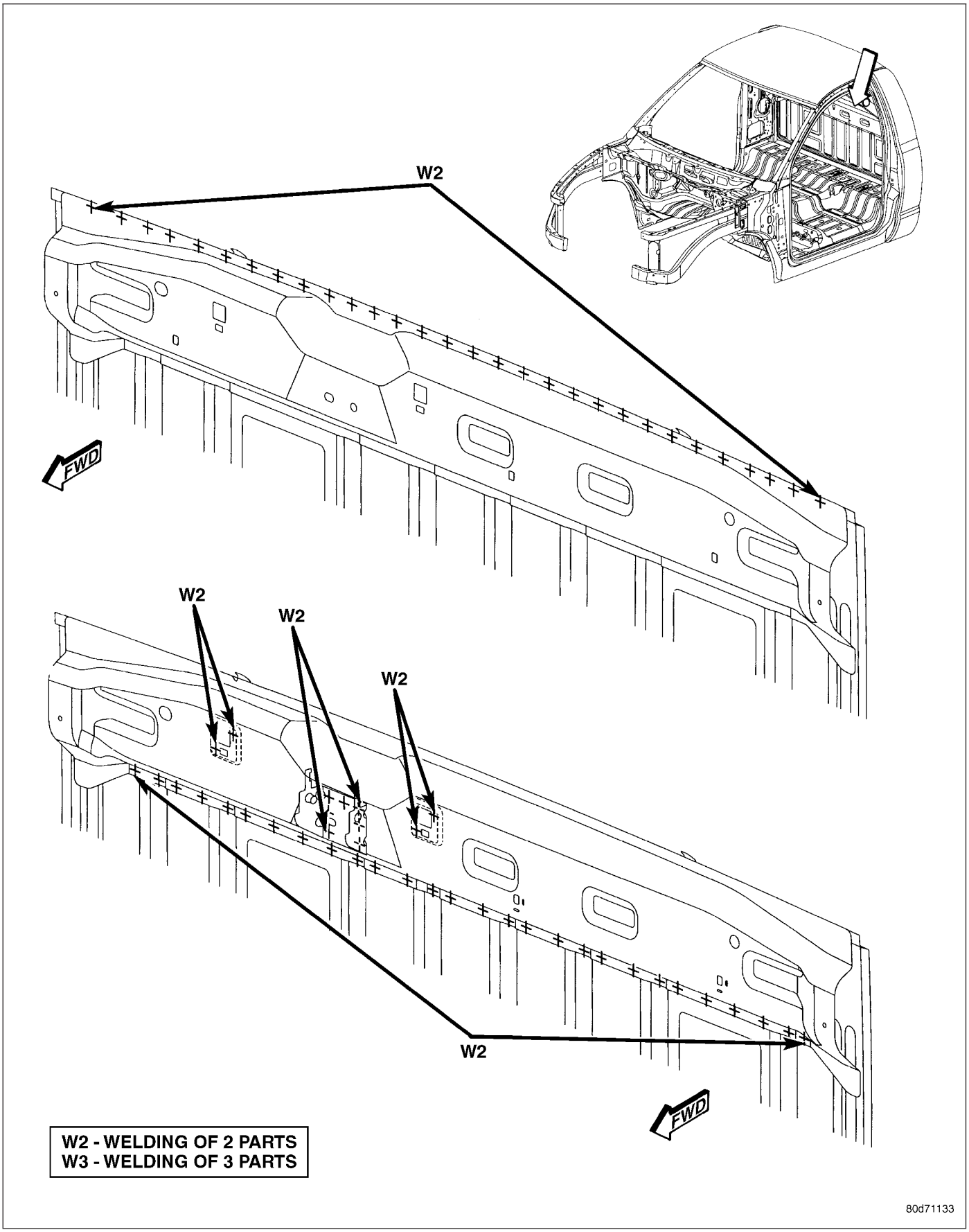

Fig. 77 CAB BACK REINFORCEMENT - STANDARD CAB

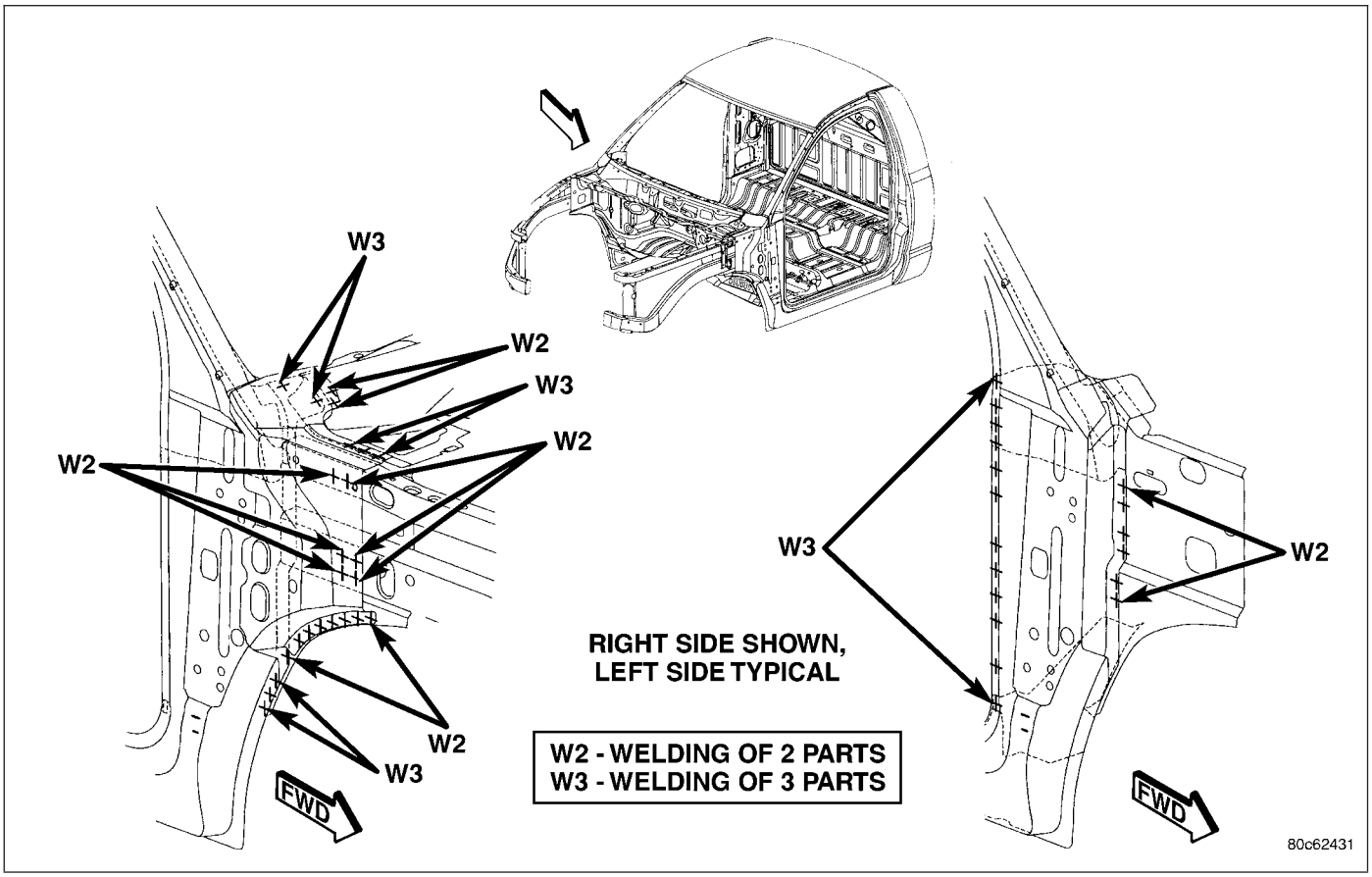

Fig. 78 COWL SIDE PANEL - STANDARD CAB

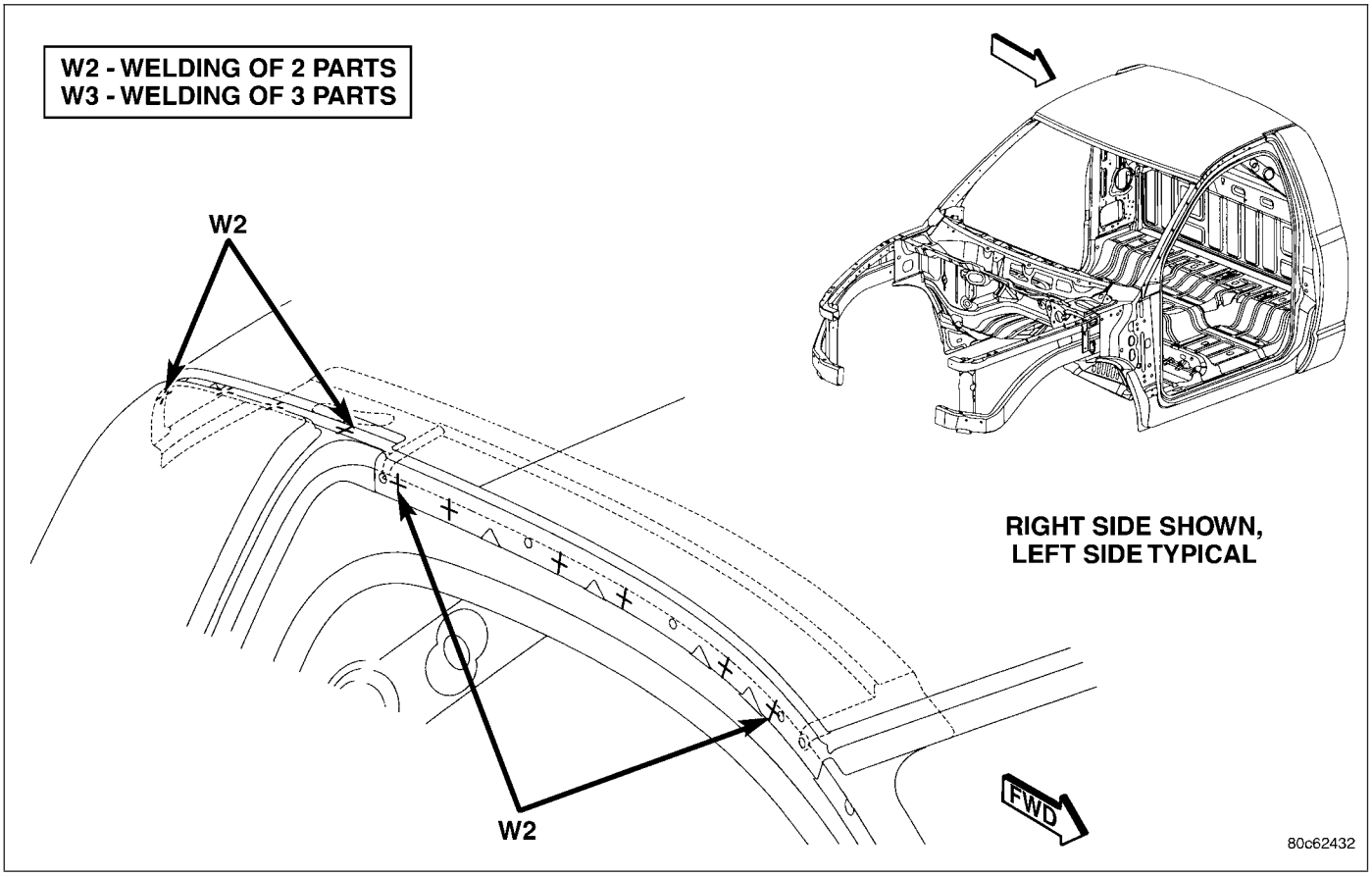

Fig. 79 OUTER ROOF PANEL - STANDARD CAB

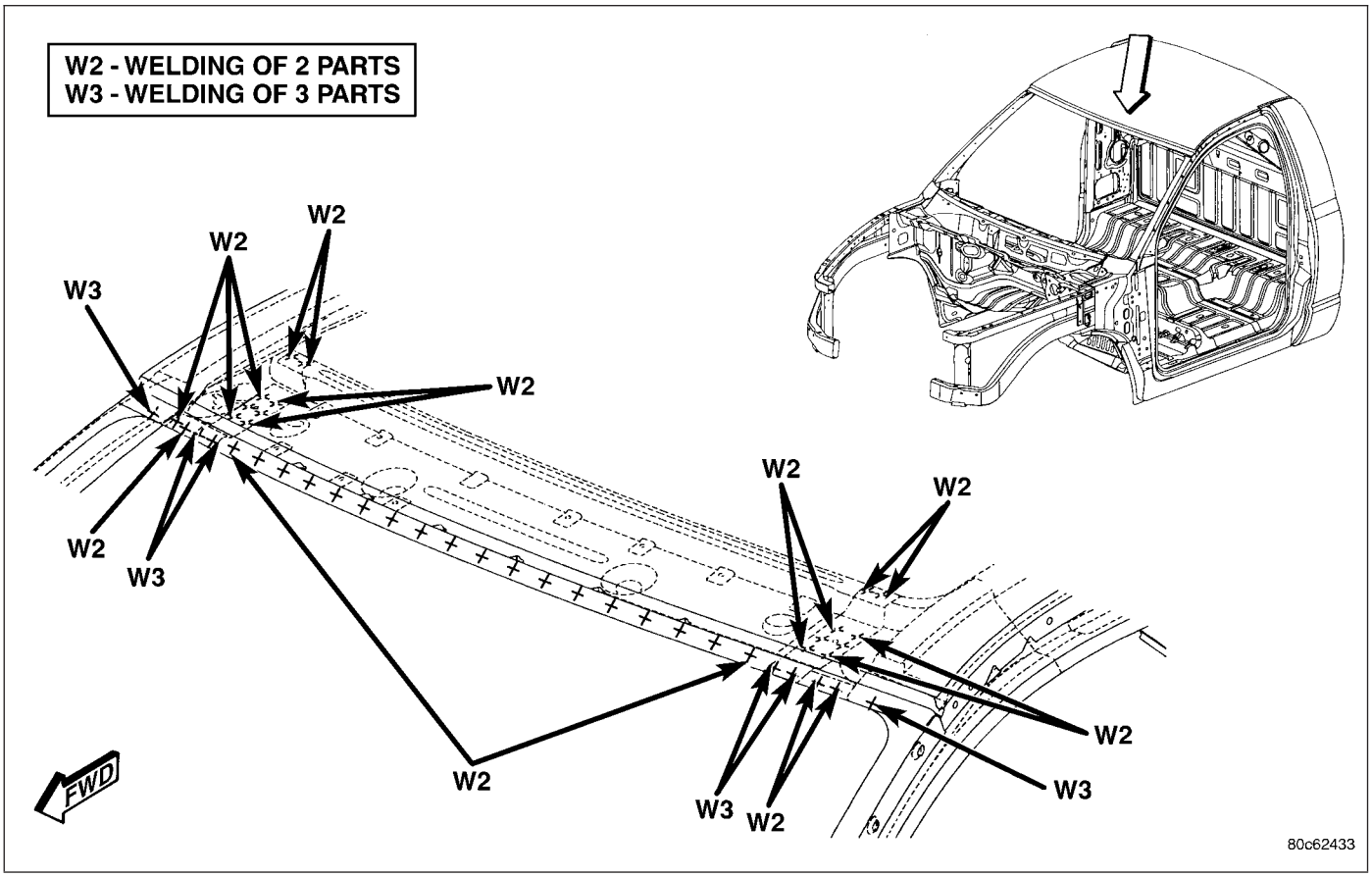

Fig. 80 FRONT ROOF HEADER - STANDARD CAB

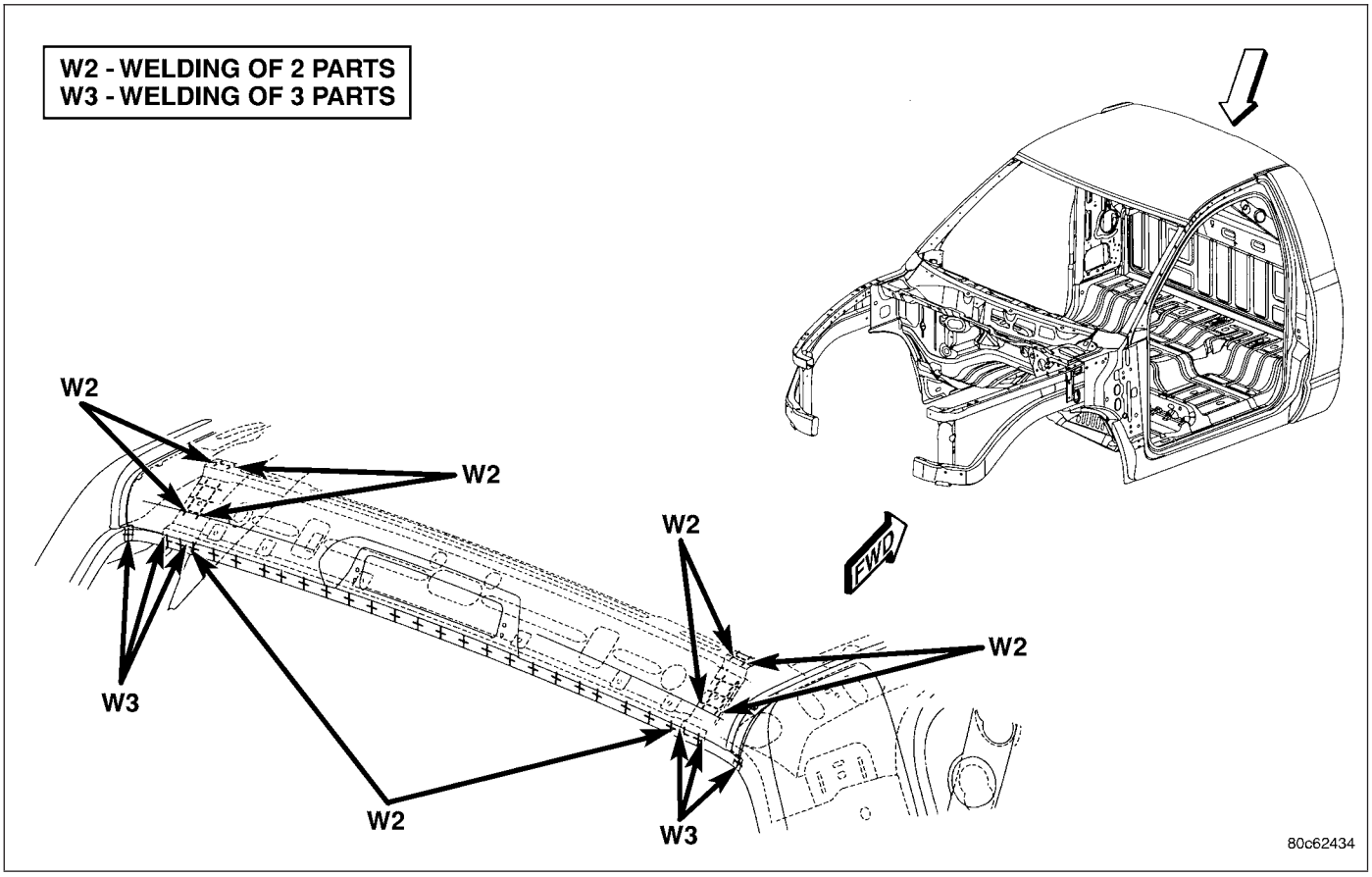

Fig. 81 REAR ROOF HEADER - STANDARD CAB

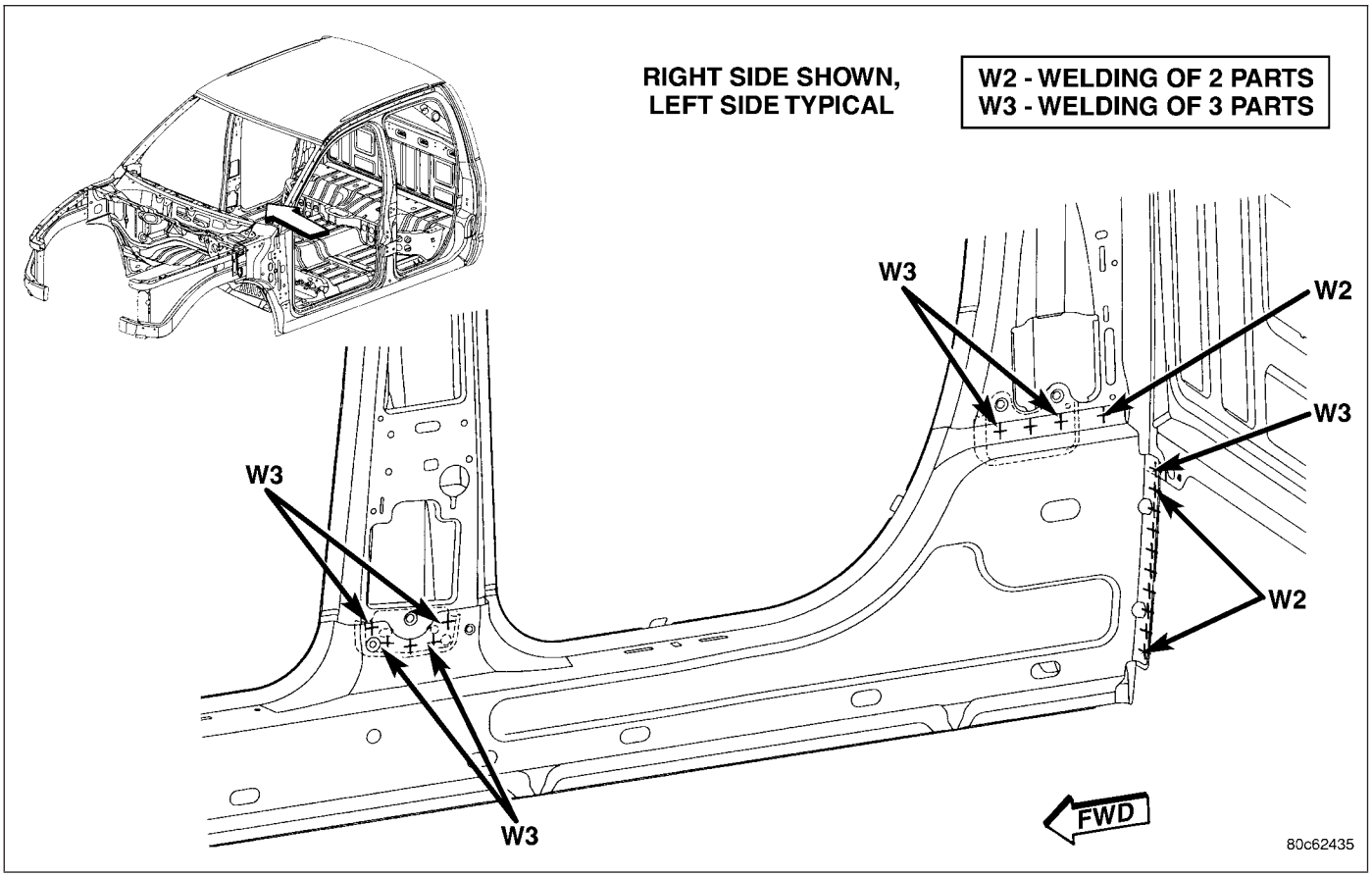

Fig. 82 OUTER BODY SIDE APERTURE - QUAD CAB

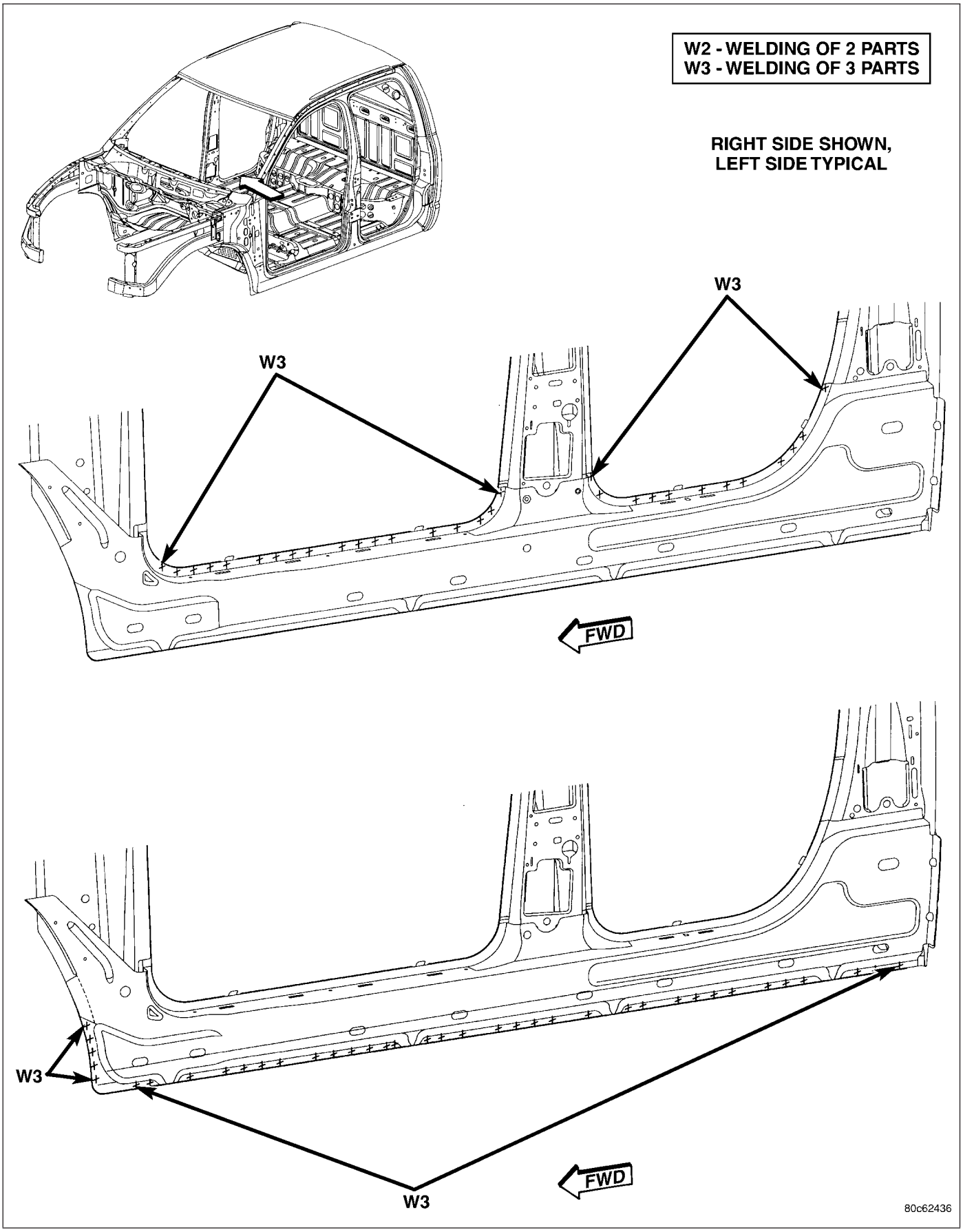

Fig. 83 OUTER BODY SIDE APERTURE- QUAD CAB

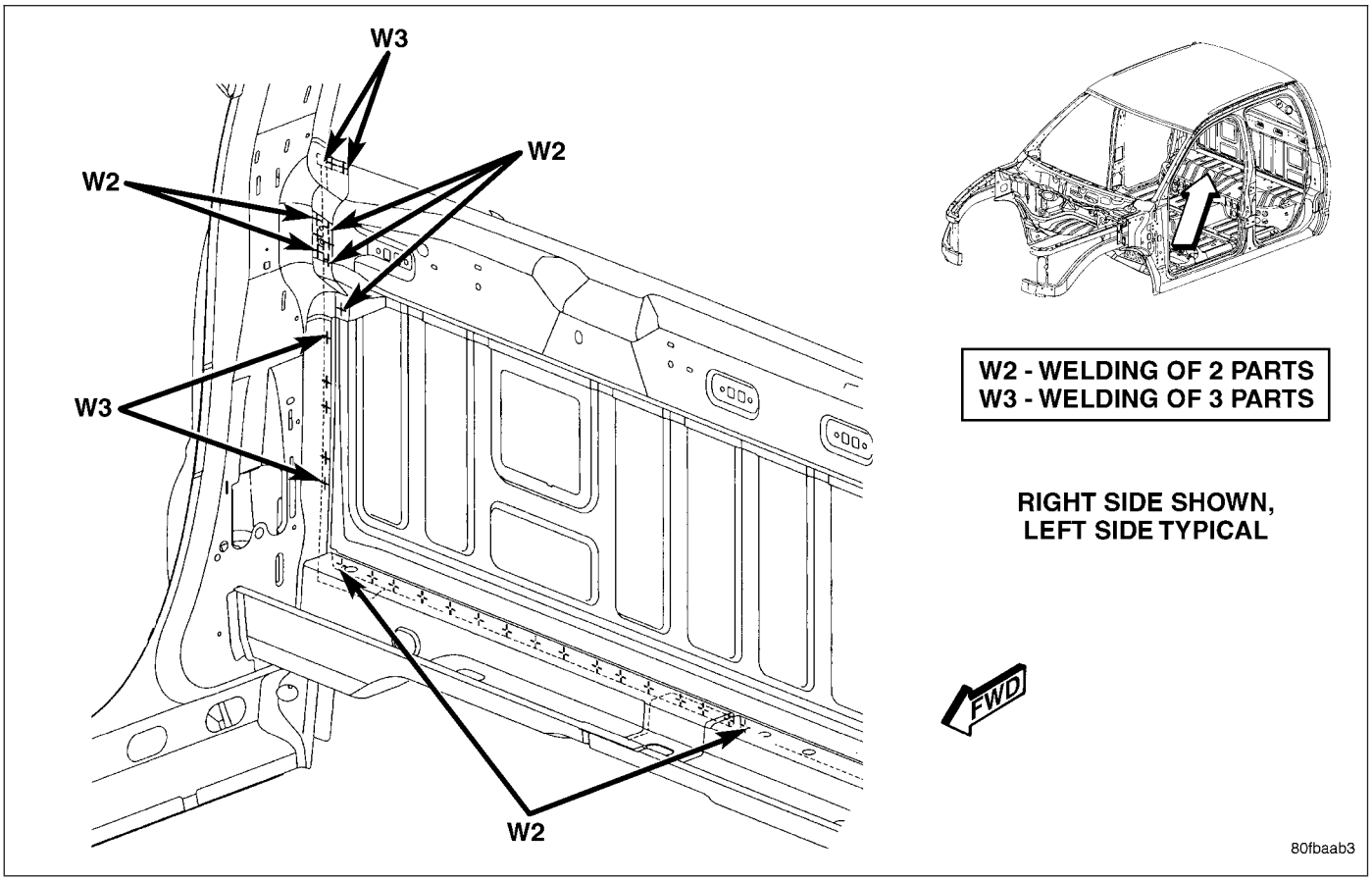

Fig. 84 REAR FLOOR CROSSMEMBER - QUAD CAB

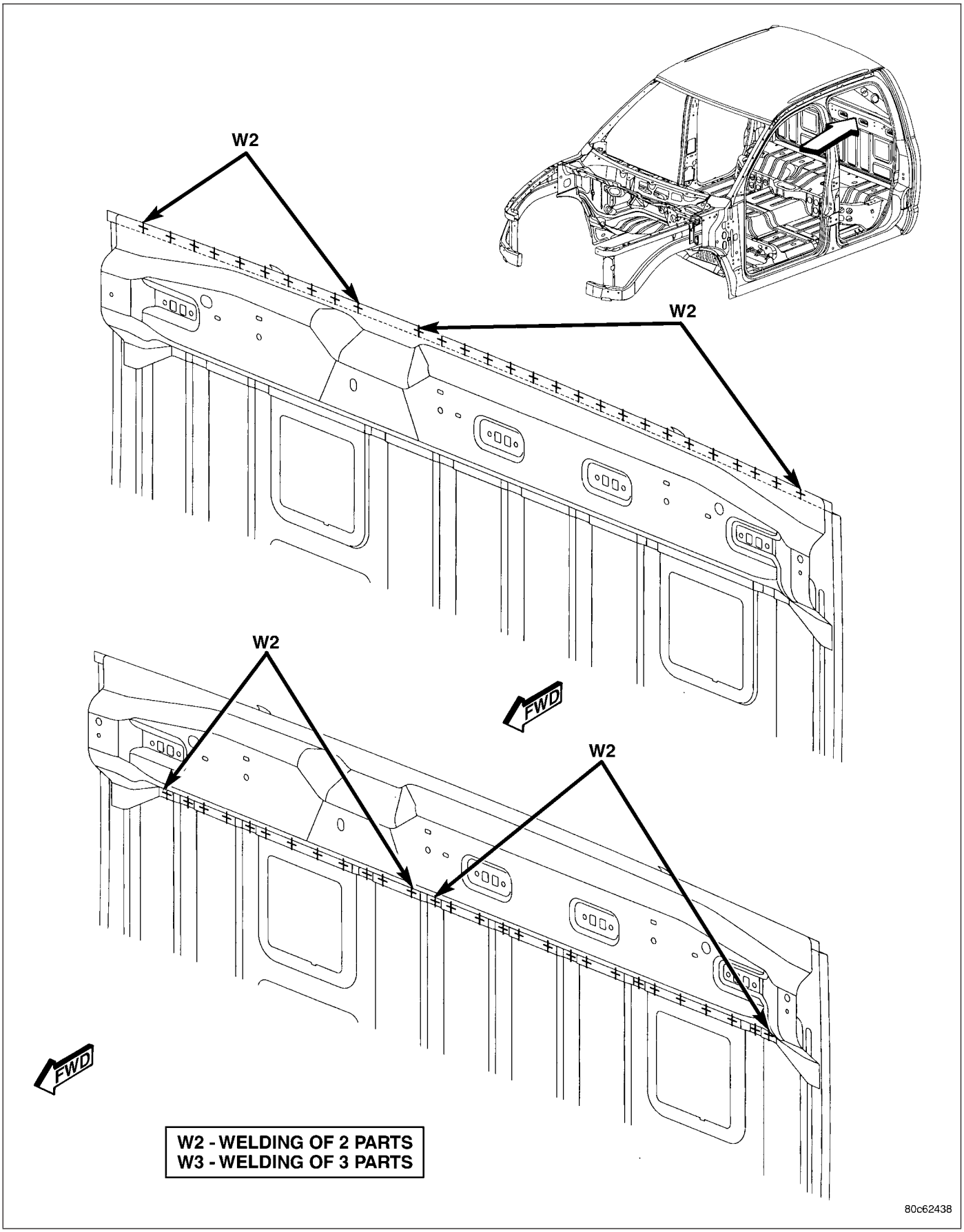

Fig. 85 CAB BACK REINFORCEMENT- QUAD CAB

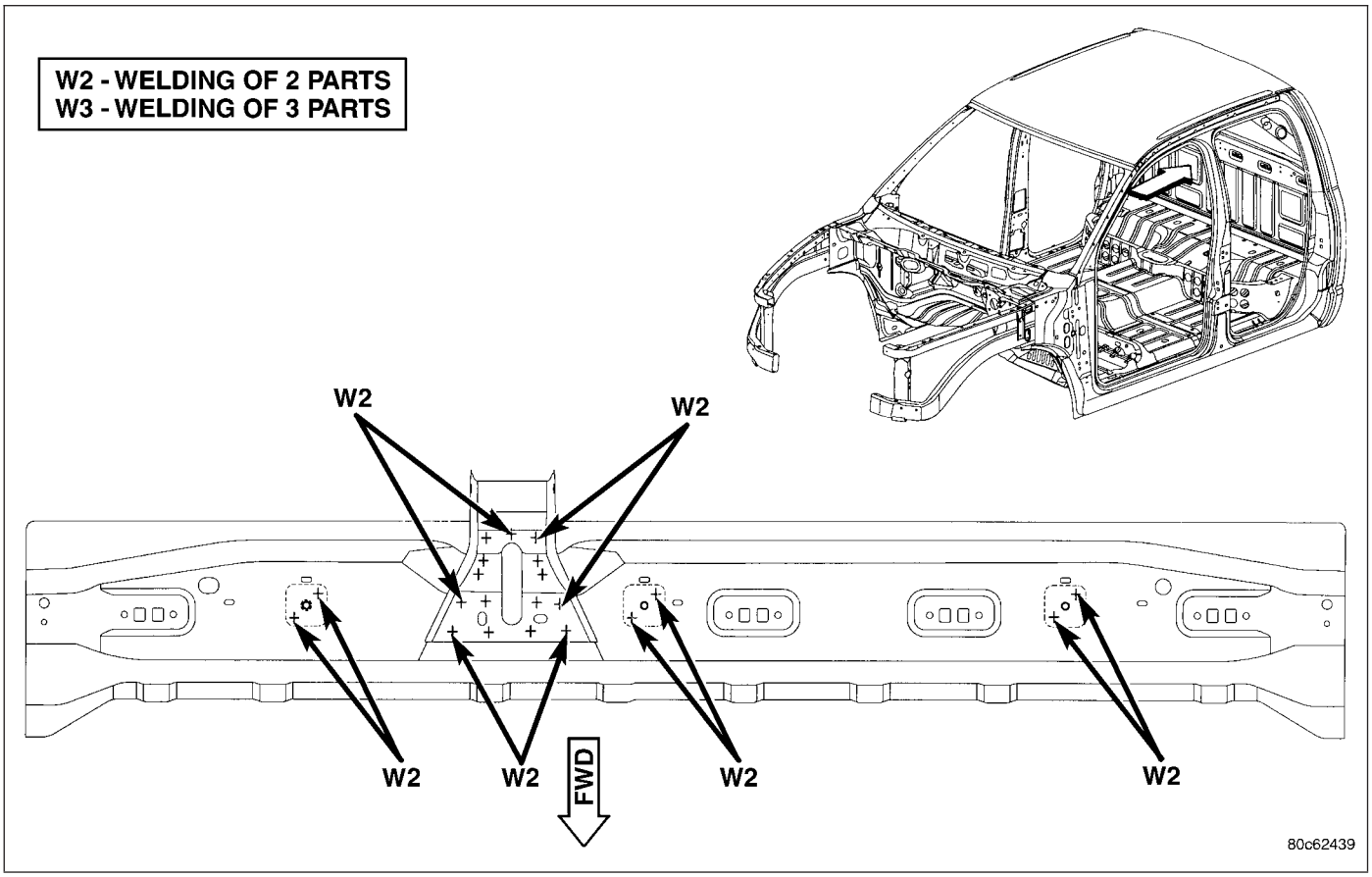

Fig. 86 CENTER SHOULDER BELT REINFORCEMENT- QUAD CAB

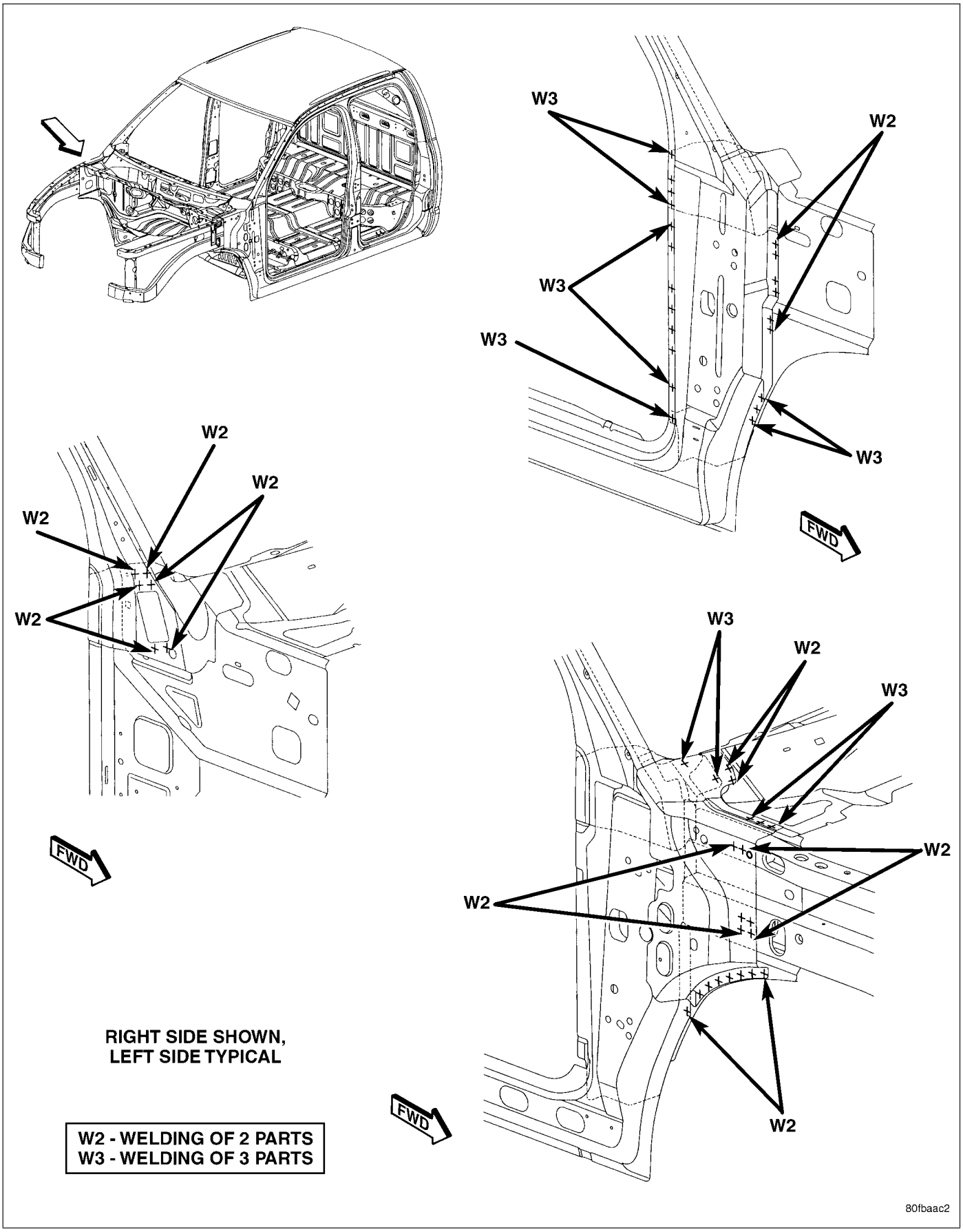

Fig. 87 A-PILLAR REINFORCEMENT - QUAD CAB

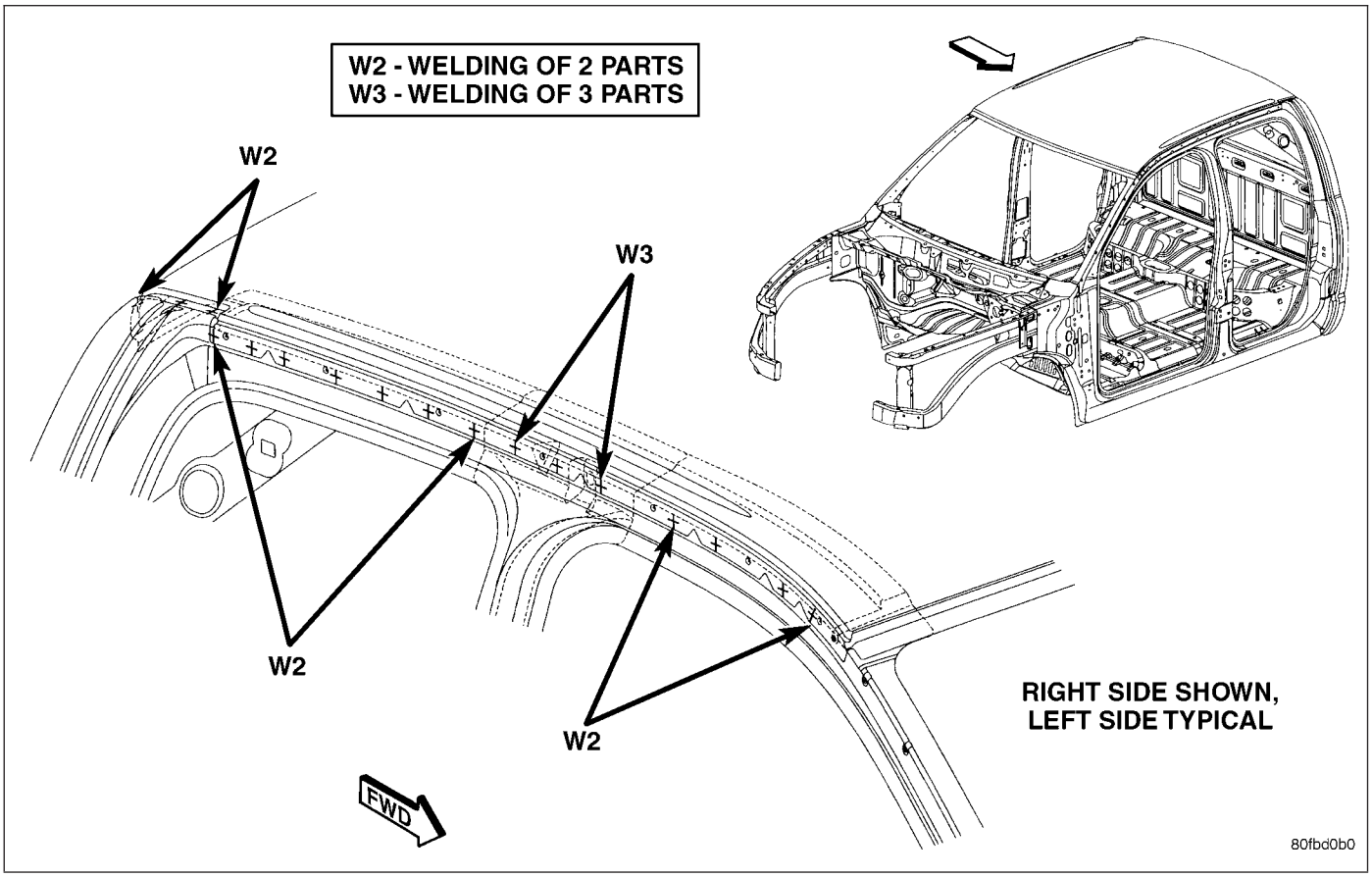

Fig. 88 B-PILLAR REINFORCEMENT - QUAD CAB

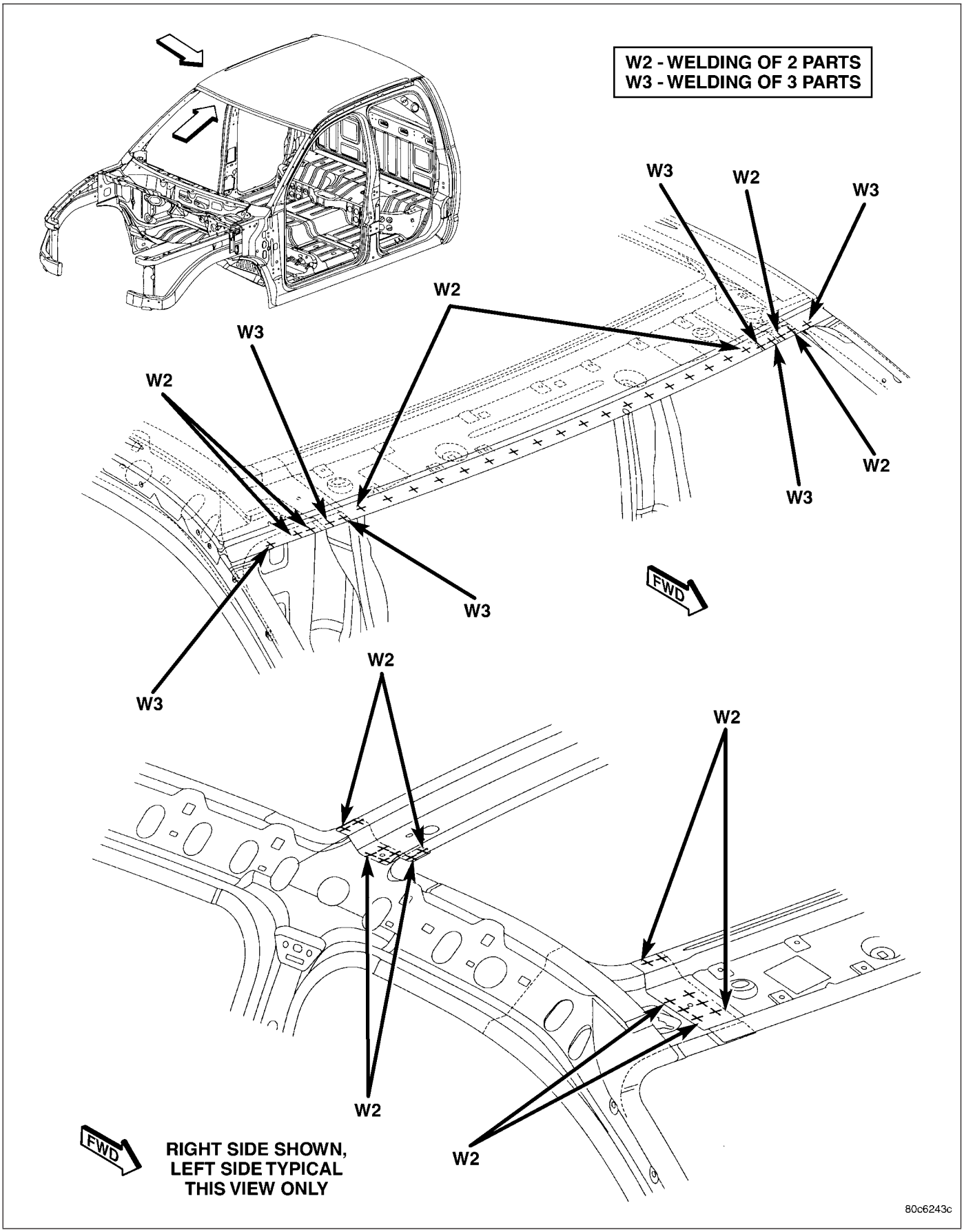

Fig. 89 FRONT ROOF HEADER- QUAD CAB

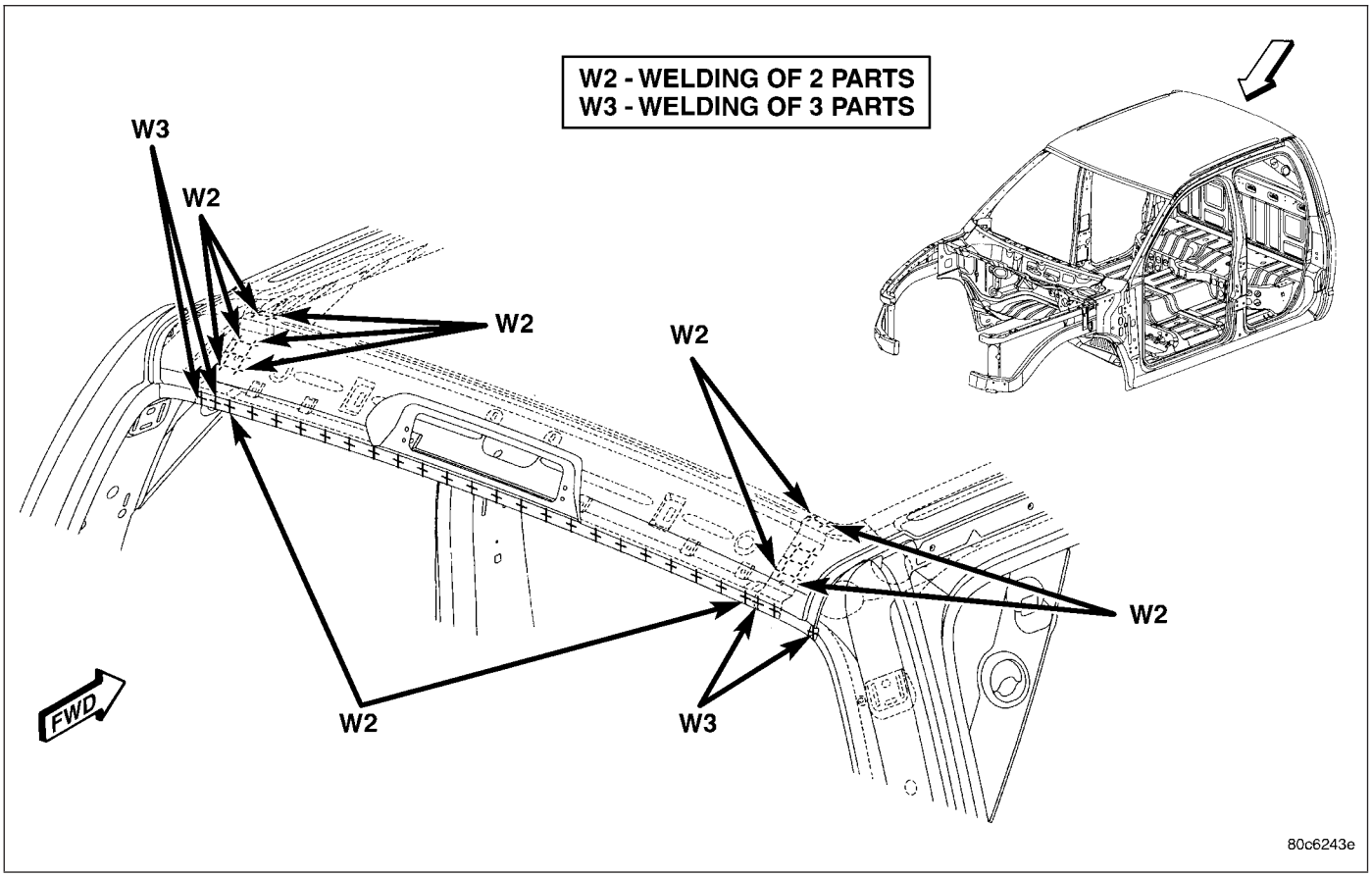

Fig. 90 INNER BODY SIDE APERTURE- QUAD CAB

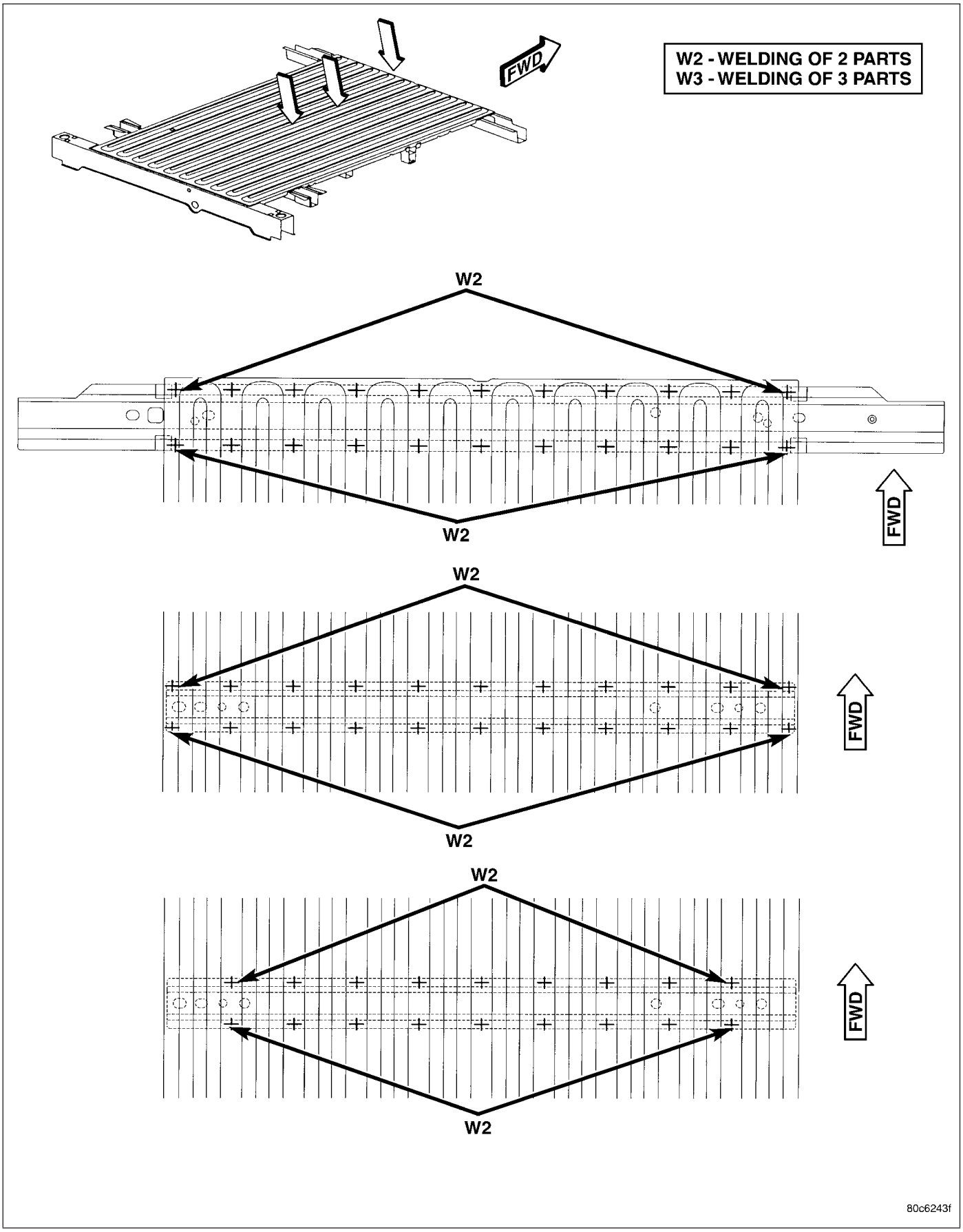

Fig. 91 FRONT CROSSMEMBER - SHORT CARGO BOX ONLY

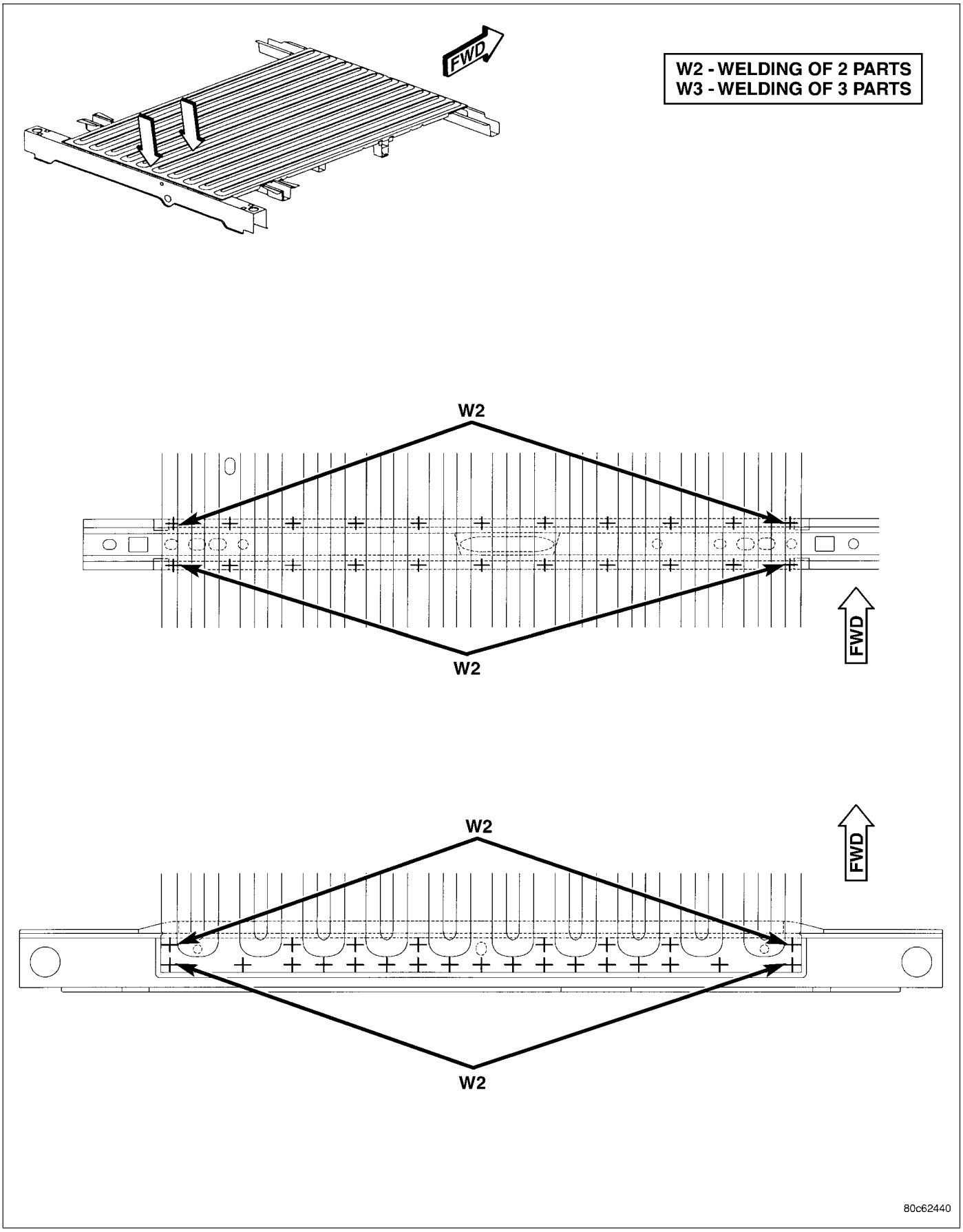

Fig. 92 LONG CROSSMEMBER - SHORT CARGO BOX ONLY

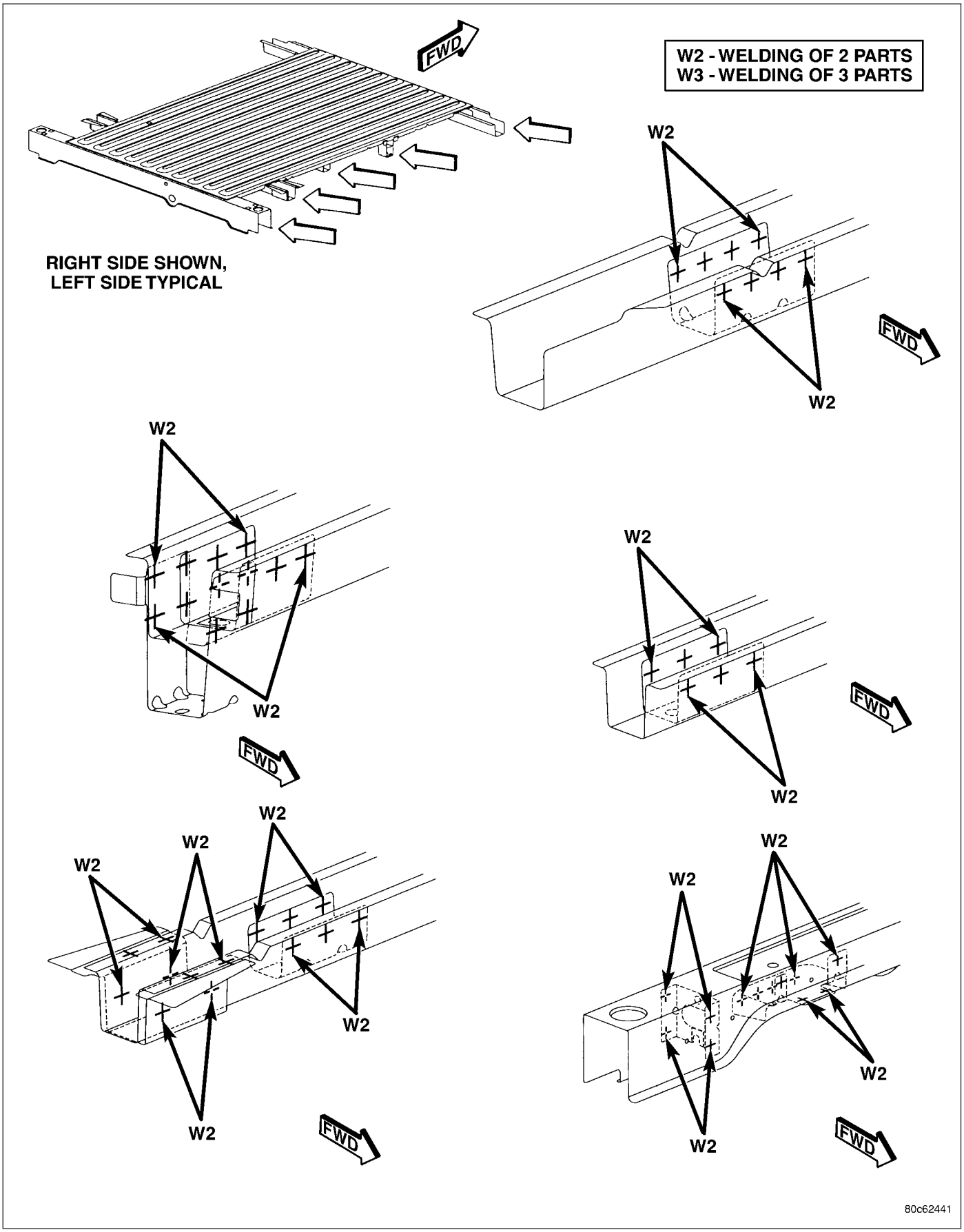

Fig. 93 TAPPING PLATES - SHORT CARGO BOX ONLY

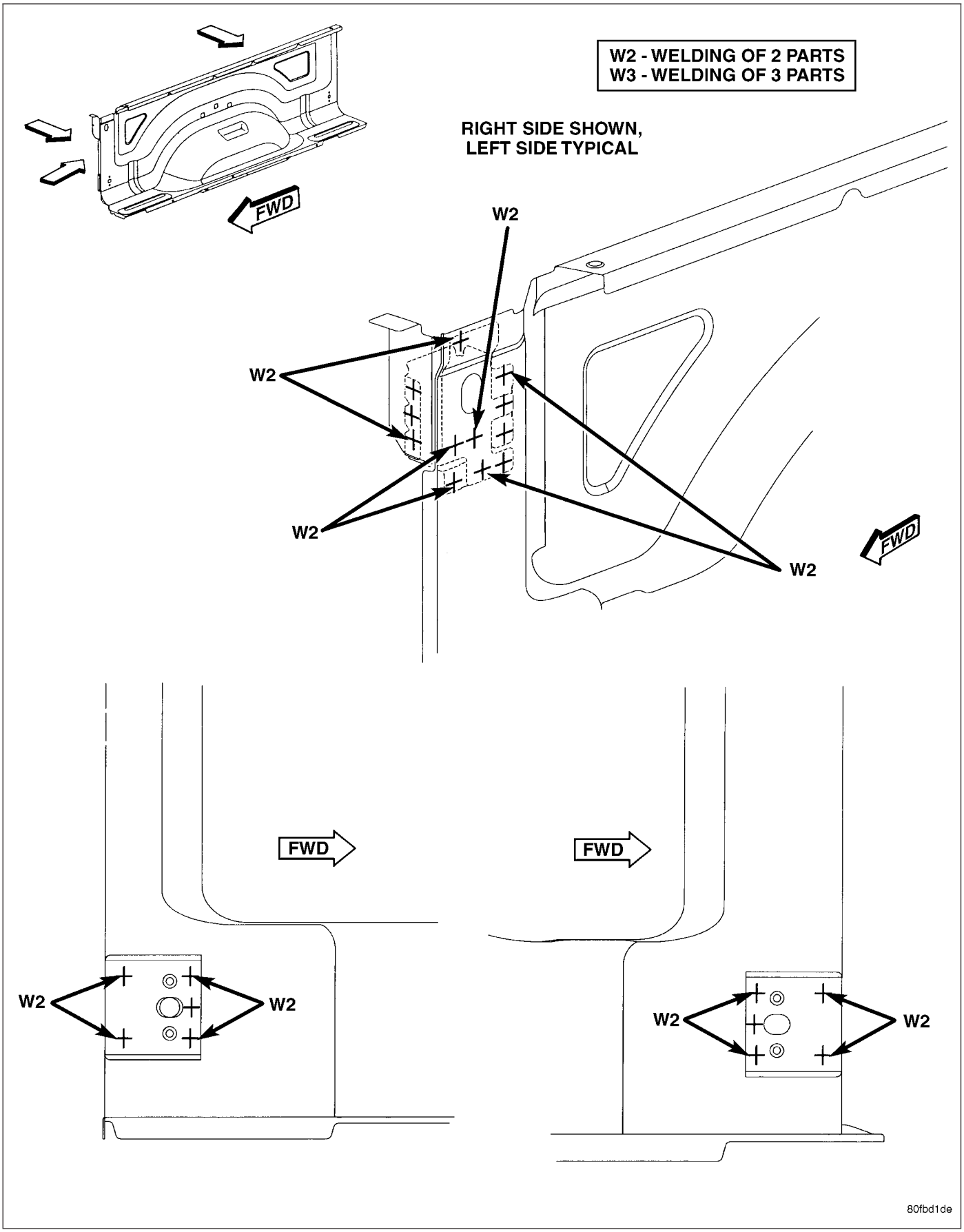

Fig. 94 STAKE POCKET REINFORCEMENTS - SHORT CARGO BOX ONLY

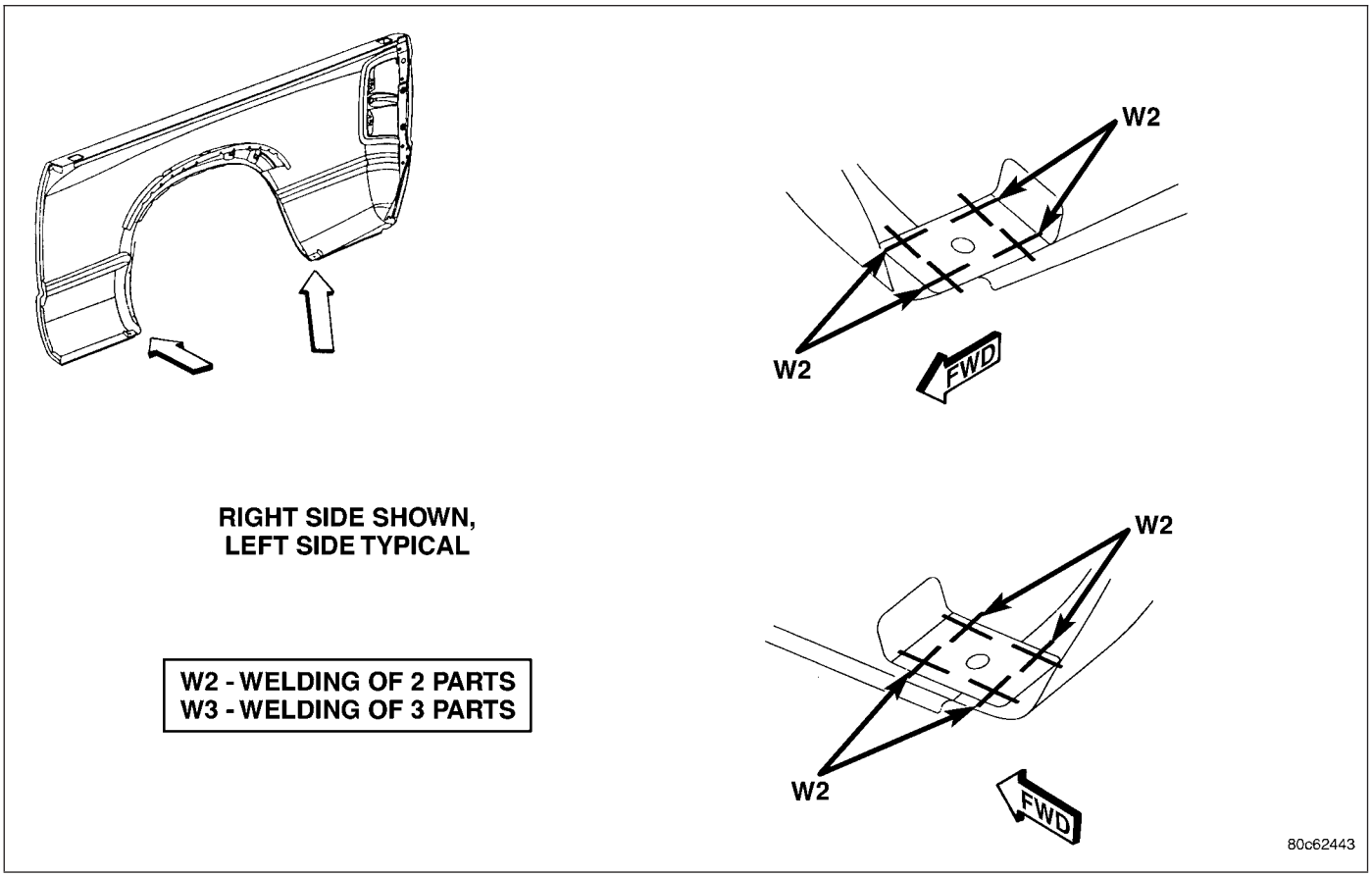

Fig. 95 OUTER BOX SIDE REINFORCEMENT BRACES - SHORT CARGO BOX ONLY

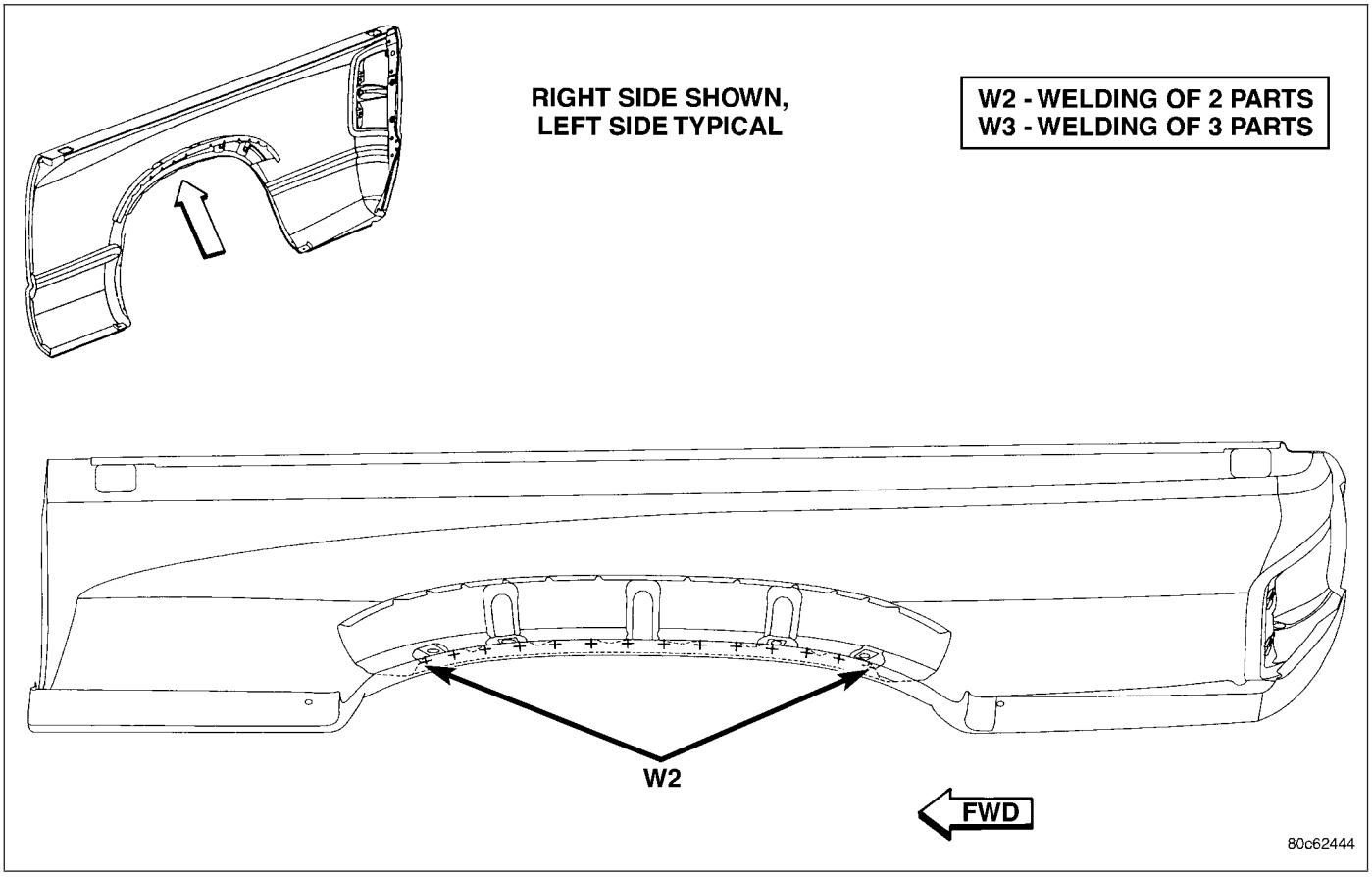

Fig. 96 OUTER WHEELHOUSE - SHORT CARGO BOX ONLY

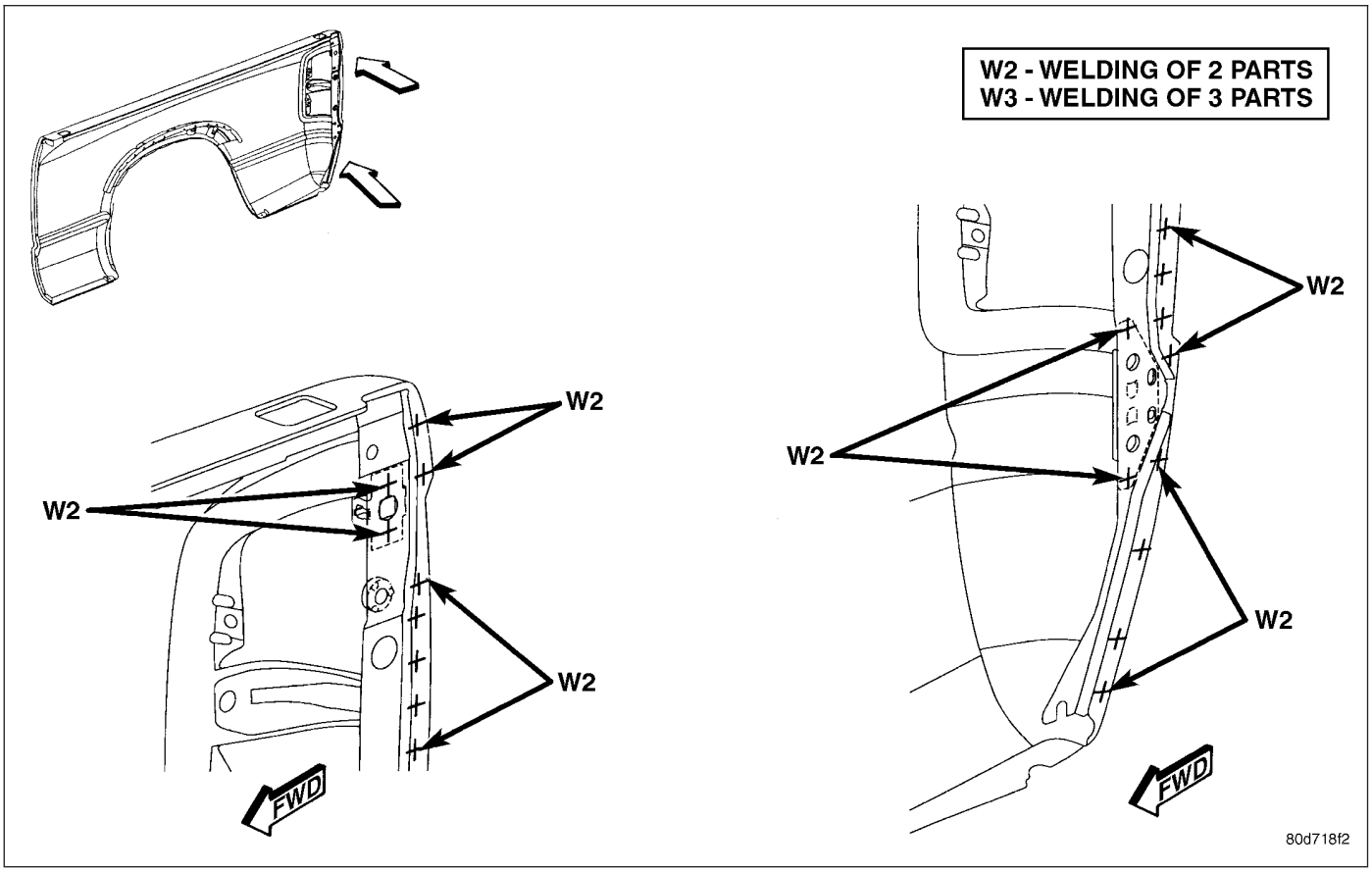

Fig. 97 WELD NUT - SHORT CARGO BOX ONLY - SHORT CARGO BOX ONLY

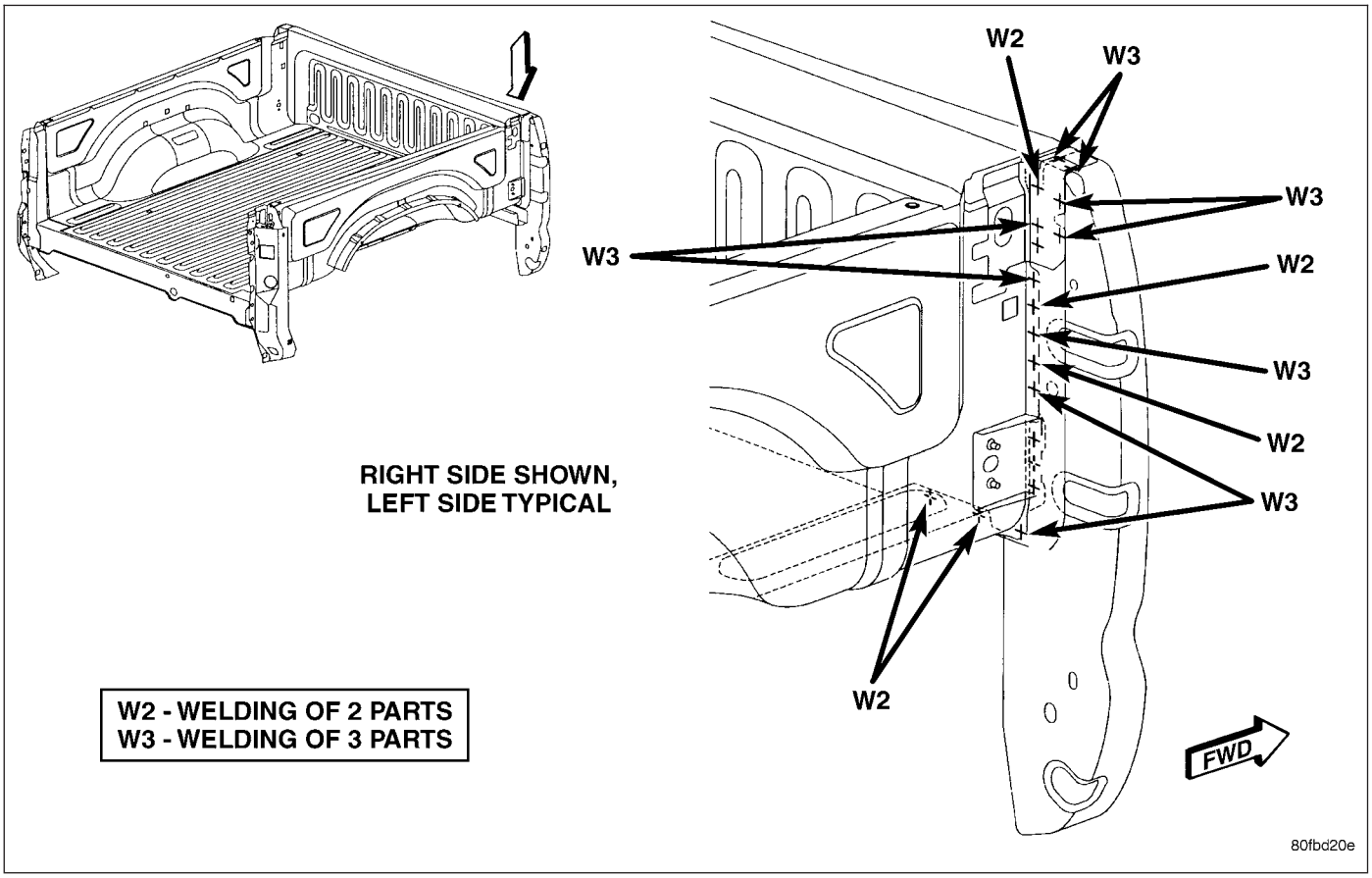

Fig. 98 FRONT BOX PANEL - SHORT CARGO BOX ONLY

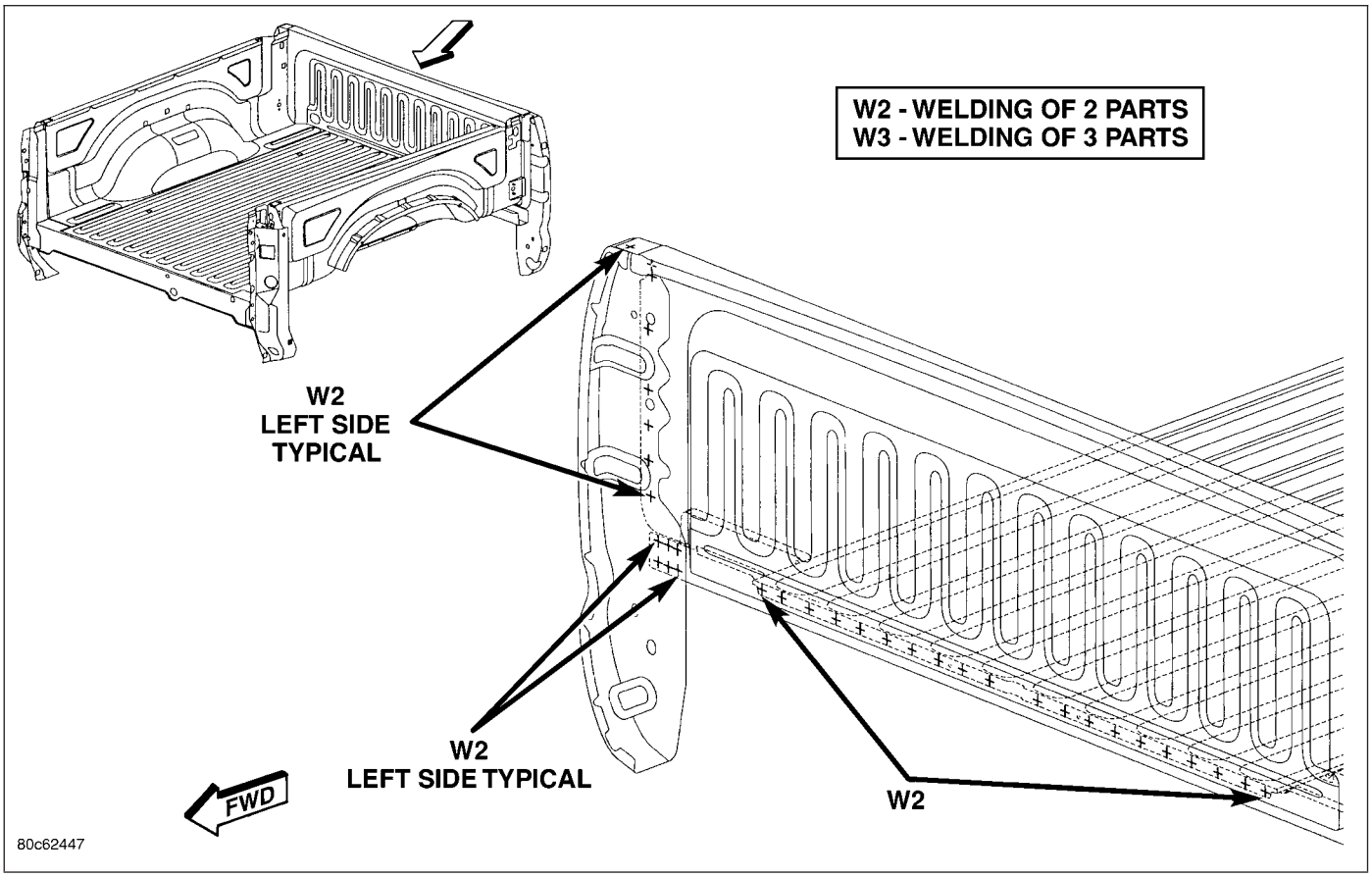

Fig. 99 FRONT CROSSMEMBER - SHORT CARGO BOX ONLY

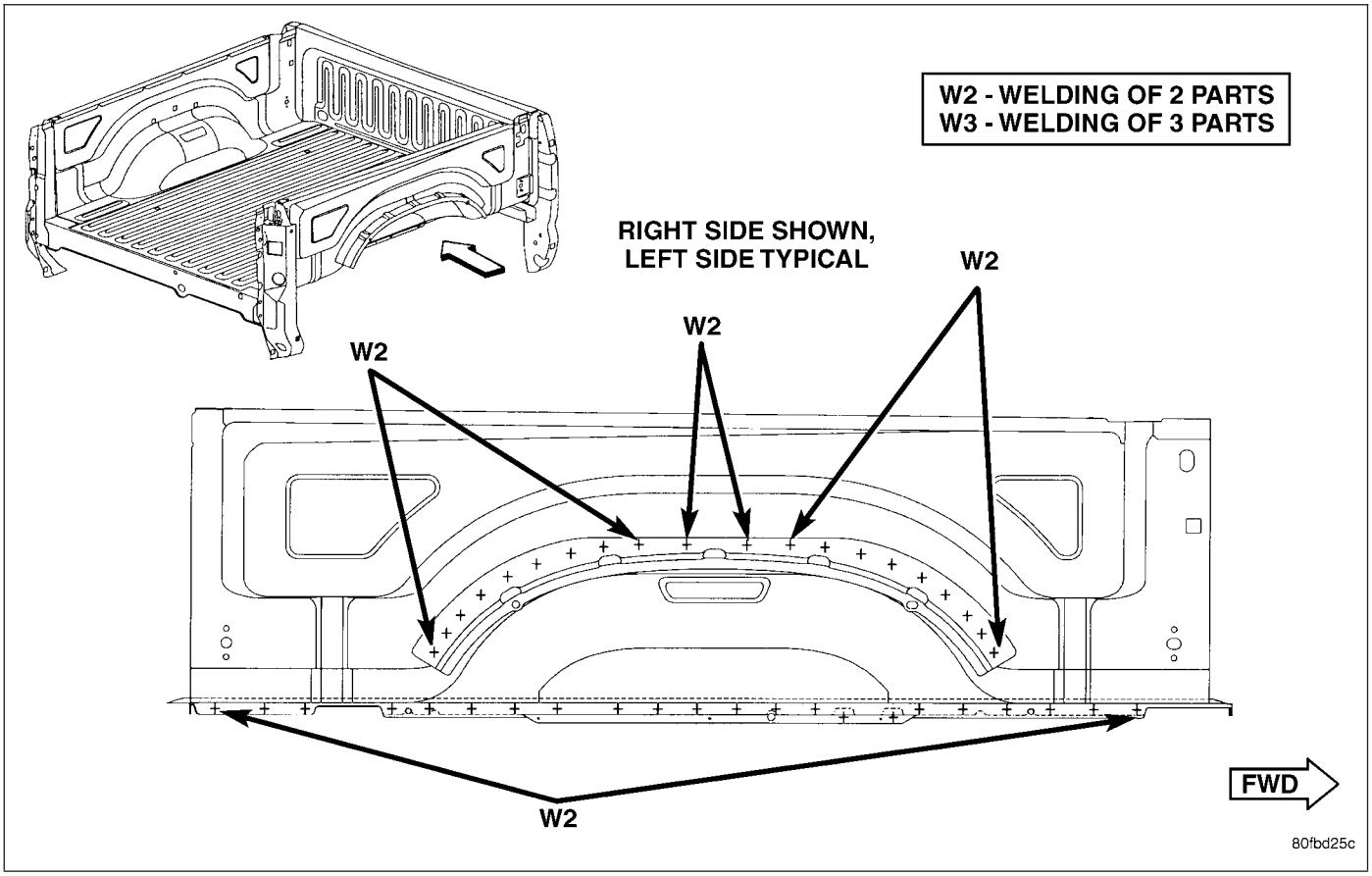

Fig. 100 BOX FLOOR PANEL - SHORT CARGO BOX ONLY

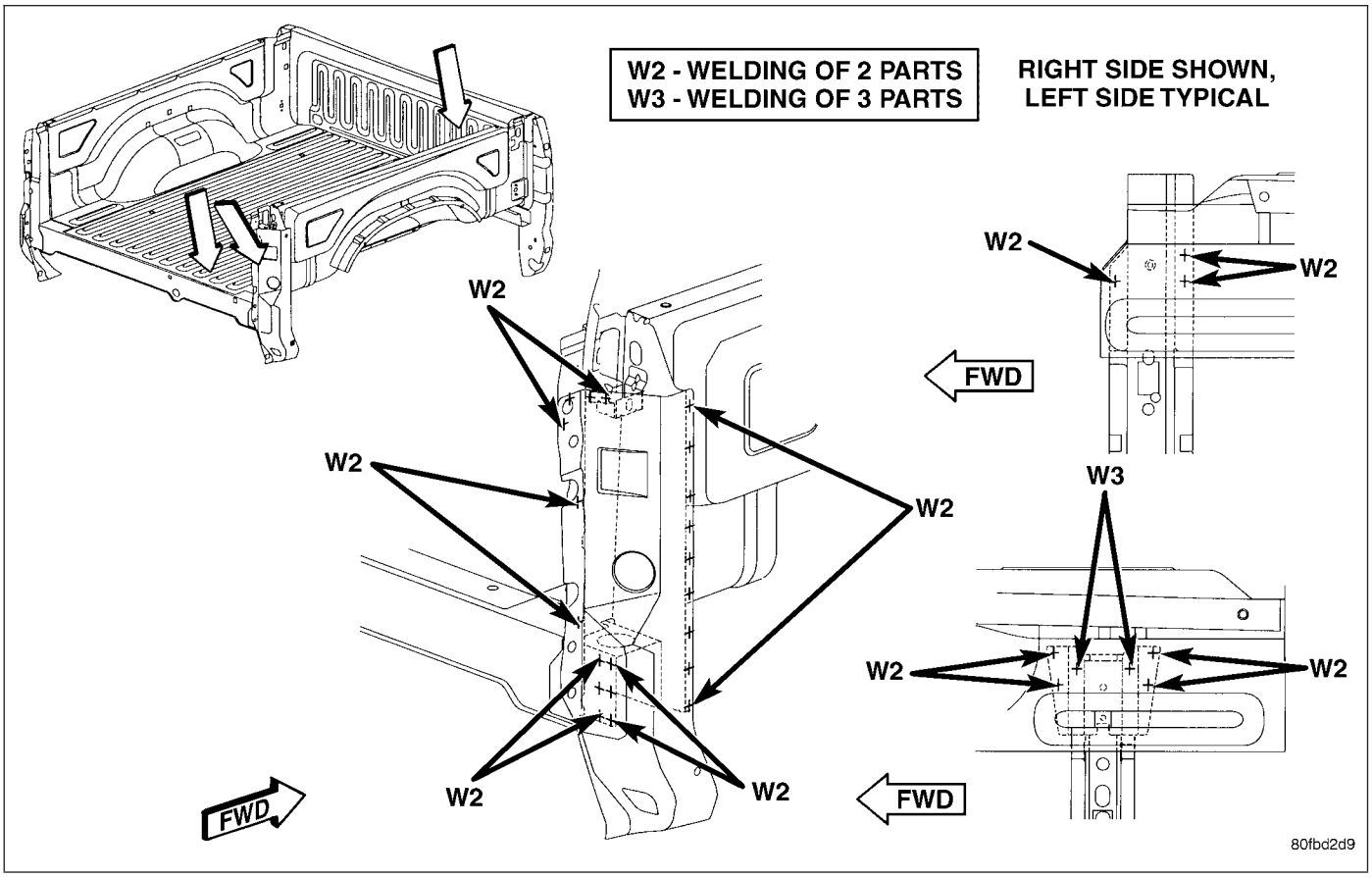

Fig. 101 FRONT CROSSMEMBER - SHORT CARGO BOX ONLY

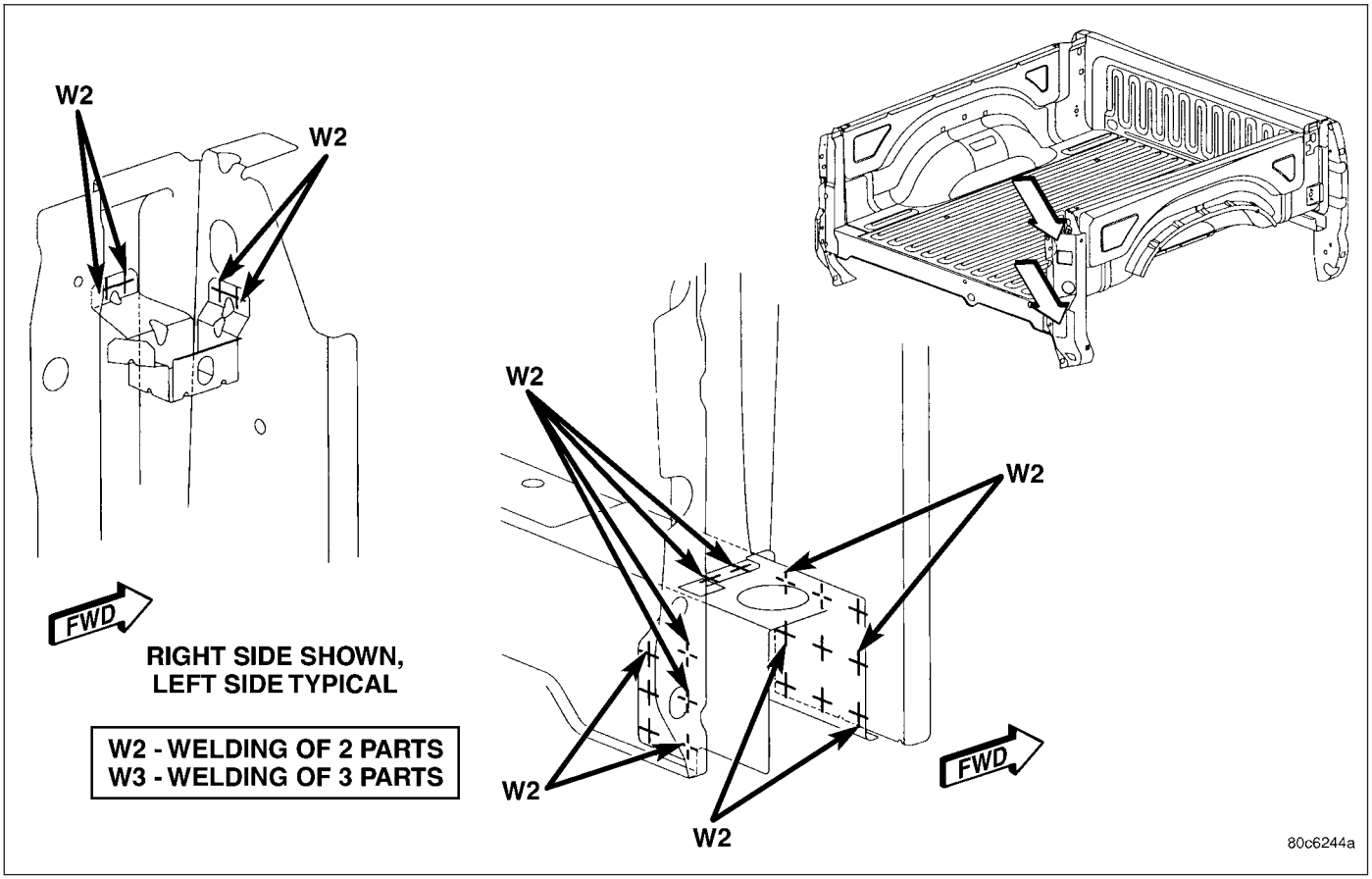

Fig. 102 STAKE POCKET REINFORCEMENT - SHORT CARGO BOX ONLY

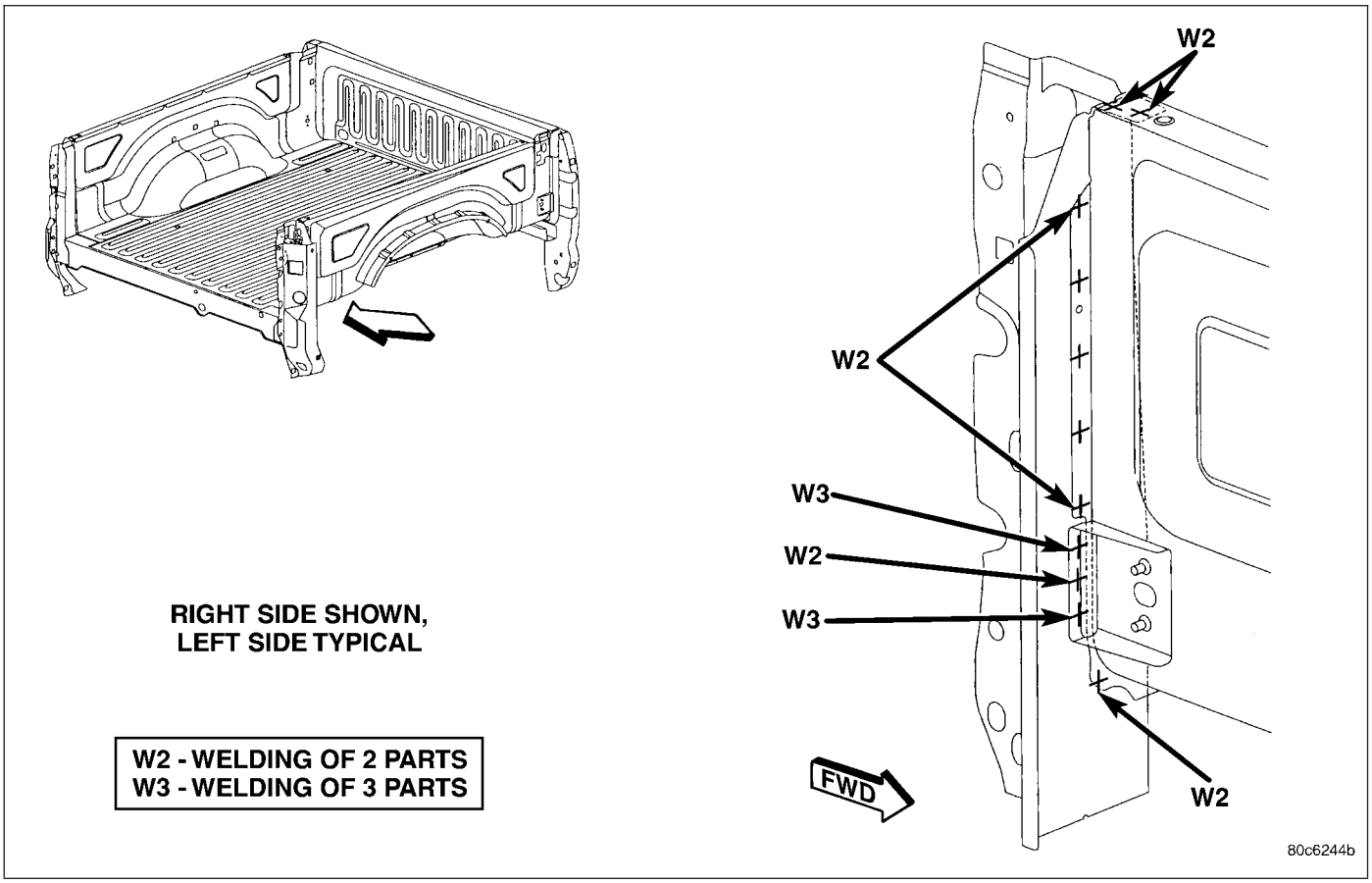

Fig. 103 INNER TAILGATE PILLAR PANEL - SHORT CARGO BOX ONLY

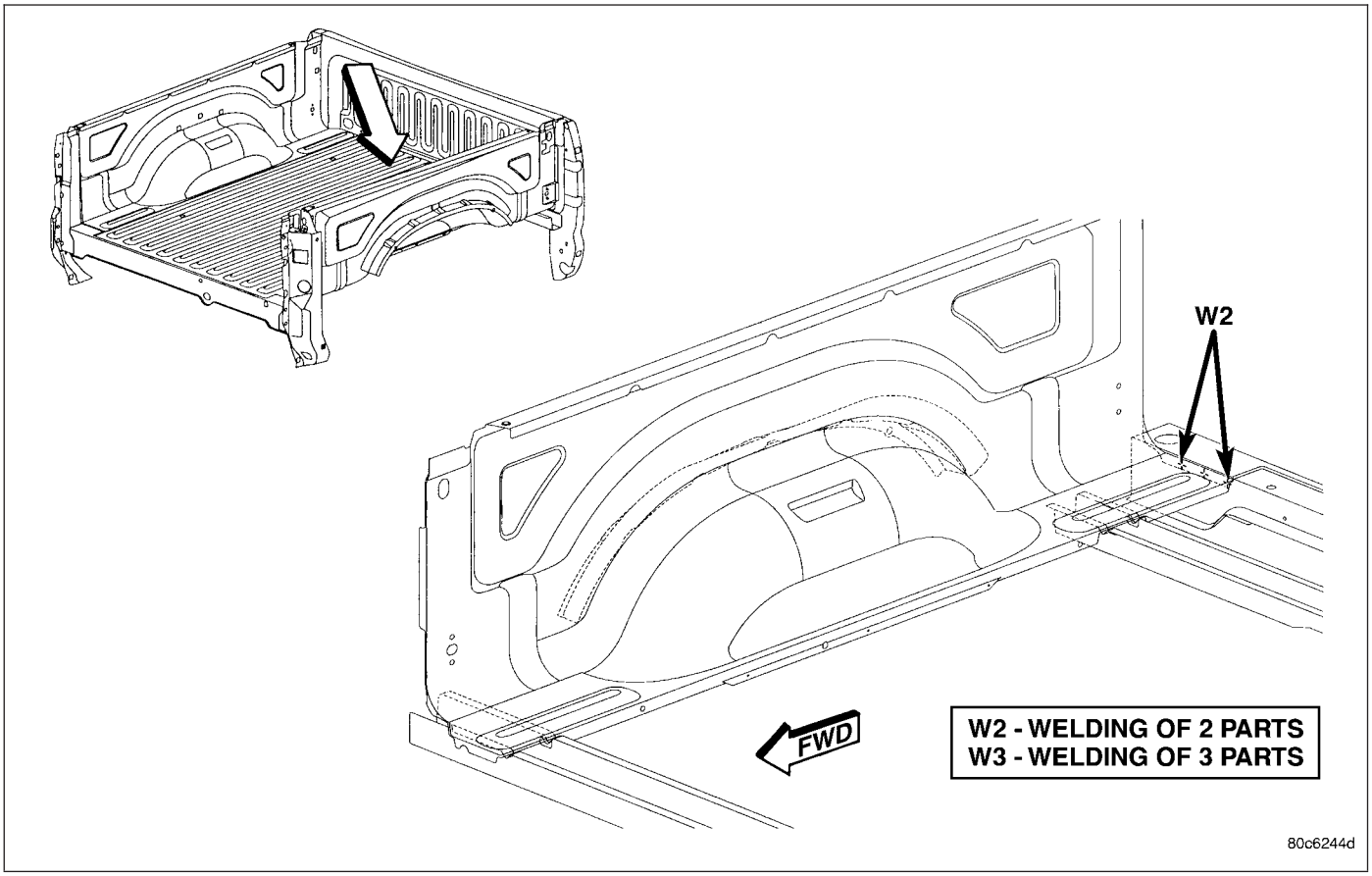

Fig. 104 BOX FLOOR SILL CROSSMEMBER - SHORT CARGO BOX ONLY

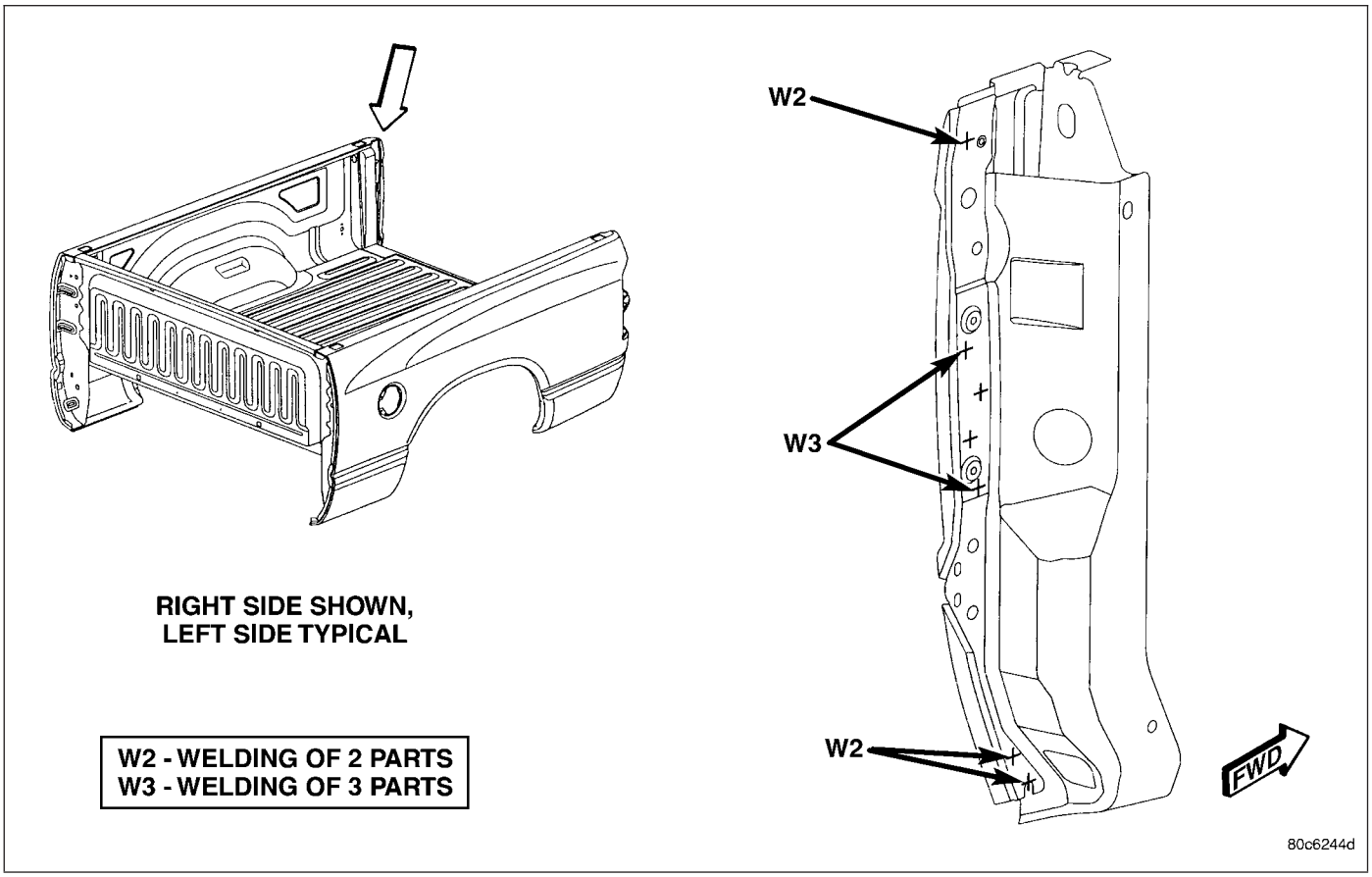

Fig. 105 INNER TAILGATE PILLAR - SHORT CARGO BOX ONLY

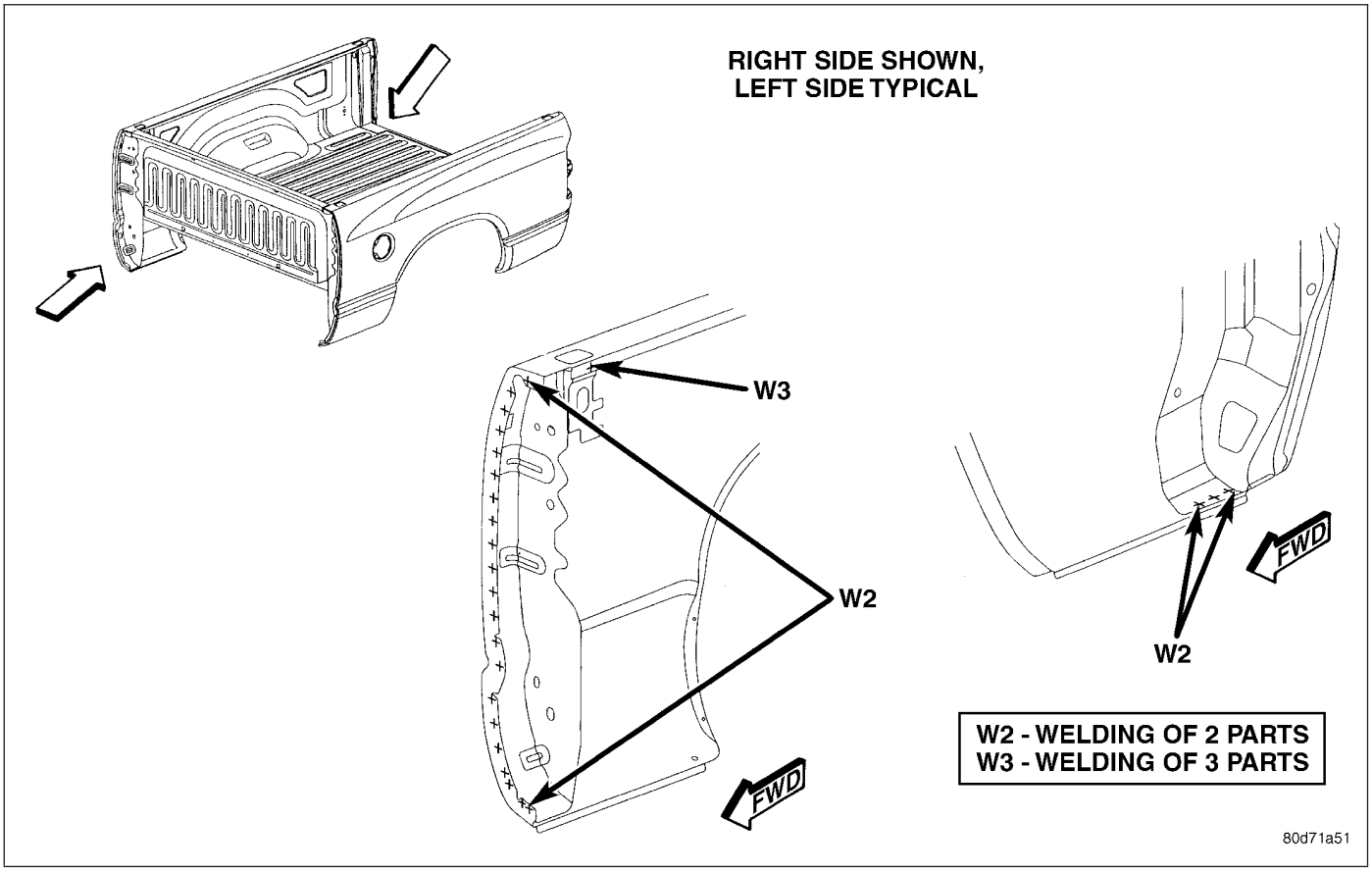

Fig. 106 BOX SIDE PANEL - SHORT CARGO BOX ONLY

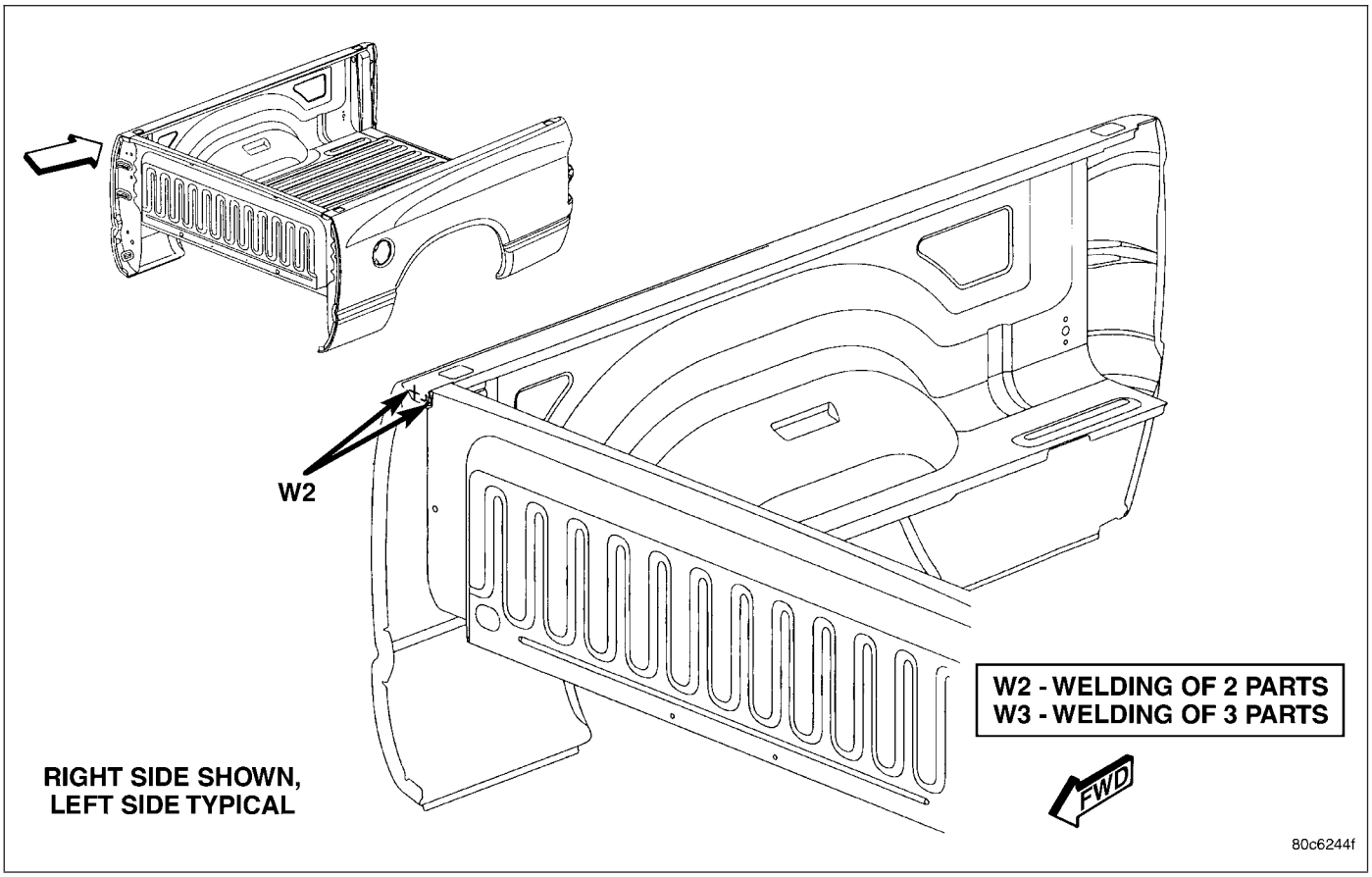

Fig. 107 FRONT BOX PANEL - SHORT CARGO BOX ONLY

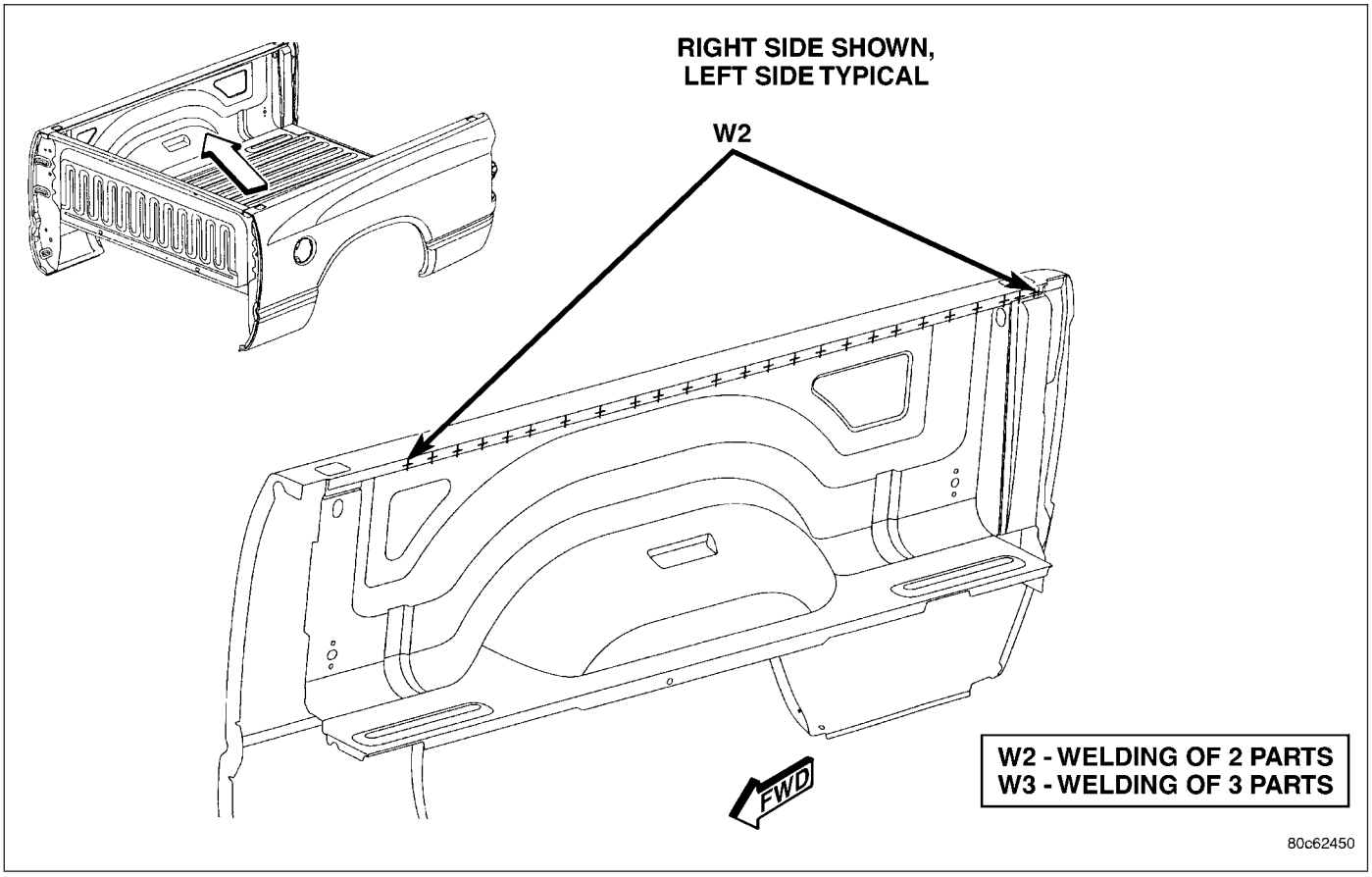

Fig. 108 INNER BOX SIDE PANEL - SHORT CARGO BOX ONLY

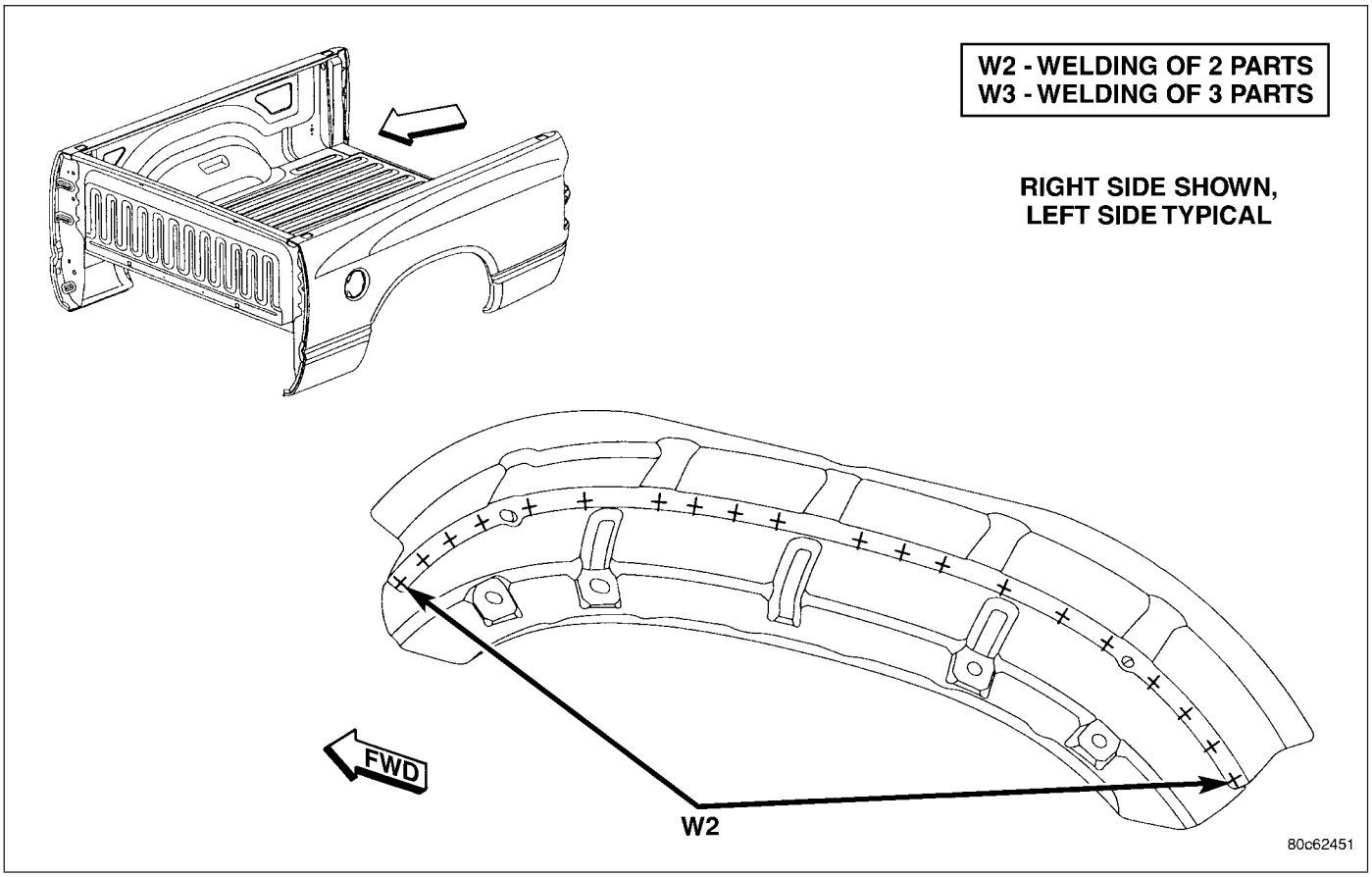

Fig. 109 OUTER WHEELHOUSE PANEL - SHORT CARGO BOX ONLY

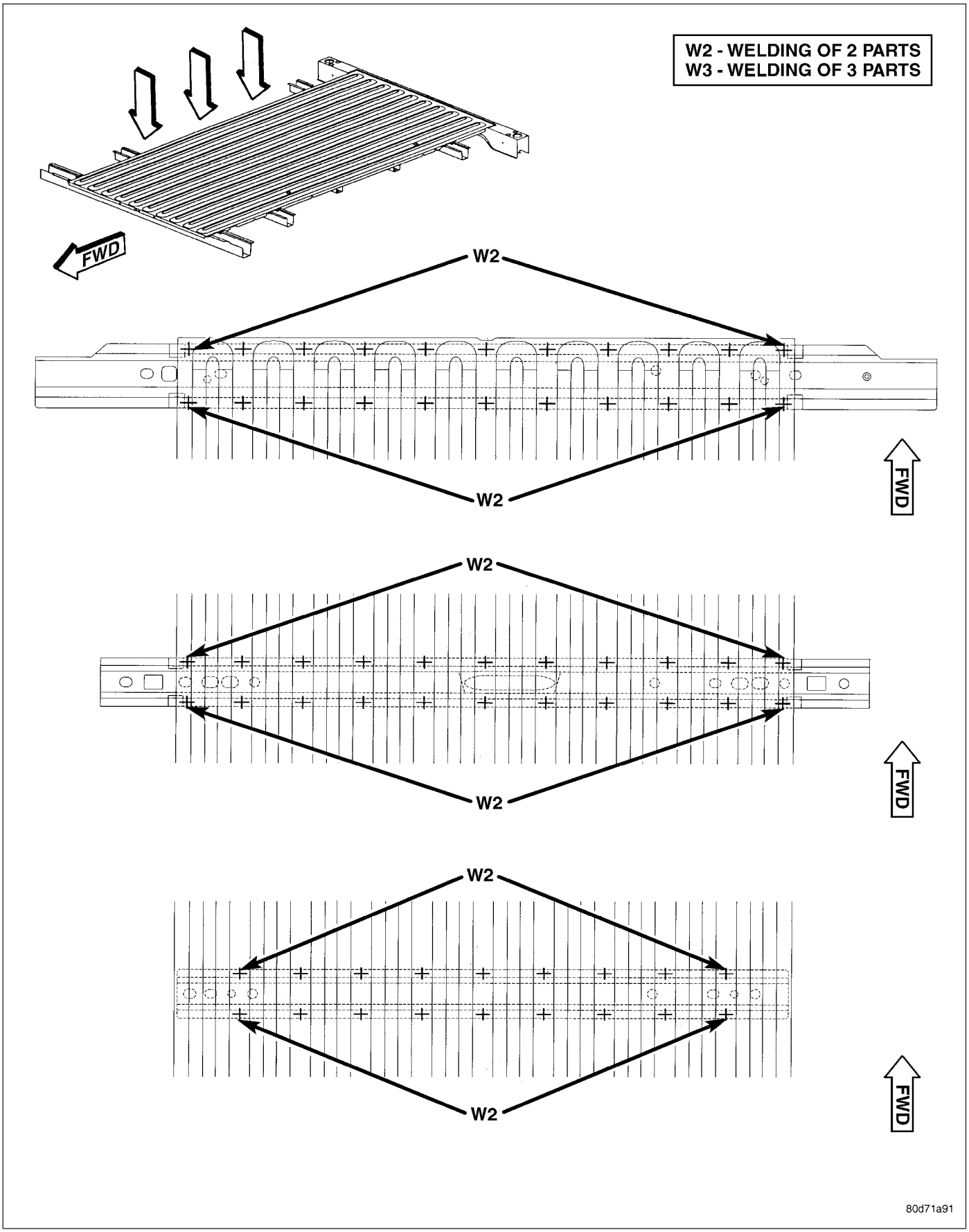

Fig. 110 FRONT CROSSMEMBER - LONG CARGO BOX ONLY

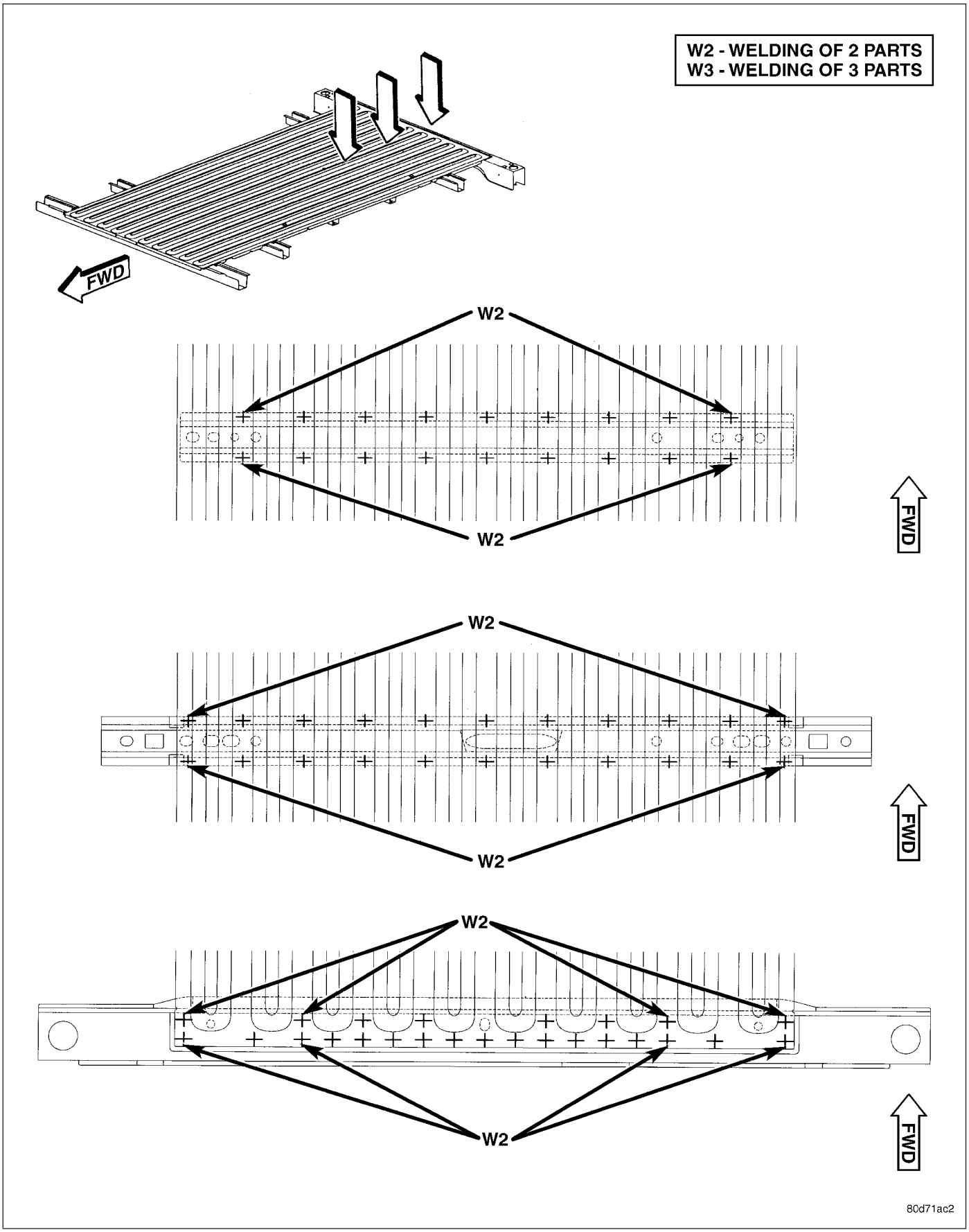

Fig. 111 WHEELHOUSE CROSSMEMBER - LONG CARGO BOX ONLY

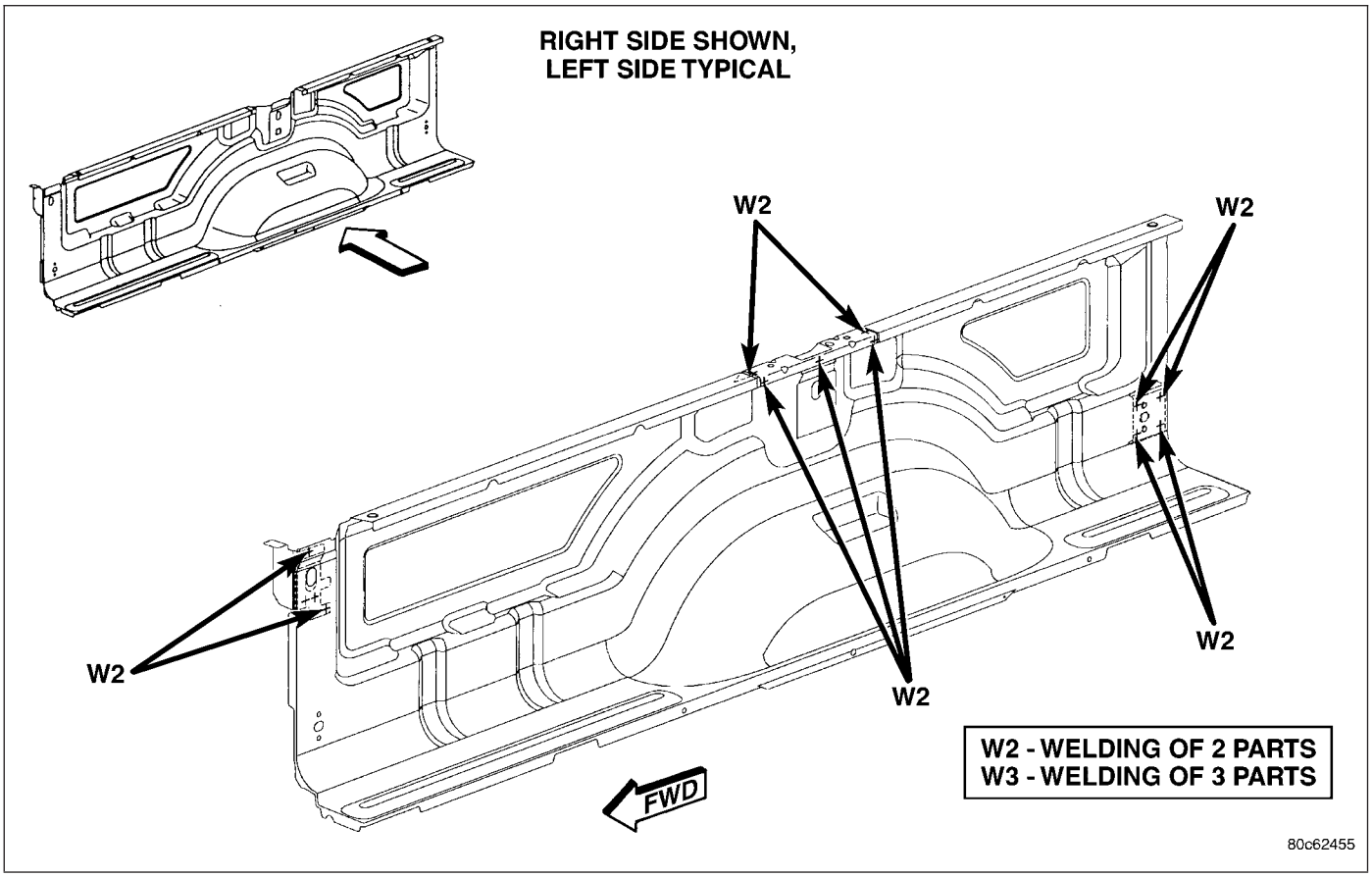

Fig. 112 FRONT AND CENTER STAKE POCKET REINFORCEMENTS - LONG CARGO BOX ONLY

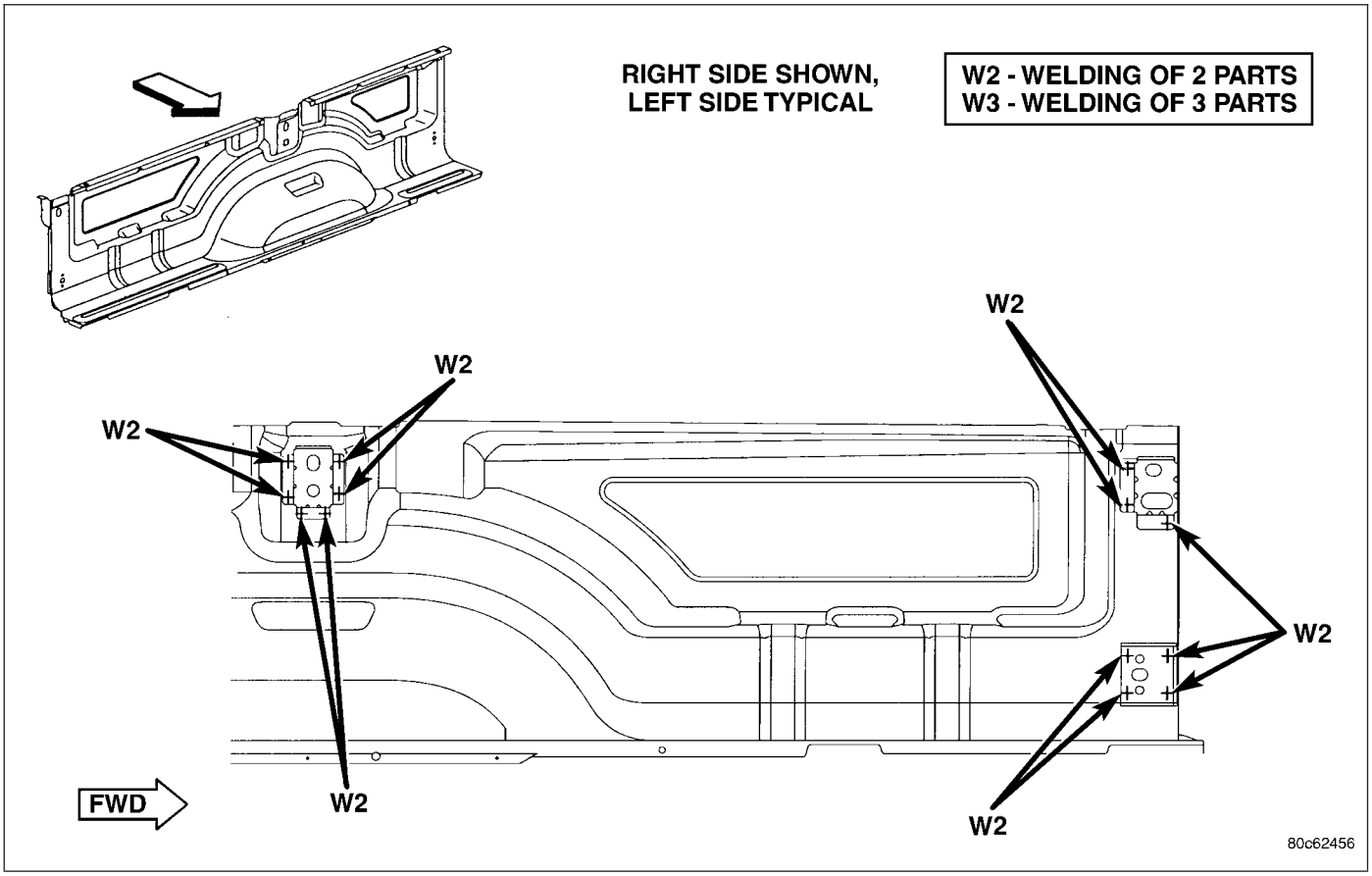

Fig. 113 OUTER FRONT AND CENTER STAKE POCKET REINFORCEMENT - LONG CARGO BOX ONLY

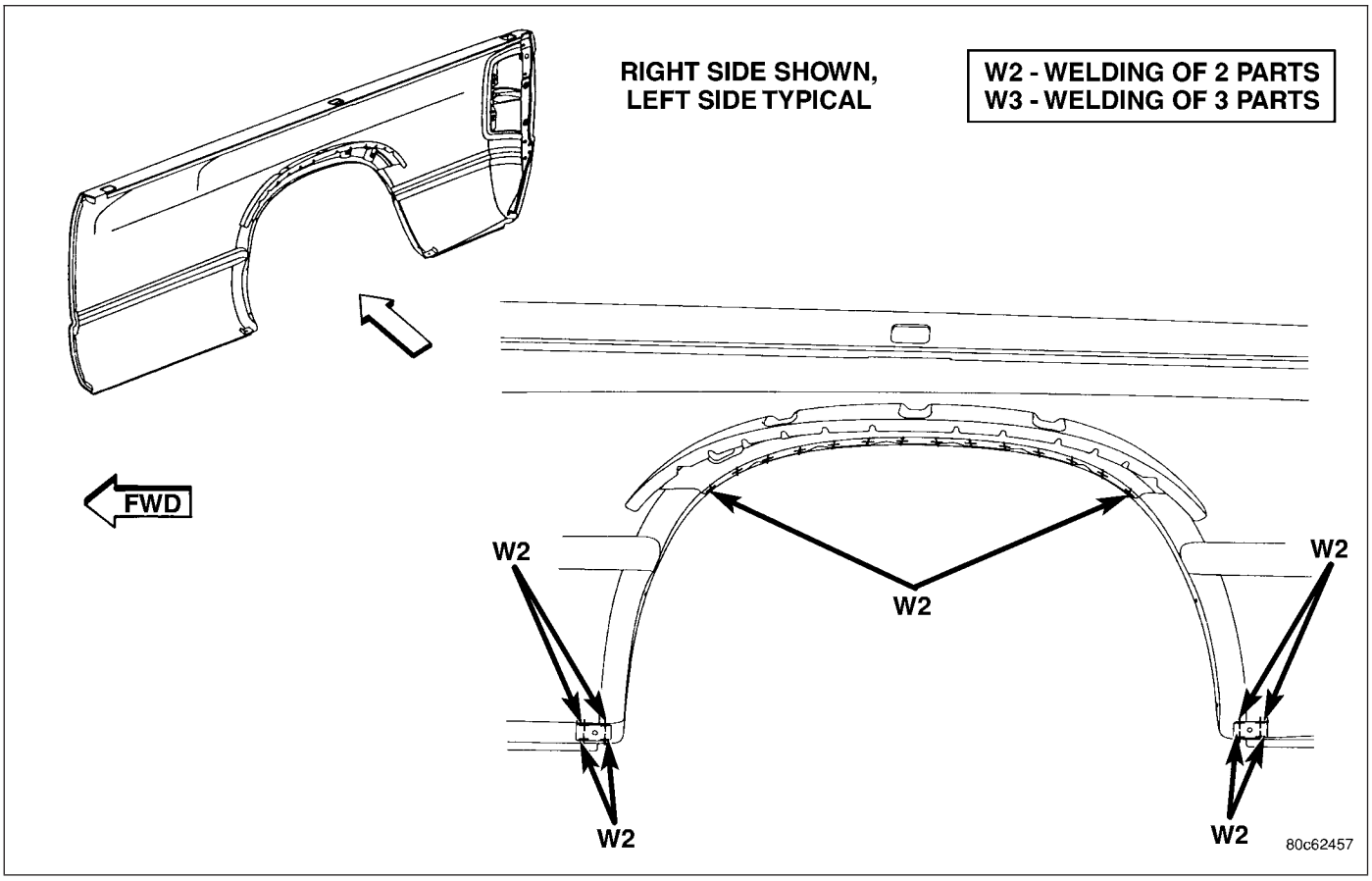

Fig. 114 OUTER WHEELHOUSE - LONG CARGO BOX ONLY

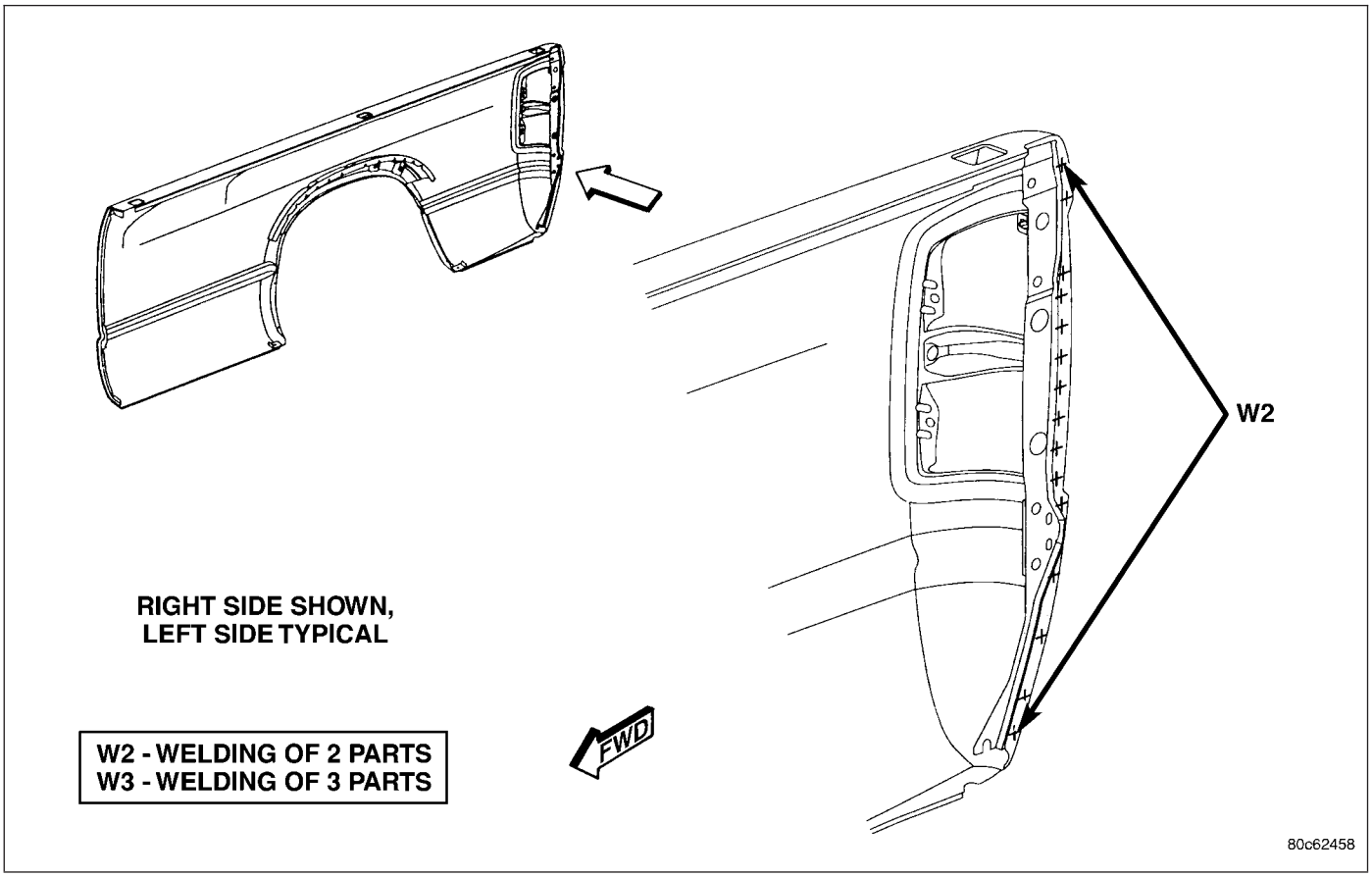

Fig. 115 TAILGATE BOX SIDE PIVOT REINFORCEMENT - LONG CARGO BOX ONLY

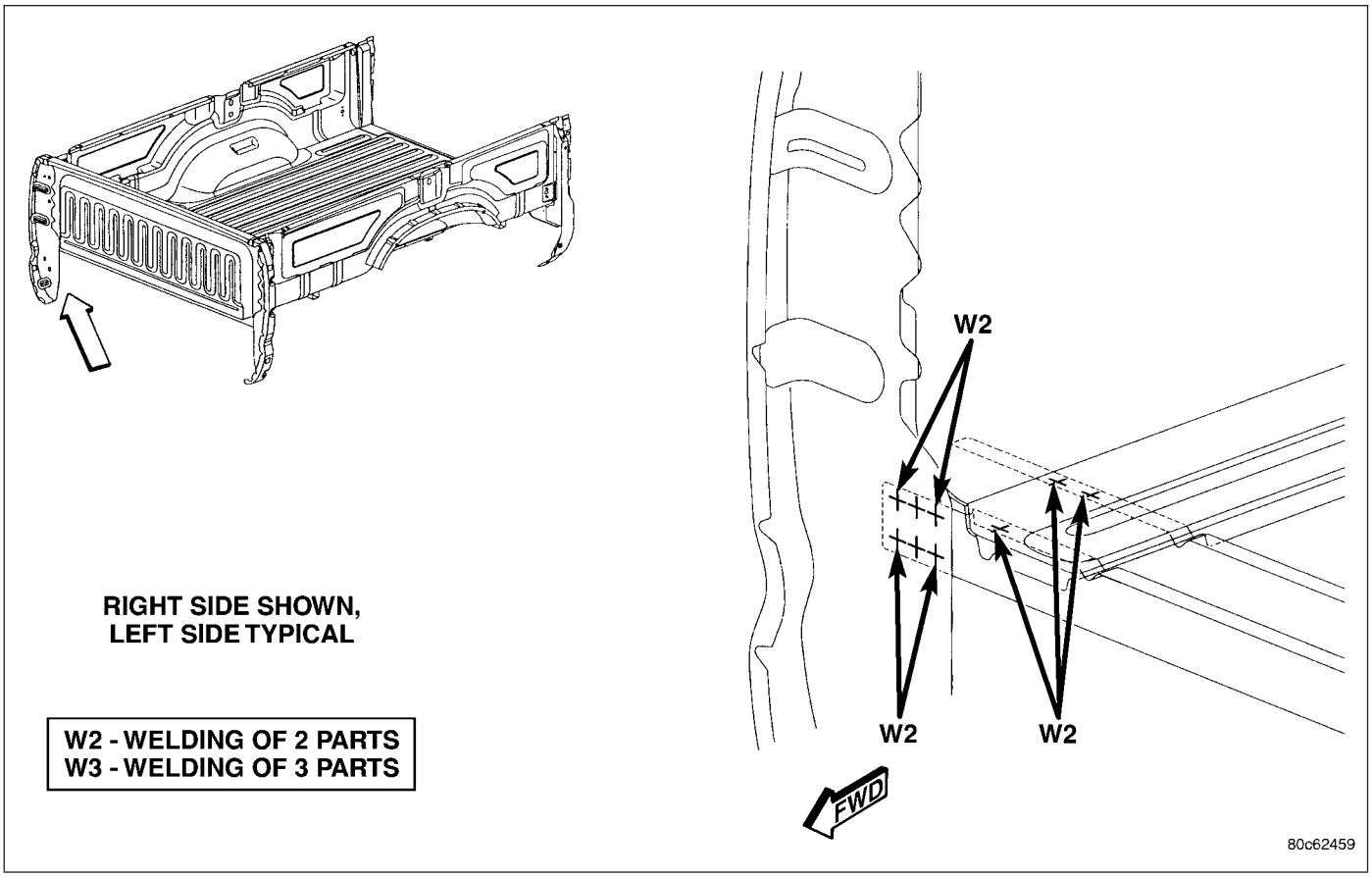

Fig. 116 FRONT BOX SIDE PANEL - LONG CARGO BOX ONLY

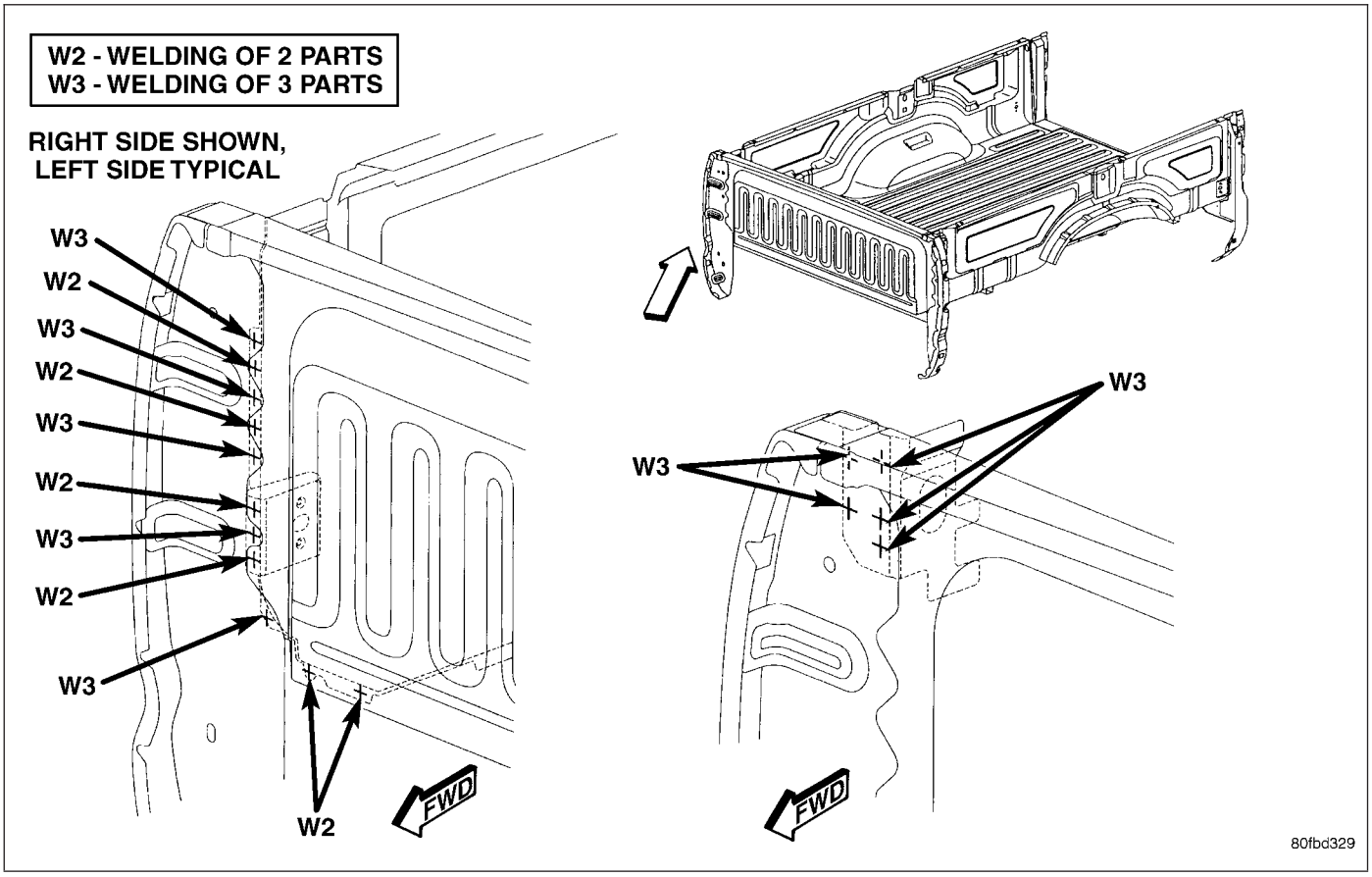

Fig. 117 FRONT BOX SIDE PANEL - LONG CARGO BOX ONLY

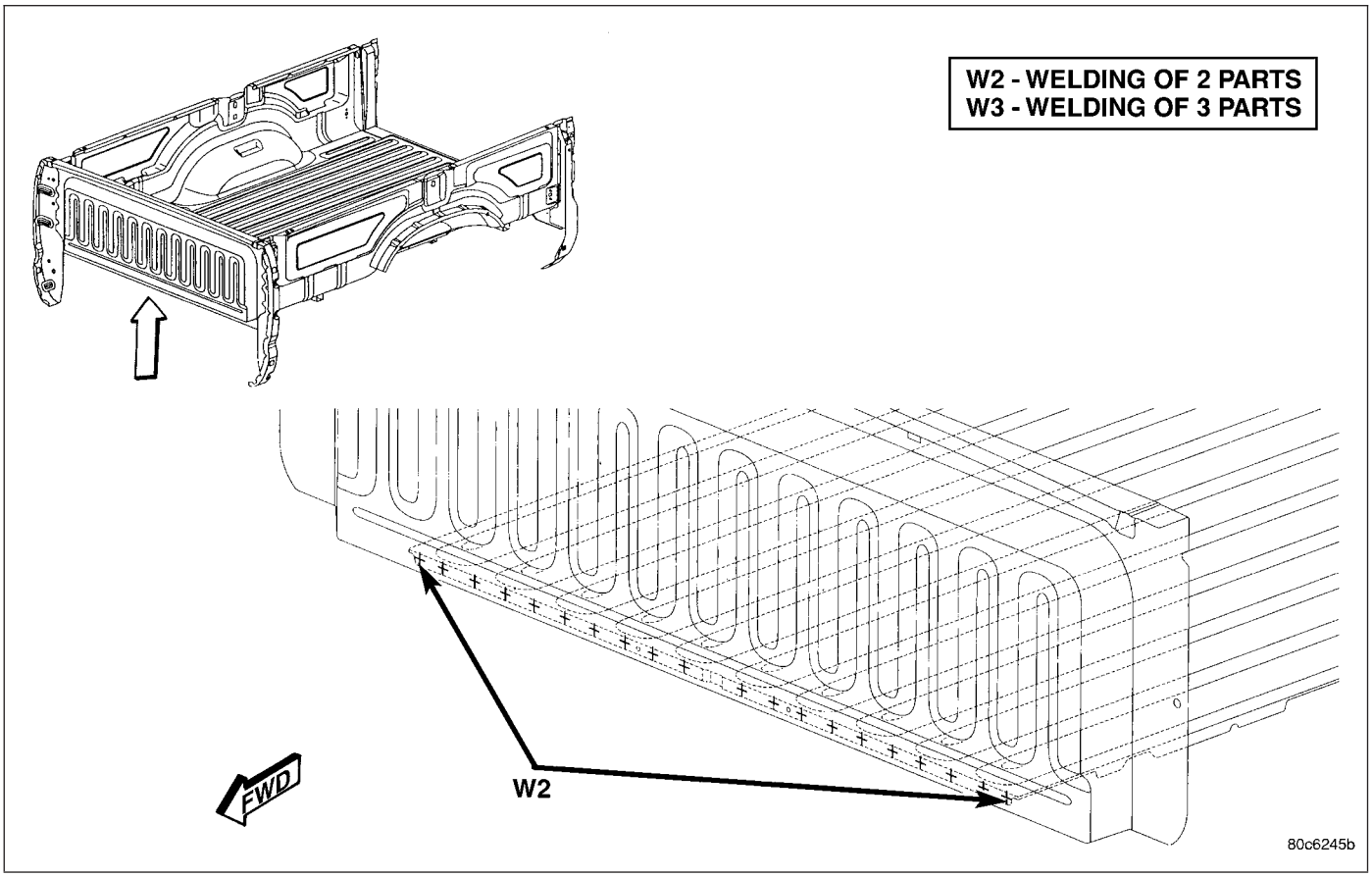

Fig. 118 BOX FRONT PANEL - LONG CARGO BOX ONLY

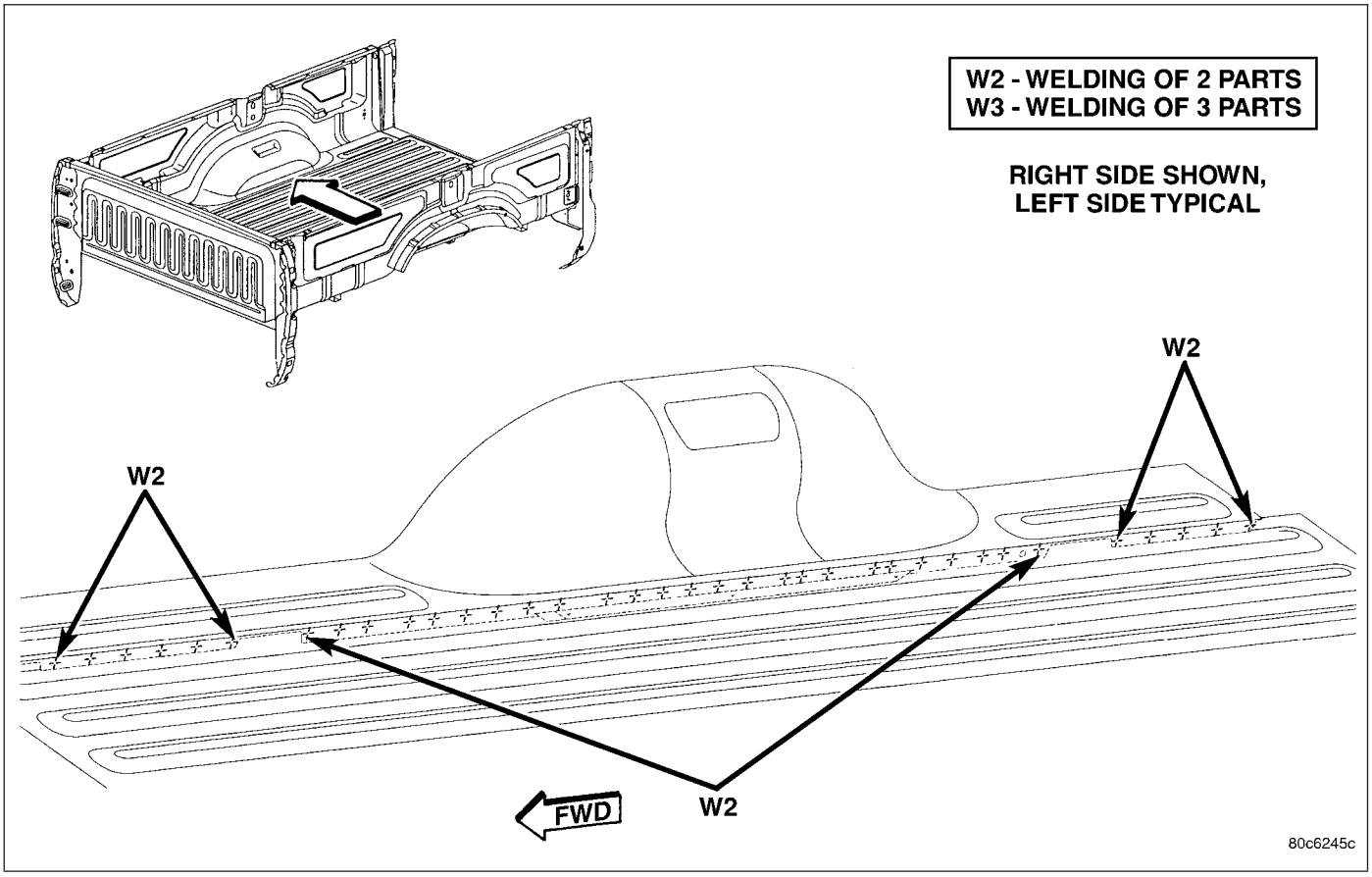

Fig. 119 BOX FLOOR PANEL - LONG CARGO BOX ONLY

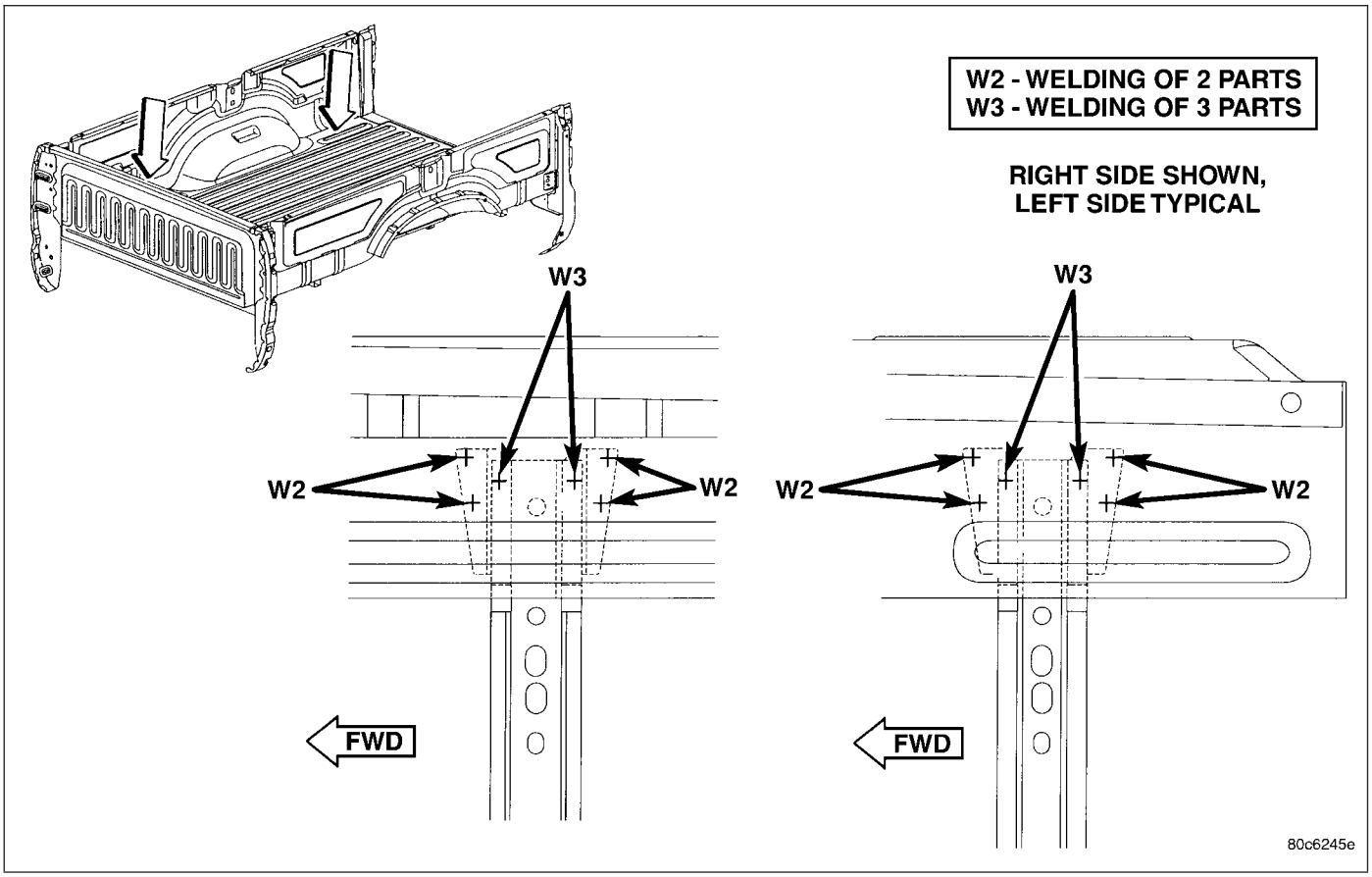

Fig. 120 LONG CROSSMEMBERS - LONG CARGO BOX ONLY

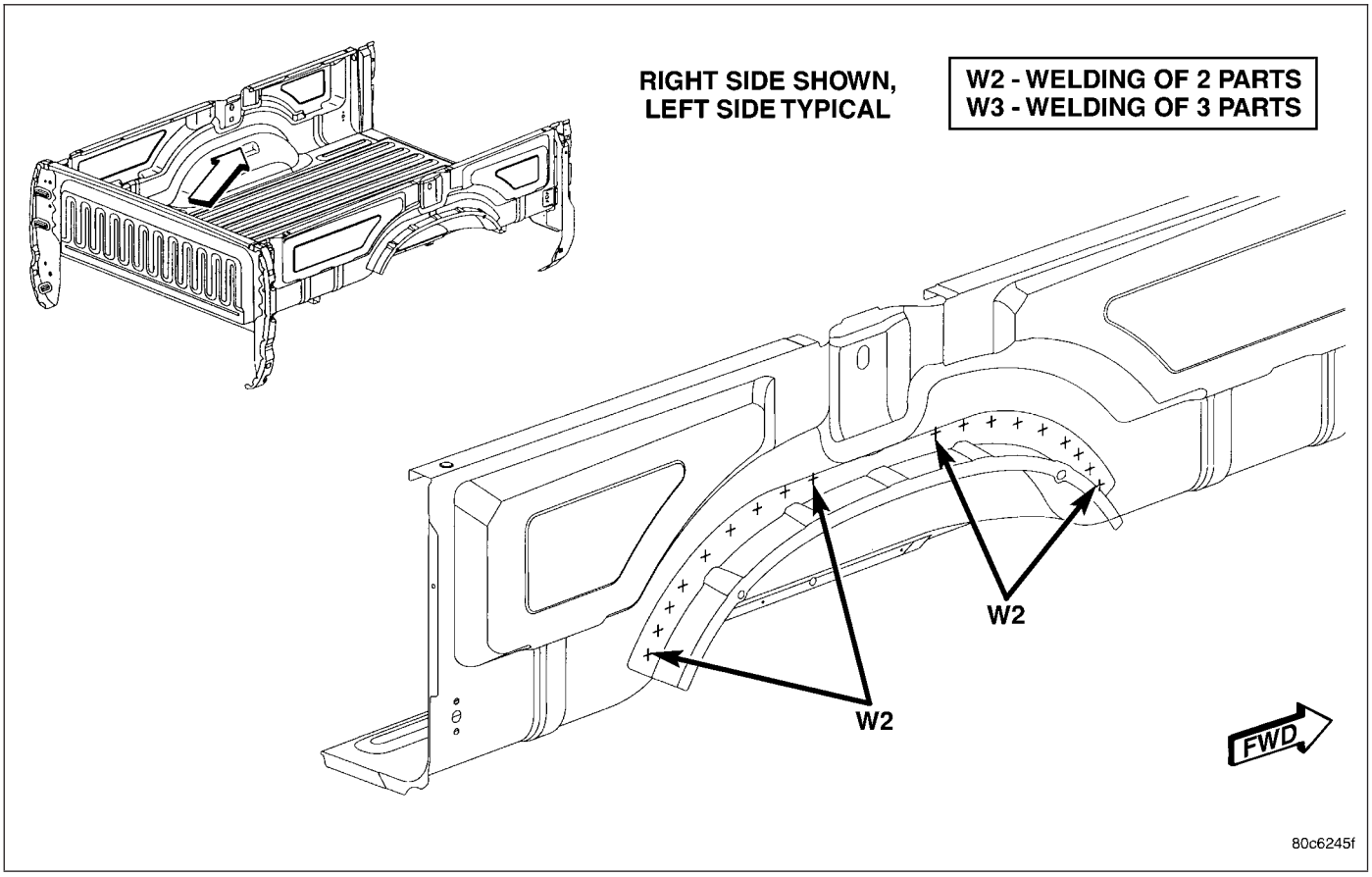

Fig. 121 INNER WHEELHOUSE PANEL - LONG CARGO BOX ONLY

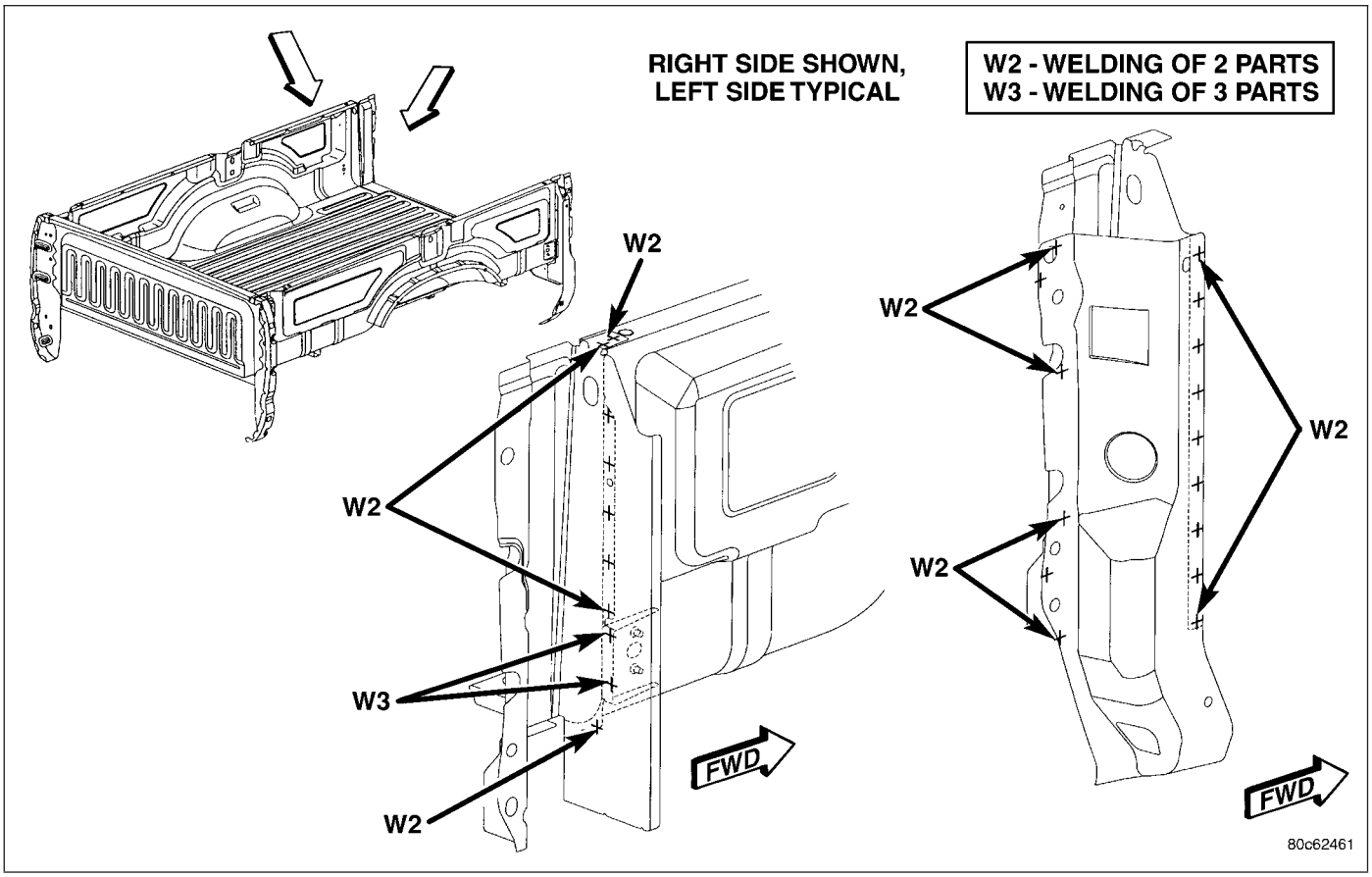

Fig. 122 TAILGATE PILLAR OUTER PANEL - LONG CARGO BOX ONLY

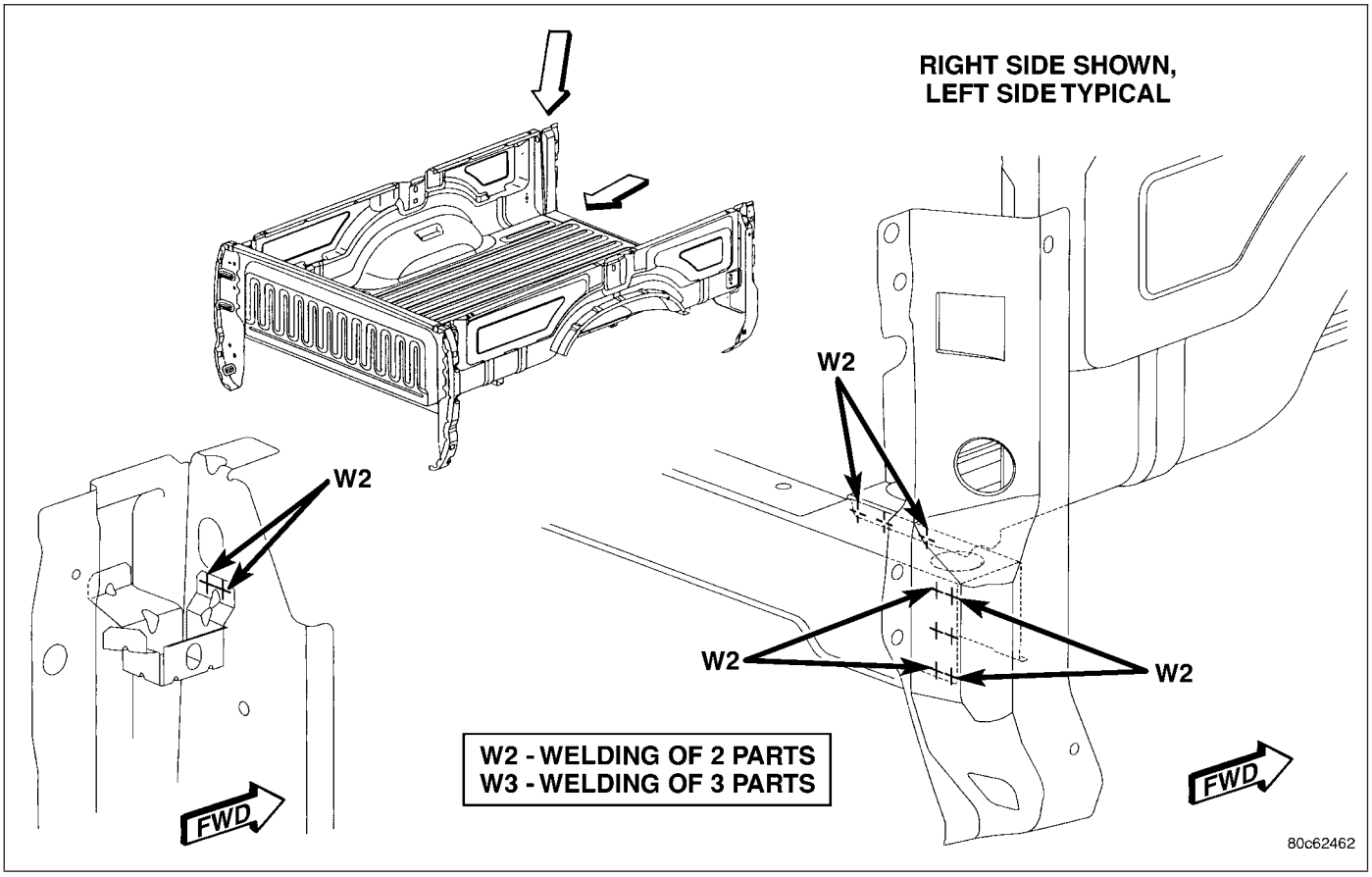

Fig. 123 REAR SILL CROSS BOX - LONG CARGO BOX ONLY

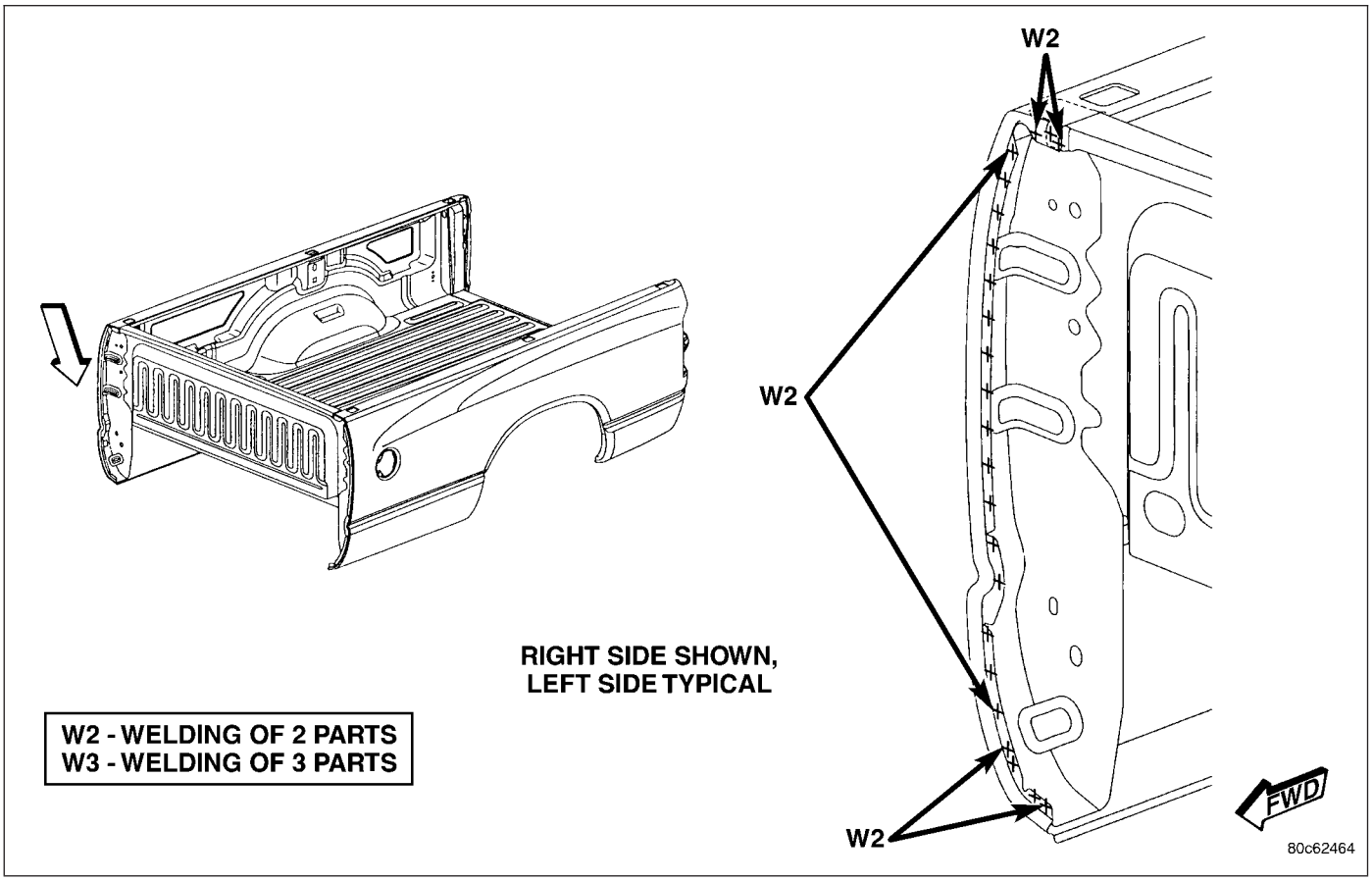

Fig. 124 OUTER BOX SIDE PANEL - LONG CARGO BOX ONLY

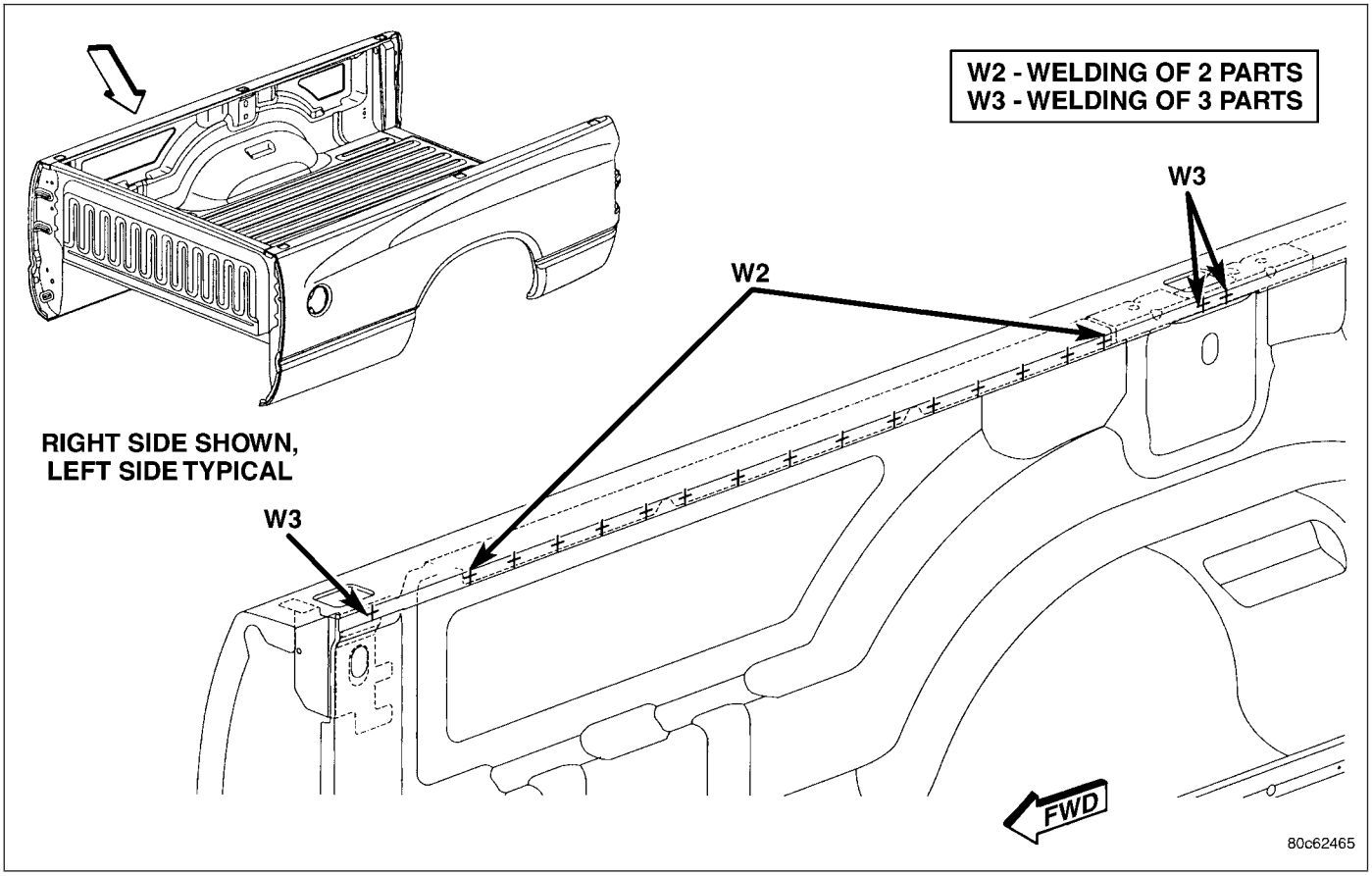

Fig. 125 STAKE POCKET REINFORCEMENTS - LONG CARGO BOX ONLY

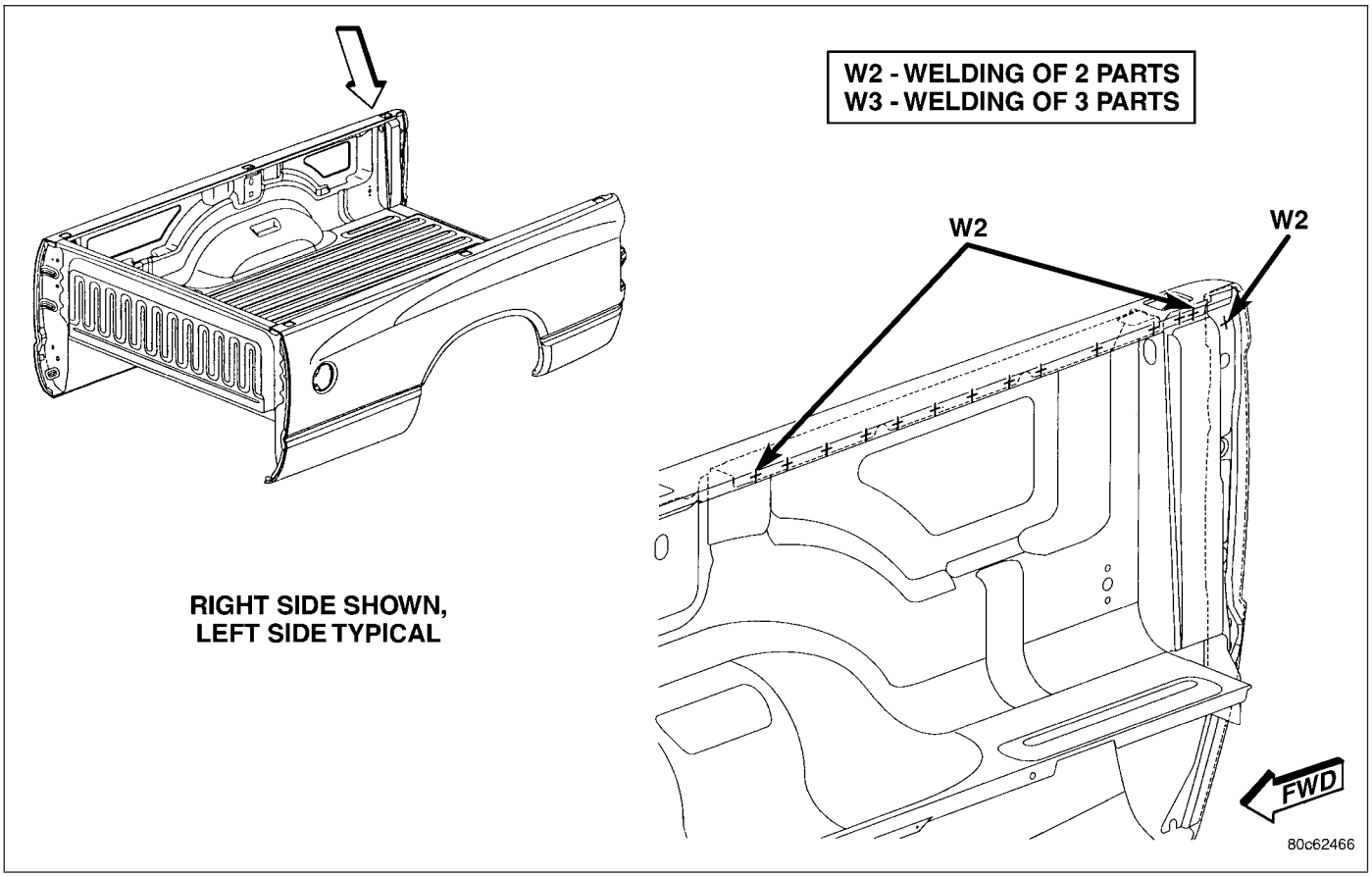

Fig. 126 TAILGATE PIVOT REINFORCEMENT - LONG CARGO BOX ONLY

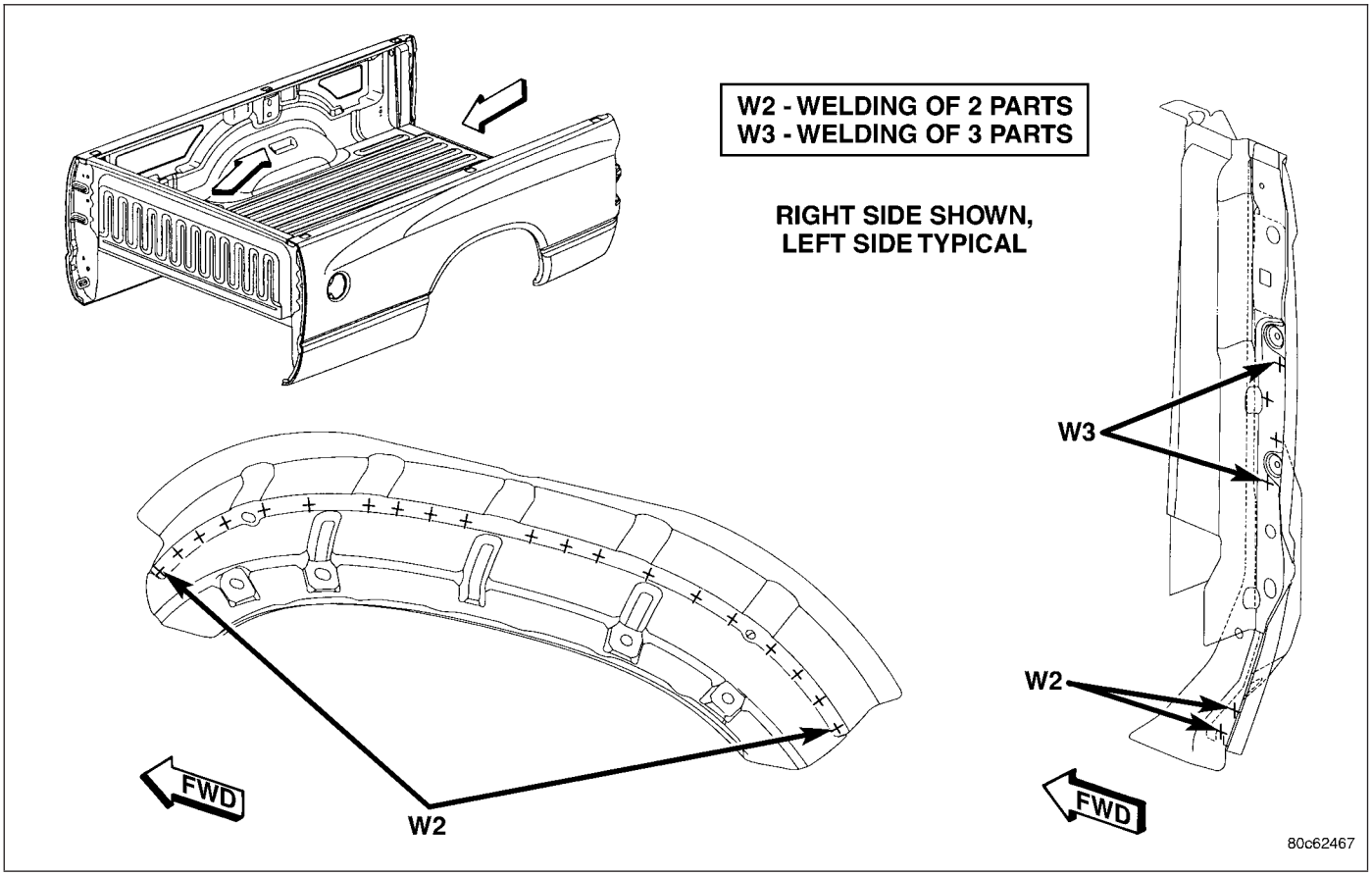

Fig. 127 INNER WHEELHOUSE - LONG CARGO BOX ONLY

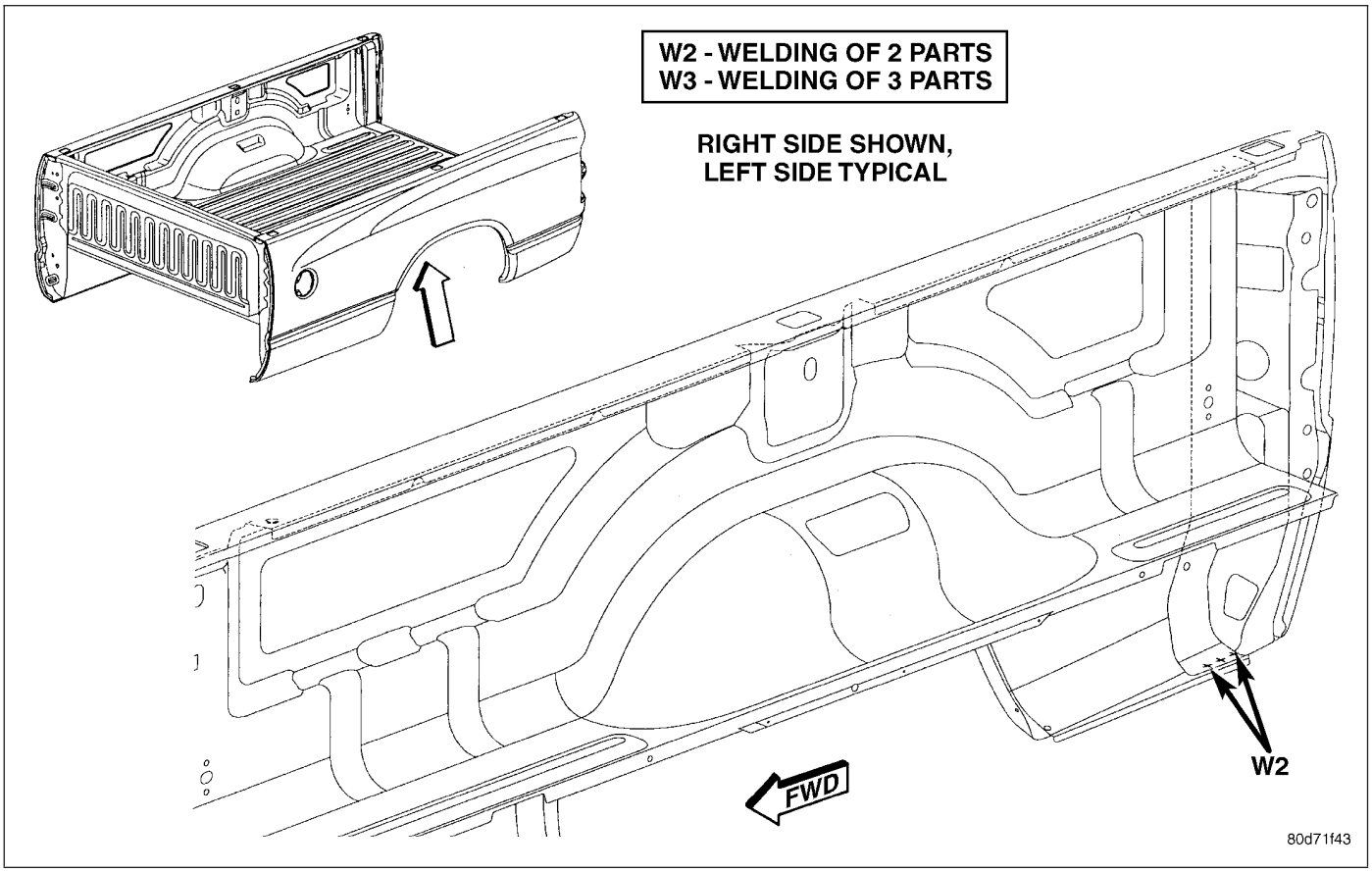

Fig. 128 OUTER TAILGATE PILLAR - LONG CARGO BOX ONLY

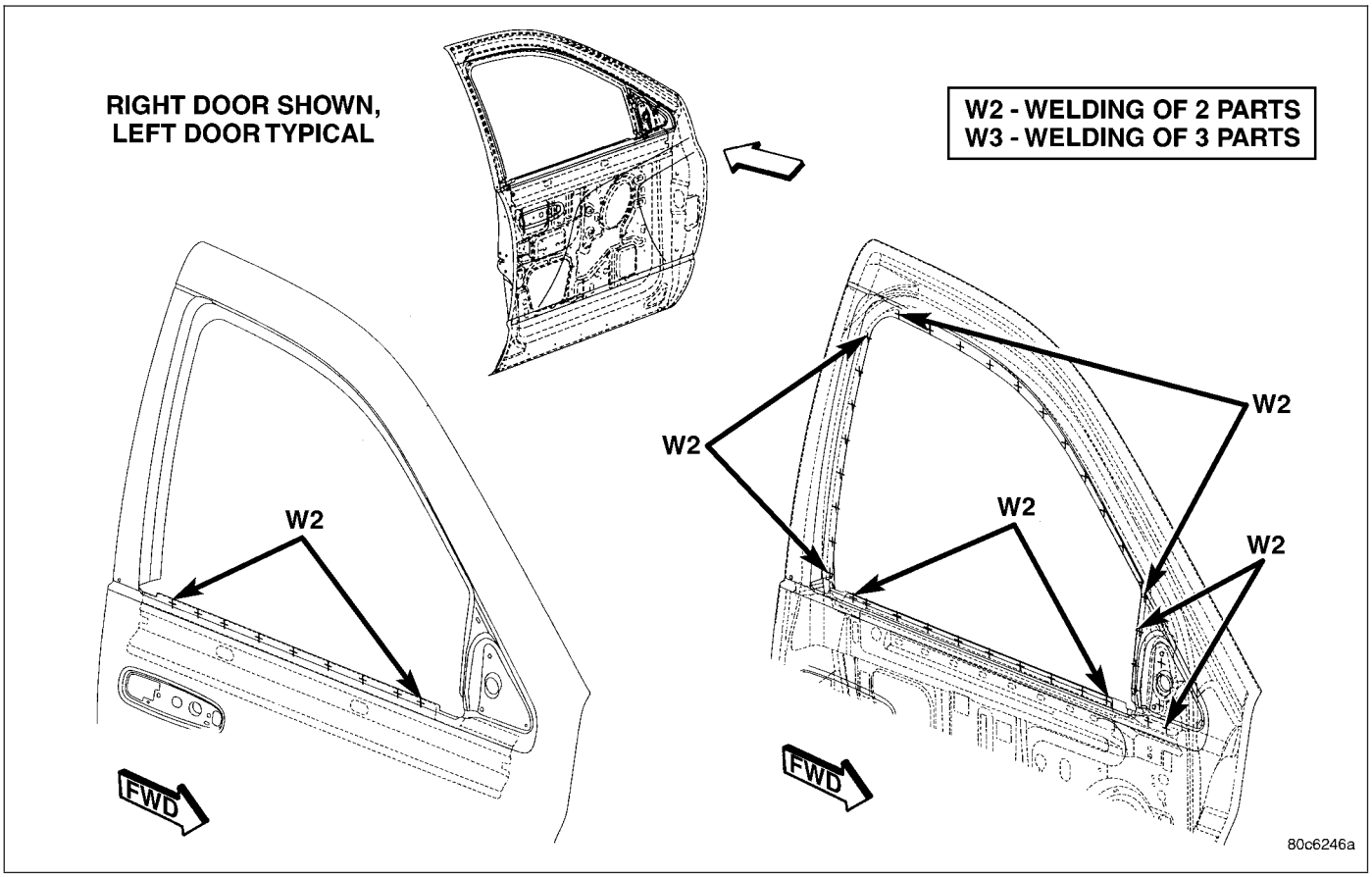

Fig. 129 INNER DOOR PANEL - QUAD CAB

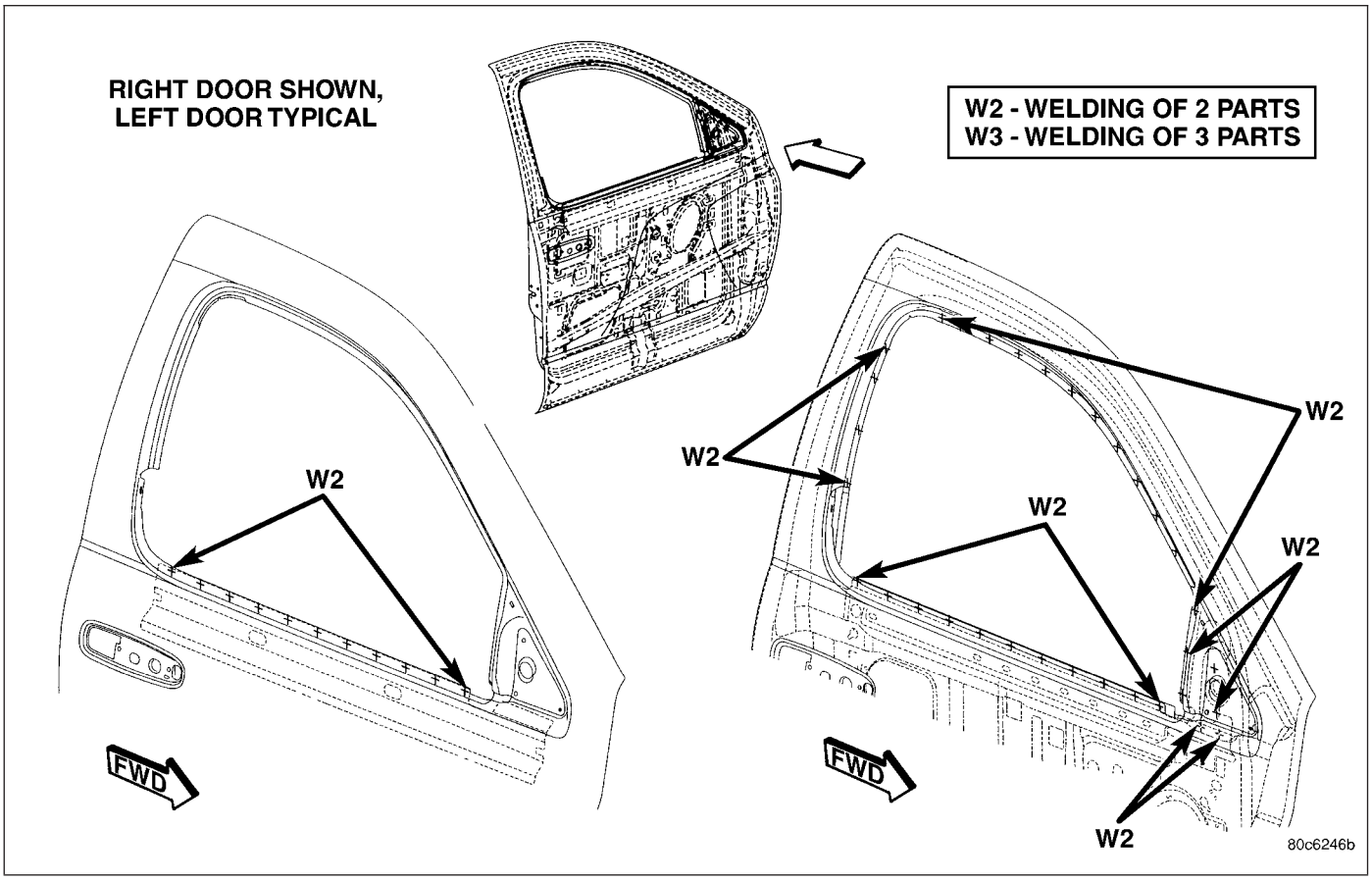

Fig. 130 INNER DOOR PANEL - STANDARD CAB

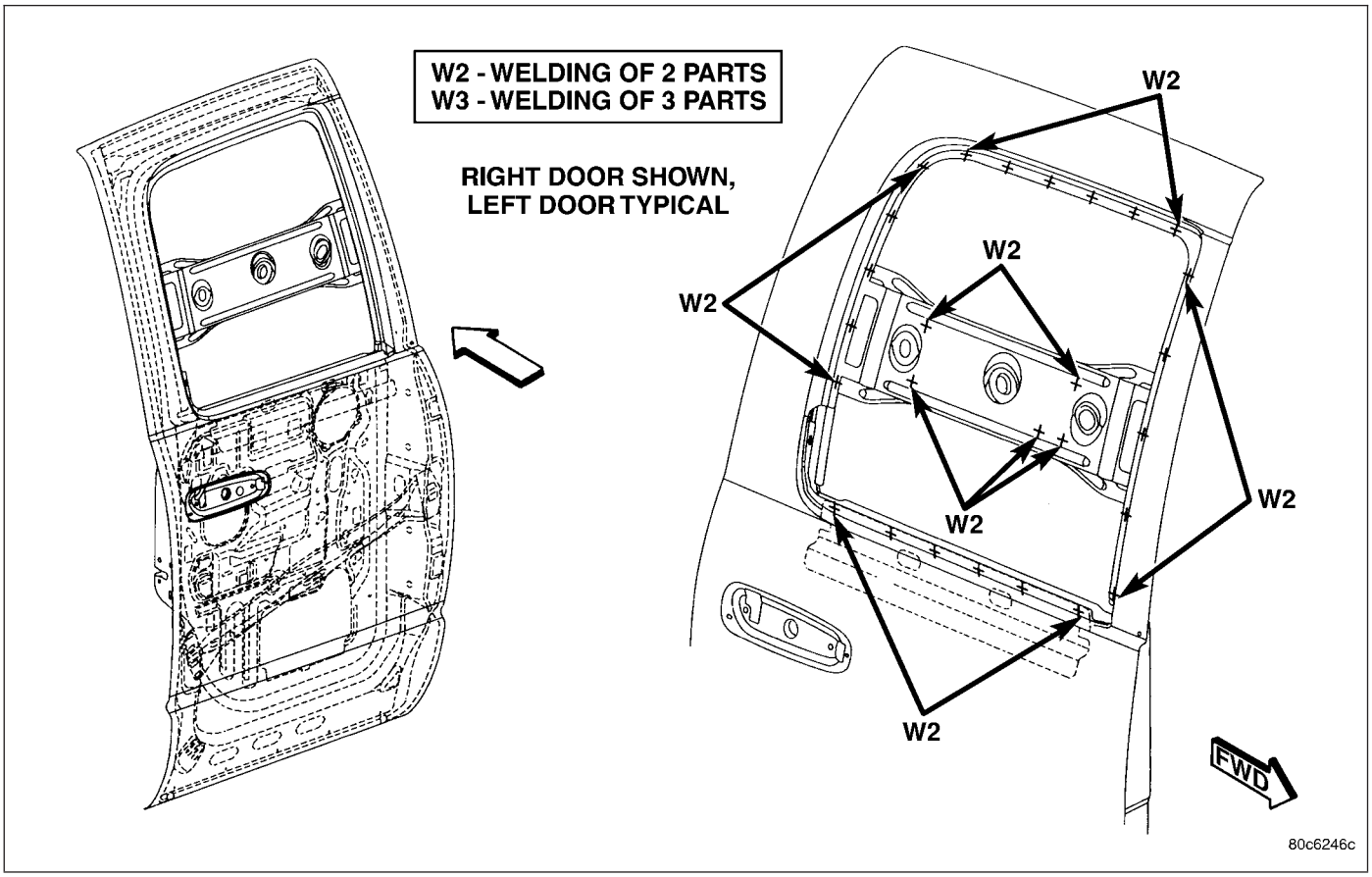

Fig. 131 INNER DOOR PANEL - QUAD CAB