https://truckmanualshub.com/

Pinguely-Haulotte

CE

REPAIR MANUAL

SELF PROPELLED LIFT

HA16PX - HA18PX

242 031 9560 - E 02.03 GB

ISO 9001
GROUPE PINGUELY HAULOTTE

ARTICULEES MATS TELESCOPIQUES CISEAUX TRACTEES

Haulotte®
L'ACCES A L'ESPACE

PINGUELY HAULOTTE • LA PERONNIERE - BP 9 - 42152 L'HORME • Tél. +33 (0) 4 77 29 24 24 • Fax SAV +33 (0) 4 77 31 28 11
email haulotte@haulotte.com • Web www.haulotte.com

https://truckmanualshub.com/

https://truckmanualshub.com/

GENERAL

This manual gives the information required for you to perform servicing and repair operations on certain pieces of equipment yourself.

However, we would like to bring your attention to the importance of:

- respecting the safety instructions concerning the machine itself, its use and its environment,
- use within the limits of its performance,
- correct servicing to ensure long service life.

During and after the guarantee period, our After-Sales service is available to perform any servicing operations you may require.

In this case, contact our local agency or our Plant After-Sales service, specifying the exact type of machine and its serial number.

To order consumables or spare parts, use the "Instructions for use and maintenace" manual and the "Spare parts" catalogue to order original parts, the only guarantee of interchangability and perfect operation.

REMINDER: We would like to remind you that our machines comply with the clauses of the "Machines Directive", 89/392/CEE, dated June 14th 1989, modified by directives 91/368/CEE, dated June 21st 1991, 93/44/CEE, dated June 14th 1993, 93/68/CEE (98/37/CE) dated July 22nd 1993 and 89/336 CEE, dated May 3rd 1989; to directive 2000/14/CE and directive EMC/89/336/CE.

⚠ Caution!

The technical data in this manual is not binding and we reserve the right to make improvements or modifications without altering this manual.

SUMARY

GENERAL **1**

1 - GENERAL RECOMMENDATIONS - SAFETY **5**

1.1 - GENERAL WARNING 5
1.1.1 - Manual 5
1.1.2 - Labels 5
1.1.3 - Safety 5

1.2 - GENERAL SAFETY RECOMMENDATIONS 6
1.2.1 - Operators 6
1.2.2 - Environment 6
1.2.3 - Using the machine 6

1.3 - RESIDUAL RISKS 8
1.3.1 - Risks of jerky movements and tipping over 8
1.3.2 - Electrical risk 8
1.3.3 - Risk of explosion or burning 8
1.3.4 - Risks of collision 8

1.4 - INSPECTIONS 9
1.4.1 - Periodic inspections 9
1.4.2 - Examination of machine suitability 9
1.4.3 - State of conservation 9

1.5 - REPAIRS AND ADJUSTMENTS 10

1.6 - VERIFICATIONS WHEN RETURNING TO SERVICE 10

1.7 - BEAUFORT SCALE 10

2 - SPECIFICATION **11**

2.1 - TECHNICAL CHARACTERISTICS 12
2.1.1 - Technical characteristics HA 16PX - HA 18PX 12

2.2 - SIZE 15
2.2.1 - HA 16PX size 15

2.2.2 - HA 18PX size 16

2.3 - TIGHTENING TORQUE 17

2.3.1 - Tightening torque for large thread 17

2.3.2 - Tightening torque for fine thread 17

2.3.3 - Wheel tightening torque values 17

2.3.4 - Tightening torque values for hydraulic hoses 18

2.3.5 - Pressure table (in bar) 19

2.3.6 - Table of adjustment times 19

3 - SAFETY SYSTEMS 21

3.1 - FUNCTION OF RELAYS AND FUSES IN THE TURNTABLE BOX 21

3.2 - FUNCTION OF SAFETY CONTACTS 21

3.3 - OPERATING EQUATIONS 22

4 - WIRING DIAGRAMS 27

4.1 - DIAGRAM E 567 - FOLIO 01/05 27

4.2 - POSITIONS OF ELECTRIC COMPONENTS ON THE MOTHER BOARD 32

4.2.1 - Description 32

4.2.2 - Positions of screws, connectors and relays 33

4.2.3 - Positions of fuses 34

4.2.4 - Positions of diagnosis help LEDs 35

5 - HYDRAULIC DIAGRAMS 37

5.1 - FUNCTION OF ELECTROVALVES 38

5.1.1 - "On / off" electrovalves 38

5.1.2 - Les électrovannes proportionnelles 38

6 - MAINTENANCE 39

6.1 - GENERAL RECOMMENDATIONS 39

6.2 - PARTICULAR RECOMMENDATIONS 40

6.2.1 - Specific tools 40

6.2.2 - Replacing an element 40

6.2.3 - Locating the breakdown 40

6.2.4 - Environment protection 40

6.3 - MAINTENANCE SYSTEM 40

6.4 - ELECTRIC POWER SUPPLY 41

6.5 - MAINTENANCE PLAN 41

6.6 - OPERATIONS 43

6.6.1 - Summary table 43

6.7 - PRESENCE OF LABELS 45

6.7.1 - Common labels 45

6.7.2 - Labels specific to the different models 48

6.7.3 - Labels specific to options 48

6.7.4 - Labels specific to Holland 48

6.7.5 - Labels specific to Australia 49

6.7.6 - Position of labels 50

6.8 - PRESENCE OF MANUALS 53

7 - PREVENTIVE MAINTENANCE SHEETS 55

8 - OPERATING INCIDENTS 63

8.1 - INCIDENT TABLE 63

8.1.1 - General operation 64

8.1.2 - Lifting system 66

8.1.3 - Travel system 67

8.1.4 - Steering system 67

8.1.5 - Turntable rotation system 68

8.2 - BREAKDOWN DETECTION FLOW CHART 68

9 - CORRECTIVE MAINTENANCE PROCEDURES 161

https://truckmanualshub.com/

1 - GENERAL RECOMMENDATIONS - SAFETY

1.1 - GENERAL WARNING

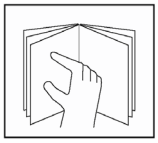

1.1.1 - Manual

This manual aims to help maintenance personnel service and repair the machine. It cannot, however, replace the basic training required by any person working on the site equipment.

The site manager must inform operators of the recommendations in the instruction manual. He is also responsible for application of current "user regulations" in the country of use.

Before operating on the machine, it is essential to be familiar with all the recommendations in this manual and the user manual to ensure personnel and equipment safety.

1.1.2 - Labels

Potential dangers and recommendations for the machine are indicated on labels and plates. Read the instructions on them.

All labels conform to the following colour code:

- Red indicates a potentially fatal danger.
- Orange indicates a danger that may cause serious injury.
- Yellow indicates a danger that may cause material damage or slight injury.

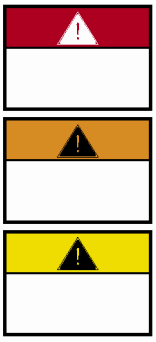

Maintenance pesrsonnel must ensure that these labels and plates are in good conditions and keep them legible. Spare labels and plates can be supplied by the manufacturer on request.

1.1.3 - Safety

Ensure that any person entrusted with the machine is take the safety measures implied by its use.

Avoid any working mode that may affect safety. Any use that does not comply with the recommendations may generate risks and damage to people and equipment.

After intervention, maintenance personnel must check that the operator manual is present. This must be kept by the user throughout the machine's service life, even if it is loaned, rented or sold.

Ensure that all the plates or labels related to safety and danger are complete and legible.

Caution!
To attract the reader's attention, instructions are indicated by this standardised sign.

1.2 - GENERAL SAFETY RECOMMENDATIONS

1.2.1 - Operators

Operators must be aged 18 or over and hold an operating permit issued by the employer after verification of medical aptitude and the practical platform operation test.

Caution!
Only trained operators may use Haulotte self-propelled platforms.

There must be at least two operators present, so that one of them can:

- intervene rapidly if necessary,
- take over the controls in the case of accident or breakdown,
- monitor and prevent machines or people from circulating around the platform,
- guide the platform operator if necessary.

1.2.2 - Environment

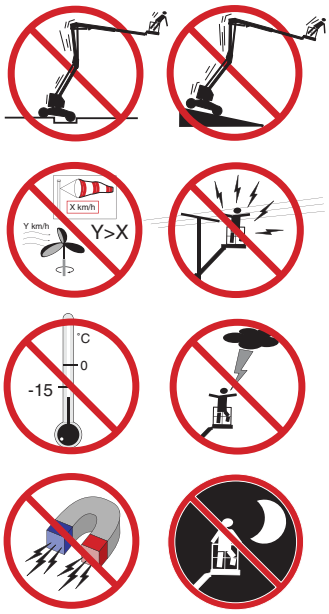

Never use the machine:

- On soft, unstable or cluttered floors.
- On a floor with a tilt greater than the allowed limit.
- With a windspeed above the permitted level. In case of outdoor use, check that windspeed is lower or equal to the permitted level using an anemometer.
- Near electric lines (find out about minimum distances according to current). In temperatures of less than -15°C (in particular, in cold rooms); consult our service department if work is required in conditions below -15°C.
- In an explosive atmosphere.
- In an incorrectly ventilated area, as exhaust fumes are toxic.
- During storms (risk of being struck by lightning).
- At night if the machine is not equipped with an optional light.
- In the presence of intense electromagnetic fields (radar, mobile and high current).

DO NOT DRIVE ON THE PUBLIC HIGHWAY.

1.2.3 - Using the machine

It is important to ensure that in normal use, i.e. platform operation, the platform station selection key remains in the the platform position to enable control of the machine from the platform. If a problem occurs on the platform, a person present and trained in emergency/standby manoeuvres can help by putting the key in the ground control position.

Never use the machine with:

- a load greater than the nominal load,
- more people than the authorised number,
- lateral force in the platform greater than the level permitted,
- wind speed higher than the permitted level.

To avoid all risk of serious fall, operators must respect the following instructions:

- Hold the hand rails firmly when climbing onto or operating the platform.
- Wipe any traces of oil or grease off the steps, floor and hand rails.
- Wear protective clothing suited to working conditions and current local legislation, in particular when working in hazardous areas.
- Do not disable the safety system end of stroke contactors.
- Avoid contact with fixed or mobile obstacles.
- Do not increase working height by using ladders or other accessories.
- Never use the hand rails as a means of access for getting onto and off the platform (use the steps provided on the machine).
- Never climb on the hand rails when the platform is raised.
- Never drive the platform at high speed in narrow or cluttered areas.
- Never use the machine without installing the platform protective bar or closing the safety barrier.
- Never climb on the covers.

Caution!
Never use the platform as a crane, goods lift or elevator. Never use the platform or tow or haul.

To avoid risks of tipping over, operators must respect the following instructions:

- Do not disable the safety system end of stroke contactors.
- Avoid moving the steering control levers in the opposite direction, without stopping in the "O" position (to stop during a travel manoeuvre, move the manipulator lever gradually).
- Respect maximum load and maximum number of people authorised on the platform.
- Distribute the load evenly and place in the centre of the platform if possible.
- Check that the floor resists the pressure and load per wheel.
- Avoid contact with fixed or mobile obstacles.
- Do not drive the platform at high speed in narrow or cluttered areas.
- Do not drive the platform in reverse (inadequate visibility).
- Do not use the machine if the platform is cluttered.
- Do not use the machine with equipment or objects hanging from the hand rails.
- Do not use the machine with elements that may increase the wind load (e.g. panels).
- Do not perform machine maintenance operations when the machine is raised without setting up the required safety means (gantry crane, crane).
- Make daily checks and monitor proper operation during periods of use.
- Preserve the machine from any uncontrolled operation when it is not in service.

NB: Do not tow the platform (it is not designed to be towed and must be transported on a trailer).

1.3 - RESIDUAL RISKS

1.3.1 - Risks of jerky movements and tipping over

Caution!
The direction of travel can be reversed after a 180° turntable rotation. Take account of the colour of the arrows on the chassis compared with the direction of travel (green = forward, red = reverse) Thus, moving the manipulator in the direction of the green arrow on the control panel will move the machine according to the direction indicated by the green arrow on the chassis. Similarly, moving a manipulator in the direction of the red arrow on the control panel, will move the machine in the direction of the red arrow on the chassis

Risks of jerky movement and tipping over are high in the following situations:
- Sudden action on the controls.
- Overloading of the platform.
- Uneven ground (Be careful during thaw periods in winter).
- Gusts of wind.
- Contact with an obstacle on the ground or at a height.
- Working on platforms, pavements, etc.

Allow sufficient stopping distances:
- 3 meters at high speed,
- 1 meter at low speed.

Allow sufficient stopping distances: 3 metres at high speed and 1 metre at low speed.

Do not alter or neutralise any components connected in any way to the machine's safety or stability.

Do not place or fasten a load so that it overhangs the machine's parts.

Do not touch adjacent structures with the elevator arm.

1.3.2 - Electrical risk

Caution!
If the machine has a 220 V 16A max. plug, the extension must be connected to a mains socket protected by a 30 mA differential circuit breaker.

Electrical risks are high in the following situations:
- Contact with a live line (check safety distances before operation near electricity lines).
- Use during storms.

1.3.3 - Risk of explosion or burning

The risks of explosion or burning are high in the following situations:
- Working in explosive or inflammable atmosphere.
- Filling the fuel tank near naked flames.
- Contact with the hot parts of the motor.
- Use of a machine generating hydraulic leakage.

1.3.4 - Risks of collision

- Risk of crushing people in the machine operation zone (when travelling or manoeuvring equipment).
- The operator must assess the risks above him before using the machine.
- Pay attention to the position of the arms during turntable rotation.
- Adapt movement speed to conditions related to the ground, traffic, slope and movement of people, or any other factor that may cause a collision.
- When driving down the ramp of a truck, ensure sufficient space is available for safe unloading.
- Check brake pad wear regularly to avoid all risk of collision.

https://truckmanualshub.com/

1.4 - INSPECTIONS

Comply with the national regulations in force in the country of machine use.

For FRANCE: Order dated 9 June 1993 + circular DRT 93 dated 22 September 1993 which specify:

1.4.1 - Periodic inspections

The machine must be inspected every 6 months in order to detect any defects liable to cause an accident.

These inspections are performed by an organisation or personnel specially designated by the site manager and under his responsibility (whether or not they belong to the company) Articles R 233-5 and R 233-11 of the French Labour Code.

The results of these inspections are recorded in a safety register kept by the site manager and constantly available to the labour inspector and the site safety committee (if one exists) and the list of specially designated personnel (Article R 233-5 of the French Labour Code).

Moreover, before each use, check the following:

- the operator's manual is in the storage compartment on the platform,
- the stickers are placed according to the section concerning "Labels and their positions",
- oil level and any elements in the mainteance operation table
- look out for any danaged, incorrectly installed, modified or missing parts.

NOTE : This register can be obtained from trade organisations, and in some cases from the OPPBTP or private prevention agencies.

The designated persons must be experienced in risk prevention (Articles R 233-11 or order n° 93-41).

No member of personnel is allowed to perform any check whatsoever during machine operation (Article R 233-11 of the French Labour Code).

1.4.2 - Examination of machine suitability

The manager of the site where the machine is operated must ensure the machine is suitable, i.e. capable of performing the work in complete safety, and in compliance with the operating manual. Furthermore, the French order of 9 June 1993 addresses problems relative to leasing, examination of the state of conservation, checking upon operation after repairs, and test conditions (static test coefficient 1.25; dynamic test coefficient 1.1). All users must consult this order's requirements and comply with them.

1.4.3 - State of conservation

Detect any deterioration liable to cause hazardous situations (concerning safety devices, load limiters, tilt sensor, cylinder leaks, deformation, welds, bolt tightness, hoses, electrical connections, tyre state, excessive mechanical gaps).

NOTE : If the machine is rented/leased, the user responsible for the machine must examine its state of conservation and suitability. He must obtain assurance from the leaser that general periodic inspections and pre-operation inspections have been performed.

1.5 - REPAIRS AND ADJUSTMENTS

These cover major repairs, and work on or adjustments to safety systems or devices (of a mechanical, hydraulic or electrical nature).

These must be performed by personnel from or working for PINGUELY-HAULOTTE who will use only original parts.

Any modification not controlled by PINGUELY-HAULOTTE is unauthorised.

The manufacturer cannot be held responsible if non-original parts are used or if the work specified above is not performed by PINGUELY-HAULOTTE-approved personnel.

1.6 - VERIFICATIONS WHEN RETURNING TO SERVICE

To be performed after:

- extensive disassembly-reassembly operation,
- repair affecting the essential components of the machine,
- any accident caused by the failure of an essential component.

It is necessary to perform a suitability examination, a state of conservation examination, a static test, a dynamic test (see coefficient in paragraph (see Chap 1.4.2, page 9).

Caution!
These test must be performed by a competent person.

1.7 - BEAUFORT SCALE

The Beaufort Scale of wind force is accepted internationally and is used when communicating weather conditions. It consists of number 0 - 17, each representing a certain strength or velocity of wind at 10m (33 ft) above ground level in the open.

Description of Wind		Specifications for use on land	MPH	m/s
0	Calm	Calm; smoke rises vertically	0-1	0-0.2
1	Light Air	Direction of wind shown by smoke	1-5	0.3-1.5
2	Light Breeze	Wind felt on face; leaves rustle; ordinary vanes moved by wind	6-11	1.6-3.3
3	Gentle Breeze	Leaves and small twigs in constant motion; wind extends light flag	12-19	3.4-5.4
4	Moderate Breeze	Raises dust and loose paper; small Branches are moved	20-28	5.5-7.9
5	Fresh Breeze	Small trees in leaf begin to sway; crested wavelets form on inland waterways	29-38	8.0-10.7
6	Strong Breeze	Large branches in motion; whistling heard in telephone wires; umbrellas used with difficulty	39-49	10.8-13.8
7	Near Gale	Whole trees in motion; inconvenience felt when walking against wind	50-61	13.9-17.1
8	Gale	Breaks twigs off trees; generally impedes progress	62-74	17.2-20.7
9	Strong Gale	Slight structural damage occurs (chimney pots and slates removed)	75-88	20.8-24.4

https://truckmanualshub.com/

2 - SPECIFICATION

Self propelled lift, models HA 16 P and HA 18 P, are designed for any overhead work within the limits of their characteristics (see § 2.1, page 12) and within the respect of all safety instructions specific to the equipment and places of use.

The main operating station is on the platform.

The operating station from the turret is a standby or emergency station..

REMINDER :for any information, intervention of spare part requests, please specify the machine type and serial number.

2.1 - TECHNICAL CHARACTERISTICS

2.1.1 - Technical characteristics HA 16PX - HA 18PX

DESCRIPTION	HA 16PX		Unit
	Standard basket 1800x800	Basket option 2300x800	
Load	230	230	Kg
Max. lateral manual force	400	400	N
Max. wind speed	60	45	Km/h
Overall platform length in idle position	6.95		m
Overall platform length in transport position	5.25		m
Height under basket floor in idle position	0.235		m
Height under basket floor in work position			m
Overall width of the platform	2.3 (standard tyres)	2.38 (wide tyres)	m
Overall height of the platform	2.2		m
Floor clearance, chassis edge	0.4		m
Floor clearance of the basket in the idle position	0.235		m
Floor clearance of the basket in the transport position			m
Platform height in the transport position	2.15		m
Platform height in the idle position	2.20		m
Platform width at tyre level	2.3 (standard tyres)	2.38 (wide tyres)	m
Max. height of floor rise	14		m
Max. height of floor lowering			m
Max. height of articulation point	6.60		m
Max. reach of the basket above the ground	8.70		m
Turntable rotation angle	360 (continuous)		°
Positive boom range	74		°
Negative boom range	-3		°
Overall length of the basket	1.80	2.3	m
Overall width of the basket	0.80	0.8	m
Overall height of the basket, platform	1.10		m
Basket rotation angle	-90° /+ 90°		°
External turning radius	4		m
Internal turning radius	1.9		m
Tyre width	0.385		m
Lateral distance between the wheels	2.00		m
Tyre diameter	1.080		m
Max. slope in travel	50		%
Authorised tilt	5		°
Hydraulic tank	100		l
Fuel tank	72		l
Total weight	7240		Kg
Differential blocking	yes		
Hydraulic brakes	2		
Freewheel	yes		
DEUTZ motor - Power - Power at slow speed - Consumption	F3L1011F 38CH/28.33hp/28Kw at 2400 rpm 20.4 CH/15.21 hp/15Kw at 1250 rpm 2309 Kwh		

DESCRIPTION	HA 16PX	Unit
Travel speed - micro speed: - low speed: - medium speed: - high speed:	 0.22 0.38 0.77 1.52	m/s
Max. force on one wheel		Kg
Hydraulic pressure - general - travel - steering - orientation	 24 24 24 10	MPa
Max. pressure on the ground - hard ground (concrete) - soft ground (earth)	10.1	N/m²
Starter battery	12V-95Ah-450A	
Supply voltage	12	V
Accoustic power	104	dB(A)
Accoustic pressure at 10 metres	75	dB(A)

DESCRIPTION	HA 18PX		Unit
	Standard basket 1800x800	Basket option 2300x800	
Load	230	230	Kg
Max. lateral manual force	400	400	N
Max. wind speed	60	45	Km/h
Overall platform length in idle position	7.60		m
Overall platform length in transport position	5.90		m
Height under basket floor in idle position	0.235		m
Height under basket floor in work position			m
Overall width of the platform	2.3 (standard tyres)	2.38 (wide tyres)	m
Overall height of the platform	2.2		m
Floor clearance, chassis edge	0.4		m
Floor clearance of the basket in the idle position	0.235		m
Floor clearance of the basket in the transport position			m
Platform height in the transport position	2.15		m
Platform height in the idle position	2.20		m
Platform width at tyre level	2.3 (standard tyres)	2.38 (wide tyres)	m
Max. height of floor rise	15.3		m
Max. height of floor lowering			m
Max. height of articulation point	6.60		m
Max. reach of the basket above the ground	10.07		m
Turntable rotation angle	360 (continuous)		°
Positive boom range	74		°
Negative boom range	-3		°
Overall length of the basket	1.80	2.3	m
Overall width of the basket	0.80	0.8	m
Overall height of the basket, platform	1.10		m
Basket rotation angle	-90° /+ 90°		°

DESCRIPTION	HA 18PX	Unit
External turning radius	4	m
Internal turning radius	1.9	m
Tyre width	0.385	m
Lateral distance between the wheels	2.00	m
Tyre diameter	1.080	m
Max. slope in travel	50	%
Authorised tilt	5	°
Hydraulic tank	100	l
Fuel tank	72	l
Total weight	7240	Kg
Differential blocking	yes	
Hydraulic brakes	2	
Freewheel	yes	
DEUTZ motor - Power - Power at slow speed - Consumption	F3L1011F 38CH/28.33hp/28Kw at 2400 rpm 20.4 CH/15.21 hp/15Kw at 1250 rpm 2309 Kwh	
Travel speed - micro speed: - low speed: - medium speed: - high speed:	 0.22 0.38 0.77 1.52	m/s
Max. force on one wheel		Kg
Hydraulic pressure - general - travel - steering - orientation	 24 24 24 10	MPa
Max. pressure on the ground - hard ground (concrete) - soft ground (earth)	 10.1	N/m²
Starter battery	12V-95Ah-450A	
Supply voltage	12	V
Accoustic power	104	dB(A)
Accoustic pressure at 10 metres	75	dB(A)

https://truckmanualshub.com/

2.2 - SIZE

2.2.1 - HA 16PX size

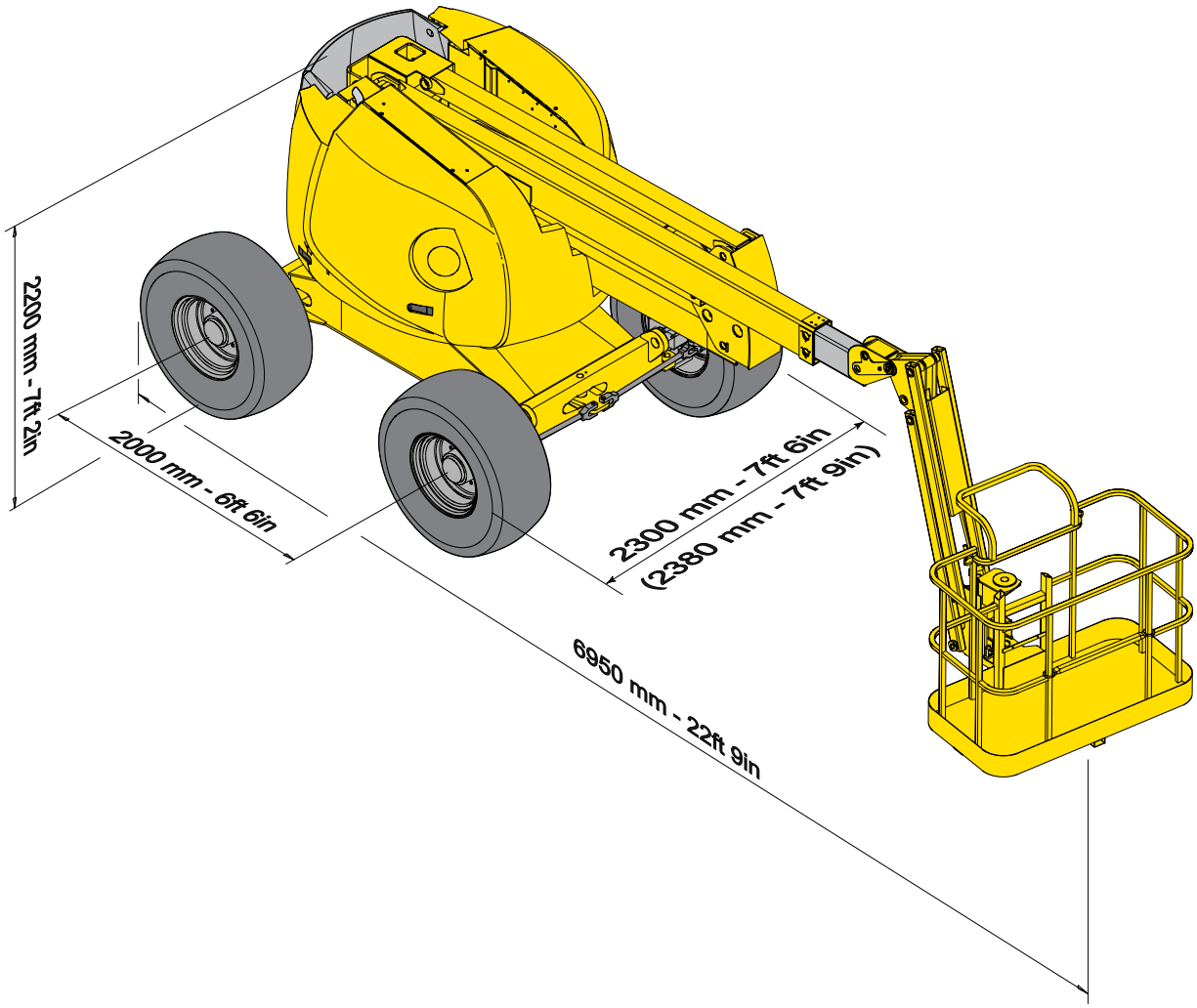

2.2.2 - HA 18PX size

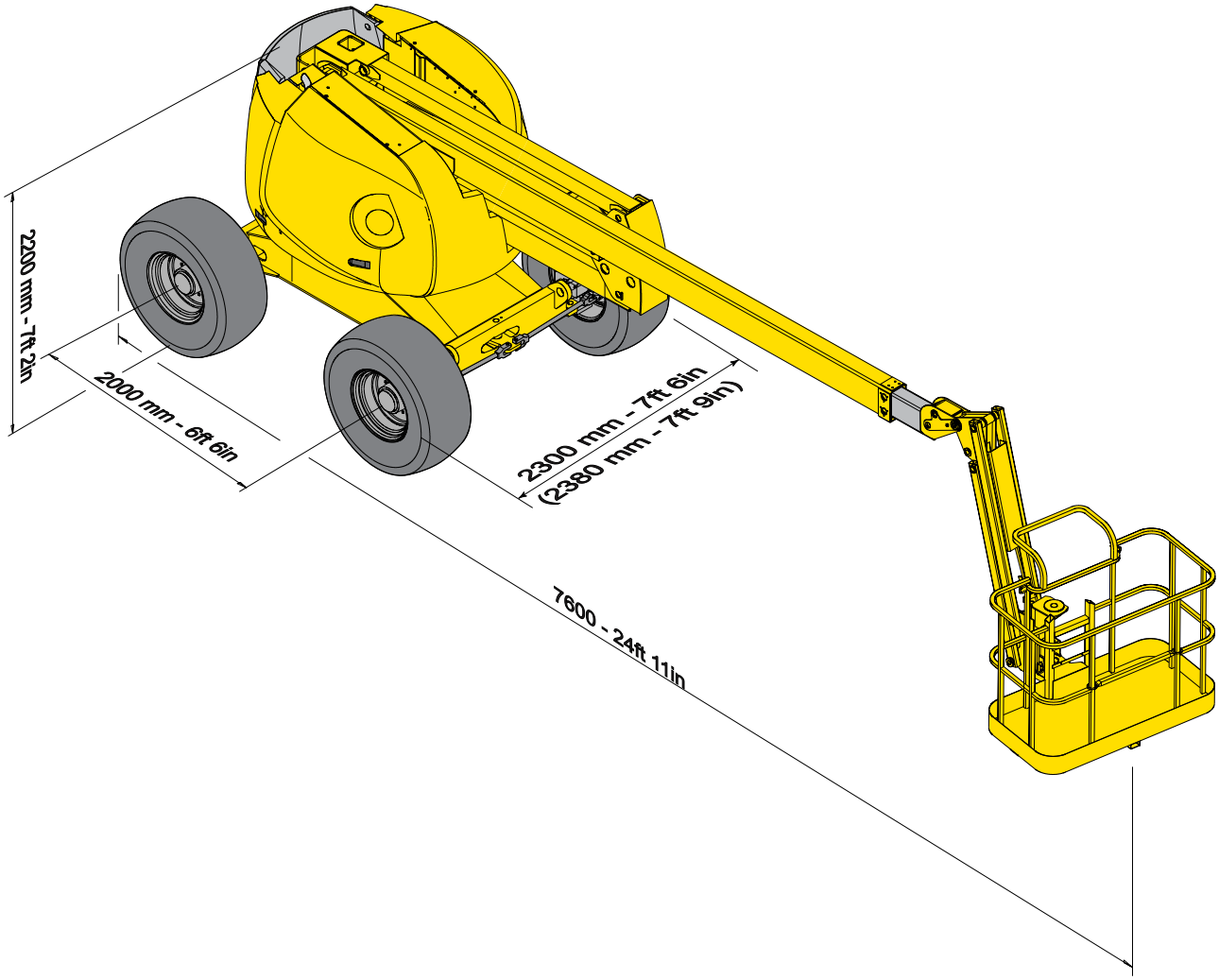

2.3 - TIGHTENING TORQUE

2.3.1 - Tightening torque for large thread

Nominal diameter	Tightening torque in N.M		
	8.8	10.9	12.9
M 6*1	9 to 11	13 to 14	15 to 17
M 7*1	15 to 19	21 to 24	26 to 28
M 8*1.25	22 to 27	31 to 34	37 to 41
M 10*1.5	43 to 45	61 to 67	73 to 81
M 12*1.75	75 to 94	110 to 120	130 to 140
M 14*2	120 to 150	170 to 190	200 to 220
M 16*2	190 to 230	260 to 290	320 to 350
M 18*2.5	260 to 320	360 to 400	440 to 480
M 20*2.5	370 to 450	520 to 570	620 to 680
M 22*2.5	500 to 620	700 to 770	840 to 930
M 24.3*3	630 to 790	890 to 990	1070 to 1180
M 27*3	930 to 1150	1300 to 1400	1560 to 1730
M 30*3.5	1260 to 1570	1770 to 1960	2200 to 2350

2.3.2 - Tightening torque for fine thread

Nominal diameter	Tightening torque in N.M		
	8.8	10.9	12.9
M 8*1	24 to 29	33 to 37	40 to 44
M 10*1.25	46 to 57	64 to 71	77 to 85
M 12*1.25	83 to 100	120 to 130	140 to 150
M 14*1.5	130 to 160	180 to 200	220 to 240
M 16*1.5	200 to 250	280 to 310	340 to 370
M 18*1.5	290 to 360	410 to 450	490 to 540
M 20*1.5	410 to 510	570 to 630	690 to 760
M 22*1.5	550 to 680	780 to 870	920 to 1000
M 24*1.5	690 to 860	970 to 1070	1160 to 1290
M 27*2	1000 to 1300	1400 to 1560	1690 to 1880
M 30*2	1400 to 1700	1960 to 2180	2350 to 2610

2.3.3 - Wheel tightening torque values

Tightening torque in N.M	
Steerng wheel nut	Drive wheel nut
320	320

2.3.4 - Tightening torque values for hydraulic hoses

Description	*Torque to apply (N.m)*
Turning equal elbow JIC37 90 (10)	35
Turning equal elbow JIC37 90 (12)	60
Turning equal elbow JIC37 90 (18)	120
Turning equal elbow JIC37 90 (25)	155
Nut F JIC37 (25)	155
Nut FJIC37 (12)	60
Nut FJIC37 (18)	120
Hose SP 1663 lg 0,830	60
Hose SP 1663 lg 1,100	60
Hose SP 1663 lg 2,100	60
Hose SP 1707 lg 2,150	15
Hose SP 1756 lg 8,400	35
Hose SP 5025 lg 1,680	120
Hose SP 5113 lg 1,700	120
Hose SP 5113 lg 1,800	120
Hose SP 5113 lg 2,170	120
Hose SP 5113 lg 2,230	120
Hose SP 5238 lg 1,900	35
Hose SP 5261 lg 1,320	35
Hose SP 5261 lg 1,800	35
Hose SP 5273 lg 0,900	120
Hose SP 5273 lg 1,460	120
Hose SP 5293 lg 0,950	120
Hose SP 791 lg 1,170	120
Hose SP 791 lg 0,510	120
Hose SP 791 lg 0,690	120
Hose SP 791 lg 0,720	120
Hose SP 791 lg 1,020	120
Hose SP 791 lg 1,730	120
Equal turning MFM JIC37 (6)	15
Inverted turning MMF JIC37 (10)	35
Inverted turning MMF JIC37 (12)	60
Inverted turning MMF JIC37 (18)	120
Inverted turning MMF JIC37 (25)	155
union MJIC 37 (10) M1/2" BSPP	90
union MJIC 37 (10) M1/4" BSPP	35
union MJIC 37 (12) M1/2" BSPP	90
union MJIC 37 (12) M1/4" BSPP	35
union MJIC 37 (18) M1/2" BSPP	90
union MJIC 37 (18) M3/4" BSPP	180
union MJIC 37 (25) M1" BSPP	310
union MJIC 37 (6) M1/4" BSPP	35

https://truckmanualshub.com/

2.3.5 - Pressure table (in bar)

	Generator	Load sensing	Main	Steering	Brake release	Rotation	Up	Down	Boom lifting
HA16-18PX NT	23	30	240	240	240	100	240	240	240

	Boom lowering	Telescope out	Telescope in	Travel	Compensation	Jib up	Jib down	Emergency unit
HA16-18PX NT	240	110	240	240	240	240	240	210

2.3.6 - Table of adjustment times

Movement	*Control*	*Movement duration*
HS decceleration	From the basket	**1,30m +/- 20cm**
HS travel HA16PX forward and reverse	From the basket	**14s / 20m**
HS travel HA18PX forward and reverse	From the basket	**16s / 20m**
Mirco speed travel HA16PX and HA18PX	From the basket	**45s / 10m**
Boom lifting	From the basket	**27s +/-3s**
Boom lowering	From the basket	**30s +/- 3s**
Arm lifting	From the basket	**29s +/- 3s**
Arm lowering	From the basket	**20s +/- 3s**
Telescope out	From the basket	**18s +/- 3s**
Telescope in	From the basket	**12s +/- 3s**
Rotation	From the basket	**44s +/- 1,5s per 1/2 turn**
Jib up	From the basket	**26s +/- 2s**
Jib in	From the basket	**35s +/- 2s**
Right / left basket rotation speed	From the basket	**15s +/- 2s**
Compensation speed up	From the basket	**30s +/- 2s**
Compensation speed down	From the basket	**55s +/- 2s**
Steering out	From the basket	**sortie 6s**
Steering in	From the basket	**rentrée 5s**
Arm lifting	From the turntable	**35s +/- 3s**
Arm lowering	From the turntable	**23s +/- 3s**
Boom lifting	From the turntable	**30s +/- 3s**
Boom lowering	From the turntable	**33s +/- 3s**
Rotation	From the turntable	**75s +/- 1,5s per 1/2 turn**

3 - SAFETY SYSTEMS

3.1 - FUNCTION OF RELAYS AND FUSES IN THE TURNTABLE BOX

(see wiring diagram)

KA2	Heat motor start	FU3–80 A	Accelerator circuit fuse
KP1	Heat motor stop	FU4–30 A	Main circuit fuse (motor)
KT2	Movement acceleration (electromotor)	FU5–3 A	Turntable movement control circuit fuse
KMG	Mains power	FU6–3 A	Platform movement control circuit
KA32	Battery-converter switching	FU7–20 A	Electrovalve supply circuit fuse
KA37	Converter supply	FU8–5 A	Turntable / platform control circuit fuse
KM1	Motorpump unit no. 1 control (bi-energy)	FU9–20 A	Accessory circuit fuse
KM2	Motorpump unit no. 2 control	FU10–3 A	Circuit fuse
FU1–10 A	Motor stop circuit fuse	FU11–250 A FU12–125 A	Electropump no. 1 circuit fuse Electropump no. 2 circuit fuse

3.2 - FUNCTION OF SAFETY CONTACTS

(see wiring diagram)

QS1	Battery circuit breaker	SQ6	2nd alert overload - break Disables all movements from the platform
SB1	Palm button emergency stop (turntable)	SQ3	Tilt reset if machine folded (boom)
SB2	Palm button emergency stop (platform)	B1	Air filter contact. Motor cut off if clogged air filter
SQ1	Tilt detector, disables arm lifting, boom lifting, telescoping, jib lifting and travel movements by breaking	B2	Motor temperature contact. Motor cut off if temperature too high
SQ4	Tilt reset if machine folded (arms)	B3	Oil pressure contact. Motor cut off if insufficient pressure
SQ5	1st audible alert overload. 90% of maximum load limit reached	B4	Hydraulic oil temperature contact. Audible alert if temperature too high

3.3 - OPERATING EQUATIONS

- Start

If (SB3=1 or SB4=1) and W=0 and D+=0 and YV1=0 then KA2=1
By selecting turntable, platform is impossible.

- Stop moteur

If KA2=1 or (no motor fault for more than 6 seconds)* then KP1=1
*No motor fault => D+=1 and B2=1 and B3=1

- Acelerator

If (SM4ab=1 or SM2ab=1 or SM1ab=1 or SM4c=1 or SM4d=1 or SA9a=1 or SA9b=1) and (Platform position =1 and Pedal OK=1 SQ6=1) or (SA2=1 and SQ6=1) or (KA2=0 and D+=1 and SQ11=1 and V12 Platform=1) then KT2=1

- Compensation
  - Up

If SA5b=1 and SQ6=1 and SA9a=0 and SA9b=0 and SM31ab=0 and SM2ab=0 then YV15b=1 and YV2a=1 and YV1=1

YV1 is time delayed for 2 seconds
If SQ6 passes to O during a movement, this one is not cut.

  - Down

If SA5a=1 and SQ6=1 and SA9a=0 and SA9b=0 and SM31ab=0 and SM2ab=0 then YV15a=1 and YV2a=1 and YV1=1

YV1 is time delayed for 2 seconds
If SQ6 passes to O during a movement, this one is not cut.

- Rotation
  - Right

If SA4b=1 then YV19b=1 and YV2a=1 and YV1=1
YV1 is time delayed for 2 seconds

  - Left

If SA4a=1 then YV19a=1 and YV2a=1 and YV1=1
YV1 is time delayed for 2 seconds

- Pendular
  - Up

If (SA6b=1 or SA7b=1) and (SQ1=1 or machine folded) and (SQ6=1 or turntable position)
then YV18b=1 and YV2a=1 and YV1=1
YV1 is time delayed for 2 seconds
machine folded => SQ2=1 and SQ3=1 and SQ4=1
If SQ6 passes to O during a movement, this one is not cut.

  - Down

If (SA6a=1 or SA7a=1) and (SQ6=1 or turntable position)
then YV18a=1 and YV2a=1 and YV1=1
YV1 is time delayed for 2 seconds
If SQ6 passes to O during a movement, this one is not cut.

- Steering
  - Front axle
    - 1°Left

If SA12b=1 and SQ6=1 and (SM4ab=1 or SQ1=1 or (SM4c=0 and SM4d=0))

then YV22b=1 and YV2a=1 and YV1=1
YV1 is time delayed for 2 seconds
If SQ6 passes to O during a movement, this one is not cut.

2°Right
If SA12a=1 and SQ6=1 and (SM4ab=1 or SQ1=1 or (SM4c=0 and SM4d=0))
then YV2ab=1 and YV2a=1 and YV1=1
YV1 is time delayed for 2 seconds
If SQ6 passes to O during a movement, this one is not cut.

- Rear axle

3°Left and Right
If (SM4c=1 or SM4d=1 or SM4ab=1) and SQ6=1 then YV21a=1 and YV2a=1 and YV1=1
YV1 is time delayed for 2 seconds
If SQ6 passes to O during a movement, this one is not cut.

- Travel

LS MS HS MicroS
If SQ2=0 or SQ3=0 or SQ4=0 or SQ9=1 then MicroS=1
If MicroS=0 then NoMicroS=1

If SA11a=0 and SA11b=1 and NoMicroS=1 and SM4ab=0 and HM4Ý then LS=1
If SA11a=0 and SA11b=0 and NoMicroS=1 and SM4ab=0 and HM4Ý then MS=1
If SA11a=1 and SA11b=0 and NoMicroS=1 and SM4ab=0 and HM4Ý then HS=1

If NoMicroS=1 and HS=1 and MS=0 and LS=0 and SM4ab=1 and PedaleOK=1 then YV8=1 and YV1=1

If LS=0 and MS=0 and HS=1 and SM4ab=1 and PedaleOK=1 and YV9=0 and SA3=0 and NoMicroS=1 then YV13=1 and YV1=1.

If (HS=1 or MS=1) and LS=0 and SM4ab=1 and PedaleOK=1 and No MicroS=1 then YV17=1 and YV12=1 and YV10=1 and YV23=1 and YV1=1

If (LS=1 or MS=1 or HS=1) and SM4ab=1 and PedaleOK=1 then YV11=1

If SM4ab=1 and PdaleOK=1et (SQ1=1 or machine folded) and SA9a=0 and SA9b=0 and SM31ab=0 and SM2ab=0 and SQ6=1 then KA37=1.
then YV6 LS MS HS : Full setpoint
MicroS : low setpoint

If SQ2=1 and SQ3=1 and SQ4=1 then KM2=1

YV1 is time delayed for 2 seconds
If SQ6 passes to O during a movement, this one is not cut.
machine folded => SQ2=1 and SQ3=1 and SQ4=1

- Lifting
  - Turntable

1°Up
If SA14a=1 and (SQ1=1 or machine folded) then YV1=1 and YV4
YV1 is time delayed for 2 seconds
machine folded => SQ2=1 and SQ3=1 and SQ4=1
If SQ6 passes to 0 the movement is carried ou more slowly.

2°Down
If SA14b=1alors YV1=1 and YV4

YV1 is time delayed for 2 seconds
If SQ6 passes to 0 the movement is carried ou more slowly.
When the arm reaches SQ4, the end of the lowering movement is slowed down.

- Platform

1°Up
If SM2ab=1 and SQ6=1 and HM2=1 and (SQ1=1 or machine folded) then YV1=1 and YV4

YV1 is time delayed for 2 seconds
machine folded => SQ2=1 and SQ3=1 and SQ4=1
If SQ6 passes to O during a movement, this one is not cut.

2°Down
If SM2ab=1 and SQ6=1 and HM2=1 then YV1=1 and YV4

YV1 is time delayed for 2 seconds
If SQ6 passes to O during a movement, this one is not cut.
When the arm reaches SQ4, the end of the lowering movement is slowed down.

- Orientation
  - Turntable

1°Left
If SA15a=1 then YV1=1 and YV5

YV1 is time delayed for 2 seconds
If SQ6 passes to 0 the movement is carried ou more slowly.

2°Right
If SA15b=1 then YV1=1 and YV5

YV1 is time delayed for 2 seconds
If SQ6 passes to 0 the movement is carried ou more slowly.

- Platform

1°Left
If SM31ab=1 and SQ6=1 and HM31=1
then YV1=1 and YV5

YV1 is time delayed for 2 seconds
If SQ6 passes to O during a movement, this one is not cut.

2°Right
If SM31ab=1 and SQ6=1 and HM31=1
then YV1=1 and YV5

YV1 is time delayed for 2 seconds
If SQ6 passes to O during a movement, this one is not cut.

- Relevage
  - Turntable

1°Up
If SA13a=1 and (SQ1=1 or machine folded) then YV1=1 and YV3
YV1 is time delayed for 2 seconds
machine folded => SQ2=1 and SQ3=1 and SQ4=1
If SQ6 passes to 0 the movement is carried ou more slowly.

2°Down
If SA13b=1alors YV1=1 and YV3

YV1 is time delayed for 2 seconds
If SQ6 passes to 0 the movement is carried ou more slowly.

- Platform

1°Up
If SM31ab=1 and SQ6=1 and HM31=1 and (SQ1=1 or machine folded) then YV1=1 and YV3

YV1 is time delayed for 2 seconds
machine folded => SQ2=1 and SQ3=1 and SQ4=1
If SQ6 passes to O during a movement, this one is not cut.

2°Down
If SM31ab=1 and SQ6=1 and HM31=1 then YV1=1 and YV3

YV1 is time delayed for 2 seconds
If SQ6 passes to O during a movement, this one is not cut.

- Telescoping
  - In

If (SA8a=1 or SA9a=1) and (SQ6=1 or turntable position)
then YV14a=1 and YV2a=1 and YV1=1

YV1 is time delayed for 2 seconds
If SQ6 passes to O during a movement, this one is not cut.

  - Out

If (SA8b=1 or SA9b=1) and (SQ1=1 or machine folded) and (SQ6=1 or turntable position)
then YV14b=1 and YV2a=1 and YV1=1

YV1 is time delayed for 2 seconds
machine folded => SQ2=1 and SQ3=1 and SQ4=1
If SQ6 passes to O during a movement, this one is not cut.

- Differential blocking

If MS=0 and HS=0 and YV13=0 and LS=1 and SA3=1 and NoMicroS=1 then YV9=1

- Horn

If SB5=1 then HA1=1

- Buzzer

If SQ1=0 and machine unfolded then the buzer sounds continuously.
If B4=0 then the buzzer sounds with a frequency F1.
If SQ6=0 and turntable position then le buzzer sonne avec une fréquence F1.
If travel_Buzzer_option=1 and HM4=1
then the buzzer sounds with a frequency F2.
If Brazil_Buzzer_option=1 and (LS=1 or SA4a=1 or SA4b=1)
then the buzzer sounds with a frequency F2.

Machine unfolded => SQ2=0 or SQ3=0 or SQ4=0

- HL2

If B1=0 then HL2=1

- HL3

If B2=0 then HL3=1

- HL4

If B3=0 then HL4=1

- Generator

If KA2=0 and SQ11=1 and V12 Platform=1 and D+=1 then YV24=1

If YV24=1 then all the movements and the translation are cut

- Other functions : Overload, End of lowering, Safety
-
  - Overload

The overload through SQ6 cuts all the ordered movements of the platform. When one passes in turntable position, one recovers the movements with a limited speed. Moreover the turntable buzzer sounds

  - End of lowering

Sensor SQ4 has two functions. One is to reset the tilt sensor and the other is used to slow down arm lowerin when closed.

  - Fuse safety

If an electrovalve is controlled permanently for any reason (short-circuited electrovalve, etc ...) fuse FU7 is destroyed.
The emergency stop is relayed. For safety reasons, we must constantly monotor that the relay does not remain stuck after an emergency stop.

  - Fail-safe

I the fail-safe is held for 10 seconds (Manip in neutral), movement is devalidated.
If waiting < 10s and pedal is actived then PedalOK=1

  - Indicator defect

If SQ6=0 then HL9=1

4 - WIRING DIAGRAMS

4.1 - DIAGRAM E 567 - FOLIO 01/05

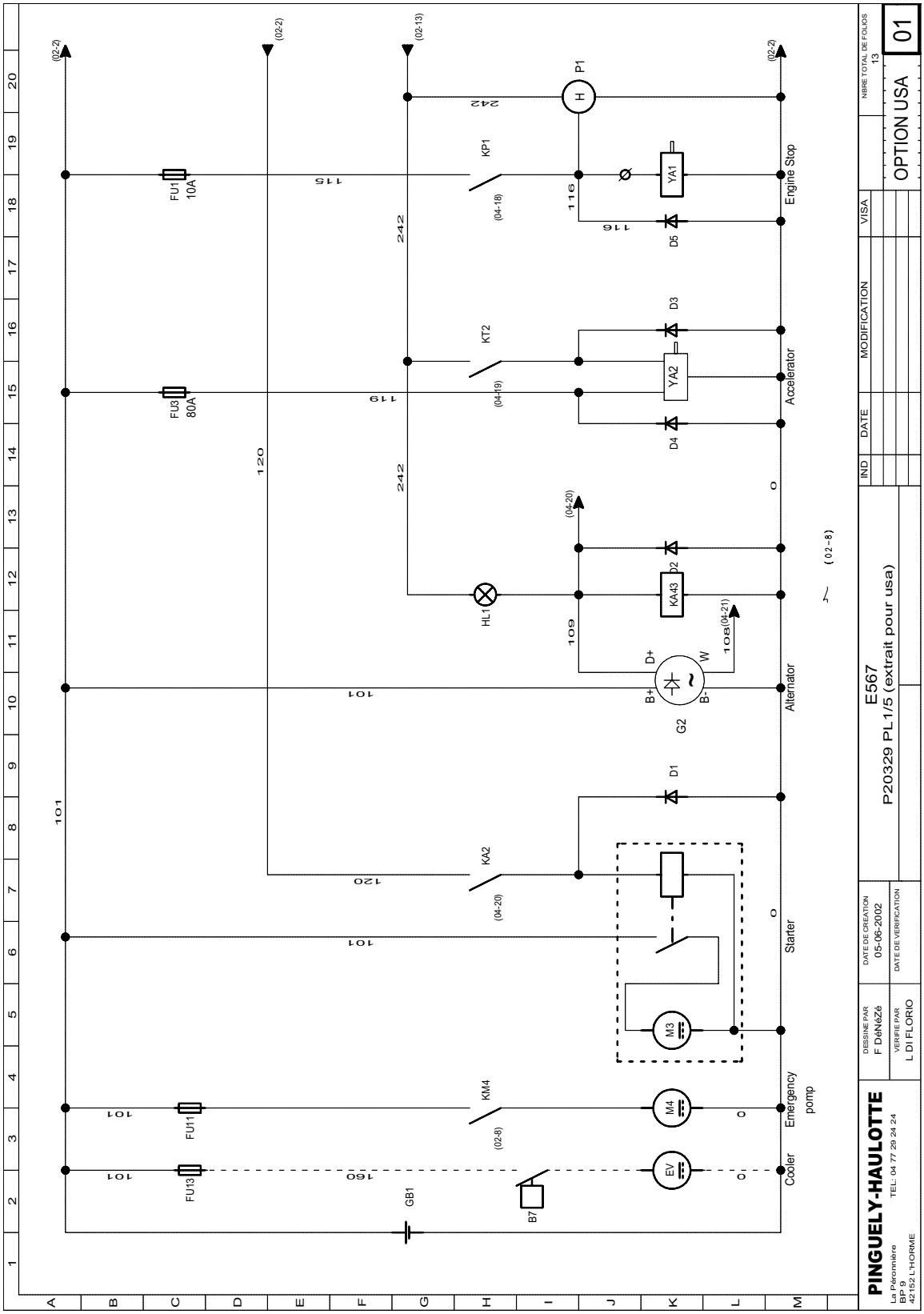

FOLIO 02/05

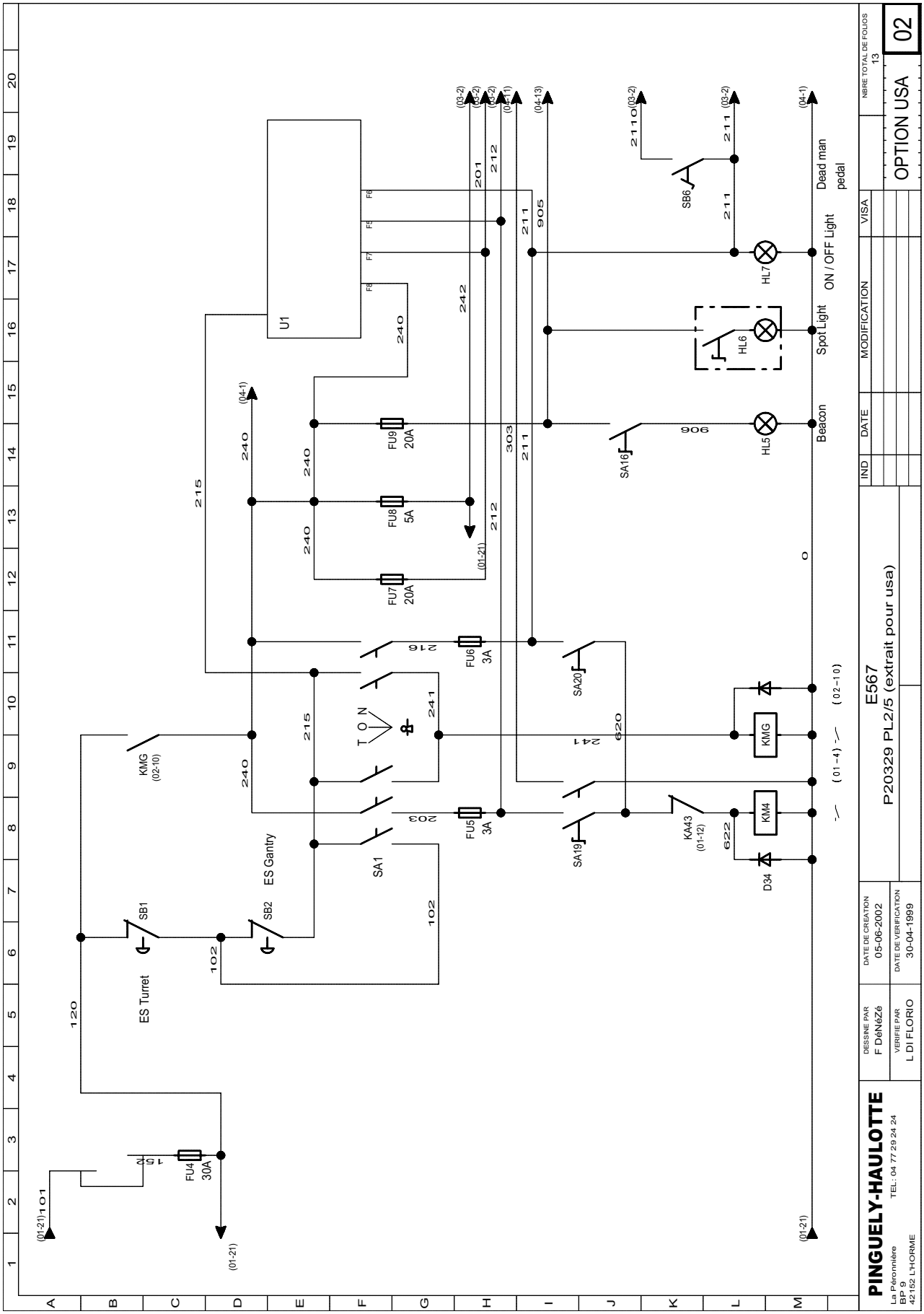
PINGUELY-HAULOTTE
La Péronnière
BP 9
42152 L'HORME
TEL: 04 77 29 24 24
DESSINE PAR
F DéNéZé
VERIFIE PAR
L DI FLORIO
DATE DE CREATION
05-06-2002
DATE DE VERIFICATION
30-04-1999
E567
P20329 PL2/5 (extrait pour usa)
IND
DATE
MODIFICATION
VISA
NBRE TOTAL DE FOLIOS
13
OPTION USA
02
U1
ES Turret
ES Gantry
SB1
SB2
SA1
SA16
SA19
SA20
KA43
(01-12)
KMG
(02-10)
FU4
30A
FU5
3A
FU6
3A
FU7
20A
FU8
5A
FU9
20A
HL5
HL6
HL7
SB6
Beacon
Spot Light
ON / OFF Light
Dead man
pedal
D34
KM4
KMG
T O N
(01-21)
(04-1)
(03-2)
(04-11)
(04-13)
(01-4)
(02-10)

FOLIO 03/05

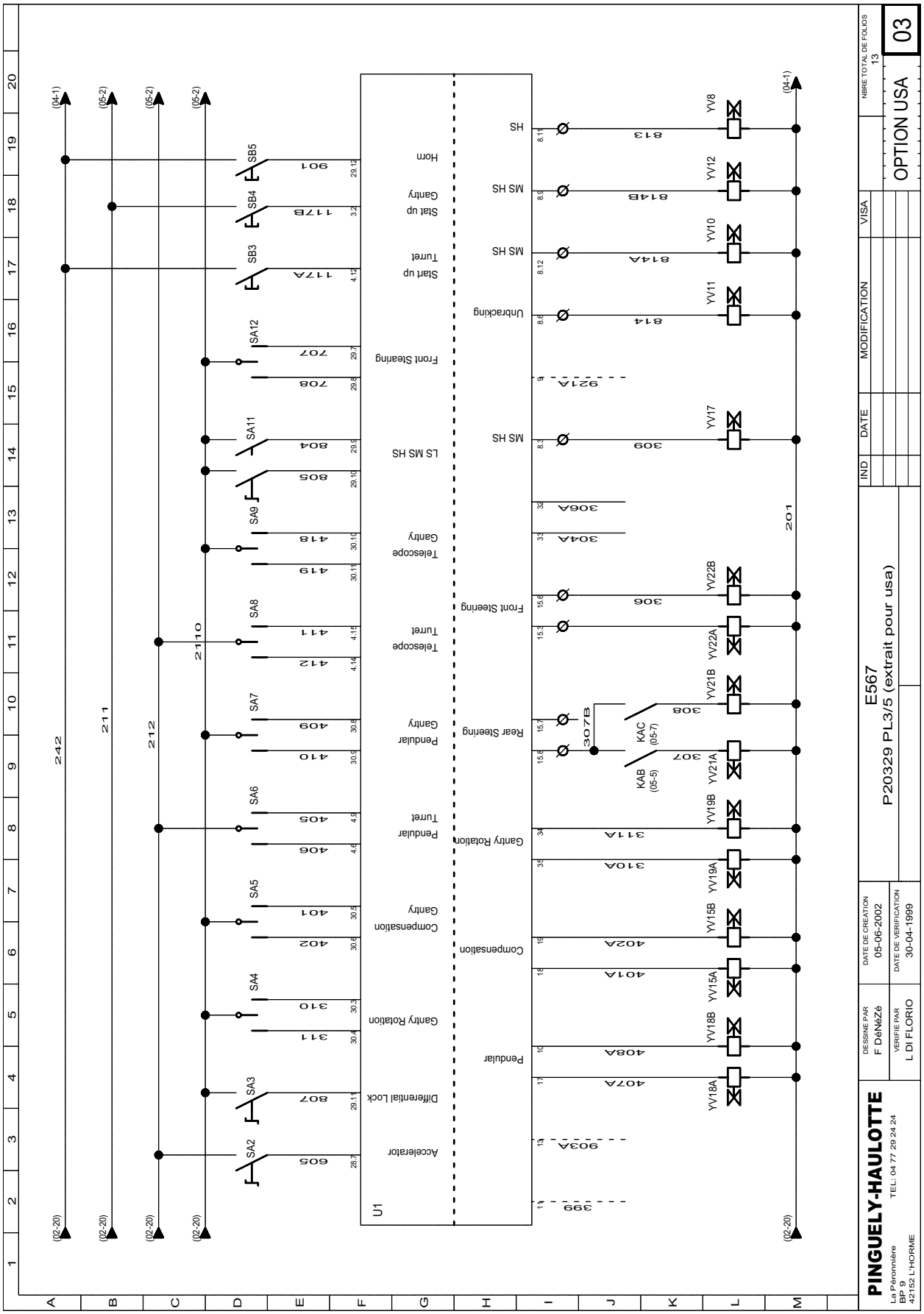
U1
Horn
Stat up Gantry
Stat up Turret
Front Steering
LS MS HS
Telescope Gantry
Telescope Turret
Pendular Gantry
Pendular Turret
Compensation Gantry
Gantry Rotation
Differential Lock
Accelerator
HS
MS HS
MS HS
Unbracking
MS HS
Front Steering
Rear Steering
Gantry Rotation
Compensation
Pendular
SB5
SB4
SB3
SA12
SA11
SA9
SA8
SA7
SA6
SA5
SA4
SA3
SA2
YV8
YV12
YV10
YV11
YV17
YV22B
YV22A
YV21B
YV21A
YV19B
YV19A
YV15B
YV15A
YV18B
YV18A
KAC (05-5)
KAB (05-5)
242
211
212
2110
201
NBRE TOTAL DE FOLIOS 13
03
OPTION USA
VISA
MODIFICATION
DATE
IND
E567
P20329 PL3/5 (extrait pour usa)
DATE DE CREATION 05-06-2002
DATE DE VERIFICATION 30-04-1999
DESSINE PAR F DéNéZé
VERIFIE PAR L DI FLORIO
PINGUELY-HAULOTTE
La Péronnière BP 9 42152 L'HORME
TEL: 04 77 29 24 24

FOLIO 04/05

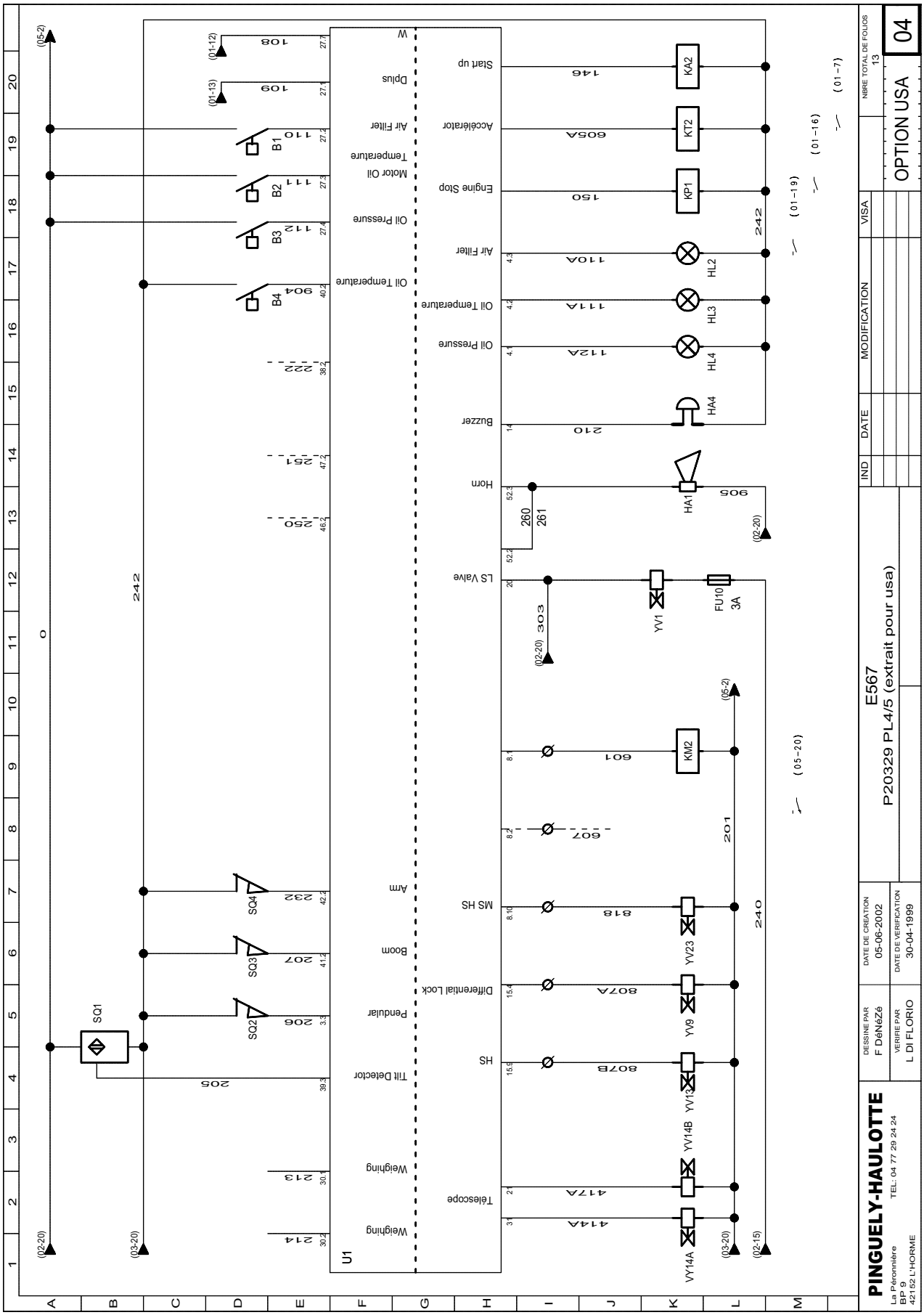
Start up
Accélérator
Engine Stop
Air Filter
Oil Temperature
Oil Pressure
Buzzer
Horn
LS Valve
MS HS
Differential Lock
HS
Télescope
Weighing
Weighing
Tilt Detector
Pendulier
Boom
Arm
Oil Temperature
Oil Pressure
Motor Oil Temperature
Air Filter
Dplus
W
U1
KA2
KT2
KP1
HL2
HL3
HL4
HA4
HA1
KM2
YV1
FU10
3A
YV23
YV9
YV13
YV14B
YV14A
SQ1
SQ2
SQ3
SQ4
B1
B2
B3
B4
OPTION USA
04
E567
P20329 PL4/5 (extrait pour usa)
PINGUELY-HAULOTTE
La Péronnière
BP 9
42152 L'HORME
TEL: 04 77 29 24 24
DESSINE PAR F DéNéZé
VERIFIE PAR L DI FLORIO
DATE DE CREATION 05-06-2002
DATE DE VERIFICATION 30-04-1999
NBRE TOTAL DE FOLIOS 13
IND
DATE
MODIFICATION
VISA

FOLIO 05/05

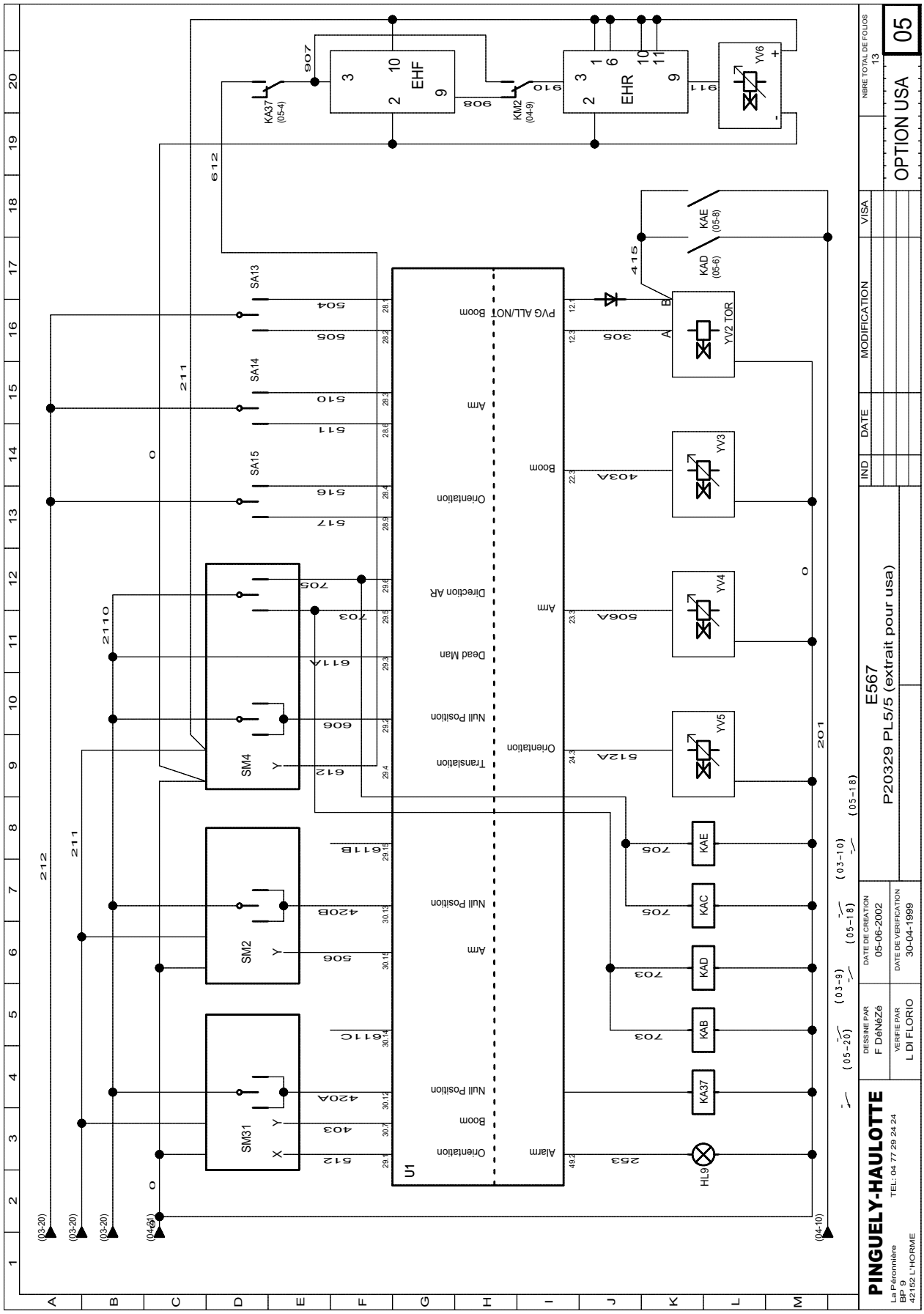
OPTION USA
05
NBRE TOTAL DE FOLIOS 13
VISA
MODIFICATION
DATE
IND
E567
P20329 PL5/5 (extrait pour usa)
DATE DE CREATION 05-06-2002
DATE DE VERIFICATION 30-04-1999
DESSINE PAR F DéNéZé
VERIFIE PAR L DI FLORIO
PINGUELY-HAULOTTE
La Péronnière
BP 9
42152 L'HORME
TEL: 04 77 29 24 24
EHF
EHR
YV6
KA37 (05-4)
KM2 (04-9)
KAE (05-8)
KAD (05-6)
YV2 TOR
YV3
YV4
YV5
SA13
SA14
SA15
SM4
SM2
SM31
U1
PVG ALL/NOT
Boom
Arm
Orientation
Direction AR
Dead Man
Null Position
Translation
Alarm
KAE
KAC
KAD
KAB
KA37
HL9

4.2 - POSITIONS OF ELECTRIC COMPONENTS ON THE MOTHER BOARD

4.2.1 - Description

Ref	SCREW		Ref	Connector	
1	101	+ Battery	**28**	1	Flashing light
2	105	+ Bi-energy machine - option	**29**	2	Bottom box door
3	120	+ Main	**30**	3	Top control panel
4	103	Starter	**31**	4	Bottom box door
5	118	Accelerator control	**32**	55	KMG main relay
6	240	Main supply after switch	**33**	5	KM4 standby pump switch
7	102	Emergency stop circuit	**34**	6	Console connector
8	215	Emergency stop circuit	**35**	52	HA1 horn
9	0	- Battery	**36**	7	Gas electrovalves option
10	226	Petrol gas machine - option	**37**	54	Proportional valve output
11	224	Petrol gas machine - option	**38**	14	Buzzer
	RELAYS		**39**	47	SQ13
12	KA2	Start	**40**	22	Boom lifting PVG
13	KP1	Motor stop	**41**	23	Telescoping or arm lifting PVG
14	KA32	Electric power / thermal power switch	**42**	24	Rotation PVG
15	KT2	Accelerator	**43**	25	Travel PVG
16	KA43	Standby pump safety system	**44**	26	Travel PVG
17	KA37	Converter for bi-energy machine	**45**	27	Motor wiring harness
18	KA46	Petrol / gas switch	**46**	28	Top control panel
	FUSES		**47**	29	Top control panel
19	F1	Motor stop	**48**	30	Top control panel
20	F3	Maintain accelerator	**49**	36	SQ11
21	F4	Main	**50**	37	SQ10
22	F5	+ Bottom position	**51**	39	SQ6 Tilt
23	F6	+ Top position	**52**	40	Hydraulic tank temperature probe B4
24	F7	+ Electrovalve	**53**	41	SQ3
25	F8	+ Permanent (sensor supply)	**54**	42	SQ4 or SQ14
26	F9	+ Accessories	**55**	43	SQ7
27	F10	+ Load Sensing valve for machine with PVG	**56**	44	SQ8
			57	45	SQ9

4.2.2 - Positions of screws, connectors and relays

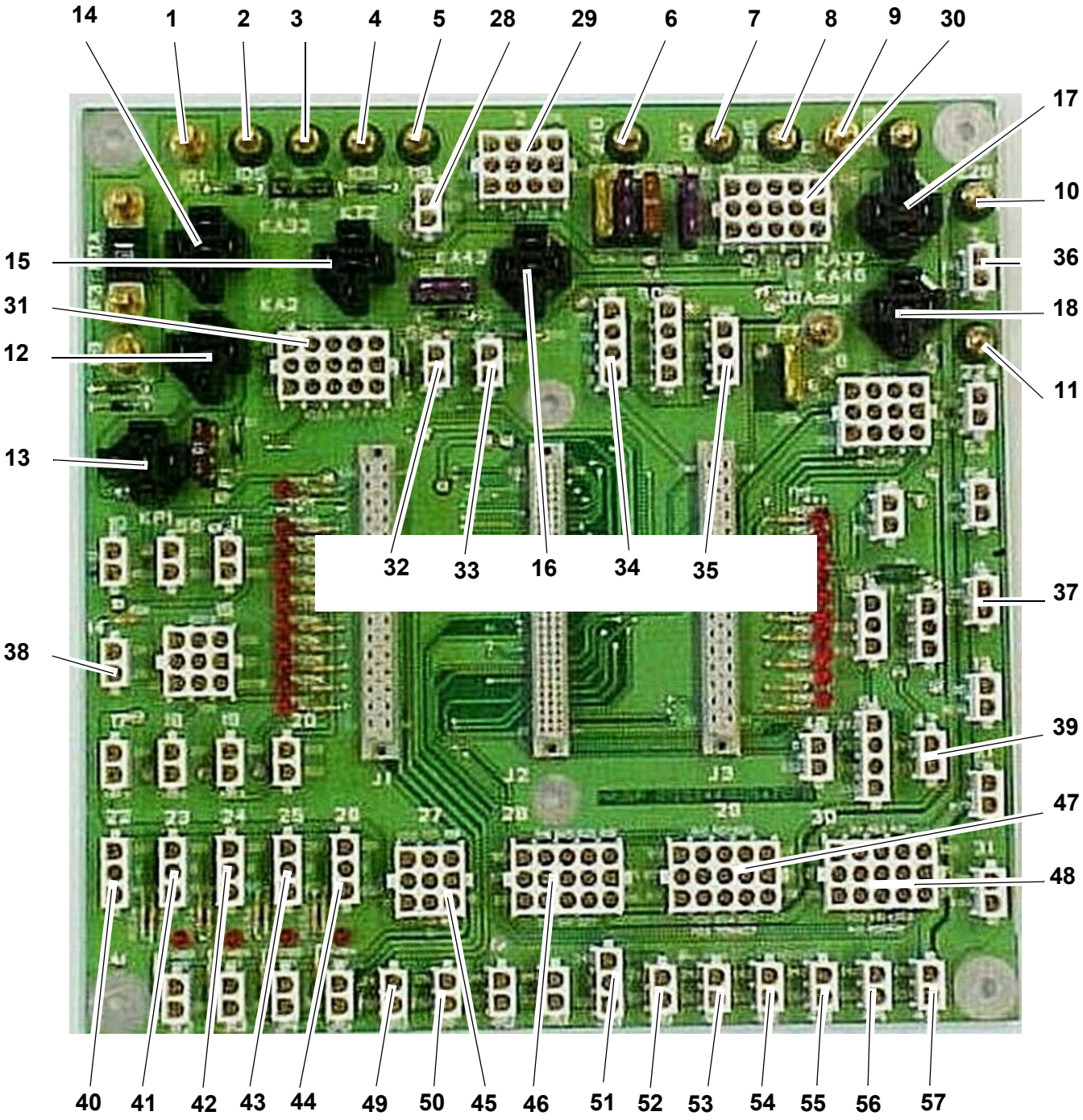

4.2.3 - Positions of fuses

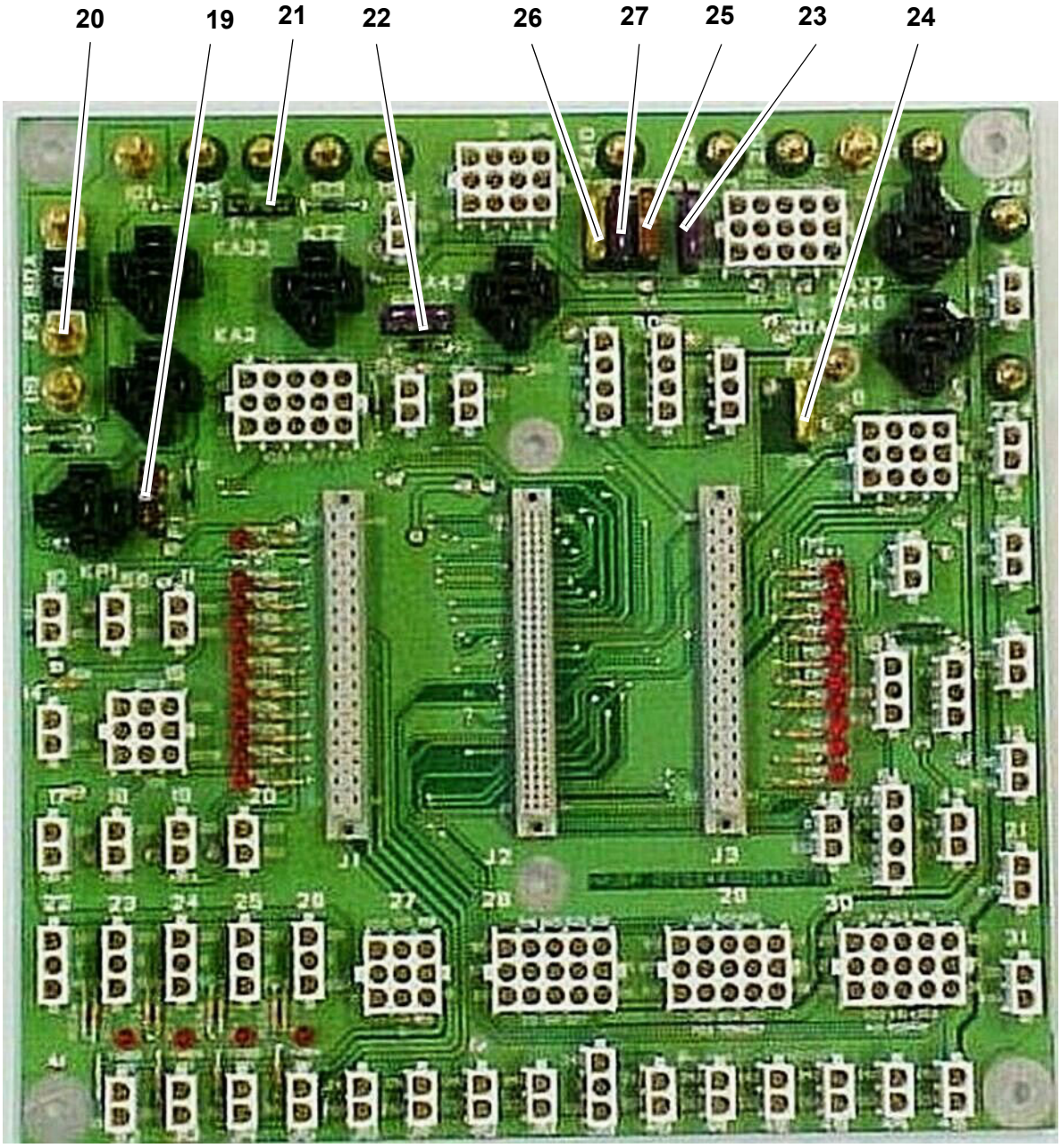

4.2.4 - Positions of diagnosis help LEDs

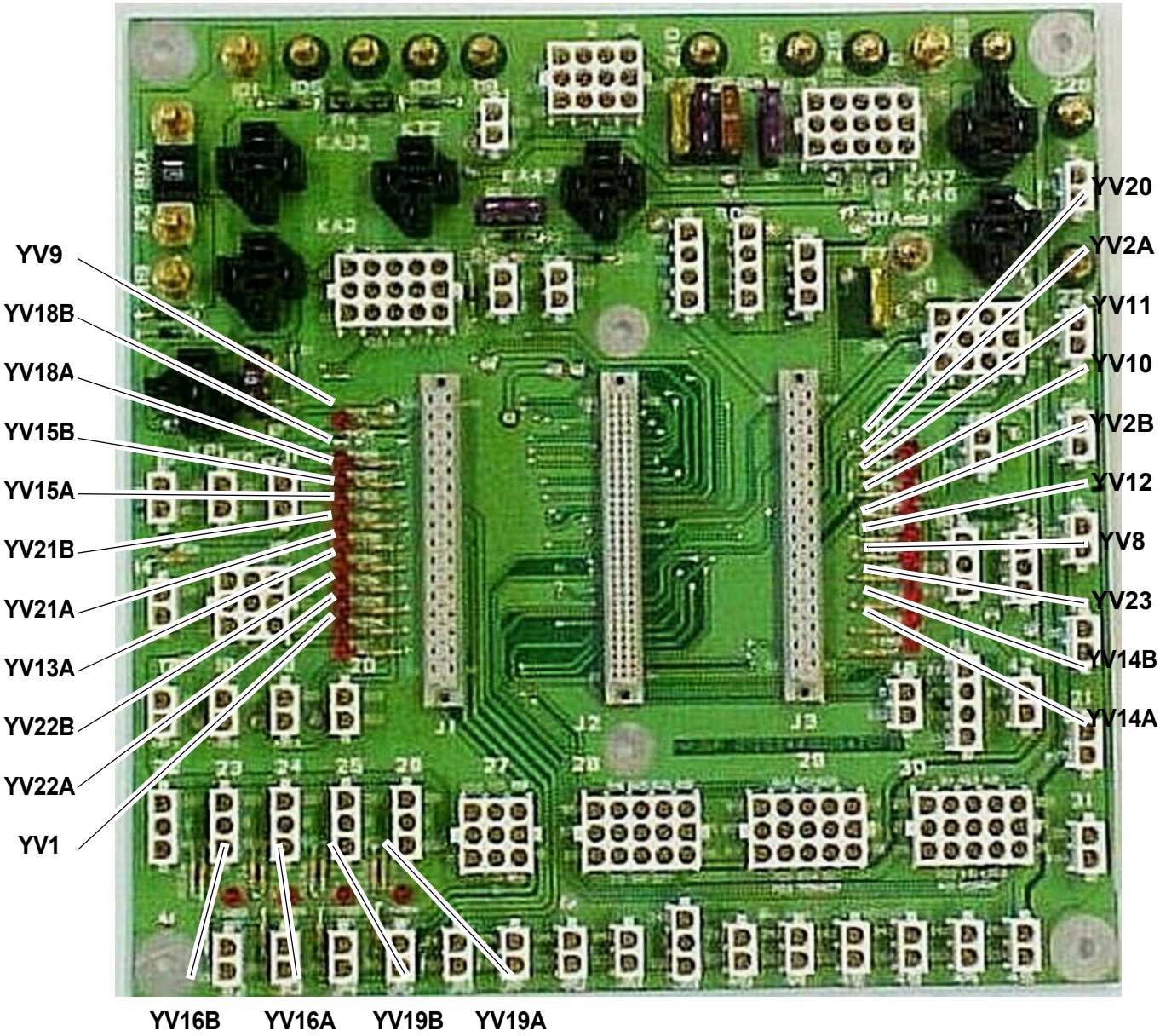

5 - HYDRAULIC DIAGRAMS

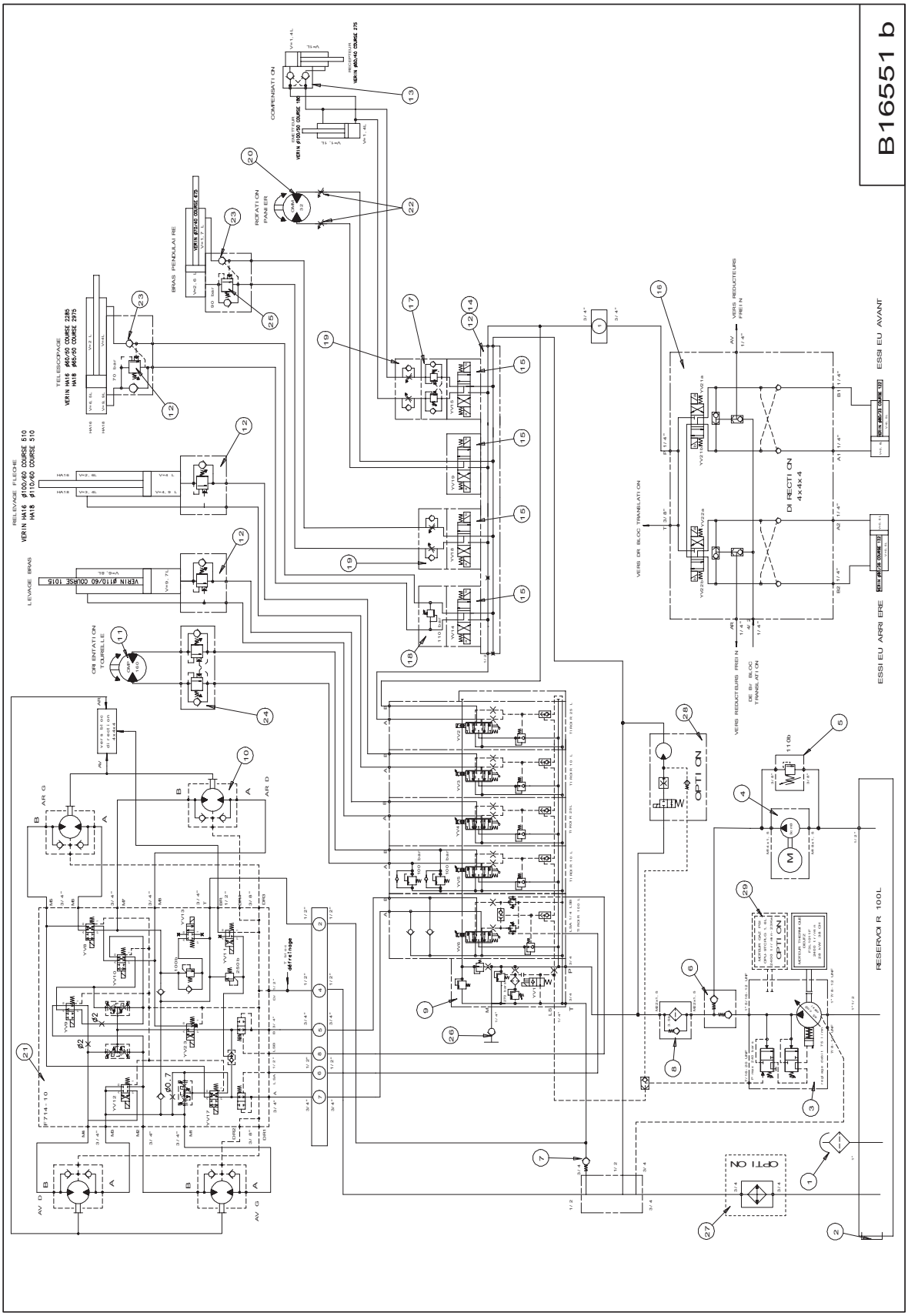

5.1 - FUNCTION OF ELECTROVALVES

5.1.1 - "On / off" electrovalves

Supply voltage is 12V when the electrovalve is controlled and 0V when the electrovalve is not controlled.

YV1: Load Sensing 303, time delayed for 2 seconds
YV2a: Steering, rotation, compensation, jib 305
YV2b: Telescope 415
YV8: High speed 813
YV9: Differential blocking 807A
YV10: Middle and High speed 814A
YV11: Brake release function 814
YV12: Middle and High speed 814B
YV13: High speed 807B
YV14a: Telescope in 414A
YV14b: Telescope out 417A
YV15a: Compensation up 401A
YV15b: Compensation down 402A
YV17: Moyenne et grande vitesse 309
YV18a: Jib down 407A
YV18b: Jib up 408A
YV19a: Basket rotation left 310A
YV19b: Basket rotation right 311A
YV21a: Rear left and right steering in 4x4 307
YV22a: Front right steering in 4x4 304
YV22b: Front left steering in 4x4 306

5.1.2 - Les électrovannes proportionnelles

The supply voltage of proportional electrovalves varies from 6 to 3V in one direction and 6 to 9V in the other.

YV3: Lifting 403A
YV4: Lifting 506A
YV5: Rotation 512A
YV6: Travel 911

https://truckmanualshub.com/

6 - MAINTENANCE

6.1 - GENERAL RECOMMENDATIONS

Servicing operation described in this manual are given for normal conditions of use.

In difficult conditions: extreme temperatures, high hygrometry, polluted atmosphere, high altitude, etc ..., certains operations must be carried out more frequently and specific precautions must be taken: consult PINGUELY HAULOTTE After-Sales Service for information.

Only authorised and competent personel may operate on the machine and must comply with the safety instructions related to Personnel and Environment protection..

As far as the motor is concerned, refer to the manufacturer's manual and instructions.

Regularly check proper operation of the safety mechanisms :

1°) Tilt detector: buzzer

2°) Platform overload - load.

3°) High speed unavailable (or medium speed for the 4x4 model) if the boom is raised, arm is lifted, telescope is out.

CAUTION:

- **Do not use the machine as a welding earth.**
- **Do not weld without disconnecting the (+) and (-) terminals of the batteries.**
- **Do not use to jumpstart other vehicles.**

6.2 - PARTICULAR RECOMMENDATIONS

Before any maintenance intervention on the elevating platform, indicate on the turntable and platform control stations that the machine is being serviced. If possible, restrict access to the elevating platform to intervention personnel only.

6.2.1 - Specific tools

Personnel should therefore be familiar with the use of the specific tools used (measurement device, torque tightening device, lifting apparatus, etc.) and respect the operating limits specified in the documentation that is supplied with the tools.

Incorrect use of a tool (incorrect adjustment after a reading error) may lead to premature deterioration of the elevating platform (or more seriously, an accident), for which PINGUELY-HAULOTTE cannot be held responsible.

6.2.2 - Replacing an element

Before replacing an element, the machine must be put in the maintenance configuration (see Chapter 6.3, page 36) and the electric power supply cut off (see Chapter 6.4, page 36).

All distributing valves are "with open centre": breaking the electric circuit therefore decreases pressure in the hydraulic circuits, up to the non-return valves flanged on the cylinders. An element can be replaced safely, if the procedures described in the maintenance sheets are respected (unscrew hydraulic connectors slowly to release residual pressure).

To preserve the integrity of the safety systems and the technical characteristics of the elevating platform, it is essential to use original parts and to respect the initial setting and tightening torque values (see Chapitre 2, page 11).

6.2.3 - Locating the breakdown

Certain checks require the elevating platform to be switched on. In this case, personnel must ensure:

- that the measurement devices used are properly insulated,
- that they do not touch the live parts,
- that they are not wearing or carrying metal objects that may deteriorate the live components (e.g.: dropping a spanner during an intervention on the batteries).

6.2.4 - Environment protection

To protect the environment, an oil collection tank must be used during interventions requiring hydraulic oil change or where there may be a hydraulic leak.

6.3 - MAINTENANCE SYSTEM

Photo 1

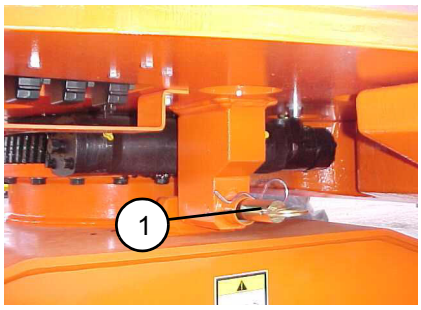

Instructions:

Maintenance configuration:

- Position the elevating platform on a firm, horizontal surface.
- If possible, fold the machine completely. Otherwise, for specific operations, put the various components into slings.
- Put the turntable rotation blocking pin into place (ref 1, Photo 1, page 40).

Restoring operational configuration:

- Remove the blocking pin (ref 1, Photo 1, page 40).

https://truckmanualshub.com/

6.4 - ELECTRIC POWER SUPPLY

Photo 2

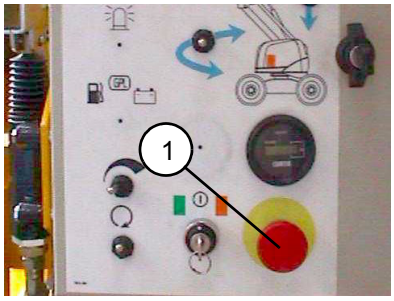

Instructions:

Cutting off the electric power supply:

Press the turntable emergency stop (ref 1, Photo 2, page 41).

Restoring the electric power supply:

Reset the emergency stop (ref 1, Photo 2, page 41).

6.5 - MAINTENANCE PLAN

The plan (following page) shows the frequency and area of maintenance and the consumables to be used.

The reference shown in the symbol shows the area maintained based on the frequency.

The symbol represents the consumable to use (or the operation to be carried out.

Consumable	Specification	Symbol	Lubricants used by Pinguely-Haulotte	ELF	TOTAL
Motor oil	SAE 15W40		SHELL RIMULA-X		
Gearbox oil	SAE 90		ESSO	TRANSELF	TM 80 W/90
Hydraulic oil	AFNOR48602 ISO VG 46		BP SHF ZS 46	HYDRELF DS 46	EQUIVIS ZS 46
Optional bio-degradable hydraulic oil	BIO ISO 46				
Lithium grease	ISO - XM - 2				
Lead-free grease	Grade 2 or 3		ESSO GP GREASE	MULTIMOTI-VE 2	MULTIS EP 2
Exchange or specific opera-tion					
grease			Ceplattyn KG 10 HMF		FUCHS
grease			Energrease LS - EP2		BP

Hours

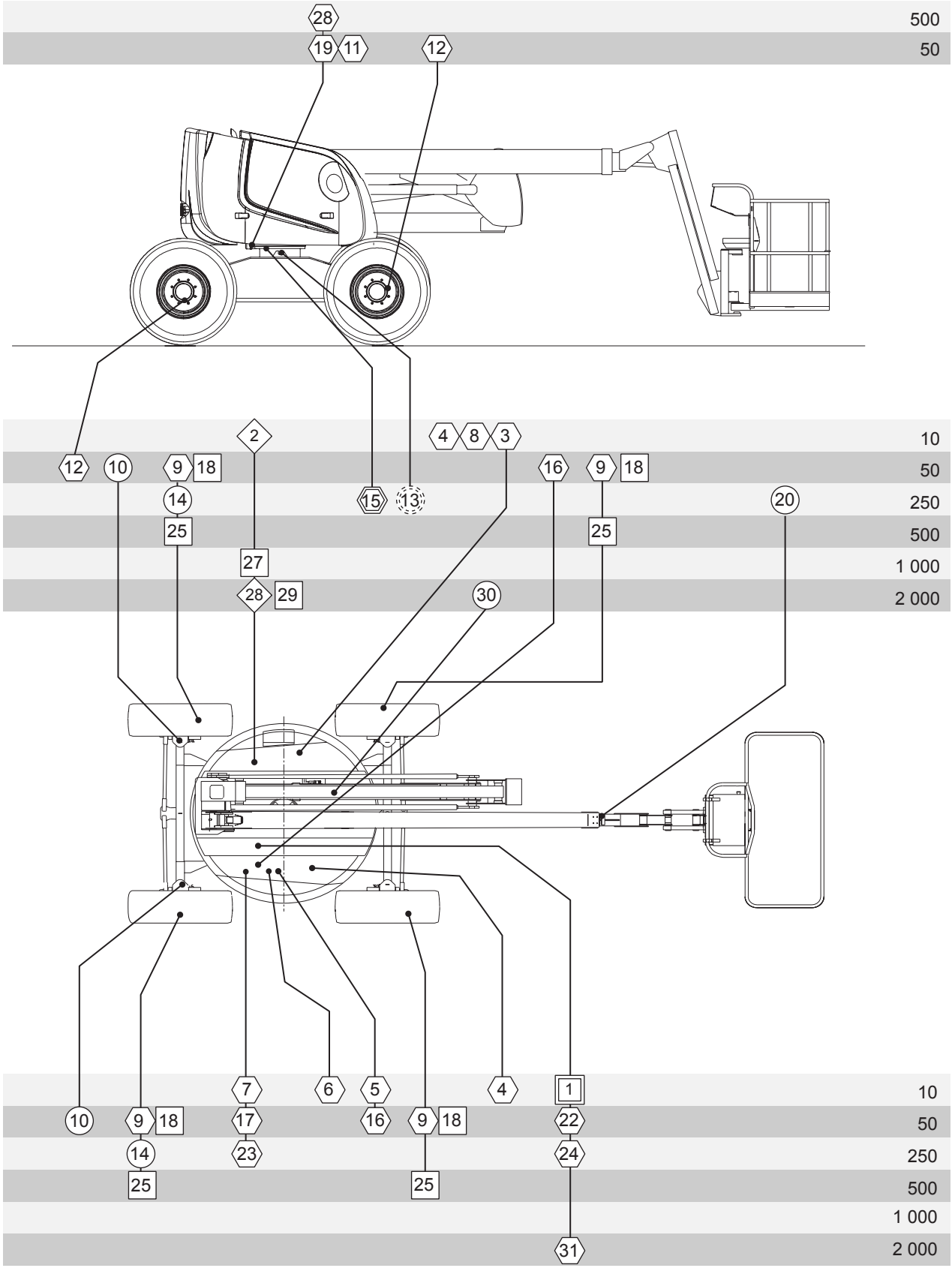
28
19
11
12
500
50
2
4
8
3
10
12
10
9
18
16
9
18
50
14
15
13
20
250
25
25
500
27
1 000
28
29
30
2 000
7
6
5
4
1
10
10
9
18
17
16
9
18
22
50
14
23
24
250
25
25
500
1 000
31
2 000

6.6 - OPERATIONS

6.6.1 - Summary table

FREQUENCY	OPERATIONS	REF
Every day or before each use	• Check the levels: - motor oil - hydraulic oil - diesel - electric batteries - battery charge using the indicator (bi-energy) • Check cleanliness: - diesel pre-filter, replace if water or impurities are found - motor air filter - machine (particularly check the tightness of connectors and hoses), also check the condition of tyres, cables and all accessories and equipment. • Check hydraulic oil filter clogging. If the clogging indicator is visible, change the cartridge.	 1 2 3 4 8 5 6 7
Every 50 hours	Motor: see manufacturer's manual • Grease: - wheel pivot axles: 2 x 2 points - turntable rotation locking pin • Check the diesel pre-filter, replace if water or impurities are found • Check the level of the drive wheel reducing gears (see Chap. 5.3.2.2, page 48) CAUTION: after the first 50 hours: • Change the hydraulic filter cartridge (see 250 hour freqeuncy) • Empty the drive wheel reducers (see 500 hour frequency) - 2 points for the 4x2 model - 4 points for the 4x4 model • Check the tightness: - of slew ring screws (torque 25 daNm) - of wheel nuts (torque 25 daNm)	22 10 11 16 9 17 18 19 12
Every 250 hours	Motor: see manufacturer's manual • Change the hydraulic filter cartridge • Grease: - bearings of the steering wheels 4x2 (remove the cap) - slew ring bearing path (rotate during the operation) 2 points - friction parts of the telescope (spatula) - teeth of the slew ring (using a brush) - battery terminals (see Chap. 4.7, page 38) • Check: - tightness of battery teminals (see Chap. 4.7, page 38) - battery charger connection (bi-energy) (see Chap. 4.6, page 38)	24 23 14 13 20 15
Every 500 hours	Motor: see manufacturer's manual • Empty wheel reducing gears • Refill with oil: capacity 2 x 0.7 l for the 4x2 - 4 x 0.7 l for the 4x4 • Ring screws: check tightness and tighten if necessary	 25 28
Every 1000 hours or every year	Motor: see manufacturer's manual • Empty: hydraulic oil tank	 27

FREQUENCY	OPERATIONS	REF
Every 2000 hours	Motor: see manufacturer's manual • Empty: hydraulic oil tank and whole circuit • Empty and clean the diesel tank • Grease: rotation reducing gear: 1 point	31 28 29 30
Every 3000 hours or every 4 years	• Check: - the state of telescoping friction pads - the state of electric cables, hydraulic hoses, etc	

REMINDER :The above frequencies should be reduced if work is carried out in difficult conditions (consult After Sales Service if necessary).

https://truckmanualshub.com/

6.7 - PRESENCE OF LABELS

It is important to check that the labels and plates warning personnel of the various dangers associated with using the machine are in good condition.

The labels providing operators with information on machine use and maintenance must also be checked.

An illegible label may lead to incorrect or dangerous use of the machine.

Operating instructions:

Check the presence of the labels:

Check that all the labels described below are legible and in the correct place. Replace if necessary (spare parts can be supplied on request, if necessary).

6.7.1 - Common labels

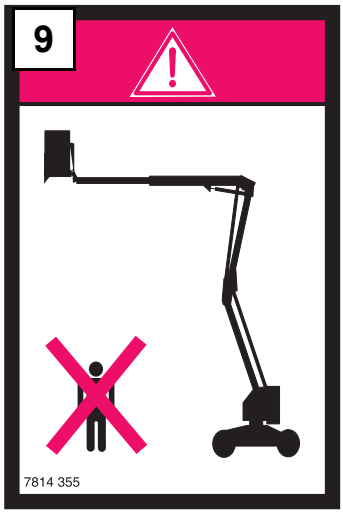
9
7814 355

14
7814 362

44
7814 363

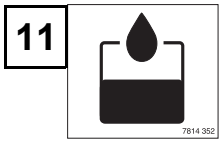
11
7814 352

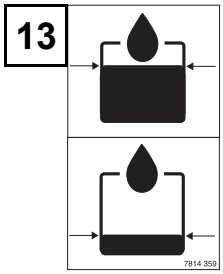
13
7814 359

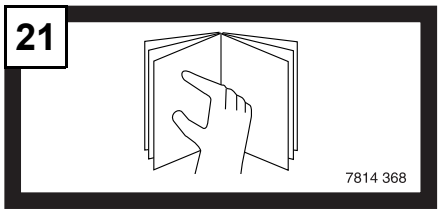
21
7814 368

20
240 V
30 mA
7814 354a

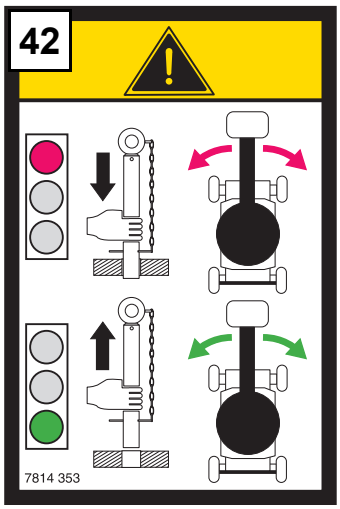
42
7814 353

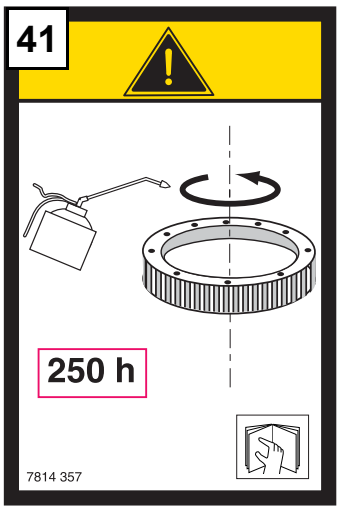
41
250 h
7814 357

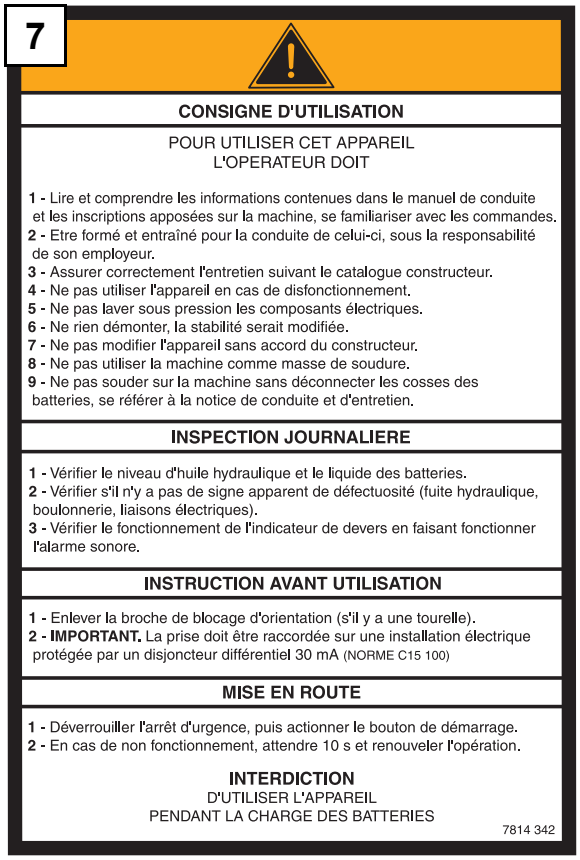
7
CONSIGNE D'UTILISATION
POUR UTILISER CET APPAREIL
L'OPERATEUR DOIT
1 - Lire et comprendre les informations contenues dans le manuel de conduite et les inscriptions apposées sur la machine, se familiariser avec les commandes.
2 - Etre formé et entraîné pour la conduite de celui-ci, sous la responsabilité de son employeur.
3 - Assurer correctement l'entretien suivant le catalogue constructeur.
4 - Ne pas utiliser l'appareil en cas de disfonctionnement.
5 - Ne pas laver sous pression les composants électriques.
6 - Ne rien démonter, la stabilité serait modifiée.
7 - Ne pas modifier l'appareil sans accord du constructeur.
8 - Ne pas utiliser la machine comme masse de soudure.
9 - Ne pas souder sur la machine sans déconnecter les cosses des batteries, se référer à la notice de conduite et d'entretien.
INSPECTION JOURNALIERE
1 - Vérifier le niveau d'huile hydraulique et le liquide des batteries.
2 - Vérifier s'il n'y a pas de signe apparent de défectuosité (fuite hydraulique, boulonnerie, liaisons électriques).
3 - Vérifier le fonctionnement de l'indicateur de devers en faisant fonctionner l'alarme sonore.
INSTRUCTION AVANT UTILISATION
1 - Enlever la broche de blocage d'orientation (s'il y a une tourelle).
2 - IMPORTANT. La prise doit être raccordée sur une installation électrique protégée par un disjoncteur différentiel 30 mA (NORME C15 100)
MISE EN ROUTE
1 - Déverrouiller l'arrêt d'urgence, puis actionner le bouton de démarrage.
2 - En cas de non fonctionnement, attendre 10 s et renouveler l'opération.
INTERDICTION
D'UTILISER L'APPAREIL
PENDANT LA CHARGE DES BATTERIES
7814 342

17
7814 364

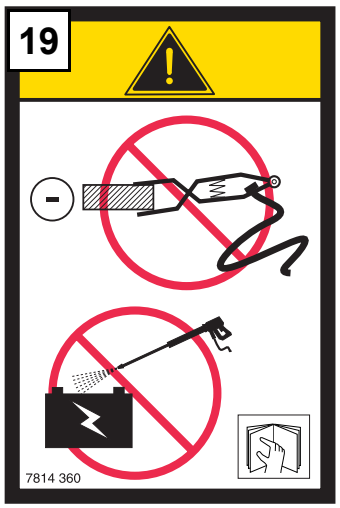
19
7814 360

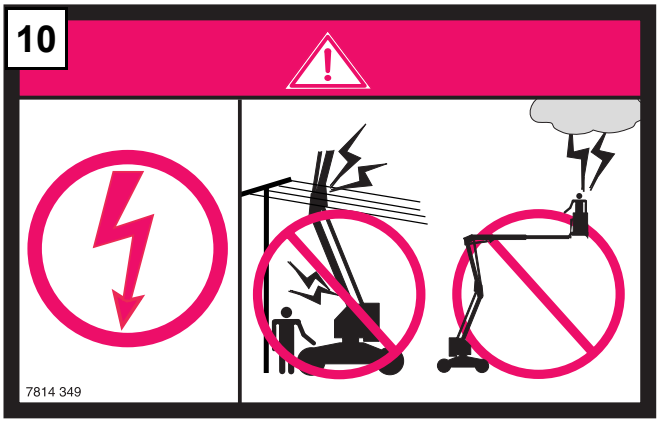
10
7814 349

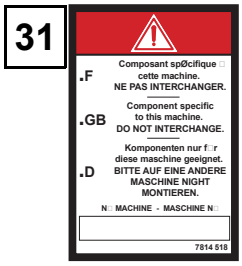
31
.F
Composant spØcifique
cette machine.
NE PAS INTERCHANGER.
.GB
Component specific
to this machine.
DO NOT INTERCHANGE.
.D
Komponenten nur f r
diese maschine geeignet.
BITTE AUF EINE ANDERE
MASCHINE NIGHT
MONTIEREN.
N MACHINE - MASCHINE N
7814 518

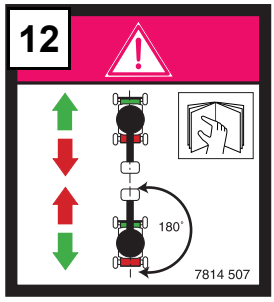
12
180°
7814 507

23
Haulotte
7814 987b

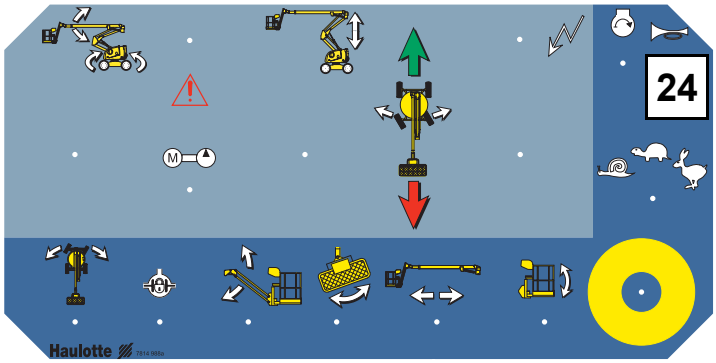
24
Haulotte

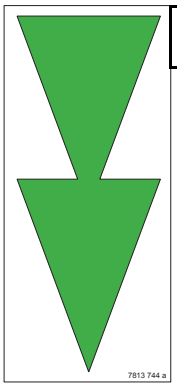
48
7813 744 a

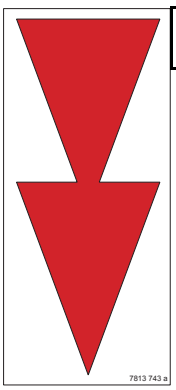
49
7813 743 a

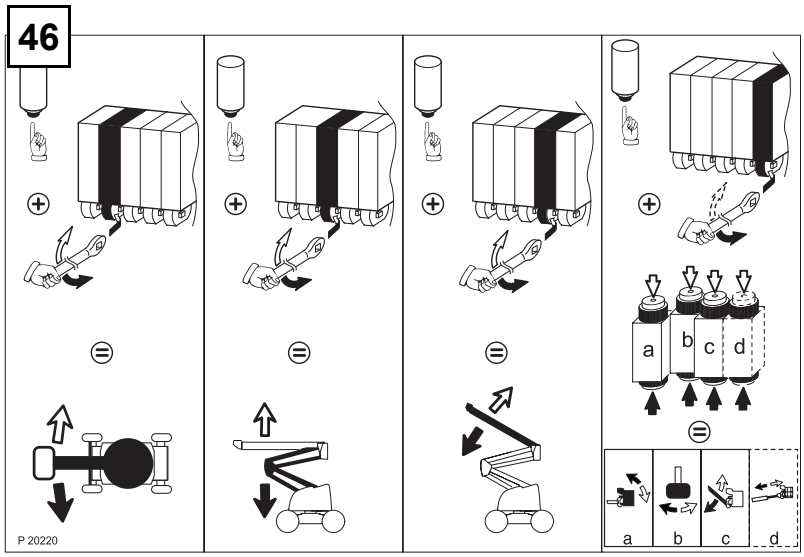
46
a
b
c
d
P 20220

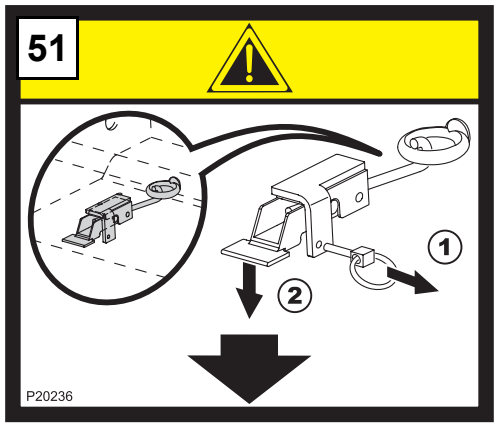
51
1
2
P20236

6.7.2 - Labels specific to the different models

HA 16PX

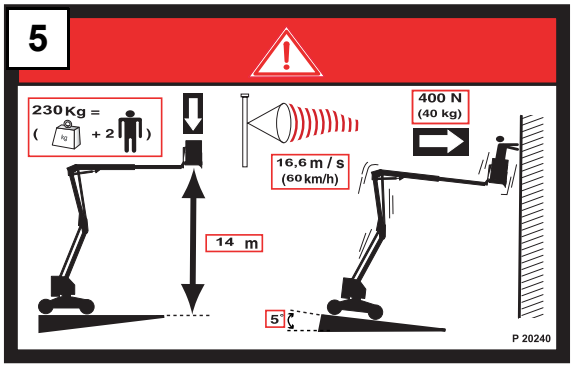

HA 18PX

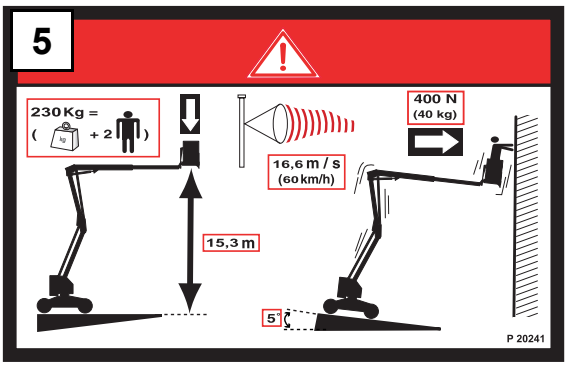

6.7.3 - Labels specific to options

Bi-energy option

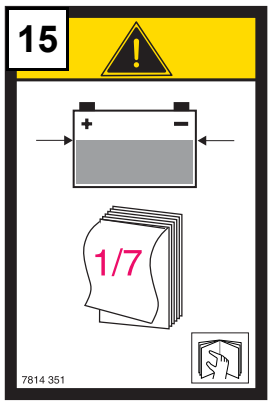

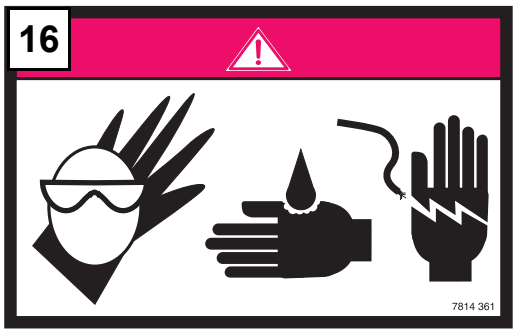

6.7.4 - Labels specific to Holland

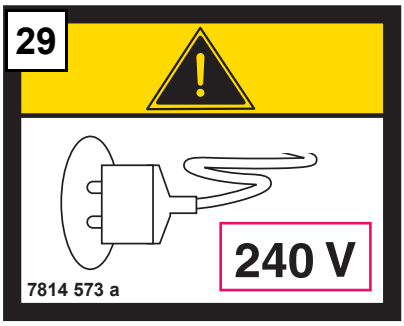

6.7.5 - Labels specific to Australia

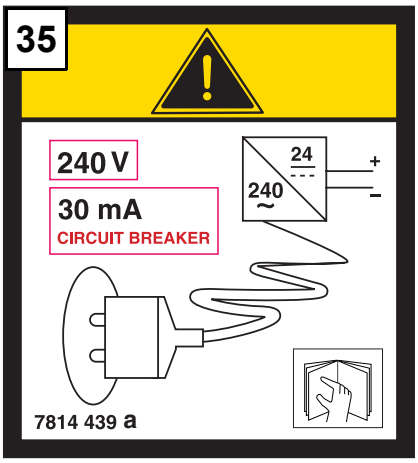

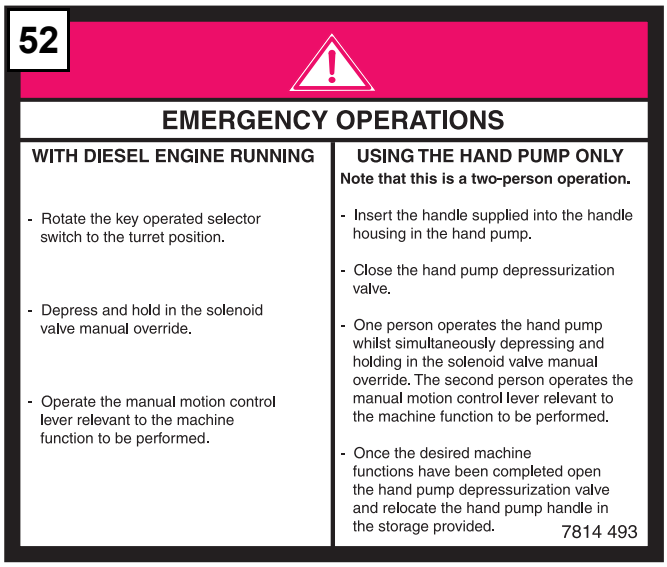

6.7.6 - Position of labels

Ref	Code	Qty	Description
2	178A142640 182A142630	1 1	HA16P logo HA18P logo
5	3078143710 3078143690 3078143700	2 2 2	Floor height + load (HA18P/PX) Floor height + load (HA16P/PX) Floor height + load (HA16PE/PN)
7	3078143420 3078143430 3078143440 3078143450 3078143460 3078143470 3078144940 3078143540 3078145830 3078145940 3078144560	1	Operating instructions (French) Operating instructions (Spanish) Operating instructions (German) Operating instructions (English) Operating instructions (Italian) Operating instructions (Dutch) Operating instructions (Danish) Operating instructions (Finnish) Operating instructions (Portuguese) Operating instructions (Swedish Operating instructions (Australia)
8	3078143240 a 3078143250 b 3078143260 a 3078143270 a 3078143280 a 3078143290 a 3078144960 a 3078145550 a 3078145950 a 3078145840 a	1	Manufacturer’s plate (French) Manufacturer’s plate (Spanish) Manufacturer’s plate (German) Manufacturer’s plate (English) Manufacturer’s plate (Italian) Manufacturer’s plate (Dutch) Manufacturer’s plate (Danish) Manufacturer’s plate (Finnish) Manufacturer’s plate (Swedish Manufacturer’s plate (Portuguese)
9	3078173550	1	Do not stop in the work area
10	3078143490 3078144430	1	Machine uninsulated Danger of electrocution (Australia)
11	3078143520	1	"Hydraulic oil" label
12	3078145070	1	Travel direction danger
13	3078143590	1	High and low hydraulic oil
14	3078143620	2	Risk of hand crushing
15	3078143510	1	Battery check plate
16	3078143610	1	Wear protective gear
17	3078143640	2	Do not stand on the cover
19	3078143600	1	Caution: do not use as a welding earth
20	3078143540a 3078144570	1	The part must be connected The part must be connected (Australia)
21	3078143680 b	1	Read CE user manual
23	3078143040	1	Chassis control panel
24	3078143030	1	Platform control panel
26	3078143560	1	Do not use the machine during charging
29	3078145730	1	240V socket position (Holland)
30	2420505950	1	Guarantee activation
31	3078145180	1	Do not interchange
33	3078144490	4	Handling lugs (Australia)
34	3078144510	1	Fuel filling with gun only (Australia)
35	3078144390	1	Charger connection (Australia)
40	2421808660		Yellow and black reflective adhesive marking (Holland)
41	3078143570	1	ring lubrication
42	3078143530	2	Remove the pin
43	178B153230 178B153240 178B153140	1	"E" logo "N" logo X logo

https://truckmanualshub.com/

Ref	Code	Qty	Description
44	3078143630	2	Risk of body crushing
45	178C143900 178C143910 178C143920	1	"X" logo "E" logo "N" logo
46	3078146160 3078146170	1	HA16 hand pump plate HA18 hand pump plate
	3078146150	1	Z1 - Z2 - Z3
51	3078146140 3078146380 3078146390 3078146400 3078146410 3078146420 3078146430 3078146440 3078146450 3078146460	1	Hand pump user instructions (French) Hand pump user instructions (Dutch) Hand pump user instructions (Spanish) Hand pump user instructions (German) Hand pump user instructions (English) Hand pump user instructions (Italian) Hand pump user instructions (Danish) Hand pump user instructions (Finnish) Hand pump user instructions (Portuguese) Hand pump user instructions (Swedish)
47	178B153210 182B153200	1	"HA16P" logo "HA18P" logo
48	3078137440 a	1	Green arrow
49	3078137430 a	1	Red arrow
50	B12759 a	3	"HAULOTTE" logo
51	307P202360	1	Motor ring release
52	3078144930 a	1	Emergency operation (Australia)
53	3078144520	1	Wear harness (Australia)

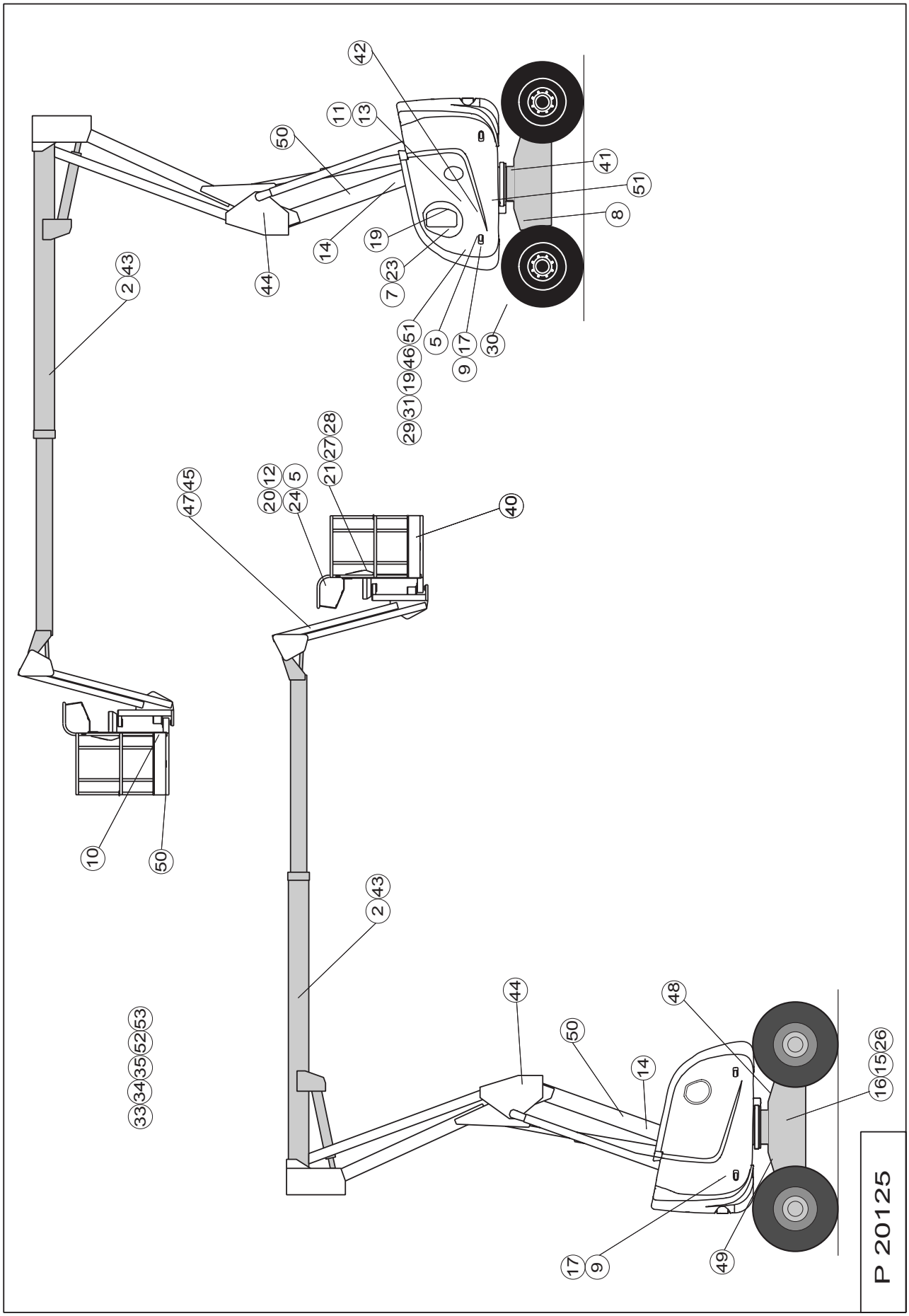
42
11
13
50
41
51
8
14
19
23
7
44
2
43
51
46
19
31
29
5
17
9
30
28
27
21
12
20
5
24
45
47
40
10
50
2
43
33
34
35
52
53
44
50
14
48
16
15
26
17
9
49
P 20125

https://truckmanualshub.com/

6.8 - PRESENCE OF MANUALS

It is important to ensure that the manuals supplied with the machine are in good conditions and stored in the document holder provided on the platform.

An illegible manual may lead to incorrect or dangerous use of the machine

Operating instructions:

Check presence of manuals:

Check that all the manuals are legible, complete and stored in the document holder provided on the platform. Replace if necessary (extra copies can be supplied on request by the manufacturer).

https://truckmanualshub.com/

7 - PREVENTIVE MAINTENANCE SHEETS

List of preventive maintenance sheet

Sheet no.	Description
P005	Checking - filling the hydraulic oil tank
P006	Replacing the hydraulic filter cartridge
P007	Checking - changing the oilof a wheel reducing gear

https://truckmanualshub.com/

Sheet P005	PREVENTIVE MAINTENANCE SHEET	Folio 1/1
	CHECKING - FILLING THE HYDRAULIC OIL TANK	

1 - Preliminary operations

- Put the machine in the maintenance configuration (see corresponding paragraph).
- Switch off electric power (see corresponding paragraph).

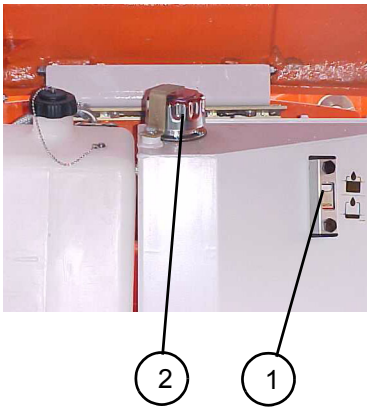

HA16/18PX - HA46/51JRT

2 - Checking - filling the hydraulic oil tank

NB: This operation must be carried out when the oil is cold, i.e. before starting the machine.

- Check that the level of oil (1) in the tank is between the high and low levels when cold.
- Top up if necessary, by filling via the cap (2).

NB: Only use the oil recommended by the manufacturer.

- Put the machine back into the operational configuration.

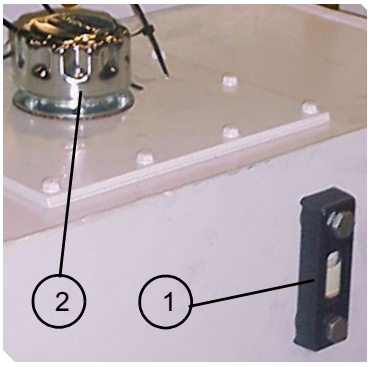

HA16/18PX New Design
HA46/51JRT New Design

https://truckmanualshub.com/

https://truckmanualshub.com/

Sheet P006	PREVENTIVE MAINTENANCE SHEET	Folio 1/1
	CHANGING THE HYDRAULIC FILTER CARTRIDGE	

Caution!
Use a container to collect oil to prevent pollution of the environment.

2 - Preliminary operations

- Put the machine in the maintenance configuration (see corresponding paragraph).
- Switch off electric power (see corresponding paragraph).

2 - Replacing the hydraulic filter cartridge

NB: The filter has a clogging indicator. Clogging should be checked when the machine is hot, otherwise, the indicator may be visible due to the viscosity of the cold oil.

- Change the cartridge (1) if the clogging indicator appears (2).
- Unscrew the base nut (3) and remove the cartridge from the hydraulic filter.
- Screw a new cartridge into place.
- Put the machine back into the operational configuration.

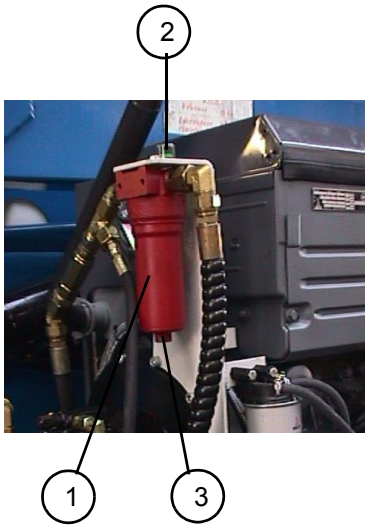

HA16/18 PX
HA46/51JRT
HA20/26 PX
HA61/80JRT

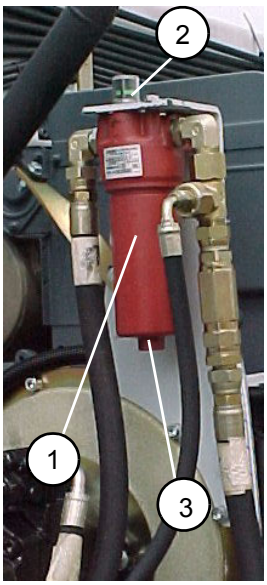

H14P / H16TP
HB40/44J

https://truckmanualshub.com/

	PREVENTIVE MAINTENANCE SHEET	

https://truckmanualshub.com/

Sheet P007	PREVENTIVE MAINTENANCE SHEET	Folio 1/1
	CHECKING - CHANGING THE OIL OF A WHEEL REDUCING GEAR	

Caution!
Use a container to collect oil to prevent pollution of the environment.

Caution!
Make sure that the machine is properly stabilised, and that the lifting means are in good condition and of sufficient capacity.

3 - Preliminary operations

- Put the machine in the maintenance configuration (see corresponding paragraph).
- Switch off electric power (see corresponding paragraph).

2 - Checking the level

- Turn the wheel so that one cap (1) is on a horizontal line and the other (2) is on a vertical line.
- Unscrew the cap (1) and check the level that should be up to the hole. Top up if necessary.
- Screw the cap back into place.

NB: Only use the oil recommended by the manufacturer.

3 - Changing the oil

- In the same position, unscrew the 2 caps and let the oil flow out.
- Re-fill as described above.
- Screw the caps back into place.

NB: Collect old oil to prevent pollution of the environment.

4 - Additional operations

- Put the machine back into the operational configuration.

HA16/18PX - HA46/51JRT
HA20/26 PX - HA61/80JRT

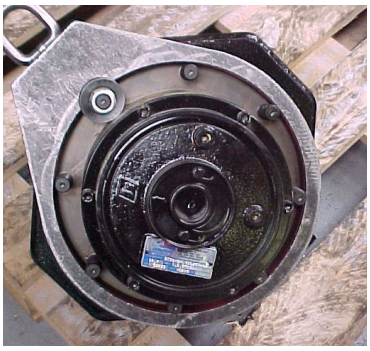

H14T(X) - H16TP(X)
HB40/44J

https://truckmanualshub.com/

	PREVENTIVE MAINTENANCE SHEET	

8 - OPERATING INCIDENTS

8.1 - INCIDENT TABLE

Before diagnosing a failure, check that:

- the fuel tank is not empty,
- the batteries are properly charged,
- the turntable and platform "palm button" emergency stop buttons are unlocked,
- the relays (platform control panel - turntable box) are correctly pushed into their compartments, (see corresponding paragraph).
- the main tank oil level is OK,
- the state of the fuses, (see corresponding paragraph).
- the electrovalves are working properly by checking the state of the LEDs in the turntable box.

Check the state of the LEDs (see corresponding paragraph):

The LEDs inside the turntable box indicate the state of the electrovalves:

- LED off: electrovalve present and not controlled,
- LED on: electrovalve present and controlled.

NB: If an electrovalve is not connected, the corresponding LED is permanently on.

Instructions:

- Identify the defective function.
- Machine power on but not started: check the presence of the electrovalves (LED off).
- No electrovalve should be controlled (LED on).
- Check that the outputs corresponding to the function are active using the LEDs and directly on the electrovalve heads.
- If they are not active, check which inputs create the function.
- Test the inputs with a voltmeter.

8.1.1 - General operation

ANOMALY	PROBABLE CAUSE	SOLUTION
The motor does not start, the starter is activated	• Diesel tank empty • Fuse FU1 defective • Diesel supply circuit defective • Wiring defective • Module U1 defective • Stop motor solenoid YA1 defective	Fiche DP015
The motor does not start, the starter is not activated	• Emergency stop locked • Generator defective • Batteries defective • Fuses FU1, FU4 or FU8 defective • Wiring defective • Switch SB3 or SB4 defective • Relay KA2 defective	Fiche DP016
The motor starts, then stops after 5s.	• Diesel tank empty • Diesel supply circuit defective	Fiche DP017
The motor does not start from the platform station but does start from the turntable station	• Fuse FU6 defective • Defective connection of switch SB4 • Switch SB4 defective • Wiring harness defective	Fiche DP019
The motor does not start from the turntable station but does start from the platform station	• Switch SB3 defective • Wiring harness defective	Fiche DP020
No motor acceleration regardless of the movement controlled from the platform	• Electronic module U1 defective • Wiring harness defective	Fiche DP021
No motor acceleration by activating the accelerator switch SA2 on the turntable control station	• Fuse FU3 defective • Relay KT2 defective • Electronic module U1 defective • Wiring harness defective • Accelerator switch SA2 defective • Motor accelerator coil YA2 defective	Fiche DP022
No movement available (from turntable or platform station)	• Insufficient hydraulic oil • Fuse FU7 or FU4 or FU10 defective • Wiring harness defective • Electrovalve YV1 defective • Incorrect "Load sensing" pressure setting • Motor-pump coupling defective • Hydraulic pump defective • Pressure limiter defective • Distribution block input module defective • Pump regulation unit incorrectly set or defective • Hydraulic pump defective • Electronic module U1 defective • Relay KMG defective • Printed circuit defective • Key switch SA1 defective	Fiche DP023

ANOMALIE	CAUSES PROBABLES	SOLUTION
No movement available from the platform control station	• Fuse FU1 defective • Platform control station defective • Fail-safe pedal defective • Wiring harness defective	Fiche DP024
Noisy hydraulic pump	• Oil non-conform • Obstruction of the tank air vent • Suction valves closed • Defective pipes • Hydraulic pump defective • Insufficient oil level	Fiche DP025
Insufficient pressure or power at the pump	• Clogged air filter • Motor speed too low • Oil leak on connector, hose or component • Clogged oil filter	• Change the filter • Adjust speed • Repair or replace • Replace oil filter cartridge
No travel telescope out, boom and arm lifting, + buzzer sounding	• Slope or tilt >5°	• First retract the telescope and lower the boom to reset
Buzzer sounding	• Slope or tilt > 5° • Platform load close to cut-off • Hydraulic oil temperature too high	• Reset by retracting the telescope and lowering the boom • Remove load • Leave to cool
The electropump does not work	• Battery breaker open • Fuses broken • Defective or discharged batteries • The battery wires do not make contact	• Close the battery breaker • Replace the fuses • Replace or recharge the batteries • Clean or tighten the terminals

8.1.2 - Lifting system

ANOMALY	PROBABLE CAUSE	SOLUTION
No platform up and/or down compensation movement	• Electrovalve YV15 or YV2 defective • Coil defective • Electronic module U1 defective • Wiring harness defective • Printed circuit defective • Compensation switch SA5 defective • Lifting manipulator defective	Sheet DP026
No platform right and/or left rotation movement	• Electrovalve YV19 or YV2 defective • Coil defective • Electronic module U1 defective • Wiring harness defective • Printed circuit defective • Basket rotation swtich SA4 defective	Sheet DP027
No jib movement (up and / or down) from the platform (or turntable) control station	• Electrovalve YV18 or YV2 defective • Coil defective • Electronic module U1 defective • Wiring harness defective • Printed circuit defective • Flow limiter defective • Jib switch SA7 or SA6 defective	Sheet DP028
No telescoping movement (out and/or in) from the platform (or turntable) control station	• Electrovalve YV14 or YV2 defective • Coil defective • Electronic module U1 defective • Wiring harness defective • Printed circuit defective • Telescoping switch SA9 or SA8 defective • Pressure limiter defective	Sheet DP029
No boom lifting movement (up and/or down) from the platform (or turntable) control station	• Electrovalve YV3 defective • Electronic module U1 defective • Wiring harness defective • Printed circuit defective • Lifting switch SA13 defective • Lifting manipulator SM31 defective	Sheet DP030
No arm lifting movement (up and/or down) from the platform (or turntable) control station	• Electrovalve YV4 defective • Electronic module U1 defective • Wiring harness defective • Printed circuit defective • Lifting switch SA14 defective • Lifting manipulator SM2 defective	Sheet DP031
The arms and boom do not move up	• Battery discharged by more than 80% • Charge check device defective	• Change the batteries • Replace the charge check device

8.1.3 - Travel system

ANOMALY	PROBABLE CAUSE	SOLUTION
No machine travel movement	• Connectors disconnected • Manipulator HM4 defective • Wiring harness defective • Electronic module U1 defective • Coils of electrovalve YV6 or YV11 defective • Electrovalves YV6 or YV11 defectives • KA37 defective • EHR defective • EHF defective	Sheet DP063
Only travel micro-speed remains available on the machine, regardless of the speed selected	• Machine unfolded • Contactors SQ2, SQ3, SQ4 incorrectly set or defective • Wiring harness defective • Electronic module U1 defective • Printed circuit defective	Sheet DP065
Machine travel speed does not correspond to the selec-tor	• Electrovalve YV8, YV10, YV12, YV13 or YV17defective • Coil of electrovalve YV8, YV10 or YV12 de-fective • Wiring harness defective • Printed circuit defective • Speed selector SA11 defective • Electronic module U1 defective	Sheet DP064
Sudden stop of travel during a platform lifting operation	• Contactors SQ3, SQ4, SQ2 incorrectly set or defective • Wiring harness defective • Electronic module U1 defective	Sheet DP035
No differential blocking during action on switch SA3	• Switch SA3 or SA11 defective • Electronic module U1 defective • Wiring harness defective • Contactors SQ3, SQ4, SQ2 incorrectly set or defective • Printed circuit defective • Coils of electrovalves YV9 or YV13 defective • Electrovalves YV9 or YV13 defective	Sheet DP073
No grip on a drive wheel	• Insufficient load on one wheel	• Act on the blocking button

8.1.4 - Steering system

ANOMALY	PROBABLE CAUSE	SOLUTION
No steering movement (right and/or left) on the front axle	• Electrovalve YV22 or YV2 defective • Coil defective • Electronic module U1 defective • Wiring harness defective • Printed circuit defective • Switch SA12 defective	Sheet DP037
No steering movement (right and/or left) on the rear axle	• Electrovalve YV21 or YV2 defective • Coil defective • Electronic module U1 defective • Wiring harness defective • Printed circuit defective • Travel switch SM4 defective	Sheet DP074

8.1.5 - Turntable rotation system

ANOMALY	PROBABLE CAUSE	SOLUTION
No turntable rotation movement (right and/or left) from the platform (or turntable) control station	• Electrovalve YV5 defective • Electronic module U1 defective • Wiring harness defective • Printed circuit defective • Rotation switch SA15 defective • Rotation manipulator SM31 defective	Sheet DP018
The turntable does not turn	• The blocking pin has not been removed from the chassis	• Remove the pin

NB: In the turntable box, LEDs indicate the state of each output so that you can check if an output is activated.

8.2 - BREAKDOWN DETECTION FLOW CHART

https://truckmanualshub.com/

Sheet DP015	BREAKDOWN DETECTION FLOW CHART THE MOTOR DOES NOT START, THE STARTER IS ACTIVATED	Folio 1/2

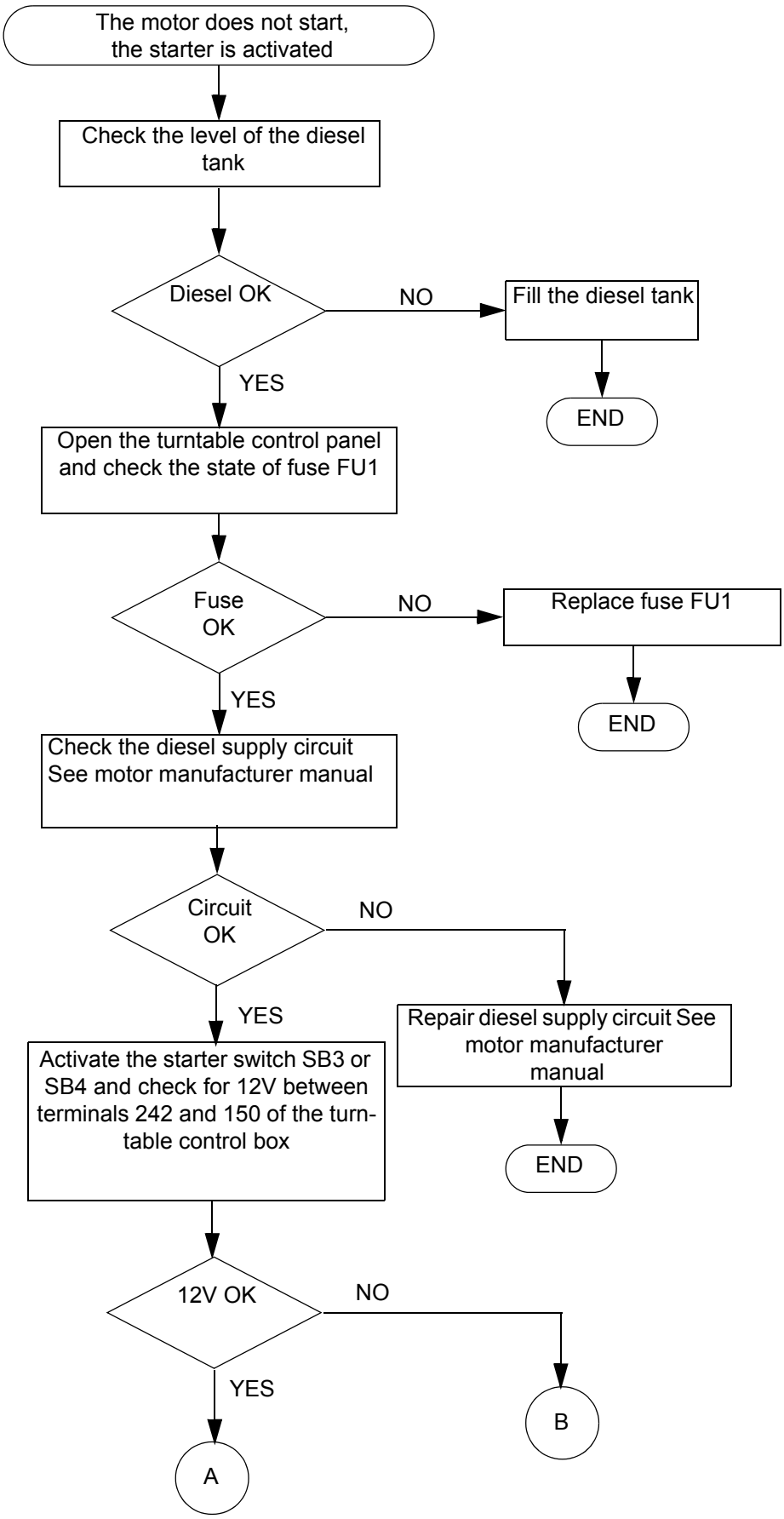

https://truckmanualshub.com/

Sheet DP015	BREAKDOWN DETECTION FLOW CHART THE MOTOR DOES NOT START, THE STARTER IS ACTIVATED	Folio 2/2

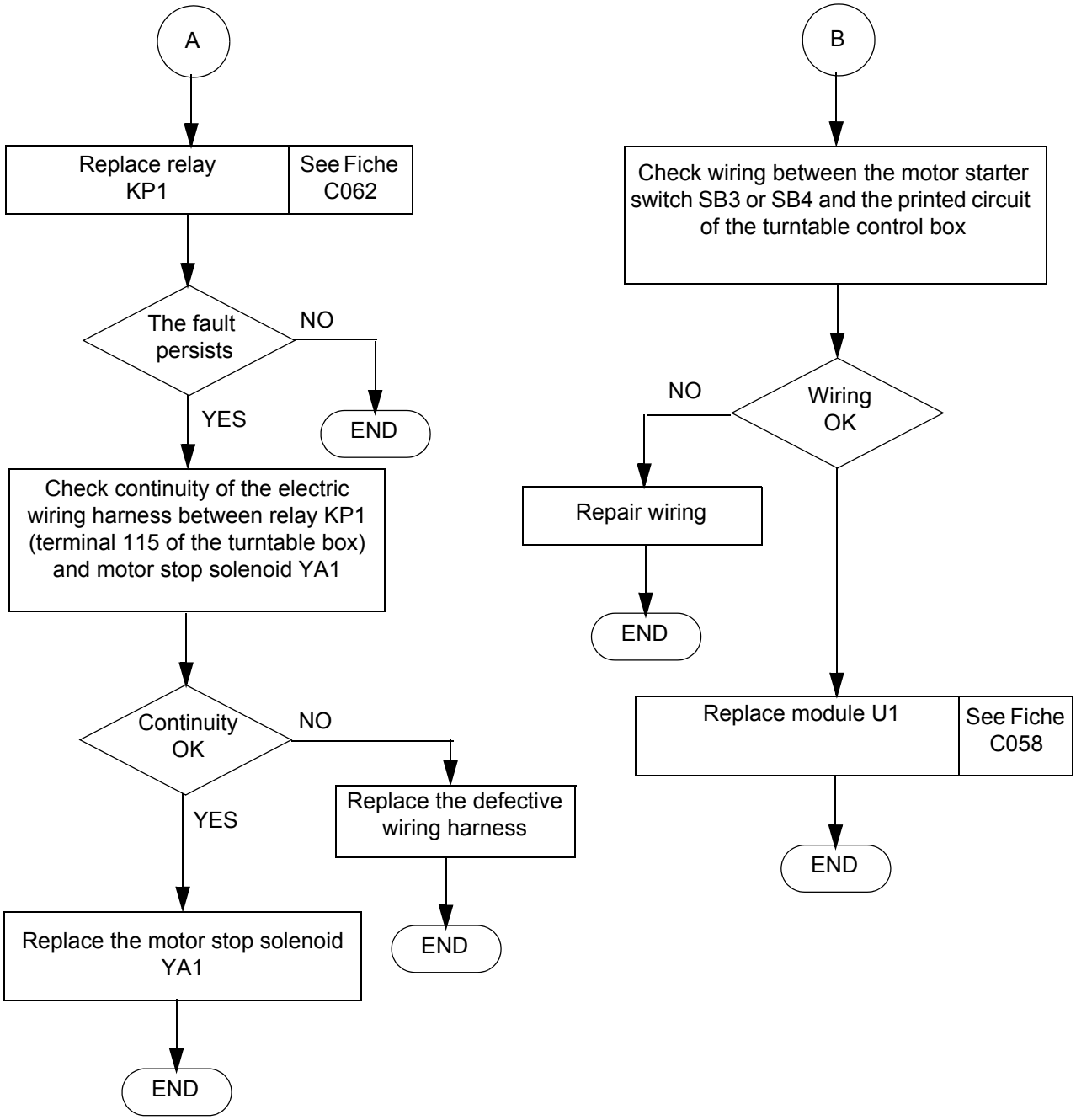

Sheet DP016	BREAKDOWN DETECTION FLOW CHART THE MOTOR DOES NOT START, THE STARTER IS NOT ACTIVATED	Folio 1/3

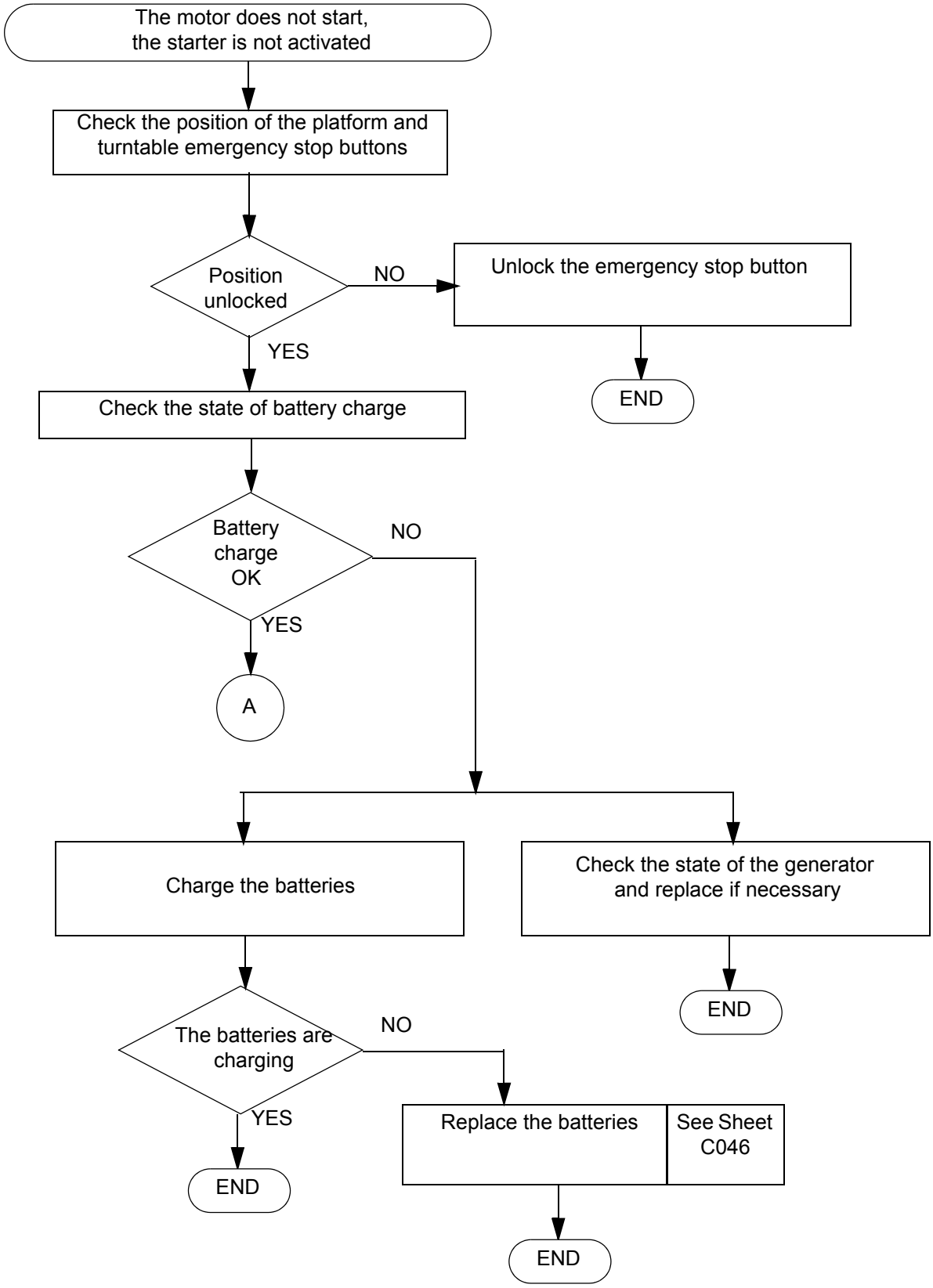

https://truckmanualshub.com/

Sheet DP016	BREAKDOWN DETECTION FLOW CHART THE MOTOR DOES NOT START, THE STARTER IS NOT ACTIVATED	Folio 2/3

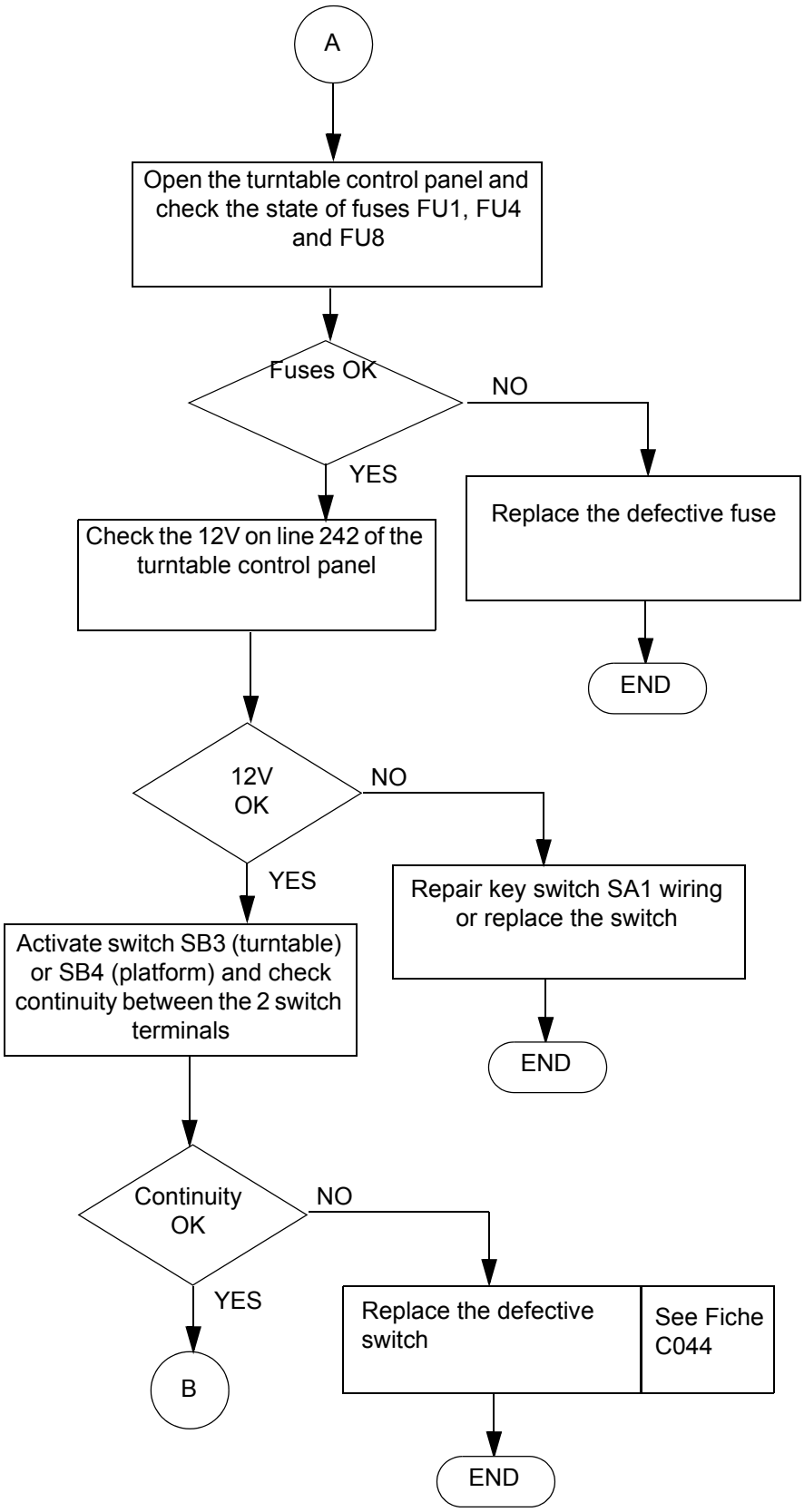

Sheet DP016	BREAKDOWN DETECTION FLOW CHART THE MOTOR DOES NOT START, THE STARTER IS NOT ACTIVATED	Folio 3/3

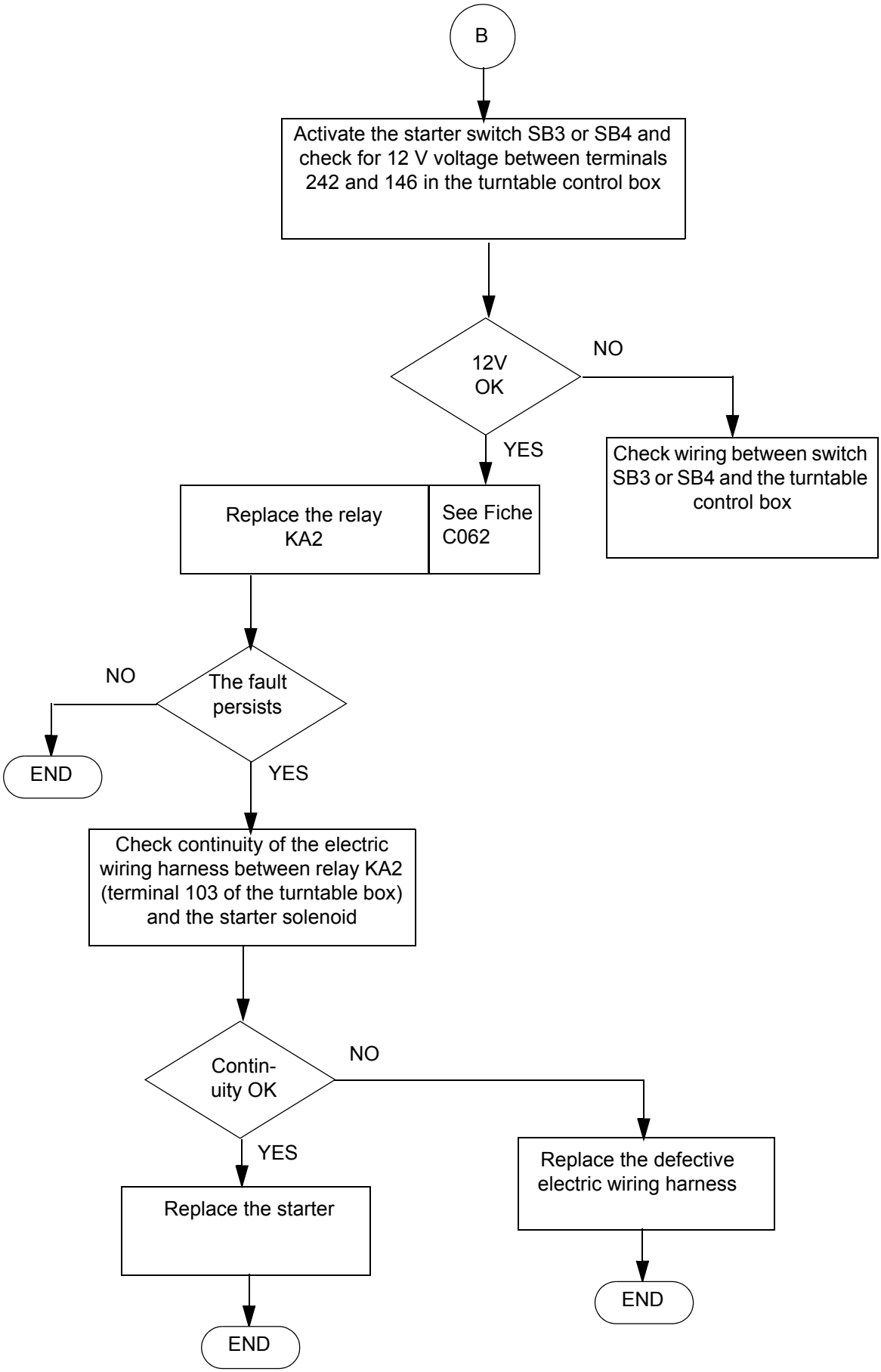

https://truckmanualshub.com/

https://truckmanualshub.com/

Sheet DP017	BREAKDOWN DETECTION FLOW CHART THE MOTOR STARTS THEN STOPS AFTER 5 sec	Folio 1/1

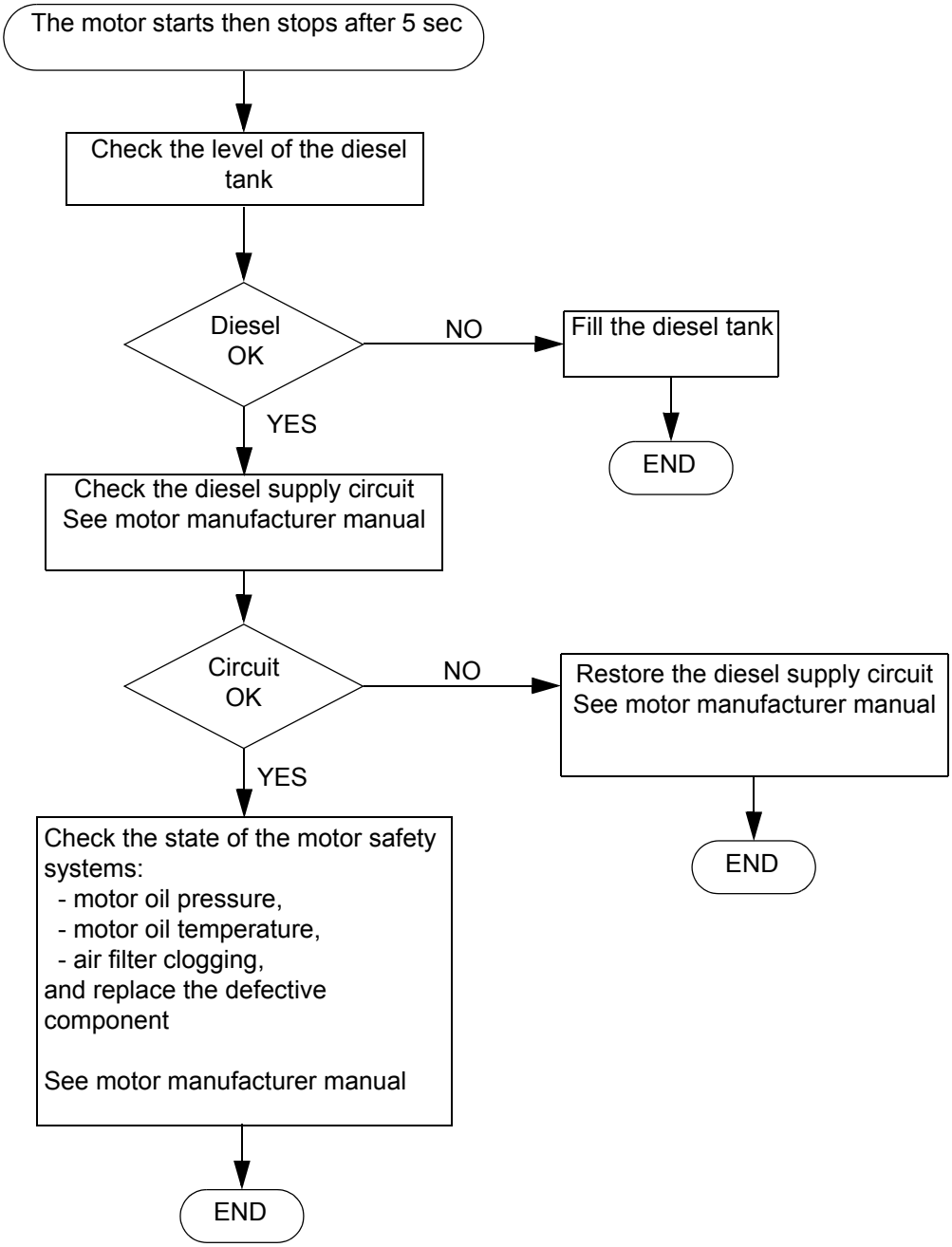

https://truckmanualshub.com/

https://truckmanualshub.com/

Sheet DP018	BREAKDOWN DETECTION FLOW CHART NO TURNTABLE ROTATION MOVEMENT (RIGHT AND / OR LEFT) FROM THE PLATFORM (OR TURNTABLE) CONTROL PANEL	Folio 1/3

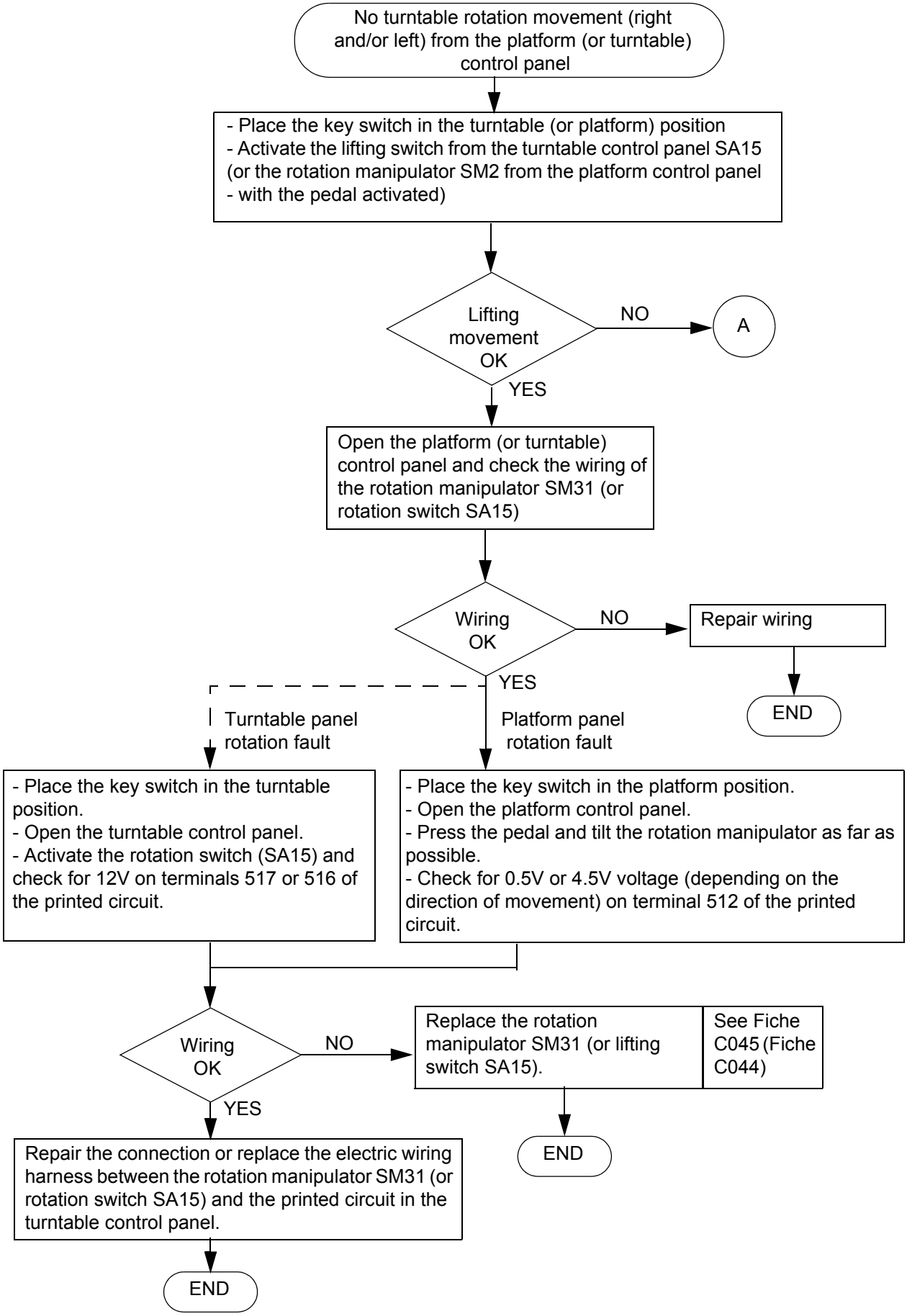

https://truckmanualshub.com/

Sheet DP018	BREAKDOWN DETECTION FLOW CHART NO TURNTABLE ROTATION MOVEMENT (RIGHT AND / OR LEFT) FROM THE PLATFORM (OR TURNTABLE) CONTROL PANEL	Folio 2/3

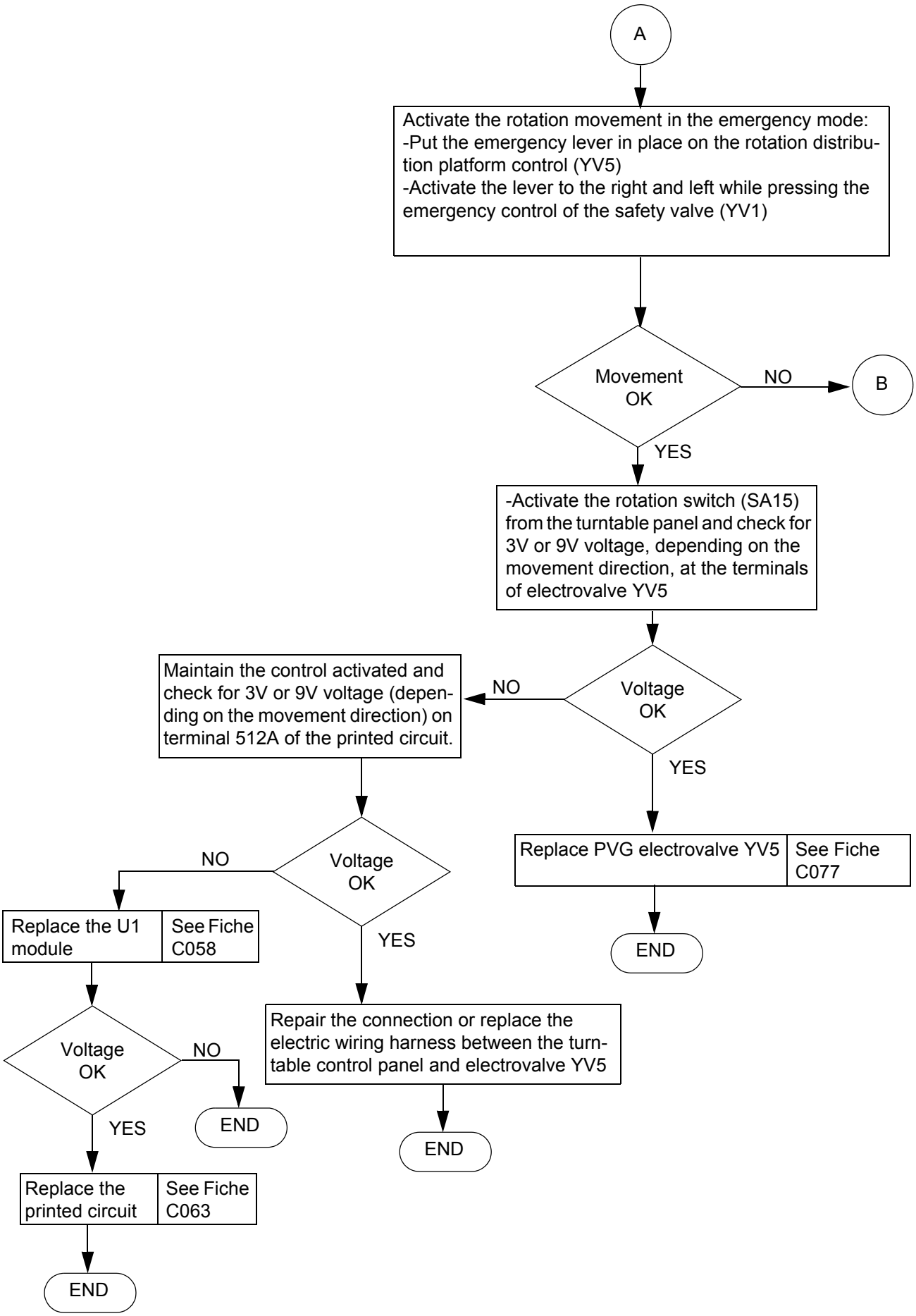

Sheet DP018	BREAKDOWN DETECTION FLOW CHART NO TURNTABLE ROTATION MOVEMENT (RIGHT AND / OR LEFT) FROM THE PLATFORM (OR TURNTABLE) CONTROL PANEL	Folio 3/3

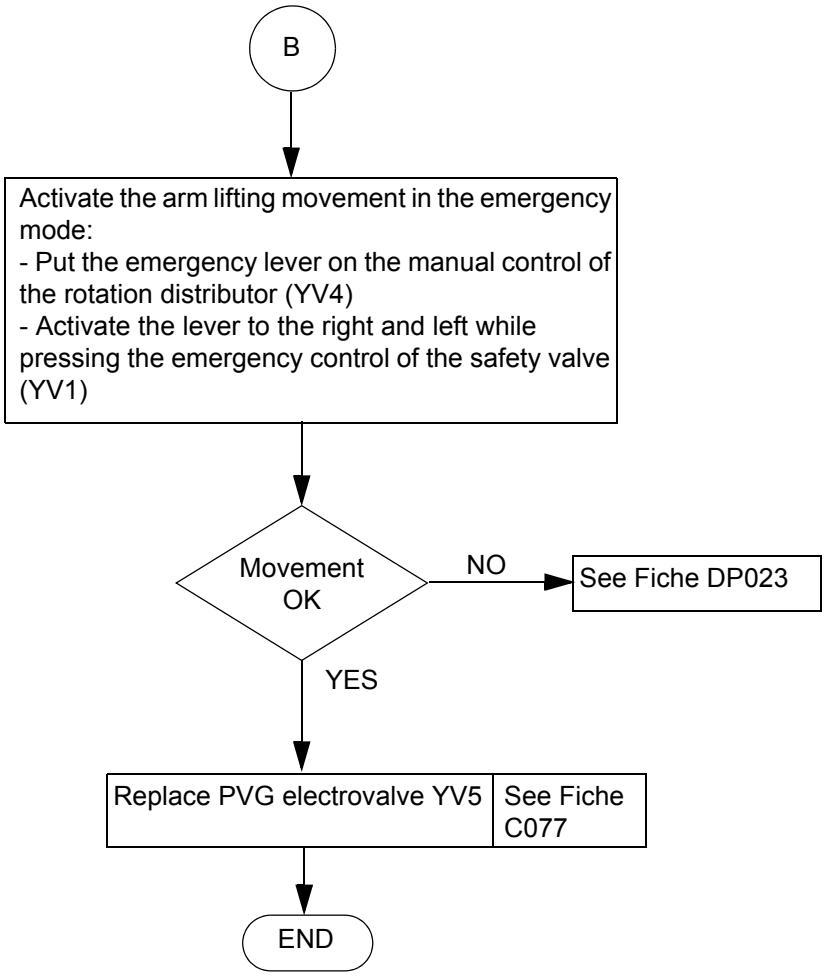

https://truckmanualshub.com/

Pinguely-Haulotte

Sheet DP019	BREAKDOWN DETECTION FLOW CHART THE MOTOR DOES NOT START FROM THE PLATFORM PANEL BUT DOES START FROM THE TURNTABLE PANEL	Folio 1/2

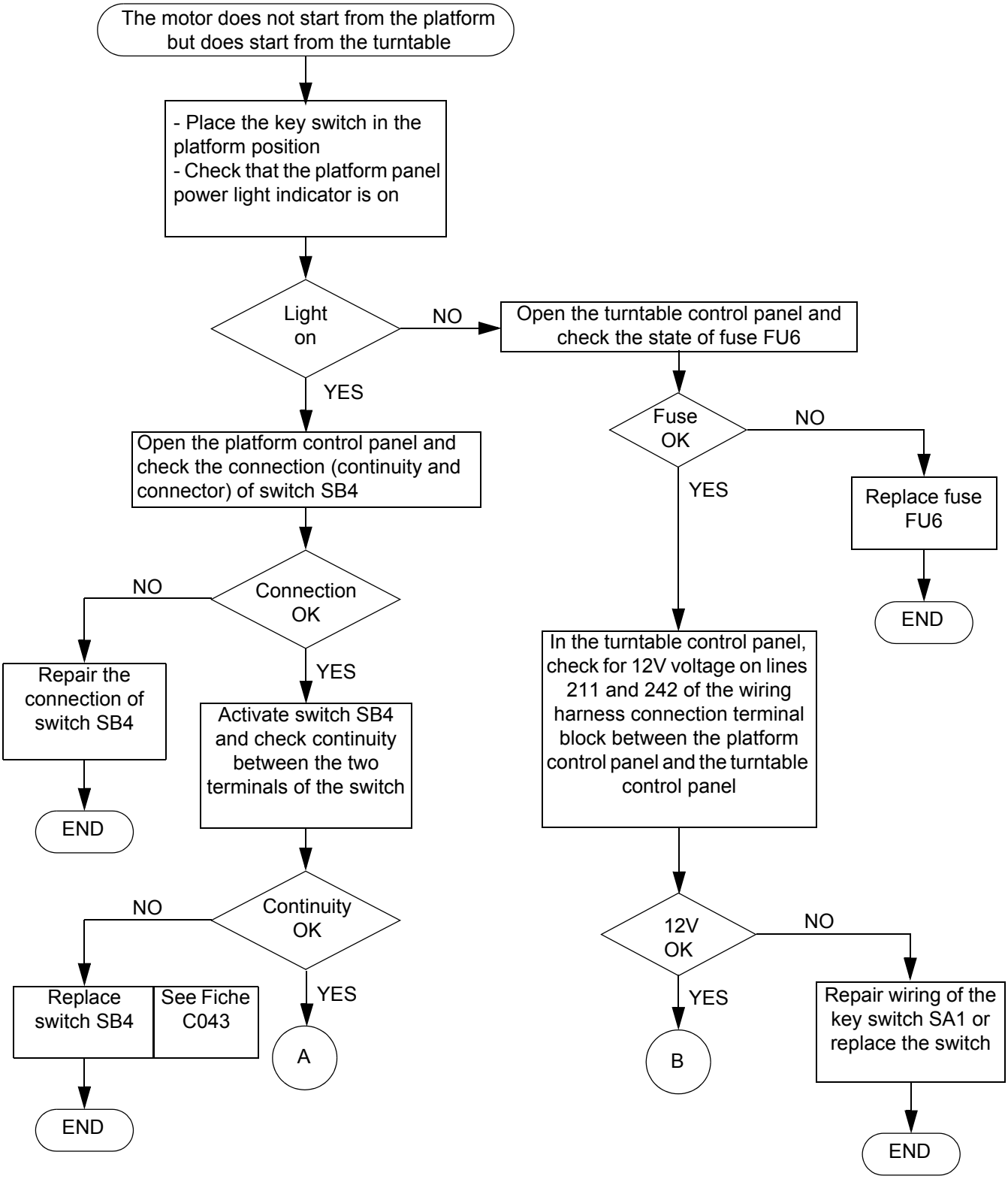

https://truckmanualshub.com/

Sheet DP019	BREAKDOWN DETECTION FLOW CHART THE MOTOR DOES NOT START FROM THE PLATFORM PANEL BUT DOES START FROM THE TURNTABLE PANEL	Folio 2/2

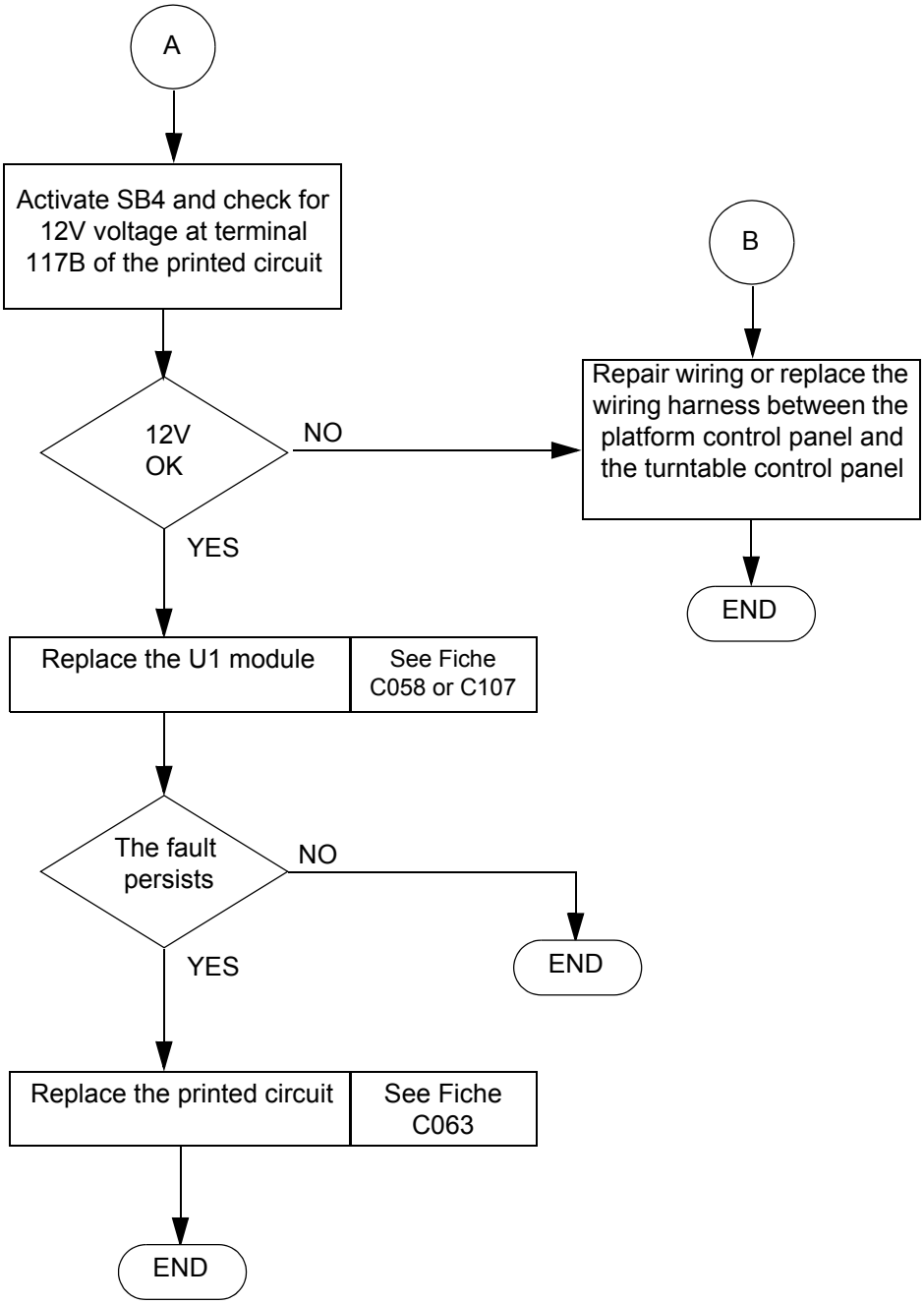

https://truckmanualshub.com/

Sheet DP020	BREAKDOWN DETECTION FLOW CHART THE MOTOR DOES NOT START FROM THE TURNTABLE CONTROL PANEL BUT DOES START FROM THE PLATFORM CONTROL PANEL	Folio 1/1

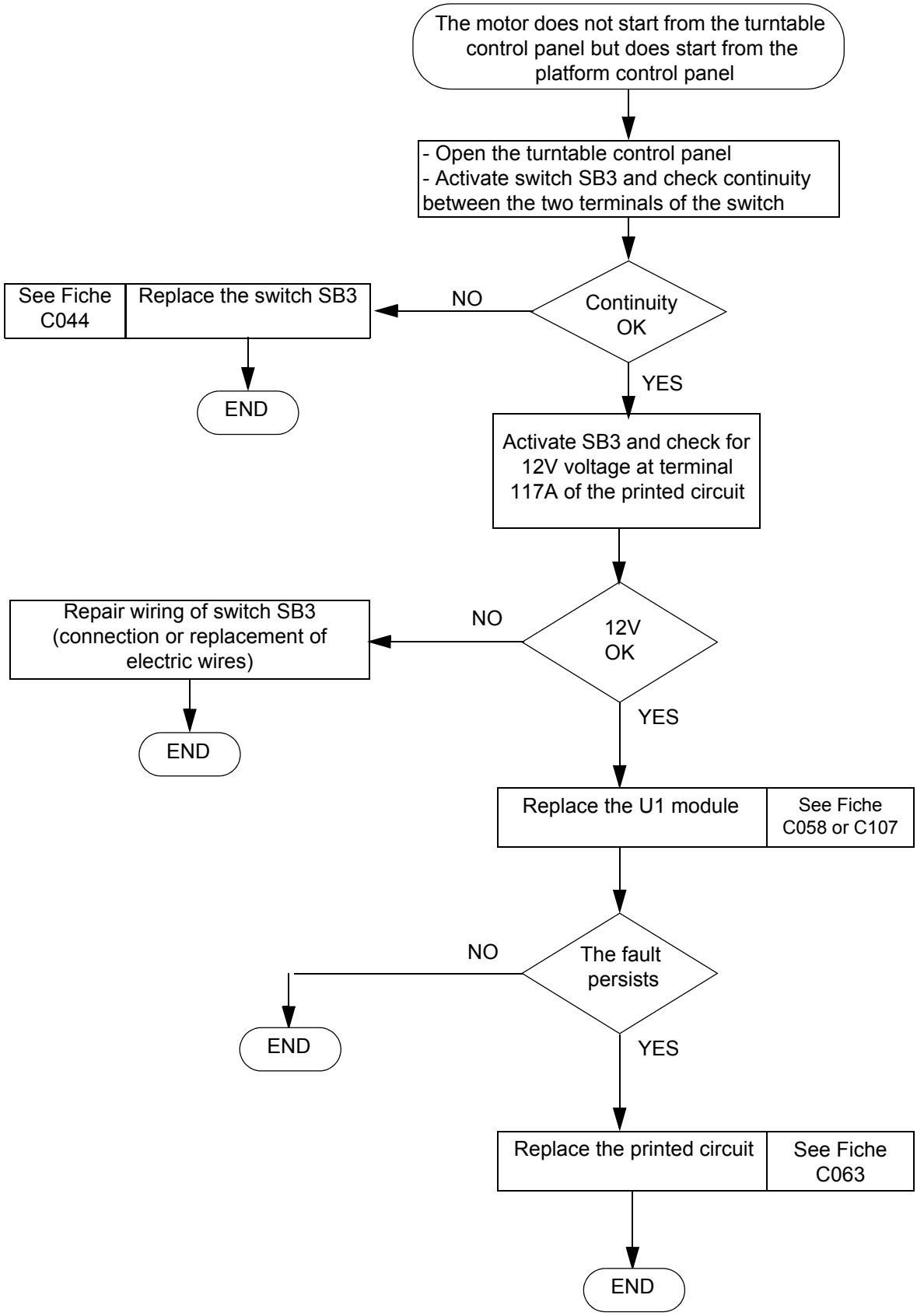

https://truckmanualshub.com/

https://truckmanualshub.com/

Sheet DP021	BREAKDOWN DETECTION FLOW CHART MOTOR ACCELERATION FOR ANY MOVEMENT CONTROLLED FROM THE PLATFORM (ACCELERATION, TRAVEL, LIFTING, TURNTABLE ROTATION, TELESCOPE)	Folio 1/1

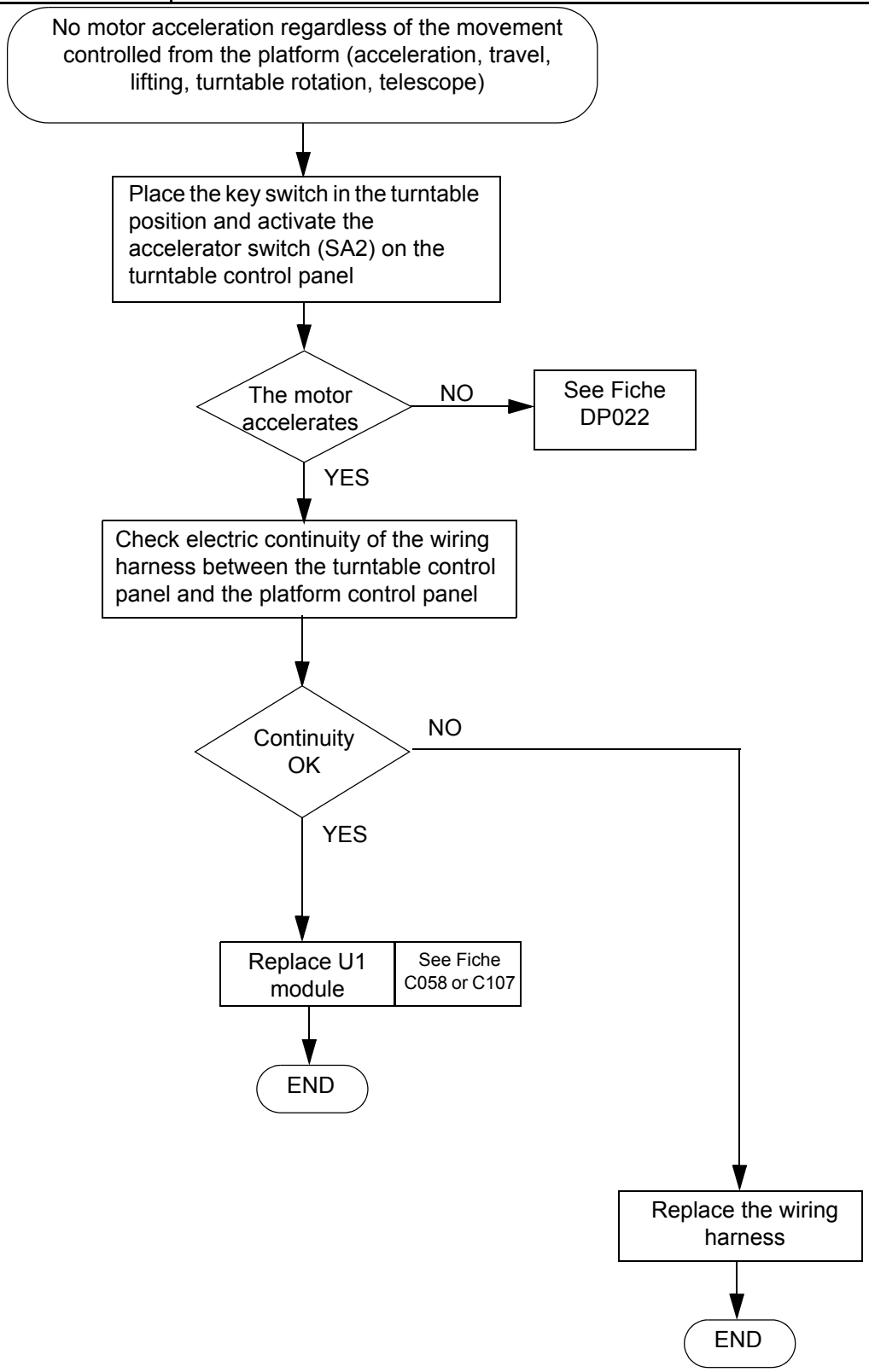

https://truckmanualshub.com/

https://truckmanualshub.com/

Sheet DP022	BREAKDOWN DETECTION FLOW CHART NO MOTOR ACCELERATION ON ACTIVATING THE ACCELERATOR SWITCH SA2 FROM THE TURNTABLE CONTROL PANEL	Folio 1/2

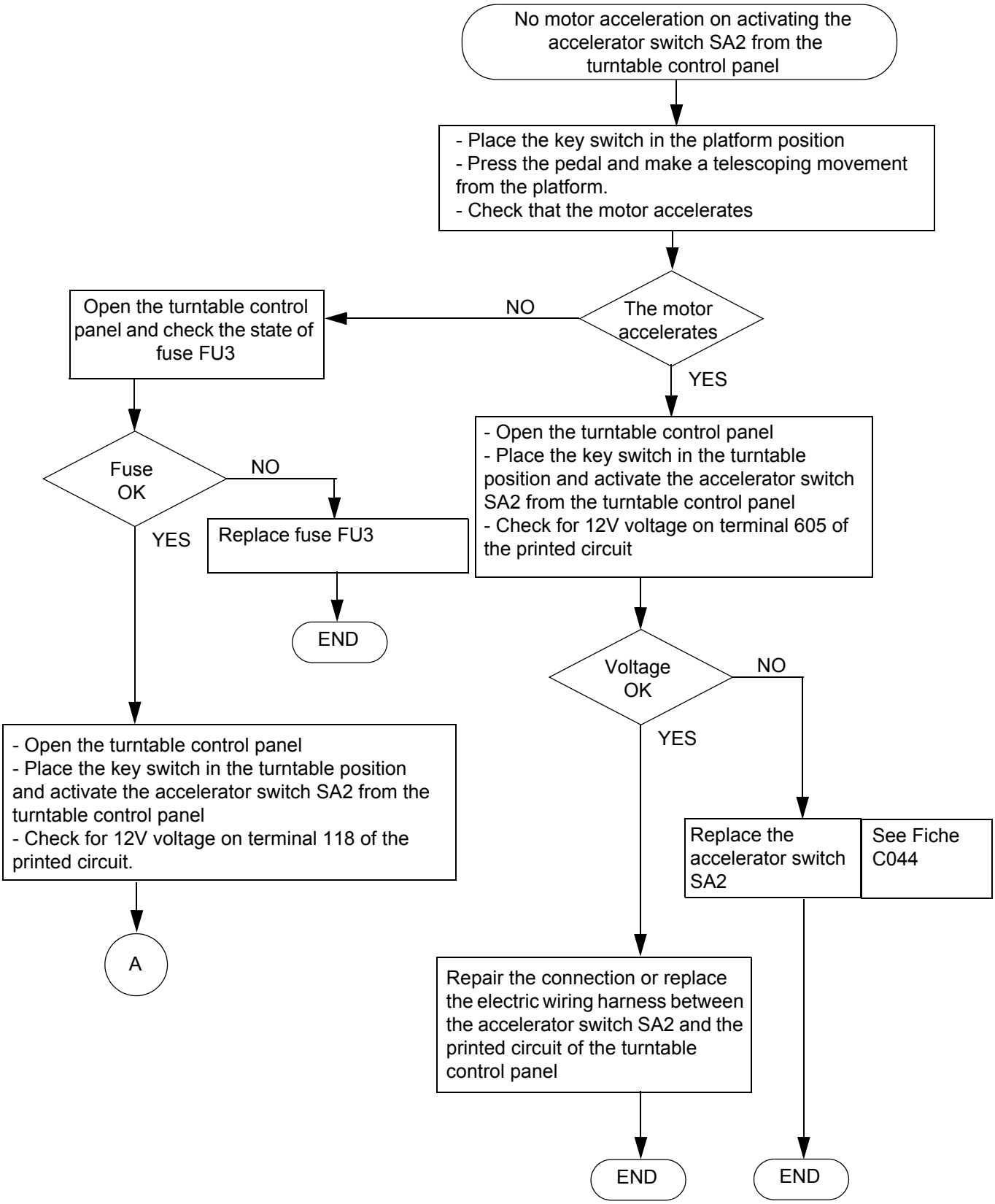

https://truckmanualshub.com/

Sheet DP022	BREAKDOWN DETECTION FLOW CHART NO MOTOR ACCELERATION ON ACTIVATING THE ACCELERATOR SWITCH SA2 FROM THE TURNTABLE CONTROL PANEL	Folio 2/2

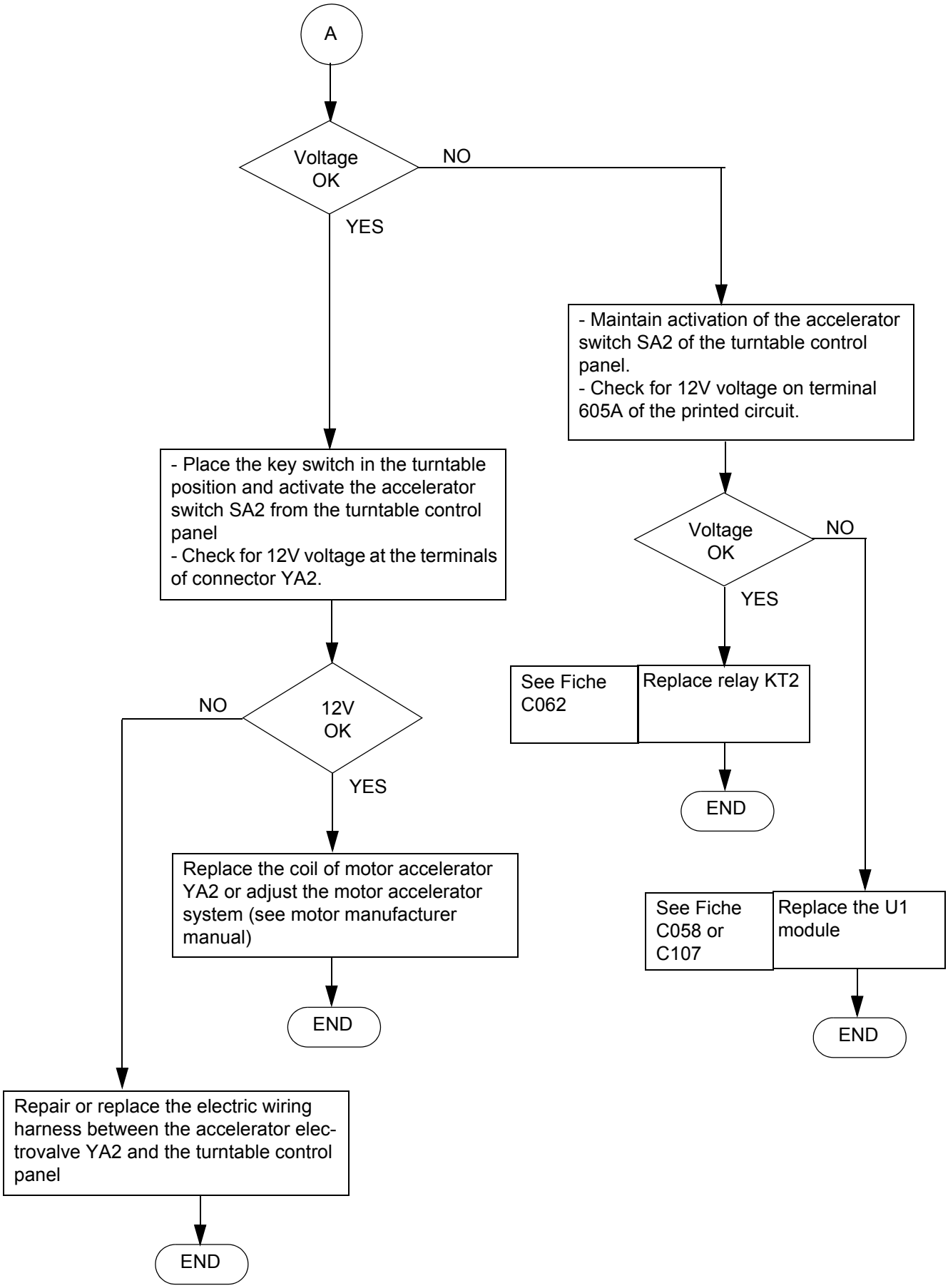

Pinguely-Haulotte

Sheet DP023	BREAKDOWN DETECTION FLOW CHART NO MOVEMENT AVAILABLE (FROM TURNTABLE OR PLATFORM CONTROL PANELS)	Folio 1/5

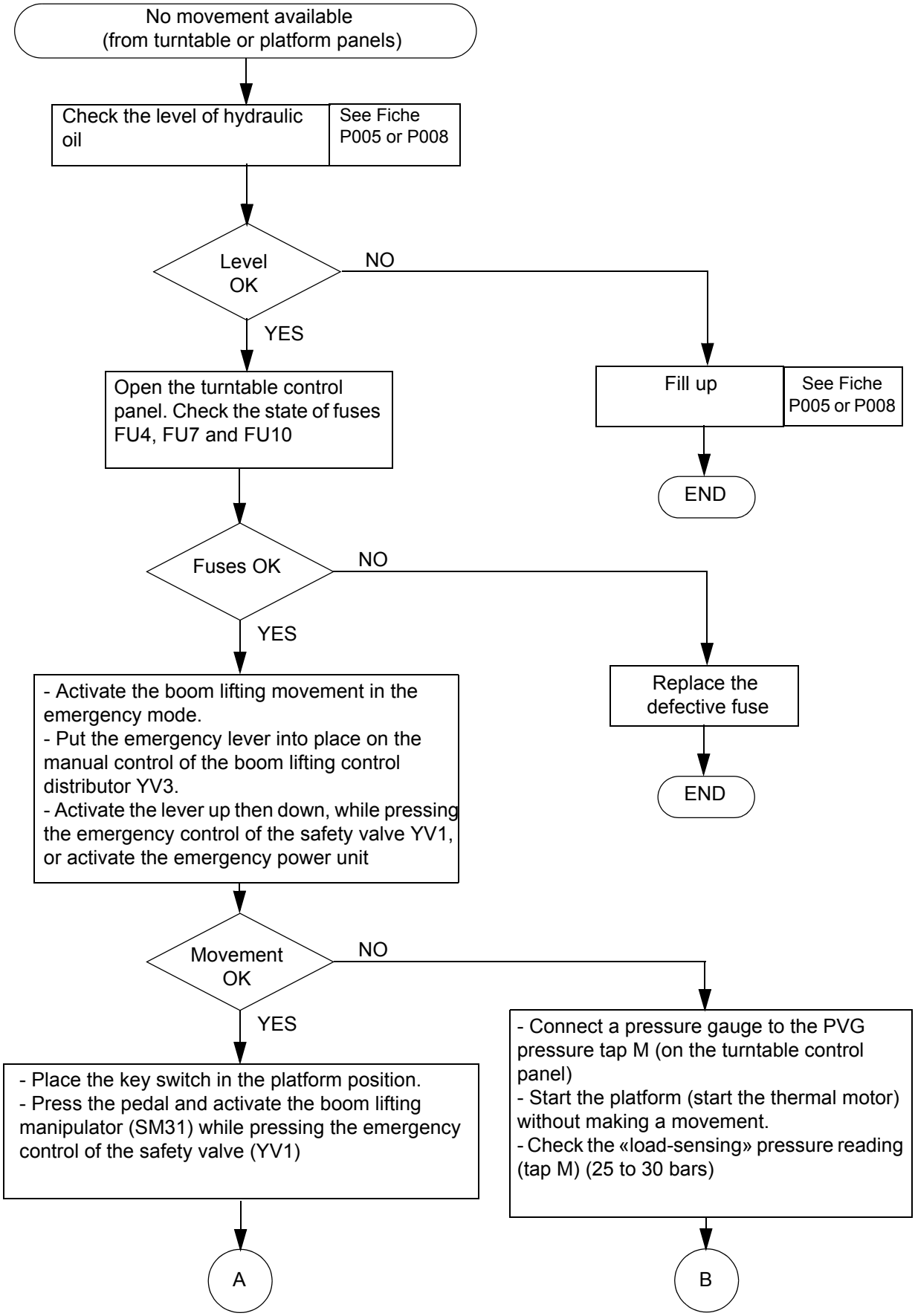

https://truckmanualshub.com/

Sheet DP023	BREAKDOWN DETECTION FLOW CHART	Folio 2/5
	NO MOVEMENT AVAILABLE (FROM TURNTABLE OR PLATFORM CONTROL PANELS)	

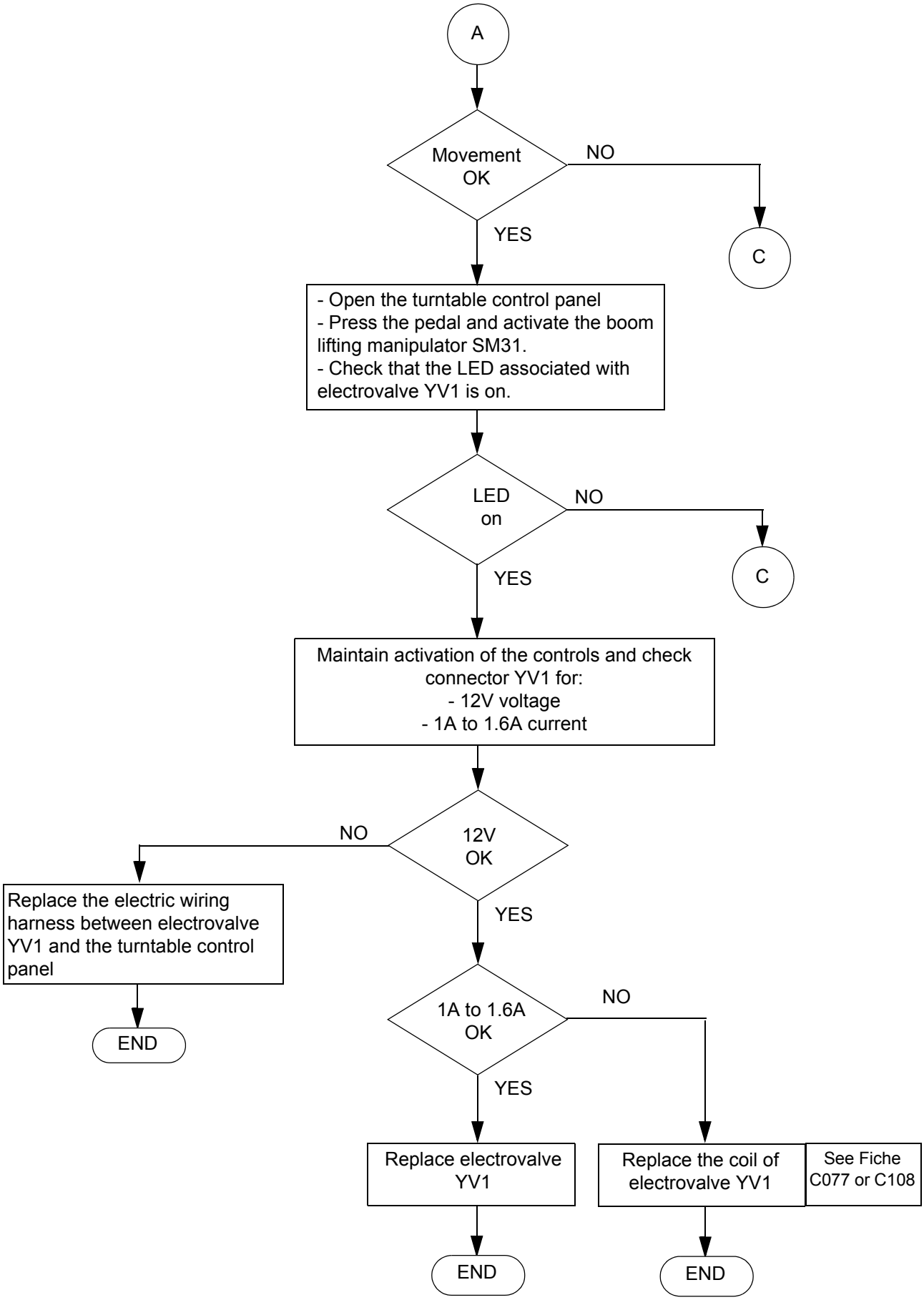

Sheet DP023	BREAKDOWN DETECTION FLOW CHART NO MOVEMENT AVAILABLE (FROM TURNTABLE OR PLATFORM CONTROL PANELS)	Folio 3/5

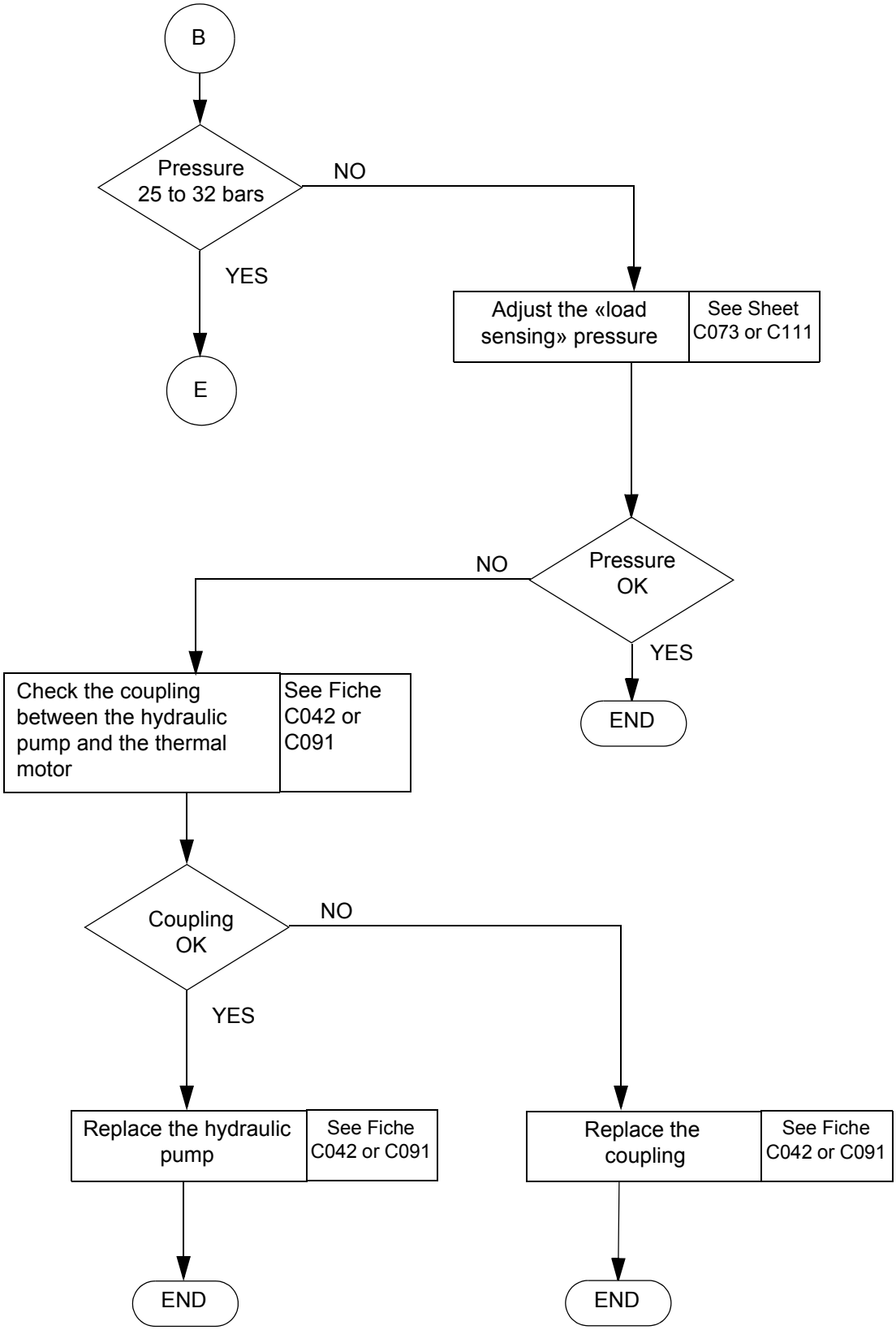

Sheet DP023	BREAKDOWN DETECTION FLOW CHART	Folio 4/5
	NO MOVEMENT AVAILABLE (FROM TURNTABLE OR PLATFORM CONTROL PANELS)	

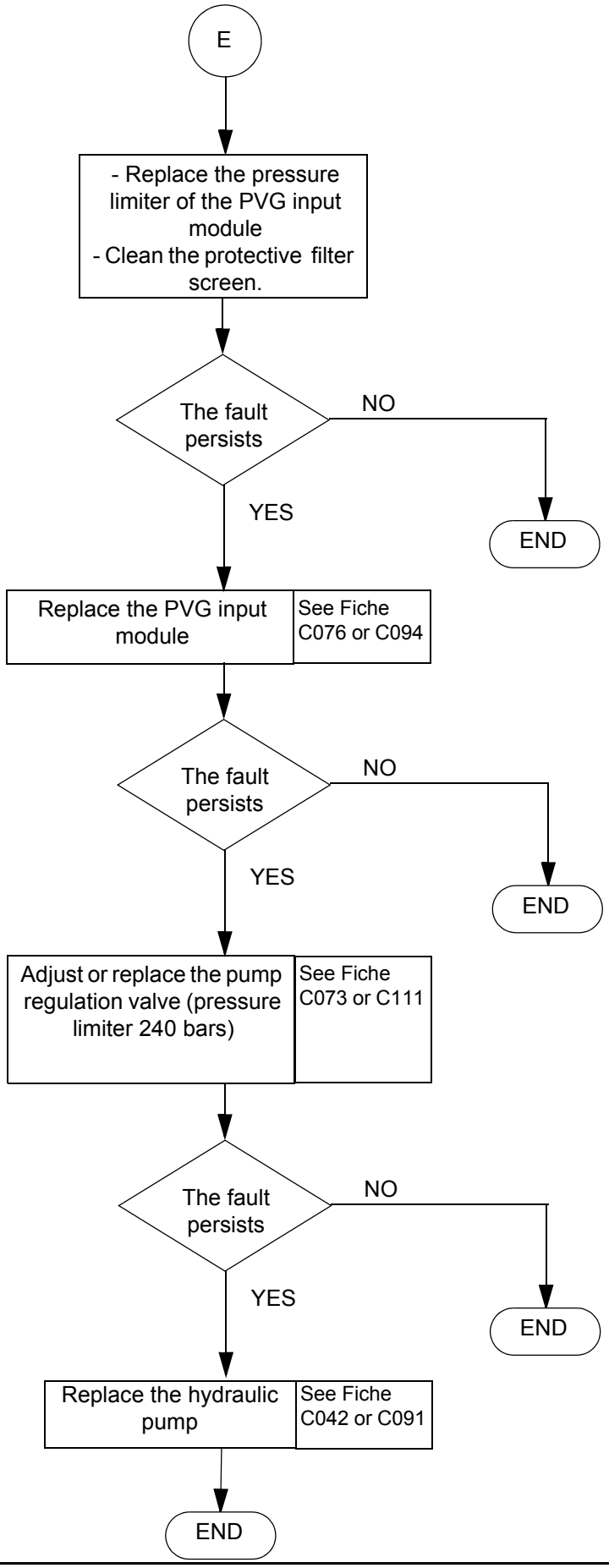

Sheet DP023	BREAKDOWN DETECTION FLOW CHART NO MOVEMENT AVAILABLE (FROM TURNTABLE OR PLATFORM CONTROL PANELS)	Folio 5/5

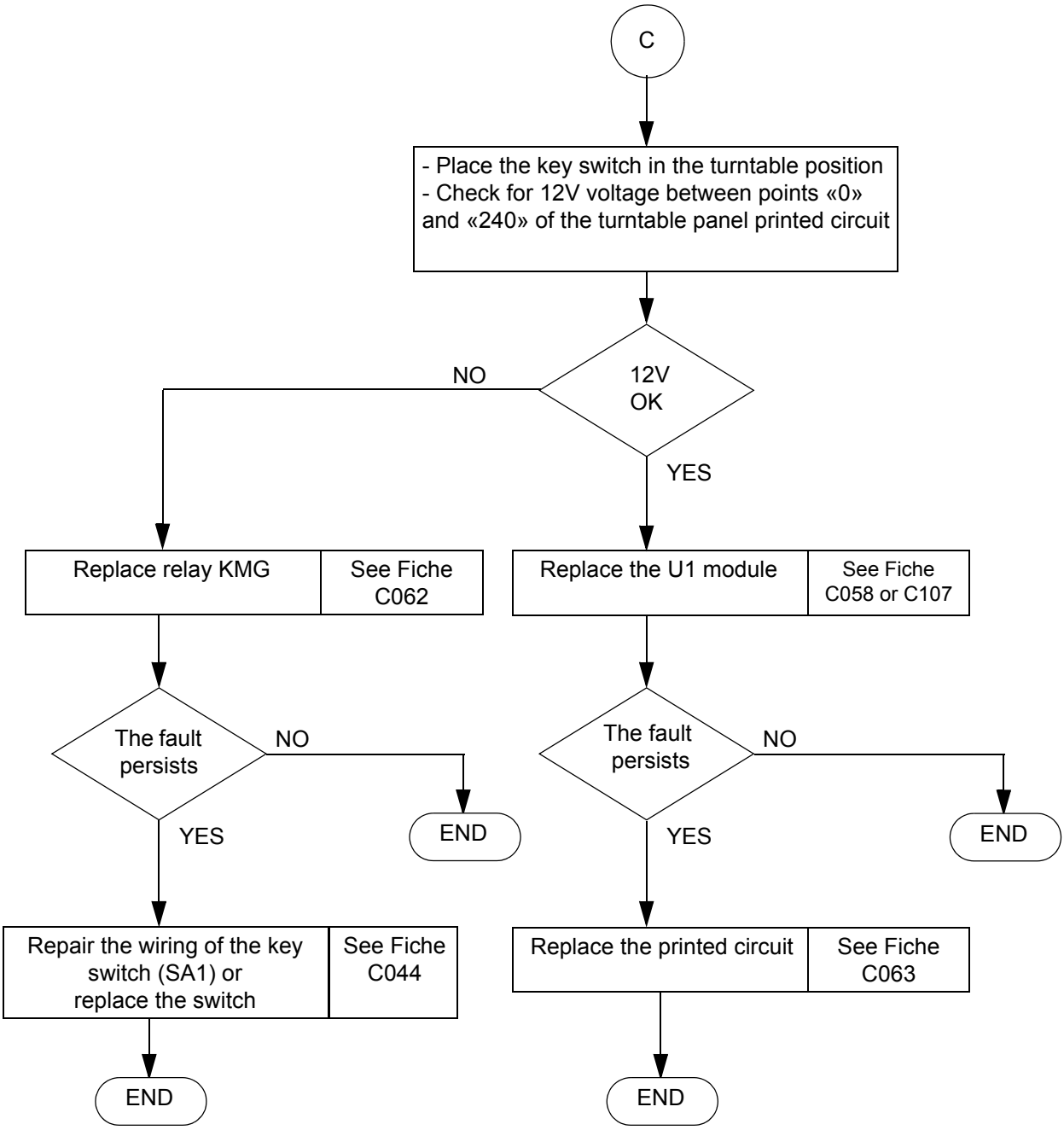

https://truckmanualshub.com/

https://truckmanualshub.com/

Sheet DP024	BREAKDOWN DETECTION FLOW CHART NO MOVEMENT AVAILABLE FROM THE PLATFORM CONTROL PANEL	Folio 1/2

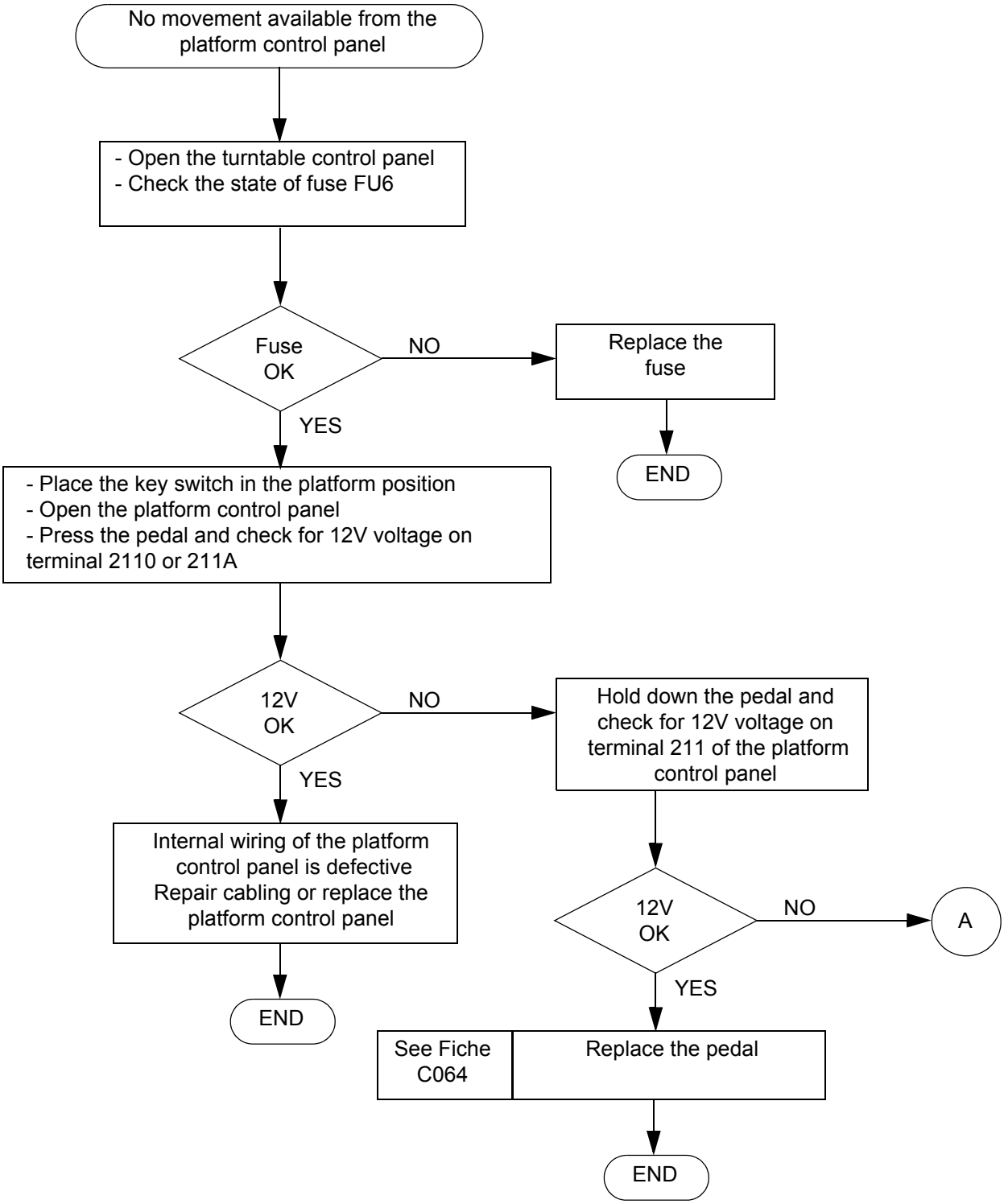

https://truckmanualshub.com/

Sheet DP024	BREAKDOWN DETECTION FLOW CHART NO MOVEMENT AVAILABLE FROM THE PLATFORM CONTROL PANEL	Folio 2/2

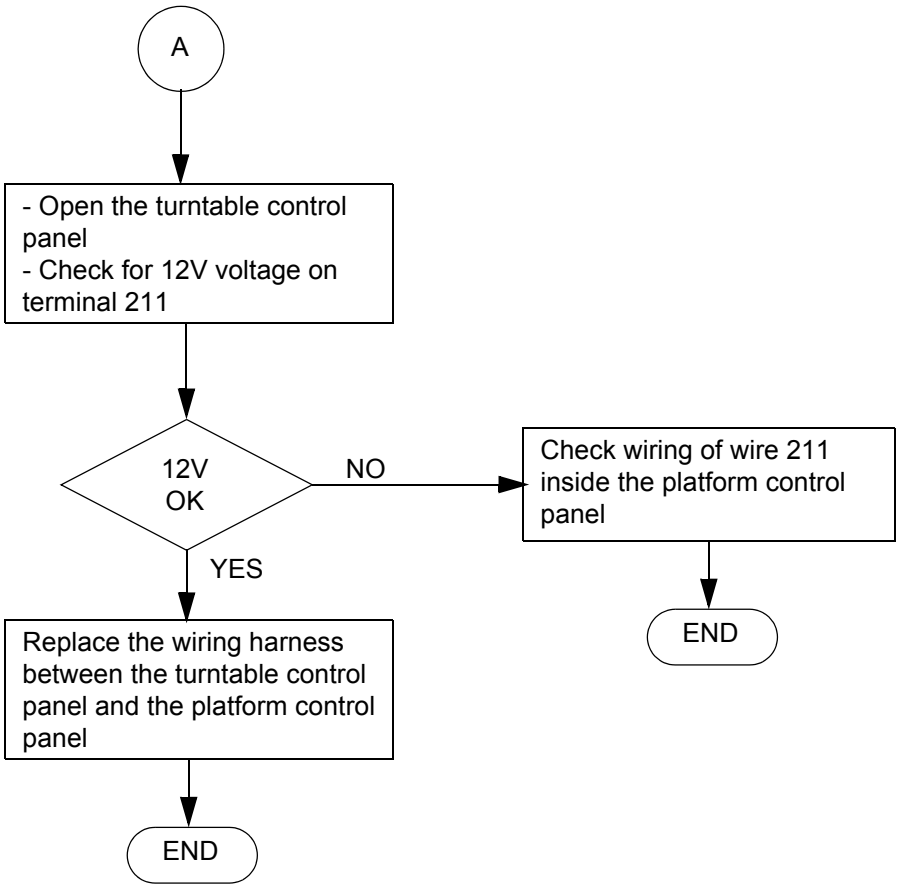

https://truckmanualshub.com/

Sheet DP025	BREAKDOWN DETECTION FLOW CHART NOISY HYDRAULIC PUMP	Folio 1/2

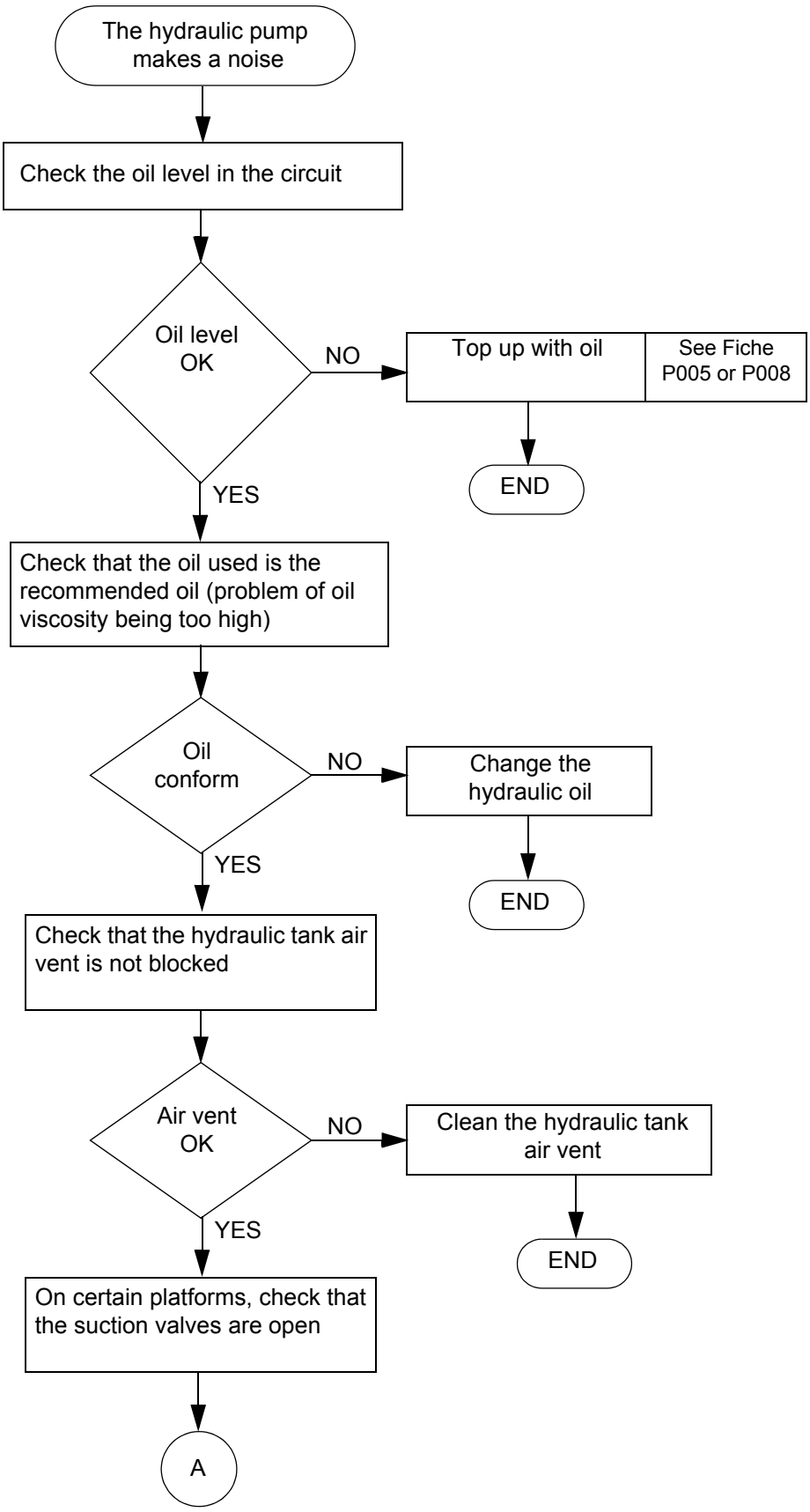

Sheet DP025	BREAKDOWN DETECTION FLOW CHART NOISY HYDRAULIC PUMP	Folio 2/2

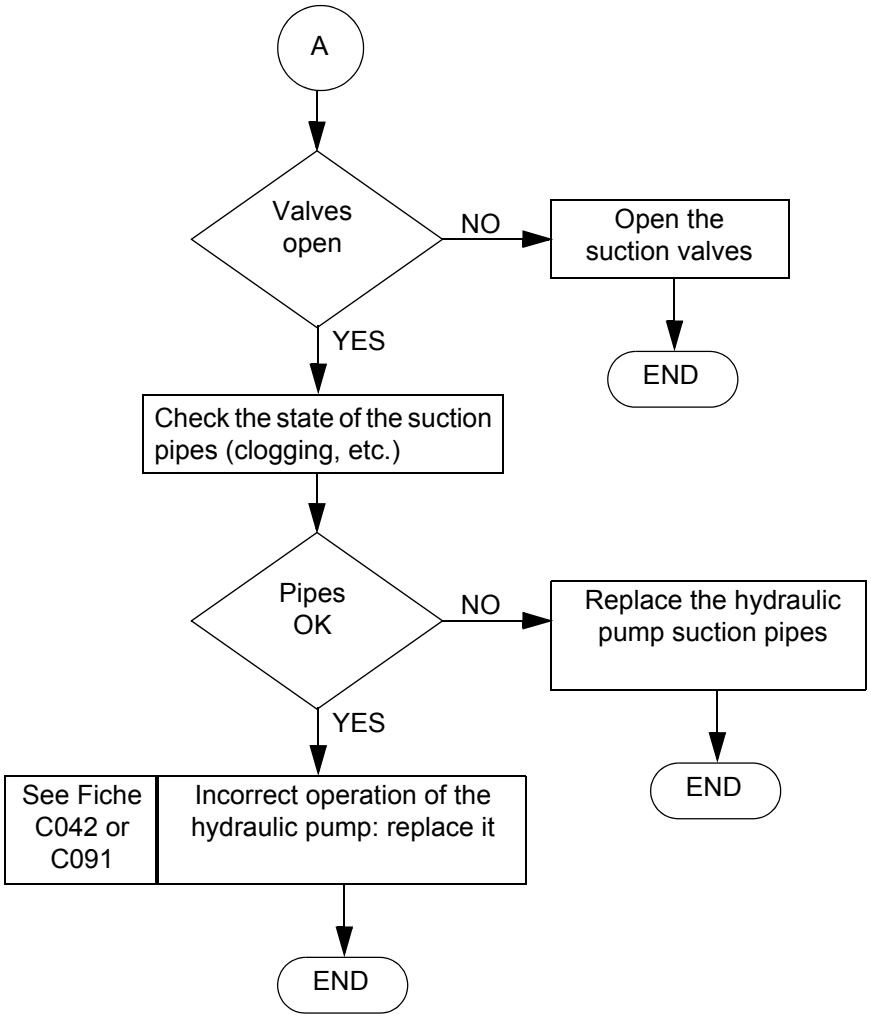

https://truckmanualshub.com/

Sheet DP026	BREAKDOWN DETECTION FLOW CHART	Folio 1/5
	NO COMPENSATION MOVEMENT (UP AND / OR DOWN)	

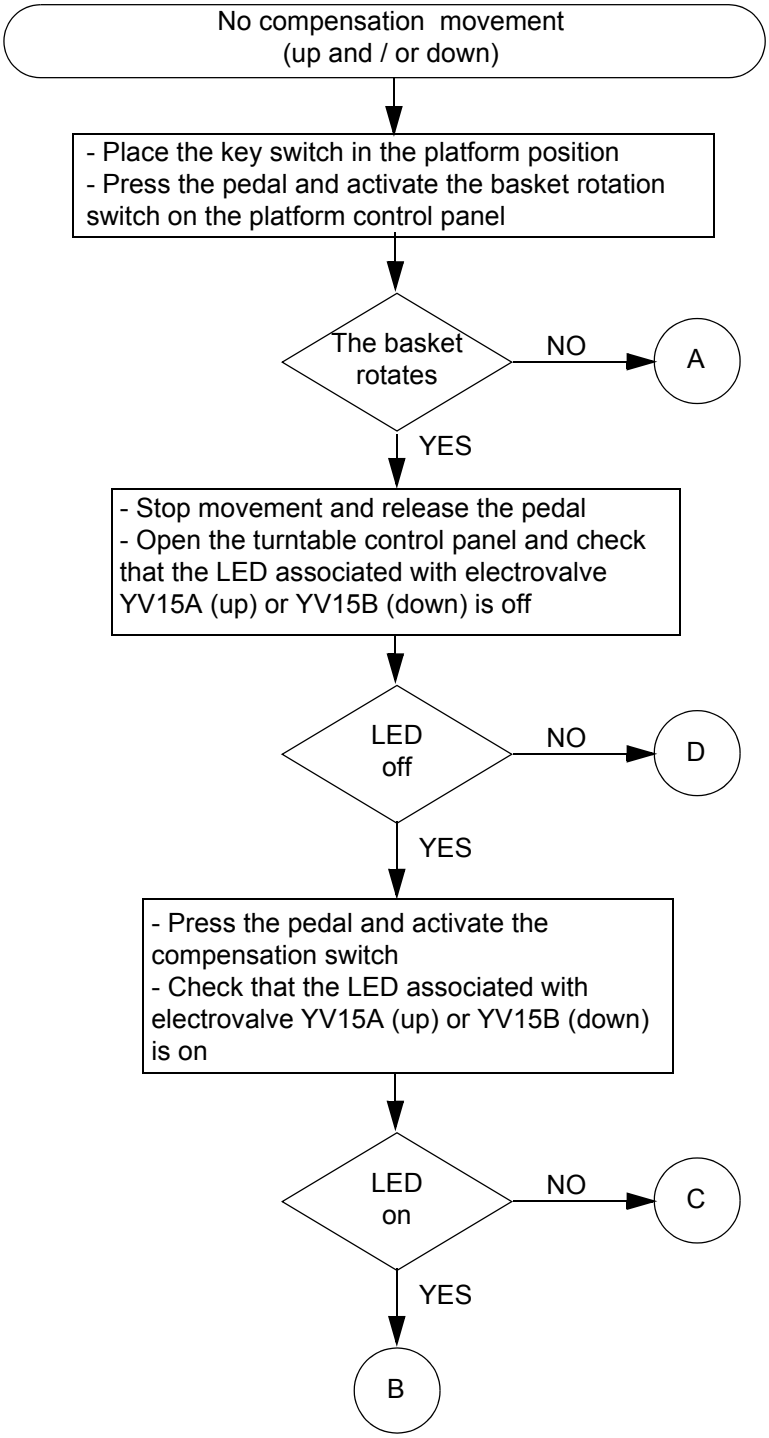

https://truckmanualshub.com/

Sheet DP026	BREAKDOWN DETECTION FLOW CHART NO COMPENSATION MOVEMENT (UP AND / OR DOWN)	Folio 2/5

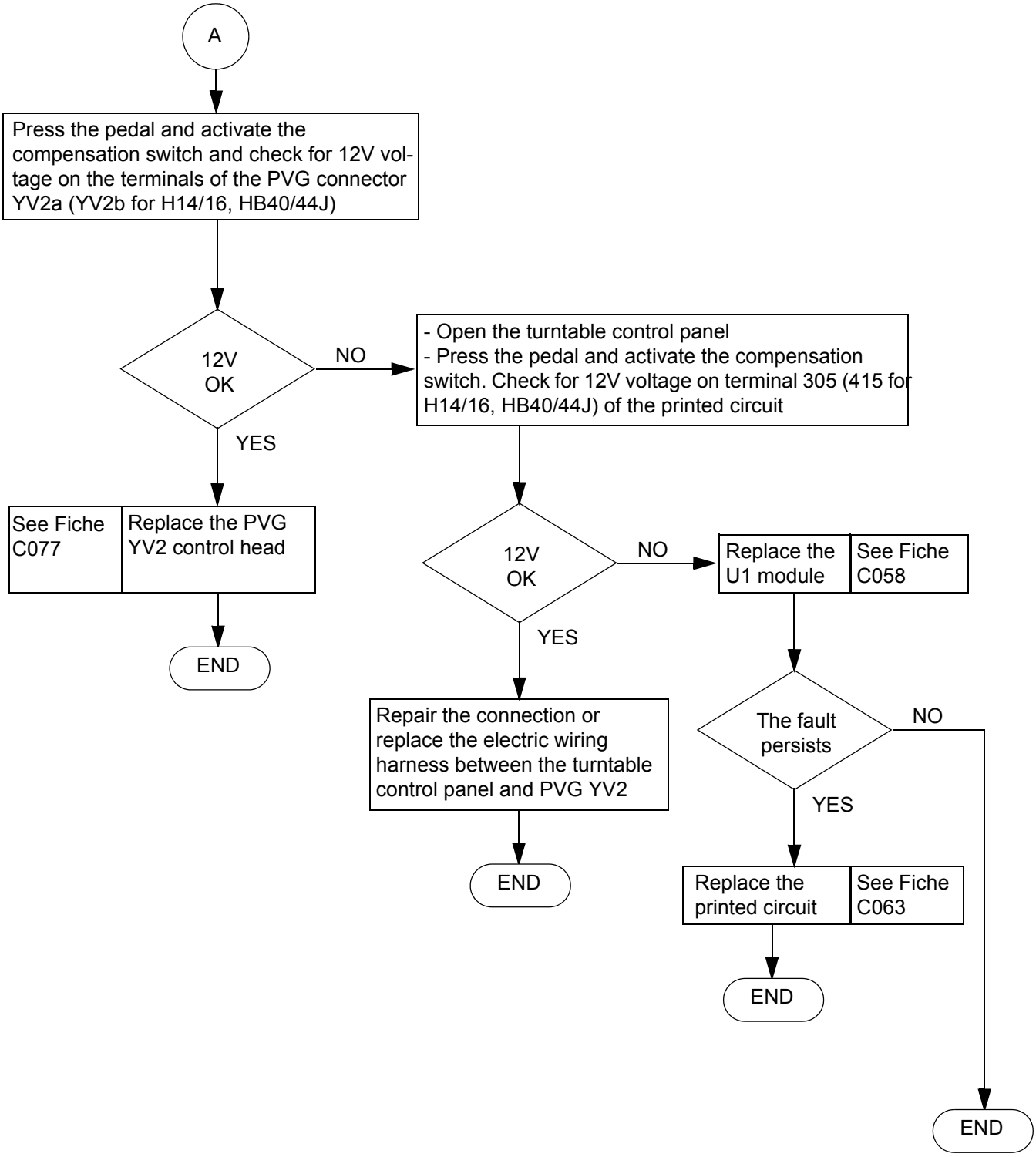

https://truckmanualshub.com/

Sheet DP026	BREAKDOWN DETECTION FLOW CHART NO COMPENSATION MOVEMENT (UP AND / OR DOWN)	Folio 3/5

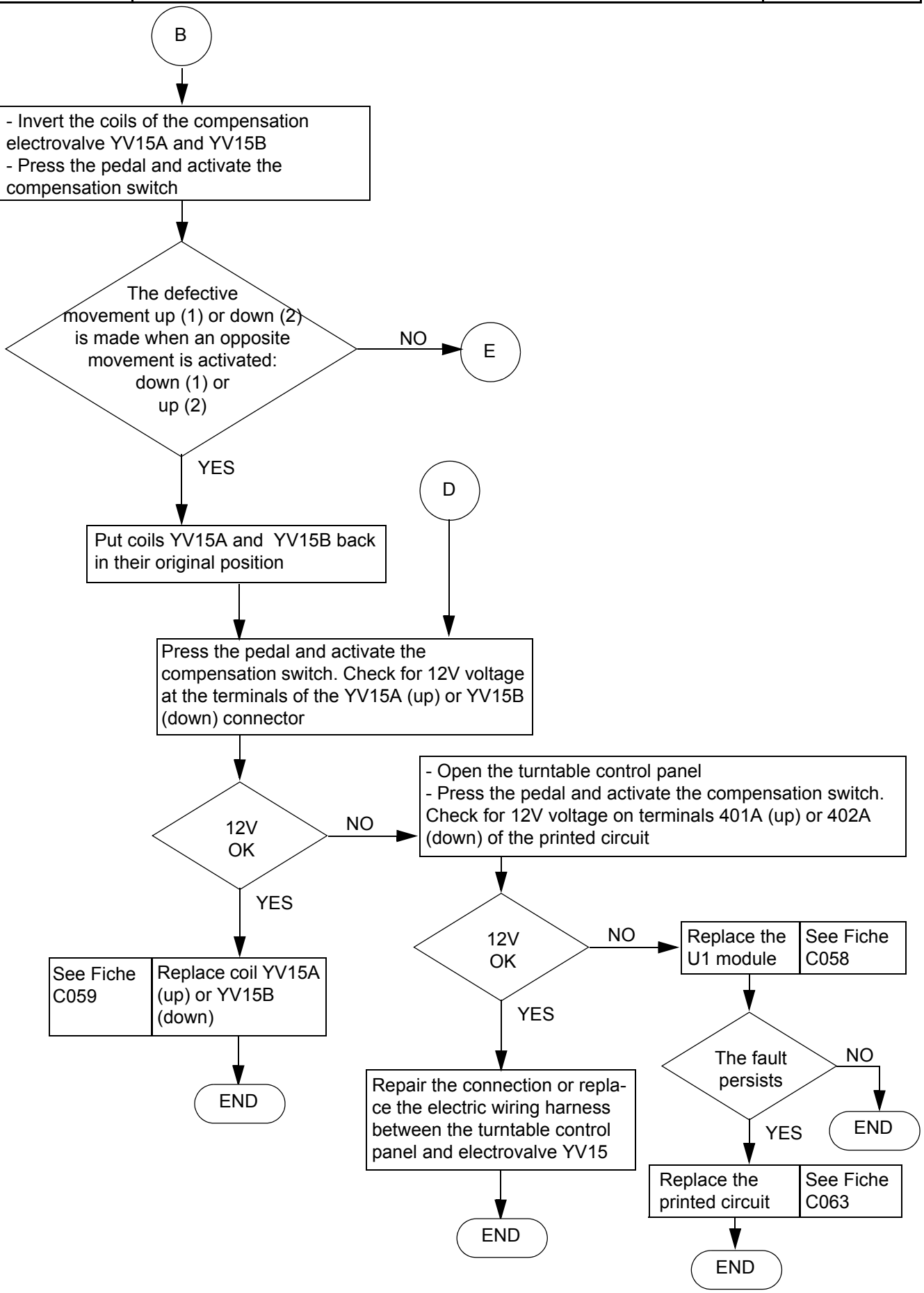

https://truckmanualshub.com/

Sheet DP026	BREAKDOWN DETECTION FLOW CHART NO COMPENSATION MOVEMENT (UP AND / OR DOWN)	Folio 4/5

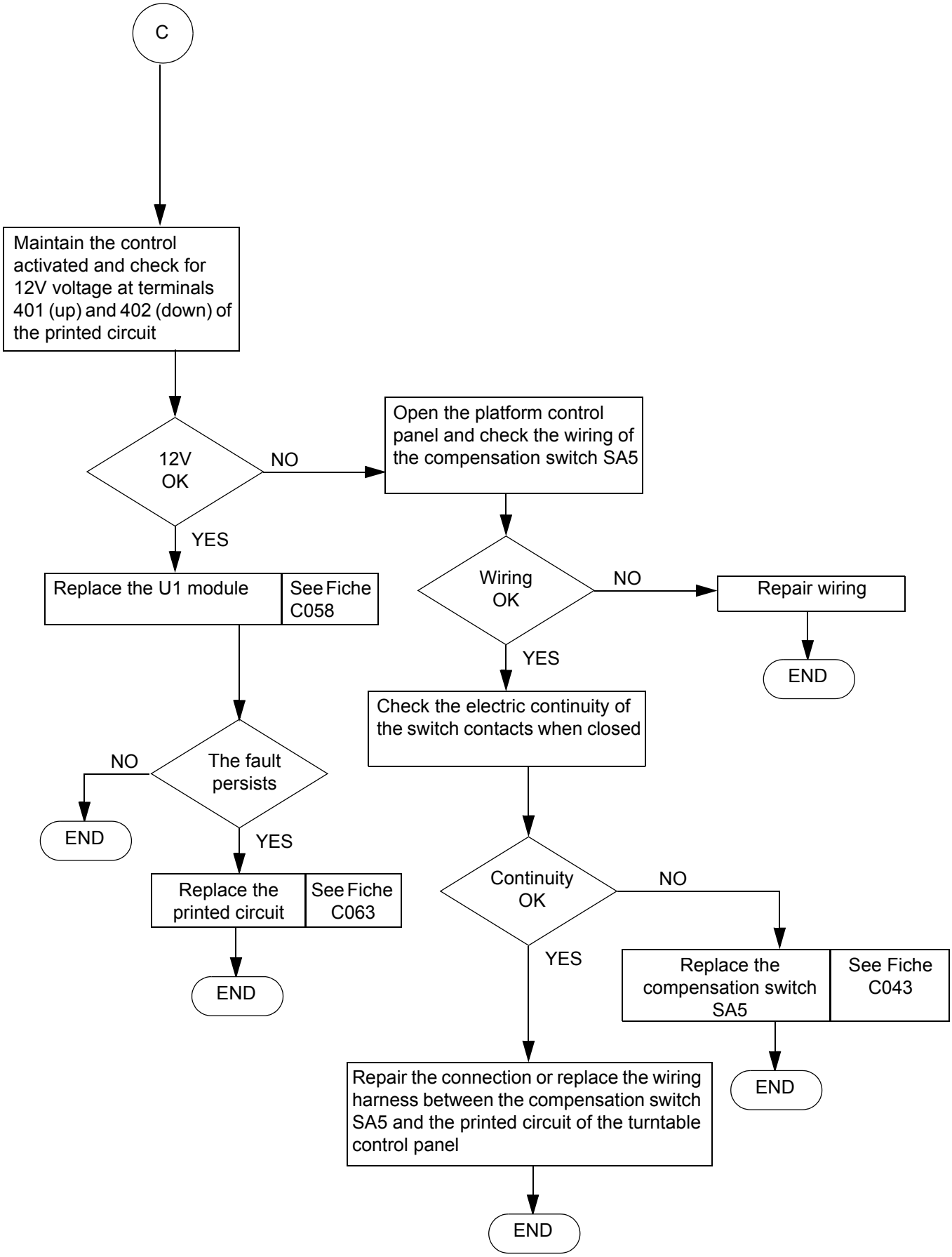

https://truckmanualshub.com/

Sheet DP026	BREAKDOWN DETECTION FLOW CHART	Folio 5/5
	NO COMPENSATION MOVEMENT (UP AND / OR DOWN)	

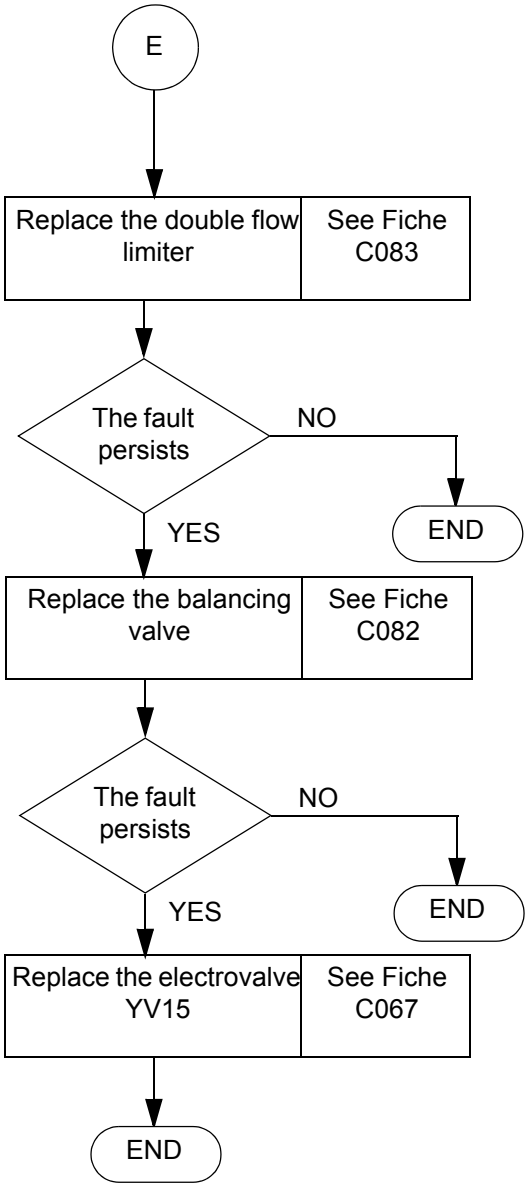

https://truckmanualshub.com/

https://truckmanualshub.com/

Sheet DP027	BREAKDOWN DETECTION FLOW CHART NO PLATFORM ROTATION MOVEMENT (RIGHT AND / OR LEFT)	Folio 1/5

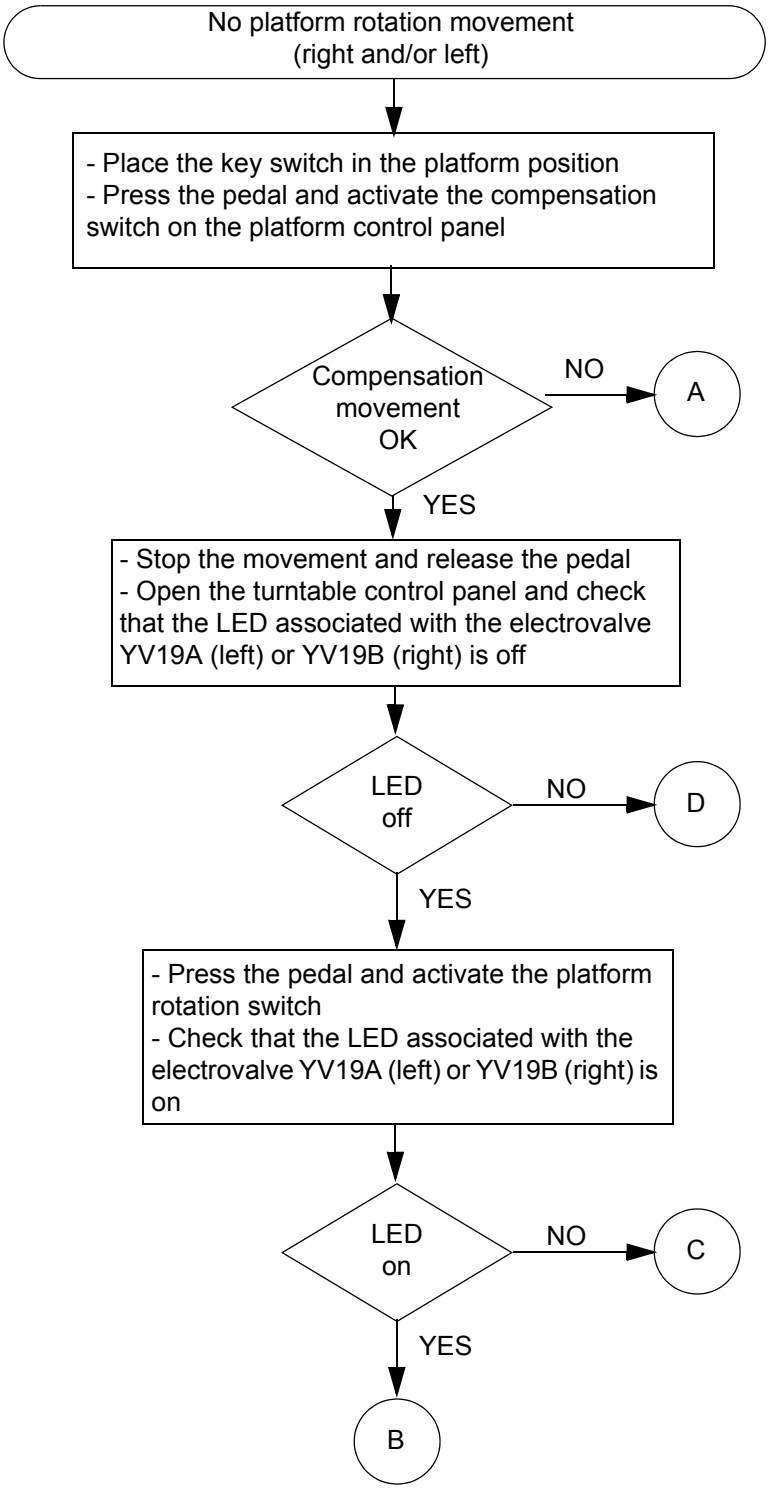

https://truckmanualshub.com/

Sheet DP027	BREAKDOWN DETECTION FLOW CHART	Folio 2/5
	NO PLATFORM ROTATION MOVEMENT (RIGHT AND / OR LEFT)	

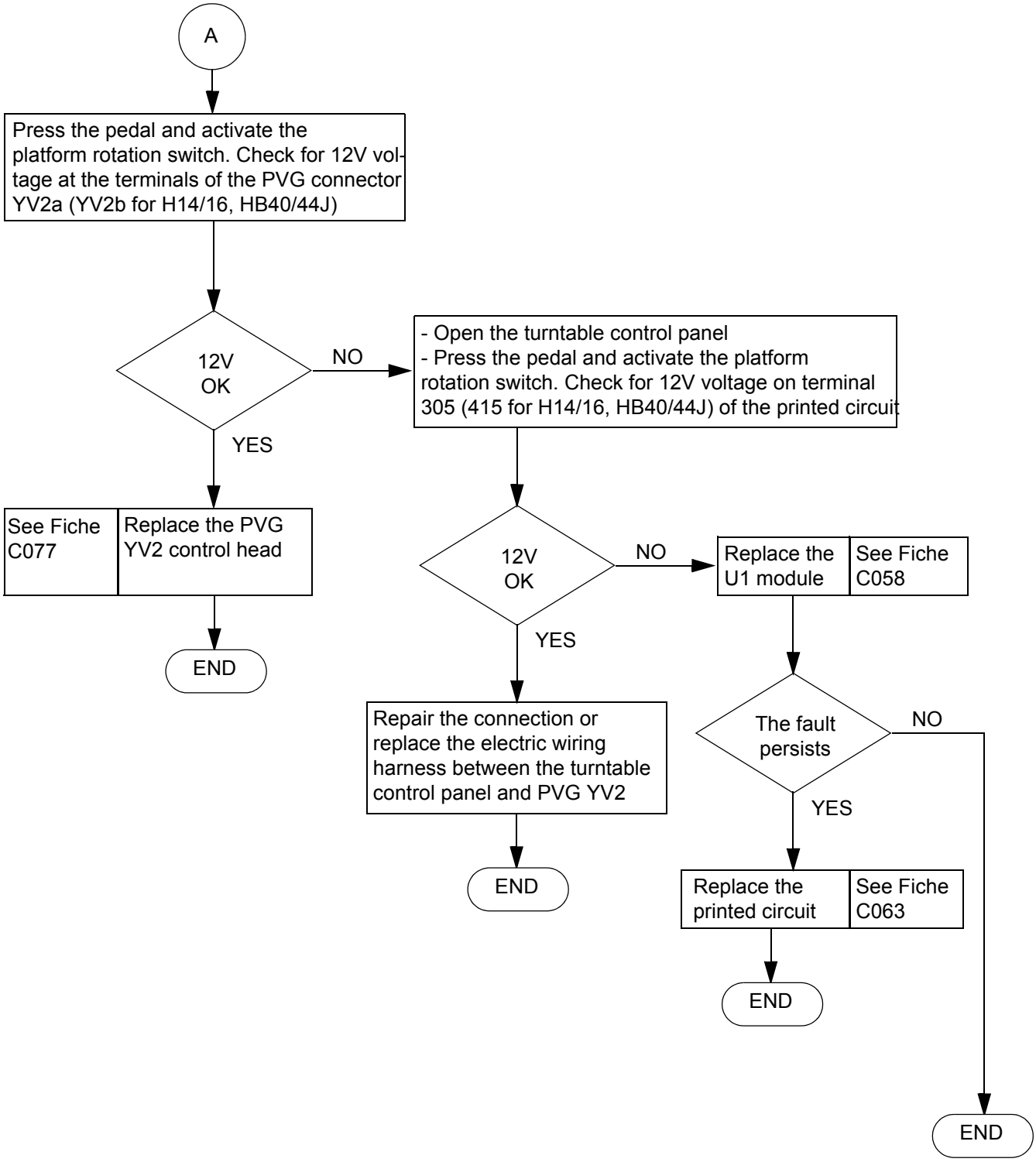

Sheet DP027	BREAKDOWN DETECTION FLOW CHART NO PLATFORM ROTATION MOVEMENT (RIGHT AND / OR LEFT)	Folio 3/5

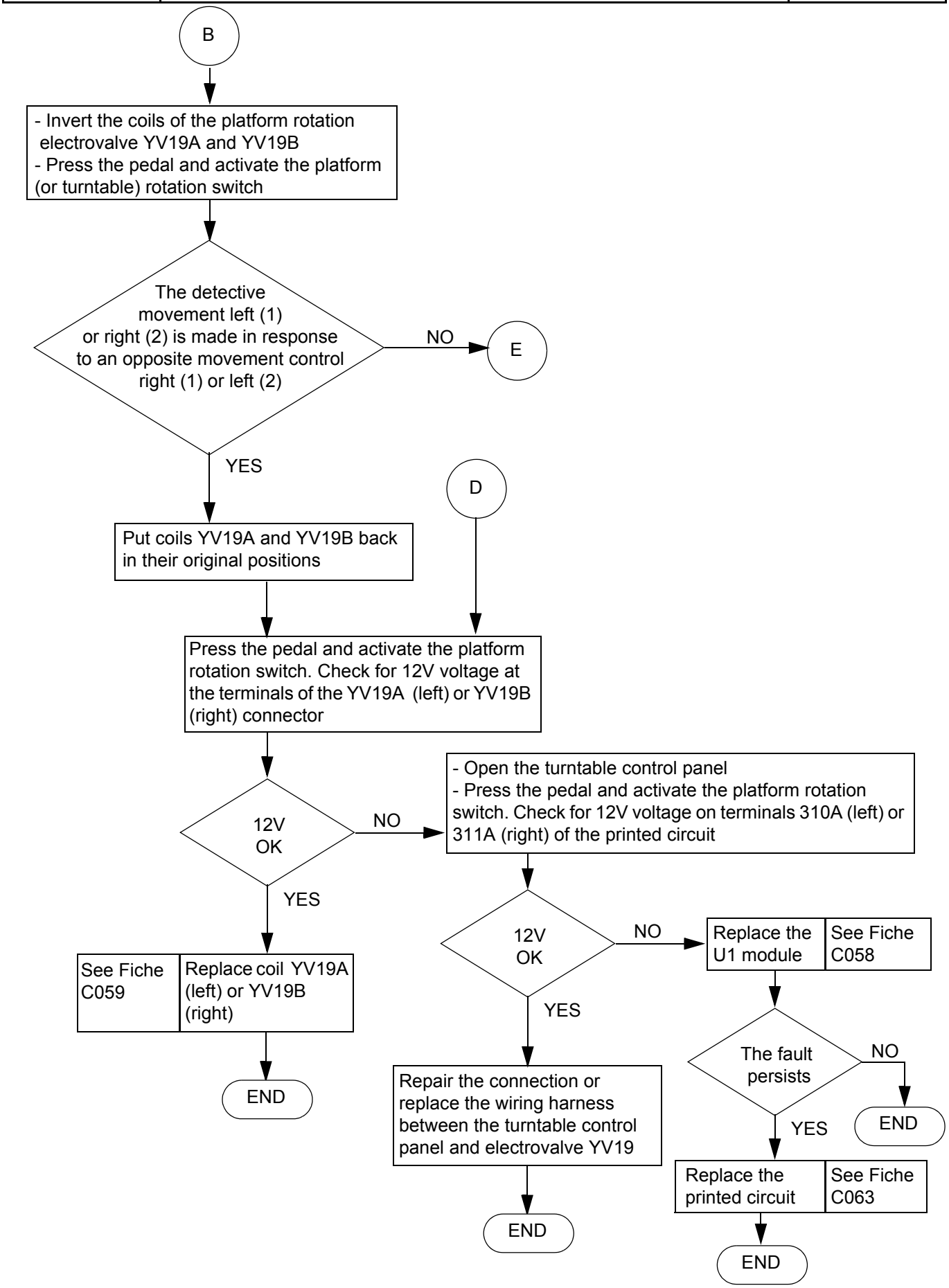

https://truckmanualshub.com/

Sheet DP027	BREAKDOWN DETECTION FLOW CHART NO PLATFORM ROTATION MOVEMENT (RIGHT AND / OR LEFT)	Folio 4/5

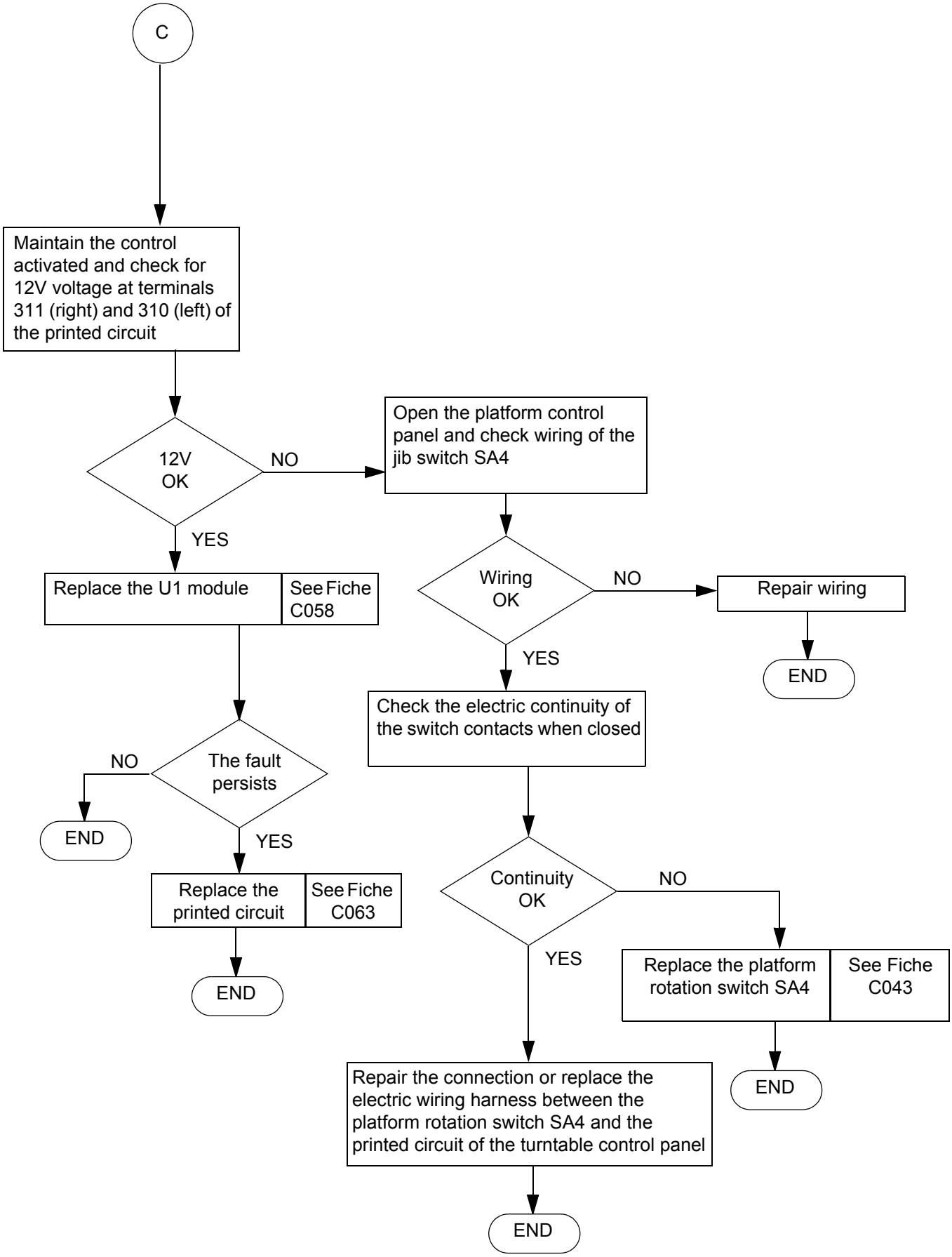

https://truckmanualshub.com/

Sheet DP027	BREAKDOWN DETECTION FLOW CHART	Folio 5/5
	NO PLATFORM ROTATION MOVEMENT (RIGHT AND / OR LEFT)	

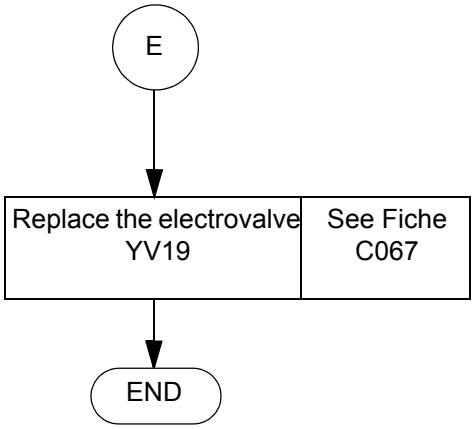

https://truckmanualshub.com/

https://truckmanualshub.com/

Sheet DP028	BREAKDOWN DETECTION FLOW CHART NO JIB MOVEMENT (UP AND / OR DOWN) FROM THE PLATFORM (OR TURNTABLE) CONTROL PANEL	Folio 1/5

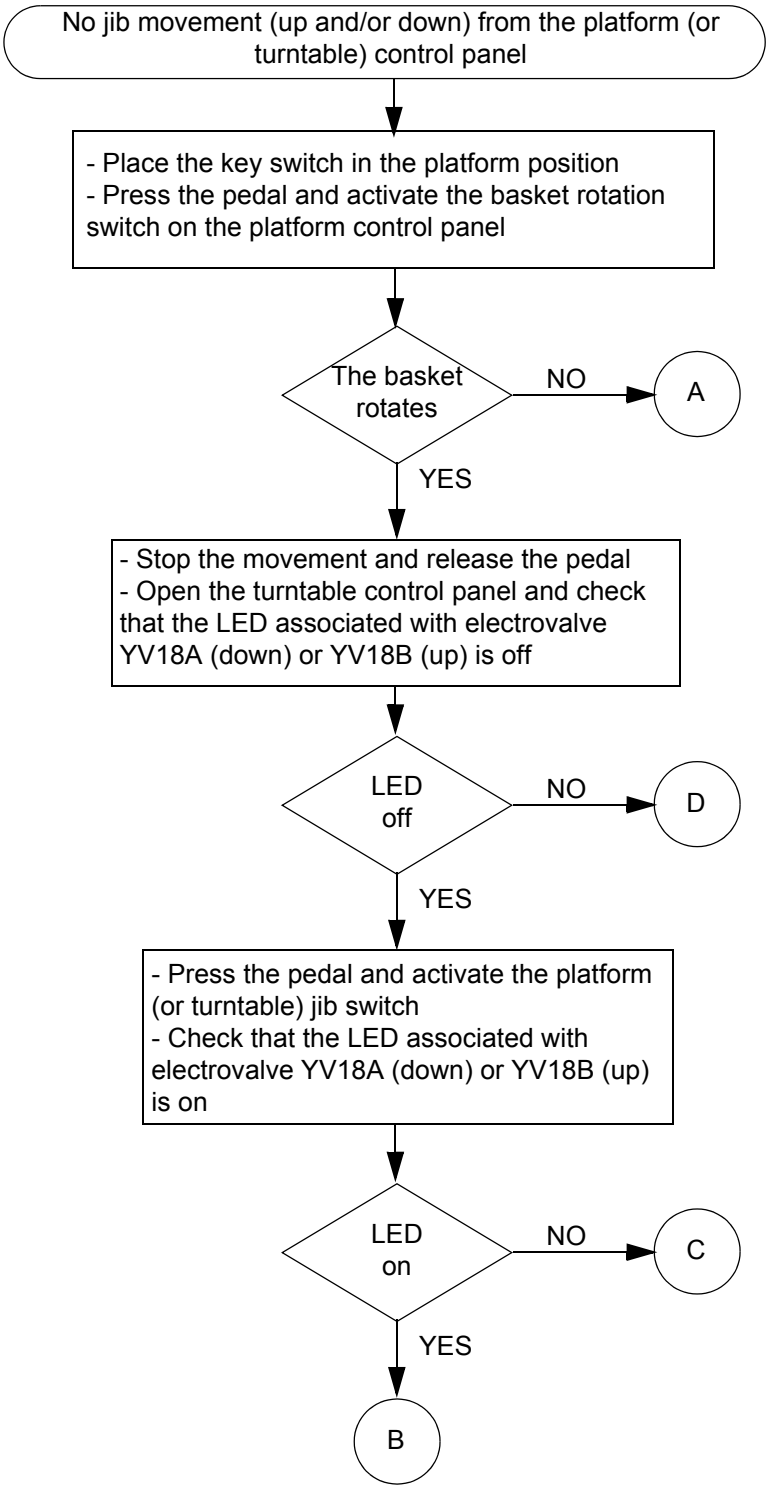

https://truckmanualshub.com/

Sheet DP028	BREAKDOWN DETECTION FLOW CHART NO JIB MOVEMENT (UP AND / OR DOWN) FROM THE PLATFORM (OR TURNTABLE) CONTROL PANEL	Folio 2/5

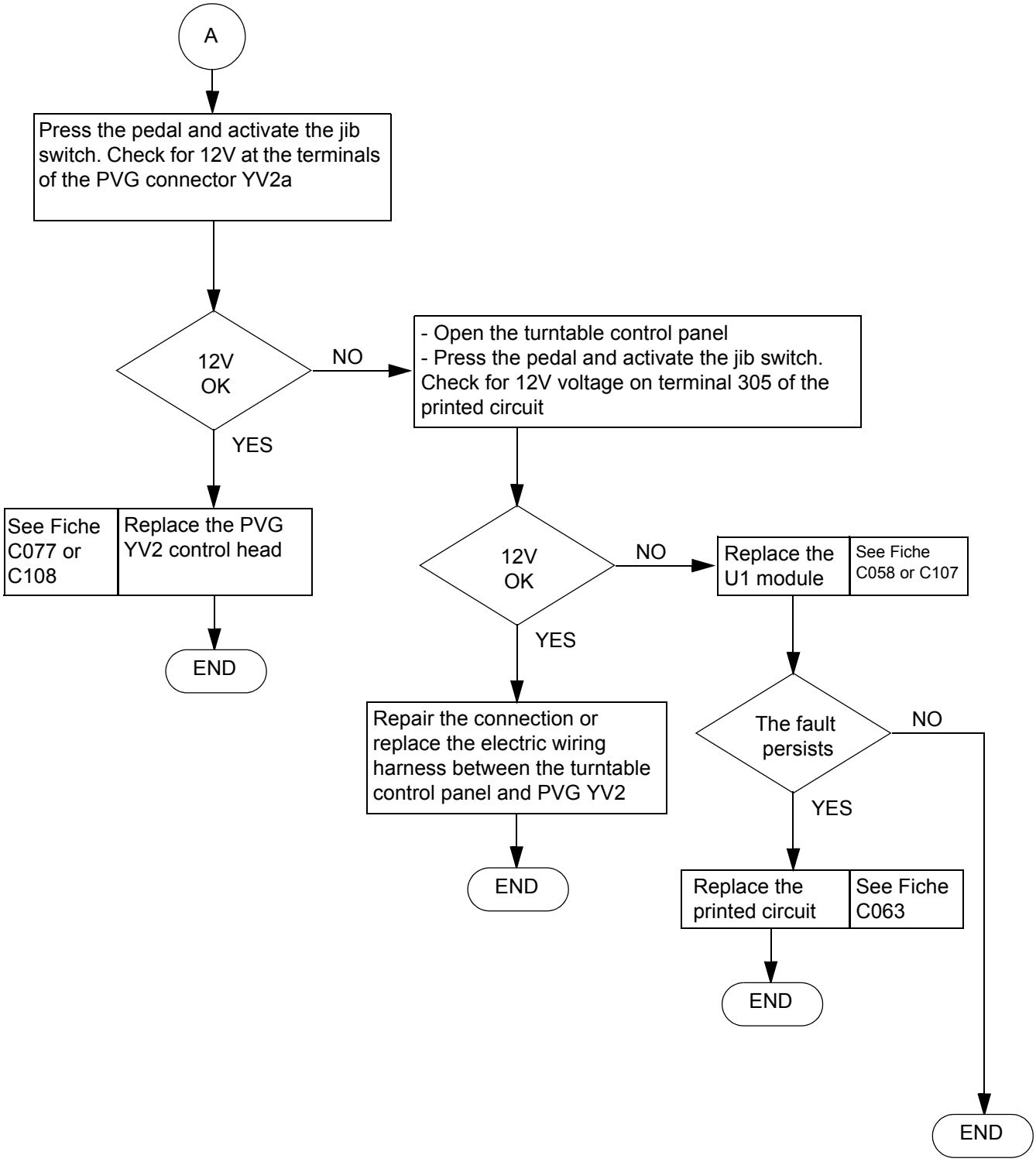

Sheet DP028	BREAKDOWN DETECTION FLOW CHART NO JIB MOVEMENT (UP AND / OR DOWN) FROM THE PLATFORM (OR TURNTABLE) CONTROL PANEL	Folio 3/5

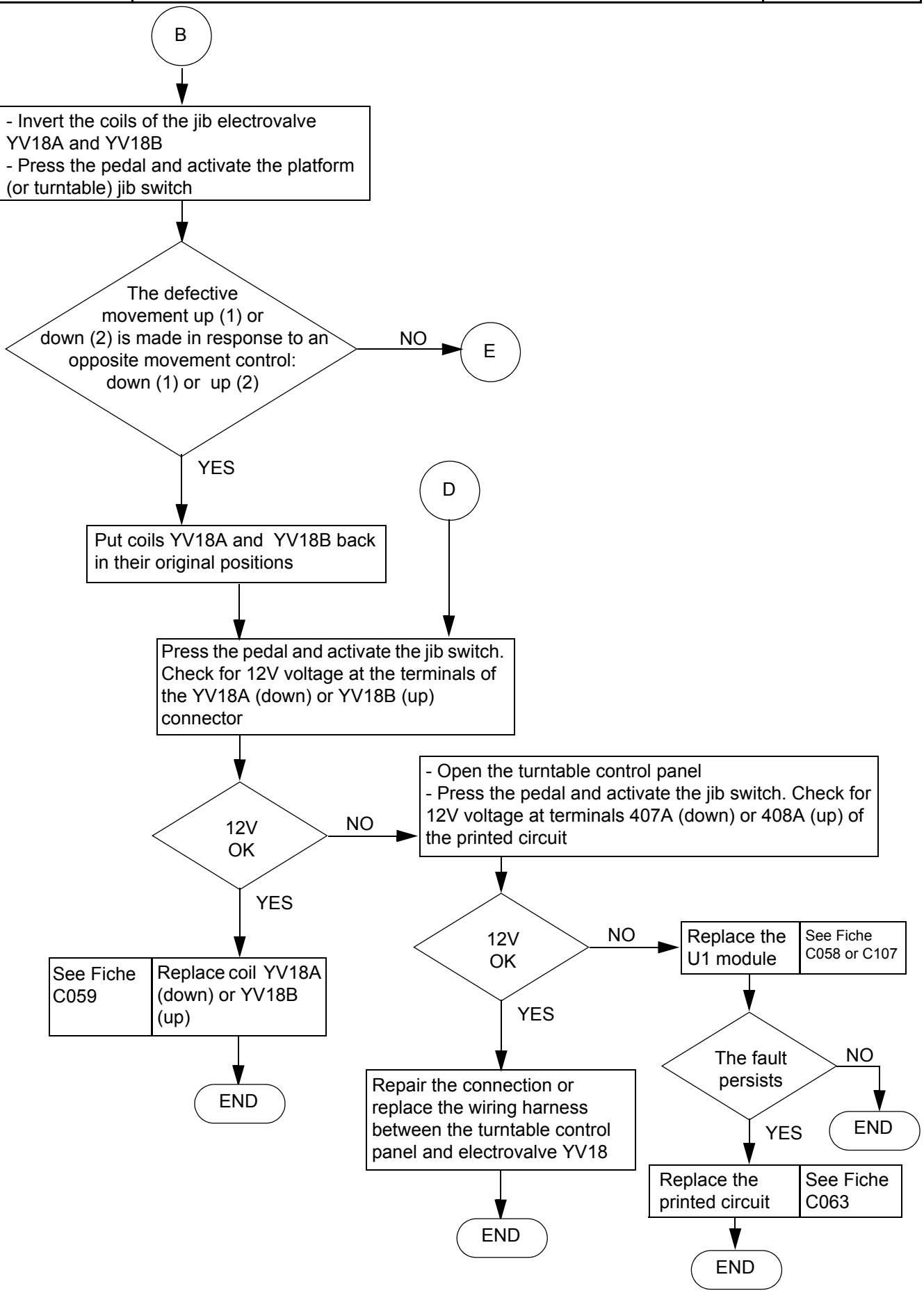

Sheet DP028	BREAKDOWN DETECTION FLOW CHART NO JIB MOVEMENT (UP AND / OR DOWN) FROM THE PLATFORM (OR TURNTABLE) CONTROL PANEL	Folio 4/5

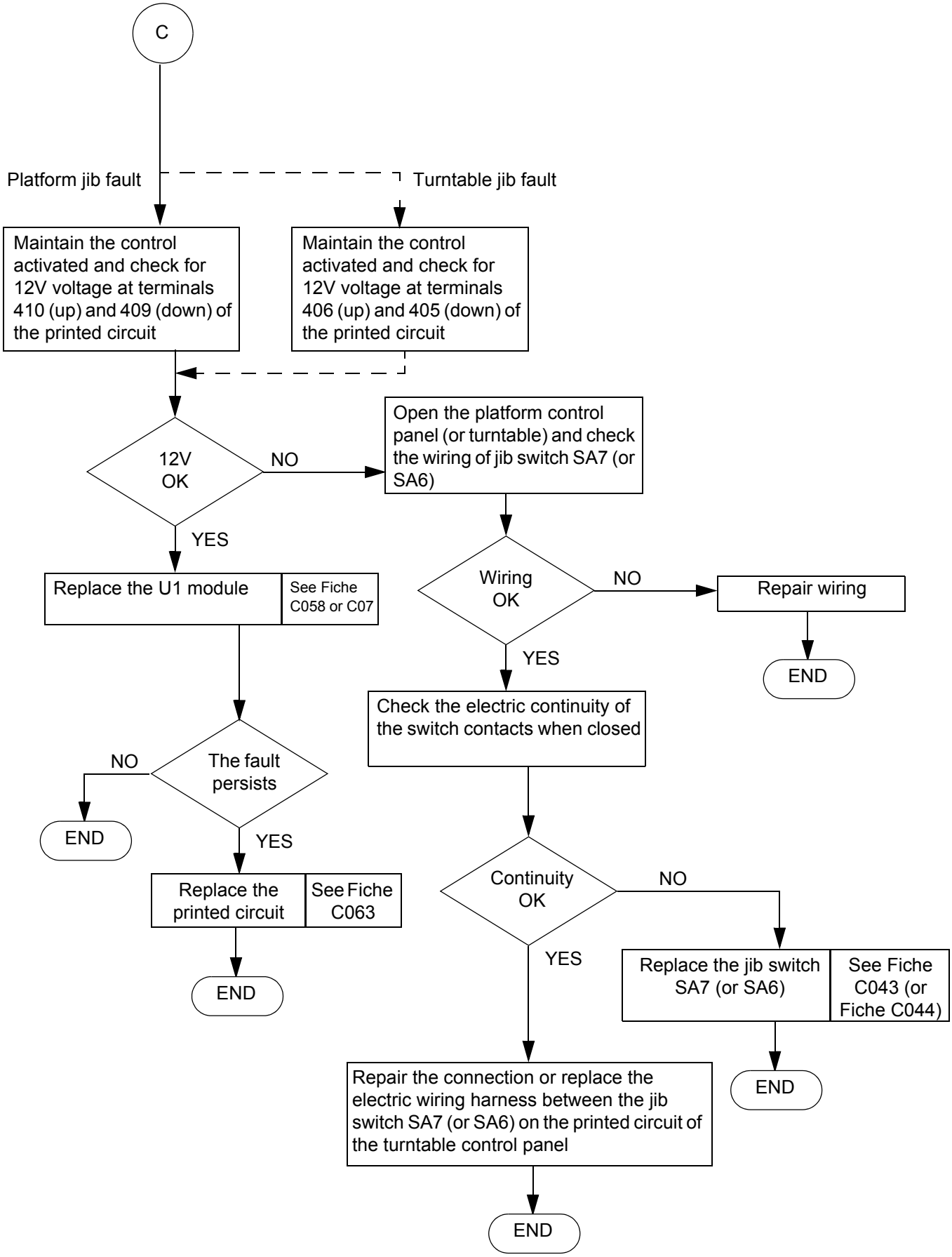

https://truckmanualshub.com/

Sheet DP028	BREAKDOWN DETECTION FLOW CHART NO JIB MOVEMENT (UP AND / OR DOWN) FROM THE PLATFORM (OR TURNTABLE) CONTROL PANEL	Folio 5/5

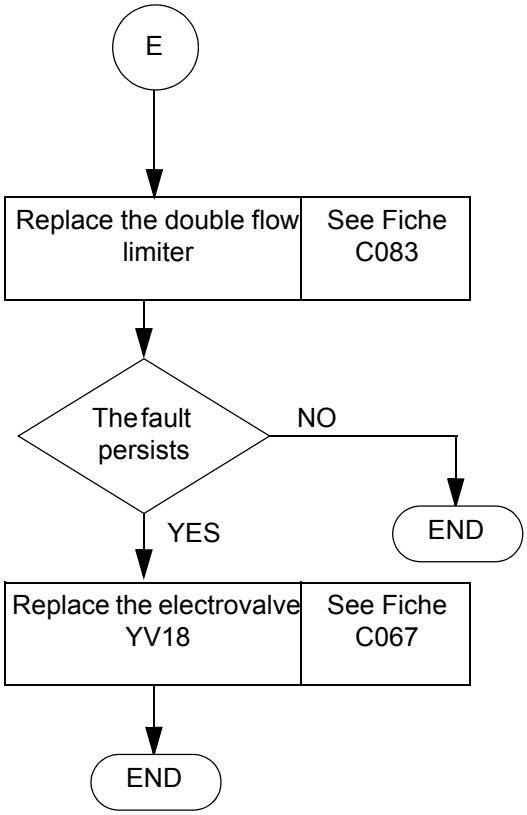

https://truckmanualshub.com/

Sheet DP029	BREAKDOWN DETECTION FLOW CHART NO TELESCOPING MOVEMENT (OUT AND / OR IN) FROM THE PLATFORM (OR TURNTABLE) CONTROL PANEL	Folio 1/5

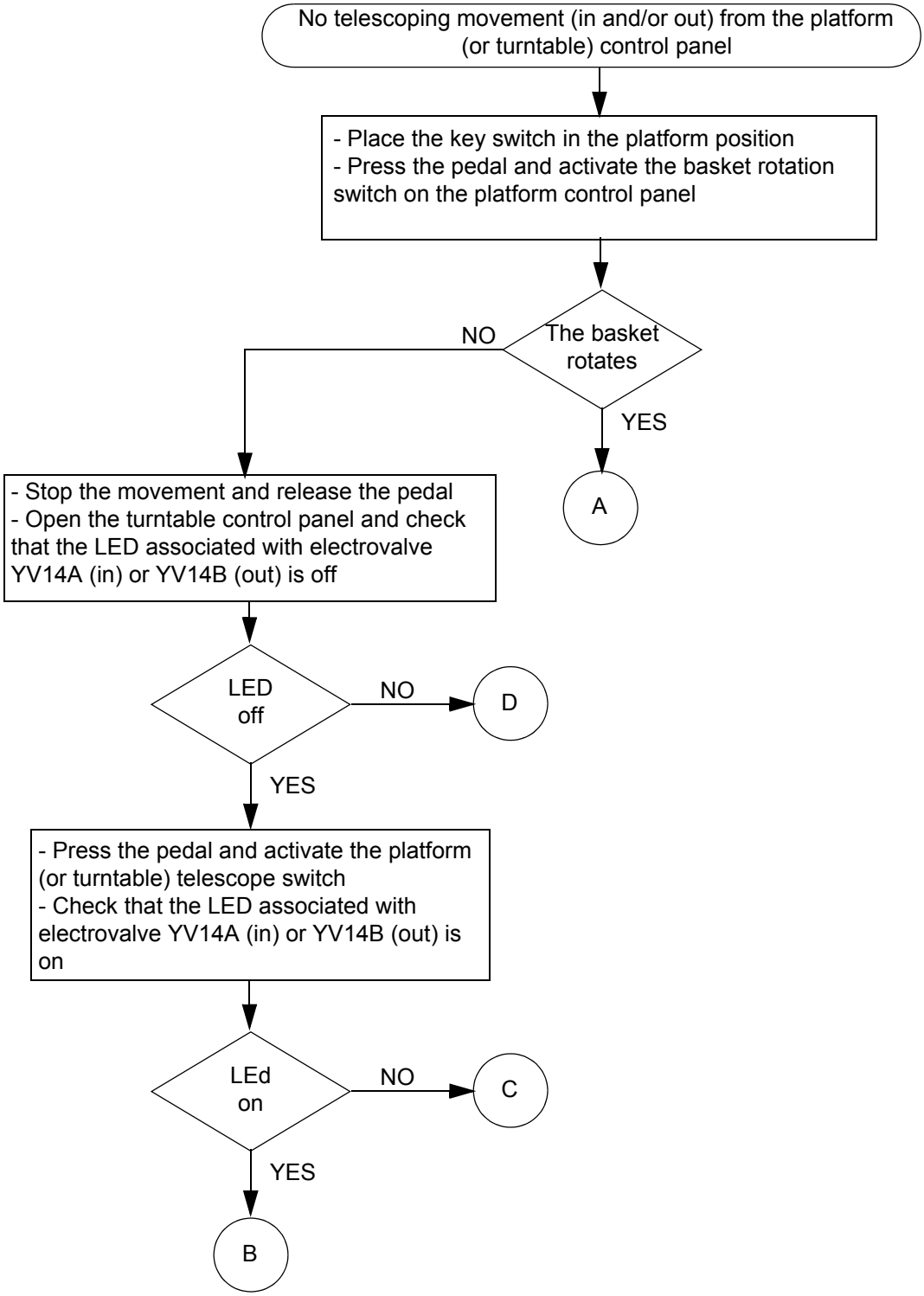

https://truckmanualshub.com/

Sheet DP029	BREAKDOWN DETECTION FLOW CHART NO TELESCOPING MOVEMENT (OUT AND / OR IN) FROM THE PLATFORM (OR TURNTABLE) CONTROL PANEL	Folio 2/5

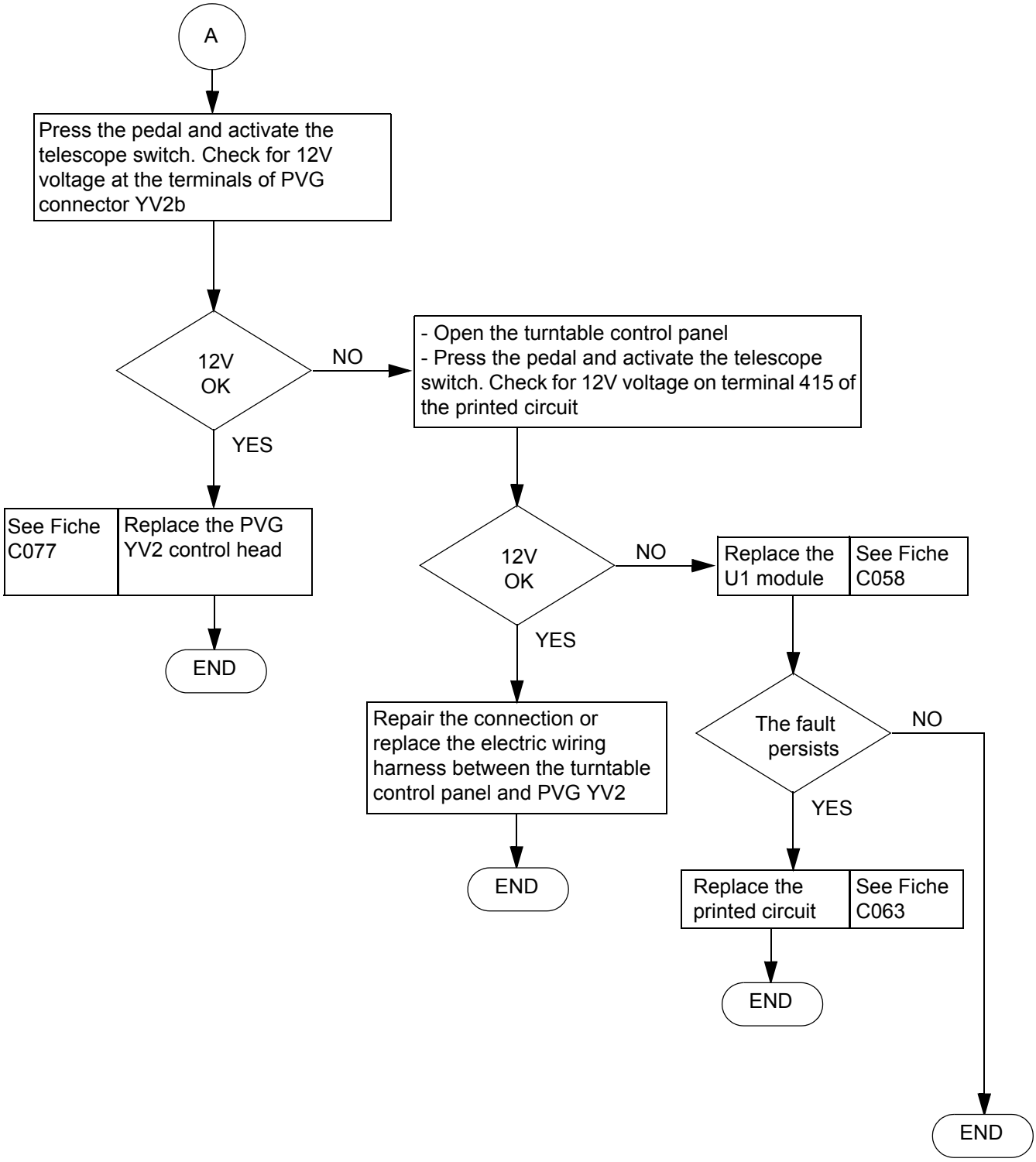

Sheet DP029	BREAKDOWN DETECTION FLOW CHART NO TELESCOPING MOVEMENT (OUT AND / OR IN) FROM THE PLATFORM (OR TURNTABLE) CONTROL PANEL	Folio 3/5

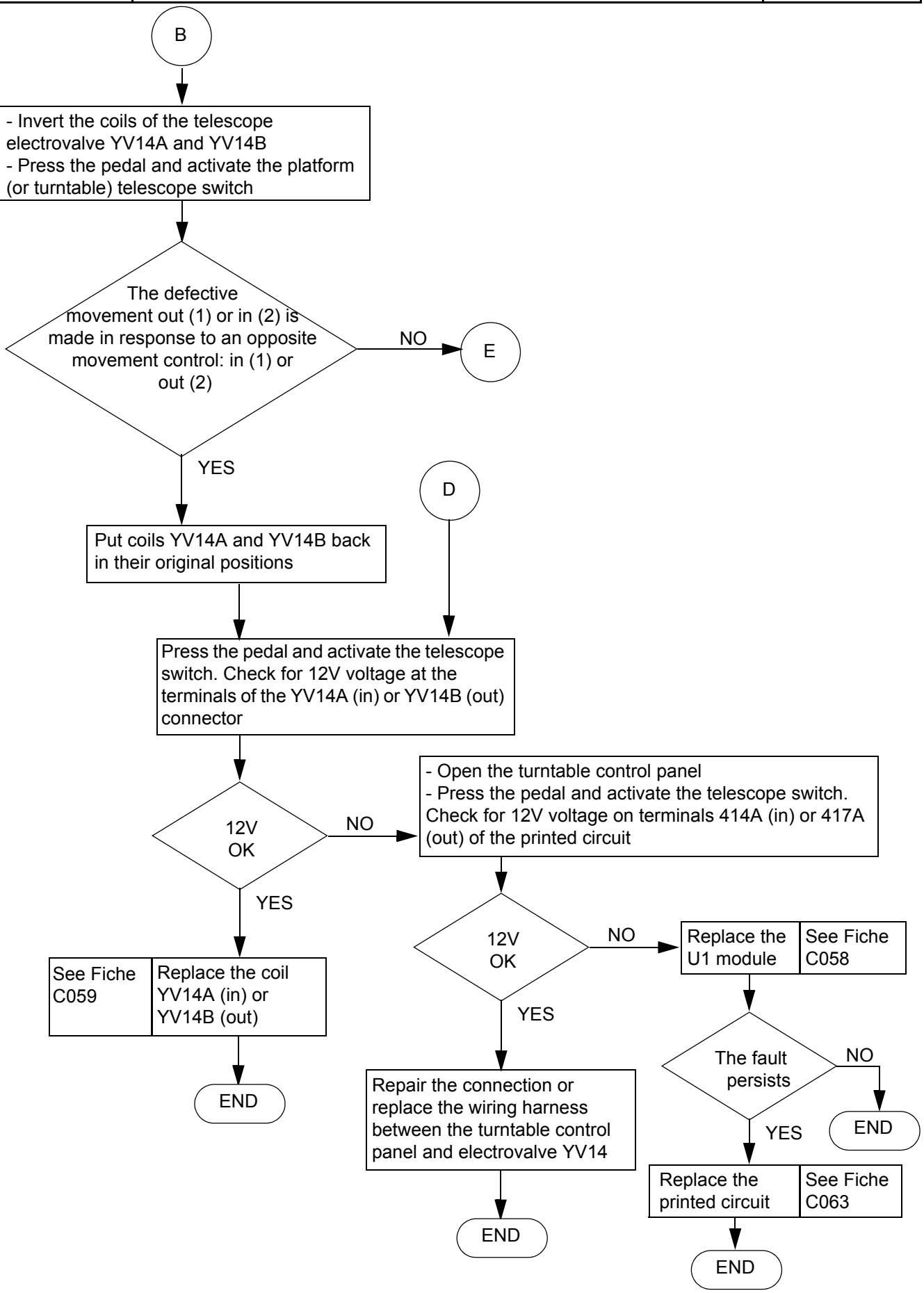

https://truckmanualshub.com/

Sheet DP029	BREAKDOWN DETECTION FLOW CHART NO TELESCOPING MOVEMENT (OUT AND / OR IN) FROM THE PLATFORM (OR TURNTABLE) CONTROL PANEL	Folio 4/5

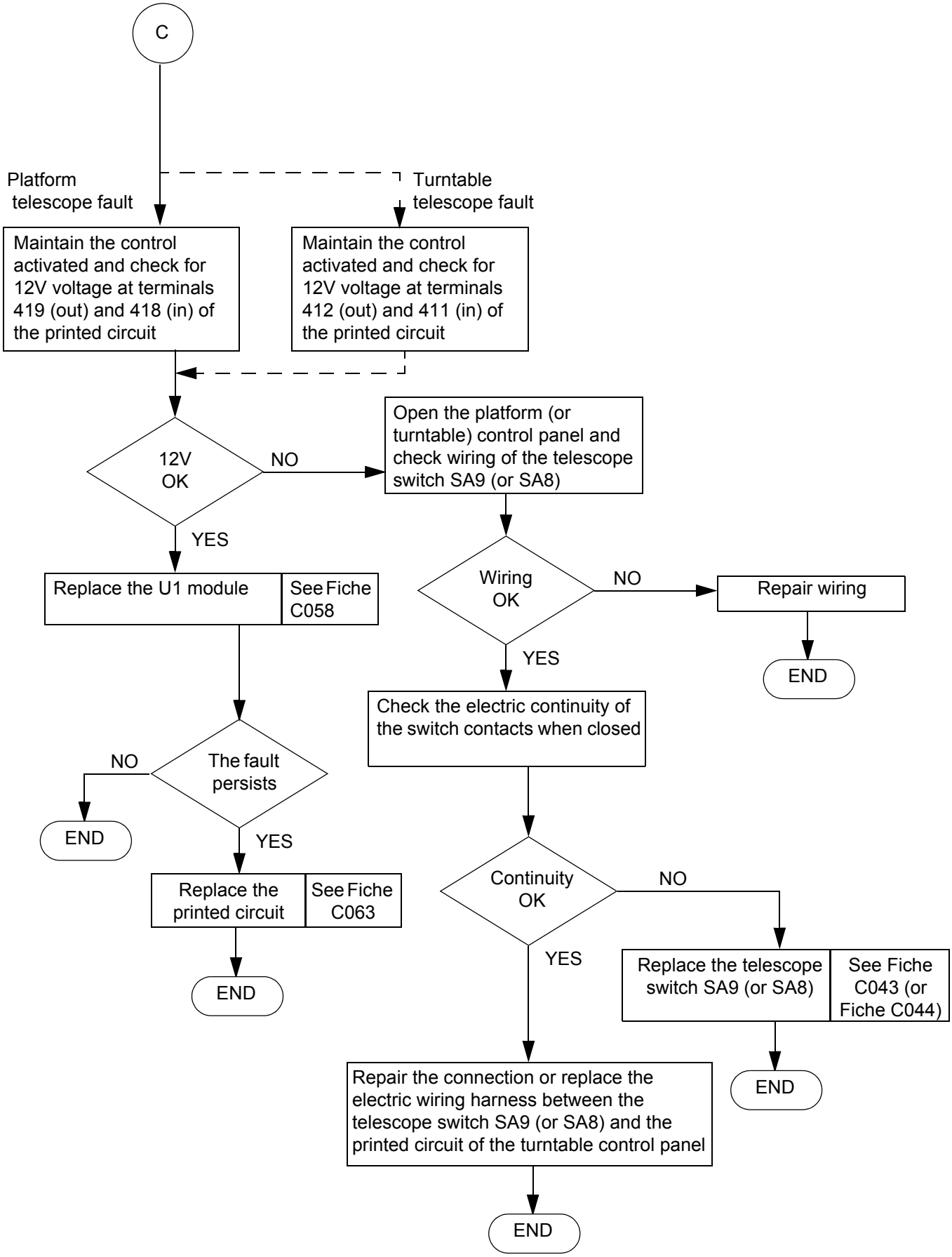

https://truckmanualshub.com/

Sheet DP029	BREAKDOWN DETECTION FLOW CHART NO TELESCOPING MOVEMENT (OUT AND / OR IN) FROM THE PLATFORM (OR TURNTABLE) CONTROL PANEL	Folio 5/5

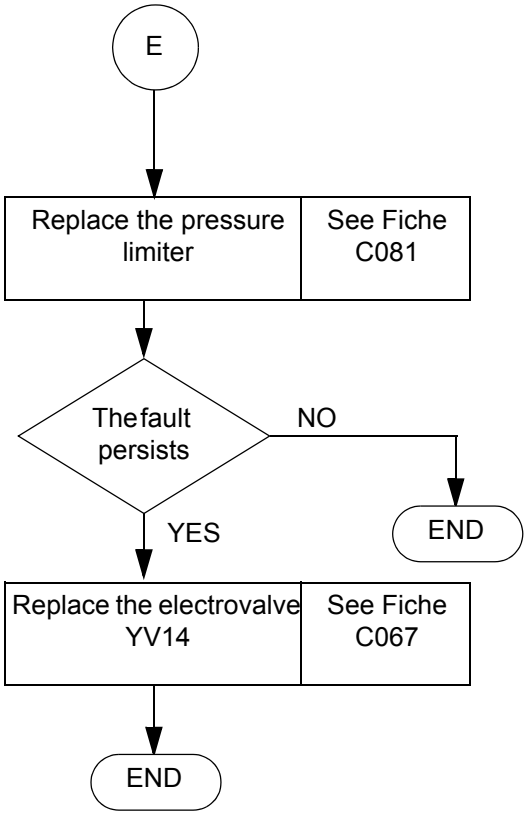

https://truckmanualshub.com/

https://truckmanualshub.com/

Sheet DP030	BREAKDOWN DETECTION FLOW CHART NO BOOM LIFTING MOVEMENT (UP AND / OR DOWN) FROM THE PLATFORM (OR TURNTABLE) CONTROL PANEL	Folio 1/3

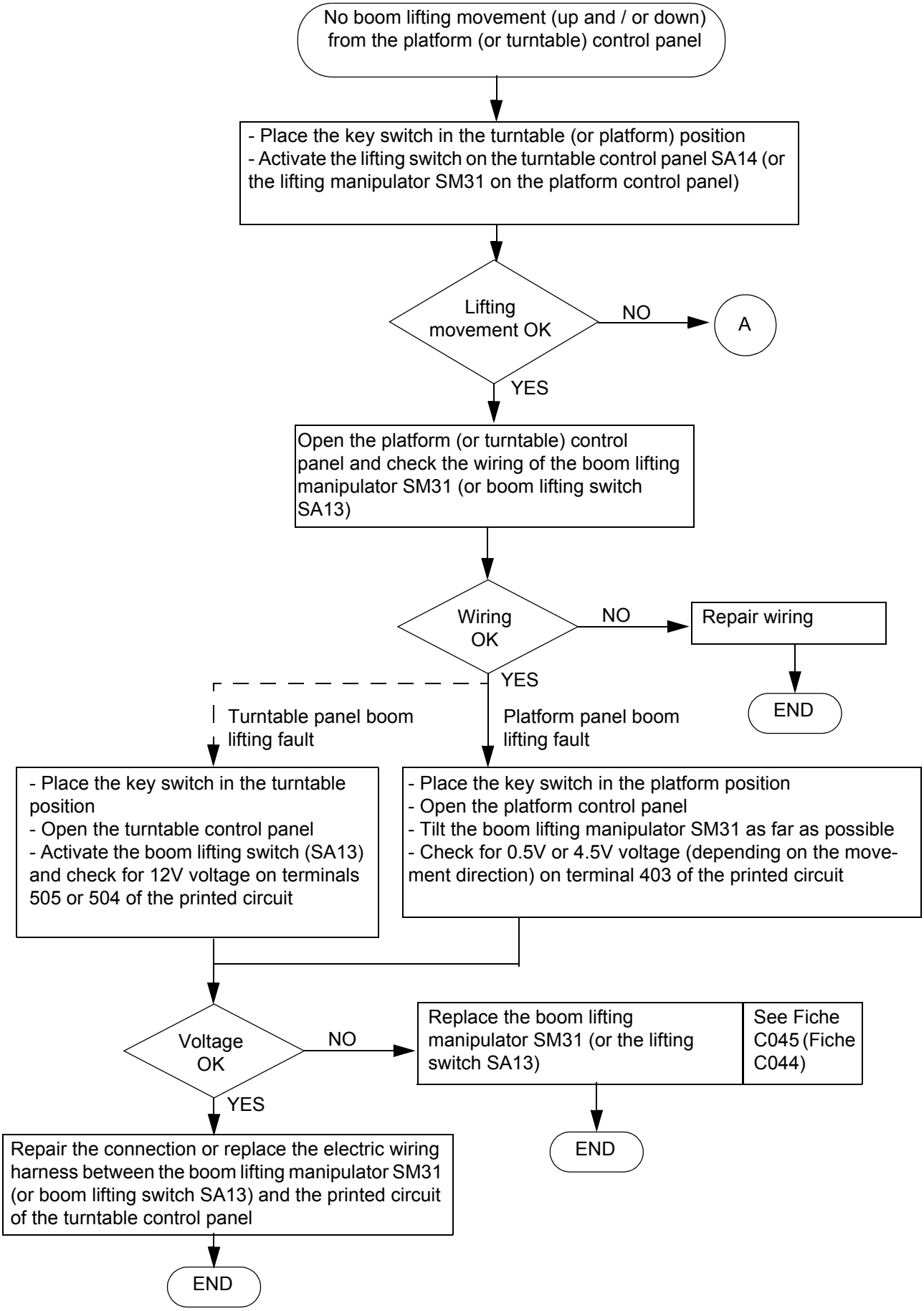

https://truckmanualshub.com/

Sheet DP030	BREAKDOWN DETECTION FLOW CHART NO BOOM LIFTING MOVEMENT (UP AND / OR DOWN) FROM THE PLATFORM (OR TURNTABLE) CONTROL PANEL	Folio 2/3

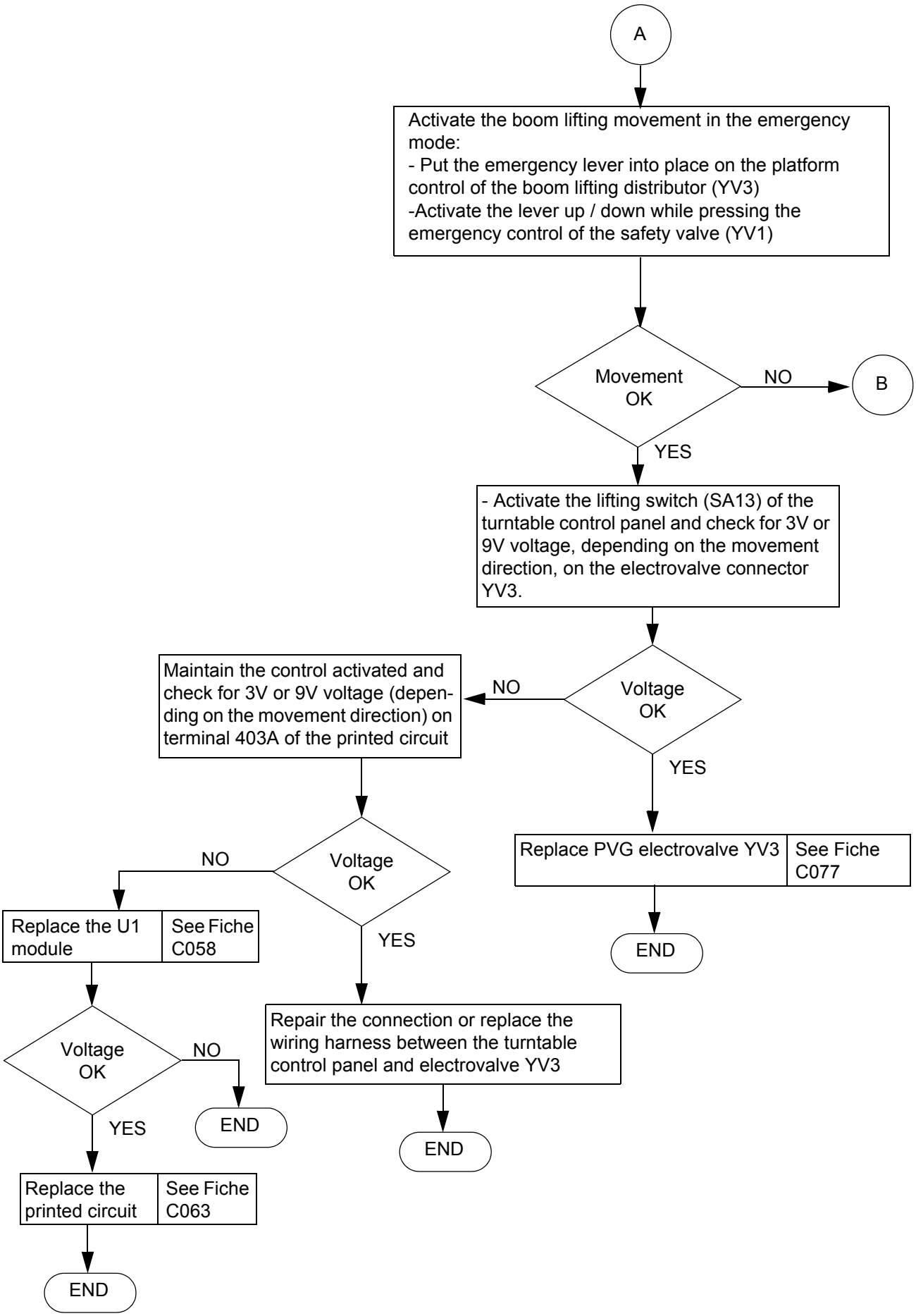

https://truckmanualshub.com/

Sheet DP030	BREAKDOWN DETECTION FLOW CHART NO BOOM LIFTING MOVEMENT (UP AND / OR DOWN) FROM THE PLATFORM (OR TURNTABLE) CONTROL PANEL	Folio 3/3

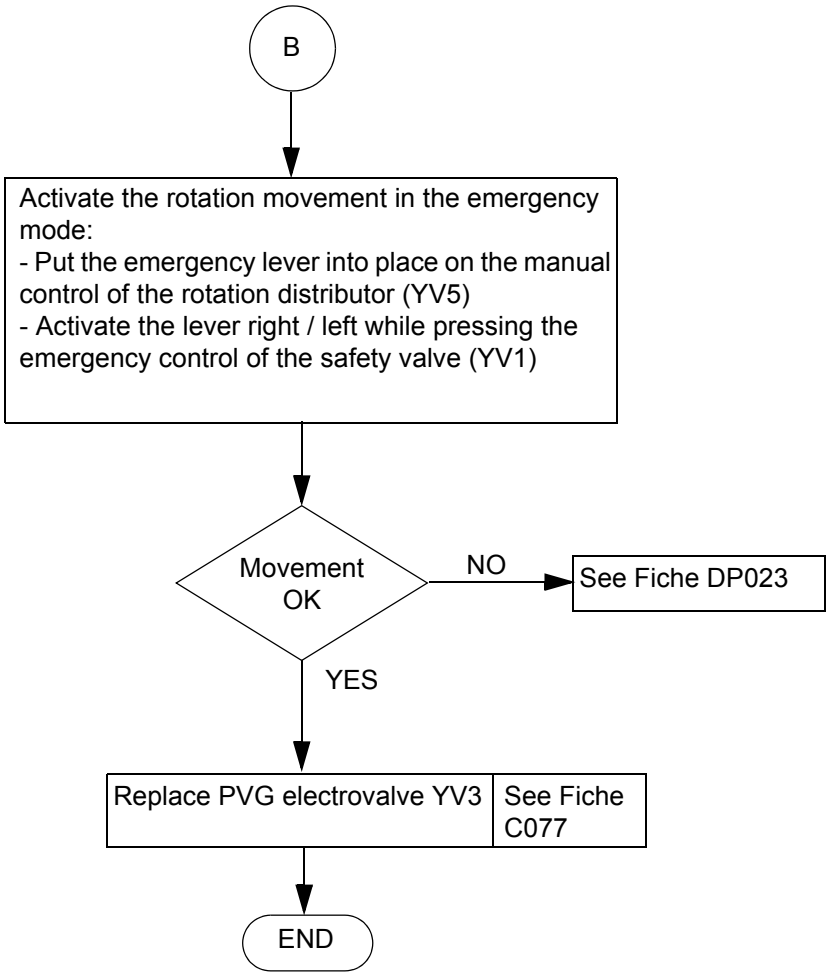

https://truckmanualshub.com/

https://truckmanualshub.com/

Sheet DP031	BREAKDOWN DETECTION FLOW CHART NO ARM LIFTING MOVEMENT (UP AND / OR DOWN) FROM THE PLATFORM (OR TURNTABLE) CONTROL PANEL	Folio 1/3

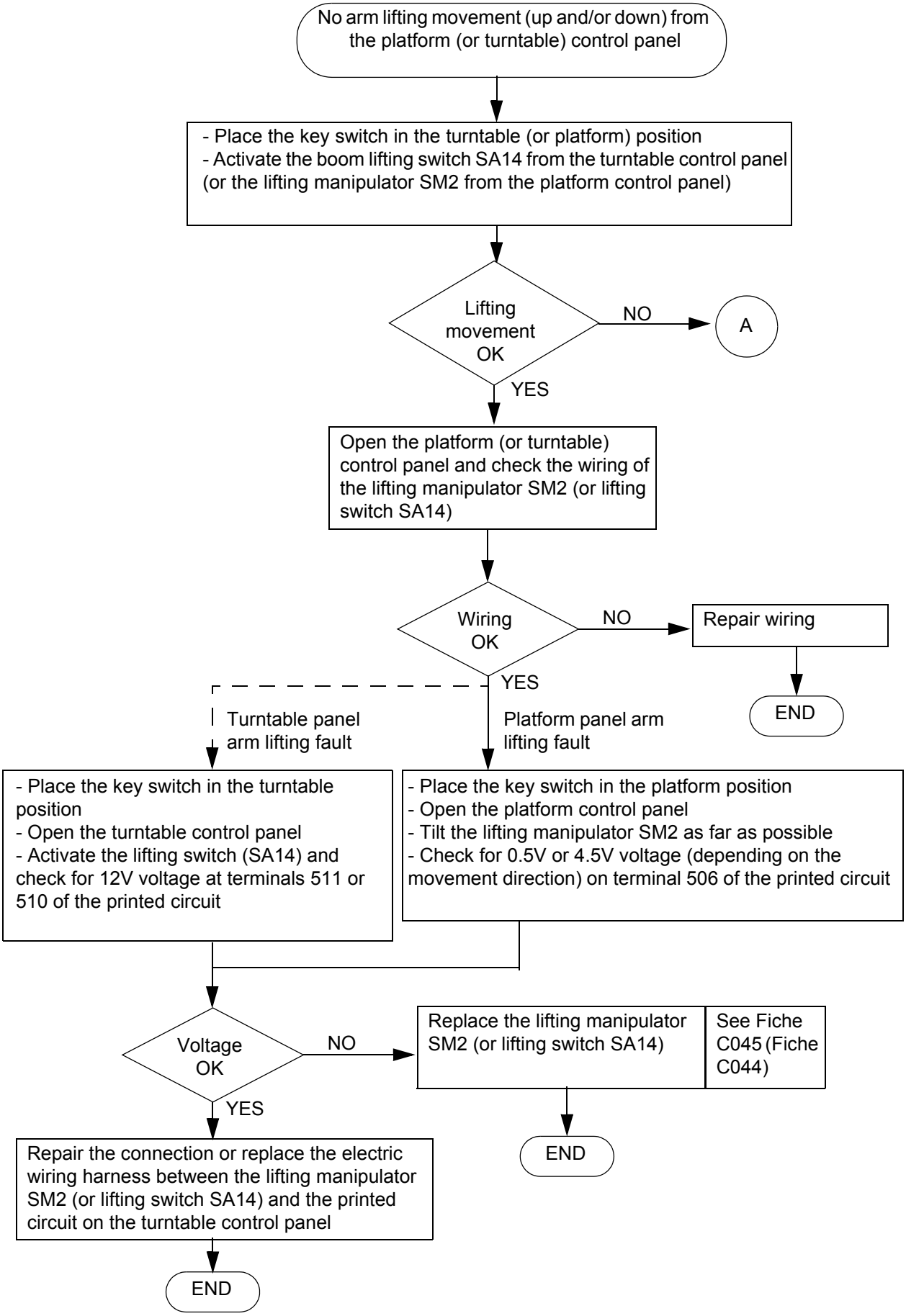

https://truckmanualshub.com/

Sheet DP031	BREAKDOWN DETECTION FLOW CHART NO ARM LIFTING MOVEMENT (UP AND / OR DOWN) FROM THE PLATFORM (OR TURNTABLE) CONTROL PANEL	Folio 2/3

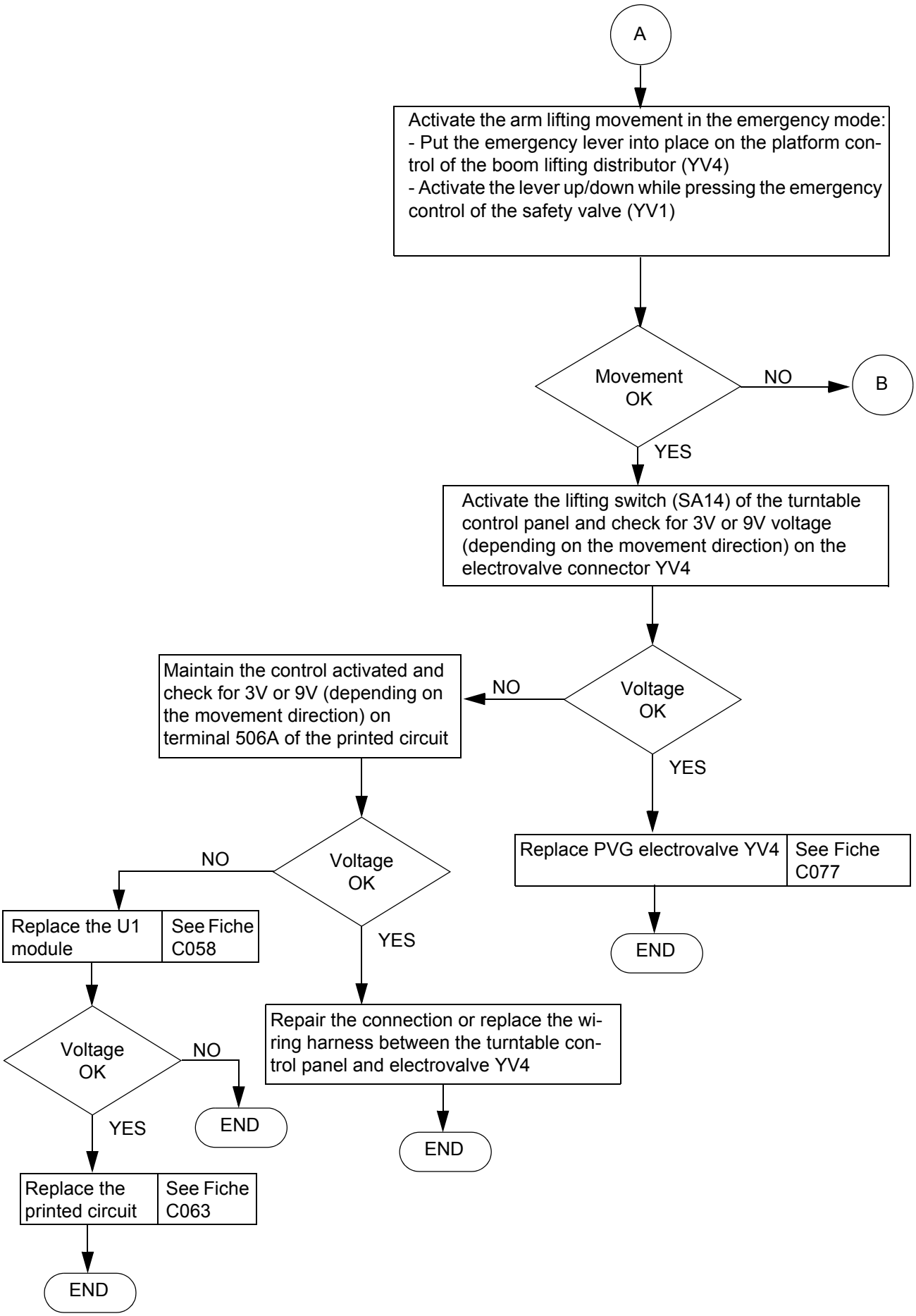

Sheet DP031	BREAKDOWN DETECTION FLOW CHART NO ARM LIFTING MOVEMENT (UP AND / OR DOWN) FROM THE PLATFORM (OR TURNTABLE) CONTROL PANEL	Folio 3/3

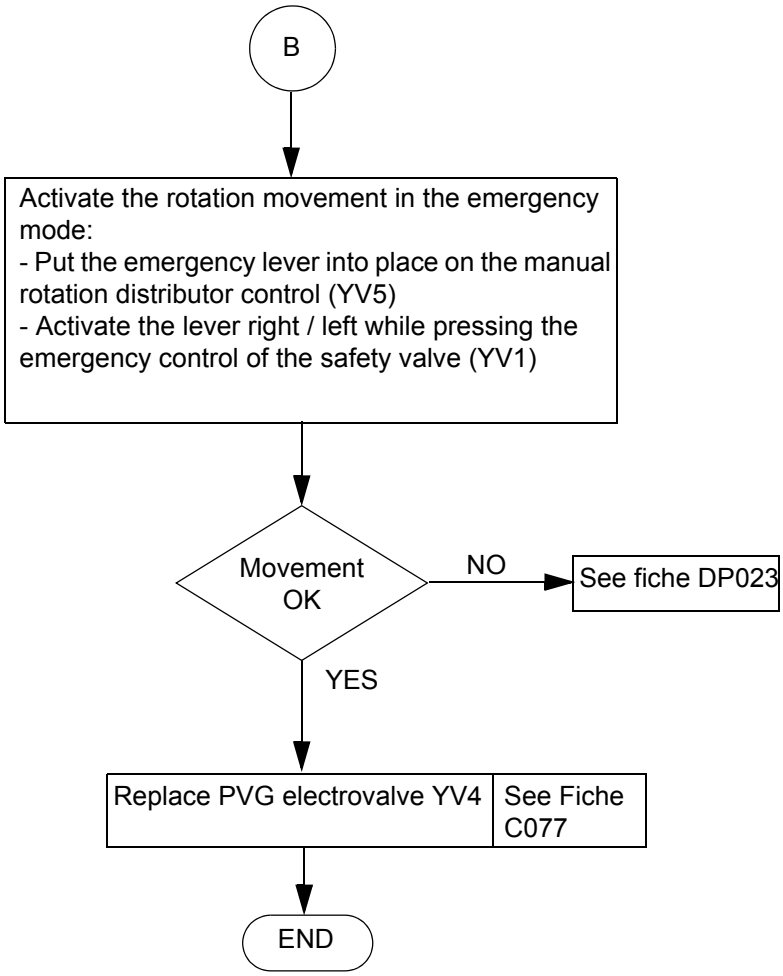

https://truckmanualshub.com/

https://truckmanualshub.com/

Sheet DP035	BREAKDOWN DETECTION FLOW CHART	Folio 1/1
	SUDDEN STOP OF TRAVEL MOVEMENT DURING A PLATFORM LIFTING OPERATION	

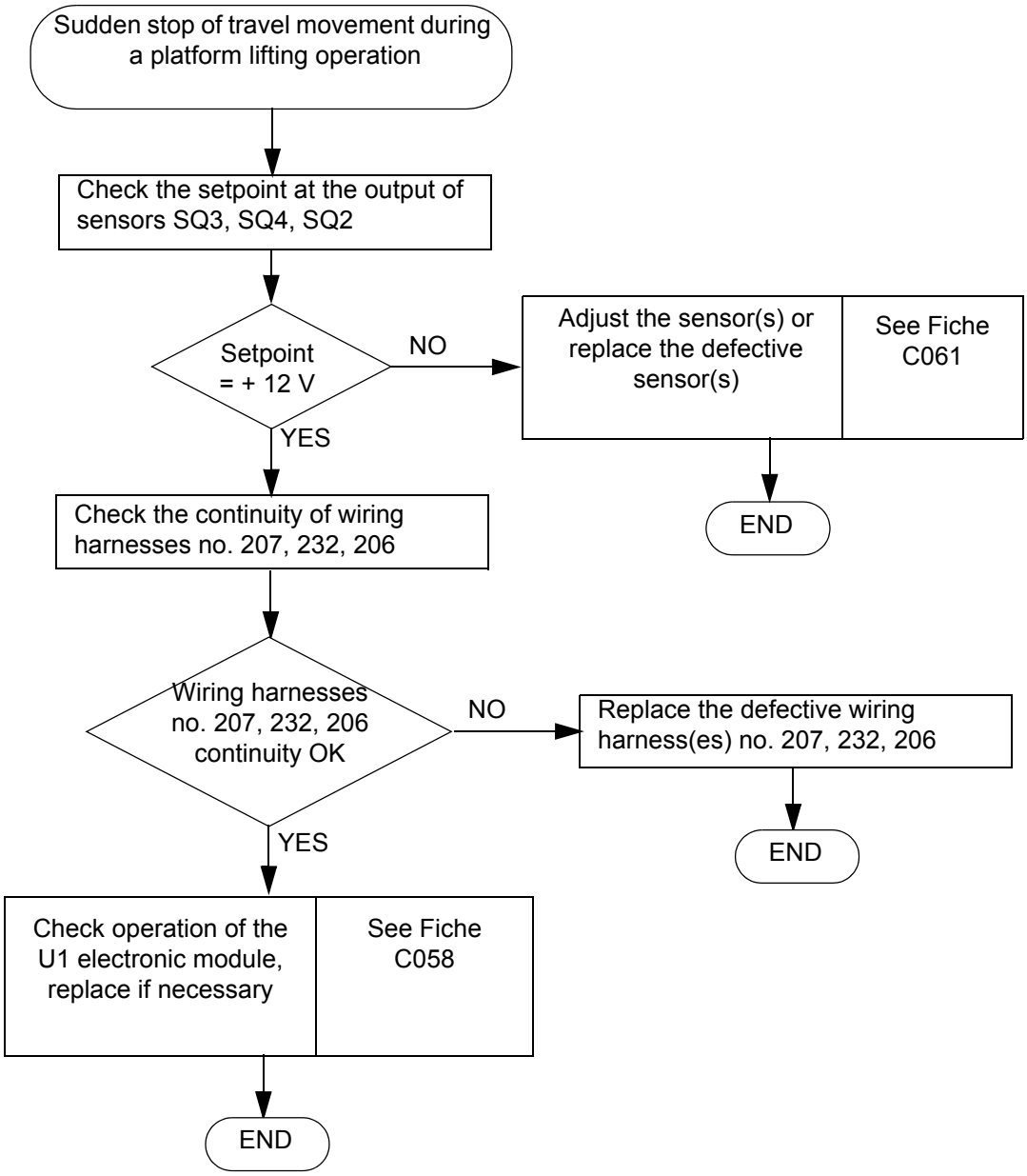

https://truckmanualshub.com/

https://truckmanualshub.com/

Sheet DP037	BREAKDOWN DETECTION FLOW CHART	Folio 1/4
	NO STEERING MOVEMENT (RIGHT AND/OR LEFT) ON THE FRONT AXLE	

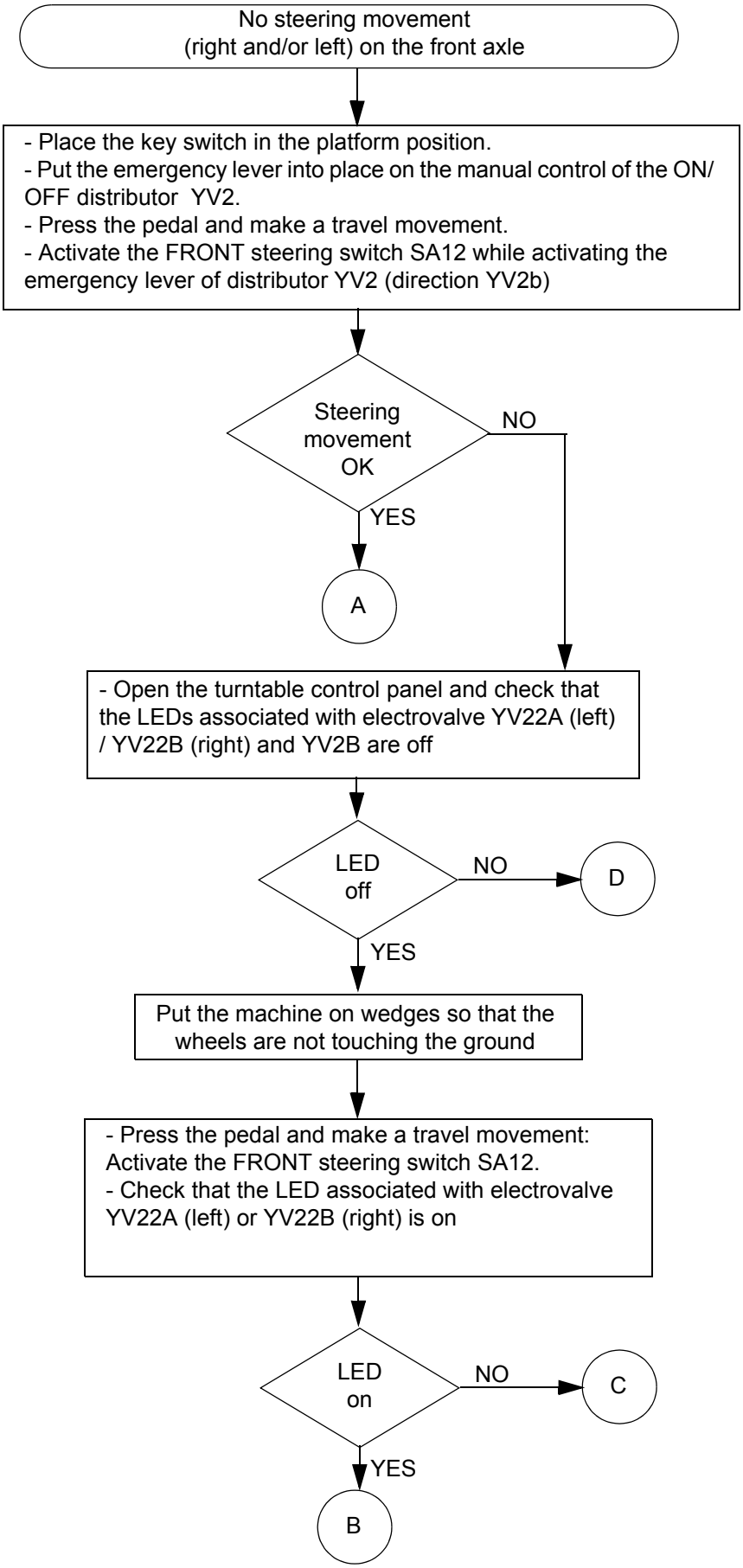

https://truckmanualshub.com/

Sheet DP037	BREAKDOWN DETECTION FLOW CHART NO STEERING MOVEMENT (RIGHT AND/OR LEFT) ON THE FRONT AXLE	Folio 2/4

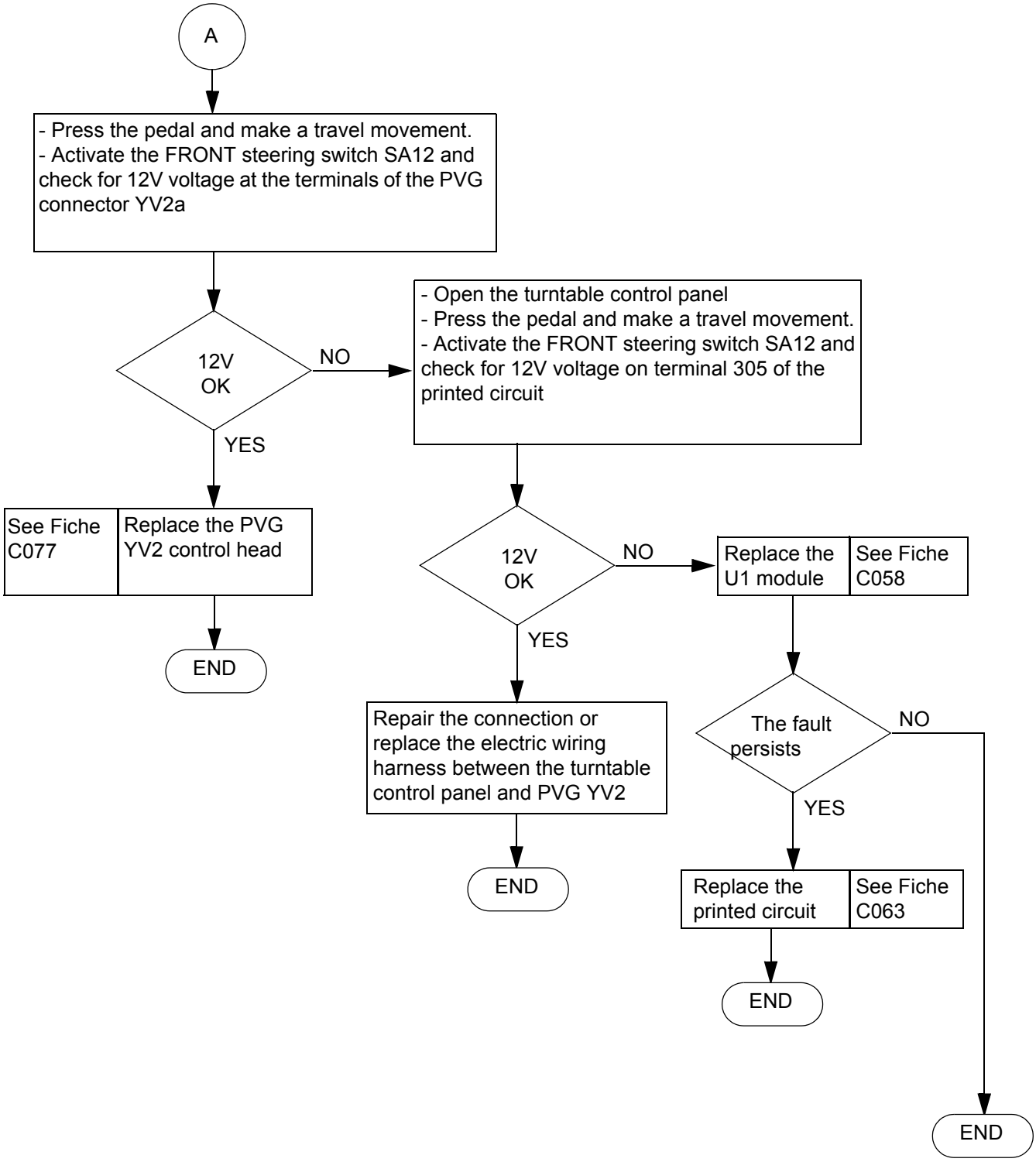

Sheet DP037	BREAKDOWN DETECTION FLOW CHART NO STEERING MOVEMENT (RIGHT AND/OR LEFT) ON THE FRONT AXLE	Folio 3/4

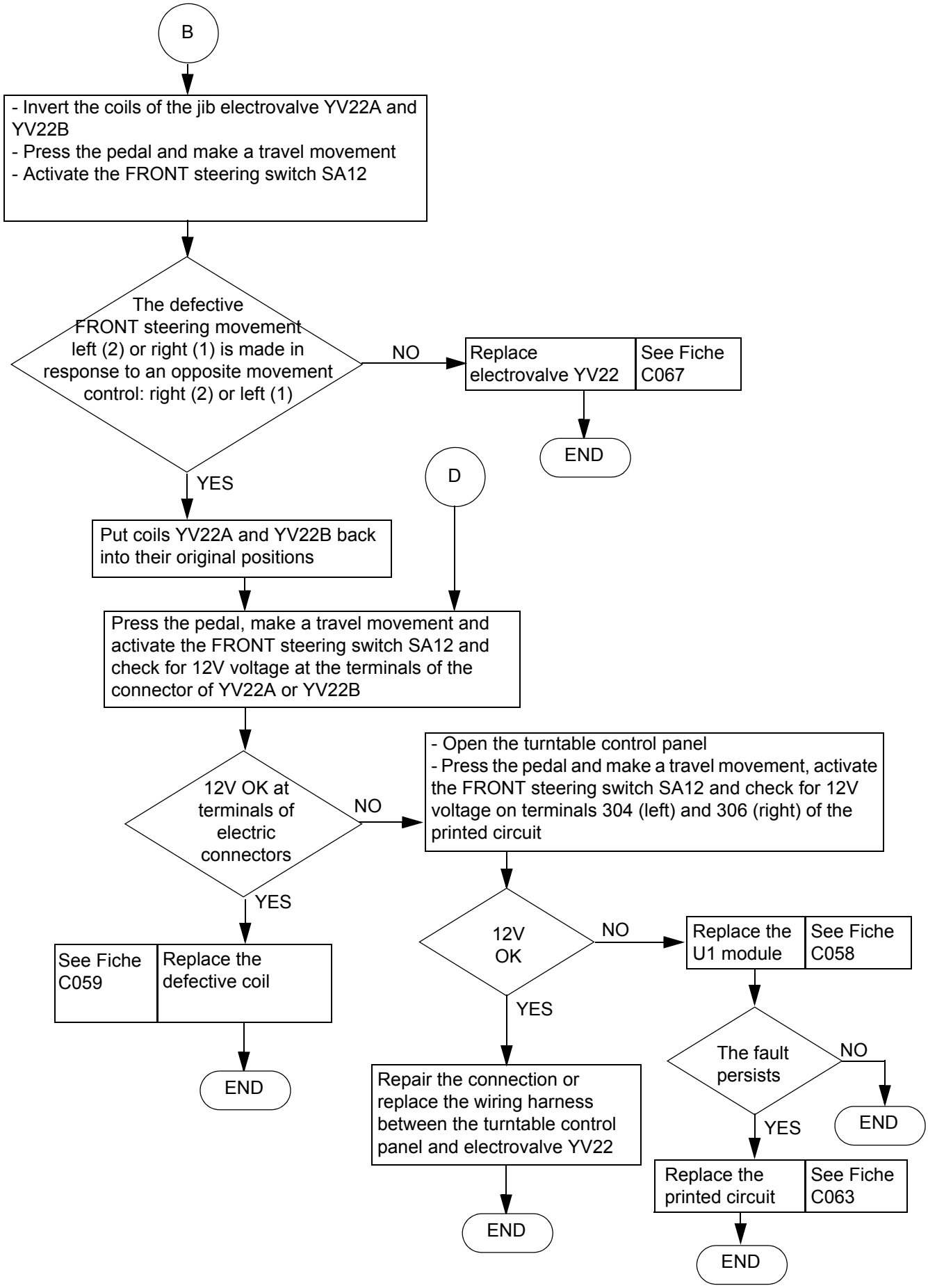

https://truckmanualshub.com/

Sheet DP037	BREAKDOWN DETECTION FLOW CHART NO STEERING MOVEMENT (RIGHT AND/OR LEFT) ON THE FRONT AXLE	Folio 4/4

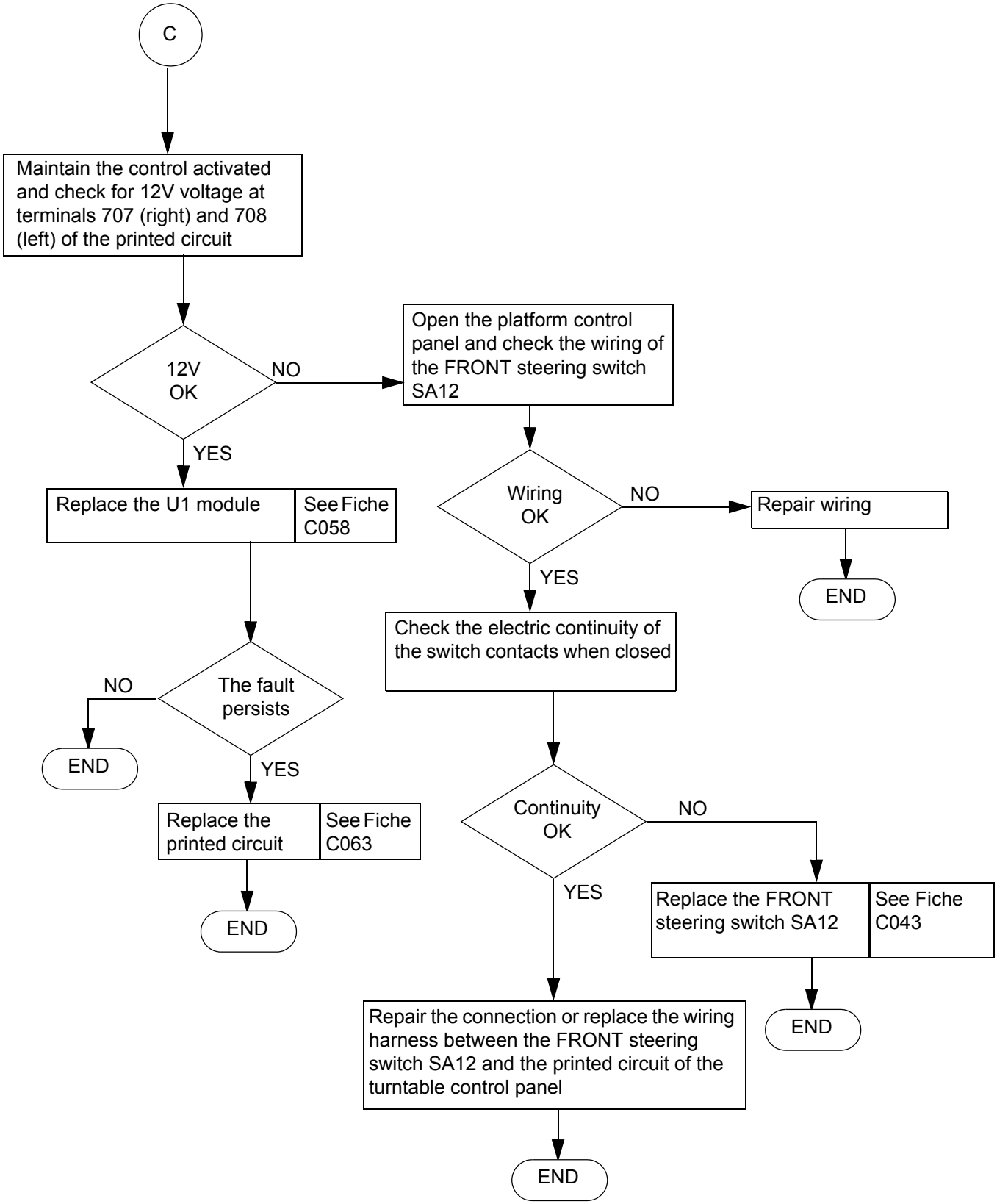

https://truckmanualshub.com/

Sheet DP063	BREAKDOWN DETECTION FLOW CHART NO MACHINE TRAVEL MOVEMENT	Folio 1/8

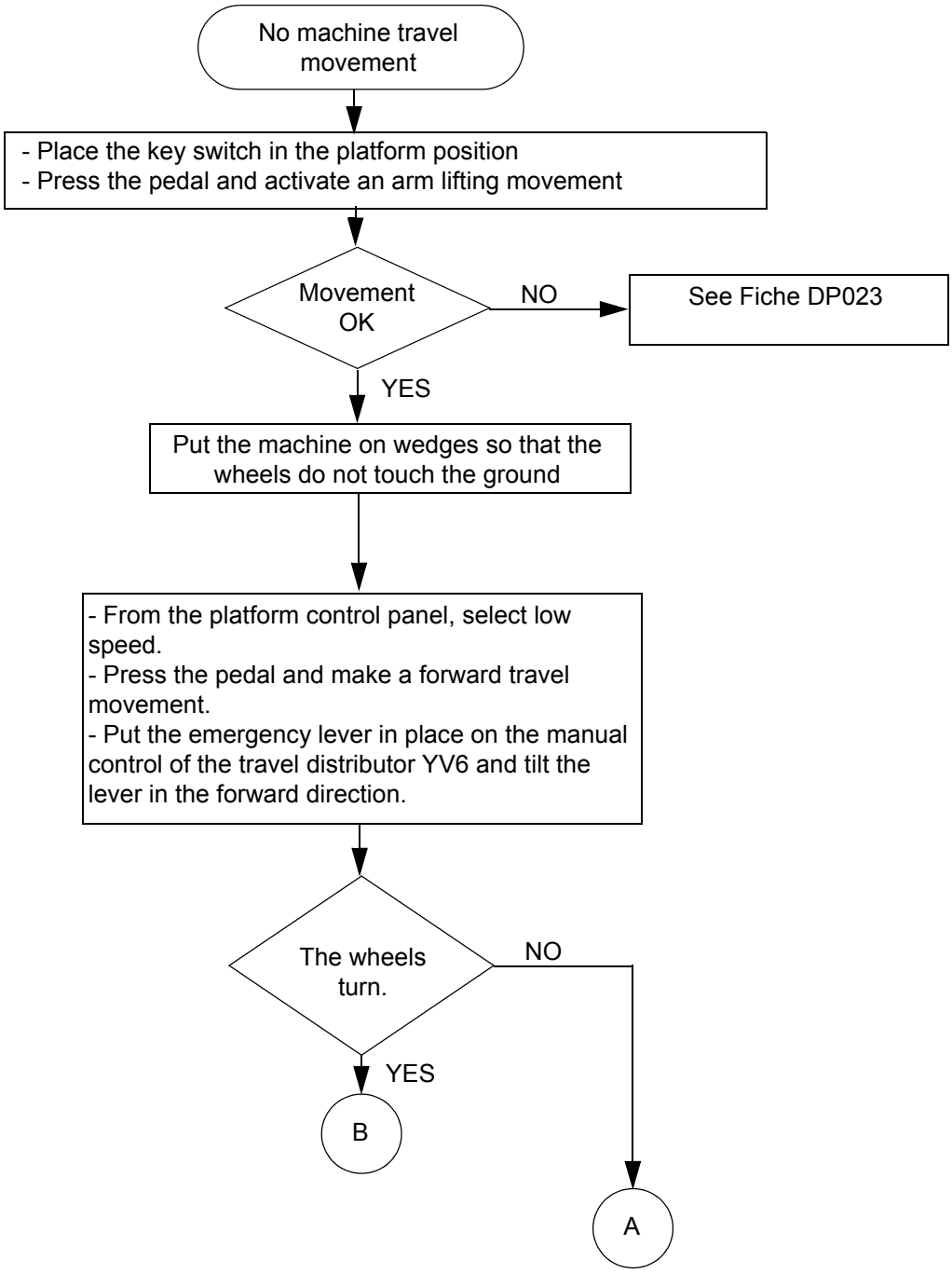

https://truckmanualshub.com/

Sheet DP063	BREAKDOWN DETECTION FLOW CHART NO MACHINE TRAVEL MOVEMENT	Folio 2/8

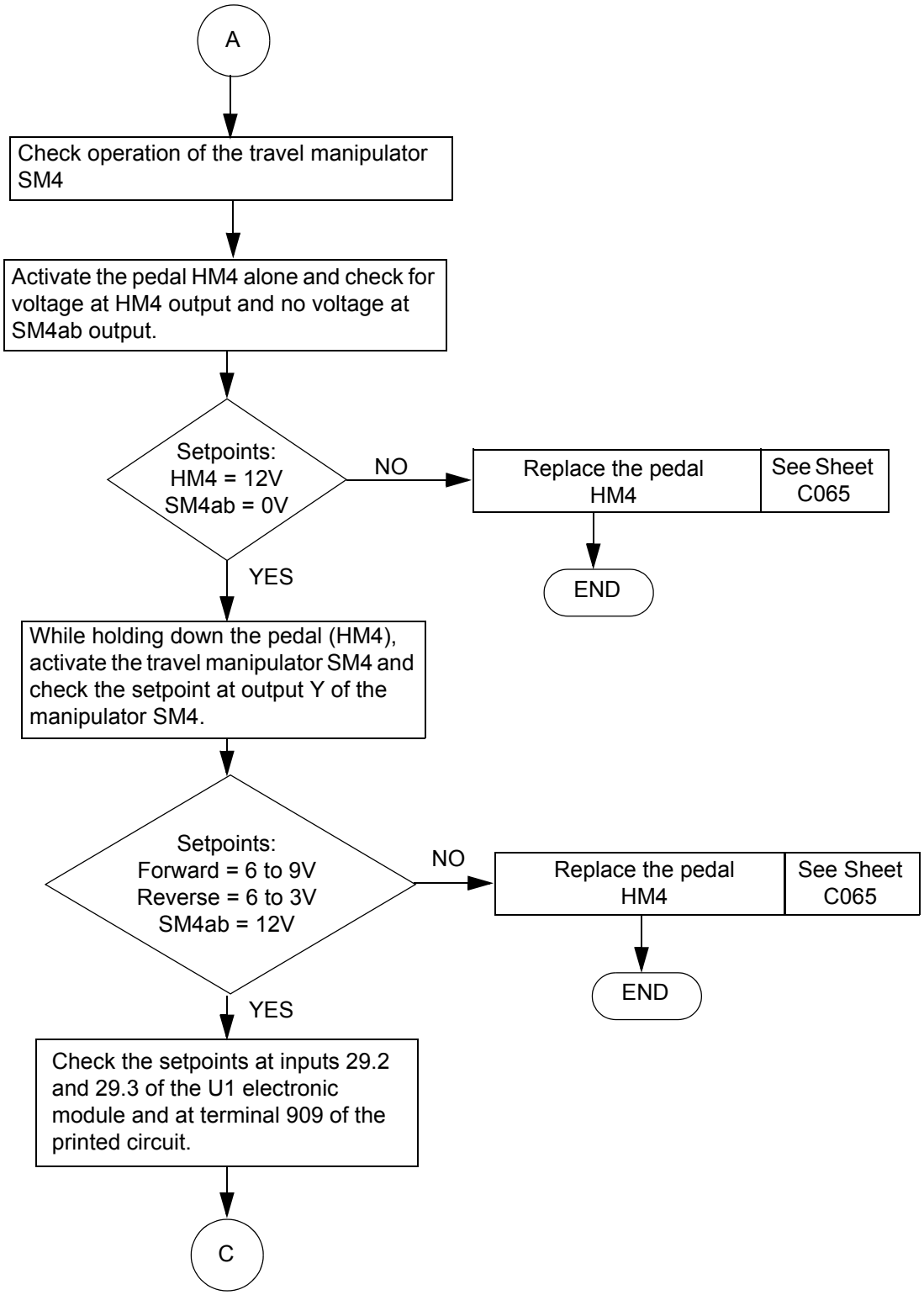

Sheet DP063	BREAKDOWN DETECTION FLOW CHART NO MACHINE TRAVEL MOVEMENT	Folio 3/8

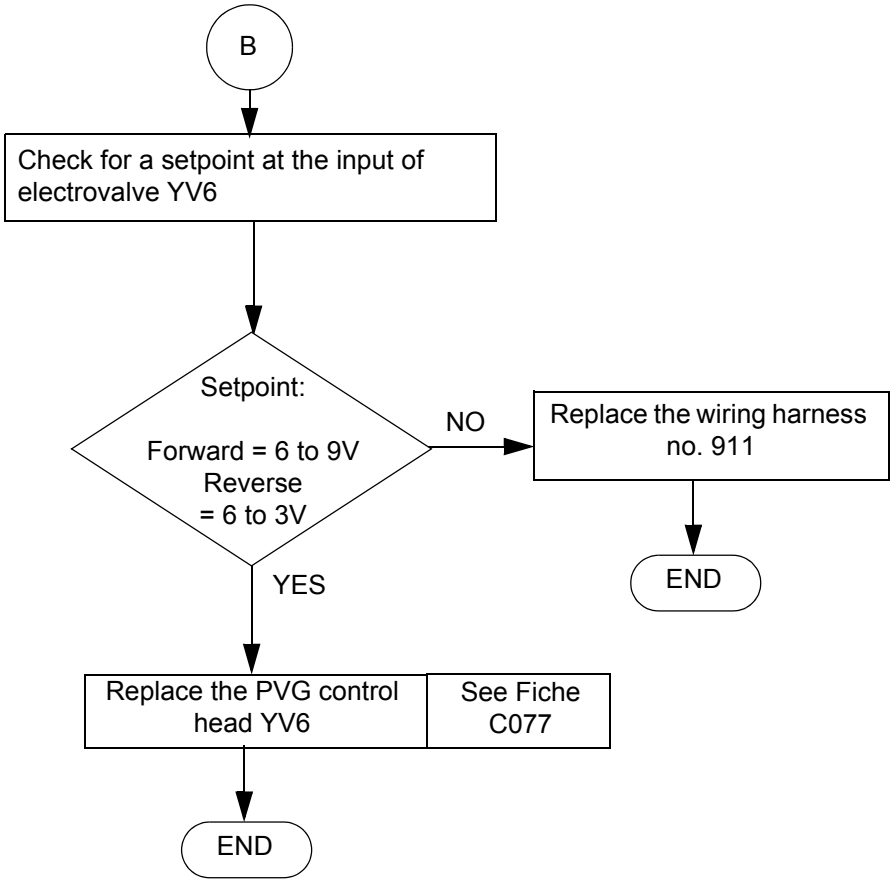

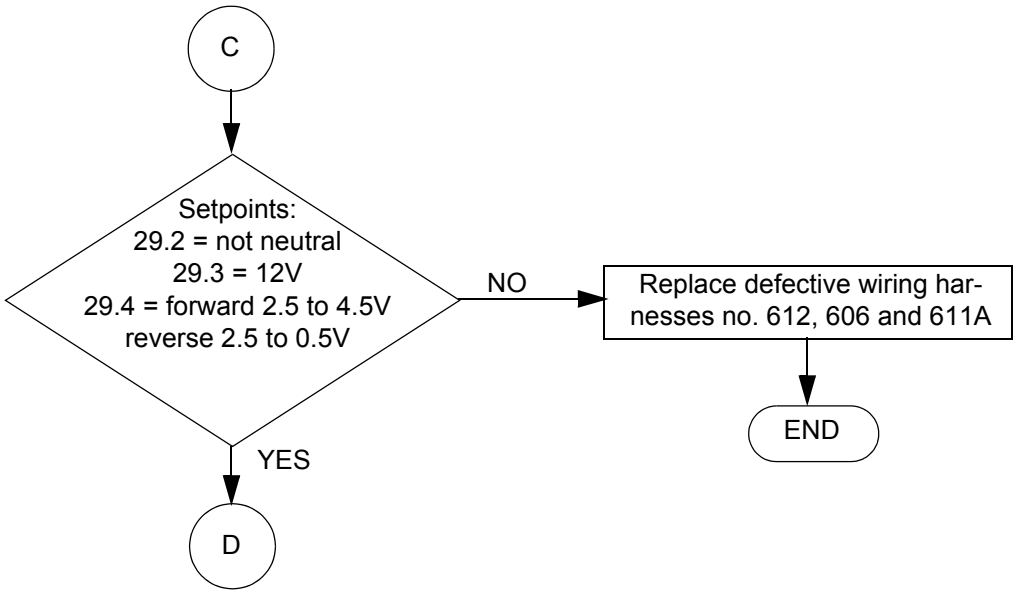

https://truckmanualshub.com/

Sheet DP063	BREAKDOWN DETECTION FLOW CHART NO MACHINE TRAVEL MOVEMENT	Folio 4/8

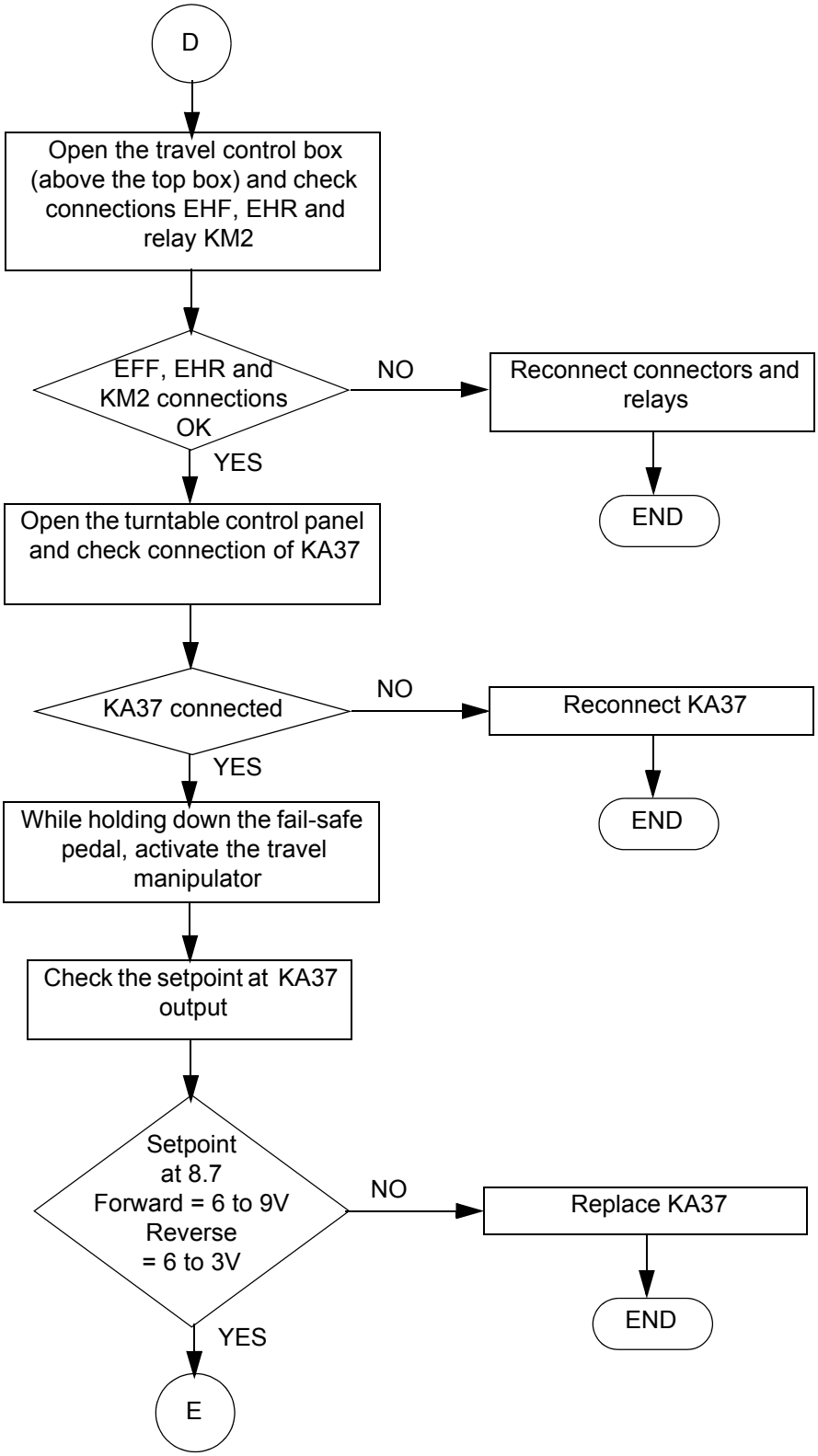

Sheet DP063	BREAKDOWN DETECTION FLOW CHART NO MACHINE TRAVEL MOVEMENT	Folio 5/8

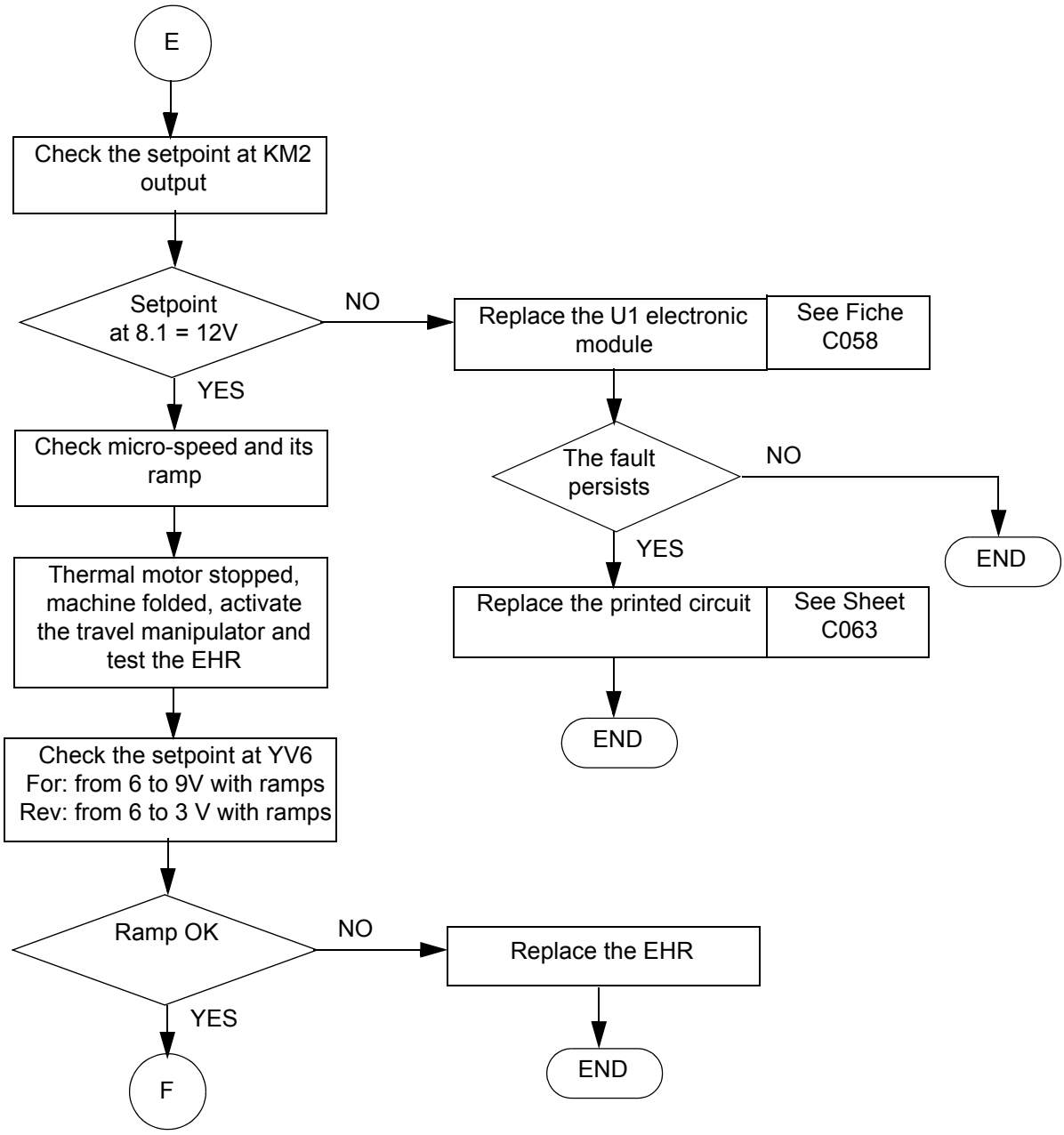

Sheet DP063	BREAKDOWN DETECTION FLOW CHART NO MACHINE TRAVEL MOVEMENT	Folio 6/8

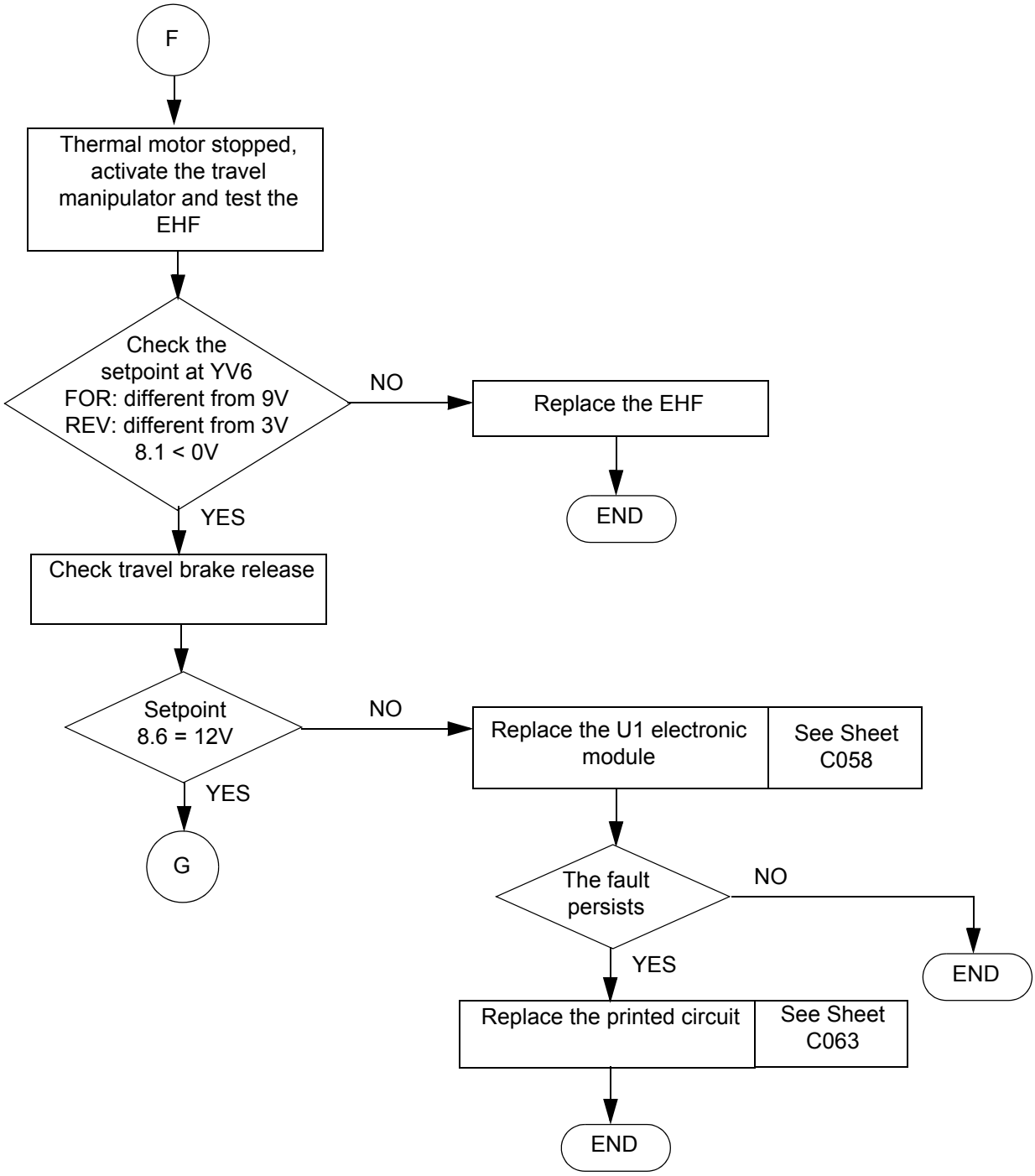

https://truckmanualshub.com/

Sheet DP063	BREAKDOWN DETECTION FLOW CHART NO MACHINE TRAVEL MOVEMENT	Folio 7/8

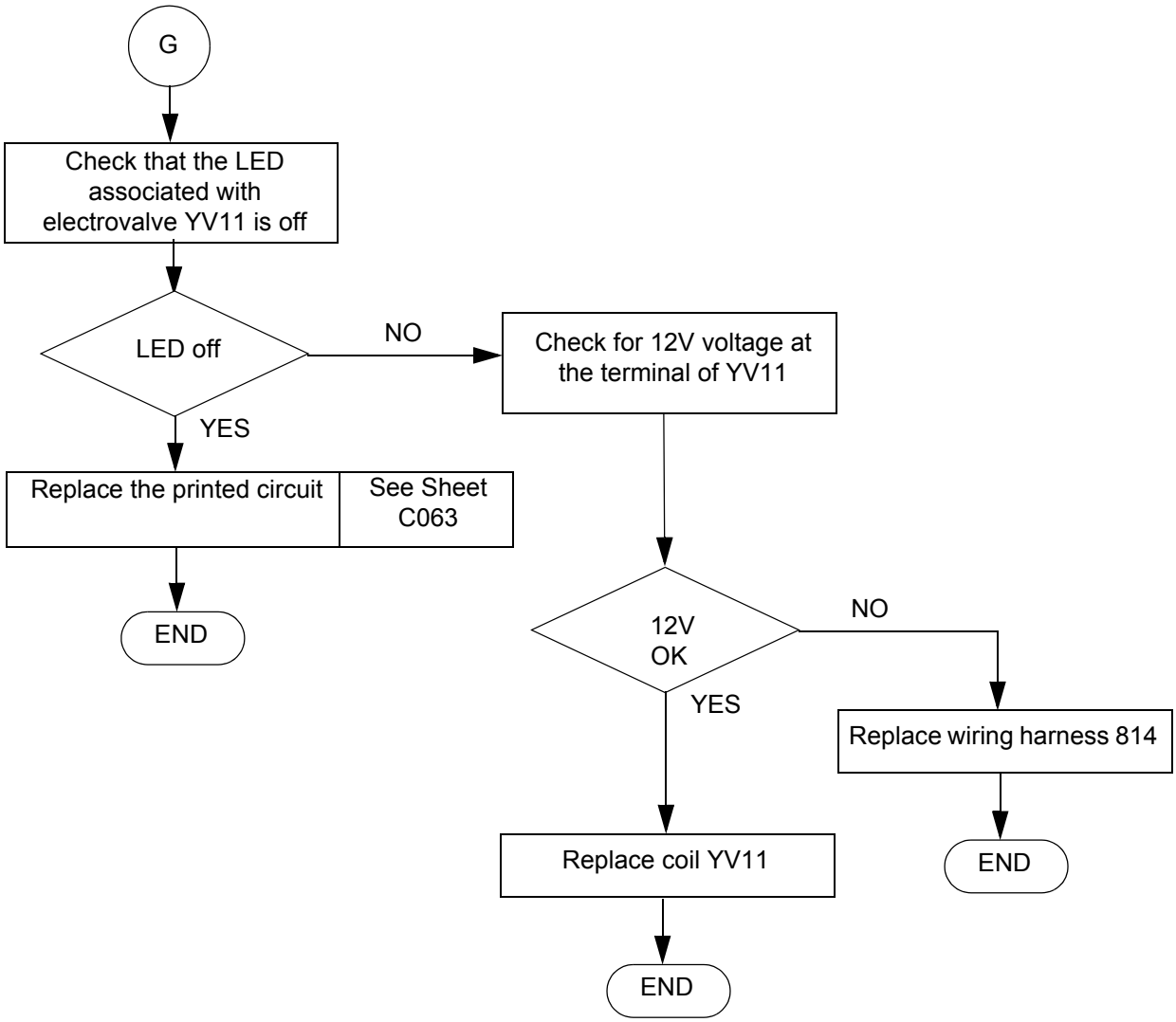

https://truckmanualshub.com/

Sheet DP063	BREAKDOWN DETECTION FLOW CHART	Folio 8/8
	NO MACHINE TRAVEL MOVEMENT	

https://truckmanualshub.com/

Sheet DP064	BREAKDOWN DETECTION FLOW CHART MACHINE TRAVEL SPEED DOES NOT CORRESPOND TO THE SELECTOR	Folio 1/4

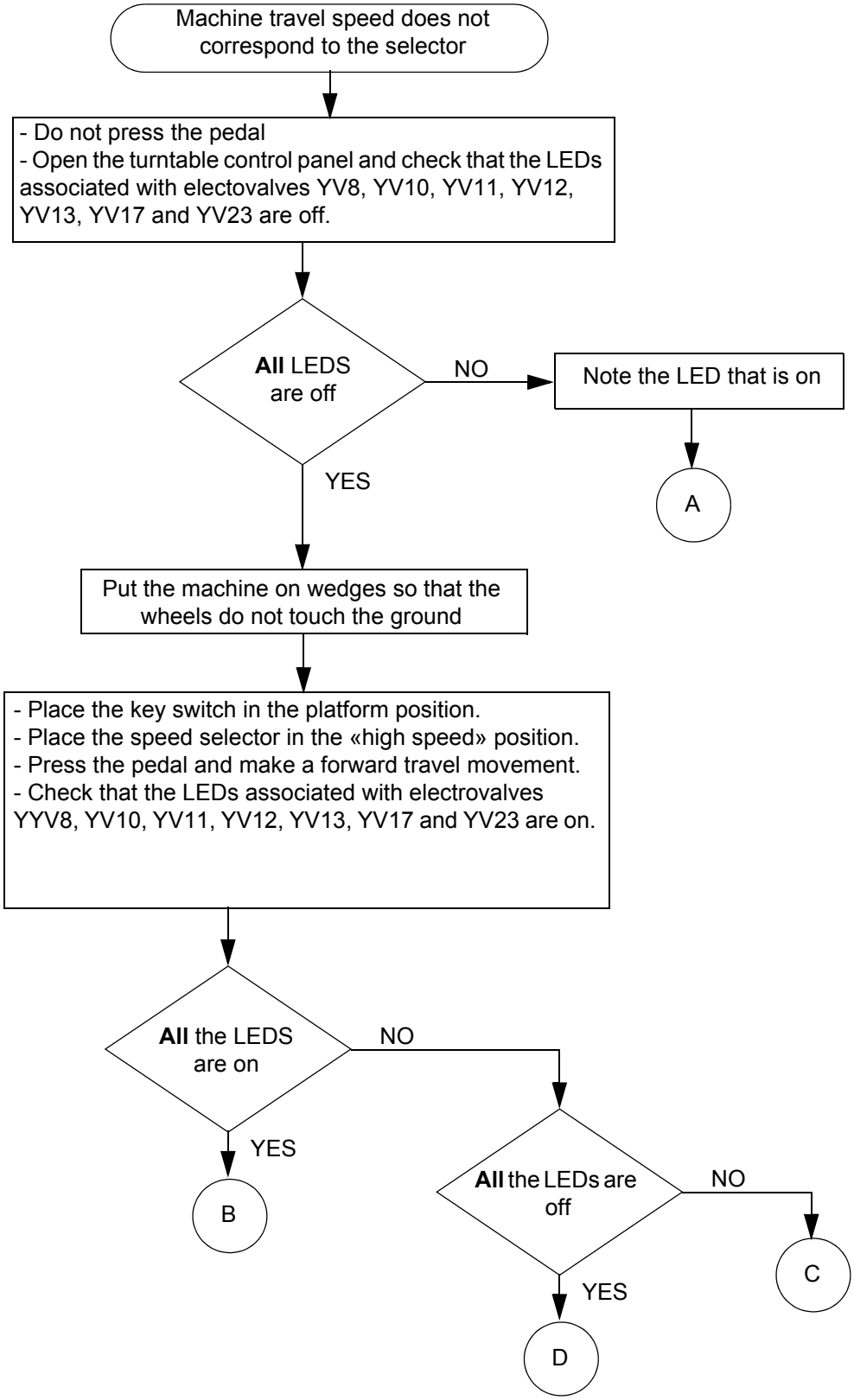

Sheet DP064	BREAKDOWN DETECTION FLOW CHART	Folio 2/4
	MACHINE TRAVEL SPEED DOES NOT CORRESPOND TO THE SELECTOR	

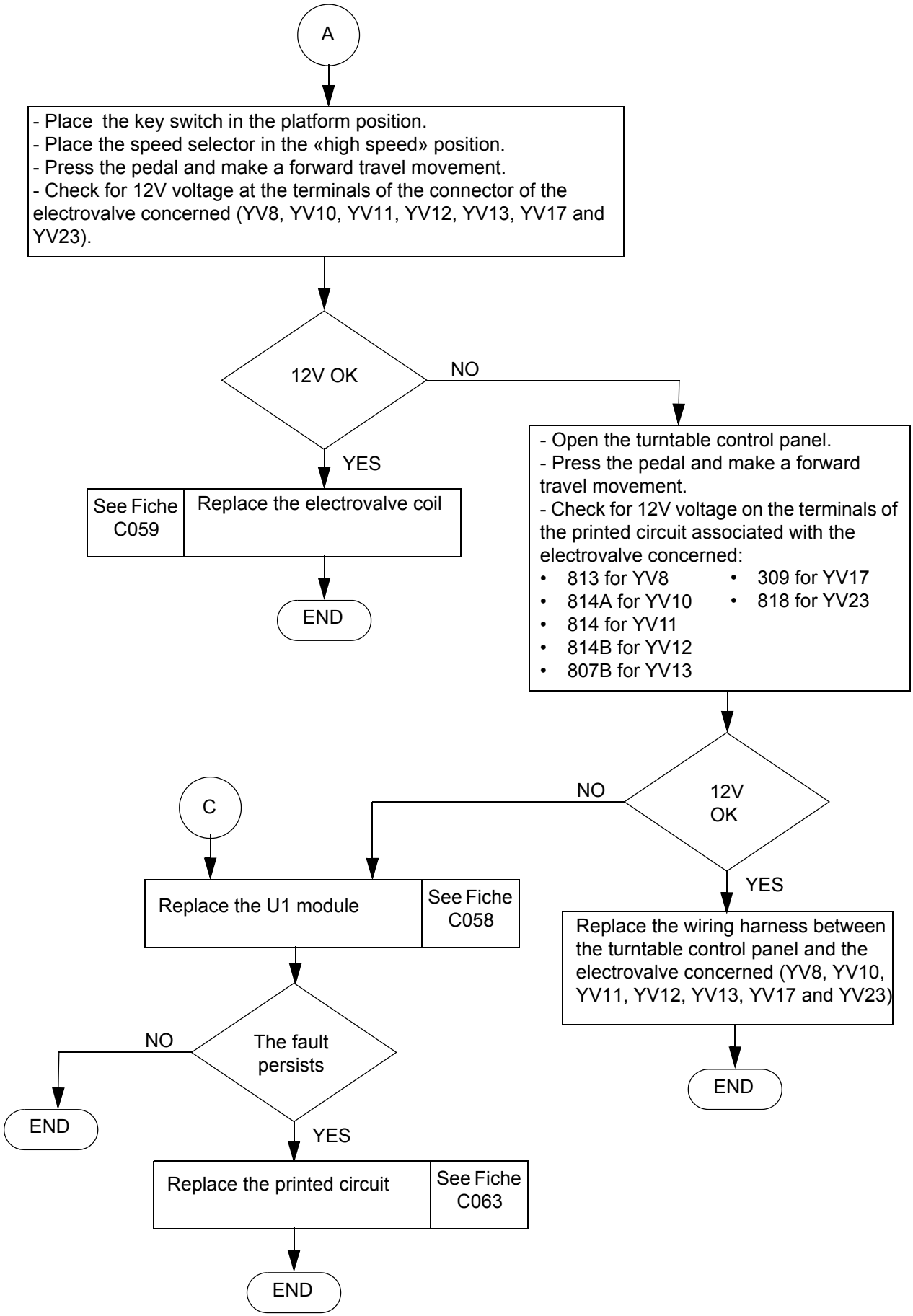

Sheet DP064	BREAKDOWN DETECTION FLOW CHART MACHINE TRAVEL SPEED DOES NOT CORRESPOND TO THE SELECTOR	Folio 3/4

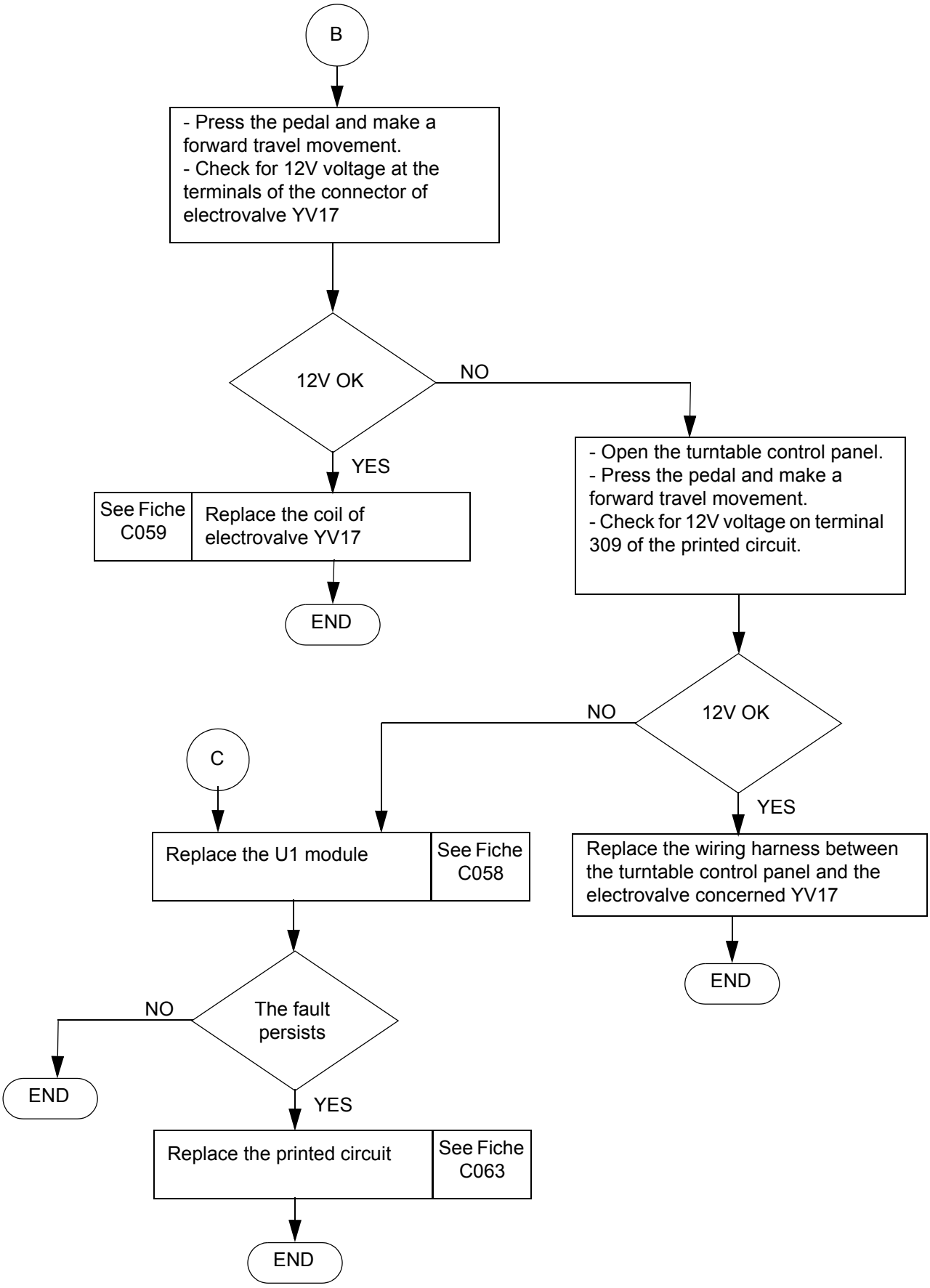

Sheet DP064	BREAKDOWN DETECTION FLOW CHART MACHINE TRAVEL SPEED DOES NOT CORRESPOND TO THE SELECTOR	Folio 4/4

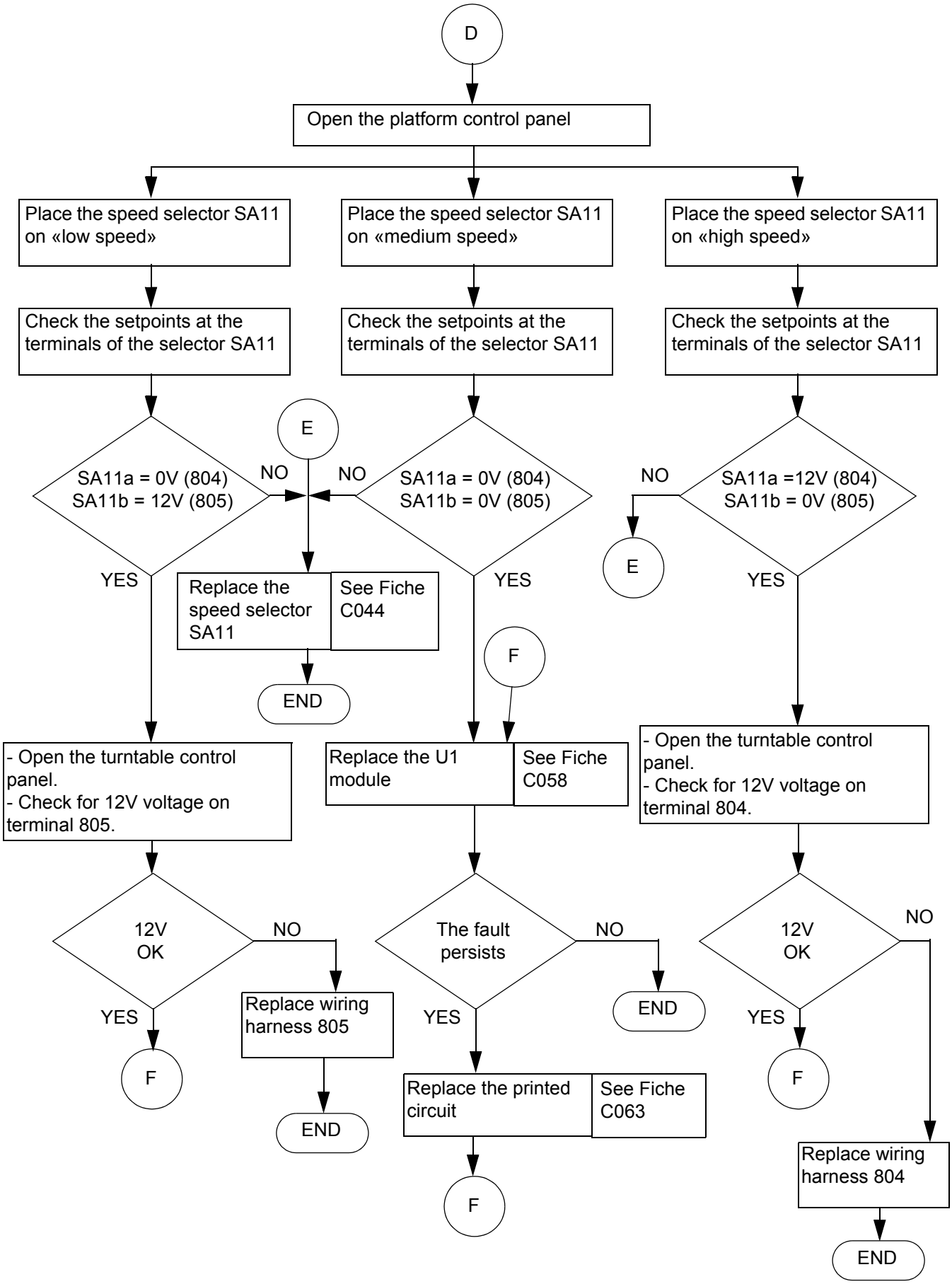

https://truckmanualshub.com/

Sheet DP065	BREAKDOWN DETECTION FLOW CHART ONLY TRAVEL MICRO-SPEED REMAINS AVAILABLE ON THE MACHINE REGARDLESS OF THE SPEED SELECTED	Folio 1/2

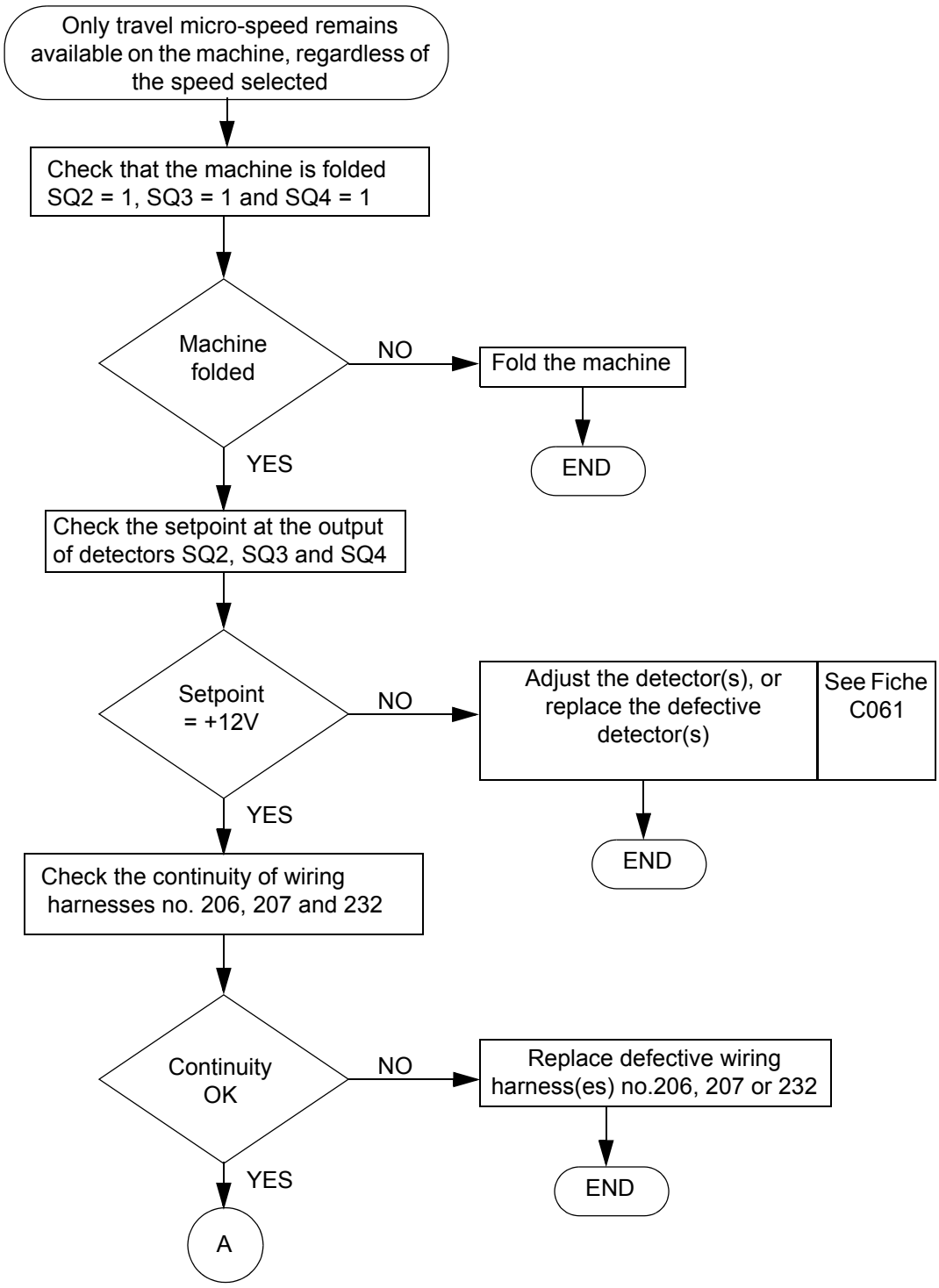

https://truckmanualshub.com/

Sheet DP065	BREAKDOWN DETECTION FLOW CHART ONLY TRAVEL MICRO-SPEED REMAINS AVAILABLE ON THE MACHINE REGARDLESS OF THE SPEED SELECTED	Folio 2/2

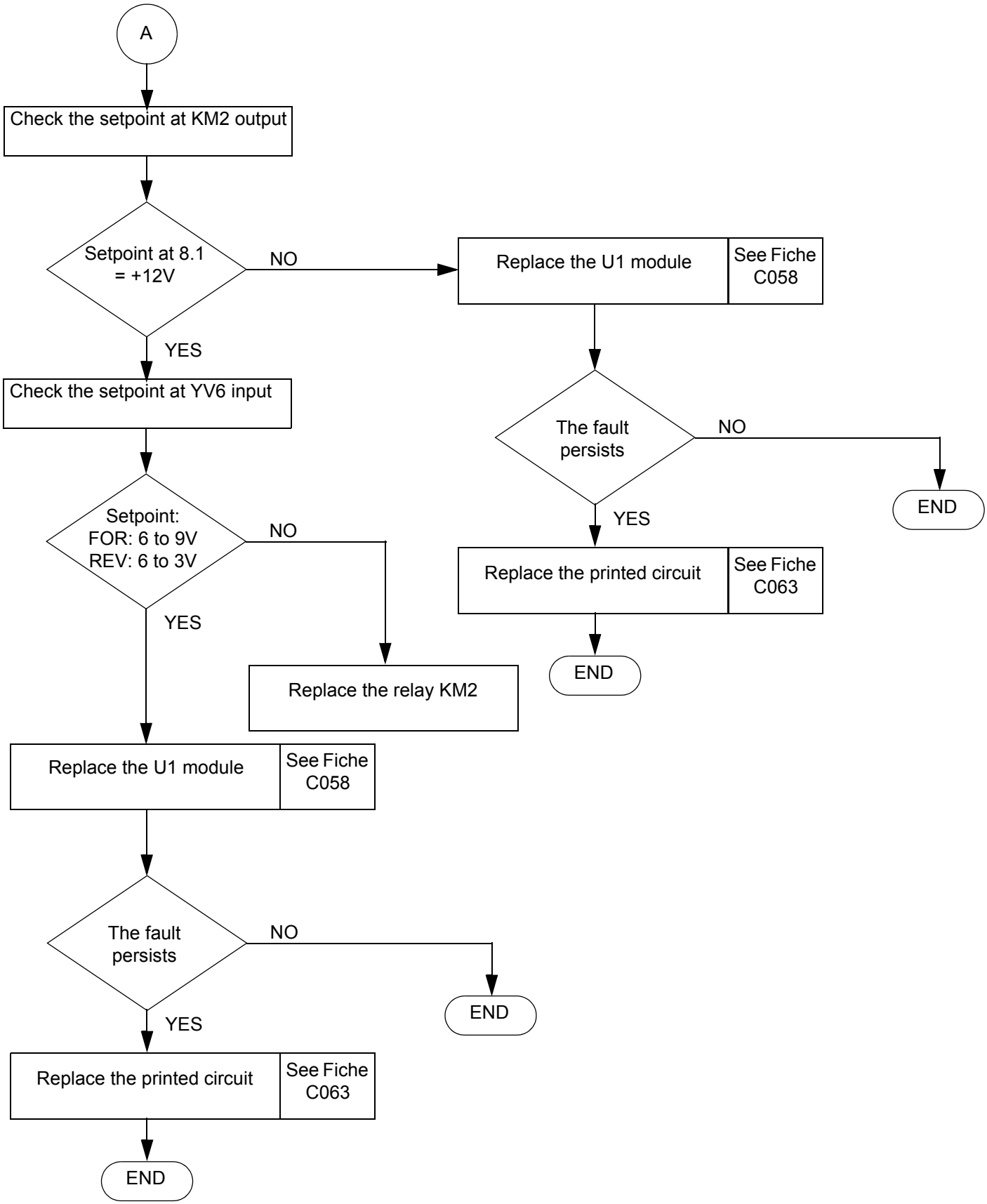

https://truckmanualshub.com/

Sheet DP073	BREAKDOWN DETECTION FLOW CHART NO DIFFERENTIAL BLOCKING IN RESPONSE TO ACTION ON SWITCH SA3	Folio 1/3

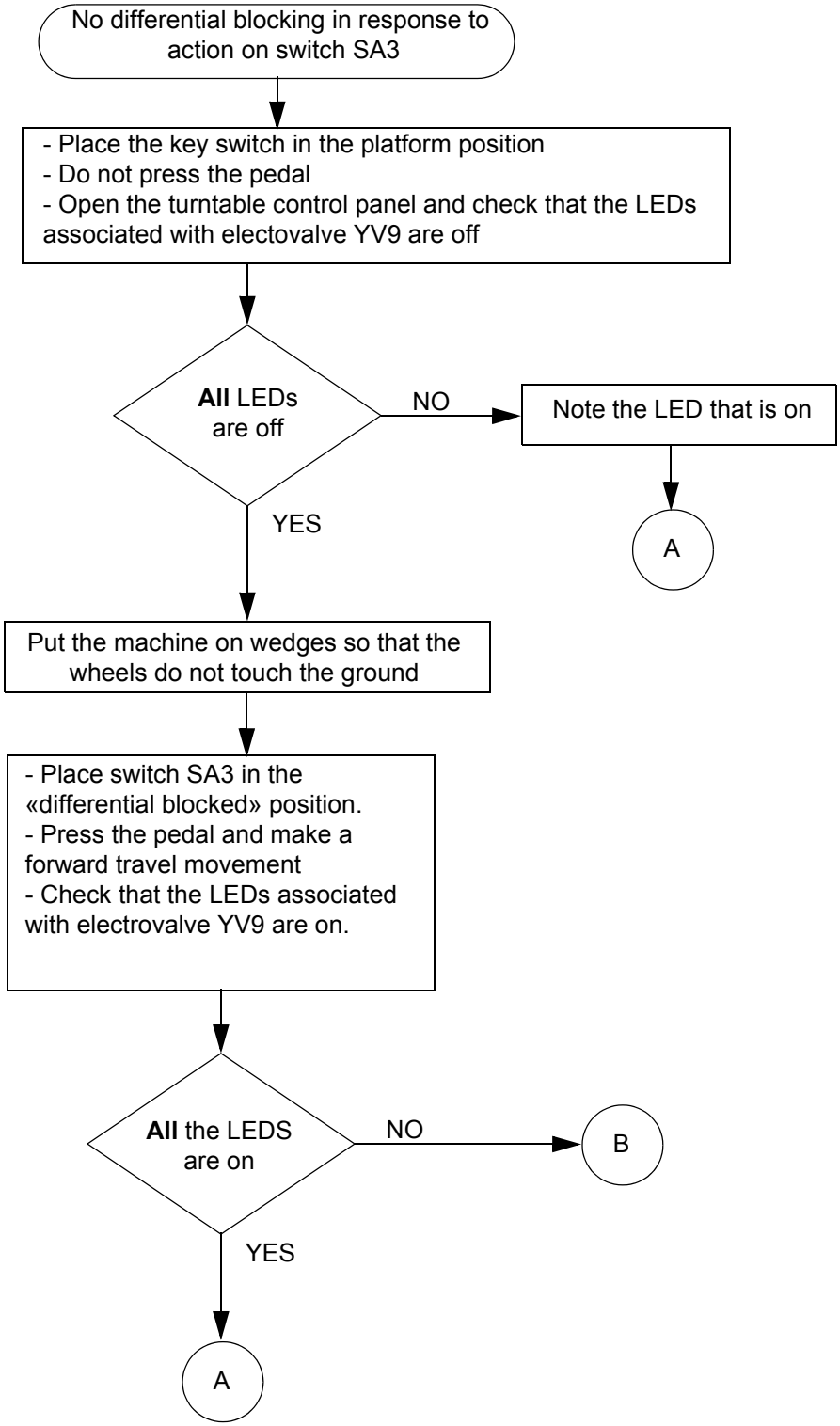

Sheet DP073	BREAKDOWN DETECTION FLOW CHART NO DIFFERENTIAL BLOCKING IN RESPONSE TO ACTION ON SWITCH SA3	Folio 2/3

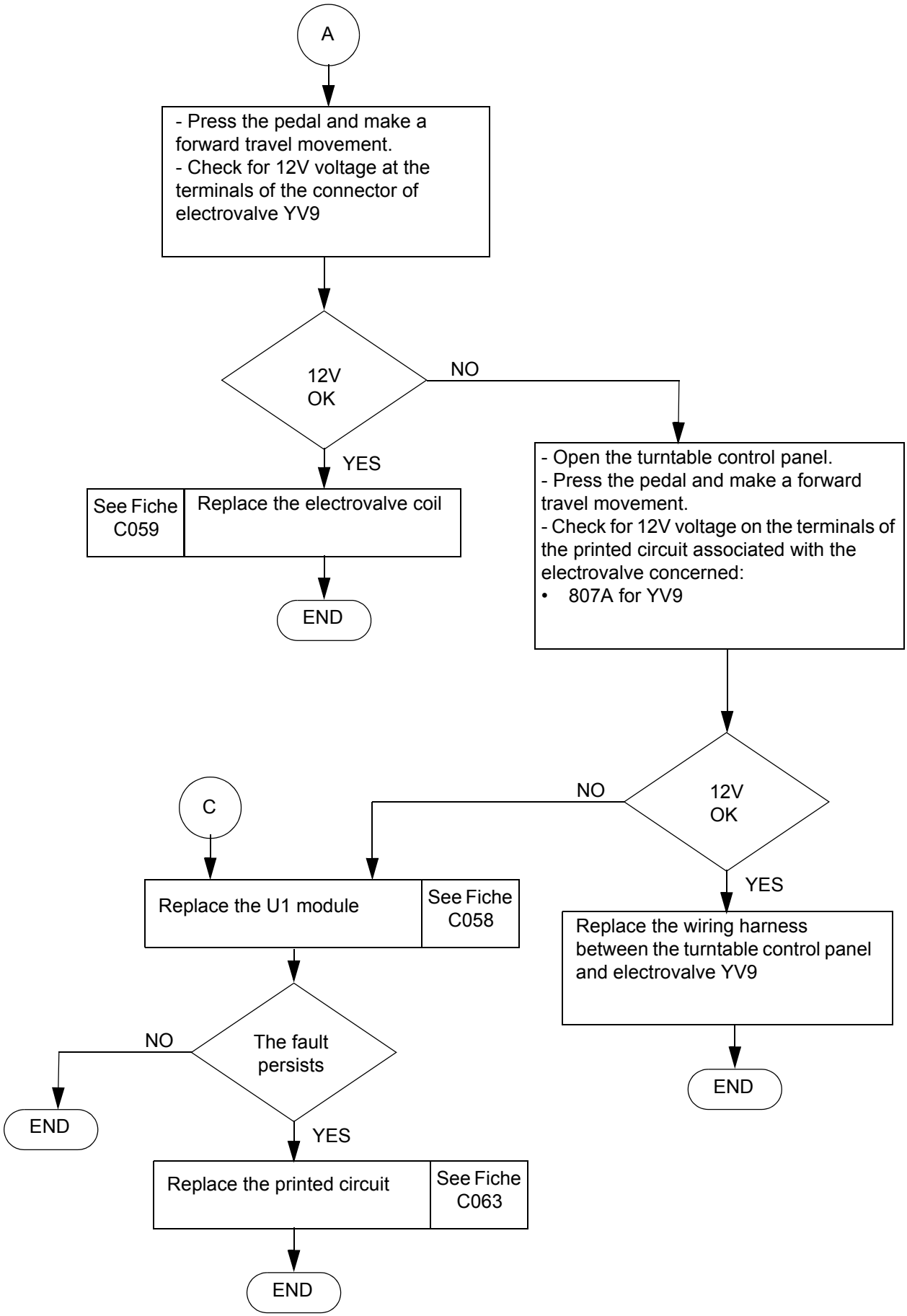

Sheet DP073	BREAKDOWN DETECTION FLOW CHART NO DIFFERENTIAL BLOCKING IN RESPONSE TO ACTION ON SWITCH SA3	Folio 3/3

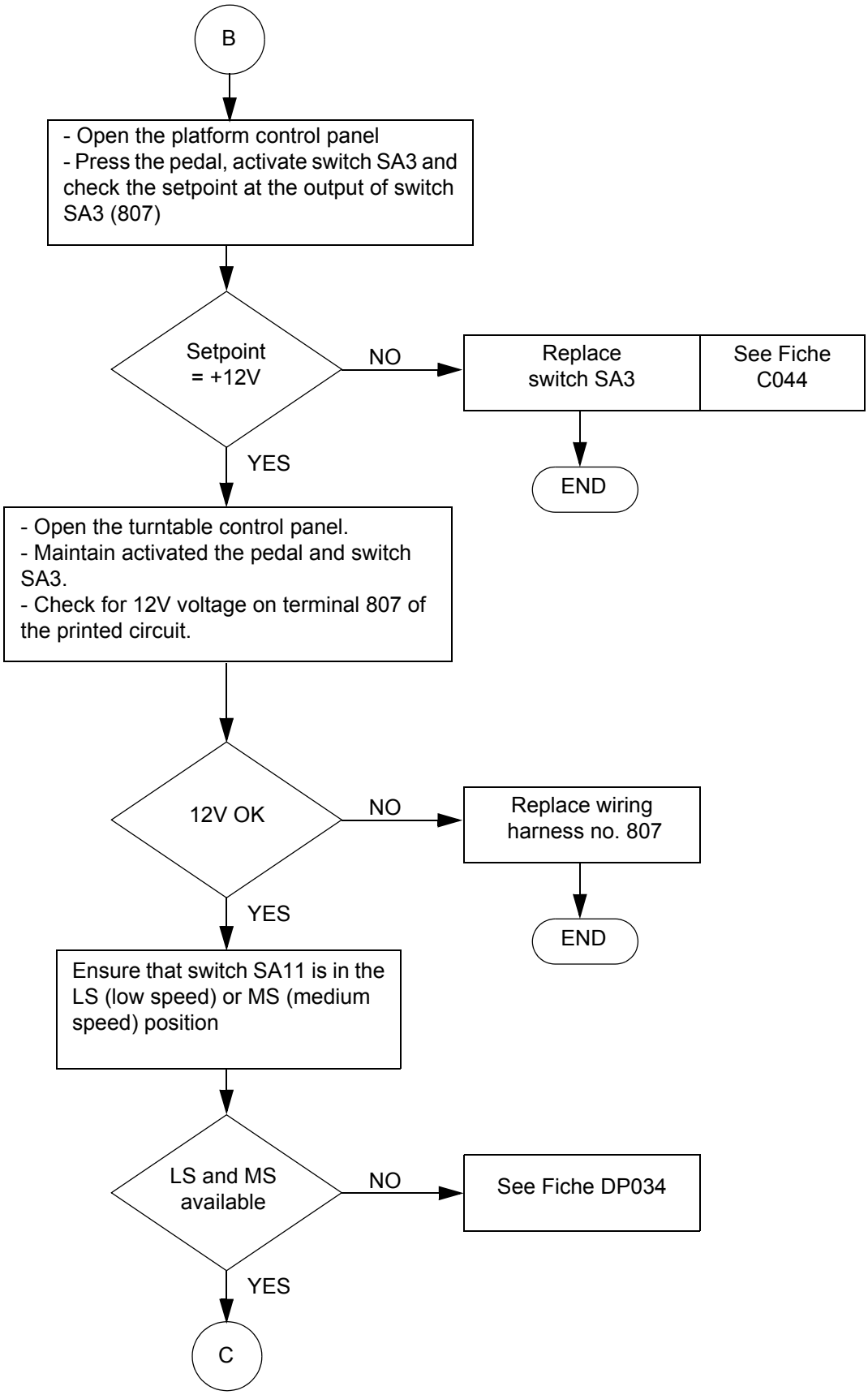

https://truckmanualshub.com/

Sheet DP074	BREAKDOWN DETECTION FLOW CHART	Folio 1/6
	NO STEERING MOVEMENT (RIGHT AND/OR LEFT) ON THE REAR AXLE	

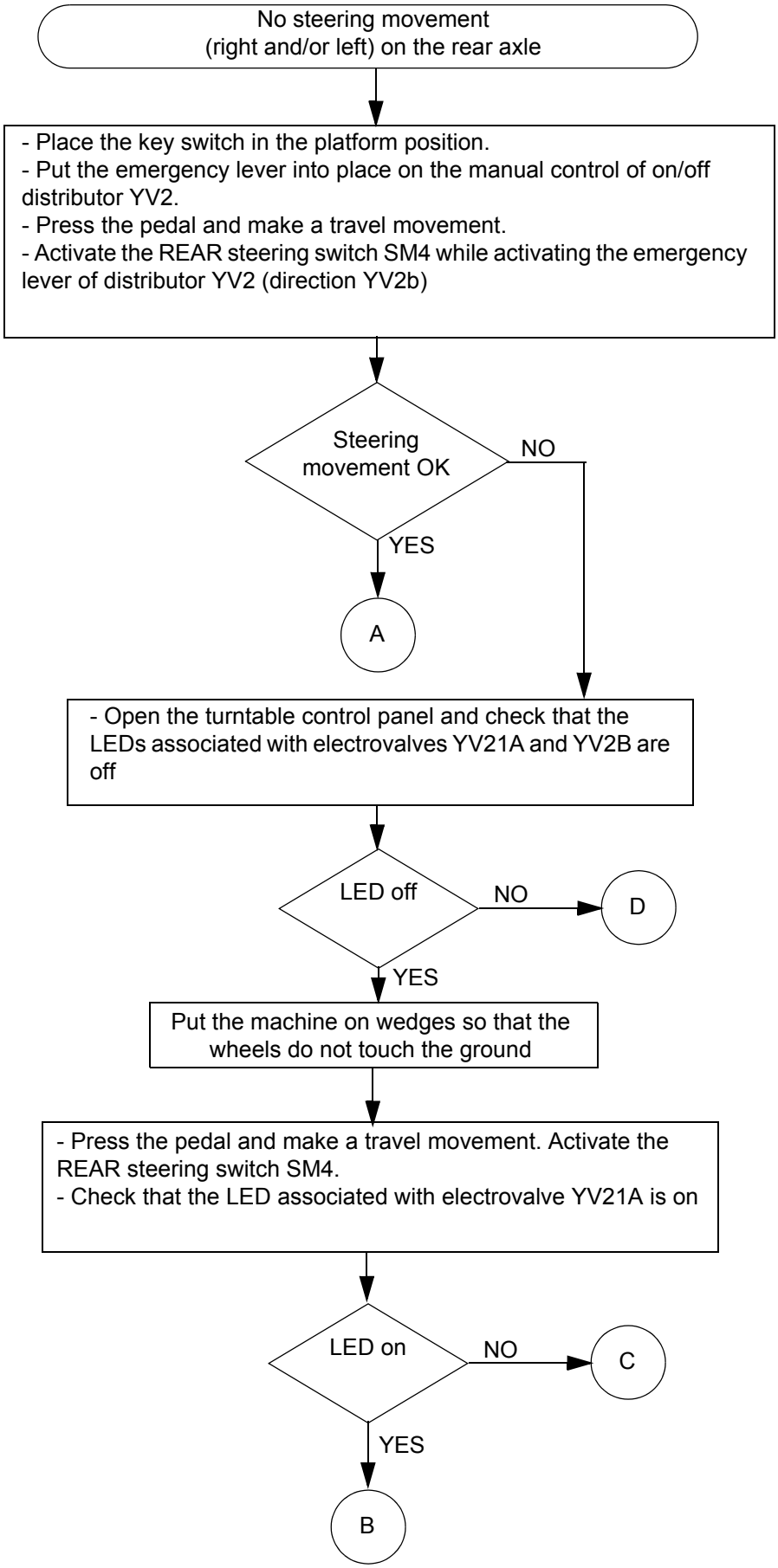

https://truckmanualshub.com/

Sheet DP074	BREAKDOWN DETECTION FLOW CHART NO STEERING MOVEMENT (RIGHT AND/OR LEFT) ON THE REAR AXLE	Folio 2/6

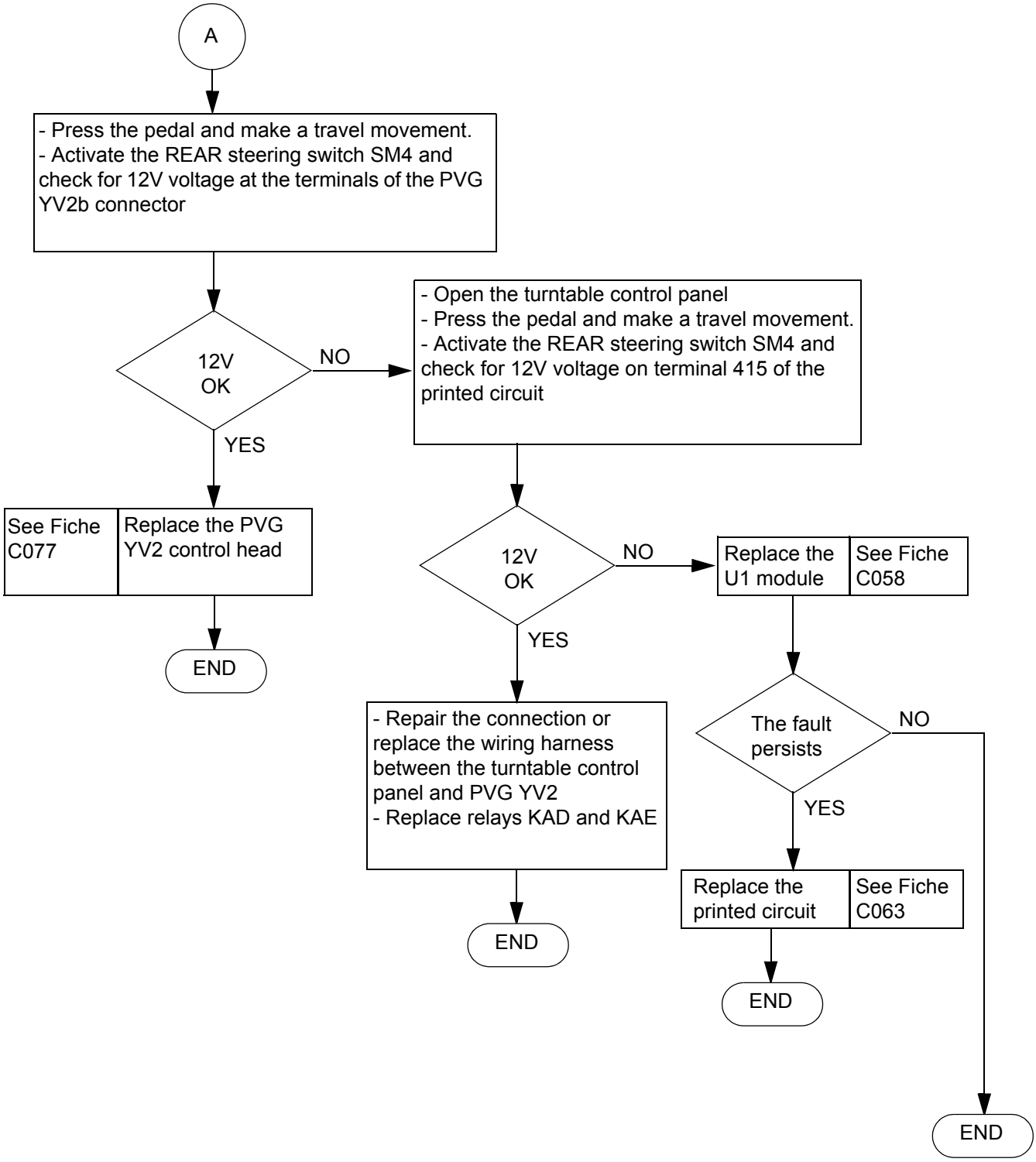

Sheet DP074	BREAKDOWN DETECTION FLOW CHART NO STEERING MOVEMENT (RIGHT AND/OR LEFT) ON THE REAR AXLE	Folio 3/6

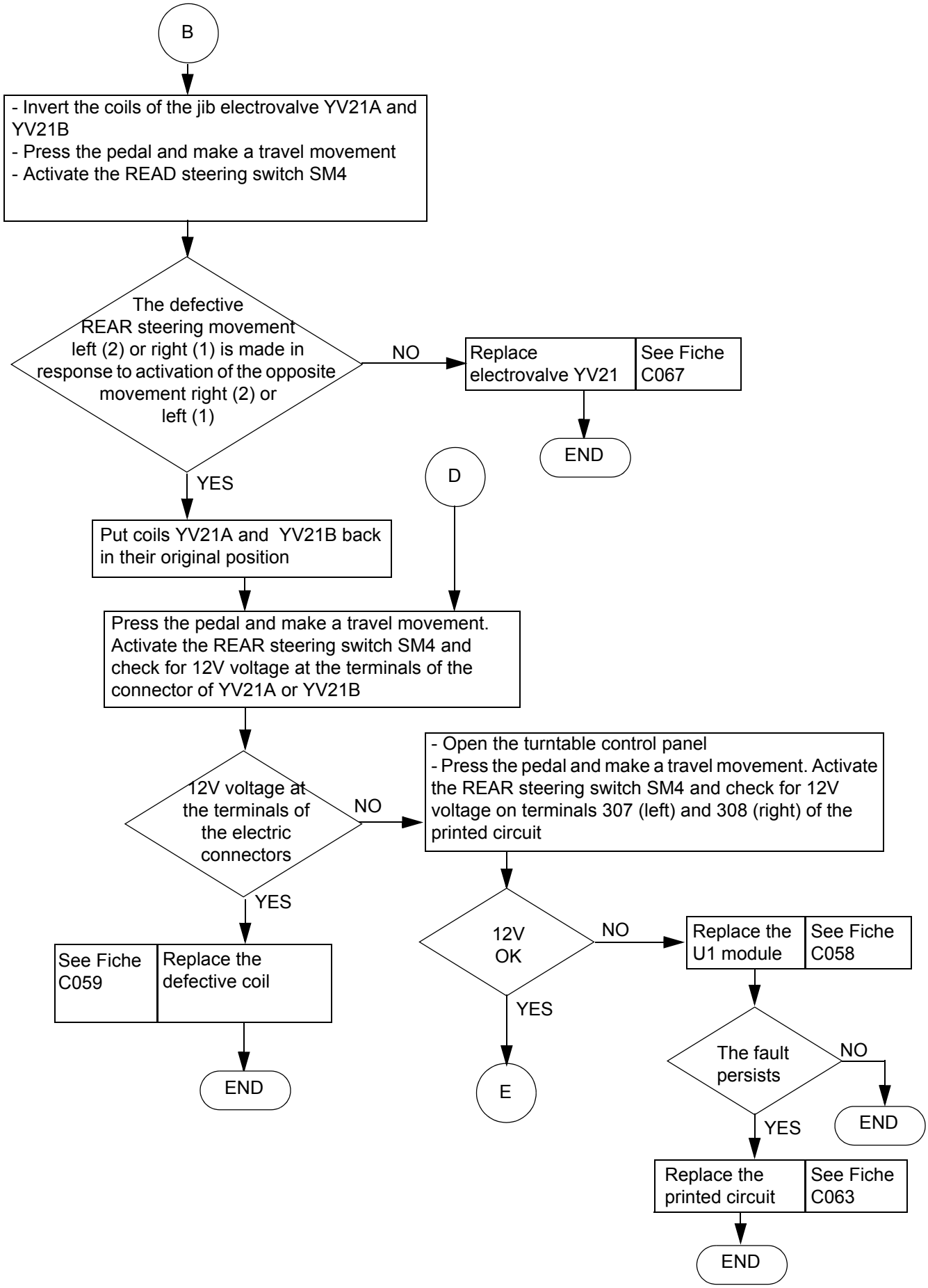

https://truckmanualshub.com/

Sheet DP074	BREAKDOWN DETECTION FLOW CHART NO STEERING MOVEMENT (RIGHT AND/OR LEFT) ON THE REAR AXLE	Folio 4/6

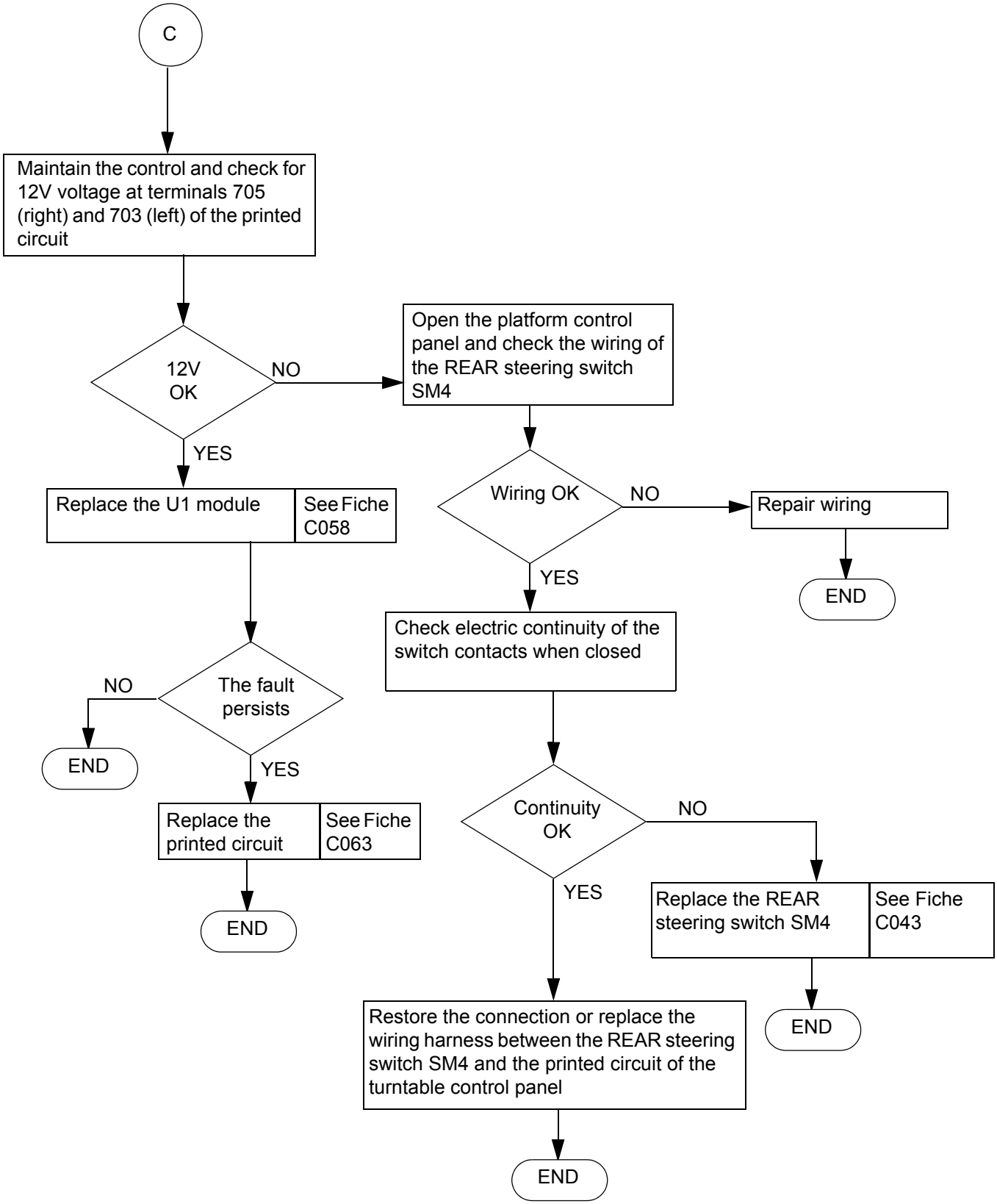

https://truckmanualshub.com/

Sheet DP074	BREAKDOWN DETECTION FLOW CHART	Folio 5/6
	NO STEERING MOVEMENT (RIGHT AND/OR LEFT) ON THE REAR AXLE	

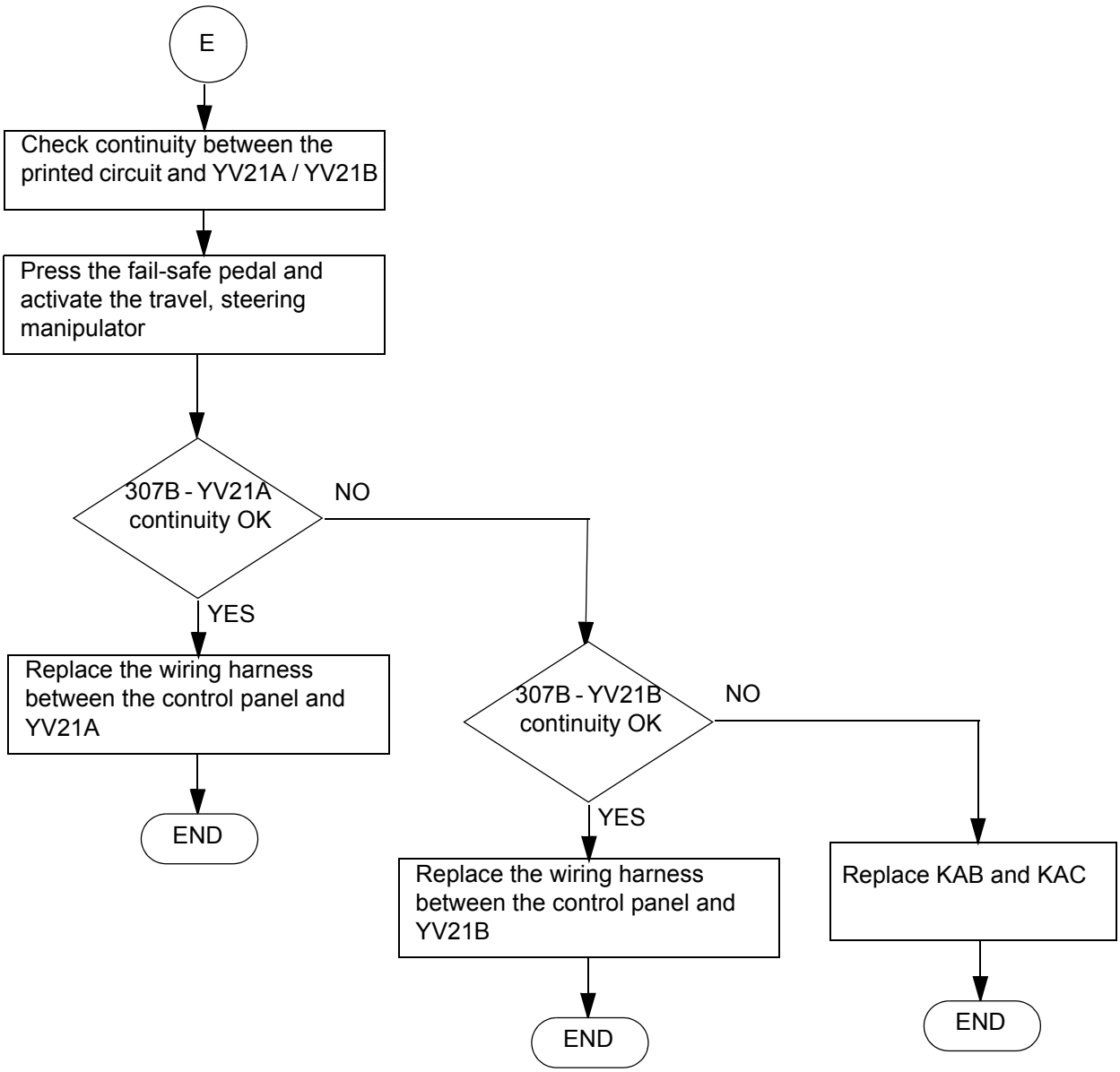

https://truckmanualshub.com/

Sheet DP074	BREAKDOWN DETECTION FLOW CHART	Folio 6/6
	NO STEERING MOVEMENT (RIGHT AND/OR LEFT) ON THE REAR AXLE	

https://truckmanualshub.com/

9 - CORRECTIVE MAINTENANCE PROCEDURES

List of corrective maintenance sheets:

Sheet no.	Description
C010	Changing a hose
C034	Changing a wheel
C035	Changing a wheel reducing hear or a travel hydraulic motor
C036	Changing a steering pivot
C037	Dismantling and re-assembling the steering system
C038	Changing the cylinder
C039	Changing the tilt sensor
C040	Changing the horn
C041	Changing the tilt sensor buzzer
C042	Changing the hydraulic pump
C043	Changing an electric component on the top control panel
C044	Changing an electric component on the bottom control panel
C045	Changing a manipulator
C046	Changing the starter battery
C047	Changing a cover gas spring
C048	Changing a turntable cover
C049	Changing the thermal motor
C050	Changing the turntable rotation hydraulic motor
C051	Changing the swing joint
C052	Changing the basket rotation hydraulic motor
C053	Changing the basket
C054	Changing the weighing rolling bearing
C055	Changing the turntable rotation gearing
C056	Changing the hydraulic filter
C057	Changing the slew ring
C058	Changing the U1 electronic module
C059	Changing a coil
C061	Changing an end of stroke contactor
C062	Changing a relay
C063	Changing a printed circuit
C064	Changing the fail-safe pedal
C065	Changing a hydraulic block (travel, steering or on/off movement)
C066	Changing the distribution hydraulic block

Sheet no.	Description
C067	Changing an electrovalve
C068	Changing the double balancing valve of the rotation function
C069	Dismantling / re-assembling the jib
C070	Dismantling / re-assembling the boom
C071	Dismantling / re-assembling the lifting arm
C073	Adjusting a pressure limiter
C074	Changing the jib cylinder
C075	Changing the boom lifting cylinder
C076	Dismantling / re-assembling the distribution hydraulic block
C077	Changing a control unit of the distribution block
C078	Changing the arm lifting cylinder
C079	Changing a flow separator
C080	Changing a steering hydraulic block - circuit selector
C081	Changing a pressure limiter - telescope out function
C082	Changing a balancing valve - compensation function
C083	Changing a double flow limiter - compensation function
C084	Changing a non-return valve - steering hydraulic block
C127	Changing emergency unit
C135	Changing the counterweight

https://truckmanualshub.com/

SHEET C010	CORRECTIVE MAINTENANCE SHEET	Sheet 1/1
	REPLACING A HOSE	

Caution!
Ensure that oil temperature is not too high.

1 - Preliminary operations

- Put the machine in the maintenance configuration (see corresponding paragraph).
- Cut off the electric power supply (see corresponding paragraph).

2 - Removing a hose

- Disconnect the hose from the equipment it connects.

NB: *Unscrew the hose slowly to allow residual hydraulic pressure to dissipate.*

- Fit caps to the equipment holes to protect them.

3 - Replacing a hose

- Reconnect a new hydraulic hose.
- Put the machine back into the operational configuration.
- Make several movements using the replaced hose to purge the hydraulic circuit.
- Check the oil level in the hydraulic oil tank.

https://truckmanualshub.com/

	CORRECTIVE MAINTENANCE SHEET	

https://truckmanualshub.com/

Sheet C034	CORRECTIVE MAINTENANCE SHEET	Folio 1/1
	CHANGING A WHEEL	

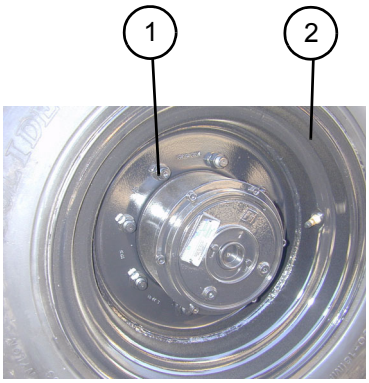

1 - Preliminary operations

- Put the machine in the maintenance configuration (see corresponding paragraph).
- Switch off electric power (see corresponding paragraph).

2 - Removing a wheel

- Unblock (without completely unscrewing) the fixing screws (1) of the wheel to be removed.
- Raise the machine using a jack or hoist.
- Remove the fixing screws (1) from the wheel and remove the wheel (2).

3 - Installing a wheel

- Put a new wheel into place and put back the fixing screws.
- Put the machine on the ground.
- Tighten the fixing screws to the recommended torque (see tightening torque value table).
- Put the machine back into the operational configuration.

Caution!
Use a container to collect oil to prevent pollution of the environment.

Caution!
It is essential to put the component in slings before dismantling/re-assembling it.

https://truckmanualshub.com/

https://truckmanualshub.com/

Sheet C035	CORRECTIVE MAINTENANCE SHEET	Folio 1/2
	CHANGING A WHEEL REDUCING GEAR OR A TRAVEL HYDRAULIC MOTOR	

1 - Preliminary operations

- Put the machine in the maintenance configuration (see corresponding paragraph).
- Switch off electric power (see corresponding paragraph).
- Remove the wheel corresponding to the element to be removed (see corresponding sheet).

Caution!
Ensure that the oil is not too hot.

2 - Removing a wheel reducing gear or a hydraulic motor

NB: Figure 1: steering axle.
Figure 2: fixed axle.

- If working on a steering axle, uncouple the steering connecting rod from the pivot.
- Mark and disconnect the hoses of the hydraulic motor (1) and reducing gear (2).

Caution!
Use a container to collect oil to prevent pollution of the environment.

NB: Unscrew the hose slowly to release residual hydraulic pressure.

- Put caps on the hoses.
- Place a wedge under the wheel reducing gear.
- Remove the reducing gear / motor assembly by removing the fixing bolts (3).
- Unscrew the screws (4) fixing the hydraulic motor to the wheel reducing gear.
- Replace the defective hydraulic motor or reducing gear.

Caution!
It is essential to put the component in slings before dismantling/re-assembling it.

3 - Installing a wheel reducing gear or a hydraulic motor

- Assemble the hydraulic motor to the reducing gear using fixing screws equipped with new grower washers.
- Fix the hydraulic motor using the four fixing bolts, equipped with new elastic washers.
- Re-install the reducing gear / motor assembly and secure with fixing screws. Tighten to the torque recommended (see tightening torque value table).
- In the case of a steering axle, couple the steering connecting rod to the pivot.
- Reconnect the hydraulic hoses to the hydraulic motor and the reducing gear hose equipped with a new seal, according to the marks made when dismantling.

4 - Additional operations

- Check the level of oil in the wheel reducing gear (see corresponding sheet).
- Put the wheel back (see corresponding sheet).
- Put the machine back into the operational configuration.
- Make several travel movements to purge the hydraulic circuit.
- Check the level of the hydraulic oil tank.

Sheet C035	CORRECTIVE MAINTENANCE SHEET	Folio 2/2
	CHANGING A WHEEL REDUCING GEAR OR A TRAVEL HYDRAULIC MOTOR	

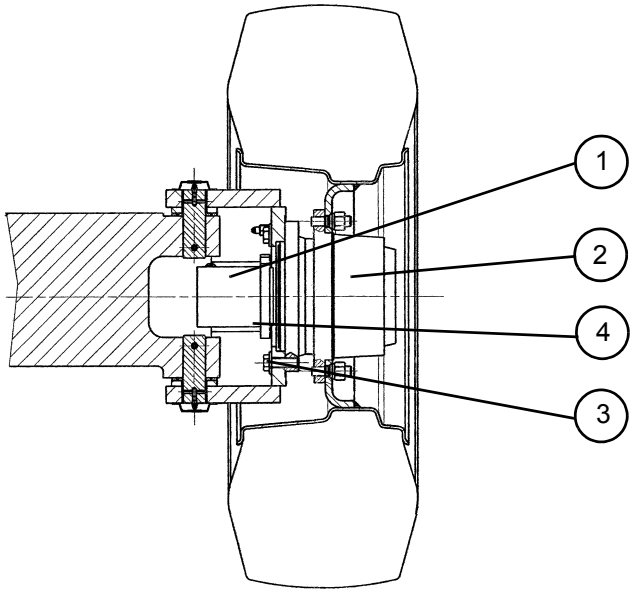

Figure 1

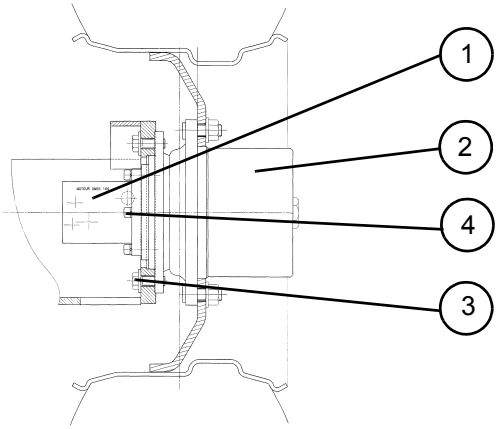

Figure 2

https://truckmanualshub.com/

Sheet C036	CORRECTIVE MAINTENANCE SHEET	Folio 1/2
	CHANGING A STEERING PIVOT	

Caution!
Ensure that the oil is not too hot.

Caution!
Use a container to collect oil to prevent pollution of the environment.

Caution!
It is essential to put the component in slings before dismantling/re-assembling it.

1 - Preliminary operations

- Put the machine in the maintenance configuration (see corresponding paragraph).
- Switch off electric power (see corresponding paragraph).
- Remove the wheel corresponding to the element to be removed (see corresponding sheet).
- Remove the motor and reducing gear corresponding to the pivot to be removed (see corresponding sheet).

2 - Removing a pivot (see figure 1)

- Place a wedge under the steering pivot (1).
- Remove the fixing screw (2) from the steering clevis pin.
- Remove the steering clevis pin (3).
- Remove the two screws (4) from the caps on the pivot pin and remove the two caps (5).
- Take out the Mécanindus pin from each pivot pin (6), then remove the pivot pin and support washer (7).
- Remove the steering pivot (1).

3 - Installing a reducing gear or a motor

- Put the steering pivot into place.
- Replace the pins, lubricators and support washers if necessary.
- Put back the support washers and pivot pins, and block using new Mécanindus pins.
- Put back the pivot pin caps and fix using fixing screws and washers.
- Adjust the wheel alignment, if necessary:
  - slacken the counter-nut (8),
  - tighten or slacken the clevis (9) to adjust the length of the steering bar.
  - tighten the counter-nut (8).
- Put back the steering clevis pin and fix using the screw equipped with a new grower washer.

NB: When installing pins, take measures necessary to avoid deteriorating the pins, rings and bores.

4 - Additional operations

- Put back the motor and reducing gear (see correpsonding sheet).
- Put back the wheel (see corresponding sheet).
- Put the machine back into the operational configuration.
- Make several travel movements to purge the hydraulic circuit
- Check the oil level of the wheel reducing gear (see corresponding sheet).
- Check the hydraulic oil tank level.
- Lubricate the pins with the lubricators.

Sheet C036	CORRECTIVE MAINTENANCE SHEET	Folio 2/2
	CHANGING A STEERING PIVOT	

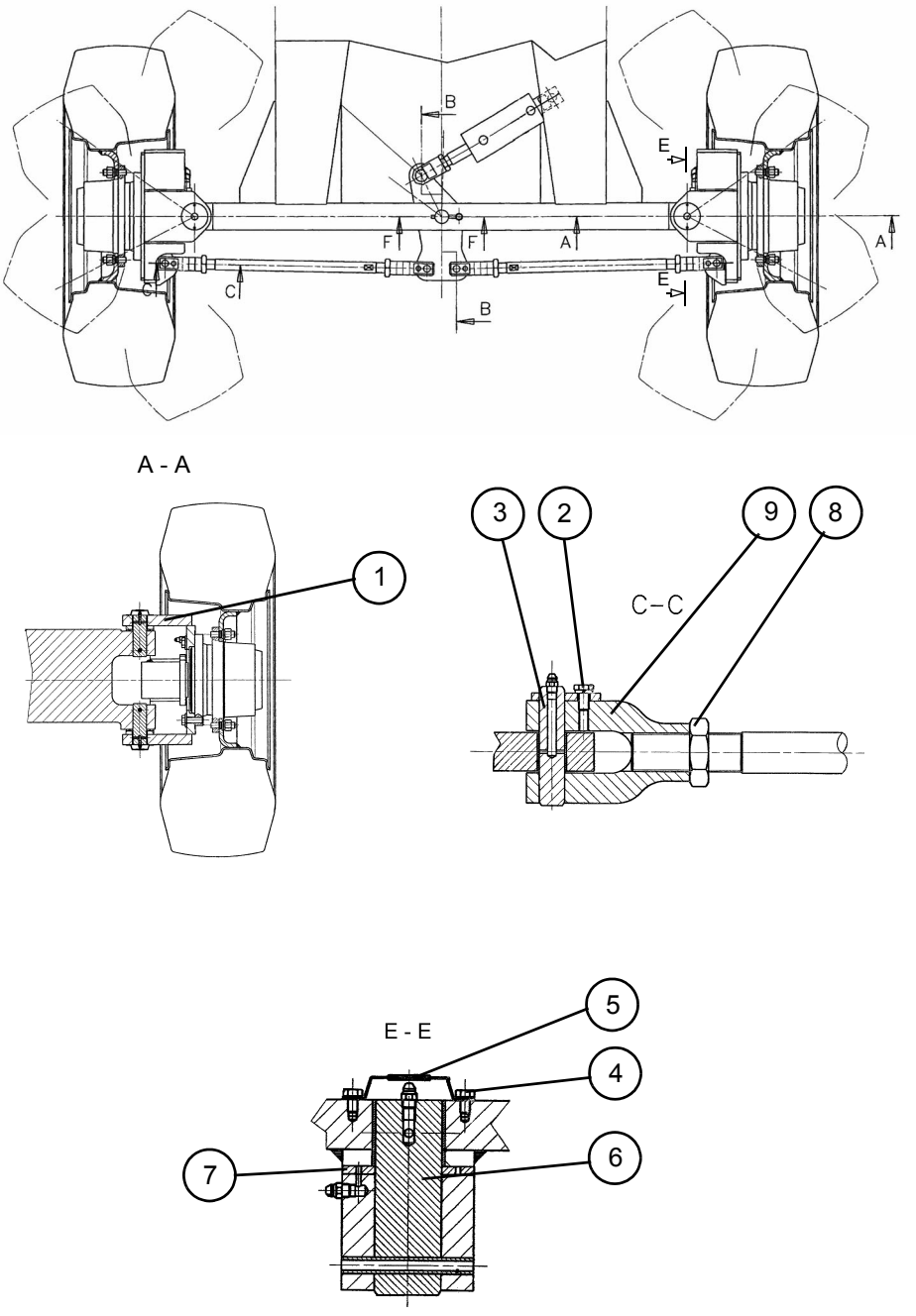

Figure 1

https://truckmanualshub.com/

Sheet C037	CORRECTIVE MAINTENANCE SHEET	Folio 1/2
	DISMANTLING AND RE-ASSEMBLING THE STEERING SYSTEM	

Caution!
Ensure that the oil is not too hot.

Caution!
Use a container to collect oil to prevent pollution of the environment.

Caution!
It is essential to put the component in slings before dismantling/re-assembling it.

1 - Preliminary operations

- Put the machine in the maintenance configuration (see corresponding paragraph).
- Switch off electric power (see corresponding paragraph).

2 - Removing a steering bar (see figure 1)

- Remove the fixing screw (1) from the two steering clevis pins (2).
- Remove the two steering clevis pins (2).
- Remove the steering bar (3).

3 - Removing the steering lever

- Open the upper chassis cover.
- Remove the Nylstop nut (4) and washer (5) from the cylinder fastening pin.
- Remove the cylinder fastening pin (6).
- Remove the male clevis then the central steering pin (8).
- Remove the steering lever (9).

4 - Installing the steering lever

NB: When installing pins, take measures necessary to avoid deteriorating the pins, rings and bores.

- Replace the pins and lubricators if necessary.
- Put the steering lever into place.
- Install the central steering pin.
- Install the male clevis and fix using its fixing screw, equipped with a new washer.
- Install the cylinder fastener pin and fix using a new Nylstop nut and its washer.

5 - Installing the steering bar

- Replace the pins and lubricators if necessary.
- Put the steering bar into place.
- Adjust the wheel alignment if necessary:
  - slacken the counter-nut (10) on the steering bar,
  - tighten or slacken the clevis (11) to adjust the length of the steering bar,
  - tighten the counter-nut (10).
- Install the two steering clevis pins.
- Install the fixing screw of the two steering clevis pins.

6 - Additional operations

- Put the machine back into the operational configuration.
- Lubricate the pins using the lubricators.

Sheet C037	CORRECTIVE MAINTENANCE SHEET	Folio 2/2
	DISMANTLING AND RE-ASSEMBLING THE STEERING SYSTEM	

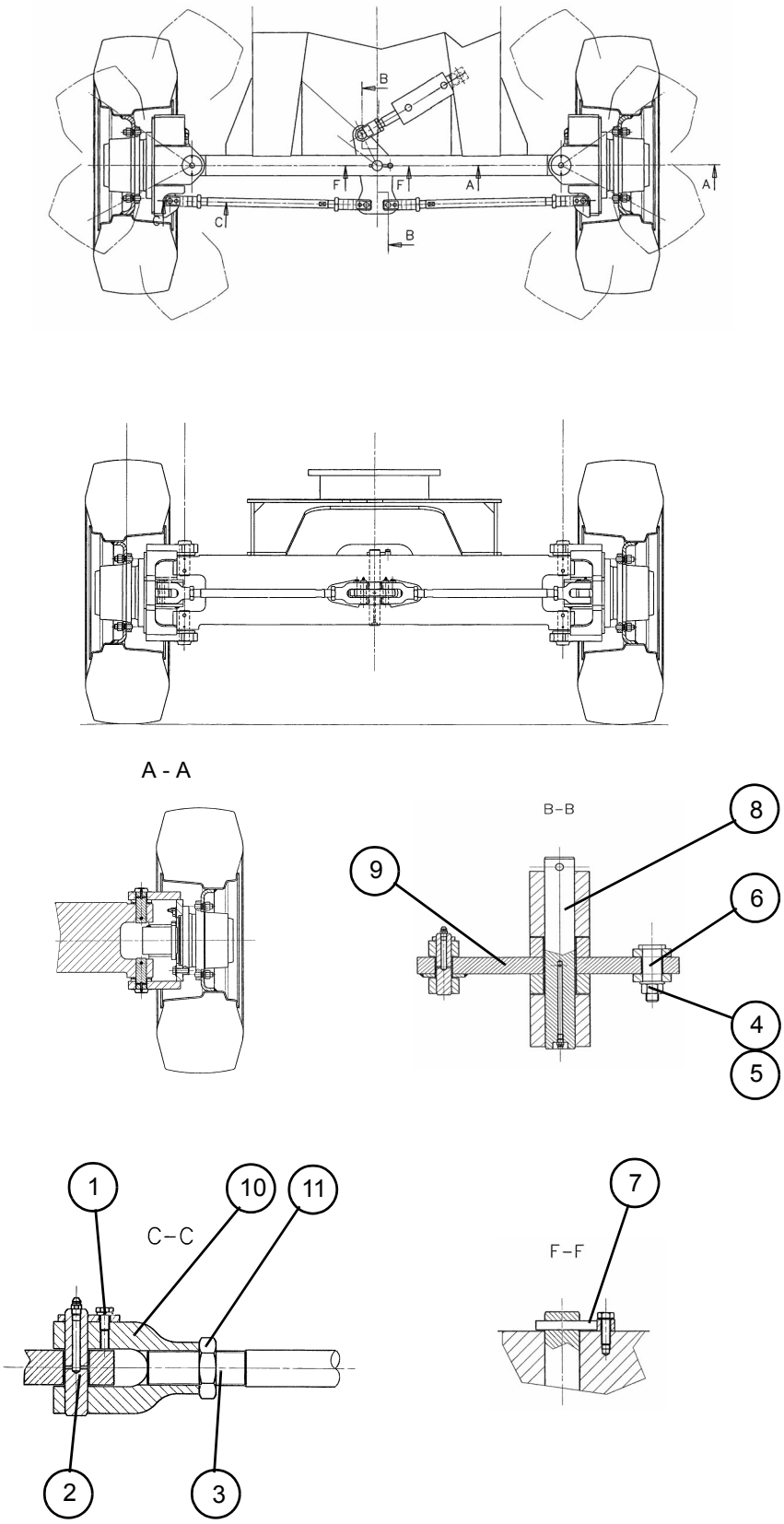

Figure 1

Pinguely-Haulotte

Sheet C038	CORRECTIVE MAINTENANCE SHEET	Folio 1/1
	CHANGING THE STEERING CYLINDER	

Caution!
Ensure that the oil is not too hot.

Caution!
Use a container to collect oil to prevent pollution of the environment.

Caution!
It is essential to put the component in slings before dismantling/re-assembling it.

1 - Preliminary operations

- Put the machine in the maintenance configuration (see corresponding paragraph).
- Switch off electric power (see corresponding paragraph).

2 - Removing the steering cylinder

- Open the upper chassis cover.
- Mark and disconnect the two hoses (2) of the steering cylinder (1).

NB: Unscrew the hoses slowly to release residual hydraulic pressure.

- Put caps on the hoses.
- Put the cylinder in slings.
- Remove the Nylstop nuts (4) then remove the two fastening pins (3) from the steering cylinder.
- Remove the steering cylinder.

3 - Installing the steering cylinder

- Put a new steering cylinder into place.
- Install the fastening pins and fix using new Nylstop nuts and their washers.
- Reconnect the hydraulic hoses according to the marks made during dismantling.
- Put the machine back into the operational configuration.
- Make several steering movements to purge the hydraulic circuit.
- Check the level of the hydraulic oil tank.

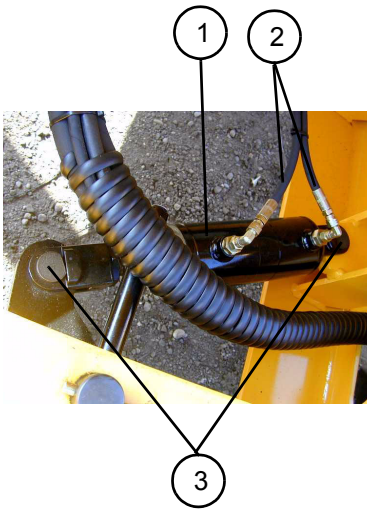

HA16/18 - HA46/51 JRT

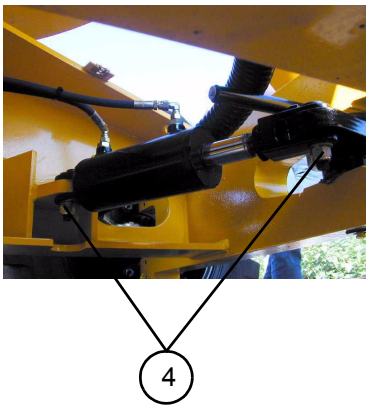

HA16/18 - HA46/51 JRT

https://truckmanualshub.com/

Pinguely-Haulotte

Sheet C039	CORRECTIVE MAINTEANCE SHEET	Folio 1/1
	CHANGING THE TILT SENSOR	

Caution!
Do not use the machine during maintenance operations.

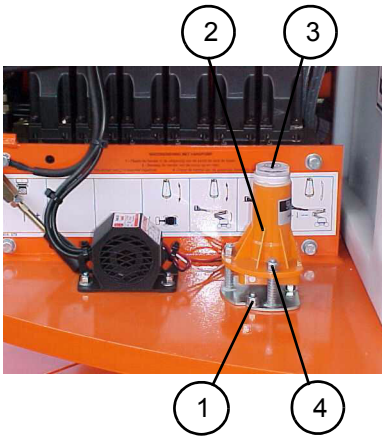

HA16/18PX - HA46/51 JRT

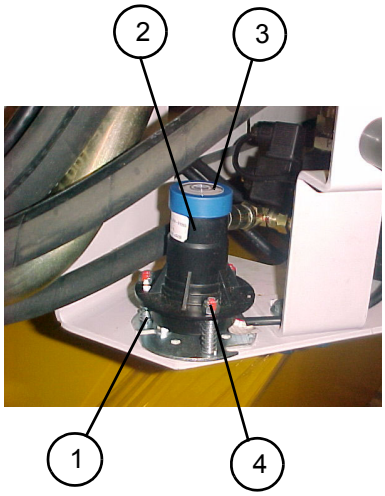

HA16/18PX New design
HA46/51JRT New Design

Caution!
The buzzer should be audible from the basket.

1 - Preliminary operations

- Put the machine on a flat surface with zero slope.
- Put the machine into the maintenance configuration (see corresponding paragraph).
- Switch off electric power (see corresponding paragraph).

2 - Removing the tilt sensor

- Mark and disconnect the electric connections of the tilt sensor.
- Remove the tilt sensor (2) by unscrewing the fixing bolts (1).

3 - Installing the tilt sensor

- Put a new tilt sensor into place and fix using the fixing bolts (1).
- Reconnect the electric connections according to the marks made during dismantling.
- Place a spirit level on the top surface of the tilt sensor and set the adjustment screws (4) so that the tilt sensor is level.

NB: The spirit level (3) is built into certain tilt sensors.

- Put the machine back into the operational configuration.

4 - Tilt sensor operating test

- Extend the machine.
- Tilt the tilt sensor and check that the buzzer sounds.
- Check that after 1 or 2 seconds, extension or travel movements have been disabled.

https://truckmanualshub.com/

https://truckmanualshub.com/

Sheet C040	CORRECTIVE MAINTENANCE SHEET	Folio 1/1
	CHANGING THE HORN	

Caution!
Do not use the machine during maintenance operations.

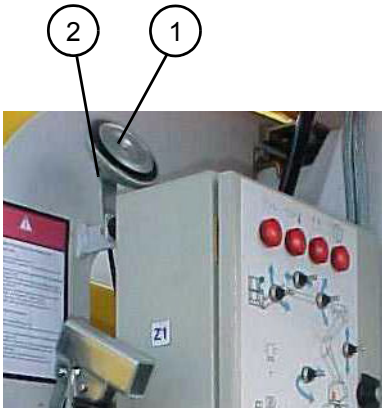

Caution!
The horn should be audible from the basket.

1 - Preliminary operations

- Switch off electric power (see corresponding paragraph).

2 - Removing the horn

- Mark and disconnect the electric connections from the horn (1).
- Remove the horn, by unscrewing the fixing bolts (2).

3 - Installing the horn

- Put the horn back into place and fix with the fixing bolt.
- Reconnect the electric connections according to the marks made during dismantling.

4 - Test

- Select the top control panel and switch on machine power.
- Put the machine back into the operational configuration.
- Activate the horn switch from the platform control panel and check that the horn sounds.

https://truckmanualshub.com/

https://truckmanualshub.com/

Sheet C041	CORRECTIVE MAINTENANCE SHEET	Folio 1/1
	CHANGING THE TILT SENSOR BUZZER	

Caution!
Do not use the machine during maintenance operations.

HA16/18PX - HA46/51JRT

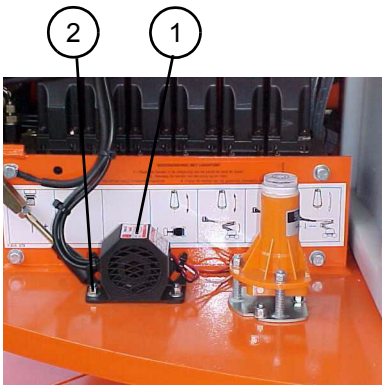

HA16/18PX New design
HA46/51JRT New Design

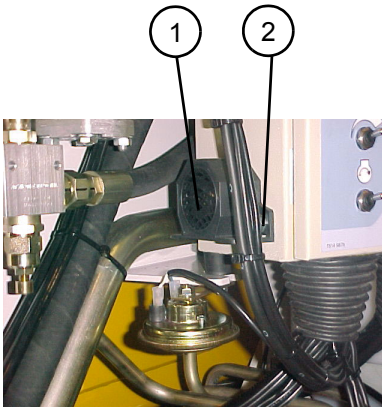

Caution!
The buzzer should be audible from the basket.

1 - Preliminary operations
- Switch off electric power (see corresponding paragraph).

2 - Removing the buzzer
- Mark and disconnect the buzzer's electric connections (1).
- Remove the buzzer by unscrewing the fixing bolts (2).

3 - Installing the buzzer
- Put the buzzer back into place and fix with the fixing bolts.
- Reconnect the electric connections according to the marks made during dismantling.

4 - Test
- Put the machine back into the operational configuration.
- Extend the machine, tilt the tilt sensor and check that the buzzer sounds.

https://truckmanualshub.com/

https://truckmanualshub.com/

Sheet C042	CORRECTIVE MAINTENANCE SHEET	Folio 1/2
	CHANGING THE HYDRAULIC PUMP	

Caution!
Ensure that the oil is not too hot.

Caution!
Use a container to collect oil to prevent pollution of the environment.

Caution!
It is essential to put the component in slings before dismantling/re-assembling it.

1 - Preliminary operations

- Put the machine in the maintenance configuration (see corresponding paragraph).
- Switch off electric power (see corresponding paragraph).
- Close the shut-off valve, if any. Otherwise, empty the hydraulic tank.

2 - Removing the hydraulic pump

- Mark and disconnect the pump hoses (1).

NB: Unscrew the hoses slowly to release residual hydraulic pressure.

- Put caps on the hoses.
- Remove the pump's fixing screws and washers (2) on the motor flange (3), and remove the pump (5).
- Remove the spined split hub (6) by unscrewing the tightening screw (7).
- Remove the hydraulic unions (4) screwed on the pump (see figure on page 2/2)
- Discard the O-rings.

3 - Installing the hydraulic pump

- Fit new O-rings to the unions.
- Screw the hydraulic unions to the pump.
- Lubricate, then install the spined split hub on a new pump.
- Ensure that the spined hub is against the pump shaft shoulder.
- Coat the hub tightening screw with normal blue loctite 243 then tighten to a torque of 83 N.m (61 lb.ft).
- Install the pump on the flange and fix using fixing screws, previously coated with normal blue loctite 243 bleu and fitted with new grower washers. Tighten to a torque of 86 N.m.
- Reconnect the hydraulic hoses according to the marks made during dismantling.
- Open the shut-off valve, if any.
- Check the level of the hydraulic tank and top up if necessary.
- Before re-starting, fill the pump pan with hydraulic oil (hole L).

4 - Additional operations

- Put the machine back into the operational configuration.
- Make several extension cycles to purge the hydraulic circuit.
- Check the level in the hydraulic oil tank
- Adjust pump output, the load sensing pressure limiter and the main pressure limiter (see corresponding sheet).

Sheet C042	CORRECTIVE MAINTENANCE SHEET	Folio 2/2
	CHANGING THE HYDRAULIC PUMP	

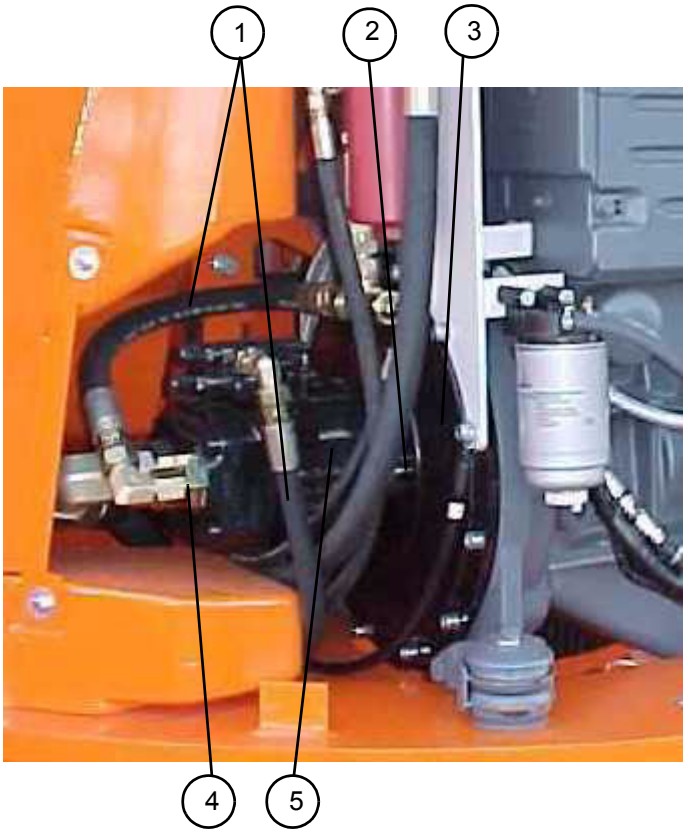

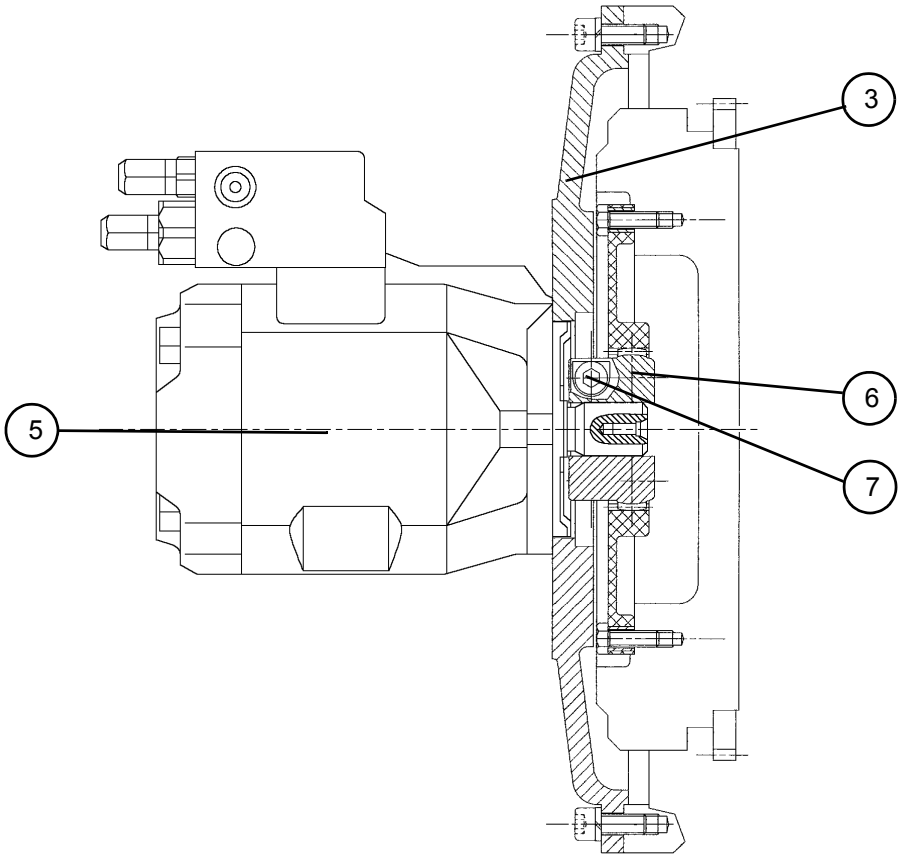

https://truckmanualshub.com/

Sheet C043	CORRECTIVE MAINTENANCE SHEET	Folio 1/1
	CHANGING AN ELECTRIC COMPONENT ON THE TOP CONTROL PANEL	

Caution!
Do not use the machine during maintenance operations.

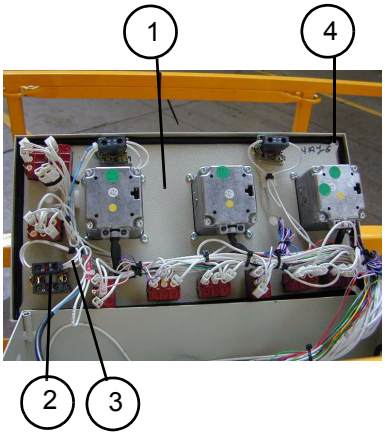

1 - Preliminary operations

- Put the machine in the maintenance configuration (see corresponding paragraph).
- Switch off electric power (see corresponding paragraph).
- Disconnect the «-» then «+» terminals of the starter battery.

2 - Removing a component from the top control panel

- Remove the closing plate (1) by removing the four fixing screws (4).
- Mark and disconect the electric connections (3) of the component to be replaced (2).
- Remove the component.

3 - Installing a component in the top control panel

- Put a new component and seal into place on the front panel of the top control panel.

NB: In the case of a lever switch, adjust the position of the fixing nut and counter-nut so that the switch lever's articulation pin is at the same level as the seal, to ensure tightness.

- Reconnect the electric connections according to the marks made during dismantling.
- Fix the closing plate using the four fixing screws.
- Reconnect the « + » then « - » terminals of the battery.
- Put the machine back into the operational configuration.
- Perform the function corresponding to the replaced component to check that it works properly.

https://truckmanualshub.com/

https://truckmanualshub.com/

Sheet C044	CORRECTIVE MAINTENANCE SHEET	Folio 1/1
	CHANGING AN ELECTRIC COMPONENT ON THE BOTTOM CONTROL PANEL	

Caution!
Do not use the machine during maintenance operations.

1 2 3

1 - Preliminary operations

- Put the machine in the maintenance configuration (see corresponding paragraph).
- Switch off electric power (see corresponding paragraph).
- Disconnect the «-» then «+» terminals to isolate the circuit.

2 - Removing a component from the bottom control panel

- Open the door of the bottom control panel (1).
- Mark and disconect the electric connections (3) of the component to be replaced (2).
- Remove the component.

3 - Installing a component in the bottom control panel

- Put a new component and seal into place on the front panel of the bottom control panel.

NB: In the case of a lever switch, adjust the position of the fixing nut and counter-nut so that the switch lever's articulation pin is at the same level as the seal, to ensure tightness.

- Reconnect the electric connections according to the marks made during dismantling.
- Close the door of the bottom control panel.
- Reconnect the « + » then « - » terminals of the battery.

4 - Test

- Put the machine back into the operational configuration.
- Perform the function corresponding to the replaced component to check that it works properly.

https://truckmanualshub.com/

Sheet C045	CORRECTIVE MAINTENANCE SHEET	Folio 1/1
	CHANGING A MANIPULATOR	

Caution!
Do not use the machine during maintenance operations.

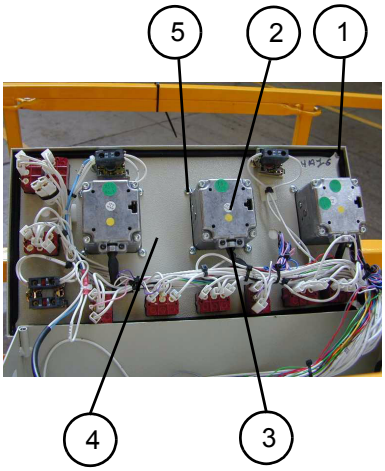

1 - Preliminary operations

- Put the machine in the maintenance configuration (see corresponding paragraph).
- Switch off electric power (see corresponding paragraph).
- Disconnect the «-» then «+» terminals to isolate the circuit.

2 - Removing a manipulator (2)

- Remove the upper panel (4) of the top control box by removing its fixing screws (1).
- Using cutters, remove the cable clamps from the defective manipulator wires.
- Carefully mark the positions of the different manipulator wires (3) on the top control panel connector.
- Disconnect the wires from the top control panel plug.
- Disconnect the positive wires 211 from the switches, and then the negative wire.
- Remove the fixing screws (5) from the manipulator and take the manipulator out of the box.

3 - Installing a manipulator

- Place the replacement manipulator in position and put back the fixing screws (5).
- Put back the wires (3) in the cable strand and fasten the strand using plastic clamps.
- Fit male reference contacts to the ends of the wires (3).
- Connect the wires in the plug according to the marks made during dismantling.
- Re-connect the supply wires 211 and then the negative wire.
- Put back the upper panel (4) of the box and fix using screws (1).
- Re-connect the « + » then « - » terminals of the battery.
- Put the machine back into its operational configuration.
- Make several movements controlled from the basket to test manipulator operation.

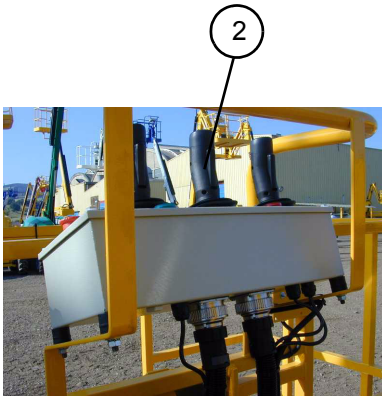

https://truckmanualshub.com/

Pinguely-Haulotte

Sheet C046	CORRECTIVE MAINTENANCE SHEET	Folio 1/1
	CHANGING THE STARTER BATTERY	

Caution!
Wear protective goggles and gloves for any operation on the batteries.

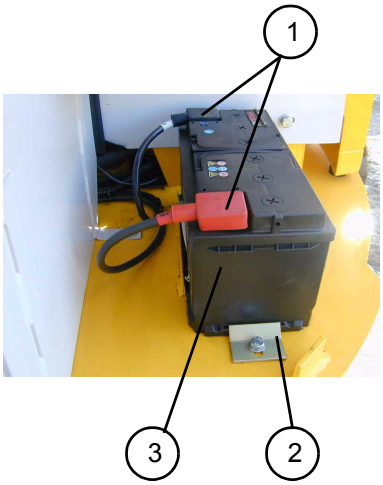

1 - Preliminary operations

- Put the machine in the maintenance configuration (see corresponding paragraph).
- Switch off electric power (see corresponding paragraph).

2 - Removing the starter battery

- Disconnect the « - » then « + » terminals (1) of the battery (3).
- Remove the fixing screws from the battery fixing tab and remove the fixing tab (2).
- Remove the battery.

3 - Installing the starter battery

- Put a new battery into place.
- Put back the fixing tab and secure with the fixing screw equipped with a new toothed washer.
- Re-connect the « + » then « - » terminals of the battery and lubricate them to improve contact.
- Put the machine back into its operational configuration.
- Start the machine to check that the battery works properly.

https://truckmanualshub.com/

https://truckmanualshub.com/

Sheet C047	CORRECTIVE MAINTENANCE SHEET	Folio 1/1
	CHANGING A COVER GAS SPRING	

Caution!
Do not use the machine during maintenance operations.

HA16/18PX - HA46/51JRT

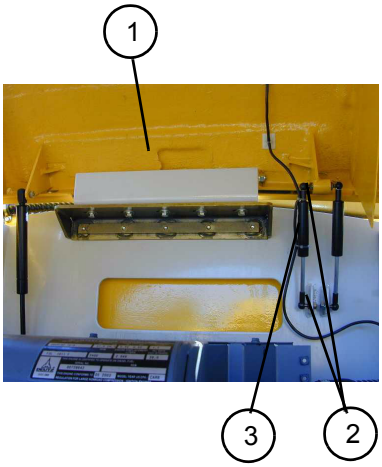

HA16/18 PX New design
HA46/51JRT New Design

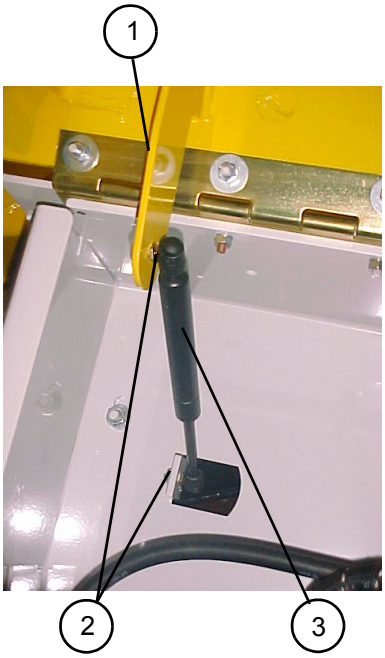

1 - Preliminary operations

- Put the machine in the maintenance configuration (see corresponding paragraph).
- Switch off electric power (see corresponding paragraph).

2 - Removing a gas spring

- Open the cover (1) concerned.
- Put the cover in slings.
- Remove the fixing nuts and washers (2) at both ends of the gas spring (3).

3 - Installing a gas spring

- Put a new gas spring into place and fix at both ends using the fixing nuts and washers.
- Put the machine back into the operational configuration.
- Check that the cover opens and closes correctly.

https://truckmanualshub.com/

https://truckmanualshub.com/

Sheet C048	CORRECTIVE MAINTENANCE SHEET	Folio 1/1
	CHANGING A TURNTABLE COVER	

⚠ *Caution!*
Do not use the machine during maintenance operations.

HA16/18 PX - HA46/51JRT

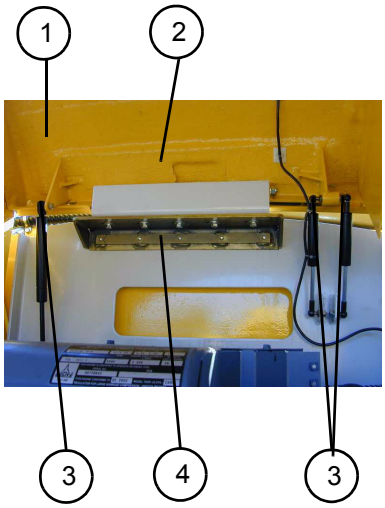

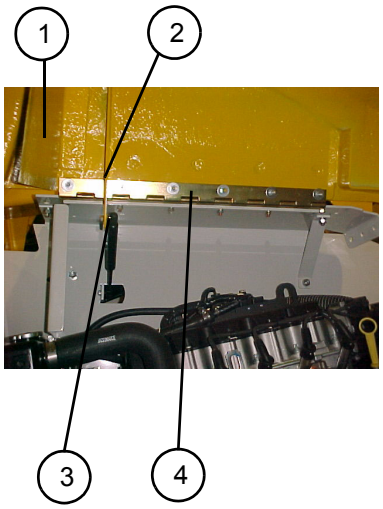

HA16/18PX New design
HA46/51JRT New Design

1 - Preliminary operations

- Put the machine in the maintenance configuration (see corresponding paragraph).
- Switch off electric power (see corresponding paragraph).

2 - Removing a cover

- Open the cover (1) concerned.
- Put the cover in slings.
- Remove the nuts and washers (3) fixing the gas springs to the cover insert (2).
- Remove the bolts fixing the cover insert (2) to the articulation clevis (4).
- Remove the cover.

3 - Installing a cover

- Put a new cover into place and fix the cover insert to the articulation clevis using the fixing bolts.
- Fix the gas springs to the cover insert using the fixing nuts and washers.
- Put the machine back into the operational configuration.
- Check that the cover opens and closes correctly.

https://truckmanualshub.com/

Pinguely-Haulotte

Sheet C049	CORRECTIVE MAINTENANCE SHEET	Folio 1/2
	CHANGING THE THERMAL MOTOR	

Caution!
Leave the motor and exhaust to cool sufficiently before performing any maintenance operation on these elements.

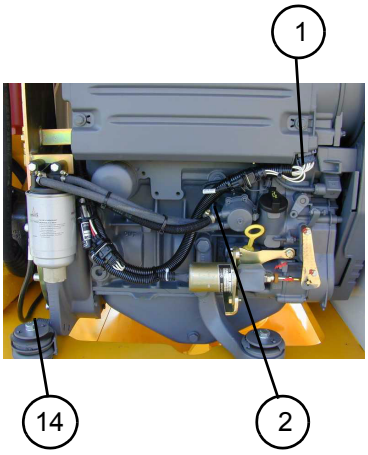

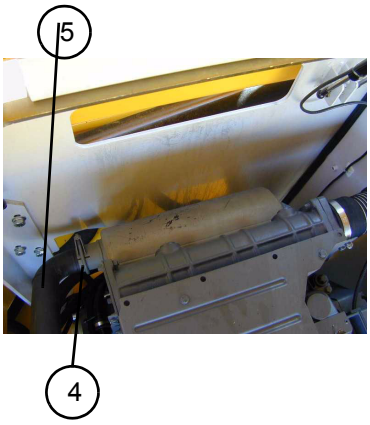

1 - Preliminary operations
- Put the machine in the maintenance configuration (see corresponding paragraph).
- Switch off electric power (see corresponding paragraph).

2 - Removing the connections
- Remove the cover on the motor side (see corresponding sheet).
- Disconnect the starter battery terminals.
- On the motor, disconnect the electric connectors (1) (acceleration set-point, oil temperature, oil pressure, starter supply, generator).
- Disconnect the fuel incoming (2) and outgoing pipes.

3 - Removing the exhaust
- Remove the fixing collar (4) on the exhaust.
- Remove the fixing bolt on the 2 exhaust fixing collars (5).
- Remove the exhaust (5).

4 - Removing the coupling
- Remove the hydraulic pump (6) (see corresponding sheet).
- Remove the 3 fixing screws (7) from the hydraulic oil filter support (8) and remove the earth braid (3).
- Remove the remaining 9 screws (9) fixing the flange (10) of the motor flap and remove the flange.
- Remove the 8 fixing screws (15) from the coupling (16) and remove it.

5 - Removing the thermal motor
- Remove the fixing collar (11) on the air filter duct (12).
- *HA16/18 previous generation only:*
  - Remove the fixing screws (13) from the cooling fan.
- Put the motor in slings according to the instructions in the motor manufacturer's manual.
- Remove the 4 fixing screws (14) from the motor, then remove the motor.

6 - Installing the thermal motor
- Check the condition of the 4 silent blocks, and replace if necessary.
- Put the thermal motor into place and fix with 4 fixing screws, previously coated with normal blue loctite 243, and equipped with new grower washers.
- Put back the fixing collar on the air filter duct.
- Put back the cooling fan fixing screws.

7 - Installing the coupling
- Put the coupling into place and fix with 8 fixing screws previously coated with normal blue loctite 243. Tighten to a torque of 25 N.m (18.43 lb.ft).
- Put the motor flap flange into place and fix with 9 screws equipped with new grower washers. Do not tighten immediately.
- Put back the hydraulic oil filter support and earth braid and fix to the flange with the 3 remaining long screws, equipped with new grower washers.
- Tighten the 12 screws (7) and (9) on the flange to a torque of 49 N.m (36.14 lb.ft).
- Put back the hydraulic pump (see corresponding sheet).

8 - Installing the exhaust
- Put the exhaust into place and fix with the fixing collar.
- Put back the fixing bolt on the 2 exhaust fixing collars.

Sheet C049	CORRECTIVE MAINTENANCE SHEET	Folio 2/2
	CHANGING THE THERMAL MOTOR	

HA16/18PX

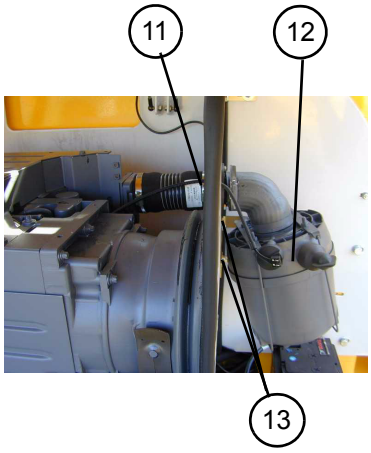

HA16/18PX new generation

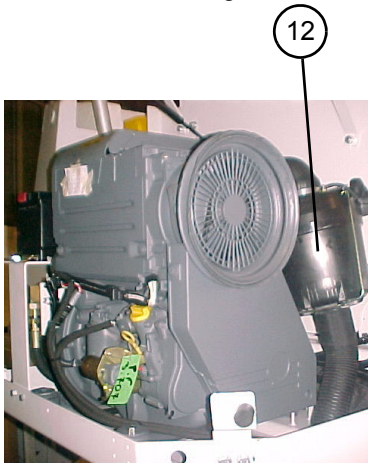

Caution!
If the motor installed is new, follow the first commissioning instructions (see motor manufacturer's manual).

9 - Connections

- Reconnect the fuel incoming and outgoing pipes.
- On the motor, reconnect the electric connectors (acceleration setpoint, oil temperature, oil pressure, starter supply).
- Reconnect the starter battery terminals.
- Put back the cover (see corresponding sheet).

10 - Additional operations

- Put the machine back into the operational configuration.
- Start the motor and check that it works properly.

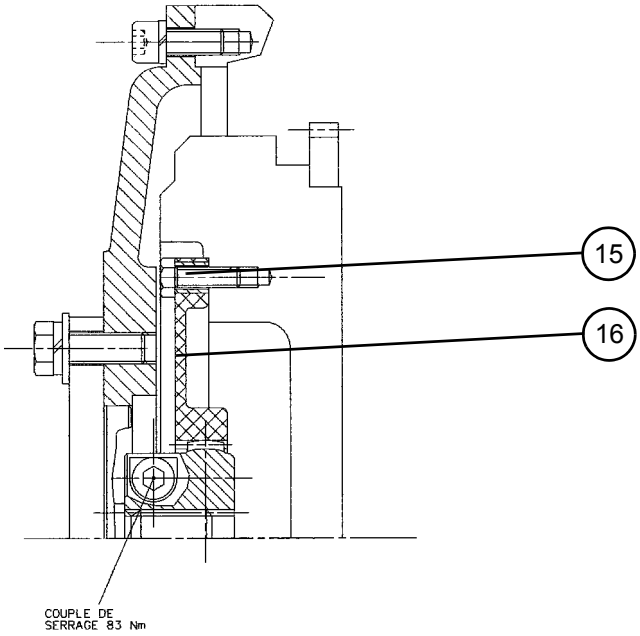

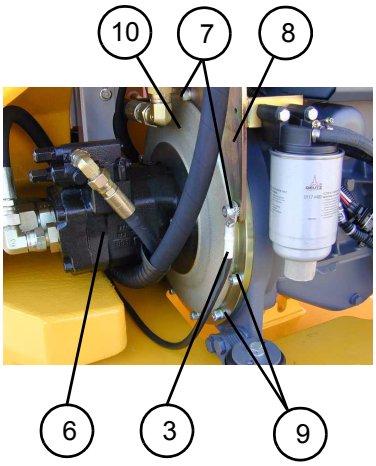

https://truckmanualshub.com/

Sheet C050	CORRECTIVE MAINTENANCE SHEET	Folio 1/1
	CHANGING THE TURNTABLE ROTATION HYDRAULIC MOTOR	

Caution!
Ensure that the oil is not too hot.

Caution!
Put the turntable rotation blocking pin into place.

Caution!
Use a container to collect oil to prevent pollution of the environment.

Caution!
It is essential to put the component in slings before dismantling/re-assembling it.

1 - Preliminary operations

- Put the machine in the maintenance configuration (see corresponding paragraph).
- Switch off electric power (see corresponding paragraph).

2 - Removing the hydraulic motor

- Mark and disconnect the hoses (1) of the hydraulic motor (3).

NB: Unscrew the hoses slowly to release residual hydraulic pressure.

- Fit caps to the hoses.
- Place a wedge under the hydraulic motor.
- Remove the hydraulic motor by removing its fixing bolts (2).

3 - Installing the hydraulic motor

- Put a new hydraulic motor into place.
- Fix the hydraulic motor using fixing bolts equipped with new spring washers.
- Re-connect the hydraulic hoses according to the marks made during dismantling.
- Put the machine back into the operational configuration.
- Remove the turntable rotation blocking pin.
- Make several turntable rotation movements to purge the hydraulic circuit.
- Check the level of the hydraulic oil tank.

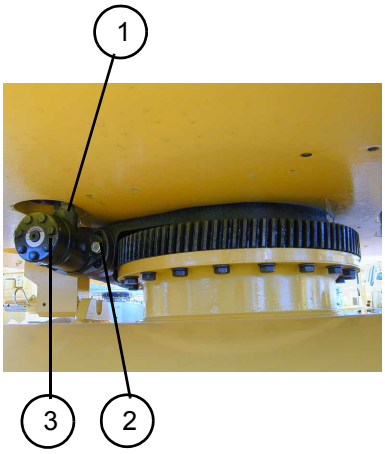

https://truckmanualshub.com/

Sheet C051	CORRECTIVE MAINTENANCE SHEET	Folio 1/2
	CHANGING THE SWING JOINT	

Caution!
Ensure that the oil is not too hot.

Caution!
Use a container to collect oil to prevent pollution of the environment.

Caution!
It is essential to put the component in slings before dismantling/re-assembling it.

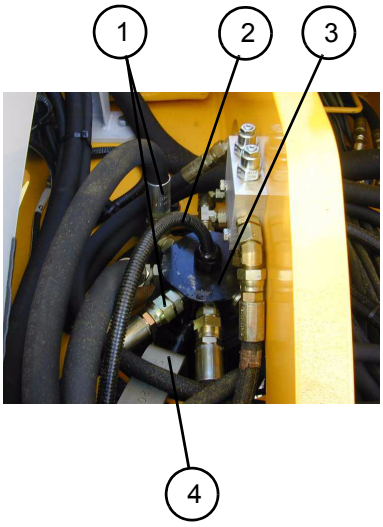

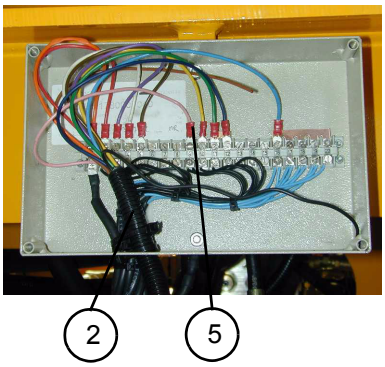

1 - Preliminary operations

- Lift the arms sufficiently to enable access to the swing joint.
- Place wedges under the arm to support it.
- Put the machine in the maintenance configuration (see corresponding paragraph).
- Switch off electric power (see corresponding paragraph).
- Block turntable rotation using the blocking pin.

2 - Removing the swing joint

- Open the chassis box, mark and disconnect all electric connectors (5).
- Remove the wiring harness (2) that passes through the swing joint.
- Mark and disconnect the hoses and hydraulic caps (1) on the swing joint (3), turntable and the bottom of the chassis.

NB: Unscrew the hoses slowly to release residual hydrualic pressure.

- Put caps on the hoses.
- Put the swing joint into slings.
- Remove the stop (4) of the swing joint by removing the 2 fixing screws.
- Remove the 3 fixing screws from the swing joint on the chassis.
- Remove the swing joint.

3 - Installing the swing joint

- Put the swing joint into place and fix with the fixing screws equipped with new washers.
- Block swing joint rotation using the swing joint stop.
- Fix the swing joint stop using the two fixing screws equipped with new washers.
- Re-connect the hydraulic hoses and caps on the swing joint according to the marks made during dismantling.
- Pass the wiring harness through the swing joint and re-connect the electric connections in the chassis box according to the marks made during dismantling.

4 - Additional operations

- Put the machine back into the operational configuration.
- Remove the wedges from under the arm.
- Make several steering and travel movements, using all possible travel speeds to purge the hydraulic circuit.
- Check the level of the hydraulic oil tank.

https://truckmanualshub.com/

https://truckmanualshub.com/

Sheet C052	CORRECTIVE MAINTENANCE SHEET	Folio 1/1
	CHANGING THE BASKET ROTATION HYDRAULIC MOTOR	

Caution!
Ensure that the oil is not too hot.

Caution!
Use a container to collect oil to prevent pollution of the environment.

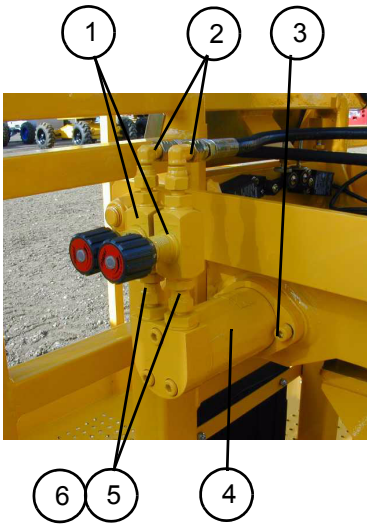

1 - Preliminary operations

- Put the machine in the maintenance configuration (see corresponding paragraph).
- Switch off electric power (see corresponding paragraph).

2 - Removing the hydraulic motor

- Mark and disconnect the hoses (2) from the hydraulic motor (4).

NB: Unscrew the hoses slowly to release residual hydrualic pressure.

- Fit caps to the hoses.
- Remove the flow limiters (1) by unscrewing the unions (5) and adapters (6).
- Remove the hydraulic motor by unscrewing its fixing screws (3).

3 - Installing the hydraulic motor

- Replace the flow limiters if necessary.
- Put a new hydraulic motor into place.
- Fix the hydraulic motor using fixing screws equipped with new grower washers.
- Screw the unions, adapters and flow limiters onto the motor.
- Reconnect the hydraulic hoses according to the marks made during dismantling (see table of tightening torque values).
- Put the machine back into the operational configuration.
- Make several platform rotation movements to purge the hydraulic circuit and adjust rotation speed using the flow limiter adjustment buttons (see Table of adjustment times).
- Check the level of the hydraulic oil tank.

https://truckmanualshub.com/

Sheet C053	CORRECTIVE MAINTENANCE SHEET CHANGING THE BASKET	Folio 1/3

⚠ *Caution!*
It is essential to put the component in slings before dismantling/re-assembling it.

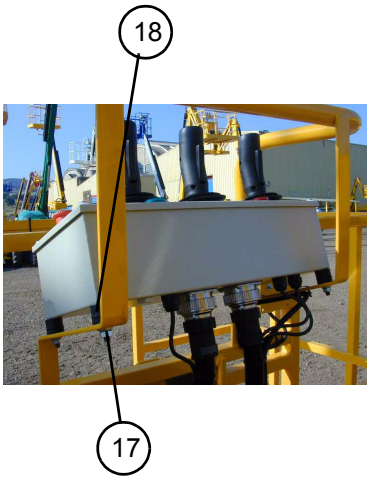

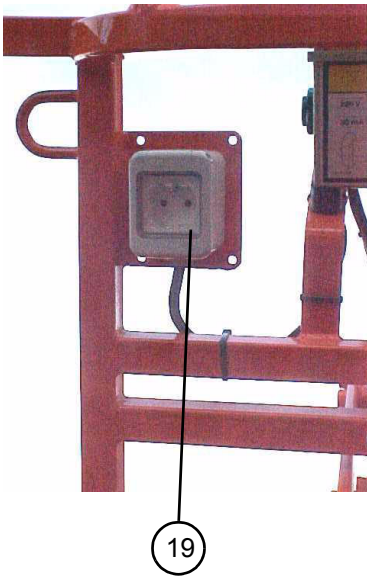

1 - Preliminary operations

- Put the machine in the maintenance configuration (see corresponding paragraph).
- Switch off electric power (see corresponding paragraph).
- Disconnect the « - » then « + » terminals of the starter battery.

2 - Removing the platform

- Disconnect the platform control panel electric wiring harness.
- Remove the control panel fixing screws (17).
- Remove the control panel and its silent blocks (18).
- Remove the platform's electric plug (19), if any, by unscrewing its fixing bolts.
- Put the platform in slings.
- Remove the pre-stressing stop by unscrewing the screw (1) and nut (2).

Upper part

- Remove the Nylstop nut (3) and its washer (4) on the platform side.
- Remove the stop pad (5) on the platform side.
- Remove the weighing articulation pin (6).

Lower part

- Remove the lower pivot pin (7) by removing its fixing screws (8) and washer (9).
- Remove the platform and retain the ball (10), the nylatron washer (11) and the stop (12).
- If necessary, unscrew the pre-stressing nut totally (13) as a safety measure, before performing any operation on the platform.

3 - Installing the platform

- Check the condition of the elastic parts and wearing parts, and replace if necessary (spring washers (14), collar rings (15), ring (16), nylatron washer (11), control panel silent blocks, circlips).

Lower part

- If necessary, adjust the pre-stressing system by tightening the pre-stressing nut (13), so that the washers are 108 mm high (see figure 3).
- Put the platform into place, taking care to put the ball (10), nylatron washer (11) and stop (12) in the right places.
- Lubricate the bore and put the lower pivot (7) into place. Fix using the fixing screw (8) and washer (9).

NB: Only use lubricants recommended by the manufacturer.

Upper part

- Lubricate then put back the weighing articulation pin (6).
- Put back the stop tab (5).
- Install the Nylstop nut (3) and its washer (4).
- Adjust the stop for the pre-stressing system by tightening the screw (1) and the nut (2).
- Put the control panel into place on its silent blocks and fix using the screws equipped with new washers.
- Reconnect the control panel wiring harness.

Sheet C053	CORRECTIVE MAINTENANCE SHEET	Folio 2/3
	CHANGING THE BASKET	

- If necessary, put the platform's electric plug back into place and fix using its fixing bolts equipped with new toothed washers.
- Reconnect the « + » then « - » terminals of the starter battery.
- Put the machine back into the operational configuration.
- Adjust the weighing contactors (see corresponding sheet).

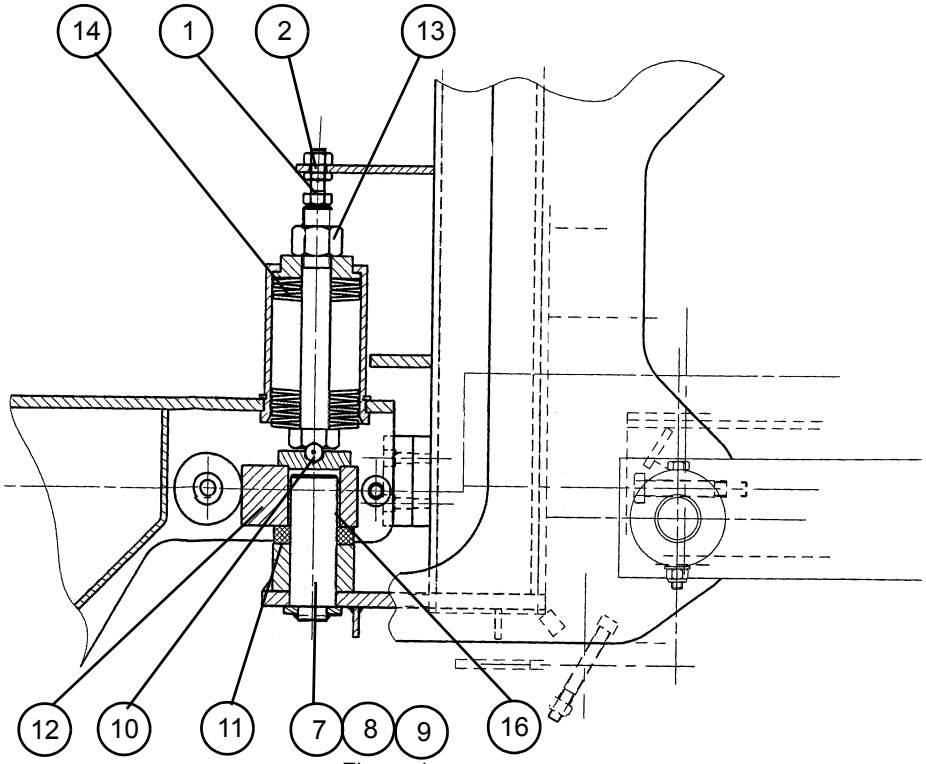

Figure 1

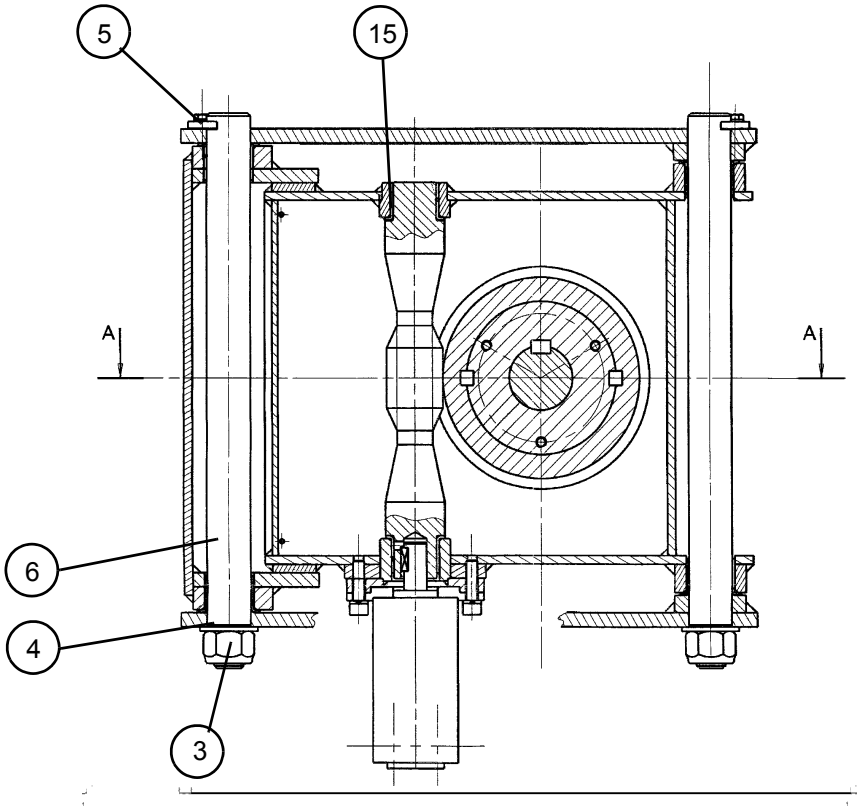

https://truckmanualshub.com/

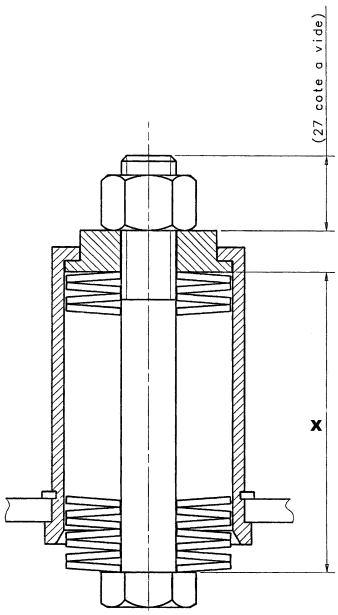

Figure 3

X =

HA16/18PX - HA46/51JRT = 108 mm / 4.25 in

H21T - HB62 = 103 mm / 4.055 in

H23T/TP - H25TP - HB68J - HB76J = 108 mm / 4.25 in

https://truckmanualshub.com/

https://truckmanualshub.com/

Sheet C054	CORRECTIVE MAINTENANCE SHEET	Folio 1/1
	CHANGING A WEIGHING SYSTEM ROLLING BEARING	

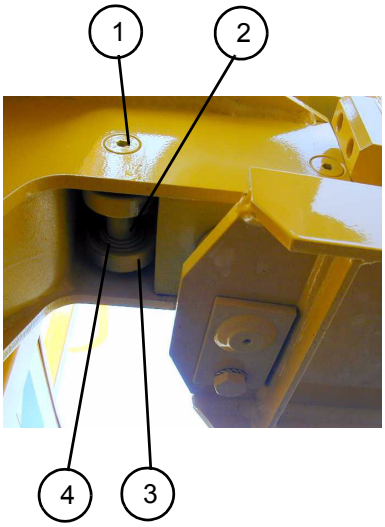

1 - Preliminary operations

- Put the machine in the maintenance configuration (see corresponding paragraph).
- Switch off electric power (see corresponding paragraph).
- Remove the basket (see corresponding sheet).

2 - Removing the rolling bearing

- Remove the screws (1) from the rolling bearing track.
- Remove the rolling bearing track (2).
- Remove the circlips (4), then the ball bearings (3).

3 - Installing the rolling bearing

- Put new rolling elements on the bearing track. Block in travel using the circlips.
- Lubricate the rolling bearings.

NB: Only use lubricants recommended by the manufacturer.

- Re-install the basket (see corresponding sheet).
- Put the machine back in the operational configuration.

https://truckmanualshub.com/

https://truckmanualshub.com/

Sheet C055	CORRECTIVE MAINTENANCE SHEET	Folio 1/2
	CHANGING THE BASKET ROTATION GEARING	

1 - Preliminary operations

- Put the machine in the maintenance configuration (see corresponding paragraph).
- Switch off electric power (see corresponding paragraph).
- Remove the basket (see corresponding sheet).
- Remove the basket rotation hydraulic motor (see corresponding sheet).

Caution!
It is essential to put the component into slings before dismantling/re-assembling it.

2 - Removing the gearing

- Remove the motor fixing flange (1).
- Remove the endless screw (2) and adjustment washers (3), if any.
- Remove the Stauff collar fixing screw (4). Retain the toothed washer (5), spacer (6) and spacer washer (7).
- Remove the cap (8), then the platform link part (9) and Nylatron washer (10).
- Remove the nylstop nut (11), bushing (12), elastic washers (13), plate (14).
- Remove the articulation pin assembly (15) then the disk (16) and pad (17).
- Remove the screws and washers (18) and (19) and remove the pin (15), tangent wheel (22), keys (17), hub (20), key (21),

3 - Installing the gearing

- Replace rings, pads and keys if necessary.
- Put into place on the articulation pin (15), the key (21), hub (20), 2 keys (17), tangent wheel (22). Put back screws and washers (18) and (19).
- Put the disk (16) and pad (17) into place, then the articulation pin assembly (15).
- Put into place the plate (14), elastic washers (13), bushing (12), then the nylstop nut (11).
- Put into place the Nylatron washer (10), platform link part (9), cap (8), spacer washer (7), spacer (6) and Stauff collar.
- Fix the assembly using the screw (4) eqipped with a new toothed washer.
- Install the endless screw (2) and adjustment washers (3) if necessary.
- Install the motor fixing flange (1).
- Install the basket rotation hydraulic motor (see corresponding sheet).
- Install the basket (see corresponding sheet).
- Lubricate the gearing.

NB: Only use lubricants recommended by the manufacturer.

- Put the machine back into the operational configuration.

Sheet C055	CORRECTIVE MAINTENANCE SHEET	Folio 2/2
	CHANGING THE BASKET ROTATION GEARING	

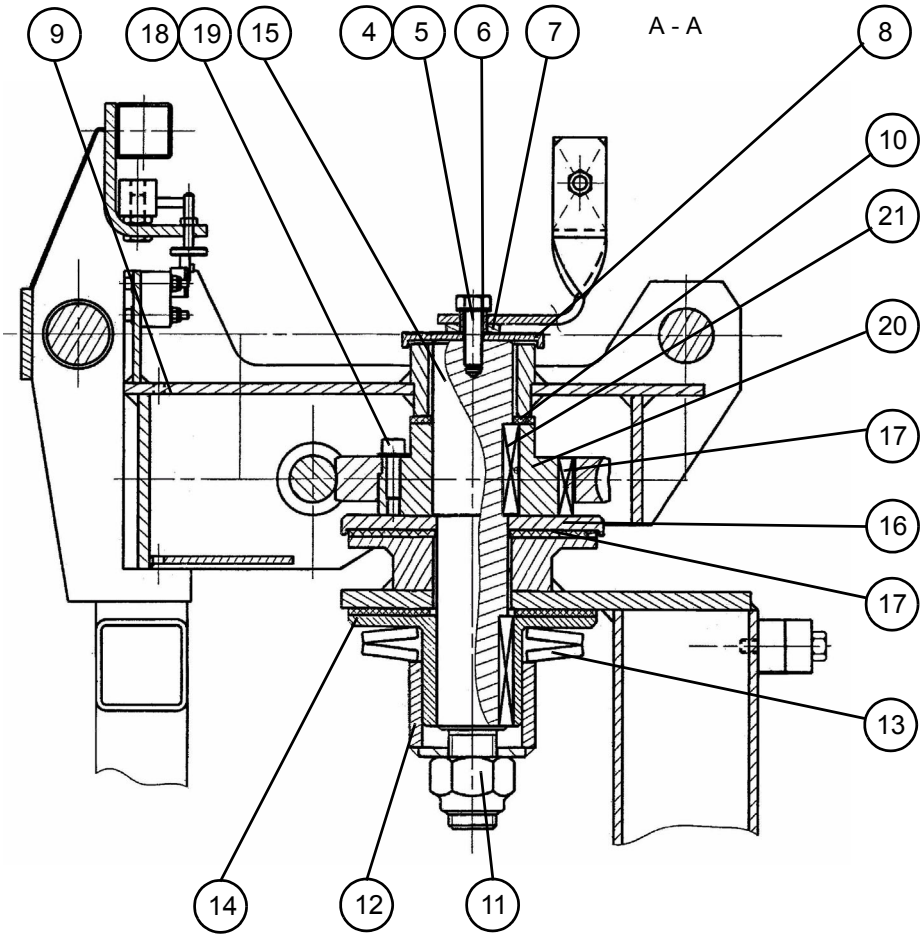

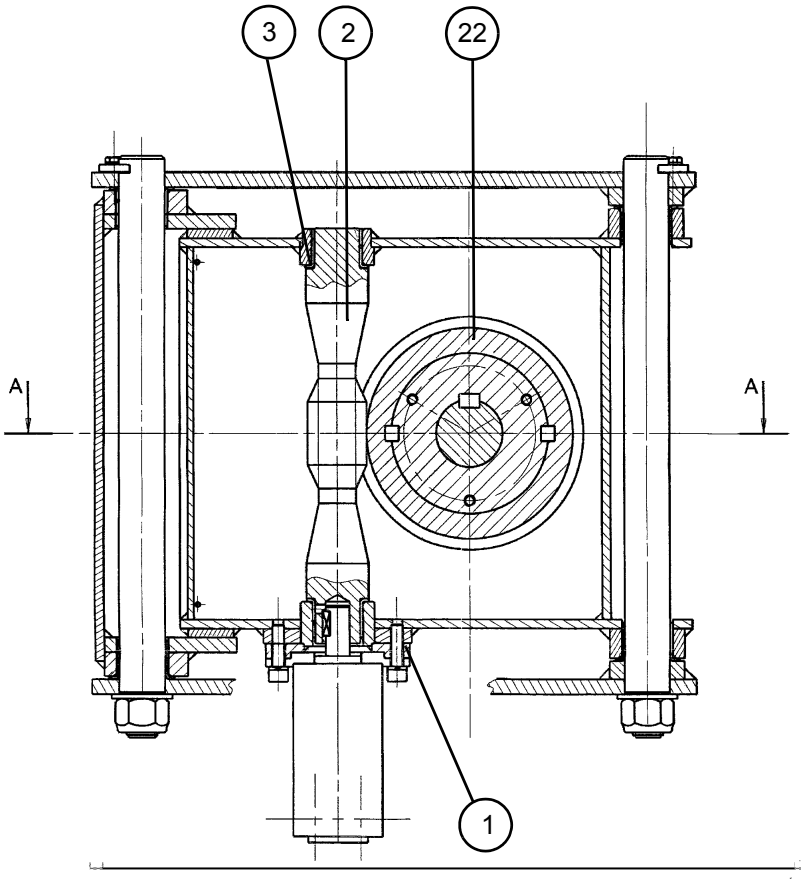

https://truckmanualshub.com/

Sheet C056	CORRECTIVE MAINTENANCE SHEET	Folio 1/1
	CHANGING THE HYDRAULIC FILTER	

Caution!
Ensure that the oil is not too hot.

Caution!
Use a container to collect oil to prevent pollution of the environment.

HA16/18PX - HA46/51JRT

H14/16TPX - HB40/44J

1 - Preliminary operations

- Put the machine in the maintenance configuration (see corresponding paragraph).
- Switch off electric power (see corresponding paragraph).
- Close the shut-off valve, if any. Otherwise, empty the hydraulic tank.

2 - Removing the hydraulic filter

- Disconnect the hydraulic filter hoses (1).

NB: Unscrew the hoses slowly to release residual hydraulic pressure.

- Fit caps to the hoses.
- Unscrew the fixing screws (2) and remove the hydraulic filter.
- Remove the two connectors (3) from the hydraulic filter.

3 - Installing the hydraulic filter

- Install the two connectors on a new hydraulic filter (see the table of tightening torque values).
- Put the equipped hydraulic filter back into place, respecting the oil flow direction and fix using the fixing screws.
- Reconnect the hydraulic hoses.
- Put the machine back into the operational configuration.
- Make several lifting cycles to purge the hydraulic circuit.

https://truckmanualshub.com/

	CORRECTIVE MAINTENANCE SHEET	Folio 2/2

Pinguely-Haulotte

Sheet C057	CORRECTIVE MAINTENANCE SHEET	Folio 1/2
	CHANGING THE SLEW RING	

Caution!
Ensure that the oil is not too hot.

Caution!
Check that the lifting equipment is in good condition and of sufficient capacity.

Caution!
Use a container to collect oil to prevent pollution of the environment.

Caution!
It is essential to put the component into slings before dismantling/re-assembling it.

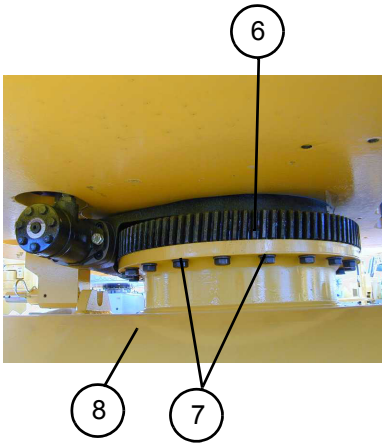

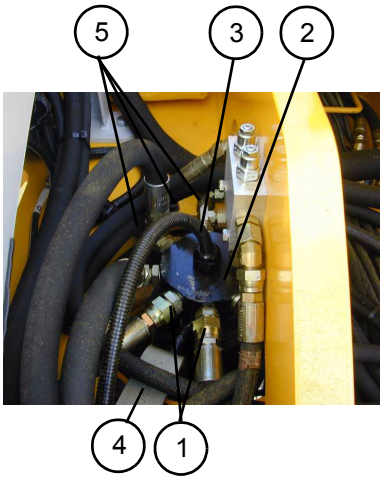

1 - Preliminary operations

- Turn the turntable to the locking position.
- Put the machine in the maintenance configuration (see corresponding paragraph).
- Switch off electric power (see corresponding paragraph).
- Remove the turntable rotation hydraulic motor (see corresponding sheet).

2 - Removing the slew ring

- Mark and disconnect the hoses (1) of the swing joint (2) at the turntable.

NB: Unscrew the hoses slowly to release residual hydrualic pressure.

- Fit caps to the hoses.
- Mark and disconnect the electric connectors (3) of the electric collector at the turntable.
- Remove the swing joint stop (4) by removing its two fixing screws and washers.
- Put the turntable into slings, then remove the turntable rotation blocking pin.
- Remove the 20 screws (5) and washers fixing the slew ring (6) to the turntable.
- Remove the turntable.
- Put the slew ring into slings, mark its position in relation to the turntable.
- Remove the 20 screws (7) and washers fixing the slew ring to the lower part (8) of the machine, then remove the slew ring.

3 - Installing the slew ring

- Put the slew ring into place, in the position marked during dismantling.
- Fix the ring using the 20 fixing screws and washers without pre-stressing.
- Tighten in a star pattern (see figure 1) to a torque of 27 m.daN (18.30 lb.ft)
- Put the turntable in the locking position.
- Fix the turntable to the slew ring using the 20 fixing screws and washers without pre-stressing.
- Tighten in a star pattern (see figure 1) to a torque of 27 m.daN (18.30 lb.ft)
- Put the blocking pin into place, then remove the slings from the turntable.
- Put the seal stop into place and fix using the two fixing screws and washers.
- Reconnect the electric connectors of the electric collector at the turntable, according to the marks made during dismantling.
- Reconnect the swing joint hoses at the turntable, according to the marks made during dismantling.

4 - Additional operations

- Install the turntable rotation hydraulic motor (see corresponding sheet)
- Put the machine back into the operational configuration.
- Lubricate the slew ring.

NB: Only use lubricants recommended by the manufacturer.

- Make several turntable rotation, steering and travel movements, using all the possible travel speeds, to purge the hydraulic circuit.

Sheet C057	CORRECTIVE MAINTENANCE SHEET	Folio 2/2
	CHANGING THE SLEW RING	

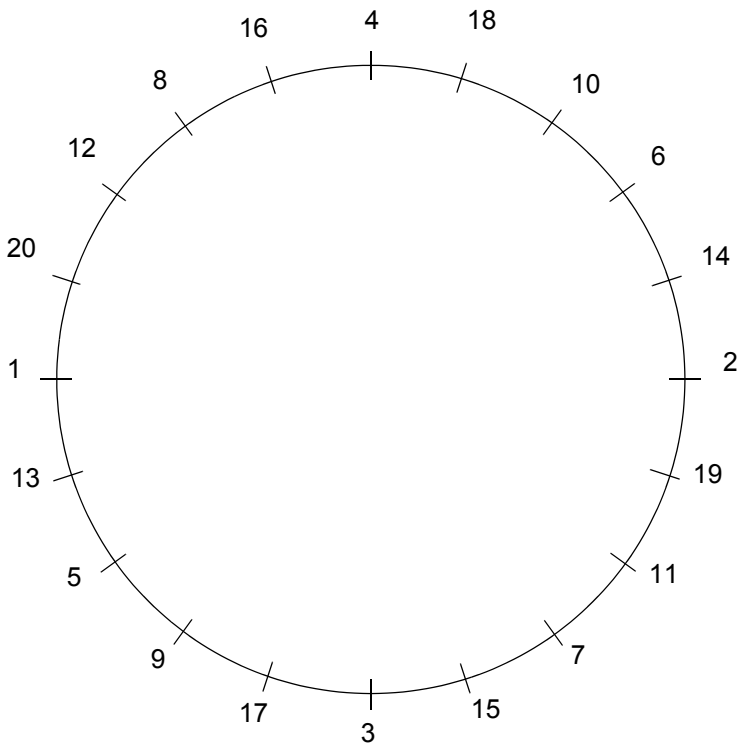

Figure 1

https://truckmanualshub.com/

Sheet C058	CORRECTIVE MAINTENANCE SHEET	Folio 1/1
	CHANGING THE U1 ELECTRONIC MODULE	

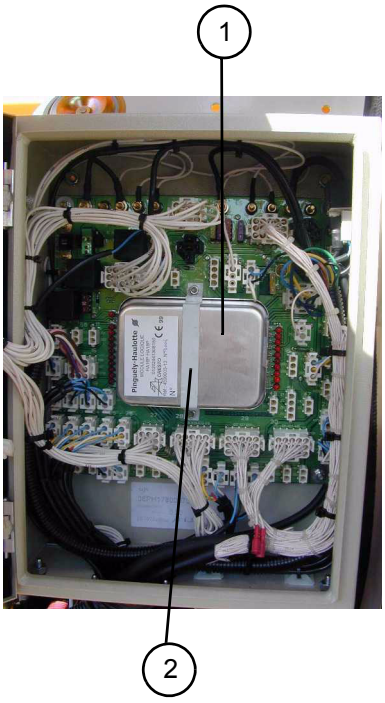

Caution!
Computers are not interchangeable, they have a serial number corresponding to a given machine. If this rule is ignored, dangerous malfunctions may occur.

1 - Preliminary operations

- Put the machine in the maintenance configuration (see corresponding paragraph).
- Switch off electric power (see corresponding paragraph).
- Disconnect the « - » then « + » terminals of the starter battery to isolate the electric circuit.

2 - Removing the U1 electronic module

- Open the turntable electric box.
- Remove the fixing flange (2) from the U1 electronic module.
- Remove the U1 electronic module.

3 - Installing the U1 electronic module

- Install a new U1 electronic module, previously programmed by the manufacturer.
- Install the fixing flange.
- Close the electric box.
- Reconnect the « + » then « - » terminals of the starter battery.
- Put the machine back into the operational configuration.
- Check that the U1 electronic module works perfectly using the check list for the machine concerned.

4 - Testing the U1 electronic module

- Make all movements from the bottom control panel for two seconds.
- Make all movements from the top control panel for two seconds.
- Lift the jib (> 0°)
- Make a travel movement with the selector on high speed and check that movement speed is actually micro-speed.
- Lower the jib.
- Lift the arm to 3 metres.
- Make a travel movement with the selector on high speed and check that movement speed is actually micro-speed.
- Lower the arm.
- Lift the boom.
- Make a travel movement with the selector on high speed and check that movement speed is actually micro-speed.
- Lower the boom.

https://truckmanualshub.com/

https://truckmanualshub.com/

Sheet C059	CORRECTIVE MAINTENANCE SHEET	Folio 1/1
	CHANGING A COIL	

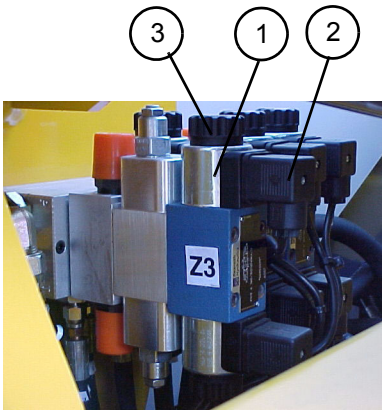

1 - Preliminary operations

- Put the machine in the maintenance configuration (see corresponding paragraph).
- Switch off electric power (see corresponding paragraph).

2 - Removing a coil

- Disconnect the electric connector (2) from the coil concerned.
- Unscrew the nut (3) and remove the coil (1).

3 - Installing a coil

- Put a new coil into place (1) and fix with the nut (3).
- Reconnect the electric connector (2) to the coil.
- Put the machine back into the operational configuration.
- Check proper operation by making the movement corresponding to the replaced coil.

https://truckmanualshub.com/

https://truckmanualshub.com/

Sheet C061	CORRECTIVE MAINTENANCE SHEET	Folio 1/2
	CHANGING AN END OF STROKE CONTACTOR	

HA16/18PX - HA46/51JRT

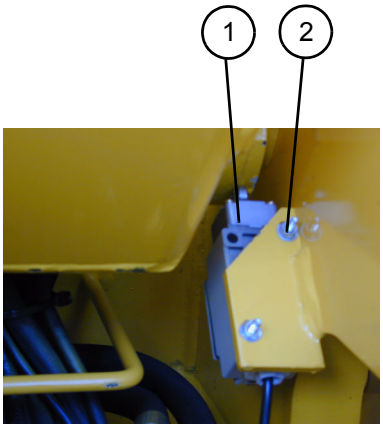

HA16/18PX New design

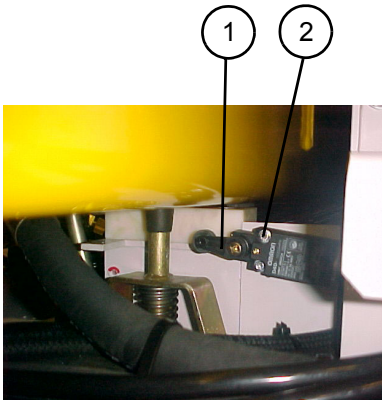

HA46/51JRT New Design

1 - Preliminary operations

- Put the machine in the maintenance configuration (see corresponding paragraph).
- Switch off electric power (see corresponding paragraph).

2 - Removing an end of stroke contactor

- Mark the position of the end of stroke contactor (1).
- For SQ2, remove the protective plate+contactor assembly.
- Remove the end of stroke contactor.
- Open the end of stroke contactor, mark and disconnect the electric connections.

3 - Installing an end of stroke contactor

- Open the new end of stroke contactor and reconnect the electric connections. Close the end of stroke contactor.
- Put back the end of stroke contactor in the position marked during dismantling and fix using the bolts (2).
- For SQ3 and SQ4, do not tighten the bolts before adjusting.
- For SQ2, install the protective plate+contactor assembly on the jib without tightening the screws, to enable adjustment.

4 - Adjustment and test

- Put the machine back into the operational configuration.
- Make the movement using the replaced contactor (see table) and check that it works properly.
- Adjust contactor position if necessary and tighten the fixing bolts.

CONTACTOR	MOVEMENT TO BE MADE	CHECK
Jib 0 to 90° (SQ2)	• Tilt the tilt sensor	• The tilt sensor buzzer sounds if the jib is lifted above the horizontal position • The tilt sensor buzzer does not sound if the jib is lowered below the horizontal position and the arms and boom are folded.
Reset tilt if machine folded (boom) (SQ3)	• Tilt the tilt sensor	• The tilt sensor buzzer sounds if the boom is lifted more than 50 cm above the stroke. • The tilt sensor buzzer does not sound if the machine is totally folded.
Reset tilt if machine folded (arms) (SQ4)	• Tilt the tilt sensor	• The tilt sensor buzzer sounds if the arm is lifted. • The tilt sensor buzzer does not sound if the machine is totally folded.

https://truckmanualshub.com/

Sheet C061	CORRECTIVE MAINTENANCE SHEET	Folio 2/2
	CHANGING AN END OF STROKE CONTACTOR	

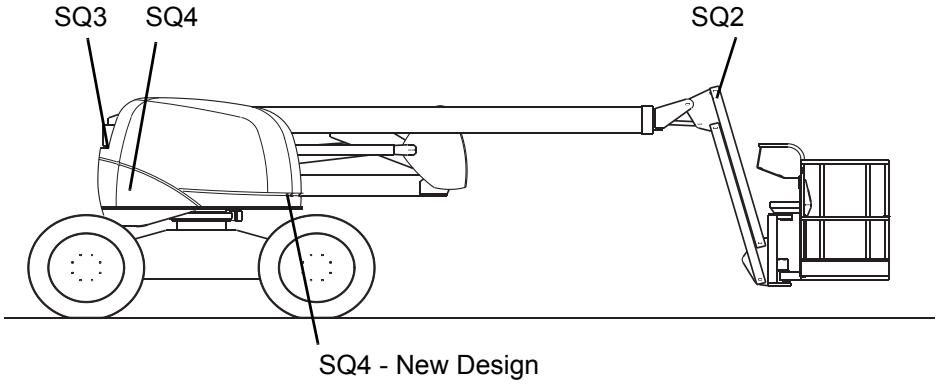

https://truckmanualshub.com/

Sheet C062	CORRECTIVE MAINTENANCE SHEET	Folio 1/2
	CHANGING A RELAY	

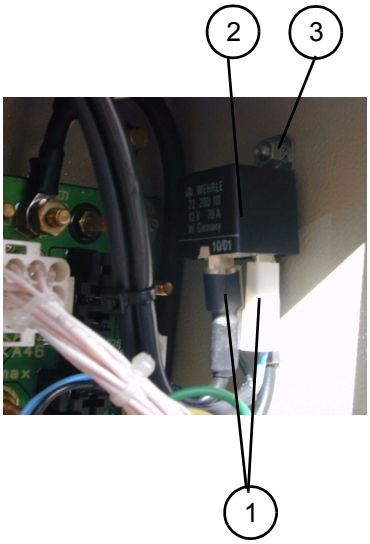

1 - Preliminary operations

- Put the machine in the maintenance configuration (see corresponding paragraph).
- Switch off electric power (see corresponding paragraph).
- Disconnect the « - » then « + » terminals of the starter battery.

2 - Removing a relay

- Open the turntable electric box.
- Mark and disconnect the electric connections (1) of the relay (2).
- Remove the relay by removing the fixing bolt (3).

3 - Installing a relay

- Put a new relay into place and fix using its bolt equipped with a new grower washer.
- Reconnect the electric connections according to the marks made during dismantling.
- Close the turntable box.
- Reconnect the « + » then « - » terminals of the starter battery.
- Put the machine back into the operational configuration.

https://truckmanualshub.com/

Sheet C062	CORRECTIVE MAINTENANCE SHEET	Folio 2/2
	CHANGING A RELAY	

https://truckmanualshub.com/

Sheet C063	CORRECTIVE MAINTENANCE SHEET	Folio 1/1
	CHANGING THE PRINTED CIRCUIT	

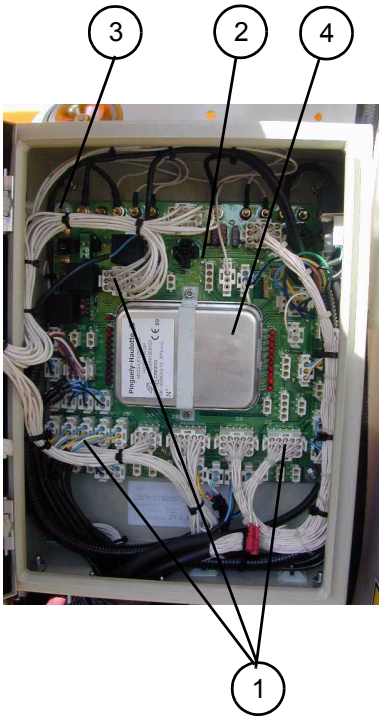

1 - Preliminary operations

- Put the machine in the maintenance configuration (see corresponding paragraph).
- Switch off electric power (see corresponding paragraph).
- Disconnect the « - » then « + » terminals of the starter battery.

2 - Removing the printed circuit

- Open the turntable electric box.
- Carefully mark and disconnect all the electric connections (1) of the printed circuit (2).
- Remove the U1 electronic module (4) (see corresponding sheet)
- Remove the bolts (3) fixing the board to the box and their sealing washers.
- Remove the printed circuit and silent-blocks equipping the fixing bolts.

3 - Installing the printed circuit

- Put a new printed circuit into place and fix using the bolts equipped with silent blocks, sealing rings and new toothed washers.
- Install the U1 electronic module (see corresponding sheet).
- Reconnect the electric connections according to the marks made during dismantling.
- Close the turntable box.
- Reconnect the « + » then « - » terminals of the starter battery.
- Put the machine back into the operational configuration.
- Test the printed circuit.

4 - Testing the printed circuit

- Perform the computer operating test (see «changing the U1 electronic module» sheet).

https://truckmanualshub.com/

https://truckmanualshub.com/

Sheet C064	CORRECTIVE MAINTENANCE SHEET	Folio 1/1
	CHANGING THE FAIL-SAFE PEDAL	

1 - Preliminary operations

- Put the machine in the maintenance configuration (see corresponding paragraph).
- Switch off electric power (see corresponding paragraph).
- Disconnect the « - » then « + » terminals of the starter battery.

2 - Removing the fail-safe pedal

- Open the platform electric box.
- Mark and disconnect the electric connections (1) of the fail-safe pedal (2) in the box.
- Mark the pedal cabling path (1) along the vertical platform parts and then cut the fixing collars (3).
- Remove the pedal by removing the pedal's fixing bolts (4) and their washers.

3 - Installing the fail-safe pedal

- Put a new pedal into place and fix using the bolts and their washers.
- Reconnect the electric connections in the box, according to the marks made during dismantling.
- Close the platform box.
- Fix the electric cable to the vertical platform parts using collars.
- Reconnect the « + » then « - » terminals of the starter battery.
- Put the machine back into the operational configuration.
- Check that movements from the platform are possible only if the fail-safe pedal is pressed.

https://truckmanualshub.com/

Sheet C065	CORRECTIVE MAINTENANCE SHEET CHANGING A HYDRAULIC BLOCK (TRAVEL, STEERING OR ON/OFF MOVEMENTS)	Folio 1/2

Caution!
Ensure that the oil is not too hot.

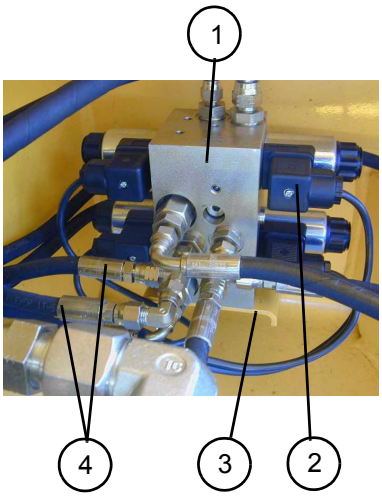

Steering block

1 - Preliminary operations

- Put the machine in the maintenance configuration (see corresponding paragraph).
- Switch off electric power (see corresponding paragraph).

2 - Removing the hydraulic block

- Mark and disconnect the hydraulic block's (1) electric connections (2).
- Mark and disconnect the hoses (4) of the hydraulic block.

NB: Unscrew the hoses slowly to release residual hydraulic pressure.

- Fit caps to the hoses.
- Place a wedge under the hydraulic block if necessary.
- Remove the hydraulic block by removing the fixing screws and washers (3).

3 - Installing the hydraulic block

- Put the hydraulic block into place and fix using screws equipped with new toothed washers.
- Reconnect the hydraulic hoses according to the marks made during dismantling.
- Reconnect the hydraulic block's electric connections, according to the marks made during dismantling.
- Put the machine back into the operational configuration.
- Make several movements using the hydraulic block concerned to purge the hydraulic circuit.
- Check the level in the hydraulic oil tank.

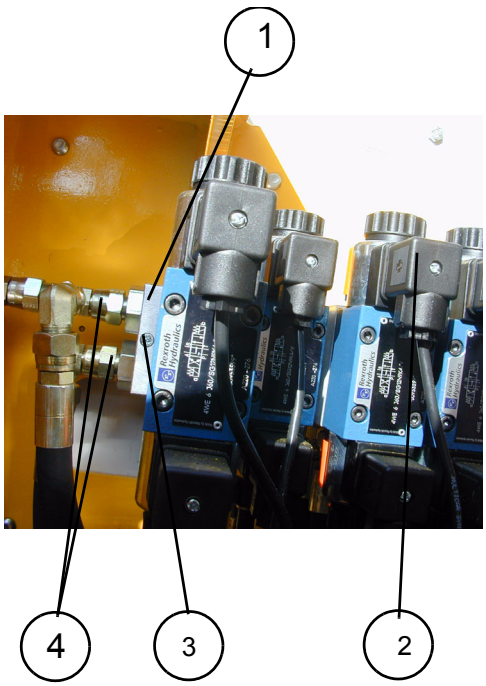

On/off movement block

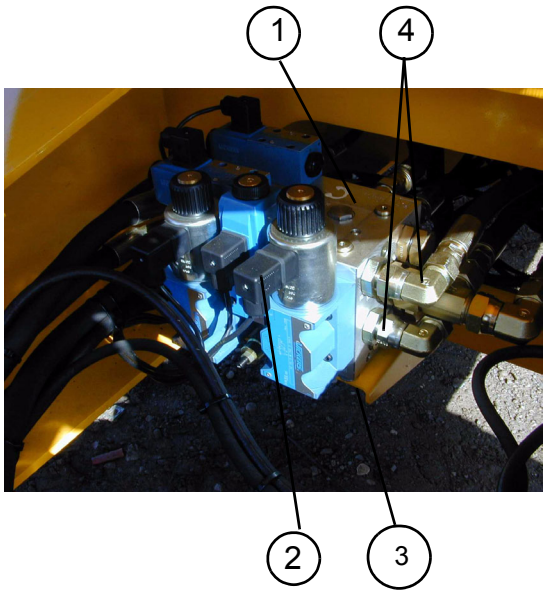

Travel block

https://truckmanualshub.com/

Sheet C065	CORRECTIVE MAINTENANCE SHEET	Folio 2/2
	CHANGING A HYDRAULIC BLOCK (TRAVEL, STEERING OR ON/OFF MOVEMENTS)	

Pinguely-Haulotte

Sheet C066	CORRECTIVE MAINTENANCE SHEET	Folio 1/1
	CHANGING THE DISTRIBUTION HYDRAULIC BLOCK	

Caution!
Ensure that the oil is not too hot.

HA16/18PX - HA46/51JRT

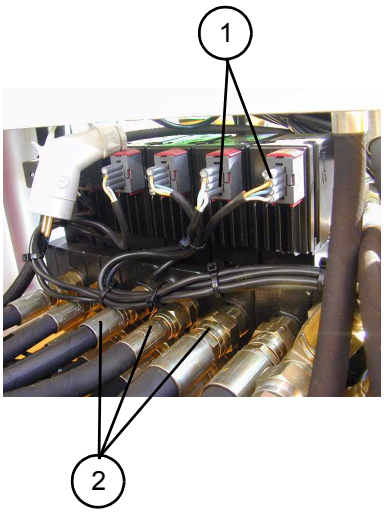

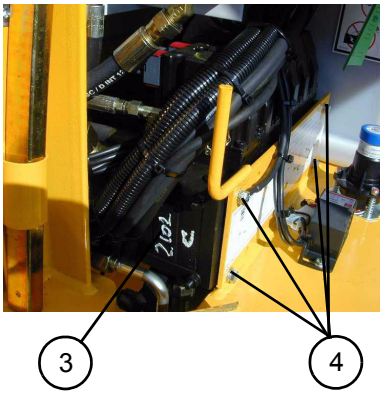

HA16/18PX New Design

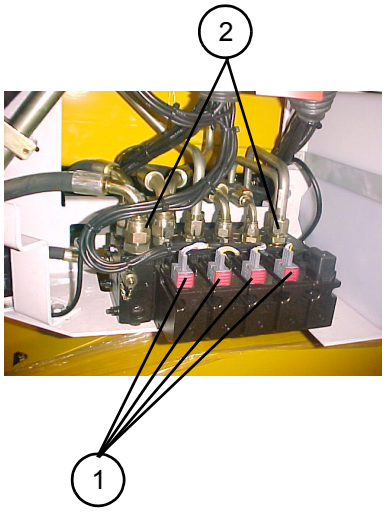

HA46/51JRT New Design

1 - Preliminary operations

- Put the machine in the maintenance configuration (see corresponding paragraph).
- Switch off electric power (see corresponding paragraph).

2 - Removing the hydraulic block

- Mark and disconnect the hydraulic block's (1) electric connections (2).
- Mark and disconnect the hoses (4) of the hydraulic block.

NB: Unscrew the hoses slowly to release residual hydraulic pressure.

- Fit caps to the hoses.
- Remove the lower protective plate (5) (only in presence of this one).
- Place a wedge under the hydraulic block.
- Remove the hydraulic block by removing the fixing screws and washers (4).
- Take out the block from the turntable.
- Dismantle the hydraulic block to replace one of its elements if necessary (see corresponding sheet).

3 - Installing the distribution hydraulic block

- When installing a new distribution block, equip the new block with the unions retained from the old block, after replacing the O-rings. Tighten to the recommended torque (see corresponding paragraph).
- Put the hydraulic block into place and fix using the screws equipped with new toothed washers.
- Install the lower protective plate.
- Reconnect the hydraulic hoses according to the marks made during dismantling. Tighten to the recommended torque (see corresponding paragraph).
- Reconnect the hydraulic block's electric connections, according to the marks made during dismantling.
- Put the machine back into the operational configuration.
- Make several lifting, travel, steering and turntable rotation movements to purge the hydraulic circuit and test block operation.
- Check the level of the hydraulic oil tank.

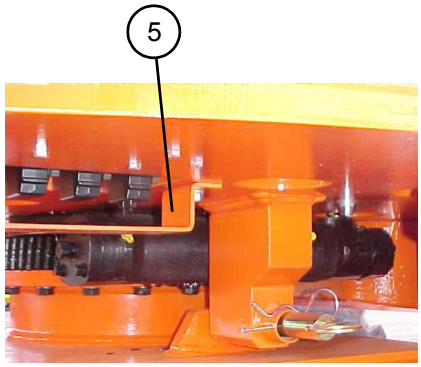

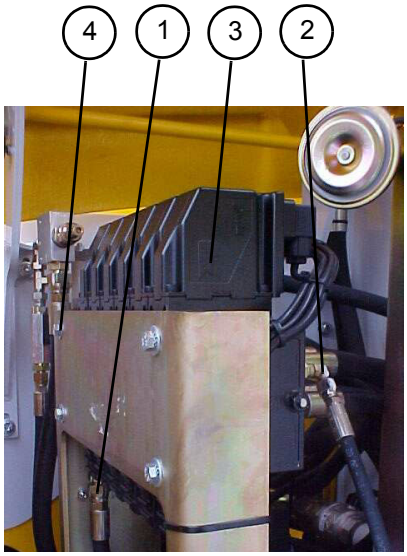

H14/16 - HB40/44J

https://truckmanualshub.com/

	CORRECTIVE MAINTENANCE SHEET	

https://truckmanualshub.com/

Sheet C067	CORRECTIVE MAINTENANCE SHEET	Folio 1/1
	CHANGING AN ELECTROVALVE	

Caution!
Ensure that the oil is not too hot.

Caution!
Use a container to collect oil to prevent pollution of the environment.

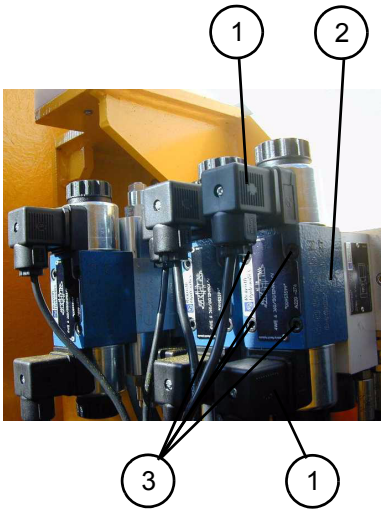

1 - Preliminary operations

- Put the machine in the maintenance configuration (see corresponding paragraph).
- Switch off electric power (see corresponding paragraph).

2 - Removing an electrovalve

- Mark and disconnect the electric connections(1) of the coils.
- Mark the installation position of the electrovalve on the block.
- Unscrew the four fixing screws (3) of the electrovalve (2) and remove.

3 - Installing an electrovalve

- Put a new electrovalve equipped with its seals into place and fix using the 4 screws, in the position of the electrovalve on the block. Tighten to the recommended torque (see corresponding paragraph).
- Reconnect the electrovalve's electric connections, according to the marks made during dismantling.
- Put the machine back into the operational configuration.
- Make several movement cycles using the replaced electrovalve to purge the hydraulic circuit.
- Check the level of the hydraulic oil tank.

https://truckmanualshub.com/

https://truckmanualshub.com/

Sheet C068	CORRECTIVE MAINTENANCE SHEET	Folio 1/1
	CHANGING THE DOUBLE BALANCING VALVE OF THE ROTATION FUNCTION	

Caution!
Ensure that the oil is not too hot.

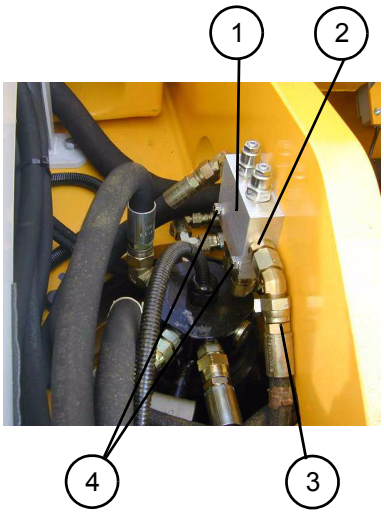

Caution!
Balancing valves are safety elements. They are calibrated in the plant and must not be re-adjusted.

1 - Preliminary operations

- Put the machine in the maintenance configuration (see corresponding paragraph).
- Switch off electric power (see corresponding paragraph).

2 - Removing a double balancing valve

- Mark and disconnect the four hydraulic hoses (3) on the double balancing valve unit (1).

NB: Unscrew the hoses slowly to release residual hydraulic pressure.

- Fit the hoses with caps.
- Remove the unit's 4 unions (2).
- Remove the unit (1) by unscrewing the 2 fixing bolts (4).

3 - Installing a double balancing valve

- Put a new unit into place and fix with the two bolts, equipped with new toothed washers.
- Put the four unions equipped with new O-rings back onto the unit. Tighten to the recommended torque (see corresponding paragraph).
- Reconnect the hydraulic hoses, according to the marks made during dismantling. Tighten to the recommended torque (see corresponding paragraph).
- Put the machine back into the operational configuration.
- Make several movement cycles using the replaced double balancing valve to purge the hydraulic circuit.
- Check the level of the hydraulic oil tank.

https://truckmanualshub.com/

https://truckmanualshub.com/

Sheet C069	CORRECTIVE MAINTENANCE SHEET DISMANTLING / RE-ASSEMBLING THE JIB	Folio 1/2

Caution!
Ensure that the oil is not too hot.

Caution!
Make sure that the lifting equipment is in good condition and of sufficient capacity.

Caution!
Use a container to collect oil to prevent pollution of the environment.

Caution!
It is essential to put the component in slings before dismantling/re-assembling it.

1 - Preliminary operations

- Put the machine in the maintenance configuration (see corresponding paragraph).
- Switch off electric power (see corresponding paragraph).
- Remove contactor SQ2 (see corresponding sheet).

2 - Removing the platform+support assembly

- Mark and disconnect the electric connections at the platform box.
- Mark and disconnect the hydraulic hoses of the platform rotation motor and the jib cylinder (1).

NB: Unscrew the hoses slowly to release residual hydraulic pressure.

- Fit caps to the hoses.
- Open the two cable passage collars on the platform, and the three collars along the jib.
- Mark the path of the electric cables and hoses, then remove all cables passing along the length of the jib.
- Put the platform into slings.
- Put the jib cylinder (1) and vertical elements (2) and (3) into slings.
- Remove the four bolts and pin stop rings (5) fixing the platform assembly (4).
- Remove the two Mécanindus pins blocking the pins (5).
- Remove the two pins (5) and remove the platform assembly.

3 - Removing the jib

- Mark the position of the cam (6) of sensor SQ2 (7).
- Remove the two pins (8) fixing the jib to the jib link part, as described above, then remove the vertical parts of the jib (2) and (3) and the cylinder (1).

4 - Removing the jib link part (9)

- Put the jib link part into slings (9).
- Put the receiver compensation cylinder into slings (10).
- Remove the Mécanindus pin blocking the pin, then remove the pin (11) of the receiver compensation cylinder (10).
- Remove the male clevis blocking the link part rotation pin (12) by removing its fixing screw.
- Remove the rotation pin (12) then remove the jib link part (9).

5 - Installing the jib link part

NB: Lubricate all bores before re-installing the pins.
Only use lubricants recommended by the manufacturer.

- Check the condition of the rings of the different jib pins, and replace if necessary.
- Put the jib link part back into place.
- Install the link part rotation pin.
- Install the clevis and block using the screw, previously coated with normal blue loctite 243.
- Install the receiver compensation cylinder pin and block with a new Mécanindus pin.

Sheet C069	CORRECTIVE MAINTENANCE SHEET	Folio 2/2
	DISMANTLING / RE-ASSEMBLING THE JIB	

6 - Installing the jib

- Put the jib and its cylinder into place and install the articulation pins.
- Fix the pins with Mécanindus pins.
- Install the 3 stop rings and the contactor SQ2 cam in the positions marked during dismantling and fix with their bolts.

7 - Installing the platform+support assembly

- Put the platform+support assembly into place and install the two articulation pins.
- Block the pins with new Mécanindus pins.
- Install the four pin stop rings and fix using their fixing bolts.
- Pass the hydraulic hoses and electric cables along the jib according to the marks made during dismantling and reconnect.
- Install the two cable passage collars on the platform and the three collars along the length of the jib.
- Install and set the contactor SQ2 (see corresponding sheet).
- Put the machine back into the operational configuration.
- Make several jib lifting, boom lifting and platform rotation movements, to purge the hydraulic circuit.
- Check the level of the hydraulic oil tank.

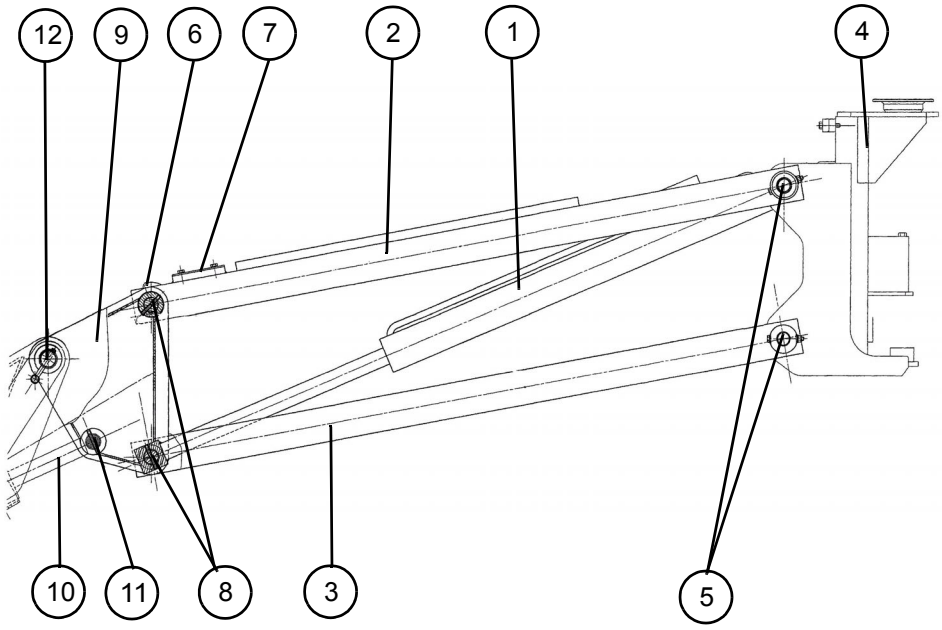

Sheet C070	CORRECTIVE MAINTENANCE SHEET	Folio 1/4
	DISMANTLING / RE-ASSEMBLING THE BOOM	

Caution!
Ensure that the oil is not too hot.

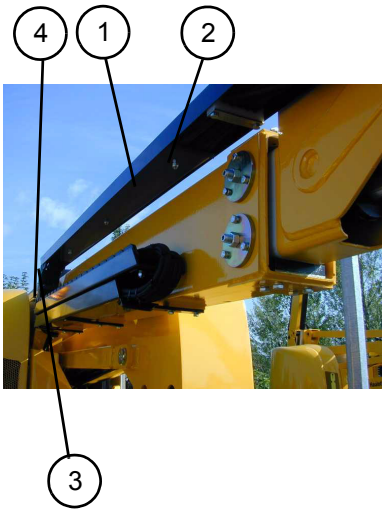

Caution!
Ensure that the lifting equipment is in good condition and of sufficient capacity.

1 - Preliminary operations

- Lift the boom and arm sufficiently to enable access to the emitting compensation cylinder pin (12) and boom lifting cylinder pin (10).
- Place wedges under the arm to support it.
- Put the machine in the maintenance configuration (see corresponding paragraph).
- Switch off electric power (see corresponding paragraph).
- Put the boom in slings to prevent it tipping when the counterweight is removed.
- Remove the counterweight (see corresponding sheet).
- Remove the platform (see corresponding sheet).
- Remove the jib (see corresponding sheet).
- Remove the contactor SQ3 (see corresponding sheet).

2 - Removing the hoses

- Mark and disconnect the two hydraulic hoses from the emitting compensation cylinder (5), receiver compensation cylinder (6), telescoping cylinder and boom lifting cylinder (28).
- Fit caps to the hoses.
- Open the four cable passage collars by removing their two fixing bolts.
- Remove the upper chain support (1) by removing its closing bolts and the closing pins (2).
- Remove the chain (3) by removing the two fixing bolts at each end.
- Remove the lower hose protection cover (4) by removing its 3 fixing bolts.
- Remove all electric cables and hydraulic hoses passing along the length of the boom.

3 - Removing the receiver compensation cylinder

- Put the receiver compensation cylinder in slings (6).
- Remove the Mécanindus blocking pin (7) from the pin on the cylinder body side.
- Remove the cylinder pin (8), then remove the receiver compensation cylinder.

4 - Removing the boom

- Put the boom lifting cylinder (28) and emitting compensation cylinder (5) in slings.
- Remove the blocking clevis (9) from the boom lifting cylinder pin on the body side, then remove the pin (10).
- Remove the Mécanindus blocking pin (11) from the emitting compensation cylinder pin on the rod side, then remove the pin (12).
- Remove the blocking clevis from the boom articulation pin, then remove the pin (13).
- Remove the boom.

5 - Removing the telescope (14)

- Put the end of the telescope in slings.
- Remove the 6 pads (15) at the end of the boom drum (16).
- Remove the pin (17) from the telescoping cylinder (18) on the cylinder body side.
- Slide the telescope then put the telescope in slings to enable it to be removed.
- Remove the telescope (14).
- Remove the pin (19) from the telescoping cylinder pin on the rod side.
- Remove the pin (20), then remove the telescoping cylinder (18).

6 - Installing the telescope

NB: Before re-assembling, check the condition of all the articulation pin rings and replace if necessary. Lubricate all bores before re-assembling the pins. Only use lubricants recommended by the manufacturer.

- If necessary, replace the guide pads (21) on the telescoping cylinder, by removing their two fixing screws.
- If necessary, replace the four pads and adjustment wedges on the telescope. Remove the 4 screws for the upper and lower pars (22) and the two bolts for the side pads (23). Adjust the gap to 2 mm vertically and 1mm on each side laterally using the adjustment wedges (24) and (27).
- Put the telescoping cylinder in place inside the telescope.
- Install the telescoping cylinder pin and block using a new Mécanindus pin.
- Slide the telescope inside the boom drum, then install the telescoping cylinder pin on the body side.
- Replace the pads at the end of the boom drum if necessary and install. Adjust the gap using cup point screws (25) and tighten their counter-nuts (26).

NB: If the gap between the telescope and the boom drum is greater than 7 mm (0.27 in), insert a 5 mm (0.196 in) wedge under the lower wedge, and change screw length.

7 - Installing the boom

- Put the boom into place on the machine and fix to the boom support by re-installing the articulation pin.
- Install the fixing clevis and fix using the screw equipped with a new grower washer.
- Install the emitting compensation cylinder pin on the rod side and block using a new Mécanindus pin.
- Install the boom lifting cylinder pin on the body side.
- Put the pin blocking clevis into place and fix with its bolt.

NB: Do not remove the sling from the boom to prevent tipping.

8 - Installing the receiver compensation cylinder

- Put the receiver compensation cylinder into place.
- Put the articulation pin into place and block using a new Mécanindus pin.

9 - Installing the hoses

- Put all the electric cables and hydraulic hoses into place along the length of the boom. Pass them in the articulation chain.
- Put the lower hose protection cover into place and fix with the three fixing bolts.
- Install the chain and fix at either end using the 2 fixing bolts.
- Install the upper chain support and fix using its closing bolts and closing pins.
- Install the 4 cable and hose collars and fix with their 2 fixing bolts.
- Reconnect the 2 hydraulic hoses of the emitting compensation cylinder, receiver compensation cylinder, telescoping cylinder and boom lifting cylinder.

Sheet C070	CORRECTIVE MAINTENANCE SHEET	Folio 3/4
	DISMANTLING / RE-ASSEMBLING THE BOOM	

10 - Additional operations

- Re-install the contactor SQ3 (see corresponding sheet).
- Install the jib (see corresponding sheet).
- Install the platform (see corresponding sheet).
- Install the counterweight (see corresponding sheet).
- Put the machine back into the operational configuration.
- Remove the sling from the boom and the wedges under the arm.
- Extend the machine several times to test its operation and purge the hydraulic circuit.
- Check the level of the hydraulic circuit.

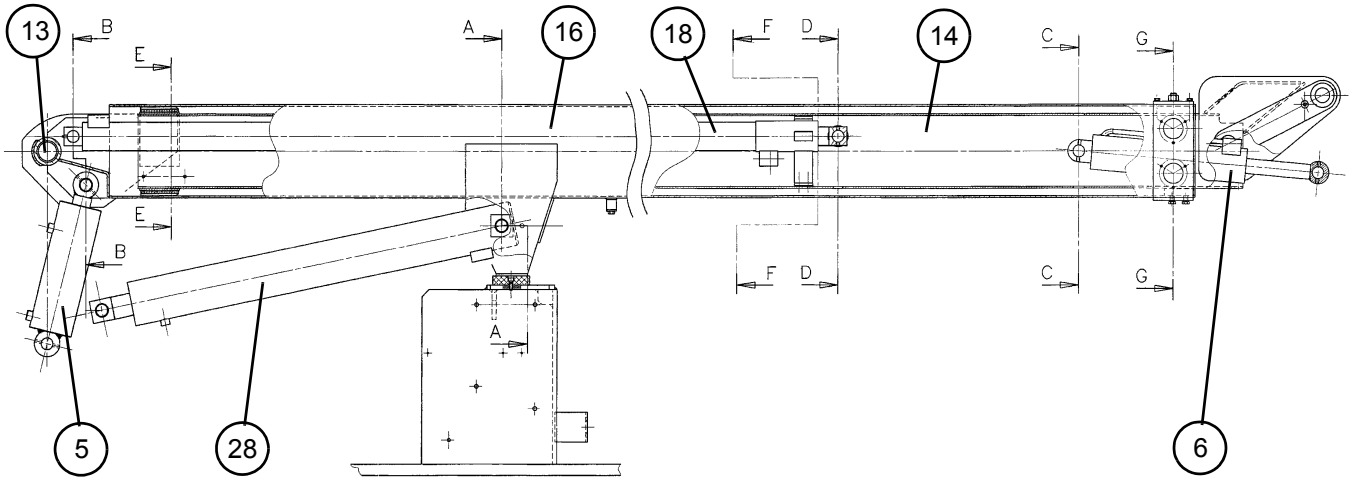

A - A

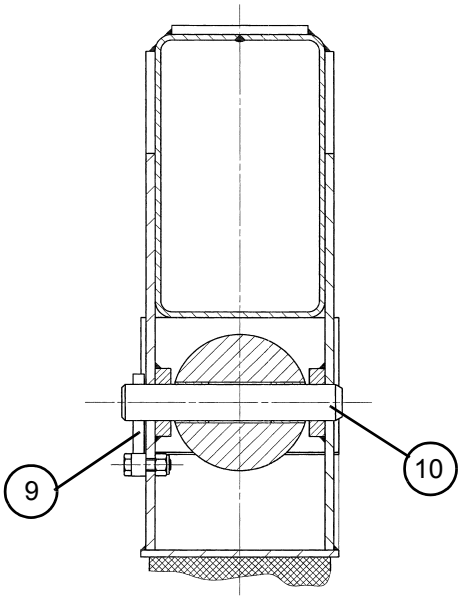

B - B

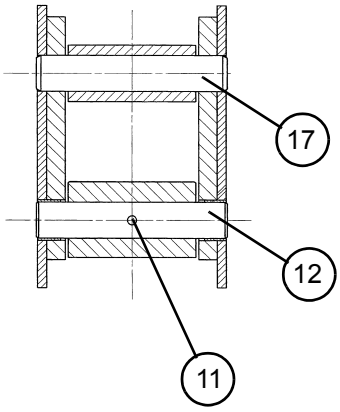

Sheet C070	CORRECTIVE MAINTENANCE SHEET	Folio 4/4
	DISMANTLING / RE-ASSEMBLING THE BOOM	

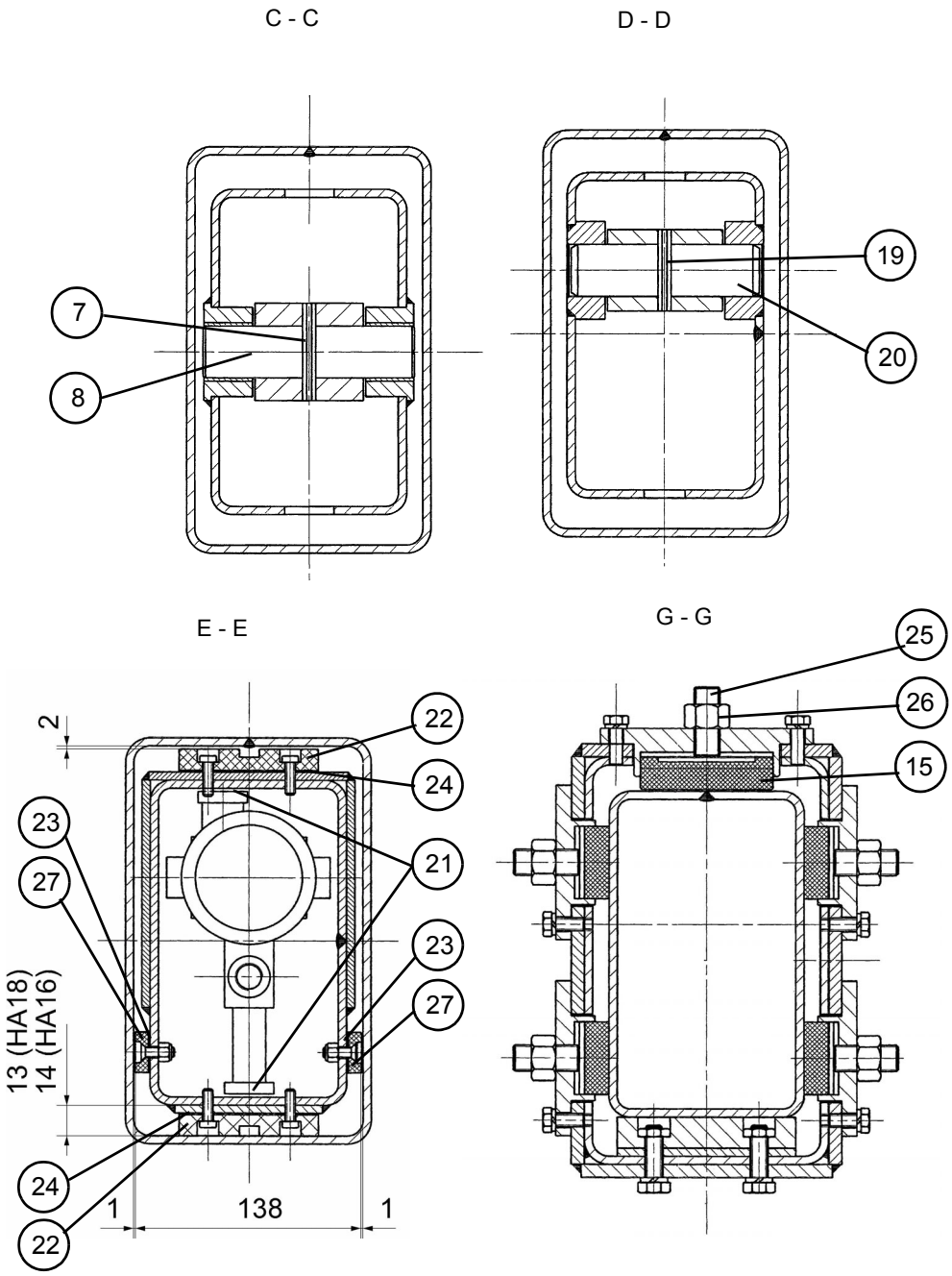

Sheet C071	CORRECTIVE MAINTENANCE SHEET	Folio 1/4
	DISMANTLING / RE-ASSEMBLING THE LIFTING ARM	

Caution!
Check that the lifting equipment is in good condition and of sufficient capacity.

1 - Preliminary operations

- Lift the arm sufficiently to enable access to the bottom tie rod/turntable pins (5) and the bottom arm /turntable pin (6), then place wedges under the arm to support it.
- Put the machine in the maintenance configuration (see corresponding paragraph).
- Switch off electric power (see corresponding paragraph).
- Put the boom in slings to prevent it tipping when the counterweight is removed.
- Remove the counterweight (see corresponding sheet).
- Remove the platform (see corresponding sheet).
- Remove the jib (see corresponding sheet).
- Remove the boom (see corresponding sheet).
- Remove the contactor SQ4 (see corresponding sheet).

2 - Removing the boom lifting cylinder and emitting compensation cylinder

NB: After removing the boom, the boom lifting cylinder and emitting compensation cylinder are still linked to the lifting arm, which is why they must be removed.

- Put the boom lifting cylinder and emitting compensation cylinder in slings.
- Remove the fixing screw and washer from the pin blocking clevis (1) of the boom lifting cylinder on the rod side, and remove the clevis.
- Remove the articulation pin (1) of the boom lifting cylinder and remove the cylinder.
- Remove the 2 stop washers from the pin (2) of the emitting compensation cylinder.
- Remove the pin blocking pin and then remove the pin (2).
- Remove the emitting compensation cylinder.

3 - Removing the lifting arm

- Mark and disconnect the two hydraulic hoses from the arm lifting cylinder (3).
- Fit caps to the hoses.
- Open the cable passage collar (4) by removing its two fixing bolts.
- Mark the path of the electric cables and hydraulic hoses passing along the arm and remove them.
- Put the arm in slings.
- Remove the pin stops of the 2 bottom tie rod/turntable pins (5) by removing their two fixing screws, then remove the 2 pins.
- Remove the pin stop from the turntable / bottom arm pin by removing its two fixing screws and then remove the pin (6).
- Remove the lifting arm.

4 - Dismantling the lifting arm

- Put the top tie rod (7), boom support (8) and intermediary support (9) into slings.
- Remove the end piece washer, then remove the top tie rod / boom support articulation pin (10).
- Remove the end piece washer, then remove the top tie rod / intermediary support articulation pin (11).
- Remove the top tie rod (7).
- Put the top arm into slings (12).
- Remove the pin from the top arm/boom support pin (22), then remove the pin.

- Remove the boom support (8).
- Put the two bottom tie rods (13) and the top arm (12) into slings.
- Remove the two machined stops from the top arm/intermediary support/ bottom tie rod pin (14) by removing the four fixing screws, then remove the pin (14).
- Remove the two bottom tie rods (13).
- Put the arm lifting cylinder (3) in slings.
- Remove the male clevis blocking the pin (15) of the arm lifting cylinder on the rod side, by removing its fixing screw and washer, then remove the pin (15).
- Remove the top arm/connecting rod stop tab (16) by removing its two fixing screws and washers, then remove the pin (16).
- Remove the top arm (12).
- Remove the male clevis blocking the pin (17) of the arm lifting cylinder on the cylinder body side, by removing its fixing screw and washer, then remove the pin (17).
- Remove the arm lifting cylinder (3).
- Remove the bottom arm/connecting rod pin stop tab (18) by removing its two fixing screws and washers, then remove the pin (18).
- Remove the connecting rod (19).
- Remove the end piece washer, then remove the bottom arm / intermediary support articulation pin (20).
- Remove the intermediary support (9) from the bottom arm (21).

5 - Installing the lifting arm

NB: Before re-assembling, check the condition of all the articulation pin rings and replace if necessary. Lubricate all bores before re-assembling the pins. Only use lubricants recommended by the manufacturer.

- Put the intermediary support into place and fix on the bottom arm with the articulation pin
- Install the end piece washer fixed with its screw to block the pin.
- Put the connecting rod into place and fix on the bottom arm with the articulation pin.
- Install the pin stop tab and fix using its two fixing screws, equipped with new grower washers.
- Put the arm lifting cylinder into place and fix the body side of the cylinder to the bottom arm using the articulation pin.
- Install the male clevis blocking the cylinder pin and fix using its fixing screw, equipped with a new grower washer.
- Put the top arm into place and fix the arm lifting cylinder rod using the pin.
- Install the male clevis blocking the pin and fix using its fixing screw, equipped with a new grower washer.
- Fix the connecting rod to the top arm using the articulation pin.
- Install the top arm/connecting rod pin stop tab and fix using its two fixing screws equipped with new grower washers.
- Put the two bottom tie rods into place and fix the bottom tie rods, top arm and intermediary support using the pin.
- Install the two machined stops to block the pin with the four fixing screws.
- Put the boom support into place and fix to the top arm using the articulation pin. Block the pin using its pin.
- Put the top tie rod into place and fix to the intermediary support using the articulation pin.
- Place the end piece washer on the articulation pin and fix with its screw.
- Fix the top tie rod to the boom support using the articulation pin.
- Place the end piece washer on the articulation pin and fix using its screw.

https://truckmanualshub.com/

6 - Installing the lifting arm

- Put the arm into place on the machine.
- Install the bottom arm / turntable pin and fix the pin stop with its two fixing screws to block it.
- Install the two bottom tie rod / turntable pins and fix the pin stops with their two fixing screws to block them.
- Put back into place all the electric cables and hydraulic hoses passing along the arm.
- Install the cable collars and fix with the two fixing bolts.
- Reconnect the two hydraulic hoses of the arm lifting cylinder.

7 - Installing the boom lifting cylinder and emitting compensation cylinder

NB: Install the boom lifting cylinder and the emitting compensation cylinder if you want to continue to re-assembly the boom.

- Put the emitting compensation cylinder into place and fix to the boom support with the articulation pin.
- Put in a new pin blocking pin.
- Install the two pin stop washers and fix with their fixing screws.
- Put in place the boom lifting cylinder and fix to the boom support using the articulation pin.
- Install the pin blockig clevis and fix using its fixing screw, equipped with a new grower washer.

8 - Additional operations

- Re-install the contactor SQ4 (see corresponding sheet).
- Install the boom (see corresponding sheet).
- Install the jib (see corresponding sheet).
- Install the platform (see corresponding sheet).
- Install the counterweight (see corresponding sheet).
- Put the machine back into the operational configuration.
- Remove the sling from the boom and the wedges under the arm.
- Extend the machine several times to test its operation and purge the hydraulic circuit.
- Check the level of the hydraulic circuit.

Sheet C071	CORRECTIVE MAINTENANCE SHEET	Folio 4/4
	DISMANTLING / RE-ASSEMBLING THE LIFTING ARM	

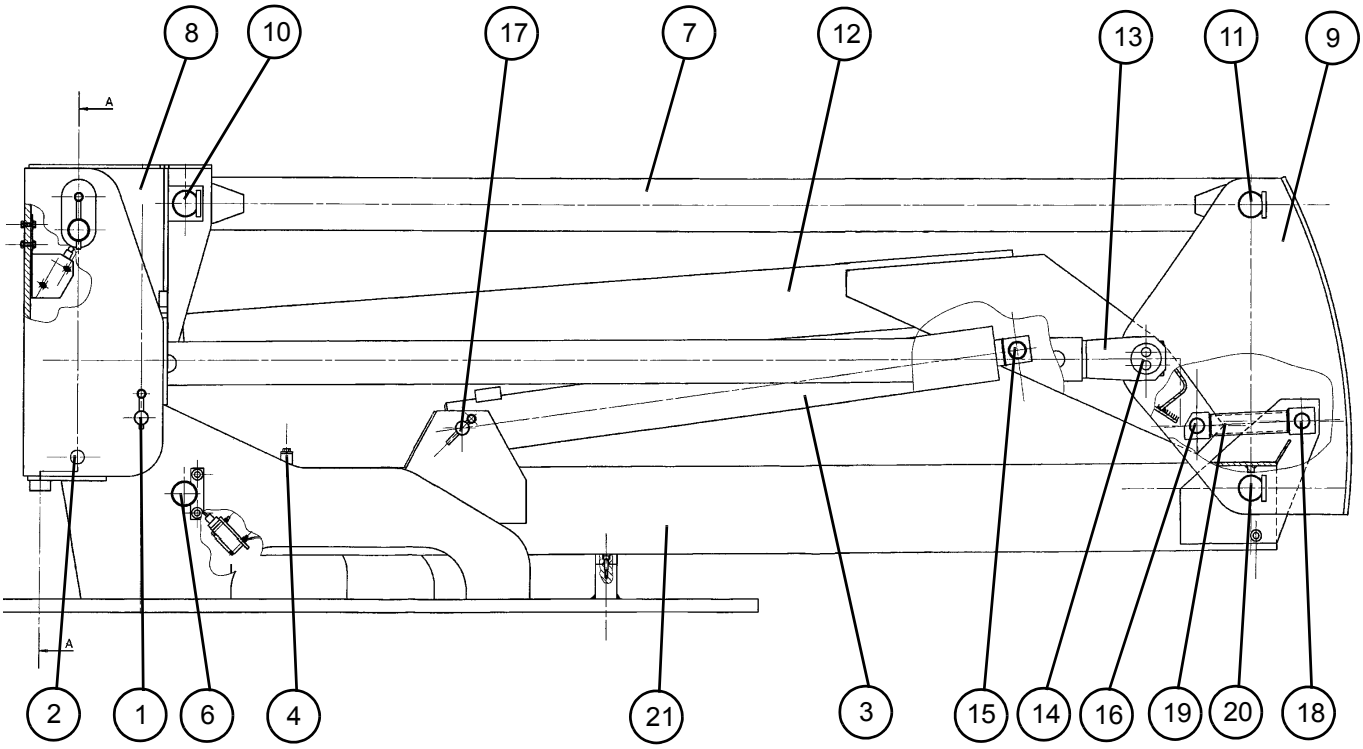

A - A

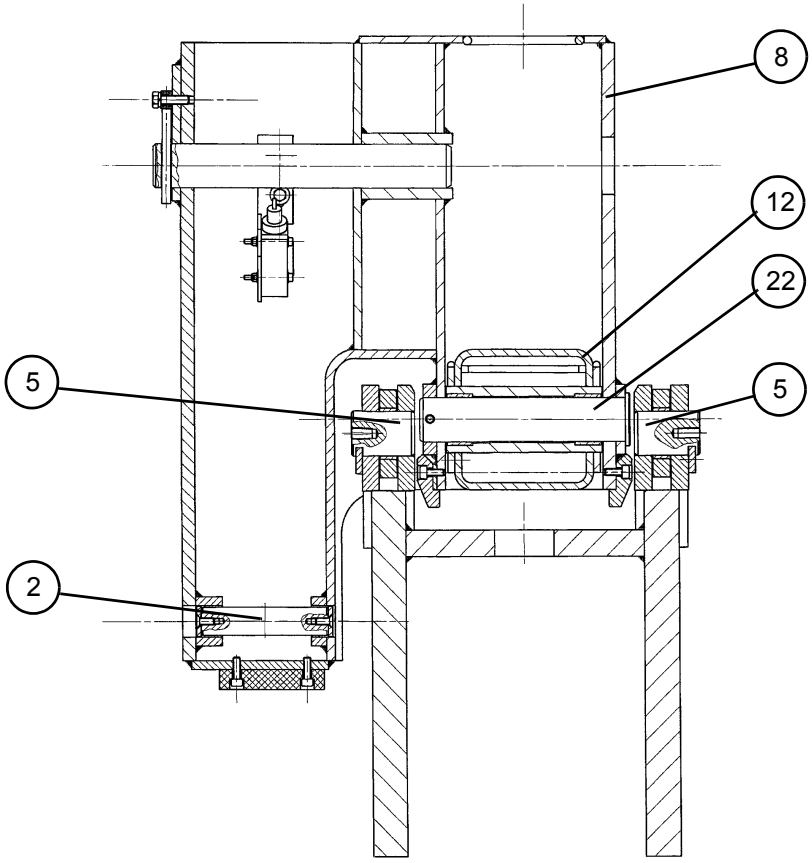

Pinguely-Haulotte

Sheet C073	CORRECTIVE MAINTENANCE SHEET	Folio 1/4
	ADJUSTING A PRESSURE LIMITER	

Caution!
Ensure that the oil is not too hot.

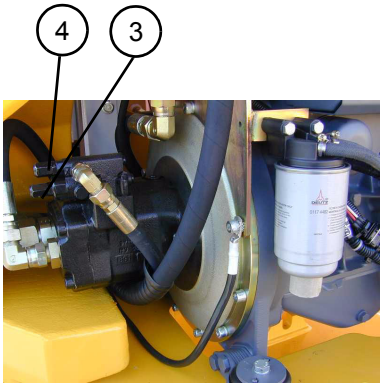

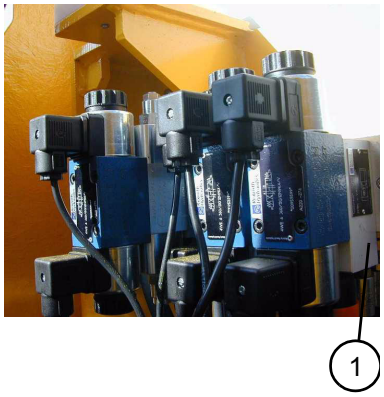

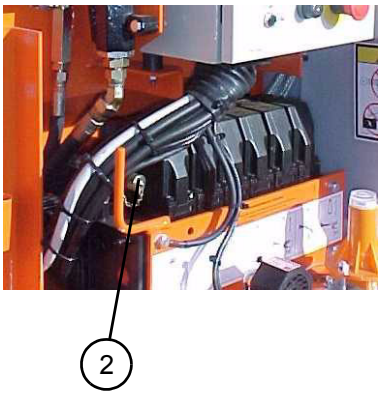

Caution!
Use a container to collect oil to prevent pollution of the environment.

NB: Before any adjustment operation, operate the machine so that the oil in the tank is at a temperature of approximately 50°.

1 - Adjusting the load sensing pressure (4)

- Put the machine in the maintenance configuration (see corresponding paragraph).
- Switch off electric power (see corresponding paragraph).
- Unscrew the cap of the minimess hydraulic pressure tapping (2) on the distribution block and connect a pressure gauge of at least 0/300 bars (0/4351 PSI).
- Switch electric power on again (see corresponding paragraph) and start the motor.
- Without activating a movement, measure pressure on the gauge.
- Adjust the hexagonal socket head screw on the pressure limiter (4) until the pressure indicated in the table below is shown on the pressure gauge.
- Put the machine in the maintenance configuration (see corresponding paragraph).
- Switch off electric power (see corresponding paragraph).
- Unscrew the pressure gauge and put the hydraulic pressure tapping cap back into place.
- Put the machine back in the operational configuration.
- Extend the machine several times to check operation.

2 - Adjusting the main pressure limiter (3)

- Put the machine in the maintenance configuration (see corresponding paragraph).
- Switch off electric power (see corresponding paragraph).
- Unscrew the cap of the minimess hydraulic pressure tapping (2) on the distribution block and connect a pressure gauge of at least 0/300 bars (0/4351 PSI).
- Switch electric power on again (see corresponding paragraph).
- Extend the boom lifting cylinder fully (to its stop) to block the movement.
- Activate a boom lifting movement and measure pressure on the gauge.
- Adjust the hexagonal socket head screw on the main pressure limiter (3) so that movements are disabled at the pressure indicated in the table below.
- Put the machine in the maintenance configuration (see corresponding paragraph).
- Switch off electric power (see corresponding paragraph).
- Unscrew the pressure gauge and put the hydraulic pressure tapping cap back into place.
- Put the machine back in the operational configuration.
- Make several boom lifting movements to check operation.

3 - Adjusting the telescope extension pressure limiter (1)

- Put the machine in the maintenance configuration (see corresponding paragraph).
- Switch off electric power (see corresponding paragraph).
- Unscrew the cap of the minimess hydraulic pressure tapping (2) on the distribution block and connect a pressure gauge of at least 0/300 bars (0/4351PSI).
- Switch electric power on again (see corresponding paragraph).
- Extend the telescope cylinder fully (to its stop) to block the movement.
- Activate a telescoping movement and measure telescoping pressure on the gauge.
- Adjust the hexagonal socket head screw on the telescoping pressure limiter (1) so that movements are disabled at the pressure indicated in the table below.

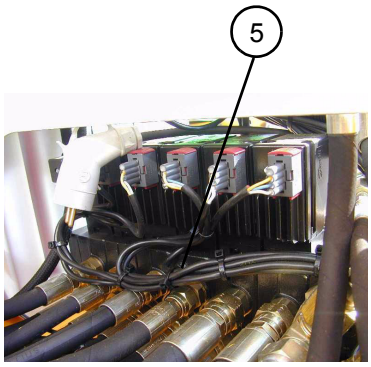

- Put the machine in the maintenance configuration (see corresponding paragraph).
- Switch off electric power (see corresponding paragraph).
- Unscrew the pressure gauge and put the hydraulic pressure tapping cap back into place.
- Put the machine back in the operational configuration.
- Make several telescoping movements to check operation.

4 - Checking the turntable rotation pressure limiter

NB: Turntable rotation pressure is preset and may not be modified.

- Put the machine in the maintenance configuration (see corresponding paragraph).
- Switch off electric power (see corresponding paragraph).
- Unscrew the cap of the minimess hydraulic pressure tapping (2) on the distribution block and connect a pressure gauge of at least 0/300 bars (0/4351 PSI).
- Switch electric power on again (see corresponding paragraph).
- Put the turntable rotation blocking pin in place to block movement.
- Activate turntable rotation and measure pressure on the gauge.

NB: Check pressure in both rotation directions.

- If the pressure measured is not conform to the value in the table, replace the pressure limiter concerned.
- Put the machine in the maintenance configuration (see corresponding paragraph).
- Switch off electric power (see corresponding paragraph).
- Unscrew the pressure gauge and put the hydraulic pressure tapping cap back into place.
- Put the machine back in the operational configuration.
- Make several turntable rotation movements to check operation.

5 - Pressure table (in bar)

	Load sensing (stand by)	Main	Steering	Brake release	Right and left rotation	Lifting	Lowering	Boom lifting
HA16-18PX HA46/51JRT	30	240	240	240	100	240	240	240
HA16-18PX NG HA46/51JRT New Design	30	240	240	240	100	240	240	240

	Boom lowering	Telescope out	Telescope in	Travel	Compensation	Jib lifting	Jib lowering	Standby unit
HA16-18PX HA46/51JRT	240	110	240	240	240	240	240	manual
HA16-18PX NG HA46/51JRT New Design	240	110	240	240	240	240	240	210

Sheet C073	CORRECTIVE MAINTENANCE SHEET ADJUSTING A PRESSURE LIMITER	Folio 3/4

6 - Pressure table (in psi)

	Load sensing (stand by)	Main	Steering	Brake release	Right and left rotation	Lifting	Lowering	Boom lifting
HA16-18PX HA46/51JRT	435	3481	3481	3481	1450	3481	3481	3481
HA16-18PX NG HA46/51JRT New Design	435	3481	3481	3481	1450	3481	3481	3481

	Boom lowering	Telescope out	Telescope in	Travel	Compensation	Jib lifting	Jib lowering	Standby unit
HA16-18PX HA46/51JRT	3481	1595	3481	3481	3481	3481	3481	manual
HA16-18PX NG HA46/51JRT New Design	3481	1595	3481	3481	3481	3481	3481	3045

https://truckmanualshub.com/

Sheet C073	CORRECTIVE MAINTENANCE SHEET	Folio 4/4
	ADJUSTING A PRESSURE LIMITER	

https://truckmanualshub.com/

Sheet C074	CORRECTIVE MAINTENANCE SHEET	Folio 1/2
	CHANGING THE JIB CYLINDER	

Caution!
Ensure that the oil is not too hot.

1 - Preliminary operations

- Put the machine in the maintenance configuration (see corresponding paragraph).
- Switch off electric power (see corresponding paragraph).
- Secure the platform to the ground.

2 - Removing the jib cylinder

- Put the cylinder (1) and the vertical elements (2) and (3) of the jib into slings.
- Mark and disconnect the 2 hydraulic hoses of the jib cylinder.

NB: Unscrew the hoses slowly to release residual hydraulic pressure.

- Fit the hoses with caps.
- Remove the 2 bolts and stop rings from the cylinder pin's pin(4) on the cylinder body side.
- Remove the Mécanindus pin blocking the pin and remove the pin (4).
- Remove the two bolts and stop rings from the cylinder pin's pin (5) on the cylinder rod side.
- Remove the Mécanindus pin blocking the pin, then remove the pin (5).
- Remove the jib cylinder (1).

3 - Installing the jib cylinder

NB: Before re-assembly, check the condition of all the articulation pin rings, and replace if necessary. Lubricate all bores before re-installing the pins. Only use lubricants recommended by the manufacturer.

- Put the jib cylinder back into place and put back the two articulation pins on the cylinder rod and body side.
- Fix the pins with Mécanindus pins.
- Install the 4 stop rings and fix with their bolts.
- Remove the slings.

4 - Additional operations

- Unfasten the platform.
- Put the machine back into the operational configuration.
- Make several jib movements to check operation and purge the hydraulic circuit.
- Check the level of the hydraulic circuit.

https://truckmanualshub.com/

Sheet C074	CORRECTIVE MAINTENANCE SHEET	Folio 2/2
	CHANGING THE JIB CYLINDER	

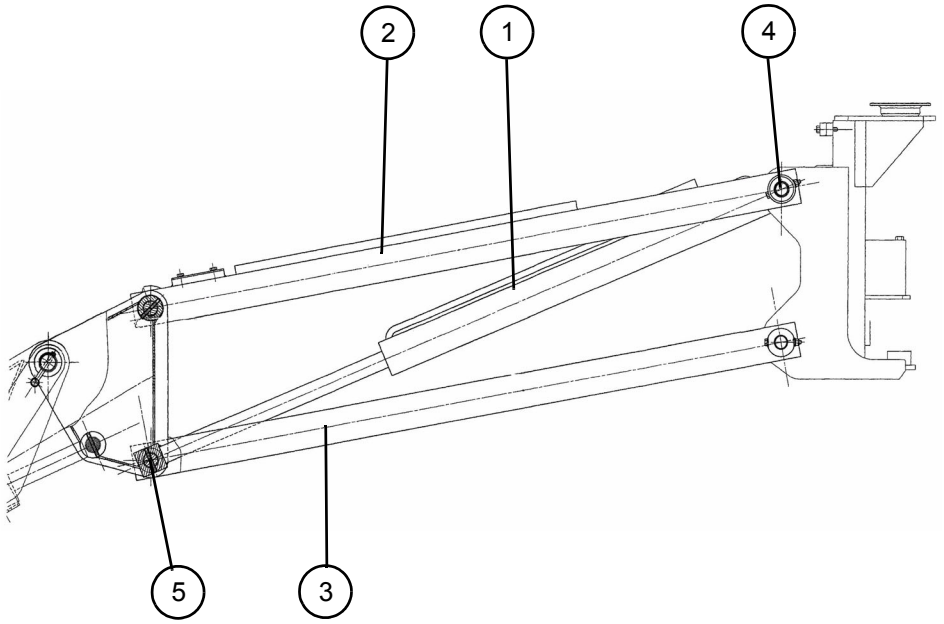

https://truckmanualshub.com/

Sheet C075	CORRECTIVE MAINTENANCE SHEET	Folio 1/2
	CHANGING THE BOOM LIFTING CYLINDER	

Caution!
Ensure that the oil is not too hot.

1 - Preliminary operations

- Position the elevating platform on a firm, horizontal surface.
- Put the turntable rotation blocking pin into place.
- Lift the boom to enable access to the arm lifting cylinder fixtures (1).
- Retract the telescope, lower the arm and put the jib in the low position.
- Switch off electric power (see corresponding paragraph).
- Put the boom into slings to take the weight of the boom while the cylinder is removed.

2 - Removing the boom lifting cylinder

- Put the boom lifting cylinder into slings.
- Mark and disconnect the two hydraulic hoses on the boom lifting cylinder.

NB: Unscrew the hoses slowly to release residual hydraulic pressure.

- Fit caps to the hoses.
- Remove the male clevis blocking the pin (3) of the boom lifting cylinder, on the cylinder body side, by removing its fixing screw and washer, then remove the pin (3).
- Remove the male clevis blocking the pin (2) of the boom lifting cylinder, on the cylinder rod side, by removing its fixing screw and washer, then remove the pin (2).
- Remove the boom lifting cylinder.

3 - Installing the boom lifting cylinder

NB: Lubricate all bores before re-installing the pins. Only use lubricants recommended by the manufacturer.

- Put the boom lifting cylinder into place and fix the rod side to the boom support with the articulation pin.
- Install the male clevis to block the cylinder pin and fix with its fixing screw equipped with a new grower washer.
- Fix the boom lifting cylinder on the body side of the cylinder using the pin.
- Install the male clevis to block the pin and fix with its fixing screw equipped with a new grower washer.
- Reconnect the 2 hydraulic hoses of the boom lifting cylinder.

4 - Additional operations

- Lower the boom.
- Remove the sling from the boom.
- Put the machine back into the operational configuration.
- Make several boom lifting movements to check operation and purge the hydraulic circuit.
- Check the level of the hydraulic circuit.

Sheet C075	CORRECTIVE MAINTENANCE SHEET	Folio 2/2
	CHANGING THE BOOM LIFTING CYLINDER	

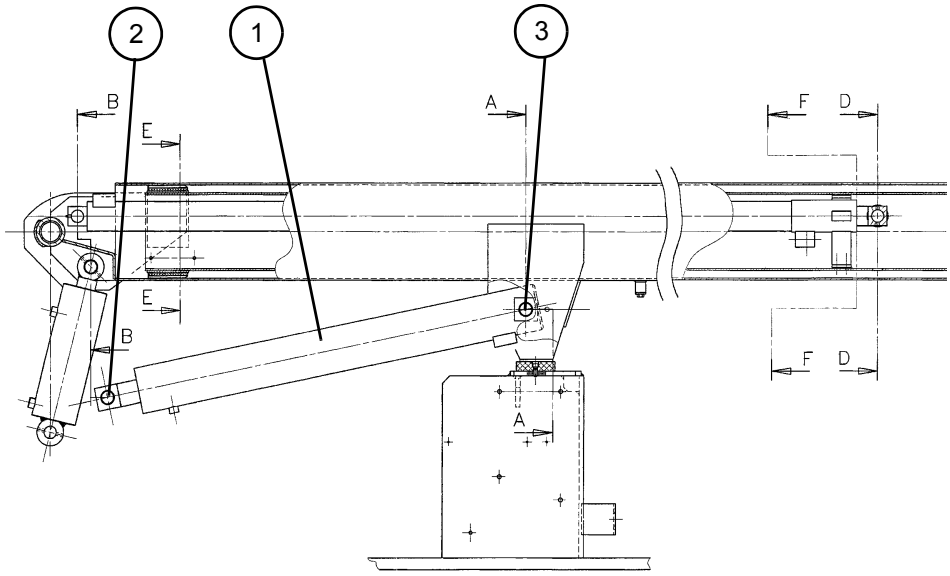

https://truckmanualshub.com/

Sheet C076	CORRECTIVE MAINTENANCE SHEET	Folio 1/1
	DISMANTLING / RE-ASSEMBLING THE HYDRAULIC DISTRIBUTION BLOCK	

Caution!
Ensure that the oil is not too hot.

Caution!
Use a container to collect oil to prevent pollution of the environment.

1 - Preliminary operations

- Remove the hydraulic distribution block (see corresponding sheet).

2 - Dismantling the hydraulic distribution block (1)

- Mark the positions of the input plate, input module, distribution elements and the closing plate.
- If necessary, remove the control units (see corresponding sheet).
- Remove the fixing nuts and the 3 tie rods (2) then separate the elements.

3 - Re-assembling the hydraulic distribution block

- Replace the O-rings seals.
- If necessary, put back the control units (see corresponding sheet).
- Install the input plate, input module, distribution elements and closing plate.
- Install the fixing nuts and 3 tie rods (2). Tighten to 2.2 daN.m (1.4 lb.ft).
- Install the hydraulic distribution block (see corresponding sheet).
- Put the machine back in the operational configuration.
- Make several lifting, travel, steering and turntable rotation movements to purge the hydraulic circuit.
- Check the level of the hydraulic oil tank.

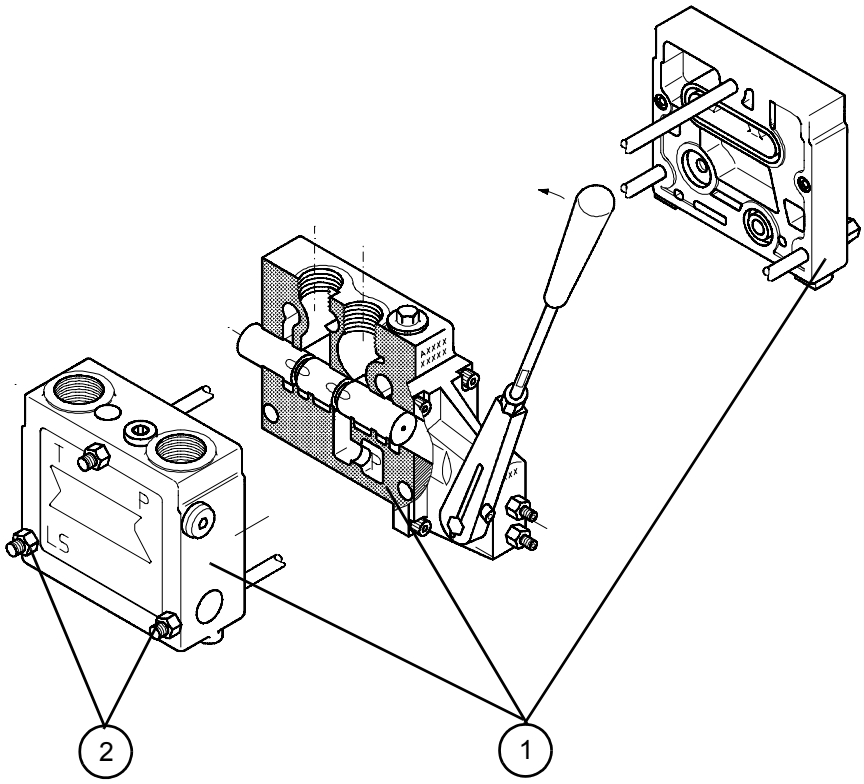

https://truckmanualshub.com/

https://truckmanualshub.com/

Sheet C077	CORRECTIVE MAINTENANCE SHEET	Folio 1/1
	CHANGING A CONTROL UNIT ON THE DISTRIBUTION BLOCK	

Caution!
Ensure that the oil is not too hot.

HA16/18PX - HA46/51JRT

HA16/18PX New design

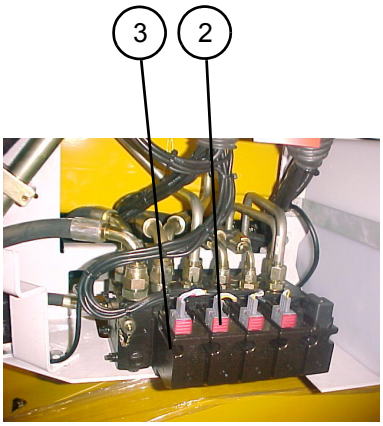

HA46/51JRT New Design

1 - Preliminary operations

- Put the machine in the maintenance configuration (see corresponding paragraph).
- Switch off electric power (see corresponding paragraph).

2 - Removing the control unit

- Remove the 4 fixing bolts and silent-blocks (1) from the turntable box.

NB: One of the bolts also holds the horn.

- Place the turntable box and the horn on the wheel.
- Mark and disconnect the electric connections (2) of the control unit (3).
- Remove the control unit by removing its 4 fixing screws (4).
- Discard the O-rings (5).

3 - Installing the control unit

- Replace the O-rings.
- Install the control unit and fix using the 4 fixing screws. Tighten the screws to a torque of between 7.5 and 8.5 N.m (5.53 and 6.26 lb.ft).
- Reconnect the control unit's electric connections.

- *For HA16/18PX and HA46/51JRT old design*
  - Install the turntable box and horn, and fix with the 4 fixing bolts and silent-blocks.
- Put the machine back in the operational configuration.
- Test the movement corresponding to the replaced control unit. Make several movements to purge the hydraulic circuit.
- Check the level of the hydraulic tank.

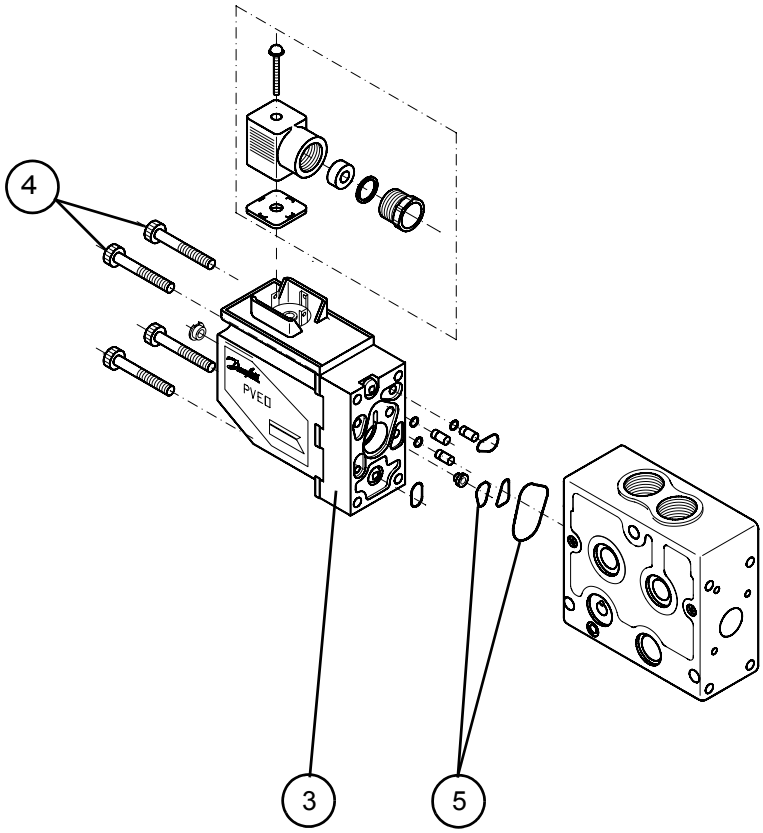

	CORRECTIVE MAINTENANCE SHEET	

HA16/18PX - HA46/51JRT

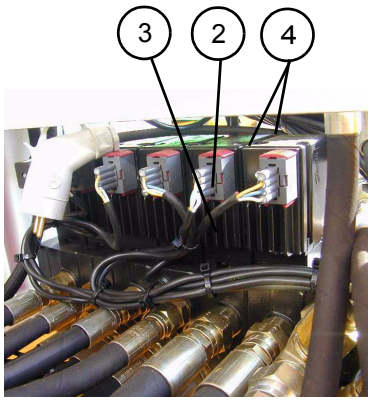

Caution!
Use a container to collect oil to prevent pollution of the environment.

https://truckmanualshub.com/

Sheet C078	CORRECTIVE MAINTENANCE SHEET	Folio 1/2
	CHANGING THE ARM LIFTING CYLINDER	

Caution!
Ensure that the oil is not too hot.

1 - Preliminary operations

- Position the elevator platform on a firm, horizontal surface.
- Put the turntable rotation blocking pin into place.
- Lift the arm to enable access to the arm lifting cylinder fixtures (1).
- Retract the telescope, lower the boom as far as possible and put the jib in the low position.
- Switch off electric power (see corresponding paragraph).
- Wedge the arm to take the weight of the boom while the arm lifting cylinder is removed.

2 - Removing the arm lifting cylinder

- Put the arm lifting cylinder in slings.
- Mark and disconnect the 2 hydraulic hoses of the arm lifting cylinder.

NB: Unscrew the hoses slowly to release residual hydraulic pressure.

- Fit caps to the hoses.
- Remove the male clevis blocking the pin (3) of the arm lifting cylinder on the rod side by removing its fixing screw and washer, then remove the pin (3).
- Remove the male clevis blocking the pin (2) of the arm lifting cylinder on the cylinder body side by removing its fixing screw and washer, then remove the pin (2).
- Remove the arm lifting cylinder.

3 - Installing the arm lifting cylinder

NB: Lubricate all bores before re-installing the pins. Only use lubricants recommended by the manufacturer.

- Put the arm lifting cylinder into place and fix the cylinder body side to the bottom arm using the articulation pin.
- Install the male clevis blocking the cylinder pin and fix using its fixing screw equipped with a new grower washer.
- Fix the arm lifting cylinder rod to the top arm using the pin.
- Install the male clevis blocking the pin and fix using its fixing screw equipped with a new grower washer.
- Reconnect the two hydraulic hoses of the arm lifting cylinder.

4 - Additional operations

- Put the machine back into the operational configuration.
- Remove the wedges from the arm.
- Lower the arm.
- Make several arm lifting movements to test its operation and purge the hydraulic circuit.
- Check the level of the hydraulic circuit.

Sheet C078	CORRECTIVE MAINTENANCE SHEET	Folio 2/2
	CHANGING THE ARM LIFTING CYLINDER	

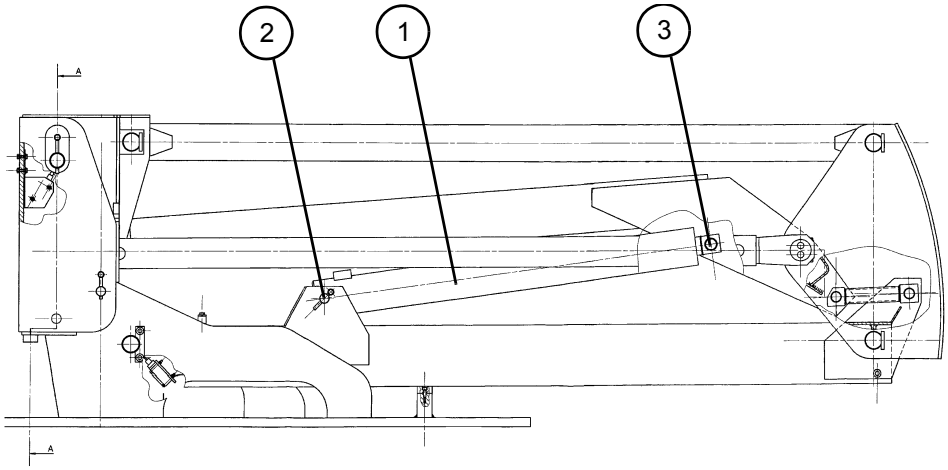

https://truckmanualshub.com/

Sheet C079	CORRECTIVE MAINTENANCE SHEET	Folio 1/1
	CHANGING A FLOW SEPARATOR	

Caution!
Ensure that the oil is not too hot.

Caution!
Use a container to collect oil to prevent pollution of the environment.

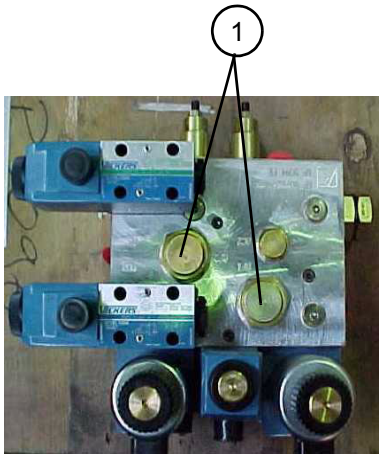

1 - Preliminary operations

- Put the machine in the maintenance configuration (see corresponding paragraph).
- Switch off electric power (see corresponding paragraph).

2 - Removing a flow separator

- Remove the flow separator (1) by unscrewing it.

3 - Installing a flow separator

- Screw a new flow separator, whose characteristics correspond to the machine in question, into the hydraulic block.
- Tighten to the recommended torque:
  - Flow separator ref. FDC1-10: 47 to 54 Nm. (34 to 39.8 lb.ft)
  - Flow separator ref. FDC1-16: 108 to 122 Nm (79.6 to 89.9 lb.ft).
- Put the machine back into the operational configuration.
- Make several movements using the replaced flow separator to purge the circuit.
- Check that the corresponding movement is made correctly.

https://truckmanualshub.com/

https://truckmanualshub.com/

Sheet C080	CORRECTIVE MAINTENANCE SHEET	Folio 1/1
	CHANGING A CIRCUIT SELECTOR ON THE STEERING HYDRAULIC BLOCK	

Caution!
Ensure that the oil is not too hot.

Caution!
Use a container to collect oil to prevent pollution of the environment.

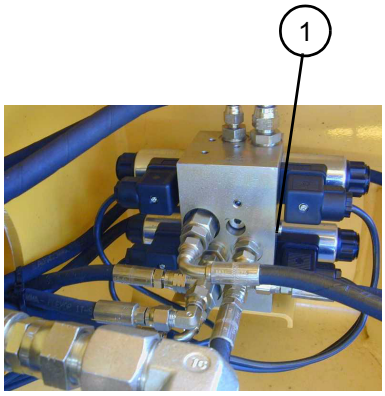

1 - Preliminary operations

- Put the machine in the maintenance configuration (see corresponding paragraph).
- Switch off electric power (see corresponding paragraph).

2 - Removing a circuit selector

- Remove the circuit selector (1) by unscrewing it.

3 - Installing a circuit selector

- Screw a new circuit selector, whose characteristics correspond to the machine in question, into the hydraulic block.
- Put the machine back into the operational configuration.
- Make several movements using the replaced circuit selector to purge the circuit.
- Check that the corresponding movement is made correctly.
- Control the level of the hydraulic oil tank.

https://truckmanualshub.com/

https://truckmanualshub.com/

Sheet C081	CORRECTIVE MAINTENANCE SHEET	Folio 1/1
	CHANGING A PRESSURE LIMITER FOR THE TELESCOPE EXTENSION FUNCTION	

Caution!
Ensure that the oil is not too hot.

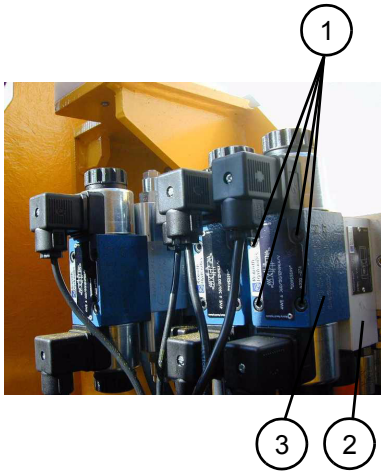

Caution!
Use a container to collect oil to prevent pollution of the environment.

1 - Preliminary operations

- Put the machine in the maintenance configuration (see corresponding paragraph).
- Switch off electric power (see corresponding paragraph).

2 - Removing a pressure limiter

- Mark the installation position of the pressure limiter unit electrodistributor.
- Remove the 4 fixing screws (1), then take out the electrovalve (3) + pressure limiter (2) assembly.
- Remove the pressure limiter (2).

3 - Installing a pressure limiter

- Replace the seals and put into place on the hydraulic block a new pressure limiter (2), whose characteristics correspond to the machine in question, then the electrovalve (3).
- Fix the assembly with the 4 fixing screws (1). Tighten to the recommended torque (see corresponding chapter).
- Put the machine back into the operational configuration.
- Make several movements using the replaced pressure limiter to purge the circuit.
- Adjust the limiter to the required pressure (see corresponding sheet).
- Check that the corresponding movement is made correctly.

https://truckmanualshub.com/

https://truckmanualshub.com/

Sheet C082	CORRECTIVE MAINTENANCE SHEET	Folio 1/1
	CHANGING A BALANCING VALVE FOR THE COMPENSATION FUNCTION	

Caution!
Ensure that the oil is not too hot.

Caution!
Use a container to collect oil to prevent pollution of the environment.

Caution!
Balancing valves are safety elements. They are calibrated in the plant and must not be re-adjusted.

1 - Preliminary operations

- Put the machine in the maintenance configuration (see corresponding paragraph).
- Switch off electric power (see corresponding paragraph).

2 - Removing a balancing valve

- Remove the balancing valve (1) by unscrewing it.

3 - Installing a balancing valve

- Screw a new balancing valve, whose characteristics correspond to the machine in question, into the hydraulic block. Tighten to a torque of 45 to 50 Nm (33 to 36.7 lb.ft).
- Put the machine back into the operational configuration.
- Make several movements using the replaced balancing valve to purge the circuit.
- Check that the corresponding movement is made correctly.

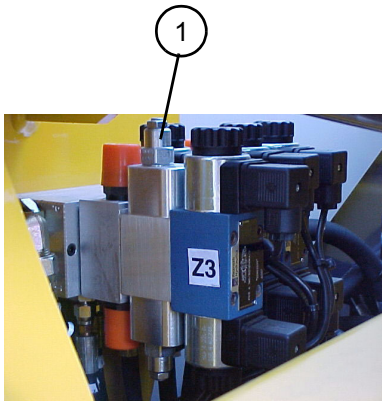

https://truckmanualshub.com/

https://truckmanualshub.com/

Sheet C083	CORRECTIVE MAINTEANCE SHEET	Folio 1/1
	CHANGING A DOUBLE FLOW LIMITER FOR THE COMPENSATION FUNCTION	

Caution!
Ensure that the oil is not too hot.

Caution!
Use a container to collect oil to prevent pollution of the environment.

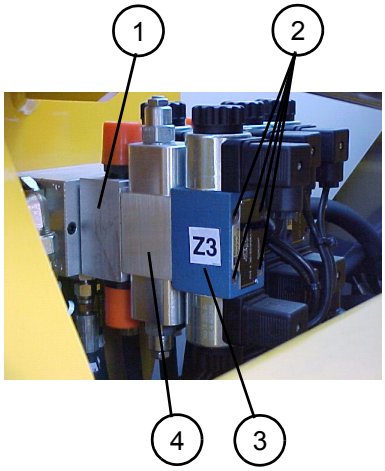

1 - Preliminary operations

- Put the machine in the maintenance configuration (see corresponding paragraph).
- Switch off electric power (see corresponding paragraph).

2 - Removing a double flow limiter (1)

- Mark the installation position of the electrodistributor, balancing valve and double flow limiter.
- Remove the 4 fixing screws (2), then take out the electrovalve (3) + balanging valve (4) + double flow limiter (1) assembly.
- Remove the double flow limiter (1).

3 - Installing the double flow limiter

- Replace the seals and put into place on the hydraulic block a new flow limiter (1), whose characteristics correspond to the machine in question, then the balancing valve (4) and the electrovalve (3).
- Fix the assembly with the 4 fixing screws (2). Tighten to the recommended torque (see corresponding chapter).
- Put the machine back into the operational configuration.
- Make several movements using the replaced double flow limiter to purge the circuit.
- Adjust compensation up and down speeds (see corresponding chapter).
- Check that the corresponding movement is made correctly.

https://truckmanualshub.com/

https://truckmanualshub.com/

Sheet C084	CORRECTIVE MAINTENANCE SHEET	Folio 1/1
	CHANGING A NON-RETURN VALVE ON THE STEERING HYDRAULIC BLOCK	

Caution!
Ensure that the oil is not too hot.

Caution!
Use a container to collect oil to prevent pollution of the environment.

1 - Preliminary operations

- Put the machine in the maintenance configuration (see corresponding paragraph).
- Switch off electric power (see corresponding paragraph).

2 - Removing a non-return valve

- Remove the non-return valve (1) by unscrewing it.

3 - Installing a non-return valve

- Screw a new non-return valve, whose characteristics correspond to the machine in question, into the hydraulic block.
- Put the machine back into the operational configuration.
- Make several movements using the replaced non-return valve to purge the circuit.
- Check that the corresponding movement is made correctly.

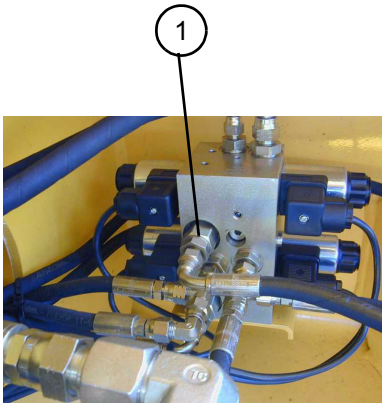

https://truckmanualshub.com/

https://truckmanualshub.com/

Sheet C127	CORRECTIVE MAINTENANCE SHEET	Folio 1/1
	CHANGING THE EMERGENCY UNIT	

Caution!
Use a container to collect oil to prevent pollution of the environment.

1 - Preliminary operations

- Put the machine in the maintenance configuration (see corresponding paragraph).
- Switch off electric power (see corresponding paragraph).
- Close the hydraulic tank suction valve.

2 - Removing the emergency unit

- Remove the cover on the reducing gear side (see corresponding sheet).
- Disconnect the battery terminals (see corresponding sheet).
- Disconnect the unit's supply terminals (1) after marking them.

NB: Unscrew the hoses slowly to release residual hydraulic pressure.

- Mark then disconnect the hoses (2) at the emergency pump.
- Put caps on the hoses.
- Unscrew the tightening flange (3) of the emergency unit.
- Remove the emergency unit by pulling it upwards.

3 - Installing the emergency unit

- Put the emergency unit into place, making sure it is the right way round.
- Screw the tightening flange (3) back onto the emergency unit.
- Reconnect the hydraulic hoses according to the marks made during dismantling.
- Reconnect the supply terminals according to the marks made during dismantling
- Open the hydraulic tank suction valve.
- Put the machine back in the operational configuration.
- Perform an emergency operation to check that the emergency unit works properly.

4 - Additional operations

- If it is necessary to change the calibration valve unit of the emergency circuit:
  - Perform the preliminary operations.
  - Calibrate the emergency unit at 110 bar:
    - Make a movement to its limit (e.g. telescoping).
    - Adjust the screw (4).
  - Open the hydraulic tank suction valve.
  - Put the machine back in the operational configuration.
  - Perform an emergency operation to check that the emergency unit works properly.

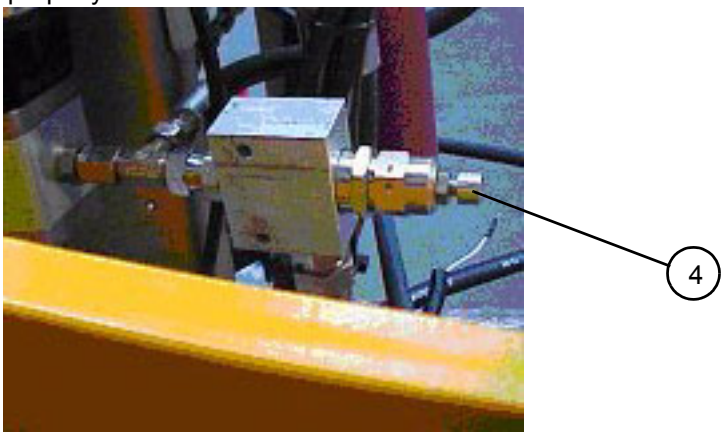

https://truckmanualshub.com/

https://truckmanualshub.com/

Sheet C135	CORRECTIVE MAINTENANCE SHEET	Folio 1/1
	CHANGING THE COUNTERWEIGHTS	

1 - Preliminary operations

- Put the machine in the maintenance configuration (see corresponding paragraph).
- Switch off electric power (see corresponding paragraph).
- Put the boom into slings (1) to prevent tipping when the counterweight is removed.
- Fix a vehicle lift to the lifting beam and apply tension to the vehicle lift.

2 - Removing the counterweight

- Install a machine able to transport the weight under the counterweight and secure the counterweight to it.
- Pass straps through the holes (2) provided on the counterweight.
- Fix the straps to vehicle lift lifting beam and apply tension to the lift.
- Unscrew the 3 screws (3) and their washers on the counterweight.
- Remove the counterweight.

3 - Installing the counterweight

- Put the counterweight into place using specific tools (contact our After-Sales department).
- Put back the three fixings screws and washers.

4 - Additional operations

- Check that the counterweight is properly secured to the machine.
- Remove the straps from the counterweight.
- Remove the sling from the boom.
- Put the machine back in the operational configuration.

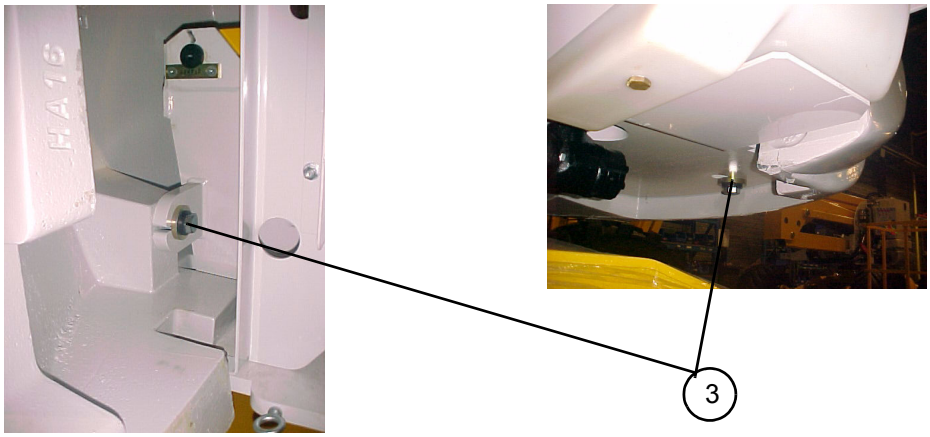

Caution!
Ensure that the lifting equipment is in good condition and of sufficient capacity.

Caution!
It is essential to put the component in slings before dismantling/re-assembling it.

https://truckmanualshub.com/

Sheet C135	CORRECTIVE MAINTENANCE SHEET	
	CHANGING THE COUNTERWEIGHTS	