https://truckmanualshub.com/

ELECTRONIC CONTROL MODULES

TABLE OF CONTENTS

page

ELECTRONIC CONTROL MODULES - ELECTRICAL DIAGNOSTICS 1

page

ELECTRONIC CONTROL MODULES - SERVICE INFORMATION 178

ELECTRONIC CONTROL MODULES - ELECTRICAL DIAGNOSTICS

TABLE OF CONTENTS

page

ELECTRONIC CONTROL MODULES - ELECTRICAL DIAGNOSTICS
DIAGNOSIS AND TESTING
B210D-BATTERY VOLTAGE LOW 4
B210E-BATTERY VOLTAGE HIGH 5
B222C-VEHICLE CONFIGURATION NOT PROGRAMMED 6
B2206-CURRENT VIN MISSING/MISMATCH 7
B2215-FRONT CONTROL MODULE INTERNAL (TOTALLY INTEGRATED POWER MODULE) 8
C2100–BATTERY VOLTAGE LOW (FDCM) 9
C2101–BATTERY VOLTAGE HIGH (FDCM) 11
C2201-FDCM ECU INTERNAL (FDCM) 13
U0001-CAN C BUS CIRCUIT 14
U0021-CAN B BUS (+) CIRCUIT OPEN 19
U0022-CAN B BUS (+) CIRCUIT LOW 22
U0023-CAN B BUS (+) CIRCUIT HIGH 25
U0024-CAN B BUS (-) CIRCUIT OPEN 28
U0025-CAN B BUS (-) CIRCUIT LOW 31
U0026-CAN B BUS (-) CIRCUIT HIGH 35
U0027-CAN B BUS (-) SHORTED TO BUS (+) 38
U0100-LOST COMMUNICATION WITH ECM/PCM 41
U0101-LOST COMMUNICATION WITH TCM . . . 44
U0114-LOST COMMUNICATION WITH FINAL DRIVE CONTROL MODULE 47
U0121-LOST COMMUNICATION WITH ANTI-LOCK BRAKE MODULE 50
U0141–LOST COMMUNICATION WITH FRONT CONTROL MODULE (TOTALLY INTEGRATED POWER MODULE) 53

page

U0151–LOST COMMUNICATION WITH OCCUPANT RESTRAINT CONTROLLER (ORC) 56
U0155-LOST COMMUNICATION WITH CLUSTER/CCN 59
U0156–LOST COMMUNICATION WITH EOM . . 62
U0164-LOST COMMUNICATION WITH HVAC CONTROL MODULE 65
U0168-LOST COMMUNICATION WITH VEHICLE SECURITY CONTROL MODULE (SKREEM/WCM) 68
U0169-LOST COMMUNICATION WITH SUNROOF CONTROL MODULE 71
U0184-LOST COMMUNICATION WITH RADIO 74
U0186-LOST COMMUNICATION WITH AUDIO AMPLIFIER 77
U0195-LOST COMMUNICATION WITH SDARS 80
U0196-LOST COMMUNICATION WITH VEHICLE ENTERTAINMENT CONTROL MODULE 83
U0197-LOST COMMUNICATION WITH HANDS FREE PHONE MODULE 86
U1108-ADDITIONAL CAN B ECU DETECTED . . 89
*STORED LOST COMMUNICATION DTCS 91
*CAN C DIAGNOSTIC (+) AND/OR CAN C DIAGNOSTIC (-) CIRCUITS HIGH 94
*CAN C DIAGNOSTIC (+) SHORTED TO CAN C DIAGNOSTIC (-) 96
*CAN C DIAGNOSTIC (+) CIRCUIT LOW 98
*CAN C DIAGNOSTIC (-) CIRCUIT LOW 100
*CAN C DIAGNOSTIC (+) CIRCUIT OPEN 102
*CAN C DIAGNOSTIC (-) CIRCUIT OPEN 104

https://truckmanualshub.com/

*BOTH CAN C DIAGNOSTIC (+) AND CAN C DIAGNOSTIC (-) CIRCUITS OPEN 106
*NO RESPONSE FROM ABS (ANTILOCK BRAKE MODULE) 109
*NO RESPONSE FROM AMP (AMPLIFIER) . . . 113
*NO RESPONSE FROM CCN (CLUSTER) 116
*NO RESPONSE FROM ECM (ENGINE CONTROL MODULE) - DIESEL 120
*NO RESPONSE FROM EOM (ELECTRONIC OVERHEAD MODULE) 123
*NO RESPONSE FROM FDCM (FINAL DRIVE CONTROL MODULE) (POWER WAGON ONLY) 126
*NO RESPONSE FROM GATEWAY MODULE - (SRT10 ONLY) 130
*NO RESPONSE FROM HFM (HANDS FREE MODULE) 135
*NO RESPONSE FROM HVAC (A/C HEATER CONTROL) 138
*NO RESPONSE FROM ORC (OCCUPANT RESTRAINT CONTROLLER) 141
*NO RESPONSE FROM PCM (POWERTRAIN CONTROL MODULE) (NGC) 145
*NO RESPONSE FROM PCM (PCI BUS) - (SRT10 ONLY) 149
*NO RESPONSE FROM PCM (SCI ONLY) - (SRT10 ONLY) 152
*NO RESPONSE FROM RADIO 156
*NO RESPONSE FROM SDAR (SATELLITE RECEIVER) 159
*NO RESPONSE FROM SUNR (SUNROOF MOTOR/MODULE) 162
*NO RESPONSE FROM TCM (POWERTRAIN CONTROL MODULE) - NGC 165
*NO RESPONSE FROM TIPM (TOTALLY INTEGRATED POWER MODULE) 167
*NO RESPONSE FROM VES (MONITOR/ DVD MEDIA SYSTEM) 170
*NO RESPONSE FROM WCM (SENTRY KEY REMOTE ENTRY MODULE) 173
STANDARD PROCEDURE
BODY VERIFICATION TEST - VER 1 177

https://truckmanualshub.com/

ELECTRONIC CONTROL MODULES - ELECTRICAL DIAGNOSTICS

DIAGNOSIS AND TESTING

https://truckmanualshub.com/

B210D-BATTERY VOLTAGE LOW

For a complete wiring diagram **Refer to Section 8W**.

- **When Monitored:**
  With the ignition on.
- **Set Condition:**
  Battery voltage less than 9 volts for more than 15 seconds.

Possible Causes
RESISTANCE IN THE (A1) BATTERY POSITIVE CIRCUIT
RESISTANCE IN THE GENERATOR CASE GROUND
GENERATOR OPERATION
GENERATOR FIELD CONTROL CIRCUIT OPEN
GENERATOR FIELD CONTROL CIRCUIT SHORTED TO GROUND
GROUND CIRCUIT OPEN
PCM/ECM

Diagnostic Test

1. CHECK FOR ANY POWERTRAIN/ENGINE CONTROL MODULES DTCS

NOTE: Make sure the Battery is in good condition. Using the Midtronics Battery Tester, test the Battery before continuing.

NOTE: Inspect the vehicle for after market accessories that may exceed the Generator System output.

NOTE: Make sure the generator drive belt is in good operating condition.

NOTE: Inspect the fuses in the TIPM. If an open fuse is found, use the wire diagram/schematic as a guide, inspect the wiring and connectors for damage.

Turn the ignition on.

With the scan tool, read active PCM/ECM DTC's.

Does the scan tool display any active DTC's?

Yes >> (Refer to 9 - ENGINE - DIAGNOSIS AND TESTING) for the diagnostic test procedure.

No >> Check the above conditions that can cause a low voltage condition. Repair as necessary.

https://truckmanualshub.com/

B210E-BATTERY VOLTAGE HIGH

For a complete wiring diagram **Refer to Section 8W**.

- **When Monitored:**
  With the ignition on.
- **Set Condition:**
  Battery voltage greater than 16 volts for more than 15 seconds.

Possible Causes
GENERATOR FIELD CONTROL CIRCUIT SHORTED TO BATTERY VOLTAGE
GENERATOR
PCM/ECM

Diagnostic Test

1. CHECK FOR ANY POWERTRAIN/ENGINE CONTROL MODULES DTCS

NOTE: Make sure the Battery is in good condition. Using the Midtronics Battery Tester, test the Battery before continuing.

NOTE: Inspect the vehicle for after market accessories that may exceed the Generator System output.

NOTE: Make sure the generator drive belt is in good operating condition.

NOTE: Inspect the fuses in the TIPM. If an open fuse is found, use the wire diagram/schematic as a guide, inspect the wiring and connectors for damage.

Turn the ignition on.

With the scan tool, read active PCM/ECM DTC's.

Does the scan tool display any active DTC's?

Yes >> (Refer to 9 - ENGINE - DIAGNOSIS AND TESTING) for the diagnostic test procedure.

No >> Check the above conditions that can cause a high voltage condition. Repair as necessary.

https://truckmanualshub.com/

B222C-VEHICLE CONFIGURATION NOT PROGRAMMED

For a complete wiring diagram **Refer to Section 8W**.

- **When Monitored:**
  With the ignition on.
- **Set Condition:**
  The Totally Integrated Power Module is not configured correctly to the vehicle.

Possible Causes
TOTALLY INTEGRATED POWER MODULE NOT CONFIGURED CORRECTLY
TOTALLY INTEGRATED POWER MODULE

Diagnostic Test

1. CHECK FOR ACTIVE DTC

With the scan tool, read the active DTC's.

Cycle the ignition switch from off to on at least 5 times, leaving the ignition on for a minimum of 90 seconds per cycle.

With the scan tool, read the active DTC's.

Does the scan tool display this DTC as active?

Yes >> Go To 2

No >> If the DTC is stored, check for an intermittent condition. Visually inspect the related wiring harness connectors. Look for broken, bent, pushed out, or corroded terminals.

2. CONFIGURE THE TIPM TO THE VEHICLE

With the scan tool enter program network configuration and program the TIPM to the vehicle configuration.

With the scan tool, erase TIPM DTC's.

Cycle the ignition switch from off to on at least 5 times, leaving the ignition on for a minimum of 90 seconds per cycle.

With the scan tool, read the active DTC's.

Does the scan tool display this DTC as active?

Yes >> Inspect the wiring and connectors for damage or shorted circuits. If ok, replace and program the Totally Integrated Power Module in accordance with the service information.

Perform BODY VERIFICATION TEST – VER 1. (Refer to 8 - ELECTRICAL/ELECTRONIC CONTROL MODULES - STANDARD PROCEDURE).

No >> Repair is complete.

https://truckmanualshub.com/

B2206-CURRENT VIN MISSING/MISMATCH

For a complete wiring diagram **Refer to Section 8W**.

- **When Monitored:**
  With the ignition on.
- **Set Condition:**
  The Totally Integrated Power Module (TIPM) will receive and monitor the VIN message from the PCM and record the VIN if different from the last VIN.

Possible Causes
INCORRECT VIN PROGRAMMED IN PCM
TOTALLY INTEGRATED POWER MODULE

Diagnostic Test

1. CHECK FOR ACTIVE DTC

With the scan tool, read the active DTC's.

Cycle the ignition switch from off to on at least 5 times, leaving the ignition on for a minimum of 90 seconds per cycle.

With the scan tool, read the active DTC's.

Does the scan tool display this DTC as active?

Yes >> Go To 2

No >> If the DTC is stored, check for an intermittent condition. Visually inspect the related wiring harness connectors. Look for broken, bent, pushed out, or corroded terminals.

2. CHECK VIN IN PCM

With the scan tool compare the VIN that is programmed into the PCM to the VIN on the vehicle.

Does the VIN programmed into the PCM match the vehicles VIN?

Yes >> Inspect the wiring and connectors for damage or shorted circuits. If ok, replace and program the Totally Integrated Power Module in accordance with the service information.

Perform BODY VERIFICATION TEST – VER 1. (Refer to 8 - ELECTRICAL/ELECTRONIC CONTROL MODULES - STANDARD PROCEDURE).

No >> Program the correct VIN in the PCM and retest.

https://truckmanualshub.com/

B2215-FRONT CONTROL MODULE INTERNAL (TOTALLY INTEGRATED POWER MODULE)

For a complete wiring diagram **Refer to Section 8W**.

- **When Monitored:**
  Continuously.
- **Set Condition:**
  The Totally Integrated Power Module detects an internal fault.

Possible Causes
TOTALLY INTEGRATED POWER MODULE (TIPM)

Diagnostic Test

1. REPLACE THE TOTALLY INTEGRATED POWER MODULE IF DTC IS ACTIVE

With the scan tool, read the active DTC's.

Does the scan tool display this DTC as active?

Yes >> Replace and program the Totally Integrated Power Module in accordance with the service information. Perform BODY VERIFICATION TEST – VER 1. (Refer to 8 - ELECTRICAL/ELECTRONIC CONTROL MODULES - STANDARD PROCEDURE).

No >> If the DTC is stored, check for an intermittent condition. Visually inspect the related wiring harness connectors. Look for broken, bent, pushed out, or corroded terminals.

https://truckmanualshub.com/

C2100–BATTERY VOLTAGE LOW (FDCM)

For a complete wiring diagram **Refer to Section 8W**

- **When Monitored:**
  Continuously.
- **Set Condition:**
  The Final Drive Control Module detects that system voltage is below 9.0 volts for 60 seconds.

Possible Causes
INTERMITTENT BATTERY VOLTAGE LOW
CHARGING SYSTEM DTCS PRESENT
FINAL DRIVE CONTROL MODULE POWER CIRCUITS OPEN OR HIGH RESISTANCE
FINAL DRIVE CONTROL MODULE

Diagnostic Test

1. CHARGING SYSTEM DTCS PRESENT

Ignition on.

With the scan tool, select View DTCs in the Powertrain Control Module.

Are there any Charging System or related voltage DTCs present?

Yes >> Refer to the symptom list and perform any Charging System DTC diagnostic procedures before continuing with this test.

No >> Go to 2

2. DTC IS ACTIVE

With the scan tool, select View DTCs in the Final Drive Control Module.

Is the status Active for this DTC?

Yes >> Go to 3

No >> Go to 5

3. (A34) FUSED B+ CIRCUIT OPEN OR HIGH RESISTANCE

Turn the ignition off.

Disconnect the Final Drive Control Module harness connector.

Turn the ignition on.

With a 12–volt test light connected to ground, check the (A34) Fused B+ circuit in the Final Drive Control Module harness connector.

NOTE: The test light must illuminate brightly. Compare the brightness to that of a direct connection to the battery.

Does the test light illuminate brightly?

Yes >> Go to 4

No >> Repair the (A34) Fused B+ circuit for an open circuit or high resistance.

Perform the FDCM VERIFICATION TEST. (Refer to 3 - DIFFERENTIAL & DRIVELINE - STANDARD PROCEDURE)

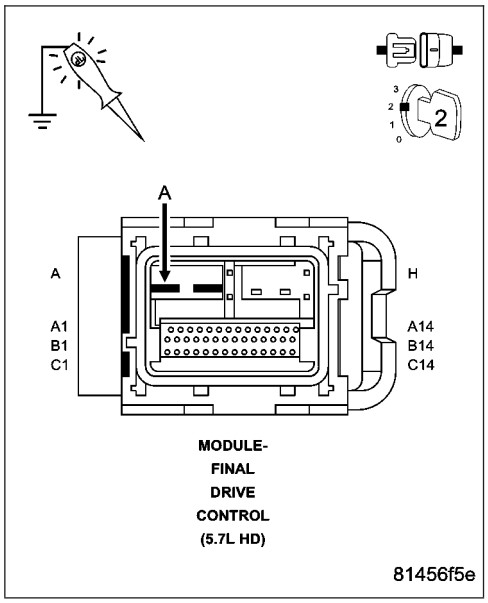

https://truckmanualshub.com/

4. FINAL DRIVE CONTROL MODULE

View repair.

Repair

Replace the Final Drive Control Module in accordance with the Service information.

Perform the FDCM VERIFICATION TEST. (Refer to 3 - DIFFERENTIAL & DRIVELINE - STANDARD PROCEDURE)

5. INTERMITTENT WIRING AND CONNECTORS

The conditions necessary to set this DTC are not present at this time.

Using the wiring diagram/schematic as a guide, inspect the wiring and connectors.

While monitoring the scan tool data relative to this circuit, wiggle test the wiring and connectors.

Look for the data to change or for the DTC to reset during the wiggle test.

Were any problems found?

Yes >> Repair as necessary.

Perform the FDCM VERIFICATION TEST. (Refer to 3 - DIFFERENTIAL & DRIVELINE - STANDARD PROCEDURE)

No >> Test complete.

https://truckmanualshub.com/

C2101–BATTERY VOLTAGE HIGH (FDCM)

For a complete wiring diagram **Refer to Section 8W**

- **When Monitored:**
  Continuously.
- **Set Condition:**
  The Final Drive Control Module detects that system voltage is above 16.0 volts for 10 seconds with engine RPM greater than 350.

Possible Causes
INTERMITTENT BATTERY VOLTAGE HIGH
CHARGING SYSTEM DTCS PRESENT
FINAL DRIVE CONTROL MODULE GROUND CIRCUITS OPEN OR HIGH RESISTANCE
FINAL DRIVE CONTROL MODULE

Diagnostic Test

1. CHARGING SYSTEM DTCS PRESENT

Ignition on.

With the scan tool, select View DTCs in the Powertrain Control Module.

Are there any Charging System or related voltage DTCs present?

Yes >> Refer to the symptom list and perform any Charging System DTC diagnostic procedures before continuing with this test.

No >> Go to 2

2. DTC IS ACTIVE

With the scan tool, select View DTCs in the Final Drive Control Module.

Is the status Active for this DTC?

Yes >> Go to 3

No >> Go to 5

https://truckmanualshub.com/

3. FINAL DRIVE CONTROL MODULE GROUND CIRCUITS OPEN OR HIGH RESISTANCE

Turn the ignition off.

Disconnect the Final Drive Control Module harness connector.

Turn the ignition on.

With a 12–volt test light connected to B+, check the Ground circuits in the Final Drive Control Module harness connector.

NOTE: The test light must illuminate brightly. Compare the brightness to that of a direct connection to the battery.

Does the test light illuminate brightly for each of the Ground circuits?

Yes >> Go to 4

No >> Repair the Ground circuit(s) for an open circuit or high resistance.

Perform the FDCM VERIFICATION TEST. (Refer to 3 - DIFFERENTIAL & DRIVELINE - STANDARD PROCEDURE)

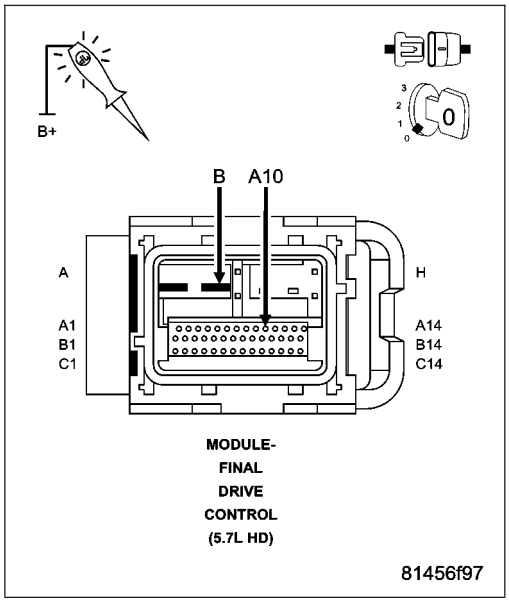

4. FINAL DRIVE CONTROL MODULE

View repair.

Repair

Replace the Final Drive Control Module in accordance with the Service information.

Perform the FDCM VERIFICATION TEST. (Refer to 3 - DIFFERENTIAL & DRIVELINE - STANDARD PROCEDURE)

5. INTERMITTENT WIRING AND CONNECTORS

The conditions necessary to set this DTC are not present at this time.

Using the wiring diagram/schematic as a guide, inspect the wiring and connectors.

While monitoring the scan tool data relative to this circuit, wiggle test the wiring and connectors.

Look for the data to change or for the DTC to reset during the wiggle test.

Were any problems found?

Yes >> Repair as necessary.

Perform the FDCM VERIFICATION TEST. (Refer to 3 - DIFFERENTIAL & DRIVELINE - STANDARD PROCEDURE)

No >> Test complete.

https://truckmanualshub.com/

C2201-FDCM ECU INTERNAL (FDCM)

For a complete wiring diagram **Refer to Section 8W**

- **When Monitored:**
  With the ignition on.
- **Set Condition:**
  The Final Drive Control Module has detected a failure internal to the controller.

Possible Causes
FINAL DRIVE CONTROL MODULE

1. FINAL DRIVE CONTROL MODULE

The Final Drive Control Module has detected an internal failure.

View repair

Repair

Replace the Final Drive Control Module in accordance with the Service Information.

Perform the FDCM VERIFICATION TEST. (Refer to 3 - DIFFERENTIAL & DRIVELINE - STANDARD PROCEDURE)

https://truckmanualshub.com/

U0001-CAN C BUS CIRCUIT

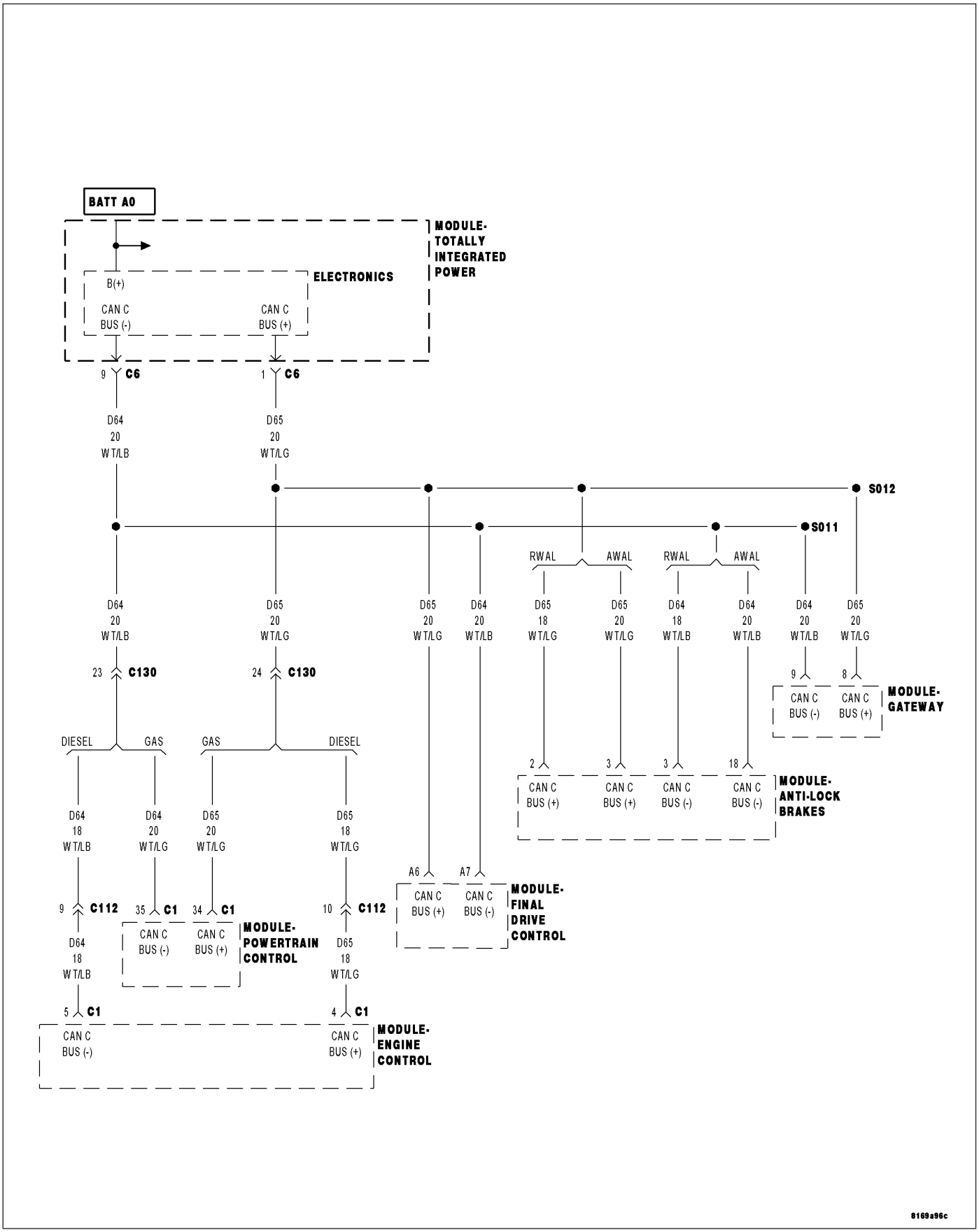

For a complete wiring diagram **Refer to Section 8W**.

https://truckmanualshub.com/

- **When Monitored:**
  With the ignition on.
- **Set Condition:**
  The TIPM detects a short in either CAN C Bus circuit.

Possible Causes
(D65) CAN C BUS (+) CIRCUIT SHORTED TO GROUND
(D64) CAN C BUS (-) CIRCUIT SHORTED TO GROUND
(D65) CAN C BUS (+) CIRCUIT SHORTED TO VOLTAGE
(D64) CAN C BUS (-) CIRCUIT SHORTED TO VOLTAGE
(D65) CAN C BUS (+) CIRCUIT SHORTED TO (D64) CAN C BUS (-) CIRCUIT
ANTILOCK BRAKE MODULE
POWERTRAIN CONTROL MODULE
ENGINE CONTROL MODULE (DIESEL ONLY)
GATEWAY MODULE (SRT10 ONLY)
FINAL DRIVE CONTROL MODULE
TOTALLY INTEGRATED POWER MODULE

Diagnostic Test

1. TEST FOR INTERMITTENT CONDITION

Turn the ignition on.
With the scan tool, record and erase TIPM DTC's.
Cycle the ignition from on to off 3 times.
Turn the ignition on.
With the scan tool, read active TIPM DTC's.

Does the scan tool display U0001–CAN C BUS CIRCUIT as active?

Yes >> Go To 2

No >> The conditions that caused this code to set are not present at this time. Using the wiring diagram/schematic as a guide, inspect the wiring and connectors.

2. ANTILOCK BRAKE MODULE — INTERNAL SHORT

Turn the ignition off.
Disconnect the Antilock Brake Module harness connector.
Turn the ignition on.
With the scan tool, record and erase TIPM DTC's.
Cycle the ignition from on to off 3 times.
Turn the ignition on.
With the scan tool, read active TIPM DTC's.

Does the scan tool display U0001–CAN C BUS CIRCUIT as active?

Yes >> Go To 3

No >> Inspect the wiring and connectors for damage or shorted circuits. If ok, replace the Antilock Brake Module in accordance with the service information.
Perform the ABS VERIFICATION TEST — VER 1.

https://truckmanualshub.com/

3. POWERTRAIN CONTROL MODULE — INTERNAL SHORT

Turn the ignition off.
Disconnect the Powertrain Control Module C1 harness connector.
Turn the ignition on.
With the scan tool, record and erase TIPM DTC's.
Cycle the ignition from on to off 3 times.
Turn the ignition on.
With the scan tool, read active TIPM DTC's.

Does the scan tool display U0001–CAN C BUS CIRCUIT as active?

Yes >> Go To 4

No >> Inspect the wiring and connectors for damage or shorted circuits. If ok, replace and program the Powertrain Control Module in accordance with the service information.
Perform the POWERTRAIN VERIFICATION TEST

4. GATEWAY MODULE (SRT10 ONLY) — INTERNAL SHORT

Turn the ignition off.

NOTE: If vehicle is not equipped with this module, answer yes to the question.
Disconnect the Gateway Module harness connector.
Turn the ignition on.
With the scan tool, record and erase TIPM DTC's.
Cycle the ignition from on to off 3 times.
Turn the ignition on.
With the scan tool, read active TIPM DTC's.

Does the scan tool display U0001–CAN C BUS CIRCUIT as active?

Yes >> Go To 5

No >> Inspect the wiring and connectors for damage or shorted circuits. If ok, replace the Gateway Module in accordance with the service information.
Perform the BODY VERIFICATION TEST – VER 1. (Refer to 8 - ELECTRICAL/ELECTRONIC CONTROL MODULES - STANDARD PROCEDURE)

5. ENGINE CONTROL MODULE (DIESEL ONLY) — INTERNAL SHORT

Turn the ignition off.

NOTE: If vehicle is not equipped with this module, answer yes to the question.
Disconnect the Engine Control Module C1 harness connector.
Turn the ignition on.
With the scan tool, record and erase TIPM DTC's.
Cycle the ignition from on to off 3 times.
Turn the ignition on.
With the scan tool, read active TIPM DTC's.

Does the scan tool display U0001–CAN C BUS CIRCUIT as active?

Yes >> Go To 6

No >> Inspect the wiring and connectors for damage or shorted circuits. If ok, replace and program the Engine Control Module in accordance with the service information.
Perform the POWERTRAIN VERIFICATION TEST VER - 5 (DIESEL).

https://truckmanualshub.com/

6. FINAL DRIVE CONTROL MODULE (POWER WAGON ONLY) — INTERNAL SHORT

Turn the ignition off.

NOTE: If vehicle is not equipped with this module, answer yes to the question.

Disconnect the Final Drive Control Module harness connectors.

Turn the ignition on.

With the scan tool, record and erase TIPM DTC's.

Cycle the ignition from on to off 3 times.

Turn the ignition on.

With the scan tool, read active TIPM DTC's.

Does the scan tool display U0001–CAN C BUS CIRCUIT as active?

Yes >> Go To 7

No >> Inspect the wiring and connectors for damage or shorted circuits. If ok, replace and program the Final Drive Control Module in accordance with the service information.

Perform the FDCM VERIFICATION TEST.

7. (D65) CAN C BUS (+) CIRCUIT SHORTED TO VOLTAGE

Turn the ignition off.

Disconnect the Totally Integrated Power Module C6 harness connector.

Turn the ignition on.

Measure the voltage between the (D65) CAN C Bus (+) circuit and ground.

Is there any voltage present?

Yes >> Repair the (D65) CAN C Bus (+) circuit for a short to voltage.

Perform the BODY VERIFICATION TEST – VER 1. (Refer to 8 - ELECTRICAL/ELECTRONIC CONTROL MODULES - STANDARD PROCEDURE)

No >> Go To 8

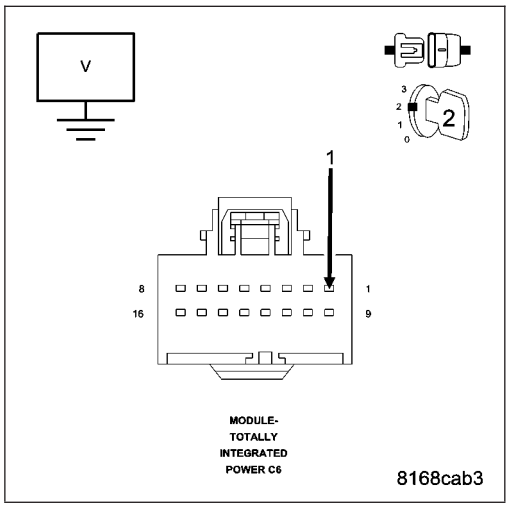

8. (D64) CAN C BUS (-) CIRCUIT SHORTED TO VOLTAGE

Measure the voltage between the (D64) CAN C Bus (-) circuit and ground.

Is there any voltage present?

Yes >> Repair the (D64) CAN C Bus (-) circuit for a short to voltage.

Perform the BODY VERIFICATION TEST – VER 1. (Refer to 8 - ELECTRICAL/ELECTRONIC CONTROL MODULES - STANDARD PROCEDURE).

No >> Go To 9

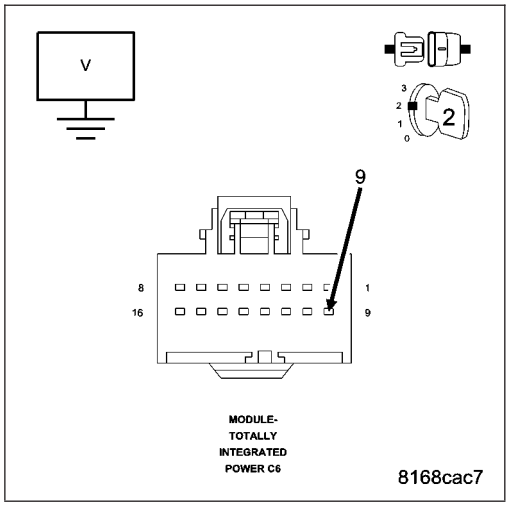

https://truckmanualshub.com/

9. (D65) CAN C BUS (+) CIRCUIT SHORTED TO GROUND

Turn the ignition off.

Measure the resistance between ground and the (D65) CAN C Bus (+) circuit.

Is any resistance present?

Yes >> Repair the (D65) CAN C Bus (+) circuit for a short to ground.

Perform the BODY VERIFICATION TEST – VER 1. (Refer to 8 - ELECTRICAL/ELECTRONIC CONTROL MODULES - STANDARD PROCEDURE).

No >> Go To 10

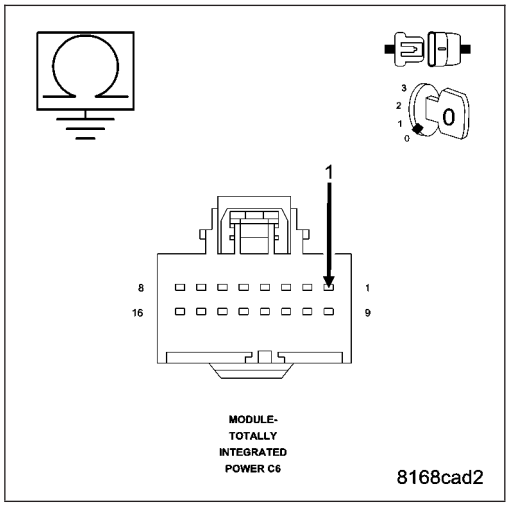

10. (D64) CAN C BUS (-) CIRCUIT SHORTED TO GROUND

Measure the resistance between ground and the (D64) CAN C Bus (-) circuit.

Is any resistance present?

Yes >> Repair the (D64) CAN C Bus (-) circuit for a short to ground.

Perform the BODY VERIFICATION TEST – VER 1. (Refer to 8 - ELECTRICAL/ELECTRONIC CONTROL MODULES - STANDARD PROCEDURE).

No >> Go To 11

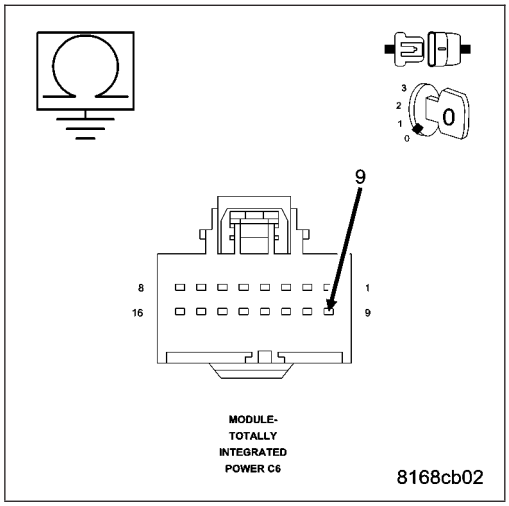

11. (D65) CAN C BUS (+) CIRCUIT SHORTED TO (D64) CAN C BUS (-) CIRCUIT

Measure the resistance between the (D65) CAN C Bus (+) circuit and the (D64) CAN C Bus (-) circuit.

Is any resistance present?

Yes >> Repair the (D65) CAN C Bus (+) circuit for a short to the (D64) CAN C Bus (-) circuit.

Perform the BODY VERIFICATION TEST – VER 1. (Refer to 8 - ELECTRICAL/ELECTRONIC CONTROL MODULES - STANDARD PROCEDURE).

No >> Inspect the wiring and connectors for damage or shorted circuits. If ok, replace and program the Totally Integrated Power Module in accordance with the service information.

Perform the BODY VERIFICATION TEST – VER 1. (Refer to 8 - ELECTRICAL/ELECTRONIC CONTROL MODULES - STANDARD PROCEDURE).

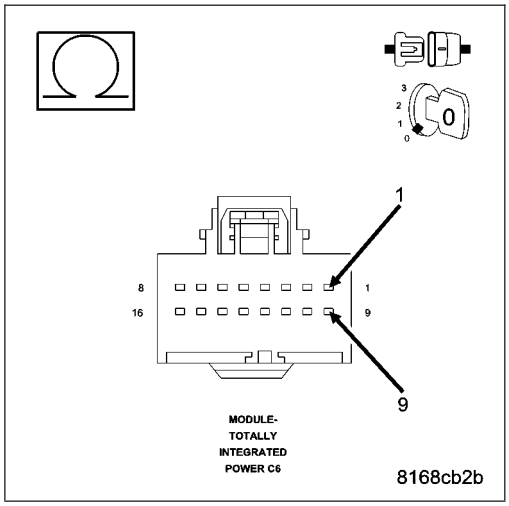

https://truckmanualshub.com/

U0021-CAN B BUS (+) CIRCUIT OPEN

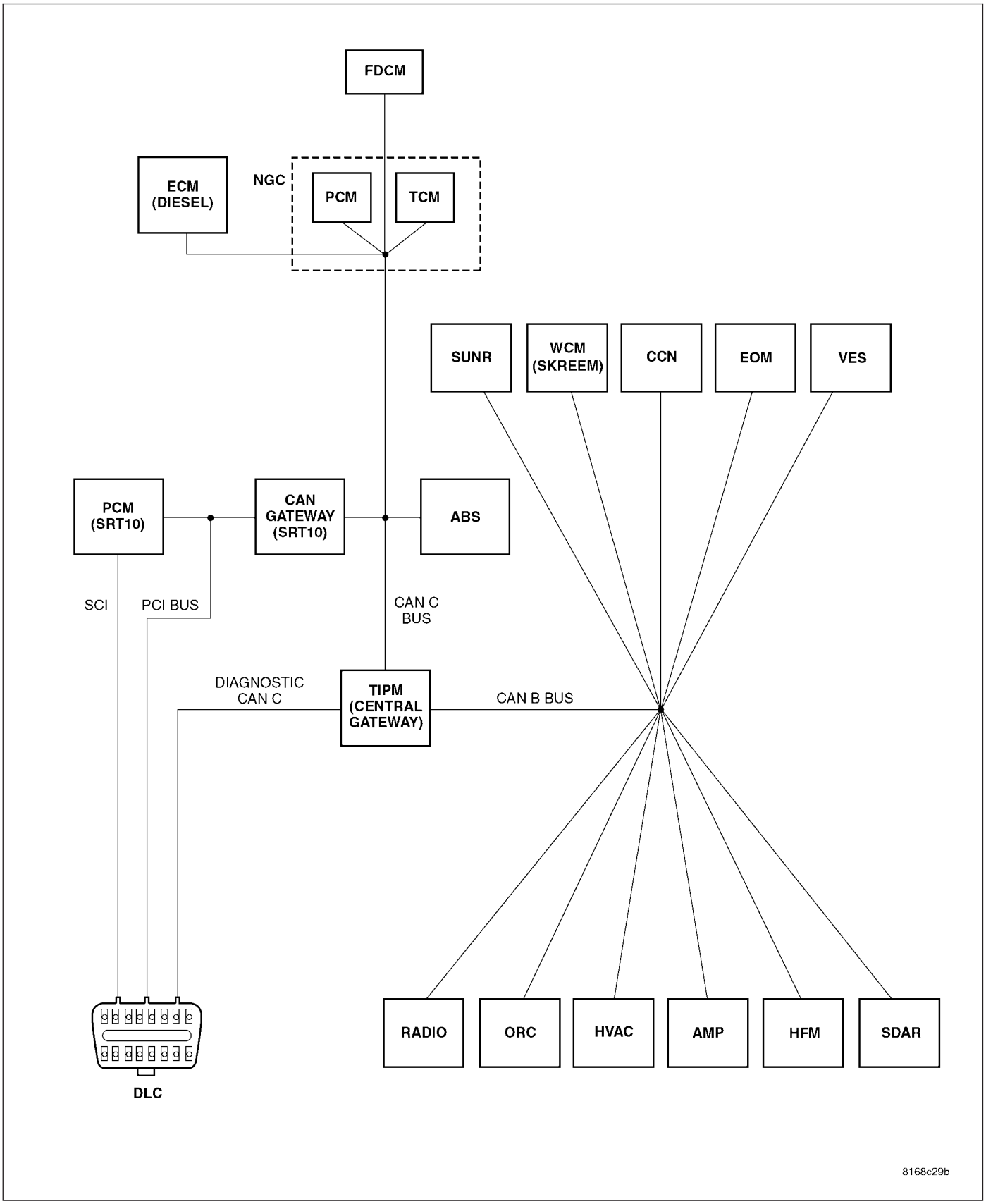

For a complete wiring diagram **Refer to Section 8W**.

https://truckmanualshub.com/

- **When Monitored:**
  With the ignition on and battery voltage between 10 and 16 volts.
- **Set Condition:**
  The TIPM detects the (D55) CAN B Bus (+) circuit is open.

Possible Causes
CAN B BUS TERMINAL PUSH OUT
SPREAD CAN B BUS TERMINAL
(D55) CAN B BUS (+) CIRCUIT OPEN
INTERNAL OPEN IN A CAN B BUS MODULE

Diagnostic Test

1. TEST FOR INTERMITTENT CONDITION

Turn the ignition on.

With the scan tool, record and erase TIPM DTC's.

Cycle the ignition from on to off 3 times.

Turn the ignition on.

With the scan tool, read active TIPM DTC's.

Does the scan tool display this DTC as active?

Yes >> Go To 2

No >> The conditions that caused this code to set are not present at this time. Using the wiring diagram/schematic as a guide, inspect the wiring and connectors.

2. ATTEMPT TO ISOLATE THE OPEN CONDITION

Turn the ignition on.

Verify that all CAN B Bus modules are communicating with the scan tool.

NOTE: A red X will be next to the module that is not communicating, indicating that the module is not active on the Bus network. A green check indicates that the module is active on the Bus network.

NOTE: If any module is not communicating, perform the appropriate no response test procedure before proceeding.

Turn the ignition off.

Gain access to the Totally Integrated Power Module C6 harness connector, but do not disconnect.

Using a fused jumper wire, connect one end to ground and with the other end backprobe the (D54) CAN B Bus (-) circuit at the TIPM C6 harness connector.

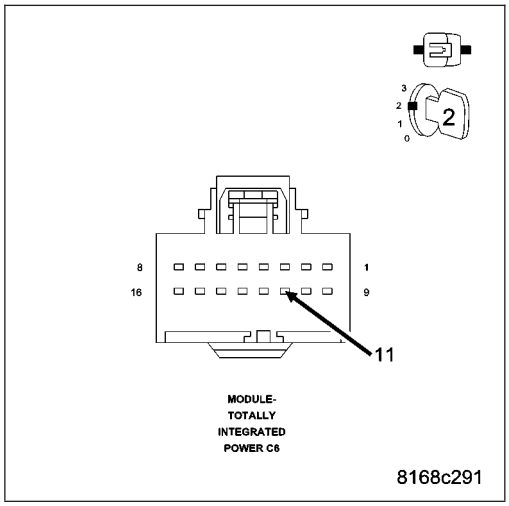

Turn the ignition on.

With the scan tool monitor the network status screen and document all modules that display a red X.

Are there any red X's displayed next to the modules?

Yes >> Go To 3

No >> Check backprobe connection to ground, make sure it is proper. The CAN B Bus open DTC may no longer be active, it may be stored. Check all module connections.

Perform BODY VERIFICATION TEST – VER 1. (Refer to 8 - ELECTRICAL/ELECTRONIC CONTROL MODULES - STANDARD PROCEDURE).

https://truckmanualshub.com/

3. ATTEMPT TO ISOLATE THE OPEN CONDITION — MULTIPLE RED X'S

With the scan tool continue monitoring the network status screen.

Are there multiple red X's displayed next to the modules?

Yes >> The most likely cause of this condition is an open CAN B Bus (+) circuit between a common CAN B Bus splice and the modules that display the red X next to them. Using the wiring diagrams will help you determine where open condition exists.

Perform BODY VERIFICATION TEST – VER 1. (Refer to 8 - ELECTRICAL/ELECTRONIC CONTROL MODULES - STANDARD PROCEDURE).

No >> Go To 4

4. (D55) CAN B BUS (+) CIRCUIT OPEN — SINGLE RED X

Turn the ignition off.

Disconnect the module that has the red X displayed next to it.

Turn the ignition on.

Measure the voltage between the (D55) CAN B Bus (+) circuit and ground.

Is there any voltage present?

Yes >> Inspect the connector and terminal for damage, inspect for spread terminals, or push out terminals. If ok, replace the module that displayed the red X next to it in accordance with the service information.

Perform BODY VERIFICATION TEST – VER 1. (Refer to 8 - ELECTRICAL/ELECTRONIC CONTROL MODULES - STANDARD PROCEDURE).

No >> Repair the (D55) CAN B Bus (+) circuit for an open between the next common splice and the module that has the red X displayed next to it. Using the wiring diagrams will help you determine where open condition exists.

Perform BODY VERIFICATION TEST – VER 1. (Refer to 8 - ELECTRICAL/ELECTRONIC CONTROL MODULES - STANDARD PROCEDURE).

https://truckmanualshub.com/

U0022-CAN B BUS (+) CIRCUIT LOW

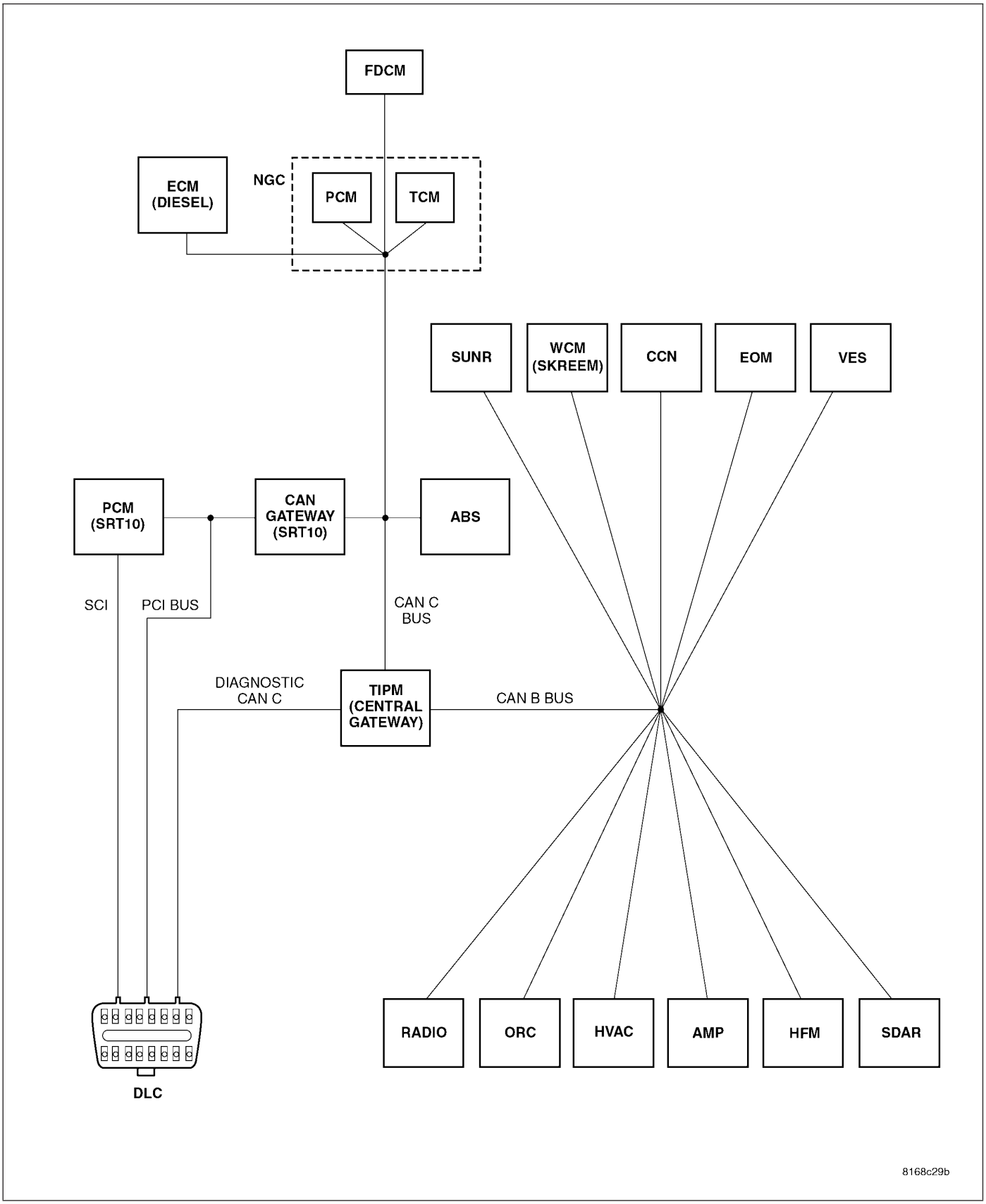

For a complete wiring diagram **Refer to Section 8W**.

https://truckmanualshub.com/

- **When Monitored:**
  Continuously.
- **Set Condition:**
  The TIPM detects the (D55) CAN B Bus (+) circuit is shorted to ground.

Possible Causes
(D55) CAN B BUS (+) CIRCUIT SHORTED TO GROUND
ANY CAN B BUS MODULE
TOTALLY INTEGRATED POWER MODULE

Diagnostic Test

1. TEST FOR INTERMITTENT CONDITION

Turn the ignition on.
With the scan tool, record and erase TIPM DTC's.
Cycle the ignition from on to off 3 times.
Turn the ignition on.
With the scan tool, read active TIPM DTC's.

Does the scan tool display this DTC as active?

Yes >> Go To 2

No >> The conditions that caused this code to set are not present at this time. Using the wiring diagram/schematic as a guide, inspect the wiring and connectors.

2. CHECK THE (D55) CAN B BUS (+) CIRCUIT FOR A SHORT TO GROUND

Turn the ignition off.
Disconnect the Totally Integrated Power Module C6 harness connector.
Measure the resistance between ground and the (D55) CAN B Bus (+) circuit.

Is resistance below 1000.0 ohms?

Yes >> Go To 3

No >> Inspect the wiring and connectors for damage or shorted circuits. If ok, replace the Totally Integrated Power Module in accordance with the service information.
Perform BODY VERIFICATION TEST – VER 1. (Refer to 8 - ELECTRICAL/ELECTRONIC CONTROL MODULES - STANDARD PROCEDURE).

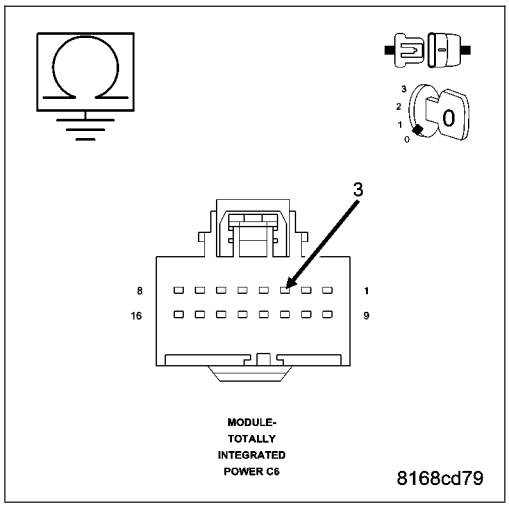

https://truckmanualshub.com/

3. (D55) CAN B BUS (+) CIRCUIT SHORTED TO GROUND

Measure the resistance between ground and the (D55) CAN B Bus (+) circuit.

While monitoring the ohmmeter, disconnect each CAN B Bus module one at a time.

NOTE: This is to determine if the short to ground is internal within a module or if the circuit is shorted.

NOTE: Disconnecting an in-line connector can eliminate a module or group of modules from the list of possible causes for this fault. Refer to the wiring diagrams to assist in diagnosis.

Is resistance below 1000.0 ohms with all the CAN B Bus modules disconnected?

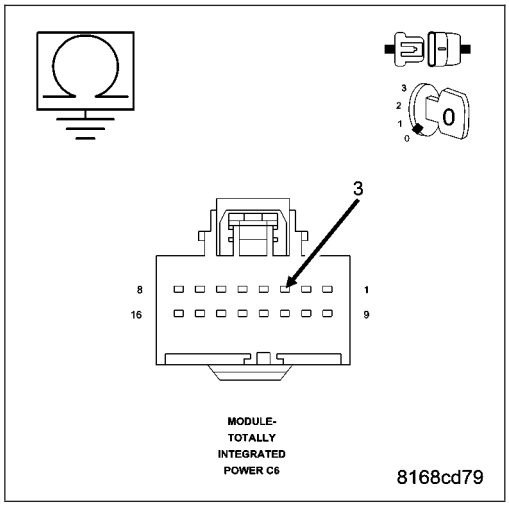

Yes >> Repair the (D55) CAN B Bus (+) circuit for a short to ground.

Perform BODY VERIFICATION TEST – VER 1. (Refer to 8 - ELECTRICAL/ELECTRONIC CONTROL MODULES - STANDARD PROCEDURE).

No >> Replace the module that when disconnected the short to ground was eliminated, in accordance with the service information.

Perform BODY VERIFICATION TEST – VER 1. (Refer to 8 - ELECTRICAL/ELECTRONIC CONTROL MODULES - STANDARD PROCEDURE).

https://truckmanualshub.com/

U0023-CAN B BUS (+) CIRCUIT HIGH

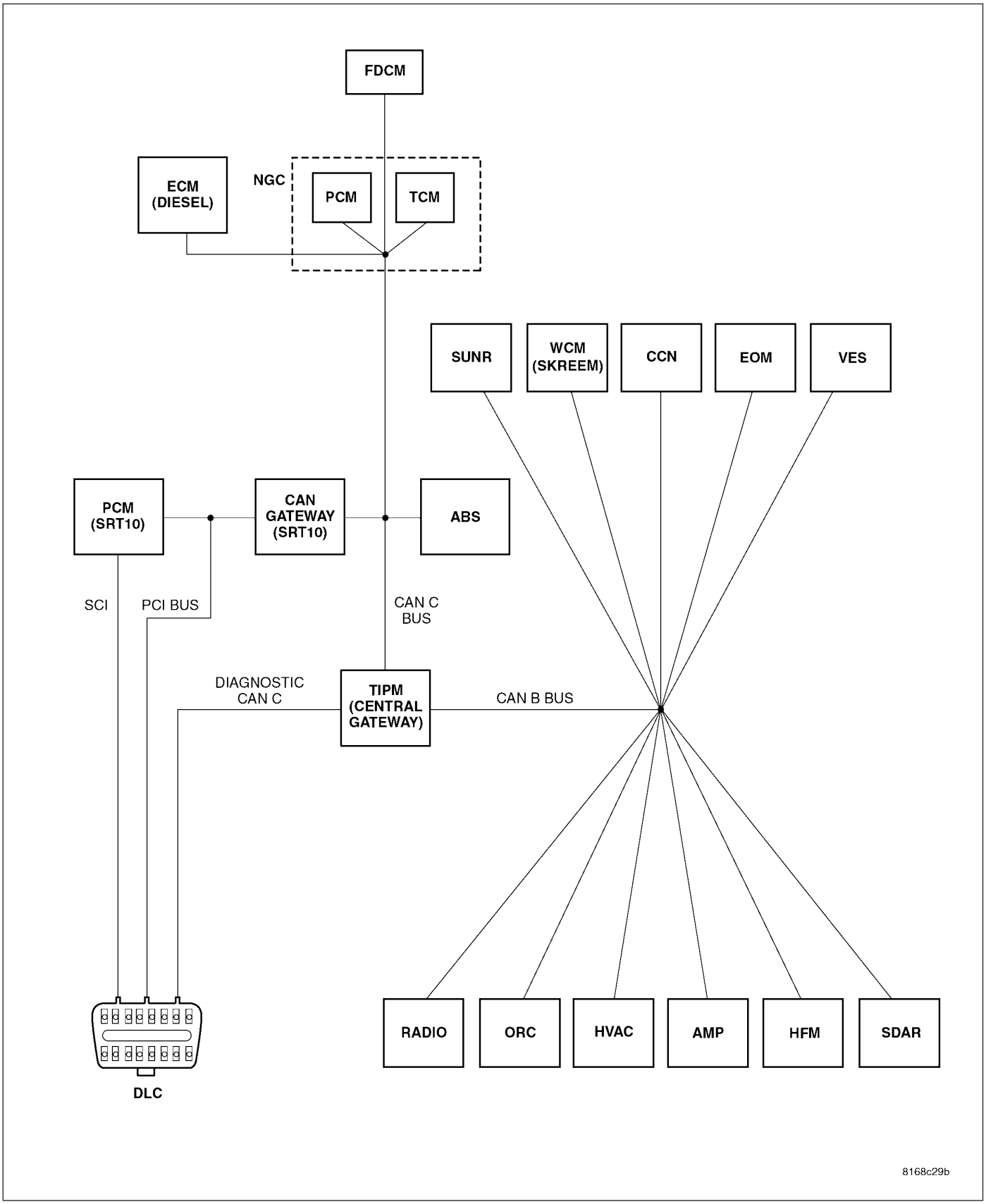

For a complete wiring diagram **Refer to Section 8W**.

https://truckmanualshub.com/

- **When Monitored:**
  Continuously
- **Set Condition:**
  The TIPM detects the (D55) CAN B Bus (+) circuit is shorted to voltage.

Possible Causes
(D55) CAN B BUS (+) CIRCUIT SHORTED TO VOLTAGE
ANY CAN B BUS MODULE
TOTALLY INTEGRATED POWER MODULE

Diagnostic Test

1. TEST FOR INTERMITTENT CONDITION

Turn the ignition on.
With the scan tool, record and erase TIPM DTC's.
Cycle the ignition from on to off 3 times.
Turn the ignition on.
With the scan tool, read active TIPM DTC's.

Does the scan tool display this DTC as active?

Yes >> Go To 2

No >> The conditions that caused this code to set are not present at this time. Using the wiring diagram/schematic as a guide, inspect the wiring and connectors.

2. CHECK THE (D55) CAN B BUS (+) CIRCUIT FOR A SHORT TO VOLTAGE

Turn the ignition off.
Disconnect the Totally Integrated Power Module C6 harness connector.
Turn the ignition on.
Measure the voltage between the (D55) CAN B Bus (+) circuit and ground.

Is voltage above 10.0 volts?

Yes >> Go To 3

No >> Inspect the wiring and connectors for damage or shorted circuits. If ok, replace the Totally Integrated Power Module in accordance with the service information.

Perform BODY VERIFICATION TEST – VER 1. (Refer to 8 - ELECTRICAL/ELECTRONIC CONTROL MODULES - STANDARD PROCEDURE).

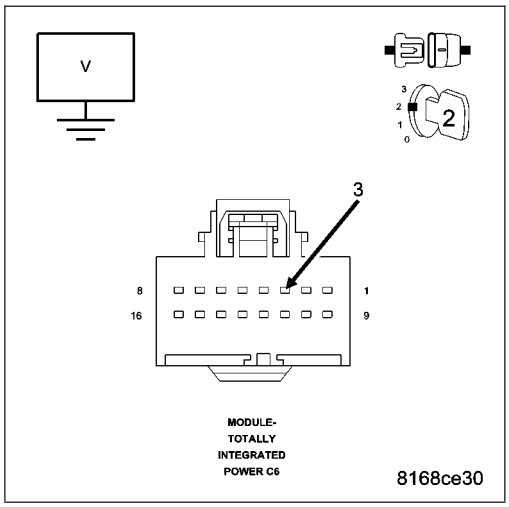

https://truckmanualshub.com/

3. (D55) CAN B BUS (+) CIRCUIT SHORTED TO VOLTAGE

Measure the voltage between the (D55) CAN B Bus (+) circuit and ground.

While monitoring the voltmeter, disconnect each CAN B Bus module one at a time.

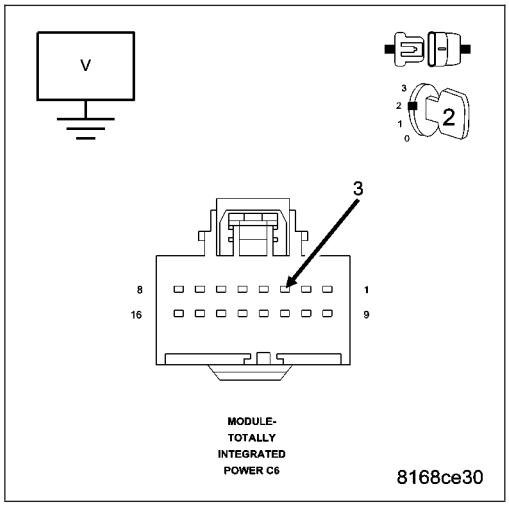

NOTE: When performing the above step, turn the ignition off (wait one minute) before disconnecting any module. When the module is disconnected turn the ignition on to check for a short to voltage.

NOTE: This is to determine if the short to voltage is internal within a module or if the circuit is shorted.

NOTE: Disconnecting an in-line connector can eliminate a module or group of modules from the list of possible causes for this fault. Refer to the wiring diagrams to assist in diagnosis.

Is the voltage above 10.0 volts with all the CAN B Bus modules disconnected?

Yes >> Repair the (D55) CAN B Bus (+) circuit for a short to voltage.

Perform BODY VERIFICATION TEST – VER 1. (Refer to 8 - ELECTRICAL/ELECTRONIC CONTROL MODULES - STANDARD PROCEDURE).

No >> Replace the module that when disconnected the short to voltage was eliminated, in accordance with the service information.

Perform BODY VERIFICATION TEST – VER 1. (Refer to 8 - ELECTRICAL/ELECTRONIC CONTROL MODULES - STANDARD PROCEDURE).

https://truckmanualshub.com/

U0024-CAN B BUS (-) CIRCUIT OPEN

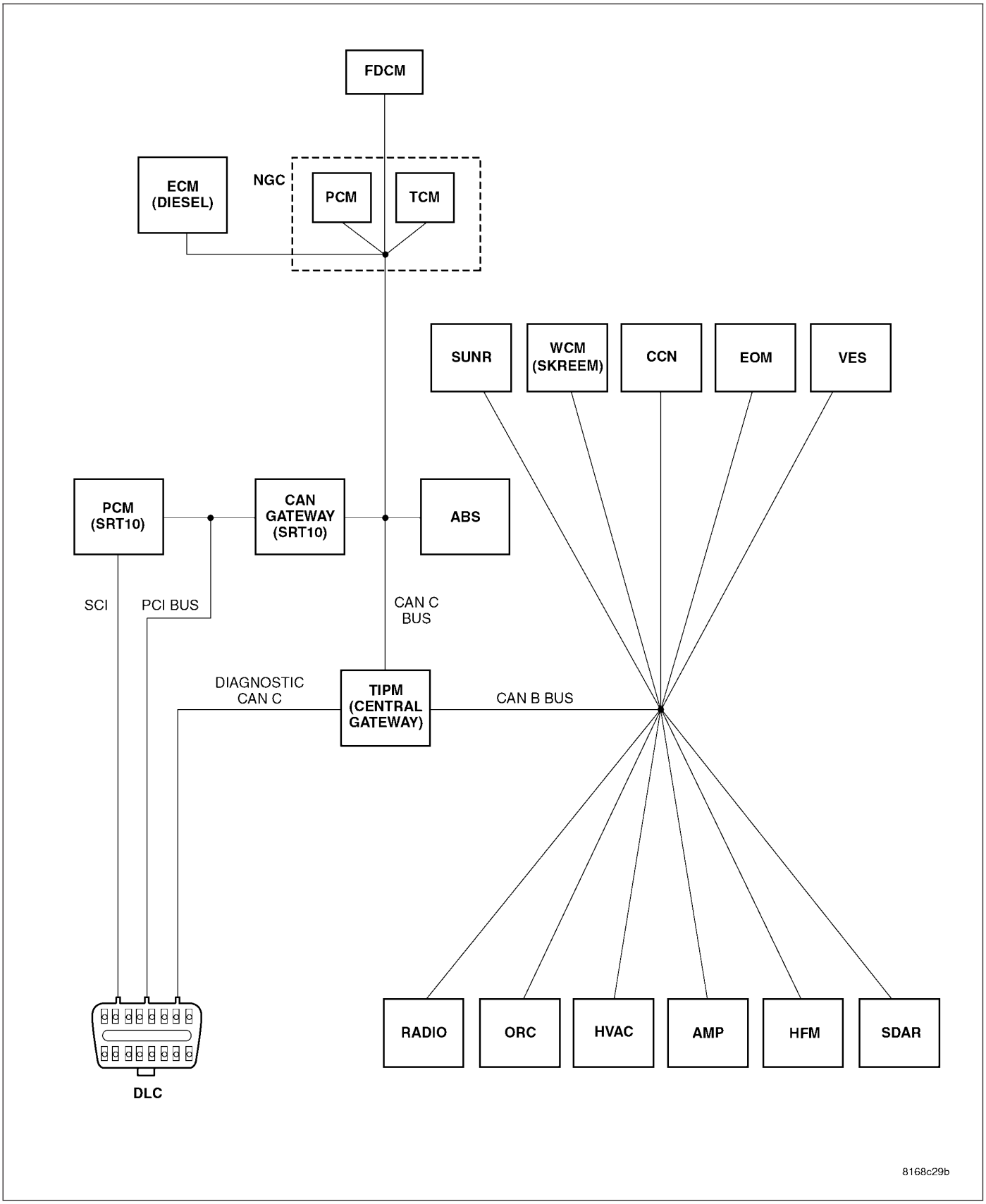

For a complete wiring diagram **Refer to Section 8W**.

https://truckmanualshub.com/

- **When Monitored:**
  With the ignition on and battery voltage between 10 and 16 volts.
- **Set Condition:**
  The TIPM detects the (D54) CAN B Bus (-) circuit is open.

Possible Causes
CAN B BUS TERMINAL PUSH OUT
SPREAD CAN B BUS TERMINAL
(D54) CAN B BUS (-) CIRCUIT OPEN
INTERNAL OPEN IN A CAN B BUS MODULE

Diagnostic Test

1. TEST FOR INTERMITTENT CONDITION

Turn the ignition on.

With the scan tool, record and erase TIPM DTC's

Cycle the ignition from on to off 3 times.

Turn the ignition on.

With the scan tool, read active TIPM DTC's.

Does the scan tool display this DTC as active?

Yes >> Go To 2

No >> The conditions that caused this code to set are not present at this time. Using the wiring diagram/schematic as a guide, inspect the wiring and connectors.

2. ATTEMPT TO ISOLATE THE OPEN CONDITION

Turn the ignition on.

Verify that all CAN B Bus modules are communicating with the scan tool.

NOTE: A red X will be next to the module that is not communicating, indicating that the module is not active on the Bus network. A green check indicates that the module is active on the Bus network.

NOTE: If any module is not communicating, perform the appropriate no response test procedure before proceeding.

Turn the ignition off.

Gain access to the Totally Integrated Power Module C6 harness connector, but do not disconnect.

Using a fused jumper wire, connect one end to ground and with the other end backprobe the CAN B Bus (+) circuit at the TIPM C6 harness connector.

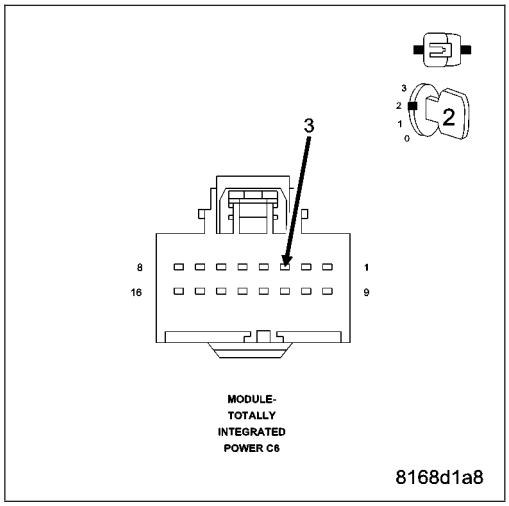

Turn the ignition on.

With the scan tool monitor the network status screen and document all modules that display a red X.

Are there any red X's displayed next to the modules?

Yes >> Go To 3

No >> Check backprobe connection to ground, make sure it is proper. The CAN B Bus open DTC may no longer be active, it may be stored. Check all module connections

Perform BODY VERIFICATION TEST – VER 1. (Refer to 8 - ELECTRICAL/ELECTRONIC CONTROL MODULES - STANDARD PROCEDURE).

https://truckmanualshub.com/

3. ATTEMPT TO ISOLATE THE OPEN CONDITION — MULTIPLE RED X'S

With the scan tool continue monitoring the network status screen.

Are there multiple red X's displayed next to the modules?

Yes >> The most likely cause of this condition is an open CAN B Bus (-) circuit between a common CAN B Bus splice and the modules that display the red X next to them. Using the wiring diagrams will help you determine where open condition exists.

Perform BODY VERIFICATION TEST – VER 1. (Refer to 8 - ELECTRICAL/ELECTRONIC CONTROL MODULES - STANDARD PROCEDURE).

No >> Go To 4

4. (D54) CAN B BUS (-) CIRCUIT OPEN — SINGLE RED X

Turn the ignition off.

Disconnect the module that has the red X displayed next to it.

Turn the ignition on.

Measure the voltage between the (D54) CAN B Bus (-) circuit and ground.

Is there any voltage present?

Yes >> Inspect the connector and terminal for damage, inspect for spread terminals, or push out terminals. If ok, replace the module that displayed the red X next to it in accordance with the service information.

Perform BODY VERIFICATION TEST – VER 1. (Refer to 8 - ELECTRICAL/ELECTRONIC CONTROL MODULES - STANDARD PROCEDURE).

No >> Repair the (D54) CAN B Bus (-) circuit for an open between the next common splice and the module that has the red X displayed next to it. Using the wiring diagrams will help you determine where open condition exists.

Perform BODY VERIFICATION TEST – VER 1. (Refer to 8 - ELECTRICAL/ELECTRONIC CONTROL MODULES - STANDARD PROCEDURE).

https://truckmanualshub.com/

U0025-CAN B BUS (-) CIRCUIT LOW

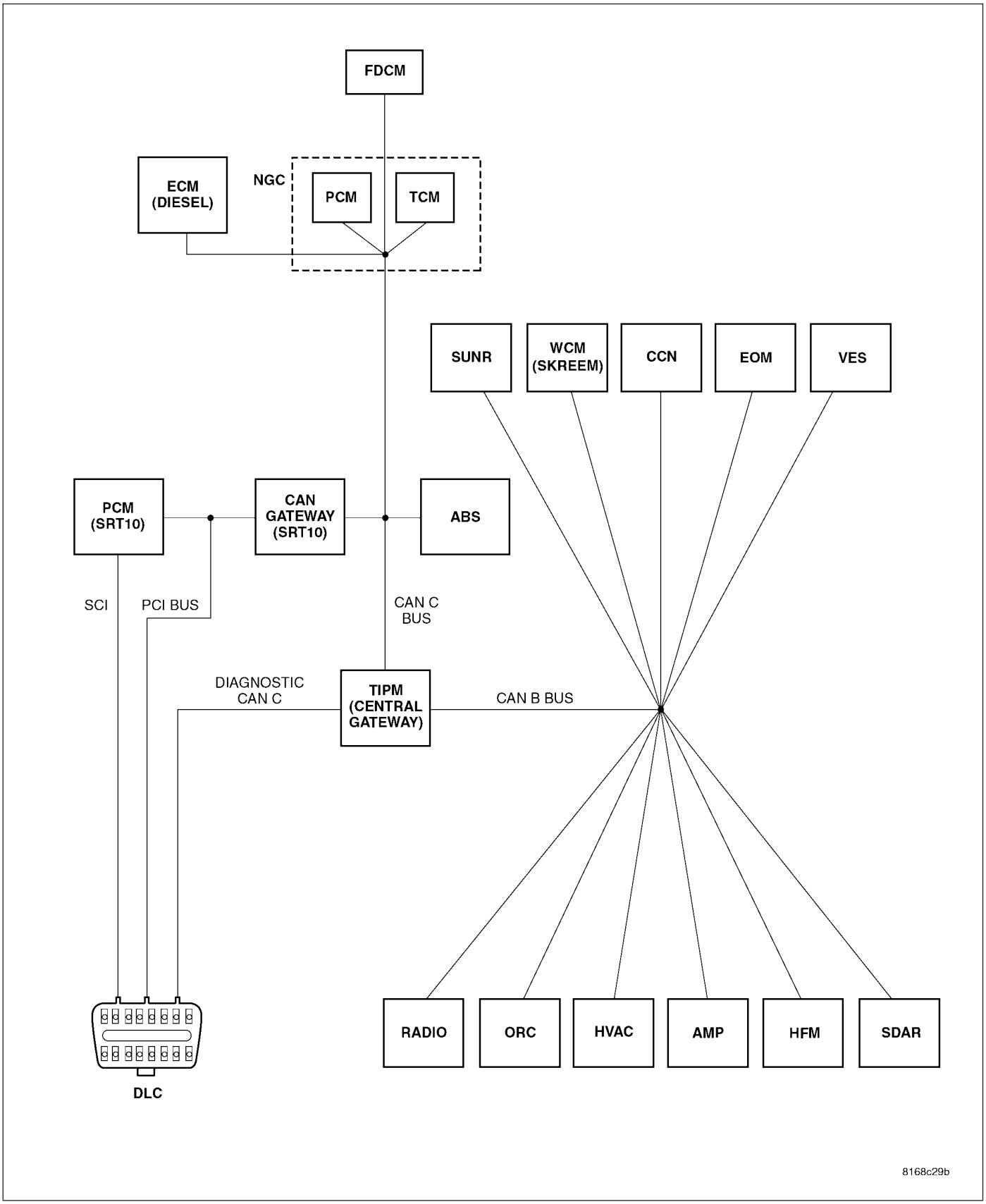

For a complete wiring diagram **Refer to Section 8W**.

https://truckmanualshub.com/

- **When Monitored:**
  Continuously
- **Set Condition:**
  The TIPM detects the (D54) CAN B Bus (-) circuit is shorted to ground.

Possible Causes
(D54) CAN B BUS (-) CIRCUIT SHORTED TO GROUND OR TO (D55) CAN B BUS (+) CIRCUIT
ANY CAN B BUS MODULE
TOTALLY INTEGRATED POWER MODULE

Diagnostic Test

1. TEST FOR INTERMITTENT CONDITION

Turn the ignition on.
With the scan tool, record and erase TIPM DTC's.
Cycle the ignition from on to off 3 times.
Turn the ignition on.
With the scan tool, read active TIPM DTC's.

Does the scan tool display this DTC as active?

Yes >> Go To 2

No >> The conditions that caused this code to set are not present at this time. Using the wiring diagram/schematic as a guide, inspect the wiring and connectors.

2. CHECK THE (D54) CAN B BUS (-) CIRCUIT FOR A SHORT TO GROUND

Turn the ignition off.
Disconnect the Totally Integrated Power Module C6 harness connector.
Measure the resistance between ground and the (D54) CAN B Bus (-) circuit.

Is resistance below 1000.0 ohms?

Yes >> Go To 3

No >> Go To 4

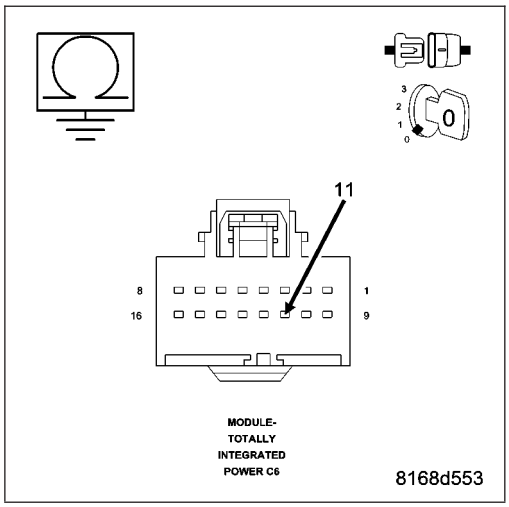

https://truckmanualshub.com/

3. (D54) CAN B BUS (-) CIRCUIT SHORTED TO GROUND

Measure the resistance between ground and the (D54) CAN B Bus (-) circuit.

While monitoring the ohmmeter, disconnect each CAN B Bus module one at a time.

NOTE: This is to determine if the short to ground is internal within a module or if the circuit is shorted.

NOTE: Disconnecting an in-line connector can eliminate a module or group of modules from the list of possible causes for this fault. Refer to the wiring diagrams to assist in diagnosis.

Is resistance below 1000.0 ohms with all the CAN B Bus modules disconnected?

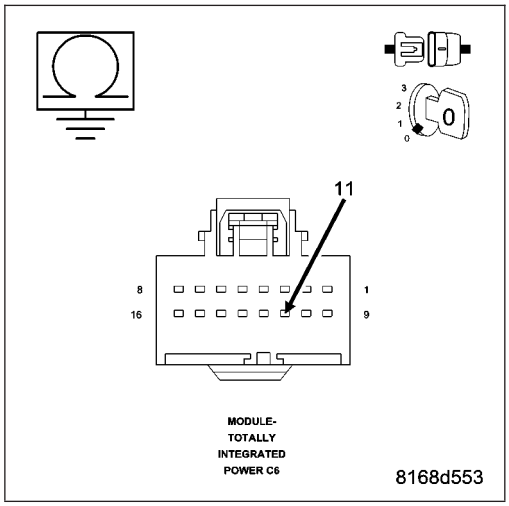

Yes >> Repair the (D54) CAN B Bus (-) circuit for a short to ground.

Perform BODY VERIFICATION TEST – VER 1. (Refer to 8 - ELECTRICAL/ELECTRONIC CONTROL MODULES - STANDARD PROCEDURE).

No >> Replace the module that when disconnected the short to ground was eliminated, in accordance with the service information.

Perform BODY VERIFICATION TEST – VER 1. (Refer to 8 - ELECTRICAL/ELECTRONIC CONTROL MODULES - STANDARD PROCEDURE).

4. CHECK THE (D55) CAN B BUS (+) CIRCUIT FOR A SHORT TO THE (D54) CAN B BUS (-) CIRCUIT

Measure the resistance between the (D55) CAN B Bus (+) circuit and (D54) CAN B Bus (-) circuit.

Is resistance below 1000.0 ohms?

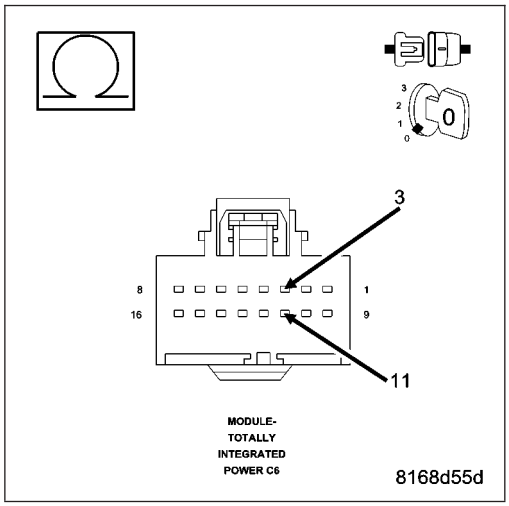

Yes >> Go To 5

No >> Inspect the wiring and connectors for damage or shorted circuits. If ok, replace the Totally Integrated Power Module in accordance with the service information.

Perform BODY VERIFICATION TEST – VER 1. (Refer to 8 - ELECTRICAL/ELECTRONIC CONTROL MODULES - STANDARD PROCEDURE).

https://truckmanualshub.com/

5. (D55) CAN B BUS (+) CIRCUIT SHORTED TO THE (D54) CAN B BUS (-) CIRCUIT

Measure the resistance between the (D55) CAN B Bus (+) circuit and (D54) CAN B Bus (-) circuit.

While monitoring the ohmmeter, disconnect each CAN B Bus module one at a time.

NOTE: This is to determine if the short together is internal within a module or if the circuits are shorted together.

NOTE: Disconnecting an in-line connector can eliminate a module or group of modules from the list of possible causes for this fault. Refer to the wiring diagrams to assist in diagnosis.

Is resistance below 1000.0 ohms with all the CAN B Bus modules disconnected?

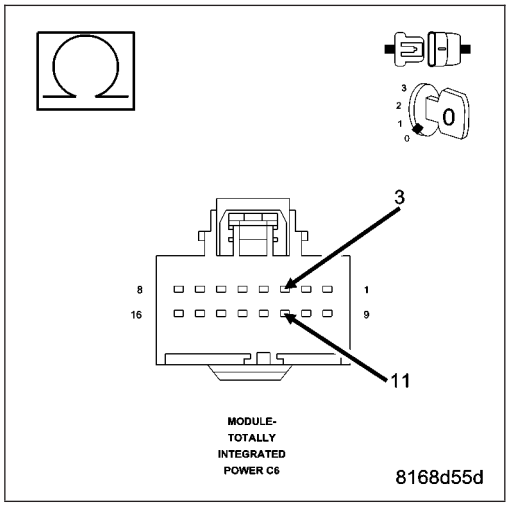

Yes >> Repair the (D55) CAN B Bus (+) circuit for a short to the (D54) CAN B Bus (-) circuit.

Perform BODY VERIFICATION TEST – VER 1. (Refer to 8 - ELECTRICAL/ELECTRONIC CONTROL MODULES - STANDARD PROCEDURE).

No >> Replace the module that when disconnected the short together was eliminated, in accordance with the service information.

Perform BODY VERIFICATION TEST – VER 1. (Refer to 8 - ELECTRICAL/ELECTRONIC CONTROL MODULES - STANDARD PROCEDURE).

https://truckmanualshub.com/

U0026-CAN B BUS (-) CIRCUIT HIGH

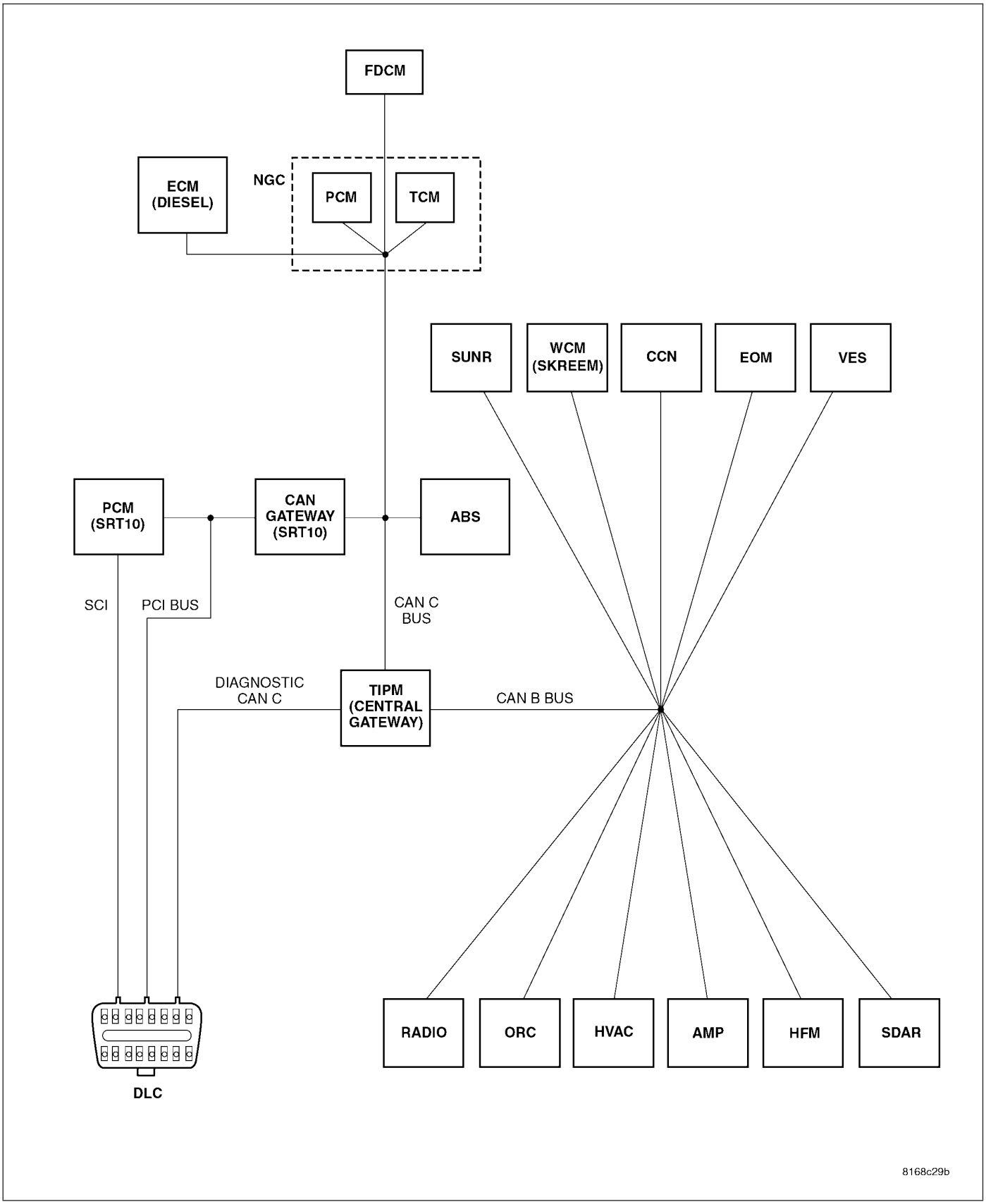

For a complete wiring diagram **Refer to Section 8W**.

https://truckmanualshub.com/

- **When Monitored:**
  Continuously
- **Set Condition:**
  The TIPM detects the (D54) CAN B Bus (-) circuit is shorted to voltage.

Possible Causes
(D54) CAN B BUS (-) CIRCUIT SHORTED TO VOLTAGE
ANY CAN B BUS MODULE
TOTALLY INTEGRATED POWER MODULE

Diagnostic Test

1. TEST FOR INTERMITTENT CONDITION

Turn the ignition on.
With the scan tool, record and erase TIPM DTC's.
Cycle the ignition from on to off 3 times.
Turn the ignition on.
With the scan tool, read active TIPM DTC's.

Does the scan tool display this DTC as active?

Yes >> Go To 2

No >> The conditions that caused this code to set are not present at this time. Using the wiring diagram/schematic as a guide, inspect the wiring and connectors.

2. CHECK THE (D54) CAN B BUS (-) CIRCUIT FOR A SHORT TO VOLTAGE

Turn the ignition off.
Disconnect the Totally Integrated Power Module C6 harness connector.
Turn the ignition on.
Measure the voltage between the (D54) CAN B Bus (-) circuit and ground.

Is voltage above 10.0 volts?

Yes >> Go To 3

No >> Inspect the wiring and connectors for damage or shorted circuits. If ok, replace the Totally Integrated Power Module in accordance with the service information.

Perform BODY VERIFICATION TEST – VER 1. (Refer to 8 - ELECTRICAL/ELECTRONIC CONTROL MODULES - STANDARD PROCEDURE).

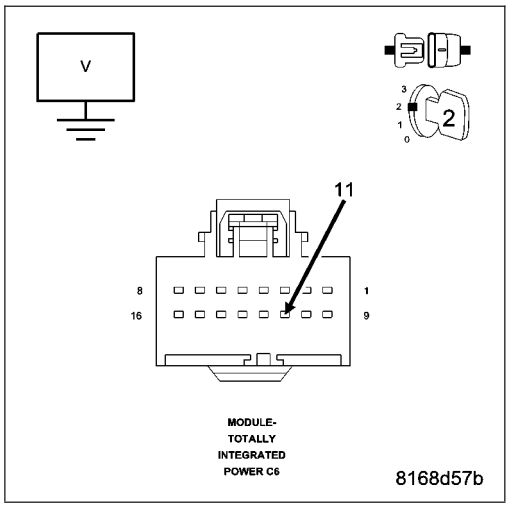

https://truckmanualshub.com/

3. (D54) CAN B BUS (-) CIRCUIT SHORTED TO VOLTAGE

Measure the voltage between the (D54) CAN B Bus (-) circuit and ground.

While monitoring the voltmeter, disconnect each CAN B Bus module one at a time.

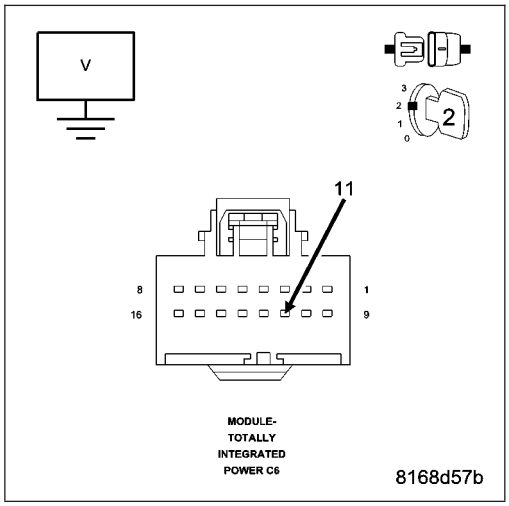

NOTE: When performing the above step, turn the ignition off (wait one minute) before disconnecting any module. When the module is disconnected turn the ignition on to check for a short to voltage.

NOTE: This is to determine if the short to voltage is internal within a module or if the circuit is shorted.

NOTE: Disconnecting an in-line connector can eliminate a module or group of modules from the list of possible causes for this fault. Refer to the wiring diagrams to assist in diagnosis.

Is the voltage above 10.0 volts with all the CAN B Bus modules disconnected?

Yes >> Repair the (D54) CAN B Bus (-) circuit for a short to voltage.

Perform BODY VERIFICATION TEST – VER 1. (Refer to 8 - ELECTRICAL/ELECTRONIC CONTROL MODULES - STANDARD PROCEDURE).

No >> Replace the module that when disconnected the short to voltage was eliminated, in accordance with the service information.

Perform BODY VERIFICATION TEST – VER 1. (Refer to 8 - ELECTRICAL/ELECTRONIC CONTROL MODULES - STANDARD PROCEDURE).

https://truckmanualshub.com/

U0027-CAN B BUS (-) SHORTED TO BUS (+)

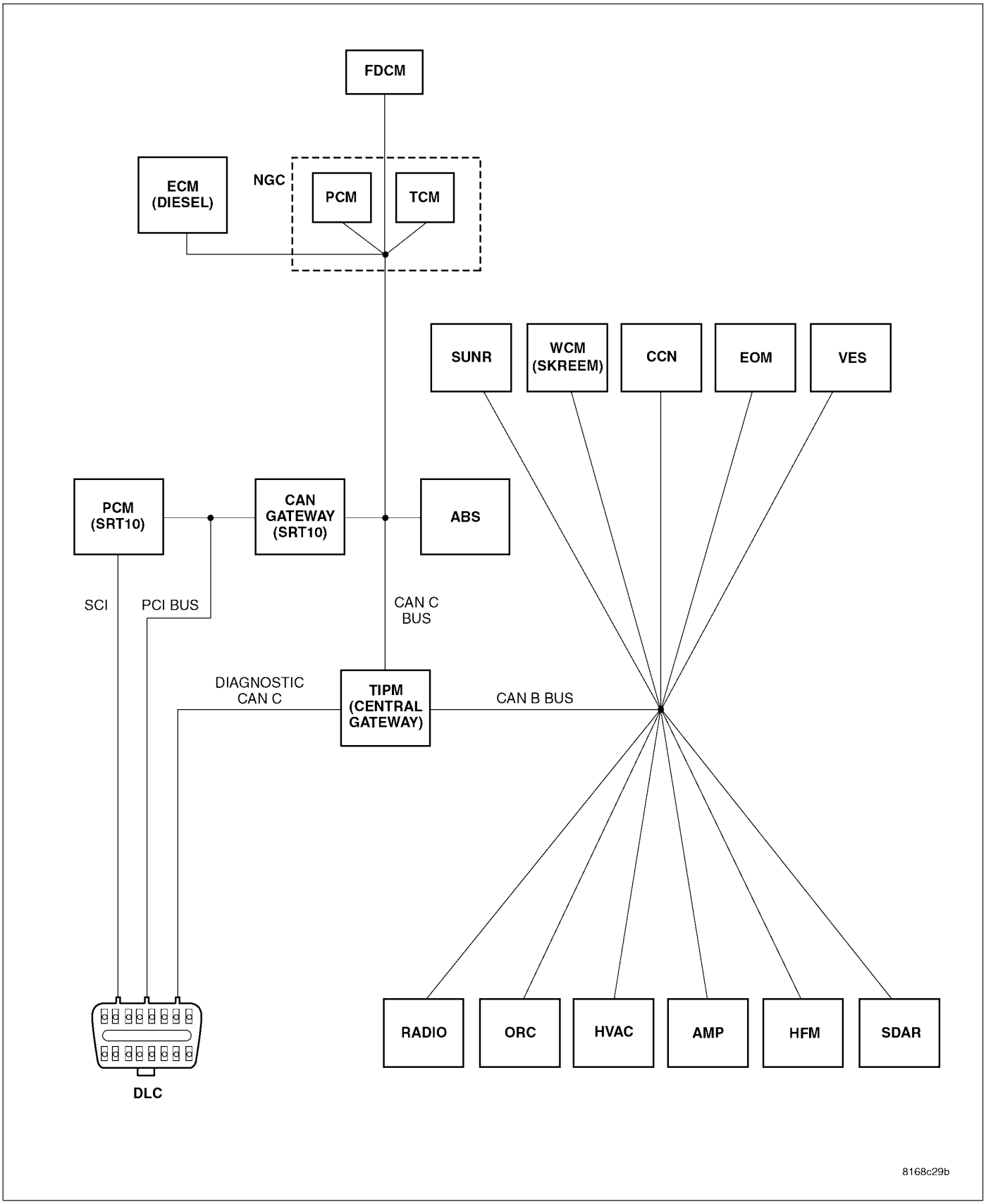

For a complete wiring diagram **Refer to Section 8W**.

https://truckmanualshub.com/

- **When Monitored:**
  Continuously
- **Set Condition:**
  The TIPM detects the (D55) CAN B Bus (+) circuit is shorted to the (D54) CAN B Bus (-) circuit.

Possible Causes
(D55) CAN B BUS (+) CIRCUIT SHORTED TO THE (D54) CAN B BUS (-) CIRCUIT
ANY CAN B BUS MODULE
TOTALLY INTEGRATED POWER MODULE

Diagnostic Test

1. TEST FOR INTERMITTENT CONDITION

Turn the ignition on.
With the scan tool, record and erase TIPM DTC's.
Cycle the ignition from on to off 3 times.
Turn the ignition on.
With the scan tool, read active TIPM DTC's.

Does the scan tool display this DTC as active?

Yes >> Go To 2

No >> The conditions that caused this code to set are not present at this time. Using the wiring diagram/schematic as a guide, inspect the wiring and connectors.

2. CHECK THE (D55) CAN B BUS (+) CIRCUIT FOR A SHORT TO THE (D54) CAN B BUS (-) CIRCUIT

Turn the ignition off.
Disconnect the Totally Integrated Power Module C6 harness connector.
Measure the resistance between the (D55) CAN B Bus (+) circuit and (D54) CAN B Bus (-) circuit.

Is resistance below 1000.0 ohms?

Yes >> Go To 3

No >> Inspect the wiring and connectors for damage or shorted circuits. If ok, replace the Totally Integrated Power Module in accordance with the service information.
Perform BODY VERIFICATION TEST – VER 1. (Refer to 8 - ELECTRICAL/ELECTRONIC CONTROL MODULES - STANDARD PROCEDURE).

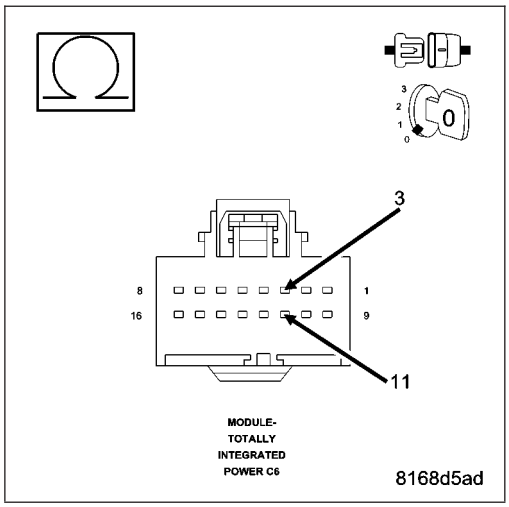

https://truckmanualshub.com/

3. (D55) CAN B BUS (+) CIRCUIT SHORTED TO THE (D54) CAN B BUS (-) CIRCUIT

Measure the resistance between the (D55) CAN B Bus (+) circuit and (D54) CAN B Bus (-) circuit.

While monitoring the ohmmeter, disconnect each CAN B Bus module one at a time.

NOTE: This is to determine if the short together is internal within a module or if the circuits are shorted together.

NOTE: Disconnecting an in-line connector can eliminate a module or group of modules from the list of possible causes for this fault. Refer to the wiring diagrams to assist in diagnosis.

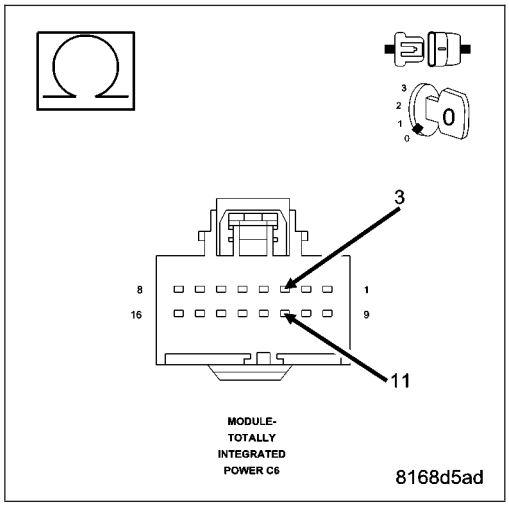

Is resistance below 1000.0 ohms with all the CAN B Bus modules disconnected?

Yes >> Repair the (D55) CAN B Bus (+) circuit for a short to the (D54) CAN B Bus (-) circuit.

Perform BODY VERIFICATION TEST – VER 1. (Refer to 8 - ELECTRICAL/ELECTRONIC CONTROL MODULES - STANDARD PROCEDURE).

No >> Replace the module that when disconnected the short together was eliminated, in accordance with the service information.

Perform BODY VERIFICATION TEST – VER 1. (Refer to 8 - ELECTRICAL/ELECTRONIC CONTROL MODULES - STANDARD PROCEDURE).

https://truckmanualshub.com/

U0100-LOST COMMUNICATION WITH ECM/PCM

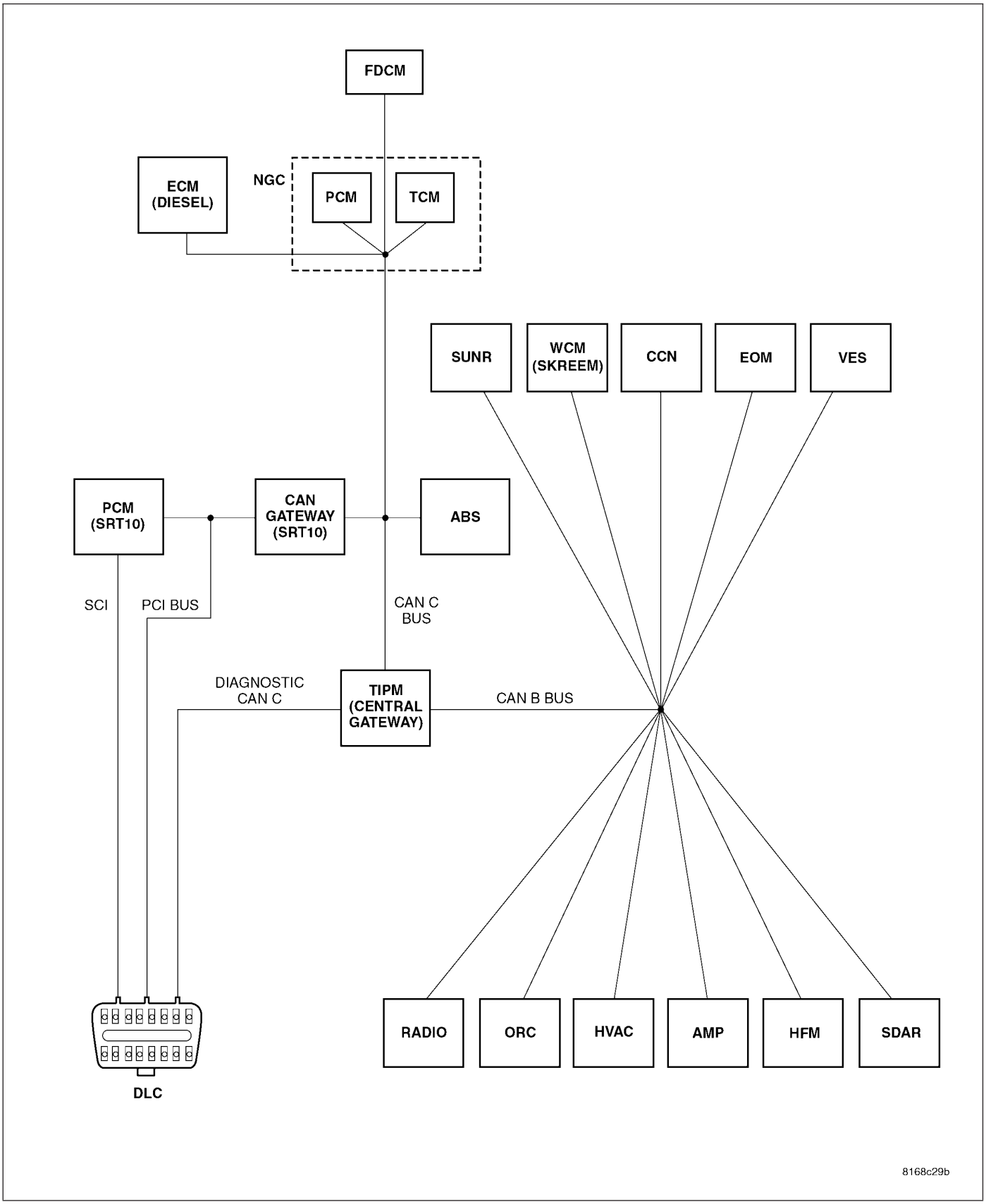

For a complete wiring diagram **Refer to Section 8W**.

https://truckmanualshub.com/

- **When Monitored:**
  - With the ignition on
  - Battery voltage between 10 and 16 volts
  - IOD fuse installed
  - TIPM is configured correctly
- **Set Condition:**
  Bus messages not received from the ECM/PCM for approximately 2 to 5 seconds.

Possible Causes
CAN B OR CAN C BUS CIRCUITS OPEN OR SHORTED
DTCS RELATED TO BATTERY VOLTAGE, IGNITION, OR VIN MESSAGES
TIPM NOT CONFIGURED CORRECTLY
ECM/PCM POWER AND GROUND
ECM/PCM
MODULE THAT SET THIS DTC

Diagnostic Test

1. VERIFY DTC IS ACTIVE

NOTE: Ensure the IOD fuse is installed and battery voltage is between 10 and 16 volts before proceeding.
With the scan tool, read active DTCs.

Is this DTC active?

Yes >> Go To 2

No >> Refer to the Stored Lost Communication test procedure. Refer to the table of contents in this section.

2. CHECK FOR ANY OF THE FOLLOWING ACTIVE DTCS

With the scan tool, read all active DTCs from all modules.

NOTE: Check for TIPM configuration, CAN B or C hardware electrical, VIN Missing/Mismatch, battery or ignition related DTCs.

Does the scan tool display any active DTCs to the conditions listed above?

Yes >> Diagnose and repair the DTC. Refer to the Index for a complete list of the symptoms.

No >> Go To 3

3. VERIFY THAT THE ECM/PCM IS ACTIVE ON THE BUS

Turn the ignition on.
With the scan tool, select Network Diagnostics.
Verify that the ECM/PCM is active on the bus.

Is the ECM/PCM active on the bus?

Yes >> Go To 4

No >> Refer to the No Response test procedure. Refer to the table of contents in this section.

https://truckmanualshub.com/

4. CHECK FOR ADDITIONAL COMMUNICATION RELATED DTCS

With the scan tool, select Network Diagnostics.

Is there more than one module with active DTCs “Logged Against” the ECM/PCM?

Yes >> Replace/update the ECM/PCM in accordance with the service information.
Perform the appropriate VERIFICATION TEST.

No >> Replace/update the module that set this DTC in accordance with the service information.
Perform the appropriate VERIFICATION TEST.

https://truckmanualshub.com/

U0101-LOST COMMUNICATION WITH TCM

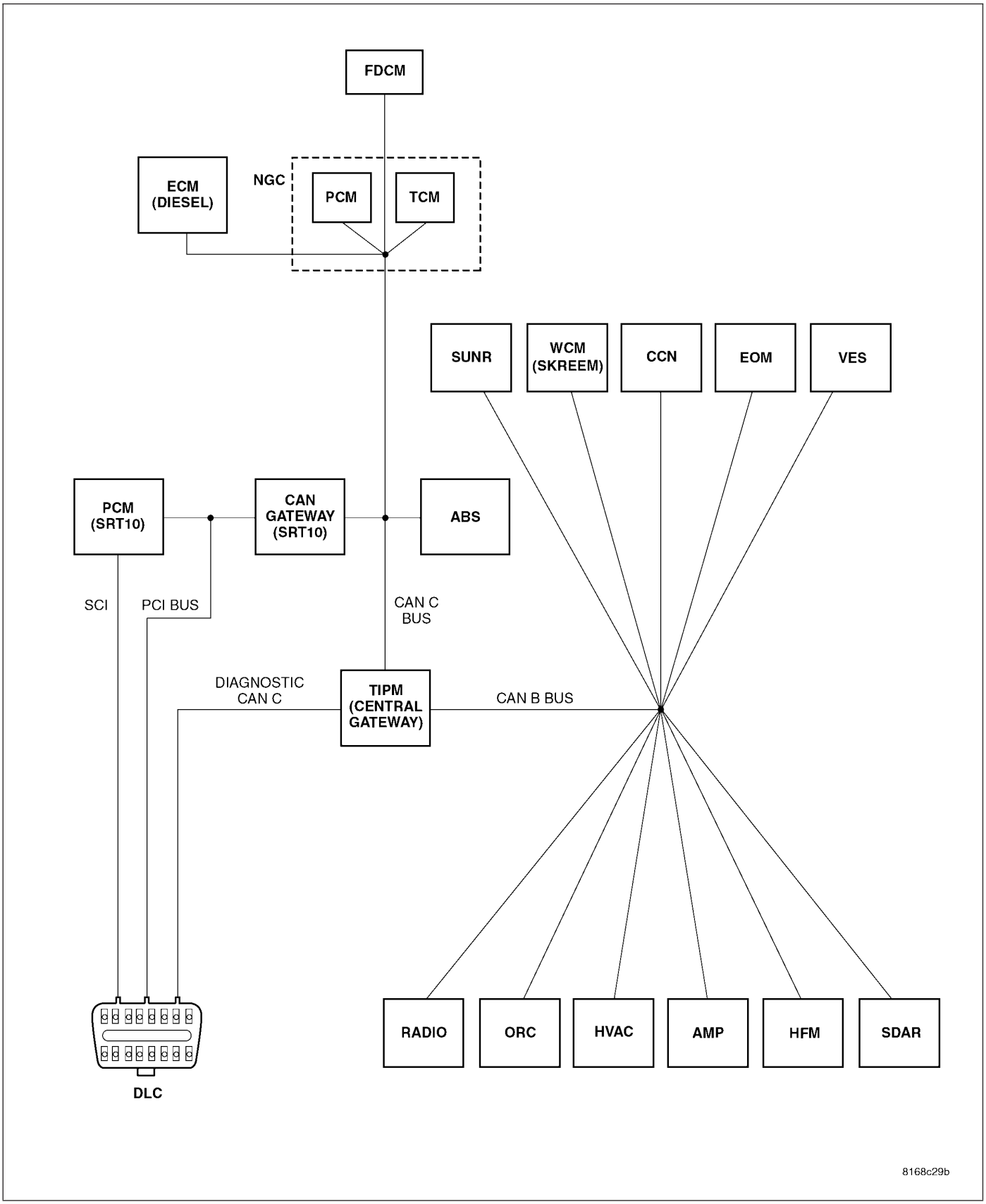

For a complete wiring diagram **Refer to Section 8W**.

https://truckmanualshub.com/

- **When Monitored:**
  - With the ignition on
  - Battery voltage between 10 and 16 volts
  - IOD fuse installed
  - TIPM is configured correctly
- **Set Condition:**
  Bus messages not received from the TCM for approximately 2 to 5 seconds.

Possible Causes
CAN B OR CAN C BUS CIRCUITS OPEN OR SHORTED
DTCS RELATED TO BATTERY VOLTAGE, IGNITION, OR VIN MESSAGES
TIPM NOT CONFIGURED CORRECTLY
TCM POWER AND GROUND
TCM (PCM)
MODULE THAT SET THIS DTC

Diagnostic Test

1. VERIFY DTC IS ACTIVE

NOTE: Ensure the IOD fuse is installed and battery voltage is between 10 and 16 volts before proceeding.
With the scan tool, read active DTCs.

Is this DTC active?

Yes >> Go To 2

No >> Refer to the Stored Lost Communication test procedure. Refer to the table of contents in this section.

2. CHECK FOR ANY OF THE FOLLOWING ACTIVE DTCS

With the scan tool, read all active DTCs from all modules.

NOTE: Check for TIPM configuration, CAN B or C hardware electrical, VIN Missing/Mismatch, battery or ignition related DTCs.

Does the scan tool display any active DTCs to the conditions listed above?

Yes >> Diagnose and repair the DTC. Refer to the Index for a complete list of the symptoms.

No >> Go To 3

3. VERIFY THAT THE TCM IS ACTIVE ON THE BUS

Turn the ignition on.
With the scan tool, select Network Diagnostics.
Verify that the TCM is active on the bus.

Is the TCM active on the bus?

Yes >> Go To 4

No >> Refer to the No Response test procedure. Refer to the table of contents in this section.

https://truckmanualshub.com/

4. CHECK FOR ADDITIONAL COMMUNICATION RELATED DTCS

With the scan tool, select Network Diagnostics.

Is there more than one module with active DTCs “Logged Against” the TCM?

Yes >> Replace/update the TCM (PCM) in accordance with the service information.
Perform the appropriate VERIFICATION TEST.

No >> Replace/update the module that set this DTC in accordance with the service information.
Perform the appropriate VERIFICATION TEST.

https://truckmanualshub.com/

U0114-LOST COMMUNICATION WITH FINAL DRIVE CONTROL MODULE

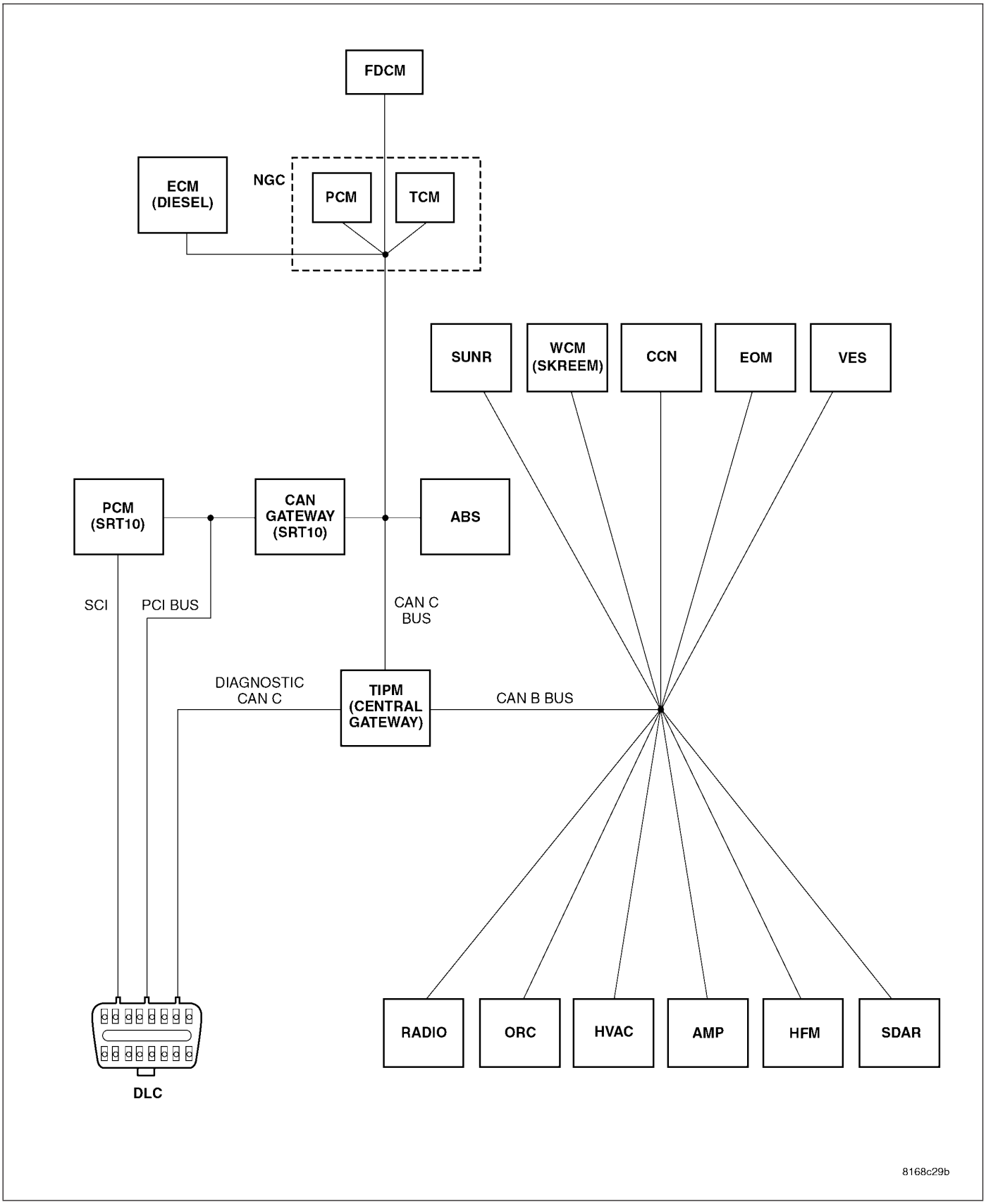

For a complete wiring diagram **Refer to Section 8W**.

https://truckmanualshub.com/

- **When Monitored:**
  - With the ignition on
  - Battery voltage between 10 and 16 volts
  - IOD fuse installed
  - TIPM is configured correctly
- **Set Condition:**
  Bus messages not received from the Final Drive Control Module (FDCM) for approximately 2 to 5 seconds.

Possible Causes
CAN B OR CAN C BUS CIRCUITS OPEN OR SHORTED
DTCS RELATED TO BATTERY VOLTAGE, IGNITION, OR VIN MESSAGES
TIPM NOT CONFIGURED CORRECTLY
FINAL DRIVE CONTROL MODULE POWER AND GROUND
FINAL DRIVE CONTROL MODULE
MODULE THAT SET THIS DTC

Diagnostic Test

1. VERIFY DTC IS ACTIVE

NOTE: Ensure the IOD fuse is installed and battery voltage is between 10 and 16 volts before proceeding.
With the scan tool, read active DTCs.

Is this DTC active?

Yes >> Go To 2

No >> Refer to the Stored Lost Communication test procedure. Refer to the table of contents in this section.

2. CHECK FOR ANY OF THE FOLLOWING ACTIVE DTCS

With the scan tool, read all active DTCs from all modules.

NOTE: Check for TIPM configuration, CAN B or C hardware electrical, VIN Missing/Mismatch, battery or ignition related DTCs.

Does the scan tool display any active DTCs to the conditions listed above?

Yes >> Diagnose and repair the DTC. Refer to the Index for a complete list of the symptoms.

No >> Go To 3

3. VERIFY THAT THE FDCM IS ACTIVE ON THE BUS

Turn the ignition on.
With the scan tool, select Network Diagnostics.
Verify that the FDCM is active on the bus.

Is the FDCM active on the bus?

Yes >> Go To 4

No >> Refer to the No Response test procedure. Refer to the table of contents in this section.

https://truckmanualshub.com/

4. CHECK FOR ADDITIONAL COMMUNICATION RELATED DTCS

With the scan tool, select Network Diagnostics.

Is there more than one module with active DTCs “Logged Against” the FDCM?

Yes >> Replace/update the Final Drive Control Module in accordance with the service information. Perform the appropriate VERIFICATION TEST.

No >> Replace/update the module that set this DTC in accordance with the service information. Perform the appropriate VERIFICATION TEST.

https://truckmanualshub.com/

U0121-LOST COMMUNICATION WITH ANTI-LOCK BRAKE MODULE

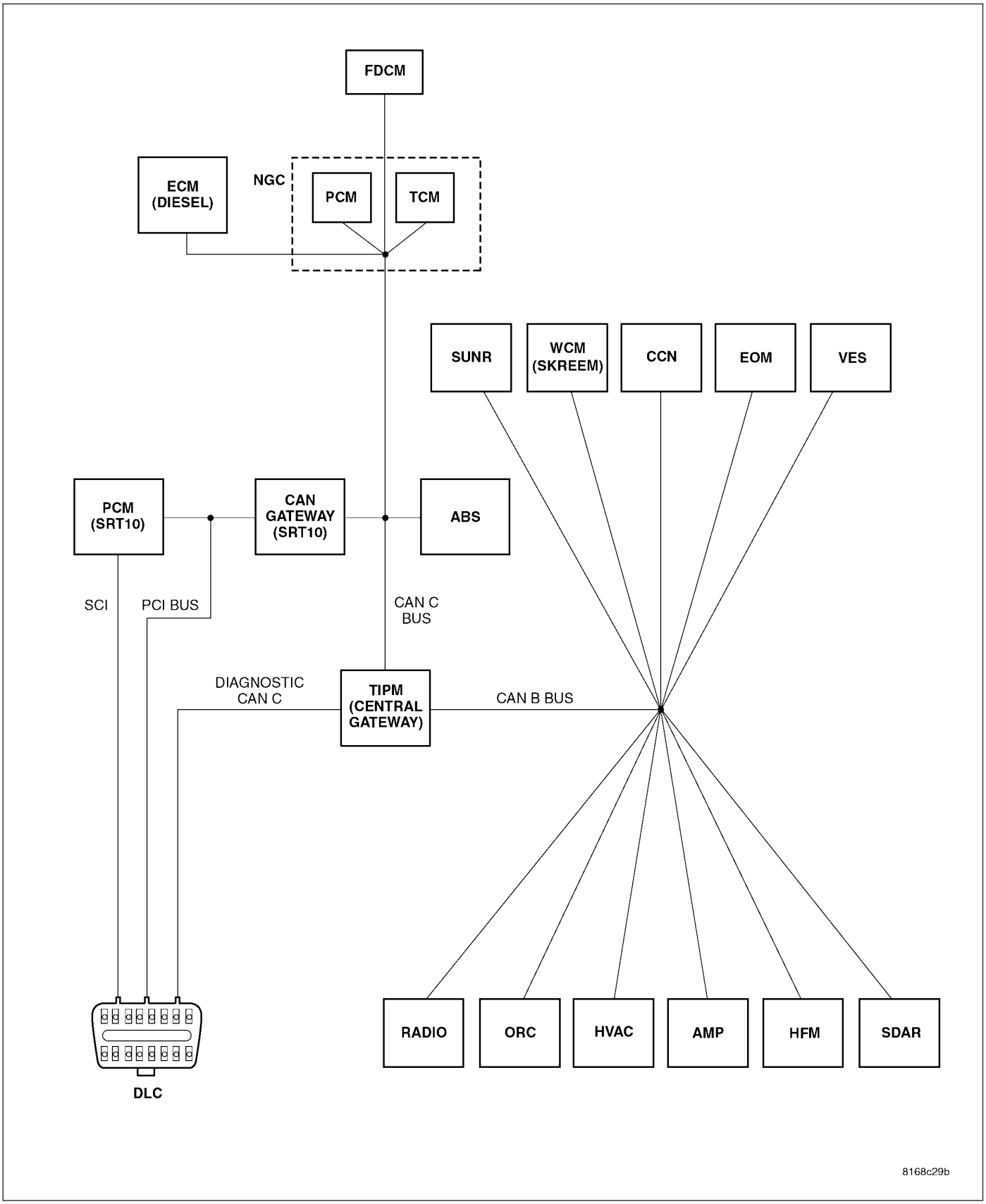

For a complete wiring diagram **Refer to Section 8W**.

https://truckmanualshub.com/

- **When Monitored:**
  - With the ignition on
  - Battery voltage between 10 and 16 volts
  - IOD fuse installed
  - TIPM is configured correctly
- **Set Condition:**
  Bus messages not received from the Antilock Brake Module for approximately 2 to 5 seconds.

Possible Causes
CAN B OR CAN C BUS CIRCUITS OPEN OR SHORTED
DTCS RELATED TO BATTERY VOLTAGE, IGNITION, OR VIN MESSAGES
TIPM NOT CONFIGURED CORRECTLY
ANTILOCK BRAKE MODULE POWER AND GROUND
ANTILOCK BRAKE MODULE
MODULE THAT SET THIS DTC

Diagnostic Test

1. VERIFY DTC IS ACTIVE

NOTE: Ensure the IOD fuse is installed and battery voltage is between 10 and 16 volts before proceeding.
With the scan tool, read active DTCs.

Is this DTC active?

Yes >> Go To 2

No >> Refer to the Stored Lost Communication test procedure. Refer to the table of contents in this section.

2. CHECK FOR ANY OF THE FOLLOWING ACTIVE DTCS

With the scan tool, read all active DTCs from all modules.

NOTE: Check for TIPM configuration, CAN B or C hardware electrical, VIN Missing/Mismatch, battery or ignition related DTCs.

Does the scan tool display any active DTCs to the conditions listed above?

Yes >> Diagnose and repair the DTC. Refer to the Index for a complete list of the symptoms.

No >> Go To 3

3. VERIFY THAT THE ABS IS ACTIVE ON THE BUS

Turn the ignition on.
With the scan tool, select Network Diagnostics.
Verify that the ABS is active on the bus.

Is the ABS active on the bus?

Yes >> Go To 4

No >> Refer to the No Response test procedure. Refer to the table of contents in this section.

https://truckmanualshub.com/

4. CHECK FOR ADDITIONAL COMMUNICATION RELATED DTCS

With the scan tool, select Network Diagnostics.

Is there more than one module with active DTCs “Logged Against” the ABS?

Yes >> Replace/update the Antilock Brake Module in accordance with the service information.
Perform ABS VERIFICATION TEST - VER 1. (Refer to 5 - BRAKES - DIAGNOSIS AND TESTING)

No >> Replace/update the module that set this DTC in accordance with the service information
Perform the appropriate VERIFICATION TEST.

https://truckmanualshub.com/

U0141–LOST COMMUNICATION WITH FRONT CONTROL MODULE (TOTALLY INTEGRATED POWER MODULE)

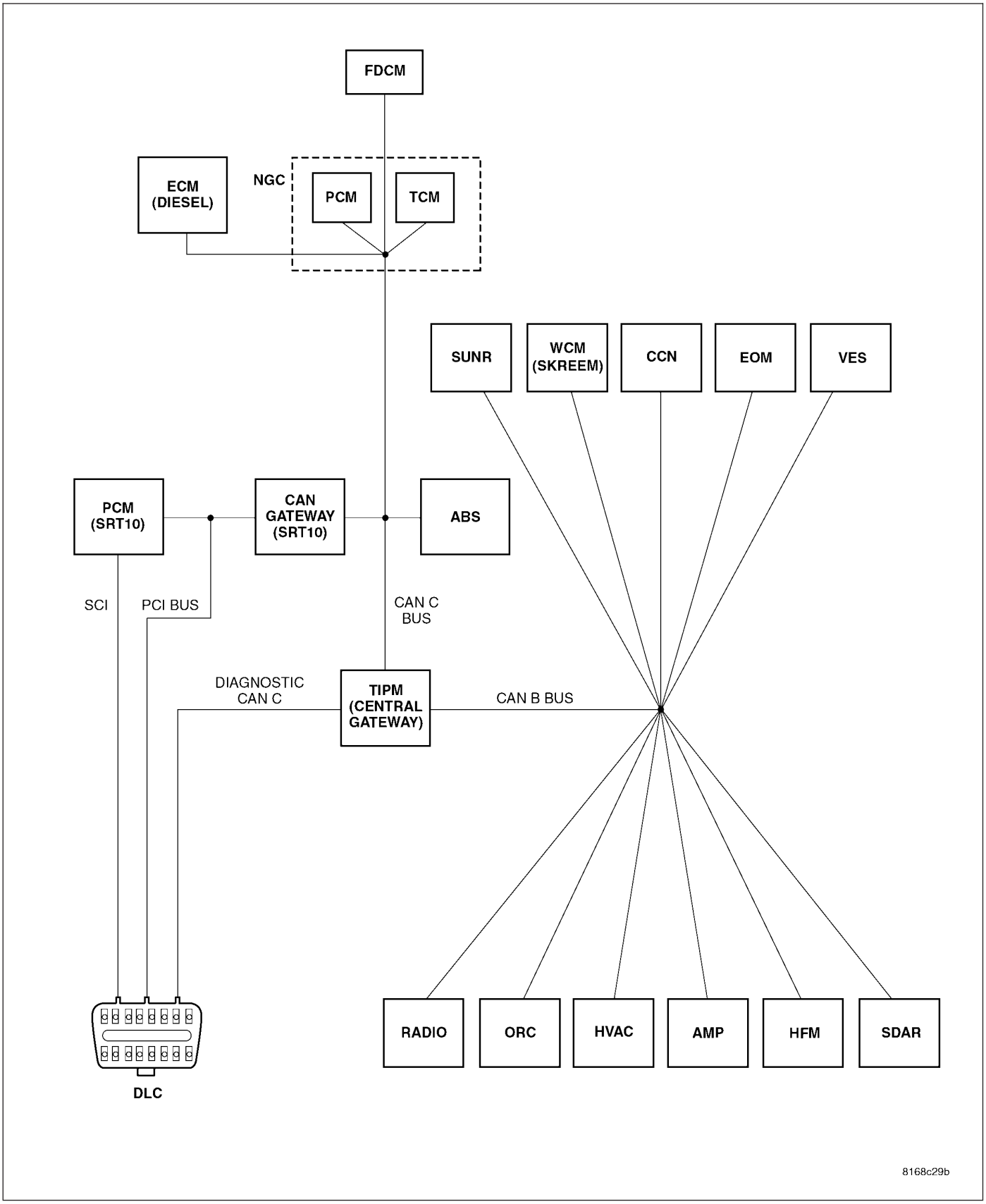

For a complete wiring diagram **Refer to Section 8W**.

https://truckmanualshub.com/

- **When Monitored:**
  - With the ignition on
  - Battery voltage between 10 and 16 volts
  - IOD fuse installed
  - TIPM is configured correctly
- **Set Condition:**
  Bus messages not received from the Front Control Module (on this vehicle, it is the Totally Integrated Power Module or TIPM) for approximately 2 to 5 seconds.

Possible Causes
CAN B BUS CIRCUITS OPEN OR SHORTED
DTCS RELATED TO BATTERY VOLTAGE, IGNITION, OR VIN MESSAGES
TIPM NOT CONFIGURED CORRECTLY
TOTALLY INTEGRATED POWER MODULE POWER AND GROUND
TOTALLY INTEGRATED POWER MODULE
MODULE THAT SET THIS DTC

Diagnostic Test

1. VERIFY DTC IS ACTIVE

NOTE: Ensure the IOD fuse is installed and battery voltage is between 10 and 16 volts before proceeding.
With the scan tool, read active DTCs.

Is this DTC active?

Yes >> Go To 2

No >> Refer to the Stored Lost Communication test procedure. Refer to the table of contents in this section.

2. CHECK FOR ANY OF THE FOLLOWING ACTIVE DTCS

With the scan tool, read all active DTCs from all modules.

NOTE: Check for TIPM configuration, CAN B or C hardware electrical, VIN Missing/Mismatch, battery or ignition related DTCs.

Does the scan tool display any active DTCs to the conditions listed above?

Yes >> Diagnose and repair the DTC. Refer to the Index for a complete list of the symptoms.

No >> Go To 3

3. VERIFY THAT THE TIPM IS ACTIVE ON THE BUS

Turn the ignition on.
With the scan tool, select Network Diagnostics.
Verify that the TIPM is active on the bus.

Is the TIPM active on the bus?

Yes >> Go To 4

No >> Refer to the No Response test procedure. Refer to the table of contents in this section.

https://truckmanualshub.com/

4. CHECK FOR ADDITIONAL COMMUNICATION RELATED DTCS

With the scan tool, select Network Diagnostics.

Is there more than one module with active DTCs “Logged Against” the TIPM?

Yes >> Replace/update the Totally Integrated Power Module (TIPM) in accordance with the service information. Perform BODY VERIFICATION TEST – VER 1. (Refer to 8 - ELECTRICAL/ELECTRONIC CONTROL MODULES - STANDARD PROCEDURE).

No >> Replace/update the module that set this DTC in accordance with the service information Perform the appropriate VERIFICATION TEST.

https://truckmanualshub.com/

U0151–LOST COMMUNICATION WITH OCCUPANT RESTRAINT CONTROLLER (ORC)

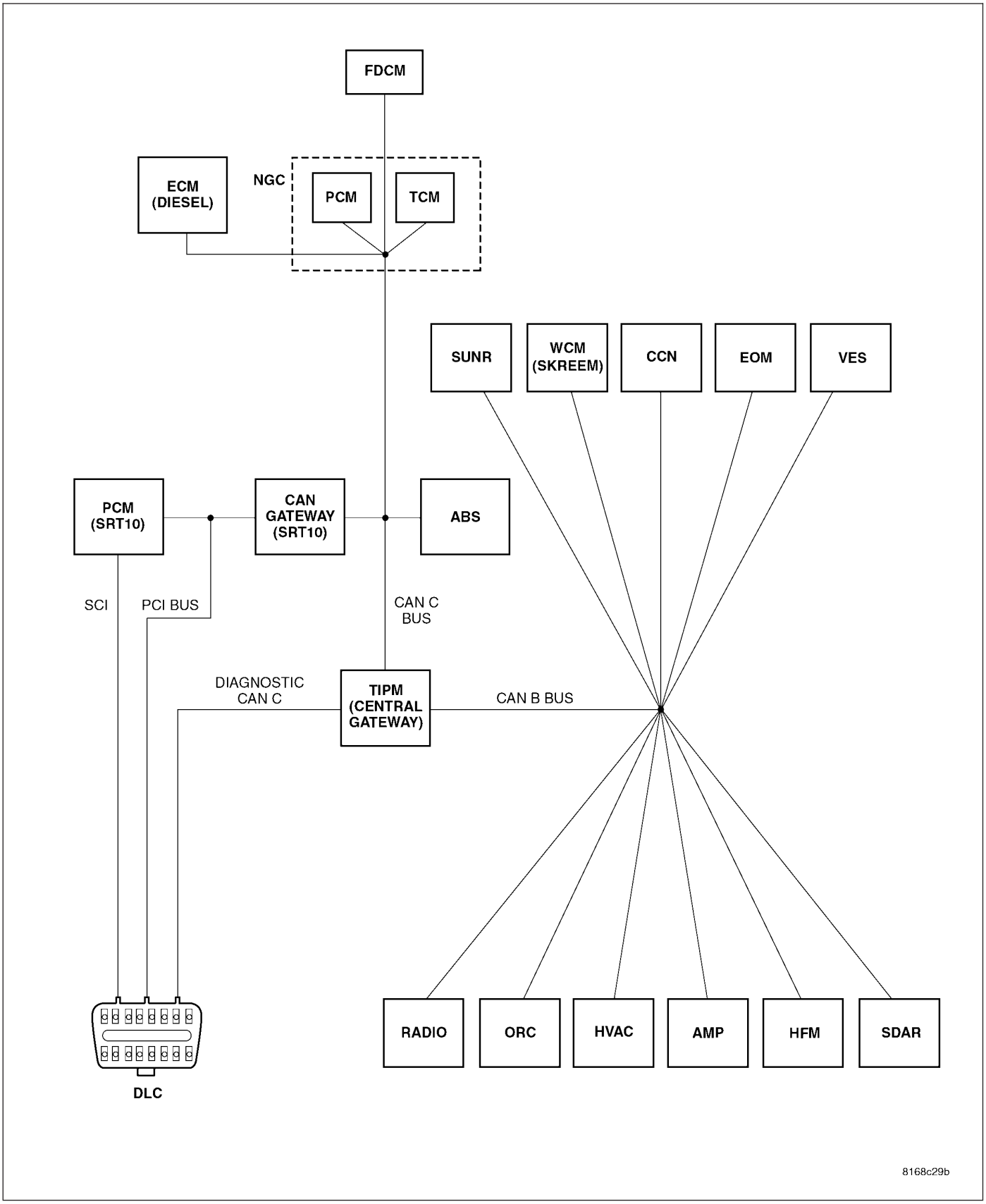

For a complete wiring diagram **Refer to Section 8W**.

https://truckmanualshub.com/

- **When Monitored:**
  - With the ignition on
  - Battery voltage between 10 and 16 volts
  - IOD fuse installed
  - TIPM is configured correctly
- **Set Condition:**
  Bus messages not received from the Occupant Restraint Controller for approximately 2 to 5 seconds.

Possible Causes
CAN B BUS CIRCUITS OPEN OR SHORTED
DTCS RELATED TO BATTERY VOLTAGE, IGNITION, OR VIN MESSAGES
TIPM NOT CONFIGURED CORRECTLY
OCCUPANT RESTRAINT CONTROLLER POWER AND GROUND
OCCUPANT RESTRAINT CONTROLLER
MODULE THAT SET THIS DTC

Diagnostic Test

1. VERIFY DTC IS ACTIVE

NOTE: Ensure the IOD fuse is installed and battery voltage is between 10 and 16 volts before proceeding.
With the scan tool, read active DTCs.

Is this DTC active?

Yes >> Go To 2

No >> Refer to the Stored Lost Communication test procedure. Refer to the table of contents in this section.

2. CHECK FOR ANY OF THE FOLLOWING ACTIVE DTCS

With the scan tool, read all active DTCs from all modules.

NOTE: Check for TIPM configuration, CAN B or C hardware electrical, VIN Missing/Mismatch, battery or ignition related DTCs.

Does the scan tool display any active DTCs to the conditions listed above?

Yes >> Diagnose and repair the DTC. Refer to the Index for a complete list of the symptoms.

No >> Go To 3

3. VERIFY THAT THE ORC IS ACTIVE ON THE BUS

Turn the ignition on.
With the scan tool, select Network Diagnostics.
Verify that the ORC is active on the bus.

Is the ORC active on the bus?

Yes >> Go To 4

No >> Refer to the No Response test procedure. Refer to the table of contents in this section.

https://truckmanualshub.com/

4. CHECK FOR ADDITIONAL COMMUNICATION RELATED DTCS

With the scan tool, select Network Diagnostics.

Is there more than one module with active DTCs “Logged Against” the ORC?

Yes >> Replace/update the Occupant Restraint Controller in accordance with the service information. Perform AIRBAG VERIFICATION TEST – VER 1.

No >> Replace/update the module that set this DTC in accordance with the service information Perform the appropriate VERIFICATION TEST.

https://truckmanualshub.com/

U0155-LOST COMMUNICATION WITH CLUSTER/CCN

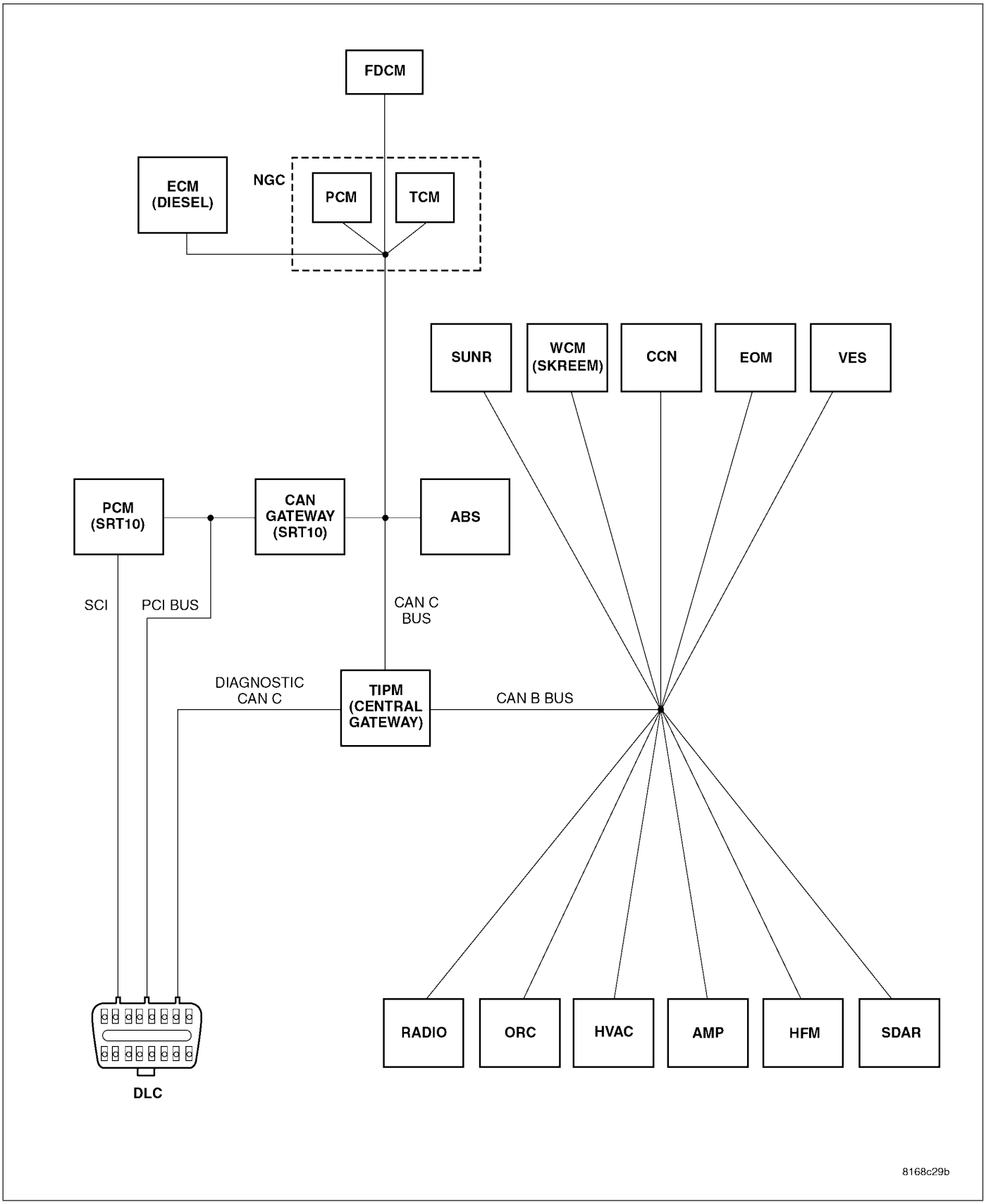

For a complete wiring diagram **Refer to Section 8W**.

https://truckmanualshub.com/

- **When Monitored:**
  - With the ignition on
  - Battery voltage between 10 and 16 volts
  - IOD fuse installed
  - TIPM is configured correctly
- **Set Condition:**
  Bus messages not received from the Cluster/CCN for approximately 2 to 5 seconds.

Possible Causes
CAN B BUS CIRCUITS OPEN OR SHORTED
DTCS RELATED TO BATTERY VOLTAGE, IGNITION, OR VIN MESSAGES
TIPM NOT CONFIGURED CORRECTLY
CLUSTER/CCN POWER AND GROUND
CLUSTER/CCN
MODULE THAT SET THE DTC

Diagnostic Test

1. VERIFY DTC IS ACTIVE

NOTE: Ensure the IOD fuse is installed and battery voltage is between 10 and 16 volts before proceeding.
With the scan tool, read active DTCs.

Is this DTC active?

Yes >> Go To 2

No >> Refer to the Stored Lost Communication test procedure. Refer to the table of contents in this section.

2. CHECK FOR ANY OF THE FOLLOWING ACTIVE DTCS

With the scan tool, read active DTCs from all modules.

NOTE: Check for TIPM configuration, CAN B or C hardware electrical, VIN Missing/Mismatch, battery or ignition related DTCs.

Does the scan tool display any active DTCs to the conditions listed above?

Yes >> Diagnose and repair the DTC. Refer to the Index for a complete list of the symptoms.

No >> Go To 3

3. VERIFY THAT THE CCN IS ACTIVE ON THE BUS

Turn the ignition on.
With the scan tool, select Network Diagnostics.
Verify that the CCN is active on the bus.

Is the CCN active on the bus?

Yes >> Go To 4

No >> Refer to the No Response test procedure. Refer to the table of contents in this section.

https://truckmanualshub.com/

4. CHECK FOR ADDITIONAL COMMUNICATION RELATED DTCS

With the scan tool, select Network Diagnostics.

Is there more than one module with active DTCs “Logged Against” the CCN?

Yes >> Replace/update the Cluster (CCN) in accordance with the service information.
Perform BODY VERIFICATION TEST – VER 1. (Refer to 8 - ELECTRICAL/ELECTRONIC CONTROL MODULES - STANDARD PROCEDURE).

No >> Replace/update the module that set this DTC in accordance with the service information.
Perform the appropriate VERIFICATION TEST.

https://truckmanualshub.com/

U0156–LOST COMMUNICATION WITH EOM

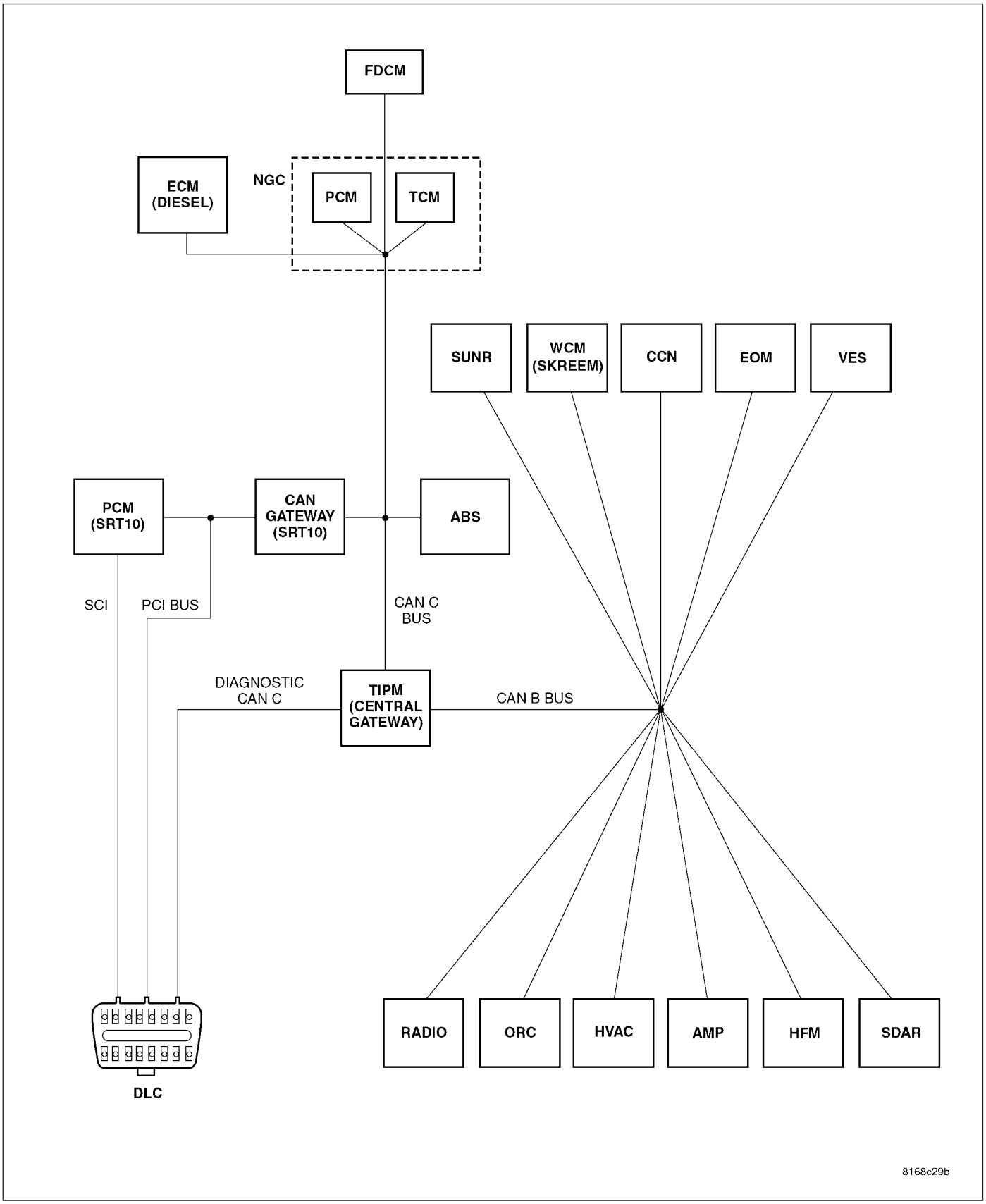

For a complete wiring diagram **Refer to Section 8W**.

https://truckmanualshub.com/

- **When Monitored:**
  - With the ignition on
  - Battery voltage between 10 and 16 volts
  - IOD fuse installed
  - TIPM is configured correctly
- **Set Condition:**
  Bus messages not received from the Electronic Overhead Module (EOM) for approximately 2 to 5 seconds.

Possible Causes
CAN B BUS CIRCUITS OPEN OR SHORTED
DTCS RELATED TO BATTERY VOLTAGE, IGNITION, OR VIN MESSAGES
TIPM NOT CONFIGURED CORRECTLY
ELECTRONIC OVERHEAD MODULE POWER OR GROUND
ELECTRONIC OVERHEAD MODULE
MODULE THAT SET THIS DTC

Diagnostic Test

1. VERIFY DTC IS ACTIVE

NOTE: Ensure the IOD fuse is installed and battery voltage is between 10 and 16 volts before proceeding.
With the scan tool, read active DTCs.

Is this DTC active?

Yes >> Go To 2

No >> Refer to the Stored Lost Communication test procedure. Refer to the table of contents in this section.

2. CHECK FOR ANY OF THE FOLLOWING ACTIVE DTCS

With the scan tool, read all active DTCs from all modules.

NOTE: Check for TIPM configuration, CAN B or C hardware electrical, VIN Missing/Mismatch, battery or ignition related DTCs.

Does the scan tool display any active DTCs to the conditions listed above?

Yes >> Diagnose and repair the DTC. Refer to the Index for a complete list of the symptoms.

No >> Go To 3

3. VERIFY THAT THE EOM IS ACTIVE ON THE BUS

Turn the ignition on.
With the scan tool, select Network Diagnostics.
Verify that the EOM is active on the bus.

Is the EOM active on the bus?

Yes >> Go To 4

No >> Refer to the No Response test procedure. Refer to the table of contents in this section.

https://truckmanualshub.com/

4. CHECK FOR ADDITIONAL COMMUNICATION RELATED DTCS

With the scan tool, select Network Diagnostics.

Is there more than one module with active DTCs “Logged Against” the EOM?

Yes >> Replace/update the Electronic Overhead Module (EOM) in accordance with the service information.
Perform BODY VERIFICATION TEST – VER 1. (Refer to 8 - ELECTRICAL/ELECTRONIC CONTROL MODULES - STANDARD PROCEDURE).

No >> Replace/update the module that set this DTC in accordance with the service information
Perform the appropriate VERIFICATION TEST.

https://truckmanualshub.com/

U0164-LOST COMMUNICATION WITH HVAC CONTROL MODULE

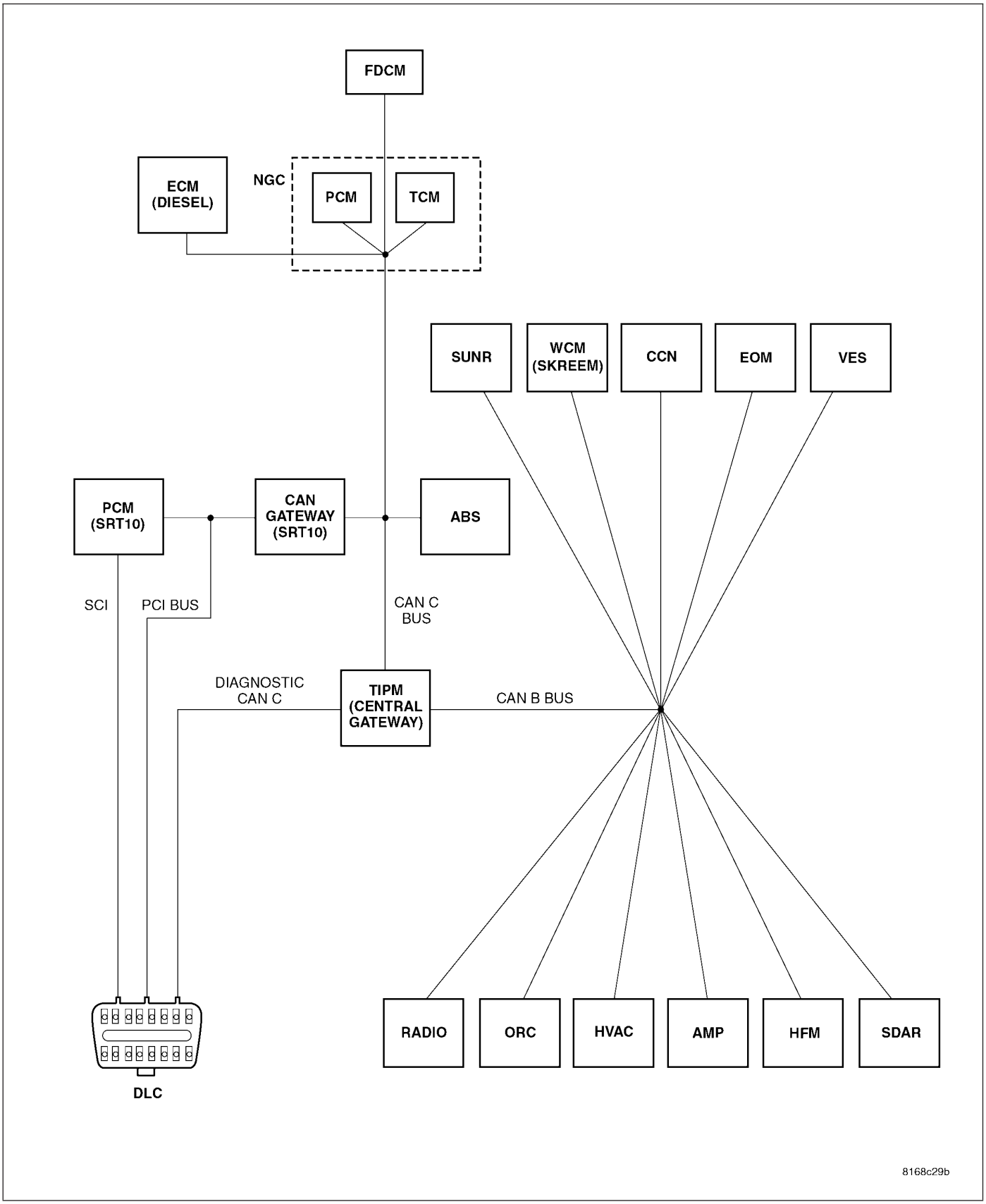

For a complete wiring diagram **Refer to Section 8W**.

https://truckmanualshub.com/

- **When Monitored:**
  - With the ignition on
  - Battery voltage between 10 and 16 volts
  - IOD fuse installed
  - TIPM is configured correctly
- **Set Condition:**
  Bus messages not received from the A/C Heater Control (HVAC) for approximately 2 to 5 seconds.

Possible Causes
CAN B BUS CIRCUITS OPEN OR SHORTED
DTCS RELATED TO BATTERY VOLTAGE, IGNITION, OR VIN MESSAGES
TIPM NOT CONFIGURED CORRECTLY
A/C HEATER CONTROL POWER AND GROUND
A/C HEATER CONTROL
MODULE THAT SET THIS DTC

Diagnostic Test

1. VERIFY DTC IS ACTIVE

NOTE: Ensure the IOD fuse is installed and battery voltage is between 10 and 16 volts before proceeding.
With the scan tool, read active DTCs.

Is this DTC active?

Yes >> Go To 2

No >> Refer to the Stored Lost Communication test procedure. Refer to the table of contents in this section.

2. CHECK FOR ANY OF THE FOLLOWING ACTIVE DTCS

With the scan tool, read active DTCs from all modules.

NOTE: Check for TIPM configuration, CAN B or C hardware electrical, VIN Missing/Mismatch, battery or ignition related DTCs.

Does the scan tool display any active DTCs to the conditions listed above?

Yes >> Diagnose and repair the DTC. Refer to the Index for a complete list of the symptoms.

No >> Go To 3

3. VERIFY THAT THE HVAC IS ACTIVE ON THE BUS

Turn the ignition on.
With the scan tool, select Network Diagnostics.
Verify that the HVAC is active on the bus.

Is the HVAC active on the bus?

Yes >> Go To 4

No >> Refer to the No Response test procedure. Refer to the table of contents in this section.

https://truckmanualshub.com/

4. CHECK FOR ADDITIONAL COMMUNICATION RELATED DTCS

With the scan tool, select Network Diagnostics.

Is there more than one module with active DTCs “Logged Against” the HVAC?

Yes >> Replace/update the A/C Heater Control in accordance with the service information.
Perform BODY VERIFICATION TEST – VER 1. (Refer to 8 - ELECTRICAL/ELECTRONIC CONTROL MODULES - STANDARD PROCEDURE).

No >> Replace/update the module that set the DTC in accordance with the service information
Perform the appropriate VERIFICATION TEST.

https://truckmanualshub.com/

U0168-LOST COMMUNICATION WITH VEHICLE SECURITY CONTROL MODULE (SKREEM/WCM)

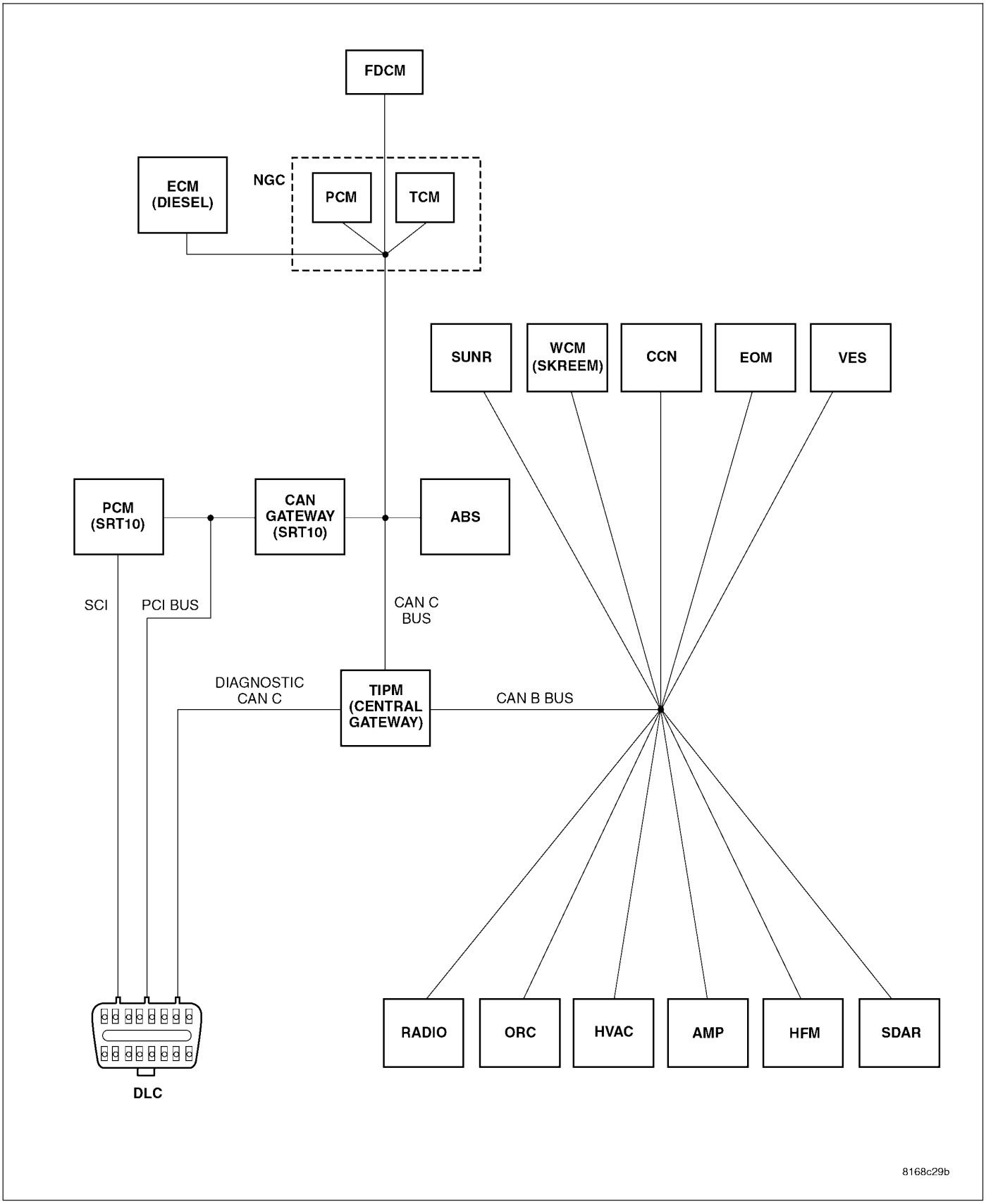

For a complete wiring diagram **Refer to Section 8W**.

https://truckmanualshub.com/

- **When Monitored:**
  - With the ignition on
  - Battery voltage between 10 and 16 volts
  - IOD fuse installed
  - TIPM is configured correctly
- **Set Condition:**
  Bus messages not received from the Sentry Key Remote Entry Module (WCM) for approximately 2 to 5 seconds.

Possible Causes
CAN B BUS CIRCUITS OPEN OR SHORTED
DTCS RELATED TO BATTERY VOLTAGE, IGNITION, OR VIN MESSAGES
TIPM NOT CONFIGURED CORRECTLY
SENTRY KEY REMOTE ENTRY MODULE POWER AND GROUND
SENTRY KEY REMOTE ENTRY MODULE
MODULE THAT SET THIS DTC

Diagnostic Test

1. VERIFY DTC IS ACTIVE

NOTE: Ensure the IOD fuse is installed and battery voltage is between 10 and 16 volts before proceeding.
With the scan tool, read active DTCs.

Is this DTC active?

Yes >> Go To 2

No >> Refer to the Stored Lost Communication test procedure. Refer to the table of contents in this section.

2. CHECK FOR ANY OF THE FOLLOWING ACTIVE DTCS

With the scan tool, read active DTCs from all modules.

NOTE: Check for TIPM configuration, CAN B or C hardware electrical, VIN Missing/Mismatch, battery or ignition related DTCs.

Does the scan tool display any active DTCs to the conditions listed above?

Yes >> Diagnose and repair the DTC. Refer to the Index for a complete list of the symptoms.

No >> Go To 3

3. VERIFY THAT THE WCM IS ACTIVE ON THE BUS

Turn the ignition on.
With the scan tool, select Network Diagnostics.
Verify that the WCM is active on the bus.

Is the WCM active on the bus?

Yes >> Go To 4

No >> Refer to the No Response test procedure. Refer to the table of contents in this section.

https://truckmanualshub.com/

4. CHECK FOR ADDITIONAL COMMUNICATION RELATED DTCS

With the scan tool, select Network Diagnostics.

Is there more than one module with active DTCs “Logged Against” the WCM?

Yes >> Replace/update the Sentry Key Remote Entry Module in accordance with the service information. Perform SKREEM VERIFICATION TEST

No >> Replace/update the module that set this DTC in accordance with the service information. Perform the appropriate VERIFICATION TEST.

https://truckmanualshub.com/

U0169-LOST COMMUNICATION WITH SUNROOF CONTROL MODULE

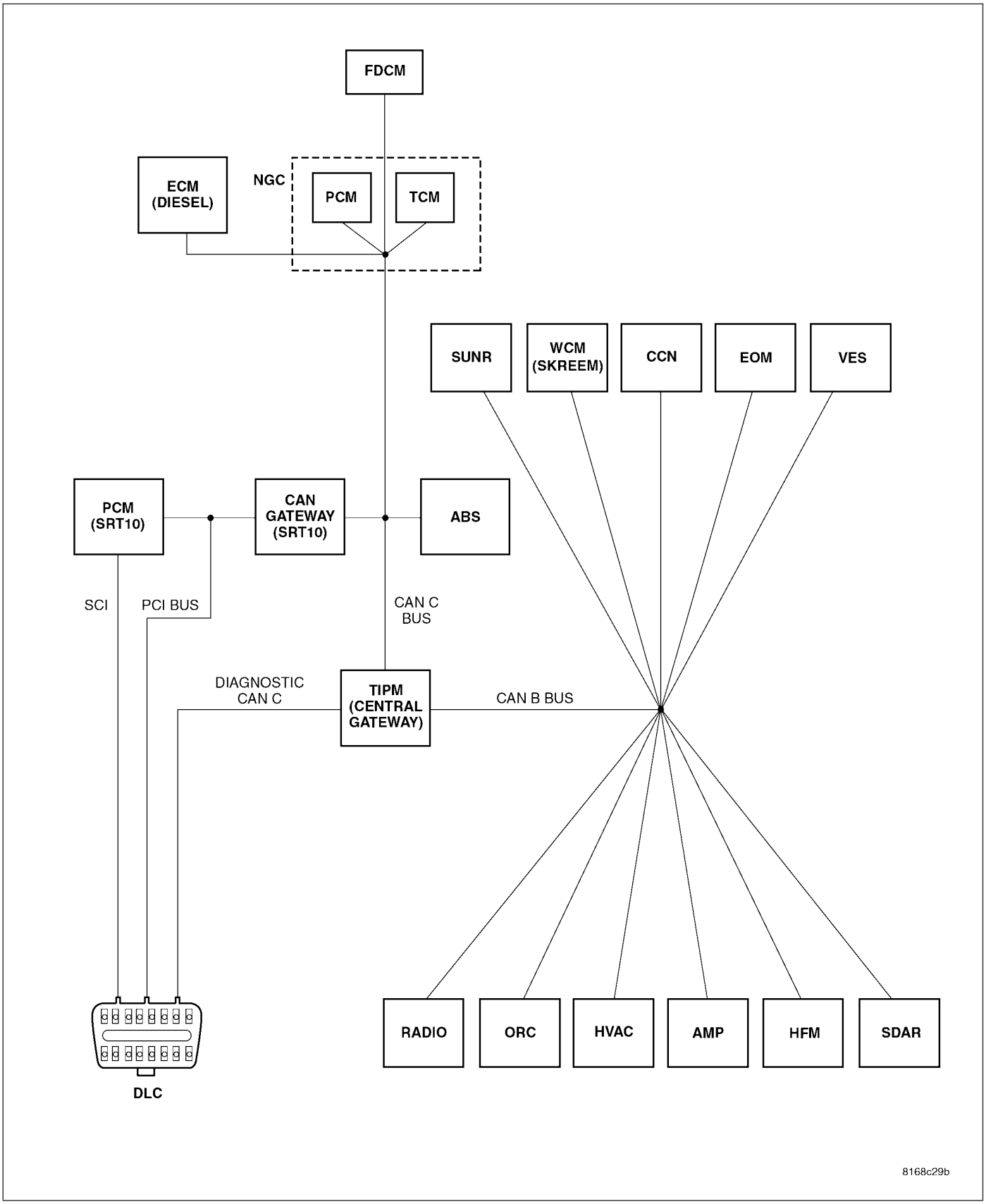

For a complete wiring diagram **Refer to Section 8W**.

https://truckmanualshub.com/

- **When Monitored:**
  - With the ignition on
  - Battery voltage between 10 and 16 volts
  - IOD fuse installed
  - TIPM is configured correctly
- **Set Condition:**
  Bus messages not received from the Sunroof Motor/Module (SUNR) for approximately 2 to 5 seconds.

Possible Causes
CAN B BUS CIRCUITS OPEN OR SHORTED
DTCS RELATED TO BATTERY VOLTAGE, IGNITION, OR VIN MESSAGES
TIPM NOT CONFIGURED CORRECTLY
SUNROOF MOTOR/MODULE POWER AND GROUND
SUNROOF MOTOR/MODULE
MODULE THAT SET THIS DTC

Diagnostic Test

1. VERIFY DTC IS ACTIVE

NOTE: Ensure the IOD fuse is installed and battery voltage is between 10 and 16 volts before proceeding.
With the scan tool, read active DTCs.

Is this DTC active?

Yes >> Go To 2

No >> Refer to the Stored Lost Communication test procedure. Refer to the table of contents in this section.

2. CHECK FOR ANY OF THE FOLLOWING ACTIVE DTCS

With the scan tool, read active DTCs from all modules.

NOTE: Check for TIPM configuration, CAN B or C hardware electrical, VIN Missing/Mismatch, battery or ignition related DTCs.

Does the scan tool display any active DTCs to the conditions listed above?

Yes >> Diagnose and repair the DTC. Refer to the Table of Contents for a complete list of the symptoms.

No >> Go To 3

3. VERIFY THAT THE SUNR IS ACTIVE ON THE BUS

Turn the ignition on.
With the scan tool, select Network Diagnostics.
Verify that the SUNR is active on the bus.

Is the SUNR active on the bus?

Yes >> Go To 4

No >> Refer to the Table of Contents located in this section for a no response test procedure.

https://truckmanualshub.com/

4. CHECK FOR ADDITIONAL COMMUNICATION RELATED DTCS

With the scan tool, select Network Diagnostics.

Is there more than one module with active DTCs “Logged Against” the SUNR?

Yes >> Replace/update the Sunroof Motor/Module in accordance with the service information.
Perform BODY VERIFICATION TEST – VER 1. (Refer to 8 - ELECTRICAL/ELECTRONIC CONTROL MODULES - STANDARD PROCEDURE).

No >> Replace/update the module that set this DTC in accordance with the service information.
Perform the appropriate VERIFICATION TEST.

https://truckmanualshub.com/

U0184-LOST COMMUNICATION WITH RADIO

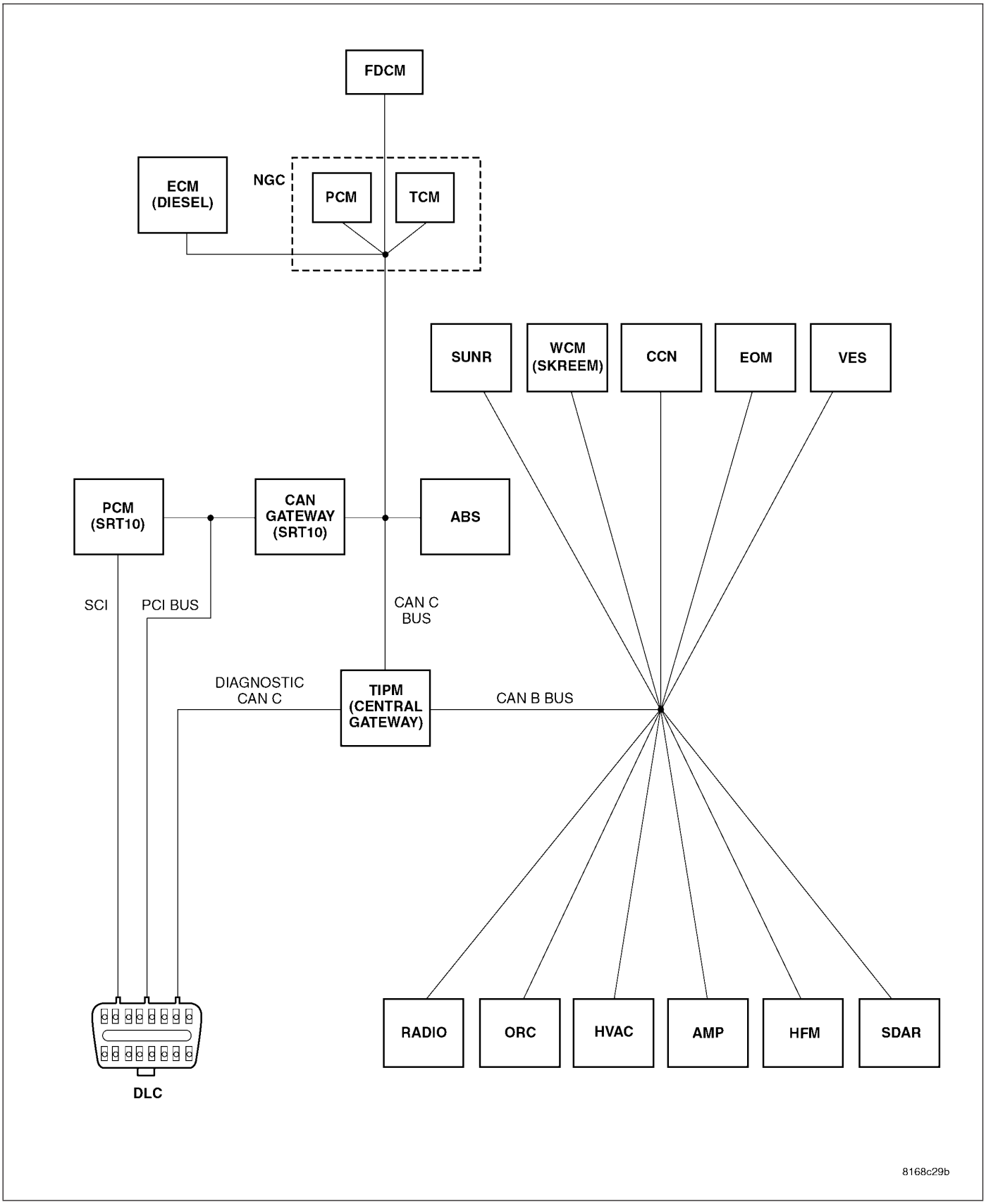

For a complete wiring diagram **Refer to Section 8W**.

https://truckmanualshub.com/

- **When Monitored:**
  - With the ignition on
  - Battery voltage between 10 and 16 volts
  - IOD fuse installed
  - TIPM is configured correctly
- **Set Condition:**
  Bus messages not received from the Radio for approximately 2 to 5 seconds.

Possible Causes
CAN B BUS CIRCUITS OPEN OR SHORTED
DTCS RELATED TO BATTERY VOLTAGE, IGNITION, OR VIN MESSAGES
TIPM NOT CONFIGURED CORRECTLY
RADIO POWER AND GROUND
RADIO
MODULE THAT SET THIS DTC

Diagnostic Test

1. VERIFY DTC IS ACTIVE

NOTE: Ensure the IOD fuse is installed and battery voltage is between 10 and 16 volts before proceeding.
With the scan tool, read active DTCs.

Is this DTC active?

Yes >> Go To 2

No >> Refer to the Stored Lost Communication test procedure. Refer to the table of contents in this section.

2. CHECK FOR ANY OF THE FOLLOWING ACTIVE DTCS

With the scan tool, read active DTCs from all modules.

NOTE: Check for TIPM configuration, CAN B or C hardware electrical, VIN Missing/Mismatch, battery or ignition related DTCs.

Does the scan tool display any active DTCs to the conditions listed above?

Yes >> Diagnose and repair the DTC. Refer to the Index for a complete list of the symptoms.

No >> Go To 3

3. VERIFY THAT THE RADIO IS ACTIVE ON THE BUS

Turn the ignition on.
With the scan tool, select Network Diagnostics.
Verify that the Radio is active on the bus.

Is the Radio active on the bus?

Yes >> Go To 4

No >> Refer to the No Response test procedure. Refer to the table of contents in this section.

https://truckmanualshub.com/

4. CHECK FOR ADDITIONAL COMMUNICATION RELATED DTCS

With the scan tool, select Network Diagnostics.

Is there more than one module with active DTCs “Logged Against” the Radio?

Yes >> Replace/update the Radio in accordance with the service information.
Perform BODY VERIFICATION TEST – VER 1. (Refer to 8 - ELECTRICAL/ELECTRONIC CONTROL MODULES - STANDARD PROCEDURE).

No >> Replace/update the module that set this DTC in accordance with the service information.
Perform the appropriate VERIFICATION TEST.

https://truckmanualshub.com/

U0186-LOST COMMUNICATION WITH AUDIO AMPLIFIER

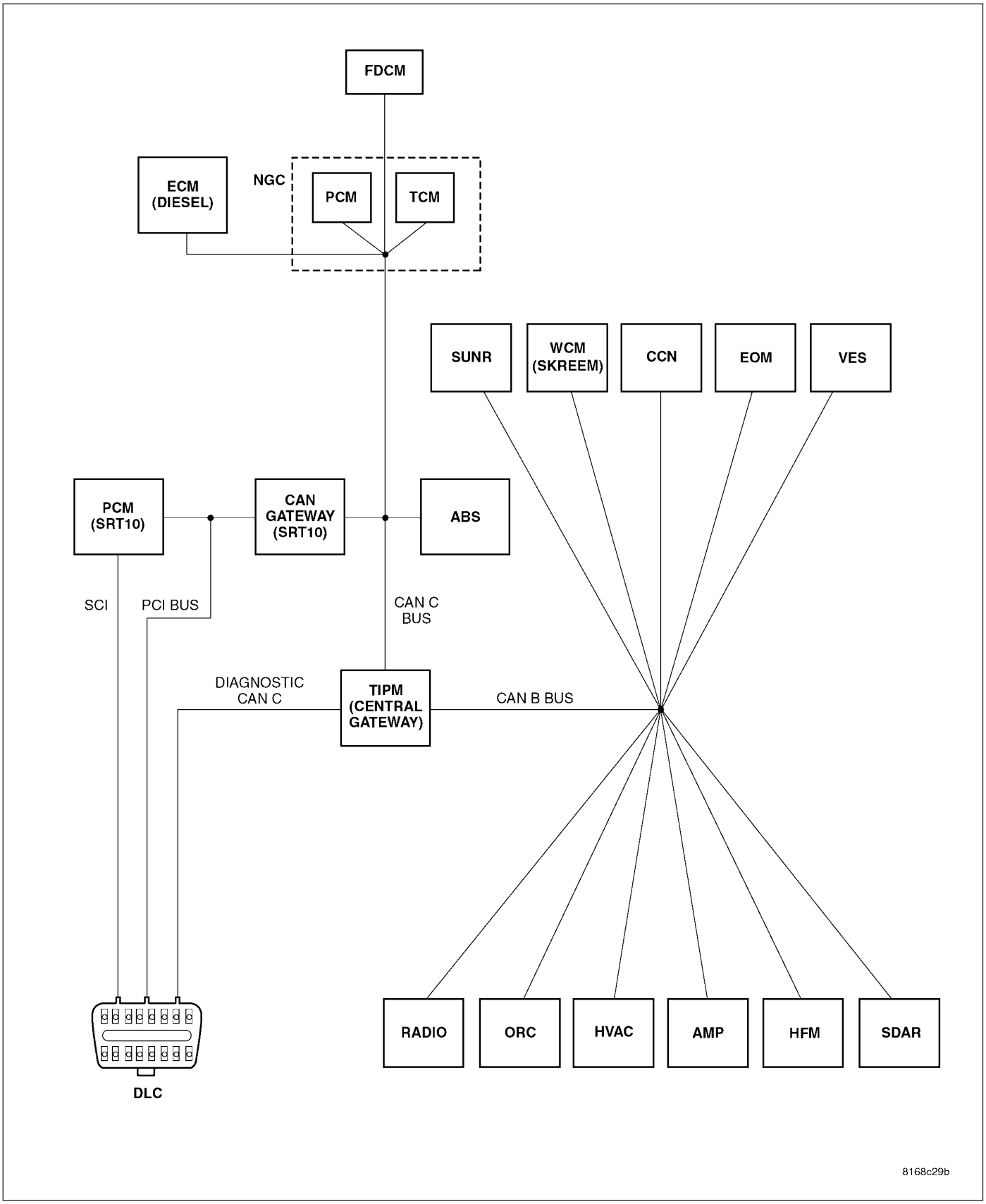

For a complete wiring diagram **Refer to Section 8W**.

https://truckmanualshub.com/

- **When Monitored:**
  - With the ignition on
  - Battery voltage between 10 and 16 volts
  - IOD fuse installed
  - TIPM is configured correctly
- **Set Condition:**
  Bus messages not received from the Amplifier for approximately 2 to 5 seconds.

Possible Causes
CAN B BUS CIRCUITS OPEN OR SHORTED
DTCS RELATED TO BATTERY VOLTAGE, IGNITION, OR VIN MESSAGES
TIPM NOT CONFIGURED CORRECTLY
AMPLIFIER POWER AND GROUND
AMPLIFIER
MODULE THAT SET THIS DTC

Diagnostic Test

1. VERIFY DTC IS ACTIVE

NOTE: Ensure the IOD fuse is installed and battery voltage is between 10 and 16 volts before proceeding.
With the scan tool, read active DTCs.

Is this DTC active?

Yes >> Go To 2

No >> Refer to the Stored Lost Communication test procedure. Refer to the table of contents in this section.

2. CHECK FOR ANY OF THE FOLLOWING ACTIVE DTCS

With the scan tool, read active DTCs from all modules.

NOTE: Check for TIPM configuration, CAN B or C hardware electrical, VIN Missing/Mismatch, battery or ignition related DTCs.

Does the scan tool display any active DTCs to the conditions listed above?

Yes >> Diagnose and repair the DTC. Refer to the Index for a complete list of the symptoms.

No >> Go To 3

3. VERIFY THAT THE AMPLIFIER IS ACTIVE ON THE BUS

Turn the ignition on.
With the scan tool, select Network Diagnostics.
Verify that the Amplifier is active on the bus.

Is the Amplifier active on the bus?

Yes >> Go To 4

No >> Refer to the No Response test procedure. Refer to the table of contents in this section.

https://truckmanualshub.com/

4. CHECK FOR ADDITIONAL COMMUNICATION RELATED DTCS

With the scan tool, select Network Diagnostics.

Is there more than one module with active DTCs “Logged Against” the Amplifier?

Yes >> Replace/update the Amplifier in accordance with the service information.
Perform BODY VERIFICATION TEST – VER 1. (Refer to 8 - ELECTRICAL/ELECTRONIC CONTROL MODULES - STANDARD PROCEDURE).

No >> Replace/update the module that set this DTC in accordance with the service information.
Perform the appropriate VERIFICATION TEST.

https://truckmanualshub.com/

U0195-LOST COMMUNICATION WITH SDARS

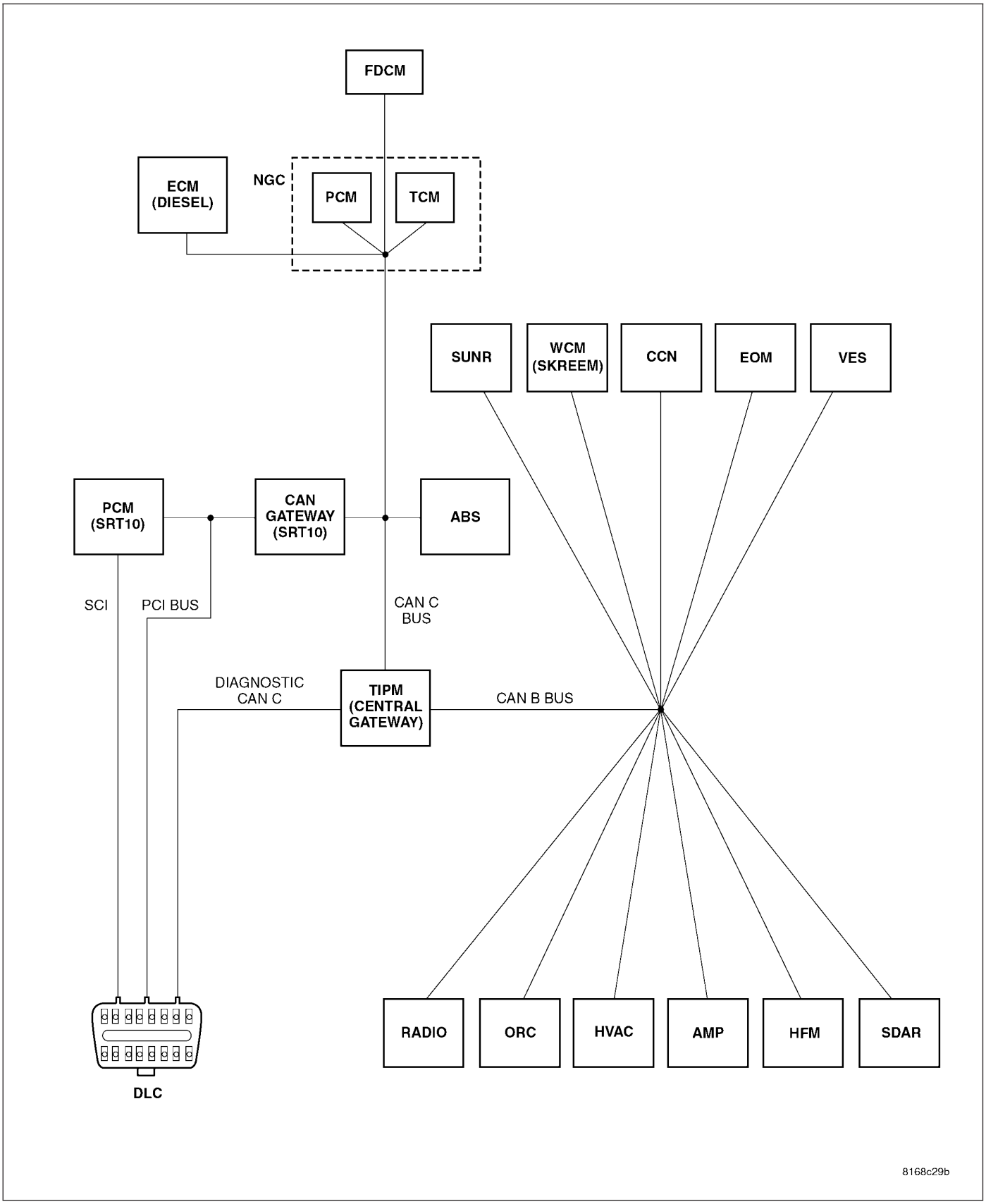

For a complete wiring diagram **Refer to Section 8W**.

https://truckmanualshub.com/

- **When Monitored:**
  - With the ignition on
  - Battery voltage between 10 and 16 volts
  - IOD fuse installed
  - TIPM is configured correctly
- **Set Condition:**
  Bus messages not received from the Satellite Receiver (SDAR) for approximately 2 to 5 seconds.

Possible Causes
CAN B BUS CIRCUITS OPEN OR SHORTED
DTCS RELATED TO BATTERY VOLTAGE, IGNITION, OR VIN MESSAGES
TIPM NOT CONFIGURED CORRECTLY
SATELLITE RECEIVER POWER AND GROUND
SATELLITE RECEIVER
MODULE THAT SET THIS DTC

Diagnostic Test

1. VERIFY DTC IS ACTIVE

NOTE: Ensure the IOD fuse is installed and battery voltage is between 10 and 16 volts before proceeding.
With the scan tool, read active DTCs.

Is this DTC active?

Yes >> Go To 2

No >> Refer to the Stored Lost Communication test procedure. Refer to the table of contents in this section.

2. CHECK FOR ANY OF THE FOLLOWING ACTIVE DTCS

With the scan tool, read active DTCs from all modules.

NOTE: Check for TIPM configuration, CAN B or C hardware electrical, VIN Missing/Mismatch, battery or ignition related DTCs.

Does the scan tool display any active DTCs to the conditions listed above?

Yes >> Diagnose and repair the DTC. Refer to the Index for a complete list of the symptoms.

No >> Go To 3

3. VERIFY THAT THE SATELLITE RECEIVER IS ACTIVE ON THE BUS

Turn the ignition on.
With the scan tool, select Network Diagnostics.
Verify that the SDARS is active on the bus.

Is the SDARS active on the bus?

Yes >> Go To 4

No >> Refer to the No Response test procedure. Refer to the table of contents in this section.

https://truckmanualshub.com/

4. CHECK FOR ADDITIONAL COMMUNICATION RELATED DTCS

With the scan tool, select Network Diagnostics.

Is there more than one module with active DTCs “Logged Against” the SDARS?

Yes >> Replace/update the Satellite Receiver in accordance with the service information.
Perform BODY VERIFICATION TEST – VER 1. (Refer to 8 - ELECTRICAL/ELECTRONIC CONTROL MODULES - STANDARD PROCEDURE).

No >> Replace/update the module that set the DTC in accordance with the service information
Perform the appropriate VERIFICATION TEST.

https://truckmanualshub.com/

U0196-LOST COMMUNICATION WITH VEHICLE ENTERTAINMENT CONTROL MODULE

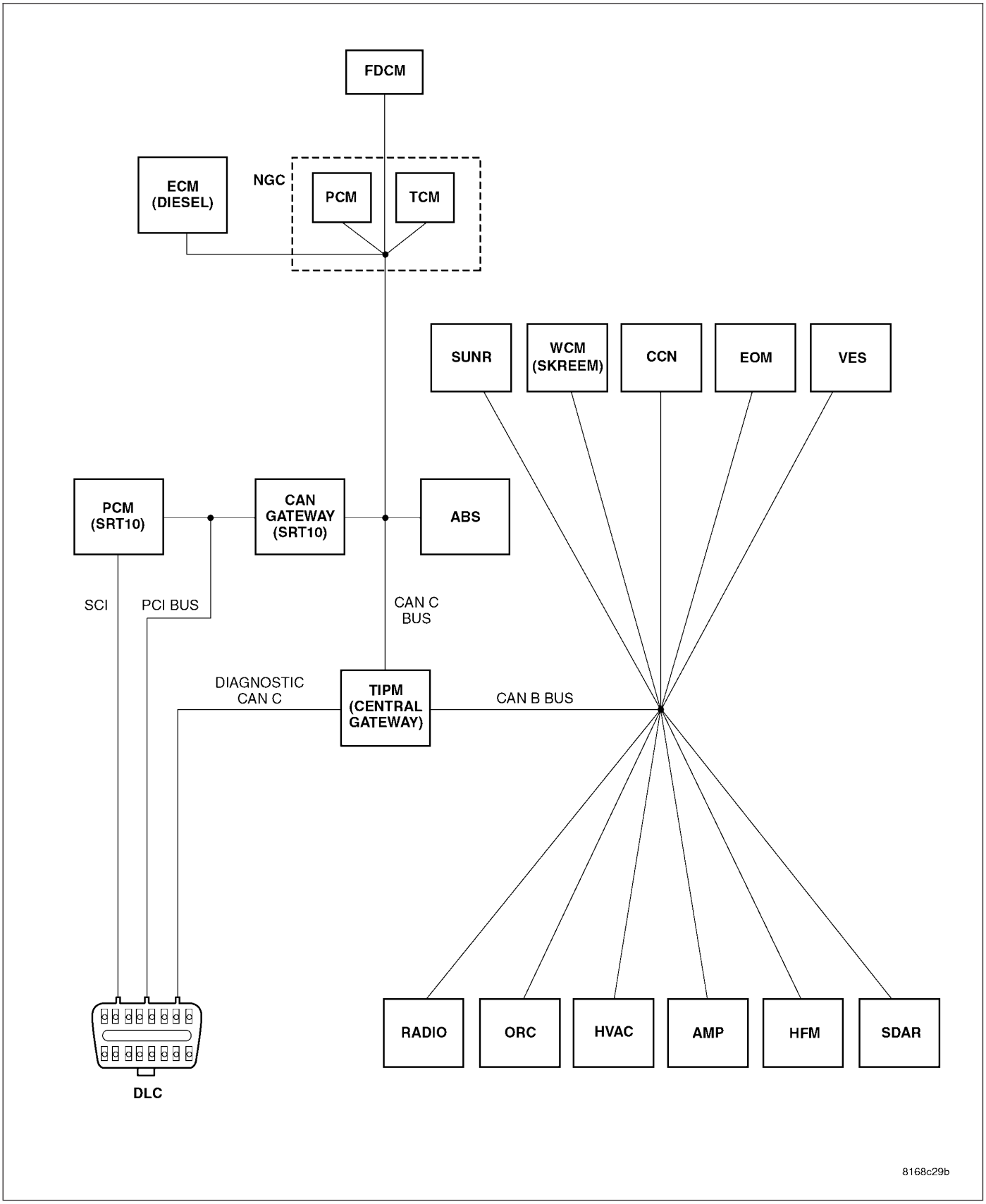

For a complete wiring diagram **Refer to Section 8W**.

https://truckmanualshub.com/

- **When Monitored:**
  - With the ignition on
  - Battery voltage between 10 and 16 volts
  - IOD fuse installed
  - TIPM is configured correctly
- **Set Condition:**
  Bus messages not received from the Vehicle Entertainment System (VES) for approximately 2 to 5 seconds.

Possible Causes
CAN B BUS CIRCUITS OPEN OR SHORTED
DTCS RELATED TO BATTERY VOLTAGE, IGNITION, OR VIN MESSAGES
TIPM NOT CONFIGURED CORRECTLY
MONITOR/DVD MEDIA SYSTEM
MONITOR/DVD MEDIA SYSTEM POWER AND GROUND
MODULE THAT SET THIS DTC

Diagnostic Test

1. VERIFY DTC IS ACTIVE

NOTE: Ensure the IOD fuse is installed and battery voltage is between 10 and 16 volts before proceeding.
With the scan tool, read active DTCs.

Is this DTC active?

Yes >> Go To 2

No >> Refer to the Stored Lost Communication test procedure. Refer to the table of contents in this section.

2. CHECK FOR ANY OF THE FOLLOWING ACTIVE DTCS

With the scan tool, read active DTCs from all modules.

NOTE: Check for TIPM configuration, CAN B or C hardware electrical, VIN Missing/Mismatch, battery or ignition related DTCs.

Does the scan tool display any active DTCs to the conditions listed above?

Yes >> Diagnose and repair the DTC. Refer to the Table of Contents for a complete list of the symptoms.

No >> Go To 3

3. VERIFY THAT THE VES IS ACTIVE ON THE BUS

Turn the ignition on.
With the scan tool, select Network Diagnostics.
Verify that the VES is active on the bus.

Is the VES active on the bus?

Yes >> Go To 4

No >> Refer to the No Response test procedure. Refer to the table of contents in this section.

https://truckmanualshub.com/

4. CHECK FOR ADDITIONAL COMMUNICATION RELATED DTCS

With the scan tool, select Network Diagnostics.

Is there more than one module with active DTCs “Logged Against” the VES?

Yes >> Replace/update the Monitor/DVD Media System in accordance with the service information.
Perform BODY VERIFICATION TEST – VER 1. (Refer to 8 - ELECTRICAL/ELECTRONIC CONTROL MODULES - STANDARD PROCEDURE).

No >> Replace/update the module that set this DTC in accordance with the service information.
Perform the appropriate VERIFICATION TEST.

https://truckmanualshub.com/

U0197-LOST COMMUNICATION WITH HANDS FREE PHONE MODULE

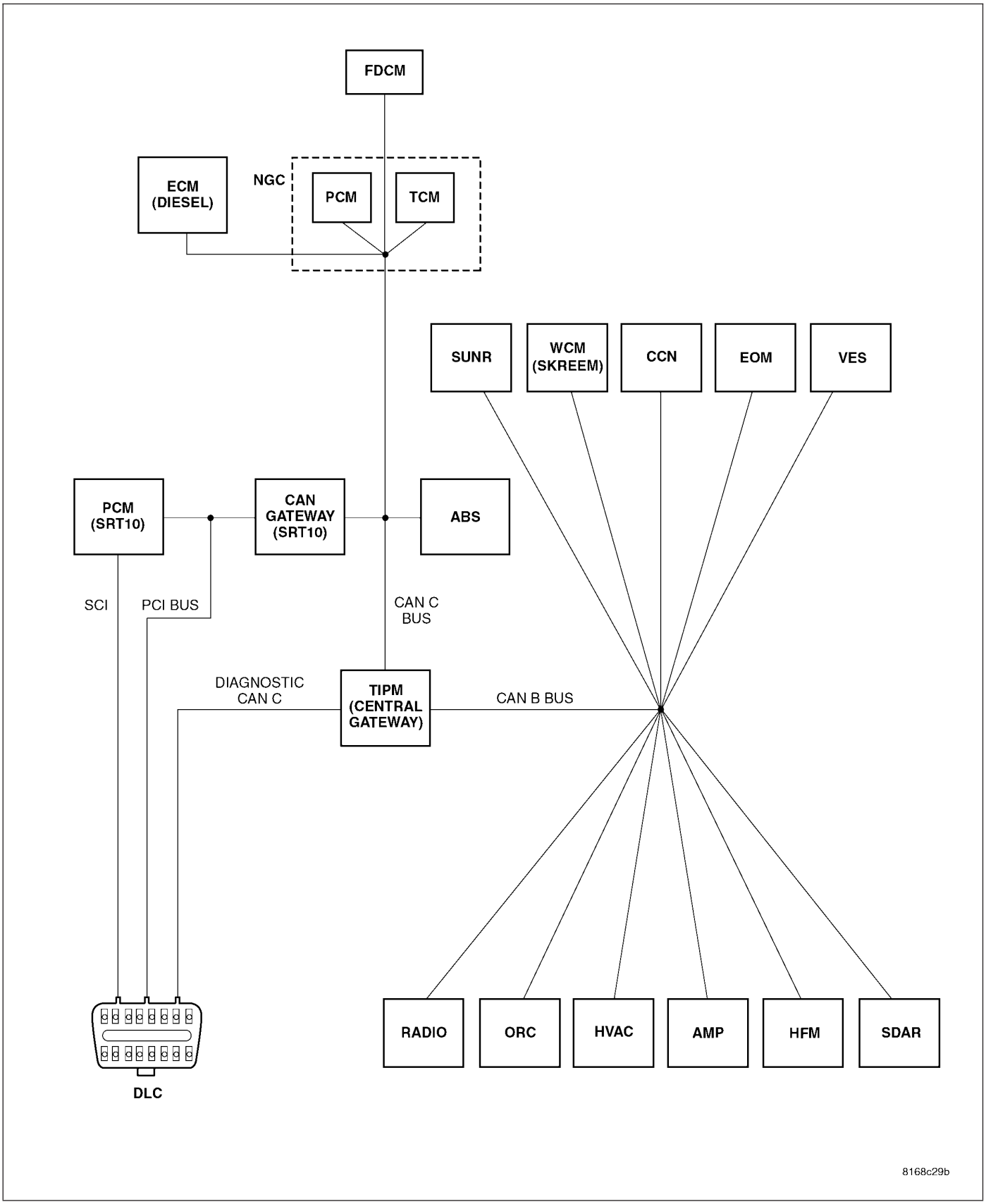

For a complete wiring diagram **Refer to Section 8W**.

https://truckmanualshub.com/

- **When Monitored:**
  - With the ignition on
  - Battery voltage between 10 and 16 volts
  - IOD fuse installed
  - TIPM is configured correctly
- **Set Condition:**
  Bus messages not received from the HFM for approximately 2 to 5 seconds.

Possible Causes
CAN B BUS CIRCUITS OPEN OR SHORTED
DTCS RELATED TO BATTERY VOLTAGE, IGNITION, OR VIN MESSAGES
TIPM NOT CONFIGURED CORRECTLY
HANDS FREE MODULE POWER AND GROUND
HANDS FREE MODULE
MODULE THAT SET THIS DTC

Diagnostic Test

1. VERIFY DTC IS ACTIVE

NOTE: Ensure the IOD fuse is installed and battery voltage is between 10 and 16 volts before proceeding.
With the scan tool, read active DTCs.

Is this DTC active?

Yes >> Go To 2

No >> Refer to the Stored Lost Communication test procedure. Refer to the table of contents in this section.

2. CHECK FOR ANY OF THE FOLLOWING ACTIVE DTCS

With the scan tool, read active DTCs from all modules.

NOTE: Check for TIPM configuration, CAN B or C hardware electrical, VIN Missing/Mismatch, battery or ignition related DTCs.

Does the scan tool display any active DTCs to the conditions listed above?

Yes >> Diagnose and repair the DTC. Refer to the Index for a complete list of the symptoms.

No >> Go To 3

3. VERIFY THAT THE HFM IS ACTIVE ON THE BUS

Turn the ignition on.
With the scan tool, select Network Diagnostics.
Verify that the HFM is active on the bus.

Is the HFM active on the bus?

Yes >> Go To 4

No >> Refer to the No Response test procedure. Refer to the table of contents in this section.

https://truckmanualshub.com/

4. CHECK FOR ADDITIONAL COMMUNICATION RELATED DTCS

With the scan tool, select Network Diagnostics.

Is there more than one module with active DTCs “Logged Against” the HFM?

Yes >> Replace/update the Hands Free Module in accordance with the service information.
Perform BODY VERIFICATION TEST – VER 1. (Refer to 8 - ELECTRICAL/ELECTRONIC CONTROL MODULES - STANDARD PROCEDURE).

No >> Replace/update the module that set this DTC in accordance with the service information.
Perform the appropriate VERIFICATION TEST.

https://truckmanualshub.com/

U1108-ADDITIONAL CAN B ECU DETECTED

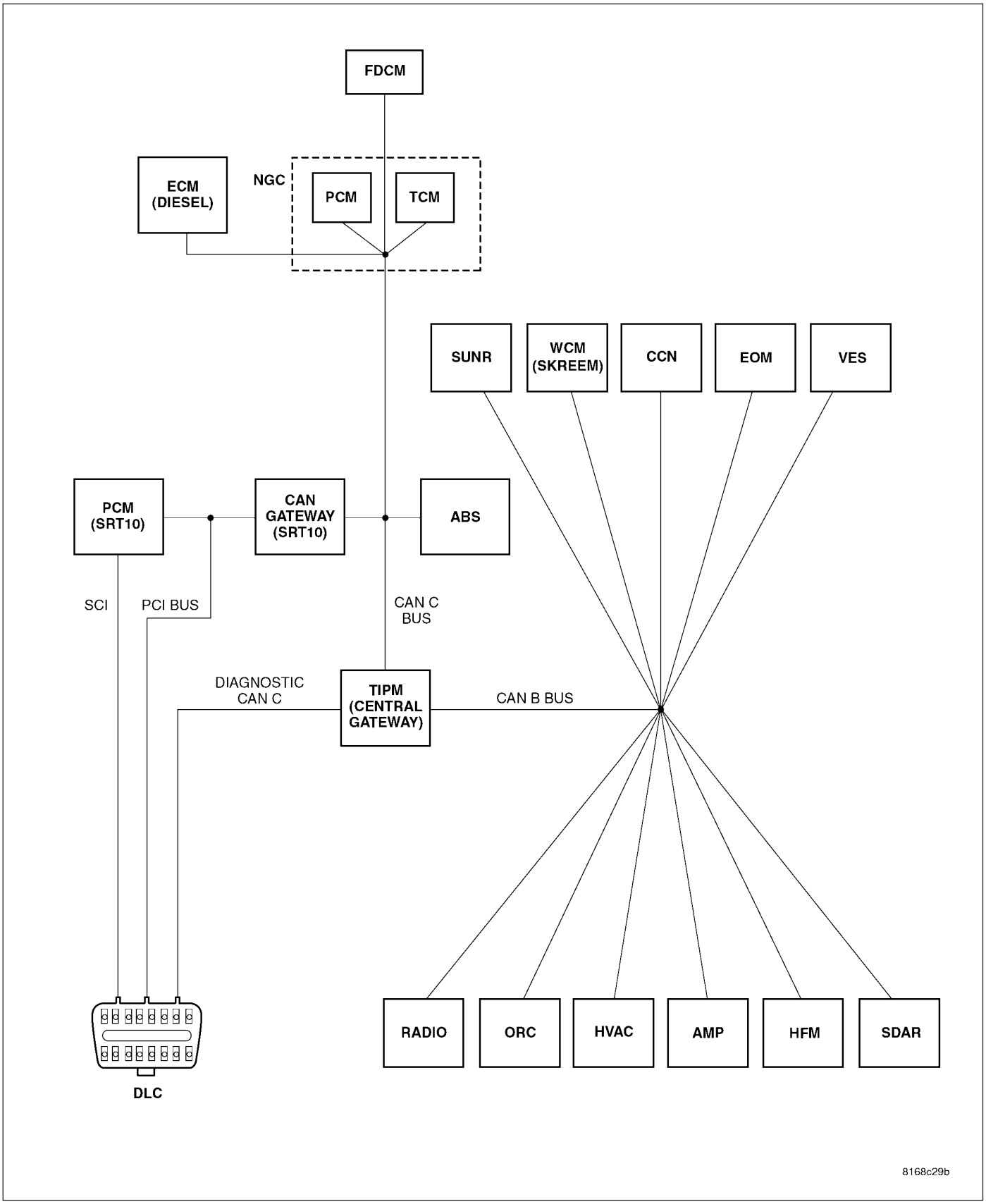

For a complete wiring diagram **Refer to Section 8W**.

https://truckmanualshub.com/

- **When Monitored:**
  Continuously.
- **Set Condition:**
  The Totally Integrated Power Module (TIPM) detects an additional CAN B module and requires a reconfiguration.

Possible Causes
ADDITIONAL MODULE ADDED/REMOVED FROM THE CAN B BUS NETWORK

Diagnostic Test

1. RECONFIGURE THE TOTALLY INTEGRATED POWER MODULE

Turn the ignition on.

With the scan tool, select network view and press the gateway button. This will list the CAN modules on the vehicle. Read and record the listed modules.

With the scan tool, select TIPM, miscellaneous functions then add/remove ECUs.

With the scan tool, add or remove the module that was not configured in the TIPM.

With the scan tool, erase DTC's.

Cycle the ignition from on to off 3 times and read the active TIPM DTC's.

Does the scan tool display this DTC as active?

Yes >> Retest system and attempt to reconfigure the TIPM.
Perform BODY VERIFICATION TEST – VER 1. (Refer to 8 - ELECTRICAL/ELECTRONIC CONTROL MODULES - STANDARD PROCEDURE).

No >> Repair is complete.
Perform BODY VERIFICATION TEST – VER 1. (Refer to 8 - ELECTRICAL/ELECTRONIC CONTROL MODULES - STANDARD PROCEDURE).

https://truckmanualshub.com/

*STORED LOST COMMUNICATION DTCS

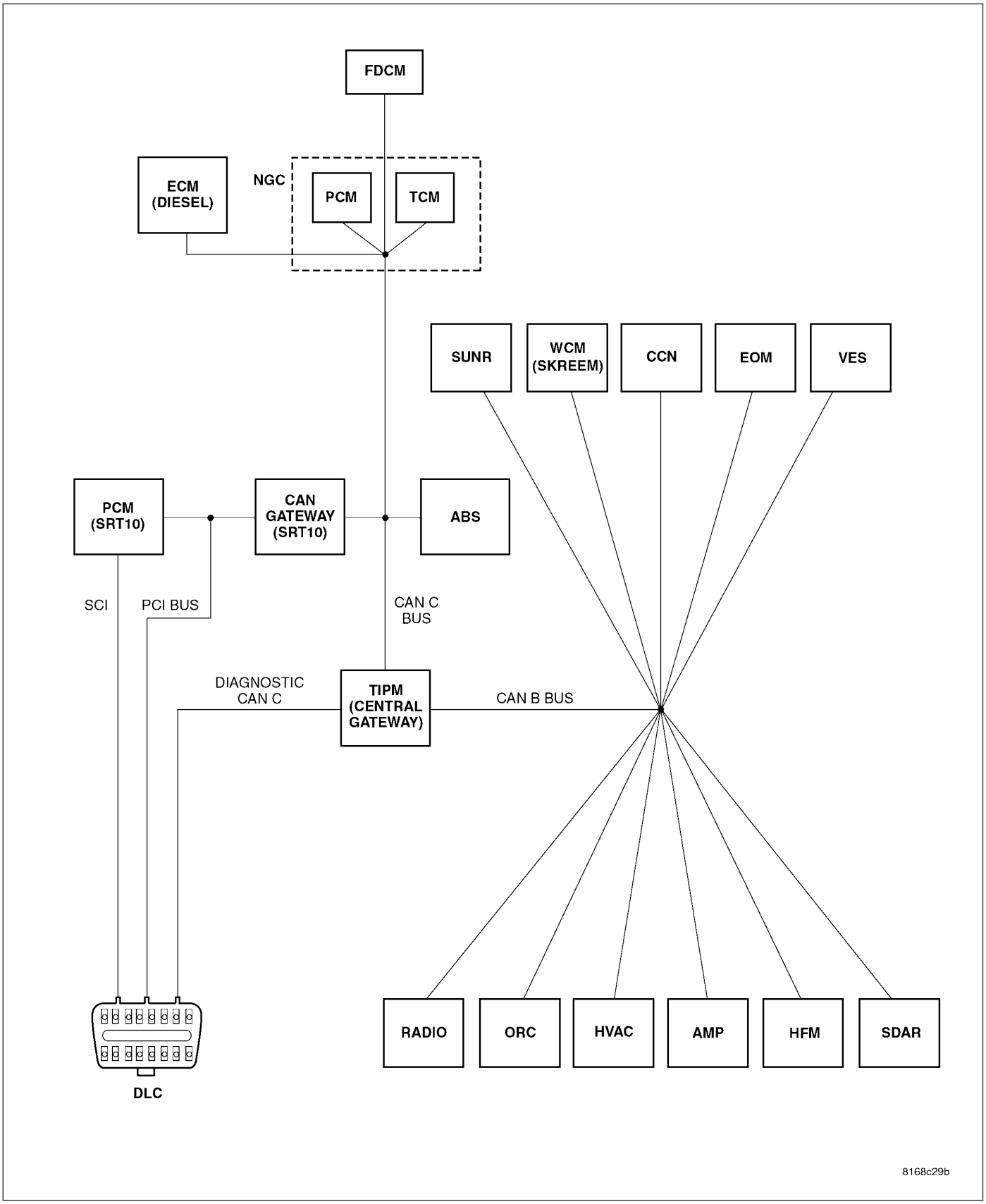

For a complete wiring diagram **Refer to Section 8W**.

https://truckmanualshub.com/

- **When Monitored:**
  - With the ignition on
  - Battery voltage between 10 and 16 volts
  - IOD fuse installed
  - TIPM is configured correctly
- **Set Condition:**
  Bus messages not received for approximately 2 to 5 seconds.

Possible Causes
CAN B BUS CIRCUITS OPEN OR SHORTED
DTCS RELATED TO BATTERY VOLTAGE, IGNITION, OR VIN MESSAGES
TIPM NOT CONFIGURED CORRECTLY
POWER OR GROUND FROM THE REPORTING MODULE
MODULE THAT SET THIS DTC
PREVIOUS SERVICE PERFORMED WITHIN THE LAST 100 KEY CYCLES (FUSE/RELAYS REMOVED, WIRING SERVICE, BATTERY DISCONNECT)
LOW BATTERY/JUMP START CONDITION
IOD FUSE WAS REMOVED DURING SHIPPING
CHECK FOR RELATED TSBS

Diagnostic Test

1. VERIFY DTC IS STORED

NOTE: Stored faults may indicate a customer perceived intermittent condition.

NOTE: Ensure the IOD fuse is installed and battery voltage is between 10 and 16 volts before proceeding.
With the scan tool, read stored DTCs.

Is this DTC stored?

Yes >> Go To 2

No >> Diagnose the active DTC. Refer to the Index for a list of the symptoms.

2. CHECK THE ENVIRONMENTAL DATA

With the scan tool, read the loss of communication environmental data.

Does the loss of communication environmental odometer data match up to any of the previous service procedures listed in the possible causes or are their any stored CAN B or C hardware electrical, battery, ignition voltage, VIN missing/mismatch, TIPM configuration DTCs present with matching environmental data?

Yes >> These DTCs may have been the result of other service procedures performed. Clear DTCs.

No >> Go To 3

3. VERIFY INTERMITTENT LOST COMMUNICATION DTC – WIRING CONCERNS

Turn the ignition on.

With the scan tool, select Network Diagnostics.

Is there more than one ECU with stored DTCs “Logged Against” the module and one or more lost communication DTCs stored in the offending module?

Yes >> Verify if the vehicle was recently in for this type of service. Otherwise, visually inspect the related wiring harness for chafed, pierced, pinched, and partially broken wires and the wiring harness connectors for broken, bent, pushed out, and corroded terminals. Repair as necessary.

No >> Go To 4

https://truckmanualshub.com/

4. VERIFY INTERMITTENT LOST COMMUNICATION DTC – OFFENDING MODULE

Turn the ignition on.

With the scan tool, select Network Diagnostics.

Is there more than one ECU with stored DTCs "Logged Against" the module and NO lost communication DTCs stored in the offending module?

Yes >> Check for TSB related to this offending module.

No >> Go To 5

5. VERIFY INTERMITTENT LOST COMMUNICATION DTC – REPORTING MODULE

Turn the ignition on.

With the scan tool, select Network Diagnostics.

Is there ONLY ONE ECU with stored DTCs "Logged Against" the module?

Yes >> Check for TSB related to the module that set this DTC.

No >> Verify if the vehicle was recently in for this type of service. Otherwise, visually inspect the related wiring harness for chafed, pierced, pinched, and partially broken wires and the wiring harness connectors for broken, bent, pushed out, and corroded terminals. Repair as necessary.

https://truckmanualshub.com/

*CAN C DIAGNOSTIC (+) AND/OR CAN C DIAGNOSTIC (-) CIRCUITS HIGH

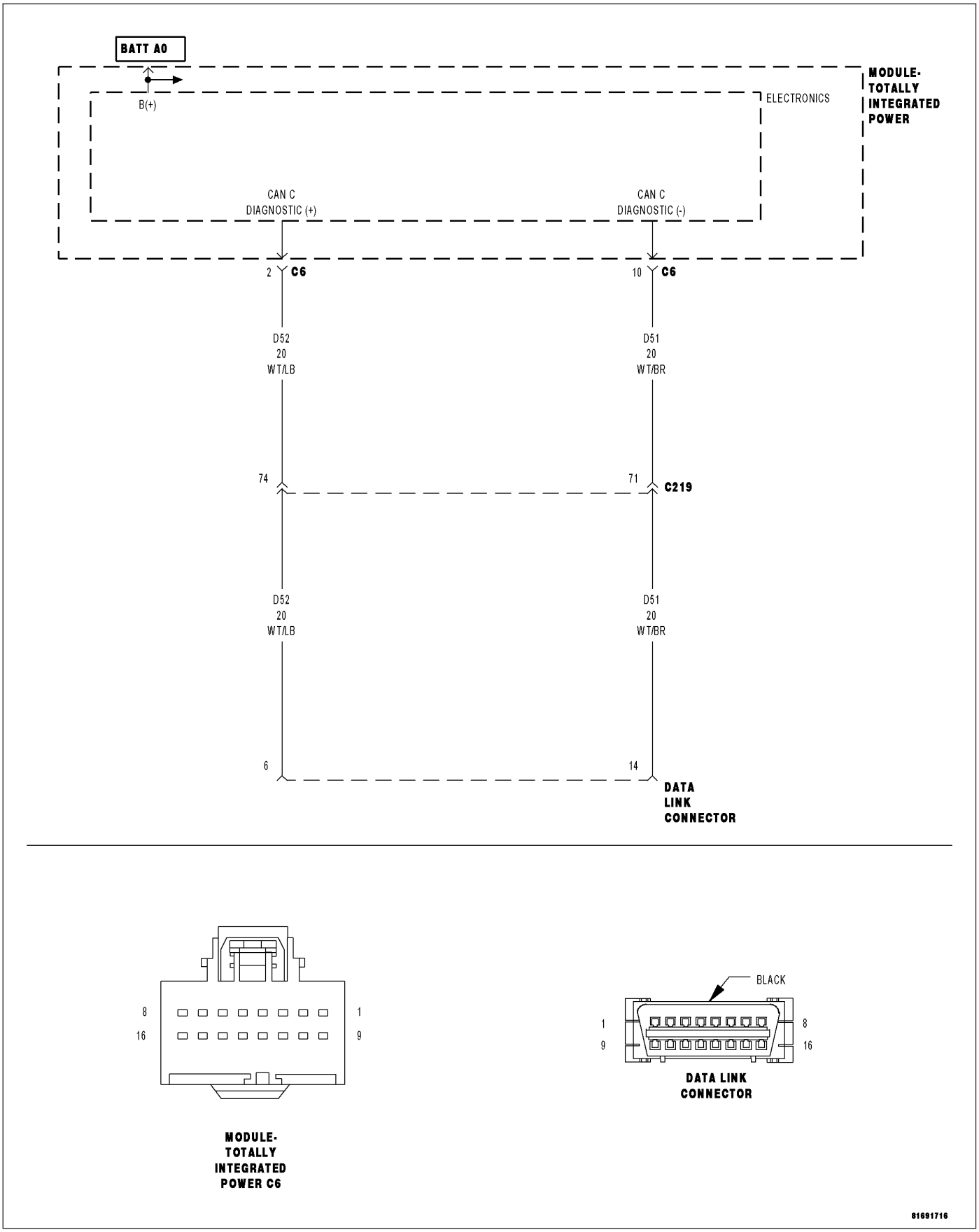

For a complete wiring diagram **Refer to Section 8W**.

https://truckmanualshub.com/

- **When Monitored:**
  When the scan tool queries the TIPM.
- **Set Condition:**
  The scan tool has detected a shorted high condition on either or both CAN C Diagnostic circuits.

Possible Causes
(D52) CAN C DIAGNOSTIC (+) CIRCUIT SHORTED TO VOLTAGE
(D51) CAN C DIAGNOSTIC (-) CIRCUIT SHORTED TO VOLTAGE
TOTALLY INTEGRATED POWER MODULE

Diagnostic Test

1. CHECK THE STATUS OF THE ERROR MESSAGE

NOTE: Ensure the vehicle being tested is a CAN BUS VEHICLE. If not, false error messages may be displayed.

NOTE: Ensure the scan tool is updated to the latest software.

With the scan tool, record the error message.

Disconnect the scan tool from the DLC.

Cycle the ignition from on to off 3 times.

Turn the ignition on.

Does the scan tool display this same error message?

Yes >> Go To 2

No >> The conditions that caused this error message to set are not present at this time. Using the wiring diagram/schematic as a guide, inspect the wiring and connectors.

2. CAN C DIAGNOSTIC CIRCUITS SHORTED TO VOLTAGE

Turn the ignition off.

Disconnect the Totally Integrated Power Module C6 harness connector.

Disconnect the scan tool from the DLC.

Turn the ignition on.

Measure the voltage of the CAN C Diagnostic circuits.

Is the voltage above 6.0 volts for either circuit?

Yes >> Repair the CAN C Diagnostic circuits for a short to voltage. Perform BODY VERIFICATION TEST – VER 1. (Refer to 8 - ELECTRICAL/ELECTRONIC CONTROL MODULES - STANDARD PROCEDURE).

No >> Inspect the wiring and connectors for damage or shorted circuits. If ok, replace the Totally Integrated Power Module in accordance with the service information.

Perform BODY VERIFICATION TEST – VER 1. (Refer to 8 - ELECTRICAL/ELECTRONIC CONTROL MODULES - STANDARD PROCEDURE).

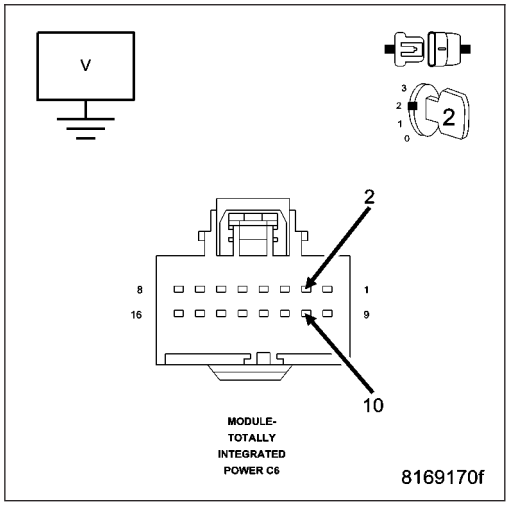

https://truckmanualshub.com/

*CAN C DIAGNOSTIC (+) SHORTED TO CAN C DIAGNOSTIC (-)

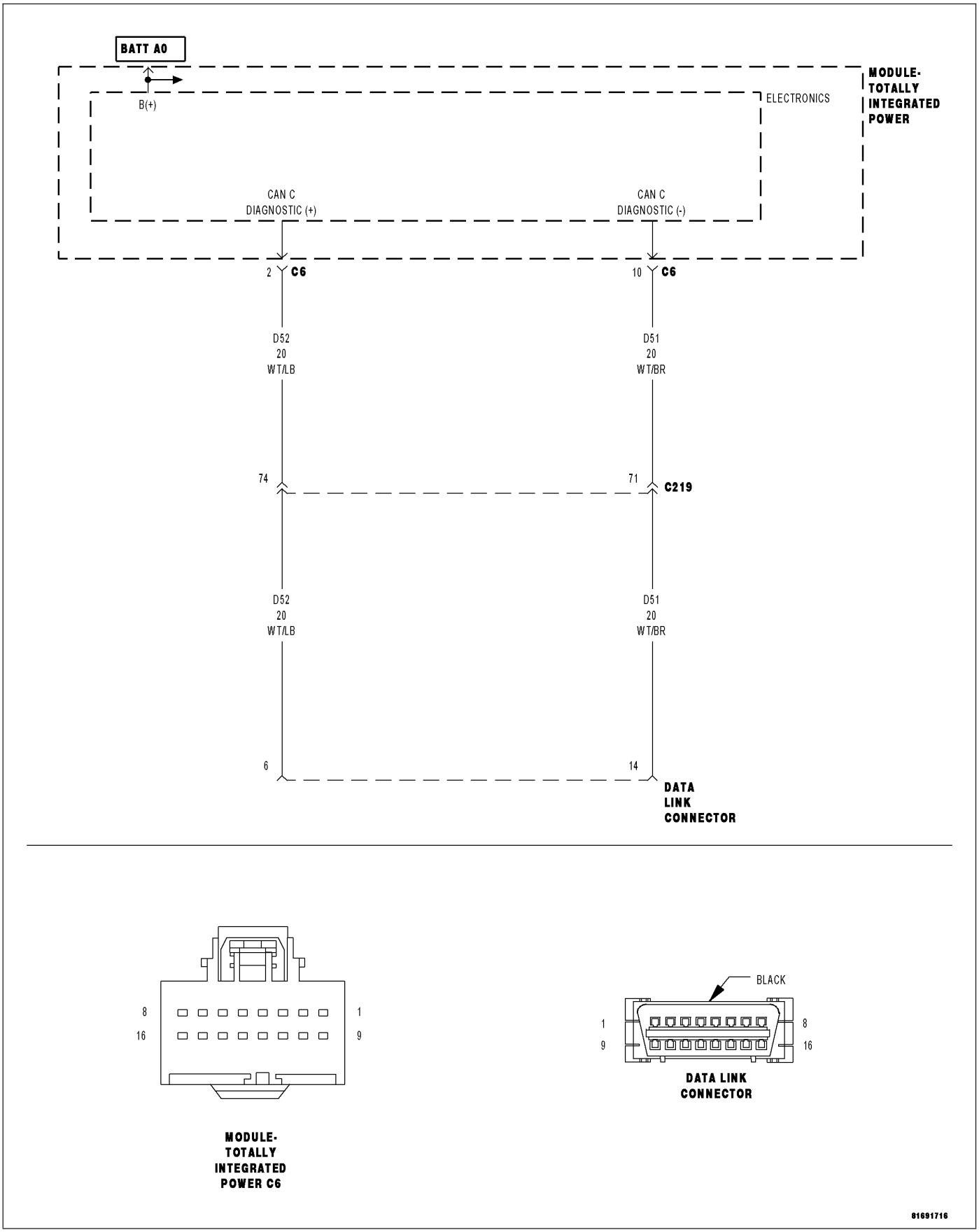

For a complete wiring diagram **Refer to Section 8W**.

https://truckmanualshub.com/

- **When Monitored:**
  When the scan tool queries the TIPM.
- **Set Condition:**
  The scan tool has detected a shorted together condition on the CAN C Diagnostic circuits.

Possible Causes
(D52) CAN C DIAGNOSTIC (+) CIRCUIT SHORTED TO (D51) CAN C DIAGNOSTIC (-) CIRCUIT
TOTALLY INTEGRATED POWER MODULE

Diagnostic Test

1. CHECK THE STATUS OF THE ERROR MESSAGE

NOTE: Ensure the vehicle being tested is a CAN BUS VEHICLE. If not, false error messages may be displayed.

NOTE: Ensure the scan tool is updated to the latest software.

With the scan tool, record the error message.

Disconnect the scan tool from the DLC.

Cycle the ignition from on to off 3 times.

Turn the ignition on.

Does the scan tool display this same error message?

Yes >> Go To 2

No >> The conditions that caused this error message to set are not present at this time. Using the wiring diagram/schematic as a guide, inspect the wiring and connectors.

2. (D52) CAN C DIAGNOSTIC (+) CIRCUIT SHORTED TO (D51) CAN C DIAGNOSTIC (-) CIRCUIT

Turn the ignition off.

Disconnect the Totally Integrated Power Module C6 harness connector.

Disconnect the scan tool from the DLC.

Measure the resistance between the (D52) CAN C Diagnostic (+) circuit and the (D51) CAN C Diagnostic (-) circuit.

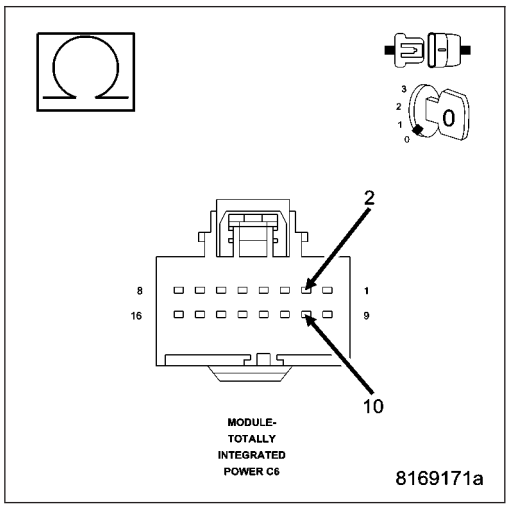

Is the resistance below 100.0 ohms?

Yes >> Repair the (D52) CAN C Diagnostic (+) circuit for a short to the (D51) CAN C Diagnostic (-) circuit.

Perform BODY VERIFICATION TEST – VER 1. (Refer to 8 - ELECTRICAL/ELECTRONIC CONTROL MODULES - STANDARD PROCEDURE).

No >> Inspect the wiring and connectors for damage or shorted circuits. If ok, replace the Totally Integrated Power Module in accordance with the service information.

Perform BODY VERIFICATION TEST – VER 1. (Refer to 8 - ELECTRICAL/ELECTRONIC CONTROL MODULES - STANDARD PROCEDURE).

https://truckmanualshub.com/

*CAN C DIAGNOSTIC (+) CIRCUIT LOW

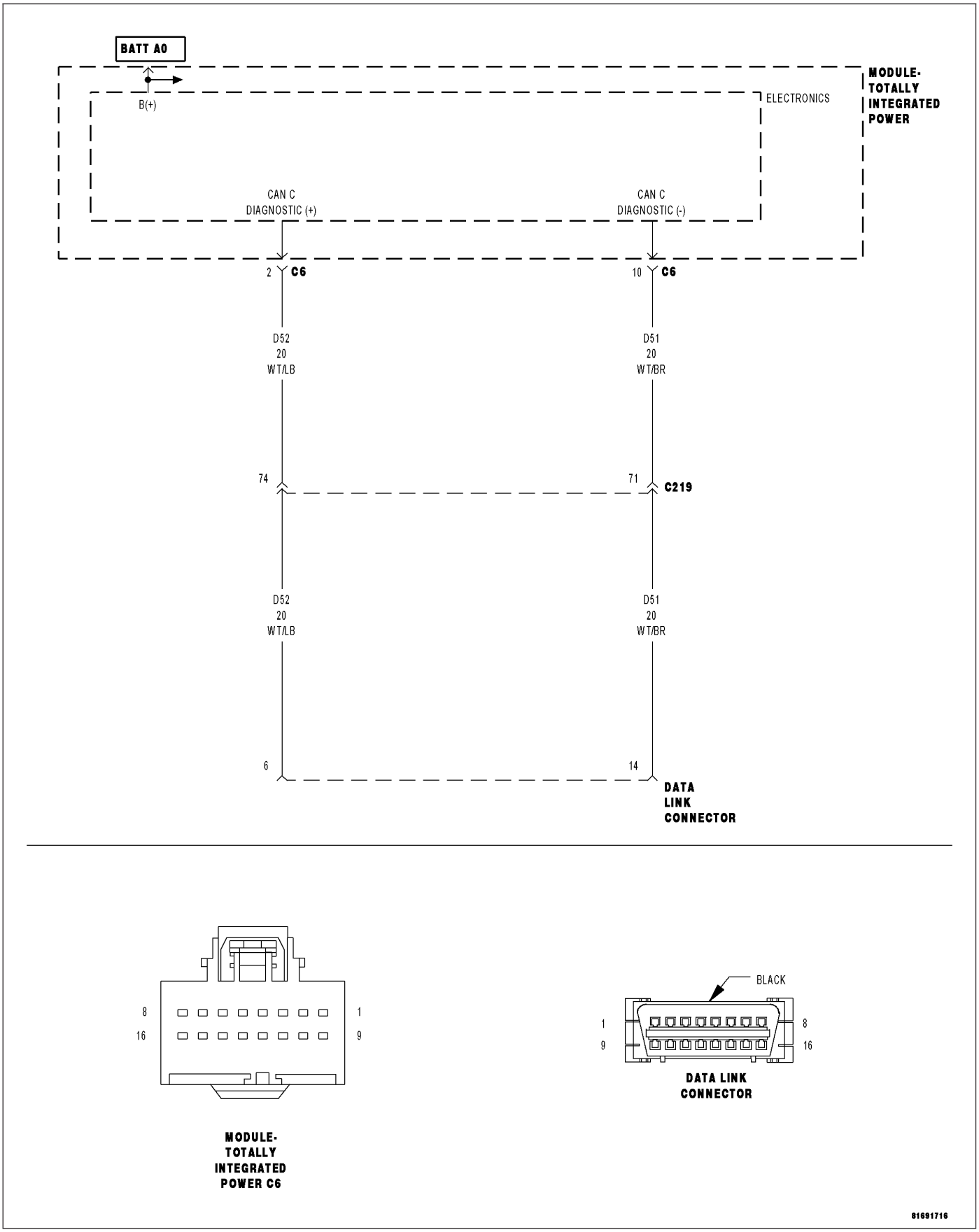

For a complete wiring diagram **Refer to Section 8W**.

https://truckmanualshub.com/

- **When Monitored:**
  When the scan tool queries the TIPM.
- **Set Condition:**
  The scan tool has detected a shorted low condition on the (D52) CAN C Diagnostic (+) circuit.

Possible Causes
(D52) CAN C DIAGNOSTIC (+) CIRCUIT SHORTED TO GROUND
TOTALLY INTEGRATED POWER MODULE

Diagnostic Test

1. CHECK THE STATUS OF THE ERROR MESSAGE

NOTE: Ensure the vehicle being tested is a CAN BUS VEHICLE. If not, false error messages may be displayed.

NOTE: Ensure the scan tool is updated to the latest software.

With the scan tool, record the error message.

Disconnect the scan tool from the DLC.

Cycle the ignition from on to off 3 times.

Turn the ignition on.

Does the scan tool display this same error message?

Yes >> Go To 2

No >> The conditions that caused this error message to set are not present at this time. Using the wiring diagram/schematic as a guide, inspect the wiring and connectors.

2. (D52) CAN C DIAGNOSTIC (+) CIRCUIT SHORTED TO GROUND

Turn the ignition off.

Disconnect the Totally Integrated Power Module C6 harness connector.

Disconnect the scan tool from the DLC.

Measure the resistance between ground and the (D52) CAN C Diagnostic (+) circuit.

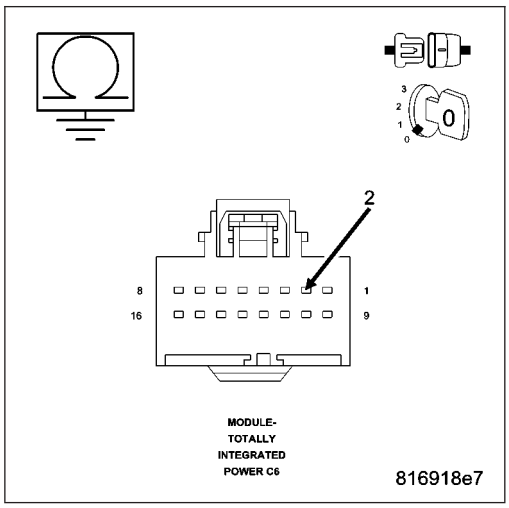

Is the resistance below 100.0 ohms?

Yes >> Repair the (D52) CAN C Diagnostic (+) circuit for a short to ground.

Perform BODY VERIFICATION TEST – VER 1. (Refer to 8 - ELECTRICAL/ELECTRONIC CONTROL MODULES - STANDARD PROCEDURE).

No >> Inspect the wiring and connectors for damage or shorted circuits. If ok, replace the Totally Integrated Power Module in accordance with the service information.

Perform BODY VERIFICATION TEST – VER 1. (Refer to 8 - ELECTRICAL/ELECTRONIC CONTROL MODULES - STANDARD PROCEDURE).

https://truckmanualshub.com/

*CAN C DIAGNOSTIC (-) CIRCUIT LOW

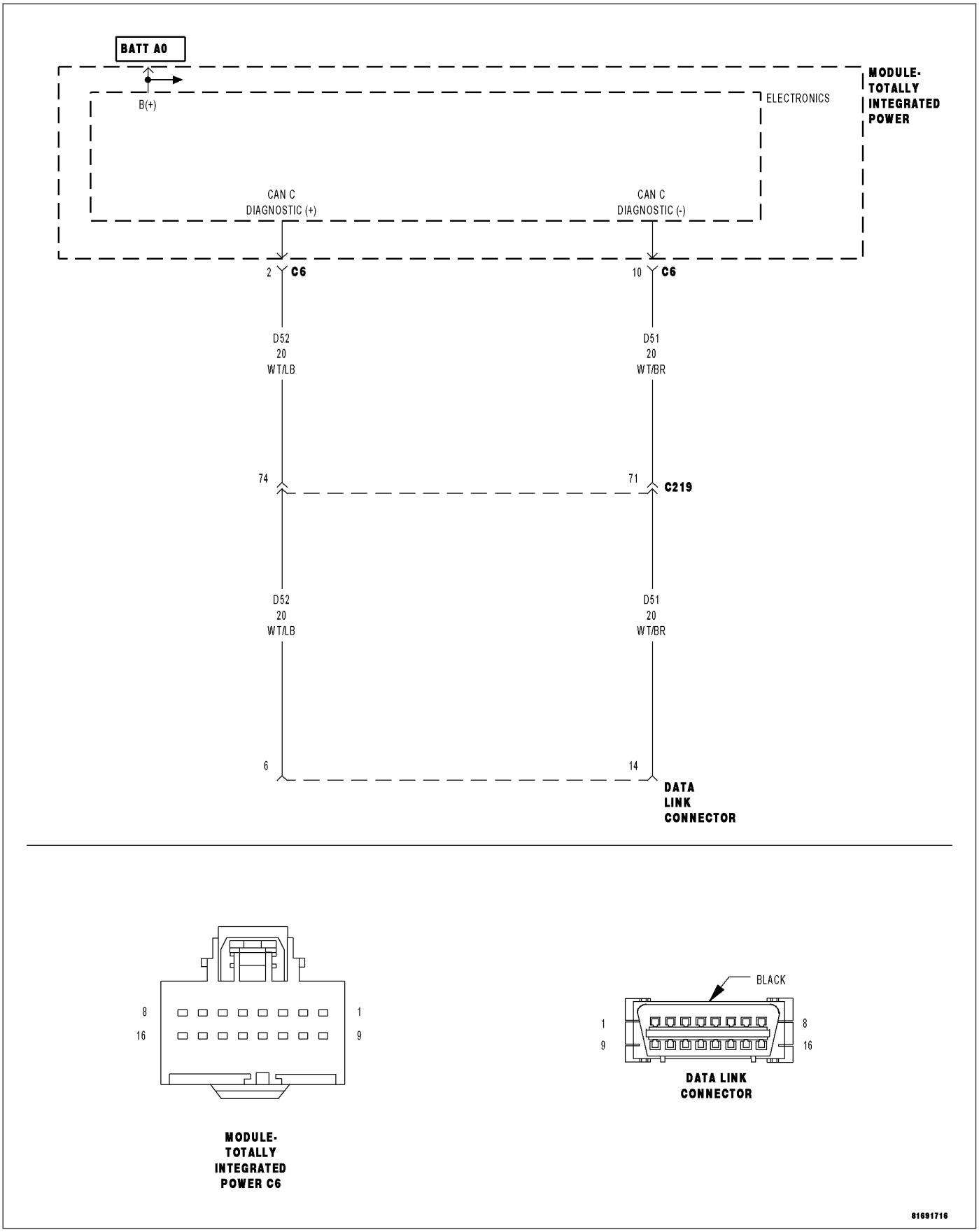

For a complete wiring diagram **Refer to Section 8W**.

https://truckmanualshub.com/

- **When Monitored:**
  When the scan tool queries the TIPM.
- **Set Condition:**
  The scan tool has detected a shorted low condition on the (D51) CAN C Diagnostic (-) circuit.

Possible Causes
(D51) CAN C DIAGNOSTIC (-) CIRCUIT SHORTED TO GROUND
TOTALLY INTEGRATED POWER MODULE

Diagnostic Test

1. CHECK THE STATUS OF THE ERROR MESSAGE

NOTE: Ensure the vehicle being tested is a CAN BUS VEHICLE. If not, false error messages may be displayed.

NOTE: Ensure the scan tool is updated to the latest software.

With the scan tool, record the error message.

Disconnect the scan tool from the DLC.

Cycle the ignition from on to off 3 times.

Turn the ignition on.

Does the scan tool display this same error message?

Yes >> Go To 2

No >> The conditions that caused this error message to set are not present at this time. Using the wiring diagram/schematic as a guide, inspect the wiring and connectors.

2. (D51) CAN C DIAGNOSTIC (-) CIRCUIT SHORTED TO GROUND

Turn the ignition off.

Disconnect the Totally Integrated Power Module C6 harness connector.

Disconnect the scan tool from the DLC.

Measure the resistance between ground and the (D51) CAN C Diagnostic (-) circuit.

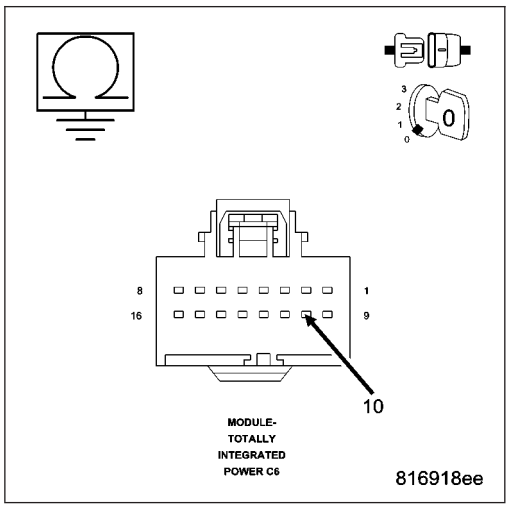

Is the resistance below 100.0 ohms?

Yes >> Repair the (D51) CAN C Diagnostic (-) circuit for a short to ground.
Perform BODY VERIFICATION TEST – VER 1. (Refer to 8 - ELECTRICAL/ELECTRONIC CONTROL MODULES - STANDARD PROCEDURE).

No >> Inspect the wiring and connectors for damage or shorted circuits. If ok, replace the Totally Integrated Power Module in accordance with the service information.
Perform BODY VERIFICATION TEST – VER 1. (Refer to 8 - ELECTRICAL/ELECTRONIC CONTROL MODULES - STANDARD PROCEDURE).

https://truckmanualshub.com/

*CAN C DIAGNOSTIC (+) CIRCUIT OPEN

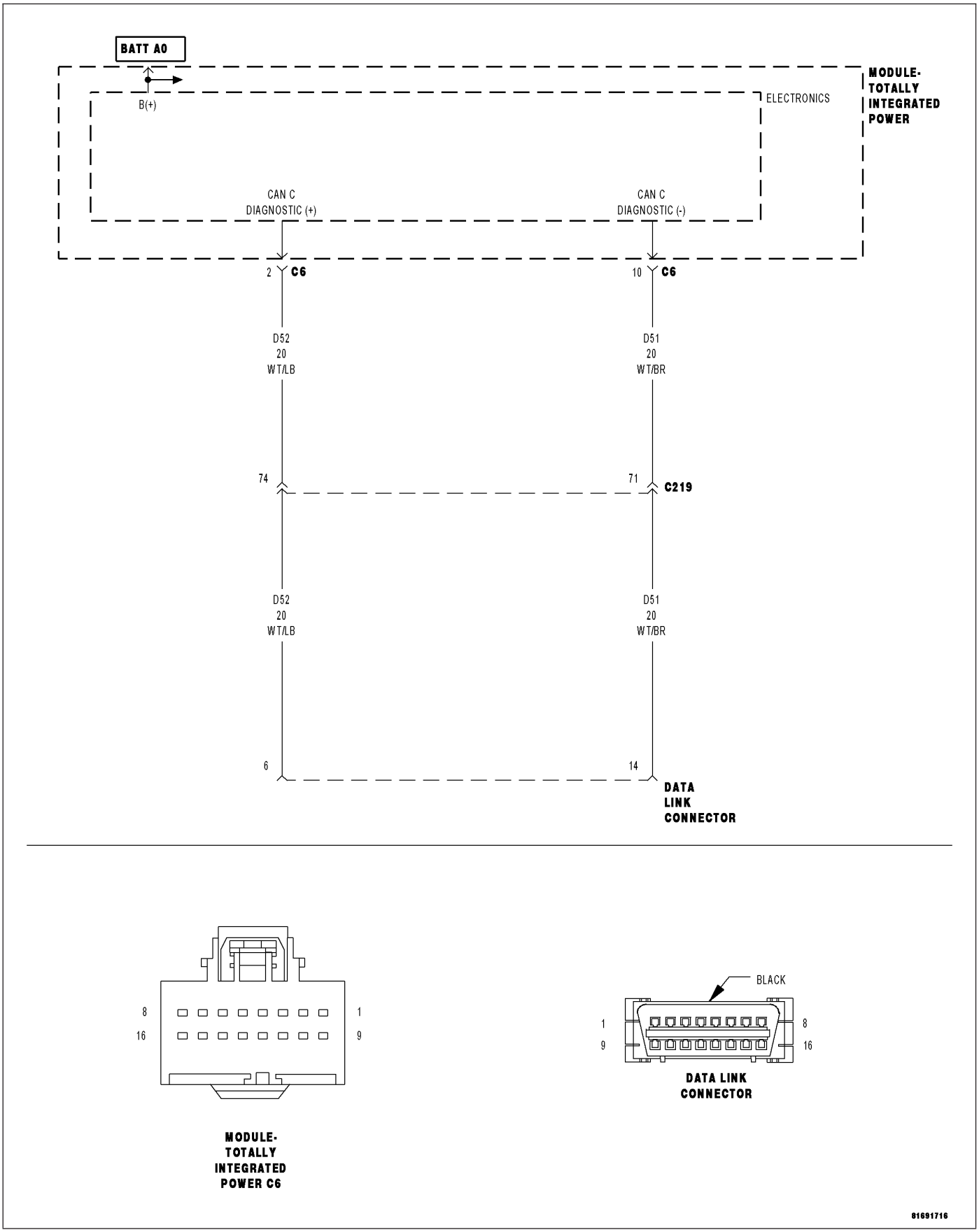

For a complete wiring diagram **Refer to Section 8W**.

https://truckmanualshub.com/

- **When Monitored:**
  When the scan tool queries the TIPM.
- **Set Condition:**
  The scan tool has detected an open condition on the (D52) CAN C Diagnostic (+) circuit.

Possible Causes
(D52) CAN C DIAGNOSTIC (+) CIRCUIT OPEN
TOTALLY INTEGRATED POWER MODULE

Diagnostic Test

1. CHECK THE STATUS OF THE ERROR MESSAGE

NOTE: Ensure the vehicle being tested is a CAN BUS VEHICLE. If not, false error messages may be displayed.

NOTE: Ensure the scan tool is updated to the latest software.

With the scan tool, record the error message.

Disconnect the scan tool from the DLC.

Cycle the ignition from on to off 3 times.

Turn the ignition on.

Does the scan tool display this same error message?

Yes >> Go To 2

No >> The conditions that caused this error message to set are not present at this time. Using the wiring diagram/schematic as a guide, inspect the wiring and connectors.

2. (D52) CAN C DIAGNOSTIC (+) CIRCUIT OPEN

Turn the ignition off.

Disconnect the Totally Integrated Power Module C6 harness connector.

Disconnect the scan tool from the DLC.

Measure the resistance of the (D52) CAN C Diagnostic (+) circuit between the TIPM connector and the DLC.

Is the resistance below 5.0 ohms?

Yes >> Inspect the wiring and connectors for damage or shorted circuits. If ok, replace the Totally Integrated Power Module in accordance with the service information.

Perform BODY VERIFICATION TEST – VER 1. (Refer to 8 - ELECTRICAL/ELECTRONIC CONTROL MODULES - STANDARD PROCEDURE).

No >> Repair the (D52) CAN C Diagnostic (+) circuit for an open.

Perform BODY VERIFICATION TEST – VER 1. (Refer to 8 - ELECTRICAL/ELECTRONIC CONTROL MODULES - STANDARD PROCEDURE).

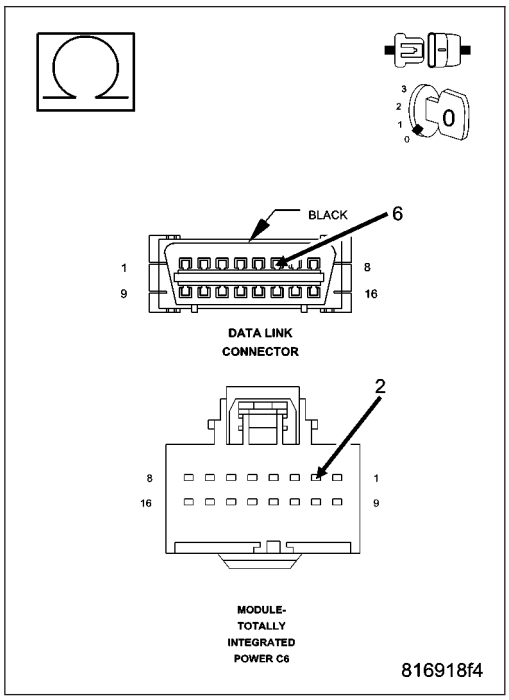

https://truckmanualshub.com/

*CAN C DIAGNOSTIC (-) CIRCUIT OPEN

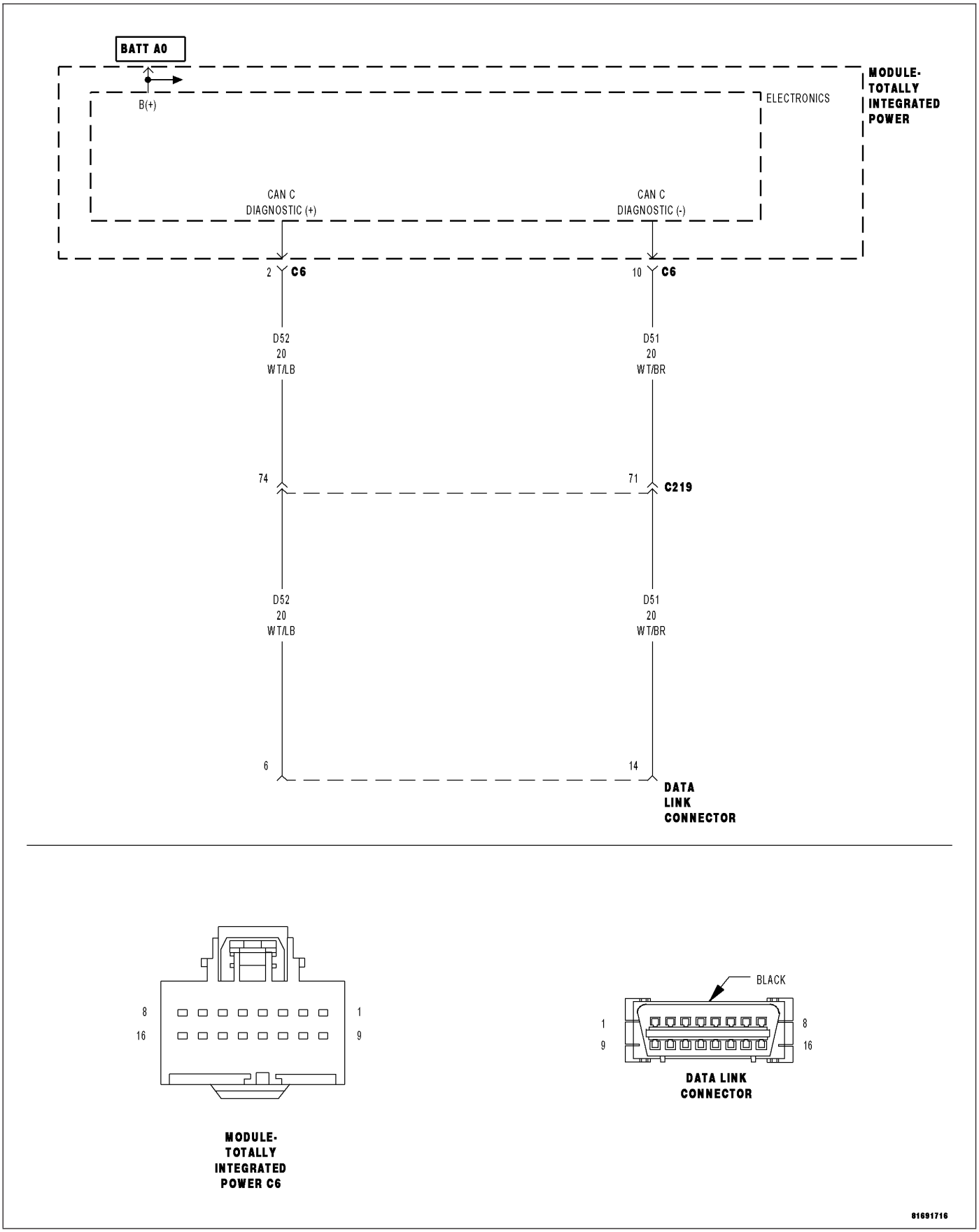

For a complete wiring diagram **Refer to Section 8W**.

https://truckmanualshub.com/

- **When Monitored:**
  When the scan tool queries the TIPM.
- **Set Condition:**
  The scan tool has detected an open condition on the (D51) CAN C Diagnostic (-) circuit.

Possible Causes
(D51) CAN C DIAGNOSTIC (-) CIRCUIT OPEN
TOTALLY INTEGRATED POWER MODULE

Diagnostic Test

1. CHECK THE STATUS OF THE ERROR MESSAGE

NOTE: Ensure the vehicle being tested is a CAN BUS VEHICLE. If not, false error messages may be displayed.

NOTE: Ensure the scan tool is updated to the latest software.

With the scan tool, record the error message.

Disconnect the scan tool from the DLC.

Cycle the ignition from on to off 3 times.

Turn the ignition on.

Does the scan tool display this same error message?

Yes >> Go To 2

No >> The conditions that caused this error message to set are not present at this time. Using the wiring diagram/schematic as a guide, inspect the wiring and connectors.

2. (D51) CAN C DIAGNOSTIC (-) CIRCUIT OPEN

Turn the ignition off.

Disconnect the Totally Integrated Power Module C6 harness connector.

Disconnect the scan tool from the DLC.

Measure the resistance of the (D51) CAN C Diagnostic (-) circuit between the TIPM connector and the DLC.

Is the resistance below 5.0 ohms?

Yes >> Inspect the wiring and connectors for damage or shorted circuits. If ok, replace the Totally Integrated Power Module in accordance with the service information.

Perform BODY VERIFICATION TEST – VER 1. (Refer to 8 - ELECTRICAL/ELECTRONIC CONTROL MODULES - STANDARD PROCEDURE).

No >> Repair the (D51) CAN C Diagnostic (-) circuit for an open.

Perform BODY VERIFICATION TEST – VER 1. (Refer to 8 - ELECTRICAL/ELECTRONIC CONTROL MODULES - STANDARD PROCEDURE).

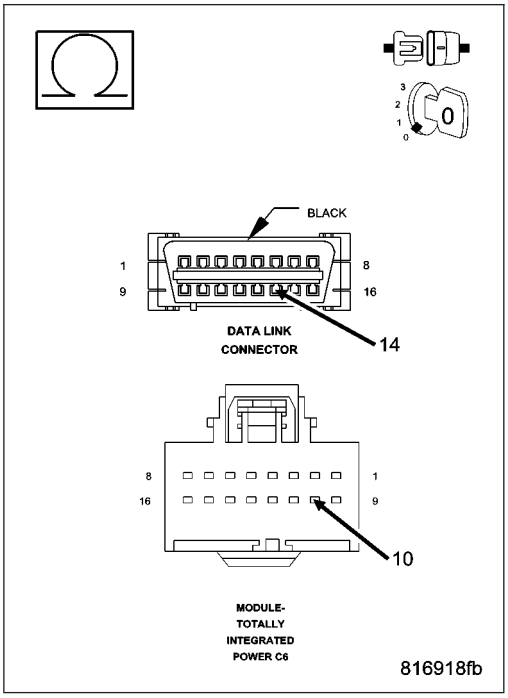

https://truckmanualshub.com/

*BOTH CAN C DIAGNOSTIC (+) AND CAN C DIAGNOSTIC (-) CIRCUITS OPEN

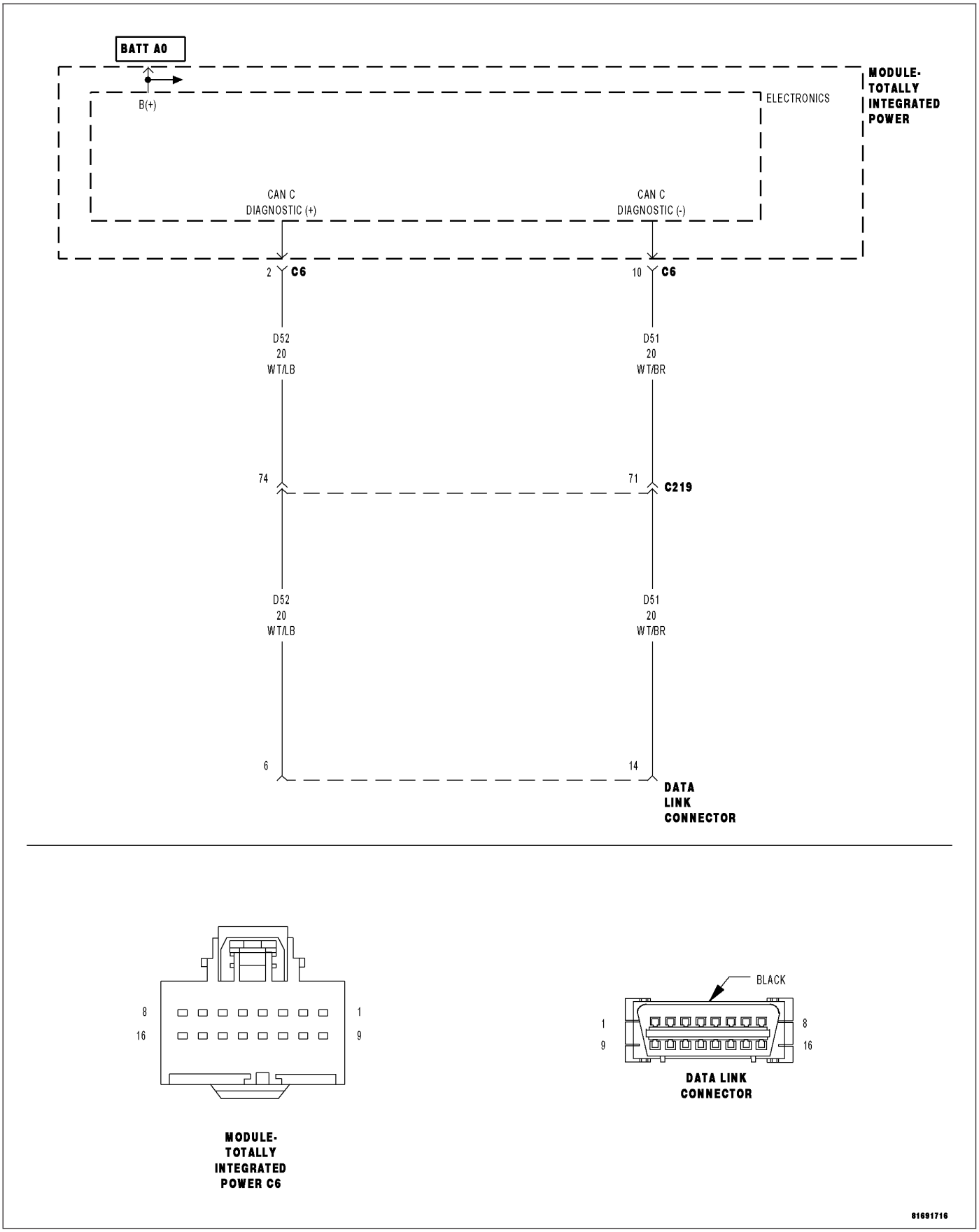

For a complete wiring diagram **Refer to Section 8W**.

https://truckmanualshub.com/

- **When Monitored:**
  When the scan tool queries the TIPM.
- **Set Condition:**
  The scan tool has detected an open condition on both CAN C Diagnostic circuits.

Possible Causes
(D52) CAN C DIAGNOSTIC (+) CIRCUIT OPEN
(D51) CAN C DIAGNOSTIC (-) CIRCUIT OPEN
TOTALLY INTEGRATED POWER MODULE

Diagnostic Test

1. CHECK THE STATUS OF THE ERROR MESSAGE

NOTE: Ensure the vehicle being tested is a CAN BUS VEHICLE. If not, false error messages may be displayed.

NOTE: Ensure the scan tool is updated to the latest software.

With the scan tool, record the error message.

Disconnect the scan tool from the DLC.

Cycle the ignition from on to off 3 times.

Turn the ignition on.

Does the scan tool display this same error message?

Yes >> Go To 2

No >> The conditions that caused this error message to set are not present at this time. Using the wiring diagram/schematic as a guide, inspect the wiring and connectors.

2. (D52) CAN C DIAGNOSTIC (+) CIRCUIT OPEN

Turn the ignition off.

Disconnect the Totally Integrated Power Module C6 harness connector.

Disconnect the scan tool from the DLC.

NOTE: Check the connectors at both the DLC and the TIPM.

Measure the resistance of the (D52) CAN C Diagnostic (+) circuit between the TIPM connector and the DLC.

Is the resistance below 5.0 ohms?

Yes >> Go To 3

No >> Repair the (D52) CAN C Diagnostic (+) circuit for an open. Perform BODY VERIFICATION TEST – VER 1. (Refer to 8 - ELECTRICAL/ELECTRONIC CONTROL MODULES - STANDARD PROCEDURE).

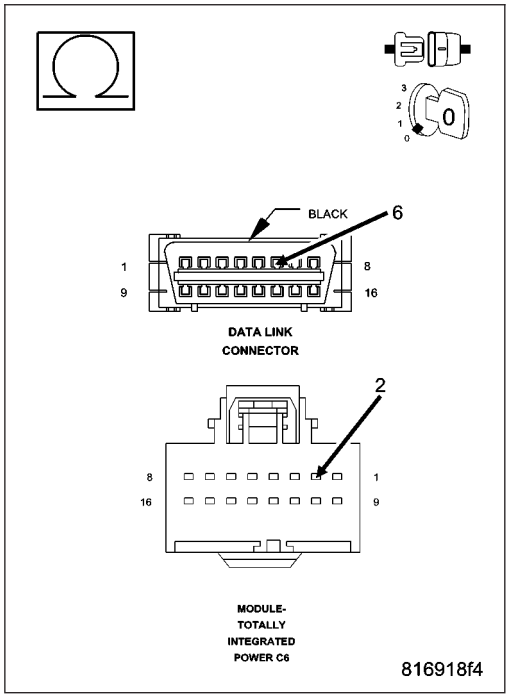

https://truckmanualshub.com/

3. (D51) CAN C DIAGNOSTIC (-) CIRCUIT OPEN

Measure the resistance of the (D51) CAN C Diagnostic (-) circuit between the TIPM connector and the DLC.

Is the resistance below 5.0 ohms?

Yes >> Inspect the wiring and connectors for damage or shorted circuits. If ok, replace the Totally Integrated Power Module in accordance with the service information.

Perform BODY VERIFICATION TEST – VER 1. (Refer to 8 - ELECTRICAL/ELECTRONIC CONTROL MODULES - STANDARD PROCEDURE).

No >> Repair the (D51) CAN C Diagnostic (-) circuit for an open.

Perform BODY VERIFICATION TEST – VER 1. (Refer to 8 - ELECTRICAL/ELECTRONIC CONTROL MODULES - STANDARD PROCEDURE).

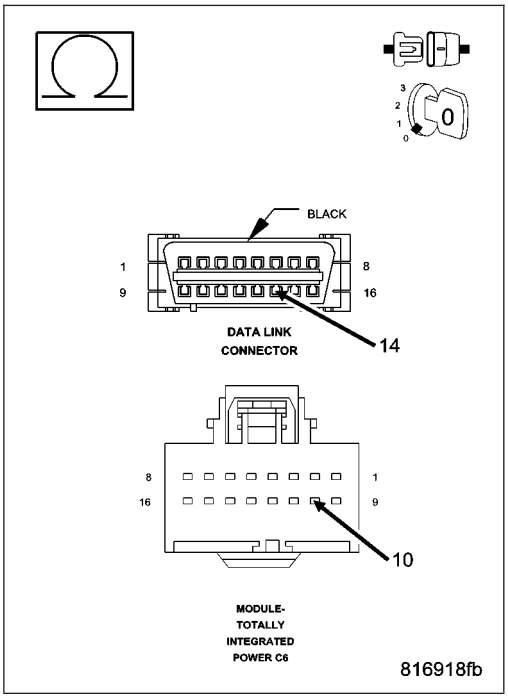

https://truckmanualshub.com/

*NO RESPONSE FROM ABS (ANTILOCK BRAKE MODULE)

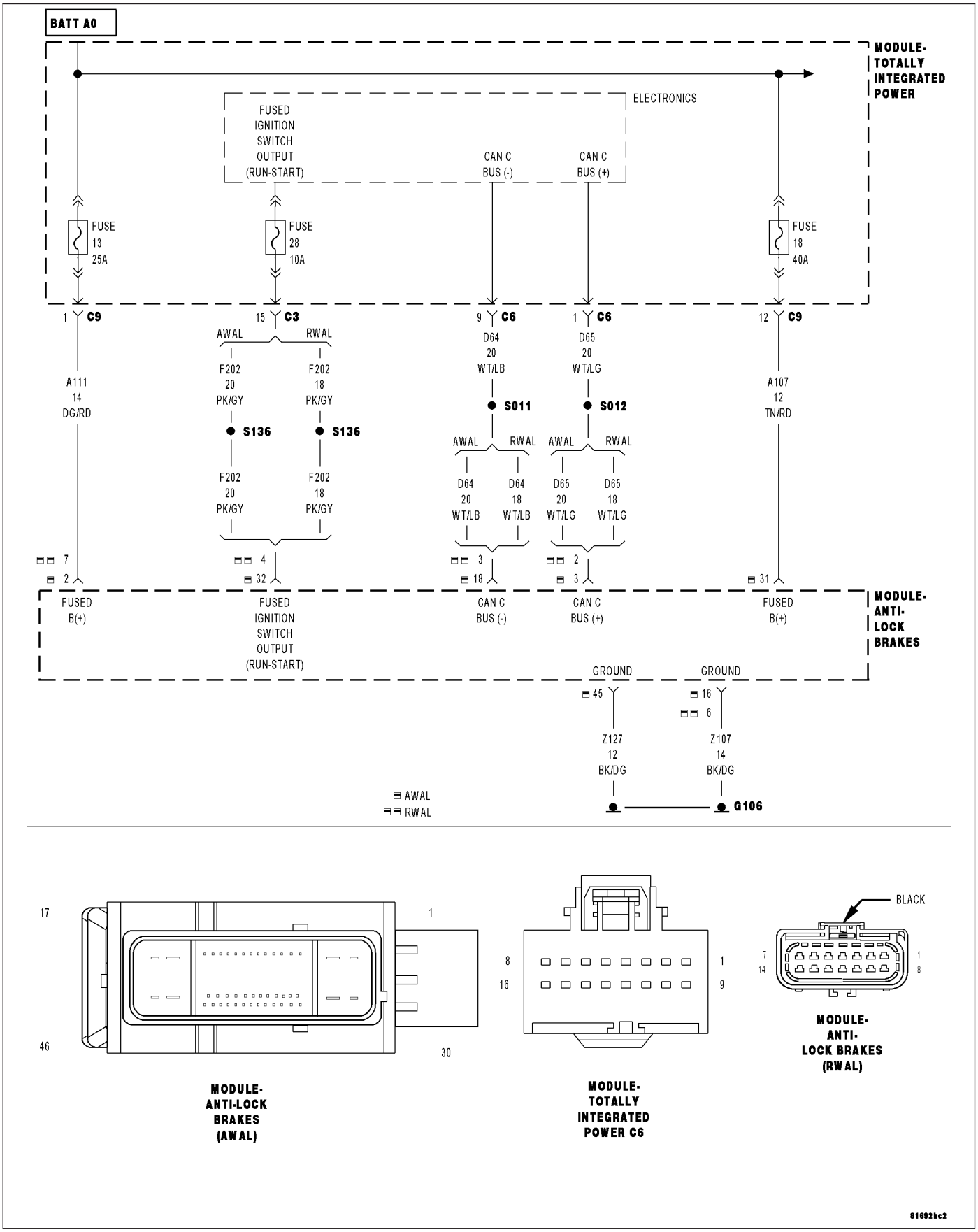

For a complete wiring diagram **Refer to Section 8W**.

https://truckmanualshub.com/

Possible Causes
(A107) (A111) FUSED B(+) CIRCUIT OPEN OR SHORTED
(Z107) (Z127) GROUND CIRCUIT OPEN
(F202) FUSED IGNITION SWITCH OUTPUT CIRCUIT OPEN OR SHORTED
(D65) CAN C BUS (+) CIRCUIT OPEN
(D64) CAN C BUS (-) CIRCUIT OPEN
ANTILOCK BRAKE MODULE

Diagnostic Test

1. TEST FOR INTERMITTENT CONDITION

Turn the ignition on.

NOTE: Ensure the IOD fuse is installed and battery voltage is between 10.0 and 16.0 volts.
With the scan tool, select ECU view.

NOTE: A red X will be next to the module that is not communicating, indicating that the module is not active on the Bus network. A green check indicates that the module is active on the Bus network.

NOTE: Check the TIPM for any active CAN C hardware DTCs, perform DTC before proceeding.

Does the scan tool display a red X next to the module?

Yes >> Go To 2

No >> The no response condition is not present at this time. Using the wiring diagram/schematic as a guide, inspect the wiring for chafed, pierced, pinched, and partially broken wires and the wiring harness connectors for broken, bent, pushed out, and corroded terminals.

2. (A107) (A111) FUSED B(+) CIRCUIT OPEN OR SHORTED

Turn the ignition off.

Disconnect the Antilock Brake Module harness connector.

Using a 12-volt test light connected to ground, check each (A107) and (A111) Fused B(+) circuit.

Does the test light illuminate brightly for each circuit?

Yes >> Go To 3

No >> Repair the (A107) or (A111) Fused B(+) circuit for an open or short.
Perform ABS VERIFICATION TEST - VER 1.

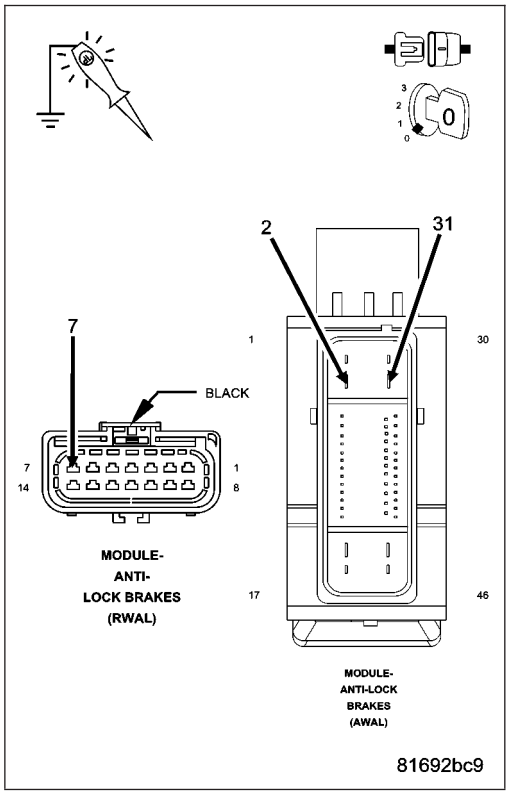

https://truckmanualshub.com/

3. (Z107) (Z127) GROUND CIRCUIT OPEN

Using a 12-volt test light connected to 12-volts, check each (Z107) and (Z127) ground circuit.

Does the test light illuminate brightly for each circuit?

Yes >> Go To 4

No >> Repair the (Z107) or (Z127) ground circuit for an open. Perform ABS VERIFICATION TEST - VER 1.

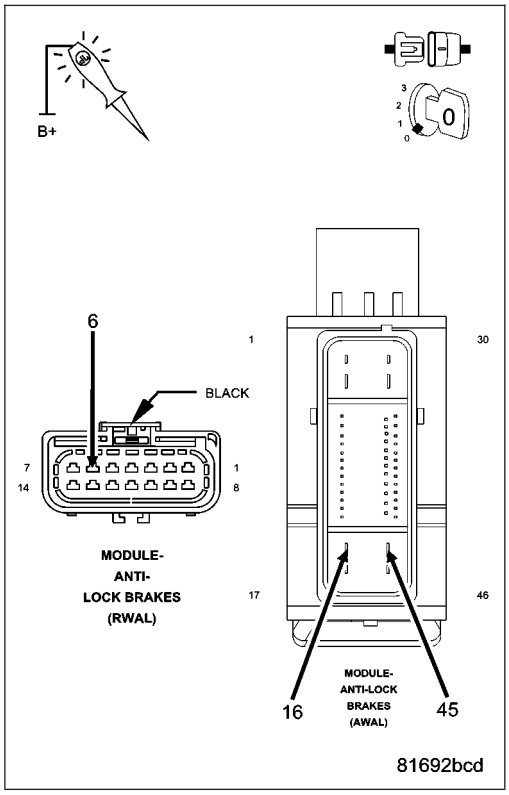

4. (F202) FUSED IGNITION SWITCH OUTPUT CIRCUIT OPEN OR SHORTED

Turn the ignition on.

Using a 12-volt test light connected to ground, check the (F202) Fused Ignition Switch Output circuit.

Does the test light illuminate brightly?

Yes >> Go To 5

No >> Repair the (F202) Fused Ignition Switch Output circuit for an open or short.
Perform ABS VERIFICATION TEST - VER 1.

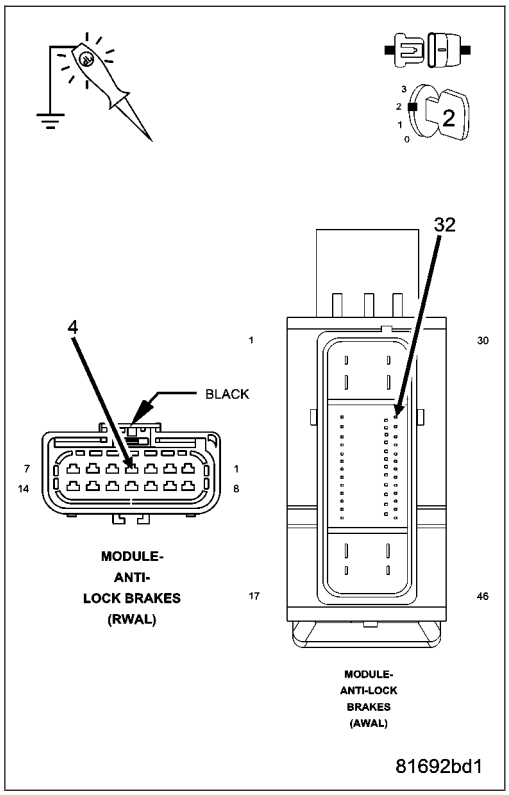

https://truckmanualshub.com/

5. (D65) CAN C BUS (+) CIRCUIT OPEN

Turn the ignition off.

Disconnect the TIPM C6 harness connector.

Measure the resistance of the (D65) CAN C Bus (+) circuit between the TIPM connector and the Antilock Brake Module connector.

Is resistance below 5.0 ohms?

Yes >> Go To 6

No >> Repair the (D65) CAN C Bus (+) circuit for an open.
Perform ABS VERIFICATION TEST - VER 1.

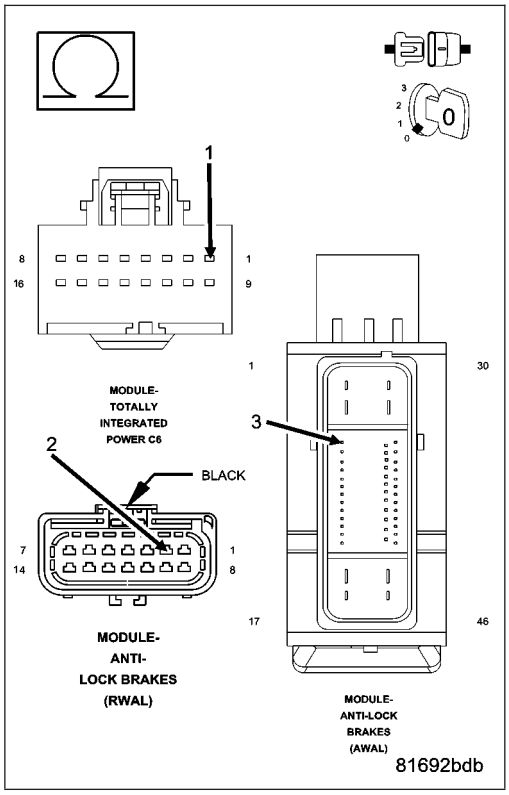

6. (D64) CAN C BUS (-) CIRCUIT OPEN

Measure the resistance of the (D64) CAN C Bus (-) circuit between the TIPM connector and the Antilock Brake Module connector.

Is resistance below 5.0 ohms?

Yes >> Replace the Antilock Brake Module in accordance with the service information.
Perform ABS VERIFICATION TEST - VER 1.

No >> Repair the (D64) CAN C Bus (-) circuit for an open.
Perform ABS VERIFICATION TEST - VER 1.

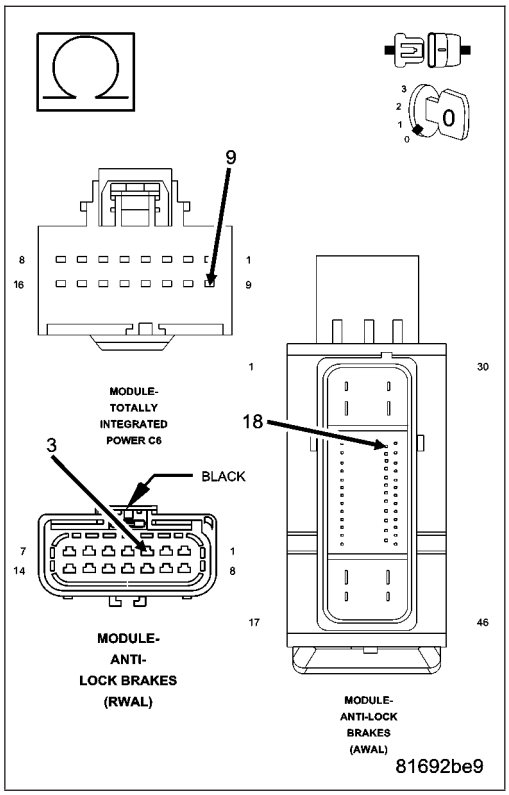

https://truckmanualshub.com/

*NO RESPONSE FROM AMP (AMPLIFIER)

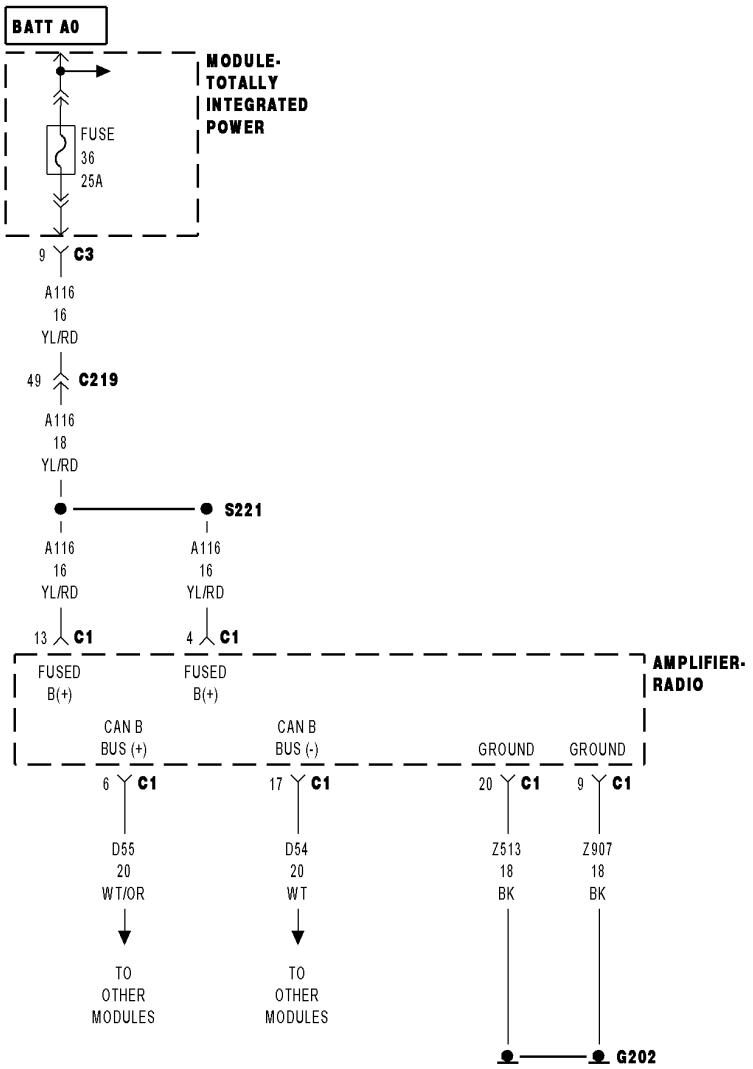

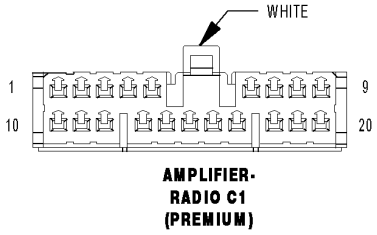

816930a5

For a complete wiring diagram **Refer to Section 8W**.

https://truckmanualshub.com/

Possible Causes
(A116) FUSED B (+) CIRCUIT OPEN OR SHORTED
(Z513) (Z907) GROUND CIRCUITS OPEN
(D55) AND (D54) CAN B BUS CIRCUITS OPEN
AMPLIFIER

Diagnostic Test

1. TEST FOR INTERMITTENT CONDITION

Turn the ignition on.

NOTE: Ensure the IOD fuse is installed and battery voltage is between 10.0 and 16.0 volts.
With the scan tool, select ECU view.

NOTE: A red X will be next to the module that is not communicating, indicating that the module is not active on the Bus network. A green check indicates that the module is active on the Bus network.

Does the scan tool display a red X next to the module?

Yes >> Go To 2

No >> The no response condition is not present at this time. Using the wiring diagram/schematic as a guide, inspect the wiring for chafed, pierced, pinched, and partially broken wires and the wiring harness connectors for broken, bent, pushed out, and corroded terminals.

2. (A116) FUSED B(+) CIRCUIT OPEN OR SHORTED

Turn the ignition off.

Disconnect the Radio Amplifier C1 harness connector.

Using a 12-volt test light connected to ground, check each (A116) Fused B(+) circuit.

Does the test light illuminate brightly for each circuit?

Yes >> Go To 3

No >> Repair the Fused B(+) circuit for an open or short.
Perform BODY VERIFICATION TEST – VER 1. (Refer to 8 - ELECTRICAL/ELECTRONIC CONTROL MODULES - STANDARD PROCEDURE).

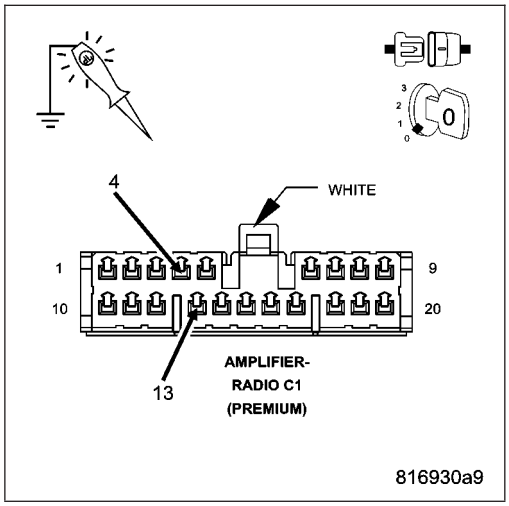

https://truckmanualshub.com/

3. (Z513) (Z907) GROUND CIRCUITS OPEN

Using a 12-volt test light connected to 12-volts, check each (Z513) and (Z907) ground circuit.

Does the test light illuminate brightly for each circuit?

Yes >> Go To 4

No >> Repair the (Z513) or (Z907) ground circuit for an open.
Perform BODY VERIFICATION TEST – VER 1. (Refer to 8 - ELECTRICAL/ELECTRONIC CONTROL MODULES - STANDARD PROCEDURE).

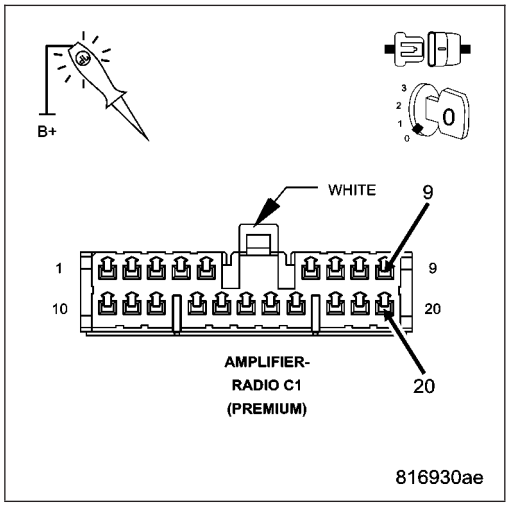

4. (D55) AND (D54) CAN B BUS CIRCUITS OPEN

NOTE: One open circuit will not cause this condition.
Measure the voltage between the (D54) CAN B Bus (-) circuit and ground.
Measure the voltage between the (D55) CAN B Bus (+) circuit and ground.

Is there any voltage present on either circuit?

Yes >> Replace the Radio Amplifier in accordance with the service information.
Perform BODY VERIFICATION TEST – VER 1. (Refer to 8 - ELECTRICAL/ELECTRONIC CONTROL MODULES - STANDARD PROCEDURE).

No >> Repair the (D55) and (D54) CAN B Bus circuits for an open. Inspect the connector for damage.
Perform BODY VERIFICATION TEST – VER 1. (Refer to 8 - ELECTRICAL/ELECTRONIC CONTROL MODULES - STANDARD PROCEDURE).

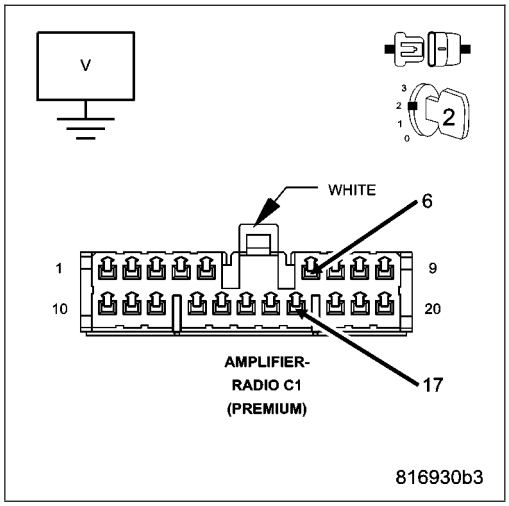

https://truckmanualshub.com/

*NO RESPONSE FROM CCN (CLUSTER)

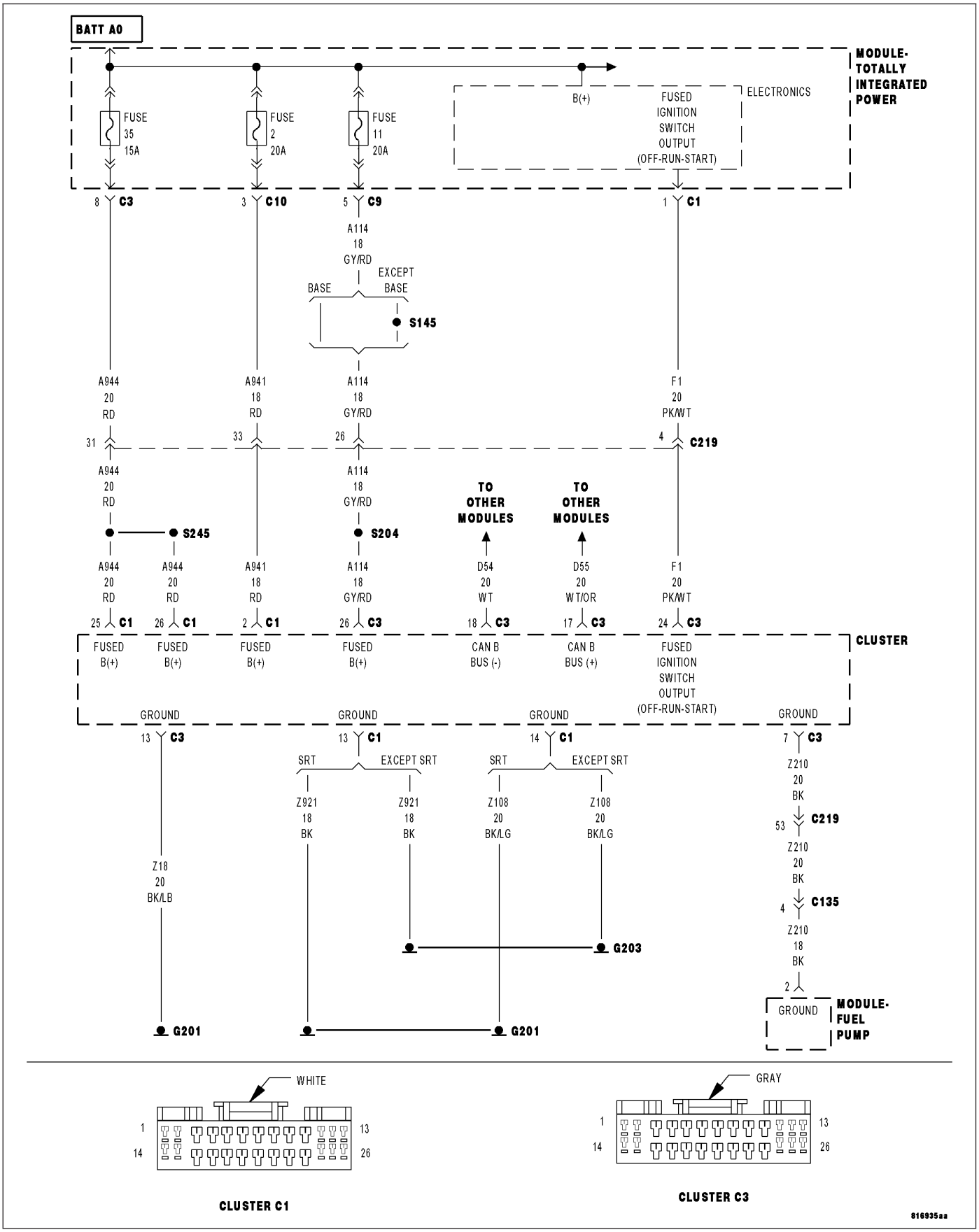

For a complete wiring diagram **Refer to Section 8W**.

https://truckmanualshub.com/

Possible Causes
FUSED B(+) CIRCUITS OPEN OR SHORTED
GROUND CIRCUITS OPEN
(F1) FUSED IGNITION SWITCH OUTPUT CIRCUIT OPEN OR SHORTED
(D55) AND (D54) CAN B BUS CIRCUITS OPEN
CLUSTER (CCN)

Diagnostic Test

1. TEST FOR INTERMITTENT CONDITION

Turn the ignition on.

NOTE: Ensure the IOD fuse is installed and battery voltage is between 10.0 and 16.0 volts.
With the scan tool, select ECU view.

NOTE: A red X will be next to the module that is not communicating, indicating that the module is not active on the Bus network. A green check indicates that the module is active on the Bus network.

Does the scan tool display a red X next to the module?

Yes >> Go To 2

No >> The no response condition is not present at this time. Using the wiring diagram/schematic as a guide, inspect the wiring for chafed, pierced, pinched, and partially broken wires and the wiring harness connectors for broken, bent, pushed out, and corroded terminals.

2. FUSED B(+) CIRCUITS OPEN OR SHORTED

Turn the ignition off.

Disconnect the Cluster C1, C3 and C4 harness connectors.

Using a 12-volt test light connected to ground, check each Fused B(+) circuit.

Does the test light illuminate brightly for each circuit?

Yes >> Go To 3

No >> Repair the Fused B(+) circuit for an open or short.
Perform BODY VERIFICATION TEST – VER 1. (Refer to 8 - ELECTRICAL/ELECTRONIC CONTROL MODULES - STANDARD PROCEDURE).

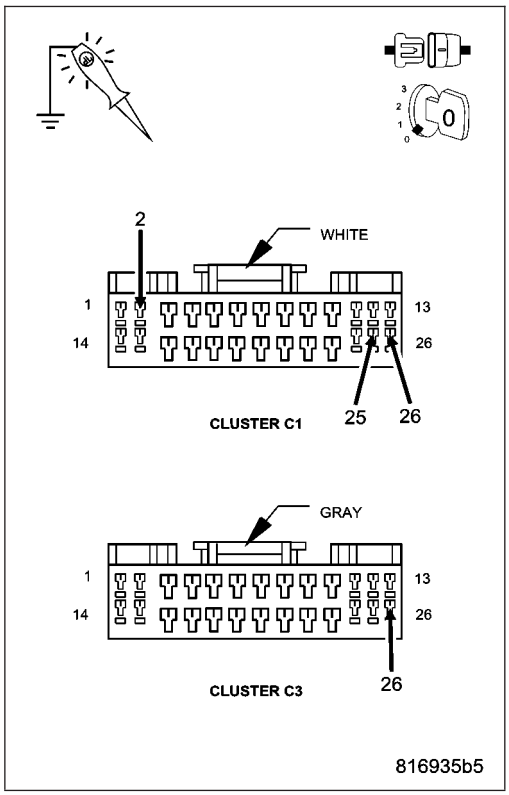

https://truckmanualshub.com/

3. GROUND CIRCUITS OPEN

Using a 12-volt test light connected to 12-volts, check each ground circuit.

Does the test light illuminate brightly for each circuit?

Yes >> Go To 4

No >> Repair the ground circuit for an open.
Perform BODY VERIFICATION TEST – VER 1. (Refer to 8 - ELECTRICAL/ELECTRONIC CONTROL MODULES - STANDARD PROCEDURE).

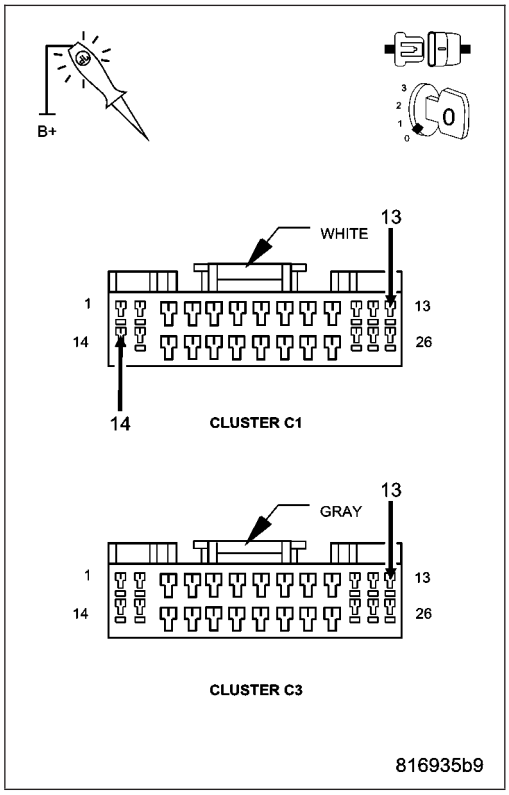

4. (F1) FUSED IGNITION SWITCH OUTPUT CIRCUIT OPEN OR SHORTED

Turn the ignition on.

Using a 12-volt test light connected to ground, check the (F1) Fused Ignition Switch Output circuit.

Does the test light illuminate brightly?

Yes >> Go To 5

No >> Repair the (F1) Fused Ignition Switch Output circuit for an open or short.
Perform BODY VERIFICATION TEST – VER 1. (Refer to 8 - ELECTRICAL/ELECTRONIC CONTROL MODULES - STANDARD PROCEDURE).

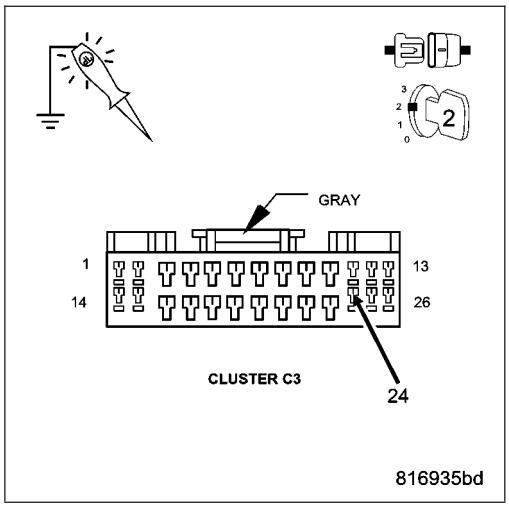

https://truckmanualshub.com/

5. (D55) AND (D54) CAN B BUS CIRCUITS OPEN

NOTE: One open circuit will not cause this condition.

Measure the voltage between the (D54) CAN B Bus (-) circuit and ground.

Measure the voltage between the (D55) CAN B Bus (+) circuit and ground.

Is there any voltage present on either circuit?

Yes >> Replace the Cluster in accordance with the service information.

Perform BODY VERIFICATION TEST – VER 1. (Refer to 8 - ELECTRICAL/ELECTRONIC CONTROL MODULES - STANDARD PROCEDURE).

No >> Repair the (D55) and (D54) CAN B Bus circuits for an open. Inspect the connector for damage.

Perform BODY VERIFICATION TEST – VER 1. (Refer to 8 - ELECTRICAL/ELECTRONIC CONTROL MODULES - STANDARD PROCEDURE).

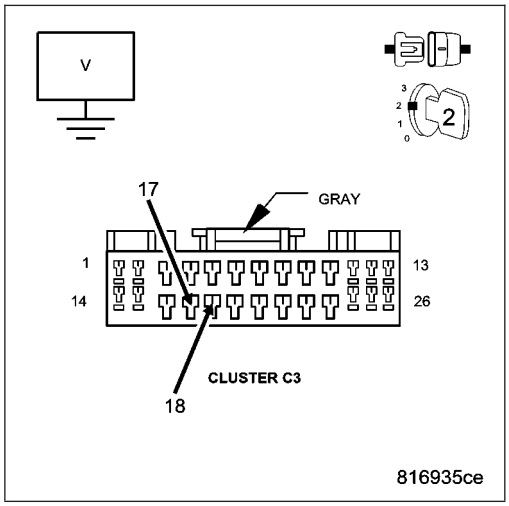

https://truckmanualshub.com/

*NO RESPONSE FROM ECM (ENGINE CONTROL MODULE) - DIESEL

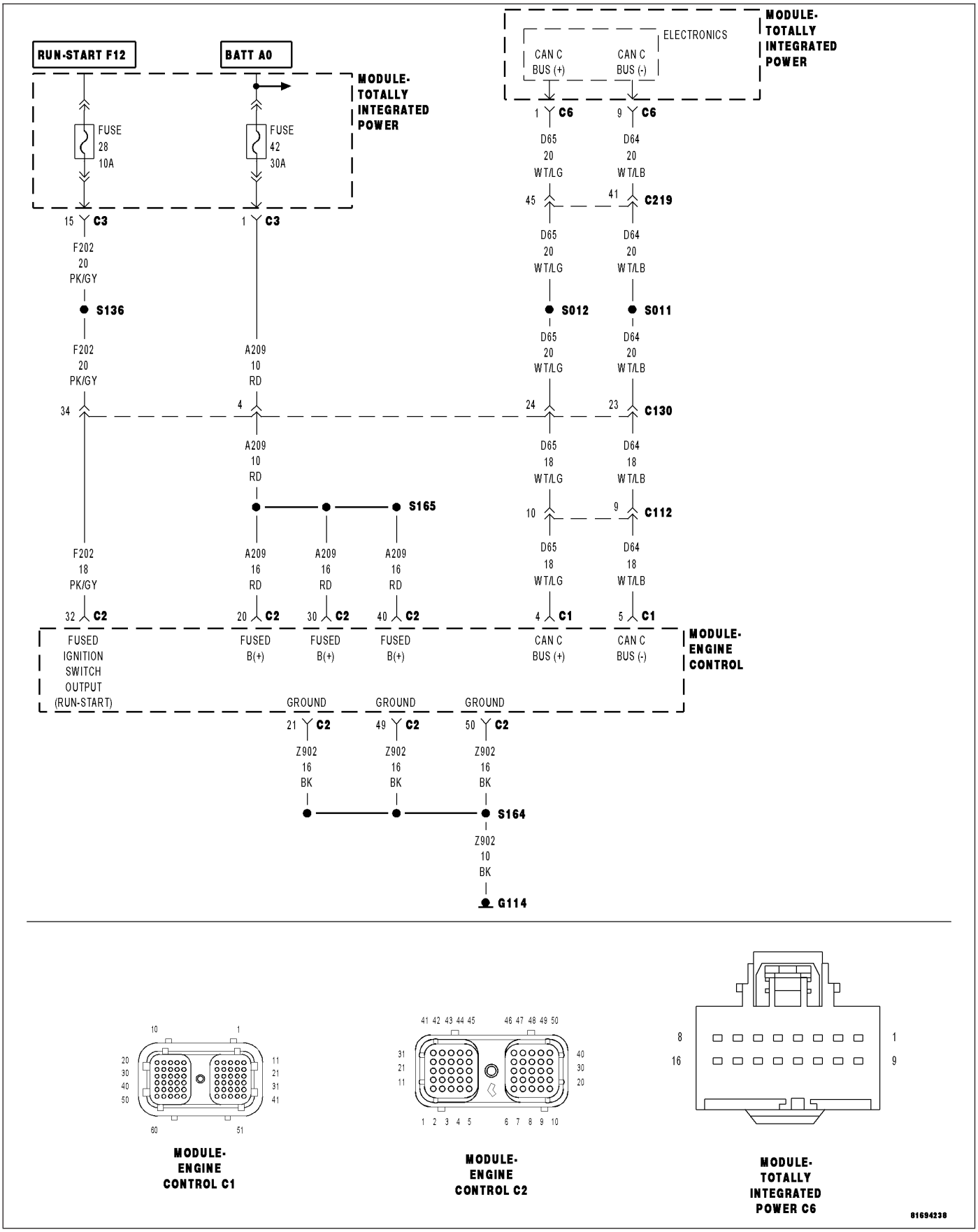

For a complete wiring diagram **Refer to Section 8W**.

https://truckmanualshub.com/

Possible Causes
ENGINE CONTROL MODULE POWER AND GROUND
(D65) CAN C BUS (+) CIRCUIT OPEN
(D64) CAN C BUS (-) CIRCUIT OPEN
ENGINE CONTROL MODULE

Diagnostic Test

1. TEST FOR INTERMITTENT CONDITION

Turn the ignition on.

NOTE: Ensure the IOD fuse is installed and battery voltage is between 10.0 and 16.0 volts.
With the scan tool, select ECU view.

NOTE: A red X will be next to the module that is not communicating, indicating that the module is not active on the Bus network. A green check indicates that the module is active on the Bus network.

NOTE: Check the TIPM for any active CAN C hardware and any ignition related DTCs, perform DTCs before proceeding.

Does the scan tool display a red X next to the module?

Yes >> Go To 2

No >> The no response condition is not present at this time. Using the wiring diagram/schematic as a guide, inspect the wiring for chafed, pierced, pinched, and partially broken wires and the wiring harness connectors for broken, bent, pushed out, and corroded terminals.

2. CHECK ECM POWER AND GROUND

Check the ECM power and ground circuits. Refer to 9 - ENGINE ELECTRICAL DIAGNOSTICS - DIESEL for the diagnostic test procedure.

Were any problems found?

Yes >> Repair as necessary.
Perform the ECM VERIFICATION TEST.

No >> Go To 3

https://truckmanualshub.com/

3. (D65) CAN C BUS (+) CIRCUIT OPEN

Turn the ignition off.

Disconnect the TIPM C6 harness connector.

Disconnect the ECM C1 harness connector.

Measure the resistance of the (D65) CAN C Bus (+) circuit between the TIPM connector and the ECM connector.

Is resistance below 5.0 ohms?

Yes >> Go To 4

No >> Repair the (D65) CAN C Bus (+) circuit for an open. Perform the ECM VERIFICATION TEST.

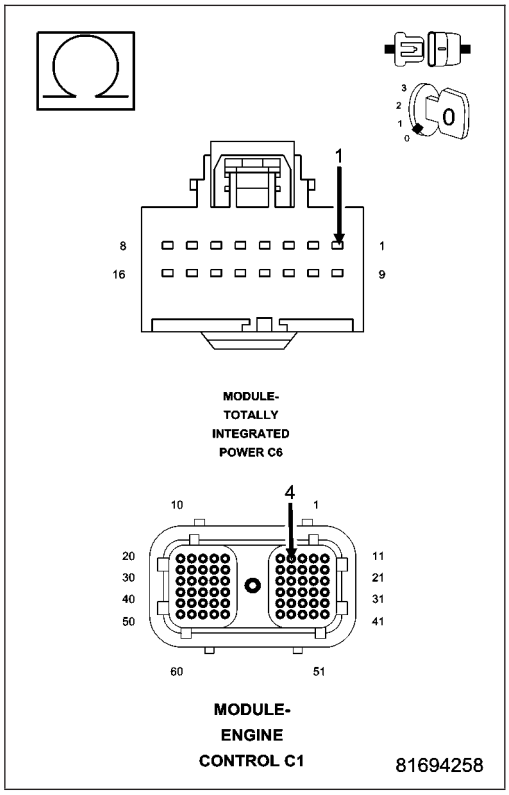

4. (D64) CAN C BUS (-) CIRCUIT OPEN

Measure the resistance of the (D64) CAN C Bus (-) circuit between the TIPM connector and the ECM connector.

Is resistance below 5.0 ohms?

Yes >> Replace and program the Engine Control Module in accordance with the service information. Perform the ECM VERIFICATION TEST.

No >> Repair the (D64) CAN C Bus (-) circuit for an open. Perform the ECM VERIFICATION TEST.

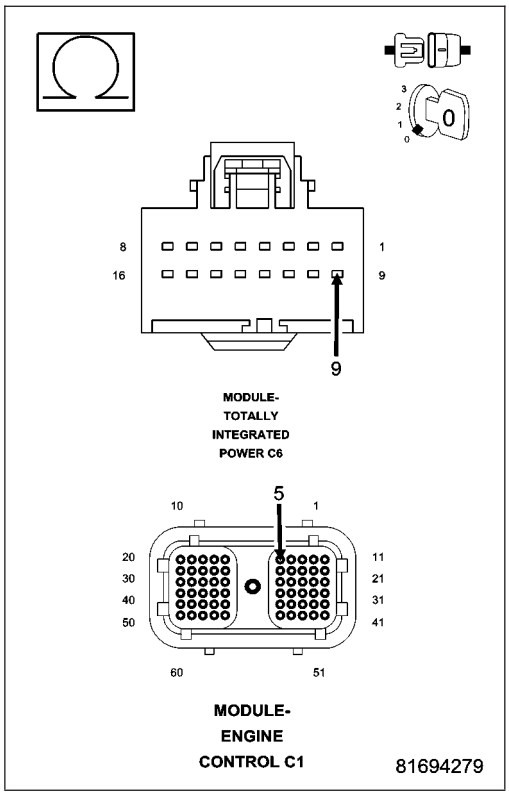

https://truckmanualshub.com/

*NO RESPONSE FROM EOM (ELECTRONIC OVERHEAD MODULE)

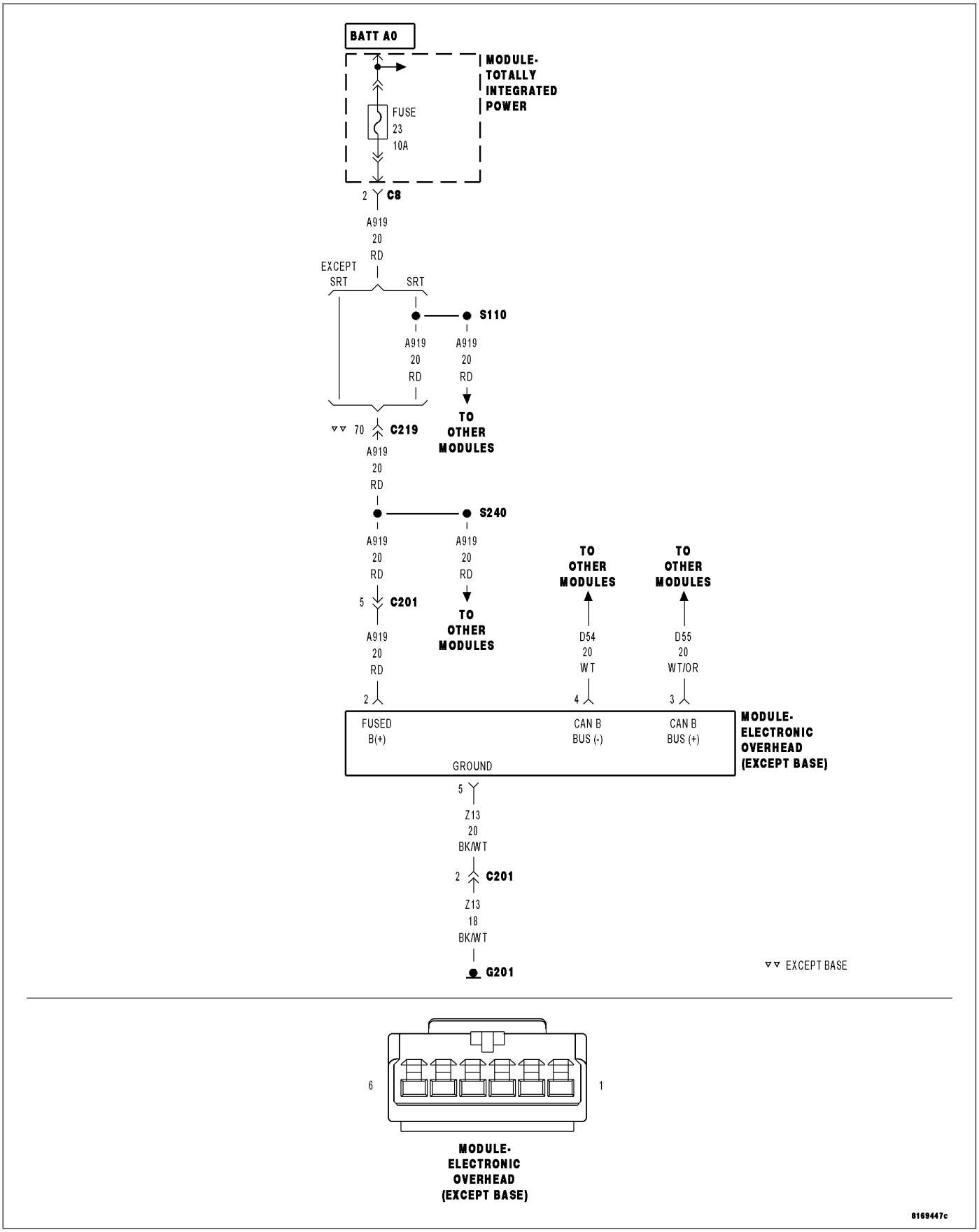

For a complete wiring diagram **Refer to Section 8W**.

https://truckmanualshub.com/

Possible Causes
(A919) FUSED B(+) CIRCUIT OPEN OR SHORTED
(Z13) GROUND CIRCUIT OPEN
(D55) AND (D54) CAN B BUS CIRCUITS OPEN
ELECTRONIC OVERHEAD MODULE

Diagnostic Test

1. TEST FOR INTERMITTENT CONDITION

Turn the ignition on.

NOTE: Ensure the IOD fuse is installed and battery voltage is between 10.0 and 16.0 volts.
With the scan tool, select ECU view.

NOTE: A red X will be next to the module that is not communicating, indicating that the module is not active on the Bus network. A green check indicates that the module is active on the Bus network.

Does the scan tool display a red X next to the module?

Yes >> Go To 2

No >> The no response condition is not present at this time. Using the wiring diagram/schematic as a guide, inspect the wiring for chafed, pierced, pinched, and partially broken wires and the wiring harness connectors for broken, bent, pushed out, and corroded terminals.

2. (A919) FUSED B(+) CIRCUIT OPEN OR SHORTED

Turn the ignition off.

Disconnect the Electronic Overhead Module harness connector.

Using a 12-volt test light connected to ground, check the (A919) Fused B(+) circuit.

Does the test light illuminate brightly?

Yes >> Go To 3

No >> Repair the (A919) Fused B(+) circuit for an open or short. Perform BODY VERIFICATION TEST – VER 1. (Refer to 8 - ELECTRICAL/ELECTRONIC CONTROL MODULES - STANDARD PROCEDURE).

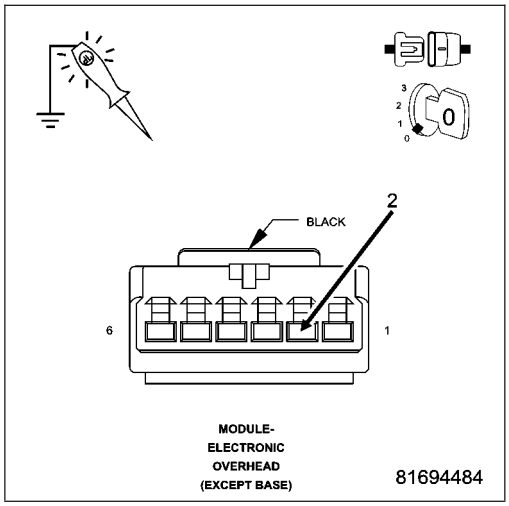

https://truckmanualshub.com/

3. (Z13) GROUND CIRCUIT OPEN

Using a 12-volt test light connected to 12-volts, check the (Z13) ground circuit.

Does the test light illuminate brightly?

Yes >> Go To 4

No >> Repair the (Z13) ground circuit for an open.
Perform BODY VERIFICATION TEST – VER 1. (Refer to 8 - ELECTRICAL/ELECTRONIC CONTROL MODULES - STANDARD PROCEDURE).

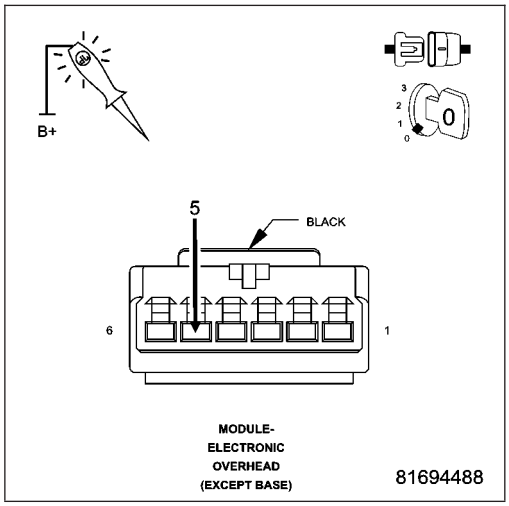

4. (D55) AND (D54) CAN B BUS CIRCUITS OPEN

NOTE: One open circuit will not cause this condition.
Measure the voltage between the (D54) CAN B Bus (-) circuit and ground.
Measure the voltage between the (D55) CAN B Bus (+) circuit and ground.

Is there any voltage present on either circuit?

Yes >> Replace the Electronic Overhead Module (EOM) in accordance with the service information.
Perform BODY VERIFICATION TEST – VER 1. (Refer to 8 - ELECTRICAL/ELECTRONIC CONTROL MODULES - STANDARD PROCEDURE).

No >> Repair the (D55) and (D54) CAN B Bus circuits for an open. Inspect the connector for damage.
Perform BODY VERIFICATION TEST – VER 1. (Refer to 8 - ELECTRICAL/ELECTRONIC CONTROL MODULES - STANDARD PROCEDURE).

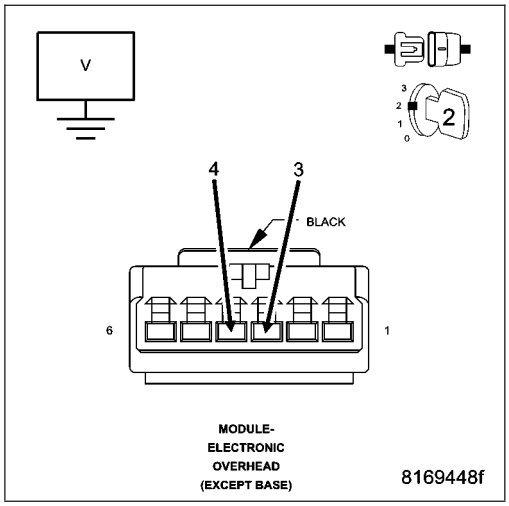

https://truckmanualshub.com/

*NO RESPONSE FROM FDCM (FINAL DRIVE CONTROL MODULE) (POWER WAGON ONLY)

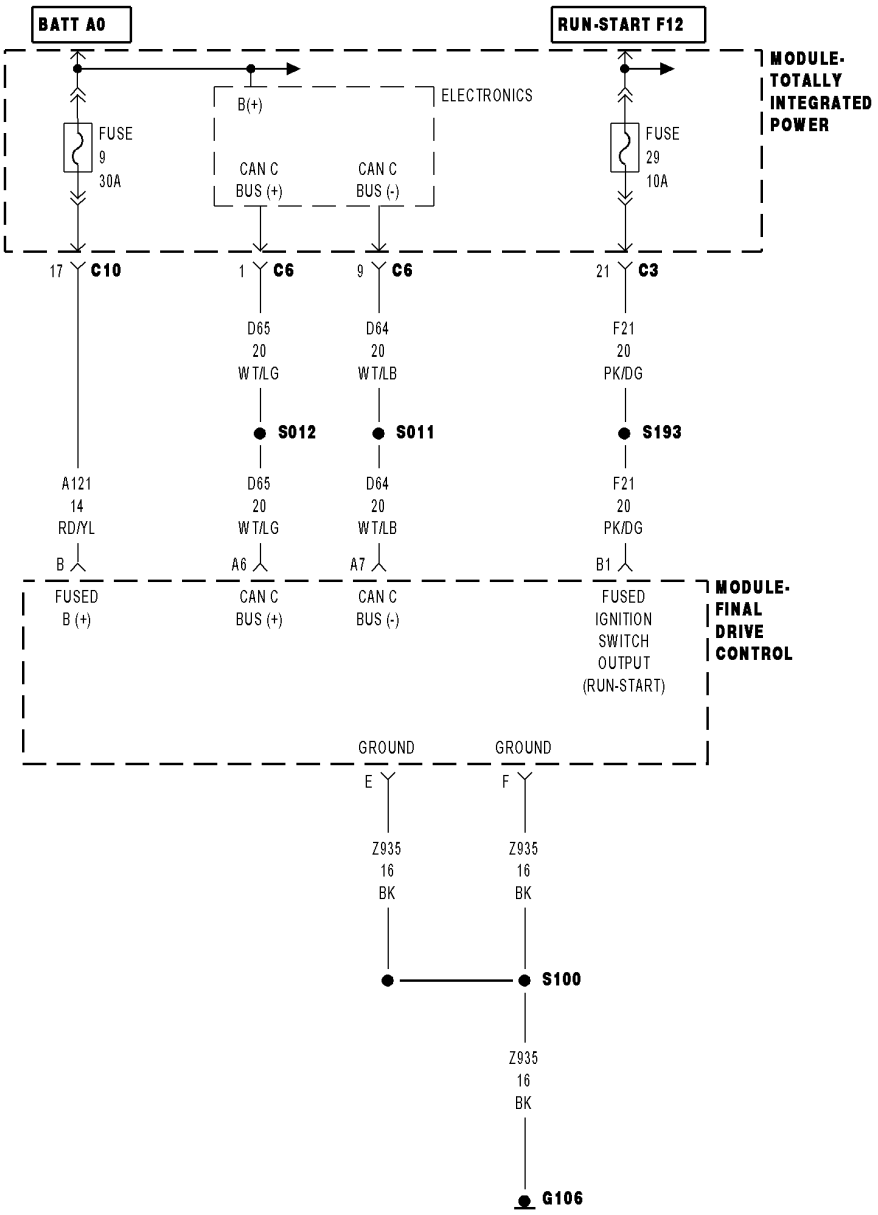

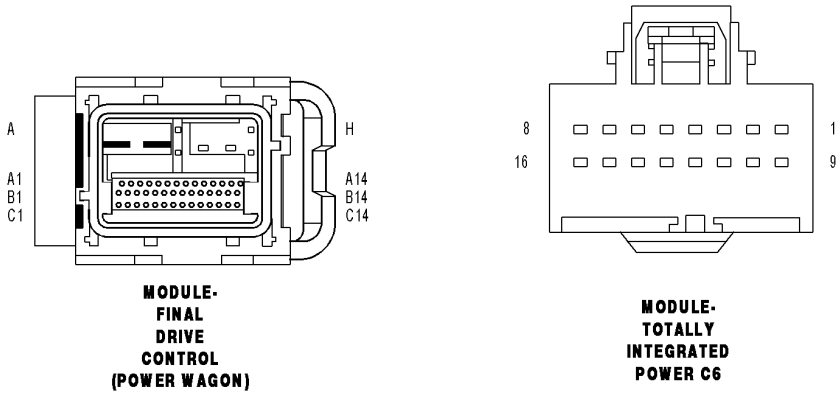

81694585

https://truckmanualshub.com/

For a complete wiring diagram **Refer to Section 8W**.

Possible Causes
(A121) FUSED B(+) CIRCUIT OPEN OR SHORTED
(Z935) GROUND CIRCUIT OPEN
(F21) FUSED IGNITION SWITCH OUTPUT CIRCUIT OPEN OR SHORTED
(D65) CAN C BUS (+) CIRCUIT OPEN
(D64) CAN C BUS (-) CIRCUIT OPEN
FINAL DRIVE CONTROL MODULE

Diagnostic Test

1. TEST FOR INTERMITTENT CONDITION

Turn the ignition on.

NOTE: Ensure the IOD fuse is installed and battery voltage is between 10.0 and 16.0 volts.
With the scan tool, select ECU view.

NOTE: A red X will be next to the module that is not communicating, indicating that the module is not active on the Bus network. A green check indicates that the module is active on the Bus network.

NOTE: Check the TIPM for any active CAN C hardware DTCs, perform DTC before proceeding.

Does the scan tool display a red X next to the module?

Yes >> Go To 2

No >> The no response condition is not present at this time. Using the wiring diagram/schematic as a guide, inspect the wiring for chafed, pierced, pinched, and partially broken wires and the wiring harness connectors for broken, bent, pushed out, and corroded terminals.

2. (A121) FUSED B(+) CIRCUIT OPEN OR SHORTED

Turn the ignition off.

Disconnect the Final Drive Control Module harness connector.

Using a 12-volt test light connected to ground, check the (A121) Fused B(+) circuit.

Does the test light illuminate brightly?

Yes >> Go To 3

No >> Repair the (A121) Fused B(+) circuit for an open or short. Perform the FDCM VERIFICATION TEST.

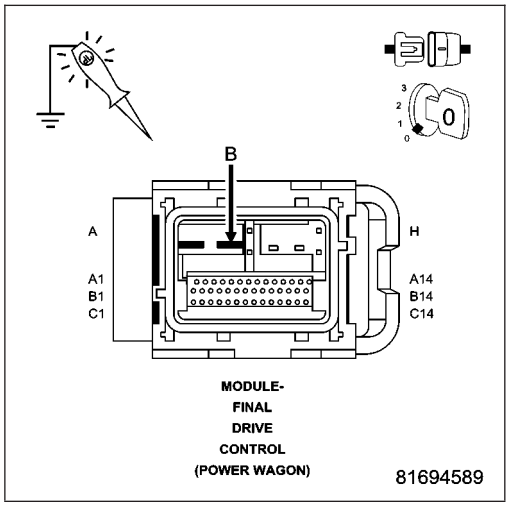

https://truckmanualshub.com/

3. (Z935) GROUND CIRCUIT OPEN

Using a 12-volt test light connected to 12-volts, check the (Z935) Ground circuit.

Does the test light illuminate brightly for each circuit?

Yes >> Go To 4

No >> Repair the (Z935) ground circuit for an open.
Perform the FDCM VERIFICATION TEST.

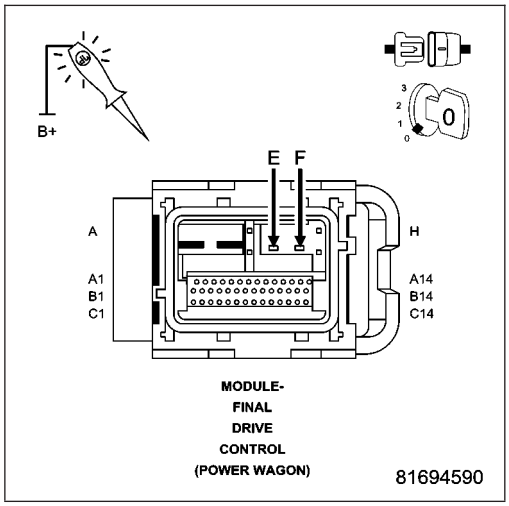

4. (F21) FUSED IGNITION SWITCH OUTPUT CIRCUIT OPEN OR SHORTED

Turn the ignition on.

Using a 12-volt test light connected to ground, check the (F21) Fused Ignition Switch Output circuit.

Does the test light illuminate brightly?

Yes >> Go To 5

No >> Repair the (F21) Fused Ignition Switch Output circuit for an open or short.
Perform the FDCM VERIFICATION TEST.

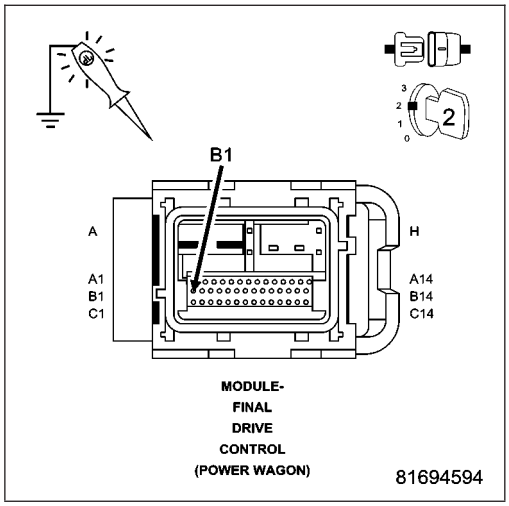

https://truckmanualshub.com/

5. (D65) CAN C BUS (+) CIRCUIT OPEN

Turn the ignition off.

Disconnect the TIPM C6 harness connector.

Measure the resistance of the (D65) CAN C Bus (+) circuit between the TIPM connector and the FDCM connector.

Is resistance below 5.0 ohms?

Yes >> Go To 6

No >> Repair the (D65) CAN C Bus (+) circuit for an open.
Perform the FDCM VERIFICATION TEST.

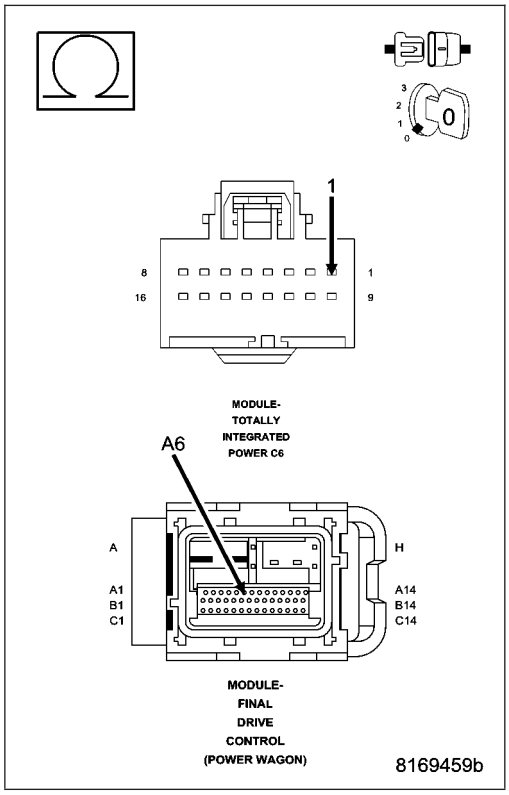

6. (D64) CAN C BUS (-) CIRCUIT OPEN

Measure the resistance of the (D64) CAN C Bus (-) circuit between the TIPM connector and the FDCM connector.

Is resistance below 5.0 ohms?

Yes >> Replace the Final Drive Control Module in accordance with the service information.
Perform the FDCM VERIFICATION TEST.

No >> Repair the (D64) CAN C Bus (-) circuit for an open.
Perform the FDCM VERIFICATION TEST.

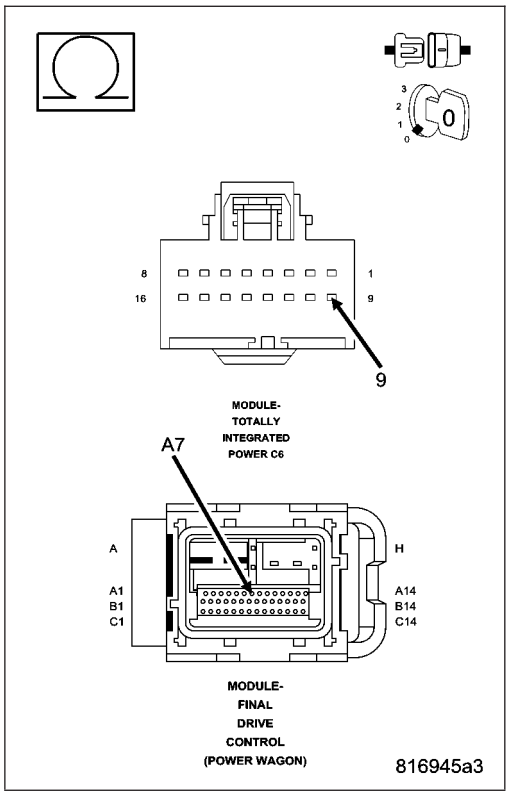

https://truckmanualshub.com/

*NO RESPONSE FROM GATEWAY MODULE - (SRT10 ONLY)

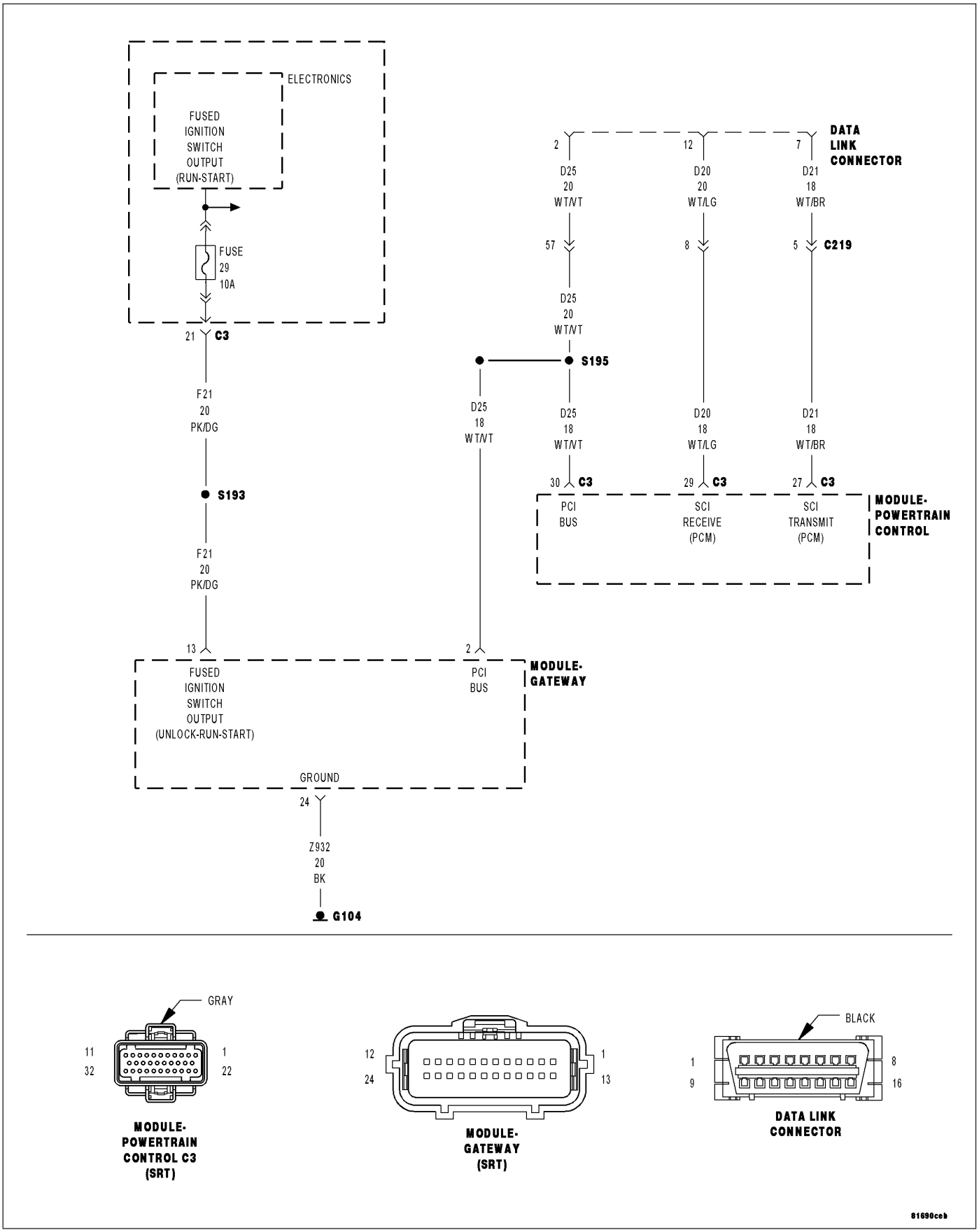

For a complete wiring diagram **Refer to Section 8W**.

https://truckmanualshub.com/

Possible Causes
(Z932) GROUND CIRCUIT OPEN
(F21) FUSED IGNITION SWITCH OUTPUT CIRCUIT OPEN OR SHORTED
(D25) PCI BUS CIRCUIT SHORTED TO VOLTAGE
(D25) PCI BUS CIRCUIT SHORTED TO GROUND
(D25) PCI BUS CIRCUIT OPEN
GATEWAY MODULE

Diagnostic Test

1. TEST FOR INTERMITTENT CONDITION

Turn the ignition on.

NOTE: Ensure the IOD fuse is installed and battery voltage is between 10.0 and 16.0 volts.
With the scan tool, select ECU view.

NOTE: A red X will be next to the module that is not communicating, indicating that the module is not active on the Bus network. A green check indicates that the module is active on the Bus network.

NOTE: Check the TIPM for any active ignition related DTCs, perform DTC before proceeding.

Does the scan tool display a red X next to the module?

Yes >> Go To 2

No >> The no response condition is not present at this time. Using the wiring diagram/schematic as a guide, inspect the wiring for chafed, pierced, pinched, and partially broken wires and the wiring harness connectors for broken, bent, pushed out, and corroded terminals.

2. ATTEMPT TO ESTABLISH COMMUNICATIONS WITH THE PCM

With the scan tool, select ECU view.

Does the scan tool also display a red X next to the PCM?

Yes >> Go To 6

No >> Go To 3

3. (Z932) GROUND CIRCUIT OPEN

Turn the ignition off.

Disconnect the Gateway Module harness connector.

Using a 12-volt test light connected to 12-volts, check the (Z932) ground circuit.

Does the test light illuminate brightly?

Yes >> Go To 4

No >> Repair the (Z932) ground circuit for an open.
Perform BODY VERIFICATION TEST – VER 1. (Refer to 8 - ELECTRICAL/ELECTRONIC CONTROL MODULES - STANDARD PROCEDURE).

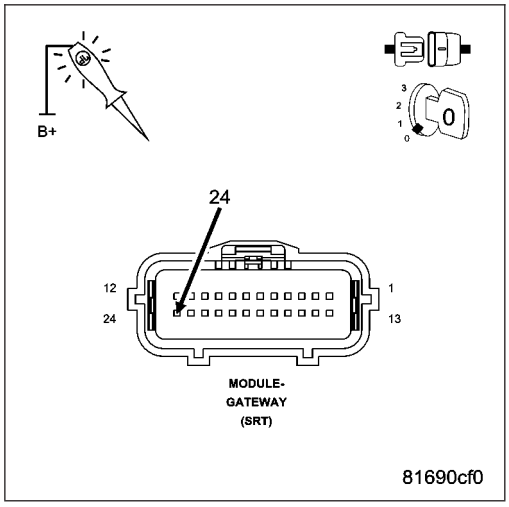

https://truckmanualshub.com/

4. (F21) FUSED IGNITION SWITCH OUTPUT CIRCUIT OPEN OR SHORTED

Turn the ignition on.

Using a 12-volt test light connected to ground, check the (F21) Fused Ignition Switch Output circuit.

Does the test light illuminate brightly?

Yes >> Go To 5

No >> Repair the (F21) Fused Ignition Switch Output circuit for an open or short.

Perform BODY VERIFICATION TEST – VER 1. (Refer to 8 - ELECTRICAL/ELECTRONIC CONTROL MODULES - STANDARD PROCEDURE).

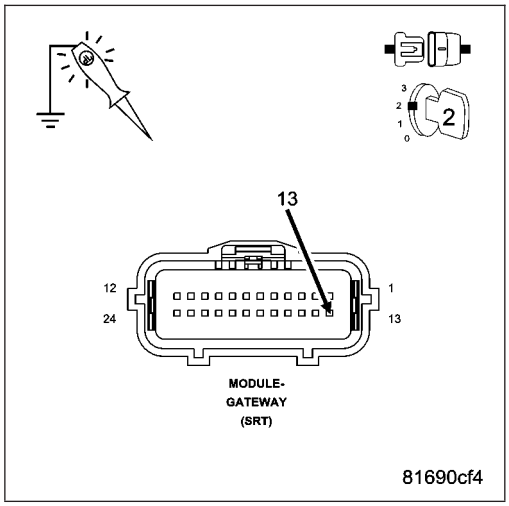

5. (D25) PCI BUS CIRCUIT OPEN

Turn the ignition off.

Disconnect the scan tool from the DLC.

Measure the resistance of the (D25) PCI Bus circuit between the DLC and the Gateway connector.

Is the resistance below 5.0 ohms?

Yes >> Replace the Gateway Module in accordance with the service information.

Perform BODY VERIFICATION TEST – VER 1. (Refer to 8 - ELECTRICAL/ELECTRONIC CONTROL MODULES - STANDARD PROCEDURE).

No >> Repair the (D25) PCI Bus circuit for an open.

Perform BODY VERIFICATION TEST – VER 1. (Refer to 8 - ELECTRICAL/ELECTRONIC CONTROL MODULES - STANDARD PROCEDURE).

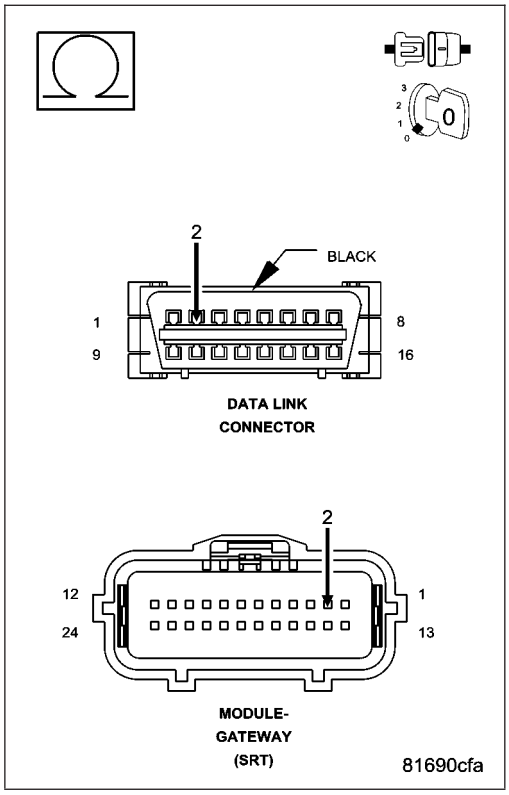

https://truckmanualshub.com/

6. (D25) PCI BUS CIRCUIT SHORTED TO GROUND

Turn the ignition off.

Disconnect the Gateway Module harness connector.

Measure the resistance between ground and the (D25) PCI Bus circuit.

Is the resistance below 100.0 ohms?

Yes >> Disconnect the PCM C3 harness connector, if the short is eliminated, replace the PCM in accordance with the service information. If not, repair the (D25) PCI Bus circuit for a short to ground.

Perform BODY VERIFICATION TEST – VER 1. (Refer to 8 - ELECTRICAL/ELECTRONIC CONTROL MODULES - STANDARD PROCEDURE).

No >> Go To 7

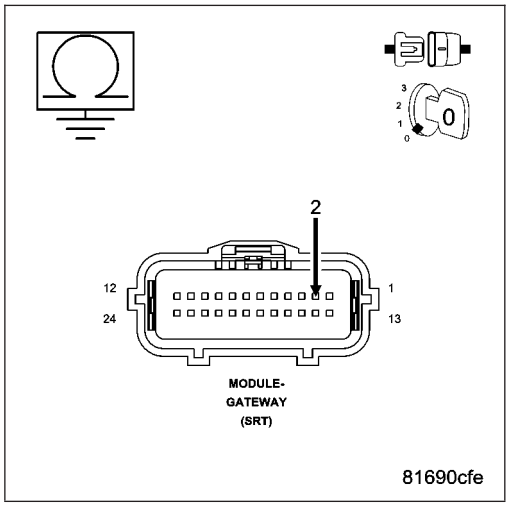

7. (D25) PCI BUS CIRCUIT SHORTED TO VOLTAGE

Turn the ignition on.

Measure the voltage of the (D25) PCI Bus circuit.

Is the voltage steadily above 8.0 volts?

Yes >> Disconnect the PCM C3 harness connector, if the short is eliminated, replace the PCM in accordance with the service information. If not, repair the (D25) PCI Bus circuit for a short to voltage.

Perform BODY VERIFICATION TEST – VER 1. (Refer to 8 - ELECTRICAL/ELECTRONIC CONTROL MODULES - STANDARD PROCEDURE).

No >> Go To 8

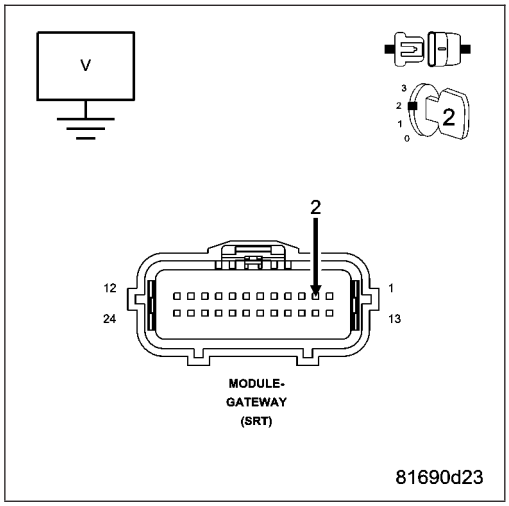

https://truckmanualshub.com/

8. (D25) PCI BUS CIRCUIT OPEN

Turn the ignition off.

Measure the resistance of the (D25) PCI Bus circuit between the DLC and the Gateway connector.

Is the resistance below 5.0 ohms?

Yes >> Replace the Gateway Module in accordance with the service information.

Perform BODY VERIFICATION TEST – VER 1. (Refer to 8 - ELECTRICAL/ELECTRONIC CONTROL MODULES - STANDARD PROCEDURE).

No >> Repair the (D25) PCI Bus circuit for an open.

Perform BODY VERIFICATION TEST – VER 1. (Refer to 8 - ELECTRICAL/ELECTRONIC CONTROL MODULES - STANDARD PROCEDURE).

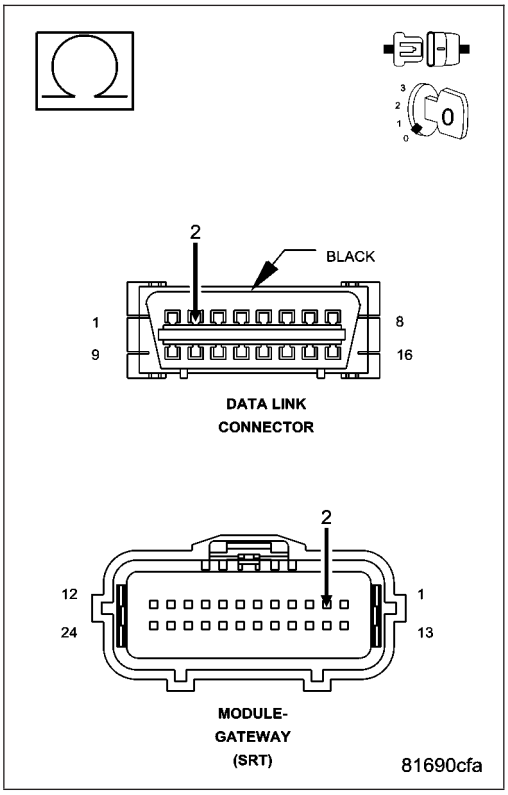

https://truckmanualshub.com/

*NO RESPONSE FROM HFM (HANDS FREE MODULE)

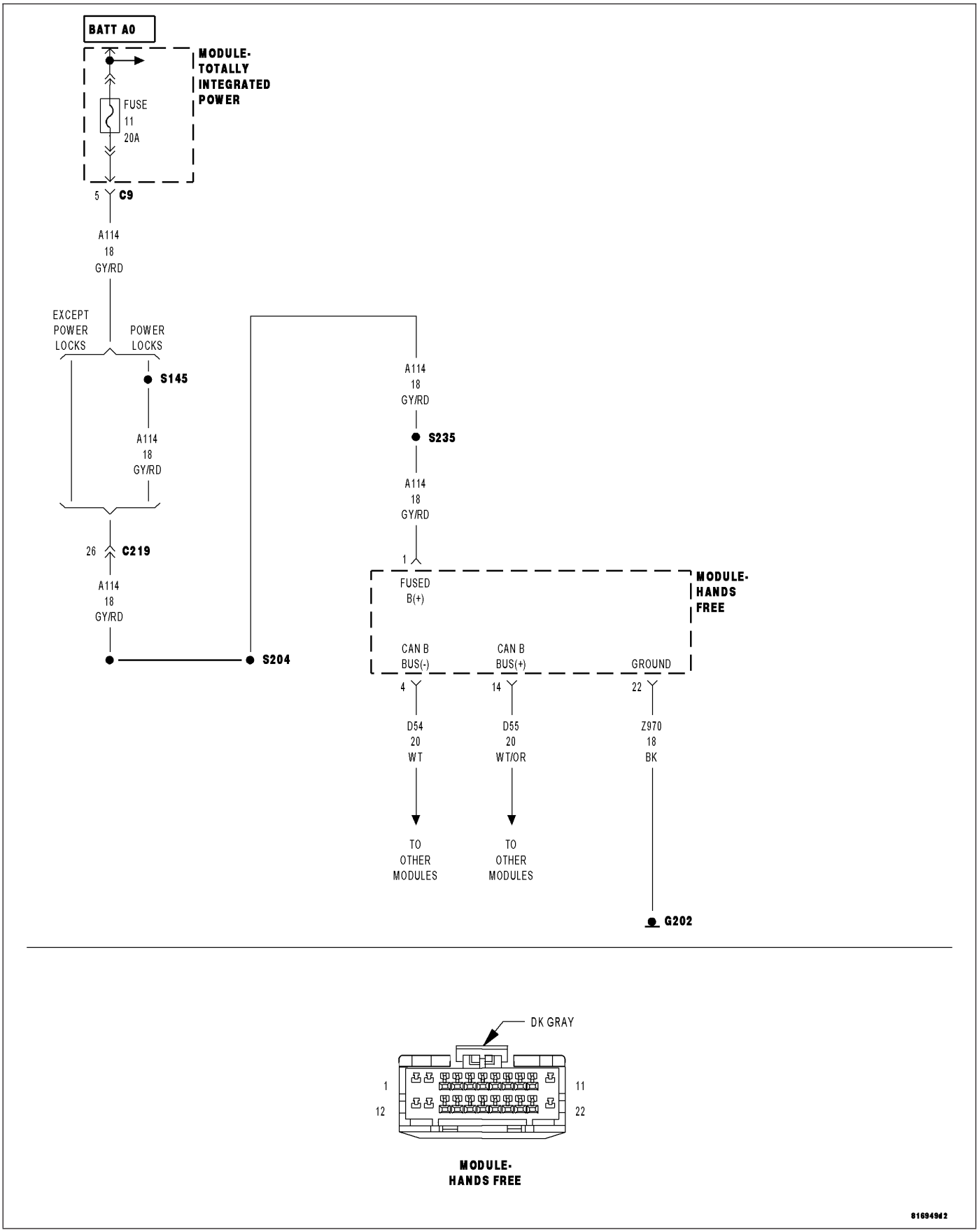

For a complete wiring diagram **Refer to Section 8W**.

https://truckmanualshub.com/

Possible Causes
(A114) FUSED B(+) CIRCUIT OPEN OR SHORTED
(Z970) GROUND CIRCUIT OPEN
(D55) AND (D54) CAN B BUS CIRCUITS OPEN
HANDS FREE MODULE

Diagnostic Test

1. TEST FOR INTERMITTENT CONDITION

Turn the ignition on.

NOTE: Ensure the IOD fuse is installed and battery voltage is between 10.0 and 16.0 volts.
With the scan tool, select ECU view.

NOTE: A red X will be next to the module that is not communicating, indicating that the module is not active on the Bus network. A green check indicates that the module is active on the Bus network.

Does the scan tool display a red X next to the module?

Yes >> Go To 2

No >> The no response condition is not present at this time. Using the wiring diagram/schematic as a guide, inspect the wiring for chafed, pierced, pinched, and partially broken wires and the wiring harness connectors for broken, bent, pushed out, and corroded terminals.

2. (A114) FUSED B(+) CIRCUIT OPEN OR SHORTED

Turn the ignition off.

Disconnect the Hands Free Module harness connector.

Using a 12-volt test light connected to ground, check the (A114) Fused B(+) circuit.

Does the test light illuminate brightly?

Yes >> Go To 3

No >> Repair the (A114) Fused B(+) circuit for an open or short. Perform BODY VERIFICATION TEST – VER 1. (Refer to 8 - ELECTRICAL/ELECTRONIC CONTROL MODULES - STANDARD PROCEDURE).

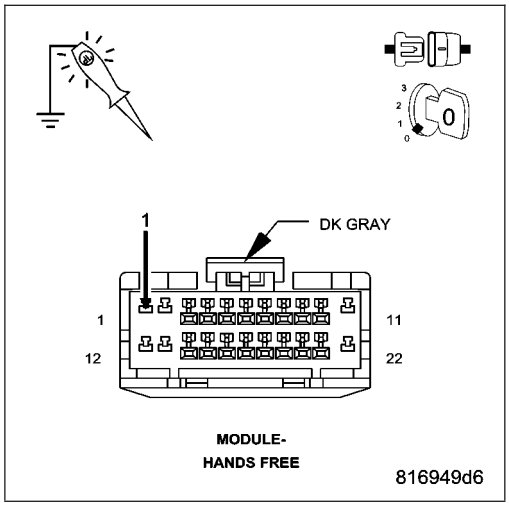

https://truckmanualshub.com/

3. (Z970) GROUND CIRCUIT OPEN

Using a 12-volt test light connected to 12-volts, check the (Z970) ground circuit.

Does the test light illuminate brightly?

Yes >> Go To 4

No >> Repair the (Z970) ground circuit for an open.
Perform BODY VERIFICATION TEST – VER 1. (Refer to 8 - ELECTRICAL/ELECTRONIC CONTROL MODULES - STANDARD PROCEDURE).

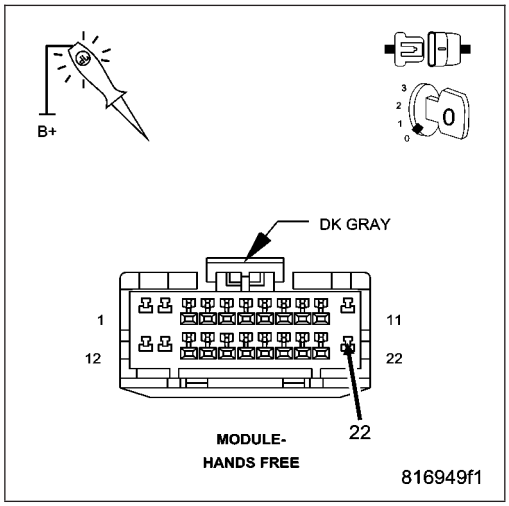

4. (D55) AND (D54) CAN B BUS CIRCUITS OPEN

NOTE: One open circuit will not cause this condition.
Measure the voltage between the (D54) CAN B Bus (-) circuit and ground.
Measure the voltage between the (D55) CAN B Bus (+) circuit and ground.

Is there any voltage present on either circuit?

Yes >> Replace the Hands Free Module in accordance with the service information.
Perform BODY VERIFICATION TEST – VER 1. (Refer to 8 - ELECTRICAL/ELECTRONIC CONTROL MODULES - STANDARD PROCEDURE).

No >> Repair the (D55) and (D54) CAN B Bus circuits for an open. Inspect the connector for damage.
Perform BODY VERIFICATION TEST – VER 1. (Refer to 8 - ELECTRICAL/ELECTRONIC CONTROL MODULES - STANDARD PROCEDURE).

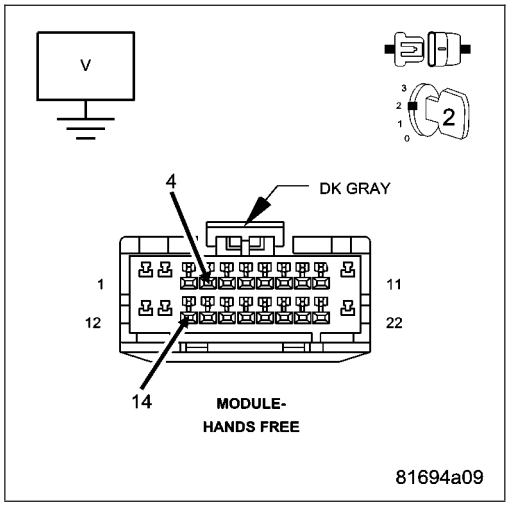

https://truckmanualshub.com/

*NO RESPONSE FROM HVAC (A/C HEATER CONTROL)

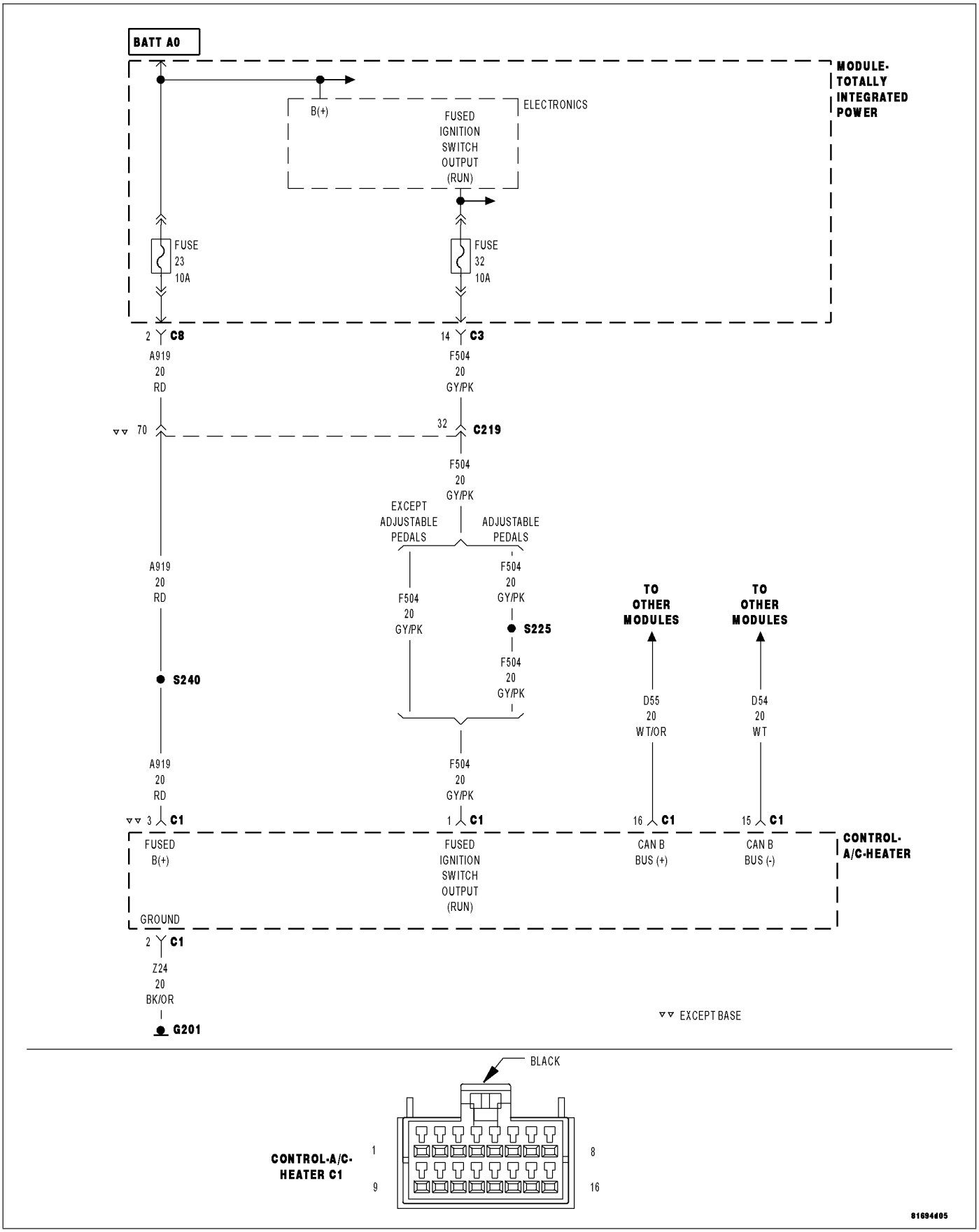

For a complete wiring diagram **Refer to Section 8W**.

https://truckmanualshub.com/

Possible Causes
(A919) FUSED B (+) CIRCUIT OPEN OR SHORTED
(F504) FUSED IGNITION SWITCH OUTPUT CIRCUIT OPEN OR SHORTED
(Z24) GROUND CIRCUIT OPEN
(D55) AND (D54) CAN B BUS CIRCUITS OPEN
A/C HEATER CONTROL

Diagnostic Test

1. TEST FOR INTERMITTENT CONDITION

Turn the ignition on.

NOTE: Ensure the IOD fuse is installed and battery voltage is between 10.0 and 16.0 volts.
With the scan tool, select ECU view.

NOTE: A red X will be next to the module that is not communicating, indicating that the module is not active on the Bus network. A green check indicates that the module is active on the Bus network.

Does the scan tool display a red X next to the module?

Yes >> Go To 2

No >> The no response condition is not present at this time. Using the wiring diagram/schematic as a guide, inspect the wiring for chafed, pierced, pinched, and partially broken wires and the wiring harness connectors for broken, bent, pushed out, and corroded terminals.

2. (A919) FUSED B(+) CIRCUIT OPEN OR SHORTED

Turn the ignition off.

Disconnect the A/C Heater Control C1 harness connector.

Using a 12-volt test light connected to ground, check the (A919) Fused B(+) circuit.

Does the test light illuminate brightly?

Yes >> Go To 3

No >> Repair the (A919) Fused B(+) circuit for an open or short. Perform BODY VERIFICATION TEST – VER 1. (Refer to 8 - ELECTRICAL/ELECTRONIC CONTROL MODULES - STANDARD PROCEDURE).

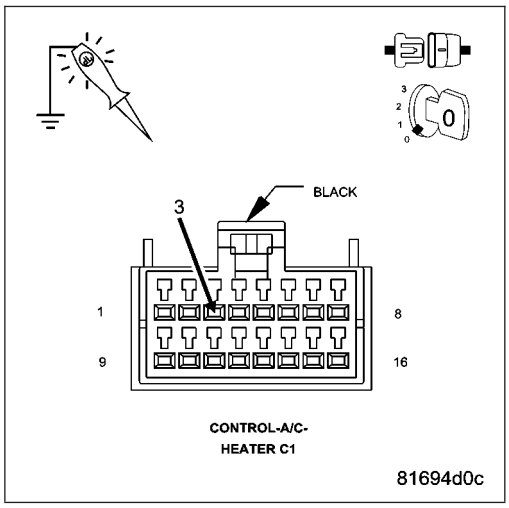

https://truckmanualshub.com/

3. (F504) FUSED IGNITION SWITCH OUTPUT CIRCUIT OPEN OR SHORTED

Turn the ignition on.

Using a 12-volt test light connected to ground, check the (F504) Fused Ignition Switch Output circuit.

Does the test light illuminate brightly?

Yes >> Go To 4

No >> Repair the (F504) Fused Ignition Switch Output for an open or short.

Perform BODY VERIFICATION TEST – VER 1. (Refer to 8 - ELECTRICAL/ELECTRONIC CONTROL MODULES - STANDARD PROCEDURE).

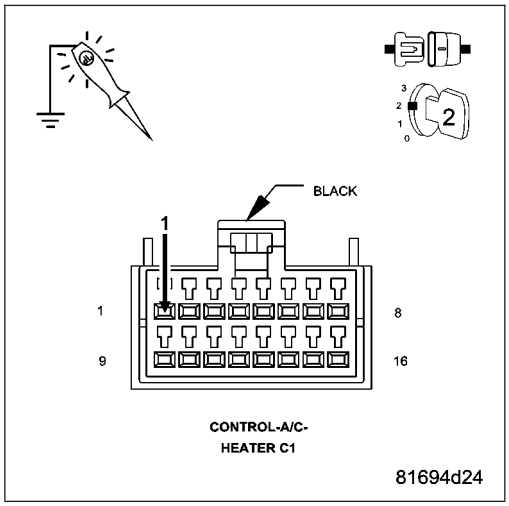

4. (Z24) GROUND CIRCUIT OPEN

Using a 12-volt test light connected to 12-volts, check the (Z24) ground circuit.

Does the test light illuminate brightly?

Yes >> Go To 5

No >> Repair the (Z24) ground circuit for an open.

Perform BODY VERIFICATION TEST – VER 1. (Refer to 8 - ELECTRICAL/ELECTRONIC CONTROL MODULES - STANDARD PROCEDURE).

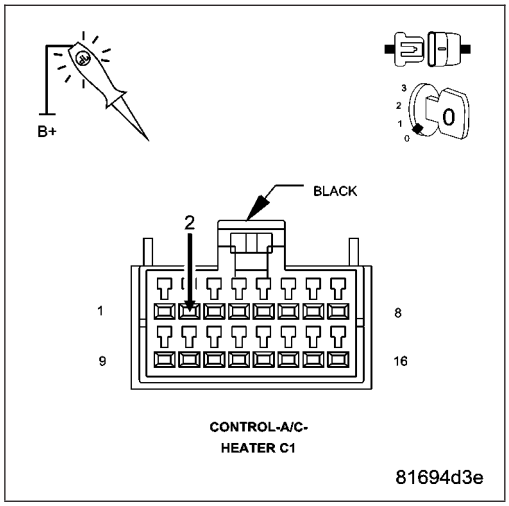

5. (D55) AND (D54) CAN B BUS CIRCUITS OPEN

NOTE: One open circuit will not cause this condition.

Measure the voltage between the (D54) CAN B Bus (-) circuit and ground.

Measure the voltage between the (D55) CAN B Bus (+) circuit and ground.

Is there any voltage present on either circuit?

Yes >> Replace the A/C Heater Control in accordance with the service information.

Perform BODY VERIFICATION TEST – VER 1. (Refer to 8 - ELECTRICAL/ELECTRONIC CONTROL MODULES - STANDARD PROCEDURE).

No >> Repair the (D55) and (D54) CAN B Bus circuits for an open. Inspect the connector for damage.

Perform BODY VERIFICATION TEST – VER 1. (Refer to 8 - ELECTRICAL/ELECTRONIC CONTROL MODULES -

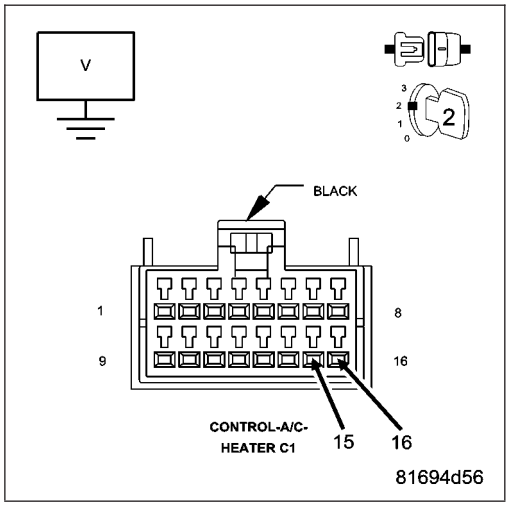

https://truckmanualshub.com/

STANDARD PROCEDURE).

*NO RESPONSE FROM ORC (OCCUPANT RESTRAINT CONTROLLER)

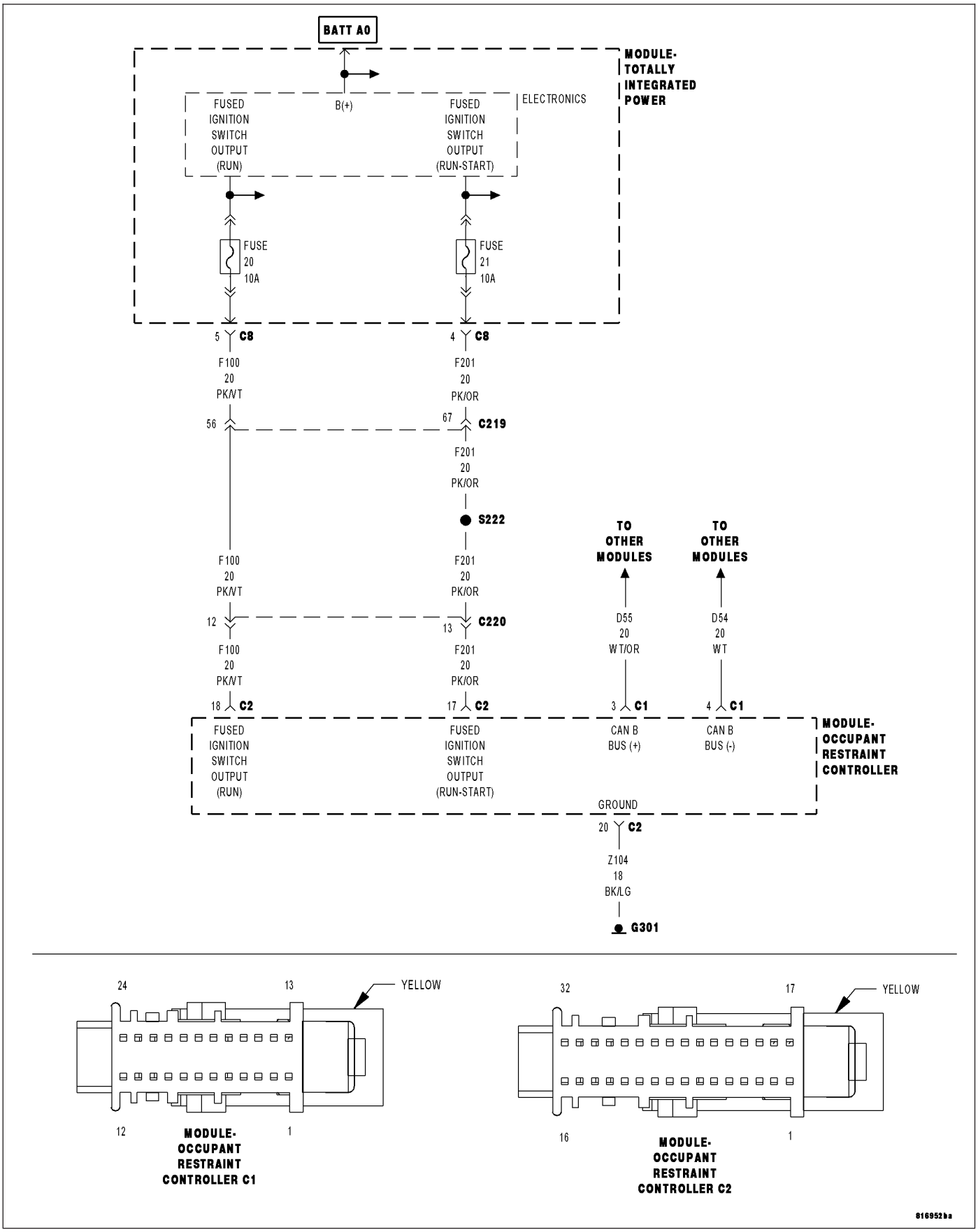

https://truckmanualshub.com/

For a complete wiring diagram **Refer to Section 8W**.

Possible Causes
(Z104) GROUND CIRCUIT OPEN
(F100) FUSED IGNITION SWITCH OUTPUT (RUN) CIRCUIT OPEN OR SHORTED
(F201) FUSED IGNITION SWITCH OUTPUT (RUN/START) CIRCUIT OPEN OR SHORTED
(D55) AND (D54) CAN B BUS CIRCUITS OPEN
OCCUPANT RESTRAINT CONTROLLER MODULE

Diagnostic Test

1. TEST FOR INTERMITTENT CONDITION

Turn the ignition on.

NOTE: Ensure the IOD fuse is installed and battery voltage is between 10.0 and 16.0 volts.
With the scan tool, select ECU view.

NOTE: A red X will be next to the module that is not communicating, indicating that the module is not active on the Bus network. A green check indicates that the module is active on the Bus network.

Does the scan tool display a red X next to the module?

Yes >> Go To 2

No >> The no response condition is not present at this time. Using the wiring diagram/schematic as a guide, inspect the wiring for chafed, pierced, pinched, and partially broken wires and the wiring harness connectors for broken, bent, pushed out, and corroded terminals.

2. (Z104) GROUND CIRCUIT OPEN

WARNING: To avoid personal injury or death, turn the ignition off, disconnect the battery and wait two minutes before proceeding.
Disconnect the Occupant Restraint Controller Module C1 and C2 harness connectors.

Connect the appropriate Load Tool ACM Adaptor to the ORC connector.

Using a 12-volt test light connected to 12-volts, check the (Z104) ground circuit.

Does the test light illuminate brightly?

Yes >> Go To 3

No >> Repair the (Z104) ground circuit for an open.
Perform AIRBAG VERIFICATION TEST - VER 1.

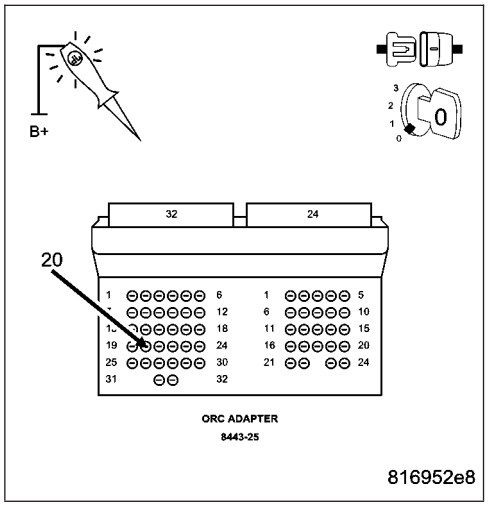

https://truckmanualshub.com/

3. (F100) FUSED IGNITION SWITCH OUTPUT (RUN) CIRCUIT OPEN OR SHORTED

NOTE: Check the TIPM for any ignition related DTCs before proceeding. If set (Refer to 8 - ELECTRICAL/IGNITION CONTROL - DIAGNOSIS AND TESTING).

WARNING: To avoid personal injury or death, turn the ignition on, then reconnect the battery.

Using a 12-volt test light connected to ground, check the (F100) Fused Ignition Switch Output (RUN) circuit.

Does the test light illuminate brightly?

Yes >> Go To 4

No >> Repair the (F100) Fused Ignition Switch Output (RUN) circuit for an open or short.
Perform AIRBAG VERIFICATION TEST - VER 1.

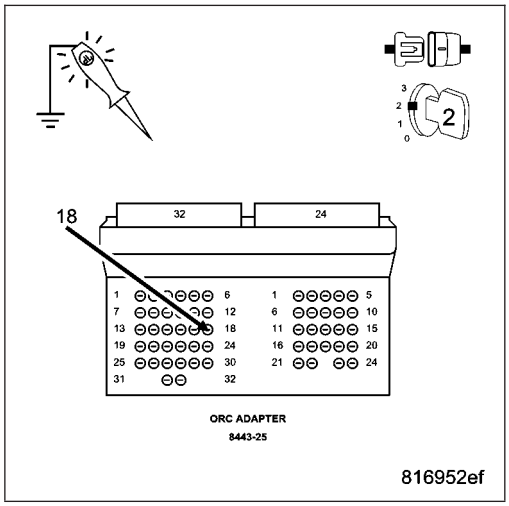

4. (F201) FUSED IGNITION SWITCH OUTPUT (RUN/START) CIRCUIT OPEN OR SHORTED

Using a 12-volt test light connected to ground, check the (F201) Fused Ignition Switch Output (RUN/START) circuit.

Does the test light illuminate brightly?

Yes >> Go To 5

No >> Repair the (F201) Fused Ignition Switch Output (RUN/START) circuit for an open or short.
Perform AIRBAG VERIFICATION TEST - VER 1.

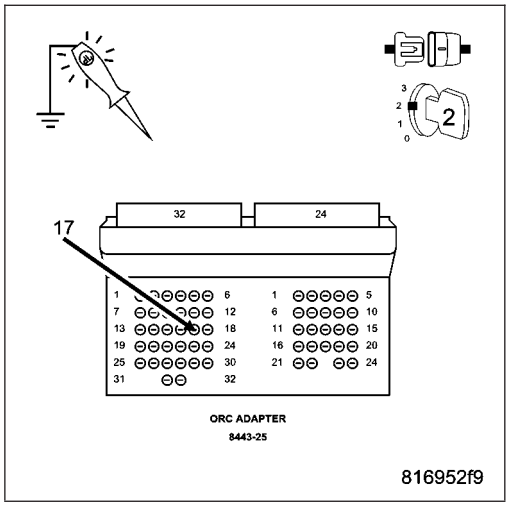

5. (D55) AND (D54) CAN B BUS CIRCUITS OPEN

WARNING: If the Occupant Restraint Controller is dropped at any time, it must be replaced. Failure to take the proper precautions could result in accidental airbag deployment and personal injury or death.

NOTE: One open circuit will not cause this condition.

Measure the voltage between the (D54) CAN B Bus (-) circuit and ground.

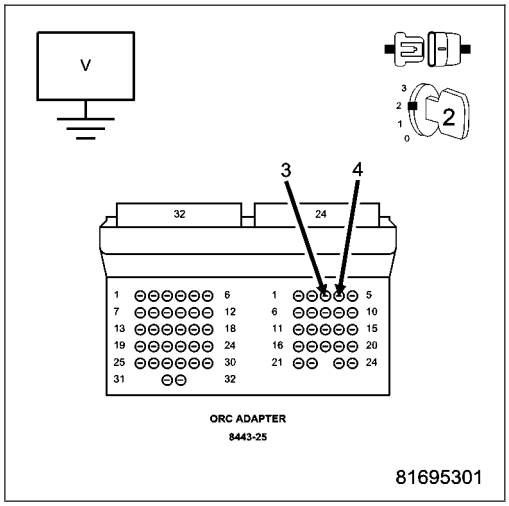

https://truckmanualshub.com/

Measure the voltage between the (D55) CAN B Bus (+) circuit and ground.

Is there any voltage present on either circuit?

Yes >> Replace the Occupant Restraint Controller Module in accordance with the service information. Perform AIRBAG VERIFICATION TEST - VER 1.

No >> Repair the (D55) and (D54) CAN B Bus circuits for an open. Inspect the connector for damage. Perform AIRBAG VERIFICATION TEST - VER 1.

https://truckmanualshub.com/

*NO RESPONSE FROM PCM (POWERTRAIN CONTROL MODULE) (NGC)

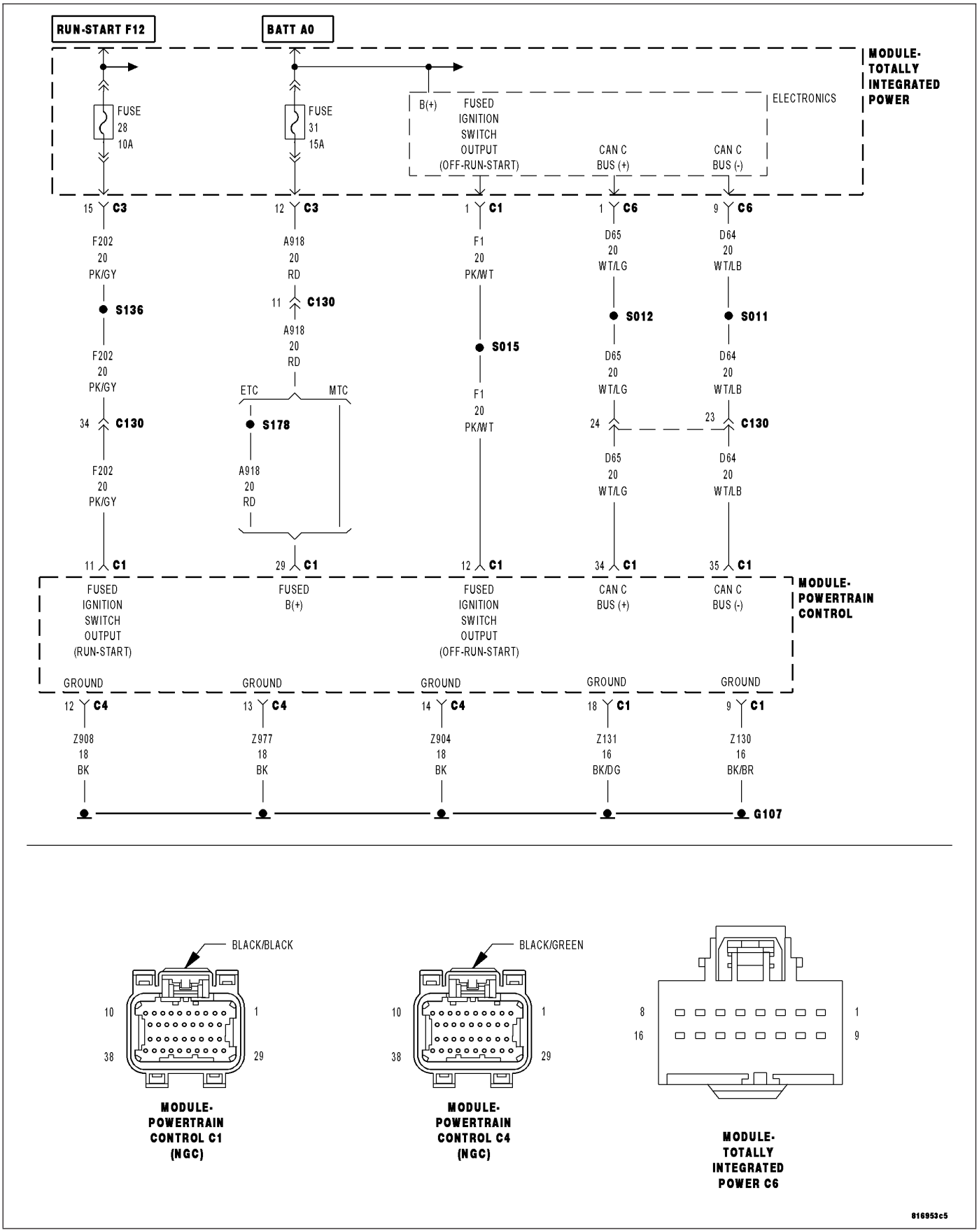

For a complete wiring diagram **Refer to Section 8W**.

https://truckmanualshub.com/

Possible Causes
(A918) FUSED B(+) CIRCUIT OPEN OR SHORTED
(Z130) (Z131) GROUND CIRCUIT OPEN
(F1) (F202) FUSED IGNITION SWITCH OUTPUT CIRCUIT OPEN OR SHORTED
(D65) CAN C BUS (+) CIRCUIT OPEN
(D64) CAN C BUS (-) CIRCUIT OPEN
POWERTRAIN CONTROL MODULE

Diagnostic Test

1. TEST FOR INTERMITTENT CONDITION

Turn the ignition on.

NOTE: Ensure the IOD fuse is installed and battery voltage is between 10.0 and 16.0 volts.
With the scan tool, select ECU view.

NOTE: A red X will be next to the module that is not communicating, indicating that the module is not active on the Bus network. A green check indicates that the module is active on the Bus network.

NOTE: Check the TIPM for any active CAN C hardware DTCs, perform DTC before proceeding.

Does the scan tool display a red X next to the module?

Yes >> Go To 2

No >> The no response condition is not present at this time. Using the wiring diagram/schematic as a guide, inspect the wiring for chafed, pierced, pinched, and partially broken wires and the wiring harness connectors for broken, bent, pushed out, and corroded terminals.

2. (A918) FUSED B(+) CIRCUIT OPEN OR SHORTED

Turn the ignition off.

Disconnect the PCM C1 harness connector.

CAUTION: Do not probe the PCM harness connectors. Probing the PCM harness connectors will damage the PCM terminals resulting in poor terminal to pin connection. Install Miller Special Tool #8815 to perform diagnosis.

Using a 12-volt test light connected to ground, check the (A918) Fused B(+) circuit.

Does the test light illuminate brightly?

Yes >> Go To 3

No >> Repair the (A918) Fused B(+) circuit for an open or short. Perform (NGC) POWERTRAIN VERIFICATION TEST VER - 5.

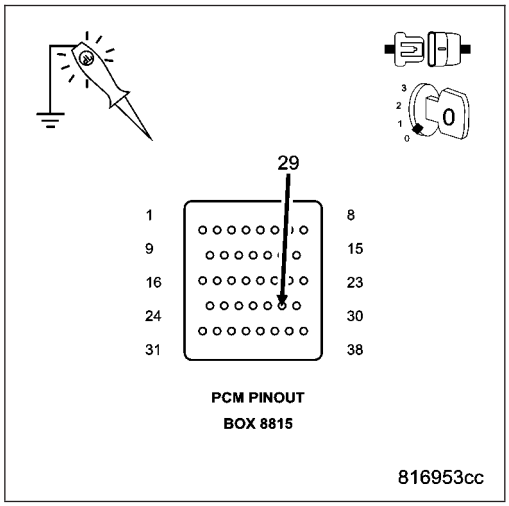

https://truckmanualshub.com/

3. (Z130) (Z131) GROUND CIRCUIT OPEN

Using a 12-volt test light connected to 12-volts, check each (Z130) and (Z131) ground circuit.

Does the test light illuminate brightly for each circuit?

Yes >> Go To 4

No >> Repair the ground circuit for an open.
Perform (NGC) POWERTRAIN VERIFICATION TEST VER - 5.

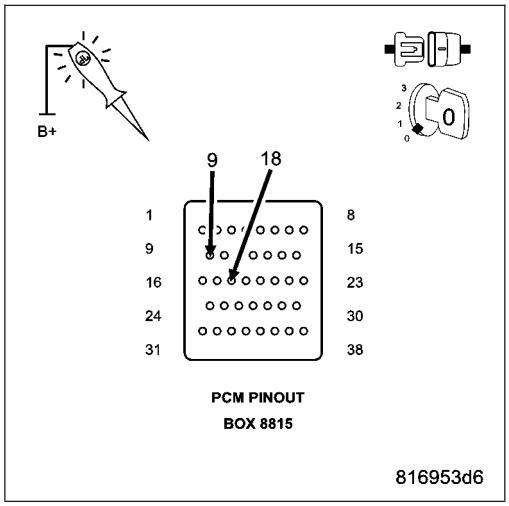

4. (F1) (F202) FUSED IGNITION SWITCH OUTPUT CIRCUIT OPEN OR SHORTED

Turn the ignition on.

Using a 12-volt test light connected to ground, check each (F1) and (F202) Fused Ignition Switch Output circuit.

Does the test light illuminate brightly for each circuit?

Yes >> Go To 5

No >> Repair the Fused Ignition Switch Output circuit for an open or short.
Perform (NGC) POWERTRAIN VERIFICATION TEST VER - 5.

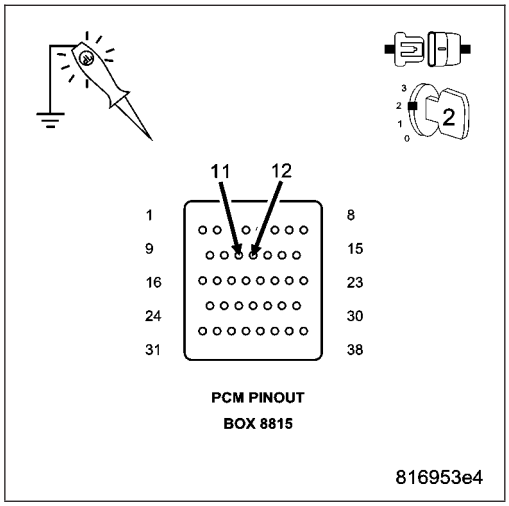

https://truckmanualshub.com/

5. (D65) CAN C BUS (+) CIRCUIT OPEN

Turn the ignition off.

Disconnect the TIPM C6 harness connector.

Measure the resistance of the (D65) CAN C Bus (+) circuit between the TIPM connector and the appropriate terminal of the special tool #8815.

Is the resistance below 5.0 ohms?

Yes >> Go To 6

No >> Repair the (D65) CAN C Bus (+) circuit for an open.
Perform (NGC) POWERTRAIN VERIFICATION TEST VER - 5.

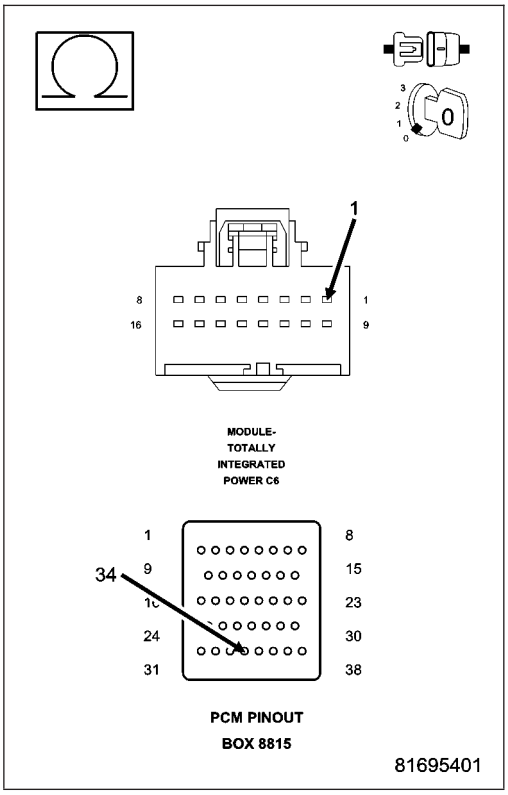

6. (D64) CAN C BUS (-) CIRCUIT OPEN

Measure the resistance of the (D64) CAN C Bus (-) circuit between the TIPM connector and the appropriate terminal of the special tool #8815.

Is the resistance below 5.0 ohms?

Yes >> Replace and program the Powertrain Control Module in accordance with the service information.
Perform (NGC) POWERTRAIN VERIFICATION TEST VER - 5.

No >> Repair the (D64) CAN C Bus (-) circuit for an open.
Perform (NGC) POWERTRAIN VERIFICATION TEST VER - 5.

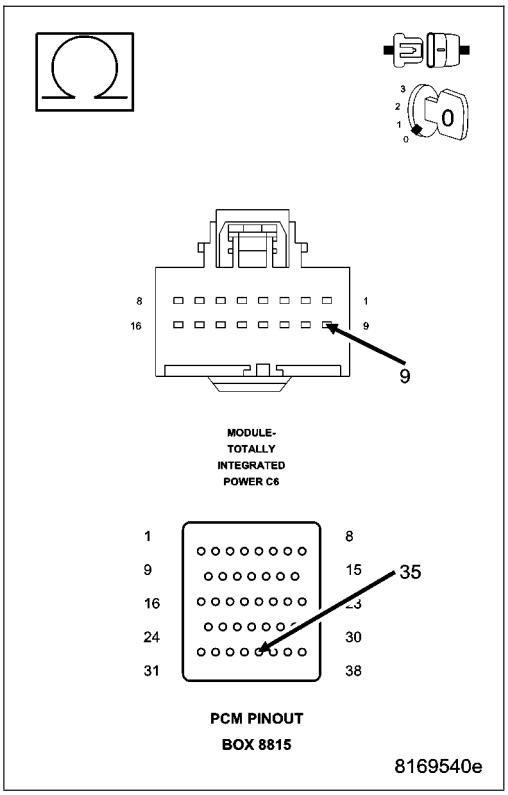

https://truckmanualshub.com/

*NO RESPONSE FROM PCM (PCI BUS) - (SRT10 ONLY)

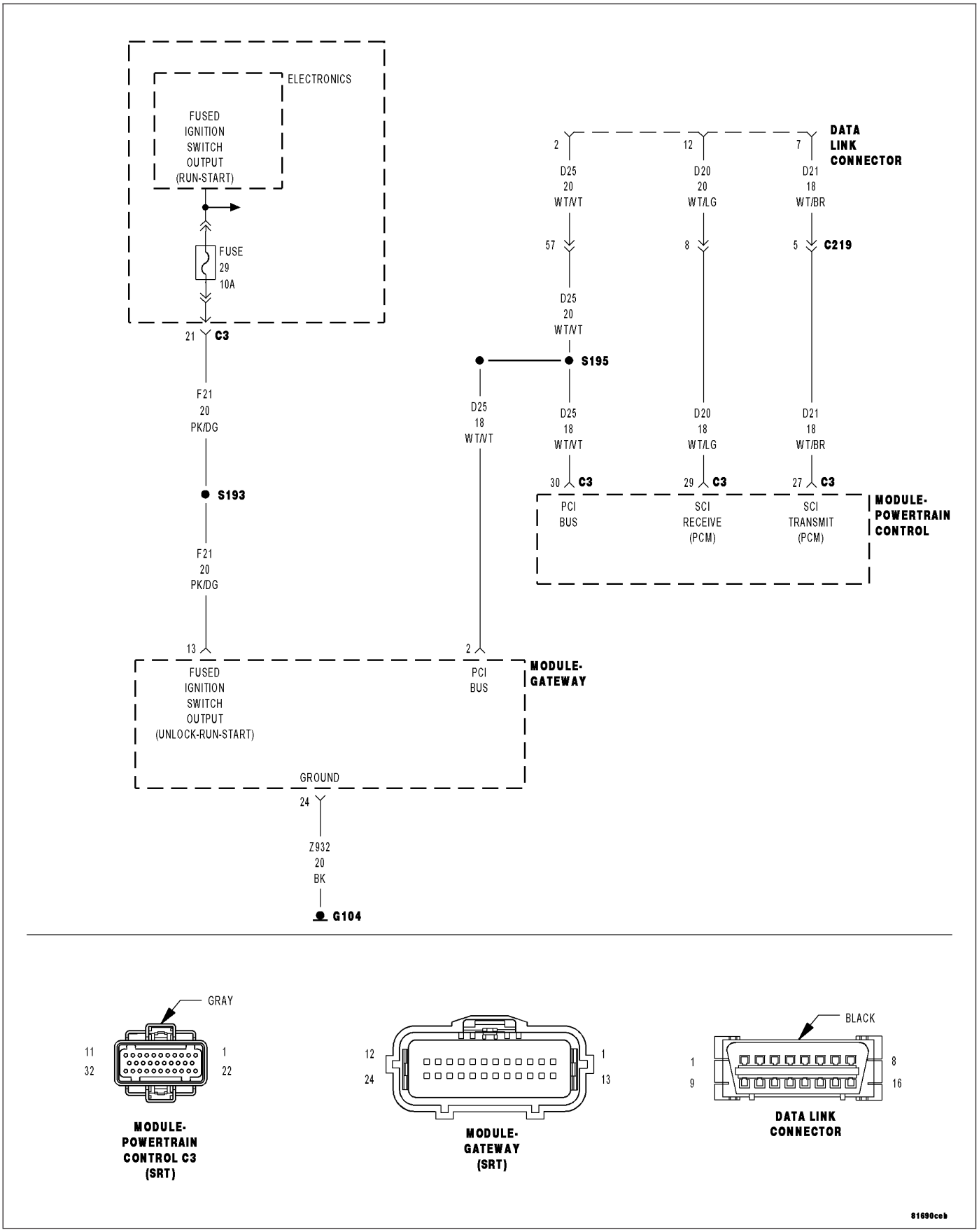

For a complete wiring diagram **Refer to Section 8W**.

https://truckmanualshub.com/

Possible Causes
POWERTRAIN CONTROL MODULE POWER AND GROUNDS
(D25) PCI BUS CIRCUIT OPEN
POWERTRAIN CONTROL MODULE

Diagnostic Test

1. TEST FOR INTERMITTENT CONDITION

Turn the ignition on.

NOTE: Ensure the IOD fuse is installed and battery voltage is between 10.0 and 16.0 volts.
With the scan tool, select ECU view.

NOTE: A red X will be next to the module that is not communicating, indicating that the module is not active on the Bus network. A green check indicates that the module is active on the Bus network.

NOTE: Check the TIPM for any active ignition related DTCs, perform DTC before proceeding.

Does the scan tool display a red X next to the module?

Yes >> Go To 2

No >> The no response condition is not present at this time. Using the wiring diagram/schematic as a guide, inspect the wiring for chafed, pierced, pinched, and partially broken wires and the wiring harness connectors for broken, bent, pushed out, and corroded terminals.

2. ATTEMPT TO ESTABLISH COMMUNICATIONS WITH THE GATEWAY MODULE

With the scan tool, select ECU view.

Does the scan tool display a red X next to the Gateway module?

Yes >> Refer to the No Response From Gateway Module test procedure. Refer to the table of contents in this section.

No >> Go To 3

https://truckmanualshub.com/

3. (D25) PCI BUS CIRCUIT OPEN

With the scan tool, read PCM DTC's. This is to ensure power and ground to the PCM are operational.

NOTE: If the scan tool will not read PCM DTC's, follow the NO RESPONSE TO PCM (SCI ONLY) - SRT10 symptom.

NOTE: If the vehicle will not start and the scan tool displays a no response message, refer to the appropriate symptom in the Engine Electrical Diagnostics category.

Turn the ignition off.

Disconnect the PCM C3 harness connector.

Measure the resistance of the (D25) PCI Bus circuit between the DLC and the PCM connector.

Is the resistance below 5.0 ohms?

Yes >> Replace the Powertrain Control Module in accordance with the service information.
Perform POWERTRAIN VERIFICATION TEST - VER 1.

No >> Repair the (D25) PCI Bus circuit for an open.
Perform POWERTRAIN VERIFICATION TEST - VER 1.

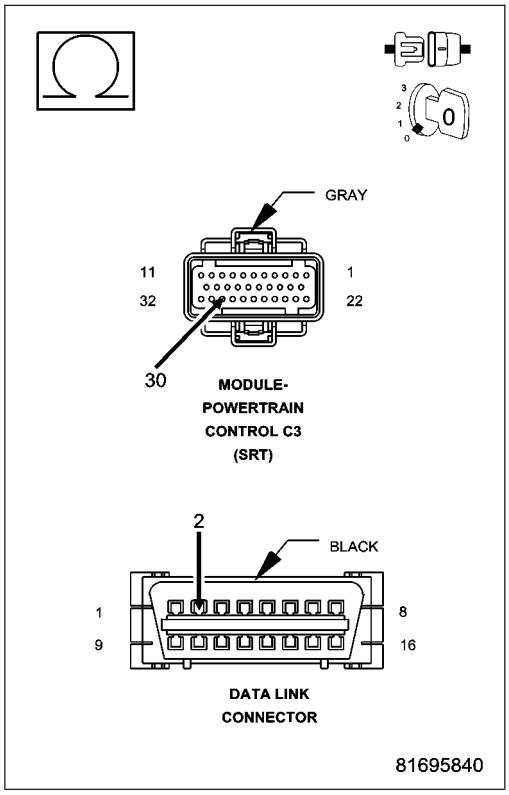

https://truckmanualshub.com/

*NO RESPONSE FROM PCM (SCI ONLY) - (SRT10 ONLY)

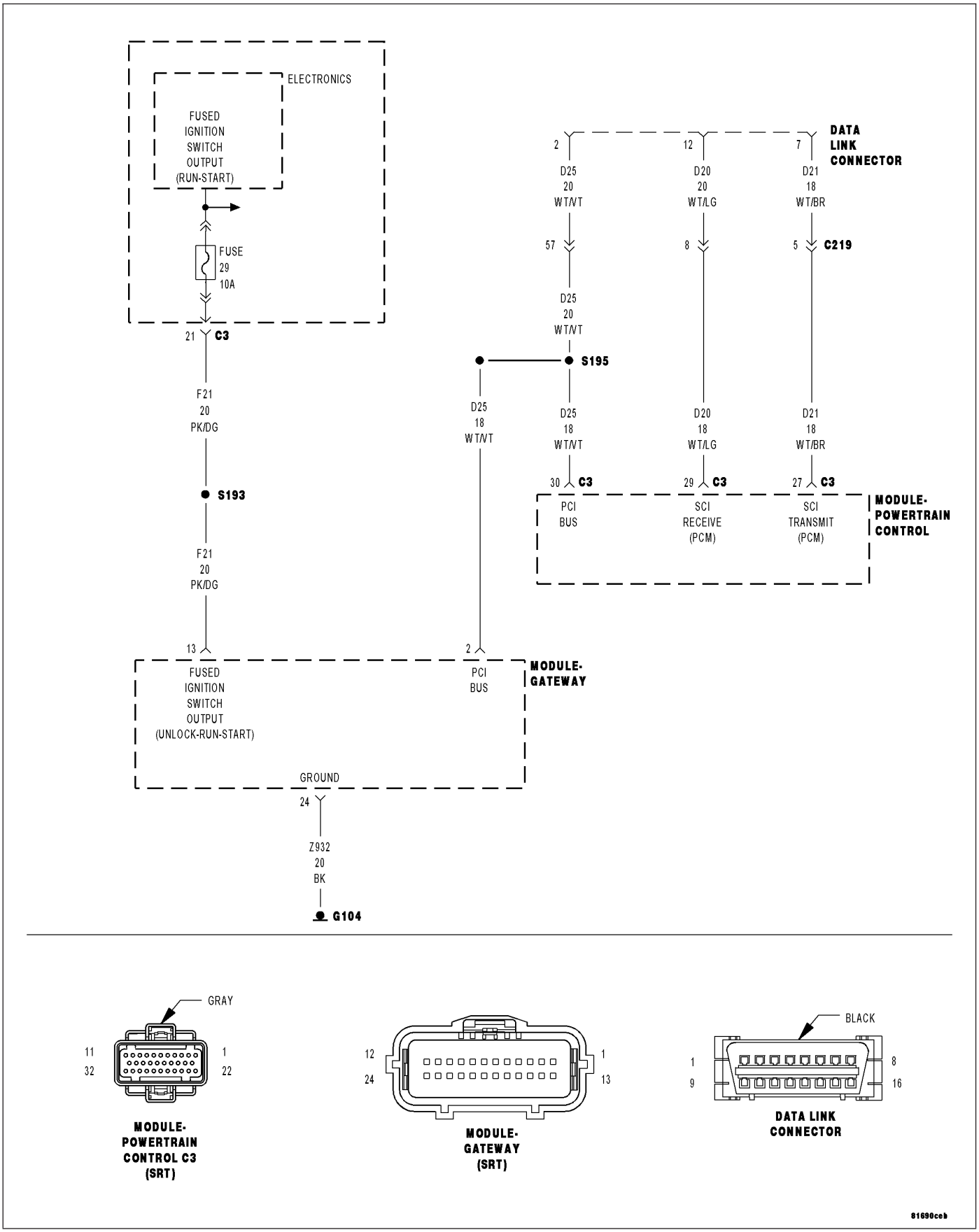

For a complete wiring diagram **Refer to Section 8W**.

https://truckmanualshub.com/

Possible Causes
POWERTRAIN CONTROL MODULE POWER AND GROUNDS
(D21) SCI TRANSMIT (PCM) CIRCUIT SHORTED TO GROUND
(D20) SCI RECEIVE (PCM) CIRCUIT SHORTED TO GROUND
(D21) SCI TRANSMIT (PCM) CIRCUIT SHORTED TO VOLTAGE
(D20) SCI RECEIVE (PCM) CIRCUIT SHORTED TO VOLTAGE
(D21) SCI TRANSMIT (PCM) CIRCUIT OPEN
(D20) SCI RECEIVE (PCM) CIRCUIT OPEN
(D21) SCI TRANSMIT (PCM) CIRCUIT SHORTED TO THE (D20) SCI RECEIVE (PCM) CIRCUIT
POWERTRAIN CONTROL MODULE

Diagnostic Test

1. CHECK POWERTRAIN CONTROL MODULE POWER AND GROUND

Refer to the Engine Electrical Diagnostics SRT10 and perform the symptom Checking PCM Power and Ground Circuits.

Did the vehicle pass this test?

Yes >> Go To 2

No >> Repair as necessary.
Perform POWERTRAIN VERIFICATION TEST - VER 1.

2. SCI CIRCUITS SHORTED TO GROUND

Turn the ignition off.

Disconnect the scan tool from the DLC.

Disconnect the Powertrain Control Module C3 harness connector.

Measure the resistance between ground and the (D21) SCI Transmit (PCM) circuit.

Measure the resistance between ground and the (D20) SCI Receive (PCM) circuit.

Is the resistance below 10.0 ohms for either circuit?

Yes >> Repair the SCI Circuit that measured below 10.0 ohms for a short to ground.
Perform POWERTRAIN VERIFICATION TEST - VER 1.

No >> Go To 3

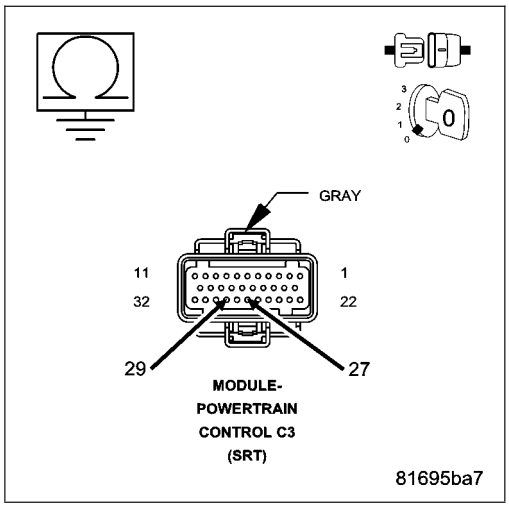

https://truckmanualshub.com/

3. SCI CIRCUITS SHORTED TO VOLTAGE

Turn the ignition on.

Measure the voltage of the (D21) SCI Transmit (PCM) circuit.

Measure the voltage of the (D20) SCI Receive (PCM) circuit.

Is the voltage above 1.0 volt for either circuit?

Yes >> Repair the SCI Circuit that measured above 1.0 volt for a short to voltage.
Perform POWERTRAIN VERIFICATION TEST - VER 1.

No >> Go To 4

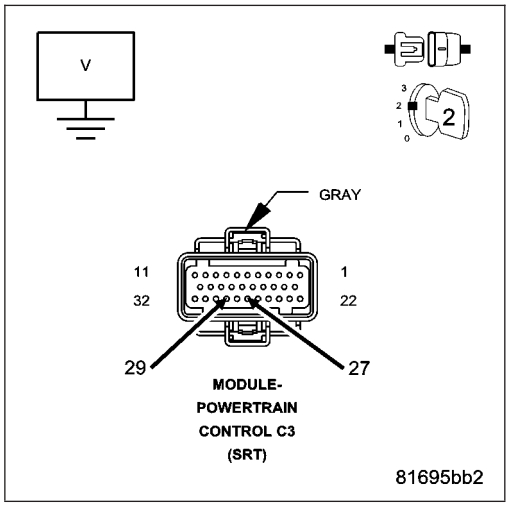

4. (D21) SCI TRANSMIT (PCM) CIRCUIT OPEN

Turn the ignition off.

Measure the resistance of the (D21) SCI Transmit (PCM) circuit between the DLC and the PCM connector.

Is the resistance below 5.0 ohms?

Yes >> Go To 5

No >> Repair the (D21) SCI Transmit (PCM) circuit for an open.
Perform POWERTRAIN VERIFICATION TEST - VER 1.

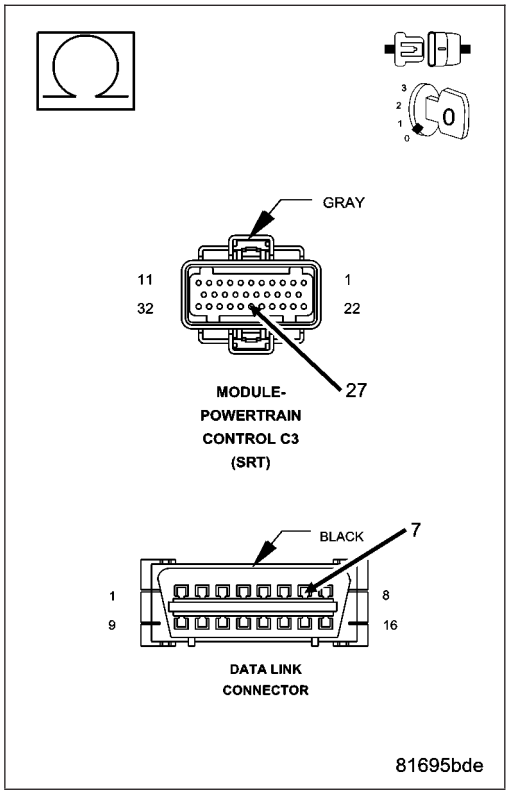

https://truckmanualshub.com/

5. (D20) SCI RECEIVE (PCM) CIRCUIT OPEN

Measure the resistance of the (D20) SCI Receive (PCM) circuit between the DLC and the PCM connector.

Is the resistance below 5.0 ohms?

Yes >> Go To 6

No >> Repair the (D20) SCI Receive (PCM) circuit for an open. Perform POWERTRAIN VERIFICATION TEST - VER 1.

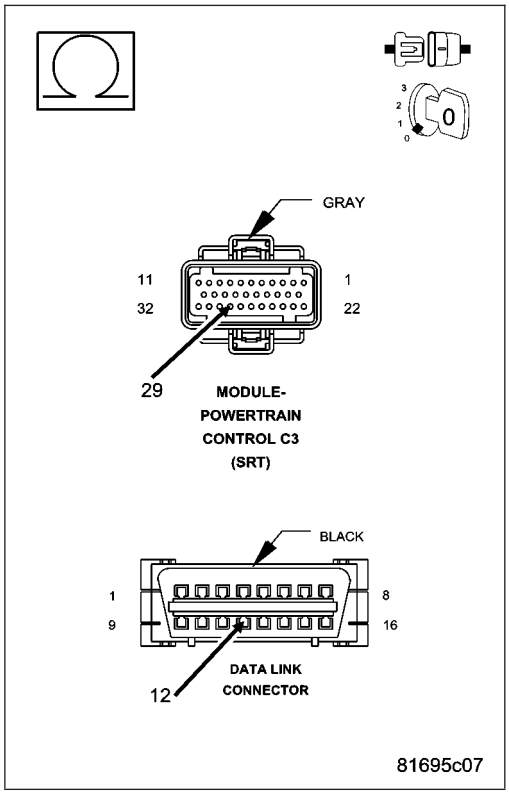

6. (D21) SCI TRANSMIT (PCM) CIRCUIT SHORTED TO THE (D20) SCI RECEIVE (PCM) CIRCUIT

Measure the resistance between the (D21) SCI Transmit (PCM) and the (D20) SCI Receive (PCM) circuits.

Is the resistance below 5.0 ohms?

Yes >> Repair the (D21) SCI Transmit (PCM) circuit for a short to the (D20) SCI Receive (PCM) circuit.
Perform POWERTRAIN VERIFICATION TEST - VER 1.

No >> Replace the Powertrain Control Module in accordance with the service information.
Perform POWERTRAIN VERIFICATION TEST - VER 1.

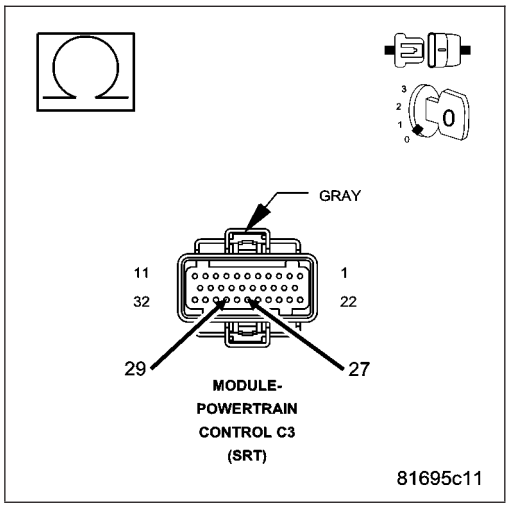

https://truckmanualshub.com/

*NO RESPONSE FROM RADIO

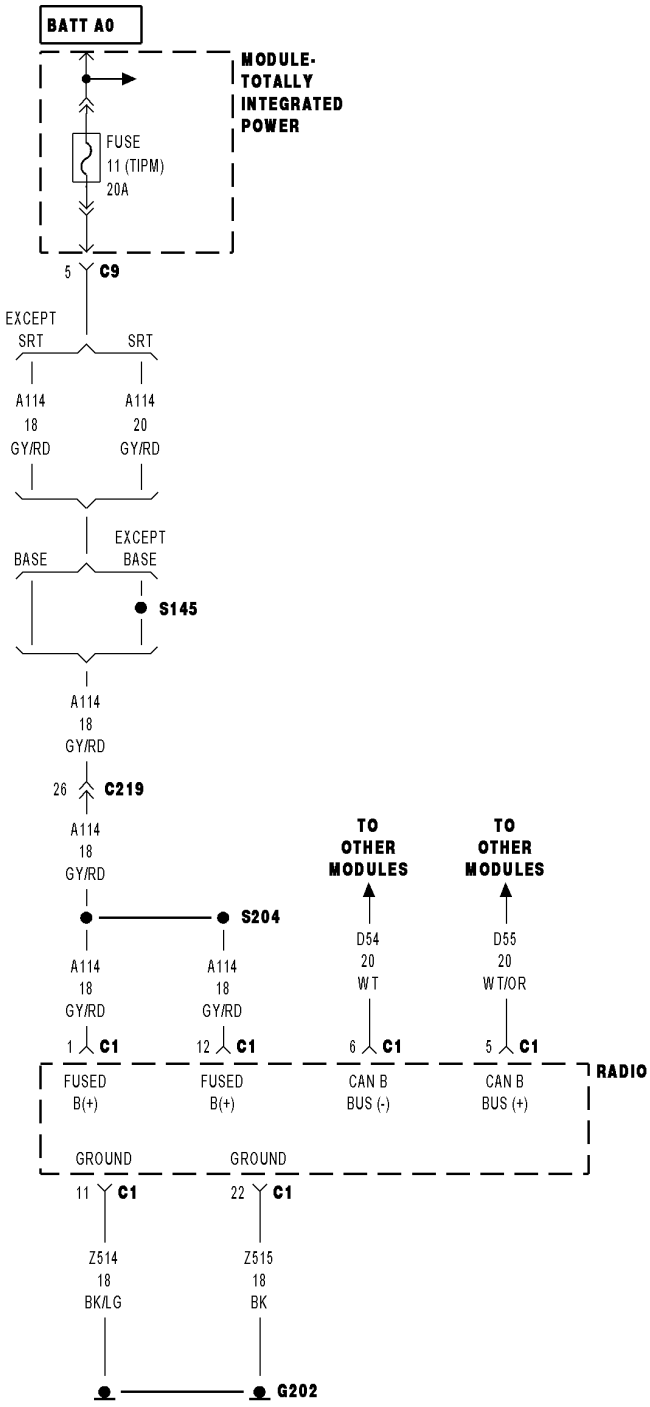

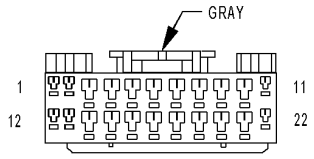

RADIO C1

81696717

For a complete wiring diagram **Refer to Section 8W**.

https://truckmanualshub.com/

Possible Causes
(A114) FUSED B (+) CIRCUIT OPEN OR SHORTED
(Z514) (Z515) GROUND CIRCUIT OPEN
(D55) AND (D54) CAN B BUS CIRCUITS OPEN
RADIO

Diagnostic Test

1. TEST FOR INTERMITTENT CONDITION

Turn the ignition on.

NOTE: Ensure the IOD fuse is installed and battery voltage is between 10.0 and 16.0 volts.
With the scan tool, select ECU view.

NOTE: A red X will be next to the module that is not communicating, indicating that the module is not active on the Bus network. A green check indicates that the module is active on the Bus network.

Does the scan tool display a red X next to the module?

Yes >> Go To 2

No >> The no response condition is not present at this time. Using the wiring diagram/schematic as a guide, inspect the wiring for chafed, pierced, pinched, and partially broken wires and the wiring harness connectors for broken, bent, pushed out, and corroded terminals.

2. (A114) FUSED B(+) CIRCUIT OPEN OR SHORTED

Turn the ignition off.

Disconnect the Radio C1 harness connector.

Using a 12-volt test light connected to ground, check each (A114) Fused B(+) circuit.

Does the test light illuminate brightly for each circuit?

Yes >> Go To 3

No >> Repair the (A114) Fused B(+) circuit for an open or short. Perform BODY VERIFICATION TEST – VER 1. (Refer to 8 - ELECTRICAL/ELECTRONIC CONTROL MODULES - STANDARD PROCEDURE).

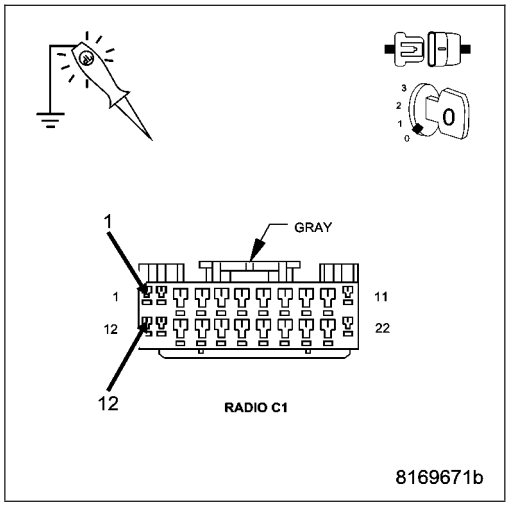

https://truckmanualshub.com/

3. (Z514) (Z515) GROUND CIRCUIT OPEN

Using a 12-volt test light connected to 12-volts, check each (Z514) and (Z515) ground circuit.

Does the test light illuminate brightly for each circuit?

Yes >> Go To 4

No >> Repair the (Z514) or (Z515) ground circuit for an open.
Perform BODY VERIFICATION TEST – VER 1. (Refer to 8 - ELECTRICAL/ELECTRONIC CONTROL MODULES - STANDARD PROCEDURE).

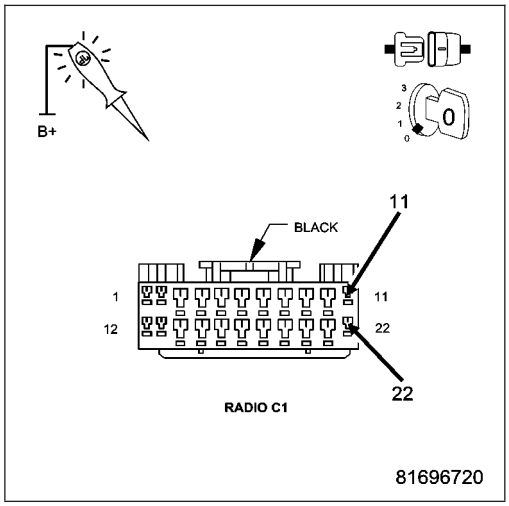

4. (D55) AND (D54) CAN B BUS CIRCUITS OPEN

NOTE: One open circuit will not cause this condition.
Measure the voltage between the (D54) CAN B Bus (-) circuit and ground.
Measure the voltage between the (D55) CAN B Bus (+) circuit and ground.

Is there any voltage present on either circuit?

Yes >> Replace the Radio in accordance with the service information.
Perform BODY VERIFICATION TEST – VER 1. (Refer to 8 - ELECTRICAL/ELECTRONIC CONTROL MODULES - STANDARD PROCEDURE).

No >> Repair the (D55) and (D54) CAN B Bus circuits for an open. Inspect the connector for damage.
Perform BODY VERIFICATION TEST – VER 1. (Refer to 8 - ELECTRICAL/ELECTRONIC CONTROL MODULES - STANDARD PROCEDURE).

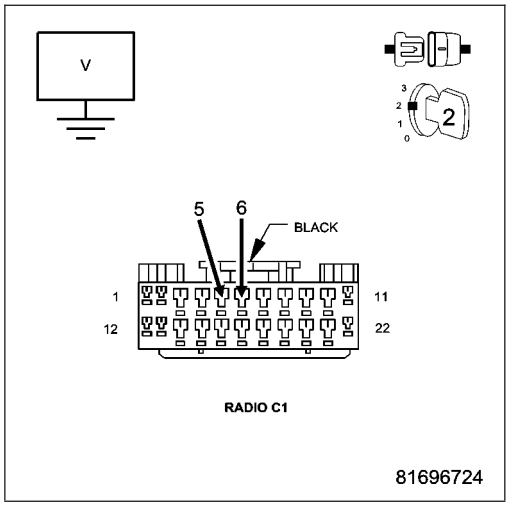

https://truckmanualshub.com/

*NO RESPONSE FROM SDAR (SATELLITE RECEIVER)

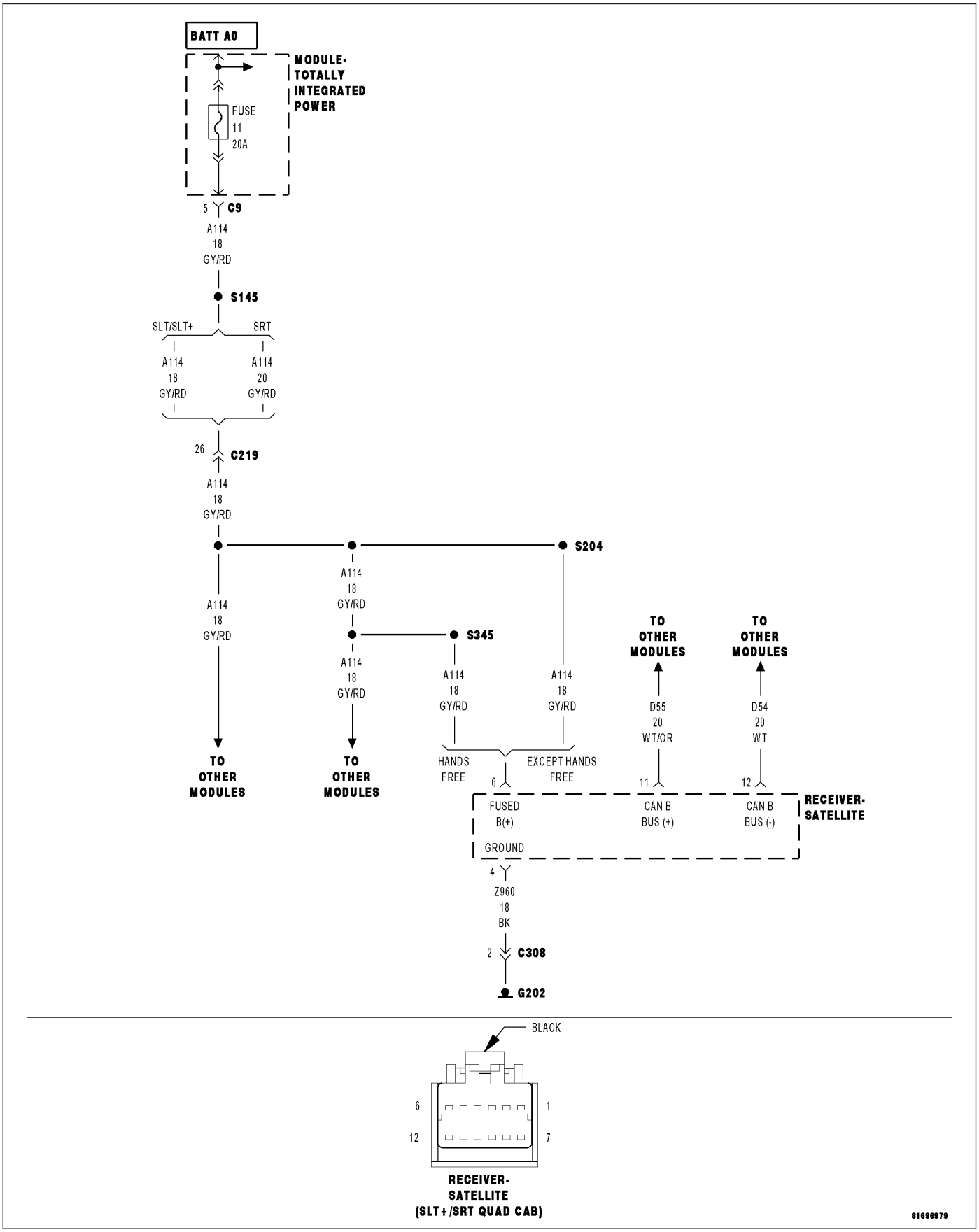

For a complete wiring diagram **Refer to Section 8W**.

https://truckmanualshub.com/

Possible Causes
(A114) FUSED B(+) CIRCUIT OPEN OR SHORTED
(Z960) GROUND CIRCUIT OPEN
(D55) AND (D54) CAN B BUS CIRCUITS OPEN
SATELLITE RECEIVER

Diagnostic Test

1. TEST FOR INTERMITTENT CONDITION

Turn the ignition on.

NOTE: Ensure the IOD fuse is installed and battery voltage is between 10.0 and 16.0 volts.
With the scan tool, select ECU view.

NOTE: A red X will be next to the module that is not communicating, indicating that the module is not active on the Bus network. A green check indicates that the module is active on the Bus network.

Does the scan tool display a red X next to the module?

Yes >> Go To 2

No >> The no response condition is not present at this time. Using the wiring diagram/schematic as a guide, inspect the wiring for chafed, pierced, pinched, and partially broken wires and the wiring harness connectors for broken, bent, pushed out, and corroded terminals.

2. (A114) FUSED B(+) CIRCUIT OPEN OR SHORTED

Turn the ignition off.

Disconnect the Satellite Receiver harness connector.

Using a 12-volt test light connected to ground, check the (A114) Fused B(+) circuit.

Does the test light illuminate brightly?

Yes >> Go To 3

No >> Repair the (A114) Fused B(+) circuit for an open or short. Perform BODY VERIFICATION TEST – VER 1. (Refer to 8 - ELECTRICAL/ELECTRONIC CONTROL MODULES - STANDARD PROCEDURE).

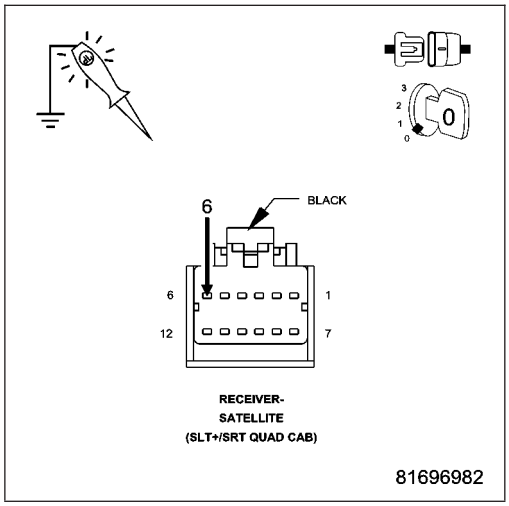

https://truckmanualshub.com/

3. (Z960) GROUND CIRCUIT OPEN

Using a 12-volt test light connected to 12-volts, check the (Z960) ground circuit.

Does the test light illuminate brightly?

Yes >> Go To 4

No >> Repair the (Z960) ground circuit for an open.

Perform BODY VERIFICATION TEST – VER 1. (Refer to 8 - ELECTRICAL/ELECTRONIC CONTROL MODULES - STANDARD PROCEDURE).

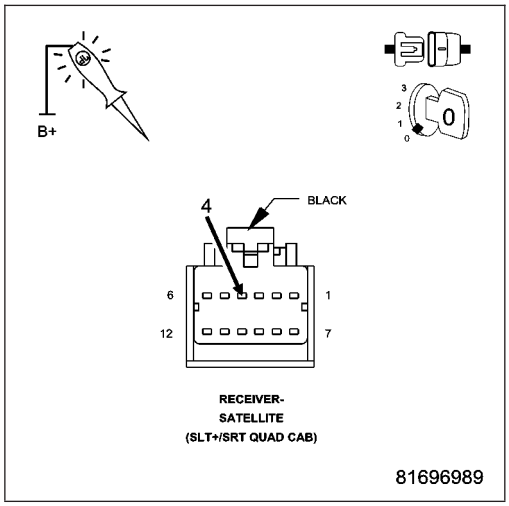

4. (D55) AND (D54) CAN B BUS CIRCUITS OPEN

NOTE: One open circuit will not cause this condition.

Measure the voltage between the (D54) CAN B Bus (-) circuit and ground.

Measure the voltage between the (D55) CAN B Bus (+) circuit and ground.

Is there any voltage present on either circuit?

Yes >> Replace the Satellite Receiver in accordance with the service information.

Perform BODY VERIFICATION TEST – VER 1. (Refer to 8 - ELECTRICAL/ELECTRONIC CONTROL MODULES - STANDARD PROCEDURE).

No >> Repair the (D55) and (D54) CAN B Bus circuits for an open. Inspect the connector for damage.

Perform BODY VERIFICATION TEST – VER 1. (Refer to 8 - ELECTRICAL/ELECTRONIC CONTROL MODULES - STANDARD PROCEDURE).

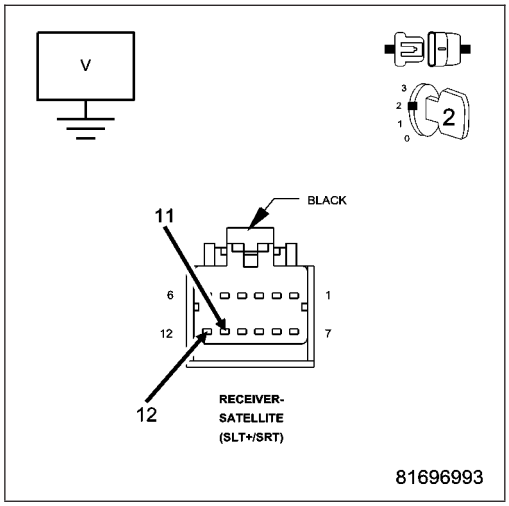

https://truckmanualshub.com/

*NO RESPONSE FROM SUNR (SUNROOF MOTOR/MODULE)

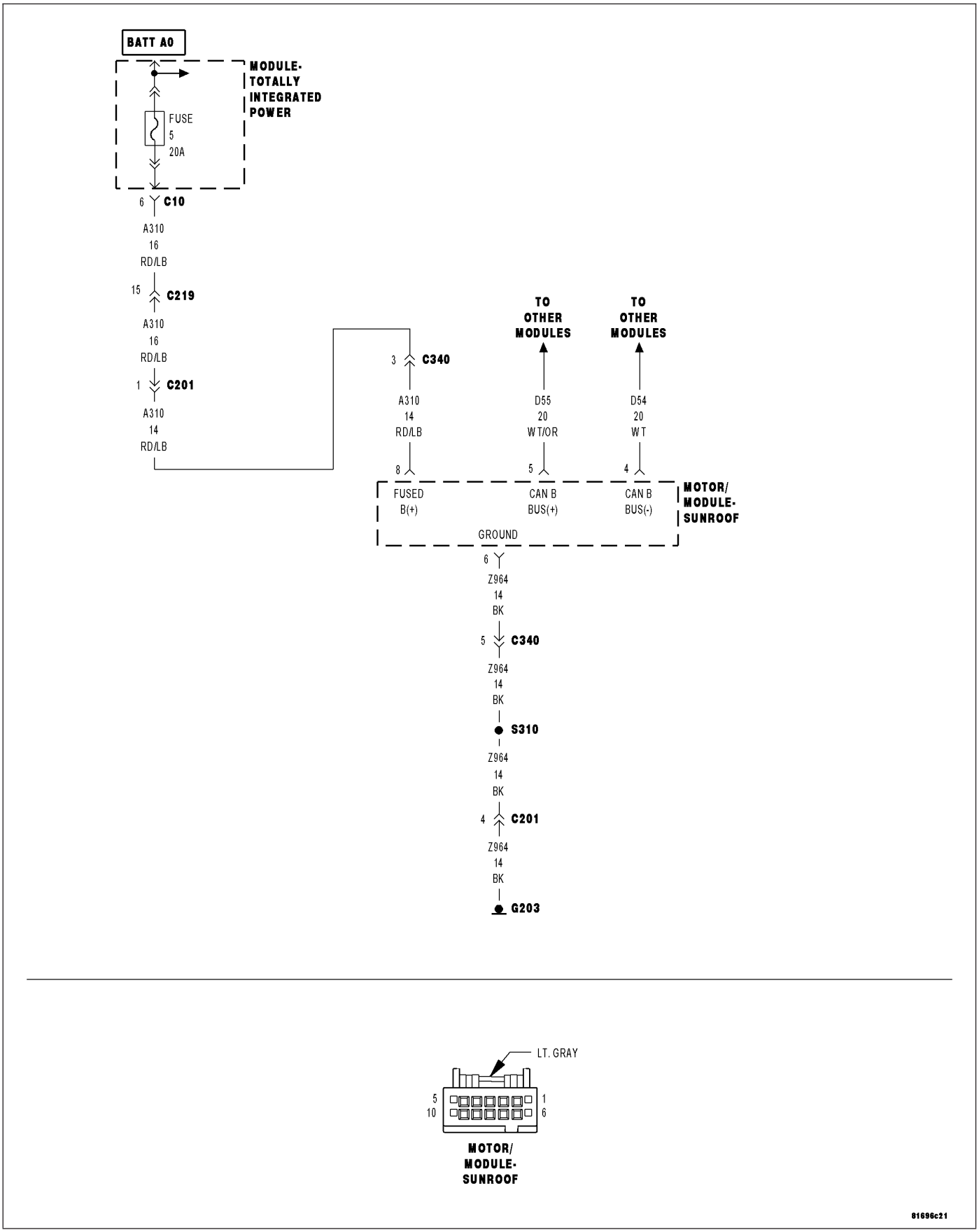

For a complete wiring diagram **Refer to Section 8W**.

https://truckmanualshub.com/

Possible Causes
(A310) FUSED B (+) CIRCUIT OPEN OR SHORTED
(Z964) GROUND CIRCUIT OPEN
(D55) AND (D54) CAN B BUS CIRCUITS OPEN
SUNROOF MOTOR/MODULE

Diagnostic Test

1. TEST FOR INTERMITTENT CONDITION

Turn the ignition on.

NOTE: Ensure the IOD fuse is installed and battery voltage is between 10.0 and 16.0 volts.
With the scan tool, select ECU view.

NOTE: A red X will be next to the module that is not communicating, indicating that the module is not active on the Bus network. A green check indicates that the module is active on the Bus network.

Does the scan tool display a red X next to the module?

Yes >> Go To 2

No >> The no response condition is not present at this time. Using the wiring diagram/schematic as a guide, inspect the wiring for chafed, pierced, pinched, and partially broken wires and the wiring harness connectors for broken, bent, pushed out, and corroded terminals.

2. (A310) FUSED B(+) CIRCUIT OPEN OR SHORTED

Turn the ignition off.

Disconnect the Sunroof Motor/Module harness connector.

Using a 12-volt test light connected to ground, check the (A310) Fused B(+) circuit.

Does the test light illuminate brightly?

Yes >> Go To 3

No >> Repair the (A310) Fused B(+) circuit for an open or short. Perform BODY VERIFICATION TEST – VER 1. (Refer to 8 - ELECTRICAL/ELECTRONIC CONTROL MODULES - STANDARD PROCEDURE).

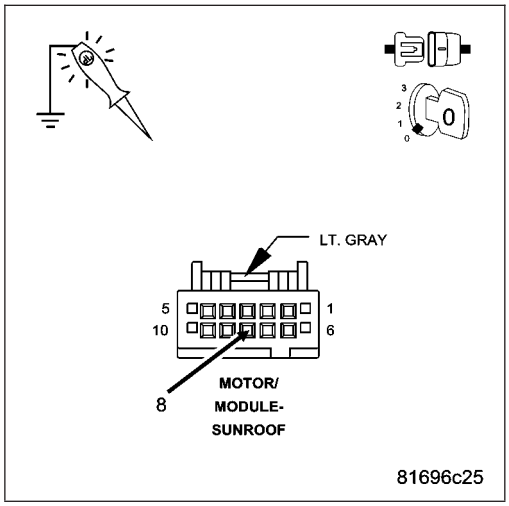

https://truckmanualshub.com/

3. (Z964) GROUND CIRCUIT OPEN

Using a 12-volt test light connected to 12-volts, check the (Z964) ground circuit.

Does the test light illuminate brightly?

Yes >> Go To 4

No >> Repair the (Z964) ground circuit for an open.
Perform BODY VERIFICATION TEST – VER 1. (Refer to 8 - ELECTRICAL/ELECTRONIC CONTROL MODULES - STANDARD PROCEDURE).

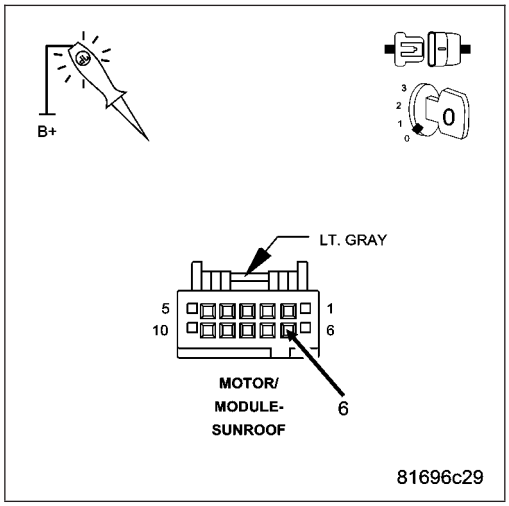

4. (D55) AND (D54) CAN B BUS CIRCUITS OPEN

NOTE: One open circuit will not cause this condition.
Measure the voltage between the (D54) CAN B Bus (-) circuit and ground.
Measure the voltage between the (D55) CAN B Bus (+) circuit and ground.

Is there any voltage present on either circuit?

Yes >> Replace the Sunroof Motor/Module in accordance with the service information.
Perform BODY VERIFICATION TEST – VER 1. (Refer to 8 - ELECTRICAL/ELECTRONIC CONTROL MODULES - STANDARD PROCEDURE).

No >> Repair the (D55) and (D54) CAN B Bus circuits for an open. Inspect the connector for damage.
Perform BODY VERIFICATION TEST – VER 1. (Refer to 8 - ELECTRICAL/ELECTRONIC CONTROL MODULES - STANDARD PROCEDURE).

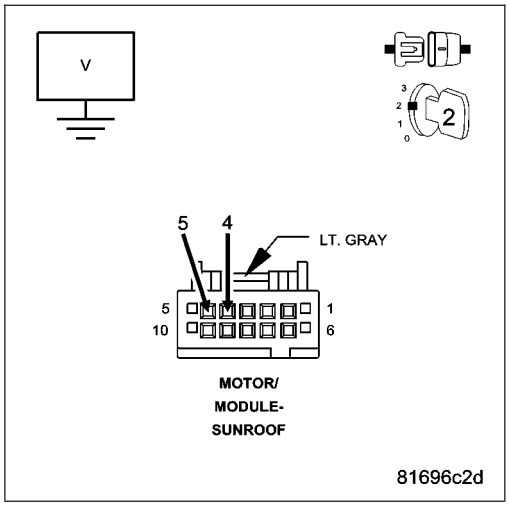

https://truckmanualshub.com/

*NO RESPONSE FROM TCM (POWERTRAIN CONTROL MODULE) - NGC

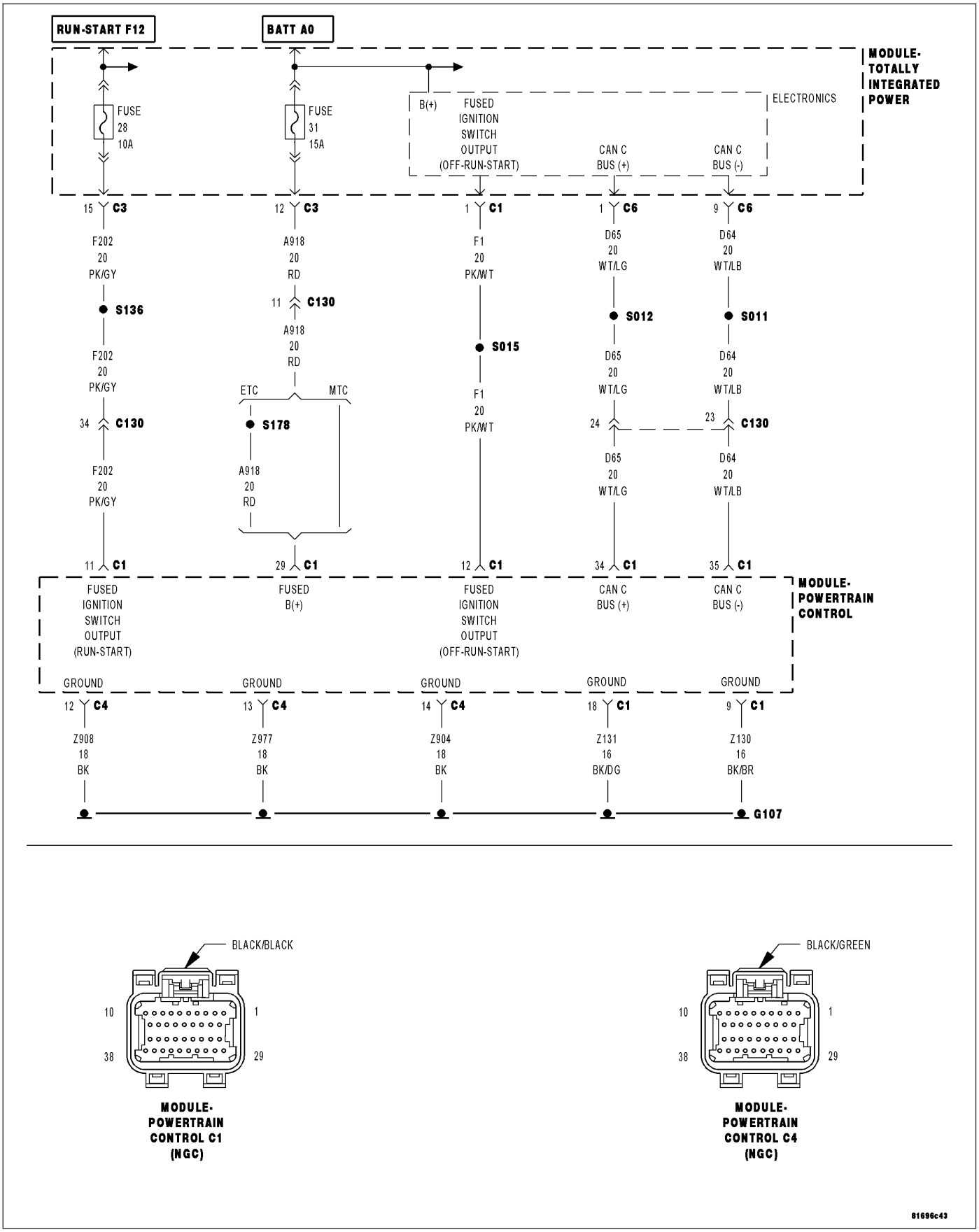

For a complete wiring diagram **Refer to Section 8W**.

https://truckmanualshub.com/

Possible Causes
(A918) B(+) CIRCUIT OPEN OR SHORTED
GROUND CIRCUIT OPEN
(F1) (F202) FUSED IGNITION SW OUTPUT CIRCUIT OPEN OR SHORTED
(D65) CAN C BUS (+) CIRCUIT OPEN
(D64) CAN C BUS (-) CIRCUIT OPEN
POWERTRAIN CONTROL MODULE

Diagnostic Test

1. TEST FOR INTERMITTENT CONDITION

Turn the ignition on.

NOTE: Ensure the IOD fuse is installed and battery voltage is between 10.0 and 16.0 volts.
With the scan tool, select ECU view.

NOTE: A red X will be next to the module that is not communicating, indicating that the module is not active on the Bus network. A green check indicates that the module is active on the Bus network.

NOTE: Check the TIPM for any active CAN C hardware DTCs, perform DTC before proceeding.

Does the scan tool display a red X next to the module?

Yes >> Go To 2

No >> The no response condition is not present at this time. Using the wiring diagram/schematic as a guide, inspect the wiring for chafed, pierced, pinched, and partially broken wires and the wiring harness connectors for broken, bent, pushed out, and corroded terminals.

2. ATTEMPT TO COMMUNICATE WITH THE PCM

With the scan tool in ECU view, observe the status of the PCM.

Does the scan tool display a red X next to the PCM?

Yes >> Refer to the No Response From PCM test procedure. Refer to the table of contents in this section.

No >> Go To 3

3. GROUND CIRCUIT OPEN

Turn the ignition off.

Disconnect the PCM C4 harness connector.

CAUTION: Do not probe the PCM harness connectors. Probing the PCM harness connectors will damage the PCM terminals resulting in poor terminal to pin connection. Install Miller Special Tool #8815 to perform diagnosis.

Using a 12-volt test light connected to 12-volts, check each ground circuit.

Does the test light illuminate brightly for each circuit?

Yes >> Replace and program the Powertrain Control Module in accordance with the service information.
Perform the appropriate VERIFICATION TEST.

No >> Repair the ground circuit for an open.
Perform the appropriate VERIFICATION TEST.

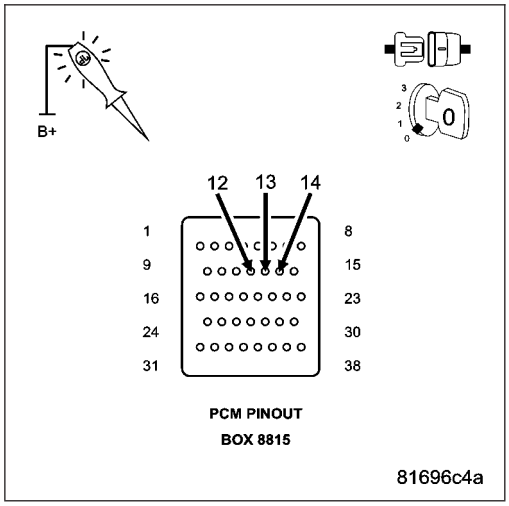

https://truckmanualshub.com/

*NO RESPONSE FROM TIPM (TOTALLY INTEGRATED POWER MODULE)

For a complete wiring diagram **Refer to Section 8W**.

Possible Causes
FUSED B (+) CIRCUITS OPEN
FUSED IGNITION SWITCH OUTPUT CIRCUITS OPEN
GROUND CIRCUITS OPEN
CAN C DIAGNOSTIC CIRCUITS OPEN
CAN C DIAGNOSTIC CIRCUITS SHORTED TO GROUND
CAN C DIAGNOSTIC CIRCUITS SHORTED TOGETHER
TOTALLY INTEGRATED POWER MODULE

Diagnostic Test

1. TEST FOR INTERMITTENT CONDITION

Turn the ignition on.

NOTE: Ensure the IOD fuse is installed and battery voltage is between 10.0 and 16.0 volts.

NOTE: Ensure the scan tool is updated to the latest software.

NOTE: If the scan tool displays any error messages involving the CAN C Diagnostic circuits, diagnose and repair the error message before proceeding. Refer to the Table of Contents.

NOTE: A loss of communication with the TIPM can cause the ECU View button on the scan tool to be inoperative (not highlighted).

With the scan tool, attempt to select ECU view.

Can the scan tool communicate with the TIPM?

Yes >> The no response condition is not present at this time. Using the wiring diagram/schematic as a guide, inspect the wiring for chafed, pierced, pinched, and partially broken wires and the wiring harness connectors for broken, bent, pushed out, and corroded terminals.

No >> Go To 2

2. FUSED B (+) CIRCUITS OPEN AT TIPM

Disconnect the scan tool from the DLC.

Using a 12-volt test light connected to ground, and using the wiring diagram as a guide, check all Fused B (+) circuits.

Does the test light illuminate brightly for each circuit?

Yes >> Go To 3

No >> Repair the Fused B(+) circuit that did not light the test light for an open or short.
Perform BODY VERIFICATION TEST - VER 1. (Refer to 8 - ELECTRICAL/ELECTRONIC CONTROL MODULES - STANDARD PROCEDURE)

https://truckmanualshub.com/

3. FUSED IGNITION SWITCH OUTPUT CIRCUITS OPEN AT TIPM

Turn the ignition on.

Using a 12-volt test light connected to ground, and using the wiring diagram as a guide, check each Fused Ignition Switch Output circuit.

Does the test light illuminate brightly for each circuit?

Yes >> Go To 4

No >> Repair the Fused Ignition Switch Output circuit that did not light the test light for an open.
Perform BODY VERIFICATION TEST - VER 1. (Refer to 8 - ELECTRICAL/ELECTRONIC CONTROL MODULES - STANDARD PROCEDURE)

4. GROUND CIRCUITS OPEN AT TIPM

Turn the ignition off.

Using a 12-volt test light connected to 12-volts, and using the wiring diagram as a guide, check all ground circuits.

Does the test light illuminate brightly on each circuit?

Yes >> Go To 5

No >> Repair the ground circuit that did not light the test light for an open.
Perform BODY VERIFICATION TEST - VER 1. (Refer to 8 - ELECTRICAL/ELECTRONIC CONTROL MODULES - STANDARD PROCEDURE)

5. CHECK FOR (D52) CAN C DIAGNOSTIC (+) CIRCUIT OPEN AT DLC

Disconnect the TIPM C6 harness connector.

Measure the resistance on the D52 CAN C Diagnostic (+) circuit between the TIPM C6 harness connector and the DLC

Is the resistance above 10 ohms?

Yes >> Repair the D52 CAN C Diagnostic (+) circuit for an open.
Perform BODY VERIFICATION TEST - VER 1. (Refer to 8 - ELECTRICAL/ELECTRONIC CONTROL MODULES - STANDARD PROCEDURE)

No >> Go To 6

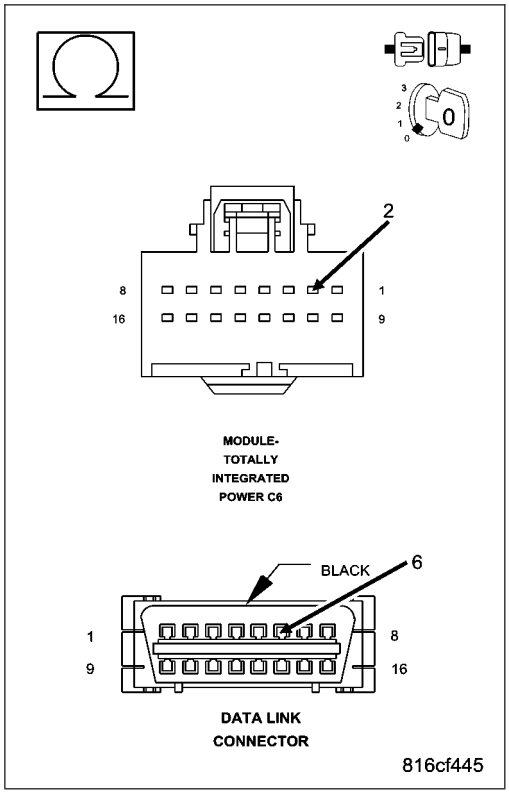

https://truckmanualshub.com/

6. CHECK FOR (D51) CAN C DIAGNOSTIC (-) CIRCUIT OPEN AT DLC

Measure the resistance on the D51 CAN C Diagnostic (-) circuit between the TIPM C6 harness connector and the DLC

Is the resistance above 10 ohms?

Yes >> Repair the D51 CAN C Diagnostic (-) circuit for an open.
Perform BODY VERIFICATION TEST - VER 1. (Refer to 8 - ELECTRICAL/ELECTRONIC CONTROL MODULES - STANDARD PROCEDURE)

No >> Go To 7

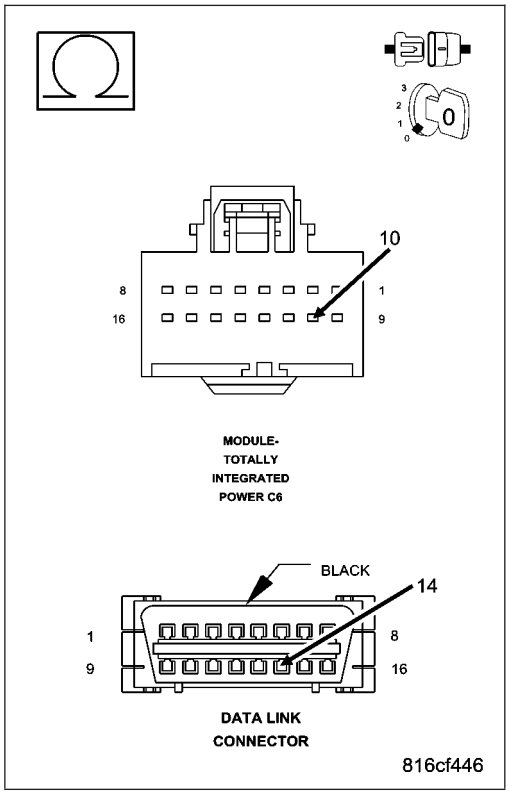

7. CHECK FOR CAN C DIAGNOSTIC CIRCUITS SHORTED TOGETHER

Measure the resistance between the (D52) CAN C Diagnostic (+) circuit and the (D51) CAN C Diagnostic (-) circuit at the TIPM C6 harness connector.

Is the resistance below 100.0 ohms?

Yes >> Repair the (D52) CAN C Diagnostic (+) circuit for a short to the (D51) CAN C Diagnostic (-) circuit.
Perform BODY VERIFICATION TEST – VER 1. (Refer to 8 - ELECTRICAL/ELECTRONIC CONTROL MODULES - STANDARD PROCEDURE).

No >> Replace the Totally Integrated Power Module in accordance with the service information.
Perform BODY VERIFICATION TEST – VER 1. (Refer to 8 - ELECTRICAL/ELECTRONIC CONTROL MODULES - STANDARD PROCEDURE).

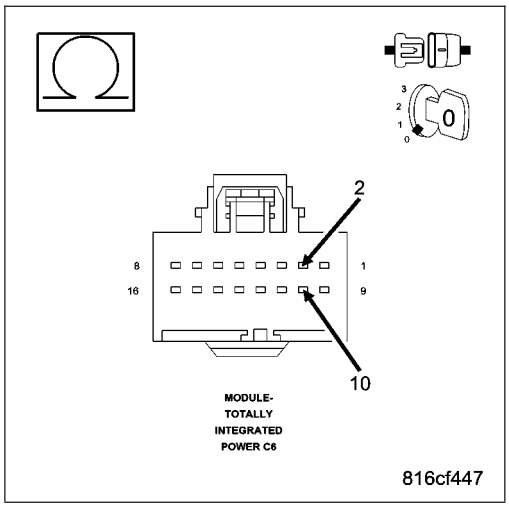

https://truckmanualshub.com/

*NO RESPONSE FROM VES (MONITOR/DVD MEDIA SYSTEM)

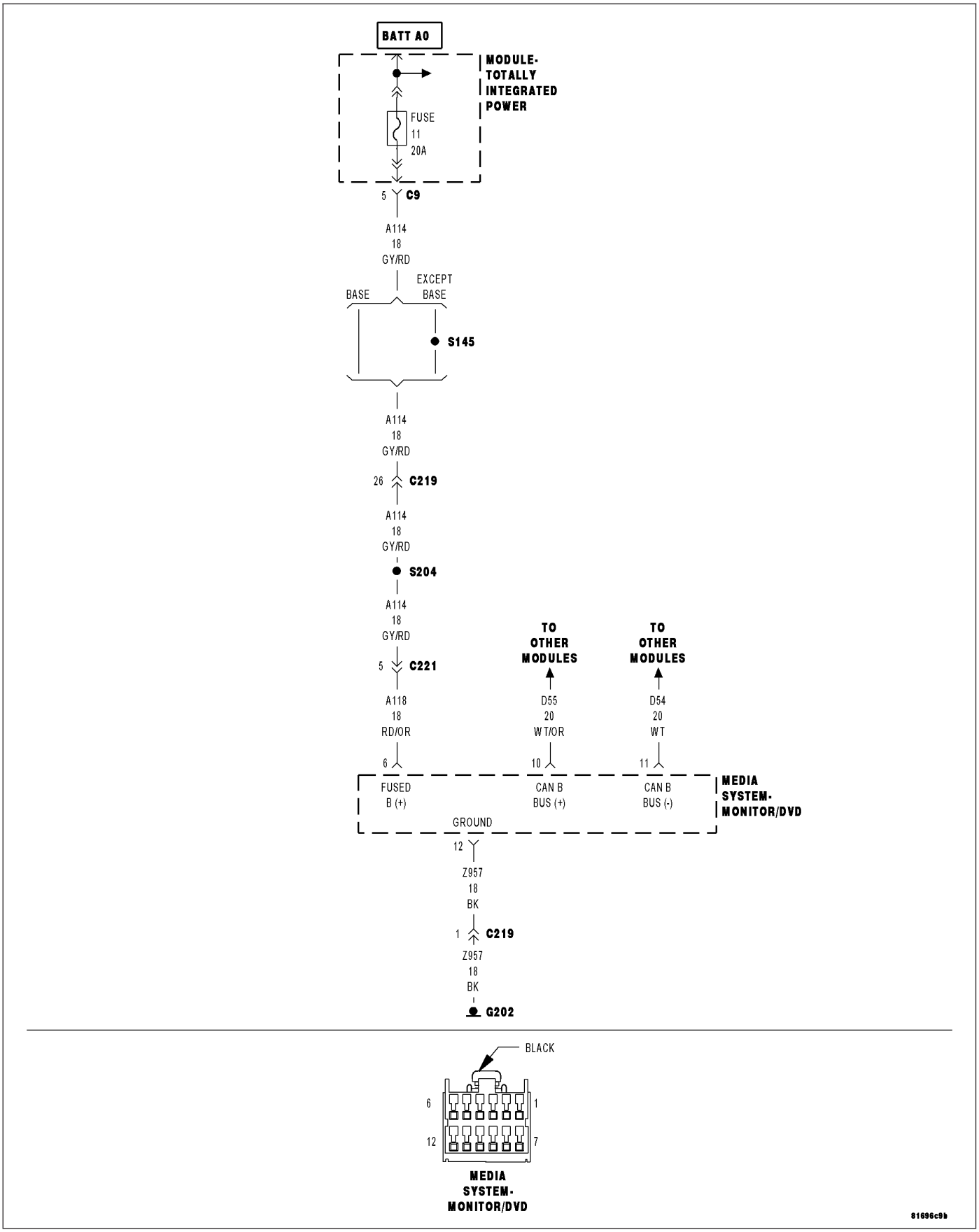

For a complete wiring diagram **Refer to Section 8W**.

https://truckmanualshub.com/

Possible Causes
(A118) FUSED B (+) CIRCUIT OPEN OR SHORTED
(Z957) GROUND CIRCUIT OPEN
(D55) AND (D54) CAN B BUS CIRCUITS OPEN
MONITOR/DVD MEDIA SYSTEM

Diagnostic Test

1. TEST FOR INTERMITTENT CONDITION

Turn the ignition on.

NOTE: Ensure the IOD fuse is installed and battery voltage is between 10.0 and 16.0 volts.
With the scan tool, select ECU view.

NOTE: A red X will be next to the module that is not communicating, indicating that the module is not active on the Bus network. A green check indicates that the module is active on the Bus network.

Does the scan tool display a red X next to the module?

Yes >> Go To 2

No >> The no response condition is not present at this time. Using the wiring diagram/schematic as a guide, inspect the wiring for chafed, pierced, pinched, and partially broken wires and the wiring harness connectors for broken, bent, pushed out, and corroded terminals.

2. (A118) FUSED B(+) CIRCUIT OPEN OR SHORTED

Turn the ignition off.

Disconnect the Monitor/DVD Media System harness connector.

Using a 12-volt test light connected to ground, check the (A118) Fused B(+) circuit.

Does the test light illuminate brightly?

Yes >> Go To 3

No >> Repair the (A118) Fused B(+) circuit for an open or short. Perform BODY VERIFICATION TEST – VER 1. (Refer to 8 - ELECTRICAL/ELECTRONIC CONTROL MODULES - STANDARD PROCEDURE).

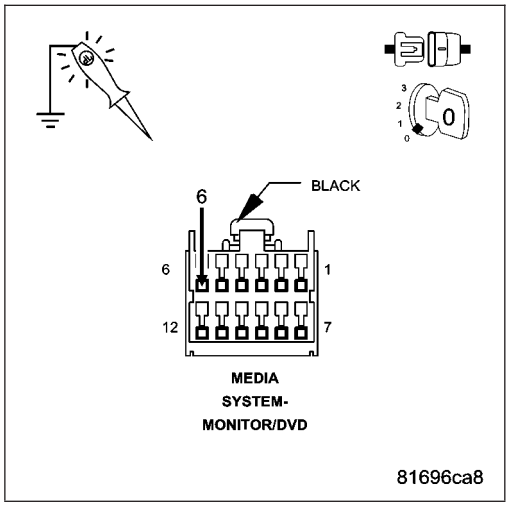

https://truckmanualshub.com/

3. (Z957) GROUND CIRCUIT OPEN

Using a 12-volt test light connected to 12-volts, check the (Z957) ground circuit.

Does the test light illuminate brightly?

Yes >> Go To 4

No >> Repair the (Z957) ground circuit for an open.
Perform BODY VERIFICATION TEST – VER 1. (Refer to 8 - ELECTRICAL/ELECTRONIC CONTROL MODULES - STANDARD PROCEDURE).

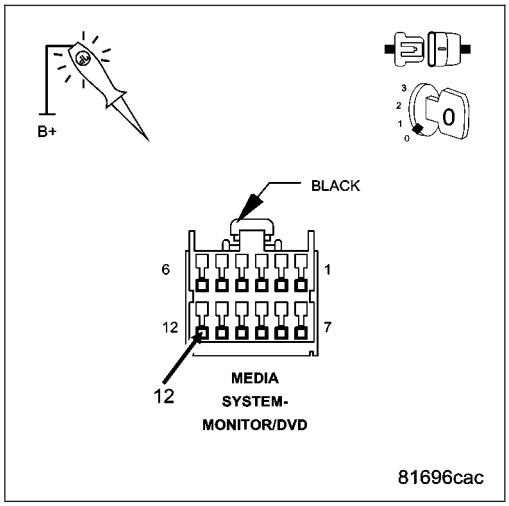

4. (D55) AND (D54) CAN B BUS CIRCUITS OPEN

NOTE: One open circuit will not cause this condition.
Measure the voltage between the (D54) CAN B Bus (-) circuit and ground.
Measure the voltage between the (D55) CAN B Bus (+) circuit and ground.

Is there any voltage present on either circuit?

Yes >> Replace the Monitor/DVD Media System in accordance with the service information.
Perform BODY VERIFICATION TEST – VER 1. (Refer to 8 - ELECTRICAL/ELECTRONIC CONTROL MODULES - STANDARD PROCEDURE).

No >> Repair the (D55) and (D54) CAN B Bus circuits for an open. Inspect the connector for damage.
Perform BODY VERIFICATION TEST – VER 1. (Refer to 8 - ELECTRICAL/ELECTRONIC CONTROL MODULES - STANDARD PROCEDURE).

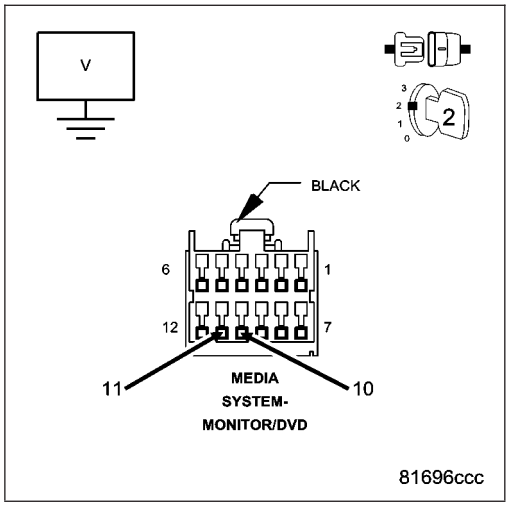

https://truckmanualshub.com/

*NO RESPONSE FROM WCM (SENTRY KEY REMOTE ENTRY MODULE)

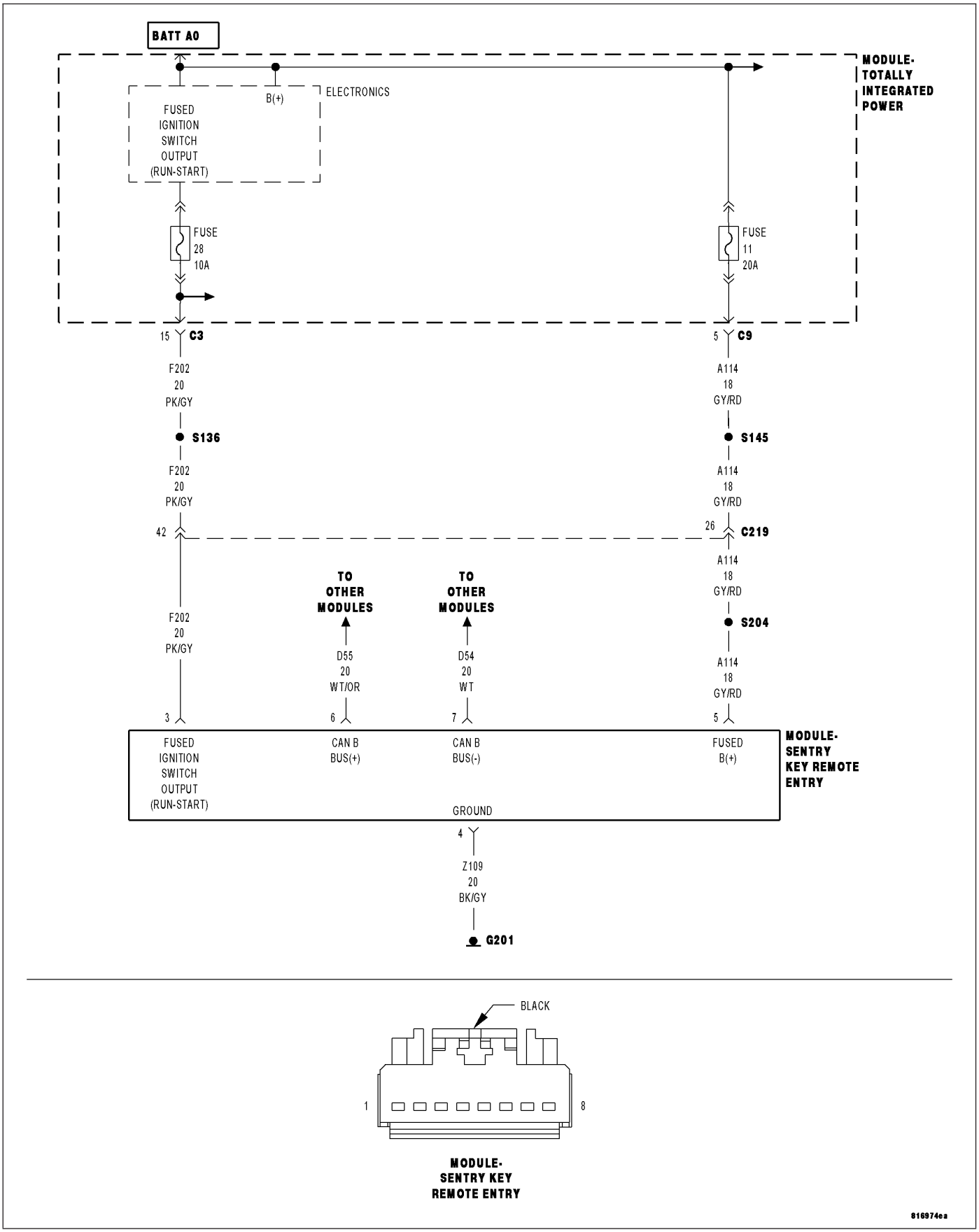

For a complete wiring diagram **Refer to Section 8W**.

https://truckmanualshub.com/

Possible Causes
(A114) FUSED B(+) CIRCUIT OPEN OR SHORTED
(Z109) GROUND CIRCUIT OPEN
(F202) FUSED IGNITION SWITCH OUTPUT CIRCUIT OPEN OR SHORTED
(D55) AND (D54) CAN B BUS CIRCUITS OPEN
SENTRY KEY REMOTE ENTRY MODULE

Diagnostic Test

1. TEST FOR INTERMITTENT CONDITION

Turn the ignition on.

NOTE: Ensure the IOD fuse is installed and battery voltage is between 10.0 and 16.0 volts.
With the scan tool, select ECU view.

NOTE: A red X will be next to the module that is not communicating, indicating that the module is not active on the Bus network. A green check indicates that the module is active on the Bus network.

Does the scan tool display a red X next to the module?

Yes >> Go To 2

No >> The no response condition is not present at this time. Using the wiring diagram/schematic as a guide, inspect the wiring for chafed, pierced, pinched, and partially broken wires and the wiring harness connectors for broken, bent, pushed out, and corroded terminals.

2. (A114) FUSED B(+) CIRCUIT OPEN OR SHORTED

Turn the ignition off.

Disconnect the Sentry Key Remote Entry Module harness connector.

Using a 12-volt test light connected to ground, check the (A114) Fused B(+) circuit.

Does the test light illuminate brightly?

Yes >> Go To 3

No >> Repair the (A114) Fused B(+) circuit for an open or short. Perform SKREEM VERIFICATION TEST.

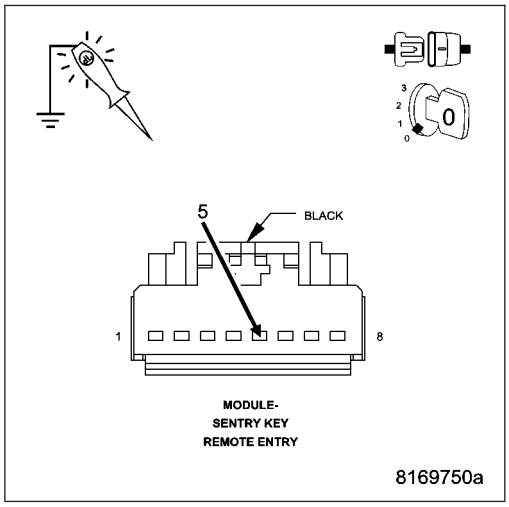

https://truckmanualshub.com/

3. (Z109) GROUND CIRCUIT OPEN

Using a 12-volt test light connected to 12-volts, check the (Z109) ground circuit.

Does the test light illuminate brightly?

Yes >> Go To 4

No >> Repair the (Z109) ground circuit for an open.
Perform SKREEM VERIFICATION TEST.

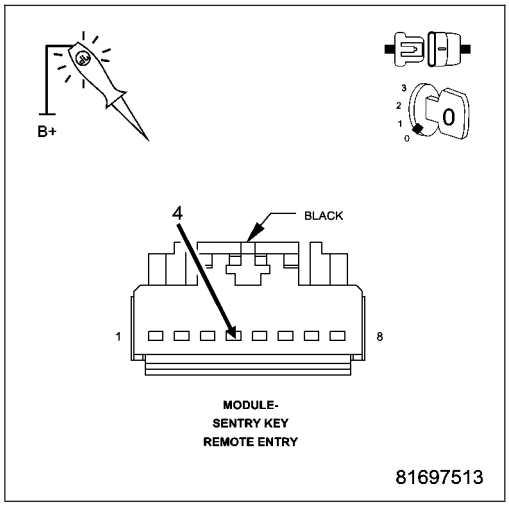

4. (F202) FUSED IGNITION SWITCH OUTPUT CIRCUIT OPEN OR SHORTED

Turn the ignition on.

Using a 12-volt test light connected to ground, check the (F202) Fused Ignition Switch Output circuit.

Does the test light illuminate brightly?

Yes >> Go To 5

No >> Repair the (F202) Fused Ignition Switch Output circuit for an open or short.
Perform SKREEM VERIFICATION TEST.

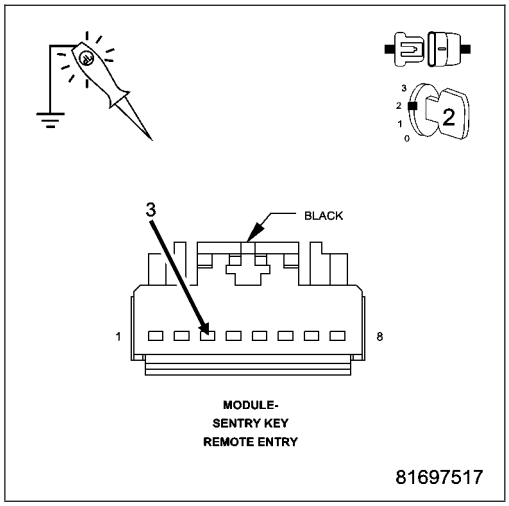

5. (D55) AND (D54) CAN B BUS CIRCUITS OPEN

NOTE: One open circuit will not cause this condition.

Measure the voltage between the (D54) CAN B Bus (-) circuit and ground.

Measure the voltage between the (D55) CAN B Bus (+) circuit and ground.

Is there any voltage present on either circuit?

Yes >> Replace the Sentry Key Remote Entry Module in accordance with the service information.
Perform SKREEM VERIFICATION TEST.

No >> Repair the (D55) and (D54) CAN B Bus circuits for an open. Inspect the connector for damage.
Perform SKREEM VERIFICATION TEST.

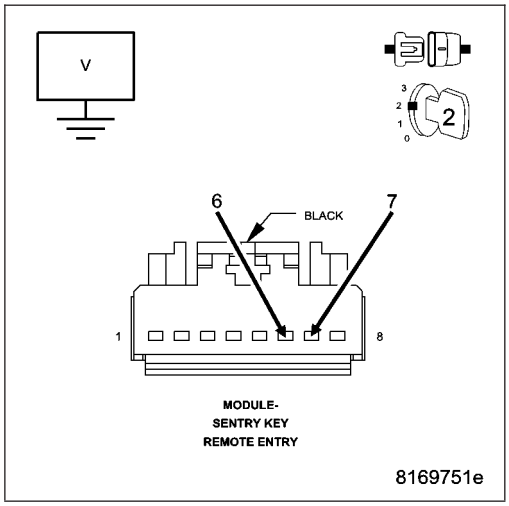

https://truckmanualshub.com/

STANDARD PROCEDURE

https://truckmanualshub.com/

BODY VERIFICATION TEST - VER 1

Diagnostic Test

1. PERFORM BODY VERIFICATION TEST

NOTE: If the SKIM, PCM or TIPM was replaced, refer to the service information for proper programming procedures.

1. Disconnect all jumper wires and reconnect all previously disconnected components and connectors.
2. Ensure that all accessories are turned off.
3. Ensure that the battery is fully charged.
4. If the Instrument Cluster was replaced, disconnect the negative battery cable for 5 seconds to power down the TIPM. Then, reconnect the battery negative cable and turn the ignition on for 15 seconds to allow the Instrument Cluster to learn the VIN.
5. If the Instrument Cluster was replaced and the vehicle is equipped with VTSS, cycle the key in the driver door cylinder lock switch to enable VTSS.
6. Program the tire size, the country code, the radio EQ setting, all of the RKE transmitters (if RKE Module was replaced), and all other options as necessary.
7. With the scan tool, record and erase all DTCs from ALL modules.
8. Turn the ignition off, wait 5 seconds, then turn the ignition on.
9. If repairs were made to any of the HVAC door actuator circuits, with the scan tool in HVAC, select System Tests and then select Actuator DTC Detection. The test must pass before proceeding to the next step.
10. If repairs were made to any of the HVAC doors, linkage, door actuators, or door actuator circuits, with the scan tool in HVAC, select System Tests and then select Actuator Calibration Test. The test must pass before proceeding to the next step.
11. Start and run the engine for 2 minutes while operating all functions of the system that caused the original concern.
12. With the scan tool, select ECU View and check for DTCs in the modules.

Are DTCs present in any module or is the original condition still present?

Yes >> The repair is not complete. Refer to the related category for the DTC or symptom that is still present.

No >> The repair is complete.

https://truckmanualshub.com/

ELECTRONIC CONTROL MODULES - SERVICE INFORMATION

TABLE OF CONTENTS

page

ELECTRONIC CONTROL MODULES - SERVICE INFORMATION
STANDARD PROCEDURE
PCM/ECM/SKREEM PROGRAMMING 179
MODULE-ANTI-LOCK BRAKES
DESCRIPTION 181
OPERATION 181
REMOVAL 181
INSTALLATION 181
COMMUNICATION
DESCRIPTION 182
OPERATION 182
DATA LINK CONNECTOR
DESCRIPTION 185
OPERATION 185
MODULE-ENGINE CONTROL-DIESEL
DESCRIPTION 186
OPERATION 186
DIAGNOSIS AND TESTING
POWERTRAIN VERIFICATION TEST VER - 1 (DIESEL) 189
POWERTRAIN VERIFICATION TEST VER - 2 (DIESEL) 190
POWERTRAIN VERIFICATION TEST VER - 4 (DIESEL) 191
POWERTRAIN VERIFICATION TEST VER - 5 (DIESEL) 193
REMOVAL 194
INSTALLATION 195
MODULE-POWERTRAIN CONTROL
DESCRIPTION
POWERTRAIN CONTROL MODULE (PCM) . . . 196
MODES OF OPERATION 196
5 VOLT SUPPLIES 199
IGNITION CIRCUIT SENSE 199
POWER GROUNDS 200
SENSOR RETURN 200
OPERATION
POWERTRAIN CONTROL MODULE (PCM) . . . 200
5 VOLT SUPPLIES 202
OIGNITION CIRCUIT SENSE 202
REMOVAL 202
INSTALLATION 203
MODULE - SRT10 GATEWAY
DESCRIPTION 205
REMOVAL 205
INSTALLATION 206
MODULE-TRANSFER CASE CONTROL
DESCRIPTION 208
OPERATION 208
DIAGNOSIS AND TESTING
TRANSFER CASE VERIFICATION TEST 213
MODULE-TRANSMISSION CONTROL
DESCRIPTION 214
OPERATION 214
DIAGNOSIS AND TESTING
PRE-DIAGNOSTIC CHECK OUT 219
PRE-DIAGNOSTIC CHECKOUT (DIESEL) 220
TRANSMISSION VERIFICATION TEST VER - 1 (DIESEL) 221
45RFE/545RFE TRANSMISSION VERIFICATION TEST - VER 1 222
STANDARD PROCEDURE
TCM QUICK LEARN 222
DRIVE LEARN 223

https://truckmanualshub.com/

ELECTRONIC CONTROL MODULES - SERVICE INFORMATION

STANDARD PROCEDURE

PCM/ECM/SKREEM PROGRAMMING

NOTE: Before replacing the Powertrain Control Module (PCM) or Engine Control Module (ECM), be certain to check the related component/circuit integrity for failures not detected due to a double fault in the circuit. Most PCM/ECM driver/control circuit failures are caused by internal component failures (such as relays and solenoids) and shorted circuits (such as pull-ups, drivers, and switched circuits). These failures are difficult to detect when a double fault has occurred and only one DTC has been set.

When a Powertrain Control Module (PCM) for a gasoline engine, or an Engine Control Module (ECM) for a diesel engine and the Sentry Key REmote Entry Module (SKREEM) on vehicles equipped with the Sentry Key Immobilizer System (SKIS) are replaced at the same time, perform the following steps in order:

1. Program the new PCM/ECM.
2. Program the new SKREEM (also sometimes referred to as the Wireless Control Module or WCM).
3. Replace all ignition keys and program them into the new SKREEM/WCM.

PROGRAMMING THE PCM/ECM/SKREEM

The SKIS Secret Key is an ID code that is unique to each SKREEM/WCM. This code is programmed and stored in the SKREEM/WCM, the PCM/ECM, the GateWay module (on SRT10 vehicles with a hybrid bus only) and each ignition key transponder chip. When the PCM/ECM or SKREEM/WCM is replaced, it is necessary to program the Secret Key into the new modules using a diagnostic scan tool. Follow the programming steps outlined in the diagnostic scan tool for **PCM Replaced**, **ECM Replaced**, **WCM Replaced**, or **GateWay Replaced** under **Miscellaneous Functions** for the **WCM/Wireless Control Module** menu item as appropriate.

NOTE: Be certain to enter the correct country code for the SKREEM/WCM. If the incorrect country code is programmed into the SKREEM, it cannot be changed and the SKREEM must be replaced.

NOTE: If the PCM/ECM and the SKREEM/WCM are replaced at the same time, all vehicle ignition keys will need to be replaced and the new keys programmed into the new SKREEM/WCM.

NOTE: Programming the PCM/ECM or SKREEM is done using a diagnostic scan tool and a PIN to enter secure access mode. If three attempts are made to enter secure access mode using an incorrect PIN, secure access mode will be locked out for one hour. To exit this lockout mode, turn the ignition to the RUN position for one hour then enter the correct PIN. (Ensure all accessories are turned OFF. Also monitor the battery state and connect a battery charger if necessary).

PROGRAMMING IGNITION KEYS TO THE SKREEM

Each ignition key transponder also has a unique ID code that is assigned at the time the key is manufactured. When a key is programmed into the SKREEM/WCM, the transponder ID code is learned by the module and the transponder acquires the unique Secret Key ID code from the SKREEM/WCM. To program ignition keys into the SKREEM/WCM, follow the programming steps outlined in the diagnostic scan tool for **Program Ignition Keys or Key FOBs** under **Miscellaneous Functions** for the **WCM/Wireless Control Module** menu item.

NOTE: A maximum of eight keys can be learned to each SKREEM. Once a key is learned to a SKREEM, that key has acquired the Secret Key for that SKREEM and cannot be transferred to any other SKREEM or vehicle.

If ignition key programming is unsuccessful, the scan tool will display one of the following error messages:

- **Programming Not Attempted** - The scan tool attempts to read the programmed key status and there are no keys programmed into SKREEM memory.
- **Programming Key Failed (Possible Used Key From Wrong Vehicle)** - SKREEM is unable to program an ignition key transponder due to one of the following:

https://truckmanualshub.com/

  - The ignition key transponder is ineffective.
  - The ignition key transponder is or has been already programmed to another vehicle.
- **8 Keys Already Learned, Programming Not Done** - The SKREEM transponder ID memory is full.
- **Learned Key In Ignition** - The ID for the ignition key transponder currently in the ignition lock cylinder is already programmed into SKREEM memory.

https://truckmanualshub.com/

MODULE-ANTI-LOCK BRAKES

DESCRIPTION

The Antilock Brake Module (ABM) (2) is mounted to the Hydraulic Control Unit (HCU) (3) and operates the ABS system.

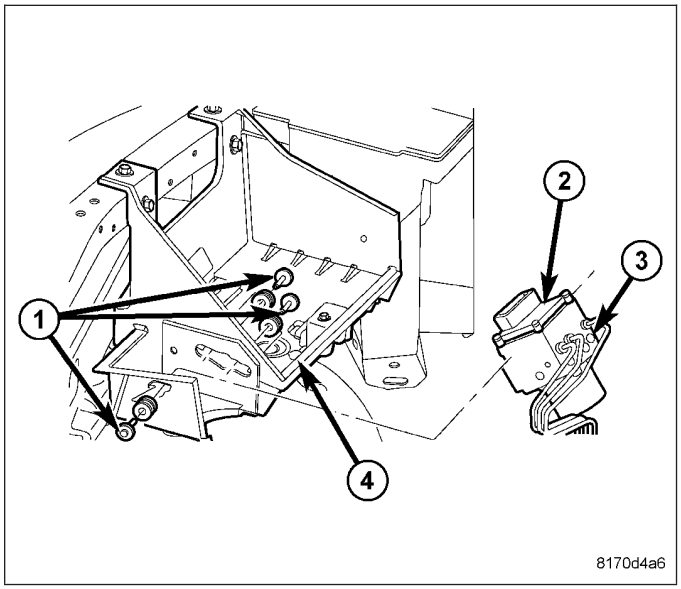

OPERATION

The ABM voltage source is through the ignition switch in the RUN position. The ABM contains a self check program that illuminates the ABS warning light when a system fault is detected. Faults are stored in a diagnostic program memory and are accessible with the scan tool. ABS faults remain in memory until cleared, or until after the vehicle is started approximately 50 times. Stored faults are **not** erased if the battery is disconnected.

NOTE: If the ABM is being replaced with a new ABM is must be reprogrammed with the use of a scan tool.

REMOVAL

1. Remove the negative battery cable from the battery.
2. Pull up on the ABM harness connector release and remove connector.
3. Remove the ABM mounting bolts.
4. Remove the pump connector from the ABM.
5. Remove the ABM from the HCU.

INSTALLATION

NOTE: If the ABM is being replaced with a new ABM is must be reprogrammed with the use of a scan tool.

1. Install ABM to the HCU.
2. Install the pump connector to the ABM.
3. Install mounting bolts. Tighten to 2 N·m (16 in. lbs.).
4. Install the wiring harness connector to the ABM and push down on the release to secure the connector.
5. Install negative battery cable to the battery.

https://truckmanualshub.com/

COMMUNICATION

DESCRIPTION

The primary on-board communication network between microprocessor-based electronic control modules in this vehicle is the Controller Area Network (CAN) data bus system. However, on SRT10 vehicles the Powertrain Control Module (PCM) uses the DaimlerChrysler Programmable Communication Interface (PCI) data bus system in combination with the CAN bus to form a hybrid bus system. A data bus network minimizes redundant wiring connections; and, at the same time, reduces wire harness complexity, sensor current loads and controller hardware by allowing each sensing device to be connected to only one module (also referred to as a node). Each node reads, then broadcasts its sensor data over the bus for use by all other nodes requiring that data. Each node ignores the messages on the bus that it cannot use.

The CAN bus is a two-wire multiplex system, while the PCI bus is a single-wire multiplex system. Multiplexing is any system that enables the transmission of multiple messages over a single channel or circuit. The CAN bus is used for communication between all vehicle nodes, except on the SRT10 where the PCM uses the PCI bus. In addition, certain vehicles may also be equipped with a Serial Controller Interface (SCI) or a K-Line serial link bus to provide direct diagnostic access between a diagnostic scan tool connected to the industry-standard 16-way Data Link Connector (DLC) located below the driver side instrument panel and certain powertrain nodes.

There are actually three separate CAN bus systems used in the vehicle. They are designated: the CAN-B, the CAN-C and the Diagnostic CAN-C. The CAN-B and CAN-C systems provide on-board communication between all nodes in the vehicle. The CAN-C is the faster of the two systems providing near real-time communication (500 Kbps), but is less fault tolerant than the CAN-B system. The CAN-C is used exclusively for communications between critical powertrain and chassis nodes. The slower (83.3 Kbps), but more fault tolerant CAN-B system is used for communications between body and interior nodes. The CAN-B fault tolerance comes from its ability to revert to a single wire communication mode if there is a problem in the bus wiring.

The added speed of the CAN data bus is many times faster than previous data bus systems. This added speed facilitates the addition of more electronic control modules or nodes and the incorporation of many new electrical and electronic features in the vehicle. The Diagnostic CAN-C bus is also capable of 500 Kbps communication, and is sometimes informally referred to as the CAN-D system to differentiate it from the other high speed CAN-C bus. The Diagnostic CAN-C is used exclusively for the transmission of diagnostic information between the Totally Integrated Power Module/Central GateWay (TIPM or TIPMCGW) and a diagnostic scan tool connected to the DLC.

All vehicles have a central CAN gateway or hub module integral to the TIPM that is connected to all three CAN buses. The TIPM is located in the engine compartment near the battery. This gateway physically and electrically isolates the CAN buses from each other and coordinates the bi-directional transfer of messages between them. On SRT10 vehicles a separate, dedicated gateway module secured to the back of the battery tray on the right side of the engine compartment coordinates the bi-directional transfer of messages between the PCI bus line from the PCM and the CAN bus connected to all of the other nodes in the vehicle.

OPERATION

Either the Controller Area Network (CAN) data bus or the hybrid bus system that integrates the Programmable Communications Interface (PCI) data bus with the CAN bus allows all electronic modules or nodes connected to the bus to share information with each other. Regardless of whether a message originates from a module on the low speed PCI or CAN-B bus or on the high speed CAN-C or CAN-D bus, the message structure and layout is similar, which allows the Totally Integrated Power Module/Central GateWay (TIPM or TIPMCGW) to process and transfer messages between the buses. The TIPM also stores a Diagnostic Trouble Code (DTC) for certain bus network faults.

All modules (also referred to as nodes) transmit and receive messages over one of these buses, either the single-wire PCI bus or the two-wire CAN bus. Data exchange between nodes is achieved by serial transmission of encoded data messages. Each node can both send and receive serial data simultaneously. Bus messages are carried over the data bus in the form of Variable Pulse Width Modulated (VPWM) signals which, when the high and low voltage pulses are strung together, form a message. Each node uses arbitration to sort the message priority if two competing messages are attempting to be broadcast at the same time.

The voltage network used to transmit messages requires biasing and termination. Each module on the bus network provides its own biasing and termination. Each node terminates the bus through a terminating resistor and a terminating capacitor. There are two types of nodes on the bus. The dominant node terminates the bus through a 1 KW resistor and a 3,300 pF capacitor, typically resulting in about a 3,300 ohm termination resistance. However, this resistance value may vary somewhat by application. The TIPM (or TIPMCGW) is the only dominant node in this

https://truckmanualshub.com/

network. A non-dominant (or recessive) node terminates the bus through an 11 KW resistor and a 330 pF capacitor, typically resulting in about a 10,800 ohm termination resistance.

PROGRAMMABLE COMMUNICATIONS INTERFACE DATA BUS

The PCI (or J1850) data bus communication protocol exceeds the Society of Automotive Engineers (SAE) J1850 Standard for Class B Multiplexing. The PCI data bus speed is an average 10.4 Kilobits per second (Kbps).

CONTROLLER AREA NETWORK DATA BUS

The communication protocol being used for the CAN data bus is a non-proprietary, open standard adopted from the Bosch CAN Specification 2.0b. The CAN is the faster of the two primary buses in the hybrid bus system, with the CAN-C bus providing near real-time communication (500 Kbps).

The CAN bus nodes are connected in parallel to the two-wire bus using a twisted pair, where the wires are wrapped around each other to provide shielding from unwanted electromagnetic induction, thus preventing interference with the relatively low voltage signals being carried through them. The twisted pairs have between 33 and 50 twists per meter (yard). While the CAN bus is operating (active), one of the bus wires will carry a higher voltage and is referred to as the CAN High or CAN bus (+) wire, while the other bus wire will carry a lower voltage and is referred to as the CAN Low or CAN bus (–) wire. Refer to the CAN Bus Voltages table.

CAN Bus Voltages (Normal Operation)								
CAN-C Bus Circuits	**Sleep**	**Recessive (Bus Idle)**	**Dominant (Bus Active)**	**CAN-L Short to Ground**	**CAN-H Short to Ground**	**CAN-L Short to Battery**	**CAN-H Short to Battery**	**CAN-H Short to CAN-L**
CAN-L (–)	0 V	2.4 - 2.5 V	1.3 - 2.3 V	0 V	0.3 - 0.5V	Battery Voltage	Battery Voltage Less 0.75 V	2.45 V
CAN-H (+)	0 V	2.4 - 2.5 V	2.6 - 3.5 V	0.02 V	0 V	Battery Voltage Less 0.75 V	Battery Voltage	2.45 V
CAN-B Bus Circuits	**Key-Off (Bus Asleep)**		**Key-On (Bus Active)**	**CAN-L Short to Ground**	**CAN-H Short to Ground**	**CAN-L Short to Battery**	**CAN-H Short to Battery**	**CAN-H Short to CAN-L**
CAN-L (–)	10.99 V		4.65 - 4.98 V	0 V	4.5 - 4.7 V	Battery Voltage	4.5 - 4.7 V	0.3 - 0.7 V
CAN-H (+)	0.0 V		0.39 - 0.46 V	0.3 - 0.7 V	0 V	0.3 - 0.7 V	Battery Voltage	0.3 - 0.7 V
Notes								
All measurements taken between node ground and CAN terminal with a standard DVOM. DVOM will display average network voltage. Total resistance of CAN-C network can also be measured (60 ohms). Cannot measure total resistance of CAN-B network.								

In order to minimize the potential effects of Ignition-Off Draw (IOD), the CAN-B network employs a sleep strategy. However, a network sleep strategy should not be confused with the sleep strategy of the individual nodes on that network, as they may differ. For example: The CAN-C bus network is awake only when the ignition switch is in the On or Start positions; however, the TIPM, which is on the CAN-C bus, may still be awake with the ignition switch in the Accessory or Unlock positions. The integrated circuitry of an individual node may be capable of processing certain sensor inputs and outputs without the need to utilize network resources.

The CAN-B bus network remains active until all nodes on that network are ready for sleep. This is determined by the network using tokens in a manner similar to polling. When the last node that is active on the network is ready for sleep, and it has already received a token indicating that all other nodes on the bus are ready for sleep, it broadcasts a **bus sleep acknowledgment** message that causes the network to sleep. Once the CAN-B bus network is asleep, any node on the bus can awaken it by transmitting a message on the network. The TIPM will keep

https://truckmanualshub.com/

either the CAN-B or the CAN-C bus awake for a timed interval after it receives a diagnostic message for that bus over the Diagnostic CAN-C bus.

In the CAN system, available options are configured into the TIPM at the assembly plant, but additional options can be added in the field using the diagnostic scan tool. The configuration settings are stored in non-volatile memory. The TIPM also has two 64-bit registers, which track each of the **as-built** and **currently responding** nodes on the CAN-B and CAN-C buses. The TIPM stores a Diagnostic Trouble Code (DTC) in one of two caches for any detected active or stored faults in the order in which they occur. One cache stores powertrain (P-Code), chassis (C-Code) and body (B-Code) DTCs, while the second cache is dedicated to storing network (U-Code) DTCs.

If there are intermittent or active faults in the CAN network, a diagnostic scan tool connected to the Diagnostic CAN-C bus through the 16-way Data Link Connector (DLC) may only be able to communicate with the TIPM. To aid in CAN network diagnosis, the TIPM will provide CAN-B and CAN-C network status information to the scan tool using certain diagnostic signals. In addition, the transceiver in each node on the CAN-C bus will identify a **bus off hardware failure** , while the transceiver in each node on the CAN-B bus will identify a **general bus hardware failure**. The transceivers for some CAN-B nodes will also identify certain failures for both CAN-B bus signal wires.

https://truckmanualshub.com/

DATA LINK CONNECTOR

DESCRIPTION

The Data Link Connector (DLC) (3) is a 16-way molded plastic connector insulator on a dedicated take out of the instrument panel wire harness. This connector is located at the lower edge of the instrument panel, outboard of the steering column. The connector insulator is retained by integral snap features within a rectangular cutout in the stamped metal lower instrument panel reinforcement (2), just below the lower edge of the instrument panel steering column opening cover (1).

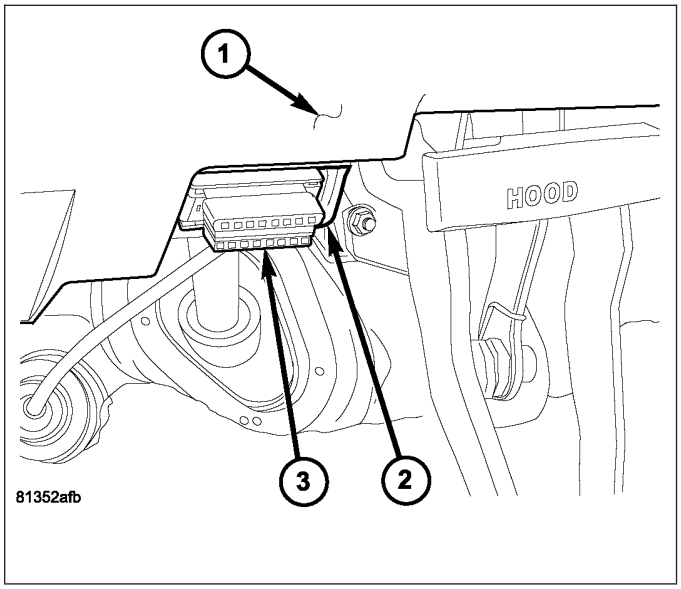

OPERATION

The Data Link Connector (DLC) is an industry-standard 16-way connector that permits the connection of a diagnostic scan tool to the Controller Area Network (CAN) data bus for interfacing with, configuring, and retrieving Diagnostic Trouble Code (DTC) data from the electronic modules that reside on the data bus network of the vehicle. The DLC on SRT10 models also includes a Programmable Communications Interface (PCI or J1850) bus link for diagnosis of the GateWay Module and a Serial Communications Interface (SCI) bus link for diagnosis of the Powertrain Control Module (PCM).

https://truckmanualshub.com/

MODULE-ENGINE CONTROL-DIESEL

DESCRIPTION

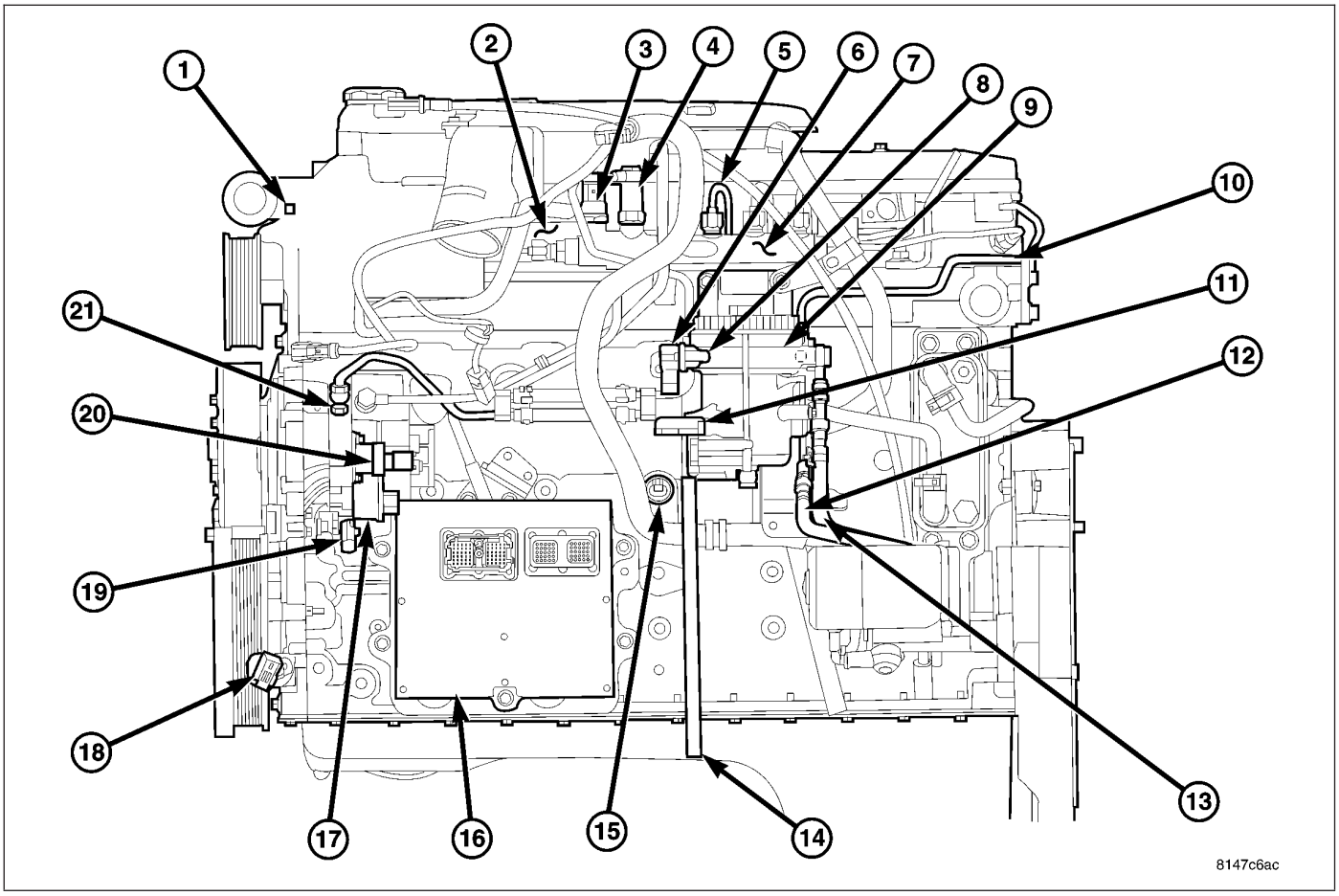

CUMMINS FUEL SYSTEM COMPONENTS

1 - ENGINE COOLANT TEMPERATURE (ECT) SENSOR
2 - INTAKE MANIFOLD AIR HEATER/ELEMENTS
3 - FUEL PRESSURE SENSOR
4 - FUEL PRESSURE LIMITING VALVE
5 - HIGH-PRESSURE FUEL LINES
6 - FUEL HEATER
7 - HIGH-PRESSURE FUEL RAIL
8 - FUEL HEATER TEMPERATURE SENSOR (THERMOSTAT)
9 - FUEL FILTER/WATER SEPARATOR
10 - FUEL DRAIN MANIFOLD (CYLINDER HEAD FUEL RETURN LINE)
11 - DRAIN VALVE
12 - FUEL RETURN LINE CONNECTION (TO FUEL TANK)
13 - FUEL SUPPLY LINE (LOW-PRESSURE, TO ENGINE)
14 - FUEL DRAIN TUBE
15 - OIL PRESSURE SWITCH
16 - ENGINE CONTROL MODULE (ECM)
17 - FUEL INJECTION PUMP
18 - CRANKSHAFT POSITION (ENGINE SPEED) SENSOR
19 - CAMSHAFT POSITION SENSOR (CMP)
20 - FUEL CONTROL ACTUATOR (FCA)
21 - CASCADE OVERFLOW VALVE

The Engine Control Module (ECM) for the 5.9L diesel engine (16) is bolted to the left side of the engine below the intake manifold.

OPERATION

The main function of the Engine Control Module (ECM) is to electrically control the fuel system. The ECM also controls certain transmission and other functions previously controlled by the Powertrain Control Module (PCM).

The ECM can adapt its programming to meet changing operating conditions.

The ECM receives input signals from various switches and sensors. Based on these inputs, the ECM regulates various engine and vehicle operations through different system components. These components are referred to as **ECM Outputs.** The sensors and switches that provide inputs to the ECM are considered **ECM Inputs.**

https://truckmanualshub.com/

NOTE: ECM Inputs:

- Accelerator Pedal Position Sensor (APPS) Signals #1 and #2
- AC system pressure
- Auto shutdown (ASD) sense
- Battery temperature
- Battery temperature sensor
- Battery voltage
- Brake switch
- Camshaft Position Sensor (CMP)
- Crankshaft Position Sensor (CKP)
- Data link connection for a scan tool
- Engine Coolant Temperature (ECT) sensor
- EATX module (if equipped)
- Fuel level
- Fuel pressure sensor
- Fan speed (engine cooling fan)
- Generator (battery voltage) output
- Governor pressure (Auto. trans.)
- Ground circuits
- Inlet air temperature sensor/pressure sensor
- Intake air temperature sensor/MAP sensor
- J1850 bus (+) circuits
- J1850 bus (-) circuits
- Key switch (ignition)
- Oil Pressure switch
- Overdrive switch (automatic transmission only)
- Park/neutral switch (auto. trans. only)
- Power ground
- SCI datalink bus (+) circuits
- SCI datalink bus (-) circuits
- Sensor return
- Signal ground
- Speed control multiplexed single wire input
- Transfer case switch (4WD range position)
- Transmission governor psi (automatic transmission only)
- Transmission OSS (automatic transmission only)
- Transmission oil pressure (automatic transmission only)
- Transmission oil temperature (automatic transmission only)
- Transmission throttle valve position (automatic transmission only)
- Vehicle speed signal
- Water-In-Fuel (WIF) sensor

NOTE: ECM Outputs:

After inputs are received by the ECM, certain sensors, switches and components are controlled or regulated by the ECM. These are considered **ECM Outputs.** These outputs are for:

- A/C clutch relay
- Auto shutdown (ASD) relay
- Data link connection for DRB scan tool
- Fan clutch PWM
- Five volt sensor supply (primary)

https://truckmanualshub.com/

- Five volt sensor supply (secondary)
- Fuel control actuator
- Fuel injector driver circuits
- Fuel transfer (lift) pump
- Generator field driver (-)
- Generator field driver (+)
- Governor pressure (VFS solenoid)
- Intake manifold air heater relays #1 and #2 control circuits
- J1850 bus (+/-) circuits for: speedometer, voltmeter, fuel gauge, oil pressure gauge/lamp, engine temp. gauge and speed control warn. lamp
- Malfunction indicator lamp (Check engine lamp). Driven through J1850 circuits.
- Oil pressure switch/warning lamp (databus)
- Overdrive/3–4 shift solenoid (automatic transmission only)
- SC source
- SCI datalink bus (+) circuits
- SCI datalink bus (-) circuits
- Speed control vacuum solenoid
- Speed control vent solenoid
- Tachometer (if equipped). Driven through J1850 circuits.
- TCC solenoid (automatic transmission only)
- Transmission battery relay (automatic transmission only)
- Transmission throttle valve actuator (automatic transmission only)
- Transmission governor solenoid (automatic transmission only)
- Wait-to-start warning lamp (databus)
- Turbo wastegate solenoid
- Water-In-Fuel (WIF) warning lamp (databus)

DIAGNOSIS AND TESTING

https://truckmanualshub.com/

POWERTRAIN VERIFICATION TEST VER - 1 (DIESEL)

Diagnostic Test

1. POWERTRAIN VERIFICATION TEST VER - 1 (DIESEL)

1. Clear the DTC before continuing.
2. Check if any of the following conditions exist.
3. The ECM has been disconnected or replaced.
4. The battery power has been disconnected.
5. If the ECM has been replaced, do the following:
6. For ABS and Airbag Systems: Action: Enter correct VIN and Mileage in ECM. Erase ABS and Airbag Module codes.

NOTE: 7. If the Engine Control Module has been replaced and the correct VIN and mileage have not been programmed, a DTC will be set in the ABS, Airbag Modules and SKIM module.

8. If the ECM has not been replaced, do the following.
9. Inspect the vehicles to ensure that all engine components are connected. Reassemble and reconnect components as necessary.
10. Attempt to start the engine.
11. If the engine is unable to start, look for any Technical Service Bulletins that may relate to this condition. Return to Symptom list if necessary.
12. If the there are no DTCs present and all components are functional, the repair is complete.

Are any DTC(s) present?

Yes >> Repair is not complete, refer to appropriate symptom.

No >> Repair is complete.

https://truckmanualshub.com/

POWERTRAIN VERIFICATION TEST VER - 2 (DIESEL)

Diagnostic Test

1. POWERTRAIN VERIFICATION TEST VER - 2 (DIESEL)

1. Check if any of the following conditions exist.
2. The ECM has been disconnected or replace.
3. The Battery power has been disconnected.
4. If the PCM has been replaced, do the following:

NOTE: 5. If the Engine Control Module has been changed and the correct VIN and mileage have not been programmed, a DTC will be set in the ABS and Airbag Module.

6. For ABS and Airbag Systems: Enter correct VIN and Mileage in the ECM. Erase ABS and Airbag Module codes.
7. If the ECM has been replaced, do the following.
8. If this verification procedure is being performed after a No Trouble Code repair, do the following.
9. Check to see if the initial symptom still exists. If the initial or another symptom exists, the repair is not complete. Check all pertinent Technical Service Bulletins and return to the Symptom list if necessary.
10. If this verification procedure is being performed after a Trouble Code repair, do the following.
11. Connect the scan tool to the data link connector and erase trouble codes.
12. With the scan tool, reset all memory values.
13. If this test is for an A/C trouble code, ensure it is operating during the following road test.
14. Drive the vehicle for at least five minutes, For some of the drive, go at least 64 km/h (40 MPH). At some point stop the vehicle and turn the engine off for 10 seconds or more; then restart and continue. Ensure the transmission shifts through all gears.
15. Upon completion of the road test, turn the engine off and read trouble codes with the scan tool. If a trouble code has been set, return to the Symptom list and follow the path specified.

Is there any DTC(s) present?

Yes >> Repair is not complete, refer to appropriate symptom.

No >> Repair is complete.

https://truckmanualshub.com/

POWERTRAIN VERIFICATION TEST VER - 4 (DIESEL)

1. POWERTRAIN VERIFICATION TEST VER - 4 (DIESEL)

1. Check if any of the following conditions exist.

2. The ECM has been disconnected or replace.

3. The Battery power has been disconnected.

4. Inspect the vehicle to ensure that all engine components are properly installed and connected. Reassemble and reconnect components as necessary.

5. With the DRBIII®, erase DTCs.

6. If the ECM has been replaced, perform steps 11 through 13, then continue with the verification.

7. If ECM has been changed and correct VIN and mileage have not been programmed, a DTC will be set in ABS and Air bag modules. In addition, if vehicle is equipped with a Sentry Key Immobilizer Module (SKIM), Secret Key data must be updated to enable start.

8. For ABS and Air Bag systems: Enter correct VIN and Mileage in ECM. Erase codes in ABS and Air Bag modules.

9. For SKIM theft alarm: Connect DRBIII® to data link conn. Go to Theft Alarm, SKIM, Misc. and place SKIM in secured access mode, by using the appropriate PIN code for this vehicle. Select Update the Secret Key data. Data will be transferred from SKIM to PCM

10. Turn the speed control ON (if equipped, cruise light will be on).

11. Depress and release the SET Switch. If the speed control did not engage, the repair is not complete. Check for TSBs that pertain to speed control problem and then, if necessary, return to Symptom List.

12. Depress and hold the RESUME/ACCEL Switch. If the vehicle speed did not increase by at least 2 mph, the repair is not complete. Check for TSBs that pertain to speed control problem and then, if necessary, return to Symptom List.

13. Press and hold the COAST switch. The vehicle speed should decrease. If it did not decrease, the repair is not complete. Check for TSBs that pertain to speed control problem and then, if necessary, return to Symptom List.

14. Using caution, depress and release the brake pedal. If the speed control did not disengage, the repair is not complete. Check for TSBs that pertain to speed control problem and then, if necessary, return to Symptom List.

15. Bring the vehicle speed back up to 35 MPH.

16. Depress the RESUME/ACCEL switch. If the speed control did not resume the previously set speed, the repair is not complete. Check for TSBs that pertain to speed control problem and then, if necessary, return to Symptom List.

17. Hold down the SET switch. If the vehicle did not decelerate, the repair is not complete. Check for TSBs that pertain to speed control problem and then, if necessary, return to Symptom List.

18. Ensure vehicle speed is greater than 35 mph and release the SET Switch. If vehicle did not adjust and set a new vehicle speed, the repair is not complete. Check for TSBs that pertain to speed control problem and then, if necessary, return to Symptom List.

19. Depress and release the CANCEL switch. If the speed control did not disengage, the repair is not complete. Check for TSBs that pertain to speed control problem and then, if necessary, return to Symptom List.

20. Bring the vehicle speed back up above 35 mph and engage speed control.

21. Depress the OFF switch to turn OFF, (Cruise light will be off). If the speed control did not disengage, the repair is not complete. Check for TSBs that pertain to speed control problem and then, if necessary, return to Symptom List.

22. If the vehicle successfully passed all of the previous tests, the speed control system is now functioning as designed. The repair is now complete.

23. NOTE: OVERSHOOT/UNDERSHOOT FOLLOWING SPEED CONTROL SET.

24. If the vehicle operator repeatedly presses and releases the SET button with their foot off of the accelerator (referred to as ″lift foot set″), the vehicle may accelerate and exceed the desired set speed by up to 5 mph (8 km/h).

25. It may also decelerate to less than the desired set speed, before finally achieving the desired set speed.

26. The Speed Control System has an adaptive strategy that compensates for vehicle-to-vehicle variations in speed control cable lengths.

27. When the speed control is set with the vehicles operators foot off of the accelerator pedal, the speed control thinks there is excessive speed control cable slack and adapts accordingly.

28. If the ″lift foot sets″ are continually used, a speed control overshoot/undershoot condition will develop.

29. To ″unlearn″ the overshoot/undershoot condition, the vehicle operator has to press and release the set button

https://truckmanualshub.com/

while maintaining the desired set speed using the accelerator pedal (not decelerating or accelerating).

30. Then turning the cruise control switch to the OFF position (or press the CANCEL button if equipped) after waiting 10 seconds.

31. This procedure must be performed approximately 10-15 times to completely unlearn the overshoot/undershoot condition.

Did the Speed Control pass the above test?

Yes >> Repair is not complete, refer to appropriate symptom.

No >> Repair is complete.

https://truckmanualshub.com/

POWERTRAIN VERIFICATION TEST VER - 5 (DIESEL)

Diagnostic Test

1. POWERTRAIN VERIFICATION TEST VER - 5 (DIESEL)

1. Check if any of the following conditions exist.
2. The ECM has been disconnected or replace.
3. The Battery power has been disconnected.
4. Inspect the vehicle to ensure that all engine components are properly installed and connected. Reassemble and reconnect components as necessary.
5. If any existing diagnostic trouble codes have not been repaired, go to Symptom List and follow path specified.
6. Connect the scan tool to the data link connector.
7. Ensure the fuel tank has at least a quarter tank of fuel. Turn off all accessories.
8. Perform steps 15 through 17 if the PCM has been replaced. Then proceed with the verification. If the ECM has not been replaced skip those steps and continue verification.
9. If ECM has been changed and correct VIN and mileage have not been programmed, a DTC will be set in ABS and Air bag modules. In addition, if vehicle is equipped with a Sentry Key Immobilizer Module (SKIM), Secret Key data must be updated to enable start.
10. For ABS and Air Bag systems: Enter correct VIN and Mileage in ECM. Erase codes in ABS and Air Bag modules.
11. For SKIM theft alarm: Connect scan tool to data link connector to Theft Alarm, SKIM, Misc. and place SKIM in secured access mode by using appropriate PIN code for this vehicle. Select Update the Secret Key data. Data will be transferred from SKIM to PCM.
12. If a Comprehensive Component DTC was repaired, perform steps 10-13. If a Major OBDII Monitor DTC was repaired skip those steps and continue verification.
13. After the ignition has been off for at least 10 seconds, restart the vehicle and run 2 minutes.
14. If there are no new DTC's, the repair was successful and is now complete. Erase DTC's and disconnect the scan tool.
15. If the repaired DTC has reset, the repair is not complete. Check for any related TSB's or flash updates and return to the Symptom list.
16. If another DTC has set, return to the Symptom List and follow the path specified for that DTC.
17. With the scan tool, monitor the appropriate pre-test enabling conditions until all conditions have been met. Once the conditions have been met, switch screen to the appropriate OBDII monitor, (Audible beeps when the monitor is running).
18. If the monitor ran, the repair was successful and is now complete. Erase DTC's and disconnect the scan tool.
19. If the repaired OBDII trouble code has reset or was seen in the monitor while on the road test, the repair is not complete. Check for any related technical service bulletins or flash updates and return to Symptom List.
20. If another DTC has set, return to the Symptom List and follow the path specified for that DTC.

Is any DTC(s) present?

Yes >> Repair is not complete, refer to appropriate symptom.

No >> Repair is complete.

https://truckmanualshub.com/

REMOVAL

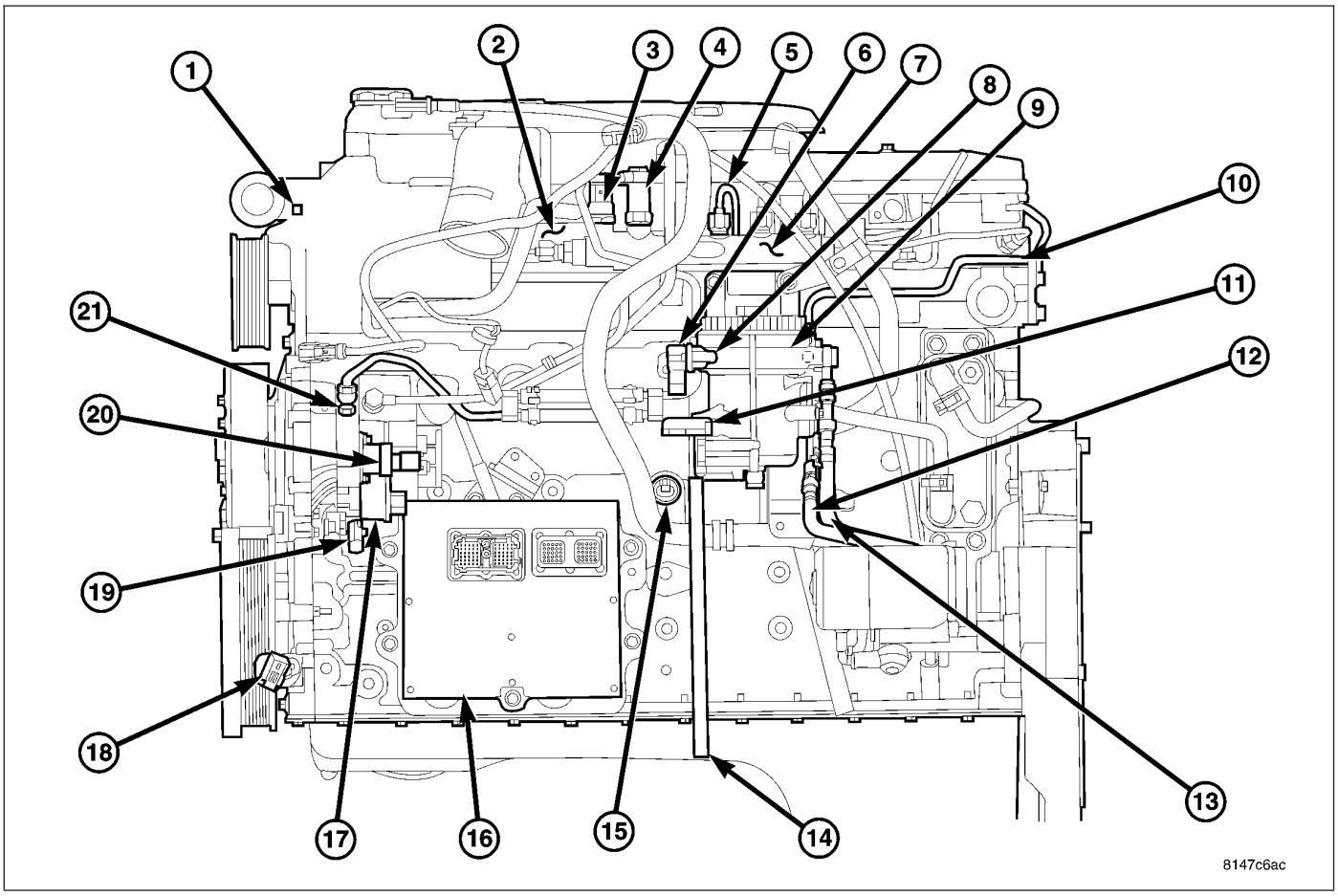

CUMMINS FUEL SYSTEM COMPONENTS

1 - ENGINE COOLANT TEMPERATURE (ECT) SENSOR
2 - INTAKE MANIFOLD AIR HEATER/ELEMENTS
3 - FUEL PRESSURE SENSOR
4 - FUEL PRESSURE LIMITING VALVE
5 - HIGH-PRESSURE FUEL LINES
6 - FUEL HEATER
7 - HIGH-PRESSURE FUEL RAIL
8 - FUEL HEATER TEMPERATURE SENSOR (THERMOSTAT)
9 - FUEL FILTER/WATER SEPARATOR
10 - FUEL DRAIN MANIFOLD (CYLINDER HEAD FUEL RETURN LINE)
11 - DRAIN VALVE
12 - FUEL RETURN LINE CONNECTION (TO FUEL TANK)
13 - FUEL SUPPLY LINE (LOW-PRESSURE, TO ENGINE)
14 - FUEL DRAIN TUBE
15 - OIL PRESSURE SWITCH
16 - ENGINE CONTROL MODULE (ECM)
17 - FUEL INJECTION PUMP
18 - CRANKSHAFT POSITION (ENGINE SPEED) SENSOR
19 - CAMSHAFT POSITION SENSOR (CMP)
20 - FUEL CONTROL ACTUATOR (FCA)
21 - CASCADE OVERFLOW VALVE

The Engine Control Module (ECM) (16) is bolted to a support bracket near the fuel filter. The support bracket mounts to the block with four capscrews and vibration isolators. A ground wire is fastened to the bracket. The other end of the wire is fastened to the engine block.

1. Record any Diagnostic Trouble Codes (DTC's) found in the ECM.

To avoid possible voltage spike damage to the ECM, ignition key must be off, and both negative battery cables must be disconnected before unplugging ECM connectors.

2. Disconnect both negative battery cables at both batteries.
3. Remove the 50–way and 60–way connector bolts at the ECM. Note: The connector bolt is a female allen head. As bolt is being removed, very carefully remove connectors from the ECM.
4. Remove five ECM mounting bolts and remove ECM from vehicle.

https://truckmanualshub.com/

INSTALLATION

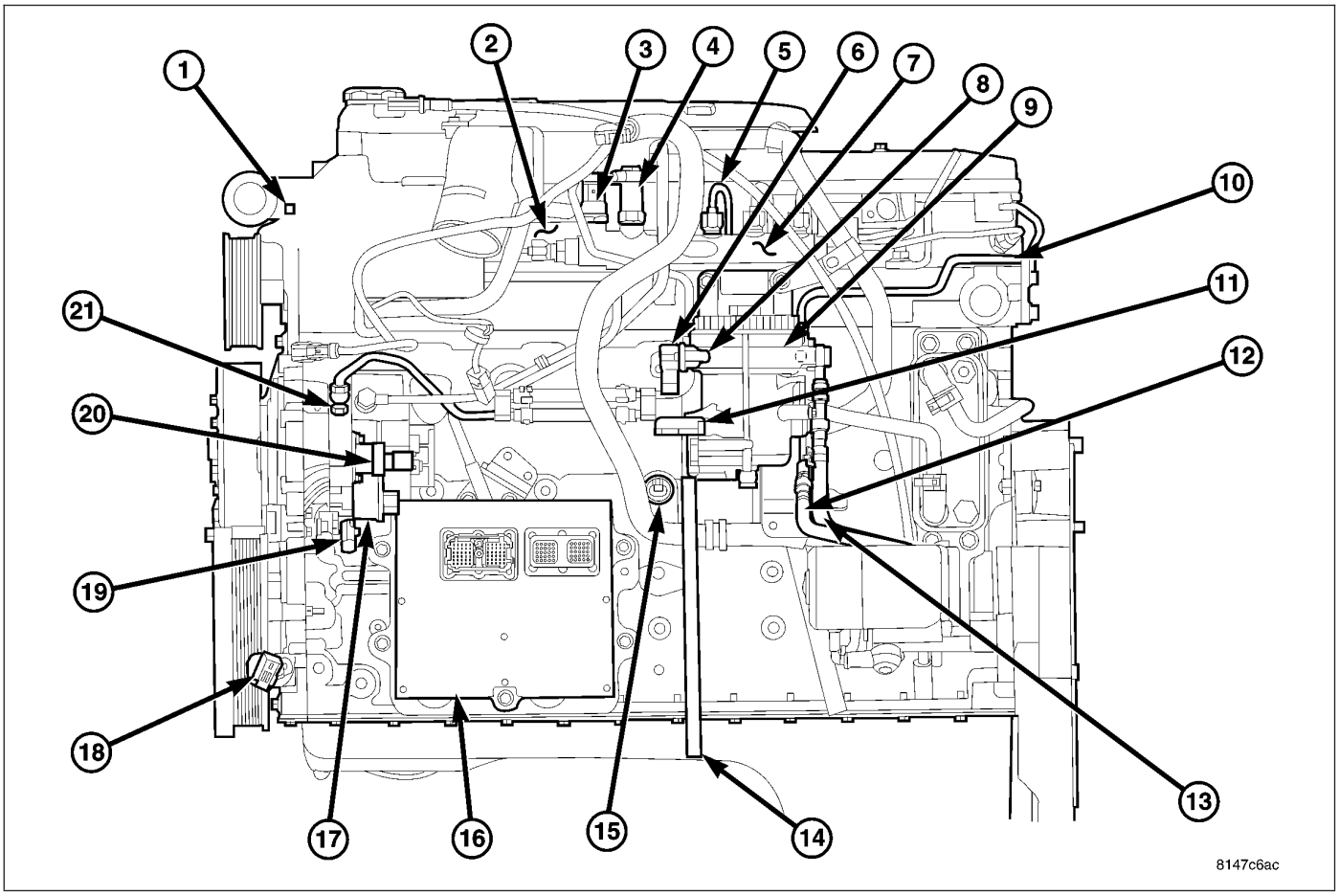

CUMMINS FUEL SYSTEM COMPONENTS

1 - ENGINE COOLANT TEMPERATURE (ECT) SENSOR
2 - INTAKE MANIFOLD AIR HEATER/ELEMENTS
3 - FUEL PRESSURE SENSOR
4 - FUEL PRESSURE LIMITING VALVE
5 - HIGH-PRESSURE FUEL LINES
6 - FUEL HEATER
7 - HIGH-PRESSURE FUEL RAIL
8 - FUEL HEATER TEMPERATURE SENSOR (THERMOSTAT)
9 - FUEL FILTER/WATER SEPARATOR
10 - FUEL DRAIN MANIFOLD (CYLINDER HEAD FUEL RETURN LINE)
11 - DRAIN VALVE
12 - FUEL RETURN LINE CONNECTION (TO FUEL TANK)
13 - FUEL SUPPLY LINE (LOW-PRESSURE, TO ENGINE)
14 - FUEL DRAIN TUBE
15 - OIL PRESSURE SWITCH
16 - ENGINE CONTROL MODULE (ECM)
17 - FUEL INJECTION PUMP
18 - CRANKSHAFT POSITION (ENGINE SPEED) SENSOR
19 - CAMSHAFT POSITION SENSOR (CMP)
20 - FUEL CONTROL ACTUATOR (FCA)
21 - CASCADE OVERFLOW VALVE

Do not apply paint to ECM or a poor ground will result.

1. Position the ECM (16) to the ECM support bracket and install the five mounting bolts. Tighten bolts to 24 N·m (18 ft. lbs.).
2. Check pin connectors in ECM, 50–way and 60–way connectors for corrosion or damage. Repair as necessary.
3. Clean pins in the 50–way and 60–way electrical connectors with a electrical contact cleaner.
4. Install the 50–way and 60–way connectors to ECM. Tighten connector bolts to 3 N·m (27 in. lbs.).
5. Reconnect both negative battery cables.
6. Use a diagnostic scan tool to erase any Diagnostic Trouble Codes (DTC's) from ECM.

https://truckmanualshub.com/

MODULE-POWERTRAIN CONTROL

DESCRIPTION

POWERTRAIN CONTROL MODULE (PCM)

The Powertrain Control Module (PCM) is located in the right-rear section of the engine compartment under the cowl.

Two different PCM's are used (JTEC and NGC). These can be easily identified. JTEC's use three 32–way connectors, NGC's use four 38–way connectors

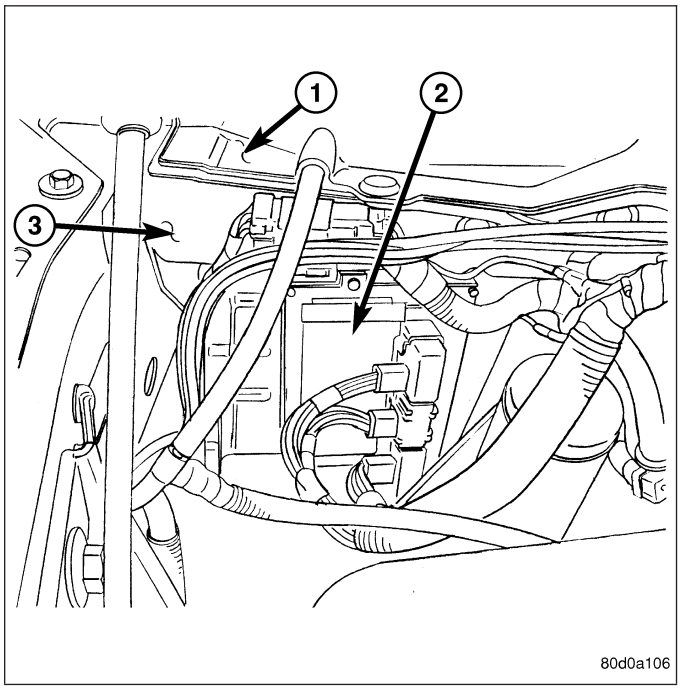

MODES OF OPERATION

As input signals to the Powertrain Control Module (PCM) change, the PCM adjusts its response to the output devices. For example, the PCM must calculate different injector pulse width and ignition timing for idle than it does for wide open throttle (WOT).

The PCM will operate in two different modes: **Open Loop and Closed Loop**.

During Open Loop modes, the PCM receives input signals and responds only according to preset PCM programming. Input from the oxygen (O2S) sensors is not monitored during Open Loop modes.

During Closed Loop modes, the PCM will monitor the oxygen (O2S) sensors input. This input indicates to the PCM whether or not the calculated injector pulse width results in the ideal air-fuel ratio. This ratio is 14.7 parts air-to-1 part fuel. By monitoring the exhaust oxygen content through the O2S sensor, the PCM can fine tune the injector pulse width. This is done to achieve optimum fuel economy combined with low emission engine performance.

The fuel injection system has the following modes of operation:

- Ignition switch ON
- Engine start-up (crank)
- Engine warm-up
- Idle
- Cruise
- Acceleration
- Deceleration
- Wide open throttle (WOT)
- Ignition switch OFF

The ignition switch On, engine start-up (crank), engine warm-up, acceleration, deceleration and wide open throttle modes are Open Loop modes. The idle and cruise modes, (with the engine at operating temperature) are Closed Loop modes.

https://truckmanualshub.com/

IGNITION SWITCH (KEY-ON) MODE

This is an Open Loop mode. When the fuel system is activated by the ignition switch, the following actions occur:

- The PCM pre-positions the idle air control (IAC) motor.
- The PCM determines atmospheric air pressure from the MAP sensor input to determine basic fuel strategy.
- The PCM monitors the engine coolant temperature sensor input. The PCM modifies fuel strategy based on this input.
- Intake manifold air temperature sensor input is monitored.
- Throttle position sensor (TPS) is monitored.
- The auto shutdown (ASD) relay is energized by the PCM for approximately three seconds.
- The fuel pump is energized through the fuel pump relay by the PCM. The fuel pump will operate for approximately three seconds unless the engine is operating or the starter motor is engaged.
- The O2S sensor heater element is energized via the ASD or O2S heater relay. The O2S sensor input is not used by the PCM to calibrate air-fuel ratio during this mode of operation.

ENGINE START-UP MODE

This is an Open Loop mode. The following actions occur when the starter motor is engaged.

The PCM receives inputs from:

- Battery voltage
- Engine coolant temperature sensor
- Crankshaft position sensor
- Intake manifold air temperature sensor
- Manifold absolute pressure (MAP) sensor
- Throttle position sensor (TPS)
- Camshaft position sensor signal

The PCM monitors the crankshaft position sensor. If the PCM does not receive a crankshaft position sensor signal within 3 seconds of cranking the engine, it will shut down the fuel injection system.

The fuel pump is activated by the PCM through the fuel pump relay.

Voltage is applied to the fuel injectors with the ASD relay via the PCM. The PCM will then control the injection sequence and injector pulse width by turning the ground circuit to each individual injector on and off.

The PCM determines the proper ignition timing according to input received from the crankshaft position sensor.

ENGINE WARM-UP MODE

This is an Open Loop mode. During engine warm-up, the PCM receives inputs from:

- Battery voltage
- Crankshaft position sensor
- Engine coolant temperature sensor
- Intake manifold air temperature sensor
- Manifold absolute pressure (MAP) sensor
- Throttle position sensor (TPS)
- Camshaft position sensor signal
- Park/neutral switch (gear indicator signal—auto. trans. only)
- Air conditioning select signal (if equipped)
- Air conditioning request signal (if equipped)

Based on these inputs the following occurs:

- Voltage is applied to the fuel injectors with the ASD relay via the PCM. The PCM will then control the injection sequence and injector pulse width by turning the ground circuit to each individual injector on and off.
- The PCM adjusts engine idle speed through the idle air control (IAC) motor and adjusts ignition timing.
- The PCM operates the A/C compressor clutch through the A/C compressor clutch relay. This is done if A/C has been selected by the vehicle operator and specified pressures are met at the high and low–pressure A/C switches. Refer to Heating and Air Conditioning for additional information.

https://truckmanualshub.com/

- When engine has reached operating temperature, the PCM will begin monitoring O2S sensor input. The system will then leave the warm-up mode and go into closed loop operation.

IDLE MODE

When the engine is at operating temperature, this is a Closed Loop mode. At idle speed, the PCM receives inputs from:

- Air conditioning select signal (if equipped)
- Air conditioning request signal (if equipped)
- Battery voltage
- Crankshaft position sensor
- Engine coolant temperature sensor
- Intake manifold air temperature sensor
- Manifold absolute pressure (MAP) sensor
- Throttle position sensor (TPS)
- Camshaft position sensor signal
- Battery voltage
- Park/neutral switch (gear indicator signal—auto. trans. only)
- Oxygen sensors

Based on these inputs, the following occurs:

- Voltage is applied to the fuel injectors with the ASD relay via the PCM. The PCM will then control injection sequence and injector pulse width by turning the ground circuit to each individual injector on and off.
- The PCM monitors the O2S sensor input and adjusts air-fuel ratio by varying injector pulse width. It also adjusts engine idle speed through the idle air control (IAC) motor.
- The PCM adjusts ignition timing by increasing and decreasing spark advance.
- The PCM operates the A/C compressor clutch through the A/C compressor clutch relay. This is done if A/C has been selected by the vehicle operator and specified pressures are met at the high and low–pressure A/C switches. Refer to Heating and Air Conditioning for additional information.

CRUISE MODE

When the engine is at operating temperature, this is a Closed Loop mode. At cruising speed, the PCM receives inputs from:

- Air conditioning select signal (if equipped)
- Air conditioning request signal (if equipped)
- Battery voltage
- Engine coolant temperature sensor
- Crankshaft position sensor
- Intake manifold air temperature sensor
- Manifold absolute pressure (MAP) sensor
- Throttle position sensor (TPS)
- Camshaft position sensor signal
- Park/neutral switch (gear indicator signal—auto. trans. only)
- Oxygen (O2S) sensors

Based on these inputs, the following occurs:

- Voltage is applied to the fuel injectors with the ASD relay via the PCM. The PCM will then adjust the injector pulse width by turning the ground circuit to each individual injector on and off.
- The PCM monitors the O2S sensor input and adjusts air-fuel ratio. It also adjusts engine idle speed through the idle air control (IAC) motor.
- The PCM adjusts ignition timing by turning the ground path to the coil(s) on and off.
- The PCM operates the A/C compressor clutch through the clutch relay. This happens if A/C has been selected by the vehicle operator and requested by the A/C thermostat.

https://truckmanualshub.com/

ACCELERATION MODE

This is an Open Loop mode. The PCM recognizes an abrupt increase in throttle position or MAP pressure as a demand for increased engine output and vehicle acceleration. The PCM increases injector pulse width in response to increased throttle opening.

DECELERATION MODE

When the engine is at operating temperature, this is an Open Loop mode. During hard deceleration, the PCM receives the following inputs.

- Air conditioning select signal (if equipped)
- Air conditioning request signal (if equipped)
- Battery voltage
- Engine coolant temperature sensor
- Crankshaft position sensor
- Intake manifold air temperature sensor
- Manifold absolute pressure (MAP) sensor
- Throttle position sensor (TPS)
- Camshaft position sensor signal
- Park/neutral switch (gear indicator signal—auto. trans. only)
- Vehicle speed

If the vehicle is under hard deceleration with the proper rpm and closed throttle conditions, the PCM will ignore the oxygen sensor input signal. The PCM will enter a fuel cut-off strategy in which it will not supply a ground to the injectors. If a hard deceleration does not exist, the PCM will determine the proper injector pulse width and continue injection.

Based on the above inputs, the PCM will adjust engine idle speed through the idle air control (IAC) motor.

The PCM adjusts ignition timing by turning the ground path to the coil on and off.

WIDE OPEN THROTTLE MODE

This is an Open Loop mode. During wide open throttle operation, the PCM receives the following inputs.

- Battery voltage
- Crankshaft position sensor
- Engine coolant temperature sensor
- Intake manifold air temperature sensor
- Manifold absolute pressure (MAP) sensor
- Throttle position sensor (TPS)
- Camshaft position sensor signal

During wide open throttle conditions, the following occurs:

- Voltage is applied to the fuel injectors with the ASD relay via the PCM. The PCM will then control the injection sequence and injector pulse width by turning the ground circuit to each individual injector on and off. The PCM ignores the oxygen sensor input signal and provides a predetermined amount of additional fuel. This is done by adjusting injector pulse width.
- The PCM adjusts ignition timing by turning the ground path to the coil(s) on and off.

IGNITION SWITCH OFF MODE

When ignition switch is turned to OFF position, the PCM stops operating the injectors, ignition coil, ASD relay and fuel pump relay.

5 VOLT SUPPLIES

Two different Powertrain Control Module (PCM) five volt supply circuits are used; primary and secondary.

IGNITION CIRCUIT SENSE

This circuit ties the ignition switch to the Powertrain Control Module (PCM).

https://truckmanualshub.com/

POWER GROUNDS

The Powertrain Control Module (PCM) has 2 main grounds. Both of these grounds are referred to as power grounds. All of the high-current, noisy, electrical devices are connected to these grounds as well as all of the sensor returns. The sensor return comes into the sensor return circuit, passes through noise suppression, and is then connected to the power ground.

The power ground is used to control ground circuits for the following PCM loads:

- Generator field winding
- Fuel injectors
- Ignition coil(s)
- Certain relays/solenoids
- Certain sensors

SENSOR RETURN

The Sensor Return circuits are internal to the Powertrain Control Module (PCM).

Sensor Return provides a low–noise ground reference for all engine control system sensors. Refer to Power Grounds for more information.

OPERATION

POWERTRAIN CONTROL MODULE (PCM)

The PCM operates the fuel system. The PCM is a pre-programmed, triple microprocessor digital computer. It regulates ignition timing, air-fuel ratio, emission control devices, charging system, certain transmission features, speed control, air conditioning compressor clutch engagement and idle speed. The PCM can adapt its programming to meet changing operating conditions.

The PCM receives input signals from various switches and sensors. Based on these inputs, the PCM regulates various engine and vehicle operations through different system components. These components are referred to as Powertrain Control Module (PCM) Outputs. The sensors and switches that provide inputs to the PCM are considered Powertrain Control Module (PCM) Inputs.

The PCM adjusts ignition timing based upon inputs it receives from sensors that react to: engine rpm, manifold absolute pressure, engine coolant temperature, throttle position, transmission gear selection (automatic transmission), vehicle speed, power steering pump pressure, and the brake switch.

The PCM adjusts idle speed based on inputs it receives from sensors that react to: throttle position, vehicle speed, transmission gear selection, engine coolant temperature and from inputs it receives from the air conditioning clutch switch and brake switch.

Based on inputs that it receives, the PCM adjusts ignition coil dwell. The PCM also adjusts the generator charge rate through control of the generator field and provides speed control operation.

NOTE: PCM Inputs:

- ABS module (if equipped)
- A/C request (if equipped with factory A/C)
- A/C select (if equipped with factory A/C)
- A/C pressure transducer
- Auto shutdown (ASD) sense
- Battery temperature sensor
- Battery voltage
- Brake switch
- J1850 bus (+) circuits
- J1850 bus (-) circuits
- Camshaft position sensor signal
- Crankshaft position sensor
- Data link connection for a scan tool

https://truckmanualshub.com/

- EATX module (if equipped)
- Engine coolant temperature sensor
- Fuel level (through J1850 circuitry)
- Generator (battery voltage) output
- Ignition circuit sense (ignition switch in on/off/crank/run position)
- Intake manifold air temperature sensor
- Knock sensors (2 on 3.7L engine)
- Leak detection pump (switch) sense (if equipped)
- Manifold absolute pressure (MAP) sensor
- Oil pressure
- Oxygen sensors
- Park/neutral switch (auto. trans. only)
- Power ground
- Power steering pressure switch (if equipped)
- Sensor return
- Signal ground
- Speed control multiplexed single wire input
- Throttle position sensor
- Transfer case switch (4WD range position)
- Vehicle speed signal

NOTE: PCM Outputs:

- A/C clutch relay
- Auto shutdown (ASD) relay
- J1850 bus (+/-) circuits for: speedometer, voltmeter, fuel gauge, oil pressure gauge/lamp, engine temp. gauge and speed control warn. lamp
- Data link connection for DRB scan tool
- EGR valve control solenoid (if equipped)
- EVAP canister purge solenoid
- Five volt sensor supply (primary)
- Five volt sensor supply (secondary)
- Fuel injectors
- Fuel pump relay
- Generator field driver (-)
- Generator field driver (+)
- Idle air control (IAC) motor
- Ignition coil(s)
- Leak detection pump (if equipped)
- Malfunction indicator lamp (Check engine lamp). Driven through J1850 circuits.
- Oxygen sensor heater relays
- Oxygen sensors (pulse width modulated)
- Radiator cooling fan relay (pulse width modulated)
- Speed control vacuum solenoid
- Speed control vent solenoid
- Tachometer (if equipped). Driven through J1850 circuits.
- Transmission convertor clutch circuit. Driven through J1850 circuits.

https://truckmanualshub.com/

5 VOLT SUPPLIES

Primary 5–volt supply:

- supplies the required 5 volt power source to the Crankshaft Position (CKP) sensor.
- supplies the required 5 volt power source to the Camshaft Position (CMP) sensor.
- supplies a reference voltage for the Manifold Absolute Pressure (MAP) sensor.
- supplies a reference voltage for the Throttle Position Sensor (TPS) sensor.

Secondary 5–volt supply:

- supplies the required 5 volt power source to the oil pressure sensor.
- supplies the required 5 volt power source for the Vehicle Speed Sensor (VSS) (if equipped).
- supplies the 5 volt power source to the transmission pressure sensor (certain automatic transmissions).

OIGNITION CIRCUIT SENSE

The ignition circuit sense input tells the PCM the ignition switch has energized the ignition circuit.

Battery voltage is also supplied to the PCM through the ignition switch when the ignition is in the RUN or START position. This is referred to as the ″ignition sense″ circuit and is used to ″wake up″ the PCM. Voltage on the ignition input can be as low as 6 volts and the PCM will still function. Voltage is supplied to this circuit to power the PCM's 8-volt regulator and to allow the PCM to perform fuel, ignition and emissions control functions.

REMOVAL

CAUTION: Certain ABS systems rely on having the Powertrain Control Module (PCM) broadcast the Vehicle Identification Number (VIN) over the bus network. To prevent problems of DTCs and other items related to the VIN broadcast, it is recommend that you disconnect the ABS CAB (controller) temporarily when replacing the PCM. Once the PCM is replaced, write the VIN to the PCM using a scan tool. This is done from the engine main menu. Arrow over to the second page to "1. Miscellaneous". Select "Check VIN" from the choices. Make sure it has the correct VIN entered before continuing. When the VIN is complete, turn off the ignition key and reconnect the ABS module connector. This will prevent the setting of DTCs and other items associated with the lack of a VIN detected when you turn the key ON after replacing the PCM.

CAUTION: Use the scan tool to reprogram the new PCM with the vehicles original identification number (VIN) and the vehicles original mileage. If this step is not done, a Diagnostic Trouble Code (DTC) may be set.

The PCM (1) is located in the engine compartment attached to the dash panel (3).

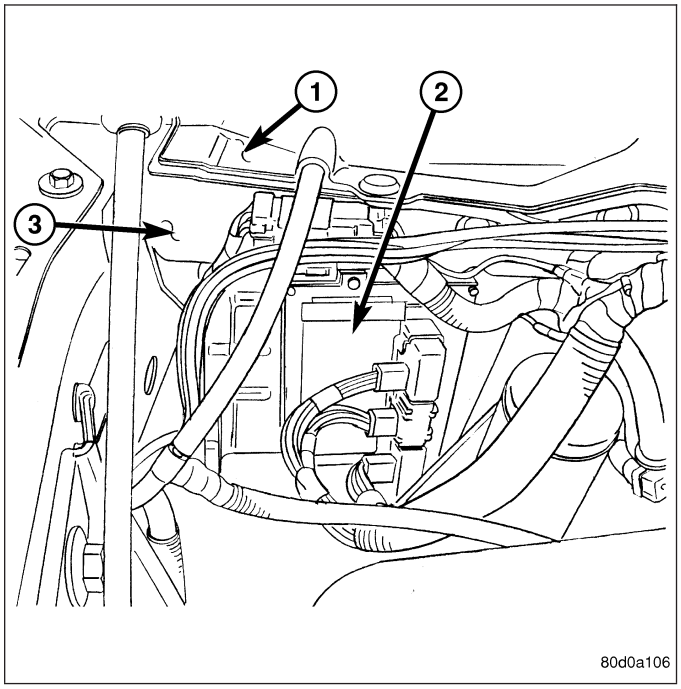

https://truckmanualshub.com/

To avoid possible voltage spike damage to the PCM, ignition key must be off, and negative battery cable must be disconnected before unplugging PCM connectors.

1. Disconnect negative battery cable at battery.
2. Remove cover over electrical connectors. Cover snaps onto PCM.
3. Carefully unplug the three 32–way connectors (four 38–way connectors if equipped with NGC) from PCM (1).
4. Remove three PCM mounting bolts (4) and remove PCM from vehicle.

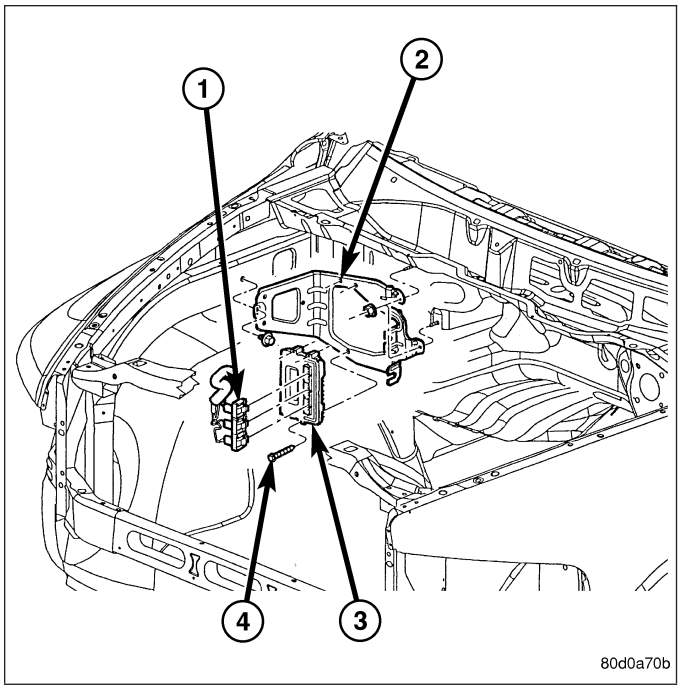

INSTALLATION

CAUTION: Certain ABS systems rely on having the Powertrain Control Module (PCM) broadcast the Vehicle Identification Number (VIN) over the bus network. To prevent problems of DTCs and other items related to the VIN broadcast, it is recommend that you disconnect the ABS CAB (controller) temporarily when replacing the PCM. Once the PCM is replaced, write the VIN to the PCM using a scan tool. This is done from the engine main menu. Arrow over to the second page to “1. Miscellaneous”. Select “Check VIN” from the choices. Make sure it has the correct VIN entered before continuing. When the VIN is complete, turn off the ignition key and reconnect the ABS module connector. This will prevent the setting of DTCs and other items associated with the lack of a VIN detected when you turn the key ON after replacing the PCM.

CAUTION: Use the scan tool to reprogram the new PCM with the vehicles original identification number (VIN) and the vehicles original mileage. If this step is not done, a Diagnostic Trouble Code (DTC) may be set.

https://truckmanualshub.com/

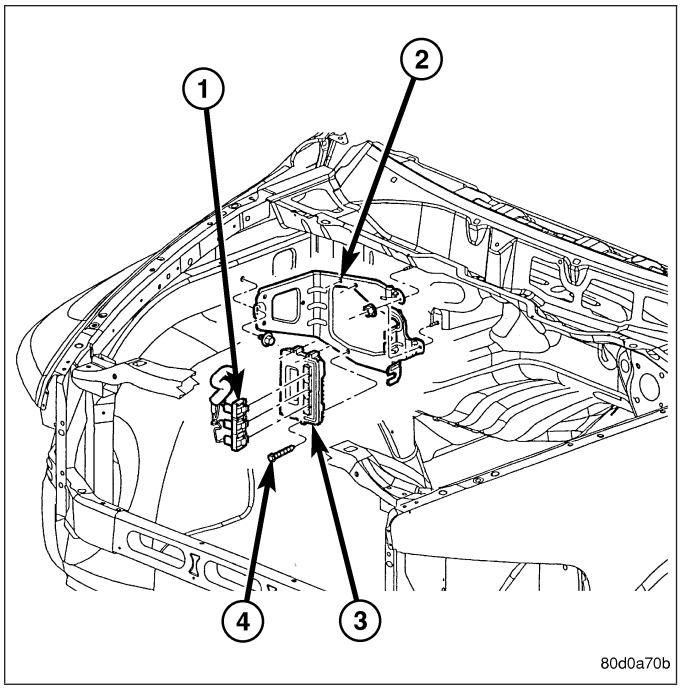

1. Install PCM (3) and 3 mounting bolts (4) to vehicle.
2. Tighten bolts. Refer to torque specifications.
3. Check pin connectors in the PCM and the three 32–way connectors (four 38–way connectors if equipped with NGC) for corrosion or damage. Also, the pin heights in connectors should all be same. Repair as necessary before installing connectors.
4. Install three 32–way connectors (four 38–way connectors if equipped with NGC).
5. Install cover over electrical connectors. Cover snaps onto PCM.
6. Install negative battery cable.
7. **The 5.7L V-8 engine is equipped with a fully electronic accelerator pedal position sensor. If equipped with a 5.7L, also perform the following 3 steps:**
   a. Connect negative battery cable to battery.
   b. Turn ignition switch ON, but do not crank engine.
   c. Leave ignition switch ON for a minimum of 10 seconds. This will allow PCM to learn electrical parameters.
   d. The scan tool may also be used to learn electrical parameters. Go to the Miscellaneous menu, and then select ETC Learn.
8. If the previous step is not performed, a Diagnostic Trouble Code (DTC) will be set.
9. If necessary, use a scan tool to erase any Diagnostic Trouble Codes (DTC's) from PCM. Also use the scan tool to reprogram new PCM with vehicles original Vehicle Identification Number (VIN) and original vehicle mileage.

https://truckmanualshub.com/

MODULE - SRT10 GATEWAY

DESCRIPTION

CAUTION: In the event that replacement of both the Gateway Module and the Sentry Key Remote Entry Module (SKREEM) is required, the Gateway Module MUST be replaced first. The sentry key information should then be uploaded to the Powertrain Control Module (PCM), (Refer to 8 - ELECTRICAL/ELECTRONIC CONTROL MODULES - STANDARD PROCEDURE - PROGRAMMING THE PCM/ECM/SKREEM) for the appropriate procedure. Once the key information is successfully programmed to the PCM the SKREEM module may be replaced. Failure to follow this module replacement sequence may result in the loss of sentry key information and a vehicle NO START condition.

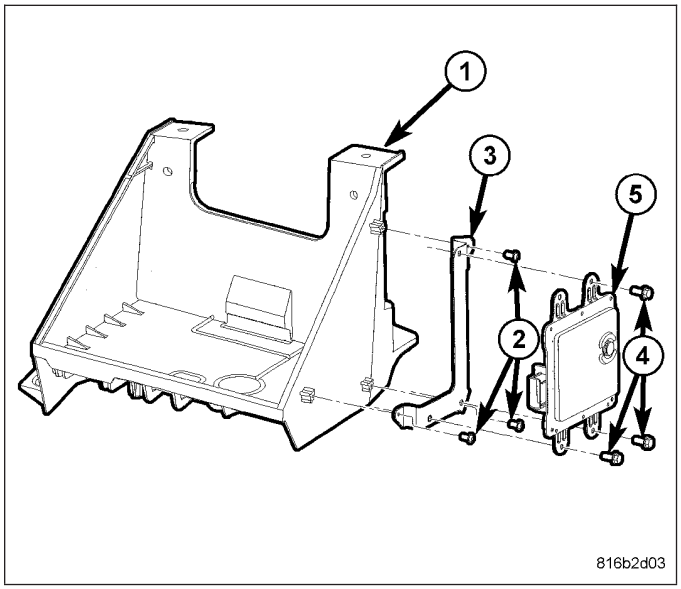

The Gateway Module (5) is located in the right side of the engine compartment secured to the right battery tray (1). The Gateway Modules primary function is to define communications between electronic controllers and move data collected from the multiple controllers to the PCM for processing using the Controller Area Network (CAN) and Programmable Communication Interface (PCI) buss. The gateway does not contain any drivers, and therefore does not directly operate any vehicle components.

REMOVAL

CAUTION: In the event that replacement of both the Gateway Module and the Sentry Key Remote Entry Module (SKREEM) is required, the Gateway Module MUST be replaced first. The sentry key information should then be uploaded to the Powertrain Control Module (PCM), (Refer to 8 - ELECTRICAL/ELECTRONIC CONTROL MODULES - STANDARD PROCEDURE - PROGRAMMING THE PCM/ECM/SKREEM) for the appropriate procedure. Once the key information is successfully programmed to the PCM the SKREEM module may be replaced. Failure to follow this module replacement sequence may result in the loss of sentry key information and a vehicle NO START condition.

1. Disconnect and isolate the battery negative cable.
2. Remove the push pin fastener (2) that secures the gateway module cover (1) to the module bracket. Remove the module cover (1).

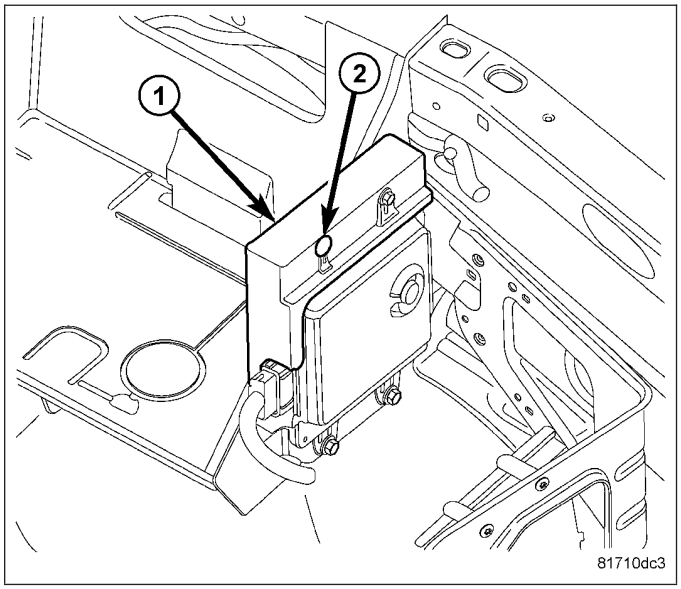

https://truckmanualshub.com/

3. Disconnect the electrical connector (2) from the gateway module (1).

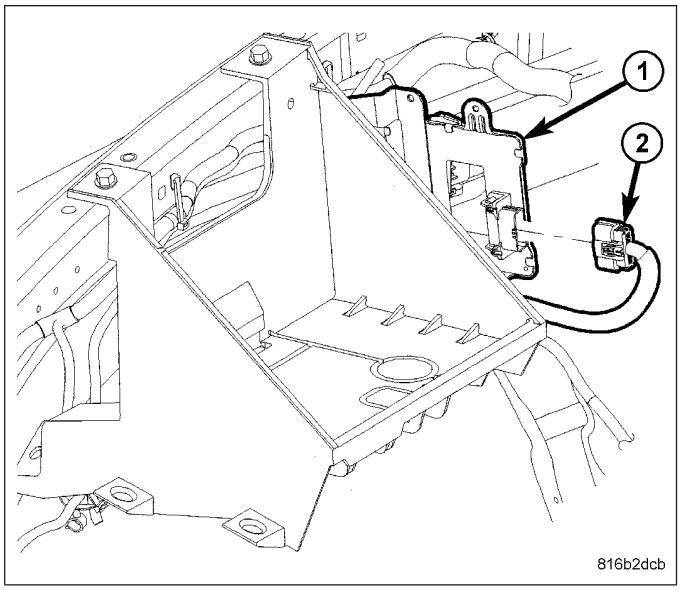

4. Remove the mounting bolts (4) that secure the gateway module (5) to the mounting bracket (3).
5. Remove the gateway module (5) from the vehicle.

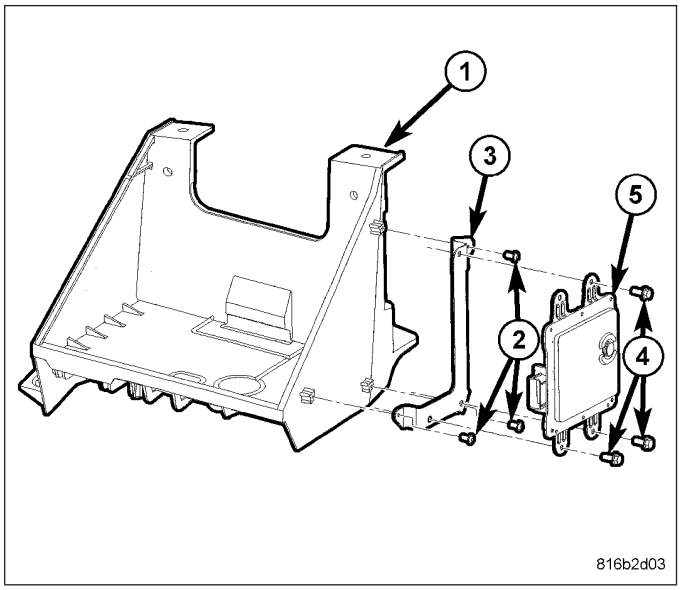

INSTALLATION

CAUTION: In the event that replacement of both the Gateway Module and the Sentry Key Remote Entry Module (SKREEM) is required, the Gateway Module MUST be replaced first. The sentry key information should then be uploaded to the Powertrain Control Module (PCM), (Refer to 8 - ELECTRICAL/ELECTRONIC CONTROL MODULES - STANDARD PROCEDURE - PROGRAMMING THE PCM/ECM/SKREEM) for the appropriate procedure. Once the key information is successfully programmed to the PCM the SKREEM module may be replaced. Failure to follow this module replacement sequence may result in the loss of sentry key information and a vehicle NO START condition.

https://truckmanualshub.com/

1. Position the gateway module (5) into the vehicle.
2. Install the mounting bolts (4) that secure the gateway module (5) to the mounting bracket (3).

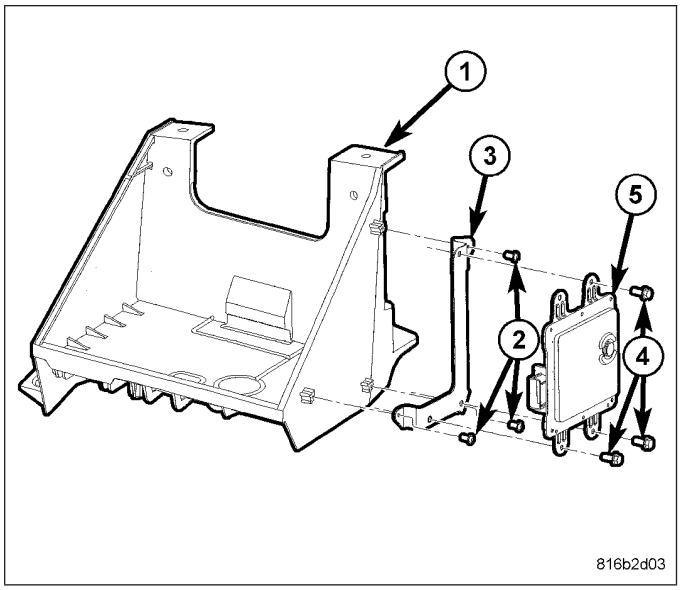

3. Connect the electrical connector (2) to the gateway module (1).

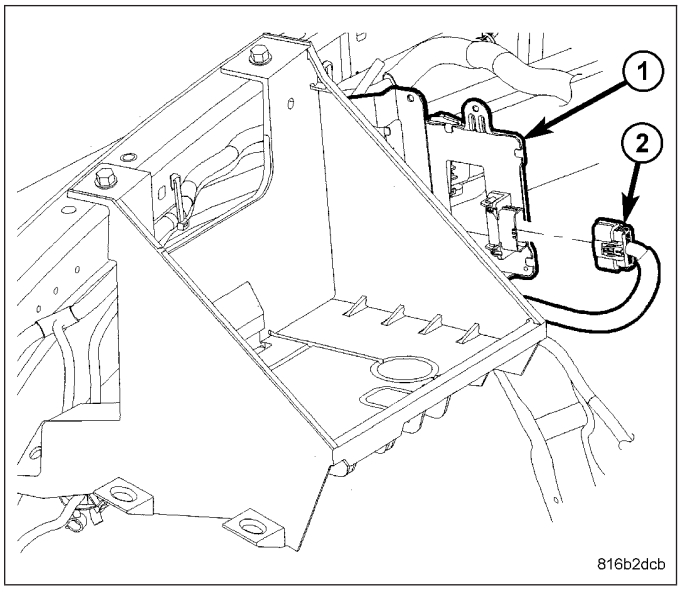

4. Position the gateway module cover (1) over the module and install the push pin fastener (2).
5. Connect the battery negative cable.
6. Upload the sentry key information to the Powertrain Control Module (PCM), (Refer to 8 - ELECTRICAL/ ELECTRONIC CONTROL MODULES - STANDARD PROCEDURE - PROGRAMMING THE PCM/ECM/SKREEM) for the appropriate procedure.

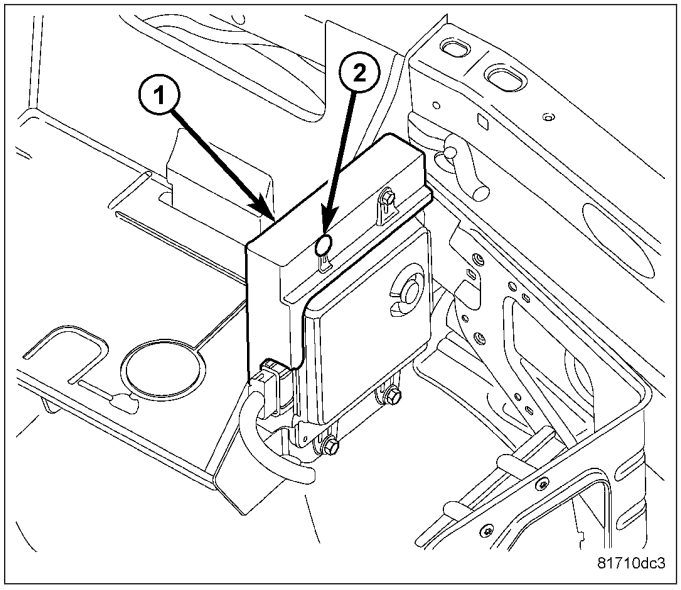

https://truckmanualshub.com/

MODULE-TRANSFER CASE CONTROL

DESCRIPTION

The Transfer Case Control Module (TCCM) (2) is a microprocessor-based assembly, controlling the 4X4 transfer case shift functions via the actuation of a shift motor and utilizing the feedback of a mode sensor assembly. Communication is via the PCI serial bus. Inputs include user selectable 4X4 modes that include 2WD, AWD, 4HI, 4LO, and Neutral. The logic and driver circuitry is contained in a molded plastic housing with an embedded heat-sink and is located behind the left side of the lower instrument panel (1).

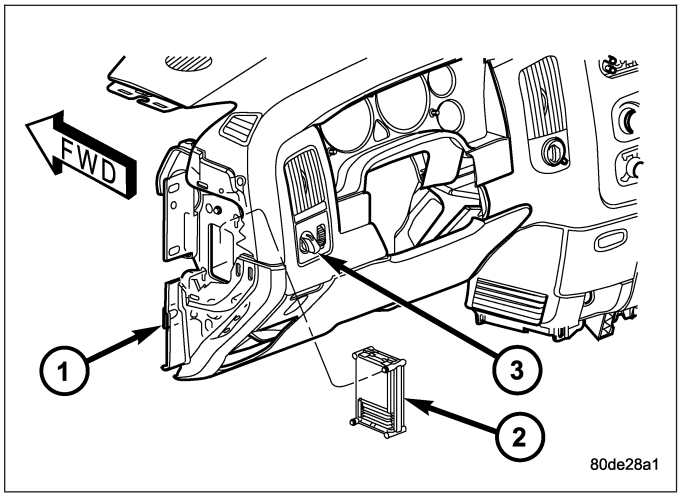

OPERATION

The Transfer Case Control Module (TCCM) utilizes the input from the transfer case mounted mode sensor, the instrument panel mounted selector switch, and the following information from the vehicle's PCI serial bus to determine if a shift is allowed.

- Engine RPM and Vehicle Speed
- Diagnostic Requests
- Manual Transmission and Brake Applied
- PRNDL
- Ignition Status
- ABS Messages

Once the TCCM determines that a requested shift is allowed, it actuates the bi-directional shift motor as necessary to achieve the desired transfer case operating mode. The TCCM also monitors the mode sensor while controlling the shift motor to determine the status of the shift attempt.

Several items can cause the requested shift not to be completed. If the TCCM has recognized a fault (DTC) of some variety, it will begin operation in one of four Functionality Levels. These levels are:

- **Level Zero** - Normal Operation.
- **Level One** - Only Mode Shifts Are Allowed.
- **Level Two** - Only Mode Shifts and Shifts Into LOW Are Allowed (No Neutral Shifts Are Allowed).
- **Level Three** - No Shifts Are Allowed

The TCCM can also be operating in one of three possible power modes. These power modes are:

- **Full Power Mode** is the normal operational mode of the module. This mode is achieved by normal PCI bus traffic being present and the ignition being in the RUN position.
- **Reduced Power Mode** will be entered when the ignition has been powered off. In this state, the module will shut down power supplied to external devices, and to electronic interface inputs and outputs. From this state the module can enter either Sleep Mode or Full Power Mode. To enter this mode, the module must receive an ignition message denoting that the ignition is off, or not receive any messages for 5 ±0.5 seconds. To exit this mode, the module must receive one ignition message that denotes that the ignition is in the RUN position.
- **Sleep Mode** will be entered, from the Reduced Power Mode, when no PCI traffic has been sensed for 20 ±1 seconds. If during Sleep Mode the module detects PCI bus traffic, it will revert to the Reduced Power mode while monitoring for ignition messages. It will remain in this state as long as there is traffic other than run or start messages, and will return to Sleep mode if the bus goes without traffic for 20 ±1 seconds.

https://truckmanualshub.com/

SHIFT REQUIREMENTS

If the TCCM is in full power mode and at functionality level zero, it uses the following criteria to determine if a shift is allowed.

If any of the driver controllable conditions are not met once the shift request is recognized, the TCCM will solidly illuminate the source position's LED and flash the desired position's LED for all shifts except NEUTRAL. The NEUTRAL shift LED strategy will be discussed later.

Mode shifts will be allowed regardless of transmission gear or vehicle speed, whenever the following conditions are met:

- Front and rear wheel speed are within 21 km/h (13 mph).
- A change in the Selector switch state indicates that a mode shift has been requested.
- A valid mode sensor signal is being sensed by the TCCM.
- Proper transmit/receive messages are occurring on the PCI bus.
- Ignition key switch is in the RUN position.

Range shifts will be allowed only if all of the following conditions are met:

- Front and rear wheel speed are within 21 km/h (13 mph).
- A change in the Selector Switch state indicating a range shift has been requested.
- Transmission in NEUTRAL signal must be recognized for at least 1.5 seconds ±100 msec. (Automatic transmissions only)
- Proper transmit/receive messages are occurring on the PCI bus.
- Clutch signal is recognized for 500 msec ± 50 msec (Manual transmissions only).
- Vehicle speed is less than or equal to 4.8 km/h (3 mph).
- Ignition key switch is in the RUN position.
- A valid mode sensor signal is being sensed by the TCCM.

A **shift into transfer case Neutral** will be allowed only if all of the following conditions are met:

- Front and rear wheel speed are within 21 km/h (13 mph).
- The recessed Neutral Selection switch has been depressed continuously for 4.0 seconds ±100 msec while all shift conditions have been continuously met.
- Transmission in NEUTRAL signal recognized from the bus. (Automatic transmissions only)
- Clutch signal is recognized from the bus (Manual transmissions only).
- Proper message transmissions/receptions are occurring on the PCI bus.
- Vehicle speed is less than or equal to 4.8 km/h (3 mph).
- Ignition key switch is in the RUN position, engine off.
- Foot Brake is applied.
- A valid mode sensor signal is being sensed by the TCCM.

A **shift out of transfer case Neutral** will be allowed only if all of the following conditions are met:

- Front and rear wheel speed are within 21 km/h (13 mph).
- The recessed Neutral Selection switch has been depressed continuously for 1.0 seconds ±100 msec while all shift conditions have been continuously met.
- Transmission in NEUTRAL signal recognized from the bus.(Automatic transmissions only)
- Clutch signal is recognized from the bus (Manual transmissions only).
- Proper message transmissions/receptions are occurring on the PCI bus.
- Vehicle speed is less than or equal to 4.8 km/h (3 mph).
- Ignition key switch is in the RUN position.
- Foot Brake is applied.
- A valid mode sensor signal is being sensed by the TCCM.

SHIFT SEQUENCES

Once all the driver controllable conditions for the requested shift have been met, the TCCM begins a shift timer with a maximum duration of 1 second per 'D' channel transition. If the shift timer expires before the TCCM recognizes to correct mode sensor code, the shift is considered to have been blocked. The blocked shift will increment the

https://truckmanualshub.com/

blocked shift counter by one. The TCCM strategy for handling blocked shifts will be described later. The process the TCCM performs for the various shifts will be described first.

RANGE AND MODE SHIFTS

The process for performing all the range and mode shifts are the same. The following steps describe the process.

- Allow time for Selector Switch debounce; 250 msec ±50 msec.
- Extinguish the source gear's LED while flashing desired transfer case position's LED.
- Engage the shift motor for a maximum of 1 second ±100 msec per 'D' channel transition in the destination gear's direction while monitoring the mode sensor channel transitions.
- Disengage the shift motor when the correct mode sensor code is recognized.
- Solidly illuminate the selected gear's LED.
- Transmit a bus message that the transfer case shift is complete.
- If the desired mode sensor code is not received after the shift timer expires (ie. a blocked or other condition exists), stop driving the motor and wait for 200 msec ±50 msec. The shift motor is then reversed in the direction back toward the source gear for up to 1.0 seconds ±100 msec. per 'D' channel. The TCCM waits for 2.0 seconds ±50 msec. and repeats the attempt to shift to the desired position.

The exception to the preceding sequence is when a shift from 4L to 2WD/AWD is requested. If 2WD/AWD is requested from the 4L position, the transfer case is first driven to the 4H position. If the 4H position is reached, the transfer case is then driven back to the 2WD/AWD position and the shift is considered complete. If the transfer case does not reach any the 4H position, but is in the 2WD/AWD 'D' channel, or the 2WD/AWD between gear position on the 4H side of 2WD/AWD, the shift is also considered complete.

SHIFT OUT OF NEUTRAL

The following steps describe the process for a shift out of NEUTRAL.

- Extinguish the Neutral LED.
- Engage the shift motor for a maximum of 1 second ±100 msec toward the transfer case 4H mode position while monitoring the mode sensor channel transitions.
- Disengage the shift motor when the correct mode sensor code is recognized.
- Extinguish the Neutral LED.
- Transmit a bus message that the transfer case shift is complete.
- If the desired mode sensor code is not received after the shift timer expires (ie. a blocked or other condition exists), stop driving the motor and wait for 200 msec ±50 msec. The shift motor is then reversed in the direction back toward the source gear for up to 1.0 seconds 100 msec. The TCCM waits for 2.0 seconds ±50 msec. and repeats the attempt to shift to the desired position.
- When the Neutral button is released, if the 4H position is the desired position, the shift is complete. Illuminate the 4H LED.
- Otherwise when the Neutral button is released, if all of the shift requirements are being met then engage the shift motor towards the desired position for 1 second ±100 msec per 'D' channel. (if requirements for shifting are not met, illuminate the 4H LED and flash the destination LED as an indication to the driver that all of the driver controllable shift conditions are not being met). If this requires another range or mode shift, begin the range/mode shift process.
- If the desired mode sensor code is not received after the shift timer expires (i.e. a blocked or other condition exists), refer to the section on Blocked Shift Strategy.

BLOCKED SHIFT STRATEGY

When a shift is commanded, the shift motor will be driven towards its destination position, except in the case of shifting out of Neutral if 4L was selected (the transfer case will shift to the 4H position first, before proceeding to 4L). If the shift is blocked on the way to the destination, the TCCM may attempt to drive the motor back to the original position. This process will be allowed to occur 5 times. If the transfer case has reached a non-NEUTRAL 'D' channel during the shift re-attempts, the LED for the achieved gear position is illuminated and the shift attempts are stopped. To re-attempt the desired shift, the selector switch will need to be rotated to the current position until the switch debounce timer expires then a shift will need to be requested again.

https://truckmanualshub.com/

At the end of the 5th blocked attempt, the shift motor is driven towards the last known ’D’ channel position. If this motor drive allows the transfer case to reach the 2WD/AWD ’D’ channel, or the 2WD/AWD between gear position on the 4H side of 2WD/AWD, the shift is considered complete and the shift attempts are ended.

If the mode sensor is in the NEUTRAL region at the expiration of the shift timer, the TCCM will continue to make the shift attempts according to the blocked shift strategy independent of whether or not the driver controlled conditions are met.

For shifts from NEUTRAL, if all 5 attempts fail to reach the desired position (which by default is 4H), the motor will be driven to stall in the direction of 4H or 4L, depending on the achieved position. If the transfer case has reached the 2WD/AWD or 4L between gear position nearest the NEUTRAL positions and the shift conditions are no longer being met, the transfer case will be driven toward the corresponding ’D’ channel. Otherwise, the transfer case will be driven in the direction opposite the last attempt with the desired target being 4H or 4L.

If the transfer case reaches the 2WD/AWD ’D’ channel when being driven in the 4H direction, then one final 1.0 second drive toward 4H is attempted. If the transfer case then reaches any of the 4H positions, the shift is considered complete and the 4H LED is illuminated. If the transfer case is still the 2WD/AWD position, the shift is considered complete and the 2WD/AWD LED is illuminated.

NOTE: If after the 5th blocked shift and reversal attempt, if the transfer case position is in the NEUTRAL region, shift attempts will continue until a non-NEUTRAL ’D’ channel is reached.

SHIFT REVERSAL TARGETS

If the shift timer expires (1 second per ’D’ channel) and the transfer case has not reached the desired position, all shifts will attempt to return to their original position with the exceptions of:

- If the intended shift is going to the High rail from Low and can’t make it, but it can make the 2WD/AWD position, the motor stops at that position. The TCCM will not attempt to cross back over NEUTRAL if it does not have to. This means that there was a block on the first attempt to go to 4H and the transfer case has made it through NEUTRAL to a known good position, then the motor will go back only to the 2WD/4WD position and execute the remainder of the attempts from there.
- For shifts out of NEUTRAL, any time a shift is commanded out of NEUTRAL, the system needs to get out. The TCCM should never go to NEUTRAL unless the driver is commanding it and all required conditions are being met

ENCODER DRIFT CORRECTION

Whenever a shift is completed, the TCCM stores the position in memory as the transfer case’s intended position. The TCCM continuously monitors the mode sensor and if the mode sensor drifts toward into a NEUTRAL region sensor position for 2.0 seconds, the TCCM will perform a motor drive to correct the drift. The transfer case will be driven toward the intended position for 1.0 seconds 100 msec. The TCCM will wait for 2.0 seconds ±50 msec. and repeat the attempt to shift to the desired position. This will continue until the intended position is reached.

SHIFT MOTOR BRAKING

Two modes of shift motor braking are employed to improve shift performance, static and dynamic. Static shift motor braking is utilized under the following conditions:

- Whenever the transfer case is in the 2WD/AWD or 4L ’D’ channel position.
- Whenever an invalid mode sensor code is present.

Static motor braking is achieved by applying +12V on both shift motor wires.

NOTE: Static Shift Motor Braking is independent of ignition key position.

SHIFT ATTEMPT LIMIT

To protect the transfer case system, the TCCM will impose a limit on the number of shifts that can occur over a calibrated time period. The system will monitor the number of ’D’ channel segment transitions that occur in any 30 second time period. If the number of segment transitions is 30 or greater, the system will go into a default mode. The default mode of operation for shifting is that the number of allowed ’D’ channel transitions permitted to occur will be 3 over each 15 second ±100 msec calibrated window of time. After 5 minutes ±100 msec, the motor can be assumed to have cooled down and the system will revert to normal operation. The following rules also apply to the shift limit:

https://truckmanualshub.com/

- The attempt limit will not prevent shifts coming out of NEUTRAL, they will be allowed regardless of the counter/timer.
- Any shift that is in progress when the counter reaches a maximum count in time will be allowed to complete before the default mode is entered. D-channel transitions during this period will not be counted towards the default mode limit.
- A block, regardless of the direction, whether towards destination or back towards reversal target (shift timer expiring), will count as a value of 2 transitions towards the 30 segment transitions to go into default mode as defined above. Current attempt limit values are 30 transitions in 30 seconds and default mode values are 3 transitions every 15 seconds for 5 minutes.

DIAGNOSIS AND TESTING

https://truckmanualshub.com/

TRANSFER CASE VERIFICATION TEST

Diagnostic Test

1. TRANSFER CASE VERIFICATION TEST

Disconnect all jumper wires and reconnect all previously disconnected components and connectors.

With the scan tool, Clear DTCs.

Make sure that all accessories are turned off and that the battery is fully charged.

Move the Transfer Case Selector Switch to the desired position.

Test drive the vehicle in each Transfer Case range and verify proper operation in each range.

NOTE: To select or deselect 2WD, AWD or 4HI mode, vehicle speed must be below 88 km/h (55 mph) with all wheels at vehicle speed.

NOTE: Shifts will not take place with a wheel speed difference of greater than 21 km/h (13 mph) between the front and rear wheels.

NOTE: To select or deselect 4LO (if equipped), vehicle speed must be below 5 km/h (3 mph) with the ignition ON and the transmission in neutral (auto trans) or the clutch pedal pressed (man trans).

NOTE: To select or deselect Transfer Case Neutral, vehicle speed must be 0 mph with the ignition ON, engine OFF, the brake pedal applied, and the transmission in neutral (auto trans) or the clutch pedal pressed (man trans). Press the Neutral button (if equipped) on the Transfer Case Selector Switch until the Neutral Indicator is illuminated.

WARNING: Apply the parking brake. The vehicle may roll with the Transfer Case in neutral.

NOTE: To verify that the Transfer Case is in Neutral, shift the automatic transmission into reverse and release the brake pedal for three seconds or shift the manual transmission into gear and slowly release the clutch pedal. There should be no vehicle movement if the Transfer Case is in Neutral.

With the scan tool, read DTCs in the Front Control Module (FCM) and the Instrument Cluster Module (CCN).

Are there any Transfer Case DTCs present in the Front Control Module (FCM) or the Instrument Cluster Module (CCN)?

Yes >> Return to the symptom list and perform the appropriate diagnostic test.

No >> Repair is complete.

https://truckmanualshub.com/

MODULE-TRANSMISSION CONTROL

DESCRIPTION

The Transmission Control Module (TCM) (2) may be sub-module within the Powertrain Control Module (PCM) (3).

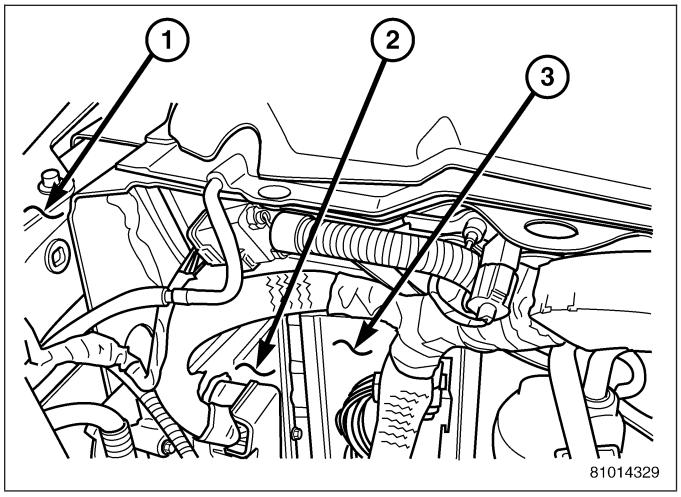

Or, for vehicles with a diesel engine, the Engine Control Module (ECM) (1). The PCM, and TCM when equipped, is located at the right rear of the engine compartment, near the right inner fender.

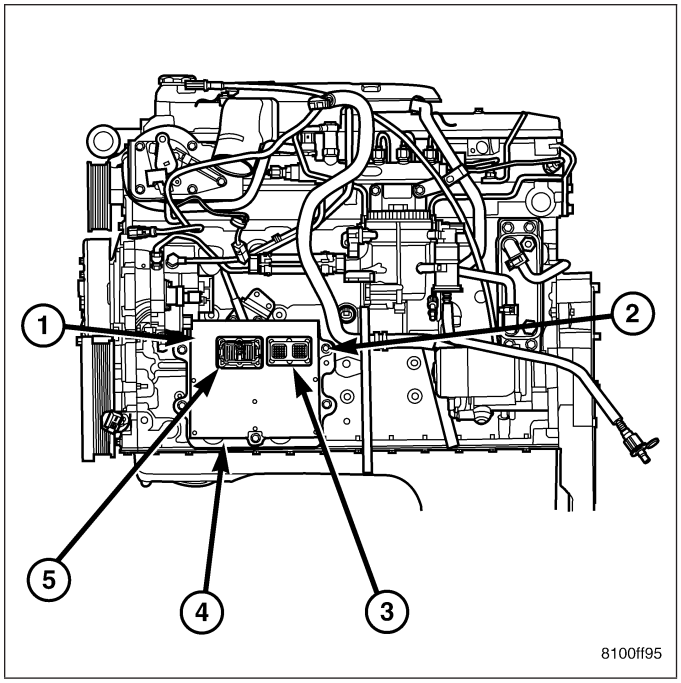

OPERATION

The Transmission Control Module (TCM) controls all electronic operations of the transmission. The TCM receives information regarding vehicle operation from both direct and indirect inputs, and selects the operational mode of the transmission. Direct inputs are hard wired to, and used specifically by the TCM. Indirect inputs are shared with the TCM via the vehicle communication bus.

Some examples of **direct inputs** to the TCM are:

- Battery (B+) voltage
- Ignition “ON” voltage
- Transmission Control Relay (Switched B+)
- Throttle Position Sensor
- Crankshaft Position Sensor
- Transmission Range Sensor
- Pressure Switches

https://truckmanualshub.com/

- Transmission Temperature Sensor
- Input Shaft Speed Sensor
- Output Shaft Speed Sensor
- Line Pressure Sensor

Some examples of **indirect inputs** to the TCM are:

- Engine/Body Identification
- Manifold Pressure
- Target Idle
- Torque Reduction Confirmation
- Engine Coolant Temperature
- Ambient/Battery Temperature
- Scan Tool Communication

Based on the information received from these various inputs, the TCM determines the appropriate shift schedule and shift points, depending on the present operating conditions and driver demand. This is possible through the control of various direct and indirect outputs.

Some examples of TCM **direct outputs** are:

- Transmission Control Relay
- Solenoids
- Torque Reduction Request

Some examples of TCM **indirect outputs** are:

- Transmission Temperature (to PCM)
- PRNDL Position (to cluster/CCN)

In addition to monitoring inputs and controlling outputs, the TCM has other important responsibilities and functions:

- Storing and maintaining Clutch Volume Indexes (CVI)
- Storing and selecting appropriate Shift Schedules
- System self-diagnostics
- Diagnostic capabilities (with scan tool)

NOTE: If the TCM has been replaced, the “Quick Learn Procedure” must be performed. (Refer to 8 - ELECTRICAL/ELECTRONIC CONTROL MODULES/TRANSMISSION CONTROL MODULE - STANDARD PROCEDURE)

BATTERY FEED

A fused, direct battery feed to the TCM is used for continuous power. This battery voltage is necessary to retain memory in the TCM. When the battery (B+) is disconnected, this memory is lost. When the battery (B+) is restored, this memory loss is detected by the TCM and a Diagnostic Trouble Code (DTC) is set.

https://truckmanualshub.com/

CLUTCH VOLUME INDEXES (CVI)

An important function of the TCM is to monitor Clutch Volume Indexes (CVI). CVIs represent the volume of fluid needed to compress a clutch pack.

The TCM monitors gear ratio changes by monitoring the Input and Output Speed Sensors. The Input, or Turbine Speed Sensor sends an electrical signal to the TCM that represents input shaft rpm. The Output Speed Sensor provides the TCM with output shaft speed information.

By comparing the two inputs, the TCM can determine transmission gear position. This is important to the CVI calculation because the TCM determines CVIs by monitoring how long it takes for a gear change to occur.

Gear ratios can be determined by using the Scan Tool and reading the Input/Output Speed Sensor values in the “Monitors” display. Gear ratio can be obtained by dividing the Input Speed Sensor value by the Output Speed Sensor value.

For example, if the input shaft is rotating at 1000 rpm and the output shaft is rotating at 500 rpm, then the TCM can determine that the gear ratio is 2:1. In direct drive (3rd gear), the gear ratio changes to 1:1. The gear ratio changes as clutches are applied and released. By monitoring the length of time it takes for the gear ratio to change following a shift request, the TCM can determine the volume of fluid used to apply or release a friction element.

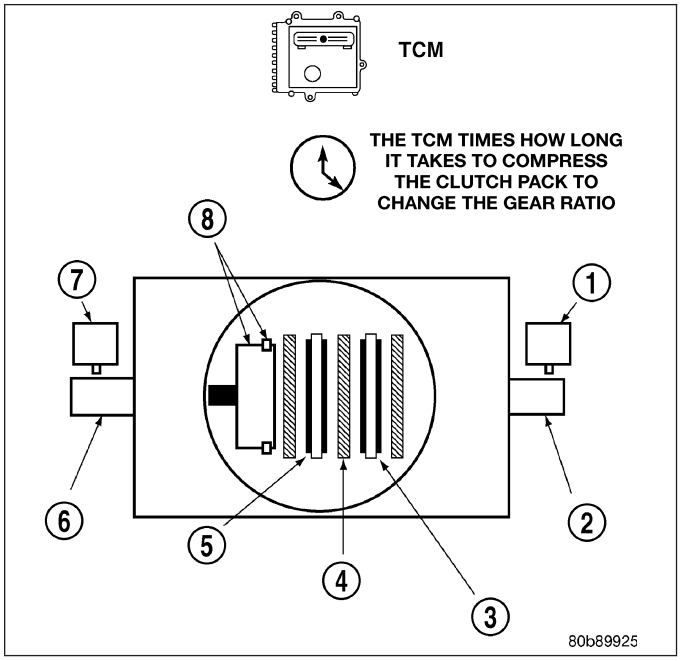

1 - OUTPUT SPEED SENSOR
2 - OUTPUT SHAFT
3 - CLUTCH PACK
4 - SEPARATOR PLATE
5 - FRICTION DISCS
6 - INPUT SHAFT
7 - INPUT SPEED SENSOR
8 - PISTON AND SEAL

The volume of transmission fluid needed to apply the friction elements are continuously updated for adaptive controls. As friction material wears, the volume of fluid need to apply the element increases.

Certain mechanical problems within the input clutch assembly can cause inadequate or out-of-range element volumes. Also, defective Input/Output Speed Sensors and wiring can cause these conditions. The following charts identifies the appropriate clutch volumes and when they are monitored/updated:

42RLE

CLUTCH VOLUMES				
Clutch	When Updated			Proper Clutch Volume
	Shift Sequence	Oil Temperature	Throttle Angle	
L/R	2-1 or 3-1 coast downshift	> 21° C (70° F)	< 5°	35 to 83
2/4	1-2 shift	> 43° C (110° F)	5 - 54°	20 to 77
OD	2-3 shift			48 to 150
UD	4-3 or 4-2 shift		> 5°	24 to 70

545RFE

https://truckmanualshub.com/

CLUTCH VOLUMES		
Clutch	**When Updated**	**Proper Clutch Volume**
L/R	2-1 or 3-1 downshift	45 to 134
2C	3-2 kickdown shift	25 to 85
OD	2-3 upshift	30 to 100
4C	3-4 upshift	30 to 85
UD	4-3 kickdown shift	30 to 100

SHIFT SCHEDULES

As mentioned earlier, the TCM has programming that allows it to select a variety of shift schedules. Shift schedule selection is dependent on the following:

- Shift lever position
- Throttle position
- Engine load
- Fluid temperature
- Software level

As driving conditions change, the TCM appropriately adjusts the shift schedule. Refer to the following chart to determine the appropriate operation expected, depending on driving conditions.

Schedule	Condition	Expected Operation
Extreme Cold	Oil temperature below -27° C (16° F)	-Park, Reverse, Neutral and 1st and 3rd gear only in D position, 2nd gear only in Manual 2 or L -No EMCC
Super Cold	Oil temperature between -24° C (-12° F) and -12° C (10° F)	- Delayed 2-3 upshift - Delayed 3-4 upshift - Early 4-3 coastdown shift - High speed 4-2, 3-2, 2-1 kickdown shifts are prevented -Shifts at high throttle openings willl be early. - No EMCC
Cold	Oil temperature between -12° C (10° F) and 2° C (36° F)	-Shift schedule is the same as Super Cold except that the 2-3 upshifts are not delayed.
Warm	Oil temperature between 4° C (40° F) and 27° C (80° F)	- Normal operation (upshift, kickdowns, and coastdowns) - No EMCC
Hot	Oil temperature between 27° C (80° F) and 115° C (240° F)	- Normal operation (upshift, kickdowns, and coastdowns) - Normal EMCC operation

https://truckmanualshub.com/

Schedule	Condition	Expected Operation
Overheat	Oil temperature above 115° C (240° F) or engine coolant temperature above 118° C (244° F)	- Delayed 2-3 upshift - Delayed 3-4 upshift - 3rd gear FEMCC from 30-48 mph - 3rd gear PEMCC above 35 mph - Above 25 mph the torque converter will not unlock unless the throttle is closed or if a wide open throttle 2nd PEMCC to 1 kickdown is made

DIAGNOSIS AND TESTING

https://truckmanualshub.com/

PRE-DIAGNOSTIC CHECK OUT

Always perform the Pre-Diagnostic Troubleshooting procedure before proceeding. (Refer to 21 - TRANSMISSION/TRANSAXLE/AUTOMATIC - 45RFE/545RFE - DIAGNOSIS AND TESTING).

For a complete wiring diagram **Refer to Section 8W**.

Diagnostic Test

1. PRE-DIAGNOSTIC CHECK OUT

NOTE: Low fluid level can be the cause of many transmission problems. If the fluid level is low locate and repair the leak then check and adjust the fluid level per the service information.

NOTE: Always perform diagnostics with a fully charged battery to avoid false symptoms.

With the scan tool, read the engine DTC's. Check and repair all Engine DTC's prior to performing Transmission symptom diagnostics.

With the scan tool, read Transmission DTC's. Record all DTC's and 1 Trip Failures.

NOTE: Diagnose 1 Trip Failures as a fully matured DTC.

Using the wiring diagram/schematic as a guide, inspect the wiring and connectors. Repair as necessary.

Perform the Shift Lever Position Test. If the test does not pass, refer to Symptom test for P0706 Check Shifter Signal.

For Gear Ratio DTC's, check and record all CVI's.

Most DTC's set on start up but some must be set by driving the vehicle to ensure that all diagnostic monitors have run.

NOTE: Verify flash level of Powertrain Controller. Some problems are corrected by software upgrades to the Transmission and Engine Systems.

NOTE: Due to the integration of the Powertrain and Transmission control modules - if a controller flash is performed it is necessary to perform Quick Learn and the Drive Learn procedures with the scan tool. Failure to do so may result in shift quality complaints.

NOTE: Check for applicable Service Bulletins that may apply.

Were any repairs made that fixed the customer's complaint?

Yes >> Testing complete.

No >> Refer to the diagnostic test procedure related to the DTC.

https://truckmanualshub.com/

PRE-DIAGNOSTIC CHECKOUT (DIESEL)

For a complete wiring diagram **Refer to Section 8W**

1. PRE-DIAGNOSTIC CHECKOUT

NOTE: Always perform diagnostics with a fully charged battery to avoid false symptoms.

NOTE: Low fluid level can be the cause of many transmission problems. If the fluid level is low locate and repair the leak then check and adjust the fluid level per the Service Information.

With the scan tool, read engine DTC's. Check and repair all engine DTCs prior to performing transmission symptom diagnostics.

Using the wiring diagram/schematic as a guide, inspect the wiring and connectors. Repair as necessary.

Verify the flash level of the Engine Control Module. Some problems are corrected by software upgrades.

Check for any Service Information Tune-ups or Technical Service Bulletins that may apply.

Did any of the above checks or procedures correct the symptom?

Yes >> Refer to the Transmission category and perform the appropriate symptom(s). (Refer to 21 - TRANSMISSION/TRANSAXLE/AUTOMATIC - 48RE - DIAGNOSIS AND TESTING)

No >> Repair is complete.

Perform RE TRANSMISSION VERIFICATION TEST VER - 1 (DIESEL). (Refer to 8 - ELECTRICAL/ELECTRONIC CONTROL MODULES/TRANSMISSION CONTROL MODULE - DIAGNOSIS AND TESTING)

https://truckmanualshub.com/

TRANSMISSION VERIFICATION TEST VER - 1 (DIESEL)

1.

1. Inspect the vehicle to ensure that all engine and transmission components are properly installed and connected. Reassemble and reconnect components as necessary.
2. If any existing diagnostic trouble codes have not been repaired, go to Symptom List and follow path specified.
3. Connect a scan tool to the data link connector.
4. Ensure the fuel tank has at least a quarter tank of fuel. Turn off all accessories.
5. Start and run the engine until the transmission temperature is above 43°C (110°F).
6. Check the transmission fluid level per the Service Information. Adjust if necessary.
7. Road test the vehicle. Make 15 to 20 1-2, 2-3 and 3-4 up shifts. Perform these shifts from a standing start to 72 km/h (45 MPH) with a constant throttle opening of 20-25%.
8. Below 40 km/h (25 MPH), make 5 to 8 wide open throttle kick downs to 1st gear. Allow at least 5 seconds each in 2nd and 3rd between each kick down.
9. For a specific DTC, drive the vehicle in accordance with the Symptom's When Monitored and Set Conditions to verify the repair.
10. If a DTC sets during the road test, return to the Symptom List and follow the path. If no DTC sets, the repair is complete.

Are there any DTCs or symptoms remaining?

Yes >> Repair is not complete, refer to appropriate symptom.

No >> Repair is complete.

https://truckmanualshub.com/

45RFE/545RFE TRANSMISSION VERIFICATION TEST - VER 1

For the Transmission circuit diagram (Refer to)(Refer to 21 - TRANSMISSION/TRANSAXLE/AUTOMATIC - 45RFE/545RFE - SCHEMATICS AND DIAGRAMS).

For a complete wiring diagram **Refer to Section 8W**.

45RFE/545RFE TRANSMISSION VERIFICATION TEST - VER 1

1. 45RFE/545RFE TRANSMISSION VERIFICATION TEST - VER 1

NOTE: 1. After completion of the Transmission Verification Test, the Powertrain Verification Test must be performed.

2. Connect the scan tool to the Data Link Connector (DLC).

3. Reconnect any disconnected components.

NOTE: 4. If the PCM has been replaced or if the transmission has been repaired or replaced it is necessary to perform the scan tool Quick Learn Procedure.

5. With the scan tool, erase all Transmission and Engine DTC's.

6. With the scan tool, display Transmission Temperature. Start and run the engine until the Transmission Temperature is HOT, above 43° C or 110° F.

7. Check the Transmission fluid level and adjust if necessary. Refer to the Service Information for the Fluid Fill procedure.

8. Road test the vehicle.

9. Perform the following shifts from a standing start with a constant throttle opening of 20 to 25 degrees to the speeds of 97 Km/h or 60 MPH; make fifteen to twenty 1 to 2, 2 to 3, 3 to 4 upshifts and for 545RFE, 4 to 4-prime.

10. Perform the following shifts with speeds below 40 Km/h or 25 MPH; make five to eight wide open throttle kickdowns to 1st gear. Allow at least 5 seconds each in 2nd and 3rd gear between each kickdown.

11. Check for DTC's during the road test.

NOTE: 12. Use the EATX OBDII task manager to run Good Trip time in each gear, this will confirm the repair and to ensure that the DTC has not re-matured.

13. With the scan tool, perform a BATTERY DISCONNECT, this will clear the EATX DTC EVENT DATA

Were there any Diagnostic Trouble Codes (DTCs) set during the road test?

Yes >> Refer to the Symptom List for the appropriate diagnostic tests.

No >> Repair is complete.

STANDARD PROCEDURE

TCM QUICK LEARN

The quick learn procedure requires the use of the scan tool.

This program allows the electronic transmission system to recalibrate itself. This will provide the proper transmission operation. The quick learn procedure should be performed if any of the following procedures are performed:

- Transmission Assembly Replacement
- Transmission Control Module Replacement
- Solenoid Pack Replacement
- Clutch Plate and/or Seal Replacement
- Valve Body Replacement or Recondition

To perform the Quick Learn Procedure, the following conditions must be met:

- The brakes must be applied
- The engine speed must be above 500 rpm
- The throttle angle (TPS) must be less than 3 degrees
- The shift lever position must stay in PARK until prompted to shift to overdrive
- The shift lever position must stay in overdrive after the Shift to Overdrive prompt until the scan tool indicates the procedure is complete.
- The calculated oil temperature must be above 60° and below 200°

https://truckmanualshub.com/

DRIVE LEARN

When a transmission is repaired and a Quick Learn procedure has been performed on the Transmission Control Module (TCM), the following Drive Learn procedure can be performed to fine tune any shifts which are particularly objectionable.

NOTE: It is not necessary to perform the complete Drive Learn procedure every time the TCM is Quick Learned. Perform only the portions which target the objectionable shift.

LEARN A SMOOTH 1ST NEUTRAL TO DRIVE SHIFT

Perform this procedure only if the complaint is for a delayed or harsh shift the first time the transmission is put into gear after the vehicle is allowed to set with the engine not running for at least 10 minutes. Use the following steps to have the TCM learn the 1st N-D UD CVI.

NOTE: The transmission oil temperature must be between 80 - 110°F (27 - 43°C).

1. Start the engine only when the engine and ignition have been off for at least ten (10) minutes.
2. With the vehicle at a stop and the service brake applied, record the 1st N-D UD CVI while performing a Neutral to Drive shift. The 1st N-D UD CVI accounts for air entrapment in the UD clutch that may occur after the engine has been off for a period of time.
3. Repeat Step 1 and Step 2 until the recorded 1st N-D UD CVI value stabilizes.

NOTE: It is important that this procedure be performed when the transmission temperature is between 80 - 110°F (27 - 43°C). If this procedure takes too long to complete fully for the allowed transmission oil temperature, the vehicle may be returned to the customer with an explanation that the shift will improve daily during normal vehicle usage. The TCM also learns at higher oil temperatures, but these values (line pressure correction values) are not available for viewing on the scan tool.

LEARN A SMOOTH NEUTRAL TO DRIVE GARAGE SHIFT

Perform this procedure if the complaint is for a delayed or harsh shift when the transmission is put into gear after the vehicle has had its first shift. Use the following steps to have the TCM learn the Norm N-D UD CVI.

NOTE: The transmission oil temperature must be between 80 - 110°F (27 - 43°C) to learn the UD CVI. Additional learning occurs at temperatures as low as 0°F and as high as 200°F. This procedure may be performed at any temperature that experiences poor shift quality. Although the UD CVI may not change, shift quality should improve.

1. Start the vehicle engine and shift to drive.
2. Move the vehicle forward to a speed of at least 16 km/h (10 MPH) and come to a stop. This ensures no air is present in the UD hydraulic circuit.
3. Perform repeated N-D shifts at a stop while pausing in Neutral for at least 2-3 seconds and monitor Norm N-D UD CVI volume until the value stabilizes. The value will change during the N-D shift. This is normal since the UD value is different for the N-D shift then the normal value shown which is used for 4-3 coastdown and kickdowns. Perform repeated shifts in this temperature range until the Norm N-D UD CVI value stabilizes and the N-D shifts become smooth.

LEARN THE 1ST 2-3 SHIFT AFTER A RESTART OR SHIFT TO REVERSE

Use the following steps to have the TCM learn the 1st 2-3 shift OD CVI.

NOTE: The transmission oil temperature must be above 80°F (27°C).

1. With the vehicle engine running, select reverse gear for over 2 seconds.
2. Shift the transmission to Drive and accelerate the vehicle from a stop at a steady 15 degree throttle opening and perform a 2-3 shift while noting the 1st 2-3 OD CVI.
3. Repeat Step 1 and Step 2 until the 1st 2-3 upshift becomes smooth and the 1st 2-3 OD CVI stabilizes.

LEARN A SMOOTH 2-3 AND 3-4 UPSHIFT

NOTE: The transmission oil temperature must be above 110°F (43°C).

Use the following steps to have the TCM learn the OD and 4C CVI's.

1. Accelerate the vehicle from a stop at a steady 15 degree throttle opening and perform multiple 1-2, 2-3, and 3-4 upshifts. The 2nd 2-3 shift following a restart or shift to reverse will be shown during the shift as a value between

https://truckmanualshub.com/

the 1st 2-3 OD CVI and the normal OD CVI. Updates to the normal OD CVI will occur after the 2nd shift into 3rd gear, following a restart or shift to reverse.

2. Repeat Step 1 until the 2-3 and 3-4 shifts become smooth and the OD and 4C CVI become stable.

LEARN A SMOOTH 4-3 COASTDOWN AND PART THROTTLE 4-3 KICKDOWN

NOTE: The transmission oil temperature must be above 110°F (43°C).

Use the following steps to have the TCM learn the UD shift volume.

1. At a vehicle speed between 64-97 km/h (40-60 MPH), perform repeated 4-3 kickdown shifts.
2. Repeat Step 1 until the UD volume becomes somewhat stable and the shift becomes smooth.

LEARN A SMOOTH 1-2 UPSHIFT AND 3-2 KICKDOWN

Use the following steps to have the TCM learn the 2C shift volume.

NOTE: The transmission oil temperature must be above 110°F (43°C).

1. With a vehicle speed below 48 km/h (30 MPH) and the transmission in 3rd gear, perform multiple 3-2 kickdowns.
2. Repeat Step 1 until the 3-2 kickdowns become smooth and the 2C CVI becomes stable.

LEARN A SMOOTH MANUAL 2-1 PULLDOWN SHIFT AS WELL AS A NEUTRAL TO REVERSE SHIFT

NOTE: The transmission oil temperature must be above 110°F (43°C).

Use the following steps to have the TCM learn the LR volume.

1. With the vehicle speed around 40-48 km/h (25-30 MPH) in Manual 2nd, perform manual pulldowns to Low or 1st gear at closed throttle.
2. Repeat Step 1 until the LR CVI becomes stable and the manual 2-1 becomes smooth.

LEARN A SMOOTH NEUTRAL TO REVERSE SHIFT

NOTE: The transmission oil temperature must be above 110°F (43°C).

1. With the vehicle at a stop, perform Neutral to Reverse shifts until the shift is smooth. An unlearned Neutral to Reverse shift may be harsh or exhibit a double bump.
2. If any of the shifts are still not smooth after the clutch volume stabilizes, an internal transmission problem may be present.

LEARN A SMOOTH 4-5 UPSHIFT

NOTE: The transmission oil temperature must be above 110°F (43°C).

Use the following steps to have the TCM learn the Alt 2C CVI.

1. Accelerate the vehicle through 88 km/h (55mph) at a steady 10-15 degree throttle opening and perform multiple 4-5 upshifts.
2. Repeat Step 1 until the 4-5 shift become smooth and theAlt 2C CVI become stable. There is a separate 2C volume used and learned for 4-5 shifts, 2CA. It is independent of the 2C CVI learned on 3-2 kickdowns.