https://truckmanualshub.com/

WSM

WORKSHOP MANUAL
TRACTOR

L2501

Kubota

KiSC issued 09, 2014 A

https://truckmanualshub.com/

TO THE READER

This Workshop Manual tells the servicing personnel about the mechanism, servicing and maintenance of the L2501. It contains 4 parts: **"Information"**, **"General"**, **"Mechanism"** and **"Servicing"**.

■ Information

This section primarily contains information below.

- Safety First
- Safety Decal
- Specifications
- Dimensions

■ General

This section primarily contains information below.

- Engine Identification
- Model Identification
- General Precautions
- Maintenance Check List
- Check and Maintenance
- Special Tools

■ Mechanism

This section contains information on the structure and the function of the unit. Before you continue with the subsequent sections, make sure that you read this section.

Refer to the latest version of Workshop Manual (Code No. 9Y021-01870 / 9Y021-18200) for the diesel engine / tractor mechanism that this workshop manual does not include.

■ Servicing

This section primarily contains information below.

- Troubleshooting
- Servicing Specifications
- Tightening Torques
- Checking, Disassembling and Servicing

All illustrations, photographs and specifications contained in this manual are of the newest information available at the time of publication.

KUBOTA reserves the right to change all information at any time without notice.

September, 2014

© KUBOTA Corporation 2014

KiSC issued 09, 2014 A

https://truckmanualshub.com/

I INFORMATION

https://truckmanualshub.com/

INFORMATION

CONTENTS

1. SAFETY FIRST I-1
2. SAFETY DECALS I-4
3. SPECIFICATIONS I-7
4. TRAVELING SPEEDS I-8
5. DIMENSIONS I-9

1. SAFETY FIRST

⚠ SAFETY FIRST

- **This symbol, the industry's "Safety Alert Symbol", is used throughout this manual and on labels on the machine itself to warn of the possibility of personal injury. Read these instructions carefully.**
- **It is essential that you read the instructions and safety regulations before you try to repair or use this unit.**

DANGER
- **Indicates an imminently hazardous situation which, if not avoided, will result in death or serious injury.**

WARNING
- **Indicates a potentially hazardous situation which, if not avoided, could result in death or serious injury.**

CAUTION
- **Indicates a potentially hazardous situation which, if not avoided, may result in minor or moderate injury.**

■ **IMPORTANT**
- **Indicates that equipment or property damage could result if instructions are not followed.**

■ **NOTE**
- **Gives helpful information.**

WSM000001INI0001US1

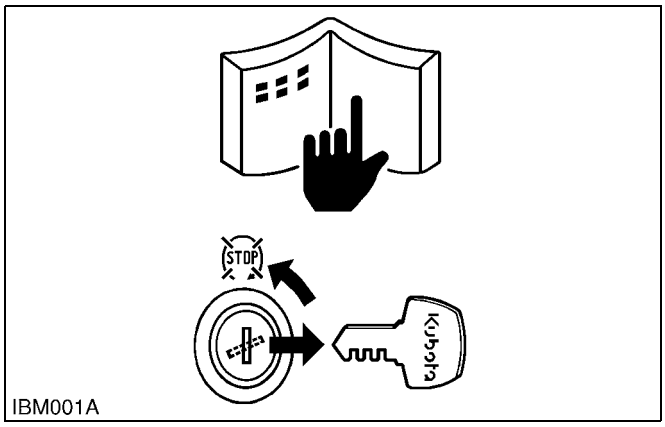

IBM001A

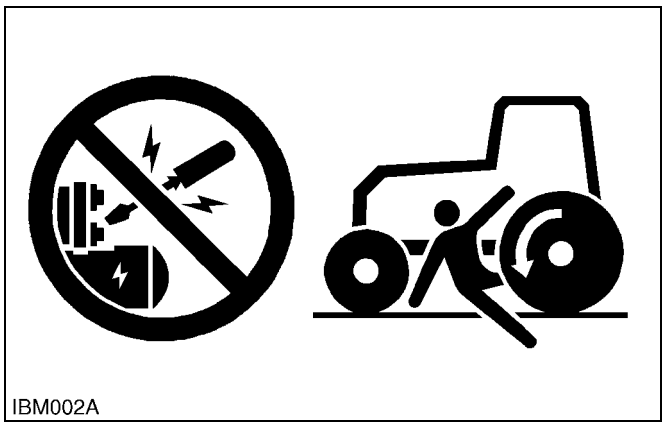
IBM002A

BEFORE YOU START SERVICE

- Read all instructions and safety instructions in this manual and on your machine safety decals.
- Clean the work area and machine.
- Park the machine on a stable and level ground, and set the parking brake.
- Lower the implement to the ground.
- Stop the engine, then remove the key.
- Disconnect the battery negative cable.
- Hang a **"DO NOT OPERATE"** tag in the operator station.

WSM000001INI0010US0

START SAFELY

- Do not do the procedures below when you start the engine.
  - short across starter terminals
  - bypass the safety start switch
- Do not alter or remove any part of machine safety system.
- Before you start the engine, make sure that all shift levers are in neutral positions or in disengaged positions.
- Do not start the engine when you stay on the ground. Start the engine only from operator's seat.

WSM000001INI0015US0

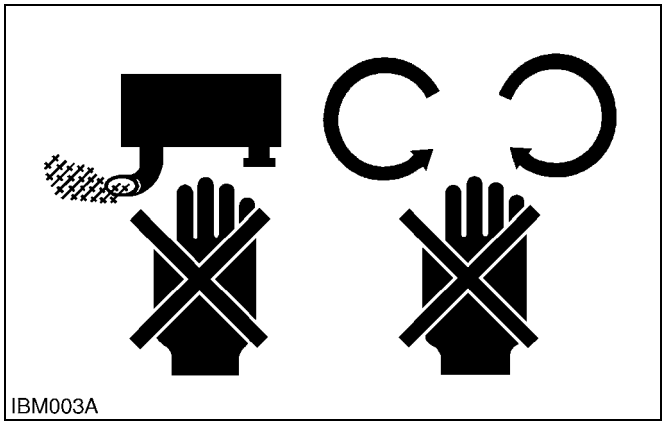
IBM003A

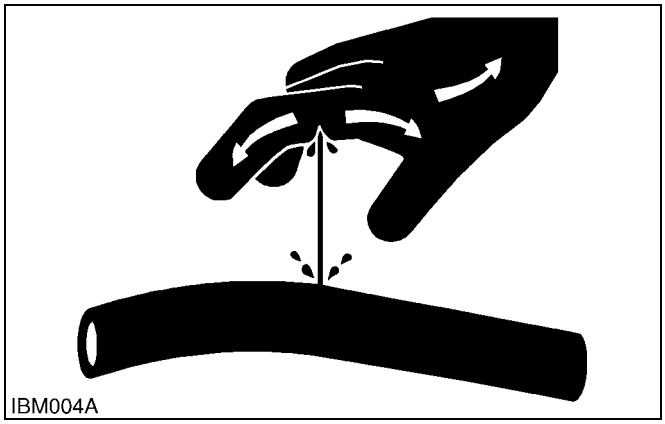
IBM004A

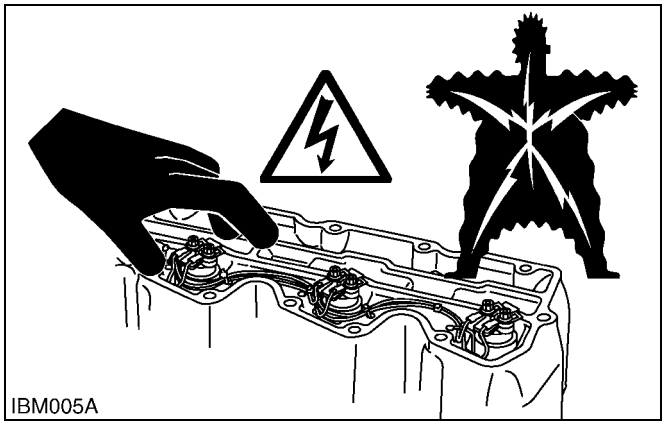
IBM005A

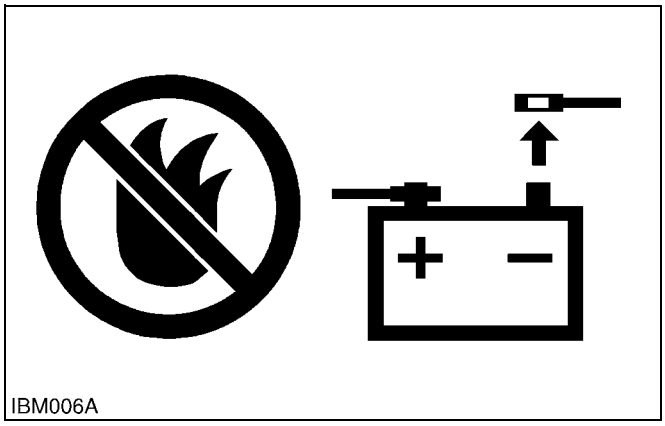
IBM006A

OPERATE SAFELY

- Do not use the machine after you consume alcohol or medication or when you are tired.
- Put on applicable clothing and safety equipment.
- Use applicable tools only. Do not use alternative tools or parts.
- When 2 or more persons do servicing, make sure that you do it safely.
- Do not operate below the machine that only a jack holds. Always use a safety stand to hold the machine.
- Do not touch the hot parts or parts that turn when the engine operates.
- Do not remove the radiator cap when the engine operates, or immediately after it stops. If not, hot water can spout out from the radiator. Only remove the radiator cap when it is at a sufficiently low temperature to touch with bare hands. Slowly loosen the cap to release the pressure before you remove it fully.
- Released fluid (fuel or hydraulic oil) under pressure can cause damage to the skin and cause serious injury. Release the pressure before you disconnect hydraulic or fuel lines. Tighten all connections before you apply the pressure.
- Do not open a fuel system under high pressure.
  The fluid under high pressure that stays in fuel lines can cause serious injury. Do not disconnect or repair the fuel lines, sensors, or any other components between the fuel pump and injectors on engines with a common rail fuel system under high pressure.
- Put on an applicable ear protective device (earmuffs or earplugs) to prevent injury against loud noises.
- Be careful about electric shock. The engine generates a high voltage of more than DC100 V in the ECU and is applied to the injector.

WSM000001INI0012US0

PREVENT A FIRE

- Fuel is very flammable and explosive under some conditions. Do not smoke or let flames or sparks in your work area.
- To prevent sparks from an accidental short circuit, always disconnect the battery negative cable first and connect it last.
- The battery gas can cause an explosion. Keep the sparks and open flame away from the top of battery, especially when you charge the battery.
- Make sure that you do not spill fuel on the engine.

WSM000001INI0005US0

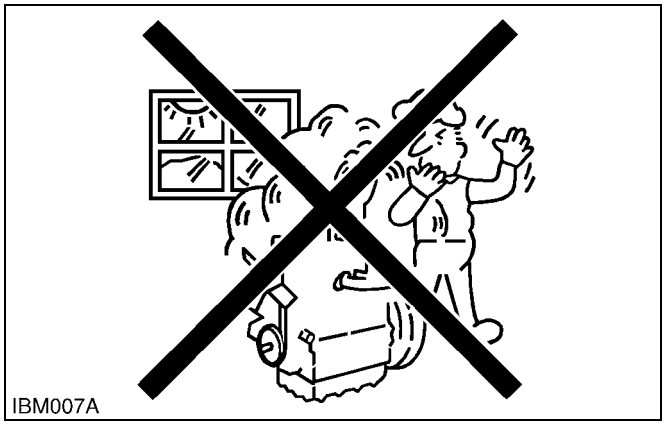
IBM007A

KEEP A GOOD AIRFLOW IN THE WORK AREA

- If the engine is in operation, make sure that the area has good airflow. Do not operate the engine in a closed area. The exhaust gas contains poisonous carbon monoxide.

WSM000001INI0006US0

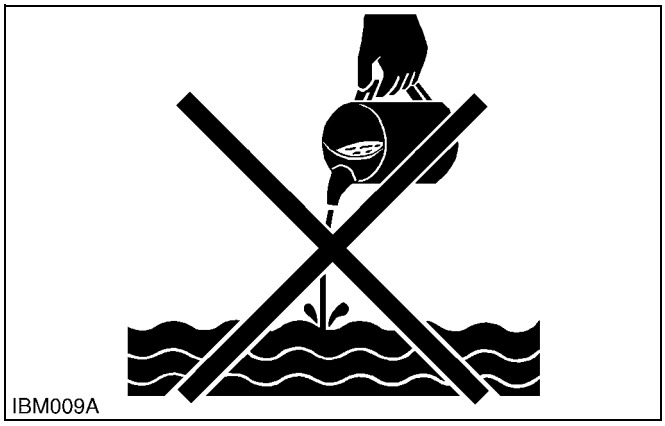
IBM009A

DISCARD FLUIDS CORRECTLY

- Do not discard fluids on the ground, down the drain, into a stream, pond, or lake. Obey related environmental protection regulations when you discard oil, fuel, coolant, electrolyte and other dangerous waste.

WSM000001INI0007US0

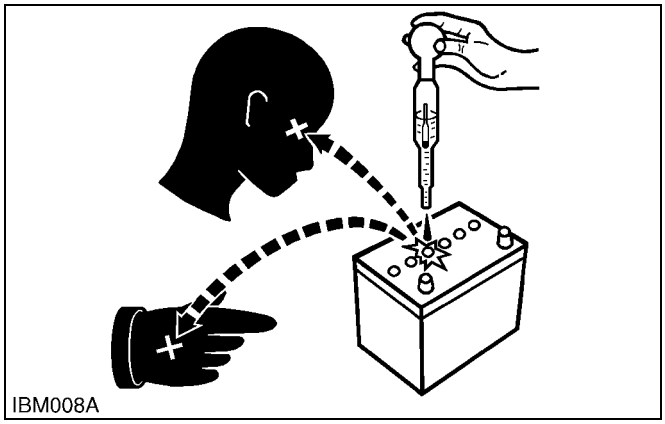
IBM008A

PREVENT ACID BURNS

- Keep electrolyte away from your eyes, hands and clothing. Sulfuric acid in battery electrolyte is poisonous and it can burn your skin and clothing and cause blindness. If you spill electrolyte on yourself, clean yourself with water, and get medical aid immediately.

WSM000001INI0008US0

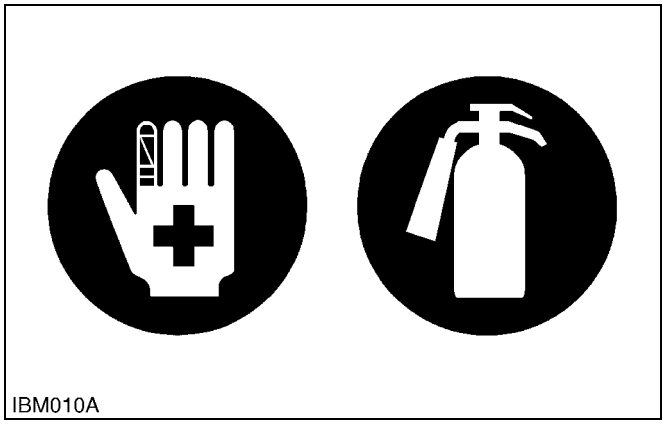
IBM010A

PREPARE FOR EMERGENCIES

- Keep a first aid kit and fire extinguisher ready at all times.
- Keep the emergency contact telephone numbers near your telephone at all times.

WSM000001INI0009US0

2. SAFETY DECALS

The following safety decals are installed on the machine. If a decal becomes damaged, illegible or is not on the machine, replace it. The decal part number is listed in the parts list.

WSM000001INI0013US0

(1) Part No. TA040-4965-2

(2) Part No. TA040-4959-3

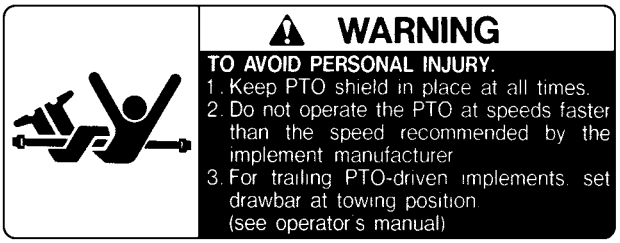

(3) Part No. TA140-4933-1 [Manual Transmission Type]

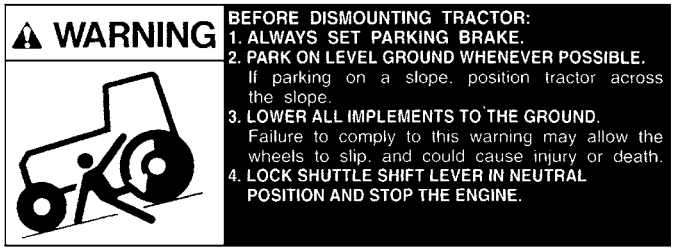

(3) Part No. TD170-4933-1 [HST Type]

(4) Part No. 6C300-4744-1

(5) Part No. TC230-4956-1

Diesel fuel only. No fire

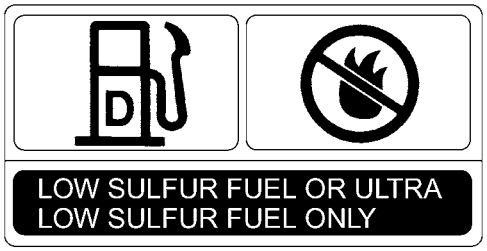

(6) Part No. TA040-4935-1

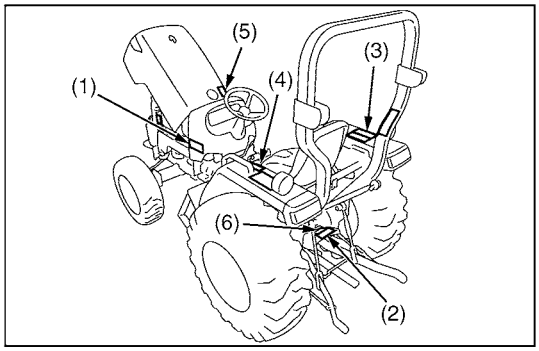

9Y1210520ICI001US

9Y1211121INI0001US0

(1) Part No. TC660-4997-1

⚠ WARNING

TO AVOID PERSONAL INJURY OR DEATH:

1. Read and understand the operator's manual before operation.
2. Before starting the engine, make sure that everyone is at a safe distance from the tractor and that the PTO is OFF.
3. Do not allow passengers on the tractor at any time.
4. Before allowing other people to use the tractor, have them read the operator's manual.
5. Check the tightness of all nuts and bolts regularly.
6. Keep all shields in place and stay away from all moving parts.
7. Lock the two brake pedals together before driving on the road.
8. Slow down for turns, or rough roads, or when applying individual brakes.
9. On public roads use SMV emblem and hazard lights, if required by local traffic and safety regulations.
10. Pull only from the drawbar.
11. Before dismounting, lower the implement to the ground, set the parking brake, stop the engine and remove the key.
12. Securely support tractor and implements before working underneath.

(2) Part No. TD020-3012-3

(3) Part No. 6C090-4958-2
Do not get your hands close to engine fan and fan belt.

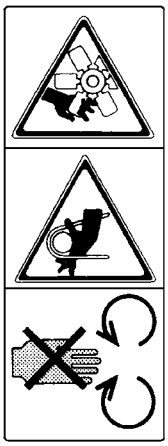

(4) Part No. TC030-4958-1
Do not touch hot surface like muffler etc.

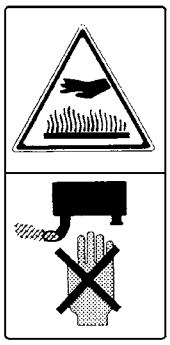

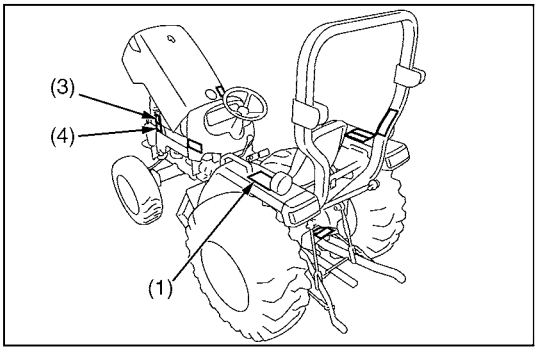

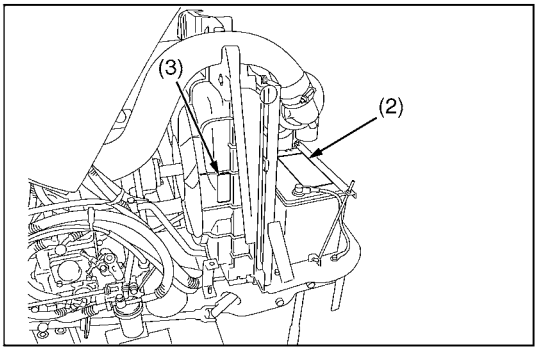

9Y1211121ICI001US

9Y1211121INI0002US0

(1) Part No. TA240-9848-2

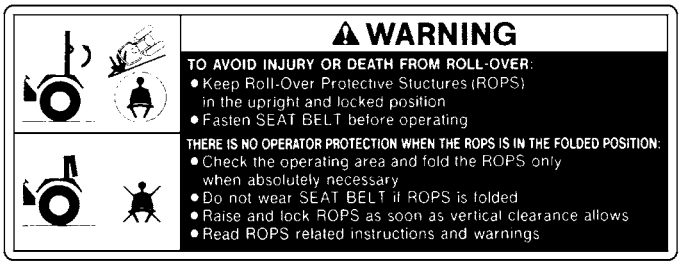

(2) Part No. 6C540-9554-1

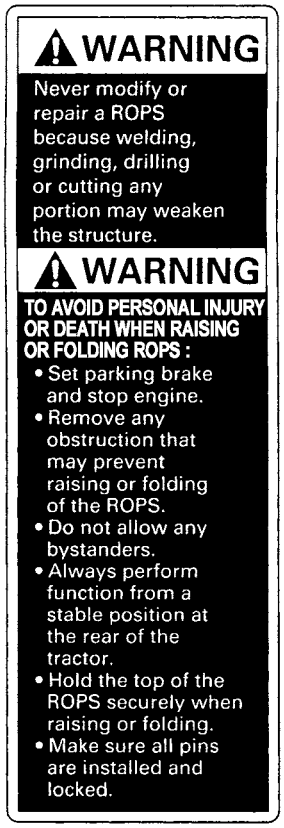

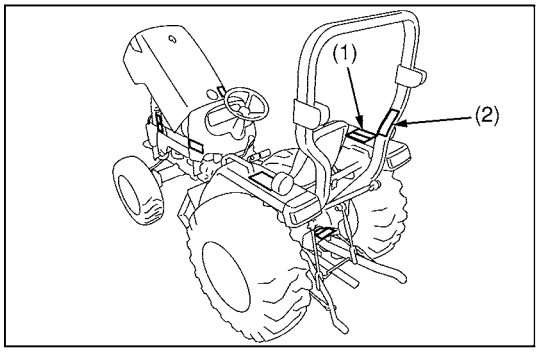

9Y1211121ICI002US

9Y1211121INI0003US0

CARE OF DANGER, WARNING AND CAUTION LABELS

1. Keep danger, warning and caution labels clean and free from obstructing material.
2. Clean danger, warning and caution labels with soap and water, dry with a soft cloth.
3. Replace damaged or missing danger, warning and caution labels with new labels.
4. If a component with danger, warning and caution label(s) affixed is replaced with new part, make sure new label(s) is (are) attached in the same location(s) as the replace component.
5. Mount new danger, warning and caution labels by applying on a clean dry surface and pressing any bubbles to outside edge.

9Y1211121INI0004US0

3. SPECIFICATIONS

Model			L2501		
			Manual Transmission		HST
			2WD	4WD	4WD
PTO power*			15.3 kW (20.5 HP)		14.2 kW (19.0 HP)
Engine	Maker		KUBOTA		
	Model		D1703-M-DI-E4		
	Type		Indirect injection, Vertical, Water-cooled 4 cycle diesel		
	Number of cylinders		3		
	Bore and stroke		87 × 92.4 mm (3.4 × 3.6 in.)		
	Total displacement		1.647 L (100.47 cu.in.)		
	Engine gross power*		18.5 kW (24.8 HP)		
	Engine net power*		17.8 kW (23.9 HP)		
	Rated revolution		36.7 rps (2200 min^{-1} (rpm))		
	Low idling revolution		17.5 to 19.2 rps (1050 to 1150 min^{-1} (rpm))		
	Maximum torque		95.2 N·m (9.71 kgf·m, 70.2 lbf·ft)		
	Battery		12 V RC: 123 min., CCA: 490 A		
Capacities	Fuel tank		38.0 L (10.0 U.S.gals, 8.4 Imp.gals)		
	Engine crankcase (with filter)		5.7 L (6.0 U.S.qts, 5.0 Imp.qts)		
	Engine coolant		6.0 L (6.3 U.S.qts, 5.3 Imp.qts)		
	Transmission case		27.0 L (7.1 U.S.gals, 5.9 Imp.gals)	27.5 L (7.3 U.S.gals, 6.1 Imp.gals)	23.5 L (6.2 U.S.gals, 5.2 Imp.gals)
Dimensions	Overall length (without 3P)		2810 mm (110.6 in.)	2700 mm (106.3 in.)	
	Overall width (min. tread)		1400 mm (55.1 in.)		
	Overall height (with ROPS)		2330 mm (91.7 in.)		
	Overall height (Top of steering wheel)		1475 mm (58.1 in.)		
	Wheel base		1610 mm (63.3 in.)		
	Min. ground clearance		345 mm (13.6 in.)	340 mm (13.4 in.)	
	Tread	Front	1050 mm (41.3 in.)	1095 mm (43.1 in.)	
		Rear	1115 mm (43.8 in.), 1195 mm (47.1 in.), 1290 mm (50.8 in.)		
Weight (with ROPS)			1100 kg (2425 lbs)	1180 kg (2601 lbs)	1190 kg (2623 lbs)
Traveling system	Tires	AG front	5-15	7-16	
		AG rear	11.2-24		
	Indust. (option)	Front	N/A	27 × 8.50-15	
		Rear	N/A	15-19.5 R4	
	Clutch		Dry type single stage		
	Steering		Integral type power steering		
	Transmission		Gear shaft, 8 forward and 4 reverse		Hydrostatic transmission, 3 range speed
	Brake		Wet disk type		
	Min. turning radius (with brake)		2.4 m (7.9 feet)	2.5 m (8.2 feet)	
Hydraulic unit	Hydraulic control system		Position control		
	Pump capacity (main)		20.9 L/min. (5.52 U.S.gals/min., 4.60 Imp.gals/min.)		
	Pump capacity (PS)		12.7 L/min. (3.36 U.S.gals/min., 2.79 Imp.gals/min.)		
	Three point hitch		Category 1		
	Max. lift force	At lift points	870 kg (1918 lbs)		
		24 in. behind lift points	630 kg (1389 lbs)		
	System pressure		15.2 MPa (155 kgf/cm^2, 2205 psi)		
PTO	Rear PTO	PTO shaft size	SAE 1-3/8, 6-splines		
		Type	Transmission driven with overrunning		Live-continuous running
	PTO / Engine speed		540 / 1910 min^{-1} (rpm)		540 / 2105 min^{-1} (rpm)

■ **NOTE**

- ***Manufacturer's estimate**
  The company reserve the right to change the specifications without notice.

9Y1211121INI0005US0

4. TRAVELING SPEEDS

■ Manual Transmission Type

(At rated engine rpm)

Model			L2501	
Tire size (Rear)			11.2-24	
Shuttle shift lever	Range gear shift lever	Main gear shift lever	km/h	mph
Forward	Low	1	1.4	0.9
		2	1.8	1.1
		3	2.6	1.8
		4	4.5	2.8
	High	1	5.3	3.3
		2	6.9	4.3
		3	10.0	6.2
		4	17.3	10.7
Reverse	Reverse	1	1.9	1.2
		2	2.5	1.8
		3	3.6	2.3
		4	6.2	3.9

The company reserves the right to change the specifications without notice.

■ HST Type

(At rated engine rpm)

Model		L2501	
Tire size (Rear)		11.2-24	
	Range gear shift lever	km/h	mph
Forward	L	5.7	3.5
	M	9.9	6.2
	H	18.5	11.5
Reverse	L	5.2	3.2
	M	8.9	5.5
	H	16.6	10.3

The company reserves the right to change the specifications without notice.

9Y1211121INI0006US0

5. DIMENSIONS

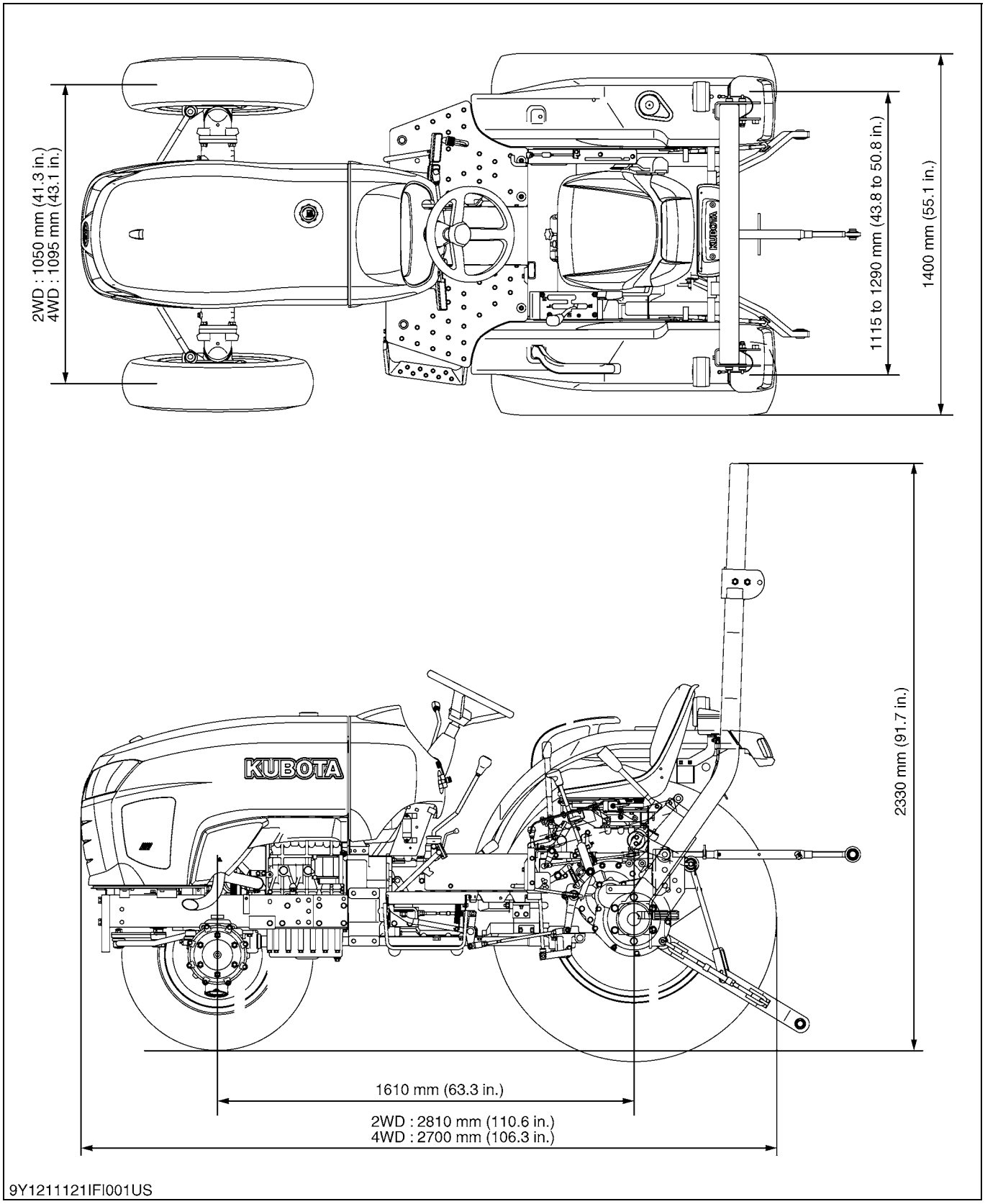

9Y1211121INI0007US0

https://truckmanualshub.com/

G GENERAL

https://truckmanualshub.com/

GENERAL

CONTENTS

1. TRACTOR IDENTIFICATION G-1
   [1] MODEL NAME AND SERIAL NUMBERS G-1
   [2] E4B ENGINE G-2
   [3] CYLINDER NUMBER G-2
2. GENERAL PRECAUTIONS G-3
3. HANDLING PRECAUTIONS FOR ELECTRICAL PARTS AND WIRING G-4
   [1] WIRING G-4
   [2] BATTERY G-6
   [3] FUSE G-6
   [4] CONNECTOR G-6
   [5] CIRCUIT TESTER G-7
   [6] COLOR OF WIRING G-8
4. LUBRICANTS, FUEL AND COOLANT G-9
5. TIGHTENING TORQUES G-11
   [1] GENERAL USE SCREWS, BOLTS AND NUTS G-11
   [2] STUD BOLTS G-11
   [3] METRIC SCREWS, BOLTS AND NUTS G-12
   [4] AMERICAN STANDARD SCREWS, BOLTS AND NUTS WITH UNC OR UNF THREADS G-12
   [5] PLUGS G-12
6. MAINTENANCE CHECK LIST G-13
7. CHECK AND MAINTENANCE G-15
   [1] DAILY CHECK G-15
   [2] CHECK POINTS OF INITIAL 50 HOURS G-16
   [3] CHECK POINTS OF EVERY 50 HOURS G-19
   [4] CHECK POINTS OF EVERY 100 HOURS G-22
   [5] CHECK POINTS OF EVERY 200 HOURS G-26
   [6] CHECK POINTS OF EVERY 400 HOURS G-28
   [7] CHECK POINT OF EVERY 600 HOURS G-30
   [8] CHECK POINT OF EVERY 800 HOURS G-30
   [9] CHECK POINT OF EVERY 1500 HOURS G-30
   [10] CHECK POINT OF EVERY 3000 HOURS G-31
   [11] CHECK POINT OF EVERY 1 YEAR G-31
   [12] CHECK POINTS OF EVERY 2 YEARS G-31
   [13] OTHERS G-34
8. SPECIAL TOOLS G-37
   [1] SPECIAL TOOLS FOR ENGINE G-37
   [2] SPECIAL TOOLS FOR TRACTOR G-45
9. TIRES G-56
   [1] TIRE PRESSURE G-56
   [2] TREADS ADJUSTMENT G-57
      (1) Front Wheel G-57
      (2) Rear Wheels G-58
   [3] TIRE LIQUID INJECTION G-59
   [4] IMPLEMENT LIMITATIONS G-62

1. TRACTOR IDENTIFICATION

[1] MODEL NAME AND SERIAL NUMBERS

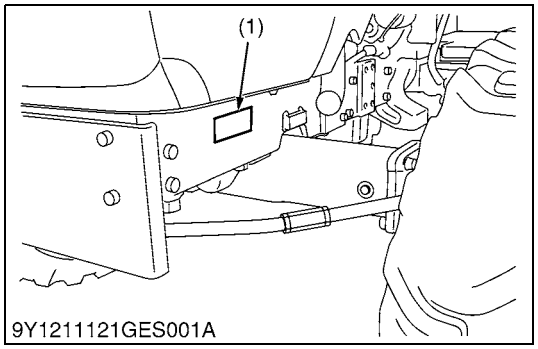

9Y1211121GES001A

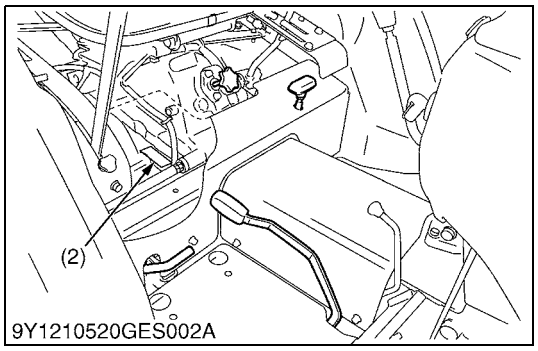

9Y1210520GES002A

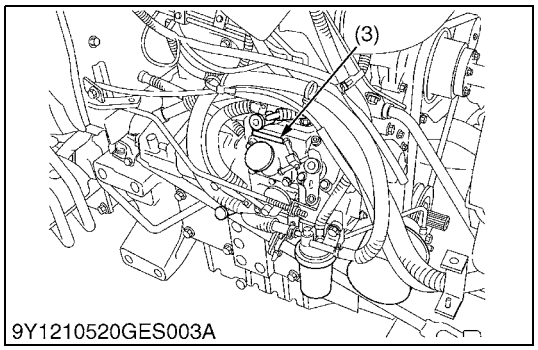

9Y1210520GES003A

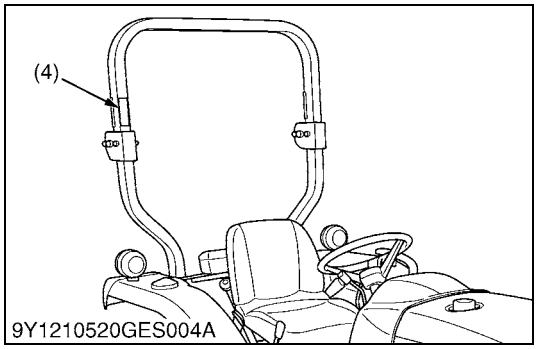

9Y1210520GES004A

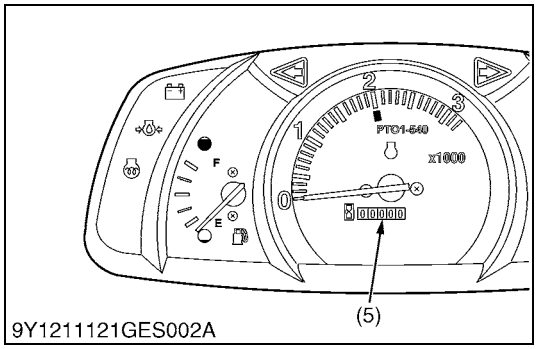

9Y1211121GES002A

When contacting your local KUBOTA distributor, always specify engine serial number, tractor serial number and hour meter reading.

(1) Tractor Identification Plate
(2) Tractor Serial Number
(3) Engine Serial Number
(4) ROPS Identification Plate (ROPS Serial Number)
(5) Hour Meter

9Y1211121GEG0001US0

[2] E4B ENGINE

[Example: Engine Model Name V2403-CR-TE4]

The emission controls previously implemented in various countries to prevent air pollution will be stepped up as Nonroad Emission Standards continue to change. The timing or applicable date of the specific Nonroad Emission regulations depends on the engine output classification.

Over the past several years, KUBOTA has been supplying diesel engines that comply with regulations in the respective countries affected by Nonroad Emission regulations. For KUBOTA Engines, E4B will be the designation that identifies engine models affected by the next emission phase (See the table below).

When servicing or repairing ###-E4B series engines, use only replacement parts for that specific E4B engine, designated by the appropriate E4B KUBOTA Parts List and perform all maintenance services listed in the appropriate KUBOTA Operator's Manual or in the appropriate E4B KUBOTA Workshop Manual. Use of incorrect replacement parts or replacement parts from other emission level engines (for example: E3B engines), may result in emission levels out of compliance with the original E4B design and EPA or other applicable regulations.Please refer to the emission label located on the engine head cover to identify Output classification and Emission Control Information. E4B engines are identified with "EF" at the end of the Model designation, on the US EPA label. Please note: E4B is not marked on the engine.

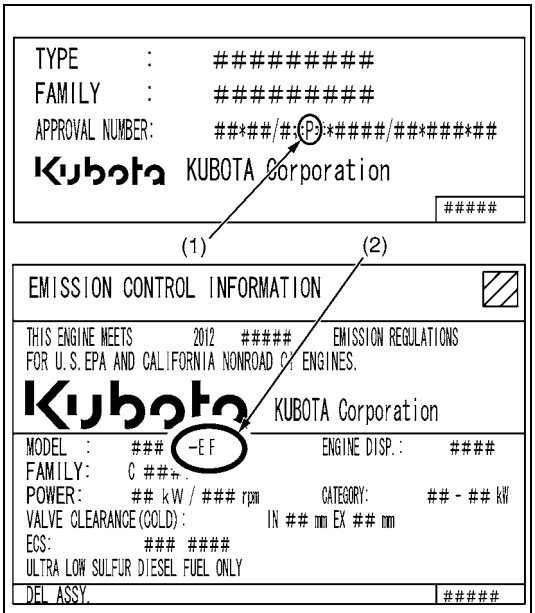

9Y1200165GES001A

Category (1)	Engine output classification	EU regulation
K	From 19 to 37 kW	STAGE IIIB
P	From 37 to less than 56 kW	STAGE IIIB
N	From 56 to less than 75 kW	STAGE IIIB
M	From 75 to less than 130 kW	STAGE IIIB

Category (2)	Engine output classification	EPA regulation
EF	Less than 19 kW	Tier 4
	From 19 to less than 56 kW	Interim Tier 4
	From 56 to less than 75 kW	Interim Tier 4
	From 75 to less than 130 kW	Interim Tier 4

(1) EU regulation engine output classification category
(2) "E4B" engines are identified with "EF" at the end of the Model designation, on the US EPA label.
"E4B" designates some Interim Tier 4 / Tier 4 models, depending on engine output classification.

9Y1211121GEG0002US0

[3] CYLINDER NUMBER

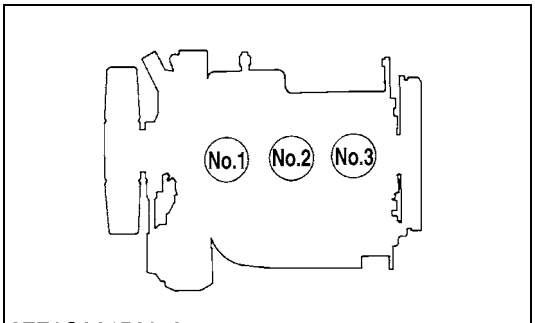

3EEACAA1P067A

The cylinder numbers of KUBOTA diesel engine are designated as shown in the figure.

The sequence of cylinder numbers is given as No. 1, No. 2, and No. 3 starting from the gear case side.

9Y1211121GEG0003US0

2. GENERAL PRECAUTIONS

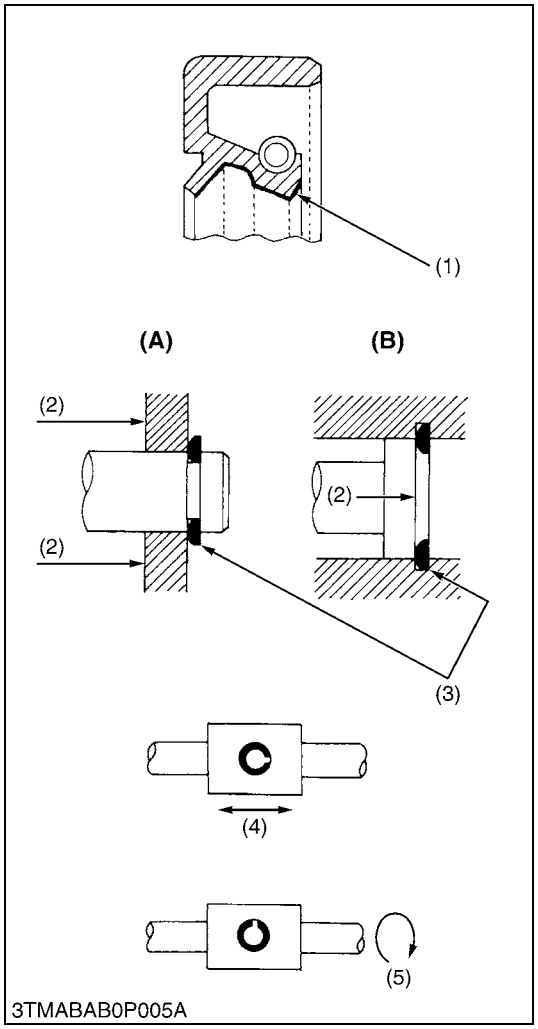

- When you disassemble, carefully put the parts in a clean area to make it easy to find the parts. You must install the screws, bolts and nuts in their initial position to prevent the reassembly errors.
- When it is necessary to use special tools, use KUBOTA special tools. Refer to the drawings when you make special tools that you do not use frequently.
- Before you disassemble or repair machine, make sure that you always disconnect the ground cable from the battery first.
- Remove oil and dirt from parts before you measure.
- Use only KUBOTA genuine parts for replacement to keep the machine performance and to make sure of safety.
- You must replace the gaskets and O-rings when you assemble again. Apply grease **(1)** to new O-rings or oil seals before you assemble.
- When you assemble the external or internal snap rings, make sure that the sharp edge **(3)** faces against the direction from which force **(2)** is applied.
- When inserting spring pins, their splits must face the direction from which a force is applied. See the figure left side.
- To prevent damage to the hydraulic system, use only specified fluid or equivalent.
- Clean the parts before you measure them.
- Tighten the fittings to the specified torque. Too much torque can cause damage to the hydraulic units or the fittings. Not sufficient torque can cause oil leakage.
- When you use a new hose or pipe, tighten the nuts to the specified torque. Then loosen (approx. by 45 °) and let them be stable before you tighten to the specified torque (This is not applied to the parts with seal tape).
- When you remove the two ends of a pipe, remove the lower end first.
- Use two pliers in removal and installation. One to hold the stable side, and the other to turn the side you remove to prevent twists.
- Make sure that the sleeves of flared connectors and tapers of hoses are free of dust and scratches.
- After you tighten the fittings, clean the joint and apply the maximum operation pressure 2 to 3 times to examine oil leakage.

(1) Grease
(2) Force
(3) Sharp Edge
(4) Axial Force
(5) Rotating Movement

(A) External Circlip
(B) Internal Circlip

WSM000001GEG0106US0

3. HANDLING PRECAUTIONS FOR ELECTRICAL PARTS AND WIRING

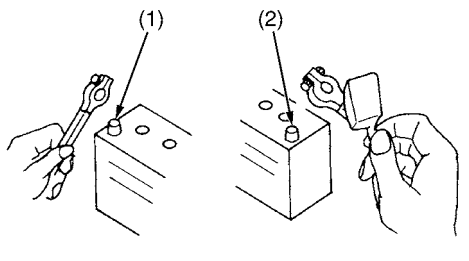

3TMABAB0P006A

To ensure safety and prevent damage to the machine and surrounding equipment, obey the following precautions in handling electrical parts and wiring.

■ **IMPORTANT**

- **Check electrical wiring for damage and loosened connection every year. To this end, educate the customer to do his or her own check and at the same time recommend the dealer to perform periodic check for a fee.**
- **Do not try to modify or remodel any electrical parts and wiring.**
- **When removing the battery cables, disconnect the negative cable first. When installing the battery cables, connect the positive cable first.**

(1) Negative Terminal (2) Positive Terminal

WSM000001GEG0062US0

[1] WIRING

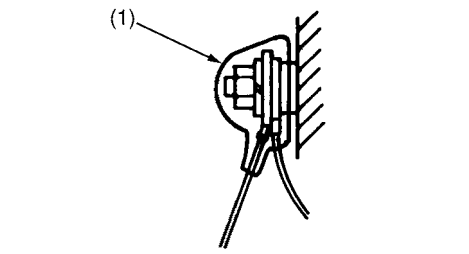

3TMABAB0P013A

- After installing wiring, check protection of terminals and clamped condition of wiring.

(1) Cover
(Securely Install Cover)

WSM000001GEG0070US0

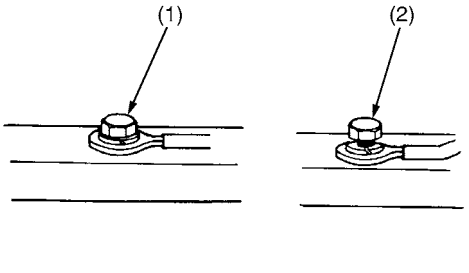

3TMABAB0P007A

- Securely tighten wiring terminals.

(1) Correct
(Securely Tighten)

(2) Incorrect
(Loosening Leads to Faulty Contact)

WSM000001GEG0063US0

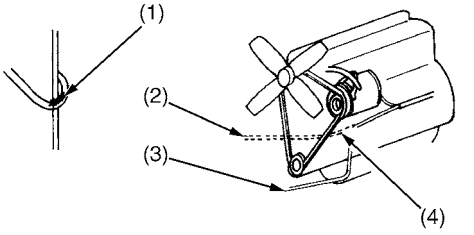

3TMABAB0P008A

- Do not let wiring contact dangerous part.

(1) Dangerous Part (Sharp Edge)
(2) Wiring (Incorrect)
(3) Wiring (Correct)
(4) Dangerous Part

WSM000001GEG0064US0

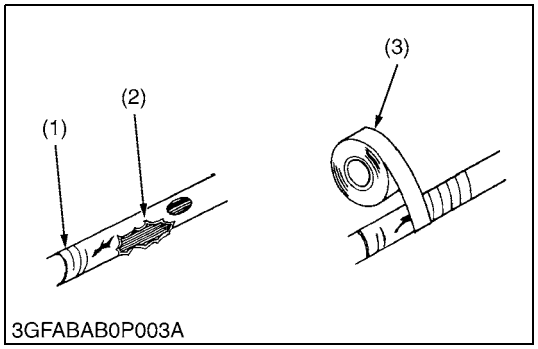

- Repair or change torn or aged wiring immediately.

(1) Aged
(2) Torn
(3) Insulating Vinyl Tape

WSM000001GEG0065US0

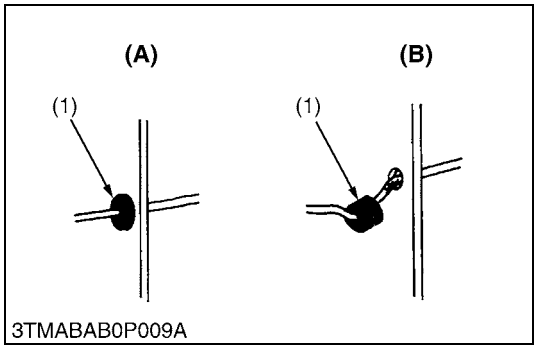

- Securely insert grommet.

(1) Grommet

(A) Correct
(B) Incorrect

WSM000001GEG0066US0

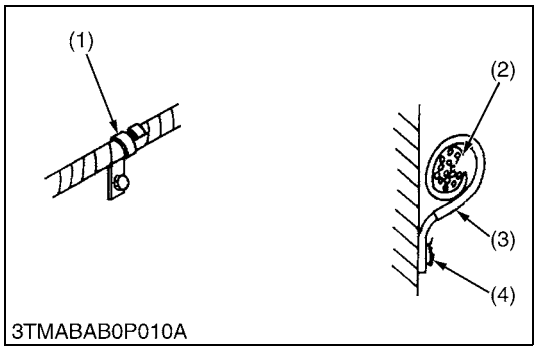

- Securely clamp, being careful not to damage wiring.

(1) Clamp
(Wind Clamp Spirally)
(2) Wire Harness
(3) Clamp
(4) Welding Dent

WSM000001GEG0067US0

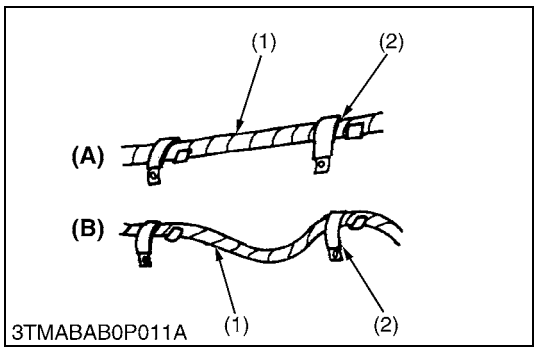

- Clamp wiring so that there is no twist, unnecessary sag, or excessive tension, except for movable part, where sag be required.

(1) Wiring
(2) Clamp

(A) Correct
(B) Incorrect

WSM000001GEG0068US0

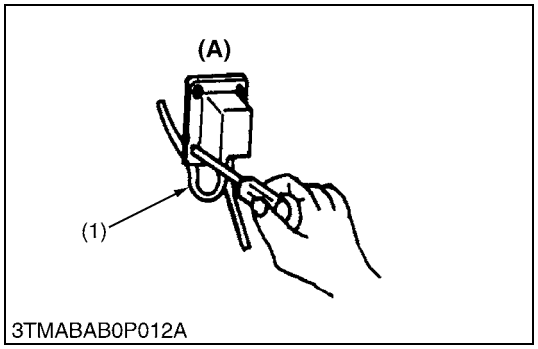

- In installing a part, be careful not to get wiring caught by it.

(1) Wiring

(A) Incorrect

WSM000001GEG0069US0

[2] BATTERY

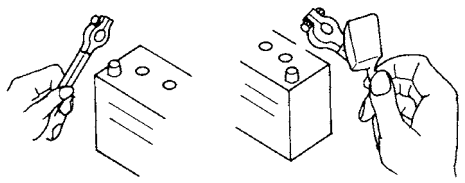

3TMABAB0P006B

- Be careful not to confuse positive and negative terminal posts.
- When you remove battery cables, disconnect negative cable first. When you install battery cables, check for polarity and connect positive cable first.
- Do not install any battery with capacity other than is specified (Ah).
- After you connect cables to battery terminal posts, apply high temperature grease to them and securely install terminal covers on them.
- Do not allow dirt and dust to collect on battery.

DANGER

To avoid serious injury or death:

- **Be careful not to let battery liquid spill on your skin and clothes. If contaminated, wash it off with water immediately.**
- **Before you recharge the battery, remove it from the machine.**
- **Before you recharge, remove cell caps.**
- **Recharge in a well-ventilated place where there is no open flame nearby, as hydrogen gas and oxygen are formed.**

WSM000001GEG0071US0

[3] FUSE

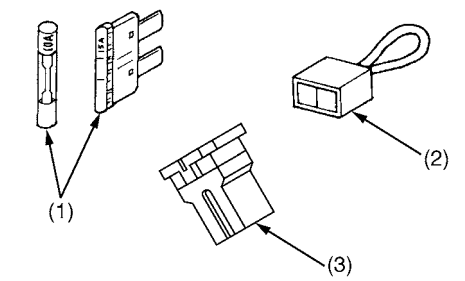

WSM00001GES001A

- Use fuses with specified capacity.
  Neither too large nor small capacity fuse is acceptable.
- Never use steel nor copper wire in place of fuse.
- Do not install working light, radio set, etc. on machine which is not provided with reserve power supply.
- Do not install accessories if fuse capacity of reserve power supply is exceeded.

(1) Fuse
(2) Fusible Link
(3) Slow Blow Fuse

WSM000001GEG0072US0

[4] CONNECTOR

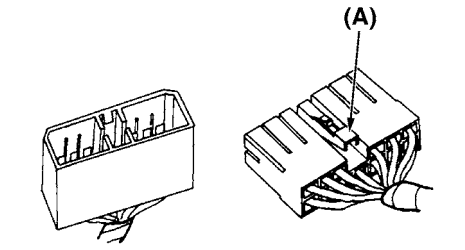

3TMABAB0P015A

- For connector with lock, push lock to separate.

(A) Push

WSM000001GEG0073US0

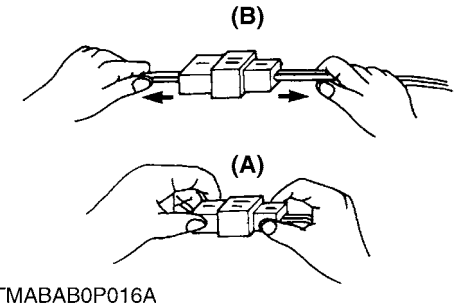

3TMABAB0P016A

- In separating connectors, do not pull wire harnesses.
- Hold connector bodies to separate.

(A) Correct
(B) Incorrect

WSM000001GEG0074US0

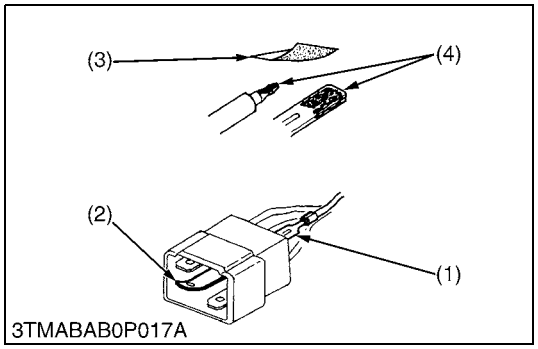

- Use sandpaper to remove rust from terminals.
- Repair deformed terminal. Make source that there is no terminal being exposed or displaced.

(1) Exposed Terminal
(2) Deformed Terminal
(3) Sandpaper
(4) Rust

WSM000001GEG0075US0

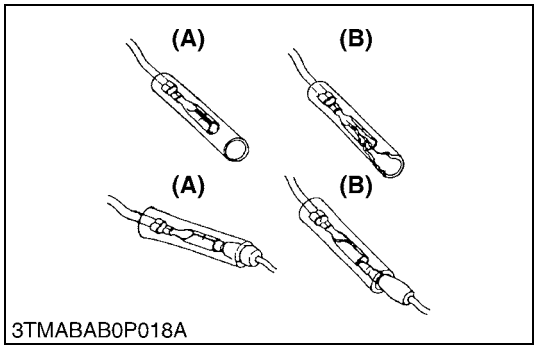

- Make sure that there is no female connector being too open.

(A) Correct
(B) Incorrect

WSM000001GEG0076US0

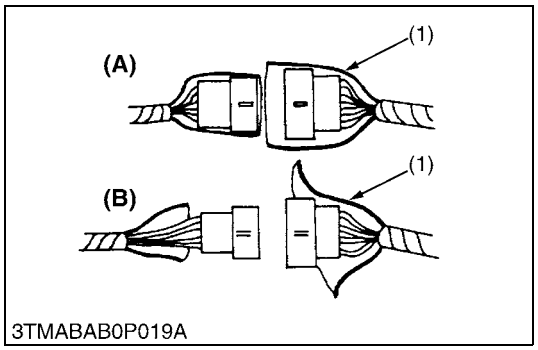

- Make sure that plastic cover is large enough to cover whole connector.

(1) Cover

(A) Correct
(B) Incorrect

WSM000001GEG0077US0

[5] CIRCUIT TESTER

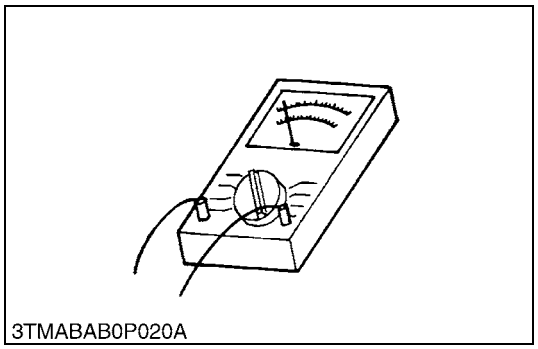

- Use tester correctly following manual provided with tester.
- Check for polarity and range.

WSM000001GEG0078US0

[6] COLOR OF WIRING

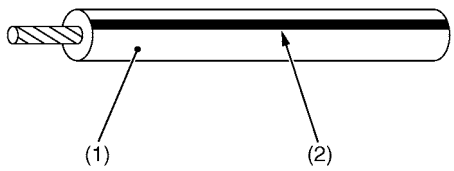

WSM00001GES002A

- Colors of wire are specified to the color codes.
- This symbol of "/" shows color with stripe(s).

(An example)

Red stripe on white color: W/R

Color of wiring	Color code
Black	B
Brown	Br
Green	G
Gray	Gy or Gr
Blue	L
Light Green	Lg
Orange	Or
Pink	P
Purple	Pu or V
Red	R
Sky Blue	Sb
White	W
Yellow	Y

(1) Wire Color (2) Stripe

WSM000001GEG0079US0

4. LUBRICANTS, FUEL AND COOLANT

No.	Place		Capacity L2501	Lubricants, fuel and coolant
1	Fuel		38.0 L 10.0 U.S.gals 8.4 Imp.gals	• No. 2-D diesel fuel • No. 1-D diesel fuel if temperature is below –10 °C (14 °F)
2	Coolant		6.0 L 6.3 U.S.qts 5.3 Imp.qts	Fresh clean water with anti-freeze
3	Engine crankcase (with filter)		5.7 L 6.0 U.S.qts 5.0 Imp.qts	Engine oil: Refer to next page. • Above 25 °C (77 °F) SAE30, 10W-30 or 15W-40 • −10 to 25 °C (14 to 77 °F) SAE20, 10W-30 or 15W-40 • Below −10 °C (14 °F) SAE10W-30
4	Transmission case	Manual Transmission, 2WD	27.0 L 7.1 U.S.gals 5.9 Imp.gals	KUBOTA SUPER UDT-2 fluid
	Transmission case	Manual Transmission, 4WD	27.5 L 7.3 U.S.gals 6.1 Imp.gals	
	Transmission case	HST, 4WD	23.5 L 6.2 U.S.gals 5.2 Imp.gals	
5	Front axle case (4WD)		4.5 L 4.8 U.S.qts 4.0 Imp.qts	KUBOTA SUPER UDT-2 fluid or SAE80-90 gear oil

Greasing				
No.	Place	No. of greasing point	Capacity	Type of grease
6	Front wheel hub (2WD)	2	A small amount	Bearing grease
	Knuckle shaft (2WD)	2	Until grease overflows	Multipurpose type grease NLGI-2 or NLGI-1 (GC-LB)
	Front axle support (4WD)	2		
	Clutch pedal	1		
	Brake pedal	1		
	Pedal shaft	1		
	Battery terminal	2		
	Lift rod	1		
	Tie-rod end (4WD)	4		

■ **NOTE**

- **The product name of KUBOTA genuine UDT fluid may be different from that in the Operator's Manual depending on countries or territories.**

9Y1211121GEG0004US0

■ **NOTE**

Engine Oil

- **Oil used in the engine should have an American Petroleum Institute (API) service classification and Proper SAE Engine Oil according to the ambient temperatures as shown above:**
- **Refer to the following table for the suitable API classification engine oil according to the engine type (with internal EGR, external EGR or non-EGR) and the fuel.**

Fuel used	Engine oil classification (API classification)	
	Oil class of engines except external EGR	Oil class of engines with external EGR
Ultra Low Sulfur Fuel [< 0.0015 % (15 ppm)]	**CF**, **CF-4**, **CG-4**, **CH-4** or **CI-4**	**CF** or **CI-4** (Class CF-4, CG-4 and CH-4 engine oils cannot be used on EGR type engines)

EGR: Exhaust Gas Re-circulation

- **The CJ-4 engine oil is intended for DPF (Diesel Particulate Filter) type engines, and cannot be used on this machine.**

	except external EGR	with external EGR
Models	L2501	—

Fuel

- **Cetane number of 45 minimum. Cetane number greater than 50 is preferred, especially for temperatures below −20 °C (−4 °F) or elevations above 1500 m (5000 ft).**
- **Diesel fuels specified to EN 590 or ASTM D975 are recommended.**
- **No.2-D is a distillate fuel of lower volatility for engines in industrial and heavy mobile service. (SAE J313 JUN87)**

Transmission Oil

- **KUBOTA Super UDT-2: For an enhanced ownership experience, we highly recommend Super UDT-2 to be used instead of standard hydraulic/transmission fluid.**
  Super UDT-2 is a proprietary KUBOTA formulation that deliveries superior performance and protection in all operating conditions.
  Regular UDT is also permitted for use in this machine.

■ **Indicated capacities of water and oil are manufacturer's estimate.**

9Y1211121GEG0005US0

5. TIGHTENING TORQUES

[1] GENERAL USE SCREWS, BOLTS AND NUTS

Tighten screws, bolts and nuts whose tightening torques are not specified in this Workshop Manual according to the table below.

Indication on top of bolt	4 No-grade or 4T						7 7T						9 9T		
Indication on top of nut	No-grade or 4T												6 6T		
Material of opponent part	Ordinariness			Aluminum			Ordinariness			Aluminum			Ordinariness		
Unit	N·m	kgf·m	lbf·ft	N·m	kgf·m	lbf·ft	N·m	kgf·m	lbf·ft	N·m	kgf·m	lbf·ft	N·m	kgf·m	lbf·ft
M6	7.9 to 9.3	0.80 to 0.95	5.8 to 6.8	7.9 to 8.8	0.80 to 0.90	5.8 to 6.5	9.81 to 11.2	1.00 to 1.15	7.24 to 8.31	7.9 to 8.8	0.80 to 0.90	5.8 to 6.5	12.3 to 14.2	1.25 to 1.45	9.05 to 10.4
M8	18 to 20	1.8 to 2.1	13 to 15	17 to 19	1.7 to 2.0	13 to 14	24 to 27	2.4 to 2.8	18 to 20	18 to 20	1.8 to 2.1	13 to 15	30 to 34	3.0 to 3.5	22 to 25
M10	40 to 45	4.0 to 4.6	29 to 33	32 to 34	3.2 to 3.5	24 to 25	48 to 55	4.9 to 5.7	36 to 41	40 to 44	4.0 to 4.5	29 to 32	61 to 70	6.2 to 7.2	45 to 52
M12	63 to 72	6.4 to 7.4	47 to 53	–	–	–	78 to 90	7.9 to 9.2	58 to 66	63 to 72	6.4 to 7.4	47 to 53	103 to 117	10.5 to 12.0	76.0 to 86.7
M14	108 to 125	11.0 to 12.8	79.6 to 92.5	–	–	–	124 to 147	12.6 to 15.0	91.2 to 108	–	–	–	167 to 196	17.0 to 20.0	123 to 144
M16	167 to 191	17.0 to 19.5	123 to 141	–	–	–	197 to 225	20.0 to 23.0	145 to 166	–	–	–	260 to 304	26.5 to 31.0	192 to 224
M18	246 to 284	25.0 to 29.0	181 to 209	–	–	–	275 to 318	28.0 to 32.5	203 to 235	–	–	–	344 to 402	35.0 to 41.0	254 to 296
M20	334 to 392	34.0 to 40.0	246 to 289	–	–	–	368 to 431	37.5 to 44.0	272 to 318	–	–	–	491 to 568	50.0 to 58.0	362 to 419

WSM000001GEG0001US0

[2] STUD BOLTS

Material of opponent part	Ordinariness			Aluminum		
Unit	N·m	kgf·m	lbf·ft	N·m	kgf·m	lbf·ft
M8	12 to 15	1.2 to 1.6	8.7 to 11	8.9 to 11	0.90 to 1.2	6.5 to 8.6
M10	25 to 31	2.5 to 3.2	18 to 23	20 to 25	2.0 to 2.6	15 to 18
M12	30 to 49	3.0 to 5.0	22 to 36	31	3.2	23
M14	62 to 73	6.3 to 7.5	46 to 54	–	–	–
M16	98.1 to 112	10.0 to 11.5	72.4 to 83.1	–	–	–
M18	172 to 201	17.5 to 20.5	127 to 148	–	–	–

WSM000001GEG0002US0

[3] METRIC SCREWS, BOLTS AND NUTS

Grade	8.8 Property class 8.8			10.9 Property class 10.9		
Unit	**N·m**	**kgf·m**	**lbf·ft**	**N·m**	**kgf·m**	**lbf·ft**
M8	24 to 27	2.4 to 2.8	18 to 20	30 to 34	3.0 to 3.5	22 to 25
M10	48 to 55	4.9 to 5.7	36 to 41	61 to 70	6.2 to 7.2	45 to 52
M12	78 to 90	7.9 to 9.2	58 to 66	103 to 117	10.5 to 12.0	76.0 to 86.7
M14	124 to 147	12.6 to 15.0	91.2 to 108	167 to 196	17.0 to 20.0	123 to 144
M16	197 to 225	20.0 to 23.0	145 to 166	260 to 304	26.5 to 31.0	192 to 224

WSM000001GEG0003US0

[4] AMERICAN STANDARD SCREWS, BOLTS AND NUTS WITH UNC OR UNF THREADS

Grade	SAE GR.5			SAE GR.8		
Unit	**N·m**	**kgf·m**	**lbf·ft**	**N·m**	**kgf·m**	**lbf·ft**
1/4	11.7 to 15.7	1.20 to 1.60	8.63 to 11.5	16.3 to 19.7	1.67 to 2.00	12.0 to 14.6
5/16	23.1 to 27.7	2.36 to 2.82	17.0 to 20.5	33 to 39	3.4 to 3.9	25 to 28
3/8	48 to 56	4.9 to 5.7	36 to 41	61 to 73	6.3 to 7.4	45 to 53
1/2	110 to 130	11.3 to 13.2	81.2 to 95.8	150 to 178	15.3 to 18.1	111 to 131
9/16	150 to 178	15.3 to 18.1	111 to 131	217 to 260	22.2 to 26.5	160 to 191
5/8	204 to 244	20.8 to 24.8	151 to 179	299 to 357	30.5 to 36.4	221 to 263

WSM000001GEG0008US0

[5] PLUGS

Shape	Size	Material of opponent part					
		Ordinariness			Aluminum		
		N·m	**kgf·m**	**lbf·ft**	**N·m**	**kgf·m**	**lbf·ft**
Tapered screw 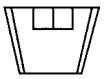	**R1/8**	13 to 21	1.3 to 2.2	9.4 to 15	13 to 19	1.3 to 2.0	9.4 to 14
	R1/4	25 to 44	2.5 to 4.5	18 to 32	25 to 34	2.5 to 3.5	18 to 25
	R3/8	49 to 88	5.0 to 9.0	37 to 65	49 to 58	5.0 to 6.0	37 to 43
	R1/2	58.9 to 107	6.00 to 11.0	43.4 to 79.5	59 to 78	6.0 to 8.0	44 to 57
Straight screw 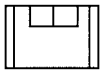	**G1/4**	25 to 34	2.5 to 3.5	18 to 25	–	–	–
	G3/8	62 to 82	6.3 to 8.4	46 to 60	–	–	–
	G1/2	49 to 88	5.0 to 9.0	37 to 65	–	–	–

WSM000001GEG0005US0

6. MAINTENANCE CHECK LIST

No.	Item		Service Interval														After since	Reference page		
			50	100	150	200	250	300	350	400	450	500	550	600	650	700				
1	Greasing	–	☆	☆	☆	☆	☆	☆	☆	☆	☆	☆	☆	☆	☆	☆	every 50 Hr	G-19		
2	Engine start system	Check	☆	☆	☆	☆	☆	☆	☆	☆	☆	☆	☆	☆	☆	☆	every 50 Hr	G-20, G-21		
3	Wheel bolt torque	Check	☆	☆	☆	☆	☆	☆	☆	☆	☆	☆	☆	☆	☆	☆	every 50 Hr	G-21		
4	Battery condition	Check		☆		☆		☆		☆		☆		☆		☆	every 100 Hr	G-22	*4	
5	Fan belt	Adjust		☆		☆		☆		☆		☆		☆		☆	every 100 Hr	G-24		
6	Clutch	Adjust	★	☆		☆		☆		☆		☆		☆		☆	every 100 Hr	G-16		
7	Brake	Adjust		☆		☆		☆		☆		☆		☆		☆	every 100 Hr	G-24		
8	Air cleaner element	Clean		☆		☆		☆		☆		☆		☆		☆	every 100 Hr	G-25	*1	@
		Replace															every 1 year	G-25	*2	
9	Fuel filter element	Clean		☆		☆		☆		☆		☆		☆		☆	every 100 Hr	G-25		@
		Replace								☆							every 400 Hr	G-25		
10	Fuel line	Check		☆		☆		☆		☆		☆		☆		☆	every 100 Hr	G-26		@
		Replace															every 2 years	G-26		
11	Engine oil	Change	★			☆				☆				☆			every 200 Hr	G-16		
12	Engine oil filter	Replace	★			☆				☆				☆			every 200 Hr	G-16		
13	Transmission oil filter (HST)	Replace	★			☆				☆				☆			every 200 Hr	G-17		
14	Toe-in	Adjust				☆				☆				☆			every 200 Hr	G-26		
15	Radiator hose and clamp	Check				☆				☆				☆			every 200 Hr	G-27		
		Replace															every 2 years	G-27		
16	Power steering oil line	Check				☆				☆				☆			every 200 Hr	G-27		
		Replace															every 2 years	G-27		
17	Intake air line	Check				☆				☆				☆			every 200 Hr	G-27		@
		Replace															every 2 years	G-27		
18	Oil cooler line (HST)	Check				☆				☆				☆			every 200 Hr	G-27		
		Replace															every 2 years	G-27		
19	Hydraulic oil filter	Replace	★							☆							every 400 Hr	G-18		
20	Transmission fluid	Change								☆							every 400 Hr	G-28, G-29		
21	Front axle case oil (4WD)	Change								☆							every 400 Hr	G-30		
22	Greasing (2WD front wheel hub)	–								☆							every 400 Hr	G-30		
23	Front axle pivot	Adjust												☆			every 600 Hr	G-30		

No.	Item		Service Interval														After since	Refer-ence page		
			50	100	150	200	250	300	350	400	450	500	550	600	650	700				
24	Engine valve clearance	Adjust															every 800 Hr	G-30		
25	Fuel injection nozzle injection pressure	Check															every 1500 Hr	G-30		@
26	Injection pump	Check															every 3000 Hr	G-31		@
27	Cooling system	Flush															every 2 years	G-31		
28	Coolant	Change															every 2 years	G-31		
29	Fuel system	Bleed															Service as re-quired	G-34		
30	Clutch housing water	Drain																G-34		
31	Fuse	Replace																G-35		
32	Head lamp / Light bulb	Replace																G-36		

■ **IMPORTANT**

- **The jobs indicated by ★ must be done after the first 50 hours of operation.**
  ***1 Air cleaner should be cleaned more often in dusty conditions than in normal conditions.**
  ***2 Every year or every 6 times of cleaning.**
  ***3 Replace only if necessary.**
  ***4 When the battery is used for less than 100 hours per year, check the battery condition by reading the indicator annually.**
- **The items listed above (@ marked) are registered as emission related critical parts by KUBOTA in the U.S.EPA nonroad emission regulation. As the engine owner, you are responsible for the performance of the required maintenance on the engine according to the above instruction. Please see Warranty Statement in detail.**

9Y1211121GEG0007US0

7. CHECK AND MAINTENANCE

WARNING

To avoid personal injury or death:

- **Be sure to check and service the tractor on a level surface with the engine shut off and the parking brake "ON" and implement lowered to the ground.**

9Y1211121GEG0008US0

[1] DAILY CHECK

To prevent trouble from occurring, it is important to know the condition of the tractor. Check the following items before starting.

9Y1211121GEG0009US0

Checking

- Check areas where previous trouble was experienced.
- Walk around the tractor.

1. Check the tire pressure, and check for wear and damage.
2. Check for oil and water leaks.
3. Check the engine oil level.
4. Check the transmission fluid level.
5. Check the coolant level.
6. Check the condition of seat belt and ROPS attaching hardware.
7. Check and clean the radiator screen and grille.
8. Check the nuts of the tires are tight.
9. Check the number plate or SMV emblem for damage and cleaner replace as necessary if equipped.
10. Care of danger, warning and caution labels.
11. Clean around the exhaust manifold and the muffler of the engine.

- While sitting in the operator's seat.

1. Check the HST pedal, brake pedals and clutch pedal.
2. Check the parking brake.
3. Check the steering wheel.

- Turning the key switch.

1. Check the performance of the Easy Checker™ lights.
2. Check the head lights, tail lights and hazard lights. Clean if necessary.
3. Check the performance of the meters and gauges.

- Starting the engine.

1. Check to see that the lights on the Easy Checker™ go off.
2. Check the color of the exhaust gas.
3. Check the brakes for proper operation.

9Y1211121GEG0010US0

[2] CHECK POINTS OF INITIAL 50 HOURS

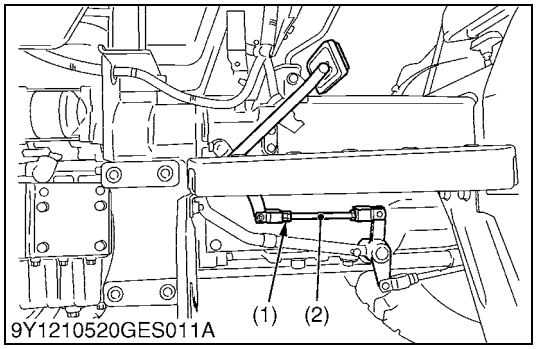

Adjusting Clutch Pedal

1. Stop the engine and remove the key.
2. Slightly depress the clutch pedal and measure free travel at top of pedal stroke.
3. If adjustment is needed, loosen the lock nut (1), and turn the clutch rod (2) to adjust the rod length within acceptable limits.
4. Retighten the lock nut.

Clutch pedal free travel	Factory specification	20 to 30 mm 0.8 to 1.2 in.

(1) Lock Nut (2) Clutch Rod

9Y1211121GEG0011US0

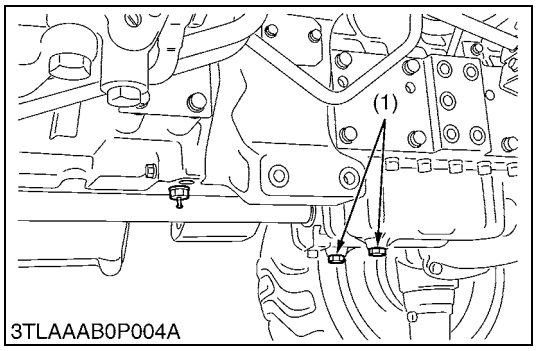

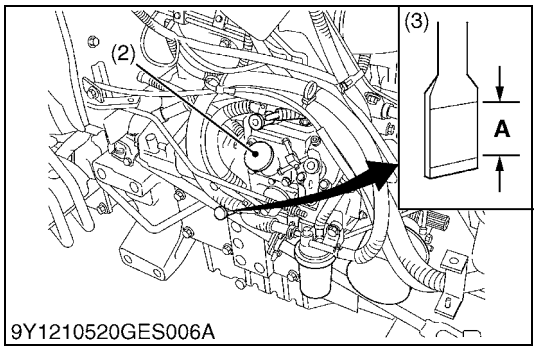

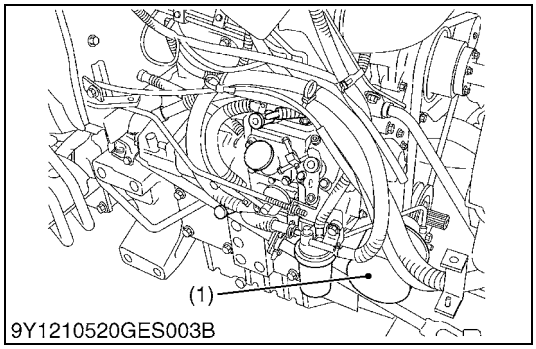

Changing Engine Oil

WARNING

To avoid personal injury or death:

- **Be sure to stop the engine before changing the oil.**
- **Allow engine to cool down sufficiently, oil can be not and can burn.**

1. To drain the used oil, remove the drain plug (1) at the bottom of the engine and drain the oil completely into the oil pan.
   All the used oil can be drained out easily when the engine is still warm.
2. After draining reinstall the drain plug (1).
3. Fill with the new oil up to the upper notch on the dipstick (3). (See page G-9.)

Engine oil capacity	5.7 L 6.0 U.S.qts 5.0 Imp.qts

(1) Drain Plug
(2) Oil Inlet
(3) Dipstick

A: Proper Oil Level

9Y1211121GEG0012US0

Replacing Engine Oil Filter

WARNING

To avoid personal injury or death:

- **Be sure to stop the engine before changing oil filter.**
- **Allow engine to cool down sufficiently, oil can be hot and can burn.**

1. Remove the oil filter.
2. Put a film of clean engine oil on the rubber seal of the new filter.
3. Tighten the filter quickly until it contacts the mounting surface.
   Tighten filter by hand an additional 1/2 turn only.
4. After the new filter has been replaced, the engine oil normally decreases a little. Make sure that the engine oil does not leak through the seal and be sure to check the oil level on the dipstick. Then, fill the engine oil up to the prescribed level.

■ **IMPORTANT**

- **To prevent serious damage to the engine, use only a KUBOTA genuine filter.**

(1) Engine Oil Filter Cartridge

9Y1211121GEG0013US0

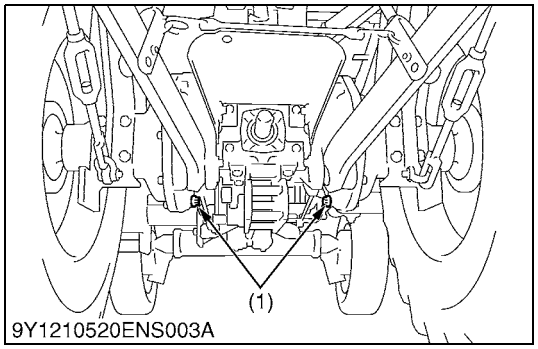

9Y1210520ENS003A

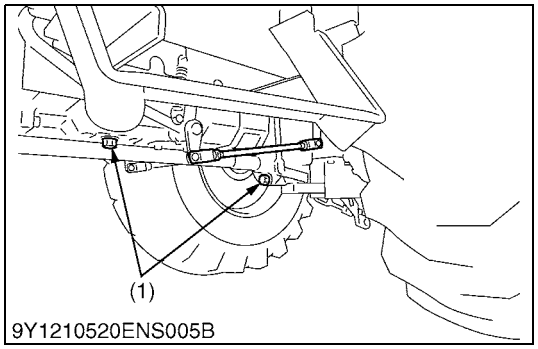

9Y1210520ENS005B

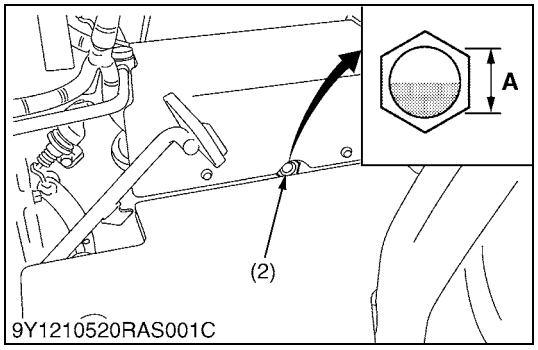

9Y1210520RAS001C

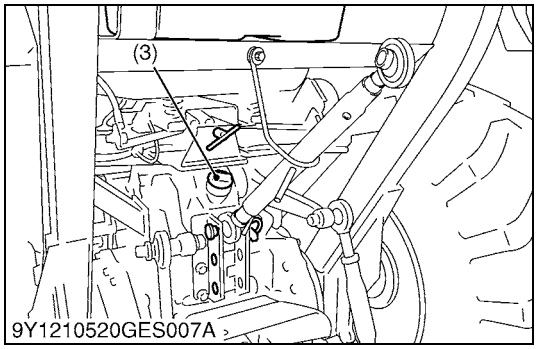

9Y1210520GES007A

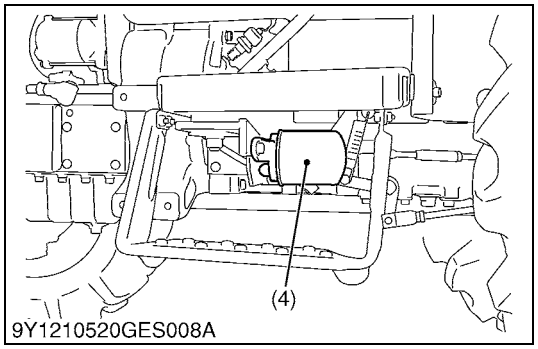

9Y1210520GES008A

Replacing Transmission Oil Filter [HST Type]

WARNING

To avoid personal injury or death:

- **Be sure to stop the engine before changing the oil filter cartridge.**
- **Allow engine to cool down sufficiently, oil can be hot and can burn.**

1. Place the oil pan underneath the transmission oil filter and remove the filter.
   Do not remove the hydraulic oil filter. Otherwise, the oil comes out.
2. Put a film of clean transmission oil on the rubber seal of the new filter.
3. Quickly tighten the filter until it contacts the mounting surface, then, with a filter wrench, tighten it an additional 1 turn only.
4. After the new filter has been replaced, fill with the transmission oil up to the upper line of the gauge (2).
5. After running the engine for a few minutes, stop the engine and check the oil level again, add oil to the prescribed level.
6. Make sure that the transmission fluid does not leak past the seal on the filter.

IMPORTANT

- **To prevent serious damage to the hydraulic system. Use only a KUBOTA genuine filter.**
- **Do not operate the tractor immediately after changing the transmission fluid.**
  Run the engine at medium speed for a few minutes to prevent damage to the transmission.

(1) Drain Plug
(2) Gauge
(3) Oil Inlet
(4) Transmission Oil Filter

A: Oil level is acceptable within this range.

9Y1211121GEG0014US0

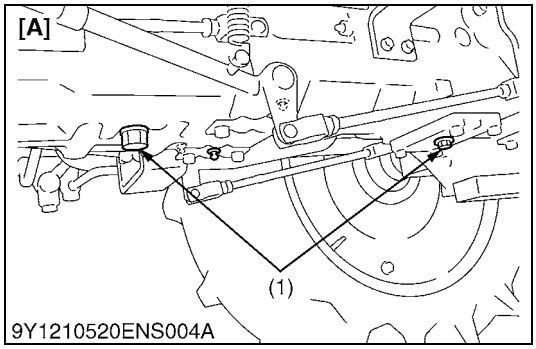

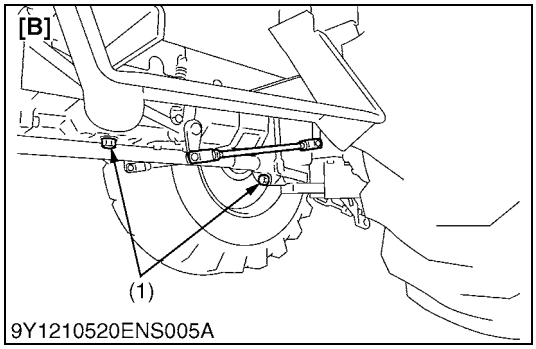

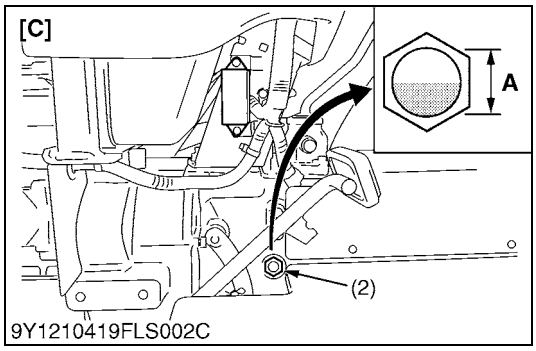

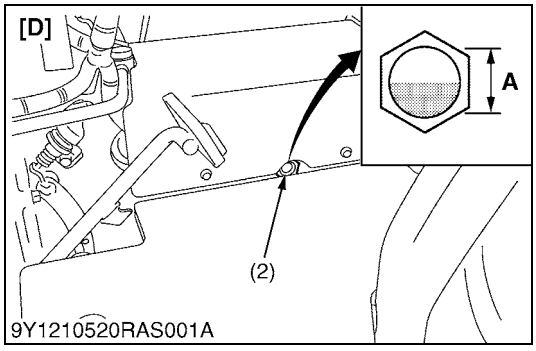

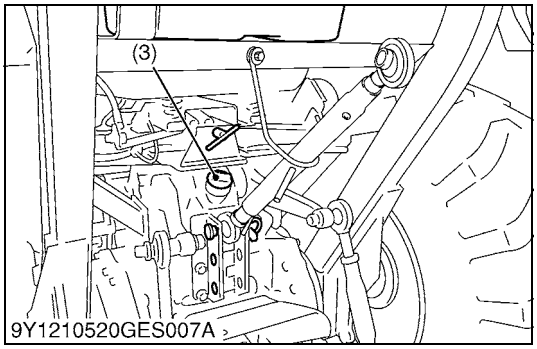

Replacing Hydraulic Oil Filter

WARNING

To avoid personal injury or death:

- **Be sure to stop the engine before changing the oil filter cartridge.**
- **Allow engine to cool down sufficiently, oil can be hot and can burn.**

1. Remove the drain plugs (1) at the bottom of the transmission case and drain the oil completely into the oil pan.
2. After draining reinstall the drain plugs.
3. Remove the oil filter (4).
4. Wipe off meter fillings from the magnetic filter with a clean rag.
5. Put a film of clean transmission oil on the rubber seal of the new filter.
6. Quickly tighten the filter until it contacts the mounting surface, then tighten it by hand an additional 1/2 turn only.
7. After the new filter has been replaced, fill with oil up to the upper line of the gauge (2).
8. After running the engine for a few minutes, stop the engine and check the oil level again, add oil to the prescribed level.
9. Make sure that the transmission fluid does not leak past the seal on the filter.

IMPORTANT

- **To prevent serious damage to the hydraulic system. Use only a KUBOTA genuine filter.**
- **Do not operate the tractor immediately after changing the transmission fluid.**
  Run the engine at medium speed for a few minutes to prevent damage to the transmission.

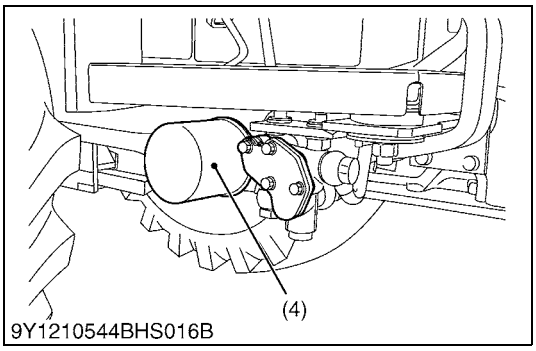

(1) Drain Plug
(2) Gauge
(3) Oil Inlet
(4) Hydraulic Oil Filter

A: Oil level is acceptable within this range.
[A] 2WD
[B] 4WD
[C] Manual Transmission Type
[D] HST Type

9Y1211121GEG0015US0

[3] CHECK POINTS OF EVERY 50 HOURS

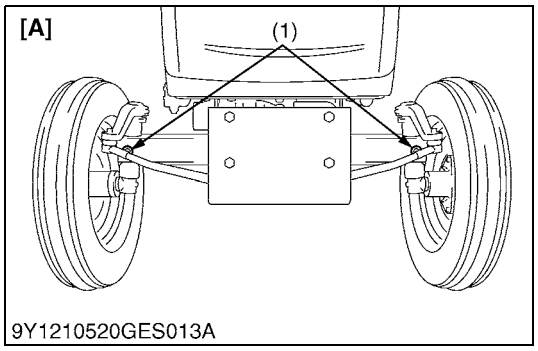

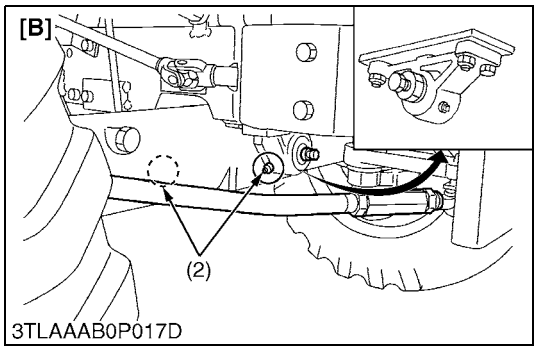

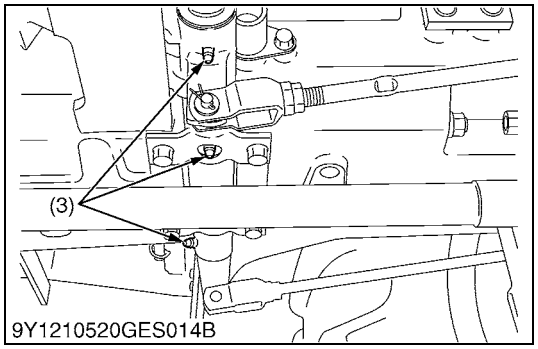

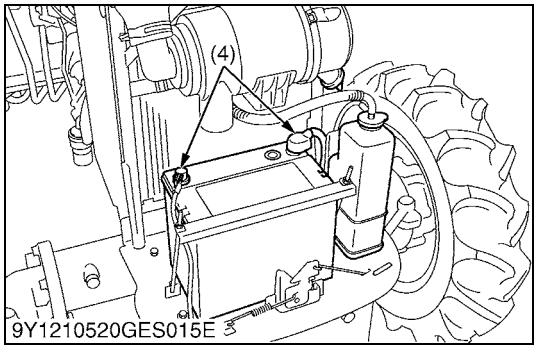

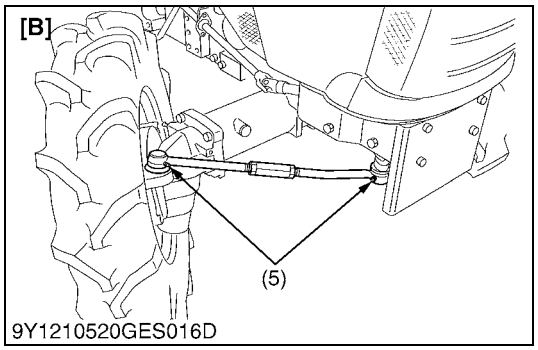

Greasing

1. Apply a grease to the following position as figures.

■ **NOTE**

- **Apply a small amount of multipurpose grease to the following points every 50 hours.**
  If you operated the machine in extremely wet and muddy conditions, lubricate grease fittings more often.
- **When apply a grease to the front axle support, remove the breather plug and apply a grease until grease overflows from breather plug. After greasing reinstall the plug.**

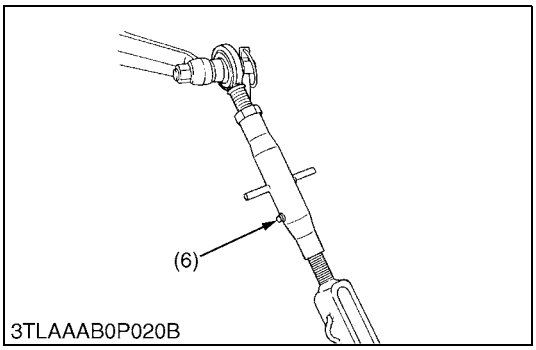

(1) Grease Fitting (Knuckle Shaft R.H., L.H.)
(2) Grease Fitting (Front Axle Support)
(3) Pedal Shaft
(4) Battery Terminals
(5) Grease Fitting (Tie-rod End)
(6) Lifting Rod (R.H.)

[A] 2WD
[B] 4WD

9Y1211121GEG0016US0

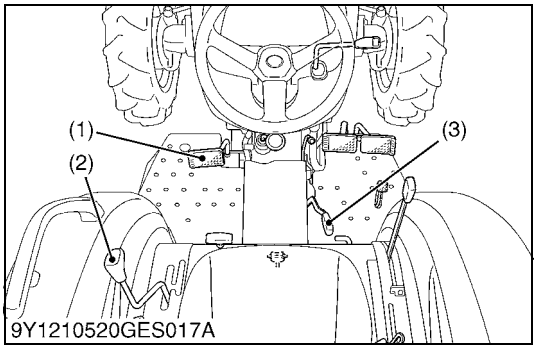

Checking Engine Start System [Manual Transmission Type]

WARNING

To avoid personal injury or death:

- **Do not allow anyone near the tractor while testing.**
- **If the tractor does not pass the test do not operate the tractor.**

■ **Preparation before testing**

1. Place all control levers in the **"NEUTRAL"** position.
2. Set the parking brake and stop the engine.

■ **Test: Switch for the range gear shift lever**

1. Sit on the operator's seat.
2. Shift the range gear shift lever to **"L", "H"** or **"R"** position.
3. Depress the clutch pedal fully.
4. Disengage the PTO gear shift lever.
5. Turn the key to **"START"** position.
6. The engine must not crank.

■ **Test: Switch for the PTO gear shift lever**

1. Sit on the operator's seat.
2. Engage the PTO gear shift lever.
3. Depress the clutch pedal fully.
4. Shift the range gear shift lever to **"NEUTRAL"** position.
5. Turn the key to **"START"** position.
6. The engine must not crank.

■ **Test: Switch for the operator's seat**

1. Sit on operator's seat.
2. Start the engine.
3. Engage the PTO gear shift lever.
4. Stand up. (Do not get off the machine.)
5. The engine must shut off after approximately 1 second.

(1) Clutch Pedal
(2) Range Gear Shift Lever (Shuttle Shift Lever)
(3) PTO Gear Shift Lever

9Y1211121GEG0017US0

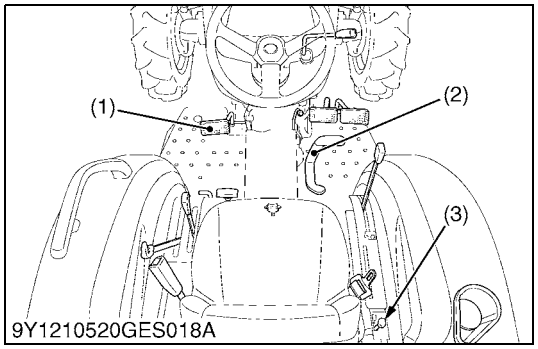

Checking Engine Start System [HST Type]

CAUTION

To avoid personal injury:

- **Do not allow anyone near the tractor while testing.**
- **If the tractor does not pass the test do not operate the tractor.**

■ **Test: Switch for the speed control pedal**

1. Sit on the operator's seat.
2. Depress the speed control pedal to the desired direction.
3. Depress the clutch pedal fully.
4. Disengage the PTO gear shift lever.
5. Turn the key to **"START"** position.
6. The engine must not crank.

■ **Test: Switch for the PTO gear shift lever**

1. Sit on the operator's seat.
2. Engage the PTO gear shift lever.
3. Depress the clutch pedal fully.
4. Place the speed control pedal in **"NEUTRAL"** position.
5. Turn the key to **"START"** position.
6. The engine must not crank.

■ **Test: Switch for the operator's seat**

1. Sit on the operator's seat.
2. Start the engine.
3. Engage the PTO gear shift lever.
4. Stand up. (Do not get off the machine.)
5. The engine must shut off after approximately 1 second.

■ **Test: Switch for the clutch pedal**

1. Sit on the operator's seat.
2. Disengage the PTO gear shift lever.
3. Place the speed control pedal in **"NEUTRAL"** position.
4. Release the clutch pedal.
5. Turn the key to **"START"** position.
6. The engine must not crank.

(1) Clutch Pedal
(2) Speed Control Pedal
(3) PTO Gear Shift Lever

9Y1211121GEG0018US0

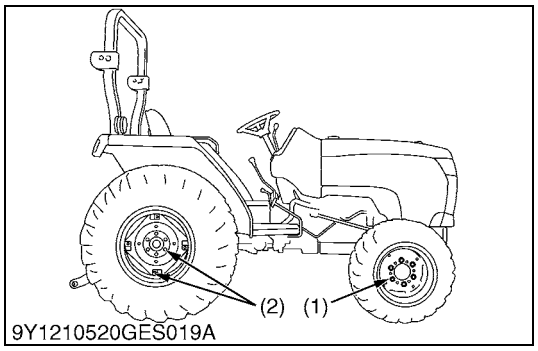

Checking Wheel Bolt Torque

WARNING

To avoid personal injury or death:

- **Never operate tractor with a loose rim, wheel or axle.**
- **Any time bolts and nuts are loosened, retighten to specified torque.**
- **Check all bolts and nuts frequently and keep them tight.**

1. Check the wheel bolts and nuts regularly especially when new. If there are loosened, tighten as follows.

Tightening torque	Front wheel bolt and nut	137 N·m 14.0 kgf·m 100 lbf·ft
	Rear wheel bolt and nuts	215 N·m 22.0 kgf·m 160 lbf·ft

(1) Front Wheel Mounting Screw and Nut
(2) Rear Wheel Mounting Screws and Nuts

9Y1211121GEG0019US0

[4] CHECK POINTS OF EVERY 100 HOURS

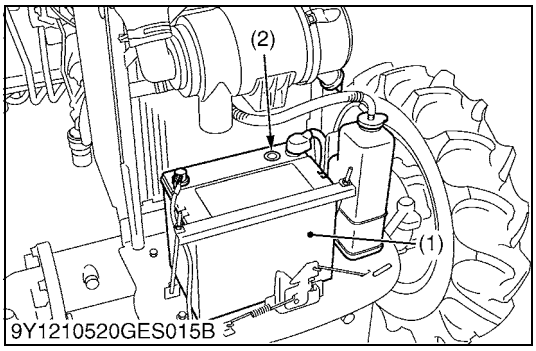

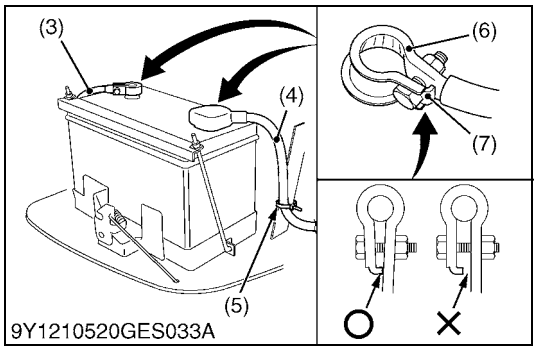

Checking Battery Condition

DANGER

To avoid the possibility of battery explosion:
For the refillable type battery, follow the instructions below.

- **Do not use or charge the refillable type battery if the fluid level is below the LOWER (lower limit level) mark. Otherwise, the battery component parts may prematurely deteriorate, which may shorten the battery's service life or cause an explosion. Check the fluid level regularly and add distilled water as required so that the fluid level is between the UPPER and LOWER levels.**

WARNING

To avoid personal injury or death:

- **Never remove the battery cap while the engine is running.**
- **Keep electrolyte away from eyes, hands and clothes. If you are spattered with it, wash it away completely with water immediately and get medical attention.**
- **Keep open sparks and flames away from the battery at all times. Hydrogen gas mixed with oxygen becomes very explosive.**
- **Wear eye protection and rubber gloves when working around battery.**

■ **NOTE**

- **The factory-installed battery is of non-refillable type. If the indicator turns white, do not charge the battery but replace it with new one.**

1. Mishandling the battery shortens the service life and adds to maintenance costs.
2. The original battery is maintenance free type battery, but need some servicing.
3. If the battery is weak, the engine is difficult to start and the lights be dim. It is important to check the battery periodically.
4. Check the battery condition by reading the indicator display.

State of indicator display	
Green	Specific gravity of electrolyte and quality of electrolyte are both in good condition.
Black	Needs charging battery.
White	Needs changing battery.

5. Be sure to wire the battery cable as shown in the figure.
6. Fix the positive cable in the cord band.
7. TIghten the terminal until the stopper comes in contact.

(1) Battery
(2) Indicator
(3) Negative Cable
(4) Positive Cable
(5) Clip
(6) Terminal
(7) Stopper

9Y1211121GEG0020US0

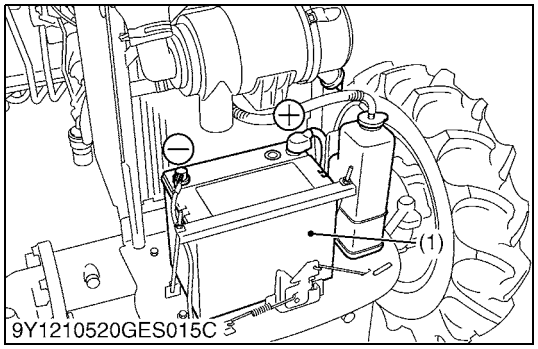

Battery Charging

WARNING

To avoid personal injury or death:

- **When the battery is being activated, hydrogen and oxygen gases in the battery are extremely explosive. Keep open sparks and flames away from the battery at all times, especially when charging the battery.**
- **When charging battery, ensure the vent caps are securely in place (if equipped).**
- **When disconnecting the cable from the battery, start with the negative terminal first.**
  When connecting the cable to the battery, start with the positive terminal first.
- **Never check battery charge by placing a metal object across the posts.**
  Use a voltmeter or hydrometer.

1. To slow charge the battery, connect the battery positive terminal to the charger positive terminal and the negative to the negative, then recharge in the standard fashion.
2. A boost charge is only for emergencies. It will partially charge the battery at a high rate and in a short time.
   When using a boost-charged battery, it is necessary to recharge the battery as early as possible.
   Failure to do this will shorten the battery's service life.
3. The battery is charged if the indicator display turns green from black.
4. When exchanging an old battery into new one, use battery of equal specification shown in table 1.

Table 1

Battery type	Volts	Reserve capacity (min)	CCA (SAE)	Normal Charging Rate
75D26R	12	123	490	6.5

CCA: Cold Cranking Ampere

■ Direction for Storage

1. When storing the tractor for long periods of time, remove the battery from tractor, adjust the electrolyte to the proper level and store in a dry place out of direct sunlight.
2. The battery self-discharges while it is stored.
   Recharge it once every three months in hot seasons and once every six months in cold seasons.

(1) Battery

9Y1211121GEG0021US0

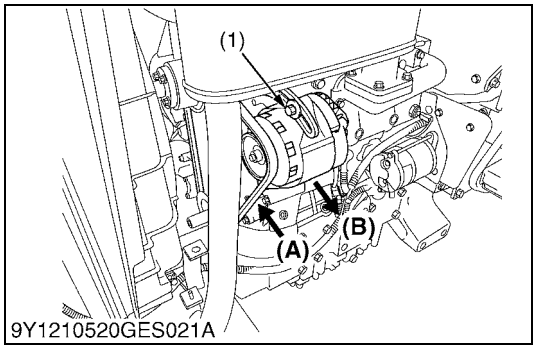

Adjusting Fan Belt Tension

WARNING

To avoid personal injury or death:

- **Be sure to stop the engine before checking fan belt tension.**

1. Stop the engine and remove the key.
2. Apply moderate thumb pressure to belt between pulleys.
3. If tension is incorrect, loosen the alternator mounting bolts (1), and using a lever placed between the alternator and the engine block, pull the alternator out until the deflection of the belt falls within the factory specifications.
4. Replace fan belt if it is damaged.

Fan belt tension	Factory specification	A deflection of between 7.0 to 9.0 mm (0.28 to 0.35 in.) when the belt is pressed (98 N, 10kgf, 22 lbf) in the middle of the span.

(1) Alternator Mounting Bolt

(A) Check the Belt Tension
(B) To Tighten the Fan Belt

9Y1211121GEG0022US0

Adjusting Clutch Pedal Free Travel

1. See page G-16.

9Y1211121GEG0023US0

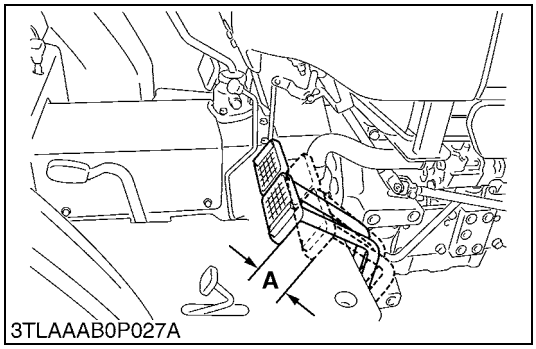

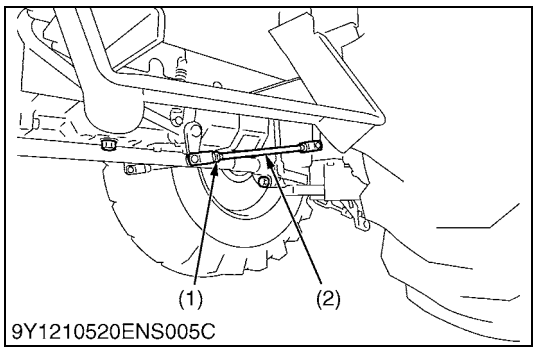

Adjusting Brake Pedal

WARNING

To avoid personal injury or death:

- **Stop the engine and chock the wheels before checking brake pedal.**

1. Release the parking brake.
2. Slightly depress the brake pedals and measure free travel at top of pedal stroke.
3. If adjustment is needed, loosen the lock nut (1) and turn the brake rod (2) to adjust the rod length within acceptable limits.
4. Retighten the lock nut.

■ **NOTE**

- **Be sure to keep the free travel in the right and left brake pedals equal.**

Brake pedal free travel	Factory specification	15 to 20 mm 0.6 to 0.8 in.

(1) Lock Nut
(2) Brake Rod

A: Free Travel

9Y1211121GEG0024US0

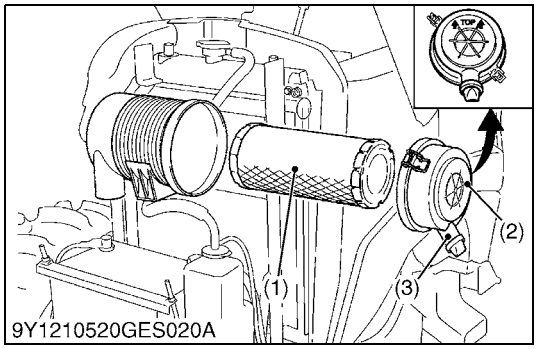

Cleaning Air Cleaner Element

1. Remove the element.
2. Clean the element:
   – When dry dust adheres to the element, blow compressed air from the inside, turning the element. Pressure of compressed air must be under 205 kPa (2.1 kgf/cm^2, 30 psi).
   – When carbon or oil adheres to the element, soak the element in detergent for 15 minutes then wash it several times in water, rinse with clean water and dry it naturally. After element is fully dried, inspect inside of the element with a light and check if it is damaged or not. (Referring to the instructions on the label attached to the case.)
3. Replace the air cleaner element (1):
   Once a yearly or after every sixth times of cleaning, whichever comes first.

■ **NOTE**
- **Check to see if the evacuator valve (3) is blocked with dust.**

■ **IMPORTANT**
- **The air cleaner uses a dry element, never apply oil.**
- **Do not run the engine with filter element removed.**
- **Be sure to refit the dust cup with the arrow ↑ (on the rear) upright. If the dust cup is improperly fitted, dust passes by the baffle and directly adheres to the element.**

■ **Evacuator Valve**

Open the evacuator valve (3) once a week under ordinary conditions or daily when used in a dusty place to get rid of large particles of dust and dirt.

(1) Air Cleaner Element
(2) Cover
(3) Evacuator Valve

9Y1211121GEG0025US0

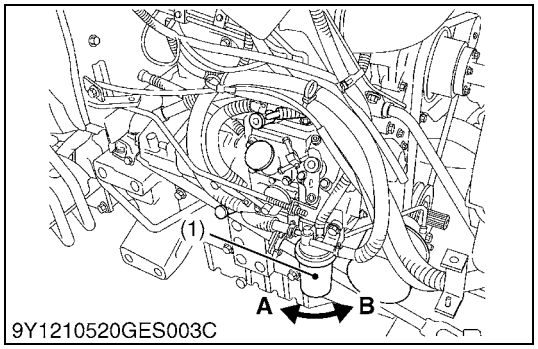

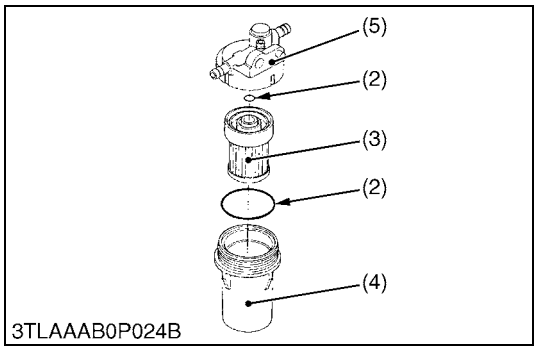

Cleaning Fuel Filter Element

This job should not be done in the field, but in a clean place.

1. Loosen and remove the filter bowl, and rinse the inside with kerosene.
2. Take out the element and dip it in the kerosene to rinse.
3. After cleaning, reassemble the fuel filter, keeping out dust and dirt.
4. Bleed the fuel system. (See page G-34.)

■ **IMPORTANT**
- **When the fuel filter bowl has been removed, fuel stops flowing from the fuel tank. If the fuel tank is almost full, however, the fuel will flow back from the fuel return pipe to the fuel filter. Before checking, make sure the fuel tank is less than half-full.**
- **If dust, dirt or water enters the fuel system, the fuel pump and injection nozzles are subject to premature wear. To prevent this, be sure to clean the fuel filter bowl and element periodically.**

(1) Fuel Filter Bowl
(2) O-ring
(3) Filter Element
(4) O-ring
(5) Body (Built-in Fuel Check Valve)

A: Loosen
B: Tighten

9Y1211121GEG0026US0

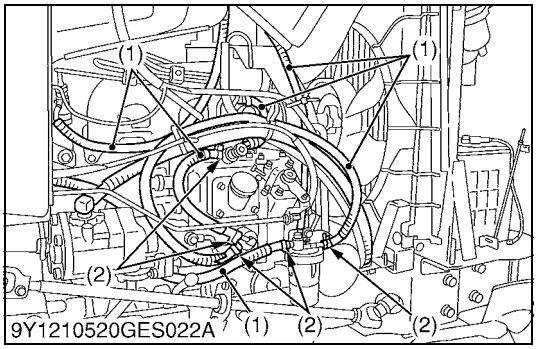

Checking Fuel Line

1. Check to see that all line and hose clamps are tight and not damaged.
2. If hoses and clamps are found worn or damaged, replace or repair them at once.

■ **NOTE**
- **If the fuel line is removed, be sure to property bleed the fuel system.**
- **Refer to "Bleeding Fuel System". (See page G-34.)**

(1) Fuel Line (2) Clamp Band

9Y1211121GEG0027US0

[5] CHECK POINTS OF EVERY 200 HOURS

Changing Engine Oil

1. See page G-16.

9Y1211121GEG0028US0

Replacing Engine Oil Filter

1. See page G-16.

9Y1211121GEG0029US0

Replacing Transmission Oil Filter [HST Type]

1. See page G-17.

9Y1211121GEG0030US0

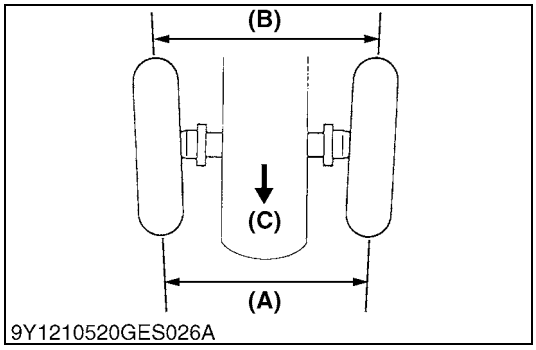

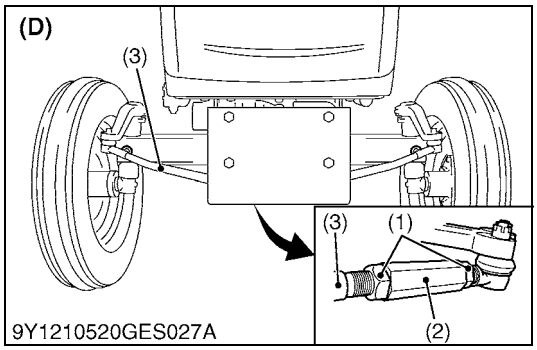

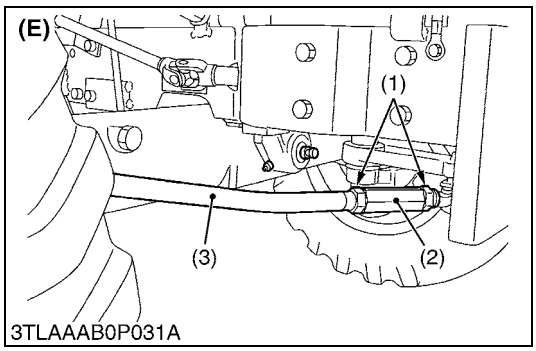

Adjusting Toe-in

1. Park the tractor on the flat place.
2. Inflate the tires to the specified pressure.
3. Turn steering wheel so front wheels are in the straight ahead position.
4. Lower the implement, lock the parking brake and stop the engine.
5. Measure distance between tire beads at front of tire, hub height.
6. Measure distance between tire beads at rear of tire, hub height.
7. Front distance should be 2 to 8 mm (0.08 to 0.3 in.) less than rear distance.
8. If the measurement is not within the factory specifications, adjust by changing the tie-rod length.

Toe-in (**(B) - (A)**)	Factory specification	2 to 8 mm 0.08 to 0.3 in.

■ **Adjusting**

1. Loosen the lock nut (1) and turn the turnbuckle (2) to adjust the tie-rod length until the proper toe-in measurement is obtained.
2. Retighten the tie-rod lock nut (1).

Tightening torque	Tie-rod lock nut	167 to 196 N·m 17.0 to 20.0 kgf·m 123 to 144 lbf·ft

■ **IMPORTANT**
- **A right and left tie-rod joint is adjusted to the same length.**

(1) Lock Nut
(2) Turnbuckle
(3) Tie-rod

(A) Wheel to Wheel Distance at front
(B) Wheel to Wheel Distance at rear
(C) Front
(D) 2WD
(E) 4WD

9Y1211121GEG0031US0

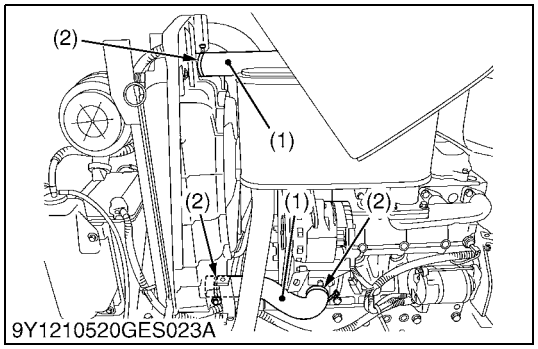

Checking Radiator Hose and Hose Clamp

Check to see if radiator hoses are properly fixed every 200 hours of operation or six months, whichever comes first.

1. If hose clamps (2) are loose or water leaks, tighten hose clamps (2) securely.
2. Replace hoses (1) and tighten hose clamps (2) securely, if radiator hoses (1) are swollen, hardened or cracked.
   Replace hoses and hose clamps every 2 years or earlier if checked and found that hoses are swollen, hardened or cracked.

■ **Precaution at Overheating**

Take the following actions in the event the coolant temperature be nearly or more than the boiling point, what is called **"Overheating"**.

1. Stop the machine operation in a safe place and keep the engine unloaded idling.
2. Do not stop the engine suddenly, but stop it after about 5 minutes of unloaded idling.
3. Keep yourself well away from the machine for further 10 minutes or while the steam blown out.
4. Check that there gets no dangers such as burn. Get rid of the causes of overheating, and then start again the engine.

(1) Radiator Hose (2) Clamp

9Y1211121GEG0032US0

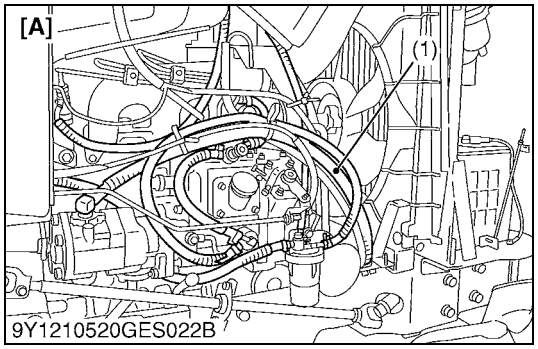

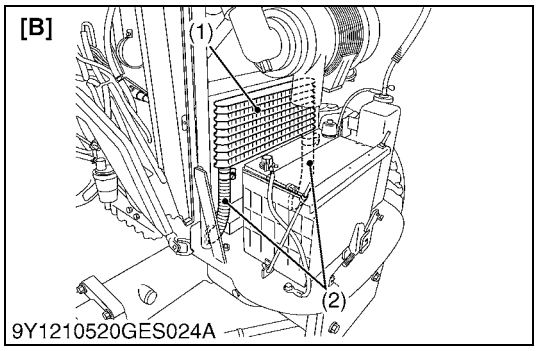

Checking Power Steering Oil Line [Manual Transmission Type] / Checking HST Oil Cooler Line [HST Type]

1. Check to see that all lines and hose clamps are tight and not damaged.
2. If hose and clamps are found worn or damaged, replace or repair them at once.

(1) Power Steering Pressure Hose **[A] Manual Transmission Type**
(2) HST Oil Cooler Line **[B] HST Type**

9Y1211121GEG0033US0

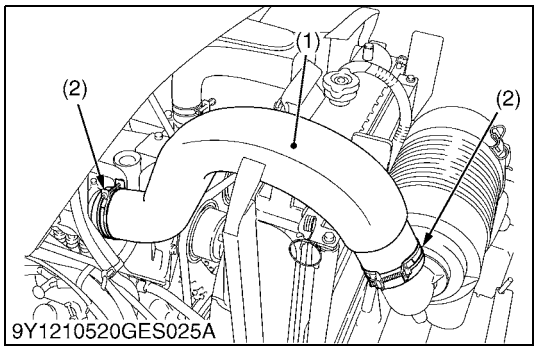

Checking Intake Air Line

1. Check to see that hoses and hose clamps are tight and not damaged.
2. If hoses and clamps are found worn or damaged, replace or repair them at once.

(1) Hose (2) Hose Clamp

9Y1211121GEG0034US0

[6] CHECK POINTS OF EVERY 400 HOURS

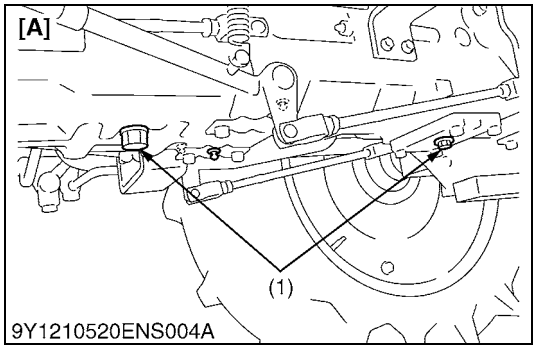

9Y1210520ENS004A

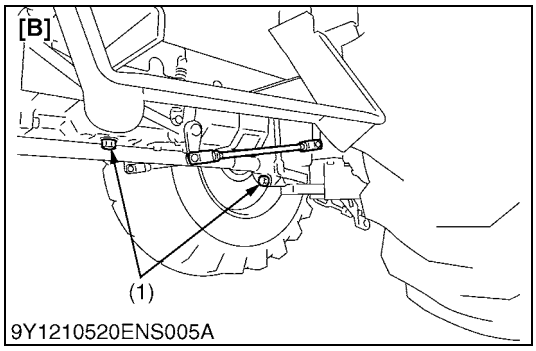

9Y1210520ENS005A

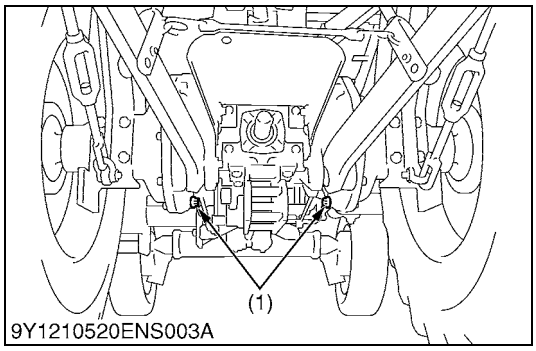

9Y1210520ENS003A

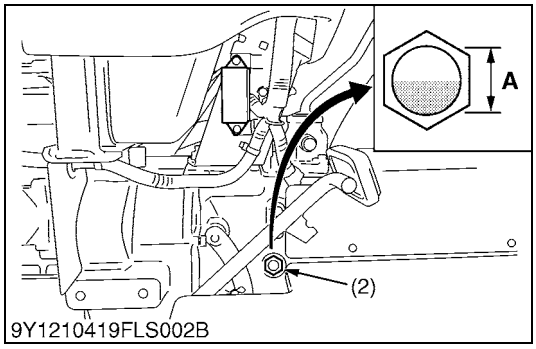

9Y1210419FLS002B

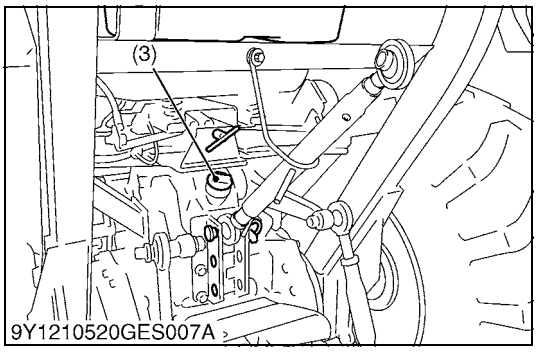

9Y1210520GES007A

Replacing Hydraulic Oil Filter

1. See page G-18.

9Y1211121GEG0035US0

Changing Transmission Fluid [Manual Transmission Type]

WARNING

To avoid personal injury or death:

- **Be sure to stop the engine before changing the oil filter cartridge.**
- **Allow engine to cool down sufficiently, oil can be hot and can burn.**

1. Place an oil pan underneath the transmission case.
2. Remove the drain plugs (1) at the bottom of the transmission case.
3. Drain the transmission fluid.
4. After draining, screw in the drain plugs (1).
5. Fill with new oil up to the upper line of the gauge (2).
6. After running the engine for a few minutes, stop it and check the fluid level again, if low, add fluid prescribed level **"A"**.

■ **IMPORTANT**

- **Use only multi-grade transmission fluid. Use of other fluids may damage the transmission or hydraulic system.**
- **Refer to "LUBRICANTS, FUEL AND COOLANT". (See page G-9.)**
- **Never work the tractor immediately after changing the transmission fluid. Keeping the engine at medium speed for a few minutes to prevent damage to the transmission.**
- **Do not mix different brands oil together.**

Transmission fluid capacity	2WD	27.0 L 7.1 U.S.gals 5.9 Imp.gals
	4WD	27.5 L 7.3 U.S.gals 6.1 Imp.gals

(1) Drain Plug
(2) Gauge
(3) Oil Inlet

A: Oil level is acceptable within this range.
[A] 2WD
[B] 4WD

9Y1211121GEG0036US0

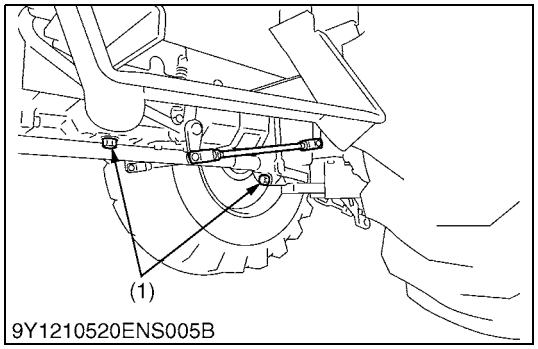

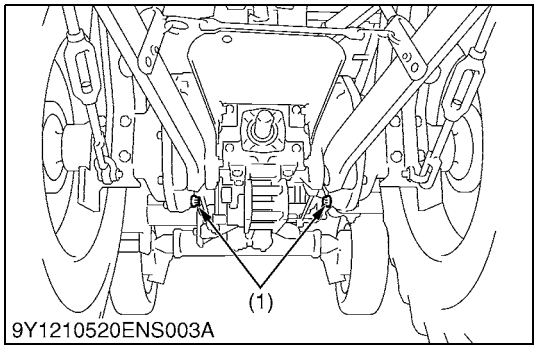

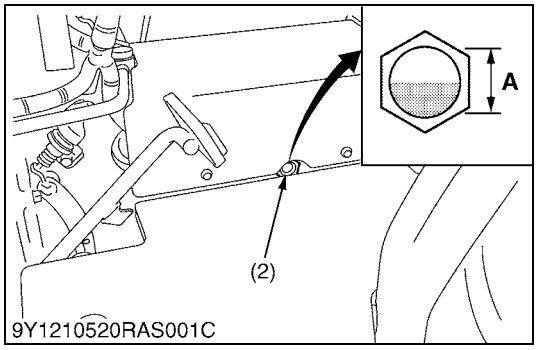

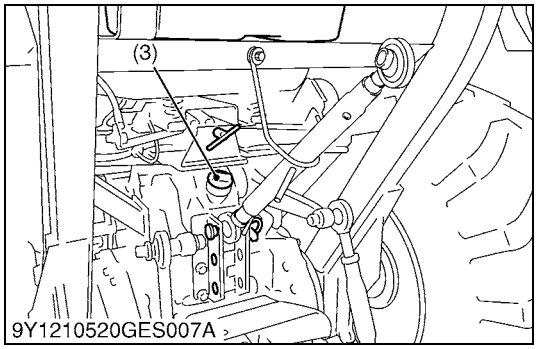

Changing Transmission Fluid [HST Type]

WARNING

To avoid personal injury or death:

- **Be sure to stop the engine before changing the oil filter cartridge.**
- **Allow engine to cool down sufficiently, oil can be hot and can burn.**

1. Place an oil pan underneath the transmission case.
2. Remove the drain plugs (1) at the bottom of the transmission case.
3. Drain the transmission fluid.
4. After draining, screw in the drain plugs (1).
5. Fill with new oil up to the upper line of the gauge (2).
6. After running the engine for a few minutes, stop it and check the fluid level again, if low, add fluid prescribed level **"A"**.

■ **IMPORTANT**

- **Use only multi-grade transmission fluid. Use of other fluids may damage the transmission or hydraulic system.**
- **Refer to "LUBRICANTS, FUEL AND COOLANT". (See page G-9.)**
- **Never work the tractor immediately after changing the transmission fluid. Keeping the engine at medium speed for a few minutes to prevent damage to the transmission.**
- **Do not mix different brands oil together.**

Transmission fluid capacity	23.5 L 6.2 U.S.gals 5.2 Imp.gals

(1) Drain Plug
(2) Gauge
(3) Oil Inlet

A: Oil level is acceptable within this range.

9Y1211121GEG0037US0

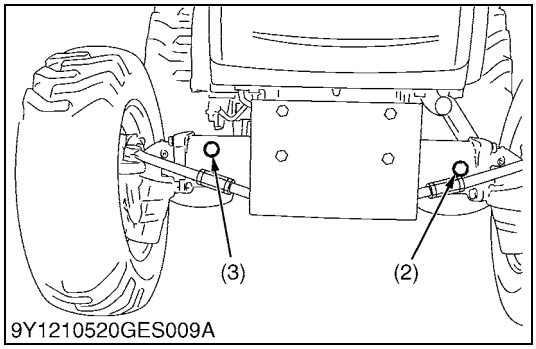

9Y1210520GES009A

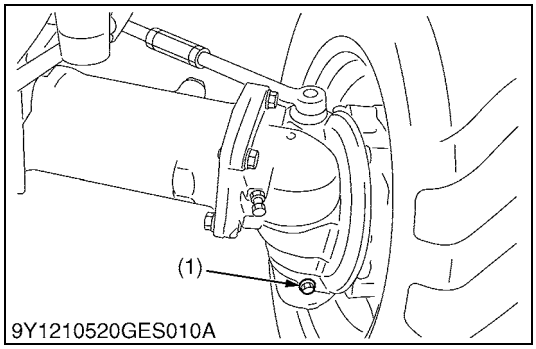

9Y1210520GES010A

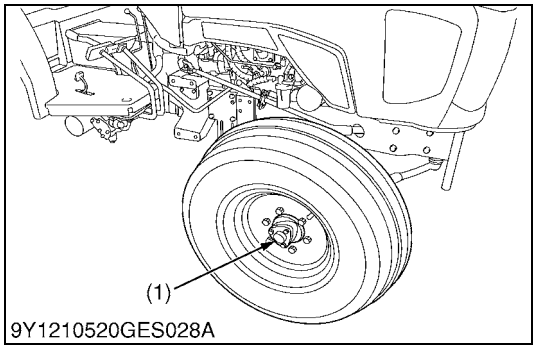

9Y1210520GES028A

Changing Front Axle Case Oil [4WD]

1. To drain the used oil, remove the right and left drain plugs and filling plug at the front axle case and drain the oil completely into the oil pan.
2. After draining reinstall the drain plugs.
3. Remove the oil level check plug.
4. Fill with the new oil up to the check plug port.
5. After filling reinstall the oil inlet plug and check plug.

■ **IMPORTANT**

- **Use KUBOTA SUPER UDT-2 fluid or SAE 80, 90 gear oil. Refer to "LUBRICANTS, FUEL AND COOLANT". (See page G-9.)**

Front axle case oil capacity	4.5 L 4.8 U.S.qts 4.0 Imp.qts

(1) Drain Plug
(2) Check Plug
(3) Oil Inlet Plug

9Y1211121GEG0038US0

Lubricating Grease Fitting [2WD]

1. Detach the cover (1), and apply bearing grease.

(1) Front Wheel Hub Cover

9Y1211121GEG0039US0

Replacing Fuel Filter Element

1. See page G-25.

9Y1211121GEG0085US0

[7] CHECK POINT OF EVERY 600 HOURS

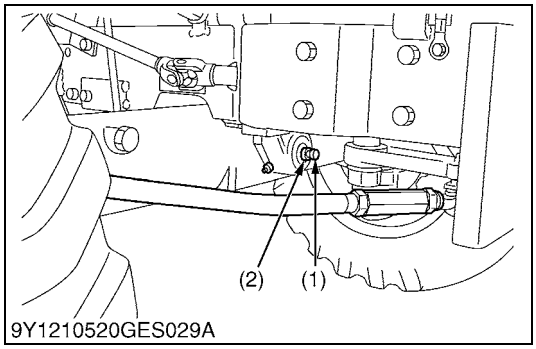

9Y1210520GES029A

Adjust Front Axle Pivot

If the front axle pivot pin adjustment is not correct, front wheel vibration can occur causing vibration in the steering wheel.

1. Loosen the lock nut (2), screw-in the adjusting screw (1) until seated, then tighten the screw with an additional 1/6 turn.
2. Retighten the lock nut.

(1) Adjusting Screw
(2) Lock Nut

9Y1211121GEG0040US0

[8] CHECK POINT OF EVERY 800 HOURS

Checking Valve Clearance

1. See page 1-S11.

9Y1211121GEG0041US0

[9] CHECK POINT OF EVERY 1500 HOURS

Checking Fuel Injection Nozzle Injection Pressure

1. See page 1-S16.

9Y1211121GEG0042US0

[10] CHECK POINT OF EVERY 3000 HOURS

Checking Injection Pump

1. See page 1-S15.

9Y1211121GEG0043US0

[11] CHECK POINT OF EVERY 1 YEAR

Replacing Air Cleaner Element

1. See page G-25.

9Y1211121GEG0044US0

[12] CHECK POINTS OF EVERY 2 YEARS

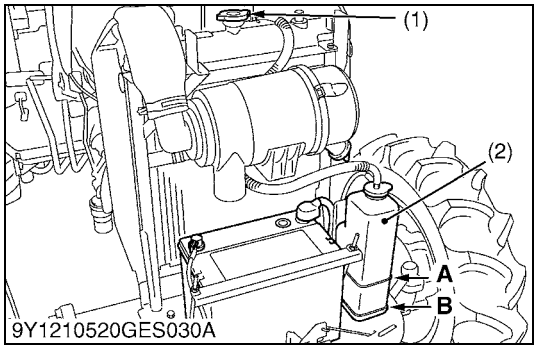

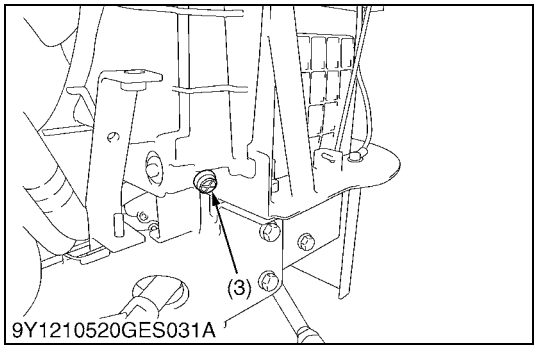

Flush Cooling System and Changing Coolant

WARNING

To avoid personal injury or death:

- **Do not remove the radiator cap while coolant is hot. When cool, slowly rotated cap to the first stop and allow sufficient time for excess pressure to escape before removing the cap completely.**

1. Stop the engine, remove the key and let it cool down.
2. To drain the coolant, open the radiator drain plug and remove radiator cap. The radiator cap must be removed to completely drain the coolant.
3. After all coolant is drained, reinstall the drain plug.
4. Fill with clean soft water and cooling system cleaner.
5. Follow directions of the cleaner instruction.
6. After flushing, fill with clean soft water and anti-freeze until the coolant level is just below the radiator cap. INstall the radiator cap securely.
7. Fill with coolant up to the **"FULL"** mark of recovery tank.
8. Start and operate the engine for a few minutes.
9. Stop the engine, remove the key and let cool.
10. Check coolant level of recovery tank and add coolant if necessary.
11. Properly dispose of used coolant.

Coolant	Capacity	6.0 L 6.3 U.S.qts 5.3 Imp.qts
Coolant (Recovery tank)	Capacity	0.6 L 0.6 U.S.qts 0.5 Imp.qts

■ **IMPORTANT**

- **Do not start engine without coolant.**
- **Use clean, fresh water and anti-freeze to fill the radiator and recovery tank.**
- **When mixing the anti-freeze with water, the anti-freeze mixing ratio is 50 %.**
- **Securely tighten radiator cap (1). If the cap is loose or improperly fitted, water may lead out and the engine could overheat.**

(1) Radiator Cap
(2) Recovery Tank
(3) Drain Plug

A: FULL
B: LOW

9Y1211121GEG0045US0

Anti-freeze

WARNING

To avoid personal injury or death:

- **When using anti-freeze, put on some protection such as rubber gloves (anti-freeze contains poison).**
- **If it is swallowed, seek immediate medical help. Do NOT make a person throw up unless told to do so by poison control or a health care professional. Use standard first aid and CPR for signs of shock or cardiac arrest. Call your local emergency number for further assistance.**
- **When anti-freeze comes in contact with the skin or clothing, wash it off immediately.**
- **Do not mix different types of anti-freeze.**
  The mixture can produce chemical reaction causing harmful substances.
- **Anti-freeze is extremely flammable and explosive under certain conditions. Keep fire and children away from anti-freeze.**
- **When draining fluids from the engine, place some container underneath the engine body.**
- **Do not pour waste onto the grounds, down a drain, or into any water source.**
- **Also, observe the relevant environmental protection regulations when disposing of anti-freeze.**

If it freezes, coolant can damage the cylinders and radiator. If the ambient temperature falls below 0 °C (32 °F) or before a long-term storage, let out cooling water completely, or mix fresh water with long-life coolant and fill the radiator and recovery tank with the mixture.

1. Long-life coolant (hereafter LLC) comes in several types. Use ethylene glycol (EG) type for this engine.
2. Before employing LLC-mixed cooling water, fill the radiator with fresh water and empty it again. Repeat this procedure 2 or 3 times to clean up the inside.
3. Mixing the LLC
   Put the LLC in cooling water in the percentage (%) for a target temperature. When mixing, stir it up well, and then fill into the radiator.
4. The procedure for the mixing of water and anti-freeze differs according to the make of the antifreeze and the ambient temperature. Refer to SAE J1034 standard, more specifically also to SAE J814c.

Vol % Anti-freeze	Freezing Point		Boiling Point*	
	°C	°F	°C	°F
40	−24	−12	106	222
50	−37	−34	108	226

* At 1.013×10^5 Pa (760 mmHg) pressure (atmospheric). A higher boiling point is obtained by using a radiator pressure cap which permits the development of pressure within the cooling system.

(To be continued)

(Continued)

5. Adding the LLC
   a) Add only water if the mixture reduces in amount by evaporation.
   b) If there is a mixture leak, add the LLC of the same manufacturer and type in the same mixture percentage.
      * Never add any long-life coolant of different manufacturer. (Different brands may have different additive components, and the engine may fail to perform as specified.)
6. When the LLC is mixed, do not employ any radiator cleaning agent. The LLC contains anticorrosive agent.
   If mixed with the cleaning agent, sludge may build up, adversely affecting the engine parts.
7. Kubota's genuine long-life coolant has a service life of 2 years. Be sure to change the coolant every 2 years.

■ **NOTE**

- **The above data represent industry standards that necessitate a minimum glycol content in the concentrated antifreeze.**
- **When the coolant level drops due to evaporation, add water only to keep the antifreeze mixing ratio less than 50 %. In case of leakage, add antifreeze and water in the specified mixing ratio before filling in to the radiator.**

9Y1211121GEG0046US0

Replacing Fuel Hose

1. Replace the fuel hoses and clamps.
   Refer to "Checking Fuel Line". (See page G-26.)

9Y1211121GEG0047US0

Replacing Radiator Hose (Water Pipes)

1. Replace the hoses and clamps.
   Refer to "Checking Radiator Hose and Clamp". (See page G-27.)

9Y1211121GEG0048US0

Replacing Power Steering Hose

1. Replace the hoses and clamps. (See page G-27.)

9Y1211121GEG0049US0

Replacing Air Hose

1. Replace the air hose and clamps.
   Refer to "Checking Intake Air Line". (See page G-27.)

9Y1211121GEG0050US0

Replacing HST Oil Cooler Line (HST Type)

1. Replace the hoses and clamps. (See page G-27.)

9Y1211121GEG0051US0

[13] OTHERS

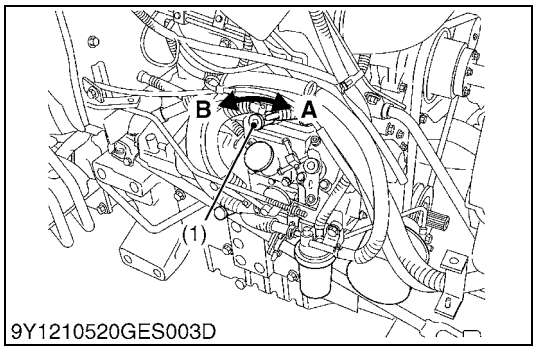

Bleeding Fuel System

Air must removed:

1. When the fuel filter or lines are removed.
2. When tank is completely empty.
3. After the tractor has not been used for a long period of time.

Bleeding procedure is as follows:

1. Fill the fuel tank with fuel.
2. Open the air vent cock (1) on the fuel injection pump.
3. Close the air vent cock (1) after 30 seconds.

■ **IMPORTANT**

- **Always close the air vent cock (1) except for bleeding fuel lines.**
  Otherwise, engine runs irregularly or stalls frequently.

(1) Air Vent Cock

A: Close
B: Open

9Y1211121GEG0052US0

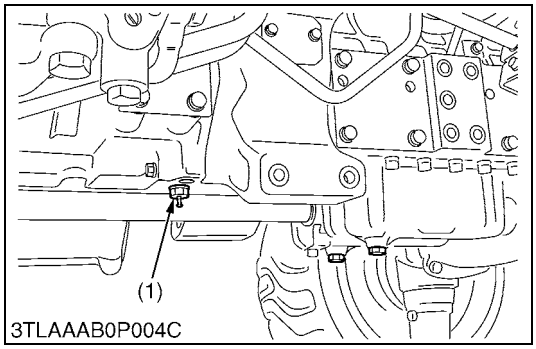

Draining Clutch Housing Water

■ **NOTE**

- **The tractor is equipped with split pin plug (1) under the clutch housing.**
- **After operating in rain, snow or tractor has been washed, water may get into the clutch housing.**

1. Check it by pushing in the split pin (1).
2. If water enters into the clutch housing, remove the plug (1) and drain the water, then reinstall the plug.

(1) Split Pin (Plug)

9Y1211121GEG0053US0

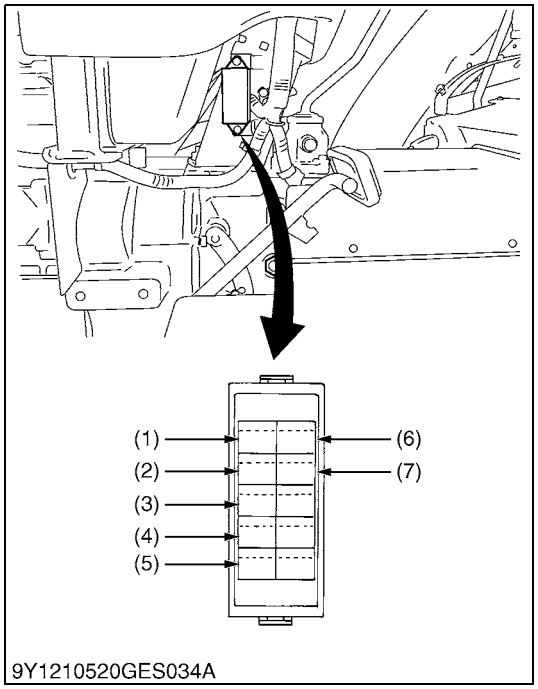

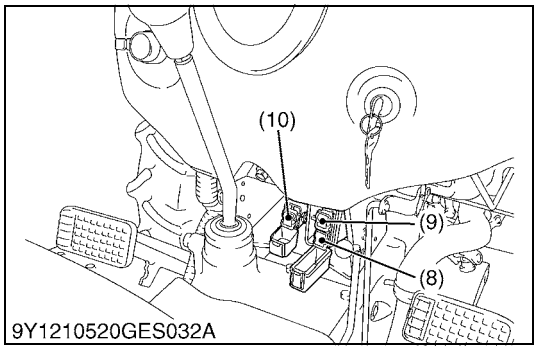

Replacing Fuse

1. The tractor electrical system is protected from potential damage by fuses.
   A blown fuse indicates that there is an overload or short somewhere in the electrical system.
2. If any of the fuses should blow, replace with a new one of the same capacity.

■ **IMPORTANT**

- **Before replacing a blown fuse, determine why the fuse blew and make any necessary repairs. Failure to follow this procedure may result in serious damage to the tractor electrical system. Refer to troubleshooting section of this manual.**
  If any of them should blow, replace with a new one of the same capacity.

Fuse No.	Capacity (A)	Protected circuit
(1)	15	Hazard
(2)	10	Work Light
(3)	10	Panel
(4)	15	Head Light
(5)	5	Key stop
(6)	5	Glow lamp
(7)	5	Starter relay
(8)	40	Main
(9)	30	Key stop
(10)	40	Key switch

9Y1211121GEG0054US0

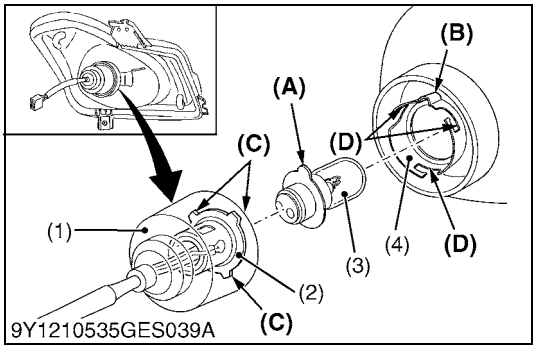

Replacing Head Lamp

CAUTION

To avoid personal injury:

- **Be careful not to drop the bulb, hit anything against the lamp, apply excess force, and get the lamp scratched. If broken, glass may cause injury.**
- **Before replacing the lamp, be sure to turn off the light and wait until the bulb cools down, otherwise, you may get burned.**

■ **Removing Bulb**

1. Remove the rubber boot.
2. Turn the socket counterclockwise while pressing and remove it.
3. Remove the bulb.

■ **Attaching Bulb**

1. Align **(A)** of the bulb with **(B)** of the lamp case and attach the bulb.
2. Align **(C)** of the socket with **(D)** of the lamp case and attach the socket.
3. Attach the rubber boot.

■ **IMPORTANT**

- **Be sure to use a new bulb of the specified wattage.**
- **Never touch the bulb surface (glass) with bare hands. Fingerprints, for example, may break the bulb.**

(1) Rubber Boot
(2) Socket
(3) Bulb
(4) Lamp Case

(A) Align to (B)
(C) Align to (D)

9Y1211121GEG0055US0

Replacing Light Bulb

1. Head lights and rear combination lights.
   Take the bulb out of the light body and replace with a new one.
2. Other lights
   Detach the lens and replace the bulb.

Light	Capacity
Head light	25 W / 25W
Tail light	5 W
Turn signal / Hazard light (rear)	21 W
Turn signal / Hazard light (front)	23 W
Instrument panel light	1.7 W

9Y1211121GEG0056US0

8. SPECIAL TOOLS

[1] SPECIAL TOOLS FOR ENGINE

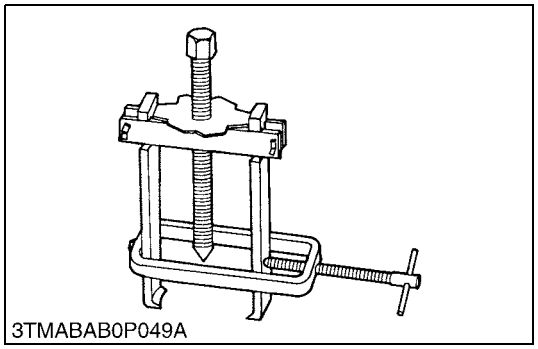
3TMABAB0P049A

Special Use Puller Set

Code No.
- 07916-09032

Application
- Use exclusively to pull out bearing, gears and other parts with ease.

WSM000001GEG0011US0

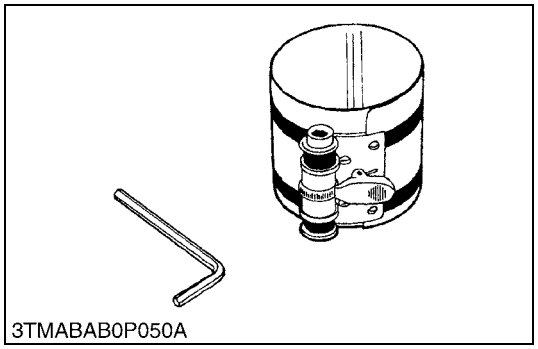
3TMABAB0P050A

Piston Ring Compressor

Code No.
- 07909-32111

Application
- Use exclusively to push in the piston with piston rings into the cylinder.

WSM000001GEG0012US0

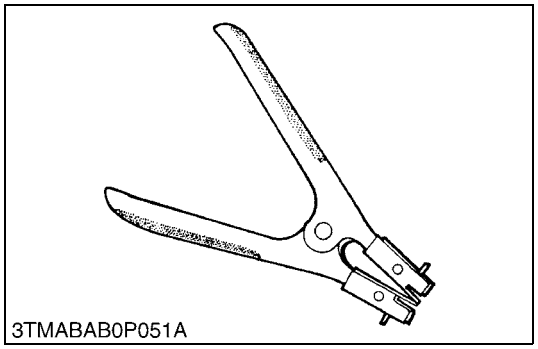
3TMABAB0P051A

Piston Ring Tool

Code No.
- 07909-32121

Application
- Use exclusively to remove or install the piston ring with ease.

WSM000001GEG0013US0

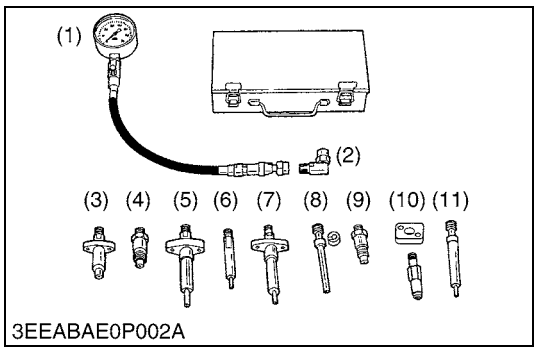

3EEABAE0P002A

Diesel Engine Compression Tester (for Injection Nozzle)

Code No.
- 07909-30208 (Assembly)
- 07909-30934 (**A** to **F**)
- 07909-31211 (**E** and **F**)
- 07909-31231 (**H**)
- 07909-31251 (**G**)
- 07909-31271 (**I**)
- 07909-31281 (**J**)

Application
- Use to measure diesel engine compression and diagnostics of need for major overhaul.

(1) Gauge
(2) **L** Joint
(3) Adaptor **A**
(4) Adaptor **B**
(5) Adaptor **C**
(6) Adaptor **E**
(7) Adaptor **F**
(8) Adaptor **G**
(9) Adaptor **H**
(10) Adaptor **I**
(11) Adaptor **J**

WSM000001GEG0014US0

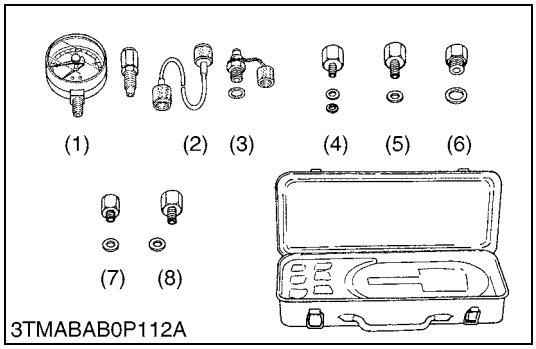

Oil Pressure Tester

Code No.
- 07916-32032

Application
- Use to measure lubricating oil pressure.

(1) Gauge
(2) Cable
(3) Threaded Joint
(4) Adaptor **1**
(5) Adaptor **2**
(6) Adaptor **3**
(7) Adaptor **4**
(8) Adaptor **5**

WSM000001GEG0015US0

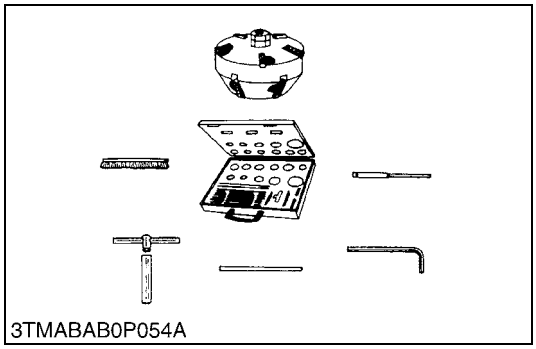

Valve Seat Cutter

Code No.
- 07909-33102

Application
- Use to reseat valves.

Angle
- 0.79 rad (45 °)
- 0.26 rad (15 °)

Diameter
- 28.6 mm (1.13 in.)
- 31.6 mm (1.24 in.)
- 35.0 mm (1.38 in.)
- 38.0 mm (1.50 in.)
- 41.3 mm (1.63 in.)
- 50.8 mm (2.00 in.)

WSM000001GEG0016US0

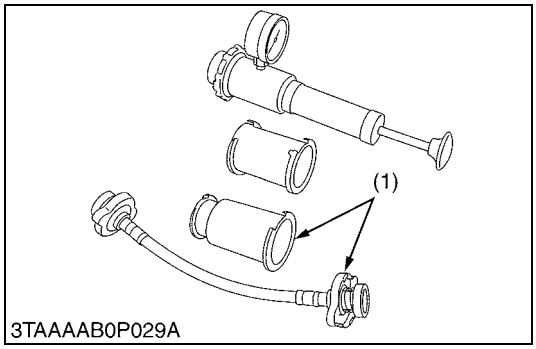

Radiator Tester

Code No.
- 07909-31551

Application
- Use to check of radiator cap pressure, and leaks from cooling system.

Remarks
- Adaptor (1) BANZAI Code No. RCT-2A-30S.

(1) Adaptor

WSM000001GEG0017US0

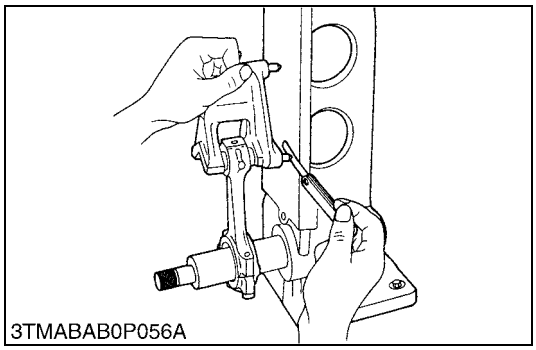

Connecting Rod Alignment Tool

Code No.
- 07909-31661

Application
- Use to check the connecting rod alignment.

Applicable range
- Connecting rod big end I.D.
  30 to 75 mm dia. (1.2 to 2.9 in. dia.)
- Connecting rod length
  65.0 to 300 mm (2.56 to 11.8 in.)

WSM000001GEG0020US0

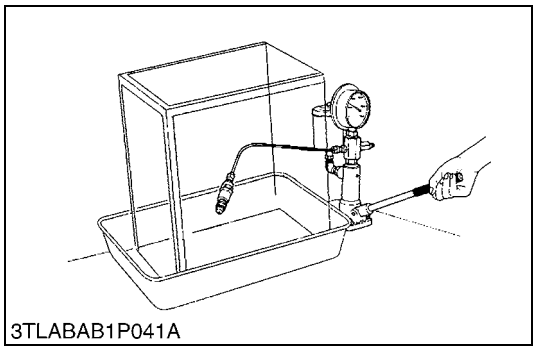

Nozzle Tester

Code No.
- 07909-31361

Application
- Use to check the fuel injection pressure and spray pattern of nozzle.

Measuring range
- 0 to 50 MPa (0 to 500 kgf/cm^2, 0 to 7200 psi)

WSM000001GEG0021US0

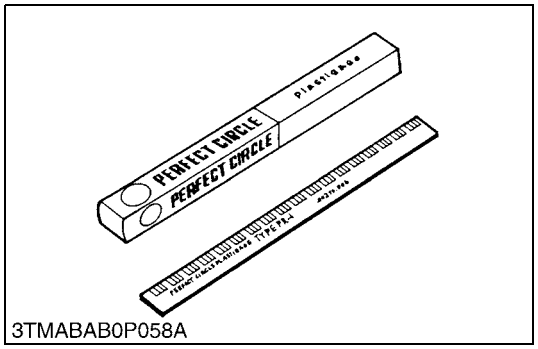

3TMABAB0P058A

Plastigauge

Code No.
- 07909-30241

Application
- Use to check the oil clearance between crankshaft and bearing, etc..

Measuring range
- Green: 0.03 to 0.07 mm (0.001 to 0.003 in.)
- Red: 0.05 to 0.1 mm (0.002 to 0.006 in.)
- Blue: 0.1 to 0.2 mm (0.004 to 0.009 in.)

WSM000001GEG0022US0

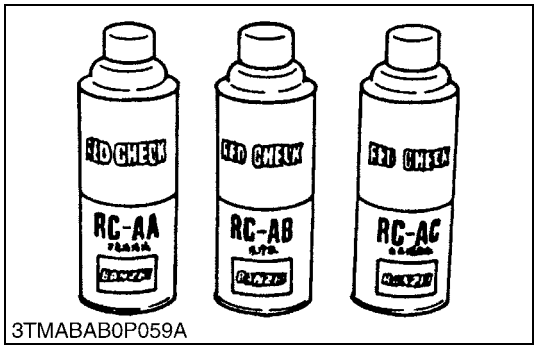

3TMABAB0P059A

Red Check

Code No.
- 07909-31371

Application
- Use to check cracks on cylinder head, cylinder block, etc..

WSM000001GEG0023US0

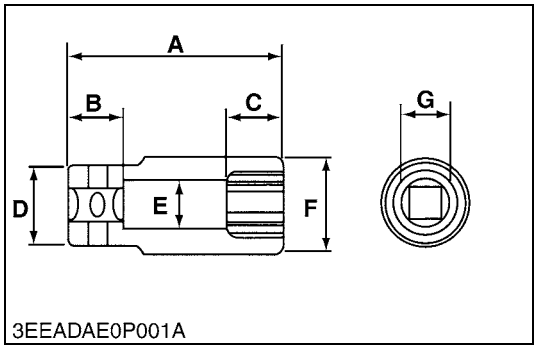

3EEADAE0P001A

Socket Wrench for Crank Pulley Nut (46 mm Deep Socket Wrench)

Application
- To loosen and tighten the mounting nut of fan drive pulley.

A	100 mm (3.94 in.)
B	25.0 mm (0.984 in.)
C	27.0 mm (1.06 in.)
D	45.0 mm dia. (1.77 in. dia.)
E	35.0 mm dia. (1.38 in. dia.)
F	62.5 mm dia. (2.46 in. dia.)
G	46.0 mm (1.81 in.)

M00000003GEG0062US1

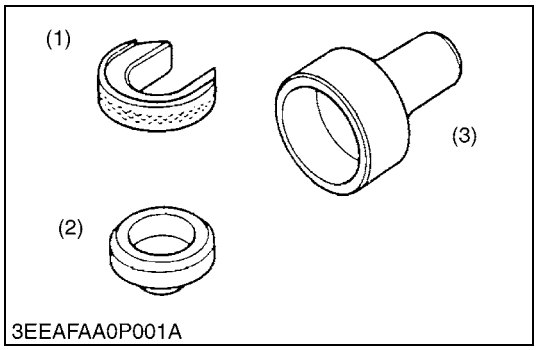

3EEAFAA0P001A

Auxiliary Socket for Fixing Crankshaft Sleeve

Application
- To fix the crankshaft sleeve of the diesel engine.

A	80.0 mm (3.15 in.)
B	60.10 to 60.30 mm (2.367 to 2.374 in.)
C	80.0 mm dia. (3.15 in. dia.)
D	85.0 mm dia. (3.35 in. dia.)
E	60.10 to 60.30 mm dia. (2.367 to 2.374 in. dia.)
F	26.30 to 26.40 mm (1.036 to 1.039 in.)
G	25.85 to 25.90 mm (1.018 to 1.019 in.)
H	15.0 mm (0.591 in.)
I	5.0 mm (0.20 in.)

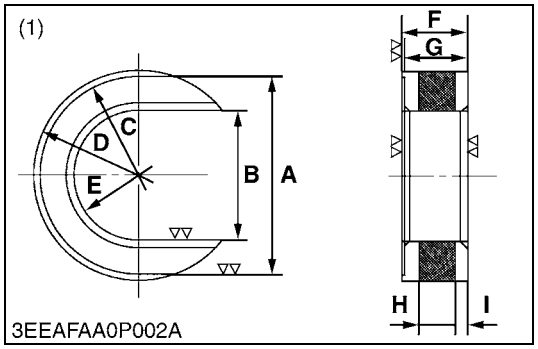

3EEAFAA0P002A

(1) Stopper
(2) Sleeve Guide
(3) Auxiliary Socket for Pushing

(To be continued)

(Continued)

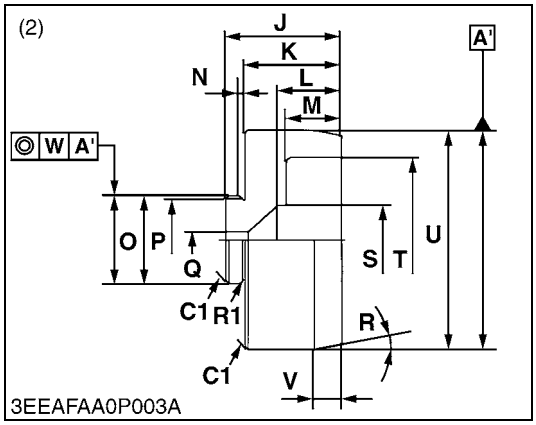

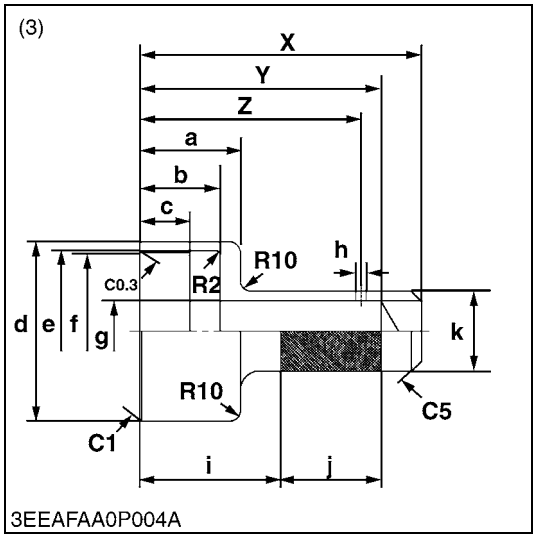

Application

- To fix the crankshaft sleeve of the diesel engine.

J	42.0 mm (1.65 in.)
K	30.50 to 30.60 mm (1.201 to 1.204 in.)
L	23.0 mm (0.906 in.)
M	20.0 mm (0.787 in.)
N	2.0 mm (0.079 in.)
O	31.911 to 31.950 mm dia. (1.2564 to 1.2578 in. dia.)
P	30.0 mm dia. (1.18 in. dia.)
Q	5.0 mm dia. (0.20 in. dia.)
R	0.09 rad (5 °)
S	25.0 mm dia. (0.984 in. dia.)
T	60.0 mm dia. (2.36 in. dia.)
U	79.80 to 79.85 mm dia. (3.142 to 3.143 in. dia.)
V	10.0 mm (0.394 in.)
W	0.04 mm dia. (0.002 in. dia.)
X	140 mm (5.51 in.)
Y	120 mm (4.72 in.)
Z	110 mm (4.33 in.)
a	50.0 mm (1.97 in.)
b	39.90 to 40.00 mm (1.571 to 1.574 in.)
c	25.0 mm (0.984 in.)
d	90.0 mm dia. (3.54 in. dia.)
e	81.0 mm dia. (3.19 in. dia.)
f	80.10 to 80.15 mm dia. (3.154 to 3.155 in. dia.)
g	30.0 mm dia. (1.18 in. dia.)
h	5.0 mm dia. (0.20 in. dia.)
i	70.0 mm (2.76 in.)
j	50.0 mm (1.97 in.)
k	40.0 mm dia. (1.57 in. dia.)
C1	Chamfer 1.0 mm (0.039 in.)
C5	Chamfer 5.0 mm (0.20 in.)
C0.3	Chamfer 0.3 mm (0.01 in.)
R1	1.0 mm radius (0.039 in. radius)
R2	2.0 mm radius (0.079 in. radius)
R10	10.0 mm radius (0.394 in. radius)

(2) Sleeve Guide (3) Auxiliary Socket for Pushing

M00000003GEG0063US1

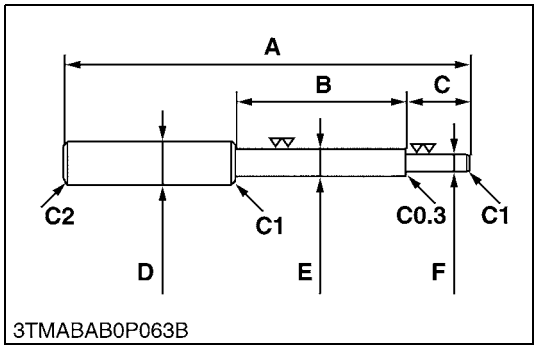

3TMABAB0P063B

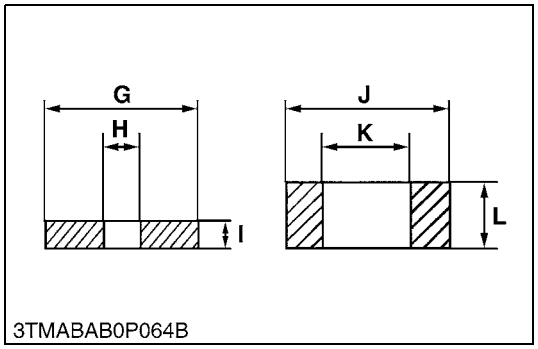

3TMABAB0P064B

Valve Guide Replacing Tool

Application

- Use to press out and press in the valve guide.

A	225 mm (8.86 in.)
B	70 mm (2.8 in.)
C	45 mm (1.8 in.)
D	20 mm dia. (0.79 in. dia.)
E	11.7 to 11.9 mm dia. (0.461 to 0.468 in. dia.)
F	6.50 to 6.60 mm dia. (0.256 to 0.259 in. dia.)
G	25 mm (0.98 in.)
H	6.70 to 7.00 mm dia. (0.264 to 0.275 in. dia.)
I	5.0 mm (0.20 in.)
J	20 mm dia. (0.79 in. dia.)
K	12.5 to 12.8 mm dia. (0.493 to 0.503 in. dia.)
L	8.90 to 9.10 mm (0.351 to 358 in.)
C1	Chamfer 1.0 mm (0.039 in.)
C2	Chamfer 2.0 mm (0.079 in.)
C0.3	Chamfer 0.30 mm (0.012 in.)

9Y1211121GEG0057US0

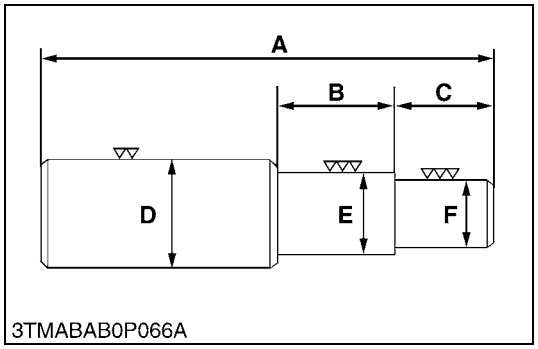

3TMABAB0P066A

Bushing Replacing Tools

Application

- To press out and press fit the bushing.

1) For small end bushing

A	162 mm (6.38 in.)
B	35 mm (1.4 in.)
C	27 mm (1.1 in.)
D	35 mm dia. (1.4 in. dia.)
E	27.90 to 27.95 mm dia. (1.099 to 1.100 in. dia.)
F	25.00 to 25.01 mm dia. (0.9843 to 0.9846 in. dia.)

2) For idle gear bushing

A	175 mm (6.89 in.)
B	40 mm (1.6 in.)
C	38 mm (1.5 in.)
D	45 mm dia. (1.8 in. dia.)
E	41.90 to 41.95 mm dia. (1.650 to 1.651 in. dia.)
F	37.950 to 37.970 mm dia. (1.4941 to 1.4948 in. dia.)

9Y1211121GEG0058US0

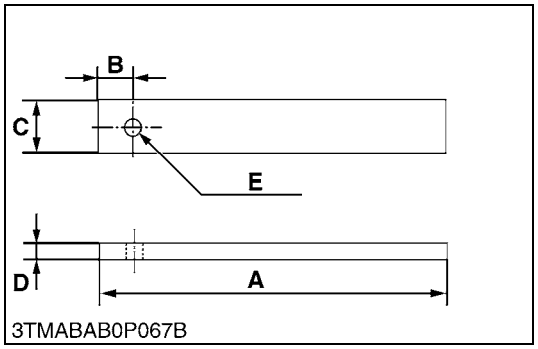

3TMABAB0P067B

Flywheel Stopper

Application

- Use to loosen and tighten the flywheel screw.

A	200 mm (7.87 in.)
B	20 mm (0.79 in.)
C	30 mm (1.18 in.)
D	8 mm (0.31 in.)
E	10 mm dia. (0.39 in. dia.)

9Y1211121GEG0059US0

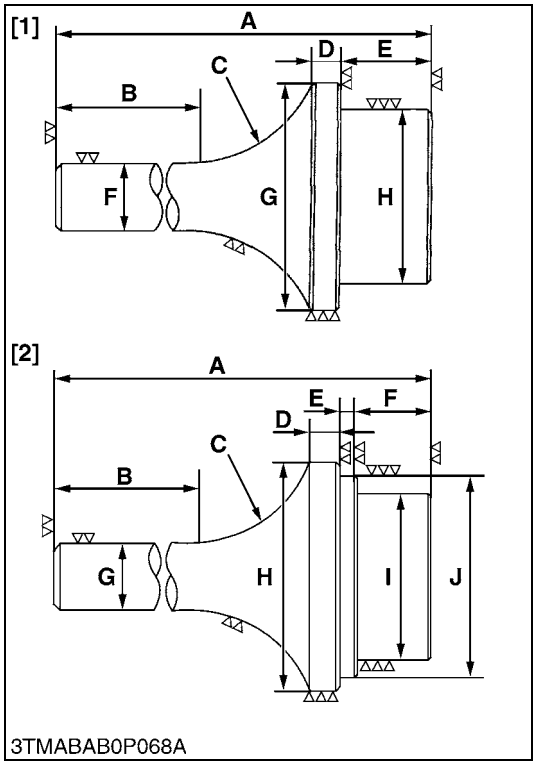

Crankshaft Bearing 1 Replacing Tool

Application

- Use to press out and press fit the crankshaft bearing 1.

[Extracting tool]

A	135 mm (5.31 in.)
B	72 mm (2.83 in.)
C	R40 mm (R1.57 in.)
D	10 mm (0.39 in.)
E	20 mm (0.79 in.)
F	20 mm dia. (0.79 in. dia.)
G	64.8 to 64.9 mm dia. (2.551 to 2.555 in. dia.)
H	59.8 to 59.9 mm dia. (2.354 to 2.358 in. dia.)

[Inserting tool]

A	130 mm (5.12 in.)
B	72 mm (2.83 in.)
C	R40 mm (R1.57 in.)
D	9 mm (0.35 in.)
E	4 mm (0.16 in.)
F	20 mm (0.79 in.)
G	20 mm dia. (0.79 in. dia.)
H	68 mm dia. (2.68 in. dia.)
I	59.8 to 59.9 mm dia. (2.354 to 2.358 in. dia.)
J	64.8 to 64.9 mm dia. (2.551 to 2.555 in. dia.)

9Y1211121GEG0060US0

Balancer Metal Replacing Tool (for Removing)

Application

- To remove the metal bearing.

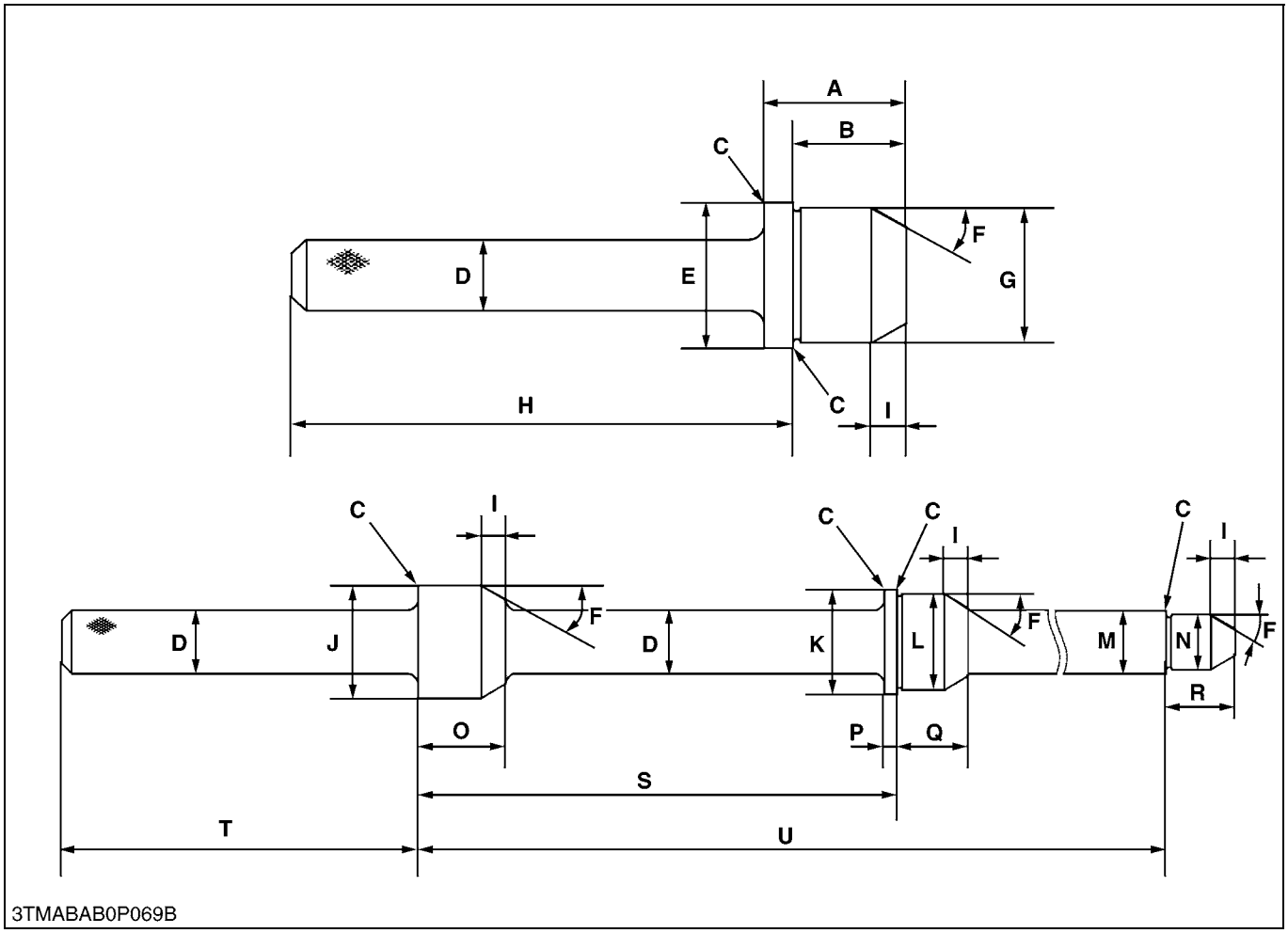

A	41 mm (1.6 in.)	**L**	41.934 to 41.950 mm dia. (1.6510 to 1.6515 in. dia.)
B	32.5 mm (1.28 in.)	**M**	24.959 to 24.980 mm dia. (0.98264 to 0.98346 in. dia.)
C	Chamfer 0.3 mm (0.01 in.)	**N**	21.947 to 21.960 mm dia. (0.86406 to 0.86456 in. dia.)
D	25 mm dia. (0.98 in. dia.)	**O**	36 mm (1.4 in.)
E	46.950 to 46.975 mm dia. (1.8485 to 1.8494 in. dia.)	**P**	5 mm (0.2 in.)
F	0.52 rad (30 °)	**Q**	29.0 mm (1.14 in.)
G	43.934 to 43.950 mm dia. (1.7297 to 1.7303 in. dia.)	**R**	28.0 mm (1.10 in.)
H	148.5 mm (5.846 in.)	**S**	195.25 to 195.75 mm (7.6870 to 7.7066 in.)
I	10 mm (0.39 in.)	**T**	145 mm (5.71 in.)
J	46.50 to 46.75 mm dia. (1.831 to 1.840 in. dia.)	**U**	384.75 to 385.25 mm (15.148 to 15.167 in.)
K	44.950 to 44.975 mm dia. (1.7697 to 1.7706 in. dia.)		

M00000003GEG0064US1

Balancer Metal Replacing Tool (for Fitting)

Application

- To press fit the metal bearing.

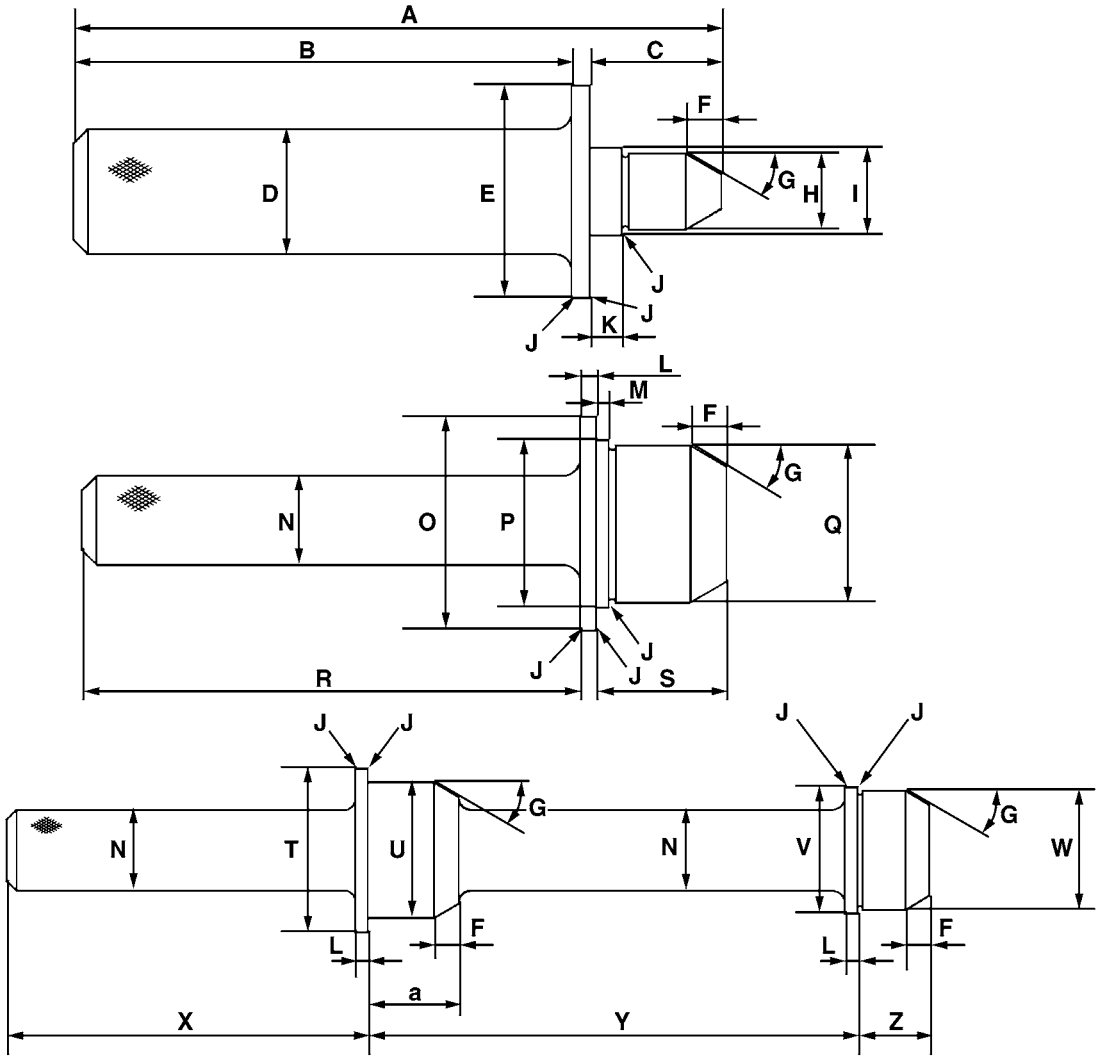

3TMABAB0P070B

A	182 mm (7.17 in.)	**O**	60 mm dia. (2.4 in. dia.)
B	140 mm (5.51 in.)	**P**	46.950 to 46.975 mm dia. (1.8485 to 1.8494 in. dia.)
C	37 mm (1.5 in.)	**Q**	43.934 to 43.950 mm dia. (1.7297 to 1.7303 in. dia.)
D	35 mm dia. (1.4 in. dia.)	**R**	140 mm (5.51 in.)
E	60 mm dia. (2.4 in. dia.)	**S**	36 mm (1.4 in.)
F	10 mm (0.39 in.)	**T**	60 mm dia. (2.4 in. dia.)
G	0.52 rad (30 °)	**U**	46.950 to 46.975 mm dia. (1.8485 to 1.8494 in. dia.)
H	21.947 to 21.960 mm dia. (0.86406 to 0.86456 in. dia.)	**V**	44.950 to 44.975 mm dia. (1.7697 to 1.7706 in. dia.)
I	24.959 to 24.980 mm dia. (0.98264 to 0.98346 in. dia.)	**W**	41.934 to 41.950 mm dia. (1.6510 to 1.6515 in. dia.)
J	Chamfer 0.3 mm (0.01 in.)	**X**	145 mm (5.71 in.)
K	8.8 to 9.2 mm (0.35 to 0.36 in.)	**Y**	195.25 to 195.75 mm (7.6870 to 7.7066 in.)
L	5 mm (0.2 in.)	**Z**	29 mm (1.1 in.)
M	3.3 to 3.7 mm (0.13 to 0.14 in.)	**a**	36 mm (1.4 in.)
N	25 mm dia. (0.98 in. dia.)		

M00000003GEG0065US1

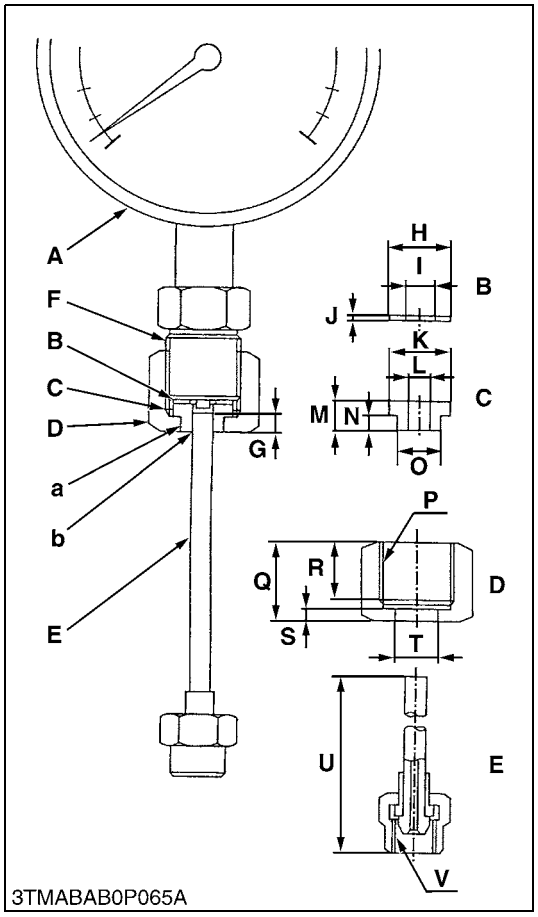

Injection Pump Pressure Tester

Application

- Use to check fuel tightness of injection pumps.

■ **NOTE**

- **The following special tools are not provided, so make them referring to the figure.**

A	Pressure gauge full scale: More than 29.4 MPa (300 kgf/cm^2, 4267 psi)
B	Copper gasket
C	Flange (Material: Steel)
D	Hex. nut 27 mm (1.06 in.) across the plat
E	Injection pipe
F	PF 1/2
G	5 mm (0.20 in.)
H	17 mm dia. (0.67 in. dia.)
I	8 mm dia. (0.31 in. dia.)
J	1.0 mm (0.039 in.)
K	17 mm dia. (0.67 in. dia.)
L	6.10 to 6.20 mm dia. (0.2402 to 0.2441 in. dia.)
M	8 mm (0.31 in.)
N	4 mm (0.16 in.)
O	11.97 to 11.99 mm dia. (0.4713 to 0.4721 in. dia.)
P	PF 1/2
Q	23 mm (0.91 in.)
R	17 mm (0.67 in.)
S	4 mm (0.16 in.)
T	12.00 to 12.02 mm dia. (0.4724 to 0.4732 in. dia.)
U	100 mm (3.94 in.)
V	M12 × 1.5
a	Adhesive application
b	Fillet welding on the enter circumference

9Y1211121GEG0061US0

[2] SPECIAL TOOLS FOR TRACTOR

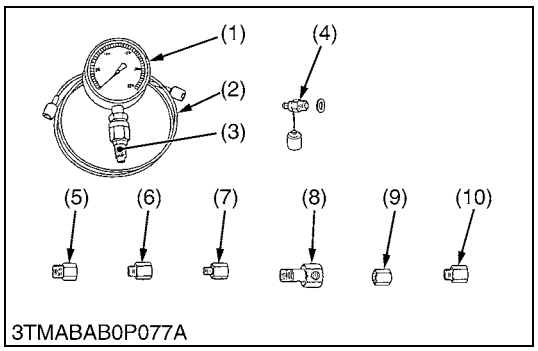

Relief Valve Pressure Tester

Code No.

- 07916-50045

Application

- This allows easy measurement of relief set pressure.

(1) Gauge (07916-50322)
(2) Cable (07916-50331)
(3) Threaded Joint (07916-50401)
(4) Threaded Joint (07916-50341)
(5) Adaptor **B** (M18 × P1.5) (07916-50361)
(6) Adaptor **C** (PS3/8) (07916-50371)
(7) Adaptor **D** (PT1/8) (07916-50381)
(8) Adaptor **E** (PS3/8) (07916-50392)
(9) Adaptor **F** (PF1/2) (07916-62601)
(10) Adaptor **58** (PT1/4) (07916-52391)

WSM000001GEG0027US0

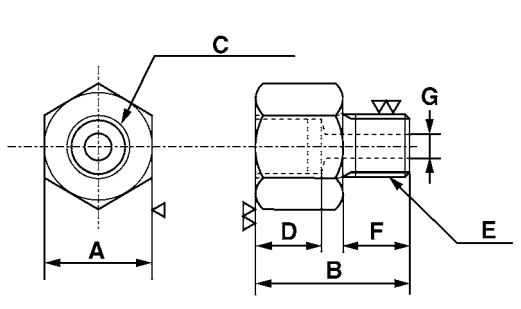

9Y1211121GES003A

Adaptor 58

Code No.
- 07916-52391

Application
- Use for checking high pressure relief valve and charge relief pressure.

A	24 mm (0.94 in.)
B	35 mm (1.4 in.)
C	G1/4 × 12 mm (0.47 in.)
D	15 mm (0.59 in.)
E	R1/4
F	15 mm (0.59 in.)
G	5 mm dia. (0.2 in. dia.)

9Y1211121GEG0086US0

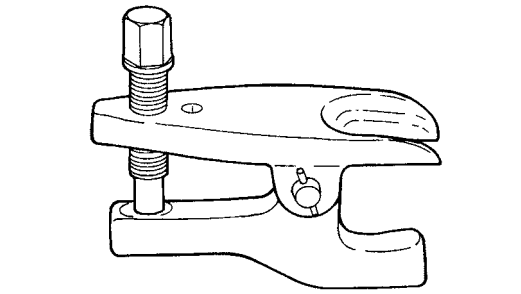
3TMABAB0P071A

Tie-rod End Lifter

Code No.
- 07909-39051

Application
- Use to remove the tie-rod end with ease.

WSM000001GEG0029US0

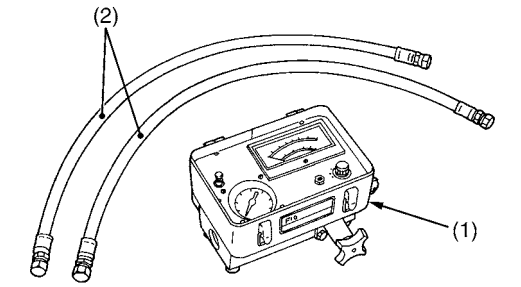

3TMABAB0P078A

Flow Meter

Code No.
- 07916-52791 (Flow Meter)
- 07916-52651 (Hydraulic Test Hose)

Application
- This allows easy testing of hydraulic system.

(1) Flow Meter
(2) Hydraulic Test Hose

WSM000001GEG0036US0

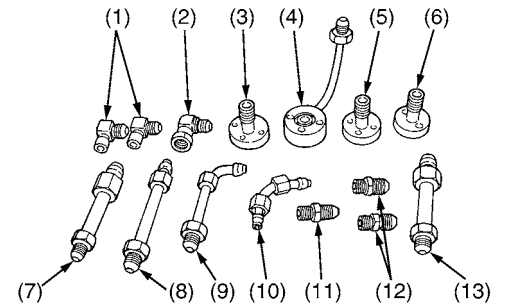

3TMABAB0P079A

Adaptor Set for Flow Meter

Code No.
- 07916-54031

Application
- Use for test of the hydraulic system.

(1) Adaptor **52**
(2) Adaptor **53**
(3) Adaptor **54**
(4) Adaptor **61**
(5) Adaptor **62**
(6) Adaptor **63**
(7) Adaptor **64**
(8) Adaptor **65**
(9) Adaptor **66**
(10) Adaptor **67**
(11) Adaptor **68**
(12) Adaptor **69**
(13) Hydraulic Adaptor **1**

WSM000001GEG0037US0

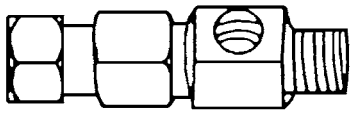

3TMABAB0P080A

Power Steering Adaptor

Code No.

- 07916-54021

Application

- Use to measure the relief valve setting pressure for power steering.

WSM000001GEG0038US0

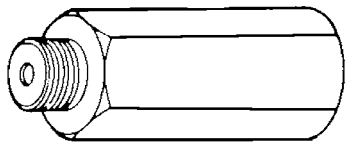

3TMABAB0P083A

Relief Valve Setting Pressure Adaptor G

Code No.

- 07916-52751

Application

- This allows easy measurement of relief valve setting pressure from the hydraulic coupler. This is available with the relief valve setting pressure tester.

WSM000001GEG0041US0

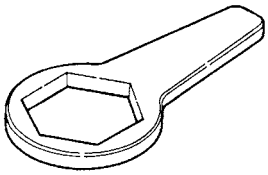

3TMABAB0P082A

Rear Axle Nut Wrench 71

Code No.

- 07916-52531

Application

- Use to remove and tighten a rear axle nut.

WSM000001GEG0040US0

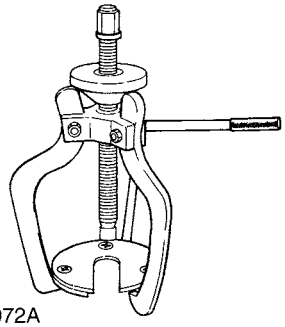

3TMABAB0P072A

Steering Wheel Puller

Code No.

- 07916-51090

Application

- Use to remove the steering wheel without damage to the steering shaft.

WSM000001GEG0030US0

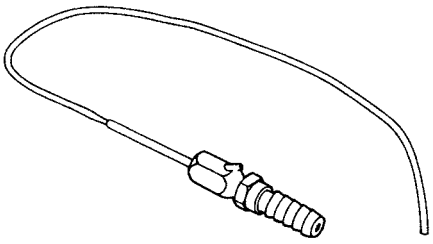

3TMABAB0P073A

Injector CH3

Code No.

- 07916-52501

Application

- Use to put calcium chloride solution into a rear wheel and to remove it.

WSM000001GEG0031US0

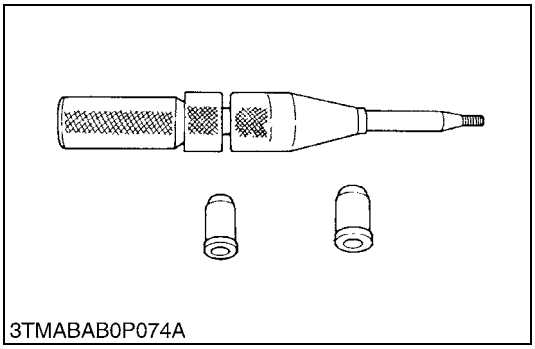
3TMABAB0P074A

Clutch Center Tool (For B and L Series Tractors)

Application

- The clutch center tool is for all B and L series tractors with a diaphragm clutch by changing tip guides. Center piece diameter is 20 mm (0.79 in.).

WSM000001GEG0032US0

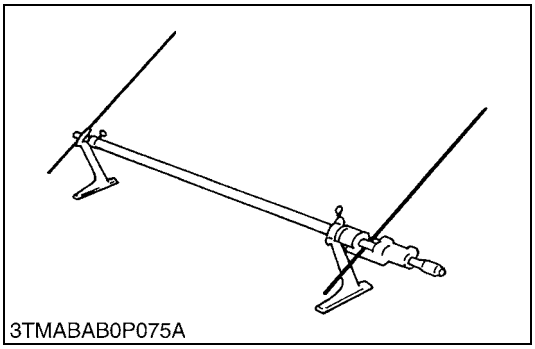
3TMABAB0P075A

Toe-in Gauge

Code No.

- 07909-31681

Application

- This allows easy measurement of toe-in for all machine models.

WSM000001GEG0034US0

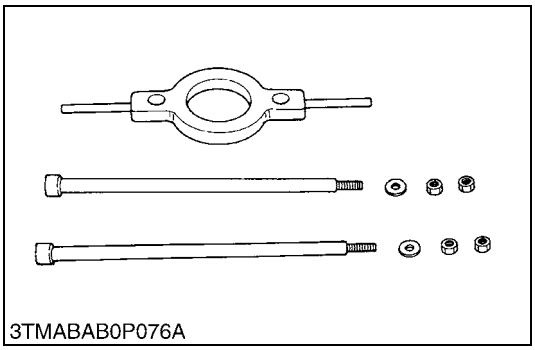
3TMABAB0P076A

Rear Axle Cover Puller

Code No.

- 07916-51041

Application

- Use to remove a rear axle cover from rear axle.

WSM000001GEG0035US0

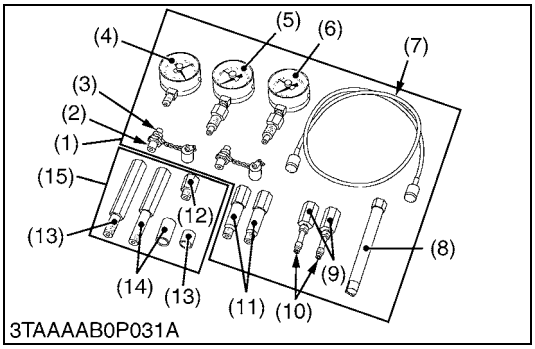

3TAAAAB0P031A

Hydrostatic Transmission Tester and HST Adaptor Set

Code No.

- 07916-52040 (Hydrostatic Transmission Tester)
- 07916-53072 (HST Adaptor Set)

Application

- This allows easy measurement of hydrostatic transmission pressure.

(1) Hydrostatic Transmission Tester (07916-52040)
(2) Gasket (04714-00200)
(3) Connector **3** (07916-51331)
(4) Vacuum Gauge (07916-51331)
(5) Pressure Gauge (Low Pressure) (07916-51301)
(6) Pressure Gauge (High Pressure) (in Relief Valve Set Pressure Tester) (07916-50321)
(7) HN Tube (in Relief Valve Set Pressure Tester) (07916-50331)
(8) Valve Seat Driver (07916-60841)
(9) Connector **1** (07916-60811)
(10) Connector **2** (07916-60821)
(11) Long Connector (07916-60831)
(12) Adaptor **1** (07916-52621)
(13) Adaptor **2** with Collar (07916-52632)
(14) Adaptor **3** with Collar (07916-52642)
(15) HST Adaptor Set (07916-53072)

WSM000001GEG0104US0

Check and High Pressure Relief Valve Assembly Tool

Application

- Use for readjusting relief valve pressure.

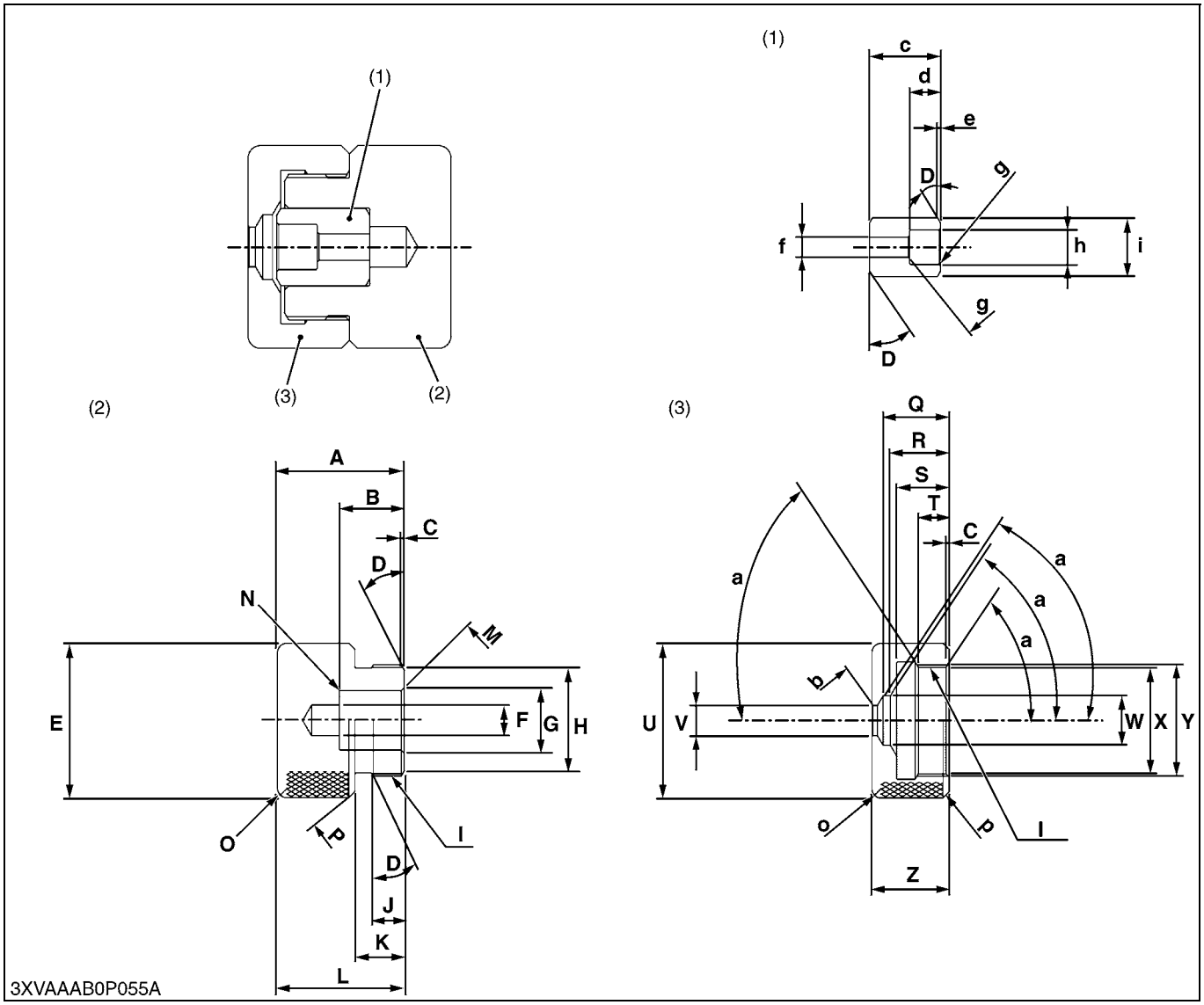

A	30 mm (1.2 in.)	**N**	Chamfer 0.4 mm (0.02 in.)	**a**	0.17 rad (10 °)
B	21 mm (0.83 in.)	**O**	Chamfer 3 mm (0.1 in.)	**b**	Chamfer 0.3 mm (0.01 in.)
C	1 mm (0.04 in.)	**P**	Chamfer 2 mm (0.08 in.)	**c**	23 mm (0.91 in.)
D	0.52 rad (30 °)	**Q**	21.4 mm (0.843 in.)	**d**	10 mm (0.39 in.)
E	50 mm dia. (2.0 in. dia.)	**R**	19 mm (0.75 in.)	**e**	1 mm (0.04 in.)
F	10 mm dia. (0.39 in. dia.)	**S**	17 mm (0.67 in.)	**f**	6.5 mm (0.26 in.)
G	9.10 to 9.30 mm dia. (0.359 to 0.366 in. dia.)	**T**	10 mm (0.39 in.)	**g**	Chamfer 0.5 mm (0.02 in.)
H	34 mm dia. (1.3 in. dia.)	**U**	50 mm dia. (2.0 in. dia.)	**h**	11.1 to 11.3 mm (0.437 to 0.444 in.)
I	M36 × 1.5 mm Pitch	**V**	9.8 mm dia. (0.39 in. dia.)	**j**	18.8 to 19.0 mm (0.741 to 0.748 in.)
J	10 mm (0.39 in.)	**W**	16 mm dia. (0.63 in. dia.)		
K	16 mm (0.63 in.)	**X**	34.5 mm dia. (1.36 in. dia.)	(1)	Spacer
L	41 mm (1.6 in.)	**Y**	38 mm dia. (1.5 in. dia.)	(2)	Block
M	Chamfer 1 mm (0.04 in.)	**Z**	25 mm (0.98 in.)	(3)	Cap

9Y1211121GEG0062US0

Pump Adaptor

Application

- Use for checking the main hydraulic pump.
- You can substitute delivery pipe (parts number : TC220-33422) for this adaptor by cutting pipe and welding plug part(shown as **I** in the figure).

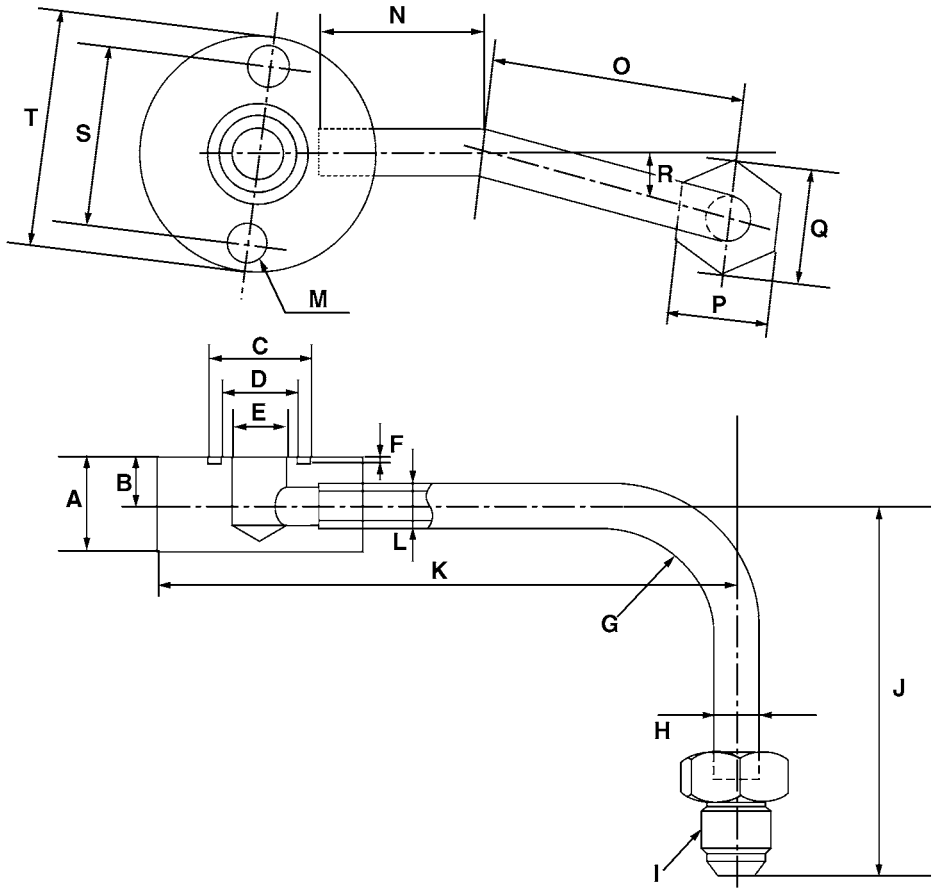

9Y1210278GES009A

■ **NOTE**

- **When using, attach with following parts.**
  O-ring: 04811-00180
- **This adaptor is modified from Adaptor 61 of flowmeter adaptor set (see page G-46).**

A	22 mm (0.872 in.)	**H**	10 mm dia. (0.39 in. dia.)	**O**	61.5 mm (2.42 in.)
B	11 mm (0.437 in.)	**I**	G 3/8	**P**	24 mm (0.94 in.)
C	24 mm dia. (0.94 in. dia.)	**J**	89 mm (3.50 in.)	**Q**	27.7 mm (1.09 in.)
D	18 mm dia. (0.71 in. dia.)	**K**	135 mm (5.31 in.)	**R**	0.244 rad (14 °)
E	12 mm dia. (0.47 in. dia.)	**L**	7 mm dia. (0.28 in. dia.)	**S**	40 mm (1.57 in.)
F	1.7 to 1.9 mm (0.067 to 0.075 in.)	**M**	8.5 mm dia. (0.33 in. dia.)	**T**	60 mm dia. (2.36 in. dia.)
G	30 mm Round (1.18 in. Round)	**N**	37 mm (1.46 in.)		

(Reference)

- Compared with adaptor **61**, the followings are different.
  a) Dimensions **S**, **T** and number of holes **M**.
  b) Direction of pipe **I**.

9Y1211121GEG0063US0

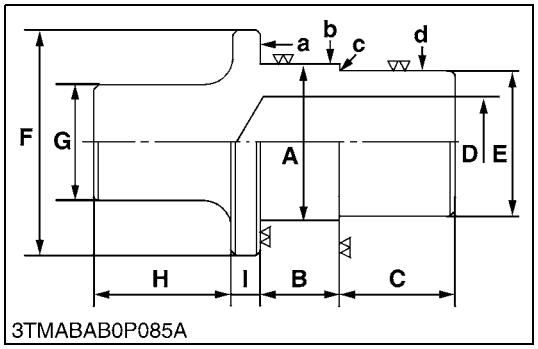

Hydraulic Arm Shaft Bushing Press-Fitting Tool

Application

- Use for replacing the hydraulic arm shaft bushings in the hydraulic cylinder body.

	Right	Left
A	54.7 to 54.9 mm (2.154 to 5.161 in.)	49.7 to 49.9 mm (1.957 to 1.964 in.)
B	24.5 to 25.5 mm (0.965 to 1.00 in.)	21.5 to 22.5 mm (0.847 to 0.885 in.)
C	40.0 mm (1.57 in.)	40.0 mm (1.57 in.)
D	32.0 mm (1.26 in.)	32.0 mm (1.26 in.)
E	49.70 to 49.90 mm (1.957 to 1.964 in.)	44.70 to 44.90 mm (1.760 to 1.767 in.)
F	70.0 mm dia. (2.76 in. dia.)	
G	40.0 mm dia. (1.57 in. dia.)	
H	50.0 mm (1.97 in.)	
I	10.0 mm (0.39 in.)	
a	6.3 µm (250 µin.)	
b	6.3 µm (250 µin.)	
c	6.3 µm (250 µin.)	
d	6.3 µm (250 µin.)	

9Y1211121GEG0064US0

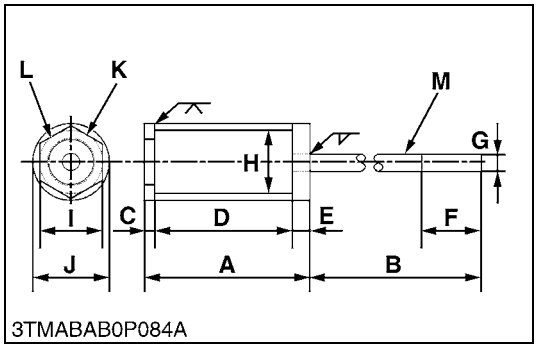

Pinion Shaft Remover

Application

- Use for removing a pinion shaft.

■ **NOTE**

- **The following special tools are not provided, so make them referring to the figure.**

A	106 mm (4.17 in.)
B	350.0 mm (13.78 in.)
C	6.0 mm (0.24 in.)
D	90.0 mm (3.54 in.)
E	10.0 mm (0.39 in.)
F	40.0 mm (1.57 in.)
G	10.0 mm (0.39 in.)
H	35.6 mm (1.40 in.)
I	36.0 mm (1.42 in.)
J	41.6 mm (1.64 in.)
K	Part code No. 3A201-4130 nut
L	M27 × 1.5
M	M10 × 1.25

9Y1211121GEG0065US0

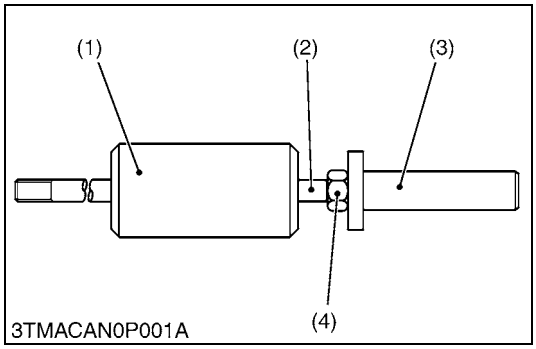

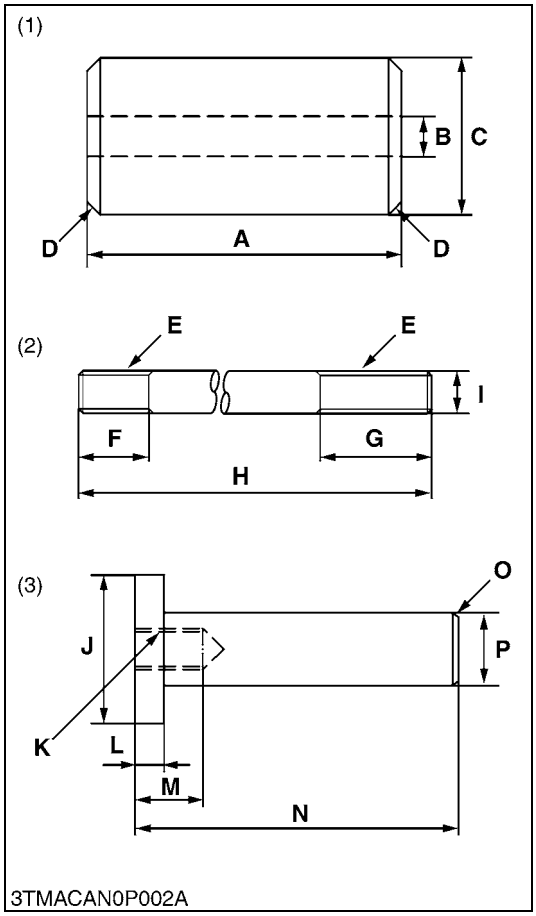

Sliding Hammer

Application

- Use to removing the bevel pinion shaft with adaptor for front axle.

■ **NOTE**

- **This special tool is not provided, so make it referring to the figure.**

A	120 mm (4.72 in.)
B	14.5 mm dia. (0.57 in. dia.)
C	60 mm dia. (2.36 in. dia.)
D	Chamfer 5 mm (0.20 in.)
E	M14 × P1.5
F	25 mm (0.98 in.)
G	40 mm (1.57 in.)
H	450 mm (17.72 in.)
I	14 mm dia. (0.55 in. dia.)
J	50 mm dia. (1.97 in. dia.)
K	M14 × P1.5
L	10 mm (0.39 in.)
M	30 mm (1.18 in.)
N	110 mm (4.3 in.)
O	Chamfer 2 mm (0.08 in.)
P	25 mm dia. (0.98 in. dia.)

(1) Hammer
(2) Sliding Shaft
(3) Handle
(4) Nut (M14 × P1.5)

9Y1211121GEG0066US0

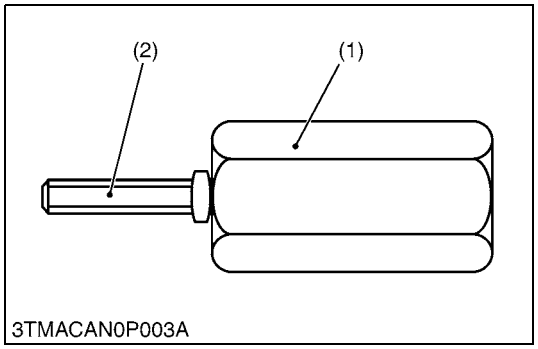

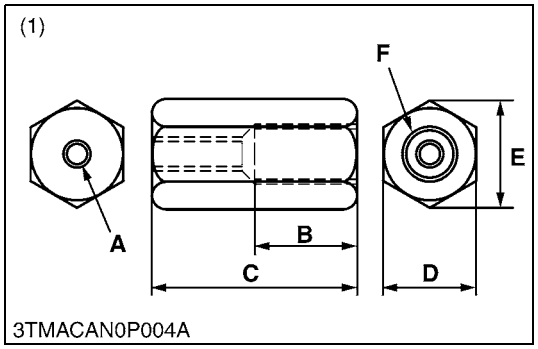

Adaptor for Sliding Hammer

Application

- Use to removing the front axle bevel pinion shaft and hydraulic pump drive gear pin with sliding hammer.

■ **NOTE**

- **This special tool is not provided, so make it referring to the figure.**

A	M8 × P1.25
B	25 mm (0.98 in.)
C	50 mm (1.97 in.)
D	23 mm (0.91 in.)
E	27 mm (1.06 in.)
F	M14 × P1.5

(1) Adaptor (M8) (2) Stud Bolt (M8 × P1.25)

9Y1211121GEG0067US0

Cylinder Safety Valve Setting Pressure Adaptor

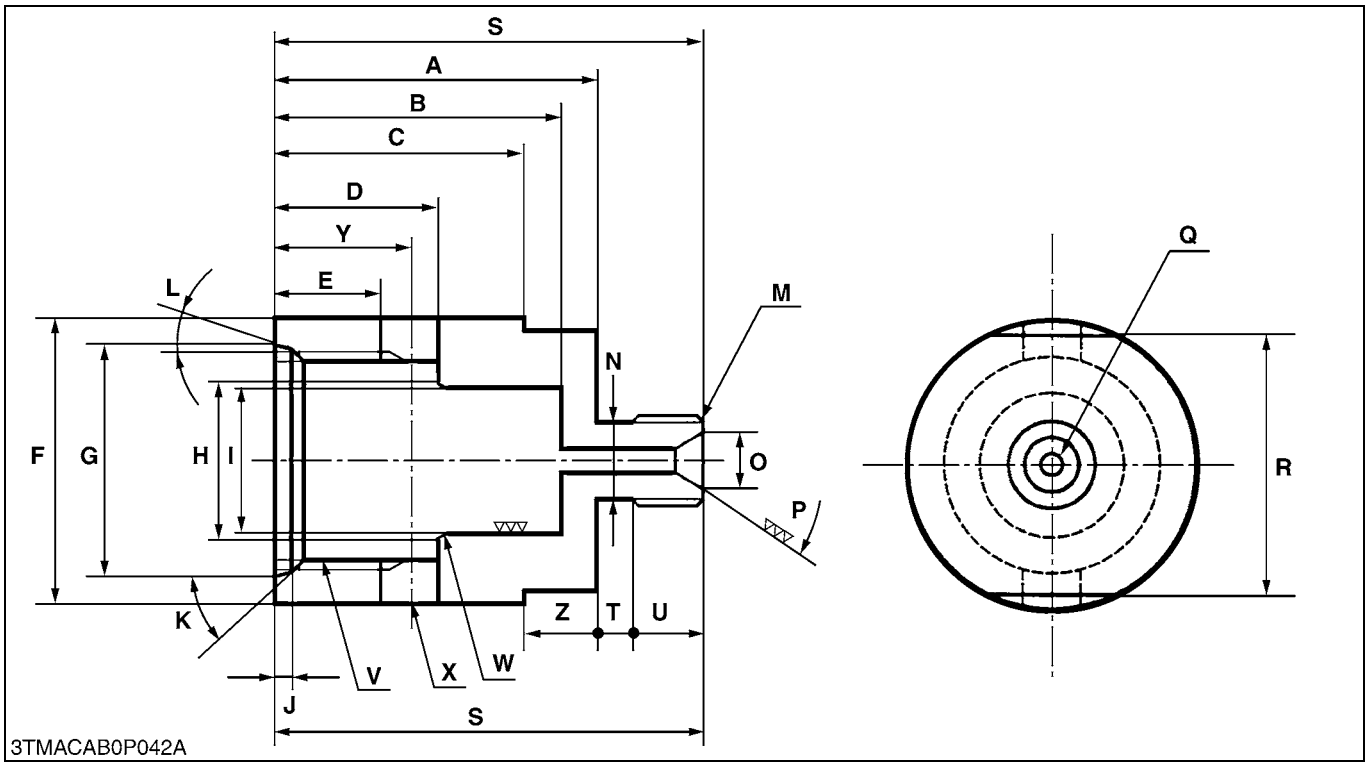

Application

- Use for setting the safety valve to the nozzle tester to measure cranking pressure and check oil tightness of the safety valves.

■ **NOTE**

- **This special tool is not provided, so make it referring to the figure.**

A	45 mm (1.77 in.)	**N**	10 mm dia. (0.39 in. dia.)
B	40 mm (1.58 in.)	**O**	7.5 mm dia. (0.3 in. dia.)
C	35 mm (13.8 in.)	**P**	1.05 rad (60 °)
D	23 to 23.3 mm (0.9055 to 0.9713 in.)	**Q**	3 mm dia. (1.18 in. dia.)
E	16 mm dia. (0.63 in. dia.)	**R**	36 mm (1.18 in.)
F	40 mm dia. (1.58 in. dia.)	**S**	60 mm (2.36 in.)
G	32.4 to 32.7 mm dia. (1.2756 to 1.2874 in. dia.)	**T**	5 mm (0.20 in.)
H	21 mm dia. (0.83 in. dia.)	**U**	10 mm (0.39 in.)
I	20 to 20.05 mm dia. (0.7874 to 0.7894 in. dia.)	**V**	M30 × P1.5
J	2.5 to 2.59 mm (0.0984 to 0.1097 in.)	**W**	0.52 rad (30 °)
K	0.79 rad (45 °)	**X**	8 mm dia. (0.32 in. dia.)
L	0.26 rad (15 °)	**Y**	19 mm (0.75 in.)
M	M12 × P1.5	**Z**	10 mm (0.39 in.)

9Y1211121GEG0068US0

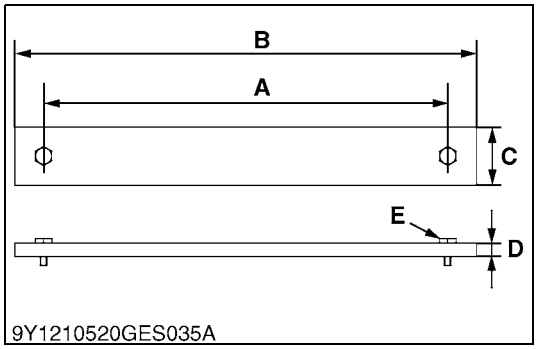

Front Axle Rocking Restrictors

Application

- Use for restricting front axle rocking.

■ **NOTE**

- **This special tool is not provided, so make it referring to the figure.**

A	350 mm (13.8 in.)
B	400 mm (15.7 in.)
C	500 mm (2.0 in.)
D	12 mm (0.47 in.)
E	M12 × P1.25 × l30

9Y1211121GEG0069US0

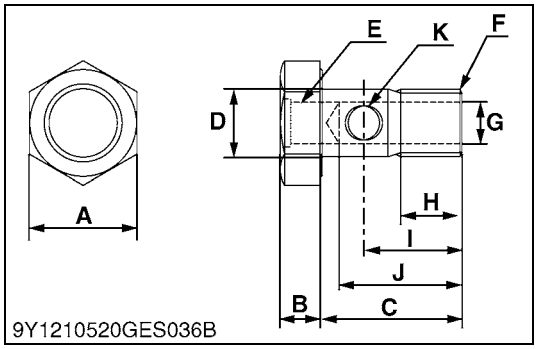

Power Steering Pump Adaptor

Application

- Use for checking the relief valve of power steering.

■ **NOTE**

- **This special tool is not provided, so make it referring to the figure.**
- **You can make this adaptor by drilling G1/8 hole (shown as E in the table below) to joint (parts number : 66591-36250).**

A	26 mm (1.0 in.)
B	10 mm (0.4 in.)
C	35 mm (1.4 in.)
D	17 mm dia. (0.67 in. dia.)
E	G1/8 × 15 mm (0.6 in.)
F	G3/8
G	10 mm dia. (0.4 in. dia.)
H	15 mm (0.6 in.)
I	25 mm (1.0 in.)
J	30 mm (1.2 in.)
K	8 mm dia. (0.3 in. dia.)

9Y1211121GEG0070US0

9. TIRES

[1] TIRE PRESSURE

WARNING

To avoid personal injury or death:

- **Do not attempt to mount a tire on a rim. This should be done by a qualified person with the proper equipment.**
- **Always maintain the correct tire pressure.**
  Do not inflate tires above the recommended pressure shown in the operator's manual.

■ **IMPORTANT**

- **Do not use tires other than those approved by KUBOTA.**

9Y1211121GEG0071US0

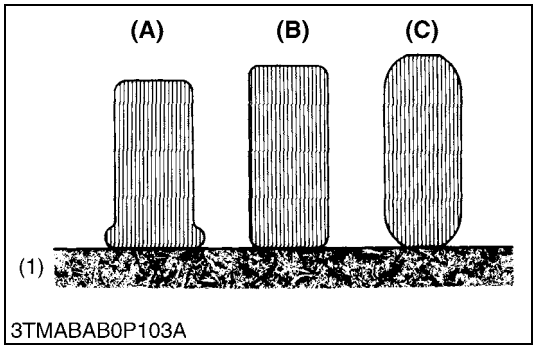

Inflation Pressure

Though the tire pressure is factory-set to the prescribed level, it naturally drops slowly in the course of time. Thus, check it everyday and inflate as necessary.

■ **NOTE**

- **Maintain the maximum pressure in front tires, if using a front loader or when equipped with a full load of front weights.**

	Tire Sizes	Inflation Pressure
Rear	11.2-24, 4PR	100 kPa (1.0 kgf/cm^2, 14 psi)
	13.6-16, 4PR	100 kPa (1.0 kgf/cm^2, 14 psi)
	15-19.5, 6PR	210 kPa (2.1 kgf/cm^2, 30 psi)
Front	5.00-15, 4PR	220 kPa (2.2 kgf/cm^2, 32 psi)
	7-16, 6PR	180 kPa (1.8 kgf/cm^2, 26 psi)
	23 × 8.50-12, 4PR	160 kPa (1.6 kgf/cm^2, 23 psi)
	25 × 8.50-14, 6PR	160 kPa (1.6 kgf/cm^2, 23 psi)
	27 × 8.50-15, 6PR	210 kPa (2.1 kgf/cm^2, 30 psi)

(1) Ground

(A) Insufficient
(B) Standard
(C) Excessive

9Y1211121GEG0072US0

[2] TREADS ADJUSTMENT

WARNING

To avoid personal injury or death:

- **When working on slopes or working with trailer, set the wheel tread as wide as practice for the job for maximum stability.**
- **Support tractor securely on stands before removing a wheel.**
- **Do not work under any hydraulically supported devices. They can settle, suddenly leak down, or be accidentally lowered. If necessary to work under tractor or any machine elements for servicing or adjustment, securely support them with stands or suitable blocking beforehand.**
- **Never operate tractor with a loose rim, wheel, or axle.**

9Y1211121GEG0073US0

(1) Front Wheel

Front tread can not be adjusted.

■ **IMPORTANT**

- **Do not turn front discs to obtain wider tread.**
- **When re-fitting or adjusting a wheel, tighten the bolts to the following torques then recheck after driving the tractor 200 m (200 yards) and 10 times of shuttle movement by 5 m (5 yards), and thereafter according to service interval. (See page G-13.)**

9Y1211121GEG0074US0

2WD Front Wheel

5 - 15 Farm	23 × 8.5 - 12 Turf
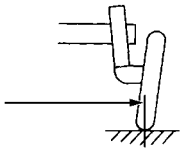 3TLAAAB0P037A	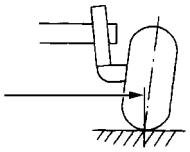 3TLAAAB0P038A
1050 mm (41.3 in.)	1175 mm (46.3 in.)

9Y1211121GEG0075US0

4WD Front Wheel

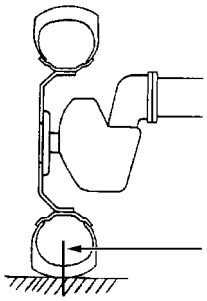 3TMABAB0P095A	Tire	7-16 Farm	25 × 8.5-14 Turf	27 × 8.5-15 Industrial
	Tread	1095 mm (43.1 in.)	1105 mm (43.5 in.)	1115 mm (43.9 in.)

9Y1211121GEG0076US0

(2) Rear Wheels

Rear tread width can be adjusted with the tires listed below.

To change the tread width

1. Remove the wheel rim and / or disk mounting bolts.
2. Change the position of the rim and / or disk (right and left) to the desired position, and tighten the bolts.

■ **IMPORTANT**

- **Always attach wheels as shown in the drawings.**
- **If not attached as illustrated, transmission parts may be damaged.**
- **When re-fitting or adjusting a wheel, tighten the bolts to the following torques then recheck after driving the tractor 200 m (200 yards) and 10 times of shuttle movement by 5 m (5 yards), and thereafter according to service interval. (See page G-13.)**

15-19.5 Industry	13.6-16 Turf
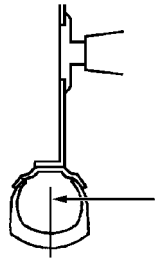 3TMABAB0P101A	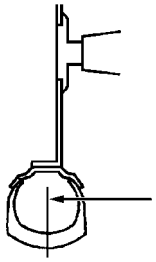 3TMABAB0P101A
1145 mm (45.1 in.)	1115 mm (43.9 in.)

11.2-24 Farm		
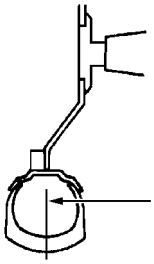 3TMABAB0P098A	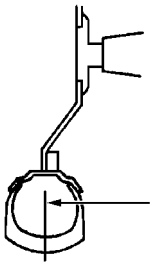 3TMABAB0P099A	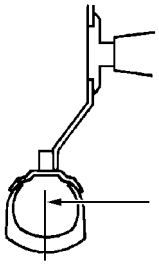 3TMABAB0P100A
1115 mm (43.8 in.)	1195 mm (47.1 in.)	1290 mm (50.8 in.)

9Y1211121GEG0077US0

[3] TIRE LIQUID INJECTION

Auxiliary weights can be used to increase traction force for plowing in fields or clayey ground.

Another way is to inject water or another liquid, such as a calcium chloride solution in the tires. Water must not be used in winter since it freezes at 0 °C (32 °F). The calcium chloride solution will not freeze and moreover, affords higher effect than water since its specific gravity is higher than that of water by about 20 %. Below is an explanation of calcium chloride solution injection.

■ **IMPORTANT**

- **Do not fill the front tires with liquid.**

9Y1211121GEG0078US0

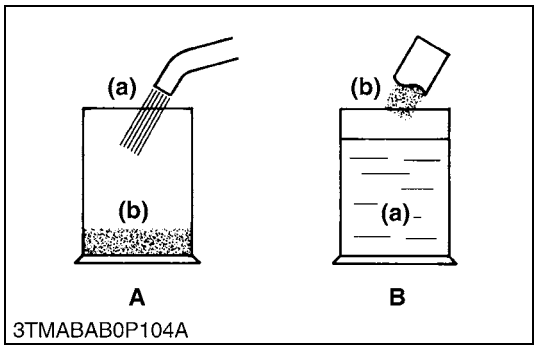

3TMABAB0P104A

Preparation of Calcium Chloride Solution

CAUTION

- **When making a calcium chloride solution, do not pour water over calcium chloride since this results in chemical reaction which will cause high temperature. Instead add a small amount of calcium chloride to the water at a time until the desired solution is achieved.**

Freezing temp.	Weight of $CaCl_2$ to be dissolved in 100 L (26.4 U.S.gals, 22.0 Imp.gals) of water
−5 °C (23 °F)	12.0 kg (26.5 lbs)
−10 °C (14 °F)	21.0 kg (46.3 lbs)
−15 °C (5 °F)	28.0 kg (61.7 lbs)
−20 °C (−4 °F)	34.0 kg (75.0 lbs)
−25 °C (−13 °F)	40.0 kg (88.2 lbs)
−30 °C (−22 °F)	44.0 kg (97.0 lbs)
−35 °C (−31 °F)	49.0 kg (108 lbs)
−40 °C (−40 °F)	52.0 kg (115 lbs)
−45 °C (−49 °F)	56.0 kg (123 lbs)
−50 °C (−58 °F)	61.0 kg (134 lbs)

(a) Water **A: Bad**
(b) $CaCl_2$ (Calcium Chloride) **B: Good**

9Y1211121GEG0079US0

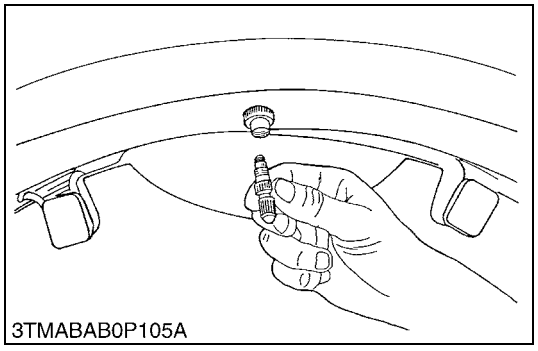
3TMABAB0P105A

Attaching Injector

1. Lift the rear tires off the ground.
2. Turn the tire so that the air valve is at the top.
3. Remove the air valve, and attach the injector. (Code No. 07916-52501)

(1) Injector (2) Hose

9Y1211121GEG0080US0

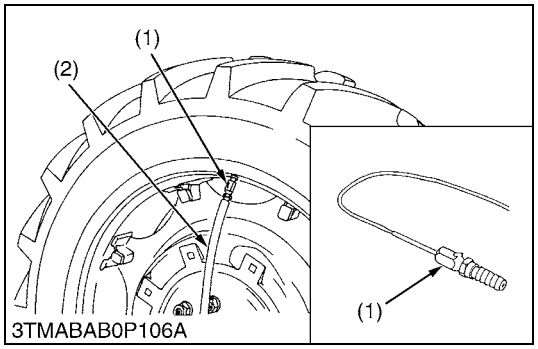

3TMABAB0P106A

Fig. 1

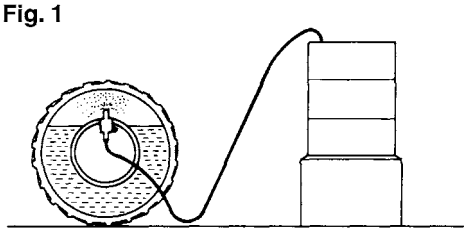

Fig. 2

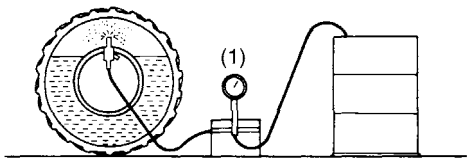

Fig. 3

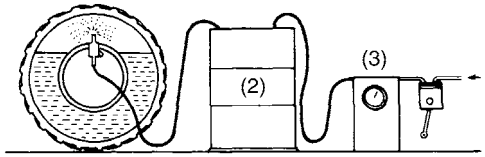

3TMABAB0P111A

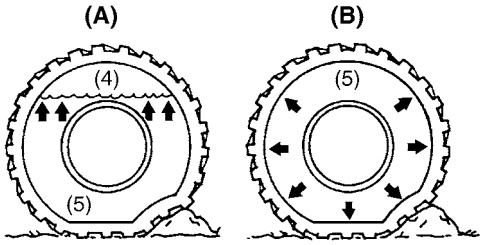

3TMABAB0P107A

Injection

CAUTION

- **When a calcium chloride solution is used, cool it before pouring it into the tire.**
- **Do not fill tires with water or solution more than 75 % of full capacity (to the valve stem level).**

The following four ways can be used to inject water or a calcium chloride solution into tires.

1. Gravity injection **(Fig. 1)**
2. Pump injection **(Fig. 2)**
3. Pressure tank injection **(Fig. 3)**
4. Injection directly from tap (only when water is being used).

■ **NOTE**

- **Once injection is completed, reset the air valve, and pump air into the tire to the specified pressure.**

Weight of Calcium Chloride Solution Filling 75 % of Full Capacity of a Tire.

Tire sizes	11.2-24	15-19.5
Slush free at −10 °C (14 °F) Solid at −30 °C (−22 °F) [Approx. 1 kg (2 lbs) $CaCl_2$ per 4 L (1 gal) of water]	105 kg (230 lbs)	140 kg (309 lbs)
Slush free at −24 °C (−11 °F) Solid at −47 °C (−52 °F) [Approx. 1.5 kg (3.5 lbs) $CaCl_2$ per 4 L (1 gal) of water]	110 kg (240 lbs)	150 kg (331 lbs)
Slush free at −47 °C (−52 °F) Solid at −52 °C (−62 °F) [Approx. 2.25kg (5 lbs) $CaCl_2$ per 4 L (1 gal) of water]	115 kg (253 lbs)	160 kg (353 lbs)

(1) Pump
(2) Pressure Tank
(3) Compressor
(4) Air
(5) Water

(A) Correct: 75 %
Air Compresses Like A Cushion
(B) Incorrect: 100 % Full
Water Can Not Be Compressed

9Y1211121GEG0081US0

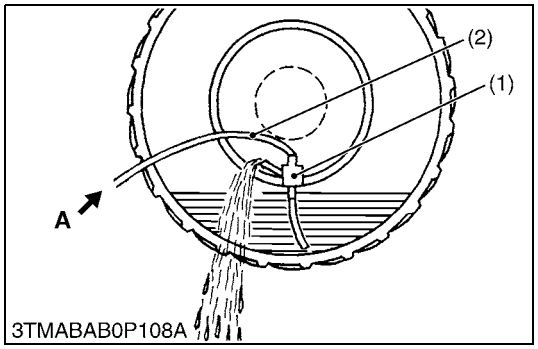

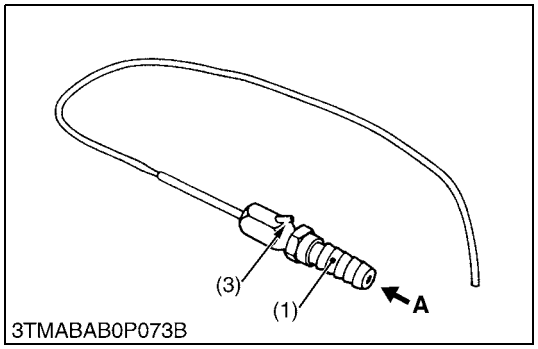

Draining Water or Solution

1. Lift the rear tires off the ground.
2. Turn the tire so that the air valve is at the bottom.
3. Remove the air valve, and drain liquid (liquid can only be drained to the level of the valve and liquid under that level remains inside).
4. To drain liquid completely, use the injector, and direct compressed air into the tire to force out the liquid through the injector's vent.

(1) Injector
(2) Hose
(3) Vent

A: Compressed Air

9Y1211121GEG0082US0

[4] IMPLEMENT LIMITATIONS

The KUBOTA Tractor has been thoroughly tested for proper performance with implements sold or approved by KUBOTA. Use with implements which exceed the maximum specifications listed below, or which are otherwise unfit for use with the KUBOTA Tractor may result in malfunctions or failures of the tractor, damage to other property and injury to the operator or others. [Any malfunctions or failures of the tractor resulting from use with improper implements are not covered by the warranty.]

	Tread (max. width)			**Lower link end max. lifting capacity W0**
	Front		**Rear**	
	2WD	**4WD**		
L2501	1050 mm (41.3 in.)	1095 mm (43.1 in.)	1290 mm (50.8 in.)	900 kg (1985 lbs)

	Actual figures		
	Implement weight W1 and / or size	**Max. Drawbar Load W2**	**Trailer loading weight W3 Max. capacity**
L2501	Refer to page G-63.	330 kg (730 lbs)	1000 kg (2200 lbs)

Lower link end max. hydraulic lift capacity: **W0**
Implement weight: The implement weight which you can put on the link: **W1**
Max. drawbar load: **W2**
Trailer loading weight: The max loading weight for trailer (without trailer weight): **W3**

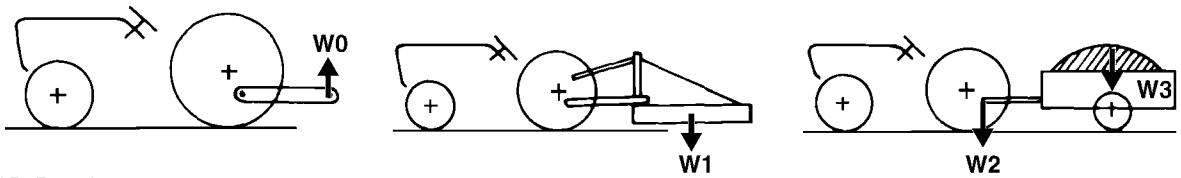

3TMABAB0P109A

■ **NOTE**

- **Implement size may vary depending on soil operating conditions.**

9Y1211121GEG0083US0

No.	Implement		Remarks	L2501
1	Trailer		Max. Load Capacity	1000 kg (2200 lbs)
			Max. Drawbar Load	330 kg (730 lbs)
2	Mower	Rotary-cutter	Max. Cutting Width	1524 mm (60 in.)
			Max. Weight	350 kg (770 lbs)
		Flail Mower	Max. Cutting Width	1270 mm (50 in.)
			Max. Weight	350 kg (770 lbs)
		Sickle Bar	Max. Cutting Width	1829 mm (72 in.)
			Max. Weight	400 kg (880 lbs)
3	Sprayer	Rear Mounted	Max. Tank-capacity	300 L (80 U.S.gals, 66 Imp.gals)
		Pull Type	Max. Tank-capacity	800 L (210 U.S.gals, 176 Imp.gals)
4	Rotary Tiller		Max. Tilling Width	1370 mm (54 in.)
5	Bottom Plow		Max. Size	12 in. × 2, 16 in. × 1
6	Disc-harrow Pull Type		Max. Harrowing Width	1524 mm (60 in.)
			Max. Weight	300 kg (660 lbs)
7	Chisel Plow		Max. Width	1829 mm (72 in.)
			Max. Weight	350 kg (770 lbs)
8	Broad Caster		Max. Tank-capacity	200 L (53 U.S.gals, 44 Imp.gals)
			Max. Weight	100 kg (220 lbs)
9	Manure Spreader		Max. Capacity	1000 kg (2200 lbs)
10	Cultivator		Max. Width	1524 mm (60 in.)
			Number of Rows	1
			Max. Weight	250 kg (550 lbs)
11	Front Loader		Max. Cutting Width	1829 mm (72 in.)
			Max. Oil Pressure	15.9 MPa (162 kgf/cm^2, 2311 psi)
			Sub Frame	Necessary
12	Rear Blade		Max. Cutting Width	1829 mm (72 in.)
			Max. Oil Pressure	15.9 MPa (162 kgf/cm^2, 2311 psi)
13	Front-end Loader		Max. Lifting Capacity	460 kg (1014 lbs)
			Max. Oil Pressure	15.9 MPa (162 kgf/cm^2, 2311 psi)
			Sub Frame	Not necessary
14	Box Blade		Max. Cutting Width	1321 mm (52 in.)
			Max. Weight	315 kg (694 lbs)
15	Back Hoe		Max. Digging Depth	2288 mm (90 in.)
			Max. Weight	420 kg (926 lbs)
			Sub Frame	Necessary
16	Snow Blade		Max. Width	1524 mm (60 in.)
			Max. Weight	300 kg (660 lbs)
17	Snow Blower		Max. Working Width	1524 mm (60 in.)
			Max. Weight	250 kg (550 lbs)

■ **NOTE**

- **Implement size may vary depending on soil operating conditions.**

9Y1211121GEG0084US0

https://truckmanualshub.com/

1 ENGINE

https://truckmanualshub.com/

MECHANISM

CONTENTS

1. ENGINE BODY 1-M1
   [1] PISTON 1-M1
   [2] HALF-FLOATING HEAD COVER 1-M1
2. FUEL SYSTEM 1-M2
   [1] OUTLINE 1-M2
   [2] GOVERNOR 1-M3
   [3] INJECTION NOZZLE 1-M5
3. COOLING SYSTEM 1-M7

1. ENGINE BODY

[1] PISTON

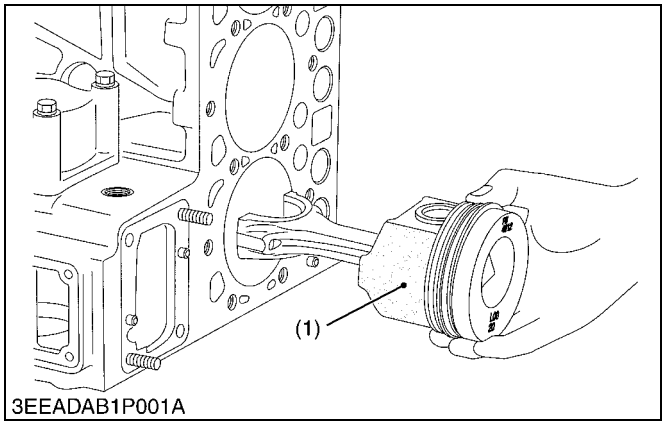

Piston's skirt is coated with molybdenum disulfide★, which reduces the piston slap noise and thus the entire operating noise.

★Molybdenum disulfide (MoS_2)

The molybdenum disulfide (1) serves as a solid lubricant, like a Graphite or Teflon. This material helps resist metal wears even with little lube oil.

(1) Molybdenum Disulfide

9Y1211121ENM0001US0

[2] HALF-FLOATING HEAD COVER

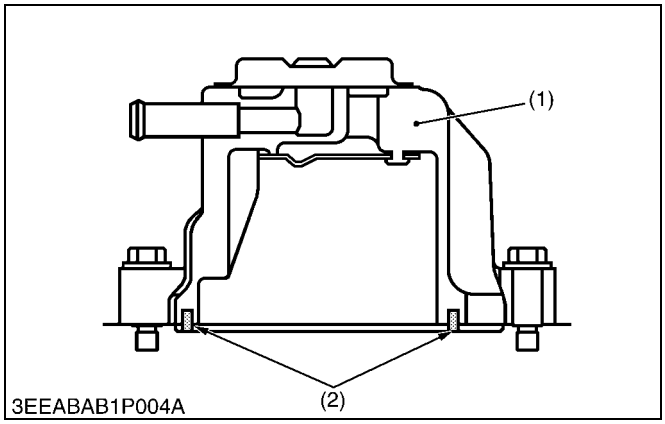

The rubber packing (2) is fitted in to maintain the cylinder head cover (1) 0.5 mm or so off the cylinder head. This arrangement helps reduce noise coming from the cylinder head.

(1) Cylinder Head Cover (2) Rubber Packing

9Y1211121ENM0002US0

2. FUEL SYSTEM

[1] OUTLINE

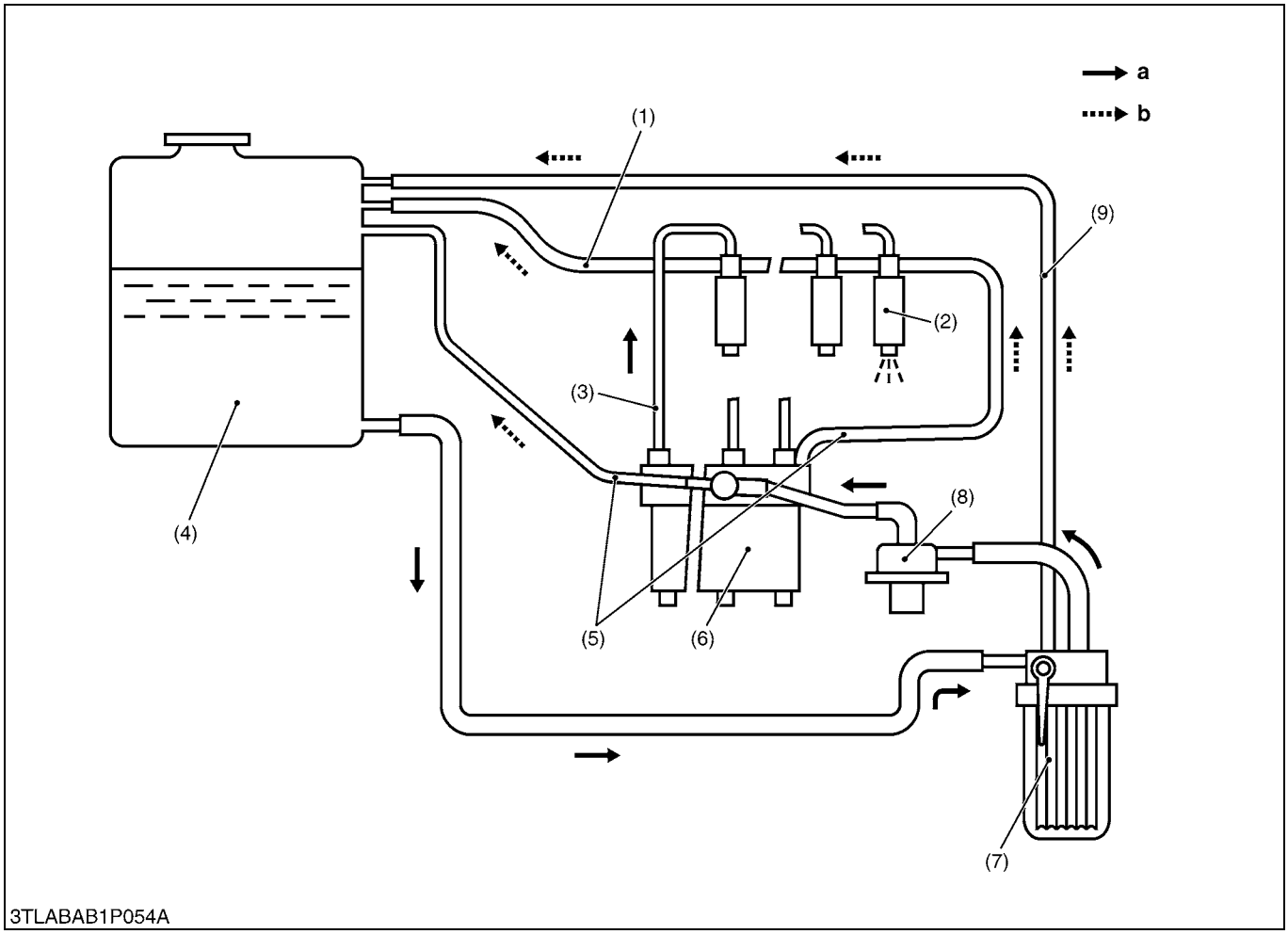

(1)	Fuel Overflow Pipe	(4)	Fuel Tank	(7)	Fuel Filter	**a:**	**Injected Fuel Flow**
(2)	Injection Nozzle	(5)	Injection Pump Air Vent Pipe	(8)	Fuel Feed Pump	**b:**	**Returned Fuel Flow**
(3)	Injection Pipe	(6)	Injection Pump	(9)	Fuel Filter Air Vent Pipe		

The fuel system of this tractor is shown in the diagram above.

Fuel from the tank flows in the passage as shown by the arrows, and is injected from the nozzle via the fuel injection pump. Overflow fuel returns to the tank.

The system includes filters and other concerns to protect it from entrance of air, water and dust.

While the engine is running, fuel is fed into the injection pump (6) by the fuel feed pump (8) after passing through the fuel filter (7). The fuel camshaft actuates the injection pump and force-feeds fuel to the injection nozzle (2) through the injection pipe (3). Fuel is then sprayed through the nozzle into the combustion chamber. The fuel discharged after lubricating and cooling the injection nozzle is returned to the fuel tank (4) automatically through the overflow pipe (1).

9Y1211121ENM0003US0

[2] GOVERNOR

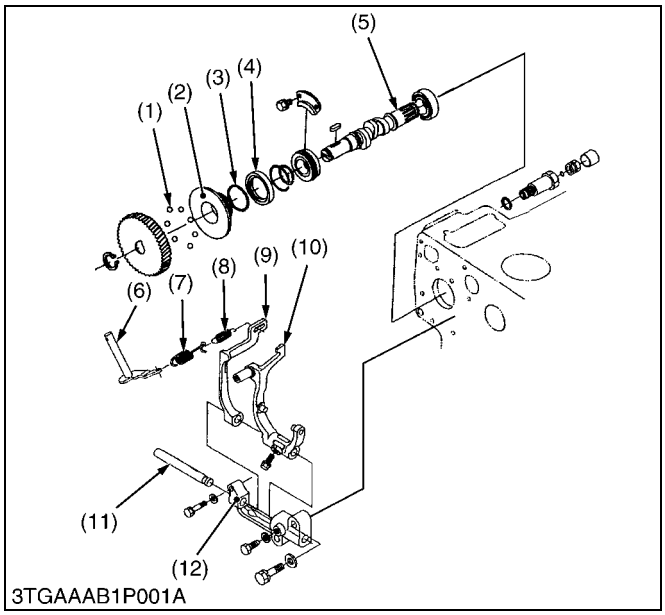

The governor serves to keep engine speed constant by automatically adjusting the amount of fuel supplied to the engine according to changes in the load. This engine employs an all-speed governor which controls the centrifugal force of the steel ball (1) weight, produced by rotation of the fuel camshaft (5), and the tension of the governor spring 1 (7) and 2 (8) are balanced.

(1)	Steel Ball	(7)	Governor Spring 1
(2)	Governor Sleeve	(8)	Governor Spring 2
(3)	Steel Ball	(9)	Fork Lever 2
(4)	Governor Ball Case	(10)	Fork Lever 1
(5)	Fuel Camshaft	(11)	Fork Lever Shaft
(6)	Governor Lever	(12)	Fork Lever Holder

9Y1211121ENM0004US0

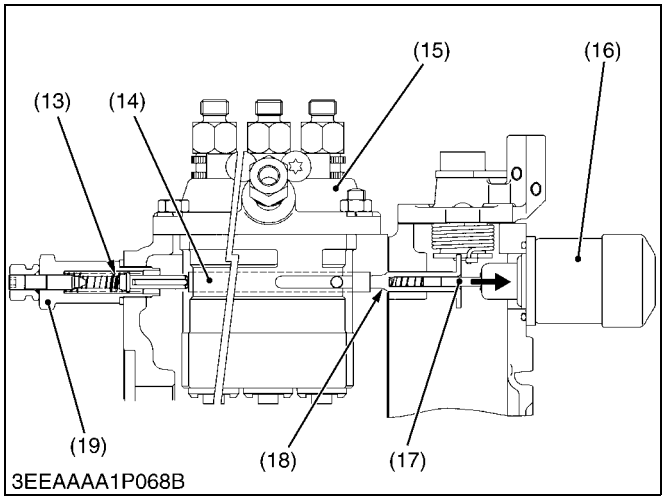

At Start

Flowing of the battery current into the engine stop solenoid (16), the plunger (17) is actuated to arrow direction.

Since the steel ball (1) have no centrifugal force, the control rack (14) is pushed to the right by the start spring (13). Accordingly, the control rack (14) moves to the maximum injection position to assure easy starting.

(13)	Start Spring	(17)	Plunger
(14)	Control Rack	(18)	Guide
(15)	Injection Pump	(19)	Idling Apparatus
(16)	Engine Stop Solenoid		

9Y1211121ENM0005US0

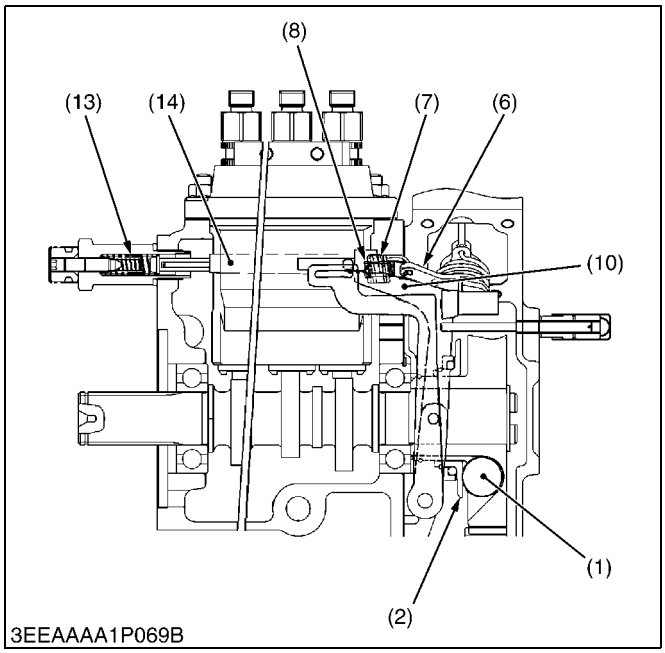

At Idling

When the speed control lever is set at the idling position after the engine starts, the governor spring 1 (7) does not work at all and the governor spring 2 (8) does only act slightly. The governor sleeve (2) is pushed leftward by a centrifugal force of steel ball (1).

Therefore, the fork lever 1 (10) and control rack (14) are moved to the left by the governor sleeve (2) and then the start spring (13) is compressed by the control rack (14). As a result, the control rack (14) is kept at a position where a centrifugal force of steel ball (1) and forces of start spring (13), governor spring 2 (8) are balanced, providing stable idling.

(1)	Steel Ball	(8)	Governor Spring 2
(2)	Governor Sleeve	(10)	Fork Lever 1
(6)	Governor Lever	(13)	Start Spring
(7)	Governor Spring 1	(14)	Control Rack

9Y1211121ENM0006US0

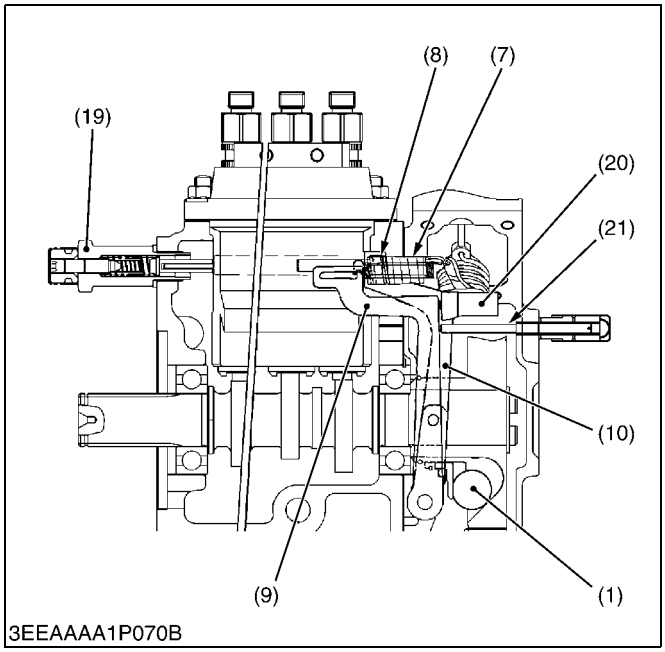

3EEAAAA1P070B

At High Speed Running with Overload

When an overload is applied to the engine running at a high speed, the centrifugal force of steel ball (1) becomes small as the engine speed is dropped, and fork lever 2 (9) is pulled to the right by the governor springs 1 (7) and 2 (8), increasing fuel injection. Though, fork lever 2 (9) becomes ineffective in increasing fuel injection when it is stopped by the adjusting screw (21).

After that, when the force of torque spring (20) becomes greater than the centrifugal force of the steel ball (1), fork lever 1 (10) moves rightward to increase fuel injection, causing the engine to run continuously at a high torque.

(1)	Steel Ball	(10)	Fork Lever 1
(7)	Governor Spring 1	(19)	Idling Apparatus
(8)	Governor Spring 2	(20)	Torque Spring
(9)	Fork Lever 2	(21)	Adjusting Screw

9Y1211121ENM0007US0

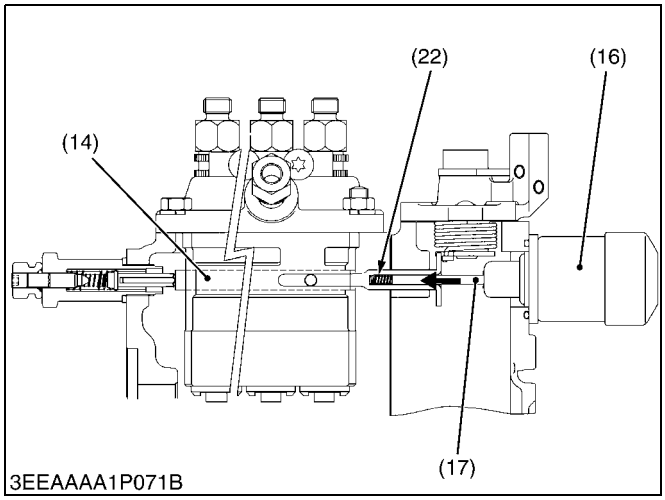

3EEAAAA1P071B

To Stop Engine

When the battery current stops, the plunger (17) of engine stop solenoid (16) is returned to the original position, the spring (22) to keep the control rack (14) in **"No fuel injection"** position.

(14)	Control Rack	(17)	Plunger
(16)	Engine Stop Solenoid	(22)	Spring

9Y1211121ENM0008US0

[3] INJECTION NOZZLE

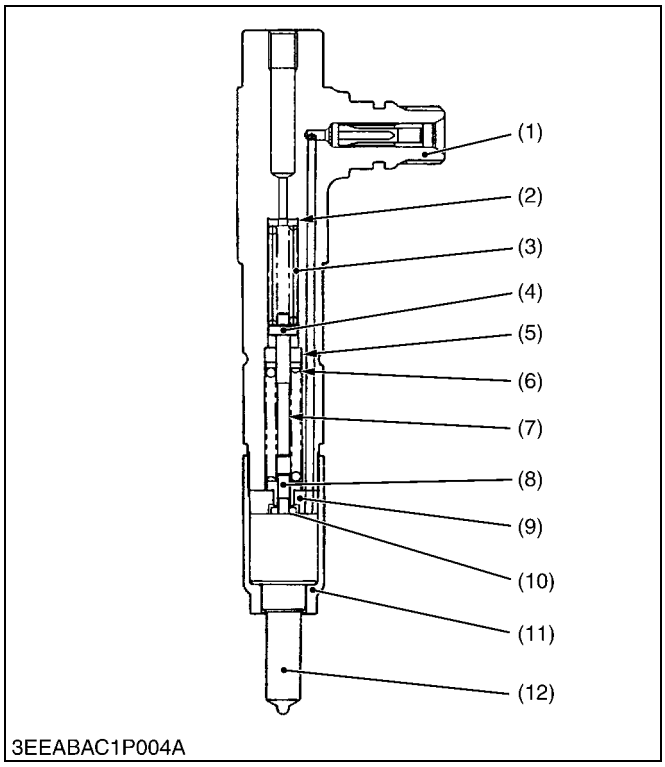

Exhaust and noise regulations are becoming increasingly strict, particularly in regard to the reduction of NOx (nitrogen oxides) and particulates.

The two-spring nozzle holder has been developed to reduce NOx (nitrogen oxides) and particulates from direct injection diesel engine exhaust.

■ **Features**

The two-spring nozzle holder limits needle valve lift at initial valve opening to throttle the injection quantity. Main injection occurs when the in-line pressure has increased sufficiently to move the needle valve through its full lift.

The gives the following features.

- Improved engine stability at low and intermediate speeds.
- Decreased engine hunting and surge.
- Decreased noise at idling.
- Decreased idling speed because of improved engine stability.
- Stabilized fuel injection characteristics from the injection pump and nozzle system, and easier matching of governor characteristics to engine demand.

(1) Nozzle Holder Body
(2) 1st Stage Injection Pressure Adjusting Shim
(3) First Spring
(4) Pressure Pin
(5) Spring Seat
(6) 2nd Stage Injection Pressure Adjusting Shim
(7) Second Spring
(8) Pre-lift Adjusting Spring Seat
(9) Chip-packing
(10) Max-lift Adjusting Washer
(11) Retaining Nut
(12) Nozzle

9Y1211121ENM0009US0

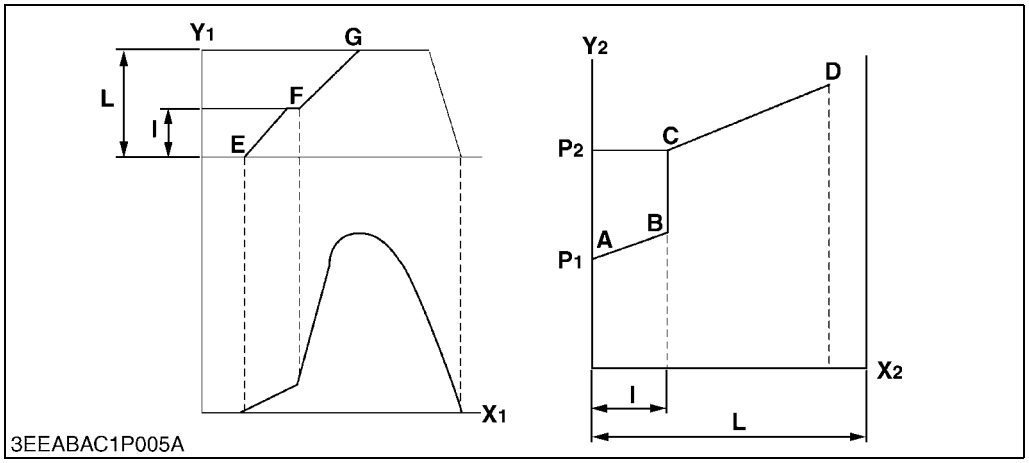

A-B :First Spring's Set Force
B-C-D :Combined Force of First and Second Springs
P1 : First Opening Pressure
P2 : Second Opening Pressure
L : Full Needle Valve Lift
I : Needle Valve Pre-lift
X1 : Cam Angle (°)
Y1 : Injection Rate (mm3/°)
X2 : Needle Valve Lift (mm)
Y2 : In-line Pressure

■ First opening pressure

The force of the high pressure fuel delivered by the injection pump acts to push the needle valve up. When this force exceeds the set force of the first spring, the nozzle's needle valve pushes the first pushrod up and the valve opens. (First opening pressure is represented by point **"E"** in the bottom left hand figure, and point **"A"** in the above figure.)

■ Second opening pressure

When the first pushrod has been lifted through the pre-lift, it contacts the second pushrod. As the set force of the second spring is acting on the second pushrod, the combined forces of both the first spring and the second spring then act on the needle valve, which will not lift unless these forces are overcome.

When the high pressure fuel (ie, in-line pressure) overcomes the combined forces of the first and second springs, the needle valve is again lifted and main injection can begin. (Second opening pressure is represented by point **"F"** in the bottom left hand figure and **"B-C"** in the above figure.)

9Y1211121ENM0010US0

3. COOLING SYSTEM

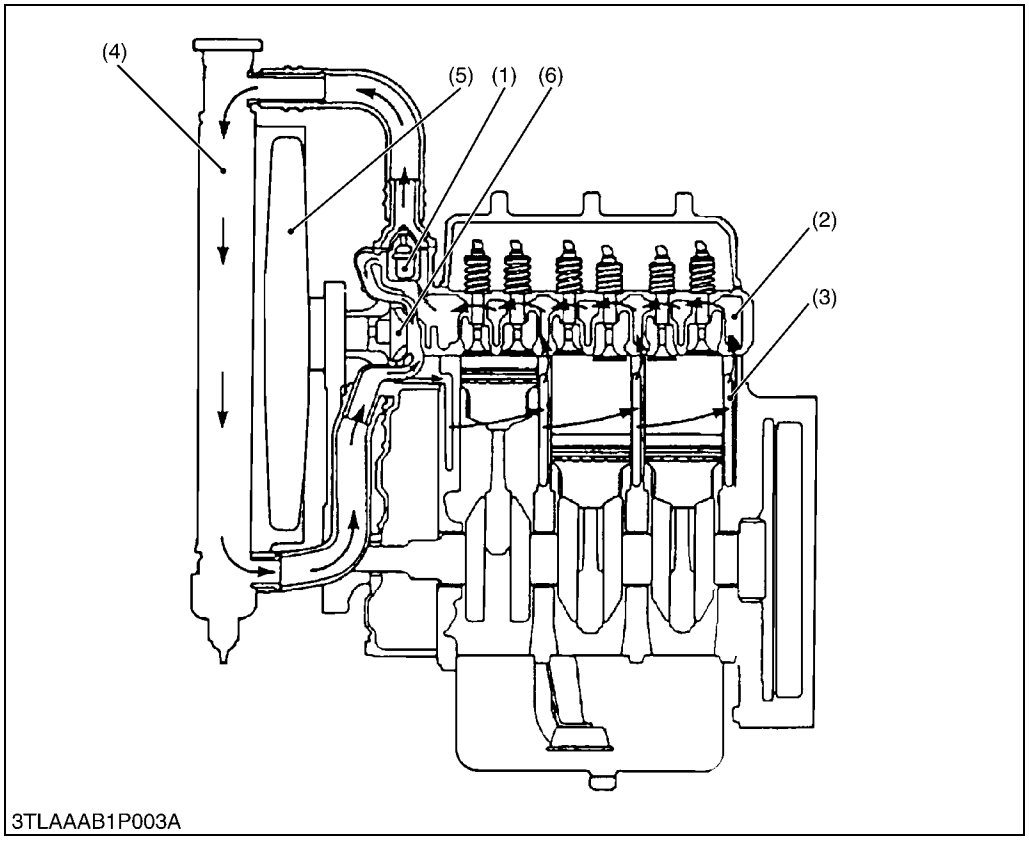

(1) Thermostat
(2) Cylinder Head Water Jacket
(3) Cylinder Block Water Jacket
(4) Radiator
(5) Cooling Fan
(6) Water Pump

The cooling system consists of a radiator (4), a centrifugal water pump (6), a cooling fan (5) and a thermostat (1).

The water is cooled as it flows through the radiator core, and the cooling air through the radiator core by cooling fan.

The water pump receives water from the radiator or from the cylinder head and force it into the cylinder block.

The thermostat opens or closes according to the water temperature. When the water temperature is high, the thermostat opens to allow the water to flow from the cylinder head to the radiator. When the water temperature is low, the thermostat close to flow the water only to the water pump.

9Y1211121ENM0011US0

https://truckmanualshub.com/

SERVICING

CONTENTS

1. TROUBLESHOOTING 1-S1
2. SERVICING SPECIFICATIONS 1-S4
3. TIGHTENING TORQUES 1-S9
4. CHECKING AND ADJUSTING 1-S10
   [1] ENGINE BODY 1-S10
   [2] LUBRICATING SYSTEM 1-S12
   [3] COOLING SYSTEM 1-S12
   [4] FUEL SYSTEM 1-S15
5. PREPARATION 1-S17
   [1] MANUAL TRANSMISSION TYPE 1-S17
      (1) Separating Engine from Clutch Housing Case 1-S17
      (2) Separating Engine from Front Axle Frame 1-S26
   [2] HST TYPE 1-S28
      (1) Separating Engine from Clutch Housing Case 1-S28
      (2) Separating Engine from Front Axle Frame 1-S37
6. DISASSEMBLING AND ASSEMBLING 1-S40
   [1] CYLINDER HEAD AND VALVES 1-S40
   [2] TIMING GEARS, CAMSHAFT AND FUEL CAMSHAFT 1-S44
   [3] CONNECTING ROD AND PISTON 1-S48
   [4] CRANKSHAFT 1-S51
   [5] THERMOSTAT 1-S54
7. SERVICING 1-S55
   [1] CYLINDER HEAD AND VALVES 1-S55
   [2] TIMING GEARS, CAMSHAFT AND FUEL CAMSHAFT 1-S61
   [3] PISTON AND CONNECTING ROD 1-S63
   [4] CRANKSHAFT 1-S66
   [5] CYLINDER 1-S71
   [6] OIL PUMP 1-S72

1. TROUBLESHOOTING

Symptom	Probable Cause and Checking Procedure	Solution	Reference Page
Engine Does Not Start	1. No fuel	Fill fuel	G-9
	2. Fuel leak due to loose injection pipe retaining nut	Tighten retaining nut	1-S40
	3. Air in the fuel system	Vent air	G-34
	4. Water in the fuel system	Change fuel and repair or replace fuel system	G-9
	5. Fuel with low cetane number	Use specified fuel	G-9
	6. Excessively high viscosity of fuel or engine oil at low temperature	Use specified fuel or engine oil	G-9
	7. Fuel filter clogged	Replace	G-25
	8. Fuel hose clogged	Clean or replace	G-26
	9. Stop solenoid malfunctioning	Replace	9-S14
	10. Injection nozzle clogged	Repair or replace	1-S16
	11. Injection pump malfunctioning	Repair or replace	1-S44
	12. Compression leak from cylinder	Solution Order 1. Tighten cylinder head screw, glow plug and nozzle holder	1-S40, 1-S42
		2. Replace cylinder head gasket	1-S42
	13. Excessive valve clearance	Adjust	1-S11
	14. Improper valve timing	Correct or replace timing gear	1-S47
	15. Incorrect injection timing	Adjust	1-S15
	16. Piston ring and cylinder worn	Replace	1-S64, 1-S71
	17. Fuel camshaft worn	Replace	1-S47
	18. Seizure of crankshaft, camshaft, piston, cylinder or bearing	Repair or replace	1-S52, 1-S47, 1-S49
(Starter Does Not Run)	1. Electrical system malfunctioning	Repair or replace	9-S1
Engine Revolution Is Not Smooth	1. Air cleaner clogged	Clean or replace	G-25
	2. Fuel filter clogged or dirty	Replace	G-25
	3. Fuel leak due to loose injection pipe retaining nut	Tighten retaining nut	1-S40
	4. Governor malfunctioning	Repair	1-S45
	5. Incorrect nozzle opening pressure	Replace	1-S16
	6. Injection nozzle stuck or clogged	Replace	1-S16
	7. Injection pump malfunctioning	Repair or replace	1-S44

Symptom	Probable Cause and Checking Procedure	Solution	Reference Page
Either White or Blue Exhaust Gas Is Observed	1. Excessive engine oil	Reduce to specified level	G-9
	2. Piston ring and cylinder worn or stuck	Repair or replace	1-S64, 1-S71
	3. Incorrect injection timing	Adjust	1-S15
Either Black or Dark Gray Exhaust Gas Is Observed	1. Overload	Reduce the load	–
	2. Low grade fuel used	Use specified fuel	G-9
	3. Air cleaner clogged	Clean or replace	G-25
	4. Fuel filter clogged	Replace	G-25
	5. Deficient nozzle injection	Repair or replace nozzle	1-S16
Deficient Output	1. Air cleaner dirty or clogged	Clean or replace	G-25
	2. Deficient nozzle injection	Repair or replace nozzle	1-S16
	3. Compression leak	Check the compression pressure and repair	1-S10
	4. Incorrect injection timing	Adjust	1-S15
	5. Engine's moving parts seem to be seizing	Repair or replace	–
	6. Injection pump malfunctioning	Repair or replace	1-S44
Excessive Lubricant Oil Consumption	1. Piston ring's gap facing the same direction	Shift ring gap direction	1-S50
	2. Oil ring worn or stuck	Replace	1-S50
	3. Piston ring groove worn	Replace piston	1-S65
	4. Valve stem and valve guide worn	Replace	1-S57
	5. Crankshaft bearing, and crank pin bearing worn	Replace	1-S67
	6. Oil leaking due to damaged seals or packing	Replace	1-S48
Fuel Mixed into Lubricant Oil	1. Injection pump's plunger worn	Repair or replace	1-S44
	2. Deficient nozzle injection	Replace	1-S16
	3. Injection pump broken	Replace	1-S44
Water Mixed into Lubricant Oil	1. Head gasket damaged	Replace	1-S41
	2. Cylinder block or cylinder head flawed	Replace	1-S56

Symptom	Probable Cause and Checking Procedure	Solution	Reference Page
Low Oil Pressure	1. Engine oil insufficient	Fill	G-9
	2. Different type of oil	Use specified type of oil	G-9
	3. Oil strainer clogged	Clean	1-S48
	4. Relief valve stuck with dirt	Clean	1-S46
	5. Relief valve spring weaken or broken	Replace	1-S46
	6. Oil pump damaged	Replace	1-S48
	7. Excessive oil clearance of crankshaft bearing	Replace	1-S68
	8. Excessive oil clearance of crankpin bearing	Replace	1-S67
	9. Excessive oil clearance of rocker arm	Replace	1-S60
	10. Oil passage clogged	Clean	–
High Oil Pressure	1. Different type of oil	Use specified type of oil	G-9
	2. Relief valve damaged	Replace	1-S46
Engine Overheated	1. Overload running	Reduce the load	–
	2. Engine oil insufficient	Fill	G-9
	3. Coolant insufficient	Fill	G-9
	4. Unsuitable fuel used	Use specified fuel	G-9
	5. Fan belt broken or elongated	Replace or adjust	G-24, 1-S12
	6. Radiator net and radiator fin clogged with dust	Clean	1-S14
	7. Radiator cap damaged	Replace	1-S13
	8. Inside of radiator corroded	Clean or replace	1-S13
	9. Coolant flow route corroded	Clean or replace	1-S13
	10. Head gasket damaged	Replace	1-S42
	11. Incorrect injection timing	Adjust	1-S15

9Y1211121ENS0001US0

2. SERVICING SPECIFICATIONS

ENGINE BODY

Item		Factory Specification	Allowable Limit
Cylinder Head Surface	Flatness	–	0.05 mm / 500 mm 0.002 in. / 19.6 in.
Compression Pressure (When Cranking with Starting Motor)		2.95 to 3.23 MPa (30.0 to 33.0 kgf/cm^2, 427 to 469 psi) / 290 min^{-1} (rpm)	2.35 MPa (24.0 kgf/cm^2, 341 psi) / 290 min^{-1} (rpm)
Difference among Cylinders		–	10 % or less
Top Clearance		0.60 to 0.70 mm 0.024 to 0.027 in.	–
Valve Clearance (When Cold)		0.18 to 0.22 mm 0.0071 to 0.0086 in.	–
Valve Seat	Width (Intake)	2.12 mm 0.0835 in.	–
	Width (Exhaust)	2.12 mm 0.0835 in.	–
	Angle (Intake)	0.79 rad 45 °	–
	Angle (Exhaust)	0.79 rad 45 °	–
Valve Face	Angle (Intake)	0.79 rad 45 °	–
	Angle (Exhaust)	0.79 rad 45 °	–
Valve Stem to Valve Guide	Clearance	0.040 to 0.070 mm 0.0016 to 0.0027 in.	0.1 mm 0.004 in.
• Valve Stem	O.D.	7.960 to 7.975 mm 0.3134 to 0.3139 in.	–
• Valve Guide	I.D.	8.015 to 8.030 mm 0.3156 to 0.3161 in.	–
Valve Recessing	Recessing	0.65 to 0.85 mm 0.026 to 0.033 in.	0.4 mm 0.016 in.
Valve Timing (Intake Valve)	Open	0.14 rad (8 °) before B.D.C.	–
	Close	0.35 rad (20 °) after T.D.C.	–
Valve Timing (Exhaust Valve)	Open	0.49 rad (28 °) before B.D.C	–
	Close	0.1 rad (8 °) after T.D.C.	–

Item		Factory Specification	Allowable Limit
Valve Spring	Free Length	41.7 to 42.2 mm 1.65 to 1.66 in.	41.2 mm 1.62 in.
	Setting Load / Setting Length	118 N / 35.0 mm 12.0 kgf / 35.0 mm 26.5 lbf / 1.3780 in.	100 N / 35.0 mm 10.2 kgf / 35.0 mm 22.5 lbf / 1.3780 in.
	Tilt	–	1.0 mm 0.039 in.
Rocker Arm Shaft to Rocker Arm	Clearance	0.016 to 0.045 mm 0.00063 to 0.0017 in.	0.1 mm 0.0039 in.
• Rocker Arm Shaft	O.D.	13.973 to 13.984 mm 0.55012 to 0.55055 in.	–
• Rocker Arm	I.D.	14.000 to 14.018 mm 0.55119 to 0.55188 in.	–
Push Rod	Alignment	–	0.25 mm 0.0098 in.
Tappet to Tappet Guide	Clearance	0.020 to 0.062 mm 0.00079 to 0.0024 in.	0.07 mm 0.0028 in.
• Tappet	O.D.	23.959 to 23.980 mm 0.94327 to 0.94409 in.	–
• Tappet Guide	I.D.	24.000 to 24.021 mm 0.94489 to 0.94570 in.	–
Timing Gear • Crank Gear to Idle Gear	Backlash	0.04150 to 0.1122 mm 0.001634 to 0.004417 in.	0.15 mm 0.0059 in.
• Idle Gear to Cam Gear	Backlash	0.04150 to 0.1154 mm 0.001634 to 0.004543 in.	0.15 mm 0.0059 in.
• Idle Gear to Injection Pump Gear	Backlash	0.0415 to 0.1154 mm 0.001634 to 0.004543 in.	0.15 mm 0.0059 in.
• Crank Gear to Oil Pump Gear	Backlash	0.04840 to 0.2455 mm 0.001906 to 0.009665 in.	0.30 mm 0.012 in.
Idle Gear	Side Clearance	0.15 to 0.25 mm 0.0059 to 0.0098 in.	0.90 mm 0.035 in.
Idle Gear Shaft to Idle Gear Bushing	Clearance	0.025 to 0.066 mm 0.00099 to 0.0025 in.	0.1 mm 0.0039 in.
• Idle Gear Shaft	O.D.	37.959 to 37.975 mm 1.4945 to 1.4950 in.	–
• Idle Gear Bushing	I.D.	38.000 to 38.025 mm 1.4961 to 1.4970 in.	–
Camshaft	Side Clearance	0.070 to 0.22 mm 0.0028 to 0.0086 in.	0.30 mm 0.012 in.
	Alignment	–	0.01 mm 0.0004 in.

Item		Factory Specification	Allowable Limit
Cam	Height (Intake) (Exhaust)	32.20 mm 1.268 in. 31.80 mm 1.252 in.	32.15 mm 1.266 in. 31.75 mm 1.250 in.
Camshaft Journal to Cylinder Block Bore	Clearance	0.050 to 0.091 mm 0.0020 to 0.0035 in.	0.15 mm 0.0059 in.
• Camshaft Journal	O.D.	39.934 to 39.950 mm 1.5722 to 1.5728 in.	–
• Cylinder Block Bore	I.D.	40.000 to 40.025 mm 1.5748 to 1.5757 in.	–
Piston Pin Bore	I.D.	25.000 to 25.013 mm 0.98426 to 0.98476 in.	25.05 mm 0.9862 in.
Top ring to Ring Groove	Clearance	0.050 to 0.090 mm 0.0020 to 0.0035 in.	0.20 mm 0.0079 in.
Second Ring to Ring Groove	Clearance	0.0780 to 0.110 mm 0.00307 to 0.00433 in.	0.2 mm 0.0079 in.
Oil Ring to Ring Groove	Clearance	0.030 to 0.070 mm 0.0012 to 0.0027 in.	0.15 mm 0.0059 in.
Top Ring	Ring Gap	0.20 to 0.35 mm 0.0079 to 0.013 in.	1.25 mm 0.0492 in.
Second Ring	Ring Gap	0.30 to 0.45 mm 0.012 to 0.017 in.	1.25 mm 0.0492 in.
Oil Ring	Ring Gap	0.20 to 0.40 mm 0.0079 to 0.015 in.	1.25 mm 0.0492 in.
Connecting Rod	Alignment	–	0.05 mm 0.0020 in.
Piston Pin to Small End Bushing	Clearance	0.014 to 0.038 mm 0.00056 to 0.00150 in.	0.15 mm 0.0059 in.
• Piston Pin	O.D.	25.002 to 25.011 mm 0.98433 to 0.98468 in.	–
• Small End Bushing	I.D.	25.025 to 25.040 mm 0.98524 to 0.98582 in.	–
Crankshaft	Alignment	–	0.02 mm 0.00079 in.
Crankshaft Journal to Crankshaft Bearing 1	Oil Clearance	0.0400 to 0.118 mm 0.00158 to 0.00464 in.	0.2 mm 0.008 in.
• Crankshaft Journal	O.D.	59.921 to 59.940 mm 2.3591 to 2.3598 in.	–
• Crankshaft Bearing 1	I.D.	59.980 to 60.039 mm 2.3615 to 2.3637 in.	–
Crankshaft Bearing 1	Side Clearance	4.20 to 4.50 mm 0.166 to 0.177 in.	–

Item		Factory Specification	Allowable Limit
Crankshaft Journal to Crankshaft Bearing 2	Oil Clearance	0.0400 to 0.104 mm 0.00158 to 0.00409 in.	0.2 mm 0.008 in.
• Crankshaft Journal	O.D.	59.921 to 59.940 mm 2.3591 to 2.3598 in.	–
• Crankshaft Bearing 2	I.D.	59.980 to 60.025 mm 2.3615 to 2.3631 in.	–
Crankpin to Crankpin Bearing	Oil Clearance	0.025 to 0.087 mm 0.00099 to 0.0034 in.	0.2 mm 0.0079 in.
• Crankpin	O.D.	46.959 to 46.975 mm 1.8488 to 1.8494 in.	–
• Crankpin Bearing	I.D.	47.000 to 47.046 mm 1.8504 to 1.8522 in.	–
Crankshaft	Side Clearance	0.15 to 0.31 mm 0.0059 to 0.012 in.	0.5 mm 0.02 in.
Crankshaft Sleeve	Wear	–	0.1 mm 0.004 in.
Cylinder Bore [Standard]	I.D.	87.000 to 87.022 mm 3.4252 to 3.4260 in.	+ 0.15 mm + 0.0059 in.
[Oversize]	I.D.	87.250 to 87.272 mm 3.4351 to 3.4359 in.	+ 0.15 mm + 0.0059 in.
Finishing		Hone to 2.2 to 3.0 µmRz (0.000087 to 0.000118 in. Rz)	

LUBRICATING SYSTEM

Item		Factory Specification	Allowable Limit
Engine Oil Pressure	At Idle Speed	More than 98 kPa 1.0 kgf/cm^2 14 psi	50 kPa 0.5 kgf/cm^2 7 psi
	At Rated Speed	300 to 440 kPa 3.0 to 4.5 kgf/cm^2 43 to 64 psi	250 kPa 2.5 kgf/cm^2 36 psi
Inner Rotor to Outer Rotor	Clearance	0.030 to 0.14 mm 0.0012 to 0.0055 in.	0.2 mm 0.008 in.
Outer Rotor to Pump Body	Clearance	0.11 to 0.19 mm 0.0044 to 0.0074 in.	0.25 mm 0.0098 in.
Inner Rotor to Cover	Clearance	0.105 to 0.150 mm 0.00414 to 0.00590 in.	0.2 mm 0.008 in.

COOLING SYSTEM

Item		Factory Specification	Allowable Limit
Fan Belt	Tension	7.0 to 9.0 mm (0.28 to 0.35 in.) deflection at 98 N (10 kgf, 22 lbf) of force	–
Thermostat	Valve Opening Temperature (At Beginning)	80.5 to 83.5 °C 177 to 182 °F	–
	Valve Opening Temperature (Opened Completely)	95 °C 203 °F	–
Radiator	Water Tightness	No leak at 140 kPa 1.4 kgf/cm^2 20 psi	–
Radiator Cap	Pressure Falling Time	More than 10 seconds for pressure falling from 80 to 60 kPa from 0.9 to 0.6 kgf/cm^2 from 10 to 9 psi	–

FUEL SYSTEM

Item		Factory Specification	Allowable Limit
Injection Pump	Injection Timing	0.0568 to 0.0829 rad (3.25 to 4.75 °) before T.D.C	–
Injection Nozzle	Injection Pressure	19.1 to 20.1 MPa 195 to 205 kgf/cm^2 2770 to 2910 psi	–
Injection Nozzle Valve Seat	Valve Seat Tightness	When the pressure is 16.7 MPa (170 kgf/cm^2, 2420 psi), the valve seat must be fuel tightness.	–

9Y1211121ENS0002US0

3. TIGHTENING TORQUES

Tightening torques of screws, bolts and nuts on the table below are especially specified.
(For general use screws, bolts and nuts: See page G-11.)

Item	N·m	kgf·m	lbf·ft
Steering wheel mounting nut	49 to 55	5.0 to 5.7	37 to 41
Screw (joint shaft)	23.5 to 27.4	2.4 to 2.8	18 to 20
Screw (bearing support)	23.5 to 27.4	2.4 to 2.8	18 to 20
Delivery pipe joint screw (M16)	49 to 68	5.0 to 7.0	37 to 50
Delivery pipe joint screw (PS controller side)	40 to 48	4.0 to 5.0	29 to 36
Delivery pipe joint screw (hydraulic pump side)	49 to 68	5.0 to 7.0	37 to 50
Muffler mounting screw	32 to 37	3.2 to 3.8	24 to 27
Front axle frame mounting screw (M12)	103 to 117	10.5 to 12.0	76.0 to 86.7
Joint screw (HST return pipe)	80 to 88	8.1 to 9.0	59 to 65
Retaining nut (HST delivery pipe)	49 to 58	5.0 to 6.0	37 to 43

Item	Dimension × Pitch	N·m	kgf·m	lbf·ft
Oil pressure switch	PT1/8	15 to 19	1.5 to 2.0	11 to 14
Cylinder head cover screw	M8 × 1.25	6.87 to 11.2	0.700 to 1.15	5.07 to 8.31
Injection pipe retaining nut	M12 × 1.5	25 to 34	2.5 to 3.5	18 to 25
Nozzle holder clamp screw	M10 × 1.25	26 to 29	2.3 to 3.0	19 to 21
Retaining screw of overflow pipe assembly	M6 × 1.0	9.81 to 11.2	1.00 to 1.15	7.24 to 8.31
Glow plug	M10 × 1.25	15 to 19	1.5 to 2.0	11 to 14
*Rocker arm bracket nut	M8 × 1.25	24 to 27	2.4 to 2.8	18 to 20
*Cylinder head screw	M11 × 1.25	93.2 to 98.0	9.50 to 10.0	68.8 to 72.3
Hi-idling body	M14 × 1.0	45 to 49	4.5 to 5.0	33 to 36
*Fan drive pulley mounting nut	M30 × 1.5	138 to 156	14.0 to 16.0	102 to 115
Camshaft set bolt	M8 × 1.25	24 to 27	2.4 to 2.8	18 to 20
*Connecting rod screw	M8 × 1.0	40 to 44	4.0 to 4.5	29 to 32
*Flywheel screws	M12 × 1.25	98.1 to 107	10.0 to 11.0	72.4 to 79.5
Bearing case cover mounting screw	M8 × 1.25	24 to 27	2.4 to 2.8	18 to 20
*Main bearing case screws 2	M10 × 1.25	69 to 73	7.0 to 7.5	51 to 54
*Main bearing case screw 1	M9 × 1.25	46 to 50	4.7 to 5.2	34 to 37

■ **NOTE**

- **For * marked screws, bolts and nuts on the table, apply engine oil to their threads and seats before tightening.**
- **The letter "M" in Size × Pitch means that the screw, bolt or nut dimension stands for metric. The size is the nominal outside diameter in mm of the threads. The pitch is the nominal distance in mm between two threads.**

9Y1211121ENS0003US0

4. CHECKING AND ADJUSTING

[1] ENGINE BODY

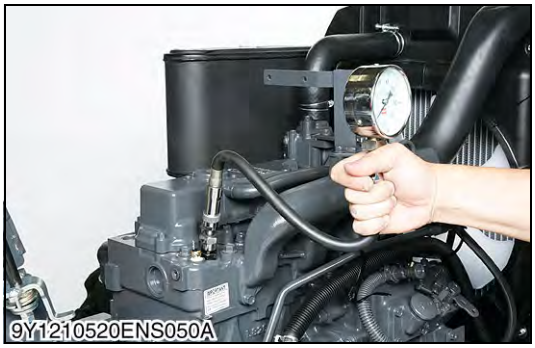

Compression Pressure

1. Run the engine until it is warmed up.
2. Stop the engine and disconnect the **2P** connector from the stop solenoid in order to inject fuel.
3. Remove the fuel tank and all injection nozzles.
4. Set a compression tester (Code No. 07909-30208) with the adaptor to the nozzle hole (Nozzle hole thread size : M20 × 1.5).
5. Keep the engine stop lever at **"Stop Position"**.
6. While cranking the engine with the starter, measure the compression pressure.
7. Repeat steps 4 through 6 for each cylinder.
8. If the measurement is below the allowable limit, apply a small amount of oil to the cylinder wall through the nozzle hole and measure the compression pressure again.
9. If the compression pressure is still less than the allowable limit, check the top clearance, valve and cylinder head.
10. If the compression pressure increases after applying oil, check the cylinder wall and piston rings.

■ **NOTE**

- **Check the compression pressure with the specified valve clearance.**
- **Always use a fully charged battery for performing this test.**
- **Variances in cylinder compression values should be under 10 %.**

Compression pressure	Factory specification	2.95 to 3.23 MPa 30.0 to 33.0 kgf/cm^2 427 to 469 psi
	Allowable limit	2.35 MPa 24.0 kgf/cm^2 341 psi

9Y1211121ENS0004US0

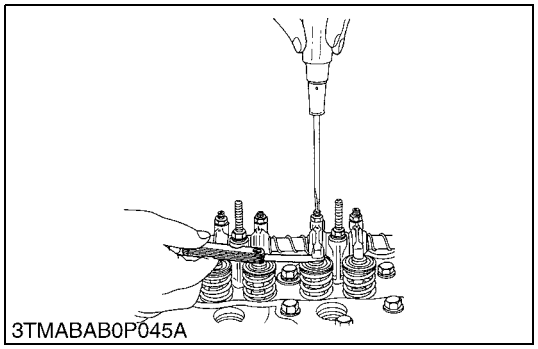
3TMABAB0P045A

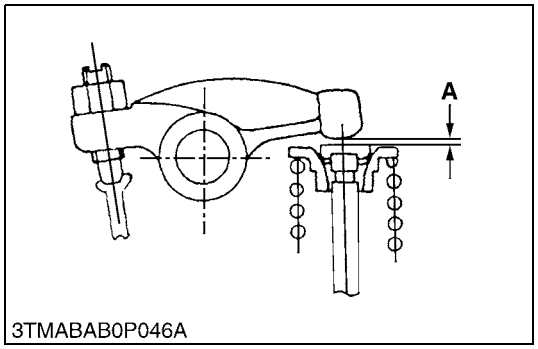

3TMABAB0P046A

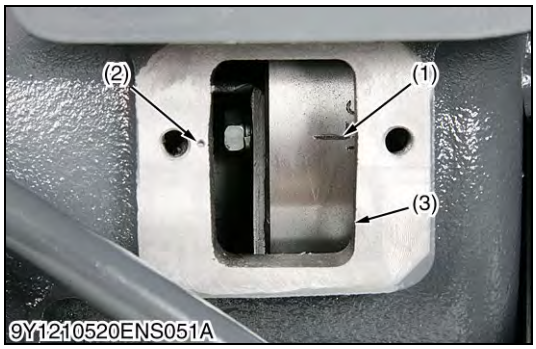

9Y1210520ENS051A

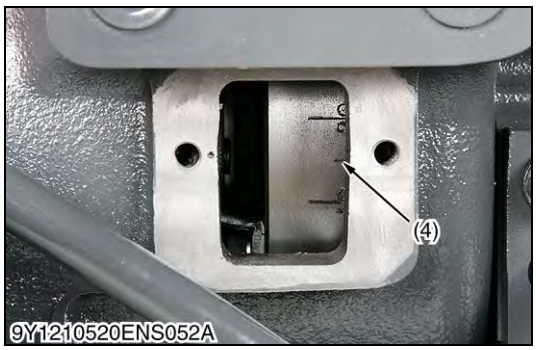

9Y1210520ENS052A

Valve Clearance

■ **IMPORTANT**

- **Valve clearance must be checked and adjusted when engine is cold.**

1. Remove the fuel tank, the head cover, the glow plugs and the timing window cover on the clutch housing.
2. Align the **"1TC"** mark line on the flywheel and center of timing window so that the No. 1 piston comes to the compression or overlap top dead center.
3. Check the following valve clearance marked with "☆" using a feeler gauge.
4. If the clearance is not within the factory specifications, adjust with the adjusting screw.

Valve clearance	Factory specification	0.18 to 0.22 mm 0.0071 to 0.0086 in.

■ **NOTE**

- **The "TC" marking line on the flywheel is just for No. 1 cylinder. There is no "TC" marking for the other cylinders.**
- **No. 1 piston comes to the T.D.C. position when the "TC" marking is aligned with the center mark of timing window on clutch-housing. Turn the flywheel 0.26 rad (15 °) clockwise and counterclockwise to see if the piston is at the compression top dead center or the overlap position. Now referring to the table below, readjust the valve clearance. (The piston is at the compression top dead center when both the IN. and EX. valves do not move; it is at the overlap position when both the valves move.)**
- **Finally turn the flywheel 6.28 rad (360 °) and align the "TC" marking line and the center mark of timing window. Adjust all the other valve clearance as required.**
- **After turning the flywheel counterclockwise twice or three times, recheck the valve clearance, firmly tighten the lock nut of the adjusting screw.**

Adjustable Cylinder Location of Piston		Valve Arrangement	
		IN.	EX.
When No. 1 piston is at compression top dead center	No. 1	☆	☆
	No. 2		☆
	No. 3	☆	
When No. 1 piston is at overlap position	No. 1		
	No. 2	☆	
	No. 3		☆

(1) "1TC" Mark Line
(2) Center Mark of Timing Window
(3) Timing Window
(4) 0.26 rad (15 °) Mark Line (of Top Dead Center or Overlap Position)

A: Valve Clearance

9Y1211121ENS0005US0

[2] LUBRICATING SYSTEM

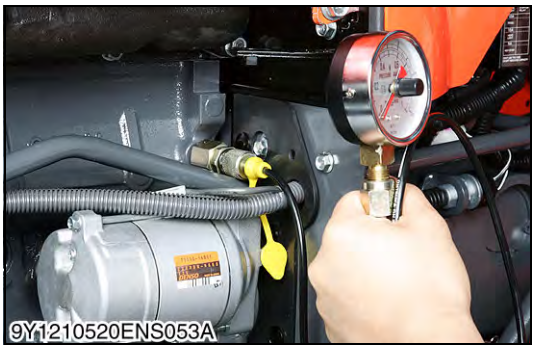

Engine Oil Pressure

1. Remove the engine oil pressure switch, and set an oil pressure tester (Code No. 07916-32032). (Adaptor screw size: PT 1/8).
2. Start the engine. After warming up, measure the oil pressure of both idling and rated speeds.
3. If the oil pressure is less than the allowable limit, check the following.

- Engine oil insufficient.
- Oil pump defective
- Oil strainer clogged
- Oil filter cartridge clogged
- Oil gallery clogged
- Excessive oil clearance
- Foreign matter in the relief valve

Engine oil pressure	At idle speed	Factory specification	More than 98 kPa 1.0 kgf/cm^2 14 psi
		Allowable limit	50 kPa 0.5 kgf/cm^2 7 psi
	At rated speed	Factory specification	300 to 440 kPa 3.0 to 4.5 kgf/cm^2 43 to 64 psi
		Allowable limit	250 kPa 2.5 kgf/cm^2 36 psi

(When reassembling)

- After checking the engine oil pressure, tighten the engine oil pressure switch to the specified torque.

Tightening torque	Oil pressure switch	15 to 19 N·m 1.5 to 2.0 kgf·m 11 to 14 lbf·ft

9Y1211121ENS0006US0

[3] COOLING SYSTEM

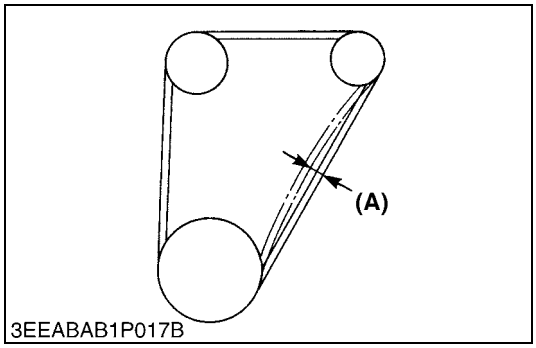

Fan Belt Tension

1. Measure the deflection **(A)**, depressing the belt halfway between the fan drive pulley and alternator pulley at specified force 98 N (10 kgf, 22 lbf).
2. If the measurement is not within the factory specifications, loosen the alternator mounting screws and relocate the alternator to adjust.

Deflection **(A)**	Factory specification	7.0 to 9.0 mm 0.28 to 0.35 in.

9Y1211121ENS0007US0

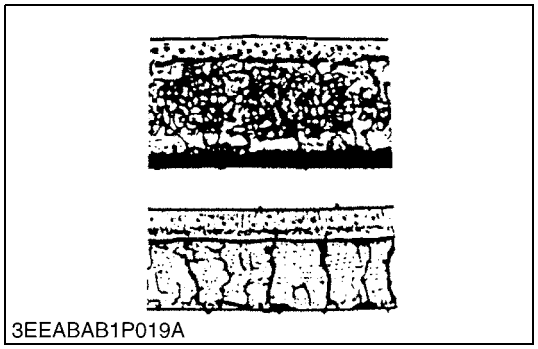
3EEABAB1P019A

Fan Belt Damage and Wear

1. Check the fan belt for damage.
2. If the fan belt is damaged, replace it.
3. Check if the fan belt is worn and sunk in the pulley groove.
4. If the fan belt is nearly worn out and deeply sunk in the pulley groove, replace it.

(A) Good **(B) Bad**

9Y1211121ENS0008US0

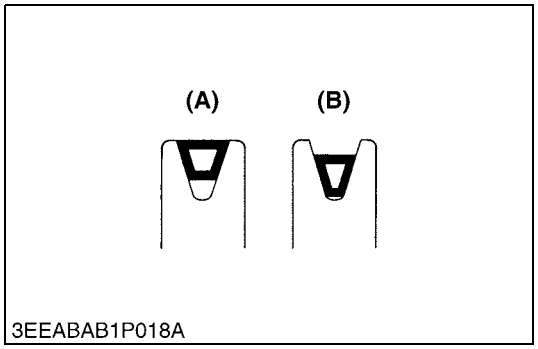

3EEABAB1P018A

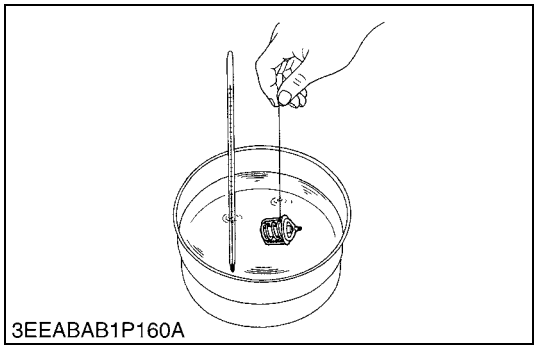
3EEABAB1P160A

Thermostat Valve Opening Temperature

1. Suspend the thermostat in the water by a string with its end inserted between the valve and seat.
2. Heating the water gradually, read the temperature when the valve opens and leaves the string.
3. Continue heating and read the temperature when the valve opens approx. 6 mm (0.2 in.).
4. If the measurement is not within the factory specifications, replace the thermostat.

Thermostat's valve opening temperature	Factory specification	80.5 to 83.5 °C 177 to 182 °F
Temperature at which thermostat completely opens	Factory specification	95 °C 203 °F

9Y1211121ENS0009US0

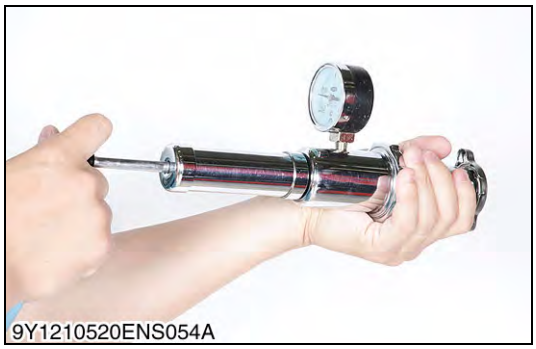
9Y1210520ENS054A

Radiator Cap Air Leakage

CAUTION

- **When removing the radiator cap, wait at least ten minutes after the engine has stopped and cooled down. Otherwise, hot water may gush out, scalding nearby people.**

1. Set a radiator tester (Code No. 07909-31551) and an adapter (BANZAI Code No. RCT-2A-30S) on the radiator cap.
2. Apply the specified pressure 80 kPa (0.9 kgf/cm^2, 10 psi), and measure the time for the pressure to fall to 60 kPa (0.6 kgf/cm^2, 10 psi).
3. If the measurement is less than the factory specification, replace the radiator cap.

Pressure falling time	Factory specification	More than 10 seconds for pressure fall from 80 to 60 kPa (from 0.9 to 0.6 kgf/cm^2, from 10 to 9 psi)

9Y1211121ENS0010US0

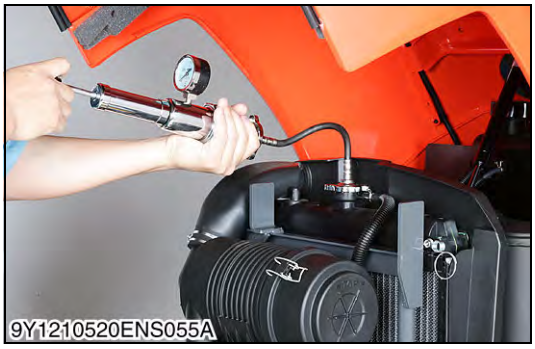

Radiator Water Leakage

1. Pour a specified amount of water into the radiator.
2. Set a radiator tester (Code No. 07909-31551) with an adaptor (BANZAI Code No. RCT-2A-30S) and raise the water pressure to the specified pressure.
3. Check the radiator and water pipes for water leak.
4. For water leak from the pinhole, replace the radiator or repair with the radiator cement. When water leak is excessive, replace the radiator.
5. For water leaf from water pipe, replace the water pipe.

Radiator water leakage test pressure	Factory specification	No leak at 140 kPa 1.4 kgf/cm^2 20 psi

9Y1211121ENS0011US0

[4] FUEL SYSTEM

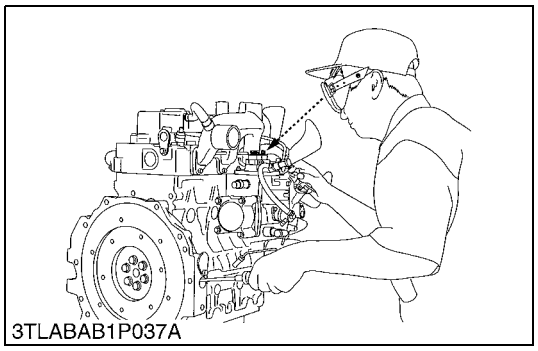
3TLABAB1P037A

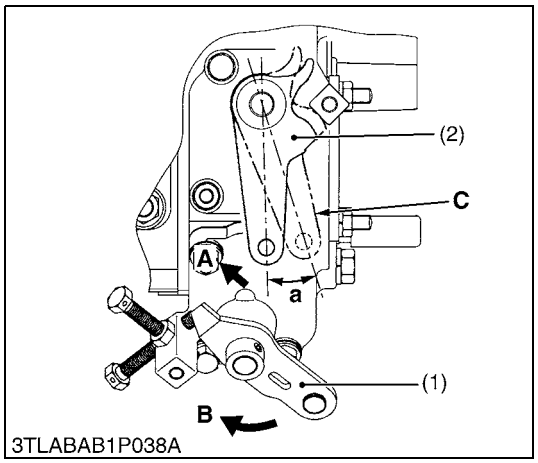

3TLABAB1P038A

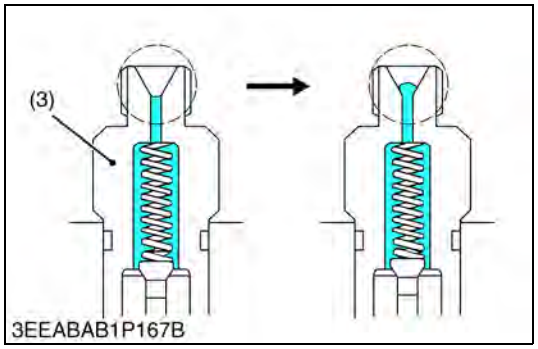

3EEABAB1P167B

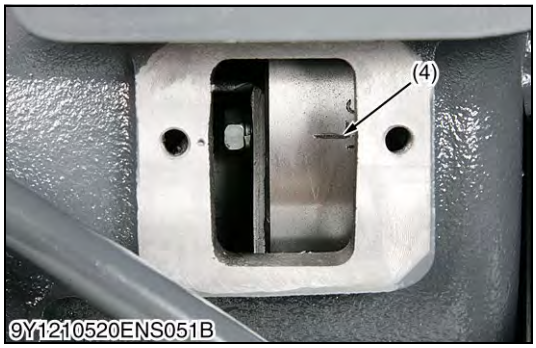

9Y1210520ENS051B

Injection Timing

1. Remove the stop solenoid.
2. Remove the fuel tank, injection pipes and glow plugs.
3. Set the speed control lever to maximum fuel discharge position.

(Reference)

- Turn the flywheel with screwdriver.

4. Turn the flywheel counterclockwise (facing the flywheel) until the fuel fills up to the hole of the delivery valve holder for 1st cylinder.
5. Turn the flywheel further and stop turning when the fuel begins to flow over, to get the present injection timing.
6. (The flywheel has mark 1TC and four lines indicating every 0.09 rad (5 °) of crank angle from 0.17 rad (10 °) to 0.44 rad (25 °) before mark 1TC) Calculate the angle which the center of the window points out. If the calculation differs from specified injection timing, add or remove the shim to adjust.

(Injection Timing)

Injection timing	Factory specification	0.0568 to 0.0829 rad 3.25 ° to 4.75 ° B.T.D.C.

■ **NOTE**

- **The sealant is applied to both sides of the soft metal gasket shim. The liquid gasket is not required for assembling.**
- **Shims are available in thickness of 0.20 mm (0.0079 in.), 0.25 mm (0.098 in.) and 0.30 mm (0.012 in.). Combine these shims for adjustments.**
- **Addition or reduction of shim (0.05 mm, 0.002 in.) delays or advances the injection timing by approx. 0.009 rad (0.5 °).**
- **In disassembling and replacing, be sure to use the same number of new gasket shims with the same thickness.**

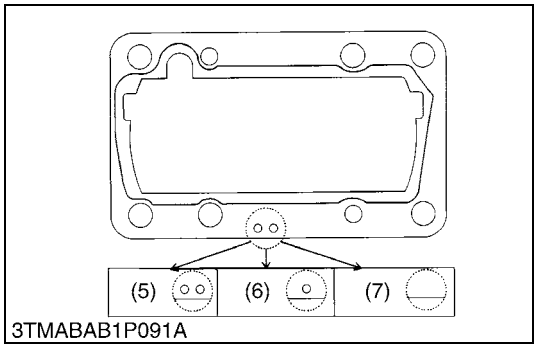

3TMABAB1P091A

(1) Speed Control Lever
(2) Stop Lever
(3) Delivery Valve Holder
(4) **"1TC"** Mark Line
(5) 2-Holes: 0.20 mm (0.0079 in.) (Shim)
(6) 1-hole: 0.25 mm (0.098 in.) (Shim)
(7) Without hole: 0.30 mm (0.012in.) (Shim)

A: To STOP Position
B: To Max. Speed Position
C: Stop Lever in Free Position

a: 0.267 ± 0.03 rad (15.3 ± 2 °)

9Y1211121ENS0012US0

CAUTION

- **Check the injection pressure and condition after you make sure that there is no one in the direction of the fumes.**
- **If the fumes from the nozzle directly touches the human body, they can cause damage to the cells and blood poisoning.**
- **Use eyes protector on eyes when inspecting the high pressure fuel from the fuel injection nozzle.**
- **Set the protection board for jetted fuel near the tractor when inspecting the high pressure fuel from the fuel injection nozzle.**
- **Use face protector on face when inspecting the high pressure fuel from the fuel injection nozzle.**
- **Use leather gloves or protector on hands, arm covers on arms and protector on body when inspecting the high pressure fuel from the fuel injection nozzle.**

9Y1211121ENS0013US0

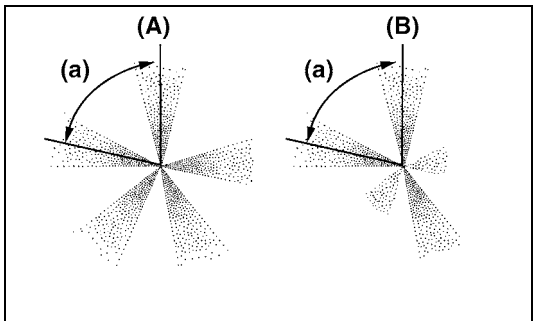

3EEADAB1P004C

Nozzle Fume Condition

1. Set the injection nozzle to a nozzle tester, and check the condition of the fumes from the nozzle.
2. If the fume condition is bad, replace the injection nozzle assembly.

(A) Good
(B) Bad
(a) 1.3 rad (72 °)

9Y1211121ENS0014US0

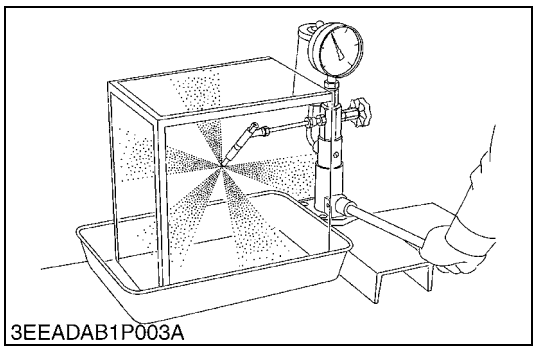
3EEADAB1P003A

Fuel Injection Pressure

1. Set the injection nozzle to a nozzle tester.
2. Slowly move the tester lever to measure the pressure at which the fuel start to jet out from the nozzle.
3. If the measurement is out of the factory specifications, replace the injection nozzle assembly.

Fuel injection pressure (1st stage)	Factory specification	19.1 to 20.1 MPa 195 to 205 kgf/cm^2 2770 to 2910 psi

9Y1211121ENS0015US0

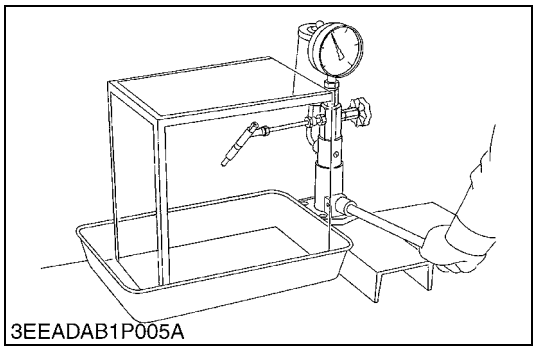
3EEADAB1P005A

Valve Seat Tightness

1. Set the injection nozzle to a nozzle tester.
2. Increase the fuel pressure, and keep it at 16.7 MPa (170 kgf/cm^2, 2420 psi) for 10 seconds.
3. If you find a fuel leakage, replace the injection nozzle assembly.

Valve seat tightness	Factory specification	No fuel leak at 16.7 MPa 170 kgf/cm^2 2420 psi

9Y1211121ENS0016US0

5. PREPARATION

[1] MANUAL TRANSMISSION TYPE

(1) Separating Engine from Clutch Housing Case

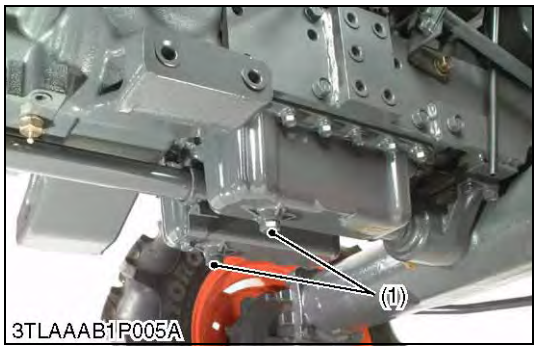

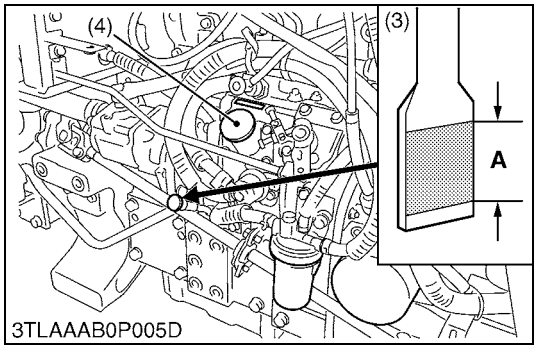

Draining Engine Oil

WARNING

To avoid personal injury or death:

- **Be sure to stop the engine before changing the oil.**
- **Allow engine to cool down sufficiently, oil can be hot and can burn.**

1. To drain the used oil, remove the drain plugs (1) at the bottom of the engine and drain the oil completely into the oil pan.
   All the used oil can be drained out easily when the engine is still warm.
2. After draining reinstall the drain plugs.

(When refilling)

- Remove the bonnet side cover (R.H.) (2).
- Fill the engine oil up to the upper line on the dipstick (3).

■ **IMPORTANT**

- **Never mix two different types of oil.**
- **Use the proper SAE Engine Oil according to ambient temperatures.**
  Refer to "LUBRICANTS, FUEL AND COOLANT". (See page G-9.)

Engine oil capacity (with filter)	5.7 L 6.0 U.S.qts 5.0 Imp.qts

(1) Drain Plug
(2) Bonnet Side Cover (R.H.)
(3) Dipstick
(4) Oil Inlet Plug

A: Oil level is acceptable within this range.

9Y1211121ENS0017US0

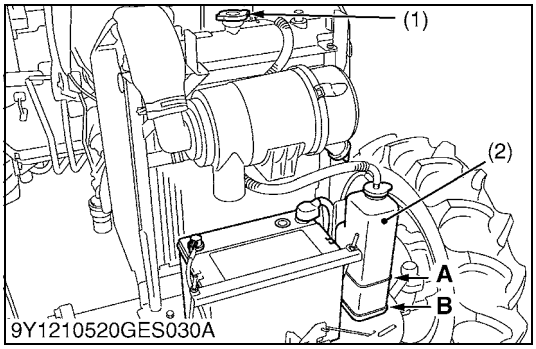

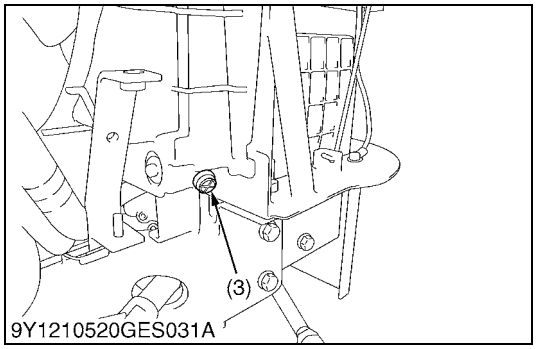

Draining Coolant

WARNING

To avoid personal injury or death:

- **Do not remove radiator cap while coolant is hot. When cool, slowly rotate cap to the first stop and allow sufficient time for excess pressure to escape before removing the cap completely.**

1. Stop the engine and let cool down.
2. To drain the coolant, open the bonnet and the radiator drain plug (3) and remove the radiator cap (1). The radiator cap (1) must be removed to completely drain the coolant.
3. After all coolant is drained, close the drain plug (3).

(When refilling)

- Fill with clean water and anti-freeze until the coolant level is just below the port. Install the radiator cap (1) securely.
- Fill with coolant up to **"FULL"** mark on the recovery tank.
- Start and operate the engine for few minutes.
- Stop the engine and let cool. Check coolant level of recovery tank (2) and add coolant if necessary.
- Properly dispose of used coolant.

■ **IMPORTANT**

- **Do not start engine without coolant.**
- **Use clean, fresh water and anti-freeze to fill the radiator and recovery tank.**
- **When the anti-freeze is mixed with water, the anti-freeze mixing ratio must be less than 50 %.**
- **Securely tighten radiator cap. If the cap is loose or improperly fitted, water may leak out and the engine could overheat.**
- **Refer to "LUBRICANTS, FUEL AND COOLANT". (See page G-9.)**

Coolant capacity (with recovery tank)	6.6 L 7.0 U.S.qts 5.8 Imp.qts

(1) Radiator Cap
(2) Recovery Tank
(3) Drain Plug

A: FULL
B: LOW

9Y1211121ENS0018US0

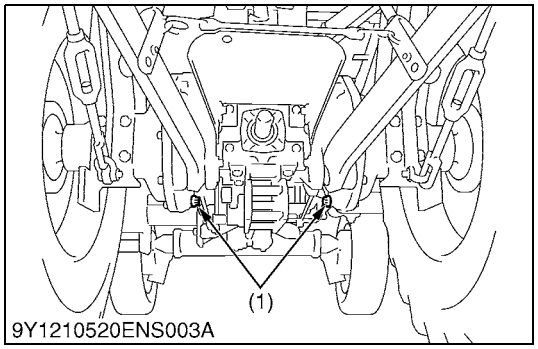

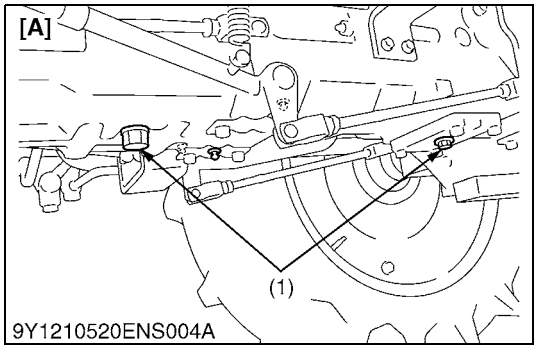

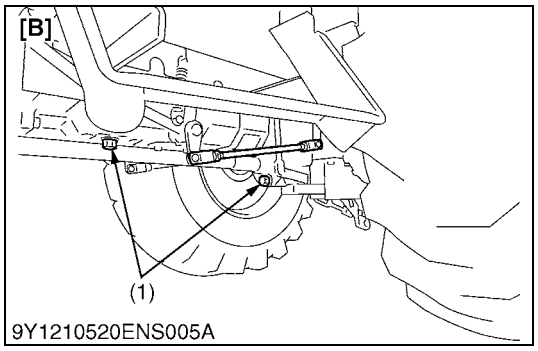

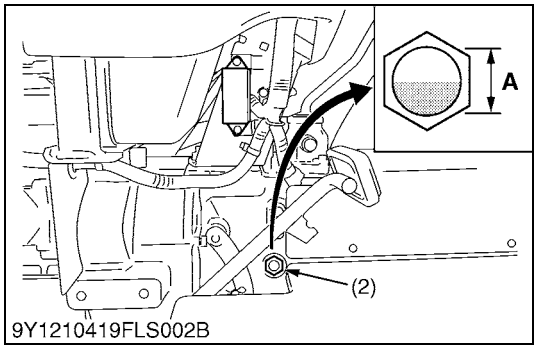

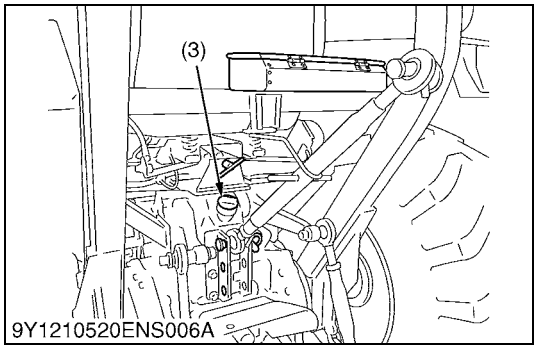

Draining the Transmission Fluid

WARNING

To avoid personal injury or death:

- **Allow engine to cool down sufficiently, oil can be hot and can burn.**

1. Remove the drain plugs (1) at the bottom of the transmission case and drain the oil completely into the oil pan.
2. After draining reinstall the drain plugs.

(When reassembling)

- Fill up new oil to the upper line of the gauge (2) from the oil inlet port after removing the oil inlet plug (3).
- After running the engine for a few minutes, stop it and check the fluid level again, if low, add fluid prescribed level **"A"**.

IMPORTANT

- **Use only multi-grade transmission fluid. Use of other fluids may damage the transmission or hydraulic system.**
- **Refer to "LUBRICANTS, FUEL AND COOLANT". (See page G-9.)**
- **Never work the tractor immediately after changing the transmission fluid. Keeping the engine at medium speed for a few minutes to prevent damage to the transmission.**
- **Do not mix different brands oil together.**

Transmission fluid capacity	2WD	27.0 L 7.1 U.S.gals 5.9 Imp.gals
	4WD	27.5 L 7.3 U.S.gals 6.1 Imp.gals

(1) Drain Plug
(2) Gauge
(3) Oil Inlet Plug

[A] 2WD
[B] 4WD
A: Oil level is acceptable within this range.

9Y1211121CLS0005US0

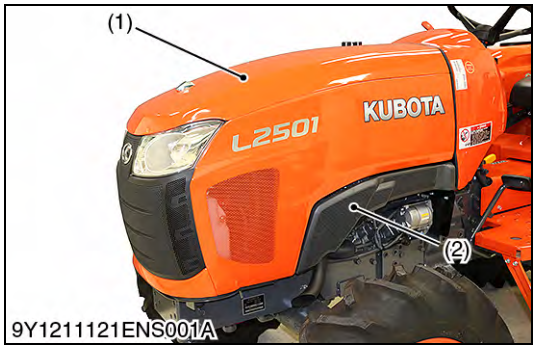

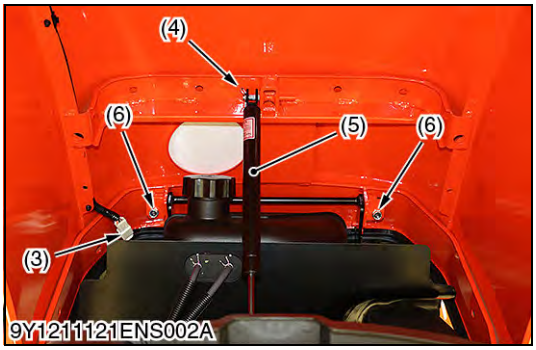

Bonnet and Front Axle Rocking Restrictor

1. To open the bonnet (1), hold the bonnet with a hand and pull the release lever and open the bonnet.
2. Disconnect the battery negative cable.
3. Disconnect the head light connector (3).
4. Remove the snap pin (4) and disconnect the bonnet damper (5) from the bonnet.
5. Remove the screws (6).
6. Remove the bonnet carefully.
7. Remove the side cover (2).
8. Install the front axle rocking restrictor (7) (refer to "SPECIAL TOOLS" (see page G-55)) to the front axle bracket and chock the rear wheels.

(When reassembling)

- To close the bonnet, push the bonnet into position using both hands.

(1)	Bonnet	(5)	Bonnet Damper
(2)	Side Cover	(6)	Screw
(3)	Head Light Connector	(7)	Front Axle Rocking Restrictor
(4)	Snap Pin		

9Y1211121CLS0006US0

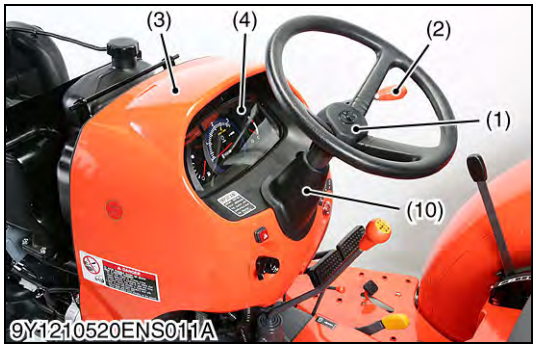

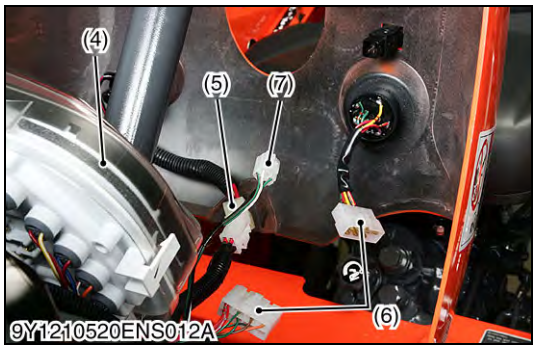

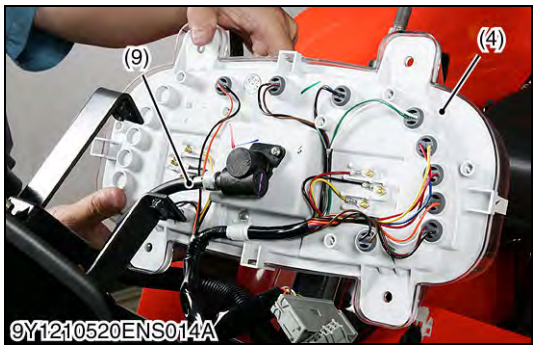

Steering Wheel and Rear Bonnet

1. Remove the steering wheel (1) with steering puller and the rubber steering cover (10).
2. Remove the throttle grip (2).
3. Remove the rear bonnet (3).
4. Disconnect the **4P** connector (5), the **8P** connector (6), the **6P** connector (7) and the **20P** connector (8).
5. Disconnect the hour-meter cable (9) and remove the meter panel (4).

(When reassembling)

Tightening torque	Steering wheel mounting nut	49 to 55 N·m 5.0 to 5.7 kgf·m 37 to 41 lbf·ft

(1) Steering Wheel
(2) Throttle Grip
(3) Rear Bonnet
(4) Meter Panel
(5) **4P** Connector (Main Switch)
(6) **8P** Connector (Combination Switch)
(7) **6P** Connector (Hazard Switch)
(8) **20P** Connector (Meter Panel)
(9) Hour-meter Cable
(10) Rubber Steering Cover

9Y1211121CLS0007US0

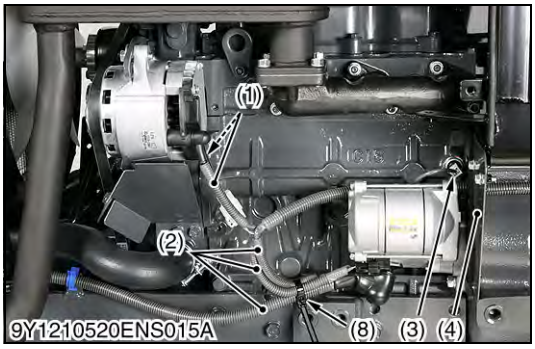

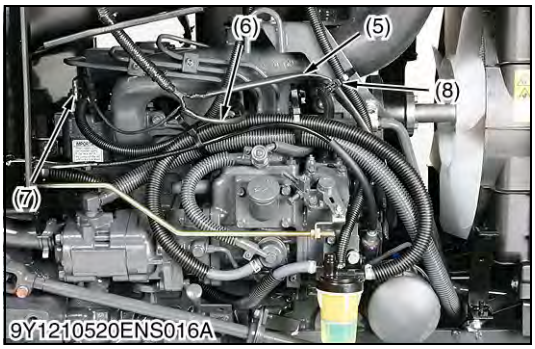

Electrical Wirings 1

1. Disconnect the wirings (1).
2. Remove the clip (8) and disconnect the wirings (2).
3. Disconnect the **1P** connector (3), (7) and the wiring (6), (5).
4. Remove the shutter plate (4) and the wirings from engine.

(1) Wiring (Alternator)
(2) Wiring (Starter Motor)
(3) **1P** Connector (Engine Oil Switch)
(4) Shutter Plate
(5) Wiring (Engine Stop Solenoid)
(6) Wiring (Glow Plug)
(7) **1P** Connector (Coolant Temperature Sensor)
(8) Clip

9Y1211121CLS0008US0

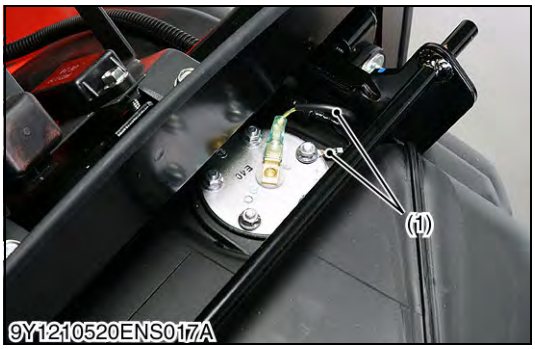

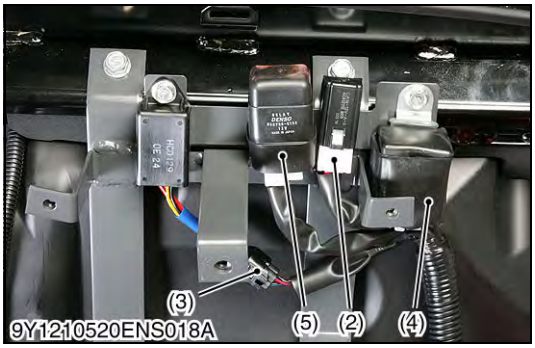

Electrical Wirings 2

1. Disconnect the wiring (1).
2. Disconnect the **4P** connector (3), the starter relay (2), the engine stop solenoid relay (5) and the flasher unit (4).
3. Remove the wiring from the rear bonnet support.

(1) Wiring (Fuel Sensor)
(2) Starter Relay
(3) **4P** Connector (OPC Timer)
(4) Flasher Unit
(5) **4P** Connector (Engine Stop Solenoid Relay)

9Y1211121CLS0009US0

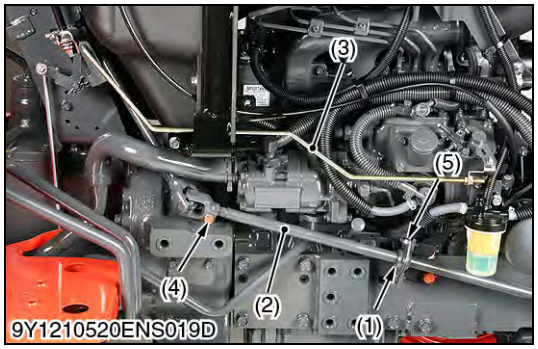

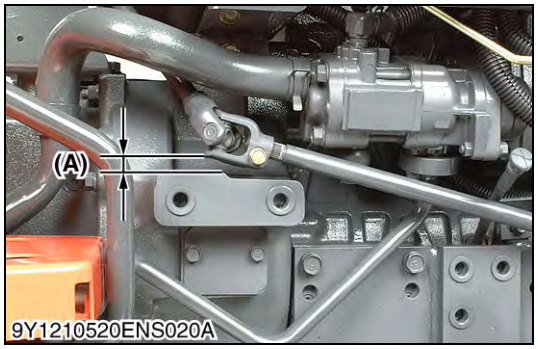

Steering Joint Shaft and Accelerator Rod

1. Remove the screw from support (1) and the steering joint shaft (2).
2. Remove the accelerator rod (3).

(When reassembling)

- Lift the universal joint so that there should be a clearance **(A)** of more than 5 mm (0.2 in.) between the universal joint and flywheel housing.
  Then fit the support (1) in position.
- Be sure to insert the screw (2) into cut-off part of joint shaft (1).
- Apply grease to spline part of joint shaft (1).

Tightening torque	Screw (Joint Shaft)	23.5 to 27.4 N·m 2.4 to 2.8 kgf·m 18 to 20 lbf·ft
	Screw (bearing support)	23.5 to 27.4 N·m 2.4 to 2.8 kgf·m 18 to 20 lbf·ft

(1) Support (Steering Joint Shaft)
(2) Steering Joint Shaft
(3) Accelerator Rod
(4) Screw (Joint Shaft)
(5) Screw (Bearing Support)

(A) Clearance

9Y1211121CLS0010US0

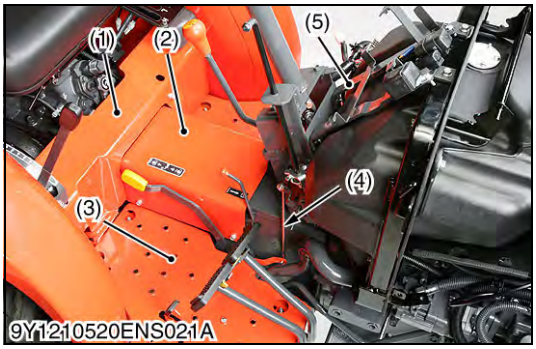

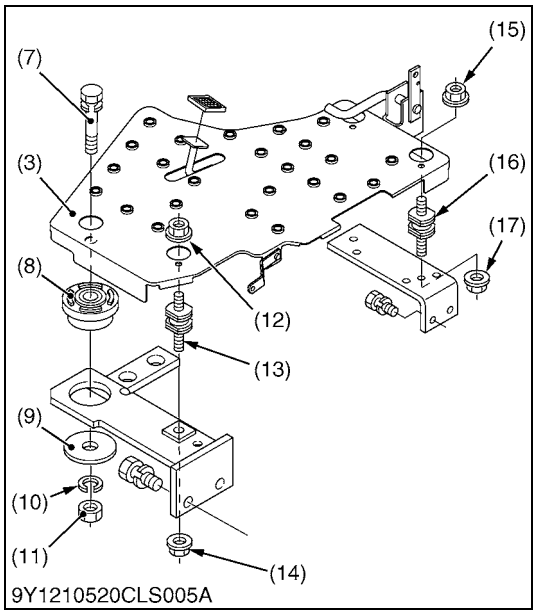

Outer Components

1. Remove the grip (6).
2. Remove the floor sheet cover (1) and the center cover (2).
3. Disconnect the differential lock spring and rod.
4. Disconnect the brake pedal springs and remove the step (3) (R.H.).
5. Remove the throttle rod (4) and the meter panel support (5).

(When reassembling)

- Be sure to set the washers and rubber plates of the step (R.H.) (3) mounting screw at an original positions as shown in figure.

(1) Floor Sheet Cover
(2) Center Cover
(3) Step (R.H.)
(4) Throttle Rod
(5) Meter Panel Support
(6) Grip (Front Drive Lever)
(7) Screw
(8) Rubber Plate
(9) Washer
(10) Spring Washer
(11) Nut
(12) Nut
(13) Cushion
(14) Nut
(15) Nut
(16) Cushion
(17) Nut

[A] 4WD

9Y1211121CLS0011US0

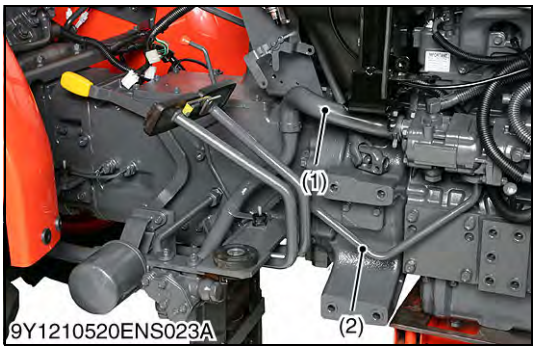

Suction Hose and Delivery Pipe

1. Disconnect the suction hose (1).
2. Remove the delivery pipe (2).

(When reassembling)

- When reassembling the delivery pipe, install the new copper washers securely.

Tightening torque	Delivery pipe joint screw	49 to 68 N·m 5.0 to 7.0 kgf·m 37 to 50 lbf·ft

(1) Suction Hose
(2) Delivery Pipe

9Y1211121CLS0012US0

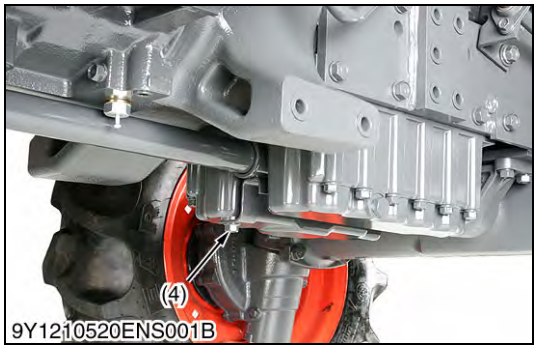

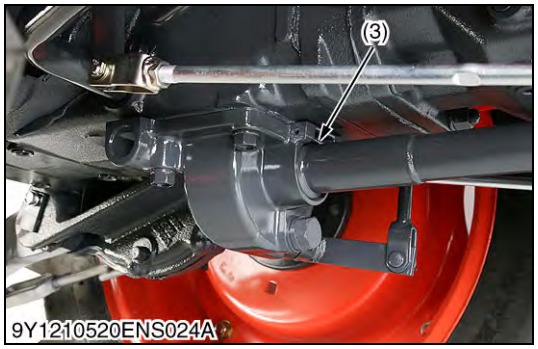

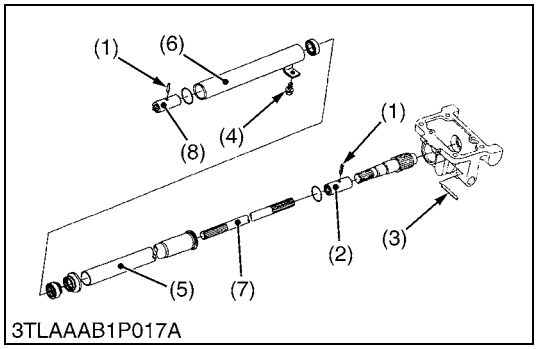

Propeller Shaft [4WD]

1. Remove the screw (4) then tap out the spring pin (3).
2. Slide the propeller shaft cover 1 (5) to the front and the cover 2 (6) to the rear.
3. Tap out the spring pins (1) and then slide the coupling (2) to the front and coupling (8) to the rear.

(When reassembling)

- Apply grease to the splines of the propeller shaft (7) and pinion shaft.

(1)	Spring Pin	(5)	Propeller Shaft Cover 1
(2)	Coupling	(6)	Propeller Shaft Cover 2
(3)	Spring Pin	(7)	Propeller Shaft
(4)	Screw	(8)	Coupling

9Y1211121CLS0013US0

Separating Clutch Housing Case from Engine

1. Check the engine and clutch housing case are securely mounted on the disassembling stands.
2. Remove the engine mounting screws, and separate the clutch housing case from the engine.

(When reassembling)

- Apply grease to the splines.
- Apply liquid gasket (Three Bond 1206C or equivalent) to joint face of the engine and clutch housing case.

9Y1211121ENS0019US0

(2) Separating Engine from Front Axle Frame

Clutch Assembly

1. Insert the clutch center tool.
2. Remove the clutch assembly together with the clutch center tool.

(When reassembling)

- Direct the shorter end of the clutch disc boss toward the flywheel.
- Apply molybdenum disulfide (Three Bond 1901 or equivalent) to the splines of clutch disc boss.
- Insert the pressure plate, noting the position of straight pins.

■ **IMPORTANT**

- **Be sure to align the center of disc and flywheel by inserting the clutch tool set.**

■ **NOTE**

- **Do not allow grease and oil on the clutch disc facing.**

9Y1211121ENS0020US0

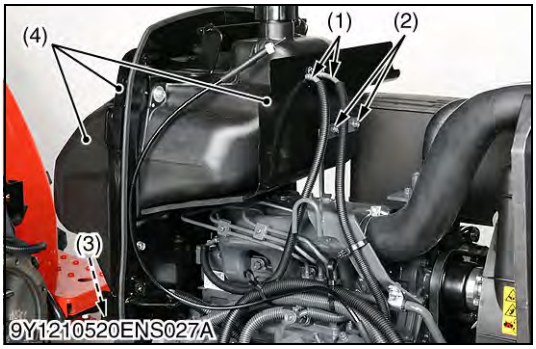

Fuel Tank

1. Disconnect the return fuel pipe (1).
2. Remove the screws (2), (3).
3. Remove the fuel tank assembly (4).

(1)	Fuel Pipe	(3)	Screw (Rear Bonnet Support)
(2)	Screw (Shutter Plate)	(4)	Fuel Tank Assembly

9Y1211121ENS0021US0

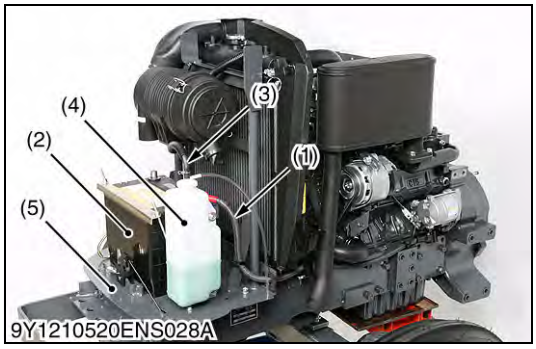

Battery

1. Remove the battery positive cable (1) and battery (2).
2. Disconnect the radiator pipe (3) and remove the reserve tank (4).
3. Remove the battery support (5).

(1)	Battery Positive Cable	(4)	Reserve Tank
(2)	Battery	(5)	Battery Support
(3)	Radiator Pipe		

9Y1211121ENS0022US0

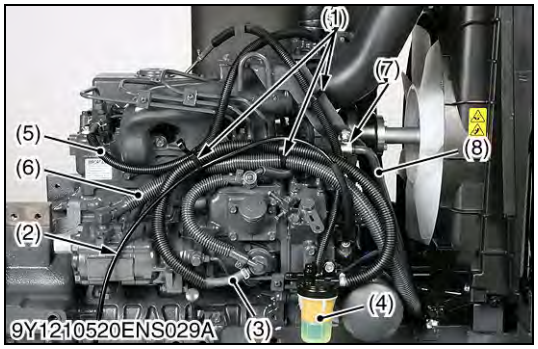

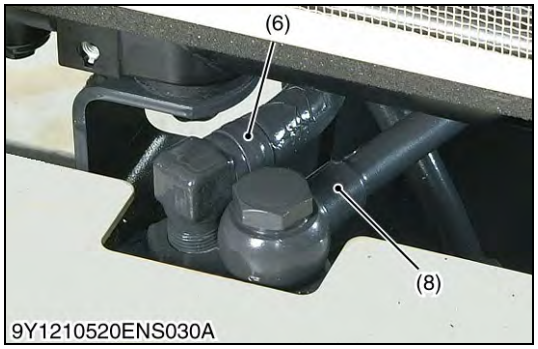

Fuel Filter Hose and Pipe

1. Remove the clips (1) and the hour-meter cable (2).
2. Disconnect the fuel hose (3) and remove the fuel filter (4).
3. Remove the fuel hose (5) and the return hose (6).
4. Remove the clamp (7) and the delivery pipe (8).
5. Disconnect the breather hose. [4WD]

(When reassembling)

- Install the new copper washers to the delivery pipe joint screw securely.

Tightening torque	Delivery pipe joint screw (PS controller side)	40 to 48 N·m 4.0 to 5.0 kgf·m 29 to 36 lbf·ft
	Delivery pipe joint screw (hydraulic pump side)	49 to 68 N·m 5.0 to 7.0 kgf·m 37 to 50 lbf·ft

(1) Clip
(2) Hour-meter Cable
(3) Fuel Hose
(4) Fuel Filter
(5) Fuel Hose
(6) Return Hose
(7) Clamp
(8) Delivery Pipe

9Y1211121ENS0023US0

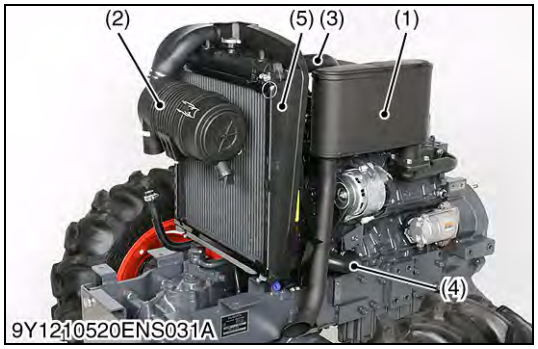

Muffler, Air Cleaner and Radiator Assembly

1. Remove the muffler (1).
2. Remove the air cleaner assembly (2).
3. Disconnect the radiator hose (3), (4).
4. Remove the radiator assembly (5).

(When reassembling)

Tightening torque	Muffler mounting screw	32 to 37 N·m 3.2 to 3.8 kgf·m 24 to 27 lbf·ft

(1) Muffler
(2) Air Cleaner Assembly
(3) Radiator Hose (Upper)
(4) Radiator Hose (Lower)
(5) Radiator Assembly

9Y1211121ENS0024US0

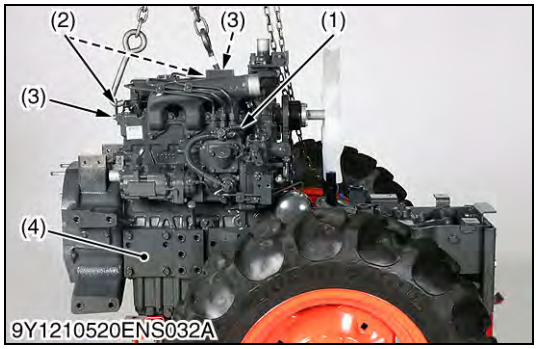

Separating Engine from Front Axle Frame

1. Hoist the engine (1) by the chain at the engine hook (2). Fit the engine (1) with engine hook (2) by the screw (3).
2. Remove the front axle frame mounting screw.
3. Separate the engine (1) from the front axle frame (4).

(When reassembling)

- Lift the front of the front axle frame (4) by the gap in the screw hole, and tighten the front axle mounting screws.

Tightening torque	Front axle frame mounting screw (M12)	103 to 117 N·m 10.5 to 12.0 kgf·m 76.0 to 86.7 lbf·ft

(1) Engine
(2) Engine Hook
(3) Screw (M8 × 20, P1.25)
(4) Front Axle Frame

9Y1211121ENS0025US0

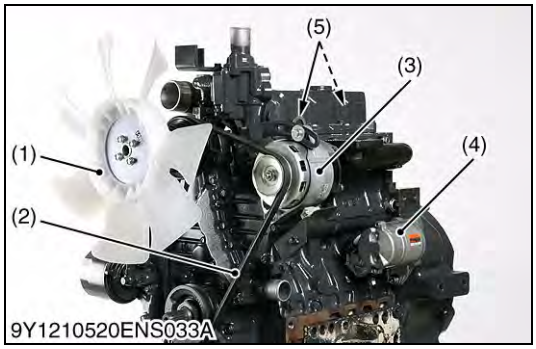

External Components

1. Set the engine to the disassembling stand.
2. Remove the cooling fan (1).
3. Remove the alternator (3) and fan belt (2).
4. Remove the starter motor (4) and the engine hook (5).

■ **IMPORTANT**
- **After reassembling the fan belt, be sure to adjust the fan belt tension. (See page G-24, 1-S12.)**

(1) Cooling Fan
(2) Fan Belt
(3) Alternator
(4) Starter Motor
(5) Engine Hook

9Y1211121ENS0026US0

[2] HST TYPE

(1) Separating Engine from Clutch Housing Case

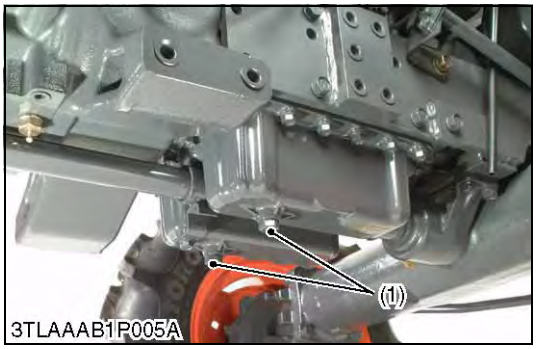

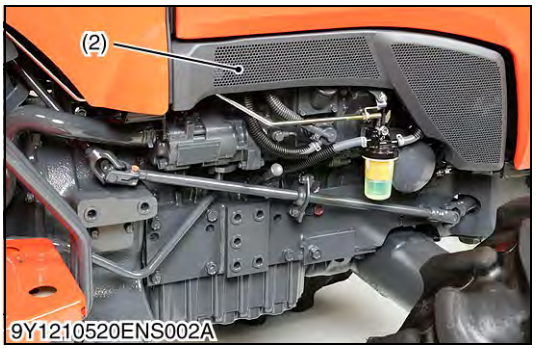

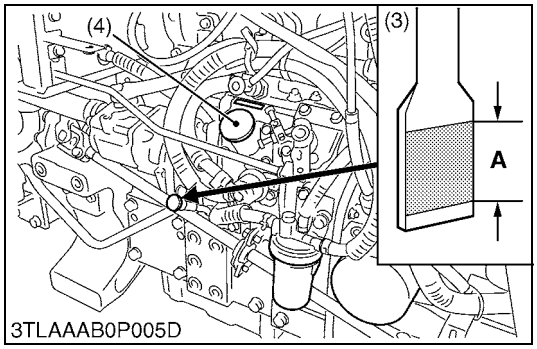

Draining Engine Oil

⚠ **WARNING**

To avoid personal injury or death:
- **Be sure to stop the engine before changing the oil.**
- **Allow engine to cool down sufficiently, oil can be hot and can burn.**

1. To drain the used oil, remove the drain plugs (1) at the bottom of the engine and drain the oil completely into the oil pan.
   All the used oil can be drained out easily when the engine is still warm.
2. After draining reinstall the drain plugs.

(When refilling)
- Remove the bonnet side cover (R.H.) (2).
- Fill the engine oil up to the upper line on the dipstick (3).

■ **IMPORTANT**
- **Never mix two different types of oil.**
- **Use the proper SAE Engine Oil according to ambient temperatures.**
  Refer to "LUBRICANTS, FUEL AND COOLANT". (See page G-9.)

Engine oil capacity (with filter)	5.7 L 6.0 U.S.qts 5.0 Imp.qts

(1) Drain Plug
(2) Bonnet Side Cover (R.H.)
(3) Dipstick
(4) Oil Inlet Plug

A: Oil level is acceptable within this range.

9Y1211121ENS0017US0

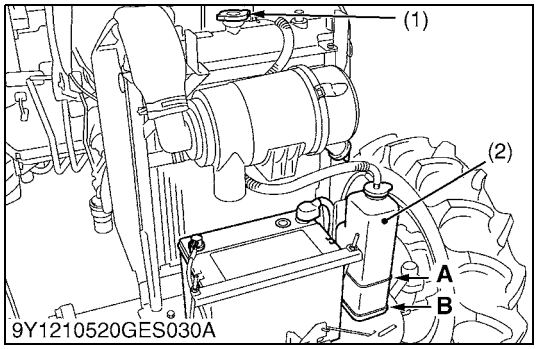

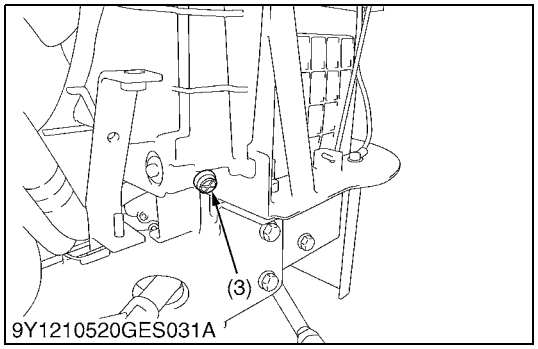

Draining Coolant

WARNING

To avoid personal injury or death:

- **Do not remove radiator cap while coolant is hot. When cool, slowly rotate cap to the first stop and allow sufficient time for excess pressure to escape before removing the cap completely.**

1. Stop the engine and let cool down.
2. To drain the coolant, open the bonnet and the radiator drain plug (3) and remove the radiator cap (1). The radiator cap (1) must be removed to completely drain the coolant.
3. After all coolant is drained, close the drain plug (3).

(When refilling)

- Fill with clean water and anti-freeze until the coolant level is just below the port. Install the radiator cap (1) securely.
- Fill with coolant up to **"FULL"** mark on the recovery tank.
- Start and operate the engine for few minutes.
- Stop the engine and let cool. Check coolant level of recovery tank (2) and add coolant if necessary.
- Properly dispose of used coolant.

■ **IMPORTANT**

- **Do not start engine without coolant.**
- **Use clean, fresh water and anti-freeze to fill the radiator and recovery tank.**
- **When the anti-freeze is mixed with water, the anti-freeze mixing ratio must be less than 50 %.**
- **Securely tighten radiator cap. If the cap is loose or improperly fitted, water may leak out and the engine could overheat.**
- **Refer to "LUBRICANTS, FUEL AND COOLANT". (See page G-9.)**

Coolant capacity (with recovery tank)	6.6 L 7.0 U.S.qts 5.8 Imp.qts

(1) Radiator Cap
(2) Recovery Tank
(3) Drain Plug

A: FULL
B: LOW

9Y1211121ENS0018US0

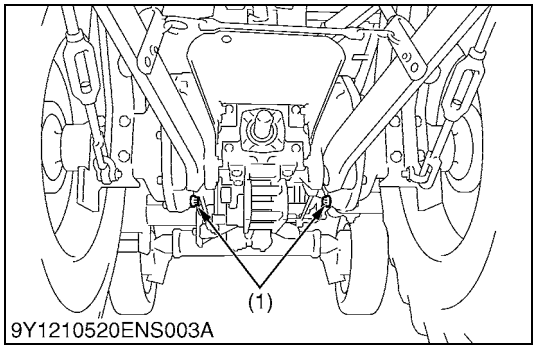

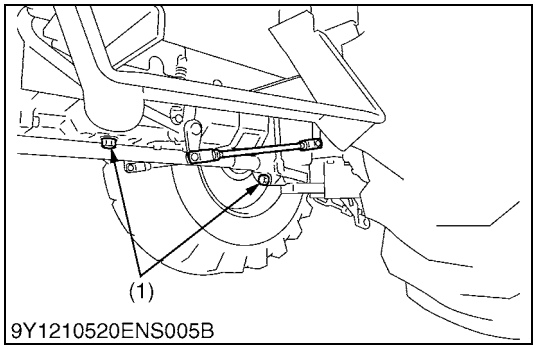

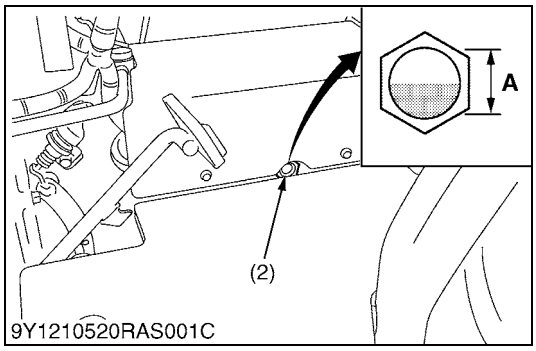

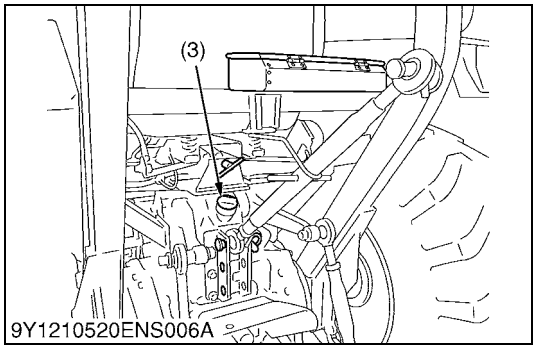

Draining the Transmission Fluid

WARNING

To avoid personal injury or death:

- **Allow engine to cool down sufficiently, oil can be hot and can burn.**

1. Remove the drain plugs (1) at the bottom of the transmission case and drain the oil completely into the oil pan.
2. After draining reinstall the drain plugs.

(When reassembling)

- Fill up new oil to the upper line of the gauge (2) from the oil inlet port after removing the oil inlet plug (3).
- After running the engine for a few minutes, stop it and check the fluid level again, if low, add fluid prescribed level **"A"**.

■ **IMPORTANT**

- **Use only multi-grade transmission fluid. Use of other fluids may damage the transmission or hydraulic system.**
- **Refer to "LUBRICANTS, FUEL AND COOLANT". (See page G-9.)**
- **Never work the tractor immediately after changing the transmission fluid. Keeping the engine at medium speed for a few minutes to prevent damage to the transmission.**
- **Do not mix different brands oil together.**

Transmission fluid capacity	23.5 L 6.2 U.S.gals 5.2 Imp.gals

(1) Drain Plug
(2) Gauge
(3) Oil Inlet Plug

A: Oil level is acceptable within this range.

9Y1211121CLS0015US0

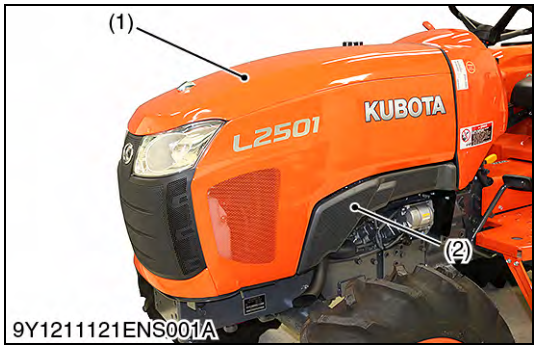

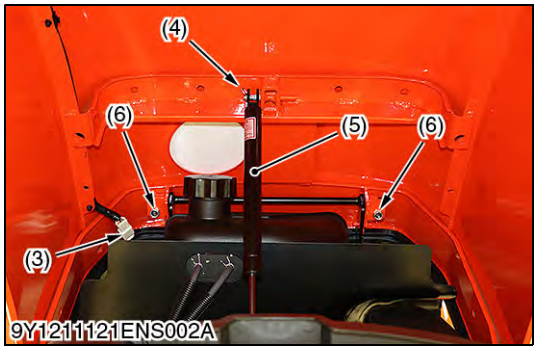

Bonnet and Front Axle Rocking Restrictor

1. To open the bonnet (1), hold the bonnet with a hand and pull the release lever and open the bonnet.
2. Disconnect the battery negative cable.
3. Disconnect the head light connector (3).
4. Remove the snap pin (4) and disconnect the bonnet damper (5) from the bonnet.
5. Remove the screws (6).
6. Remove the bonnet carefully.
7. Remove the side cover (2).
8. Install the front axle rocking restrictor (7) (refer to "SPECIAL TOOLS" (see page G-55)) to the front axle bracket and chock the rear wheels.

(When reassembling)

- To close the bonnet, push the bonnet into position using both hands.

(1)	Bonnet	(5)	Bonnet Damper
(2)	Side Cover	(6)	Screw
(3)	Head Light Connector	(7)	Front Axle Rocking Restrictor
(4)	Snap Pin		

9Y1211121CLS0006US0

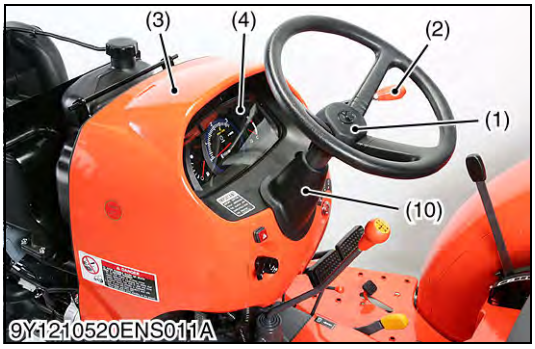

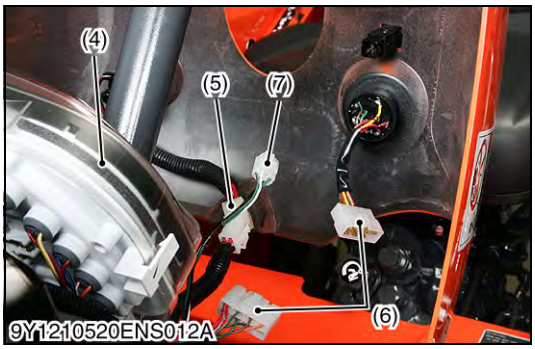

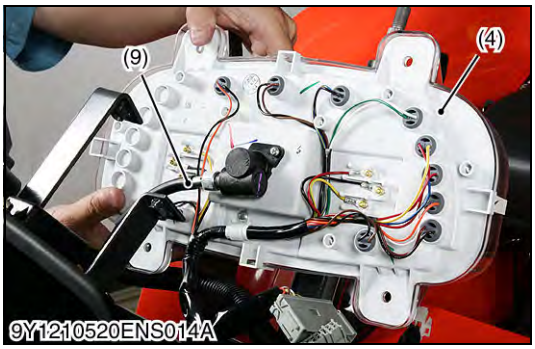

Steering Wheel and Rear Bonnet

1. Remove the steering wheel (1) with steering puller and the rubber steering cover (10).
2. Remove the throttle grip (2).
3. Remove the rear bonnet (3).
4. Disconnect the **4P** connector (5), the **8P** connector (6), the **6P** connector (7) and the **20P** connector (8).
5. Disconnect the hour-meter cable (9) and remove the meter panel (4).

(When reassembling)

Tightening torque	Steering wheel mounting nut	49 to 55 N·m 5.0 to 5.7 kgf·m 37 to 41 lbf·ft

(1) Steering Wheel
(2) Throttle Grip
(3) Rear Bonnet
(4) Meter Panel
(5) **4P** Connector (Main Switch)
(6) **8P** Connector (Combination Switch)
(7) **6P** Connector (Hazard Switch)
(8) **20P** Connector (Meter Panel)
(9) Hour-meter Cable
(10) Rubber Steering Cover

9Y1211121CLS0007US0

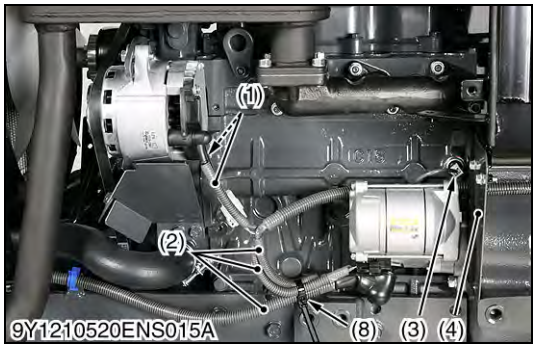

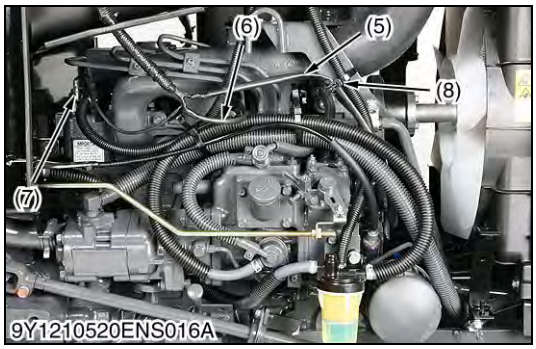

Electrical Wirings 1

1. Disconnect the wirings (1).
2. Remove the clip (8) and disconnect the wirings (2).
3. Disconnect the **1P** connector (3), (7) and the wiring (6), (5).
4. Remove the shutter plate (4) and the wirings from engine.

(1) Wiring (Alternator)
(2) Wiring (Starter Motor)
(3) **1P** Connector (Engine Oil Switch)
(4) Shutter Plate
(5) Wiring (Engine Stop Solenoid)
(6) Wiring (Glow Plug)
(7) **1P** Connector (Coolant Temperature Sensor)
(8) Clip

9Y1211121CLS0008US0

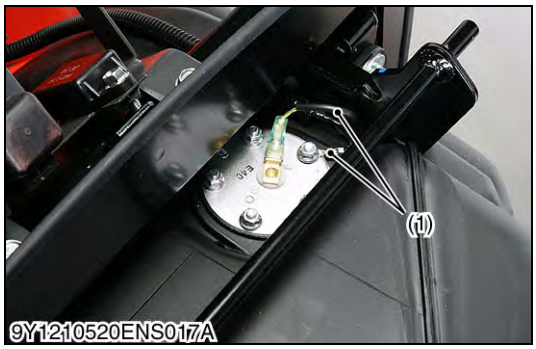

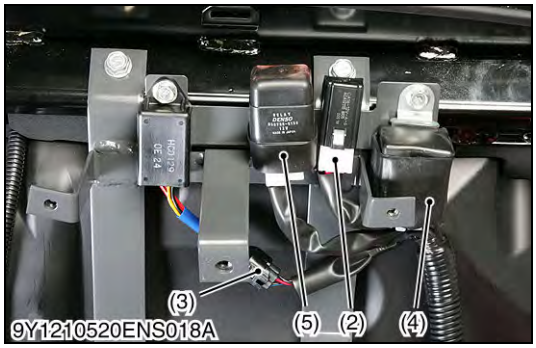

Electrical Wirings 2

1. Disconnect the wiring (1).
2. Disconnect the **4P** connector (3), the starter relay (2), the engine stop solenoid relay (5) and the flasher unit (4).
3. Remove the wiring from the rear bonnet support.

(1) Wiring (Fuel Sensor)
(2) Starter Relay
(3) **4P** Connector (OPC Timer)
(4) Flasher Unit
(5) **4P** Connector (Engine Stop Solenoid Relay)

9Y1211121CLS0009US0

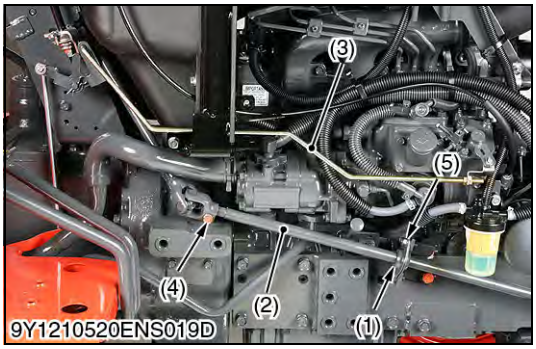

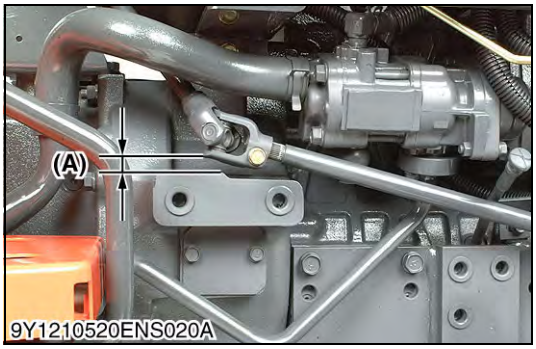

Steering Joint Shaft and Accelerator Rod

1. Remove the screw from support (1) and the steering joint shaft (2).
2. Remove the accelerator rod (3).

(When reassembling)

- Lift the universal joint so that there should be a clearance **(A)** of more than 5 mm (0.2 in.) between the universal joint and flywheel housing.
  Then fit the support (1) in position.
- Be sure to insert the screw (2) into cut-off part of joint shaft (1).
- Apply grease to spline part of joint shaft (1).

Tightening torque	Screw (Joint Shaft)	23.5 to 27.4 N·m 2.4 to 2.8 kgf·m 18 to 20 lbf·ft
	Screw (bearing support)	23.5 to 27.4 N·m 2.4 to 2.8 kgf·m 18 to 20 lbf·ft

(1) Support (Steering Joint Shaft)
(2) Steering Joint Shaft
(3) Accelerator Rod
(4) Screw (Joint Shaft)
(5) Screw (Bearing Support)

(A) Clearance

9Y1211121CLS0010US0

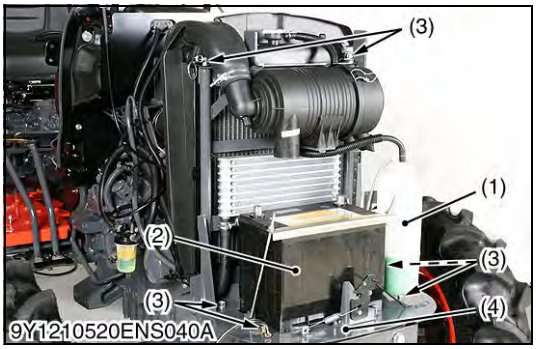

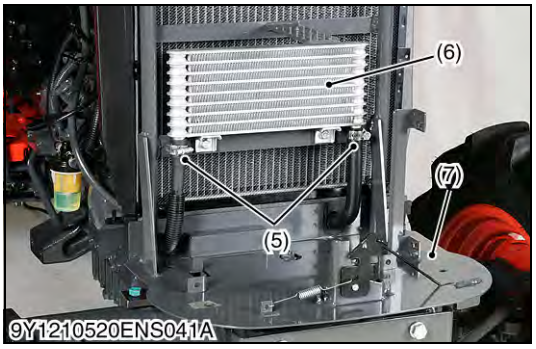

Battery, Reserve Tank and Battery Support Assembly

1. Disconnect the reserve tank hose and remove the reserve tank (1).
2. Remove the battery (2) and the screws (3) from the battery support (4).
3. Disconnect the hoses (5) from the oil cooler (6).
4. Remove the battery support assembly (7).

(1) Reserve Tank
(2) Battery
(3) Screw
(4) Battery Support
(5) Hose (Oil Cooler)
(6) Oil Cooler
(7) Battery Support Assembly

9Y1211121CLS0021US0

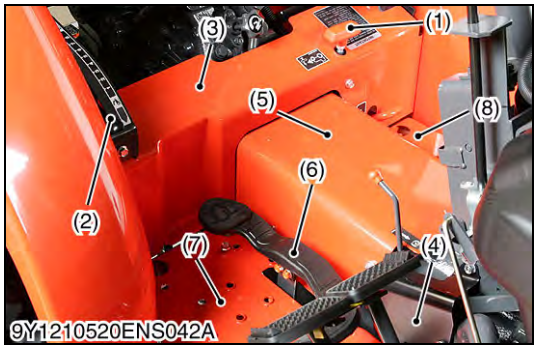

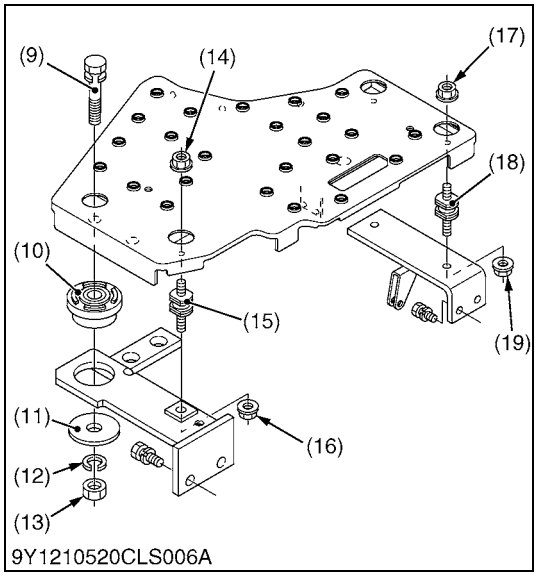

Outer Components

1. Remove the grip (1).
2. Remove the position control lever grip and position control lever guide (2).
3. Remove the floor sheet cover (3).
4. Remove the neutral holder cover (4) and the center cover (5).
5. Disconnect the brake pedal spring.
6. Remove the HST control pedal (6) and step (R.H.) (7).
7. Disconnect the differential lock spring, rod and step (L.H.) (8).

(When reassembling)

- Be sure to set the washers and rubber plates of the steps mounting screw at an original positions as shown in figure.

(1) Grip (Front Drive Lever)
(2) Position Control Lever Guide
(3) Floor Sheet Cover
(4) Neutral Holder Cover
(5) Center Cover
(6) HST Control Pedal
(7) Step (R.H.)
(8) Step (L.H.)
(9) Screw
(10) Rubber Plate
(11) Washer
(12) Spring Washer
(13) Nut
(14) Nut
(15) Cushion
(16) Nut
(17) Nut
(18) Cushion
(19) Nut

9Y1211121CLS0022US0

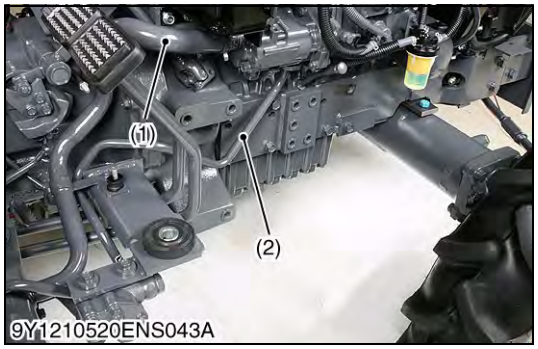

Suction Hose and Delivery Pipe

1. Disconnect the suction hose (1).
2. Remove the delivery pipe (2).

(When reassembling)

- When reassembling the delivery pipe, install the new copper washers securely.

Tightening torque	Delivery pipe joint bolt	49 to 68 N·m 5.0 to 7.0 kgf·m 37 to 50 lbf·ft

(1) Suction Hose
(2) Delivery Pipe

9Y1211121CLS0023US0

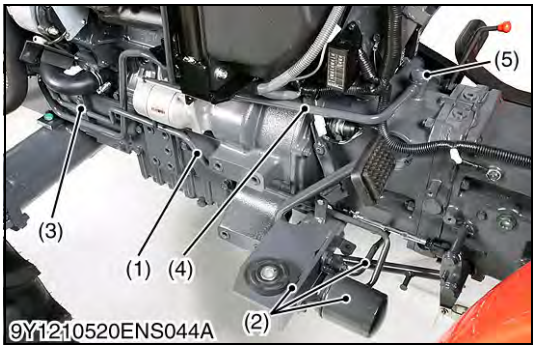

HST Pipe

1. Disconnect the HST delivery pipe (1) from power steering controller.
2. Remove the step bracket assembly (2).
3. Remove the clamp (3) and the HST delivery pipe (1).
4. Remove the eye joint screw (5) and the HST return pipe (4).

(When reassembling)

- When reassembling the HST return pipe, install the new copper washers securely.
- Wind seal tape on joint elbow part of HST delivery pipe (1).

Tightening torque	Joint screw (HST return pipe)	80 to 88 N·m 8.1 to 9.0 kgf·m 59 to 65 lbf·ft
	Retaining nut (HST delivery pipe)	49 to 58 N·m 5.0 to 6.0 kgf·m 37 to 43 lbf·ft

■ **NOTE**

- **Take care not to damage the HST pipe O-rings.**
- **If the HST pipe O-rings are damaged, change them.**

(1) HST Delivery Pipe
(2) Step Bracket Assembly
(3) Clamp (HST Delivery Pipe)
(4) HST Return Pipe
(5) Joint Screw (HST Return Pipe)

9Y1211121CLS0024US0

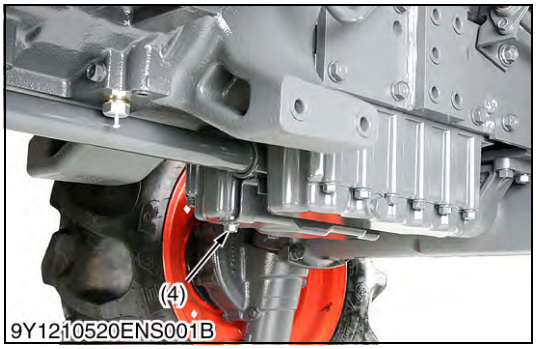

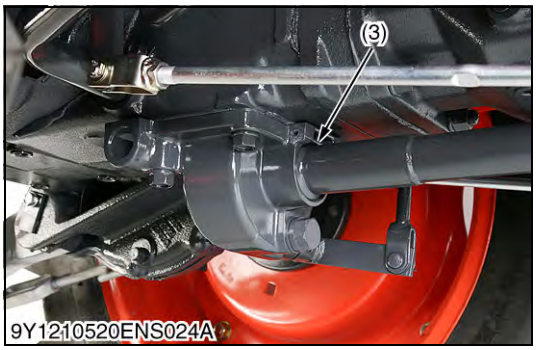

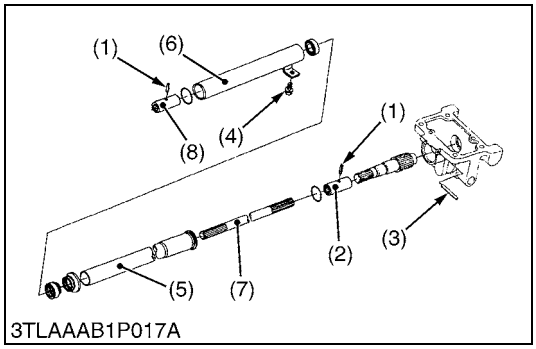

Propeller Shaft

1. Remove the screw (4) then tap out the spring pin (3).
2. Slide the propeller shaft cover 1 (5) to the front and the cover 2 (6) to the rear.
3. Tap out the spring pins (1) and then slide the coupling (2) to the front and coupling (8) to the rear.

(When reassembling)

- Apply grease to the splines of the propeller shaft (7) and pinion shaft.

(1) Spring Pin
(2) Coupling
(3) Spring Pin
(4) Screw
(5) Propeller Shaft Cover 1
(6) Propeller Shaft Cover 2
(7) Propeller Shaft
(8) Coupling

9Y1211121CLS0025US0

Separating Clutch Housing Case from Engine

1. Check the engine and clutch housing case are securely mounted on the disassembling stands.
2. Remove the engine mounting screws, and separate the clutch housing case from the engine.

(When reassembling)

- Apply grease to the splines.
- Apply liquid gasket (Three Bond 1206C or equivalent) to joint face of the engine and clutch housing case.

9Y1211121ENS0027US0

(2) Separating Engine from Front Axle Frame

Clutch Assembly

1. Insert the clutch center tool.
2. Remove the clutch assembly together with the clutch center tool.

(When reassembling)

- Direct the shorter end of the clutch disc boss toward the flywheel.
- Apply molybdenum disulfide (Three Bond 1901 or equivalent) to the splines of clutch disc boss.
- Insert the pressure plate, noting the position of straight pins.

■ **IMPORTANT**

- **Be sure to align the center of disc and flywheel by inserting the clutch tool set.**

■ **NOTE**

- **Do not allow grease and oil on the clutch disc facing.**

9Y1211121ENS0028US0

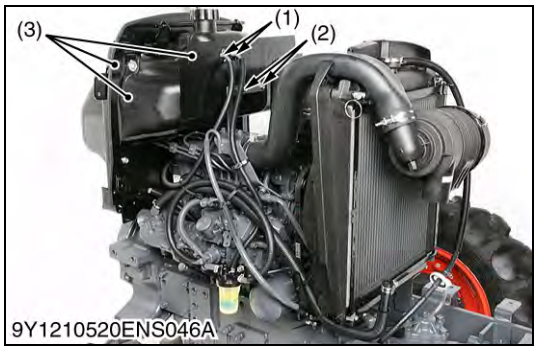

Fuel Tank

1. Disconnect the return fuel pipe (1).
2. Remove the screws (2) and rear bonnet support screw.
3. Remove the fuel tank assembly (3).

(1) Fuel Pipe
(2) Screw (Shutter Plate)
(3) Fuel Tank Assembly

9Y1211121ENS0029US0

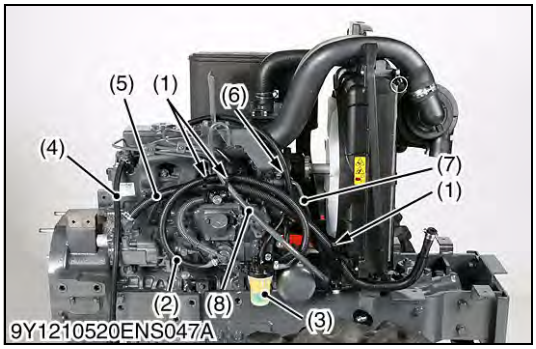

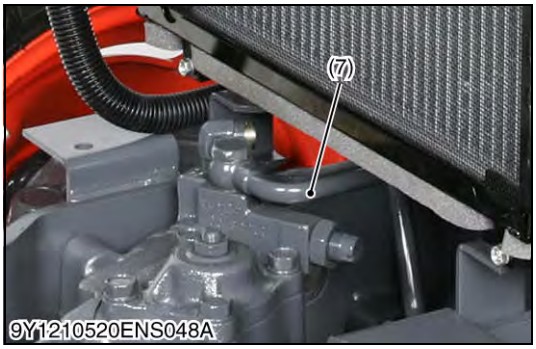

Fuel Filter Hose and Pipe

1. Remove the clips (1) and disconnect the breather hose (8).
2. Disconnect the fuel hose (2) and remove the fuel filter (3).
3. Remove the fuel hose (4) and the return hose (5).
4. Remove the clamp (6) and the delivery pipe (7).

(When reassembling)

- Install the new copper washers to the delivery pipe joint screw firmly.

Tightening torque	Delivery pipe joint screw (PS controller side)	40 to 48 N·m 4.0 to 5.0 kgf·m 29 to 36 lbf·ft
	Delivery pipe joint screw (hydraulic pump side)	49 to 68 N·m 5.0 to 7.0 kgf·m 37 to 50 lbf·ft

(1) Clip
(2) Fuel Hose
(3) Fuel Filter
(4) Fuel Hose
(5) Return Hose
(6) Clamp
(7) Delivery Pipe
(8) Breather Hose

9Y1211121ENS0030US0

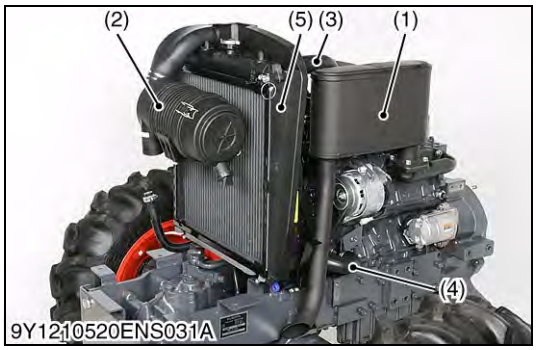

Muffler, Air Cleaner and Radiator Assembly

1. Remove the muffler (1).
2. Remove the air cleaner assembly (2).
3. Disconnect the radiator hose (3), (4).
4. Remove the radiator assembly (5).

(When reassembling)

Tightening torque	Muffler mounting screw	32 to 37 N·m 3.2 to 3.8 kgf·m 24 to 27 lbf·ft

(1) Muffler
(2) Air Cleaner Assembly
(3) Radiator Hose (Upper)
(4) Radiator Hose (Lower)
(5) Radiator Assembly

9Y1211121ENS0024US0

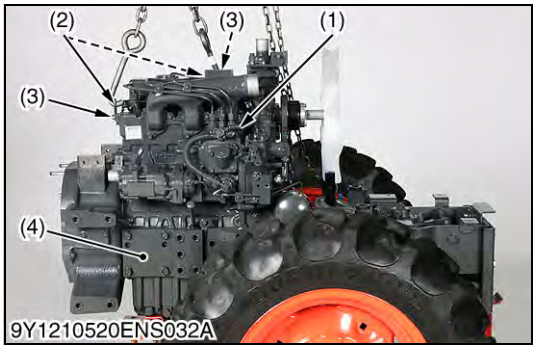

Separating Engine from Front Axle Frame

1. Hoist the engine (1) by the chain at the engine hook (2). Fit the engine (1) with engine hook (2) by the screw (3).
2. Remove the front axle frame mounting screw.
3. Separate the engine (1) from the front axle frame (4).

(When reassembling)

- Lift the front of the front axle frame (4) by the gap in the screw hole, and tighten the front axle mounting screws.

Tightening torque	Front axle frame mounting screw (M12)	103 to 117 N·m 10.5 to 12.0 kgf·m 76.0 to 86.7 lbf·ft

(1) Engine
(2) Engine Hook
(3) Screw (M8 × 20, P1.25)
(4) Front Axle Frame

9Y1211121ENS0025US0

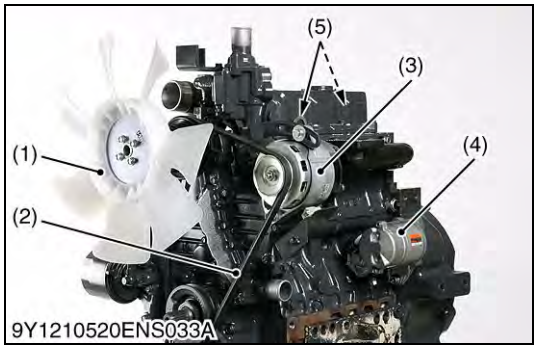

External Components

1. Set the engine to the disassembling stand.
2. Remove the cooling fan (1).
3. Remove the alternator (3) and fan belt (2).
4. Remove the starter motor (4) and the engine hook (5).

■ **IMPORTANT**

- **After reassembling the fan belt, be sure to adjust the fan belt tension. (See page G-24, 1-S12.)**

(1) Cooling Fan
(2) Fan Belt
(3) Alternator
(4) Starter Motor
(5) Engine Hook

9Y1211121ENS0026US0

6. DISASSEMBLING AND ASSEMBLING

[1] CYLINDER HEAD AND VALVES

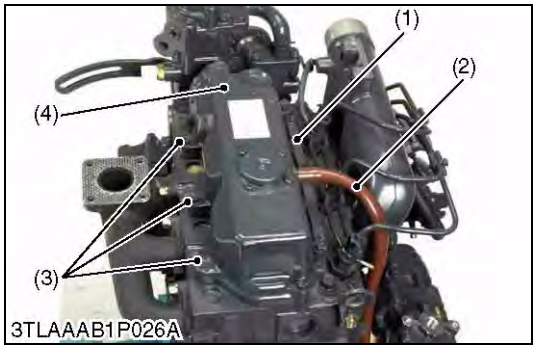

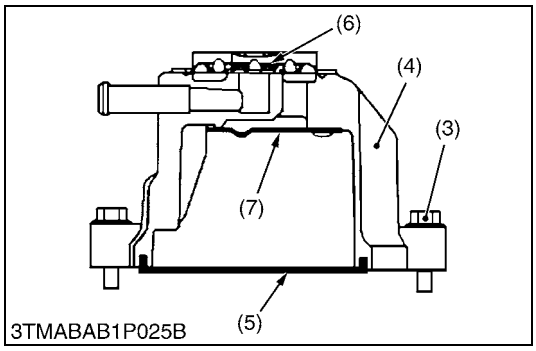

Cylinder Head Cover

1. Remove the lead (1).
2. Remove the breather hose (2).
3. Remove the head cover screws (3).
4. Remove the cylinder head cover (4).

(When reassembling)

- Check to see if the cylinder head cover gasket is not damaged.

Tightening torque	Cylinder head cover screw	6.87 to 11.2 N·m 0.700 to 1.15 kgf·m 5.07 to 8.31 lbf·ft

(1) Lead
(2) Breather Hose
(3) Head Cover Screw
(4) Cylinder Head Cover
(5) Cylinder Head Cover Gasket
(6) Breather Valve
(7) Plate

9Y1211121ENS0031US0

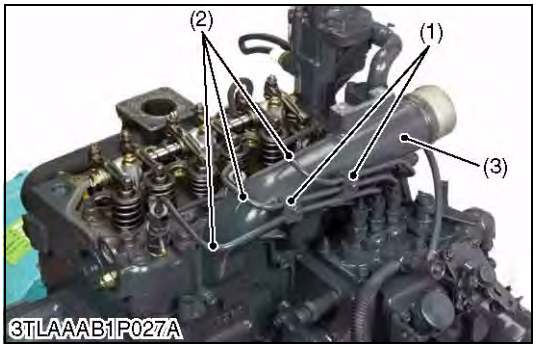

Injection Pipes

1. Loosen the screws on the pipe clamps (1).
2. Detach the injection pipes (2).
3. Remove the inlet manifold (3).

(When reassembling)

- Blow out dust inside the pipes.

Tightening torque	Injection pipe retaining nut	25 to 34 N·m 2.5 to 3.5 kgf·m 18 to 25 lbf·ft

(1) Pipe Clamp
(2) Injection Pipe
(3) Inlet Manifold

9Y1211121ENS0032US0

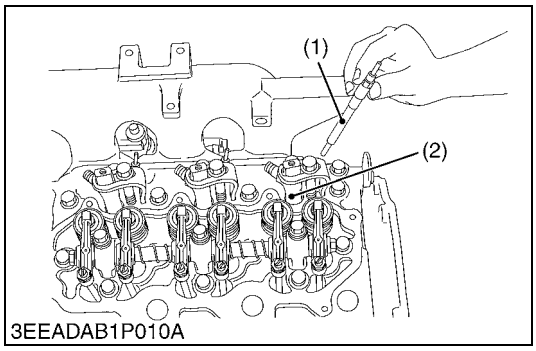

Nozzle Holder Assembly and Glow Plug

1. Remove the overflow pipe assembly.
2. Remove the nozzle holder assemblies (2).
3. Remove the glow plugs (1).

(When reassembling)

- Replace the copper gasket with a new one.

Tightening torque	Nozzle holder clamp screw	26 to 29 N·m 2.6 to 3.0 kgf·m 19 to 21 lbf·ft
	Retaining screw of overflow pipe assembly	9.81 to 11.2 N·m 1.00 to 1.15 kgf·m 7.24 to 8.31 lbf·ft
	Glow plug	15 to 19 N·m 1.5 to 2.0 kgf·m 11 to 14 lbf·ft

(1) Glow Plug
(2) Nozzle Holder Assembly

9Y1211121ENS0033US0

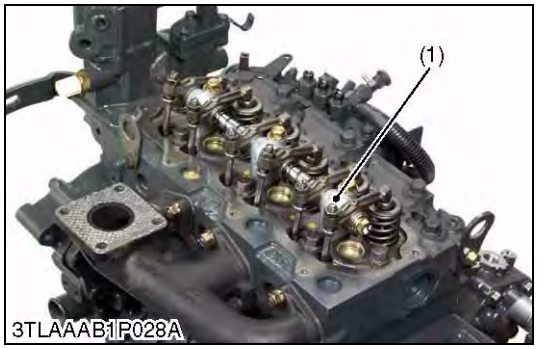

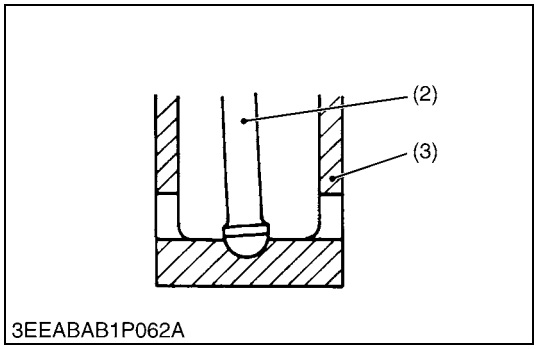

Rocker Arm and Push Rod

1. Remove the rocker arm bracket nuts.
2. Detach the rocker arm assembly (1).
3. Remove the push rods (2).

(When reassembling)

- When putting the push rods (2) onto the tappets (3), check to see if their ends are properly engaged with the grooves.

■ **IMPORTANT**

- **After installing the rocker arm, be sure to adjust the valve clearance.**

Tightening torque	Rocker arm bracket nut	24 to 27 N·m 2.4 to 2.8 kgf·m 18 to 20 lbf·ft

(1) Rocker Arm Assembly
(2) Push Rod
(3) Tappet

9Y1211121ENS0034US0

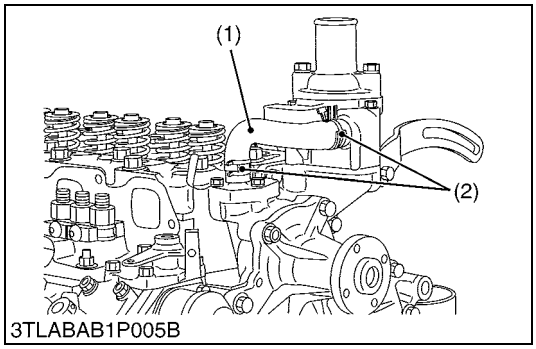

3TLABAB1P005B

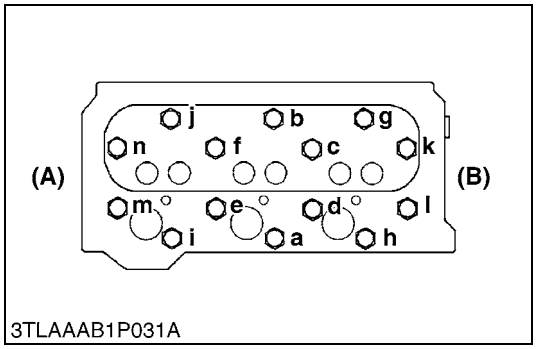

3TLAAAB1P031A

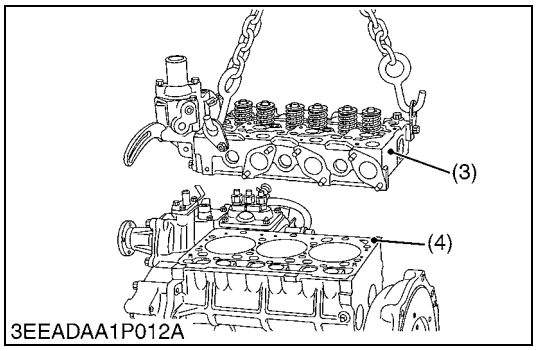

3EEADAA1P012A

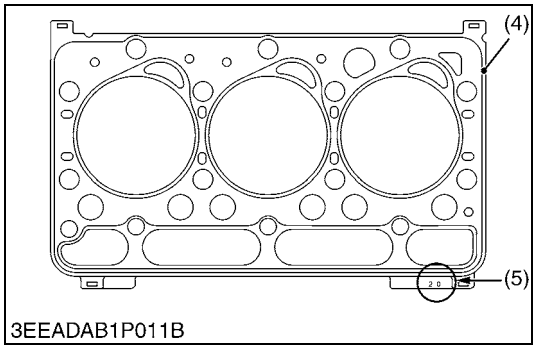

3EEADAB1P011B

Cylinder Head

1. Loosen the pipe clamp (2), and remove the water return pipe (1).
2. Remove the cylinder head screw in the order of **(n)** to **(a)**.
3. Lift up the cylinder head (3) to detach.
4. Remove the cylinder head gasket (4).

(When reassembling)

- Replace the cylinder head gasket (4) with a new one.
- Tighten the cylinder head screws after applying sufficient oil.
- Tighten the cylinder head screws in diagonal sequence starting from the center in the order of **(a)** to **(n)**.
- Tighten them uniformly, or the head may deform in the long run.

Tightening torque	Cylinder head screw	93.2 to 98.0 N·m 9.50 to 10.0 kgf·m 68.8 to 72.3 lbf·ft

■ **IMPORTANT**

- **To replace the cylinder head gasket (4), in advance make sure the marking (5) of cylinder head gasket in the original engine, and replace the same marking as the original cylinder head gasket.**

Gasket Marking	Parts Number
15	1G750-03600
20	1G750-03310
25	1G750-03610
30	1G750-03620
35	1G750-03630

(1) Return Pipe
(2) Pipe Clamp
(3) Cylinder Head
(4) Cylinder Head Gasket
(5) Marking

(n) to (a): To Loosen
(a) to (n): To Tighten
(A) Gear Case Side
(B) Flywheel Side

(To be continued)

(Continued)

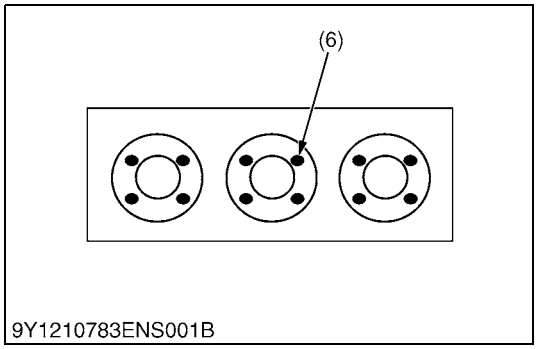

■ **IMPORTANT**
- **When replacing piston, piston pin, small end bushing, connecting rod, or crankpin bearings, measure piston head's protrusion or recessing from the level of crankcase cylinder face (average of all pistons) after installing the pistons, and select the cylinder head gasket following the below table.**

Selecting the cylinder head gasket

1. Measure the piston head's protrusion or recessing from the crankcase cylinder face 4 spots per each piston (average of all pistons) using the dial gauge.
2. Select the suitable cylinder need gasket refer to the table below.

[D1503-M, D1803-M]

Gasket Size (Number)	Piston Protrusion
15	0.475 to 0.525 mm 0.0187 to 0.0206 in.
20	0.525 to 0.575 mm 0.0206 to 0.0227 in.
25	0.575 to 0.625 mm 0.0227 to 0.0246 in.
30	0.625 to 0.675 mm 0.0246 to 0.0266 in.
35	0.675 to 0.725 mm 0.0266 to 0.0285 in.

(6) Measuring Points

9Y1211121ENS0035US0

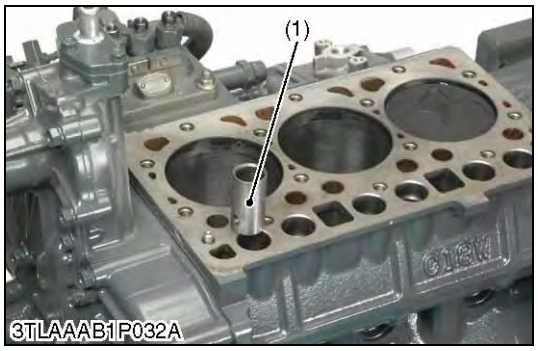

Tappets

1. Remove the tappets (1) from the crankcase.

(When reassembling)
- Visually check the contact between tappets and cams for proper rotation. If any damage is found, replace tappets.
- Before installing the tappets, apply engine oil thinly around them.

■ **IMPORTANT**
- **Do not change the combination of tappet and tappet guide.**

(1) Tappet

9Y1211121ENS0036US0

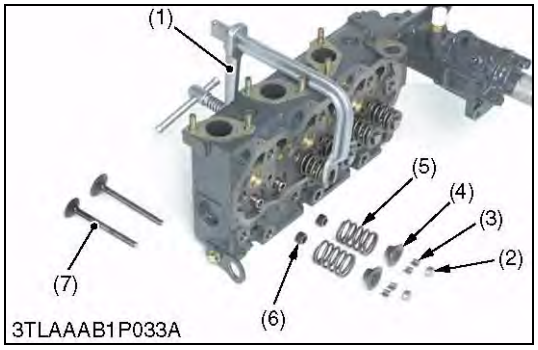

Valves

1. Remove the valve caps (2).
2. Remove the valve spring collet (3), pushing the valve spring retainer (4) by valve spring replacer (1).
3. Remove the valve spring retainer (4), valve spring (5) and valve stem seal (6).
4. Remove the valve (7).

(When reassembling)
- Wash the valve stem and valve guide hole, and apply engine oil sufficiently.
- After installing the valve spring collets, lightly tap the stem to assure proper fit with a plastic hammer.

■ **IMPORTANT**
- **Do not change the combination of valve and valve guide.**

(1) Valve Spring Replacer
(2) Valve Cap
(3) Valve Spring Collet
(4) Valve Spring Retainer
(5) Valve Spring
(6) Valve Stem Seal
(7) Valve

9Y1211121ENS0037US0

[2] TIMING GEARS, CAMSHAFT AND FUEL CAMSHAFT

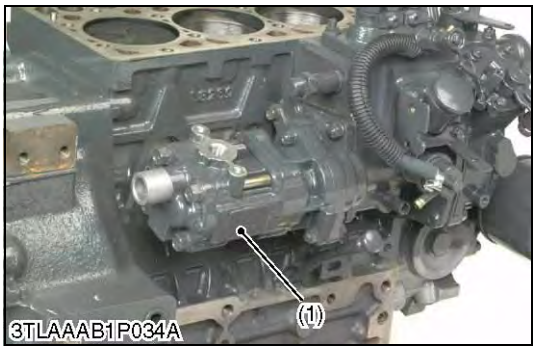

Hydraulic Pump

1. Remove the hydraulic pump mounting screws.
2. Detach the hydraulic pump (1).

(1) Hydraulic Pump

9Y1211121ENS0038US0

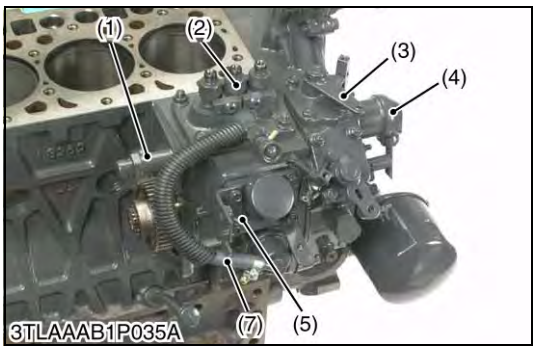

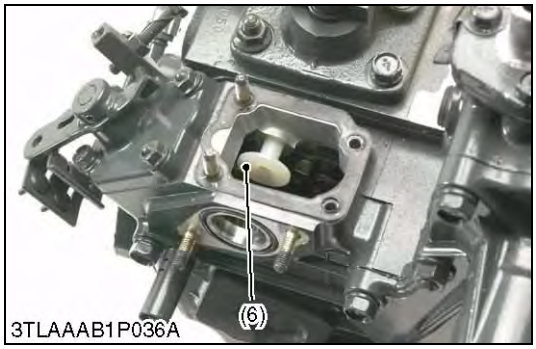

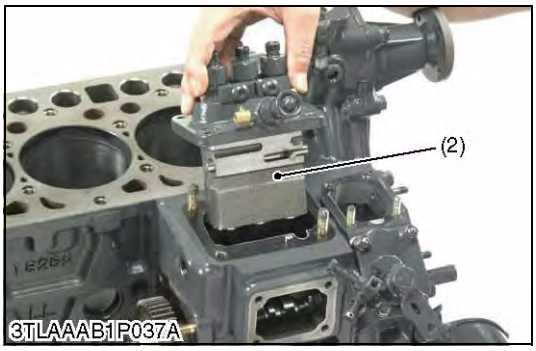

Injection Pump

1. Remove the stop solenoid (4) and hi-idling body (1).
2. Remove the engine stop lever (3) and stop solenoid guide (6).
3. Remove the fuel hose (7), pump cover (5) and fuel injection pump assembly (2).

■ **IMPORTANT**

- **Before removing the injection pump assembly (2), be sure to remove the stop solenoid (4), hi-idling body (1), engine stop lever (3) and stop solenoid guide (6).**

(When reassembling)

- Before attaching the stop solenoid, hi-idling body and solenoid guide, install the injection pump first into position.
- Replace the hi-idling body gasket with a new one.
- Before fitting the stop lever to the gear case, install the solenoid guide first into position. Then attach the stop lever and use it to see if it functions well.
- Before fitting the idling limiter in place, attach the solenoid guide and the engine stop lever in their respective positions.
- When installing the stop solenoid, be careful to keep the O-ring in place.
- Be sure to insert the push rod of the stop solenoid into the hole at the center of the solenoid guide.

Tightening torque	Hi-idling body	45 to 49 N·m 4.5 to 5.0 kgf·m 33 to 36 lbf·ft

(1) Hi-idling Body
(2) Injection Pump Assembly
(3) Stop Lever
(4) Stop Solenoid
(5) Pump Cover
(6) Solenoid Guide
(7) Fuel Hose

9Y1211121ENS0039US0

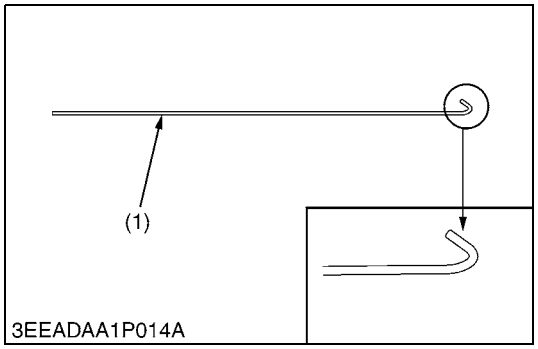

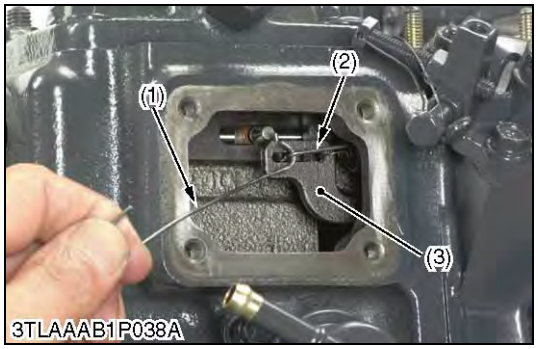

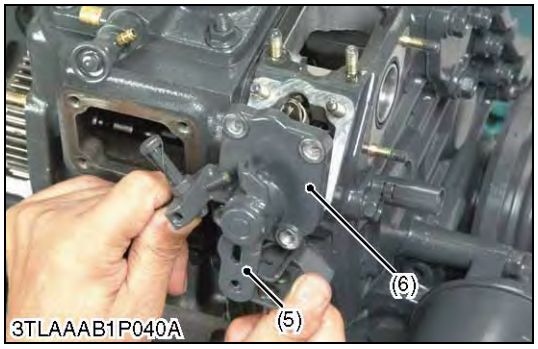

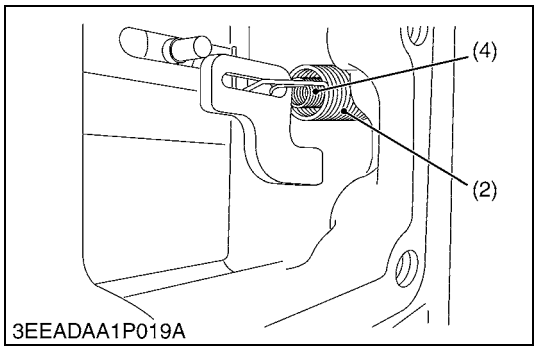

Governor Springs and Speed Control Plate

■ **NOTE**
- **Specific tool (1) :**
  1.2 mm (0.047 in.) diameter hard wire with its end hooked, overall length 200 mm (7.87 in.).
  The tip of wire is bent like the hook to hang governor springs.

1. Remove the injection pump cover.
2. Remove the speed control plate mounting nuts and bolts.
3. Using the specific tool (1), undo the large governor spring (2) from the fork lever (3).
4. Using the specific tool, undo the small governor spring (4) from the fork lever (3).
5. Set the speed control lever (5) as the photo.
6. Take out the speed control plate (6) with care not to let the large and small governor springs come off this plate and fall into the gear case.

(When reassembling)
- Hook the small spring (4) first and then the large governor spring (2) on the speed control plate (6).
- Put the specific tool (1) from the injection pump side to catch the large governor spring (2). Keep this spring slightly extended and place the speed control plate (6) in its specified position.
- Using the specific tool (1), hook the small governor spring onto the fork lever (3).

■ **NOTE**
- **Be careful not to stretch the small governor spring too long because otherwise it may get deformed permanently.**
- **Using the specific tool (1), hook the large governor spring (2) onto the fork lever (3).**
- **Make sure both the governor springs (2), (4) are tight on the fork lever (3).**
- **Apply and tighten up the two bolts and two nuts on the speed control plate (6).**
- **Check that the speed control lever (5) positions low idle, after assembling governor springs.**
- **Check that the speed control lever (5) returns to the high idle position rather than the low idle position, after moving the lever to the maximum speed position.**
- **Finally attach the injection pump cover in position.**

(1)	Specific Tool	(4)	Small Governor Spring
(2)	Large Governor Spring	(5)	Speed Control Lever
(3)	Fork Lever	(6)	Speed Control Plate

9Y1211121ENS0040US0

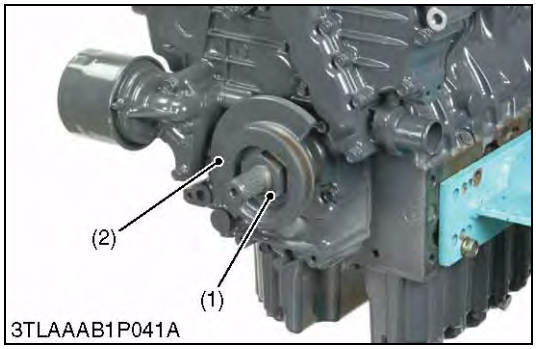

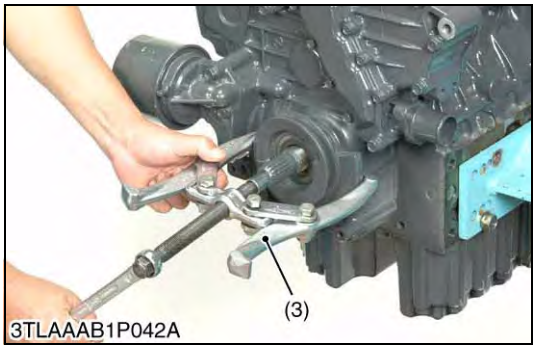

Fan Drive Pulley

1. Lock the flywheel not to turn using the flywheel stopper.
2. Remove the fan drive pulley mounting nut (1).
3. Remove the fan drive pulley (2) with gear puller (3).
4. Remove the feather key.

(When reassembling)

- Apply grease to the splines of coupling.

Tightening torque	Fan drive pulley mounting nut	138 to 156 N·m 14.0 to 16.0 kgf·m 102 to 115 lbf·ft

(1) Nut
(2) Fan Drive Pulley
(3) Gear Puller

9Y1211121ENS0041US0

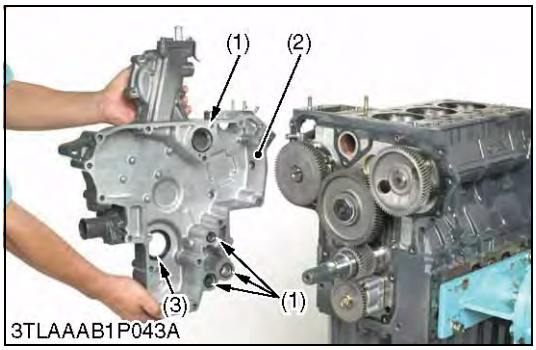

Gear Case

1. Remove the hour meter gear case.
2. Remove the gear case (2).
3. Remove the O-rings (1).

(When reassembling)

- Apply liquid gasket (Three Bond 1215 or equivalent) to both side of hour meter gear case gasket.
- Check to see if there are four O-rings (1) inside the gear case (2).
- Apply a thin film of engine oil to the oil seal (3), and install it, noting the lip come off.
- Before installing the gear case gasket, apply a non-drying adhesive.

(1) O-ring
(2) Gear Case
(3) Oil Seal

9Y1211121ENS0042US0

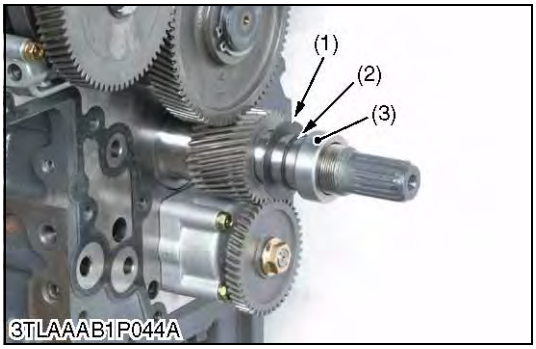

Crankshaft Oil Slinger

1. Remove the feather key.
2. Remove the crankshaft collar (3).
3. Remove the O-ring (2).
4. Detach the crankshaft oil slinger (1).

(When reassembling)

- Attach the crankshaft collar(3) after installing the gear case to the cylinder body.

(1) Crankshaft Oil Slinger
(2) O-ring
(3) Crankshaft Collar

9Y1211121ENS0043US0

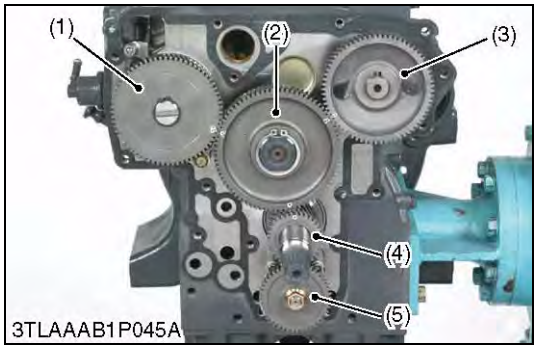

Idle Gear

1. Remove the external snap ring.
2. Detach the idle gear collar.
3. Detach the idle gear (2).

(When reassembling)

- Check to see each gear is aligned with its aligning mark.
  - Idle gear (2) and crank gear (4)
  - Idle gear (2) and camshaft gear (3)
  - Idle gear (2) and injection pump gear (1)

(1) Injection Pump Gear
(2) Idle Gear
(3) Cam Gear
(4) Crank Gear
(5) Oil Pump Drive Gear

9Y1211121ENS0044US0

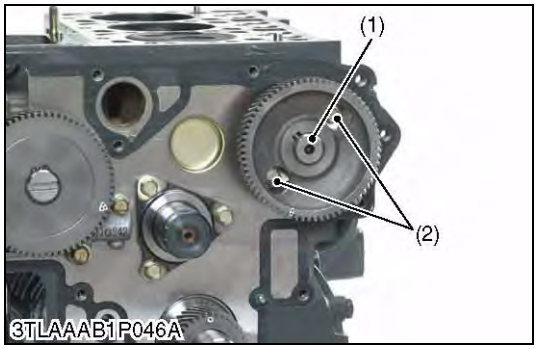

Camshaft

1. Remove the camshaft set bolts (2) and draw out the camshaft (1).

(When reassembling)

- When installing the idle gear, be sure to align the alignment marks on gears.

Tightening torque	Camshaft set bolt	24 to 27 N·m 2.4 to 2.8 kgf·m 18 to 20 lbf·ft

(1) Camshaft
(2) Camshaft Set Bolt

9Y1211121ENS0045US0

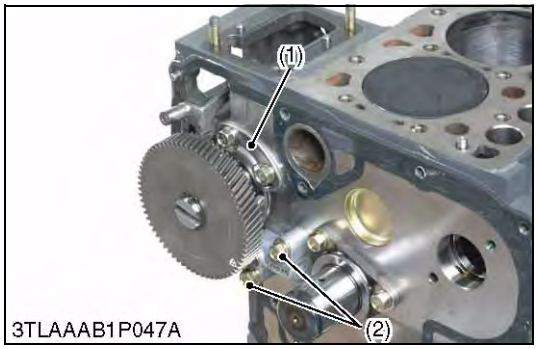

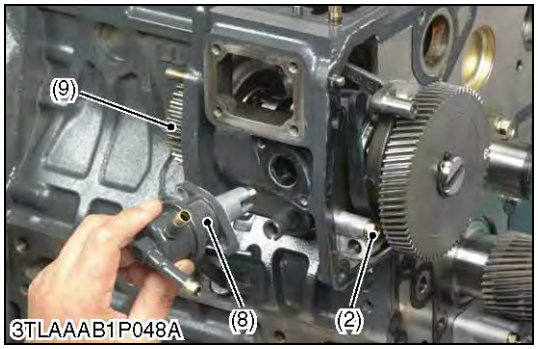

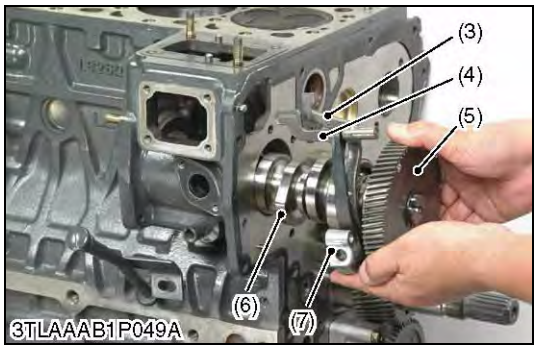

Fuel Camshaft and Fork Lever Assembly

1. Remove the fuel feed pump (8) and hydraulic pump drive gear (9).
2. Detach the fuel camshaft stopper (1).
3. Remove the three fork lever holder mounting screws (2).
4. Draw out the fuel camshaft assembly (5), (6) and fork lever assembly (3), (4), (7) at the same time.

(When reassembling)

- After installation, check to see that the fork lever 1 (3) and 2 (4) are fixed to the fork lever shaft, and that they can turn smoothly in the holder (7).

(1) Fuel Camshaft Stopper
(2) Fork Lever Holder Mounting Screws
(3) Fork Lever 1
(4) Fork Lever 2
(5) Injection Pump Gear
(6) Fuel Camshaft
(7) Fork Lever Holder
(8) Fuel Feed Pump
(9) Hydraulic Pump Drive Gear

9Y1211121ENS0046US0

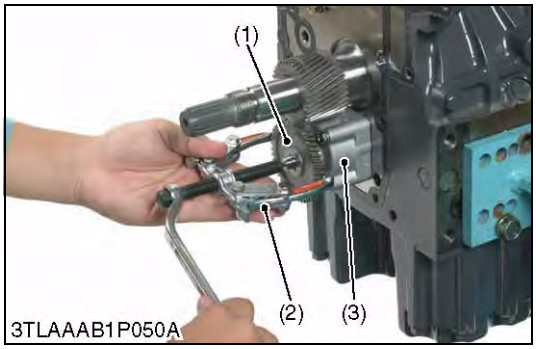

Oil Pump

1. Remove the nut.
2. Draw out the oil pump drive gear (1) with gear puller (2).
3. Remove the four oil pump mounting screws and the oil pump (3).

(1) Oil Pump Drive Gear
(2) Gear Puller
(3) Oil Pump

9Y1211121ENS0047US0

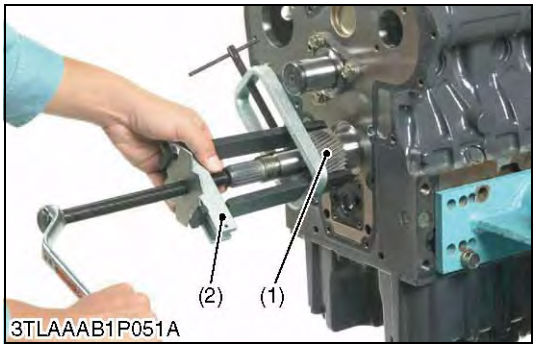

Crank Gear

1. Draw out the crank gear (1) with a puller (2).
2. Remove the feather key.

(1) Crank Gear
(2) Gear Puller

9Y1211121ENS0048US0

[3] CONNECTING ROD AND PISTON

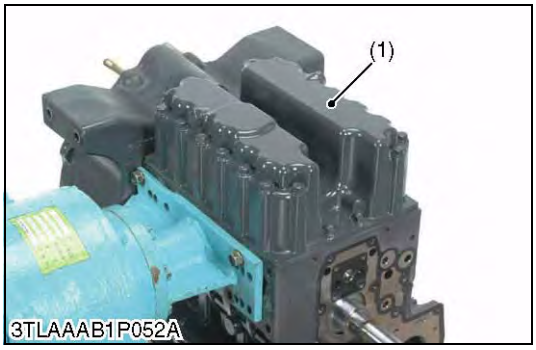

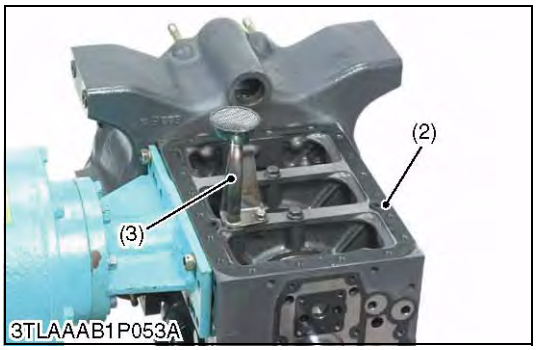

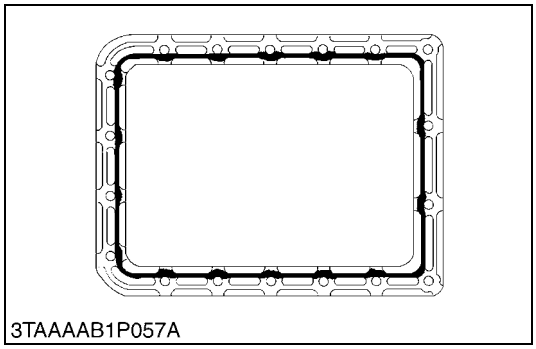

Oil Pan and Oil Strainer

1. Remove the oil pan mounting screws.
2. Remove the oil pan (1) by lightly tapping the rim of the pan with a wooden hammer.
3. Remove the oil pan gasket (2) if equipped.
4. Remove the oil strainer (3) and O-ring.

(When reassembling)

- After cleaning the oil strainer (3), check to see that the filter mesh in clean, and install it.
- Visually check the O-ring, apply engine oil, and install it.
- Securely fit the O-ring to the oil strainer (3).
- Apply a liquid gasket (Three Bond 1215 or equivalent) to the oil pan side of the oil pan gasket (2).
- To avoid uneven tightening, tighten oil pan mounting screws in diagonal order from the center.

■ **IMPORTANT**

- **Scrape off the old liquid gasket completely. Wipe the sealing surface clean using waste cloth soaked with gasoline.**
- **Cut the nozzle of the "liquid gasket" container at its second notch. Now apply liquid gasket 3.0 to 5.0 mm (0.12 to 0.19 in.) thick all over the contact surface. Apply liquid gasket also on the center of the flange as well as on the inner wall of each screw hole.**
- **Within 20 minutes after the application of fluid sealant, reassemble the components. Wait then for about 30 minutes, and pour oil in the crankcase.**

(1) Oil Pan
(2) Oil Pan Gasket
(3) Oil Strainer

9Y1211121ENS0049US0

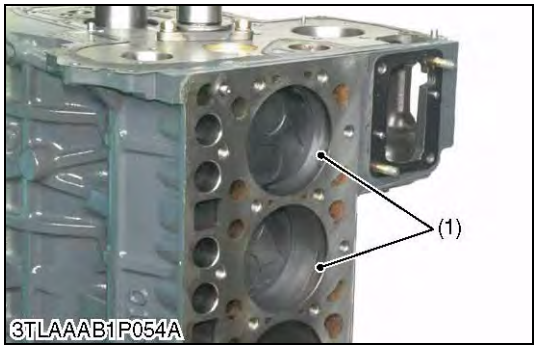

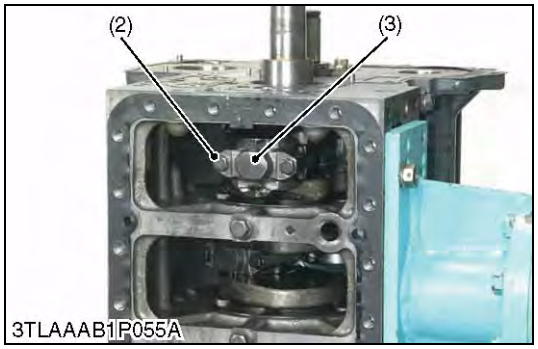

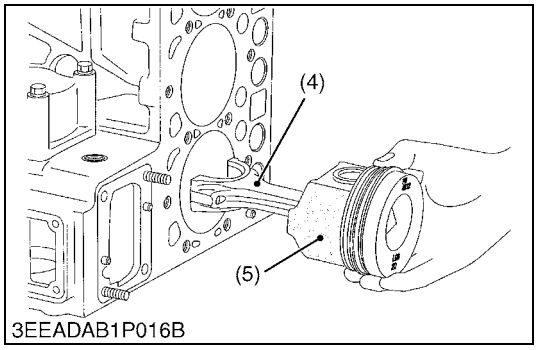

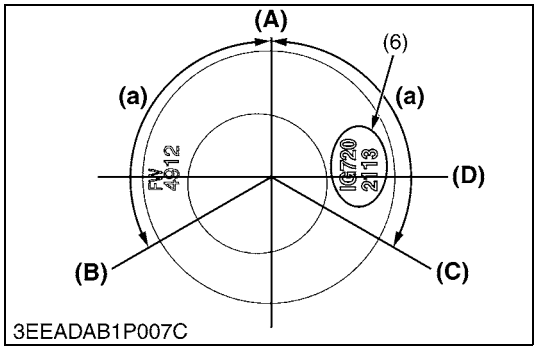

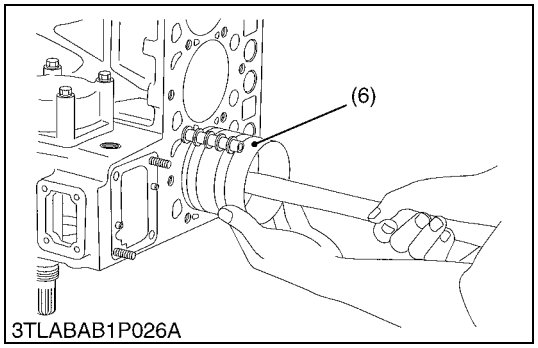

Pistons

1. Completely clean carbon (1) in the cylinders.
2. Remove the connecting rod cap (3).
3. Turn the flywheel and bring the piston to top dead center.
4. Draw out the piston upward by lightly tapping it from the bottom of the crankcase with the grip of a hammer.
5. Draw out the other piston in the same method as above.

(When reassembling)

- Before inserting piston into the cylinder, apply enough engine oil to the piston.
- When inserting the piston into the cylinder, face the mark on the connecting rod to the injection pump.

■ **IMPORTANT**

- **Do not change the combination of cylinder and piston. Make sure of the position of each piston by marking. For example, mark "1" on the No. 1 piston.**
- **Place the piston rings with their gaps at 0.79 rad (45 °) from the piston pin's direction as shown in the figure.**
- **Carefully insert the pistons using a piston ring compressor.**
- **When inserting the piston in place, be careful not to get the molybdenum disulfide coating torn off its skirt. This coating is useful in minimizing the clearance with the cylinder liner. Just after the piston pin has been press-fitted, in particular, the piston is still hot and the coating is easy to peel off. Wait until the piston cools down.**

Tightening torque	Connecting rod screw	40 to 44 N·m 4.0 to 4.5 kgf·m 29 to 32 lbf·ft

(1) Carbon
(2) Connecting Rod Screw
(3) Connecting Rod Cap
(4) Connecting Rod
(5) Molybdenum Disulfide Coating in Piston Skirt
(6) Piston Ring Compressor

(A) Top Ring Gap
(B) Second Ring Gap
(C) Oil Ring Gap
(D) Piston Pin Hole

(a) 2.09 rad (120 °)

9Y1211121ENS0050US0

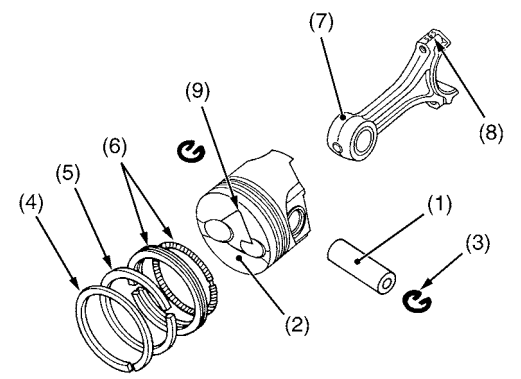

3TMABAB1P047D

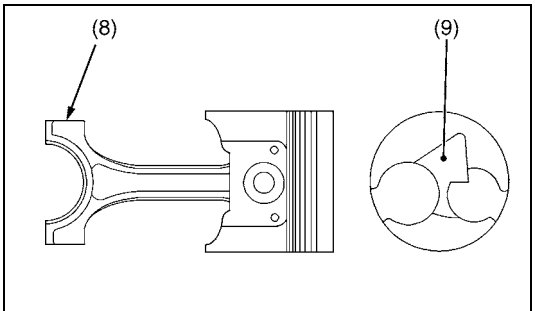

3TAAAAB1P058A

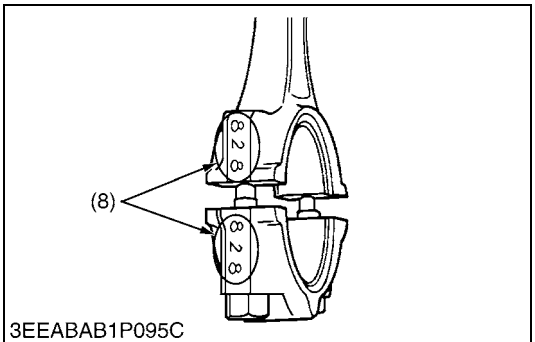

3EEABAB1P095C

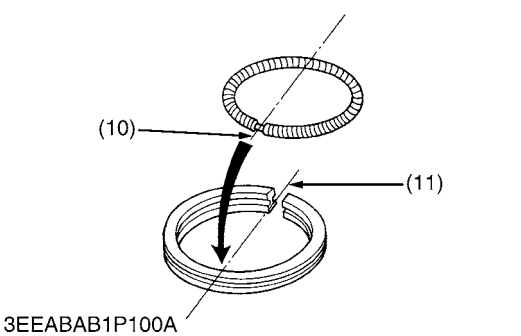

3EEABAB1P100A

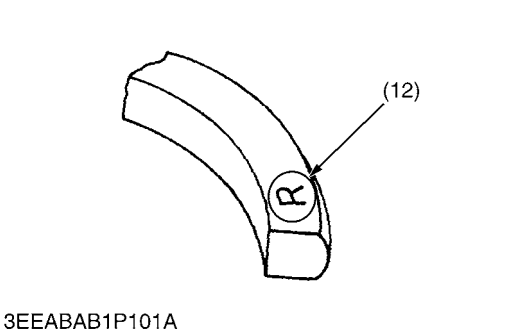

3EEABAB1P101A

Piston Ring and Connecting Rod

1. Remove the piston rings using a piston ring tool (Code No. 07909-32121).
2. Remove the piston pin (1), and separate the connecting rod (7) from the piston (2).

(When reassembling)

- When installing the rings, assemble the rings so that the manufacturer's mark (12) near the gap faces the top of the piston.
- When installing the oil ring onto the piston, place the expander joint (10) on the opposite side of the oil ring gap (11).
- Apply engine oil to the piston pin.
- When installing the piston pin, immerse the piston in 80 °C (176 °F) oil for 10 to 15 minutes and insert the piston pin to the piston.
- When installing the connecting rod to the piston, align the mark (8) on the connecting rod to the fan-shaped concave (9).

■ **NOTE**

- **Mark the same number on the connecting rod and the piston so as not to change the combination.**

(1) Piston Pin
(2) Piston
(3) Piston Pin Snap Ring
(4) Top Ring
(5) Second Ring
(6) Oil Ring
(7) Connecting Rod
(8) Mark
(9) Fan Shaped Concave
(10) Expander Joint
(11) Oil Ring Gap
(12) Manufacturer's Mark

9Y1211121ENS0051US0

[4] CRANKSHAFT

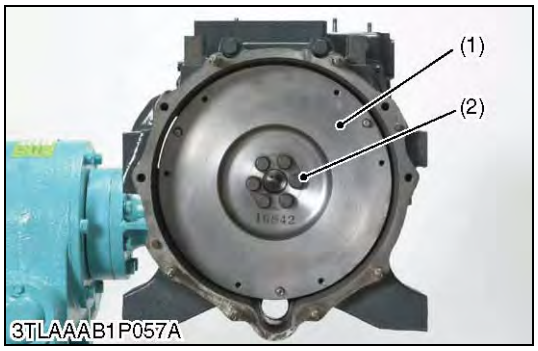

Flywheel

1. Fit the stopper to the flywheel (1).
2. Remove the all flywheel screws (2).
3. Remove the flywheel (1) slowly.

(When reassembling)

- Insert two pieces of the flywheel guide screws.
- Check to see that there are no metal particles left on the flywheel mounting surfaces.
- Apply engine oil to the threads and the undercut surface of the flywheel bolt and fit the bolt.

Tightening torque	Flywheel screws	98.1 to 107 N·m 10.0 to 11.0 kgf·m 72.4 to 79.5 lbf·ft

(1) Flywheel
(2) Flywheel Screw

9Y1211121ENS0052US0

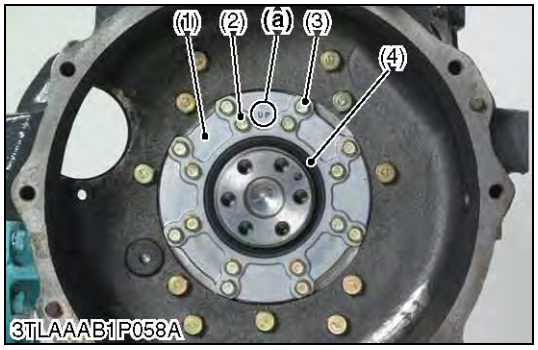

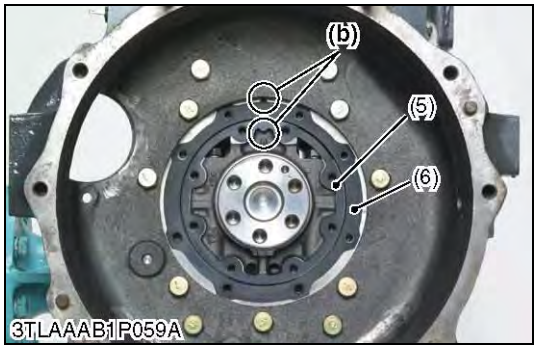

Bearing Case Cover

1. Remove the bearing case cover mounting screws. First, remove inside screws (2) and then outside screws (3).
2. Remove the bearing case cover (1).

■ **IMPORTANT**

- **The length of inside screws and outside screws are different. Do not take a mistake using inside screws and outside screws.**

(When reassembling)

- Fit the bearing case gasket (5) and the bearing case cover gasket (6) with correct directions **(b)**.
- Install the bearing case cover to position the casting mark **"UP" (a)** on it upward.
- Apply engine oil to the oil seal lip and take care that it is not rolled when installing.
- Tighten the bearing case cover mounting screws with even force on the diagonal line.

Tightening torque	Bearing case cover mounting screw	24 to 27 N·m 2.4 to 2.8 kgf·m 18 to 20 lbf·ft

(1) Bearing Case Cover
(2) Bearing Case Cover Mounting Screw
(3) Bearing Case Cover Mounting Screw
(4) Oil Seal
(5) Bearing Case Gasket
(6) Bearing Case Cover Gasket

(a) Mark "UP"
(b) Upside

9Y1211121ENS0053US0

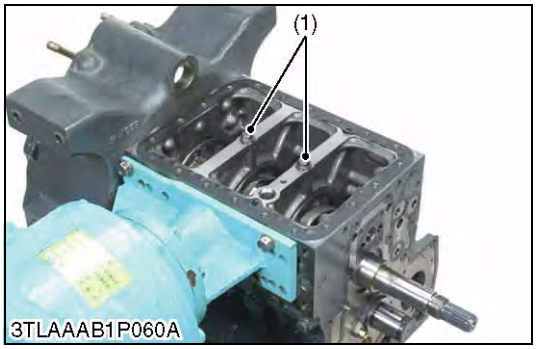

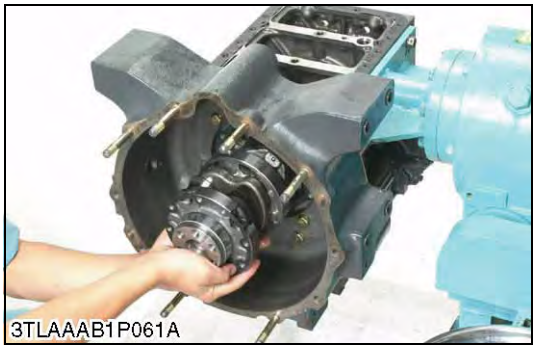

Crankshaft

■ **NOTE**

- **Before disassembling, check the side clearance of crankshaft. Also check it during reassembling.**

1. Remove the main bearing case screw 2 (1).
2. Pull out the crankshaft assembly, taking care not to damage the crankshaft bearing 1.

(When reassembling)

■ **IMPORTANT**

- **Install the crankshaft sub assembly, aligning the screw hole of main bearing case 2 with the screw hole of cylinder block.**
- **When tightening the main bearing case screw 2, apply oil to the screw and screw by hand before tightening the specific torque.**
  If not smooth to screw by hand, align the screw holes between the cylinder block and the main bearing case.

Tightening torque	Main bearing case screws 2	69 to 73 N·m 7.0 to 7.5 kgf·m 51 to 54 lbf·ft

(1) Main Bearing Case Screw 2

9Y1211121ENS0054US0

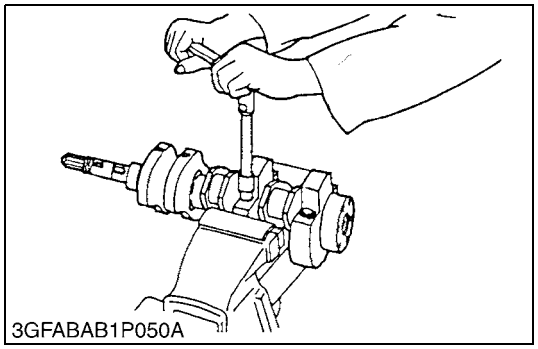
3GFABAB1P050A

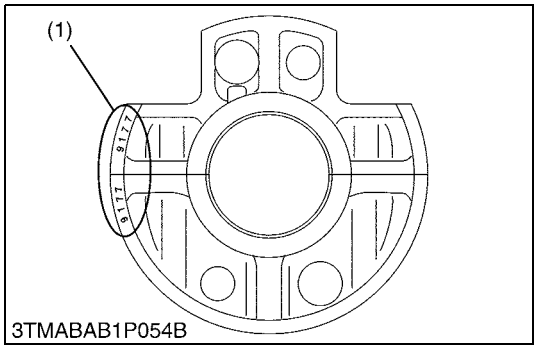

3TMABAB1P054B

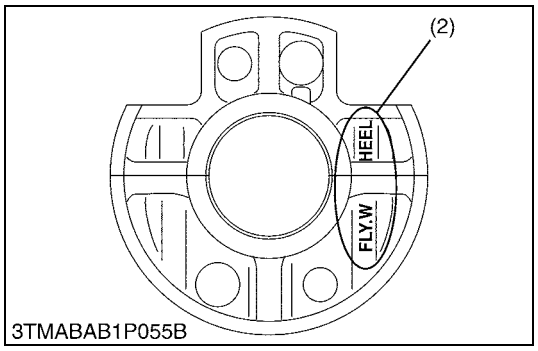

3TMABAB1P055B

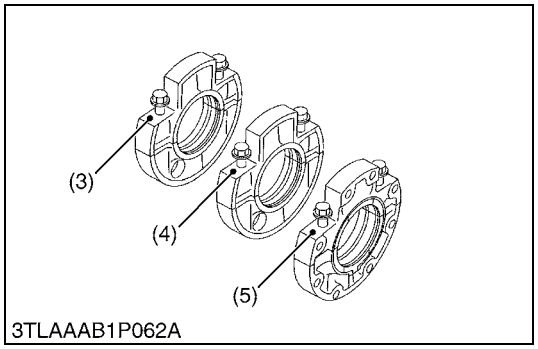

3TLAAAB1P062A

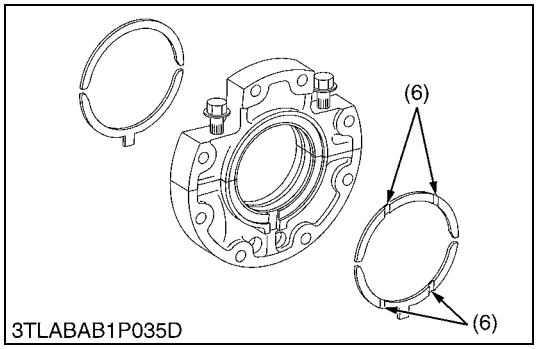

3TLABAB1P035D

Main Bearing Case Assembly

1. Remove the two main bearing case screws 1, and remove the main bearing case assembly being careful with thrust bearing and crankshaft bearing.
2. Remove the main bearing case 1, 2 as above.

(When reassembling)

- Clean the oil passage in the main bearing case.
- Apply clean engine oil on the bearings.
- Install the main bearing case assemblies in the original positions. Since diameters of main bearing cases vary, install them in order of markings A, B from the gear case side.
- Match the alignment numbers (1) and mark (2) on the main bearing case.
- When installing the main bearing case 1 and 2, face the mark **"FLYWHEEL"** to the flywheel.
- Install the thrust bearing with its oil groove facing (6) outward.
- Confirm that the main bearing case moves smoothly after tightening the main bearing case screw 1 to the specified torque.

Tightening torque	Main bearing case screw 1	46 to 50 N·m 4.7 to 5.2 kgf·m 34 to 37 lbf·ft

(1) Alignment Number
(2) Alignment Mark
(3) A
(4) B
(5) No Mark
(6) Oil Groove

9Y1211121ENS0055US0

[5] THERMOSTAT

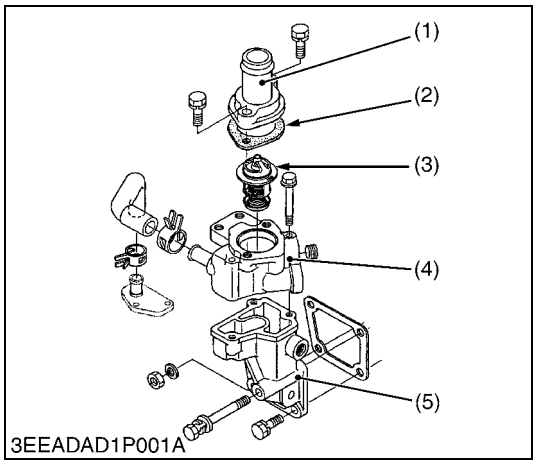

Thermostat Assembly

1. Remove the thermostat cover mounting screws, and remove the thermostat cover (1).
2. Remove the thermostat assembly (3).

(When reassembling)

- Apply a liquid gasket (Three Bond 1215 or equivalent) only at the thermostat cover side of the thermostat cover gasket (2).
- Apply a liquid gasket (Three Bond 1215 or equivalent) to the thermostat flange 1 (4) and flange 2 (5).

(1) Thermostat Cover
(2) Thermostat Cover Gasket
(3) Thermostat Assembly
(4) Water Flange 1
(5) Water Flange 2

9Y1211121ENS0056US0

7. SERVICING

[1] CYLINDER HEAD AND VALVES

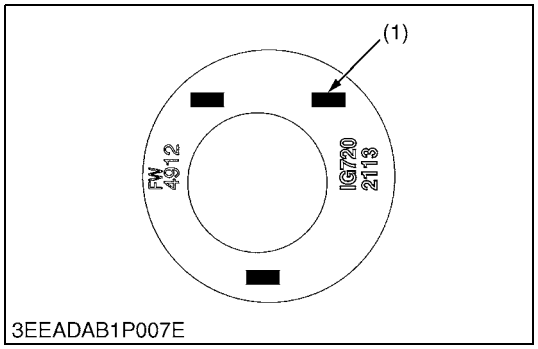

3EEADAB1P007E

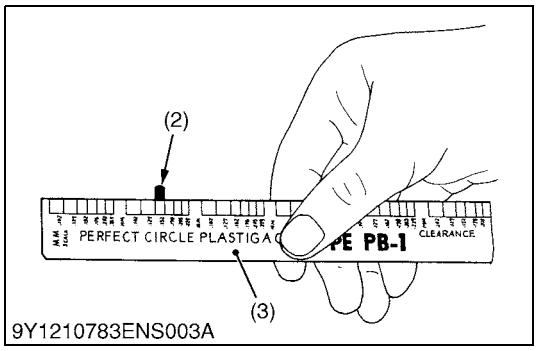

9Y1210783ENS003A

Top Clearance

1. Remove the cylinder head.
2. With the piston at TDC, use grease to affix three or four plastigauges (1) of a diameter 1.5 mm (0.059 in.) × 5.0 to 7.0 mm (0.20 to 0.27 in.) long to the crown of the piston; keep the gauges away from the intake valve and combustion chamber fittings.
3. Take the piston to an intermediate position, install the cylinder head and tighten the head screws to the specified torque.
4. Turn the crankshaft so the piston goes through TDC.
5. Remove the cylinder head and compare the width of the crushed plastigauges (2) with the scale (3).
6. If they are out of spec, check the oil clearance of the crank pin, journals and piston pin.

■ **NOTE**

- **Top clearance = Width of the crushed plastigauge (2).**

Top clearance	Factory specification	0.60 to 0.70 mm 0.024 to 0.027 in.

Tightening torque	Cylinder head screws	93.2 to 98.0 N·m 9.50 to 10.0 kgf·m 68.8 to 72.3 lbf·ft

(1) Plastigauge
(2) Crushed Plastigauge
(3) Scale

9Y1211121ENS0057US0

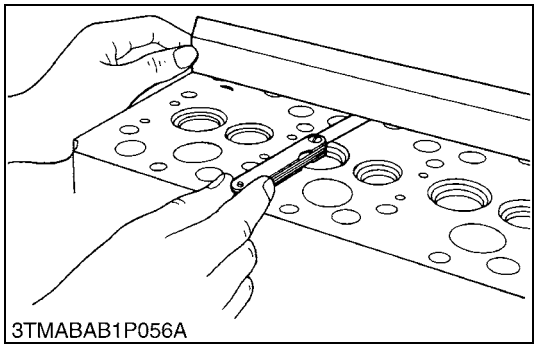
3TMABAB1P056A

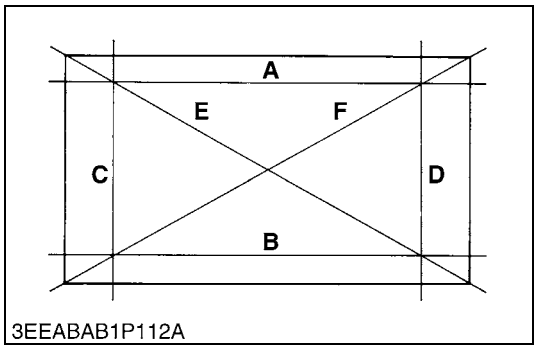

3EEABAB1P112A

Cylinder Head Surface Flatness

1. Clean the cylinder head surface.
2. Put a straightedge on the cylinder head.
3. Measure the clearance with a feeler gauge at the 6 places (see the figure).
4. If the measurement is more than the allowable limit, make it straight with a surface grinder.

■ **IMPORTANT**

- **Do not put a straightedge on the combustion chamber.**
- **Check the valve recessing after you correct.**

Cylinder head surface flatness	Allowable limit	0.05 mm 0.002 in.

9Y1211121ENS0058US0

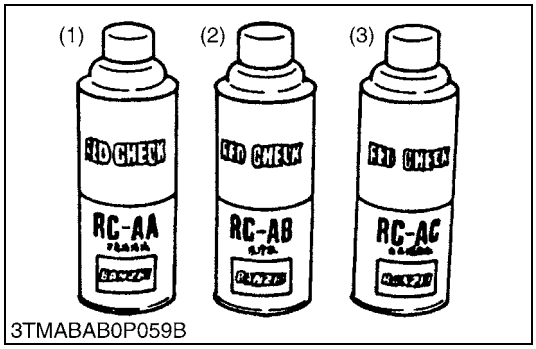

3TMABAB0P059B

Cylinder Head Flaw

1. Prepare an air spray red check (Code No. 07909-31371).
2. Clean the surface of the cylinder head with detergent (2).
3. Spray the cylinder head surface with the red permeative liquid (1). Leave it five to ten minutes after spraying.
4. Wash away the read permeative liquid on the cylinder head surface with the detergent (2).
5. Spray the cylinder head surface with white developer (3).
6. If flawed, it can be identified as red marks.

(1) Red Permeative Liquid
(2) Detergent
(3) White Developer

9Y1211121ENS0059US0

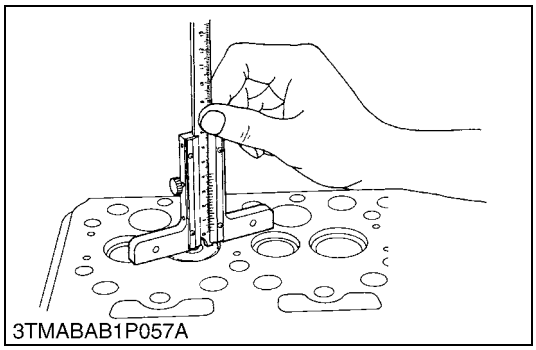
3TMABAB1P057A

Valve Recessing

1. Clean the cylinder head surface (1), valve face and valve seat.
2. Insert the valve into the valve guide
3. Measure the valve recessing with a depth gauge.
4. If the measurement exceeds the allowable limit, replace the valve.
5. If it still exceeds the allowable limit after replacing the valve, correct the valve seat face of the cylinder head with a valve seat cutter or valve seat grinder.
6. Then, correct the cylinder head surface with a surface grinder, or replace the cylinder head.

Valve recessing	Factory specification	0.65 to 0.85 mm 0.026 to 0.033 in.
	Allowable limit	1.20 mm 0.0472 in.

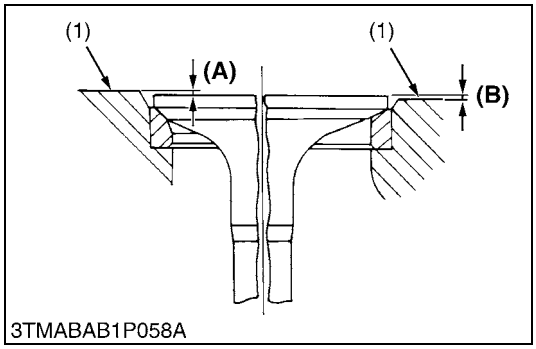

3TMABAB1P058A

(1) Cylinder Head Surface
(A) Recessing
(B) Protrusion

9Y1211121ENS0060US0

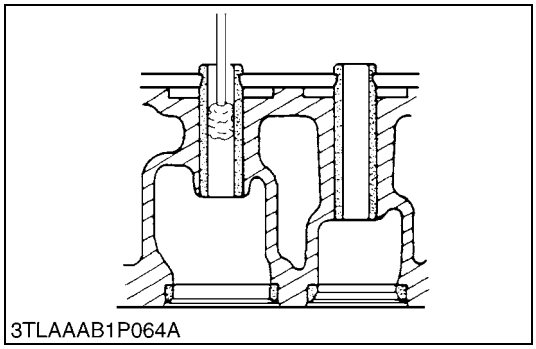
3TLAAAB1P064A

Cleaning Valve Guide

1. Wash and clean the inner surface of the valve guide with kerosene or diesel fuel.

9Y1211121ENS0061US0

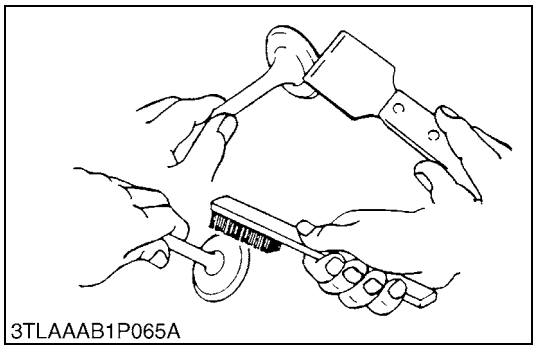
3TLAAAB1P065A

Cleaning Valve

1. Use a scraper and remove carbon.
2. Use a wire brush and remove carbon completely.

9Y1211121ENS0062US0

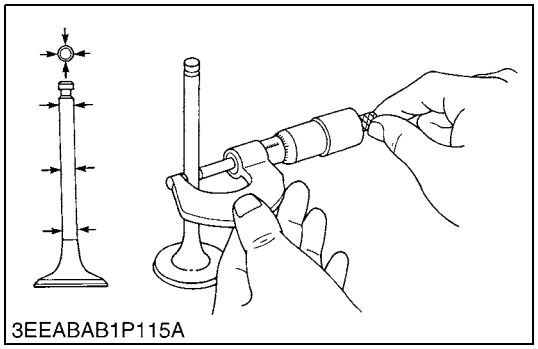
3EEABAB1P115A

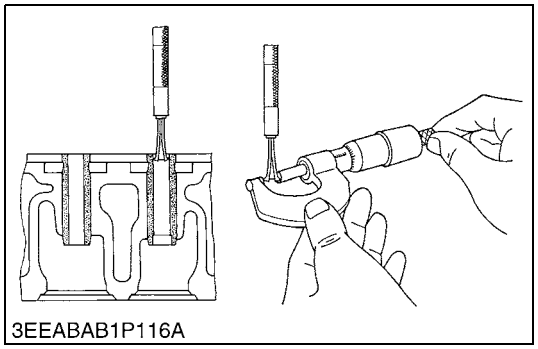
3EEABAB1P116A

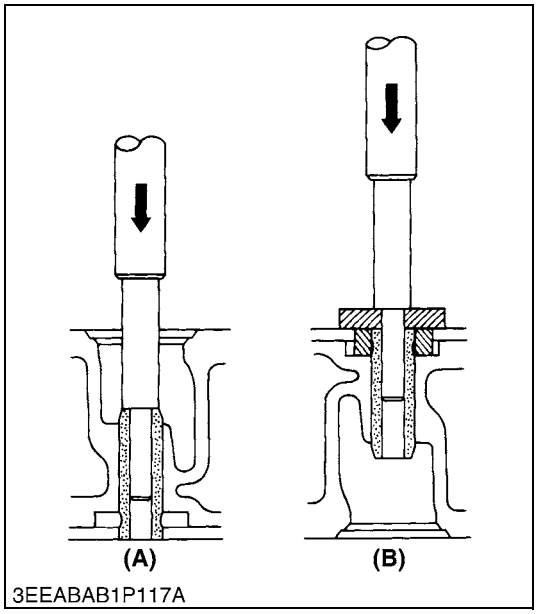

3EEABAB1P117A

Clearance between Valve Stem and Valve Guide

1. Remove carbon from the valve guide section.
2. Measure the valve stem O.D. with an outside micrometer.
3. Measure the valve guide I.D. with a small hole gauge, and calculate the clearance.
4. If the clearance exceeds the allowable limit, replace the valves. If it still exceeds the allowable limit, replace the valve guide.

Clearance between valve stem and guide	Factory specification	0.040 to 0.070 mm 0.0016 to 0.0027 in.
	Allowable limit	0.1 mm 0.004 in.

Valve stem O.D.	Factory specification	7.960 to 7.975 mm 0.3134 to 0.3139 in.
Valve guide I.D.	Factory specification	8.015 to 8.030 mm 0.3156 to 0.3161 in.

9Y1211121ENS0063US0

Replacing Valve Guide

(A) (When removing)

1. Press out the used valve guide using a valve guide replacing tool.

(B) (When installing)

1. Clean a new valve guide and valve guide bore, and apply engine oil to them.
2. Press in a new valve guide using a valve guide replacing tool.
3. Ream precisely the I.D. of the valve guide to the specified dimension.

Valve guide I.D. (Intake and exhaust)	Factory specification	8.015 to 8.030 mm 0.3156 to 0.3161 in.

■ **IMPORTANT**

- **Do not hit the valve guide with a hammer during replacement.**

(A) When Removing **(B) When Installing**

9Y1211121ENS0064US0

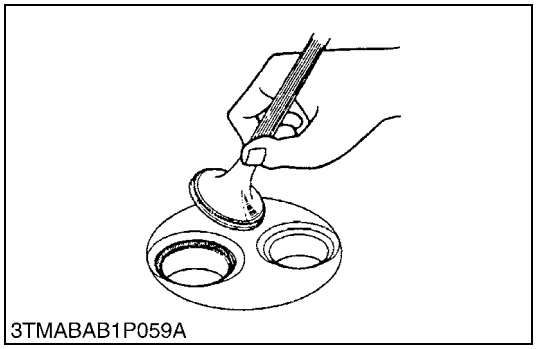
3TMABAB1P059A

Valve Seating

1. Coat the valve face lightly with prussian blue and put the valve on its seat to check the contact.
2. If the valve does not seat all the way around the valve seat or the valve contact is less than 70 %, correct the valve seating as follows.
3. If the valve contact does not comply with the reference value, replace the valve or correct the contact of valve seating.

Valve seat width	Factory specification	2.12 mm 0.0835 in.

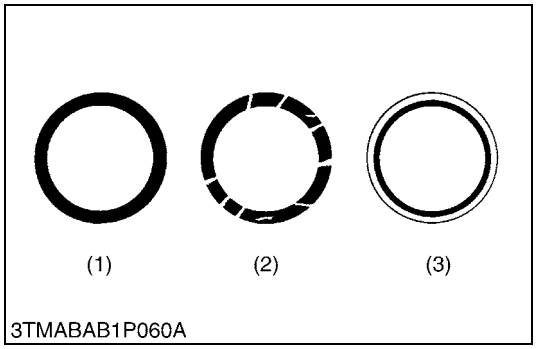

3TMABAB1P060A

(1) Correct
(2) Incorrect
(3) Incorrect

9Y1211121ENS0065US0

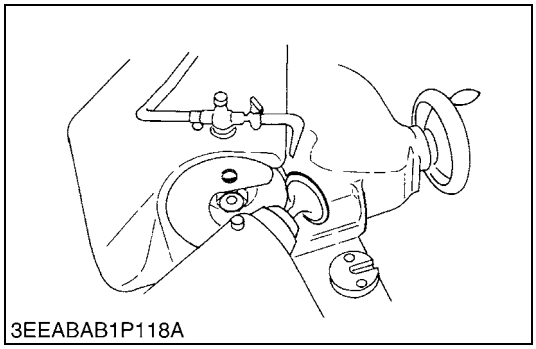
3EEABAB1P118A

Correcting Valve and Valve Seat

■ **NOTE**
- **Before correcting the valve and seat, check the valve stem and the I.D. of valve guide section, and repair them if necessary.**
- **After correcting the valve seat, be sure to check the valve recessing.**

1) Correcting Valve

1. Correct the valve with a valve refacer.

Valve face angle	Factory specification	0.79 rad 45 °

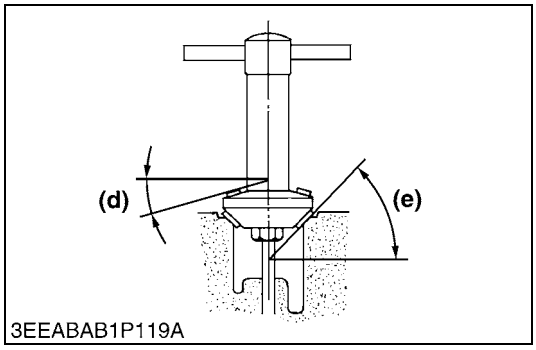

3EEABAB1P119A

2) Correcting Valve Seat

1. Slightly correct the seat surface with a 0.79 rad (45 °) seat cutter (Code No. 07909-33102).
2. Resurface the seat surface with a 0.52 rad (30 °) valve seat cutter to intake valve seat and with a 0.26 rad (15 °) valve seat cutter to exhaust valve seat so that the width is close to specified valve seat width (2.12 mm, 0.0835 in.).
3. After resurfacing the seat, inspect for even valve seating, apply a thin film of compound between the valve face and valve seat, and fit them with valve lapping tool.
4. Check the valve seating with prussian blue. The valve seating surface should show good contact all the way around.

Valve seat angle	Factory specification	0.79 rad 45 °

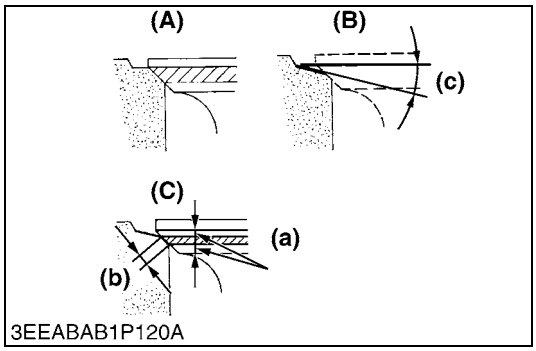

3EEABAB1P120A

(a) Identical Dimensions
(b) Valve Seat Width
(c) 0.52 rad (30 °) or 0.26 rad (15 °)
(d) 0.26 rad (15 °) or 0.52 rad (30 °)
(e) 0.79 rad (45 °) or 1.0 rad (60 °)

(A) Check Correct
(B) Correct Seat Width
(C) Check Contact

9Y1211121ENS0066US0

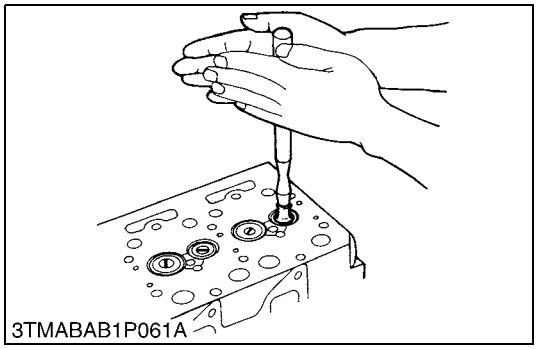
3TMABAB1P061A

Valve Lapping

1. Apply compound evenly to the valve lapping surface.
2. Insert the valve into the valve guide. Lap the valve onto its seat with a valve flapper or screwdriver.
3. After lapping the valve, wash the compound away and apply oil, then repeat valve lapping with oil.
4. Apply prussian blue to the contact surface to check the seated rate. If it is less than 70 %, repeat valve lapping again.

■ **IMPORTANT**

- **When valve lapping is performed, be sure to check the valve recessing and adjust the valve clearance after assembling the valve.**

9Y1211121ENS0067US0

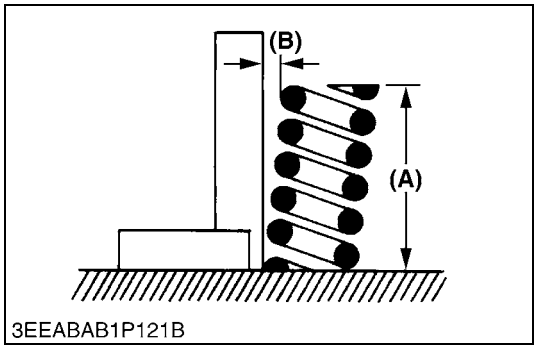

3EEABAB1P121B

Free Length and Tilt of Valve Spring

1. Measure the free length **(A)** of valve spring with vernier calipers. If the measurement is less than the allowable limit, replace it.
2. Put the valve spring on a surface plate, place a square on the side of the valve spring.
3. Check to see if the entire side is in contact with the square. Rotate the valve spring and measure the maximum tilt **(B)**. If the measurement exceeds the allowable limit, replace it.
4. Check the entire surface of the valve spring for scratches. If there is any defect, replace it.

Free length **(A)**	Factory specification	41.7 to 42.2 mm 1.65 to 1.66 in.
	Allowable limit	41.2 mm 1.62 in.

Tilt **(B)**	Factory specification	1.0 mm 0.039 in.

9Y1211121ENS0068US0

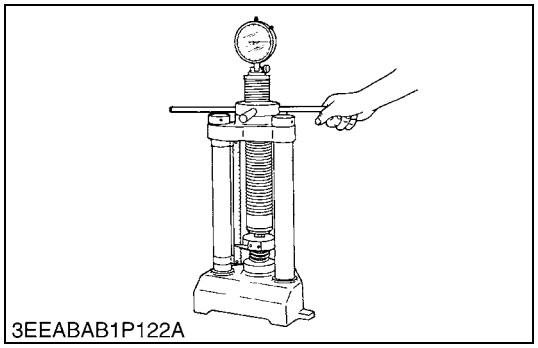
3EEABAB1P122A

Valve Spring Setting Load

1. Place the valve spring on a tester and compress it to the same length it is actually compressed in the engine.
2. Read the compression load on the gauge.
3. If the measurement is less than the allowable limit, replace it.

Setting load / Setting length	Factory specification	118 N / 35.0 mm 12.0 kgf / 35.0 mm 26.5 lbf / 1.38 in.
	Allowable limit	100 N / 35.0 mm 10.2 kgf / 35.0 mm 22.5 lbf / 1.38 in.

9Y1211121ENS0069US0

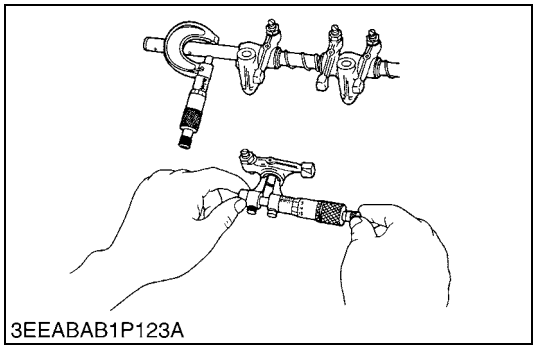
3EEABAB1P123A

Oil Clearance between Rocker Arm and Rocker Arm Shaft

1. Measure the rocker arm shaft O.D. with an outside micrometer.
2. Measure the rocker arm I.D. with an inside micrometer, and then calculate the oil clearance.
3. If the oil clearance exceeds the allowable limit, replace the rocker arm and measure the oil clearance again. If it still exceeds the allowable limit, replace also the rocker arm shaft.

Oil clearance between rocker arm and rocker arm shaft	Factory specification	0.016 to 0.045 mm 0.00063 to 0.0017 in.
	Allowable limit	0.10 mm 0.0039 in.

Rocker arm shaft O.D.	Factory specification	13.973 to 13.984 mm 0.55012 to 0.55055 in.
Rocker arm I.D.	Factory specification	14.000 to 14.018 mm 0.55119 to 0.55188 in.

9Y1211121ENS0070US0

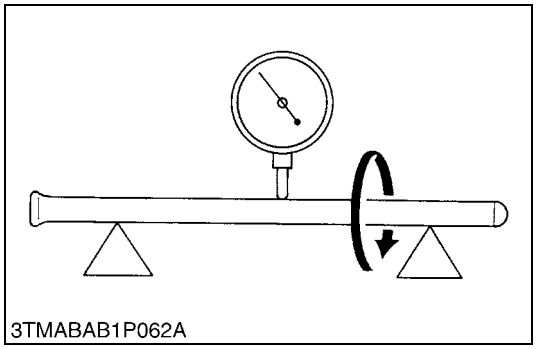
3TMABAB1P062A

Push Rod Alignment

1. Place the push rod on V blocks.
2. Measure the push rod alignment.
3. If the measurement exceeds the allowable limit, replace the push rod.

Push rod alignment	Allowable limit	0.25 mm 0.0098 in.

9Y1211121ENS0071US0

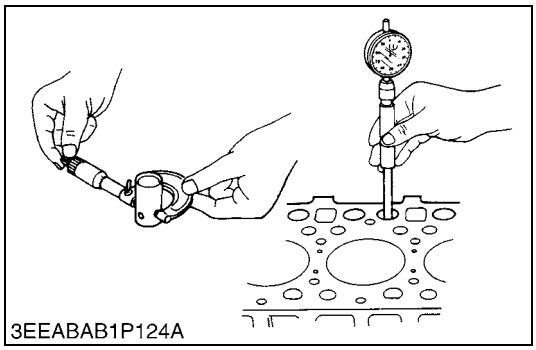
3EEABAB1P124A

Oil Clearance between Tappet and Tappet Guide Bore

1. Measure the tappet O.D. with an outside micrometer.
2. Measure the I.D. of the tappet guide bore with a cylinder gauge, and calculate the oil clearance.
3. If the oil clearance exceeds the allowable limit or the tappet is damaged, replace the tappet.

Oil Clearance between tappet and tappet guide bore	Factory specification	0.020 to 0.062 mm 0.00079 to 0.0024 in.
	Allowable limit	0.07 mm 0.0028 in.

Tappet O.D.	Factory specification	23.959 to 23.980 mm 0.94327 to 0.94409 in.
Tappet guide bore I.D.	Factory specification	24.000 to 24.021 mm 0.94489 to 0.94570 in.

9Y1211121ENS0072US0

[2] TIMING GEARS, CAMSHAFT AND FUEL CAMSHAFT

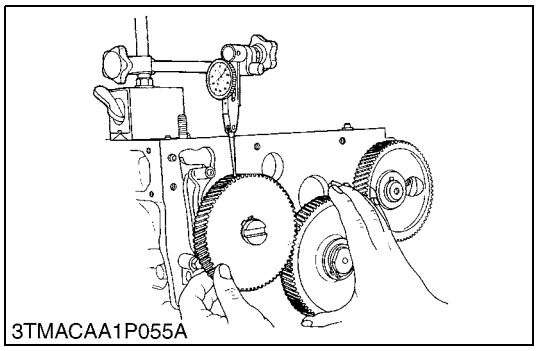
3TMACAA1P055A

Timing Gear Backlash

1. Set a dial indicator (lever type) with its tip on the gear tooth.
2. Move the gear to measure the backlash, holding its mating gear.
3. If the backlash exceeds the allowable limit, check the oil clearance of the shafts and the gear.
4. If the oil clearance is proper, replace the gear.

Backlash between idle gear and crank gear	Factory specification	0.04150 to 0.1122 mm 0.001634 to 0.004417 in.
	Allowable limit	0.15 mm 0.0059 in.

Backlash between idle gear and cam gear	Factory specification	0.04150 to 0.1154 mm 0.001634 to 0.00454 in.
	Allowable limit	0.15 mm 0.0059 in.

Backlash between idle gear and injection pump gear	Factory specification	0.04150 to 0.1154 mm 0.001634 to 0.004543 in.
	Allowable limit	0.15 mm 0.0059 in.

Backlash between crank gear and oil pump gear	Factory specification	0.04840 to 0.2455 mm 0.001906 to 0.009665 in.
	Allowable limit	0.30 mm 0.012 in.

9Y1211121ENS0073US0

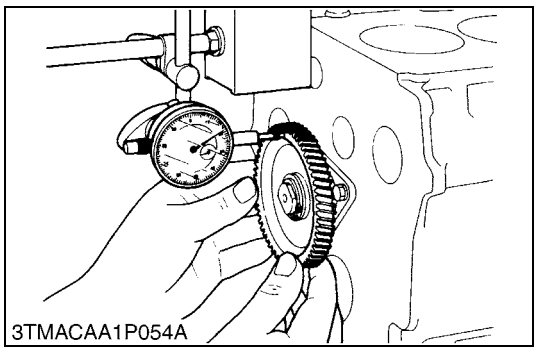
3TMACAA1P054A

Idle Gear Side Clearance

1. Set a dial indicator with its tip on the idle gear.
2. Measure the side clearance by moving the idle gear to the front and rear.
3. If the measurement exceeds the allowable limit, replace the idle gear collar.

Idle gear side clearance	Factory specification	0.15 to 0.25 mm 0.0059 to 0.0098 in.
	Allowable limit	0.90 mm 0.035 in.

9Y1211121ENS0074US0

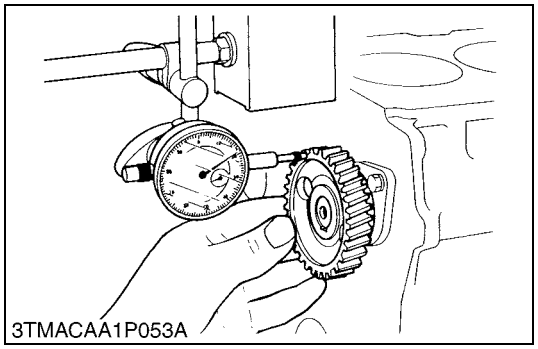
3TMACAA1P053A

Camshaft Side Clearance

1. Set a dial indicator with its tip on the cam gear.
2. Measure the side clearance by moving the cam gear to the front and rear.
3. If the measurement exceeds the allowable limit, replace the camshaft stopper.

Camshaft side clearance	Factory specification	0.070 to 0.22 mm 0.0028 to 0.0086 in.
	Allowable limit	0.30 mm 0.012 in.

9Y1211121ENS0075US0

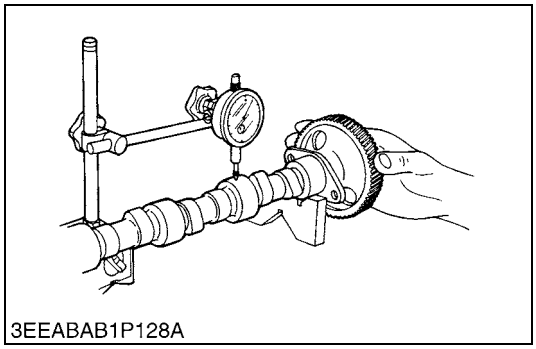
3EEABAB1P128A

Camshaft Alignment

1. Support the camshaft with V blocks on the surface plate at both end journals.
2. Set a dial indicator with its tip on the intermediate journal.
3. Measure the camshaft alignment.
4. If the measurement exceeds the allowable limit, replace the camshaft.

Camshaft alignment	Allowable limit	0.01 mm 0.0004 in.

9Y1211121ENS0076US0

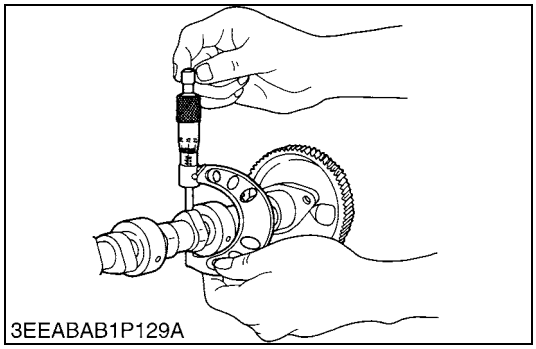
3EEABAB1P129A

Cam Height

1. Measure the height of the cam at its highest point with an outside micrometer.
2. If the measurement is less than the allowable limit, replace the camshaft.

Cam height	Intake	Factory specification	32.20 mm 1.268 in.
		Allowable limit	32.15 mm 1.266 in.
	Exhaust	Factory specification	31.80 mm 1.252 in.
		Allowable limit	31.75 mm 1.250 in.

9Y1211121ENS0077US0

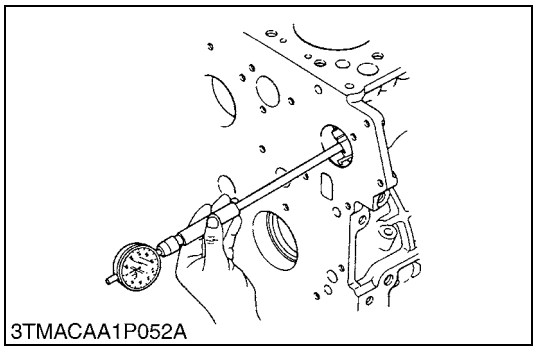
3TMACAA1P052A

Oil Clearance of Camshaft Journal

1. Measure the camshaft journal O.D. with an outside micrometer.
2. Measure the cylinder block bore I.D. for camshaft with a cylinder gauge, and calculate the oil clearance.
3. If the oil clearance exceeds the allowable limit, replace the camshaft.

Oil clearance of camshaft journal	Factory specification	0.050 to 0.091 mm 0.0020 to 0.0035 in.
	Allowable limit	0.15 mm 0.0059 in.

Camshaft journal O.D.	Factory specification	39.934 to 39.950 mm 1.5722 to 1.5728 in.
Cylinder block bore I.D.	Factory specification	40.000 to 40.025 mm 1.5748 to 1.5757 in.

9Y1211121ENS0078US0

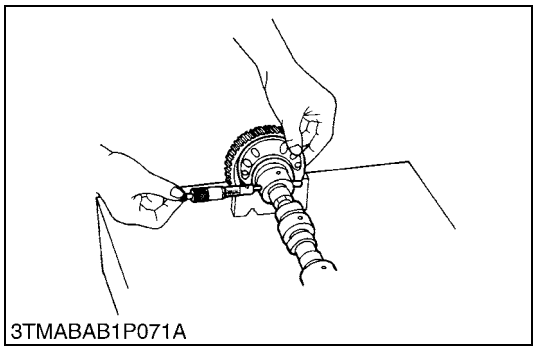
3TMABAB1P071A

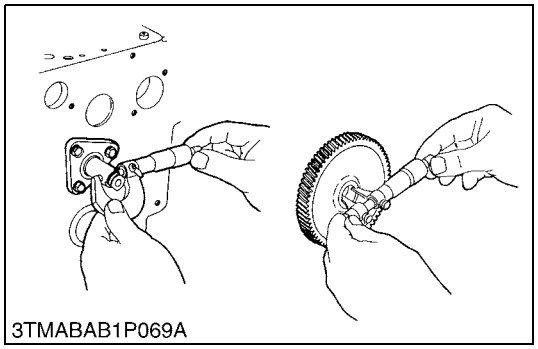
3TMABAB1P069A

Oil Clearance between Idle Gear Shaft and Idle Gear Bushing

1. Measure the idle gear shaft O.D. with an outside micrometer.
2. Measure the idle gear bushing I.D. with an inside micrometer, and calculate the oil clearance.
3. If the oil clearance exceeds the allowable limit, replace the bushing.
4. If it still exceeds the allowable limit, replace the idle gear shaft.

Clearance between idle gear shaft and idle gear bushing	Factory specification	0.025 to 0.066 mm 0.00099 to 0.0025 in.
	Allowable limit	0.1 mm 0.0039 in.

Idle gear shaft O.D.	Factory specification	37.959 to 37.975 mm 1.4945 to 1.4950 in.
Idle gear bushing I.D.	Factory specification	38.000 to 38.025 mm 1.4961 to 1.4970 in.

9Y1211121ENS0079US0

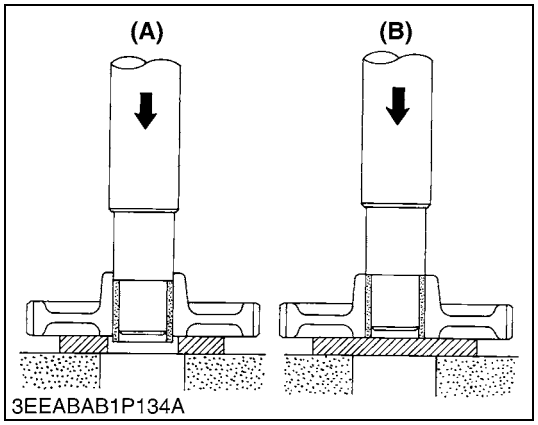

3EEABAB1P134A

Replacing Idle Gear Bushing

(A) (When removing)

1. Press out the used idle gear bushing using an idle gear bushing replacing tool.

(B) (When installing)

1. Clean a new idle gear bushing and idle gear bore, and apply engine oil to them.
2. Press in a new bushing using an idle gear bushing replacing tool, until it is flush with the end of the idle gear.

9Y1211121ENS0080US0

[3] PISTON AND CONNECTING ROD

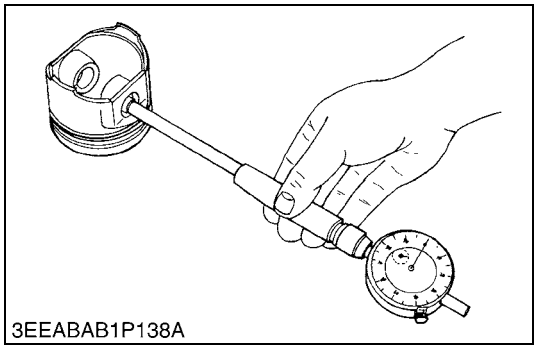
3EEABAB1P138A

Piston Pin Bore I.D.

1. Measure the piston pin bore I.D. in both the horizontal and vertical directions with a cylinder gauge.
2. If the measurement exceeds the allowable limit, replace the piston.

Piston pin bore I.D.	Factory specification	25.000 to 25.013 mm 0.98426 to 0.98476 in.
	Allowable limit	25.05 mm 0.9862 in.

9Y1211121ENS0081US0

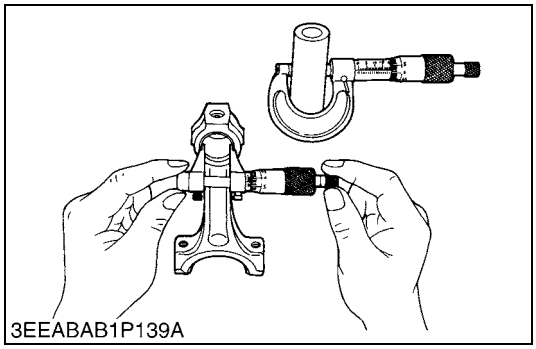
3EEABAB1P139A

Oil Clearance between Piston Pin and Small End Bushing

1. Measure the piston pin O.D. where it contacts the bushing with an outside micrometer.
2. Measure the small end bushing I.D. with an inside micrometer, and calculate the oil clearance.
3. If the oil clearance exceeds the allowable limit, replace the bushing. If it still exceeds the allowable limit, replace the piston pin.

Oil clearance between piston pin and small end bushing	Factory specification	0.014 to 0.038 mm 0.00056 to 0.00150 in.
	Allowable limit	0.15 mm 0.0059 in.

Piston pin O.D.	Factory specification	25.002 to 25.011 mm 0.98433 to 0.98468 in.
Small end bushing I.D.	Factory specification	25.025 to 25.040 mm 0.98524 to 0.98582 in.

9Y1211121ENS0082US0

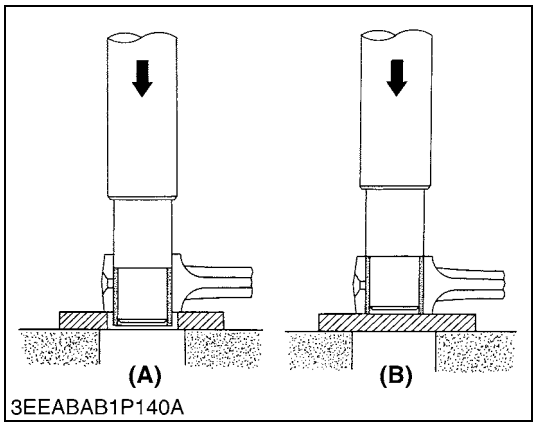

3EEABAB1P140A

Replacing Connecting Rod Small End Bushing

(A) (When removing)

1. Press out the small end bushing with a connecting rod small end bushing replacing tool.

(B) (When installing)

1. Clean a new small end bushing and bore, and apply engine oil to them.
2. Press fit a new bushing, taking due care to see that the connecting rod hole matches the bushing hole.

9Y1211121ENS0083US0

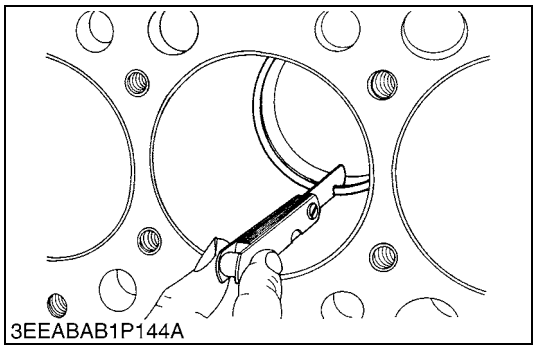
3EEABAB1P144A

Piston Ring Gap

1. Insert the piston ring into the lower part of the liner (the least worn out part) with the piston.
2. Measure the ring gap with a feeler gauge.
3. If the gap exceeds the allowable limit, replace the ring.

Top ring	Factory specification	0.20 to 0.35 mm 0.0079 to 0.013 in.
	Allowable limit	1.25 mm 0.0492 in.

Second ring	Factory specification	0.30 to 0.45 mm 0.012 to 0.017 in.
	Allowable limit	1.25 mm 0.0492 in.

Oil ring	Factory specification	0.20 to 0.40 mm 0.0079 to 0.015 in.
	Allowable limit	1.25 mm 0.0492 in.

9Y1211121ENS0084US0

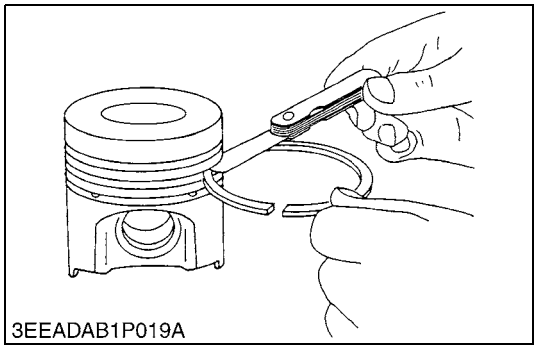
3EEADAB1P019A

Clearance between Piston Ring and Groove

1. Remove carbon from the ring grooves.
2. Measure the clearance between the ring and the groove with a feeler gauge or depth gauge.
3. If the clearance exceeds the allowable limit, replace the ring since compression leak and oil shortage result.
4. If the clearance still exceeds the allowable limit after replacing the ring, replace the piston.

Top ring	Factory specification	0.050 to 0.090 mm 0.0020 to 0.0035 in.
	Allowable limit	0.20 mm 0.0079 in.

Second ring	Factory specification	0.0780 to 0.110 mm 0.00307 to 0.00433 in.
	Allowable limit	0.2 mm 0.0079 in.

Oil ring	Factory specification	0.030 to 0.070 mm 0.0012 to 0.0027 in.
	Allowable limit	0.15 mm 0.0059 in.

9Y1211121ENS0085US0

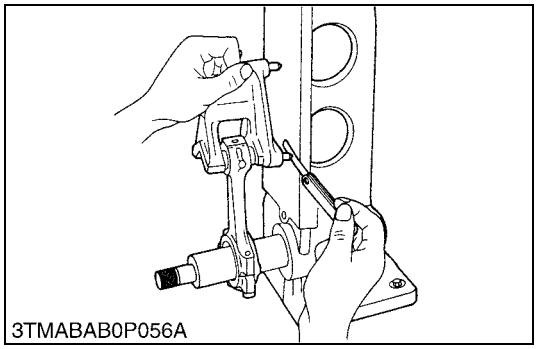
3TMABAB0P056A

Connecting Rod Alignment

■ **NOTE**

- **Since the I.D. of the connecting rod small end bushing is the basis of this check, check bushing for wear beforehand.**

1. Install the piston pin into the connecting rod.
2. Install the connecting rod on the connecting rod alignment tool.
3. Put a gauge over the piston pin and move it against the face plate.
4. If the gauge does not fit squarely against the face plate, measure the space between the pin of the gauge and the face plate.
5. If the measurement exceeds the allowable limit, replace the connecting rod.

Connecting rod alignment	Allowable limit	0.05 mm 0.0020 in.

9Y1211121ENS0086US0

[4] CRANKSHAFT

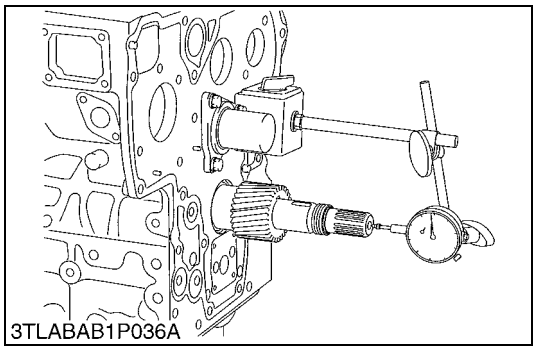
3TLABAB1P036A

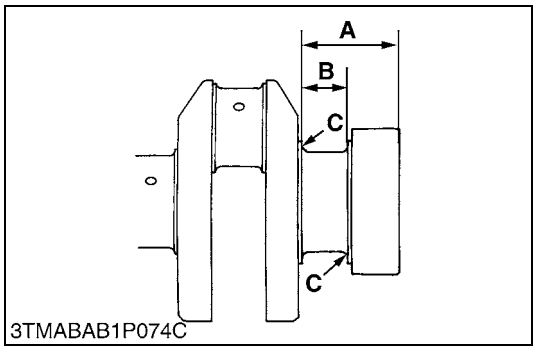

3TMABAB1P074C

Side Clearance of Crankshaft

1. Set a dial indicator with its tip on the end of the crankshaft.
2. Measure the side clearance by moving the crankshaft to the front and rear.
3. If the measurement exceeds the allowable limit, replace the thrust bearings.
4. If the same size bearing is useless because of the crankshaft journal wear, replace it with an oversize one referring to the table and figure.

Crankshaft side clearance	Factory specification	0.15 to 0.31 mm 0.0059 to 0.012 in.
	Allowable limit	0.5 mm 0.02 in.

(Reference)

- Oversize dimensions of crankshaft journal

Oversize	0.2 mm 0.008 in.	0.4 mm 0.016 in.
Dimension **A**	54.50 to 54.70 mm 2.146 to 2.153 in.	54.6 to 54.8 mm 2.150 to 2.157 in.
Dimension **B**	26.20 to 26.25 mm 1.032 to 1.033 in.	26.40 to 26.45 mm 1.040 to 1.041 in.
Dimension **C**	2.8 to 3.2 mm radius 0.11 to 0.12 in. radius	2.8 to 3.2 mm radius 0.11 to 0.12 in. radius
The crankshaft journal must be fine-finished to higher than Rmax=0.4S.		

9Y1211121ENS0087US0

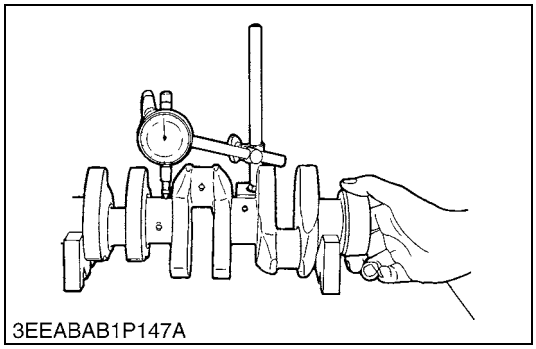
3EEABAB1P147A

Crankshaft Alignment

1. Support the crankshaft with V blocks on the surface plate at both end journals.
2. Set a dial indicator with its tip on the intermediate journal.
3. Measure the crankshaft alignment.
4. If the measurement exceeds the allowable limit, replace the crankshaft.

Crankshaft alignment	Allowable limit	0.02 mm 0.00079 in.

9Y1211121ENS0088US0

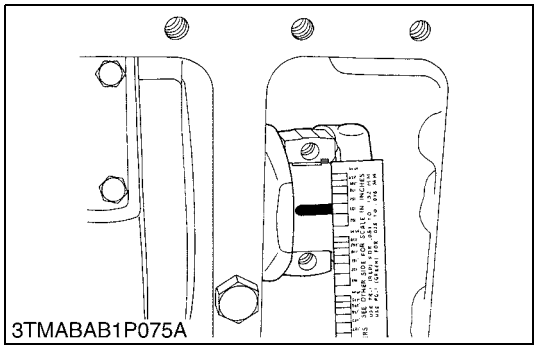
3TMABAB1P075A

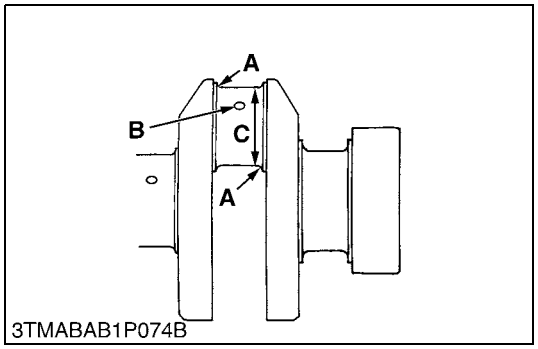

3TMABAB1P074B

Oil Clearance between Crankpin and Crankpin Bearing

1. Clean the crankpin and crankpin bearing.
2. Put a strip of plastigage on the center of the crankpin.
3. Install the connecting rod cap and tighten the connecting rod screws to the specified torque, and remove the cap again.
4. Measure the amount of the flattening with the scale, and get the oil clearance.
5. If the oil clearance exceeds the allowable limit, replace the crankpin bearing.
6. If the same size bearing is useless because of the crankpin wear, replace it with an undersize one referring to the table and figure.

■ **NOTE**
- **Never insert the plastigage into the crankpin oil hole.**
- **Be sure not to move the crankshaft while the connecting rod screws are tightened.**

Oil clearance between crankpin and crankpin bearing	Factory specification	0.025 to 0.087 mm 0.00099 to 0.0034 in.
	Allowable limit	0.2 mm 0.008 in.

Crankpin O.D.	Factory specification	46.959 to 46.975 mm 1.8488 to 1.8494 in.
Crankpin bearing I.D.	Factory specification	47.000 to 47.046 mm 1.8504 to 1.8522 in.

(Reference)
- Undersize dimensions of crankpin

Undersize	0.2 mm 0.008 in.	0.4 mm 0.016 in.
Dimension **A**	3.3 to 3.7 mm radius 0.13 to 0.14 in. radius	3.3 to 3.7 mm radius 0.123 to 0.14 in. radius
*Dimension **B**	1.0 to 1.5 mm relief 0.040 to 0.059 in. relief	1.0 to 1.5 mm relief 0.040 to 0.059 in. relief
Dimension **C**	46.759 to 46.775 mm dia. 1.8409 to 1.8415 in. dia.	46.559 to 46.575 mm dia. 1.8331 to 1.8336 in. dia.
The crankshaft journal must be fine-finished to higher than Rmax=0.4S. *Holes to be de-burred and edges rounded with 1.0 to 1.5 mm (0.040 to 0.059 in.) relief.		

9Y1211121ENS0089US0

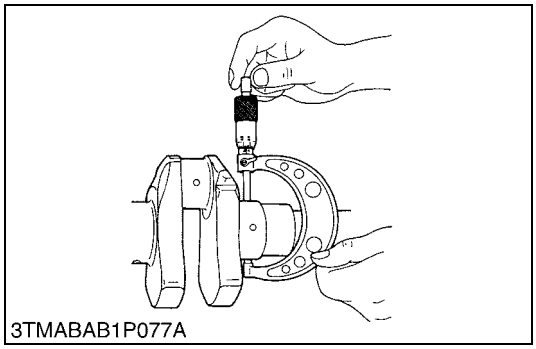
3TMABAB1P077A

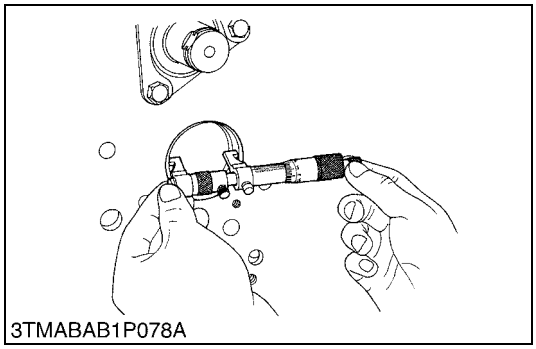
3TMABAB1P078A

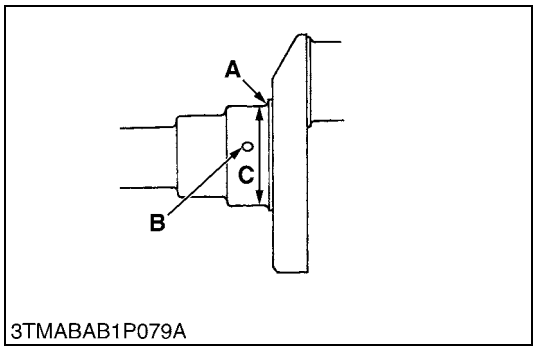

3TMABAB1P079A

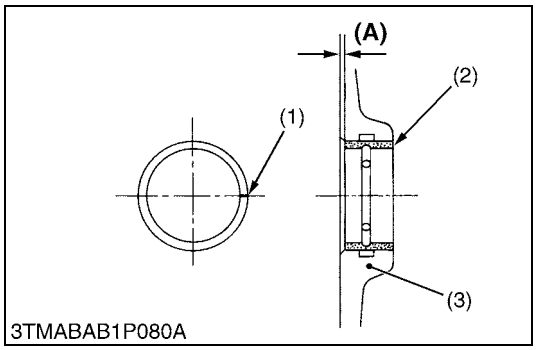

3TMABAB1P080A

Oil Clearance between Crankshaft Journal and Crankshaft Bearing 1

1. Measure the O.D. of the crankshaft journal with an outside micrometer.
2. Measure the I.D. of the crankshaft bearing 1 with an inside micrometer, and calculate oil clearance.
3. If the clearance exceeds the allowable limit, replace the crankshaft bearing 1.
4. If the same size bearing is useless because of the crankshaft journal wear, replace it with an undersize one referring to the table and figure.

Oil clearance between crankshaft journal and crankshaft bearing 1	Factory specification	0.0400 to 0.118 mm 0.00158 to 0.00464 in.
	Allowable limit	0.2 mm 0.008 in.

Crankpin O.D.	Factory specification	59.921 to 59.940 mm 2.3591 to 2.3598 in.
Crankpin bearing 1 I.D.	Factory specification	59.980 to 60.039 mm 2.3615 to 2.3637 in.

(Reference)

- Undersize dimensions of crankshaft journal

Undersize	0.2 mm 0.008 in.	0.4 mm 0.016 in.
Dimension **A**	2.8 to 3.2 mm radius 0.11 to 0.12 in. radius	2.8 to 3.2 mm radius 0.11 to 0.12 in. radius
*Dimension **B**	1.0 to 1.5 mm relief 0.040 to 0.059 in. relief	1.0 to 1.5 mm relief 0.040 to 0.059 in. relief
Dimension **C**	59.721 to 59.740 mm dia. 2.3513 to 2.3519 in. dia.	59.521 to 59.540 mm dia. 2.3434 to 2.3440 in. dia.
The crankshaft journal must be fine-finished to higher than Rmax=0.4S. *Holes to be de-burred and edges rounded with 1.0 to 1.5 mm (0.0394 to 0.0591 in.) relief.		

9Y1211121ENS0090US0

Replacing Crankshaft Bearing 1

(When removing)

1. Press out the used crankshaft bearing 1 (2) using a crankshaft bearing 1 replacing tool.

(When installing)

1. Clean a new crankshaft bearing 1 (2) and crankshaft journal bore, and apply engine oil to them.
2. Using a crankshaft bearing 1 replacing tool, press in a new bearing 1 (2) so that its seam (1) directs toward the exhaust manifold side.

Dimension **(A)**	Factory specification	4.20 to 4.50 mm 0.166 to 0.177 in.

(1) Seam
(2) Crankshaft Bearing 1
(3) Cylinder Block

9Y1211121ENS0091US0

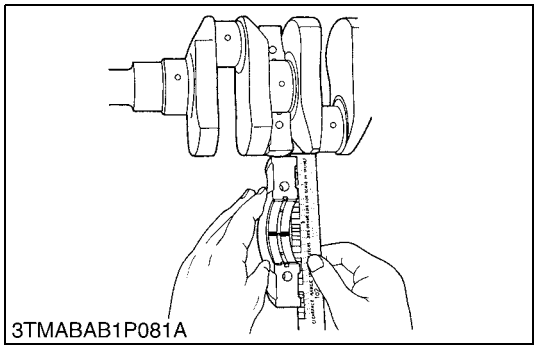
3TMABAB1P081A

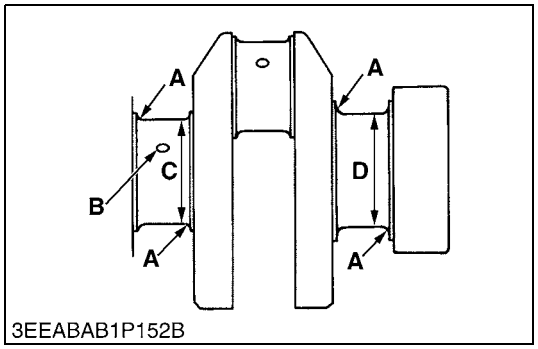

3EEABAB1P152B

Oil Clearance between Crankshaft Journal and Crankshaft Bearing 2

1. Put a strip of plastigage on the center of the journal.
2. Install the bearing case and tighten the baring case screws 1 to the specified torque, and remove the bearing case again.
3. Measure the amount of the flattening with the scale and get the oil clearance.
4. If the clearance exceeds the allowable limit, replace the crankshaft bearing 2.
5. If the same size bearing is useless because of the crankshaft journal wear, replace it with an undersize one referring to the table and figure.

■ **NOTE**

- **Be sure not to move the crankshaft while the bearing case screws are tightened.**

Oil clearance between crankshaft and crankshaft bearing 2	Factory specification	0.0400 to 0.104 mm 0.00158 to 0.00409 in.
	Allowable limit	0.20 mm 0.008 in.

Crankshaft journal O.D.	Factory specification	59.921 to 59.940 mm 2.3591 to 2.3598 in.
Crankshaft bearing 2 I.D.	Factory specification	59.980 to 60.025 mm 2.3615 to 2.3631 in.

(Reference)

- Undersize dimensions of crankshaft journal

Undersize	0.2 mm 0.008 in.	0.4 mm 0.016 in.
Dimension **A**	2.8 to 3.2 mm radius 0.11 to 0.12 in. radius	2.8 to 3.2 mm radius 0.11 to 0.12 in. radius
*Dimension **B**	1.0 to 1.5 mm relief 0.040 to 0.059 in. relief	1.0 to 1.5 mm relief 0.0340 to 0.059 in. relief
Dimension **C, D**	59.721 to 59.740 mm dia. 2.3513 to 2.3519 in. dia.	59.521 to 59.540 mm dia. 2.3434 to 2.3440 in. dia.
The crankshaft journal must be fine-finished to higher than Rmax=0.4S. *Holes to be de-burred and edges rounded with 1.0 to 1.5 mm (0.0394 to 0.0591 in.) relief.		

9Y1211121ENS0092US0

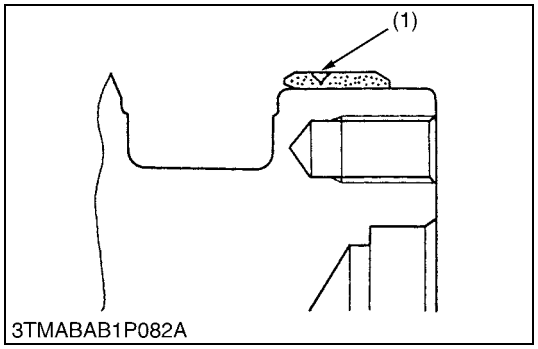

3TMABAB1P082A

Crankshaft Sleeve Wear

1. Check the wear on the crankshaft sleeve (1).
2. If the wear exceeds the allowable limit or when the engine oil leaks, replace the crankshaft sleeve (1).

Wear of sleeve	Allowable limit	0.1 mm 0.004 in.

(1) Crankshaft Sleeve

9Y1211121ENS0093US0

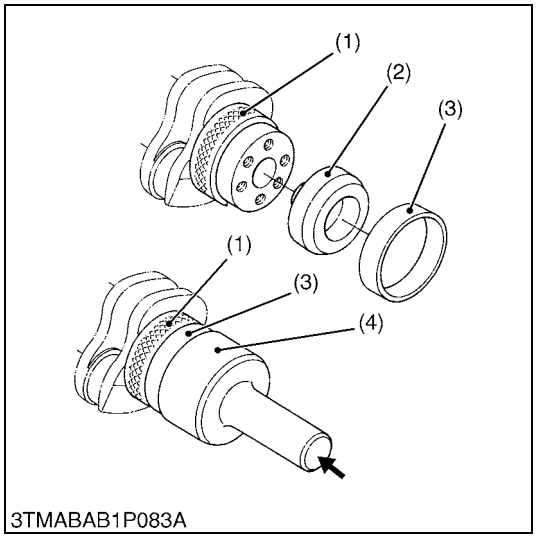

3TMABAB1P083A

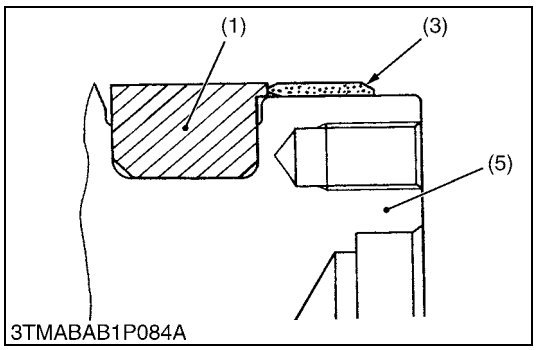

3TMABAB1P084A

Replacing Crankshaft Sleeve

1. Remove the used crankshaft sleeve (3).
2. Set the sleeve guide (2) to the crankshaft (5).
3. Set the stopper (1) to the crankshaft (5) as shown in figure.
4. Heat a new sleeve to a temperature between 150 and 200 °C (302 and 392 °F), and fix the sleeve to the crankshaft (5) as shown in figure.
5. Press fit the sleeve using the auxiliary socket for pushing (4). (Refer to "SPECIAL TOOLS". (See page G-39.))

■ **NOTE**

- **Mount the sleeve with its largely chamfered surface facing outward.**
- **Should heating is not enough, a sleeve might stop halfway, so careful.**

(1) Stopper
(2) Sleeve Guide
(3) Crankshaft Sleeve
(4) Auxiliary Socket for Pushing
(5) Crankshaft

9Y1211121ENS0094US0

[5] CYLINDER

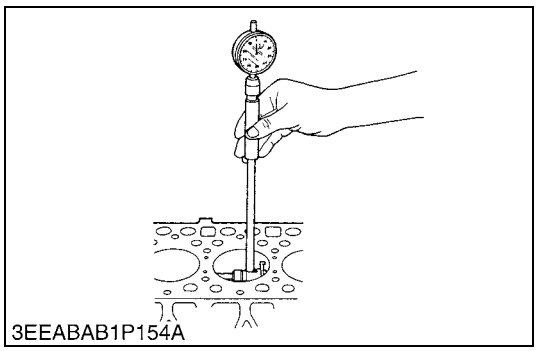
3EEABAB1P154A

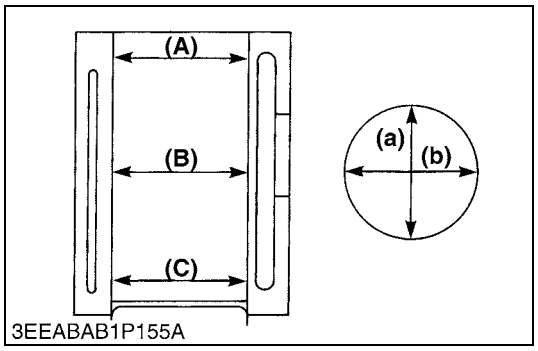

3EEABAB1P155A

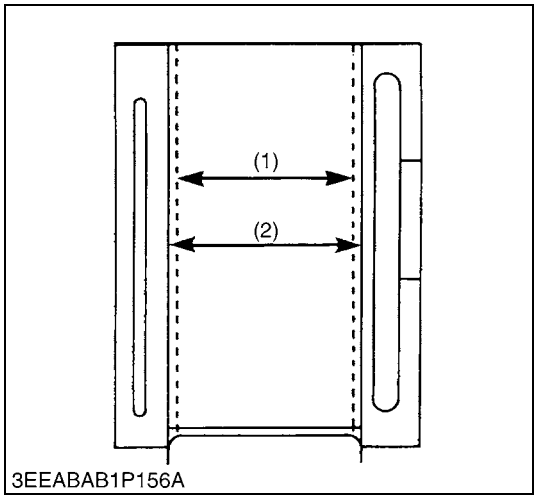

3EEABAB1P156A

Cylinder Wear

1. Measure the I.D. of the cylinder at the 6 positions (see figure) with a cylinder gauge.
2. Find the maximum and minimum inner diameters.
3. Find the difference between the maximum and the minimum inner diameters.
4. If the maximum I.D. or the difference is more than the allowable limit, bore and hone it to the oversize dimension. (Refer to **"Cylinder Correction (Oversize)"**.).
5. Check the cylinder wall for scratches. If you find deep scratches, bore the cylinder. (Refer to **"Cylinder Correction (Oversize)"**.)

Cylinder I.D.	Factory specification	87.000 to 87.022 mm 3.4252 to 3.4260 in.
	Allowable limit	87.170 mm 3.4319 in.
Difference between maximum I.D. and minimum I.D.	Allowable limit	0.15 mm 0.0059 in.

(A) Top
(B) Middle
(C) Bottom (Skirt)
(a) Right-angled to Piston Pin
(b) Piston Pin Direction

9Y1211121ENS0095US0

Cylinder Correction (Oversize)

1. If the cylinder wear is more than the allowable limit, bore and hone it to the specified dimension.

Oversize cylinder I.D.	Factory specification	87.250 to 87.272 mm 3.4351 to 3.4359 in.
	Allowable limit	87.420 mm 3.4417 in.
Difference between maximum I.D. and minimum I.D.	Allowable limit	0.15 mm 0.0059 in.
Finishing	Hone to 2.2 to 3.0 µmRz (0.000087 to 0.000118 in.Rz)	

2. Replace the piston and piston rings with oversize ones.
   Oversize: 0.25 mm (0.0098 in.)

■ **NOTE**

- **If the maximum I.D. or the difference for the oversize cylinder is more than the allowable limit, replace the cylinder block with a new one.**

(1) Cylinder I.D. (Before Correction) (2) Cylinder I.D. (Oversize)

9Y1211121ENS0096US0

[6] OIL PUMP

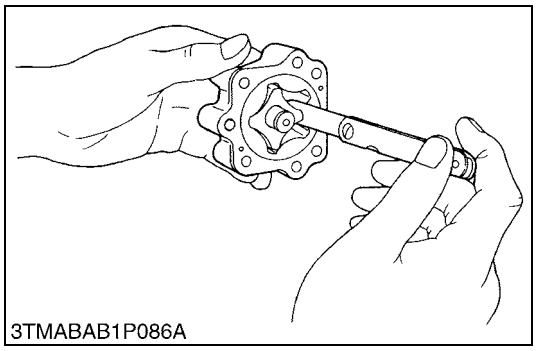
3TMABAB1P086A

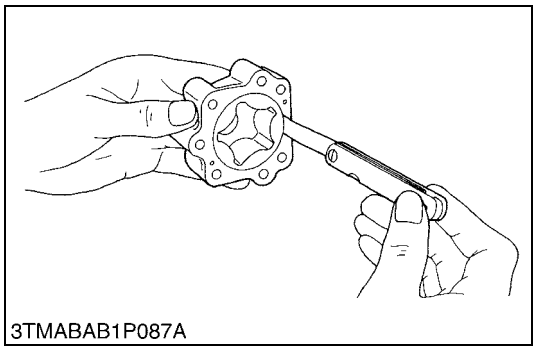
3TMABAB1P087A

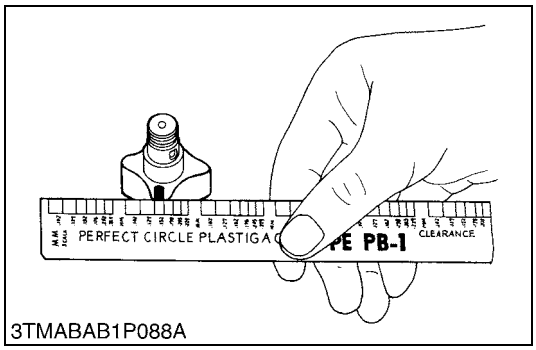

3TMABAB1P088A

Rotor Lobe Clearance

1. Measure the clearance between the lobes of the inner rotor and the outer rotor with a feeler gauge.
2. Measure the clearance between the outer rotor and the pump body with a feeler gauge.
3. If the clearance is more than the allowable limit, replace the rotor assembly of the oil pump.

Clearance between inner rotor and outer rotor	Factory specification	0.030 to 0.14 mm 0.0012 to 0.0055 in.
	Allowable limit	0.2 mm 0.008 in.

Clearance between outer rotor and pump body	Factory specification	0.11 to 0.19 mm 0.0044 to 0.0074 in.
	Allowable limit	0.25 mm 0.0098 in.

9Y1211121ENS0097US0

Clearance between Rotor and Cover

1. Put a strip of plastigauge on the rotor face with grease.
2. Install the cover and tighten the screws.
3. Remove the cover carefully.
4. Measure the width that plastigauge becomes flat with the scale to get the oil clearance.
5. If the clearance is more than the allowable limit, replace the rotor assembly of the oil pump.

Clearance between inner rotor and cover	Factory specification	0.105 to 0.150 mm 0.00414 to 0.00590 in.
	Allowable limit	0.20 mm 0.008 in.

9Y1211121ENS0098US0

https://truckmanualshub.com/

2 CLUTCH

https://truckmanualshub.com/

MECHANISM

CONTENTS

1. STRUCTURE..... 2-M1

1. STRUCTURE

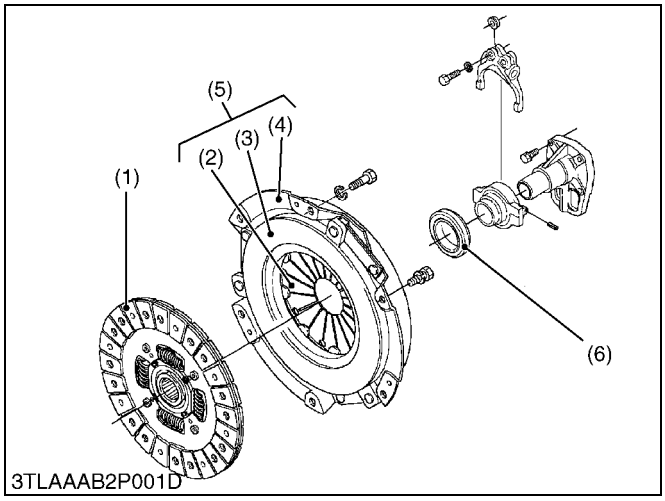

The clutch is located between the engine and transmission and is operated by stepping on the clutch pedal.

When the clutch pedal is depressed, the clutch is disengaged and when it is released, the clutch is engaged and power from the engine is transmitted to the transmission.

This tractor is equipped with the single stage clutch.

(1)	Clutch Disc	(4)	Clutch Cover
(2)	Diaphragm Spring	(5)	Pressure Plate Assembly
(3)	Pressure Plate	(6)	Release Bearing

9Y1211121CLM0001US0

https://truckmanualshub.com/

SERVICING

CONTENTS

1. TROUBLESHOOTING 2-S1
2. SERVICING SPECIFICATIONS 2-S3
   [1] SINGLE STAGE CLUTCH 2-S3
3. TIGHTENING TORQUES 2-S4
4. CHECKING AND ADJUSTING 2-S5
5. PREPARATION 2-S6
   [1] SEPARATING CLUTCH HOUSING CASE FROM ENGINE 2-S6
      (1) Manual Transmission Type 2-S6
      (2) HST Type 2-S13
6. DISASSEMBLING AND ASSEMBLING 2-S21
   [1] SINGLE STAGE CLUTCH 2-S21
7. SERVICING 2-S22
   [1] SINGLE STAGE CLUTCH 2-S22

1. TROUBLESHOOTING

Symptom	Probable Cause and Checking Procedure	Solution	Reference Page
Clutch Drags	1. Clutch pedal free play excessive	Adjust	2-S5
	2. Dust on clutch disc generated from clutch disc facing	Remove dust or replace	2-S21
	3. Release fork broken	Replace	2-S21
	4. Clutch disc or pressure plate warped	Replace	2-S23
Clutch Slips	1. Clutch pedal free play too small	Adjust	2-S5
	2. Grease or oil on clutch disc facing	Replace	2-S21
	3. Clutch disc excessively worn	Replace	2-S22
	4. Clutch disc or pressure plate warped	Replace	2-S23
	5. Diaphragm spring weaken or broken	Replace	2-S22
Chattering	1. Grease or oil on clutch disc facing	Replace	2-S21
	2. Clutch disc or pressure plate warped	Replace	2-S23
	3. Clutch disc boss spline worn or rusted	Remove dust or replace	2-S22
	4. Gear shaft bent	Replace	2-S21, 3-S37
	5. Pressure plate or flywheel face cracked or scored	Replace	2-S22
	6. Clutch disc boss spline and gear shaft spline worn	Replace	2-S22
	7. Diaphragm spring strength uneven or diaphragm spring broken	Replace	2-S22
Rattle DuringRunning	1. Clutch disc boss spline worn or rusted	Replace	2-S22
	2. Thrust ball bearing worn or sticking	Replace	2-S22
	3. Pilot bearing worn or sticking	Replace	2-S21
Clutch Squeaks	1. Thrust ball bearing sticking or dry	Replace	2-S22
	2. Clutch disc excessively worn	Replace	2-S22
	3. Pilot bearing worn or sticking	Replace	2-S21

Symptom	Probable Cause and Checking Procedure	Solution	Reference Page
Vibration	1. Main shaft bent	Replace	2-S21, 3-S37
	2. Clutch disc rivet worn or broken	Replace	2-S21
	3. Clutch parts broken	Replace	2-S21

9Y1211121CLS0001US0

2. SERVICING SPECIFICATIONS

[1] SINGLE STAGE CLUTCH

Item		Factory Specification	Allowable Limit
Clutch Pedal	Free Travel	20 to 30 mm 0.8 to 1.2 in.	–
Clutch Disc Boss to Main Shaft (Travelling)	Backlash (Displacement around Disc Edge)	–	2.0 mm 0.079 in.
Clutch Disc	Disc Surface to Rivet Top (Depth)	–	0.3 mm 0.01 in.
Diaphragm Spring	Mutual Difference	–	0.5 mm 0.02 in.
Pressure Plate to Straightedge	Clearance	–	0.2 mm 0.008 in.

9Y1211121CLS0002US0

3. TIGHTENING TORQUES

Tightening torques of screws, bolts and nuts on the table below are especially specified.
(For general use screws, bolts and nuts: See page G-11.)

Item	N·m	kgf·m	lbf·ft
Steering wheel mounting nut	49 to 55	5.0 to 5.7	37 to 41
Screw (Joint shaft)	23.5 to 27.4	2.4 to 2.8	18 to 20
Screw (bearing support)	23.5 to 27.4	2.4 to 2.8	18 to 20
Delivery pipe joint screw	49 to 68	5.0 to 7.0	37 to 50
Joint screw (HST return pipe)	80 to 88	8.1 to 9.0	59 to 65
Retaining nut (HST delivery pipe)	49 to 58	5.0 to 6.0	37 to 43

9Y1211121CLS0003US0

4. CHECKING AND ADJUSTING

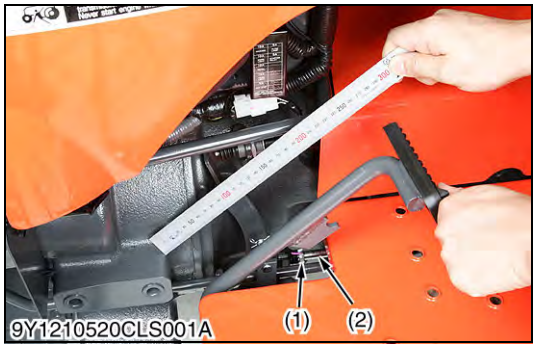

Adjusting Clutch Pedal Free Travel

1. Stop the engine and remove the key.
2. Slightly depress the clutch pedal and measure free travel at top of pedal stroke.
3. If adjustment is needed, loosen the lock nut (1), and turn the turn buckle (2) to adjust the clutch pedal free travel within factory specification.
4. Retighten the lock nut (1).

Clutch pedal free travel	Factory specification	20 to 30 mm 0.8 to 1.2 in.

(1) Lock Nut (2) Turnbuckle

9Y1211121CLS0004US0

5. PREPARATION

[1] SEPARATING CLUTCH HOUSING CASE FROM ENGINE

(1) Manual Transmission Type

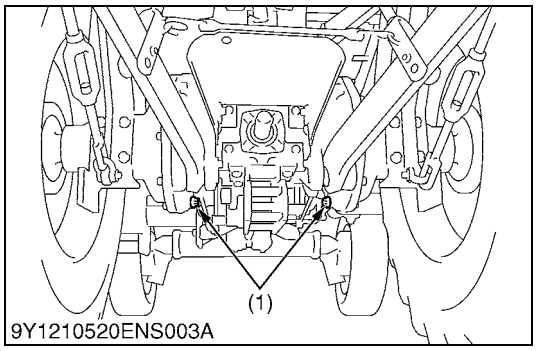

9Y1210520ENS003A

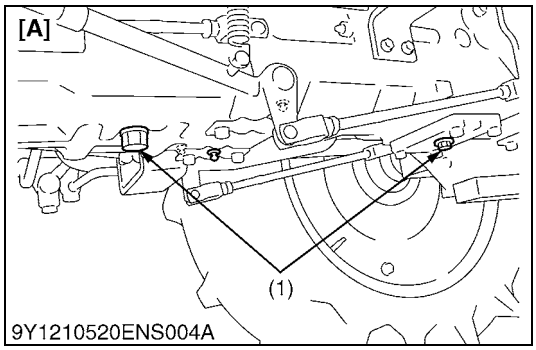

9Y1210520ENS004A

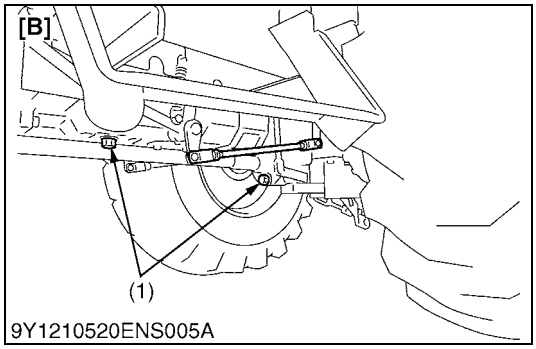

9Y1210520ENS005A

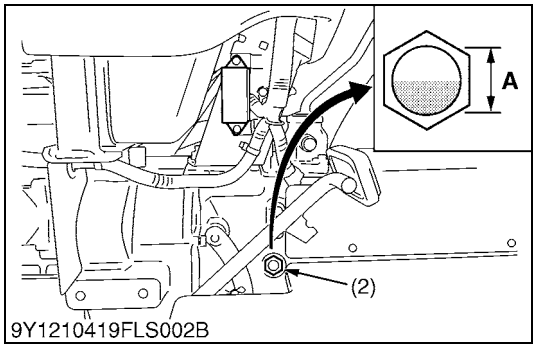

9Y1210419FLS002B

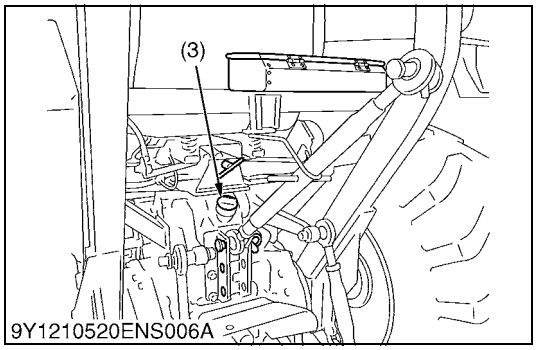

9Y1210520ENS006A

Draining the Transmission Fluid

WARNING

To avoid personal injury or death:

- **Allow engine to cool down sufficiently, oil can be hot and can burn.**

1. Remove the drain plugs (1) at the bottom of the transmission case and drain the oil completely into the oil pan.
2. After draining reinstall the drain plugs.

(When reassembling)

- Fill up new oil to the upper line of the gauge (2) from the oil inlet port after removing the oil inlet plug (3).
- After running the engine for a few minutes, stop it and check the fluid level again, if low, add fluid prescribed level **"A"**.

■ **IMPORTANT**

- **Use only multi-grade transmission fluid. Use of other fluids may damage the transmission or hydraulic system.**
- **Refer to "LUBRICANTS, FUEL AND COOLANT". (See page G-9.)**
- **Never work the tractor immediately after changing the transmission fluid. Keeping the engine at medium speed for a few minutes to prevent damage to the transmission.**
- **Do not mix different brands oil together.**

Transmission fluid capacity	2WD	27.0 L 7.1 U.S.gals 5.9 Imp.gals
	4WD	27.5 L 7.3 U.S.gals 6.1 Imp.gals

(1) Drain Plug
(2) Gauge
(3) Oil Inlet Plug

[A] 2WD
[B] 4WD
A: Oil level is acceptable within this range.

9Y1211121CLS0005US0

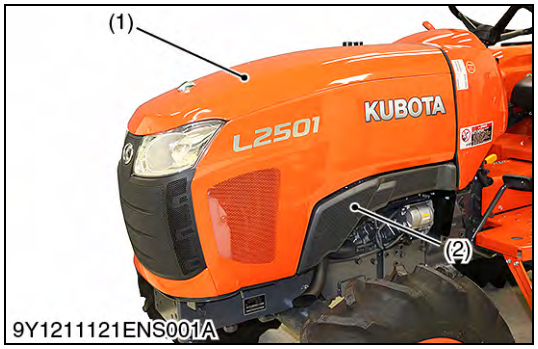

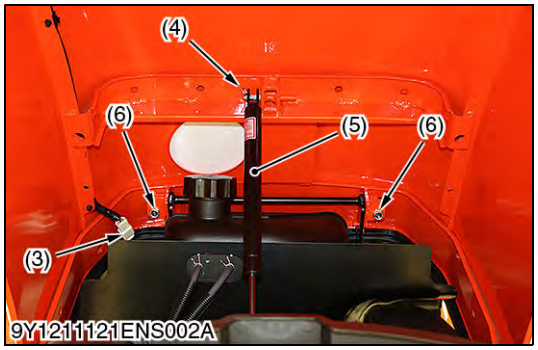

Bonnet and Front Axle Rocking Restrictor

1. To open the bonnet (1), hold the bonnet with a hand and pull the release lever and open the bonnet.
2. Disconnect the battery negative cable.
3. Disconnect the head light connector (3).
4. Remove the snap pin (4) and disconnect the bonnet damper (5) from the bonnet.
5. Remove the screws (6).
6. Remove the bonnet carefully.
7. Remove the side cover (2).
8. Install the front axle rocking restrictor (7) (refer to "SPECIAL TOOLS" (see page G-55)) to the front axle bracket and chock the rear wheels.

(When reassembling)

- To close the bonnet, push the bonnet into position using both hands.

(1)	Bonnet	(5)	Bonnet Damper
(2)	Side Cover	(6)	Screw
(3)	Head Light Connector	(7)	Front Axle Rocking Restrictor
(4)	Snap Pin		

9Y1211121CLS0006US0

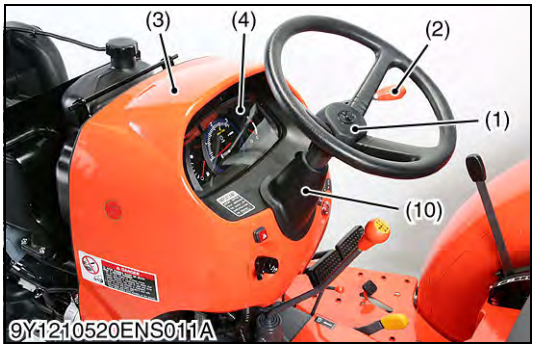

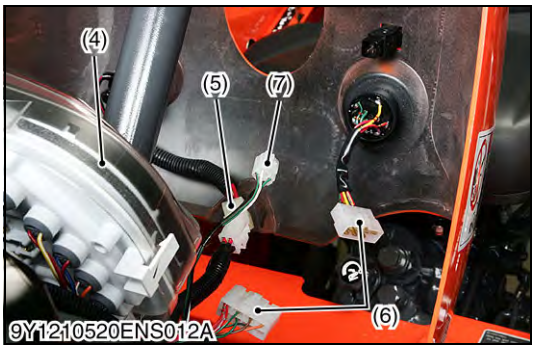

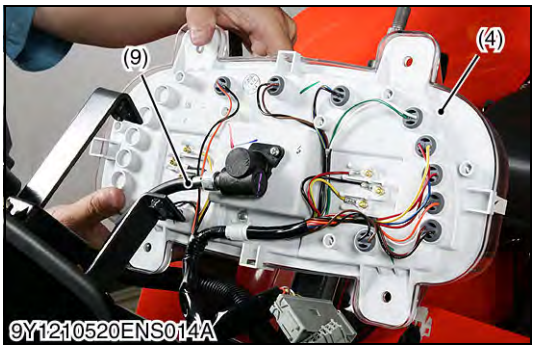

Steering Wheel and Rear Bonnet

1. Remove the steering wheel (1) with steering puller and the rubber steering cover (10).
2. Remove the throttle grip (2).
3. Remove the rear bonnet (3).
4. Disconnect the **4P** connector (5), the **8P** connector (6), the **6P** connector (7) and the **20P** connector (8).
5. Disconnect the hour-meter cable (9) and remove the meter panel (4).

(When reassembling)

Tightening torque	Steering wheel mounting nut	49 to 55 N·m 5.0 to 5.7 kgf·m 37 to 41 lbf·ft

(1) Steering Wheel
(2) Throttle Grip
(3) Rear Bonnet
(4) Meter Panel
(5) **4P** Connector (Main Switch)
(6) **8P** Connector (Combination Switch)
(7) **6P** Connector (Hazard Switch)
(8) **20P** Connector (Meter Panel)
(9) Hour-meter Cable
(10) Rubber Steering Cover

9Y1211121CLS0007US0

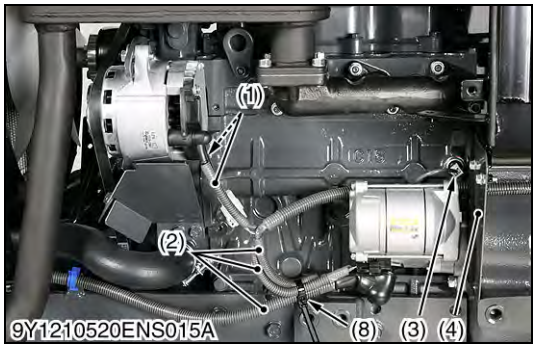

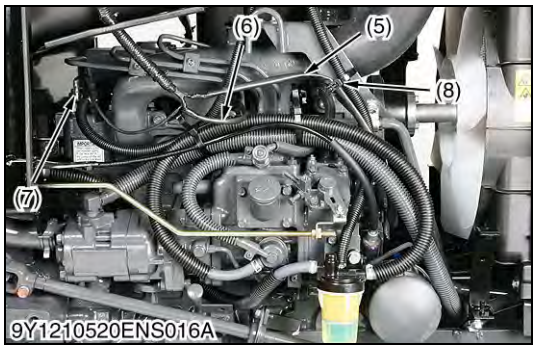

Electrical Wirings 1

1. Disconnect the wirings (1).
2. Remove the clip (8) and disconnect the wirings (2).
3. Disconnect the **1P** connector (3), (7) and the wiring (6), (5).
4. Remove the shutter plate (4) and the wirings from engine.

(1) Wiring (Alternator)
(2) Wiring (Starter Motor)
(3) **1P** Connector (Engine Oil Switch)
(4) Shutter Plate
(5) Wiring (Engine Stop Solenoid)
(6) Wiring (Glow Plug)
(7) **1P** Connector (Coolant Temperature Sensor)
(8) Clip

9Y1211121CLS0008US0

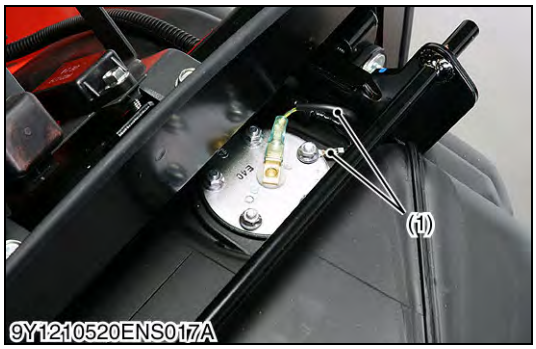

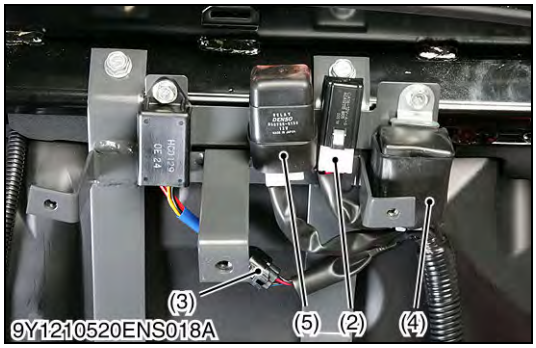

Electrical Wirings 2

1. Disconnect the wiring (1).
2. Disconnect the **4P** connector (3), the starter relay (2), the engine stop solenoid relay (5) and the flasher unit (4).
3. Remove the wiring from the rear bonnet support.

(1) Wiring (Fuel Sensor)
(2) Starter Relay
(3) **4P** Connector (OPC Timer)
(4) Flasher Unit
(5) **4P** Connector (Engine Stop Solenoid Relay)

9Y1211121CLS0009US0

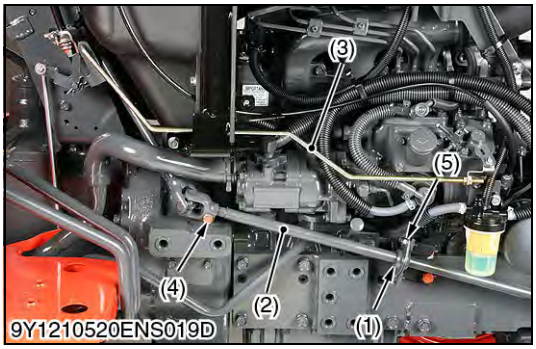

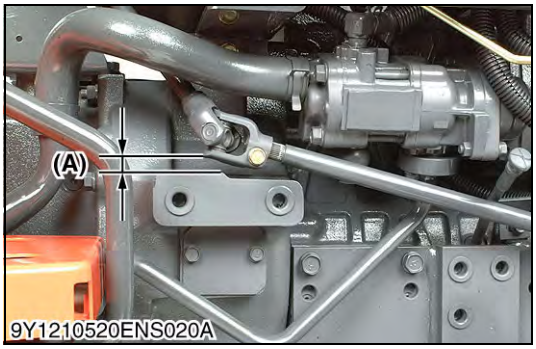

Steering Joint Shaft and Accelerator Rod

1. Remove the screw from support (1) and the steering joint shaft (2).
2. Remove the accelerator rod (3).

(When reassembling)

- Lift the universal joint so that there should be a clearance **(A)** of more than 5 mm (0.2 in.) between the universal joint and flywheel housing.
  Then fit the support (1) in position.
- Be sure to insert the screw (2) into cut-off part of joint shaft (1).
- Apply grease to spline part of joint shaft (1).

Tightening torque	Screw (Joint Shaft)	23.5 to 27.4 N·m 2.4 to 2.8 kgf·m 18 to 20 lbf·ft
	Screw (bearing support)	23.5 to 27.4 N·m 2.4 to 2.8 kgf·m 18 to 20 lbf·ft

(1) Support (Steering Joint Shaft)
(2) Steering Joint Shaft
(3) Accelerator Rod
(4) Screw (Joint Shaft)
(5) Screw (Bearing Support)

(A) Clearance

9Y1211121CLS0010US0

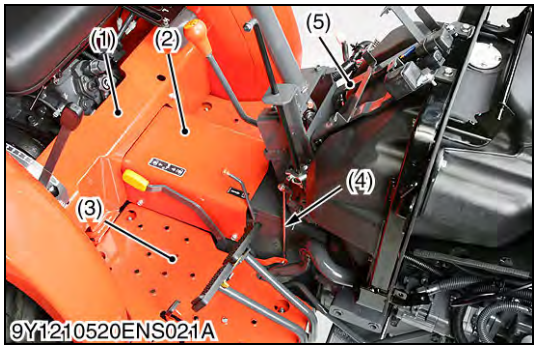

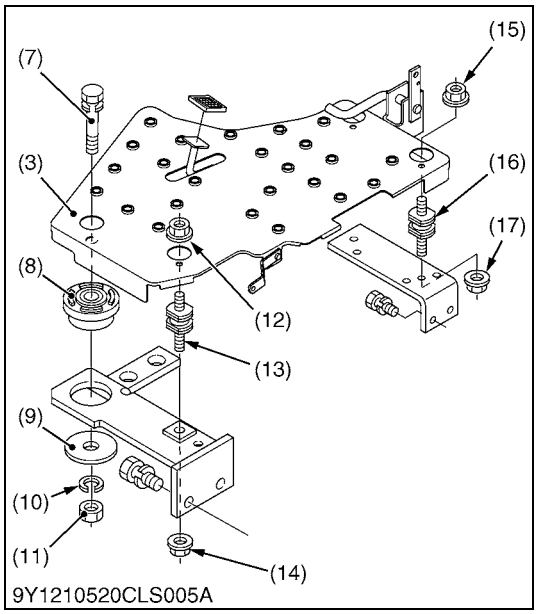

Outer Components

1. Remove the grip (6).
2. Remove the floor sheet cover (1) and the center cover (2).
3. Disconnect the differential lock spring and rod.
4. Disconnect the brake pedal springs and remove the step (3) (R.H.).
5. Remove the throttle rod (4) and the meter panel support (5).

(When reassembling)

- Be sure to set the washers and rubber plates of the step (R.H.) (3) mounting screw at an original positions as shown in figure.

(1) Floor Sheet Cover
(2) Center Cover
(3) Step (R.H.)
(4) Throttle Rod
(5) Meter Panel Support
(6) Grip (Front Drive Lever)
(7) Screw
(8) Rubber Plate
(9) Washer
(10) Spring Washer
(11) Nut
(12) Nut
(13) Cushion
(14) Nut
(15) Nut
(16) Cushion
(17) Nut

[A] 4WD

9Y1211121CLS0011US0

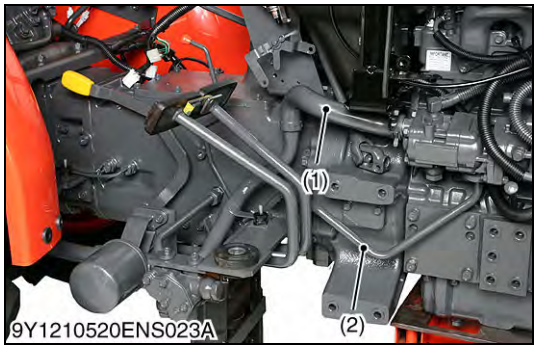

Suction Hose and Delivery Pipe

1. Disconnect the suction hose (1).
2. Remove the delivery pipe (2).

(When reassembling)

- When reassembling the delivery pipe, install the new copper washers securely.

Tightening torque	Delivery pipe joint screw	49 to 68 N·m 5.0 to 7.0 kgf·m 37 to 50 lbf·ft

(1) Suction Hose
(2) Delivery Pipe

9Y1211121CLS0012US0

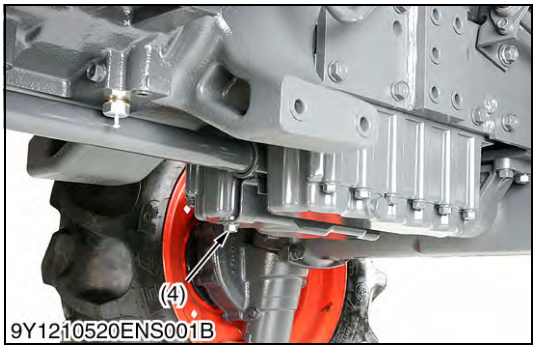

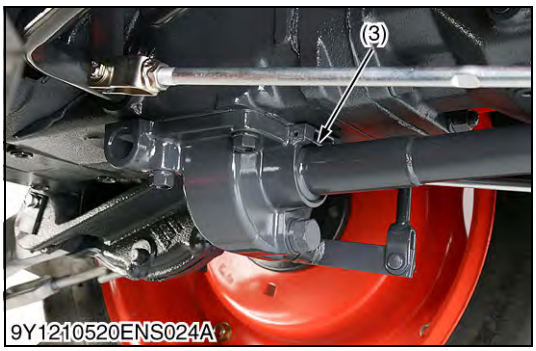

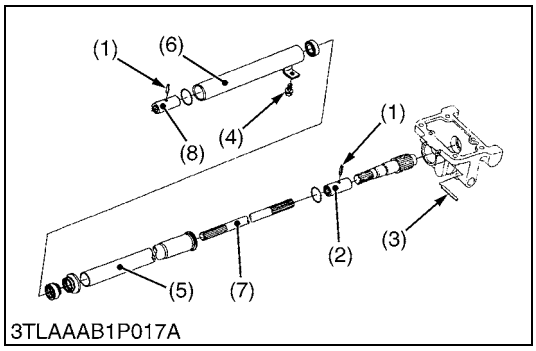

Propeller Shaft [4WD]

1. Remove the screw (4) then tap out the spring pin (3).
2. Slide the propeller shaft cover 1 (5) to the front and the cover 2 (6) to the rear.
3. Tap out the spring pins (1) and then slide the coupling (2) to the front and coupling (8) to the rear.

(When reassembling)

- Apply grease to the splines of the propeller shaft (7) and pinion shaft.

(1)	Spring Pin	(5)	Propeller Shaft Cover 1
(2)	Coupling	(6)	Propeller Shaft Cover 2
(3)	Spring Pin	(7)	Propeller Shaft
(4)	Screw	(8)	Coupling

9Y1211121CLS0013US0

Separating Clutch Housing Case from Engine

1. Check the engine and clutch housing case are securely mounted on the disassembling stands.
2. Remove the engine mounting screws, and separate the clutch housing case from the engine.

(When reassembling)

- Apply grease to the splines.
- Apply liquid gasket (Three Bond 1206C or equivalent) to joint face of the engine and clutch housing case.

9Y1211121CLS0014US0

(2) HST Type

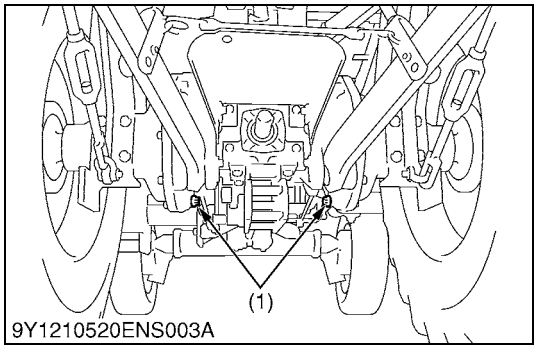

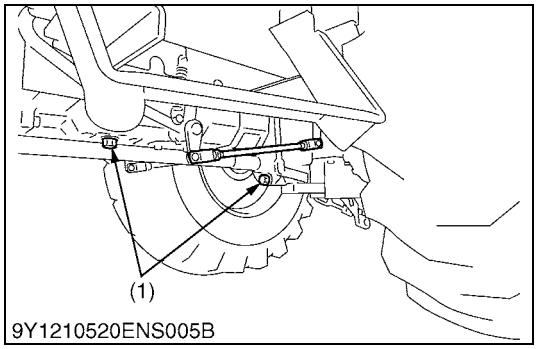

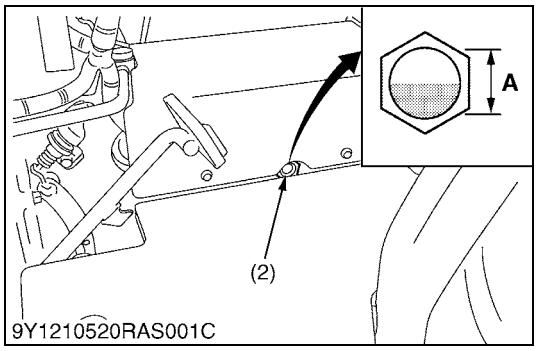

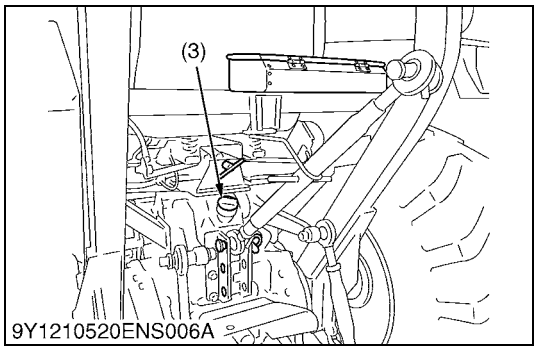

Draining the Transmission Fluid

WARNING

To avoid personal injury or death:

- **Allow engine to cool down sufficiently, oil can be hot and can burn.**

1. Remove the drain plugs (1) at the bottom of the transmission case and drain the oil completely into the oil pan.
2. After draining reinstall the drain plugs.

(When reassembling)

- Fill up new oil to the upper line of the gauge (2) from the oil inlet port after removing the oil inlet plug (3).
- After running the engine for a few minutes, stop it and check the fluid level again, if low, add fluid prescribed level **"A"**.

■ **IMPORTANT**

- **Use only multi-grade transmission fluid. Use of other fluids may damage the transmission or hydraulic system.**
- **Refer to "LUBRICANTS, FUEL AND COOLANT". (See page G-9.)**
- **Never work the tractor immediately after changing the transmission fluid. Keeping the engine at medium speed for a few minutes to prevent damage to the transmission.**
- **Do not mix different brands oil together.**

Transmission fluid capacity	23.5 L 6.2 U.S.gals 5.2 Imp.gals

(1) Drain Plug
(2) Gauge
(3) Oil Inlet Plug

A: Oil level is acceptable within this range.

9Y1211121CLS0015US0

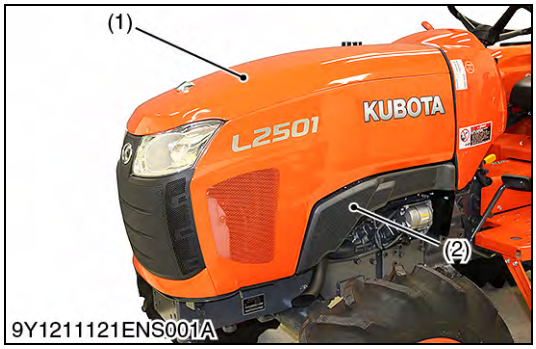

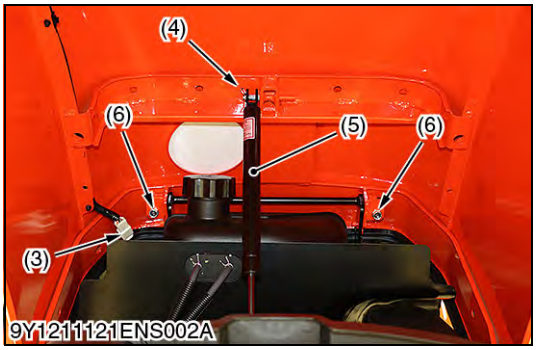

Bonnet and Front Axle Rocking Restrictor

1. To open the bonnet (1), hold the bonnet with a hand and pull the release lever and open the bonnet.
2. Disconnect the battery negative cable.
3. Disconnect the head light connector (3).
4. Remove the snap pin (4) and disconnect the bonnet damper (5) from the bonnet.
5. Remove the screws (6).
6. Remove the bonnet carefully.
7. Remove the side cover (2).
8. Install the front axle rocking restrictor (7) (refer to "SPECIAL TOOLS" (see page G-55)) to the front axle bracket and chock the rear wheels.

(When reassembling)

- To close the bonnet, push the bonnet into position using both hands.

(1) Bonnet
(2) Side Cover
(3) Head Light Connector
(4) Snap Pin
(5) Bonnet Damper
(6) Screw
(7) Front Axle Rocking Restrictor

9Y1211121CLS0006US0

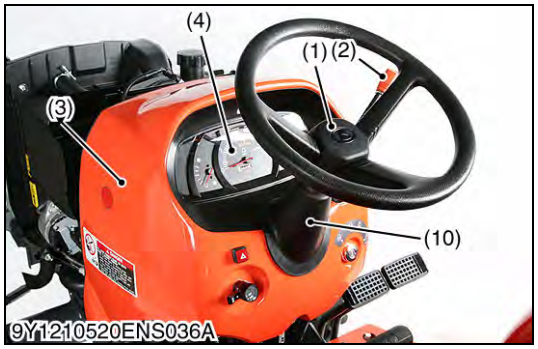

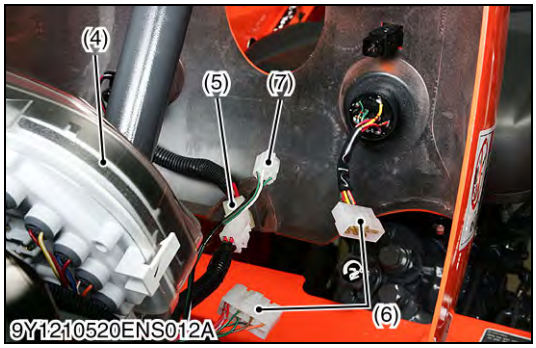

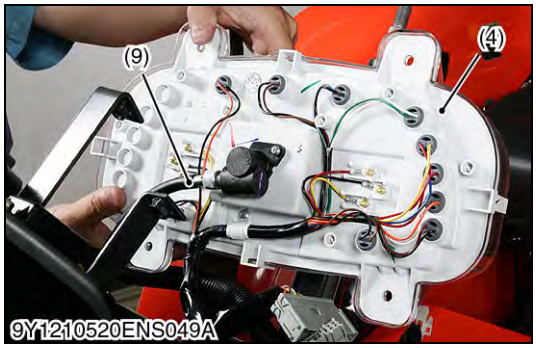

Steering Wheel and Rear Bonnet

1. Remove the steering wheel (1) with steering puller and the rubber steering cover (10).
2. Remove the throttle grip (2).
3. Remove the rear bonnet (3).
4. Disconnect the **4P** connector (5), the **8P** connector (6), the **6P** connector (7) and the **20P** connector (8).
5. Disconnect the hour-meter cable and remove the meter panel (4).

(When reassembling)

Tightening torque	Steering wheel mounting nut	49 to 55 N·m 5.0 to 5.7 kgf·m 37 to 41 lbf·ft

(1) Steering Wheel
(2) Throttle Grip
(3) Rear Bonnet
(4) Meter Panel
(5) **4P** Connector (Main Switch)
(6) **8P** Connector (Combination Switch)
(7) **6P** Connector (Hazard Switch)
(8) **20P** Connector (Meter Panel)
(9) Hour-meter Cable
(10) Rubber Steering Cover

9Y1211121CLS0017US0

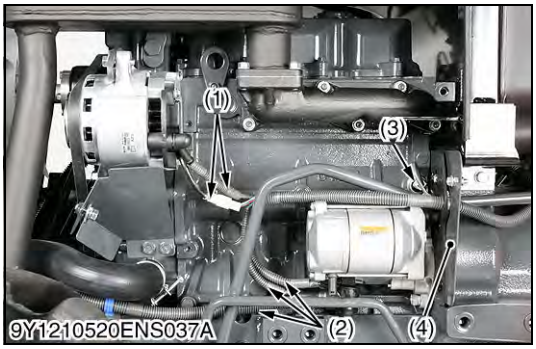

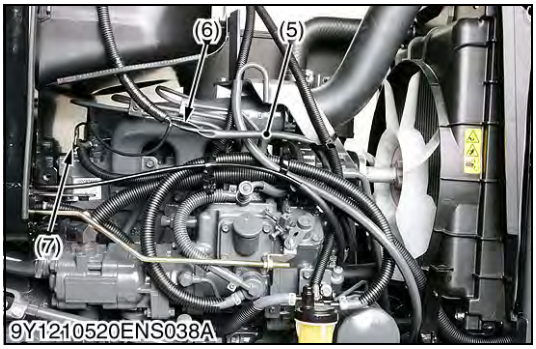

Electrical Wirings 1

1. Disconnect the wiring (1).
2. Disconnect the wirings (2).
3. Disconnect the **1P** connector (3), (7) and the wirings (5), (6).
4. Remove the shutter plate (4) and the wirings from the engine.

(1) Wiring (Alternator)
(2) Wiring (Starter Motor)
(3) **1P** Connector (Engine Oil Switch)
(4) Shutter Plate
(5) Wiring (Engine Stop Solenoid)
(6) Wiring (Glow Plug)
(7) **1P** Connector (Coolant Temperature Sensor)

9Y1211121CLS0018US0

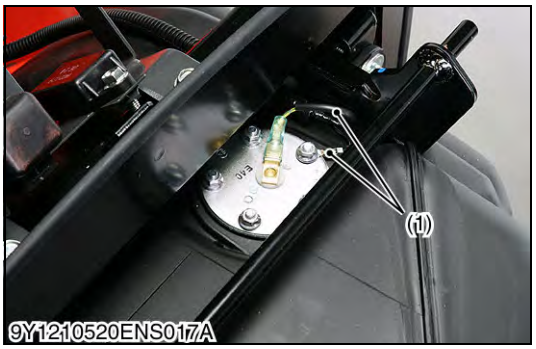

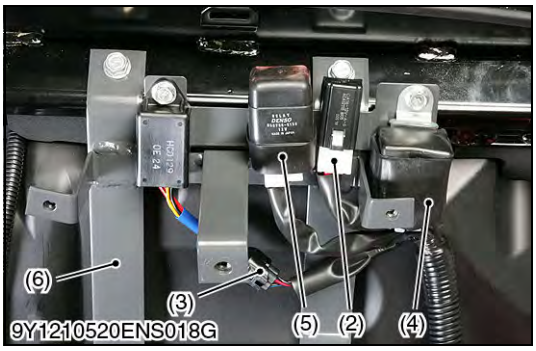

Electrical Wirings 2

1. Disconnect the wiring (1).
2. Disconnect the **4P** connector (3), the starter relay (2), the engine stop solenoid relay (5) and the flasher unit (4).
3. Remove the wiring from the rear bonnet support.
4. Remove the meter panel support (6) from rear bonnet support.

(1) Wiring (Fuel Sensor)
(2) Starter Relay
(3) **4P** Connector (OPC Timer)
(4) Flasher Unit
(5) **4P** Connector (Engine Stop Solenoid Relay)
(6) Meter Panel Support

9Y1211121CLS0019US0

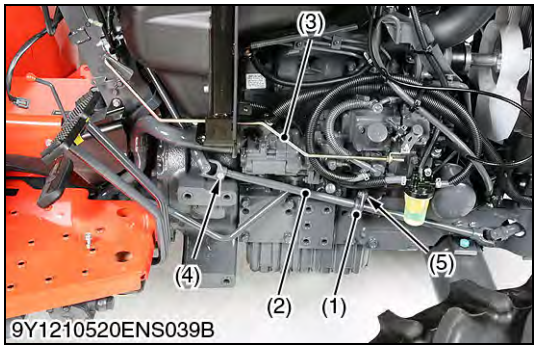

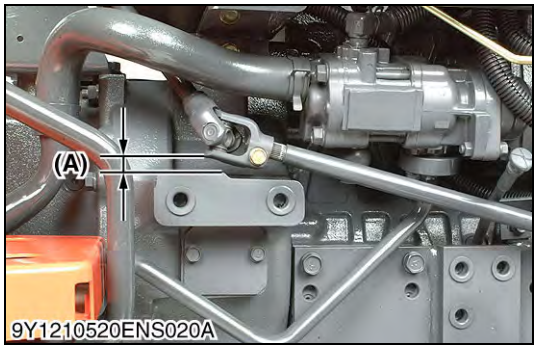

Steering Joint Shaft and Accelerator Rod

1. Remove the screw from support (1) and the steering joint shaft (2).
2. Remove the accelerator rod (3).

(When reassembling)

- Lift the universal joint so that there should be a clearance **(A)** of more than 5 mm (0.2 in.) between the universal joint and flywheel housing.
  Then fit the support (1) in position.
- Be sure to insert the screw(2) into cut-off part of joint shaft (1).
- Apply grease to spline part of joint shaft (1).

Tightening torque	Screw (Joint Shaft)	23.5 to 27.4 N·m 2.4 to 2.8 kgf·m 18 to 20 lbf·ft
	Screw (bearing support)	23.5 to 27.4 N·m 2.4 to 2.8 kgf·m 18 to 20 lbf·ft

(1) Support (Steering Joint Shaft)
(2) Steering Joint Shaft
(3) Accelerator Rod
(4) Screw (Joint Shaft)
(5) Screw (Bearing Support)

(A) Clearance

9Y1211121CLS0020US0

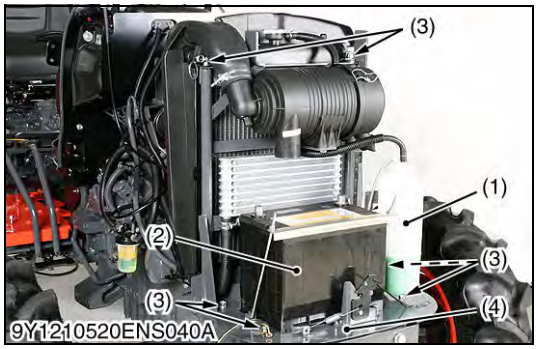

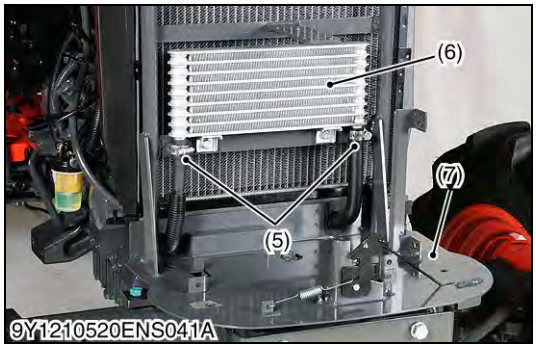

Battery, Reserve Tank and Battery Support Assembly

1. Disconnect the reserve tank hose and remove the reserve tank (1).
2. Remove the battery (2) and the screws (3) from the battery support (4).
3. Disconnect the hoses (5) from the oil cooler (6).
4. Remove the battery support assembly (7).

(1) Reserve Tank
(2) Battery
(3) Screw
(4) Battery Support
(5) Hose (Oil Cooler)
(6) Oil Cooler
(7) Battery Support Assembly

9Y1211121CLS0021US0

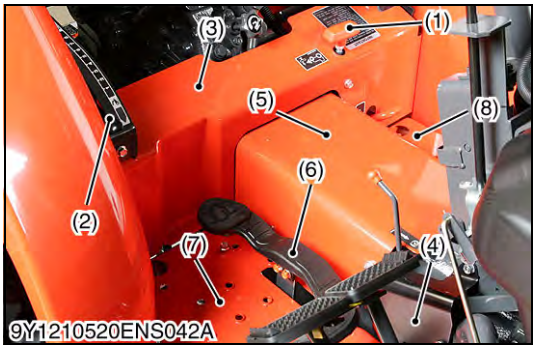

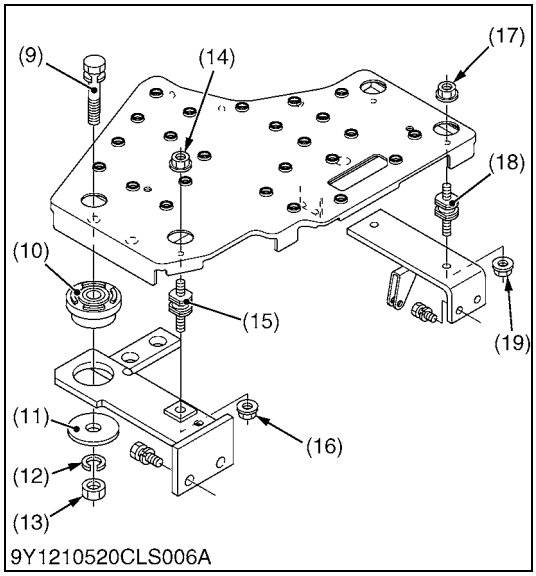

Outer Components

1. Remove the grip (1).
2. Remove the position control lever grip and position control lever guide (2).
3. Remove the floor sheet cover (3).
4. Remove the neutral holder cover (4) and the center cover (5).
5. Disconnect the brake pedal spring.
6. Remove the HST control pedal (6) and step (R.H.) (7).
7. Disconnect the differential lock spring, rod and step (L.H.) (8).

(When reassembling)

- Be sure to set the washers and rubber plates of the steps mounting screw at an original positions as shown in figure.

(1) Grip (Front Drive Lever)
(2) Position Control Lever Guide
(3) Floor Sheet Cover
(4) Neutral Holder Cover
(5) Center Cover
(6) HST Control Pedal
(7) Step (R.H.)
(8) Step (L.H.)
(9) Screw
(10) Rubber Plate
(11) Washer
(12) Spring Washer
(13) Nut
(14) Nut
(15) Cushion
(16) Nut
(17) Nut
(18) Cushion
(19) Nut

9Y1211121CLS0022US0

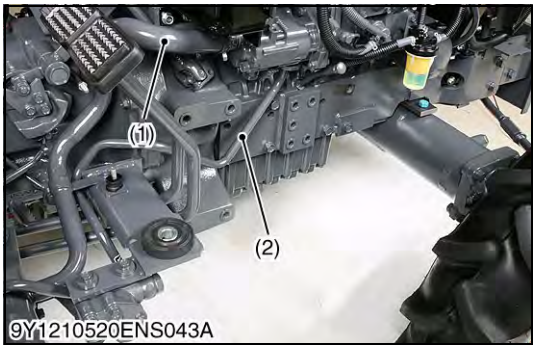

Suction Hose and Delivery Pipe

1. Disconnect the suction hose (1).
2. Remove the delivery pipe (2).

(When reassembling)

- When reassembling the delivery pipe, install the new copper washers securely.

Tightening torque	Delivery pipe joint bolt	49 to 68 N·m 5.0 to 7.0 kgf·m 37 to 50 lbf·ft

(1) Suction Hose
(2) Delivery Pipe

9Y1211121CLS0023US0

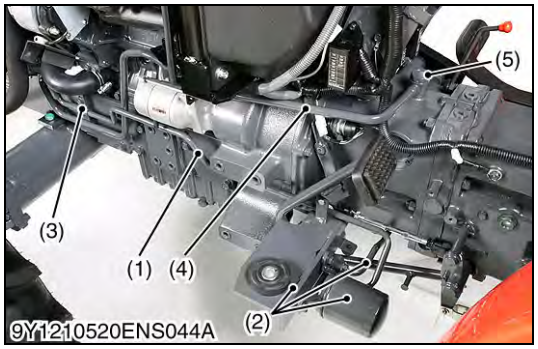

HST Pipe

1. Disconnect the HST delivery pipe (1) from power steering controller.
2. Remove the step bracket assembly (2).
3. Remove the clamp (3) and the HST delivery pipe (1).
4. Remove the eye joint screw (5) and the HST return pipe (4).

(When reassembling)

- When reassembling the HST return pipe, install the new copper washers securely.
- Wind seal tape on joint elbow part of HST delivery pipe (1).

Tightening torque	Joint screw (HST return pipe)	80 to 88 N·m 8.1 to 9.0 kgf·m 59 to 65 lbf·ft
	Retaining nut (HST delivery pipe)	49 to 58 N·m 5.0 to 6.0 kgf·m 37 to 43 lbf·ft

■ **NOTE**

- **Take care not to damage the HST pipe O-rings.**
- **If the HST pipe O-rings are damaged, change them.**

(1) HST Delivery Pipe
(2) Step Bracket Assembly
(3) Clamp (HST Delivery Pipe)
(4) HST Return Pipe
(5) Joint Screw (HST Return Pipe)

9Y1211121CLS0024US0

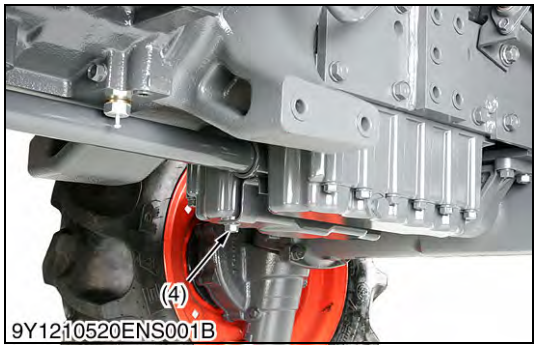

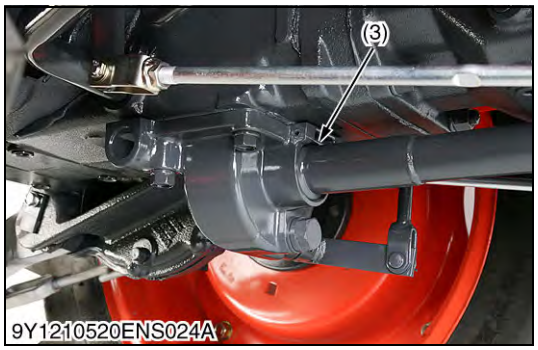

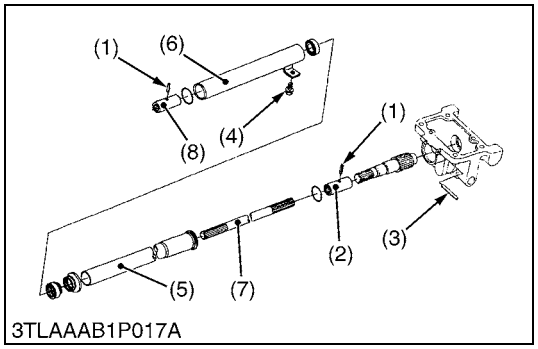

Propeller Shaft

1. Remove the screw (4) then tap out the spring pin (3).
2. Slide the propeller shaft cover 1 (5) to the front and the cover 2 (6) to the rear.
3. Tap out the spring pins (1) and then slide the coupling (2) to the front and coupling (8) to the rear.

(When reassembling)

- Apply grease to the splines of the propeller shaft (7) and pinion shaft.

(1) Spring Pin
(2) Coupling
(3) Spring Pin
(4) Screw
(5) Propeller Shaft Cover 1
(6) Propeller Shaft Cover 2
(7) Propeller Shaft
(8) Coupling

9Y1211121CLS0025US0

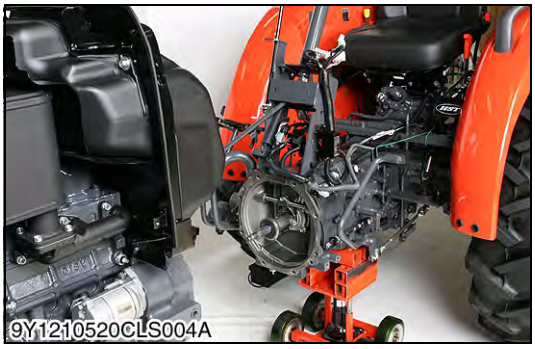

Separating Clutch Housing Case from Engine

1. Check the engine and clutch housing case are securely mounted on the disassembling stands.
2. Remove the engine mounting screws, and separate the clutch housing case from the engine.

(When reassembling)

- Apply grease to the splines.
- Apply liquid gasket (Three Bond 1206C or equivalent) to joint face of the engine and clutch housing case.

9Y1211121CLS0026US0

6. DISASSEMBLING AND ASSEMBLING

[1] SINGLE STAGE CLUTCH

Clutch Assembly

1. Insert the clutch center tool.
2. Remove the clutch assembly together with the clutch center tool.

(When reassembling)

- Direct the shorter end of the clutch disc boss toward the flywheel.
- Apply molybdenum disulfide (Three Bond 1901 or equivalent) to the splines of clutch disc boss.
- Insert the pressure plate, noting the position of straight pins.

■ **IMPORTANT**

- **Be sure to align the center of disc and flywheel by inserting the clutch tool set.**

■ **NOTE**

- **Do not allow grease and oil on the clutch disc facing.**

9Y1211121CLS0027US0

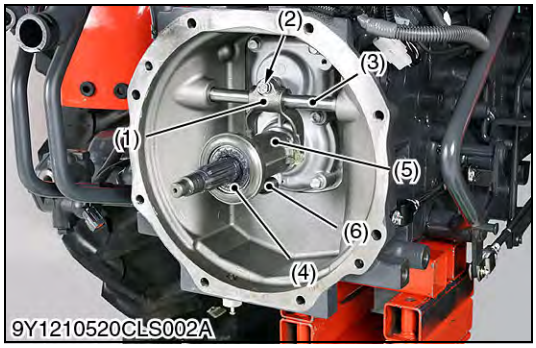

Release Hub and Clutch Lever

1. Remove the release fork (1) mounting screw (2).
2. Draw out the clutch lever (3) to remove the release fork (1).
3. Remove the hub return spring (6).
4. Remove the thrust ball bearing (4) and release hub (5) as a unit.

(When reassembling)

- Make sure the direction of the release fork (1) and thrust ball bearing (4) is correct.
- Apply grease to contact face of release fork (1) and release hub (5).
- Apply grease to clutch lever (3).
- Be sure to set the hub return spring (6).

(1)	Release Fork	(4)	Thrust Ball Bearing
(2)	Screw	(5)	Release Hub
(3)	Clutch Lever	(6)	Hub Return Spring

9Y1211121CLS0028US0

7. SERVICING

[1] SINGLE STAGE CLUTCH

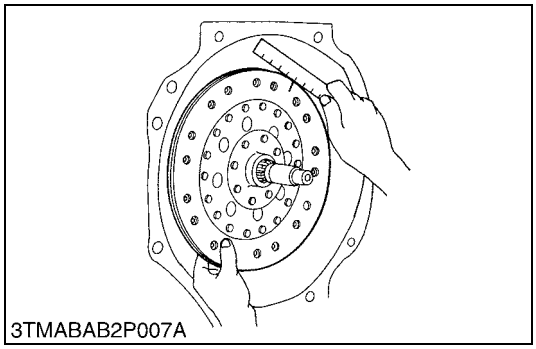
3TMABAB2P007A

Backlash between Clutch Disc Boss and Shaft

1. Mount the clutch disc to the main shaft.
2. Hold the main shaft so that it does not turn.
3. Rotate disc lightly and measure the displacement around the disc edge.
4. If the measurement exceeds the allowable limit, replace the clutch disc.

Backlash (Displacement around disc edge)	Allowable limit	2.0 mm 0.079 in.

9Y1211121CLS0029US0

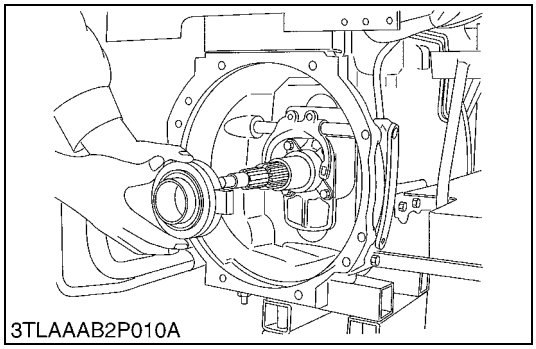
3TLAAAB2P010A

Release Bearing

1. Check for abnormal wear on contact surface.
2. Rotate bearing outer race, while applying pressure to it.
3. If the bearing rotation is rough or noisy, replace the release bearing.

■ **NOTE**

- **Do not depress bearing outer race, when replacing release bearing.**
- **Do not wash the release bearing with a cleaning solvent.**

9Y1211121CLS0030US0

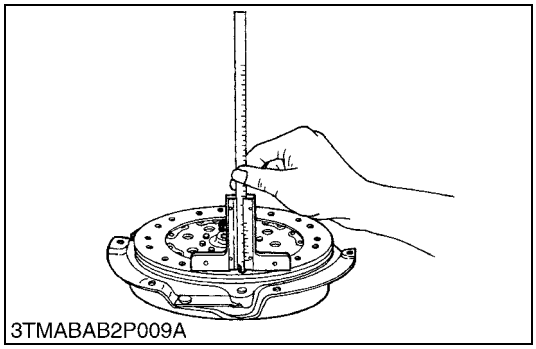
3TMABAB2P009A

Clutch Disc Wear

1. Measure the depth from clutch disc surface to the top of rivet at least 10 points with a depth gauge.
2. If the depth is less than the allowable limit, replace the disc.
3. If oil is sticking to clutch disc, or disc surface is carbonized, replace the disc.
   In this case, inspect transmission gear shaft oil seal, engine rear oil seal and other points for oil leakage.

Disc surface to rivet top (Depth)	Allowable limit	0.3 mm 0.01 in.

9Y1211121CLS0031US0

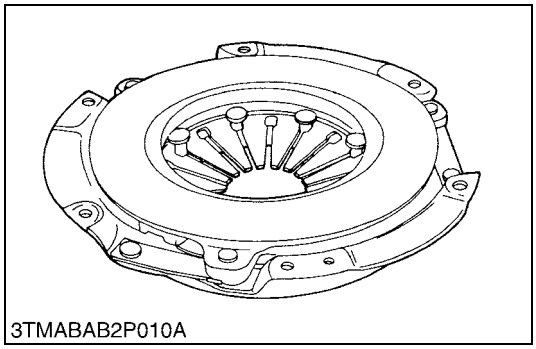
3TMABAB2P010A

Checking Pressure Plate Assembly and Flywheel

1. Wash the disassembling parts except clutch disc with a suitable cleaning solvent to remove dirt and grease before making inspection and adjustment.
2. Check friction surface of pressure plate and flywheel for scoring or roughness.
   – Slight roughness may be smoothed by using fine emery cloth.
   – If these parts have deep scores or grooves on their surface, they should be replaced.
3. Inspect the surface of the diaphragm spring for wear.
   If excessive wear is found, replace clutch cover assembly.
4. Inspect thrust rings (wire ring) for wear or damage.
   As these parts are invisible from outside, shake pressure plate assembly up and down to listen for chattering noise, or lightly hammer on rivets for a slightly cracked noise. Any of these noises indicates need of replace as a complete assembly.

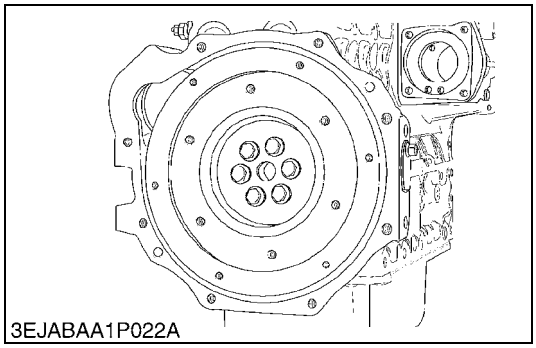
3EJABAA1P022A

Diaphragm spring mutual difference	Allowable limit	0.5 mm 0.02 in.

9Y1211121CLS0032US0

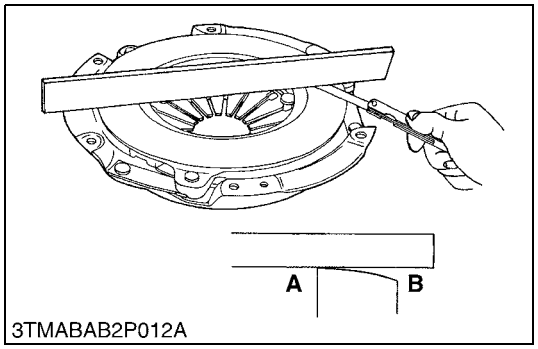

Pressure Plate Flatness

1. Place a straight edge on the pressure plate and measure clearance with a feeler gauge at several points.
2. If the clearance exceeds the allowable limit, replace it.
3. When the pressure plate is worn around its outside and its inside surface only is in contact with the straight edge, replace even if the clearance is within the allowable limit.

Clearance between pressure plate and straight edge	Allowable limit	0.2 mm 0.008 in.

A: Inside **B: Outside**

9Y1211121CLS0033US0

https://truckmanualshub.com/

3 TRANSMISSION

https://truckmanualshub.com/

MECHANISM

CONTENTS

1. STRUCTURE 3-M1
   [1] MANUAL TRANSMISSION TYPE 3-M1
   [2] HST TYPE 3-M2
2. MANUAL TRANSMISSION TYPE 3-M3
   [1] POWER TRAIN 3-M3
      (1) Main Gear Shift Section (4 Speeds) 3-M3
      (2) Range Gear Shift Section 3-M3
      (3) Front Wheel Drive Section (4WD or 2WD) 3-M4
   [2] SHIFT LINKAGE MECHANISM 3-M5
      (1) Main Gear Shift Lever 3-M5
      (2) Range Gear Shift Lever 3-M5
      (3) Front Wheel Drive Lever (For Four Wheel Drive Model) 3-M6
   [3] PTO SYSTEM 3-M7
      (1) Structure 3-M7
      (2) Shift Linkage 3-M8
3. HST TYPE 3-M9
   [1] POWER TRAIN 3-M9
      (1) Structure 3-M9
      (2) Oil Flow 3-M11
      (3) Operation 3-M12
      (4) Range Gear Shift Section 3-M15
      (5) Front Drive Wheel Section 3-M15
   [2] HST PEDAL CONTROL LINKAGE 3-M16
   [3] CRUISE CONTROL (OPTION) 3-M17
   [4] SHIFT LINKAGE MECHANISM 3-M18
      (1) Range Gear Shift Lever 3-M18
      (2) Front Wheel Drive Lever 3-M18
   [5] PTO SYSTEM 3-M19
      (1) Structure 3-M19
      (2) Shift Linkage 3-M20

1. STRUCTURE

[1] MANUAL TRANSMISSION TYPE

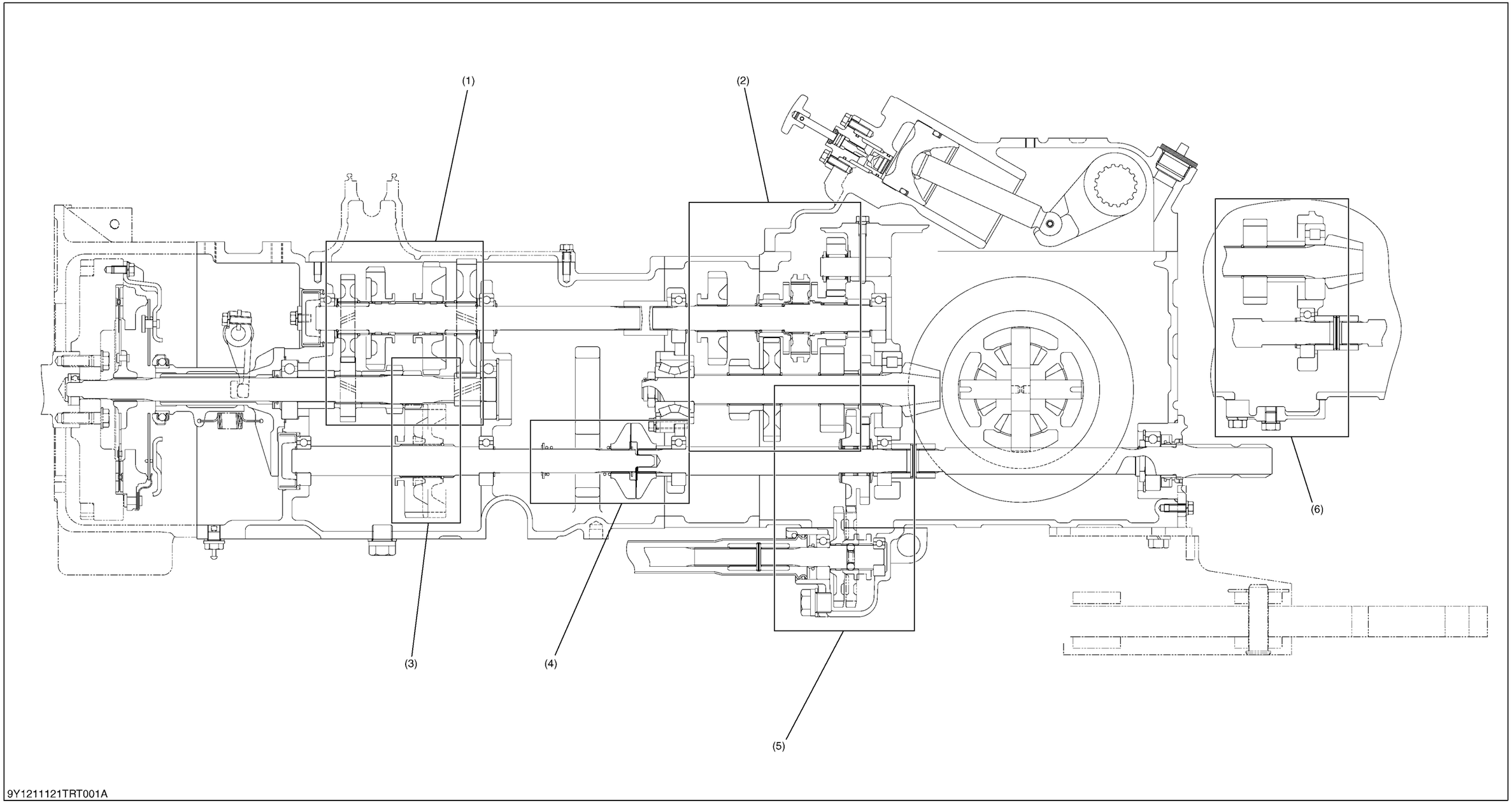

(1) Main Gear Shift Section
(2) Lo-Reverse, Hi-Shift Section
(3) PTO Gear Section
(4) PTO Clutch Section
(5) 4WD Section (Drive Gear)
(6) 2WD Section

[2] HST TYPE

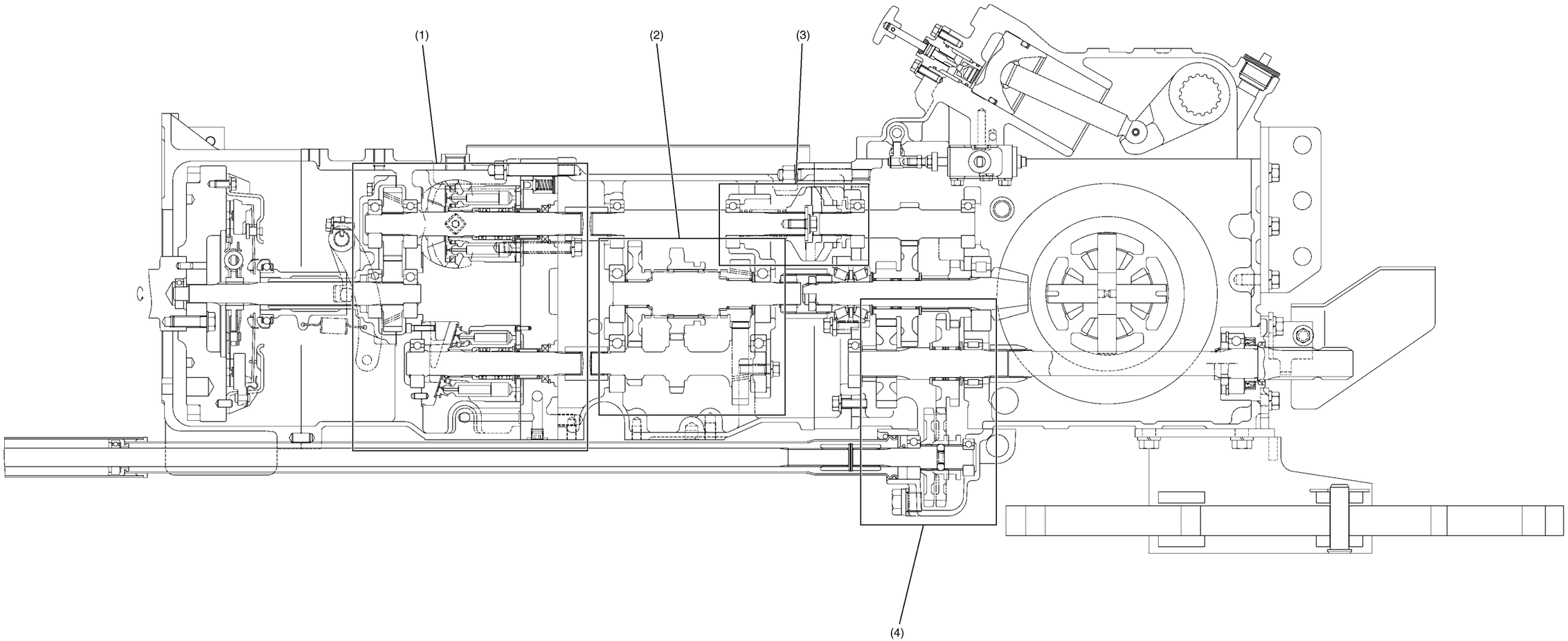

9Y1211121TRT002A

(1) Hydrostatic Transmission Section
(2) Range Gear Shift Section
(3) PTO Clutch Section
(4) 4WD Section (Drive Gear)

2. MANUAL TRANSMISSION TYPE

[1] POWER TRAIN

(1) Main Gear Shift Section (4 Speeds)

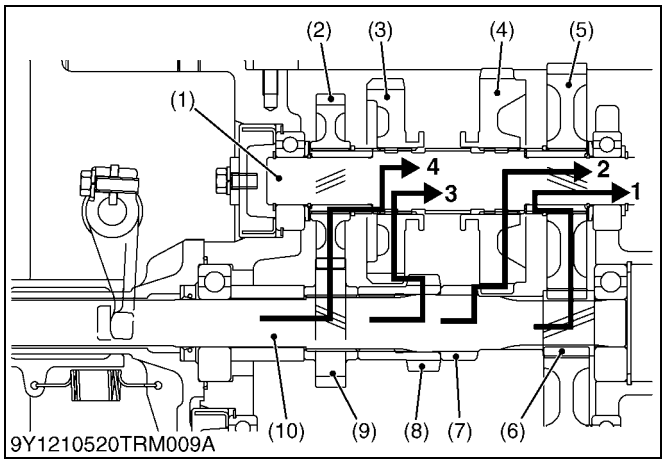

Besides neutral, four ways of power train from the main gear shaft (11) to the counter shaft (1) are available by operating the **1, 2, 3, 4** range gear shift lever.

Power is transmitted as follows.

1: 1st Speed

Main Gear Shaft (10) → 10T Gear (6) → 45T Gear (5) → 45T Shift Gear (4) → Counter Shaft (1).

2: 2nd Speed

Main Gear Shaft (10) → 13T Gear (7) → 45T Shift Gear (5) → Counter Shaft (1).

3: 3rd Speed

Main Gear Shaft (10) → 17T Gear (8) → 41T Shift Gear (3) → Counter Shaft (1).

4: 4th Speed

Main Gear Shaft (10) → 23T Gear (9) → 32T Gear (2) → 38T Shift Gear (3) → Counter Shaft (1).

(1)	Counter Shaft	(6)	10T Gear
(2)	32T Gear	(7)	13T Gear
(3)	41T Shift Gear	(8)	17T Gear
(4)	45T Shift Gear	(9)	23T Gear
(5)	45T Gear	(10)	Main Gear Shaft

9Y1211121TRM0003US0

(2) Range Gear Shift Section

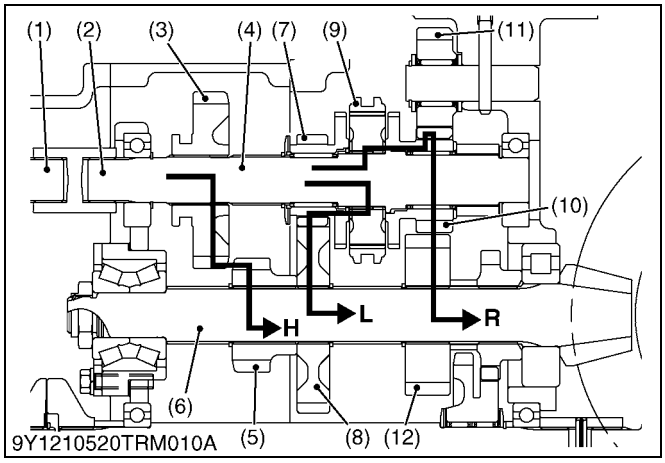

Besides three ways of power train from the counter drive shaft (1) to the spiral bevel pinion shaft (6) are available by operating the range gear shift lever.

Power is transmitted as follows.

L: Lo-Range

Counter Drive Shaft (1) → Coupling (2) → Range Gear Shaft (4) → Shifter (9) → 18T Gear (7) → 42T Gear (8) → Spiral Bevel Pinion Shaft (6).

H: Hi-Range

Counter Drive Shaft (1) → Coupling (2) → 31T Shift Gear (3) → 19T Gear (5) → Spiral Bevel Pinion Shaft (6).

R: Reverse-Range

Counter Drive Shaft (1) → Coupling (2) → Range Gear Shaft (4) → Shifter (9) → 17T Gear (10) → 29T Gear (12) → Spiral Bevel Pinion Shaft (6)

(1)	Counter Drive Shaft	(7)	18T Gear
(2)	Coupling	(8)	42T Gear
(3)	31T Shift Gear	(9)	Shifter
(4)	Range Gear Shaft	(10)	17T Gear
(5)	19T Gear	(11)	18T Gear
(6)	Spiral Bevel Pinion Shaft	(12)	29T Gear

9Y1211121TRM0004US0

(3) Front Wheel Drive Section (4WD or 2WD)

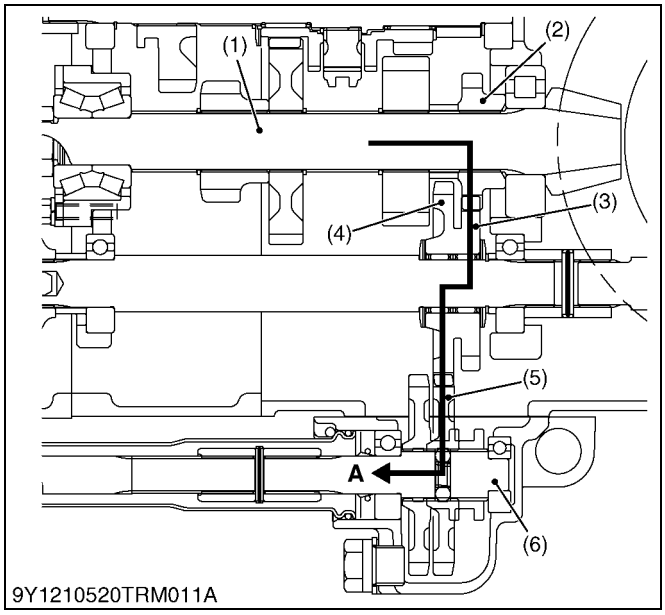

2-wheel drive or 4-wheel drive is selected by operating the front wheel drive lever to shift the 33T shift gear (5).

When the front wheel drive lever is set to disengage, 33T shift gear is neutral.

When the front wheel drive lever is set to engage, 33T shift gear splined with front axle drive shaft side to the left side to engage with 34T gear.

Then, power is transmitted as follows.

A: Engage

Spiral Bevel Pinion Shaft (1) → 18T Gear (2) → 25T Gear (3) → 34T Gear (4) → 33T Shift Gear (5) → Front Wheel Drive Shaft (6).

(1)	Spiral Bevel Pinion Shaft	(4)	34T Gear
(2)	18T Gear	(5)	33T Shift Gear
(3)	25T Gear	(6)	Front Wheel Drive Shaft

9Y1211121TRM0005US0

[2] SHIFT LINKAGE MECHANISM

(1) Main Gear Shift Lever

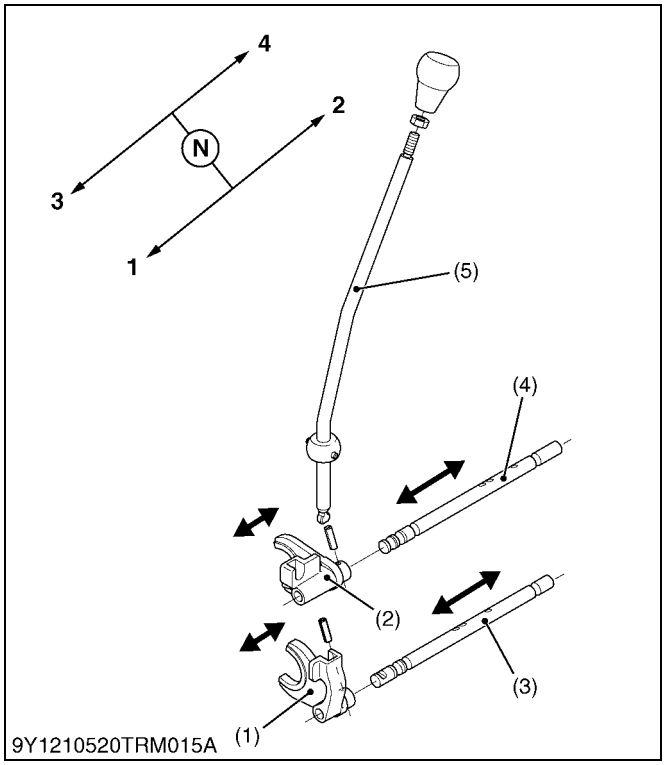

The links are connected from the shift lever (4) to the shift forks (1), (2) as shown in the figure. Each speed from the 1st to 4th can be changed by a single shift lever (5).

When the shift lever (5) is moved to the left, the shift lever (5) is engaged with the 1-2 shift fork (1), allowing the operator to change the 1st or the 2nd speed.

When the shift lever (5) is moved to the right, the shift lever (5) is engaged with the 3-4 shift fork (2), allowing the operator to change the 3rd or the 4th speed.

(1) 1-2 Shift Fork
(2) 3-4 Shift Fork
(3) Shift Rod 1
(4) Shift Rod 2
(5) Shift Lever

9Y1211121TRM0006US0

(2) Range Gear Shift Lever

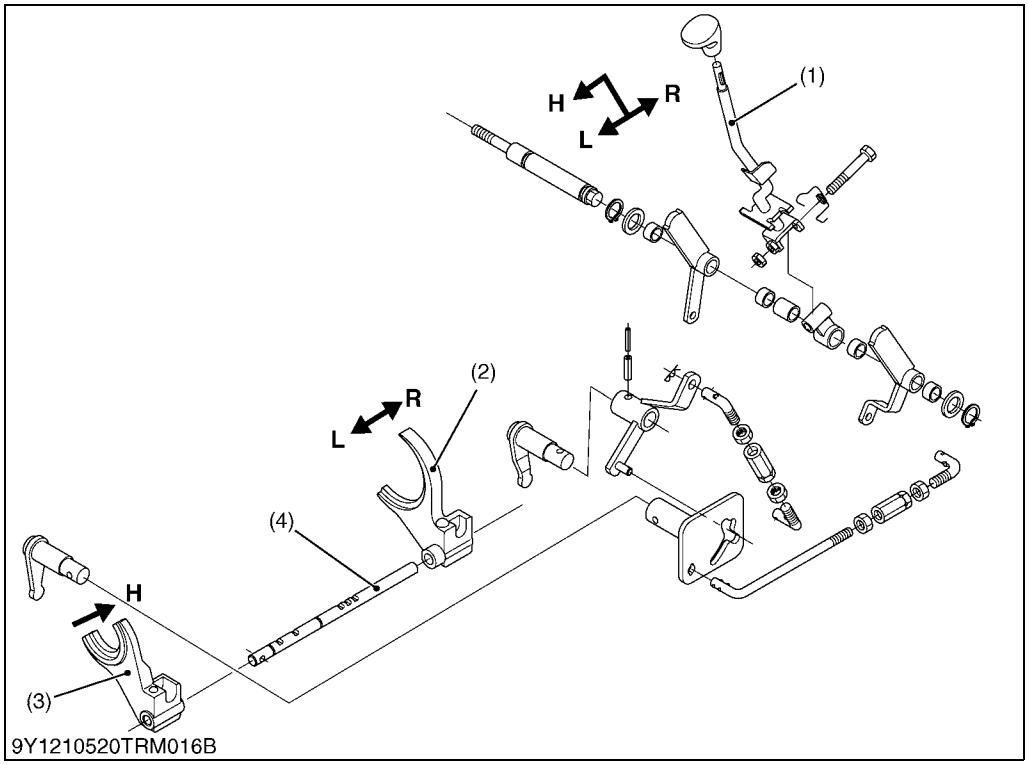

(1) Shift Lever
(2) **L-R** Shift Fork
(3) **H** Shift Fork
(4) Shift Rod

The links from the shift lever (1) to the shift fork (2) and (3) are connected as shown in the above figure.

When the shift lever (1) is moved to the left, the shift lever (1) is engaged with the **L-R** shift fork (2), allowing the operator to change the Low speed or reverse speed.

When the shift lever (1) is moved to the right, the shift lever (1) is engaged with the **H** shift fork (3), allowing the operator to change the Hi speed.

9Y1211121TRM0007US0

(3) Front Wheel Drive Lever (For Four Wheel Drive Model)

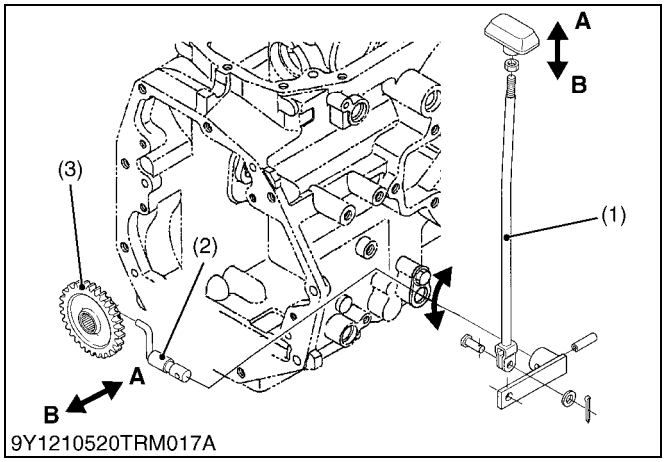

The shift lever (1) is connected directly to the shift fork (2).

When the shift lever (1) is moved to the **"A"** side, the shift fork (2) is also moved to the **"A"** side, then the front wheel drive is **"Engaged"**.

When the shift lever (1) is moved to the **"B"** side, the front wheel drive is **"Disengaged"**.

(1)	Shift Lever	**A:**	**Engaged**
(2)	Shift Fork	**B:**	**Disengaged**
(3)	Shifter Gear		

9Y1211121TRM0008US0

[3] PTO SYSTEM

(1) Structure

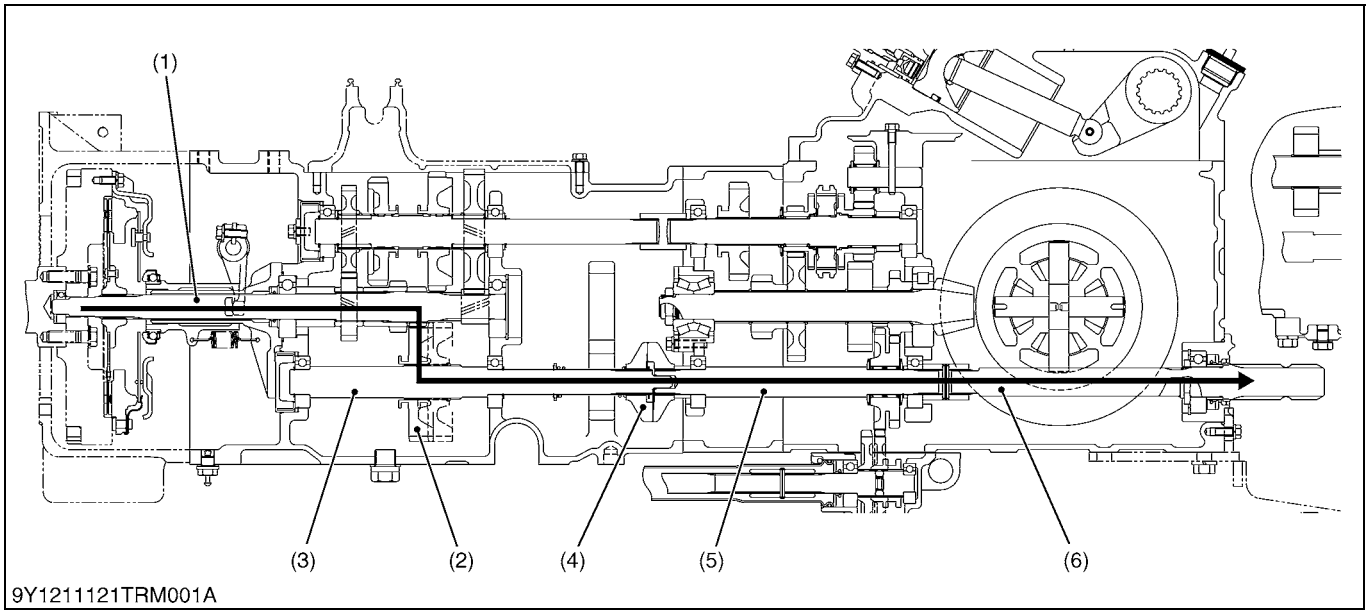

(1) Main Gear Shaft
(2) 46T Shifter Gear
(3) PTO Counter Shaft
(4) PTO Clutch
(5) PTO Drive Shaft
(6) PTO Shaft

PTO is **"ENGAGED"** or **"DISENGAGED"** by operating the shift lever of the PTO shifter.
The power train from the main gear shaft to PTO shaft is composed as shown in figure above.

9Y1211121TRM0009US0

(2) Shift Linkage

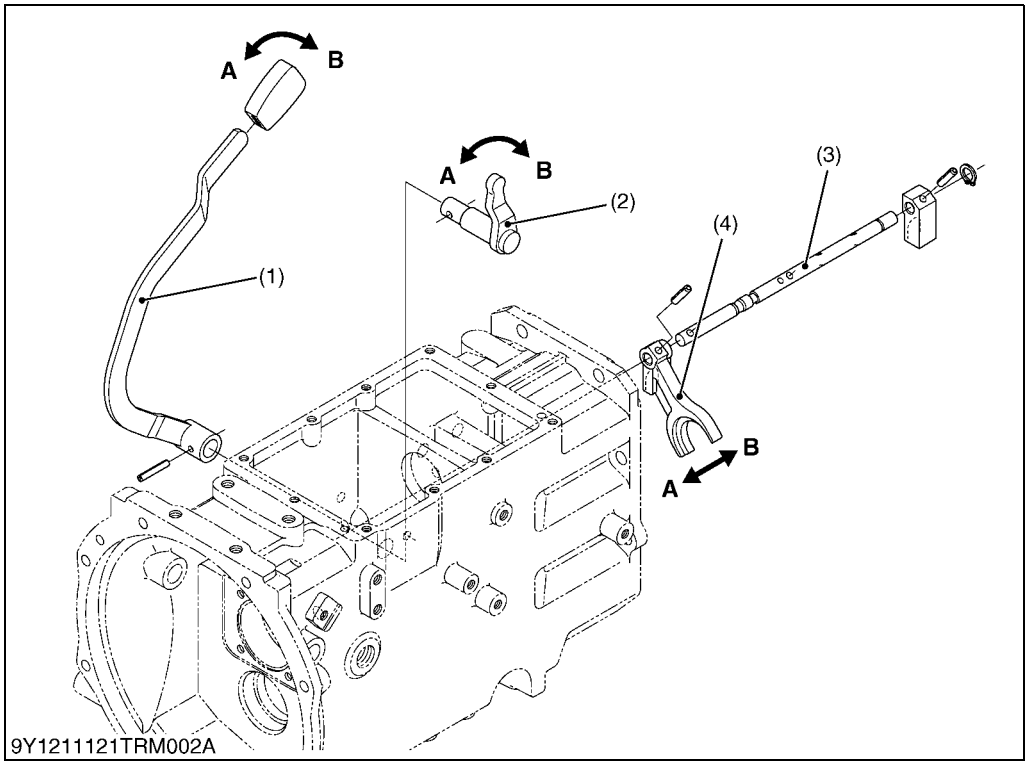

(1) PTO Shift Lever
(2) PTO Shift Range Arm
(3) PTO Fork Rod
(4) PTO Shift Fork

A: Engaged
B: Disengaged

The PTO shift lever (1) to the PTO shift fork (4) are connected by the PTO shift range arm (2) as shown in the figure above.

When the PTO shift lever (1) is moved to the **A** side or the **B** side, the PTO shift fork (4) is moved by means of the PTO shift lever (1).

When the PTO shift lever (1) is moved to the **A** side, the PTO is shifted to the **"Engaged"** position.

When the PTO shift lever (1) is moved to the **B** side, the PTO is shifted to the **"Disengaged"** position.

9Y1211121TRM0010US0

3. HST TYPE

[1] POWER TRAIN

The transmission of this model consists of a series of gears as shown in previous page. The traveling system is chiefly composed of hydrostatic transmission section, range gear shift section and front wheel drive section.

9Y1211121TRM0011US0

(1) Structure

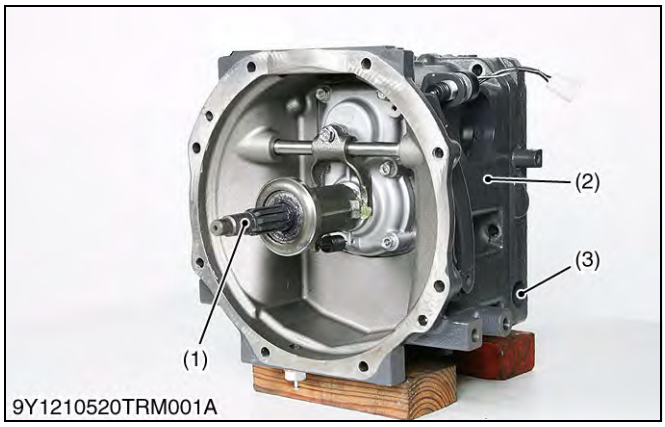

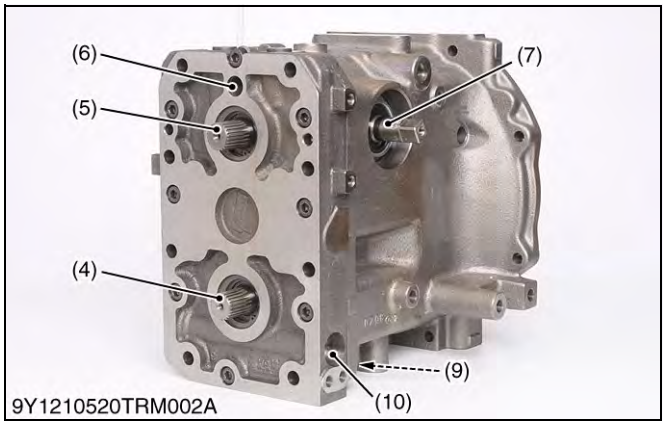

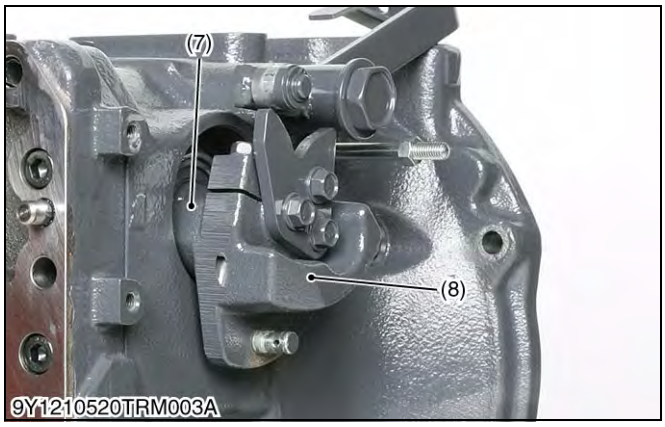

The HST of this tractor is a built-in type to the clutch housing.

HST assembly is chiefly composed of HST case (clutch housing case), variable displacement piston pump, fixed displacement piston motor, charge pump and various valves.

Refer to the next page for detailed parts in HST.

(1) Input Shaft
(2) HST Case (Clutch Housing Case)
(3) Check and High Pressure Relief Valve
(4) Output Shaft (Motor Shaft)
(5) Pump Shaft
(6) Case Relief Valve
(7) Trunnion Shaft
(8) Neutral Holder
(9) Charge Relief Valve
(10) Check and High Pressure Relief Valve

9Y1211121TRM0012US0

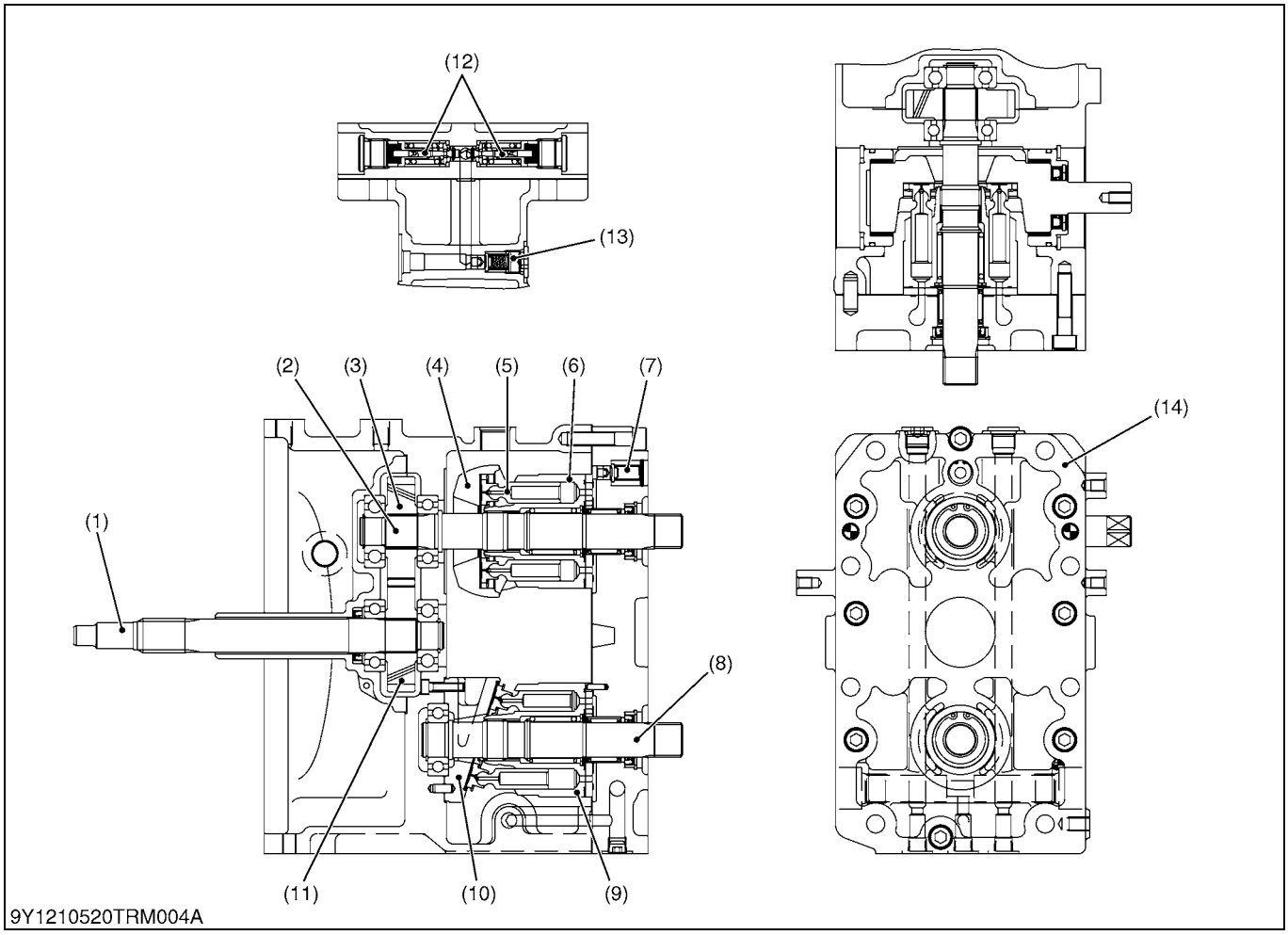

(1) Input Shaft
(2) Pump Shaft
(3) 27T Gear
(4) Variable Swashplate
(5) Piston (Pump)
(6) Cylinder Block (Pump)
(7) Case Relief Valve
(8) Output Shaft (Motor Shaft)
(9) Cylinder Block (Motor)
(10) Fixed Swashplate
(11) 28T Gear
(12) Check and High Pressure Relief Valve
(13) Charge Relief Valve
(14) Port Block

9Y1211121TRM0013US0

(2) Oil Flow

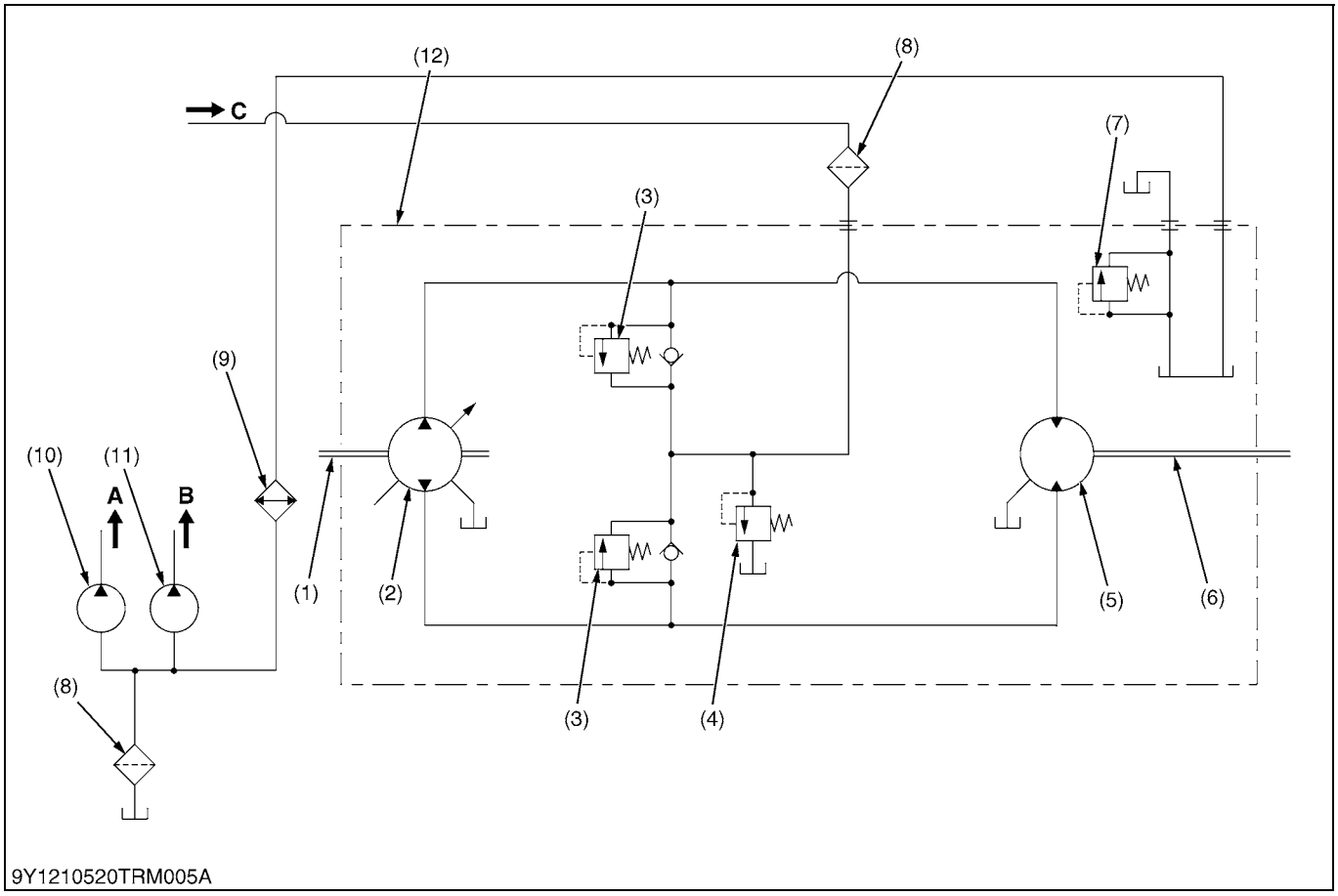

(1) Pump Shaft	(5) Fixed Displacement Motor	(9) Oil Cooler	**A: To Hydraulic Block**
(2) Variable Displacement Pump	(6) Output Shaft (Motor Shaft)	(10) Hydraulic Pump (Main Circuit)	**B: To Power Steering**
(3) Check and High Pressure Relief Valve	(7) Case Relief Valve	(11) Hydraulic Pump (Power Steering)	**C: From Power Steering**
(4) Charge Relief Valve	(8) Oil Filter	(12) HST Unit	

The pump (2) and motor (5) are joined in a closed hydraulic loop and most of oil circulates within the main oil circuit. When the variable swash-plate is at right angle to the pump piston, the oil is not send to the motor (5). When the variable swash-plate is tilted to forward or reverse, oil forced out of pump (2) at high pressure and send to the motor.

And then the output shaft (6) rotates with the motor and oil is forced out of motor at low pressure and return to the pump (2). On the other hand, oil is send to the main circuit through the filter (8) and excessive oil passes to the case through the charge relief valve (4). The case relief valve (7) controls pressure in the HST case.

The check and high pressure relief valve (3) between the two lines in the main oil circuit monitors the oil pressure in each line, it opens and close the oil into another line.

9Y1211121TRM0014US0

(3) Operation

When the HST pedal is in the neutral position

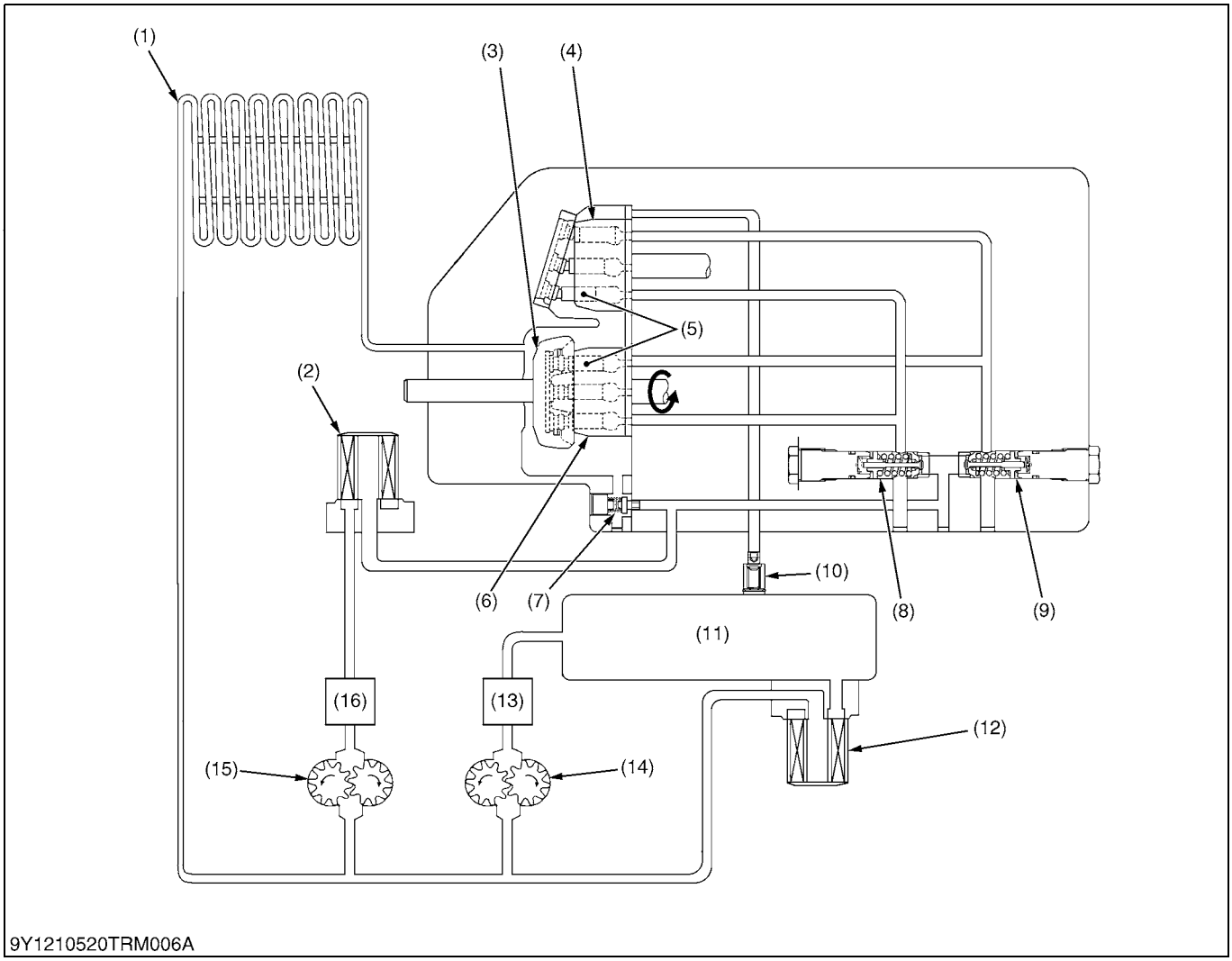

(1) Oil Cooler
(2) Oil Filter (HST)
(3) Swash plate
(4) Cylinder Block (Motor)
(5) Piston
(6) Cylinder Block (Pump)
(7) Charge Relief Valve
(8) Check and High Pressure Relief Valve (Forward)
(9) Check and High Pressure Relief Valve (Reverse)
(10) Case Relief Valve
(11) Transmission Case
(12) Oil Filter
(13) Hydraulic Control Valve
(14) Hydraulic Pump (Main Circuit)
(15) Hydraulic Pump (Power Steering)
(16) Power Steering Controller

When the speed control pedal is in neutral, the variable swash-plate is at right angles to the pump piston and they only rotate with cylinder block without reciprocating. Since the oil is not being pumped to the motor, the cylinder block in the motor is stationary and the output shaft does not move.

9Y1211121TRM0015US0

When the HST pedal is pressed toward the forward side

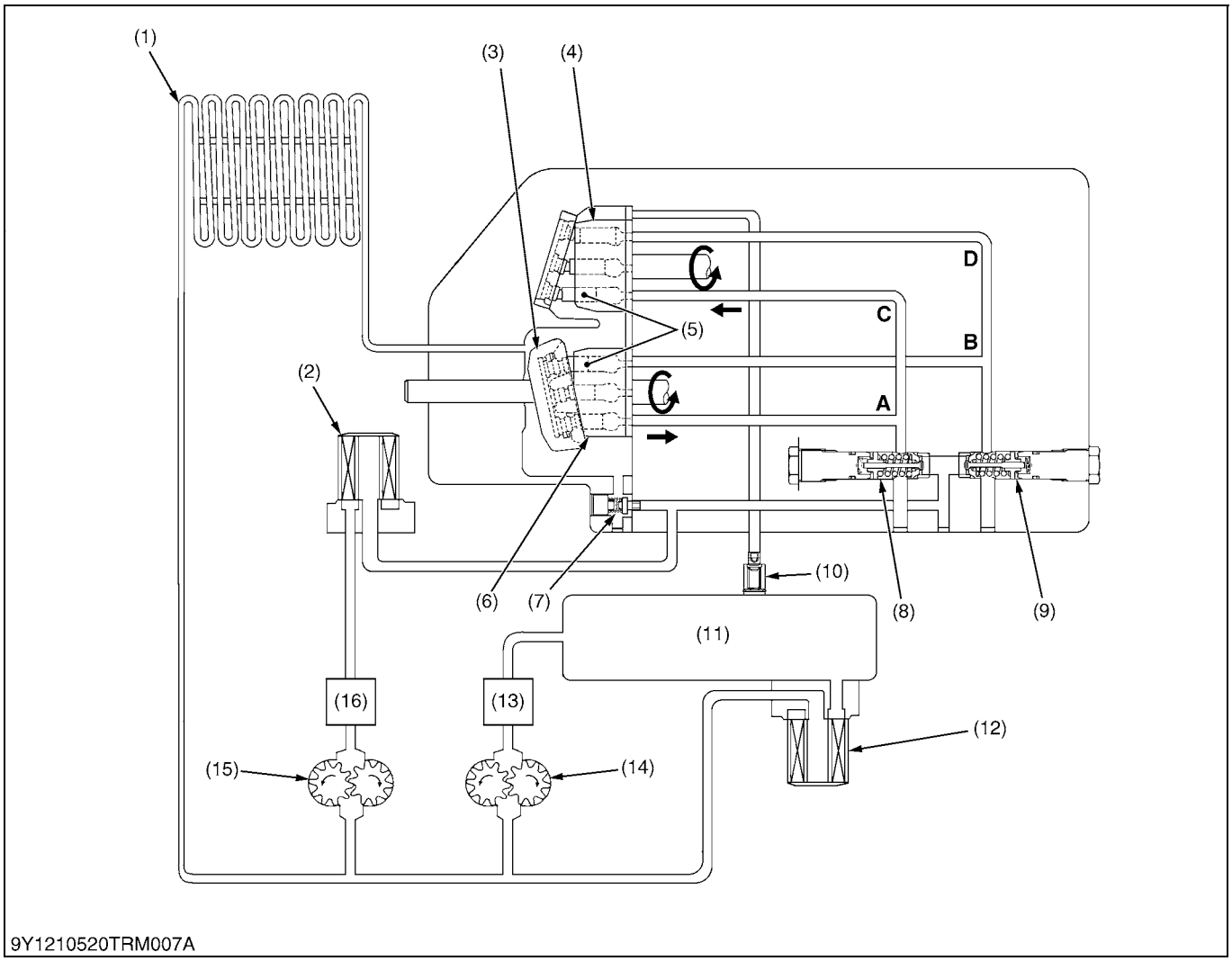

(1) Oil Cooler	(8) Check and High Pressure Relief Valve (Forward)	(13) Hydraulic Control Valve	**A: Pump Port A**
(2) Oil Filter (HST)	(9) Check and High Pressure Relief Valve (Reverse)	(14) Hydraulic Pump (Main Circuit)	**B: Pump Port B**
(3) Swash plate	(10) Case Relief Valve	(15) Hydraulic Pump (Power Steering)	**C: Motor Port C**
(4) Cylinder Block (Motor)	(11) Transmission Case	(16) Power Steering Controller	**D: Motor Port D**
(5) Piston	(12) Oil Filter		
(6) Cylinder Block (Pump)			
(7) Charge Relief Valve			

When the speed control pedal is stepped on and in forward, the variable swash-plate is tilted as shown in figure above.

As the pump cylinder block rotates with the input shaft, oil is forced out of pump port **A** at high pressure. As pressure oil enters motor port **C**, the pistons, which align with port **C**, are pushed against the swash-plate and slide down the inclined surface.

Then the output shaft rotates with the motor cylinder block. This drives the machine forward and the angle of pump swash-plate determines the output shaft speed.

As the motor cylinder block continues to rotate, oil is forced out of motor port **D** at low pressure and returns to the pump port **B**.

9Y1211121TRM0016US0

When the HST pedal is pressed toward the reverse side

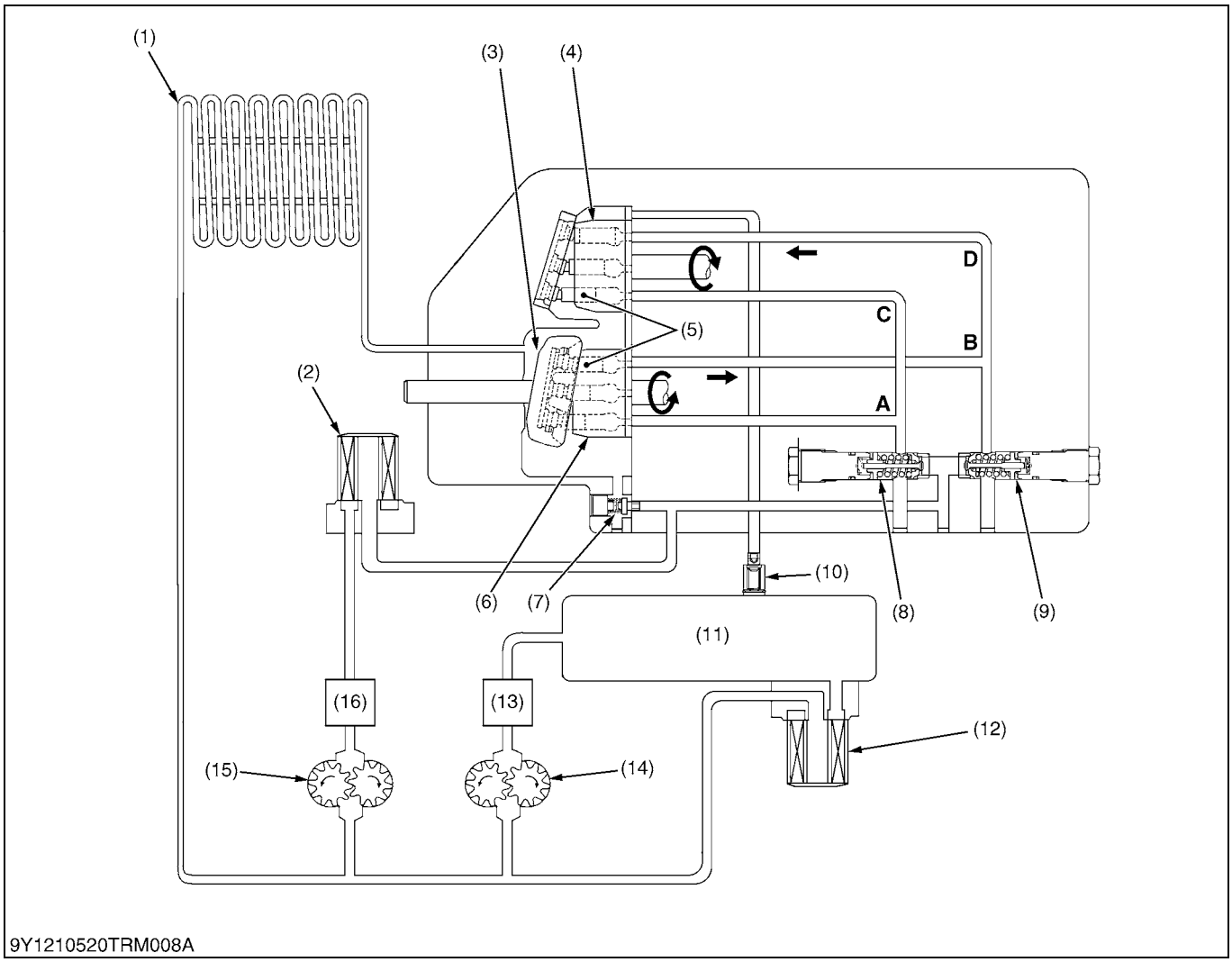

(1) Oil Cooler
(2) Oil Filter (HST)
(3) Swash plate
(4) Cylinder Block (Motor)
(5) Piston
(6) Cylinder Block (Pump)
(7) Charge Relief Valve
(8) Check and High Pressure Relief Valve (Forward)
(9) Check and High Pressure Relief Valve (Reverse)
(10) Case Relief Valve
(11) Transmission Case
(12) Oil Filter
(13) Hydraulic Control Valve
(14) Hydraulic Pump (Main Circuit)
(15) Hydraulic Pump (Power Steering)
(16) Power Steering Controller

A: Pump Port A
B: Pump Port B
C: Motor Port C
D: Motor Port D

When the speed control pedal is stepped on and in reverse, the variable swash-plate is tilted as shown in figure above.

As the pump cylinder block rotates with the input shaft, oil is forced out of pump port **B** at high pressure. As pressure oil enters motor port **D**, the pistons, which align with port **D**, are pushed against the swash-plate and slide down the inclined surface.

Then the output shaft rotates with the motor cylinder block. This drives the machine rearward and the angle of pump swash-plate determines the output shaft speed.

As the motor cylinder block continues to rotate, oil is forced out of motor port **C** at low pressure and returns to the pump port **A**.

9Y1211121TRM0017US0

(4) Range Gear Shift Section

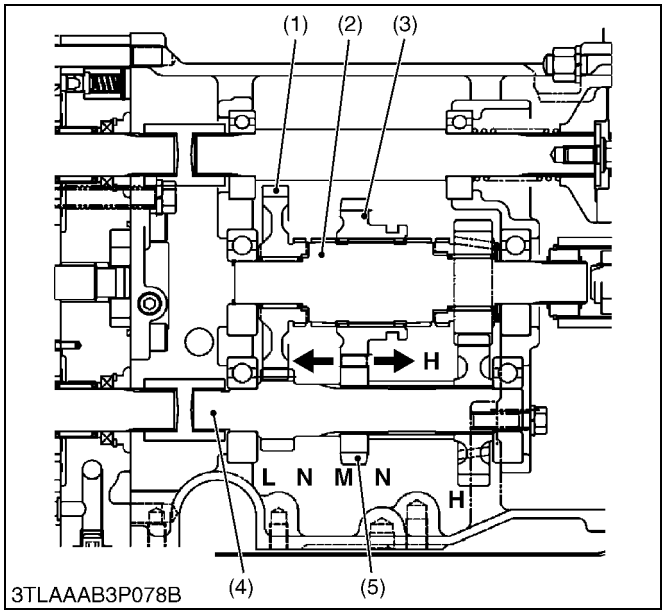

The range gear shift section is located in the mid case.

It changes the speed to five position (**L, N, M, N** and **H**) by shifting of shift gear (3) in the straight line on shaft (2).

(1)	37T Gear	**L:**	**Low Speed Position**
(2)	Shaft	**N:**	**Neutral Position**
(3)	31T Gear	**M:**	**Middle Speed Position**
(4)	13T Gear Shaft	**H:**	**High Speed Position**
(5)	19T Gear		

9Y1211121TRM0018US0

(5) Front Drive Wheel Section

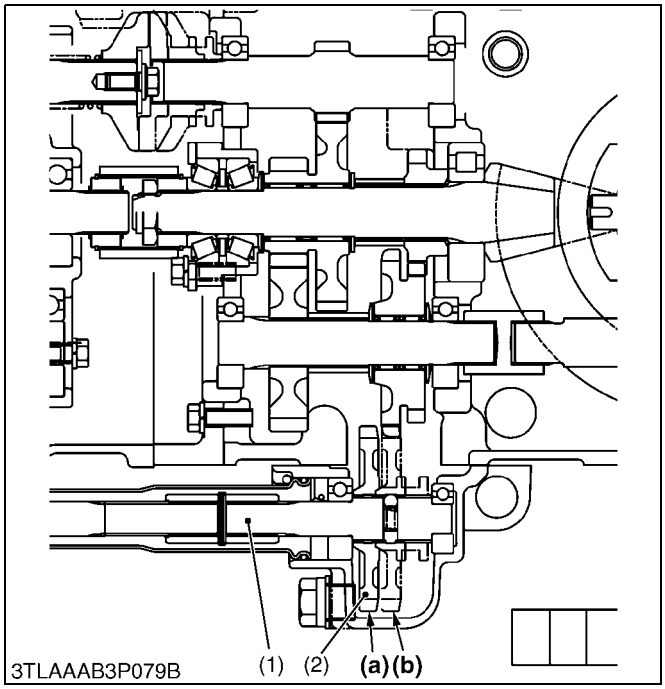

Front wheel drive section is located in the differential gear case.

2 wheel drive or 4 wheel drive is selected by operating the front wheel drive lever to shift the shift gear (2).

(1)	Front Wheel Drive Shaft	**(a)**	**2 Wheel Drive Position**
(2)	Shift Gear	**(b)**	**4 Wheel Drive Position**

9Y1211121TRM0019US0

[2] HST PEDAL CONTROL LINKAGE

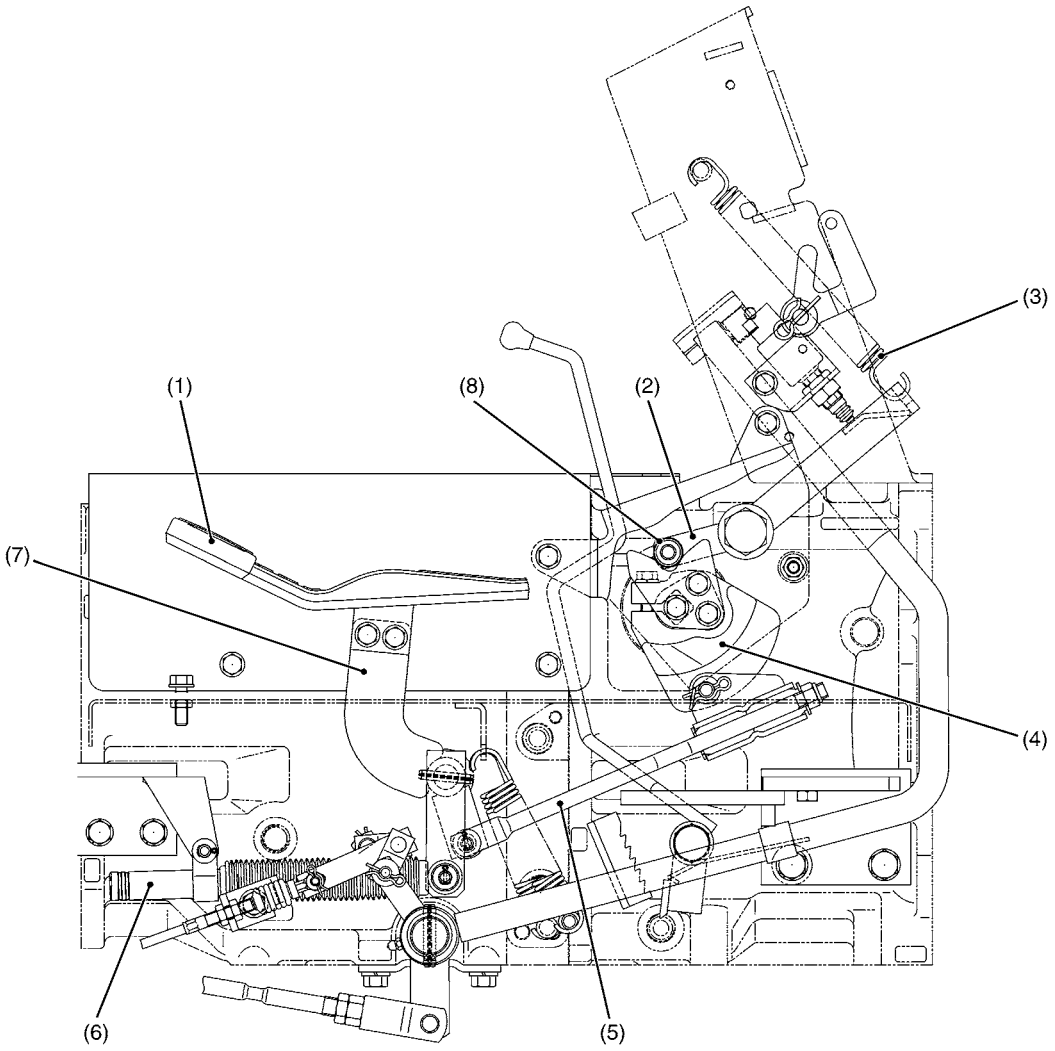

3TLAAAB3P076A

(1) HST Pedal	(3) Spring	(5) Neutral Rod	(7) Pedal Bracket
(2) Neutral Holder Arm	(4) Neutral Holder	(6) Damper	(8) Ball Bearing

The speed control pedal (HST pedal) (1) and the holder (Trunnion) are linked with the pedal bracket and HST neutral rod (5).

As the HST pedal (1) is depressed to forward, the HST holder (4) is rotated, then the swash-plate is tilted by trunnion shaft and forward travelling speed increases. Then, the swash-plate is returned to neutral with the neutral holder arm (2), when the pedal is released. The ball bearing (8) on the neutral holder (2) pulled with the neutral spring (3) seats the detent of the neutral holder arm (4) so that the neutral holder arm returns to neutral.

The damper (6) is connected to the HST pedal (1) and restricts the movement of the linkage to prevent abrupt operation or reversing.

9Y1211121TRM0020US0

[3] CRUISE CONTROL (OPTION)

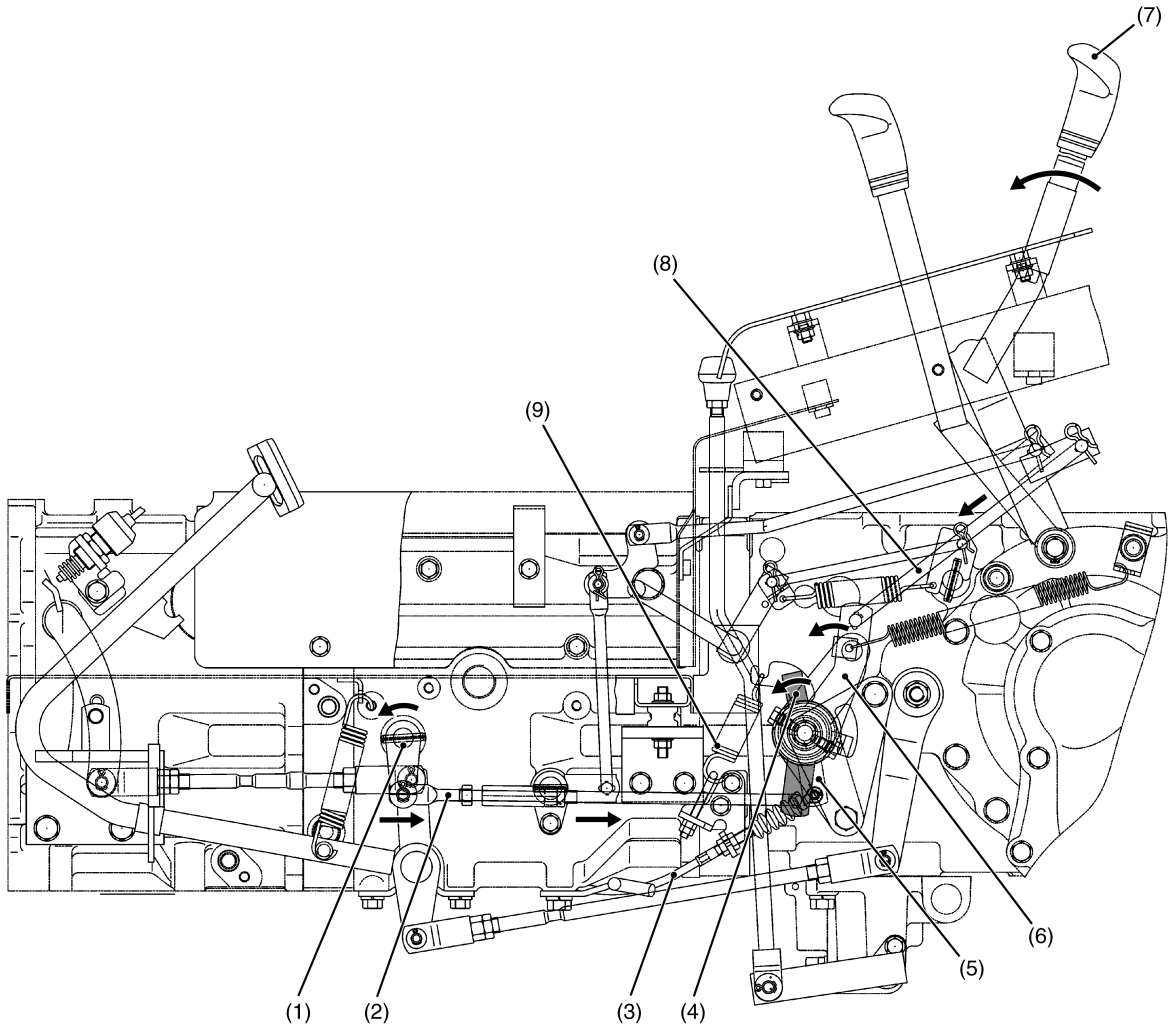

3TLAAAB3P077A

(1) Connecting Shaft	(4) Cruise Lever 1	(6) Cruise Lever 2	(8) Lever Rod
(2) Cruise Adjusting Rod	(5) Release Lever	(7) Cruise Control Lever	(9) Release Spring
(3) Release Wire			

The cruise control lever (7) and HST pedal are linked with the lever rod (8), cruise lever 1 (4), cruise lever 2 (6), cruise adjusting rod (2) and connecting shaft (1).

When the cruise control lever (7) is moved to forward direction, cruise lever 2 (6) is moved to arrow direction by the lever rod (8). The cruise lever 1 (4) is moved forward by being pushed to the cruise lever 2 (6), and cruise adjusting rod (2) is pulled backward. Because cruise adjusting rod (2) and the HST pedal are connected by the connecting shaft (1), the HST pedal is moved and HST becomes forward position.

The cruise control can be returned to neutral automatically when brake pedals are depressed.

When brake pedals are depressed, release wire pull the release lever (5) to forward.

As result, the holding force of cruise control lever (7) is lost and the cruise control lever (7) return to neutrality by force of release spring (9).

9Y1211121TRM0021US0

[4] SHIFT LINKAGE MECHANISM

(1) Range Gear Shift Lever

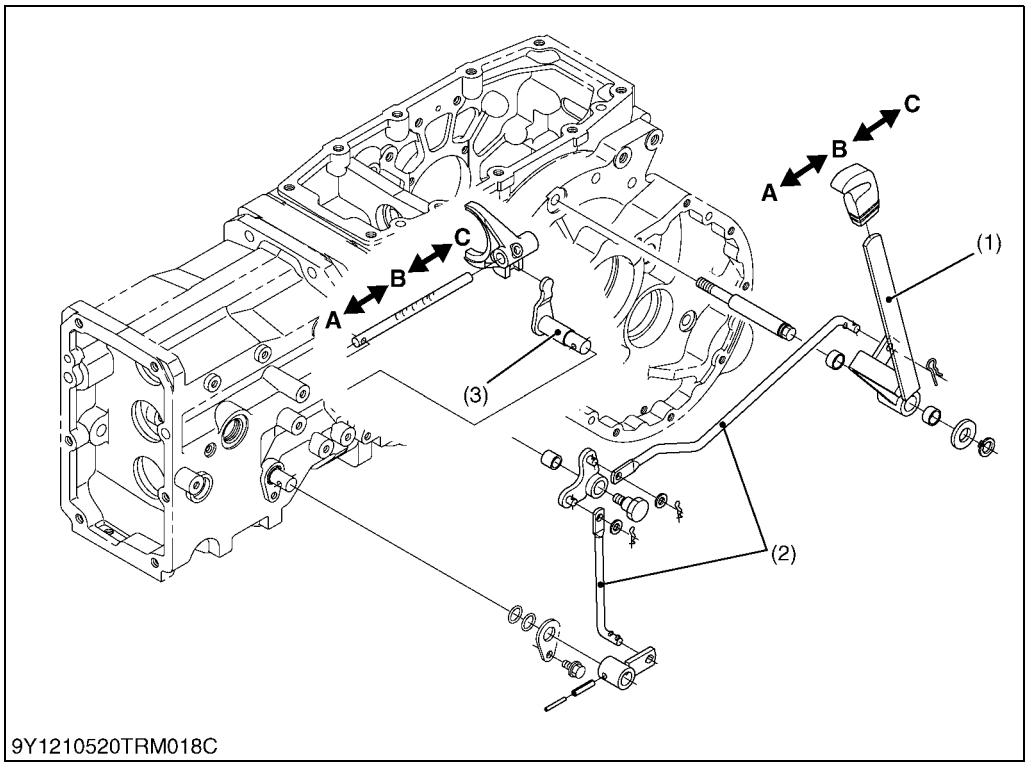

(1) Shift Lever
(2) Rod
(3) Shift Arm
(4) Shift Fork

A: L speed range
B: M speed range
C: H speed range

The links from the shift lever (1) to the shift fork (4) are connected as shown in the figure.

When the shift lever (1) is moved to the **"A"** side, the shift fork (4) is moved to the **"A"** side by means of the rod (2), and shift arm (3), changing the shift arm to the L speed position. When the shift lever (1) is moved to the **"C"** side, the shift fork (4) is moved to the H speed position.

9Y1211121TRM0022US0

(2) Front Wheel Drive Lever

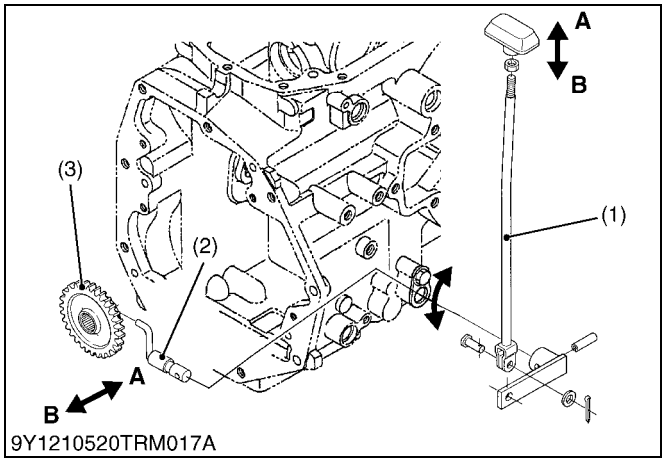

The shift lever (1) is connected directly to the shift fork (2).

When the shift lever (1) is moved to the **"A"** side, the shift fork (2) is also moved to the **"A"** side, then the front wheel drive is **"Engaged"**.

When the shift lever (1) is moved to the **"B"** side, the front wheel drive is **"Disengaged"**.

(1) Shift Lever
(2) Shift Fork
(3) Shifter Gear

A: Engaged
B: Disengaged

9Y1211121TRM0008US0

[5] PTO SYSTEM

(1) Structure

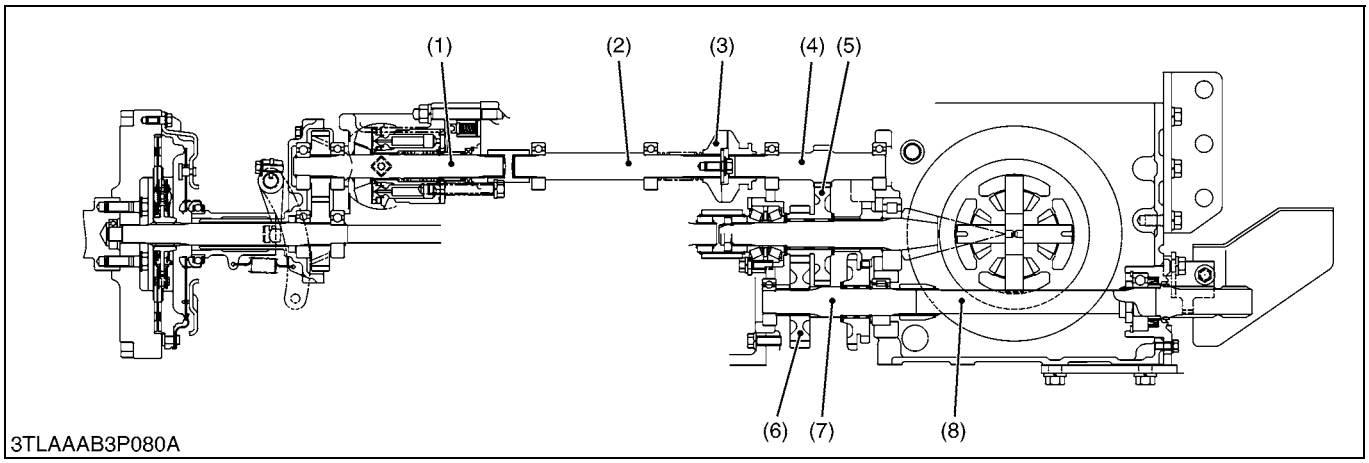

(1) Pump Shaft (HST)	(3) PTO Clutch	(5) 17T-44T Gear	(7) PTO Drive Shaft
(2) PTO Counter Shaft	(4) 16T Gear Shaft	(6) 25T Gear	(8) PTO Shaft

PTO is **"ENGAGED"** or **"DISENGAGED"** by operating the shift lever of the PTO clutch (3).
The power train from the clutch to PTO shaft is composed as shown in figure above.

9Y1211121TRM0023US0

(2) Shift Linkage

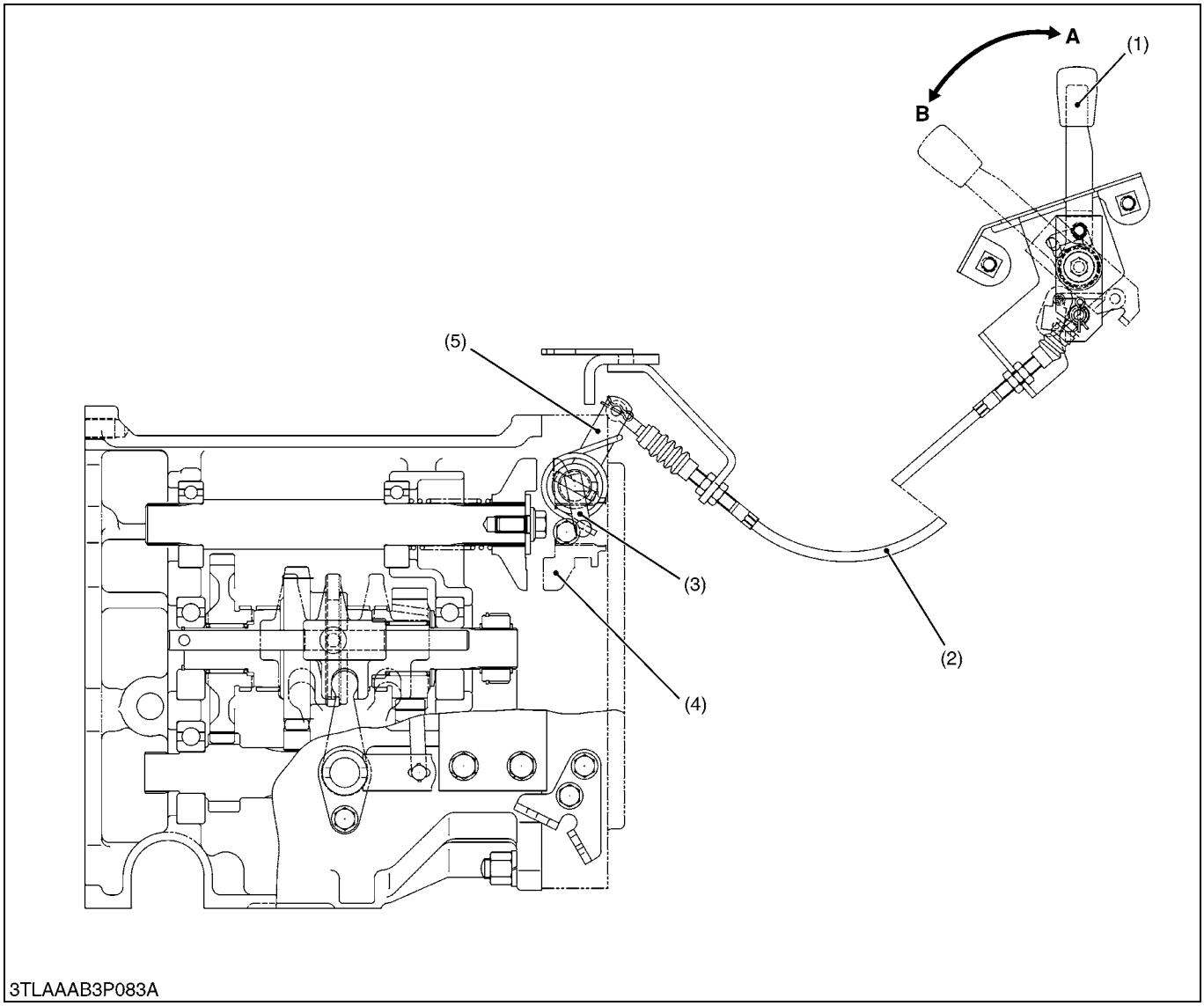

(1)	PTO Lever	(3)	PTO Shift Fork	(5)	Lever	**A:**	**Disengaged**
(2)	PTO Shift Cable	(4)	16T PTO Clutch			**B:**	**Engaged**

The shift lever (1) through the shift fork (3) are connected by shift cable (2), as shown in the figure above.

When the shift lever (1) is moved to the **A** side or the **B** side, the shift fork (3) is moved by means of the shift cable (2) and lever (5).

When the shift lever (1) is moved to the **A** side, the PTO is shifted to the **"Disengaged"** position.

When the shift lever (1) is moved to the **B** side, the PTO is shifted to the **"Engaged"** position.

9Y1211121TRM0024US0

https://truckmanualshub.com/

SERVICING

CONTENTS

1. TROUBLESHOOTING 3-S1
   [1] MANUAL TRANSMISSION TYPE 3-S1
   [2] HST TYPE 3-S3
2. SERVICING SPECIFICATIONS 3-S5
   [1] MANUAL TRANSMISSION TYPE 3-S5
   [2] HST TYPE 3-S6
3. TIGHTENING TORQUES 3-S7
4. CHECKING AND ADJUSTING 3-S8
   [1] MANUAL TRANSMISSION TYPE 3-S8
      (1) Range Gear Shift Lever 3-S8
   [2] HST TYPE 3-S10
5. PREPARATION 3-S15
   [1] MANUAL TRANSMISSION TYPE 3-S15
      (1) Separating Clutch Housing Case 3-S15
      (2) Separating Transmission Case 3-S17
   [2] HST TYPE 3-S22
      (1) Separating Clutch Housing Case 3-S22
      (2) Separating Mid Case 3-S24
      (3) Separating Transmission Case 3-S30
6. DISASSEMBLING AND ASSEMBLING 3-S36
   [1] MANUAL TRANSMISSION TYPE 3-S36
      (1) Clutch Housing Case 3-S36
      (2) Transmission Case 3-S38
      (3) Disassembling Differential Gear Assembly 3-S41
   [2] HST TYPE 3-S43
      (1) Clutch Housing 3-S43
      (2) Mid Case 3-S48
      (3) Transmission Case 3-S49
      (4) Disassembling Differential Gear Assembly 3-S52
      (5) Disassembling Cruise Control (Option) 3-S53
7. SERVICING 3-S54
   [1] CLUTCH HOUSING CASE 3-S54
      (1) Manual Transmission Type 3-S54
      (2) HST Type 3-S55
   [2] TRANSMISSION CASE 3-S58

1. TROUBLESHOOTING

[1] MANUAL TRANSMISSION TYPE

Symptom	Probable Cause and Checking Procedure	Solution	Reference Page
Excessive Transmission Noise	1. Transmission fluid insufficient or improper	Fill	G-9
	2. Gear worn or backlash improper	Adjust or replace	3-S54, 3-S58
	3. Bearing worn or broken	Replace	3-S58
	4. Spline worn	Replace	3-S54, 3-S58
	5. Snap rings on the shaft come off	Repair	3-S37, 3-S40
	6. Shift fork worn	Replace	3-S37, 3-S40
	7. Spiral bevel pinion lock nut improperly tightened	Adjust	3-S59
	8. Improper backlash between spiral bevel pinion and spiral bevel gear	Adjust	3-S59
	9. Improper backlash between differential pinion and differential side gear	Adjust	3-S61
Gear Slip Out of Mesh	1. Detent ball fallen	Repair	3-S37
	2. Detent spring weaken	Replace	3-S37
	3. Shifter or shift fork worn or damaged	Replace	3-S37, 3-S40, 3-S49
	4. Gears worn or broken	Replace	3-S54, 3-S58
Hard Shifting	1. Shifter or shift fork worn or damaged	Replace	3-S37, 3-S40, 3-S49
	2. Shift fork bent	Replace	3-S37, 3-S40, 3-S49
	3. Shift linkage rusted	Clean or replace	3-M5, 3-M18
	4. Shaft part of shift arms rusted	Clean or replace	3-S37, 3-S40
Gears Clash When Shifting	1. Clutch does not release	Adjust	2-S5
	2. Gears worn or damaged	Replace	3-S54, 3-S58

Symptom	Probable Cause and Checking Procedure	Solution	Reference Page
Differential Lock Can Not Be Set	1. Differential lock shifter damaged	Replace	3-S38
	2. Differential lock shift fork damaged	Replace	3-S38
	3. Differential lock clevis pin bent or damaged	Replace	3-S38
	4. Differential lock shift fork mounting spring pin damaged	Replace	3-S38
	5. Differential lock fork shaft bent or damaged	Replace	3-S38
Differential Lock Pedal Does Not Return	1. Differential lock pedal return spring weaken or damaged	Replace	2-S11
	2. Differential lock clevis pin bent or damaged	Replace	3-S38
	3. Differential lock fork shaft bent	Replace	3-S38
Excessive or Unusual Noise at All Time	1. Insufficient or improper type of transmission fluid used	Fill	G-9
	2. Bearing worn	Replace	3-S58
	3. Improper backlash between spiral bevel pinion and spiral bevel gear	Adjust	3-S59
	4. Improper backlash between differential pinion and differential side gear	Adjust	3-S61
Noise While Turning	1. Differential pinions or differential side gears worn or damaged	Replace	3-S61
	2. Differential lock binding (does not disengage)	Replace	3-S38, 3-S51
	3. Bearing worn	Replace	3-S58

9Y1211121TRS0114US0

[2] HST TYPE

Symptom	Probable Cause and Checking Procedure	Solution	Reference Page
Excessive Transmission Noise	1. Transmission fluid insufficient or improper	Fill	G-9
	2. Gear worn or backlash improper	Adjust or replace	3-S58
	3. Bearing worn or broken	Replace	3-S58
	4. Spline worn	Replace	3-S58
	5. Snap rings on the shaft come off	Repair	3-S49, 3-S50
	6. Shift fork worn	Replace	3-S49
	7. Spiral bevel pinion lock nut improperly tightened	Adjust	3-S59
	8. Improper backlash between spiral bevel pinion and spiral bevel gear	Adjust	3-S59
	9. Improper backlash between differential pinion and differential side gear	Adjust	3-S61
Gears Clash When Shifting	1. Clutch does not release	Adjust	2-S5
	2. Gears worn or damaged	Replace	3-S58
Differential Lock Can Not Be Set	1. Differential lock shifter damaged	Replace	3-S51
	2. Differential lock shift fork damaged	Replace	3-S51
	3. Differential lock clevis pin bent or damaged	Replace	3-S51
	4. Differential lock shift fork mounting spring pin damaged	Replace	3-S51
	5. Differential lock fork shaft bent or damaged	Replace	3-S51
Differential Lock Pedal Does Not Return	1. Differential lock pedal return spring weaken or damaged	Replace	2-S18
	2. Differential lock clevis pin bent or damaged	Replace	3-S51
	3. Differential lock fork shaft bent	Replace	3-S51

Symptom	Probable Cause and Checking Procedure	Solution	Reference Page
Excessive or Unusual Noise at All Time	1. Insufficient or improper type of transmission fluid used	Fill	G-9
	2. Bearing worn	Replace	3-S58
	3. Improper backlash between spiral bevel pinion and spiral bevel gear	Adjust	3-S59
	4. Improper backlash between differential pinion and differential side gear	Adjust	3-S61
Noise While Turning	1. Differential pinions or differential side gears worn or damaged	Replace	3-S51
	2. Differential lock binding (does not disengage)	Replace	2-S18
	3. Bearing worn	Replace	3-S58
System Does Not Operate in Either Direction	1. Oil level is too low	Fill	G-9
	2. Charge pressure is too low	Adjust	3-S11
	3. Speed control pedal linkage damaged	Replace	3-M16
	4. Component parts damaged	Replace	3-M10
Vibration and Noise	1. Oil level is too low	Fill	G-9
	2. Charge pressure is too low	Adjust	3-S11
	3. Component parts damaged	Replace	3-M10
Transmission Oil Overheats	1. Oil level is too low	Fill	G-9
	2. Excessive machine load	Replace	–
	3. Oil cooler damaged	Replace	1-S34
	4. Improper charge pressure	Adjust	3-S11
Machine Does Not Stop in Neutral Position	1. Improper adjustment of neutral holder	Adjust	3-S12
	2. Speed control linkage is out of adjustment or sticking	Replace	3-M16
System operates in One Direction Only	1. Speed control linkage damaged	Adjust	3-S12
	2. Check and high pressure relief valve damaged	Adjust	3-S10

9Y1211121TRS0115US0

2. SERVICING SPECIFICATIONS

[1] MANUAL TRANSMISSION TYPE

Item		Factory Specification	Allowable Limit
Gear	Backlash	0.1 to 0.3 mm 0.004 to 0.01 in.	0.4 mm 0.02 in.
Gear to Spline	Clearance	0.030 to 0.078 mm 0.0012 to 0.0030 in.	0.2 mm 0.008 in.
Shift Fork to Shift Gear Groove	Clearance	0.15 to 0.40 mm 0.0059 to 0.015 in.	0.6 mm 0.02 in.
Shift Fork to Shifter Groove	Clearance	0.15 to 0.40 mm 0.0059 to 0.015 in.	0.6 mm 0.02 in.
Shift Fork Spring	Free Length	22 mm 0.87 in.	20 mm 0.79 in.
Spiral Bevel Pinion and Differential Assembly	Combined Turning Torque	4.0 to 6.3 N·m 0.40 to 0.65 kgf·m 2.9 to 4.7 lbf·ft	–
Spiral Bevel Gear and 8T Spiral Bevel Pinion	Backlash	0.15 to 0.30 mm 0.0059 to 0.011 in.	–
Differential Case Bore to Differential Side Gear Boss	Clearance	0.0500 to 0.151 mm 0.00197 to 0.00594 in.	0.35 mm 0.014 in.
• Differential Case Bore	I.D.	40.500 to 40.562 mm 1.5945 to 1.5969 in.	–
• Differential Side Gear Boss	O.D.	40.411 to 40.450 mm 1.5910 to 1.5925 in.	–
Differential Case Cover Bore to Differential Side Gear Boss	Clearance	0.0900 to 0.169 mm 0.00355 to 0.00665 in.	0.35 mm 0.014 in.
• Differential Case Cover Bore	I.D.	40.540 to 40.580 mm 1.5961 to 1.5976 in.	–
• Differential Side Gear Boss	O.D.	40.411 to 40.450 mm 1.5910 to 1.5925 in.	–
Differential Pinion Shaft to Differential Pinion	Clearance	0.0800 to 0.122 mm 0.00315 to 0.00480 in.	0.30 mm 0.012 in.
• Differential Pinion	I.D.	19.959 to 19.980 mm 0.78579 to 0.78661 in.	–
• Differential Pinion Shaft	O.D.	20.060 to 20.081 mm 0.78977 to 0.79059 in.	–
Differential Pinion to Differential Side Gear	Backlash	0.15 to 0.30 mm 0.0059 to 0.011 in.	0.4 mm 0.02 in.

9Y1211121TRS0116US0

[2] HST TYPE

Item		Factory Specification	Allowable Limit
Check and High Pressure Relief Valve Condition	Setting Pressure	32.4 to 35.3 MPa 330 to 360 kgf/cm2 4700 to 5120 psi	–
Charge Relief Valve Condition	Setting Pressure	0.5 to 0.7 MPa 5 to 8 kgf/cm^2 80 to 100 psi	–
HST Pedal and Stopper Bolt	Clearance	2 to 5 mm 0.08 to 0.1 in.	–
	Height	20 mm 0.79 in.	–
	Height	13 mm 0.51 in.	–
Cruise Control Rod	Length	315 mm 12.4 in.	–

9Y1211121TRS0117US0

3. TIGHTENING TORQUES

Tightening torques of screws, bolts and nuts on the table below are especially specified.
(For general use screws, bolts and nuts: See page G-11.)

[Manual Transmission Type]

Item	N·m	kgf·m	lbf·ft
Turnbuckle lock screw	40 to 45	4.0 to 4.6	29 to 33
Steering wheel mounting nut	49 to 55	5.0 to 5.7	37 to 41
Screw (joint shaft)	23.5 to 27.4	2.4 to 2.8	18 to 20
Screw (bearing support)	23.5 to 27.4	2.4 to 2.8	18 to 20
Delivery pipe joint screw	49 to 68	5.0 to 7.0	37 to 50
Return pipe joint screw	49 to 68	5.0 to 7.0	37 to 50
Return pipe retaining joint nut	49 to 58	5.0 to 6.0	37 to 43
Rear wheel mounting screw and nut	197 to 225	20.0 to 23.0	145 to 166
ROPS lower frame mounting screw	167 to 196	17.0 to 20.0	123 to 144
Three point delivery pipe joint screw	49 to 68	5.0 to 7.0	37 to 50
Lock nut	150 to 190	15 to 20	110 to 140
Pinion bearing case mounting screw	40 to 44	4.0 to 4.5	29 to 32
Spiral bevel gear UBS screw	69 to 88	7.0 to 9.0	51 to 65

[HST Type]

Item	N·m	kgf·m	lbf·ft
Plate mounting screw	24 to 27	2.4 to 2.8	18 to 20
Steering wheel mounting nut	49 to 55	5.0 to 5.7	37 to 41
Screw (joint shaft)	23.5 to 27.4	2.4 to 2.8	18 to 20
Screw (bearing support)	23.5 to 27.4	2.4 to 2.8	18 to 20
Delivery pipe joint screw	49 to 69	5.0 to 7.0	37 to 50
Joint screw (HST return pipe)	80 to 88	8.1 to 9.0	59 to 65
Retaining nut (HST delivery pipe)	49 to 58	5.0 to 6.0	37 to 43
Mid case and transmission case mounting nut	103 to 117	10.5 to 12.0	76.0 to 86.7
Rear wheel mounting screw and nut	197 to 225	20.0 to 23.0	145 to 166
ROPS lower frame mounting screw	167 to 196	17.0 to 20.0	123 to 144
Neutral holder mounting screw	24 to 27	2.4 to 2.8	18 to 20
Port block mounting hex. socket screw	61 to 70	6.2 to 7.2	45 to 52
Hex. head plug	59 to 78	6.0 to 8.0	44 to 57
Hex. socket head screw	25 to 29	2.5 to 3.0	18 to 21
Swashplate mounting hex. head screw	29 to 35	2.9 to 3.6	21 to 26
Lock nut	150 to 190	15 to 20	110 to 140
Spiral bevel gear UBS screw	69 to 88	7.0 to 9.0	51 to 65
Cruise control boss screw (M12)	78 to 90	7.9 to 9.2	58 to 66
Rear axle case screw (M12)	78 to 90	7.9 to 9.2	58 to 66

9Y1211121TRS0118US0

4. CHECKING AND ADJUSTING

[1] MANUAL TRANSMISSION TYPE

(1) Range Gear Shift Lever

CAUTION

- **Park the tractor on a firm and level ground and set the parking brake.**
- **Lower the loader and other implement to the ground.**
- **Stop the engine, and remove the key.**

When shifting slowly the range gear shift lever from the position **H** (High) to the position **N** (Neutral), the gear inside sometimes remains at the position **H** and does not move, although the range gear shift lever is at the position **N**.

It has been caused by a bad adjustment of the turnbuckle.

Please verify and adjust the turnbuckle as follows.

9Y1211121TRS0001US0

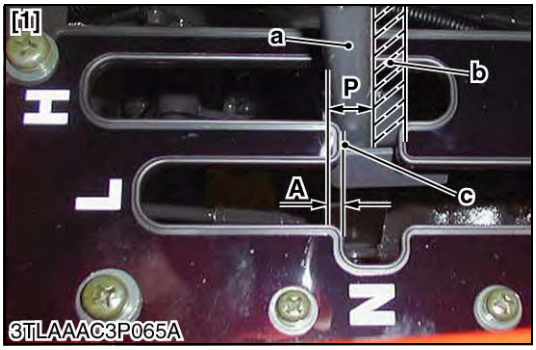

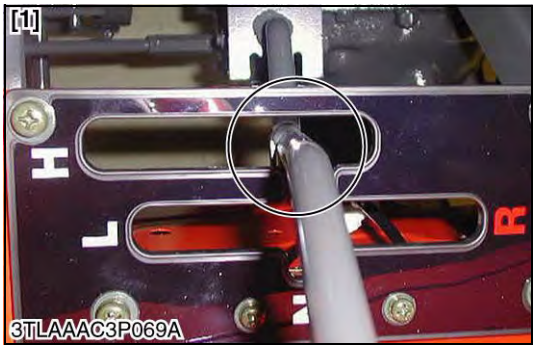

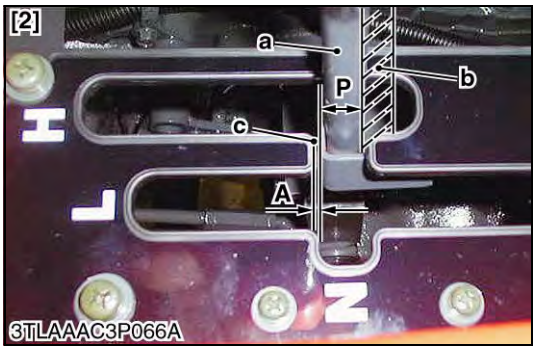

Checking Range Gear Shift Lever Neutral Position

1. Shift the range gear shift level to **N** (Neutral) position on the **H** (High) speed side. Keeping the lever slightly being pushed forward (to the left of the photo), measure the overlapping length **"A"** of the level and guide.
2. Judgement
   [1] CORRECT
   Length **"A"** is 1 to 5 mm (0.04 to 0.1 in.) when the guide and lever are overlapping.
   [2] INCORRECT
   The overlapping length **"A"** is less than 1 mm (0.04 in.), or when there is a clearance between the guide and lever. In this case, carry out the following adjustment.

A:	**Overlapping length of the level and guide.**	**a:**	**The forward position of range lever in neutral position.**
P:	**The free play stroke of range lever.**	**b:**	**The backward position of range lever in neutral position.**
		c:	**The end of the guide.**

9Y1211121TRS0002US0

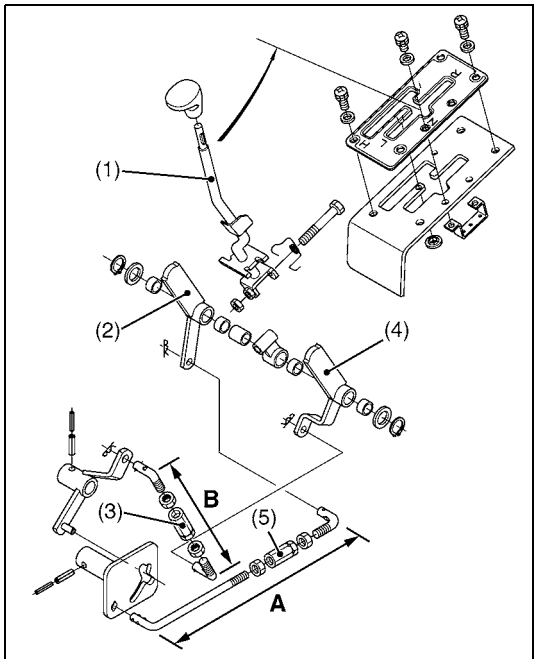

9Y1210520TRS071A

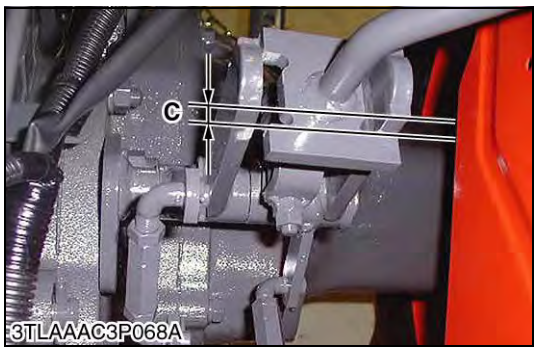

3TLAAAC3P068A

Range Gear Shift Lever Position

1. Adjust (shorten) the turnbuckle **H** (3) so that the overlapping length becomes 1 to 5 mm (0.04 to 0.1 in.).

(Reference)

Length of the rod **A**	Reference value	202 mm 7.95 in.
Length of the rod **B**	Reference value	81 mm 3.2 in.

2. Repeat shifting in a sequence of **(H → L → H → R → H)** and confirm the shifting is possible.
   a) If shifting to the directions of left and right **(H→ L and L → H)** is possible, the adjustment has been completed.
   b) When shifting to the directions of left and right is not possible, this is because the drift **"C"** in the forward and backward of the arm **H** (2) and arm (**L** - **R**) (4) in the neutral position has become too large. So make adjustment to the turnbuckle (**L** - **R**) (5) to correct the drift.
   c) Again, check by shifting and complete the adjustment.

■ **NOTE**

- **Lock securely the lock screws of adjusted turnbuckle to prevent from becoming loose.**

Tightening torque	Turnbuckle (3) (5) lock screw	40 to 45 N·m 4.0 to 4.6 kgf·m 29 to 33 lbf·ft

(1) Range Gear Shift Lever
(2) Arm **H**
(3) Turnbuckle **H**
(4) Arm (**L - R**)
(5) Turnbuckle (**L - R**)

A: Length of the rod
B: Length of the rod
C: Drift of arm in forward and backward directions

9Y1211121TRS0003US0

[2] HST TYPE

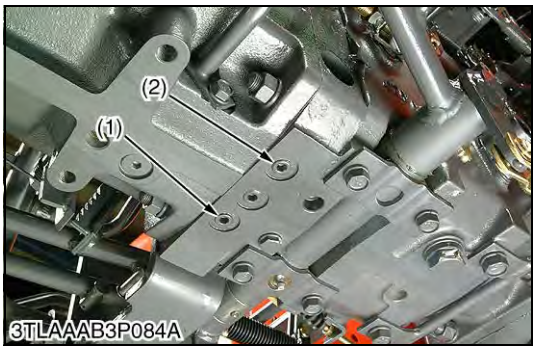

Checking High Pressure Relief Valve Pressure

CAUTION

- **When checking, park the machine on flat ground, apply the parking brake.**

1. Remove the brake rod and the propeller shaft.
2. Remove the hex. socket head plug from **P1** or **P2** port. (**P2** is for forward and **P1** is for reverse.)
3. Assemble long adaptor **C** (07916-60831) and threaded joint (07916-50341) with the gasket between them.
4. Install the assemble long adaptor **C** and threaded joint to **P2** (forward) or **P1** (reverse) port (thread size : Rc (PT) 1/4).
5. Install the cable, threaded joint in relief valve set pressure tester and high pressure gauge to threaded joint in order.
6. Check to see that parking brake is applied.
7. Run the engine at maximum speed.
8. Place the range gear shift lever in **N** position.
9. Depress the HST pedal, and measure the high pressure relief valve pressure.
10. If the measurement is not within the factory specification, check the high pressure relief valve assembly. (See page 3-S44.)

(When reassembling)

- Install the hex. socket head plug to the port with O-ring.

Check high pressure relief valve	Factory specification	32.4 to 35.3 MPa 330 to 360 kgf/cm^2 4700 to 5120 psi

Condition

- Engine speed: Maximum

■ **IMPORTANT**

- **Measure quickly so that the relief valve may not be in operation more than 10 seconds.**

■ **NOTE**

- **Be sure to use a pressure gauge with over 39.2 MPa (400 kgf/cm^2, 5690 psi) capacity.**

(1) **P1** Port (for Reverse) (2) **P2** Port (for Forward)

9Y1211121TRS0004US0

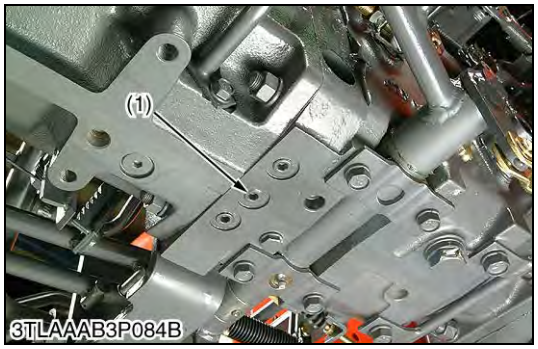

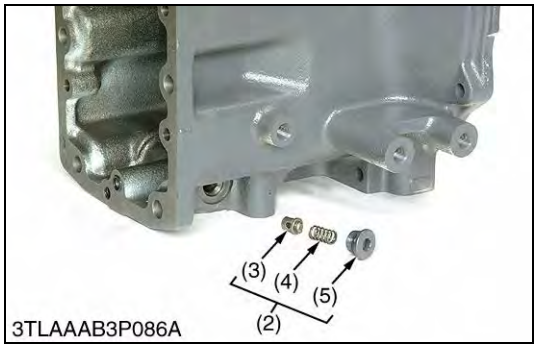

Checking Charge Relief Pressure

CAUTION

- **When parking, park the machine on flat ground, apply the parking brake.**

1. Remove the brake rod and the propeller shaft.
2. Remove the hex. socket head plug from **P** port (1).
3. Assemble long adaptor **C** (07916-60831) and thread joint (07916-50341) with the gasket between them.
4. Install the assembled long adaptor **C** and thread joint to **P** port (1) (thread size : Rc (PT) 1/4).
5. Install the cable, thread joint in relief valve set pressure tester and low pressure gauge to threaded joint in order.
6. Place the range gear shift lever in **N** position.
7. Run the engine at maximum speed.
8. Release the HST pedal to set in neutral, and measure the charge pressure.
9. If the measurement is not within the factory specifications, check charge relief valve (2).

(When reassembling)

- Apply liquid lock (Three Bond 1324 or its equivalent) to the hex. socket head plug.

Charge relief pressure	Factory specification	0.5 to 0.7 MPa 5 to 8 kgf/cm^2 80 to 100 psi

Condition

- Engine speed: Maximum
- Oil temperature: 40 to 60 °C (104 to 140 °F)

■ **NOTE**

- **Use a new transmission oil filter.**
- **Be sure to use a pressure gauge with over 2.9 MPa (30 kgf/cm^2, 430 psi) capacity.**

(1) **P** Port
(2) Charge Relief Valve
(3) Poppet
(4) Spring
(5) Plug (GPF 3/8)

9Y1211121TRS0005US0

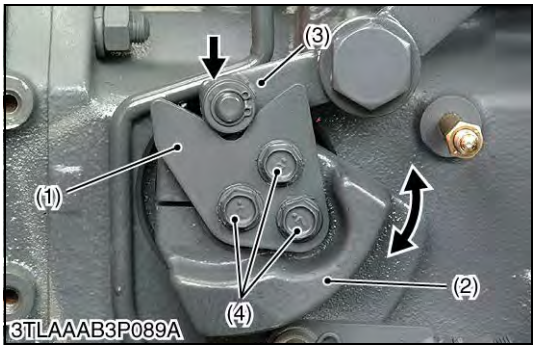

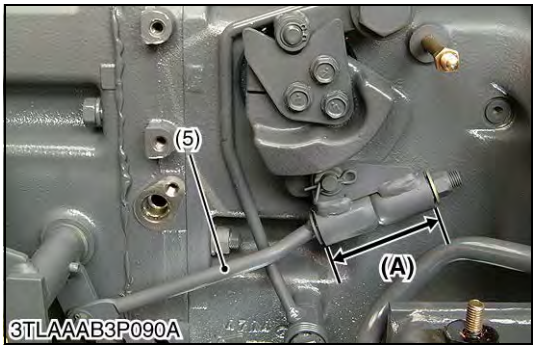

Adjusting Neutral

1. Disengage the front wheel drive lever. (Drive only rear wheels.)
2. Set the cruise control to **"OFF"** position. (HST pedal is neutral position.)
3. Check to see that the length **(A)** of HST neutral rod (5) is specified length.
   If not, adjust as follows
   Length **(A)**: 73.0 to 74.0 mm (2.88 to 2.91 in.).
4. Lift the rear of the tractor so that the rear wheels are off the ground and run the engine at maximum speed and drive only rear wheels.
5. Slightly loosen the plate mounting screws (4).
6. Press the neutral holder arm (3) to the plate (1).
7. Then rotate the neutral holder (2) clockwise or counter clockwise until wheels stop completely.
8. Hold the neutral holder (2) and tighten the plate mounting screws (4).

■ **NOTE**
- **Be sure to tighten the plate mounting screw with specified torque.**

Tightening torque	Plate mounting screw	24 to 27 N·m 2.4 to 2.8 kgf·m 18 to 20 lbf·ft

(1) Plate
(2) Neutral Holder
(3) Neutral Holder Arm
(4) Screws
(5) HST Neutral Rod

(A) Length

9Y1211121TRS0006US0

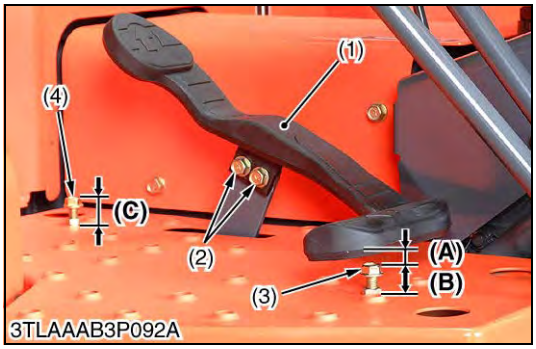

Adjusting HST Pedal and Stopper Bolt

■ **NOTE**
- **Stop the engine when adjusting the pedal stroke.**
- **Be sure to adjust the HST neutral position.**

1. Adjust the height **(B)** and **(C)** of the pedal stopper bolt (3), (4).
2. Loosen the HST pedal mounting screws (2).
3. Tighten the HST pedal mounting screws (2) so that the clearance **(A)** between HST pedal and stopper bolt (3) becomes factory specification at when HST pedal is fully depressed forward..

Clearance **(A)**	Factory specification	2 to 5 mm 0.08 to 0.1 in.
Height **(B)**	Factory specification	20 mm 0.79 in.
Height **(C)**	Factory specification	13 mm 0.51 in.

(1) HST Pedal
(2) Screws
(3) Stopper Bolt (Forward)
(4) Stopper Bolt (Reverse)

9Y1211121TRS0007US0

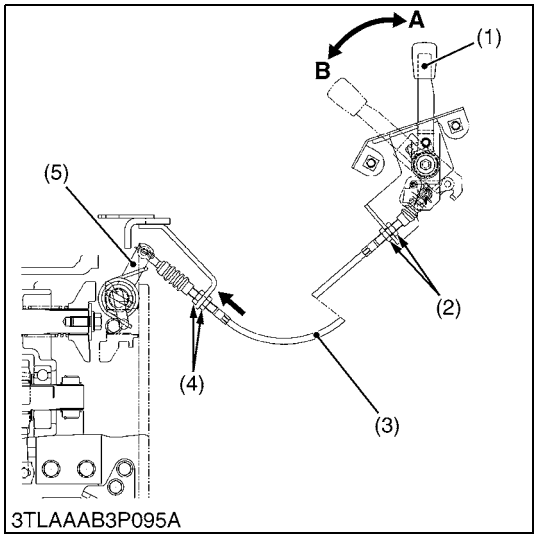

3TLAAAB3P095A

Adjusting PTO Wire

1. Check to see that the threaded portion of wire (3) rear side is set at center position.
   If not, set by lock nuts (2).
2. Set the PTO lever (1) at the **"OFF"** position **"A"**.
3. The luck nut (4) is tightened in the direction of the arrow. Then stop it before the lever (5) moves.
4. Retighten the lock nut securely.

(1) PTO Lever
(2) Lock Nuts (Rear Side)
(3) PTO Wire
(4) Lock Nuts (Front Side)
(5) Lever

A: OFF Position
B: ON Position

9Y1211121TRS0008US0

3TLAAAB3P087A

Checking Cruise Lever Operating Force (Option)

1. Push the cruise control lever (1) into maximum tied position. After that pull it 50 mm (2.0 in.) back.
2. Measure the force needed to move the cruise control lever back into the maximum position at the top of the lever grip (2).
3. If the force is not within the factory specifications, loosen the lock nut (4) and adjust the tension of cruise spring (3).
4. Retighten the lock nut securely.

Cruise control lever operation force	Factory specification	59 to 98 N 6.0 to 10 kgf 14 to 22 lbf

(1) Cruise Control Lever
(2) Lever Grip
(3) Cruise Spring
(4) Lock Nut

9Y1211121TRS0009US0

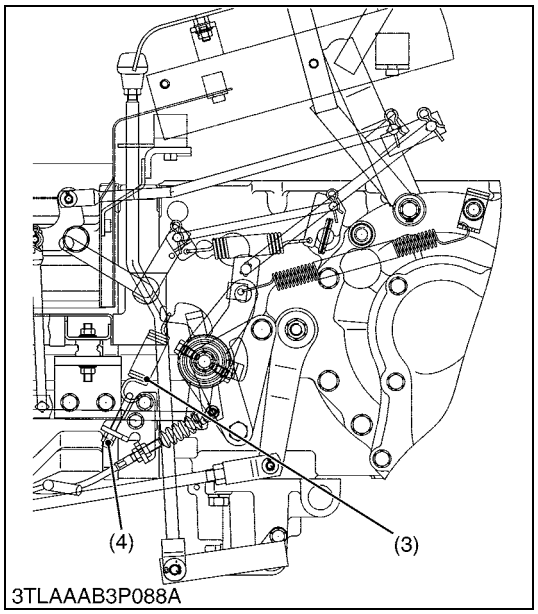

3TLAAAB3P088A

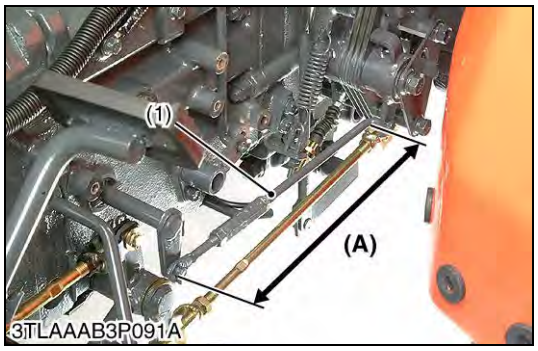

3TLAAAB3P091A

Adjusting Cruise Control Rod (Option)

1. Set the cruise control lever to fully forward.
2. Adjust the cruise control rod (1) so that trunnion shaft may maximum incline forward.

Length of cruise control rod **(A)**	Factory specification	315 mm 12.4 in.

(1) Cruise Control Rod

(A) Length

9Y1211121TRS0010US0

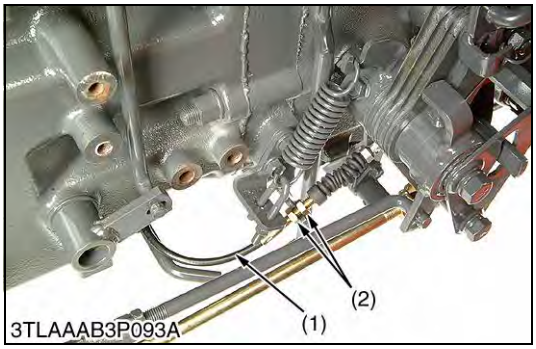

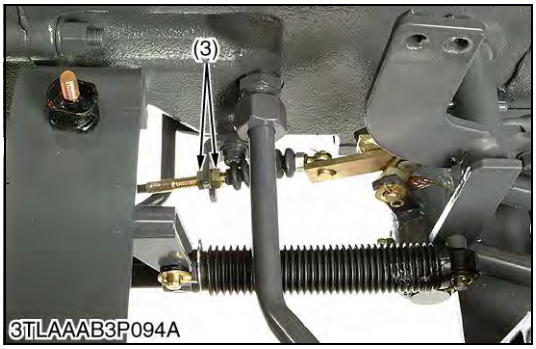

Adjusting Cruise Control Release Linkage (Option)

1. Adjust the brake pedals play first.
2. Depress one of the brake pedals to make sure the cruise control is not released. Also depress both the brake pedals coupled together to make sure that the cruise control is released.
3. If the cruise control does not work as above adjust with release wire (1) as follows.
   - Check to see that the threaded portion of the wire (1) rear side is set at the center position. If not, set by lock nuts (2).
4. In the end of the play of the brake pedal, adjust the lock nuts (3) so that slack of the wire may become 0.
   - Confirm whether to move as above-mentioned 2.
     If not, adjust by lock nut (3).

(1) Release Wire
(2) Lock Nut (Rear)
(3) Lock Nut (Front)

9Y1211121TRS0012US0

5. PREPARATION

[1] MANUAL TRANSMISSION TYPE

(1) Separating Clutch Housing Case

Separating Clutch Housing Case from Engine

1. Refer to "PREPARATION" at "CLUTCH" section. (See page 2-S6.)

9Y1211121TRS0013US0

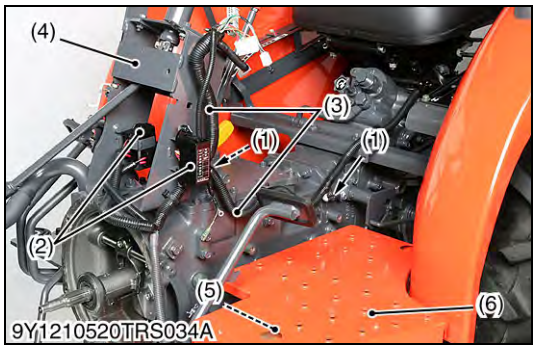

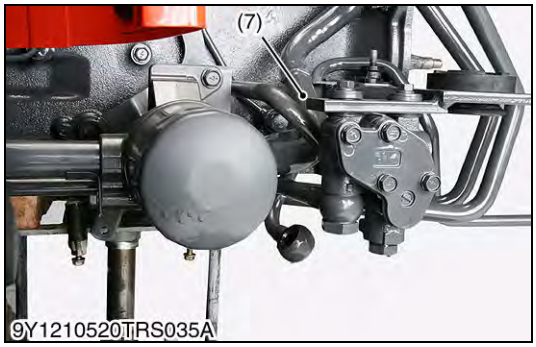

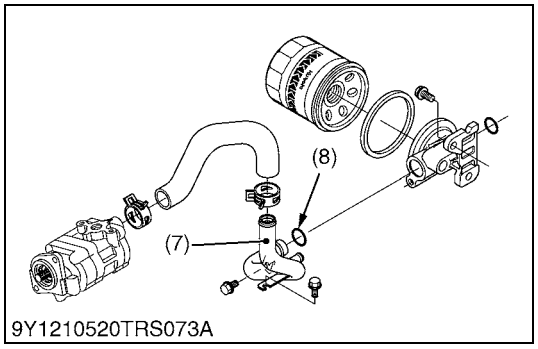

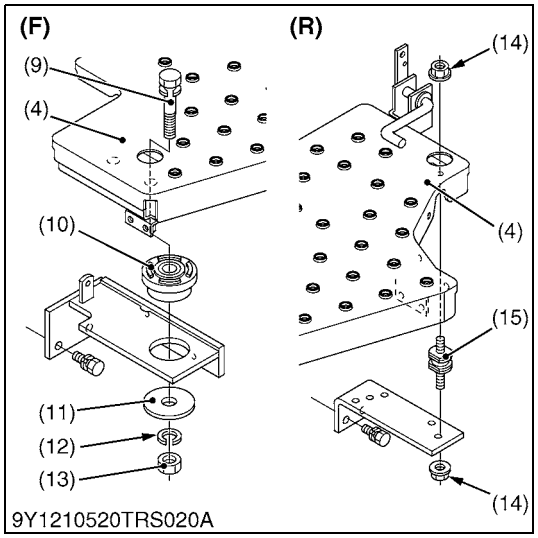

Electrical Wiring, Step and Steering Support

1. Disconnect the ground cables (1) and remove the slow blow fuse box (2) and wiring (3) from the steering support (4).
2. Remove the steering support (4).
3. Disconnect the spring (5) and remove the step (L.H.) (6).
4. Remove the suction pipe (7).

(When reassembling)

- Be sure to set the washers and rubber plates of the step (L.H.) (6) mounting screw at an original positions as shown in figure.

■ **NOTE**

- **Take care not to damage the O-ring.**
- **If the O-ring are damaged, change them.**

(1)	Ground Cable	(10)	Rubber Plate
(2)	Slow Blow Fuse Box	(11)	Washer
(3)	Wiring	(12)	Spring Washer
(4)	Steering Support	(13)	Nut
(5)	Spring (for Clutch Pedal)	(14)	Nut
(6)	Step (L.H.)	(15)	Cushion
(7)	Suction Pipe		
(8)	O-ring (Suction Pipe)	**(F)**	**Front Side**
(9)	Screw	**(R)**	**Rear Side**

9Y1211121TRS0014US0

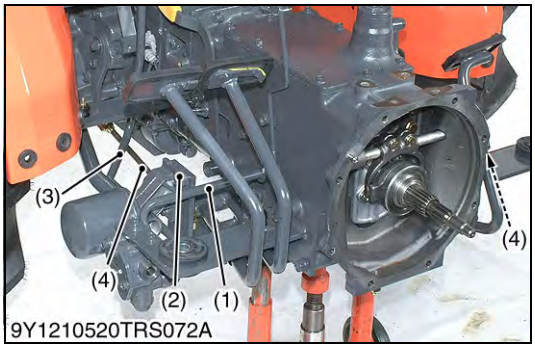

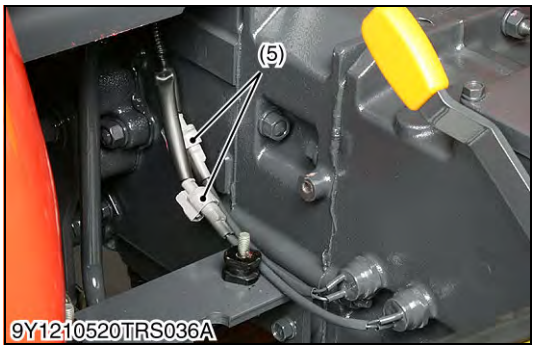

Delivery Pipe and Return Pipe

1. Check the clutch housing case and transmission case are securely mounted on the disassembling stands.
2. Remove the return pipe (1) and disconnect delivery pipe (3).
3. Remove the filter bracket stay (2).
4. Disconnect the **2P** connectors (5).
5. Remove the brake rods (4).

(When reassembling)

- Install the new copper washers to the delivery pipe joint screw securely.

Tightening torque	Delivery pipe joint screw	49 to 68 N·m 5.0 to 7.0 kgf·m 37 to 50 lbf·ft
	Return pipe joint screw	49 to 68 N·m 5.0 to 7.0 kgf·m 37 to 50 lbf·ft
	Return pipe retaining joint nut	49 to 58 N·m 5.0 to 6.0 kgf·m 37 to 43 lbf·ft

(1) Return Pipe
(2) Filter Bracket Stay
(3) Delivery Pipe (Hydraulic System)
(4) Brake Rod
(5) **2P** Connector (PTO Safety Switch)

9Y1211121TRS0015US0

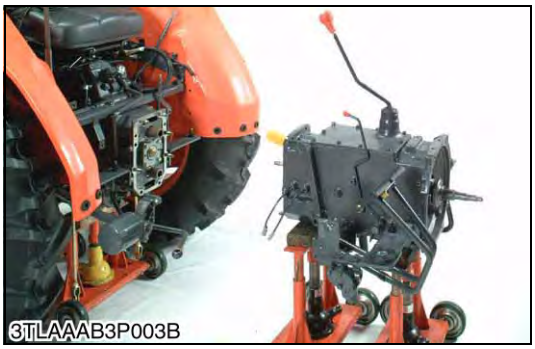

Separating Clutch Housing Case from Transmission Case

1. Remove the clutch housing mounting screws.
2. Separate the clutch housing from the transmission case.

9Y1211121TRS0016US0

(2) Separating Transmission Case

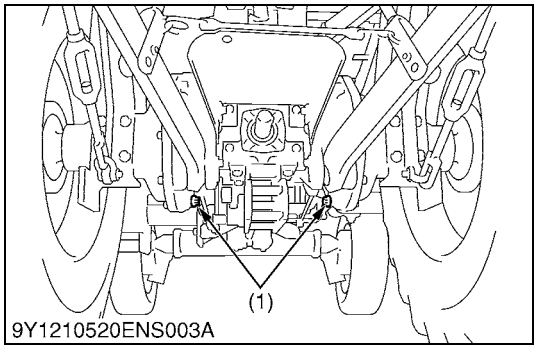

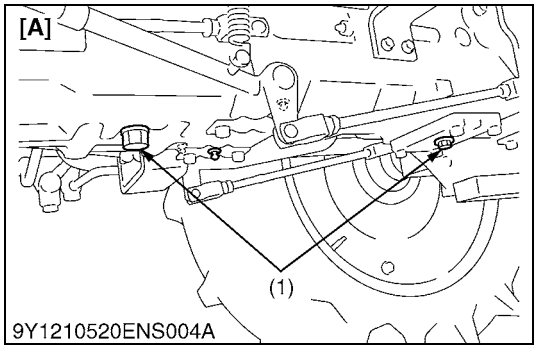

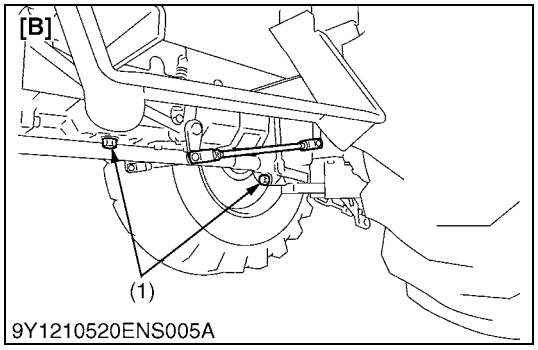

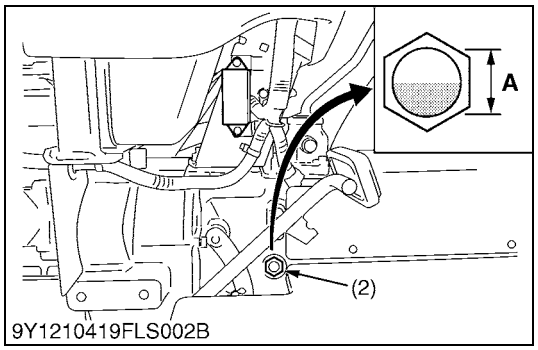

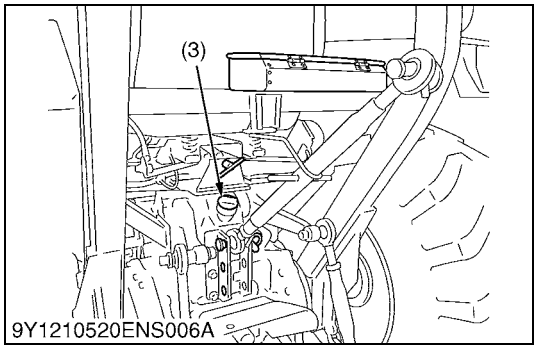

Draining the Transmission Fluid

WARNING

To avoid personal injury or death:

- **Allow engine to cool down sufficiently, oil can be hot and can burn.**

1. Remove the drain plugs (1) at the bottom of the transmission case and drain the oil completely into the oil pan.
2. After draining reinstall the drain plugs.

(When reassembling)

- Fill up new oil to the upper line of the gauge (2) from the oil inlet port after removing the oil inlet plug (3).
- After running the engine for a few minutes, stop it and check the fluid level again, if low, add fluid prescribed level **"A"**.

■ **IMPORTANT**

- **Use only multi-grade transmission fluid. Use of other fluids may damage the transmission or hydraulic system.**
- **Refer to "LUBRICANTS, FUEL AND COOLANT". (See page G-9.)**
- **Never work the tractor immediately after changing the transmission fluid. Keeping the engine at medium speed for a few minutes to prevent damage to the transmission.**
- **Do not mix different brands oil together.**

Transmission fluid capacity	2WD	27.0 L 7.1 U.S.gals 5.9 Imp.gals
	4WD	27.5 L 7.3 U.S.gals 6.1 Imp.gals

(1) Drain Plug
(2) Gauge
(3) Oil Inlet Plug

[A] 2WD
[B] 4WD
A: Oil level is acceptable within this range.

9Y1211121CLS0005US0

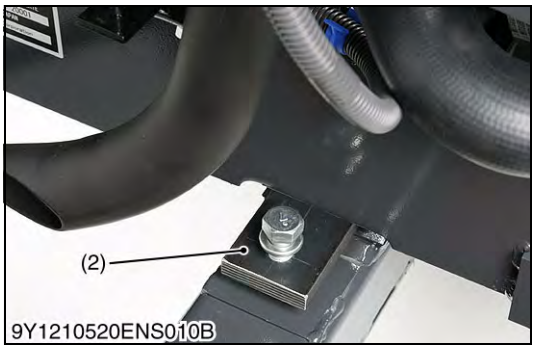

Battery Negative Cable and Front Axle Rocking Restrictor

1. To open the bonnet, hold the bonnet with a hand and pull the release lever and open the bonnet.
2. Disconnect the battery negative cable (1).
3. Install the front axle rocking restrictor (2) (refer to "SPECIAL TOOLS" at "G. GENERAL" section (see page G-55)) to the front axle bracket and chock the wheels.

(1) Negative Cable
(2) Front Axle Rocking Restrictor

9Y1211121TRS0017US0

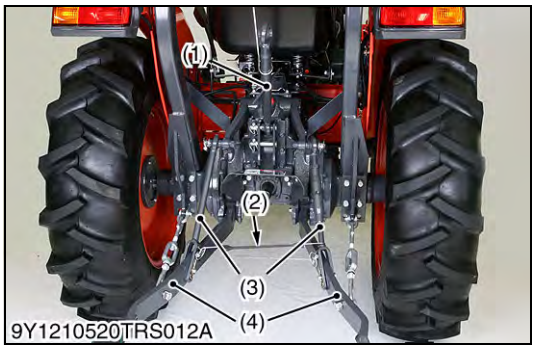

Three Point Linkage

1. Remove the top link (1).
2. Remove the rubber spring (2), the lift rod (3) and the lower link (4).

(1) Top Link
(2) Rubber Spring
(3) Lift Rod
(4) Lower Link

9Y1211121TRS0018US0

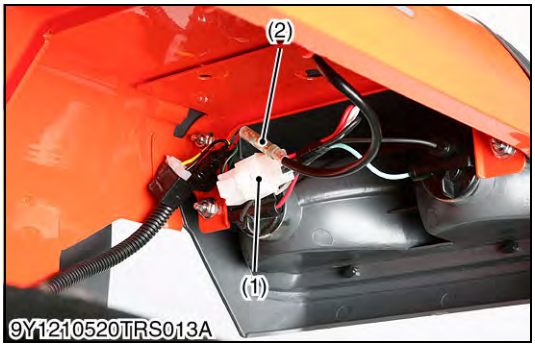

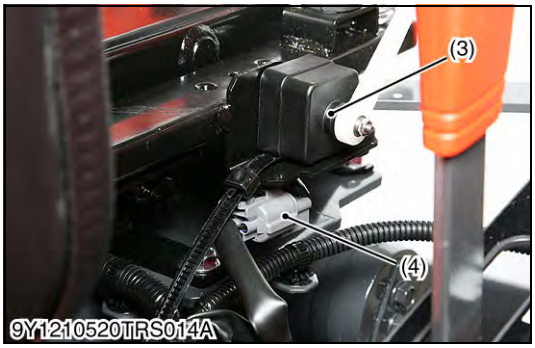

Electrical Wiring 1

1. Disconnect the **4P** connector (1) and the **1P** connector (2).
2. Remove the seat switch (3) from seat adjuster and disconnect the **3P** connector (4).

(1) **4P** Connector (Rear Combination Lamp)
(2) **1P** Connector (Hazard Lamp)
(3) Seat Switch
(4) **3P** Connector (Seat Switch)

9Y1211121TRS0019US0

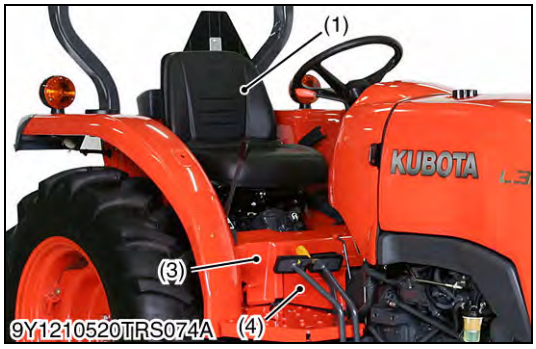

Outer Components

1. Remove the seat (1).
2. Remove the grip (2) and the floor sheet cover (3).
3. Disconnect the differential lock spring and rod.
4. Remove the center cover (4).

(1)	Seat	**[A]**	**4WD**
(2)	Grip (Front Wheel Drive Lever)		
(3)	Floor Sheet Cover		
(4)	Center Cover		

9Y1211121TRS0020US0

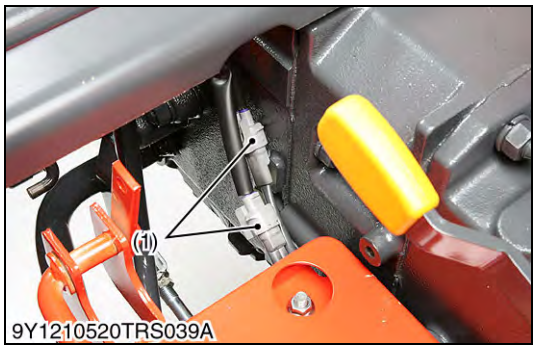

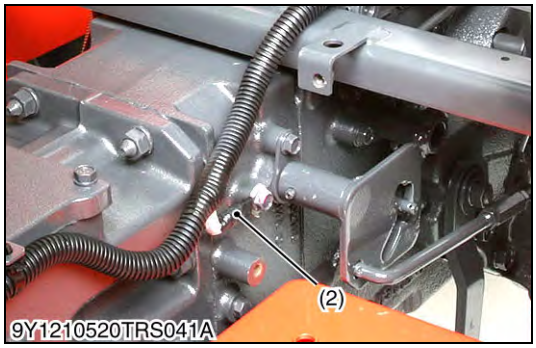

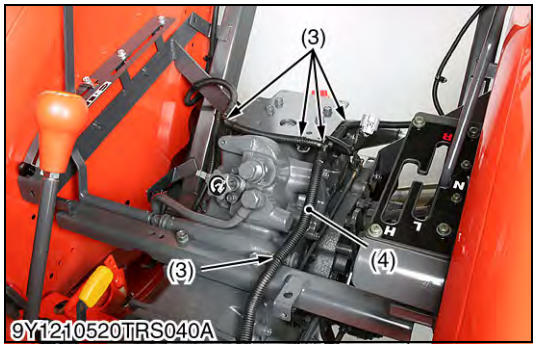

Electrical Wiring

1. Disconnect the **2P** connectors (1).
2. Disconnect the ground cable (2).
3. Remove the clips (3) and the wiring (4).

(1)	**2P** Connector (PTO Safety Switch)	(3)	Clip
(2)	Ground Cable	(4)	Wiring

9Y1211121TRS0021US0

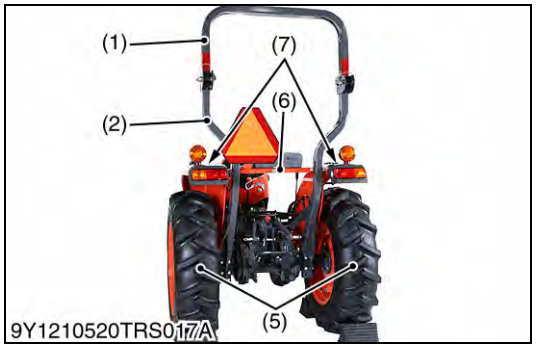

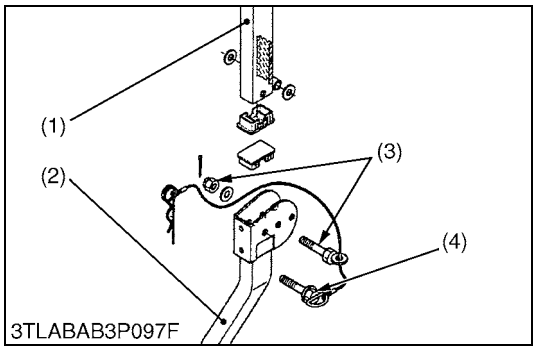

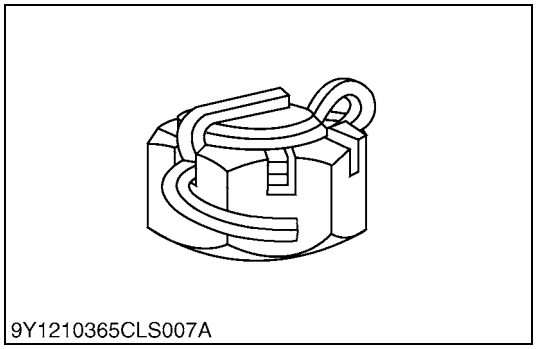

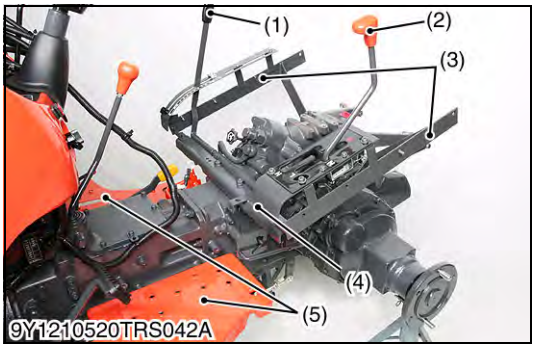

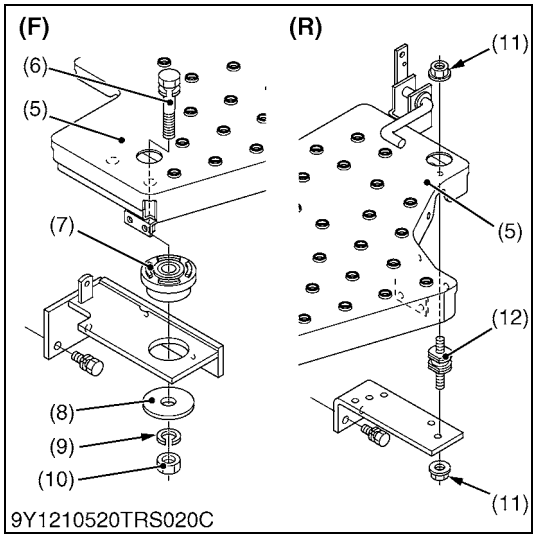

ROPS and Fender

1. Place the disassembling stand under the mid case and the transmission case.
2. Remove the upper frame (1) and the lower frame (2).
3. Remove the rear wheels (5) and place the disassembling stands under the rear axle cases.
4. Remove the fender support assembly (6) and the fenders (7).

(When reassembling)

- After tighten the ROPS mounting bolt (3) and nut, install the cotter pin as shown in the figure.
- Tighten the ROPS upper frame mounting bolts and nuts so that the ROPS upper frame (1) does not fall down when the ROPS upper frame (1) positioned at horizontal.

■ **NOTE**

- **Do not firmly all upper frame mounting screws until most components are attached.**

Tightening torque	Rear wheel mounting screw and nut	197 to 225 N·m 20.0 to 23.0 kgf·m 145 to 166 lbf·ft
	ROPS lower frame mounting screw	167 to 196 N·m 17.0 to 20.0 kgf·m 123 to 144 lbf·ft

(Reference)

Tightening torque	Fulcrum screw and nut	118 to 137 N·m 12.0 to 14.0 kgf·m 86.8 to 101 lbf·ft

(1) ROPS Upper Frame
(2) ROPS Lower Frame
(3) Fulcrum Screw and Nut
(4) Lock Screw
(5) Rear Wheel
(6) Fender Support Assembly
(7) Fender

9Y1211121TRS0022US0

Fender Support and Step

1. Remove the grip (1), (2), the fender support (3) and fender stay (4).
2. Disconnect the accelerator rod, the brake pedal spring and the clutch pedal spring.
3. Remove the steps (5).

(1) Grip (for Position Control Lever)
(2) Grip (for Range Gear Shift Lever)
(3) Fender Support
(4) Fender Stay
(5) Step
(6) Screw
(7) Rubber Plate
(8) Washer
(9) Spring Washer
(10) Nut
(11) Nut
(12) Cushion
(F) Front Side
(R) Rear Side

9Y1211121TRS0023US0

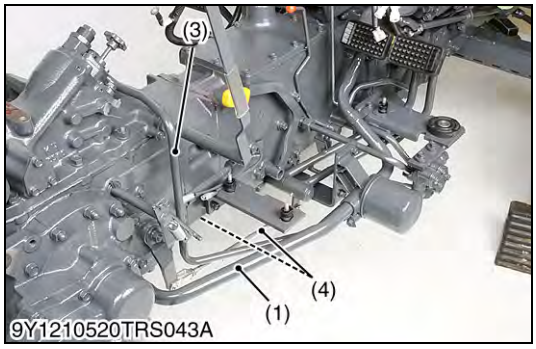

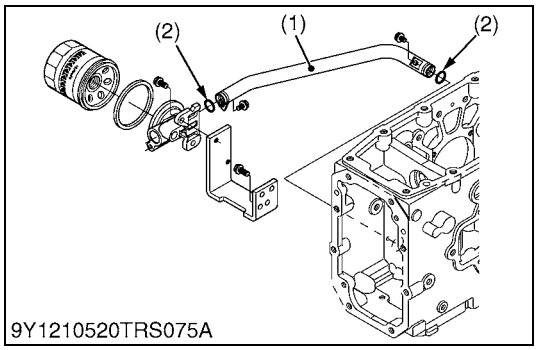

Hydraulic Pipes and Brake Rod

1. Remove the suction pipe (1).
2. Remove the delivery pipe joint screws and the delivery pipe (3).
3. Disconnect the brake rod (R.H.) (4).

(When reassembling)

- Install the new copper washers to the delivery pipe joint screw securely.

■ **NOTE**

- **Take care not to damage the O-rings (2).**
- **If the O-rings (2) are damaged, change them.**

Tightening torque	Three point delivery pipe joint screw	49 to 68 N·m 5.0 to 7.0 kgf·m 37 to 50 lbf·ft

(1) Suction Pipe
(2) O-ring
(3) Delivery Pipe (Hydraulic System)
(4) Brake Rod

9Y1211121TRS0024US0

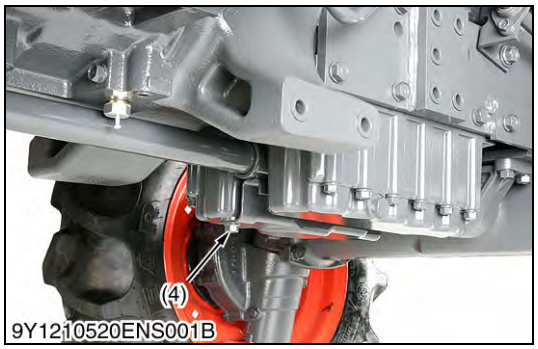

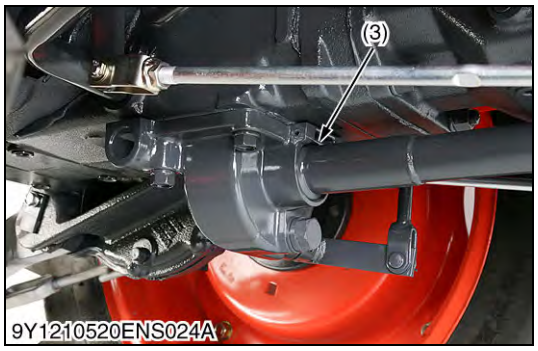

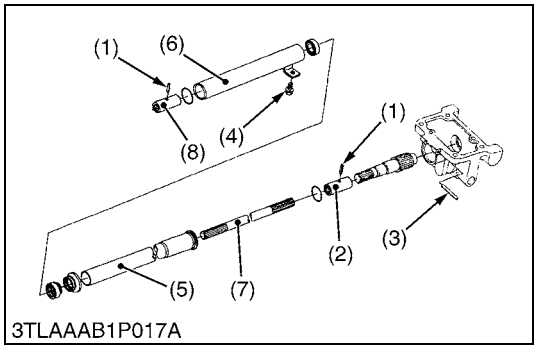

Propeller Shaft [4WD]

1. Remove the screw (4) then tap out the spring pin (3).
2. Slide the propeller shaft cover 1 (5) to the front and the cover 2 (6) to the rear.
3. Tap out the spring pins (1) and then slide the coupling (2) to the front and coupling (8) to the rear.

(When reassembling)

- Apply grease to the splines of the propeller shaft (7) and pinion shaft.

(1) Spring Pin
(2) Coupling
(3) Spring Pin
(4) Screw
(5) Propeller Shaft Cover 1
(6) Propeller Shaft Cover 2
(7) Propeller Shaft
(8) Coupling

9Y1211121CLS0013US0

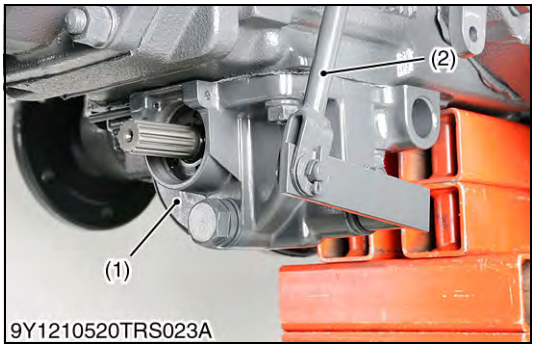

Front Wheel Drive Case [4WD]

1. Remove the front wheel drive case (1) and lever (2).

(When reassembling)

- Be sure to assemble the gasket.
- If gasket is damaged, replace it.

(1) Front Wheel Drive Case (2) Lever (Front Wheel Drive)

9Y1211121TRS0025US0

Separating Clutch Housing Case from Transmission Case

1. Check the clutch housing case and transmission case are securely mounted on the disassembling stands.
2. Loosen and remove the transmission case mounting nut.
3. Separate the transmission case from the clutch housing case.

(When reassembling)

- Apply liquid gasket (Three Bond 1206C or equivalent) to joint faces of transmission case and clutch housing case.

9Y1211121TRS0026US0

[2] HST TYPE

(1) Separating Clutch Housing Case

Separating Clutch Housing Case from Engine

1. Refer to "PREPARATION" at "CLUTCH" section. (See page 2-S13).

9Y1211121TRS0027US0

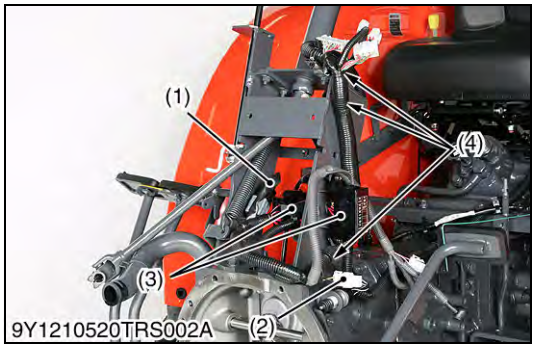

Electrical Wiring

1. Disconnect the **4P** connector (1), the **2P** connector (2) and the ground cable.
2. Remove the slow blow fuses (3), clips (4) and wire from the steering support.

(1) **4P** Connector (HST Pedal Switch) (3) Slow Blow Fuse
(2) **2P** Connector (Clutch Pedal Switch) (4) Clip

9Y1211121TRS0028US0

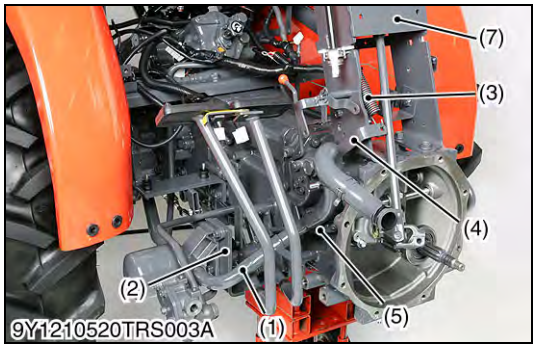

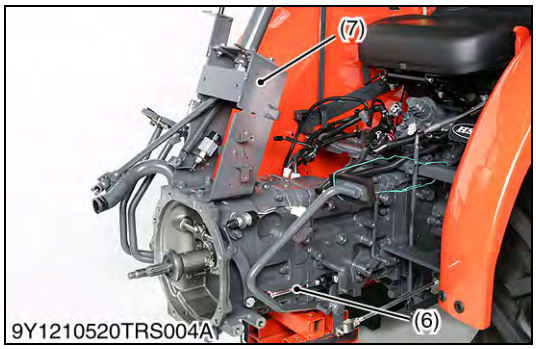

HST Neutral Rod, Clutch Rod and Steering Support

1. Remove the suction pipe (1) and the filter bracket stay (2).
2. Disconnect the spring (3) and remove the neutral hold arm (4).
3. Disconnect the HST pedal rod (5) and the clutch rod (6).
4. Remove the steering support (7).

(When reassembling)

■ **NOTE**
- **Take care not to damage the O-ring.**
- **If the O-ring is damaged, change it.**

(1)	Suction Pipe	(5)	HST Pedal Rod
(2)	Filter Bracket Stay	(6)	Clutch Rod
(3)	Spring (Neutral Holder Arm)	(7)	Steering Support
(4)	Neutral Holder Arm		

9Y1211121TRS0029US0

Separating Clutch Housing Case from Mid Case

1. Place the disassembling stand under the clutch housing case.
2. Remove the clutch housing and mid case mounting screws.
3. Separate the clutch housing and mid case.

(When reassembling)
- Apply liquid gasket (Three Bond 1206C or equivalent) to the joint faces of clutch housing and mid case.

9Y1211121TRS0030US0

(2) Separating Mid Case

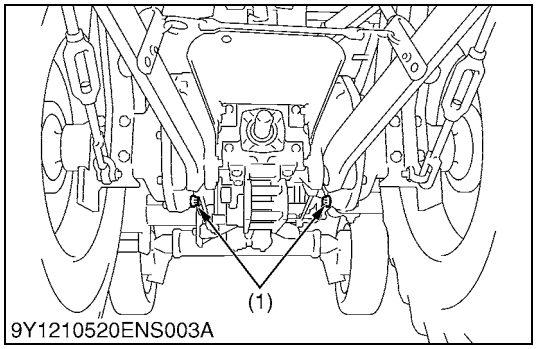

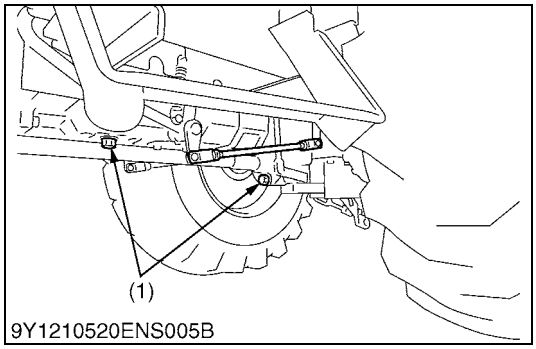

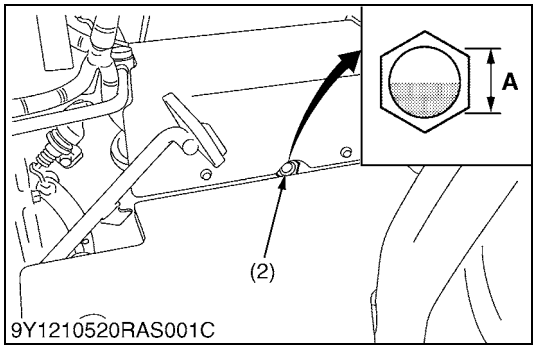

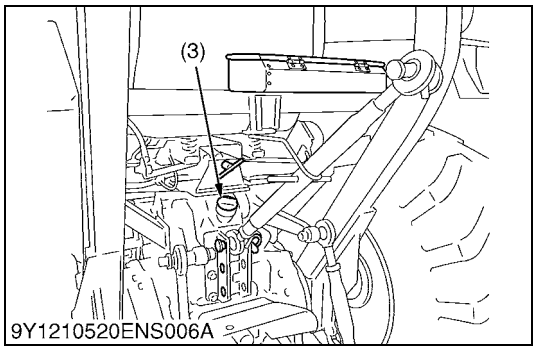

Draining the Transmission Fluid

WARNING

To avoid personal injury or death:

- **Allow engine to cool down sufficiently, oil can be hot and can burn.**

1. Remove the drain plugs (1) at the bottom of the transmission case and drain the oil completely into the oil pan.
2. After draining reinstall the drain plugs.

(When reassembling)

- Fill up new oil to the upper line of the gauge (2) from the oil inlet port after removing the oil inlet plug (3).
- After running the engine for a few minutes, stop it and check the fluid level again, if low, add fluid prescribed level **"A"**.

■ **IMPORTANT**

- **Use only multi-grade transmission fluid. Use of other fluids may damage the transmission or hydraulic system.**
- **Refer to "LUBRICANTS, FUEL AND COOLANT". (See page G-9.)**
- **Never work the tractor immediately after changing the transmission fluid. Keeping the engine at medium speed for a few minutes to prevent damage to the transmission.**
- **Do not mix different brands oil together.**

Transmission fluid capacity	23.5 L 6.2 U.S.gals 5.2 Imp.gals

(1) Drain Plug
(2) Gauge
(3) Oil Inlet Plug

A: Oil level is acceptable within this range.

9Y1211121CLS0015US0

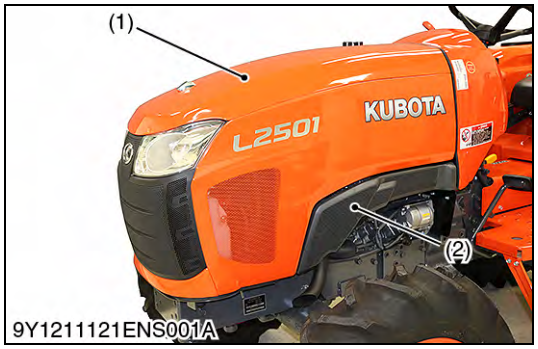

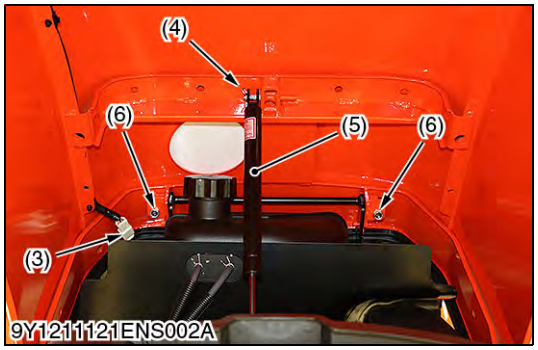

Bonnet and Front Axle Rocking Restrictor

1. To open the bonnet (1), hold the bonnet with a hand and pull the release lever and open the bonnet.
2. Disconnect the battery negative cable.
3. Disconnect the head light connector (3).
4. Remove the snap pin (4) and disconnect the bonnet damper (5) from the bonnet.
5. Remove the screws (6).
6. Remove the bonnet carefully.
7. Remove the side cover (2).
8. Install the front axle rocking restrictor (7) (refer to "SPECIAL TOOLS" (see page G-55)) to the front axle bracket and chock the rear wheels.

(When reassembling)

- To close the bonnet, push the bonnet into position using both hands.

(1)	Bonnet	(5)	Bonnet Damper
(2)	Side Cover	(6)	Screw
(3)	Head Light Connector	(7)	Front Axle Rocking Restrictor
(4)	Snap Pin		

9Y1211121CLS0006US0

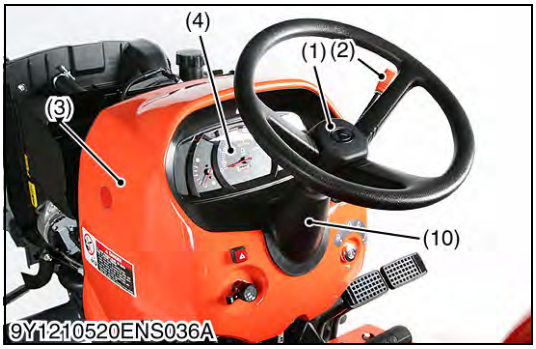

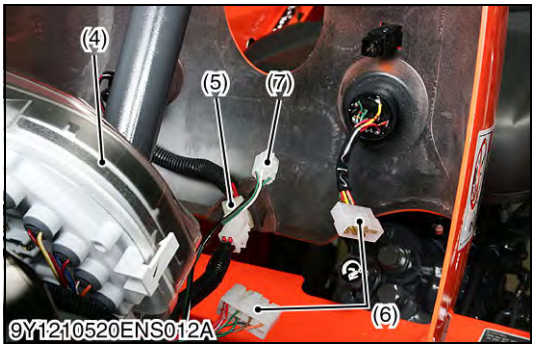

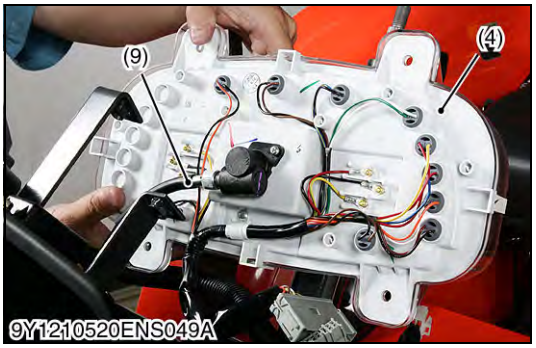

Steering Wheel and Rear Bonnet

1. Remove the steering wheel (1) with steering puller and the rubber steering cover (10).
2. Remove the throttle grip (2).
3. Remove the rear bonnet (3).
4. Disconnect the **4P** connector (5), the **8P** connector (6), the **6P** connector (7) and the **20P** connector (8).
5. Disconnect the hour-meter cable and remove the meter panel (4).

(When reassembling)

Tightening torque	Steering wheel mounting nut	49 to 55 N·m 5.0 to 5.7 kgf·m 37 to 41 lbf·ft

(1) Steering Wheel
(2) Throttle Grip
(3) Rear Bonnet
(4) Meter Panel
(5) **4P** Connector (Main Switch)
(6) **8P** Connector (Combination Switch)
(7) **6P** Connector (Hazard Switch)
(8) **20P** Connector (Meter Panel)
(9) Hour-meter Cable
(10) Rubber Steering Cover

9Y1211121CLS0017US0

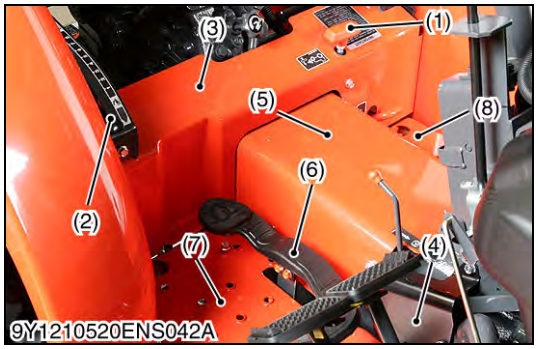

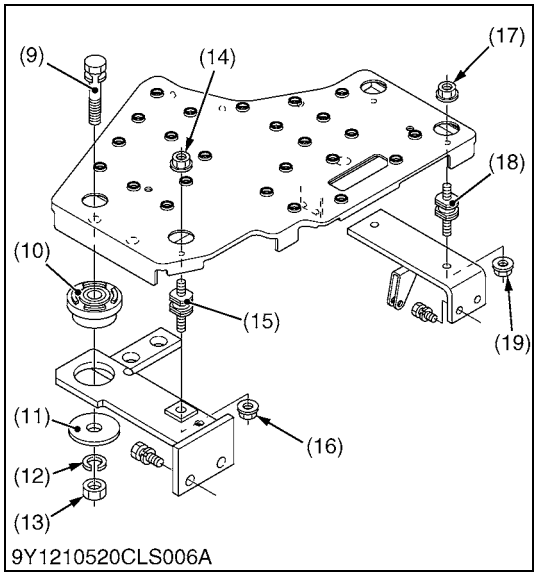

Outer Components

1. Remove the grip (1).
2. Remove the position control lever grip and position control lever guide (2).
3. Remove the floor sheet cover (3).
4. Remove the neutral holder cover (4) and the center cover (5).
5. Disconnect the brake pedal spring.
6. Remove the HST control pedal (6) and step (R.H.) (7).
7. Disconnect the differential lock spring, rod and step (L.H.) (8).

(When reassembling)

- Be sure to set the washers and rubber plates of the steps mounting screw at an original positions as shown in figure.

(1) Grip (Front Drive Lever)
(2) Position Control Lever Guide
(3) Floor Sheet Cover
(4) Neutral Holder Cover
(5) Center Cover
(6) HST Control Pedal
(7) Step (R.H.)
(8) Step (L.H.)
(9) Screw
(10) Rubber Plate
(11) Washer
(12) Spring Washer
(13) Nut
(14) Nut
(15) Cushion
(16) Nut
(17) Nut
(18) Cushion
(19) Nut

9Y1211121CLS0022US0

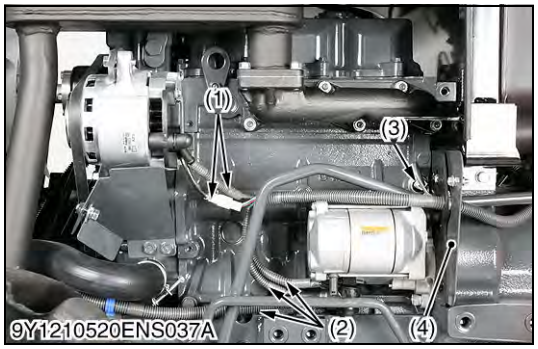

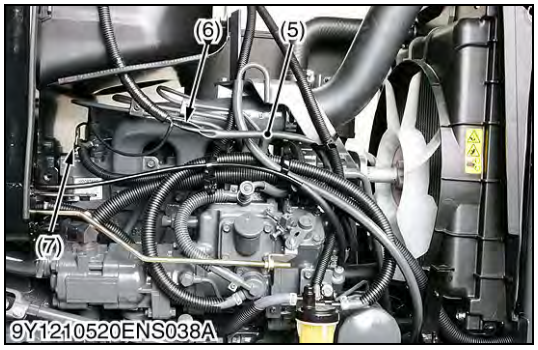

Electrical Wirings 1

1. Disconnect the wiring (1).
2. Disconnect the wirings (2).
3. Disconnect the **1P** connector (3), (7) and the wirings (5), (6).
4. Remove the shutter plate (4) and the wirings from the engine.

(1) Wiring (Alternator)
(2) Wiring (Starter Motor)
(3) **1P** Connector (Engine Oil Switch)
(4) Shutter Plate
(5) Wiring (Engine Stop Solenoid)
(6) Wiring (Glow Plug)
(7) **1P** Connector (Coolant Temperature Sensor)

9Y1211121CLS0018US0

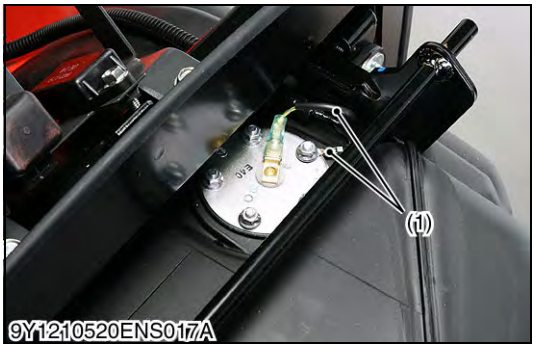

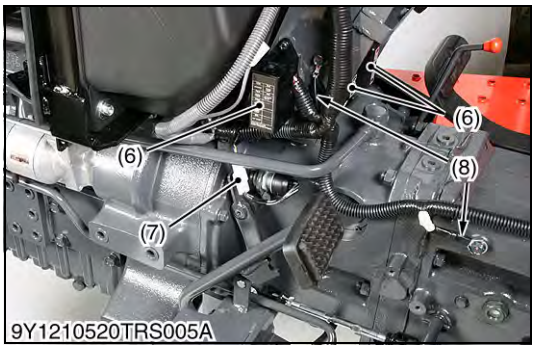

Electrical Wiring 2

1. Disconnect the wirings (1) for fuel sensor.
2. Disconnect the **4P** connector (2), the **4P** connector (3), the **6P** connector (4) and the **4P** connector (5).
3. Disconnect the HST pedal switch **4P** connector and remove the slow blow fuse box (6).
4. Disconnect the **2P** connector (7) and the ground cables (8).
5. Remove the wirings from rear bonnet support and steering support.

(1) Wiring (Fuel Sensor)
(2) **4P** Connector (Starter Relay)
(3) **4P** Connector (OPC Timer)
(4) **6P** Connector (Flasher Unit)
(5) **4P** Connector (Engine Stop Solenoid Relay)
(6) Slow Blow Fuse Box
(7) **2P** Connector (Clutch Pedal Switch)
(8) Ground Cable

9Y1211121TRS0031US0

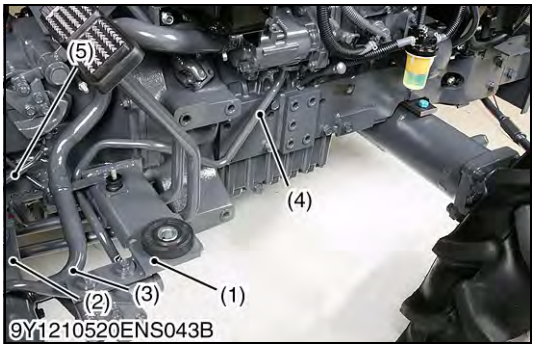

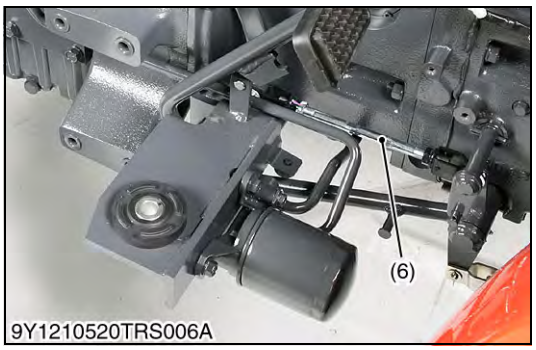

Hydraulic Pipes, HST Neutral Rod and Clutch Rod

1. Remove the front step bracket (R.H.) (1) and filter bracket stay (2).
2. Disconnect the suction pipe (3), the delivery pipe (4).
3. Disconnect the clutch rod (6) and the HST pedal rod (5).

(When reassembling)

- Be sure to adjust the HST neutral position. (See page 3-S12.)

(1) Front Step Bracket (R.H.)
(2) Filter Bracket Stay
(3) Suction PIpe
(4) Delivery Pipe
(5) HST Pedal Rod
(6) Clutch Rod

9Y1211121TRS0032US0

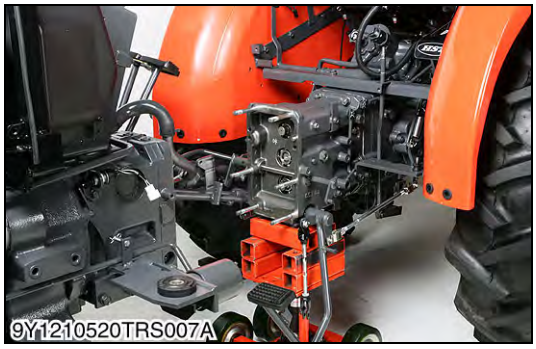

Separating Clutch Housing Case from Mid Case

1. Place the disassembling stand under the mid case.
2. Remove the clutch housing and mid case mounting screws.
3. Separate the clutch housing cae.

(When reassembling)

- Apply liquid gasket (Three Bond 1206C or equivalent) to the joint faces of clutch housing case and mid case.

9Y1211121TRS0033US0

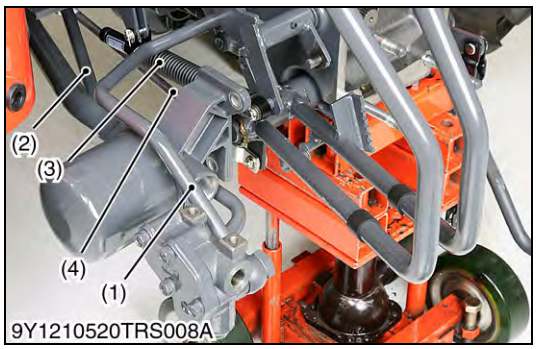

Hydraulic Pipe, Brake Rods and Range Shift Rod

1. Remove the return pipe (1) and the delivery pipe (2).
2. Remove the damper (3).
3. Disconnect the brake rod (4) and the range shift rod (5).

(When reassembling)

- Install the new copper washers securely.

Tightening torque	Delivery pipe joint screw	49 to 68 N·m 5.0 to 7.0 kgf·m 37 to 50 lbf·ft
	Return pipe joint screw	49 to 69 N·m 5.0 to 7.0 kgf·m 37 to 50 lbf·ft
	Return pipe retaining joint nut	49 to 58 N·m 5.0 to 6.0 kgf·m 37 to 43 lbf·ft

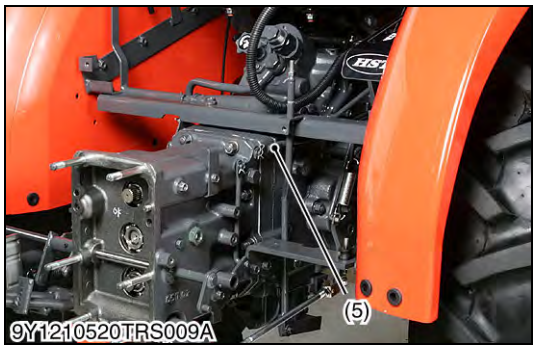

(1) Return Pipe
(2) Delivery Pipe (Three Point Hydraulic System)
(3) Damper (HST Pedal Rod)
(4) Brake Rod
(5) Range Shift Rod

9Y1211121TRS0034US0

Separating Mid Case from Transmission Case

1. Place the disassembling stand under the transmission case.
2. Remove the mid case and transmission case mounting nuts.
3. Separate the mid case and transmission case.

(When reassembling)

- Apply liquid gasket (Three Bond 1206C or equivalent) to the joint faces of mid case and transmission case.

Tightening torque	Mid case and transmission case mounting nut	103 to 117 N·m 10.5 to 12.0 kgf·m 76.0 to 86.7 lbf·ft

9Y1211121TRS0035US0

(3) Separating Transmission Case

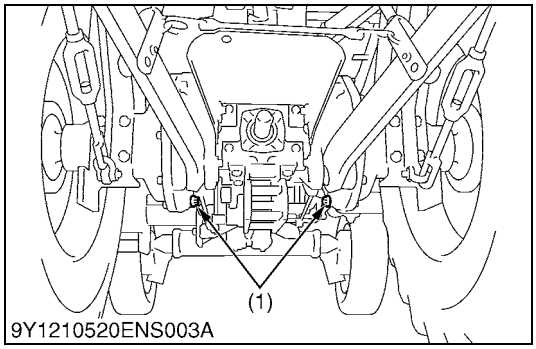

9Y1210520ENS003A

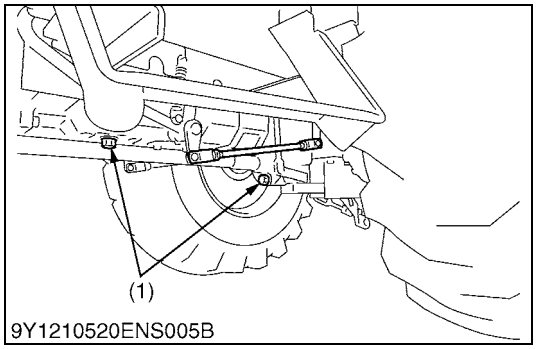

9Y1210520ENS005B

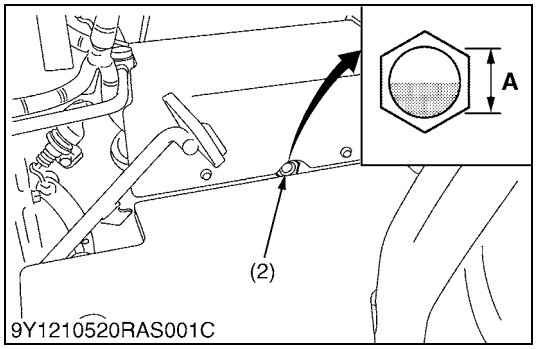

9Y1210520RAS001C

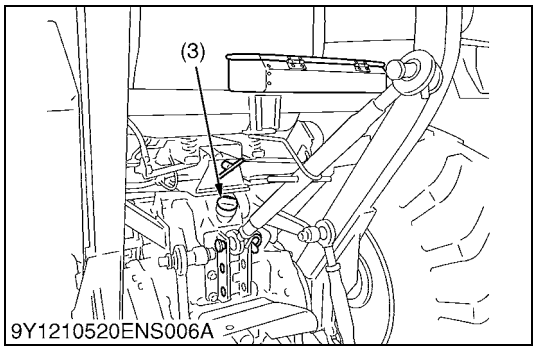

9Y1210520ENS006A

Draining the Transmission Fluid

WARNING

To avoid personal injury or death:

- **Allow engine to cool down sufficiently, oil can be hot and can burn.**

1. Remove the drain plugs (1) at the bottom of the transmission case and drain the oil completely into the oil pan.
2. After draining reinstall the drain plugs.

(When reassembling)

- Fill up new oil to the upper line of the gauge (2) from the oil inlet port after removing the oil inlet plug (3).
- After running the engine for a few minutes, stop it and check the fluid level again, if low, add fluid prescribed level **"A"**.

■ **IMPORTANT**

- **Use only multi-grade transmission fluid. Use of other fluids may damage the transmission or hydraulic system.**
- **Refer to "LUBRICANTS, FUEL AND COOLANT". (See page G-9.)**
- **Never work the tractor immediately after changing the transmission fluid. Keeping the engine at medium speed for a few minutes to prevent damage to the transmission.**
- **Do not mix different brands oil together.**

Transmission fluid capacity	23.5 L 6.2 U.S.gals 5.2 Imp.gals

(1) Drain Plug
(2) Gauge
(3) Oil Inlet Plug

A: Oil level is acceptable within this range.

9Y1211121CLS0015US0

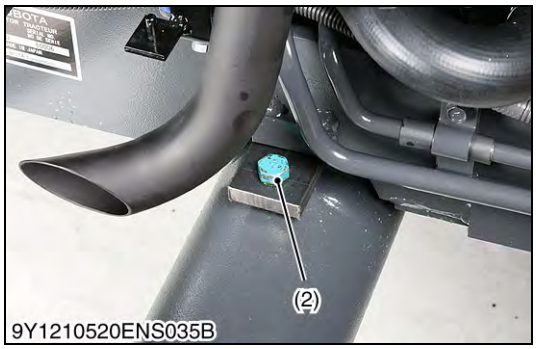

Battery Negative Cable and Front Axle Rocking Restrictor

1. To open the bonnet, hold the bonnet with a hand and pull the release lever and open the bonnet.
2. Disconnect the battery negative cable (1).
3. Install the front axle rocking restrictor (2) (refer to "SPECIAL TOOLS" (see page G-55)) to the front axle bracket and chock the wheels.

(1) Negative Cable
(2) Front Axle Rocking Restrictor

9Y1211121TRS0036US0

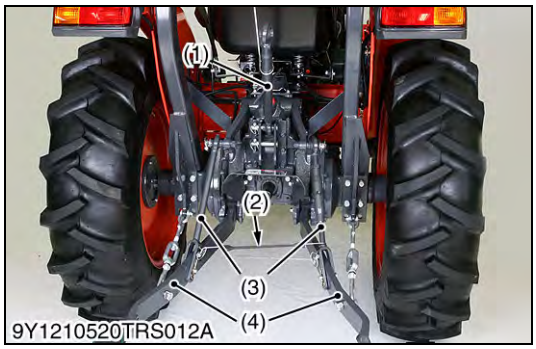

Three Point Linkage

1. Remove the top link (1).
2. Remove the rubber spring (2), the lift rod (3) and the lower link (4).

(1) Top Link
(2) Rubber Spring
(3) Lift Rod
(4) Lower Link

9Y1211121TRS0018US0

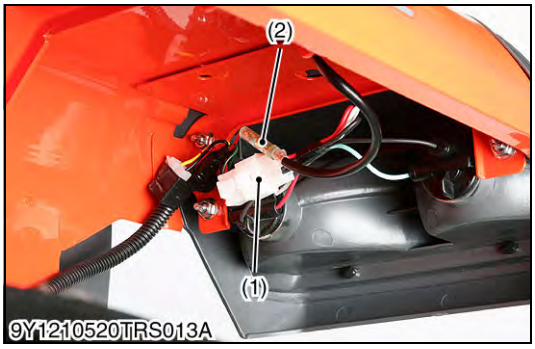

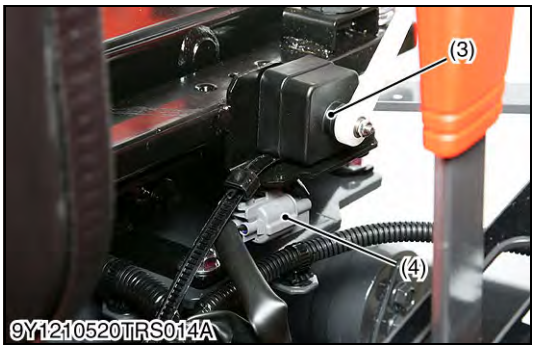

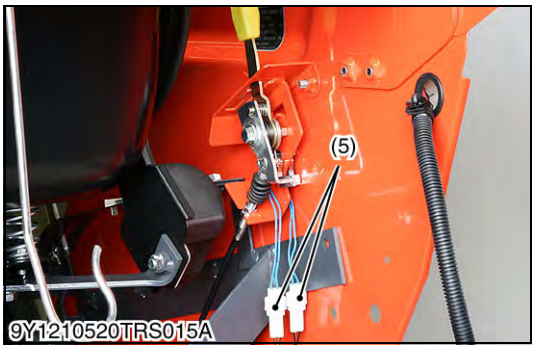

Electrical Wiring 1

1. Disconnect the **4P** connector (1) and the **1P** connector (2).
2. Remove the seat switch (3) from seat adjuster and disconnect the **3P** connector (4).
3. Disconnect the **2P** connectors (5).

(1) **4P** Connector (Rear Combination Lamp)
(2) **1P** Connector (Hazard Lamp)
(3) Seat Switch
(4) **3P** Connector (Seat Switch)
(5) **2P** Connector (PTO Lever Neutral Switch)

9Y1211121TRS0037US0

Outer Components

1. Remove the seat (1).
2. Remove the grip (2) and guide (3).
3. Remove the grip (4).
4. Remove the floor sheet cover (5).
5. Disconnect the differential lock spring and the rod.
6. Remove the neutral holder cover and the center cover (6).
7. Remove the guide (7).

(1) Seat
(2) Grip (Position Control Lever)
(3) Guide (Position Control Lever)
(4) Grip (Front Drive Lever)
(5) Floor Sheet Cover
(6) Center Cover
(7) Guide (PTO Lever)

9Y1211121TRS0038US0

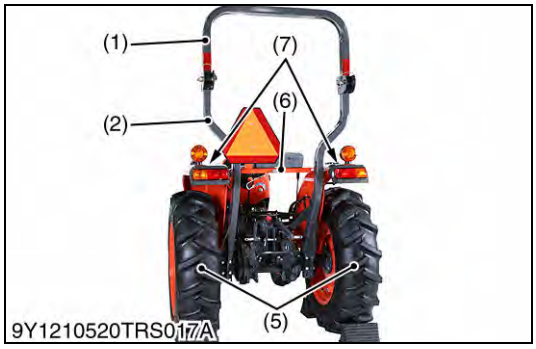

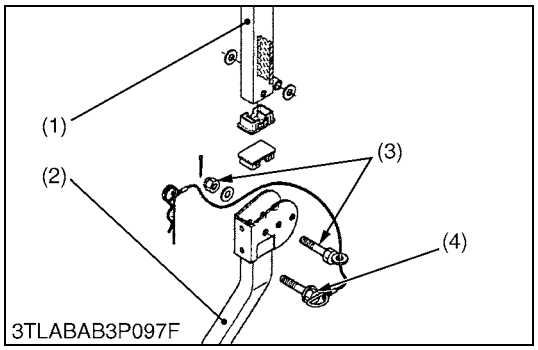

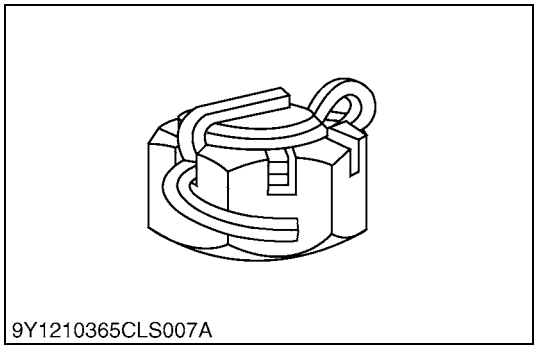

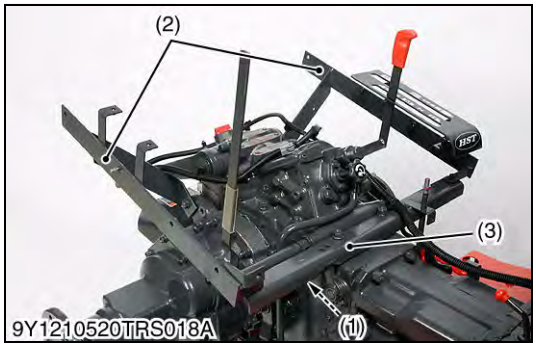

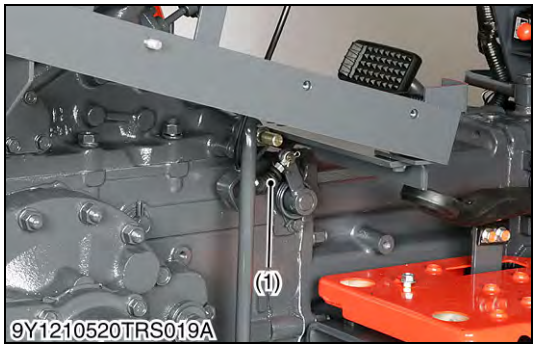

ROPS and Fender

1. Place the disassembling stand under the mid case and the transmission case.
2. Remove the upper frame (1) and the lower frame (2).
3. Remove the rear wheels (5) and place the disassembling stands under the rear axle cases.
4. Remove the fender support assembly (6) and the fenders (7).

(When reassembling)

- After tighten the ROPS mounting bolt (3) and nut, install the cotter pin as shown in the figure.
- Tighten the ROPS upper frame mounting bolts and nuts so that the ROPS upper frame (1) does not fall down when the ROPS upper frame (1) positioned at horizontal.

■ **NOTE**

- **Do not firmly all upper frame mounting screws until most components are attached.**

Tightening torque	Rear wheel mounting screw and nut	197 to 225 N·m 20.0 to 23.0 kgf·m 145 to 166 lbf·ft
	ROPS lower frame mounting screw	167 to 196 N·m 17.0 to 20.0 kgf·m 123 to 144 lbf·ft

(Reference)

Tightening torque	Fulcrum screw and nut	118 to 137 N·m 12.0 to 14.0 kgf·m 86.8 to 101 lbf·ft

(1) ROPS Upper Frame
(2) ROPS Lower Frame
(3) Fulcrum Screw and Nut
(4) Lock Screw
(5) Rear Wheel
(6) Fender Support Assembly
(7) Fender

9Y1211121TRS0039US0

PTO Cable and Fender Support

1. Disconnect the PTO wire (1).
2. Remove the fender supports (2) and the fender stay (3).

(1) PTO Wire
(2) Fender Support
(3) Fender Stay

9Y1211121TRS0040US0

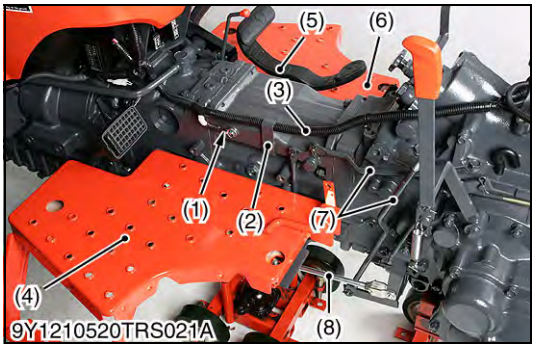

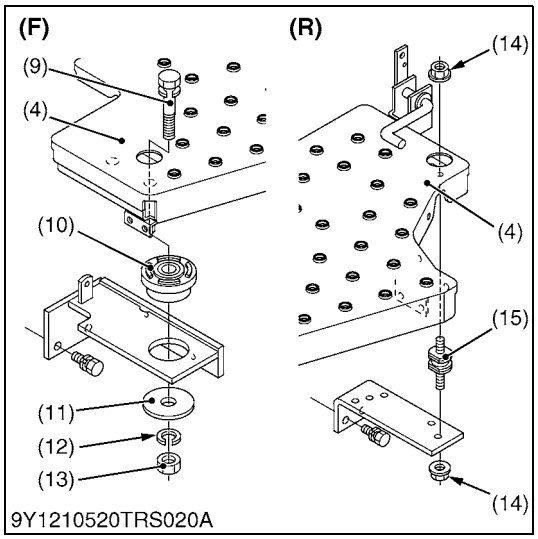

Electrical Wiring, Range Shift Rod, Brake Rod (L.H.) and Step

1. Disconnect the ground cable (1).
2. Remove the clamp (2) and wiring (3).
3. Remove the HST pedal (5) and the steps (4), (6).
4. Disconnect the range shift rod (7) and the brake rod (L.H.) (8).

(When reassembling)

- Be sure to set the washers and rubber plates of the steps (4) (6) mounting screw at an original position as shown in figure.

(1) Ground Cable
(2) Clamp (Wiring)
(3) Wiring
(4) Step (L.H.)
(5) HST Pedal
(6) Step (R.H.)
(7) Range Shift Rod
(8) Brake Rod (L.H.)
(9) Screw
(10) Rubber Plate
(11) Washer
(12) Spring Washer
(13) Nut
(14) Nut
(15) Cushion

(F) Front Side
(R) Rear Side

9Y1211121TRS0041US0

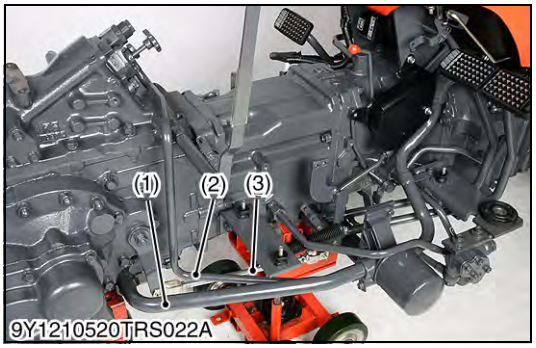

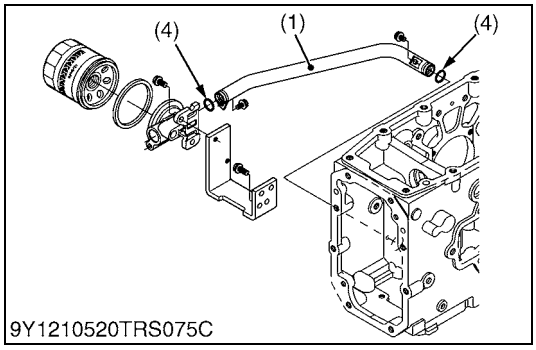

Hydraulic Pipes and Brake Rod (R.H.)

1. Remove the suction pipe (1).
2. Remove the delivery pipe joint screws and the delivery pipe (2).
3. Disconnect the brake rod (R.H.) (3).

(When reassembling)

- Install the new copper washers to the delivery pipe joint screw securely.

■ **NOTE**

- **Take care not to damage the suction pipe O-rings (4).**
- **If the suction pipe O-rings are damaged, change them.**

Tightening torque	Delivery pipe joint screw	49 to 68 N·m 5.0 to 7.0 kgf·m 37 to 50 lbf·ft

(1) Suction Pipe
(2) Delivery Pipe (Hydraulic System)
(3) Brake Rod (R.H.)
(4) O-ring

9Y1211121TRS0042US0

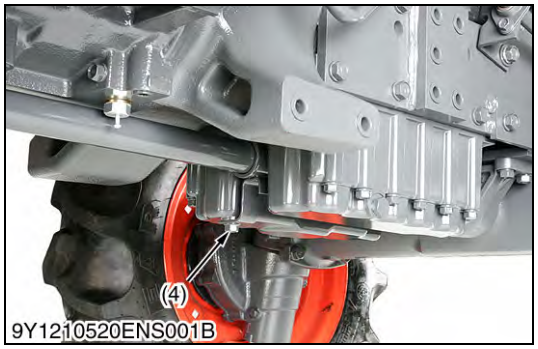

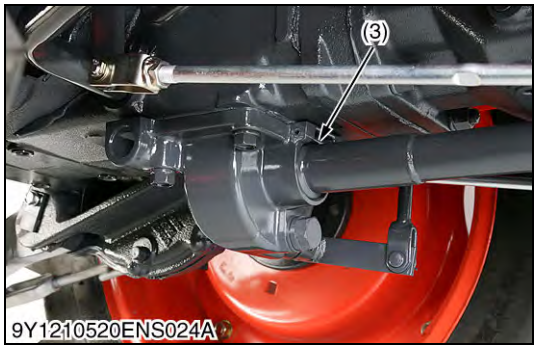

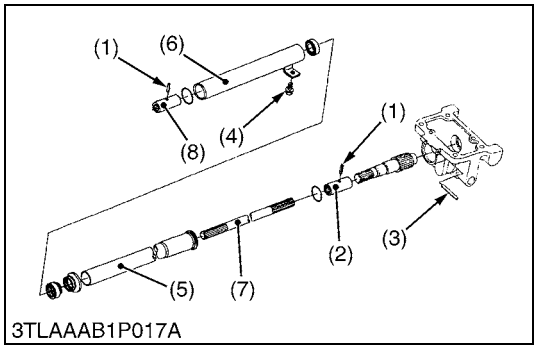

Propeller Shaft

1. Remove the screw (4) then tap out the spring pin (3).
2. Slide the propeller shaft cover 1 (5) to the front and the cover 2 (6) to the rear.
3. Tap out the spring pins (1) and then slide the coupling (2) to the front and coupling (8) to the rear.

(When reassembling)

- Apply grease to the splines of the propeller shaft (7) and pinion shaft.

(1)	Spring Pin	(5)	Propeller Shaft Cover 1
(2)	Coupling	(6)	Propeller Shaft Cover 2
(3)	Spring Pin	(7)	Propeller Shaft
(4)	Screw	(8)	Coupling

9Y1211121CLS0025US0

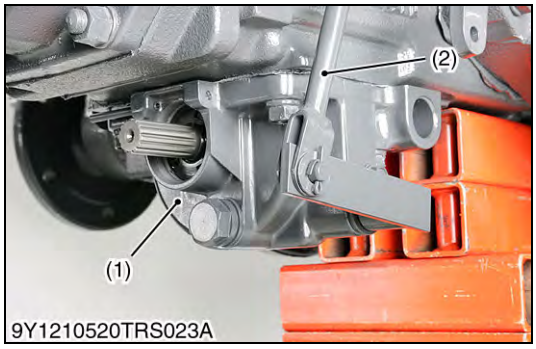

Front Wheel Drive Case

1. Remove the front wheel drive case (1) and lever (2).

(When reassembling)

- Be sure to assemble the gasket.
- If gasket is damaged, replace it.

(1)	Front Wheel Drive Case	(2)	Lever (Front Wheel Drive)

9Y1211121TRS0043US0

Separating Transmission Case from Mid Case

1. Check the mid case and transmission case are securely mounted on the disassembling stands.
2. Loosen the remove the transmission case mounting nut.
3. Separate the transmission case from the mid case.

(When reassembling)

- Apply liquid gasket (Three Bond 1206C or equivalent) to joint face of transmission case and clutch housing case.

9Y1211121TRS0044US0

6. DISASSEMBLING AND ASSEMBLING

[1] MANUAL TRANSMISSION TYPE

(1) Clutch Housing Case

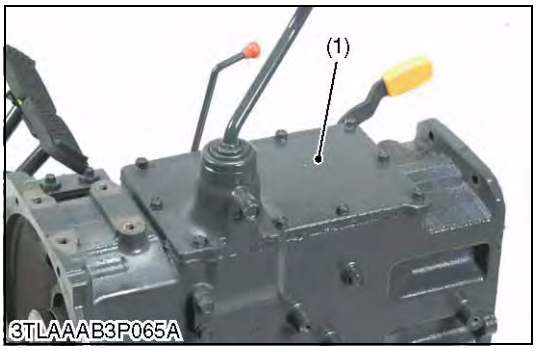

Speed Change Cover

1. Remove the speed change cover (1).

(When reassembling)

- Apply liquid gasket (Three Bond 1206C or equivalent) to joint face of speed change cover and clutch housing.

(1) Speed Change Cover

9Y1211121TRS0045US0

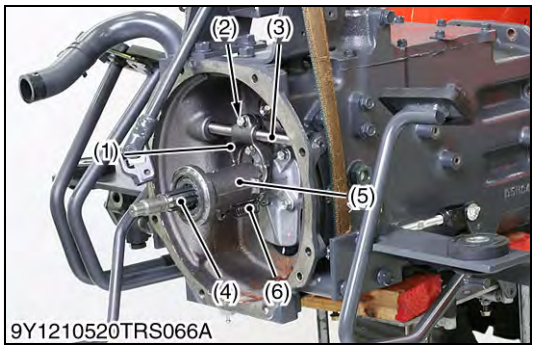

Release Hub and Clutch Lever

1. Remove the release fork (1) mounting screw (2).
2. Draw out the clutch lever (3) to remove the release fork (1).
3. Remove the hub return spring (6).
4. Remove the thrust ball bearing (4) and release hub (5) as a unit.

(When reassembling)

- Make sure the direction of the release fork (1) is correct.
- Inject grease to the release hub (5).
- Be sure to set the hub return spring (6).

(1) Release Fork
(2) Screw
(3) Clutch Lever
(4) Thrust Ball Bearing
(5) Release Hub
(6) Hub Return Spring

9Y1211121TRS0046US0

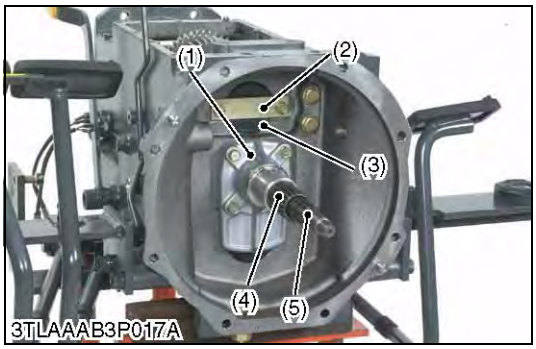

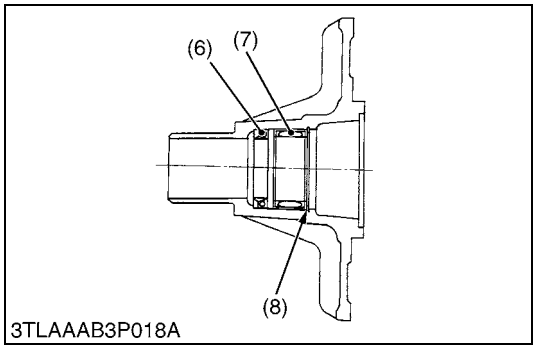

Main Shaft Case

1. Remove the main shaft case (1).
2. Remove the stopper plate (2).
3. Remove the bearing cover (3).

(When reassembling)

- Apply grease to the O-ring and install it to the clutch housing.
- After reassembling the main shaft case, check that 16T gear shaft (4) and main shaft (5) rotate respectively and that they have a little axial play.
- Bearing cover (3) should be replaced with new one.

(When replacing bearing and oil seal in main shaft case)

- Install the oil seal (6) as shown in the figure, noting its direction.
- Apply grease to the needle bearing (7) and press-fit it up to the groove of internal cir-clip (8).

(1) Main Shaft Cover
(2) Stopper Plate
(3) Bearing Cover
(4) 16T Gear Shaft
(5) Main Shaft
(6) Oil Seal
(7) Needle Bearing
(8) Internal Cir-clip

9Y1211121TRS0047US0

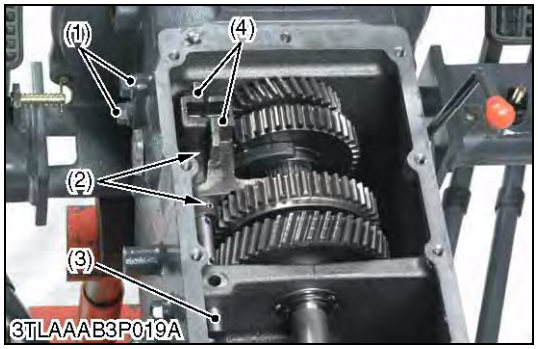

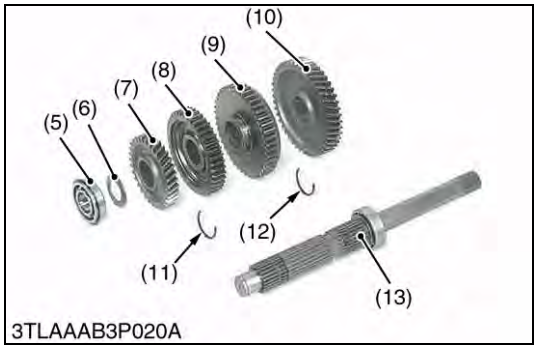

Counter Shaft

1. Remove the screw (1) and take out the spring and ball.
2. Tap out the spring pin (2).
3. Draw out the fork rod (3) to the front and take out the shift fork (4) and balls.
4. Remove the internal cir-clip (11), (12).
5. Tap out the counter shaft (13) to the rear.

■ **NOTE**

- **When drawing out the counter shaft, take out the following parts one by one: thrust collar (6), 32T gear (7), 41T gear (8) and 45T gear (9) and 45T gear (10).**

(When reassembling)

- Apply molybdenum disulfide (Three Bond 1091 or equivalent) to the inner circumferential surface of the spline boss.
- Point the oil groove side of thrust collar (6) towards the spline boss.
- With the snap rings in position, make sure that the 32T and 45T gears turn smoothly.

(1)	Screw	(8)	41T Gear
(2)	Spring Pin	(9)	45T Gear
(3)	Fork Rod	(10)	45T Gear
(4)	Shift Fork	(11)	Internal Cir-clip
(5)	Bearing	(12)	Internal Cir-clip
(6)	Thrust Collar	(13)	Counter Shaft
(7)	32T Gear		

9Y1211121TRS0048US0

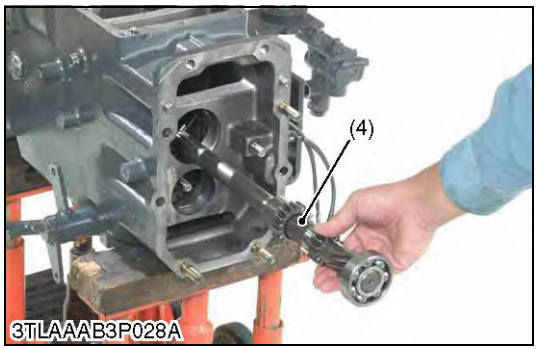

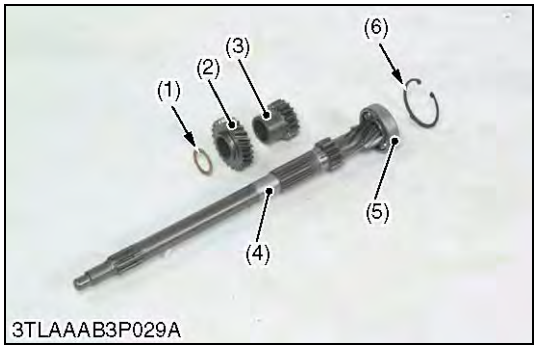

Main Shaft

1. Remove the internal cir-clip (6).
2. Tap out the main shaft (4) to the rear.

■ **NOTE**

- **When drawing out the main shaft, take out the following parts one by one: copper washer (1), 23T gear (2) and 17T gear (3).**

(When reassembling)

- Install the new copper washer to the front of 25T gear.

(1)	Copper Washer	(4)	Main Shaft
(2)	23T Gear	(5)	Ball Bearing
(3)	17T Gear	(6)	Internal Cir-clip

9Y1211121TRS0049US0

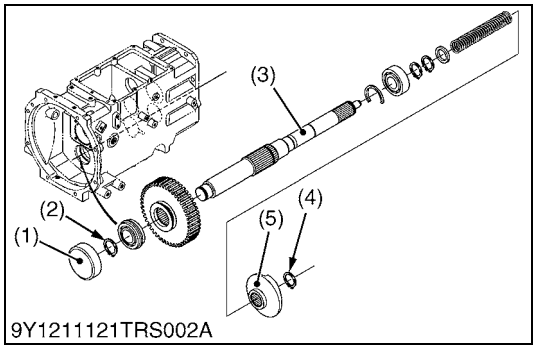

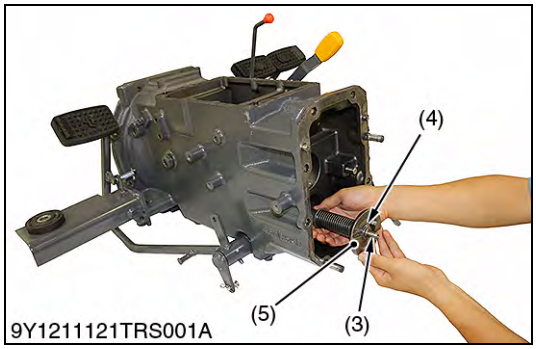

PTO Counter Shaft

1. Remove the PTO shift rod and PTO shift fork.
2. Remove the bearing cover (1).
3. Remove the external cir-clip (2).
4. Tap out the PTO counter shaft (3) to the rear.
5. Remove the external cir-clip (4) and oneway clutch (5).

(When reassembling)

- Bearing cover (1) should be replaced with new one.

(1) Bearing Cover
(2) External Cir-clip
(3) PTO Counter Shaft
(4) External Cir-clip
(5) Oneway Clutch

9Y1211121TRS0050US0

(2) Transmission Case

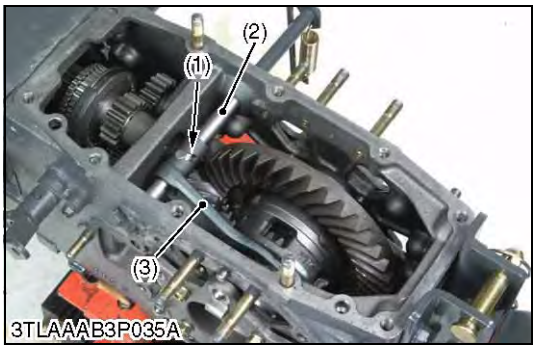

Differential Lock

1. Remove the clevis pin (1).
2. Draw out the differential lock fork shaft (2).
3. Take out the shift fork (3).

(1) Clevis Pin
(2) Fork Shaft
(3) Shift Fork

9Y1211121TRS0051US0

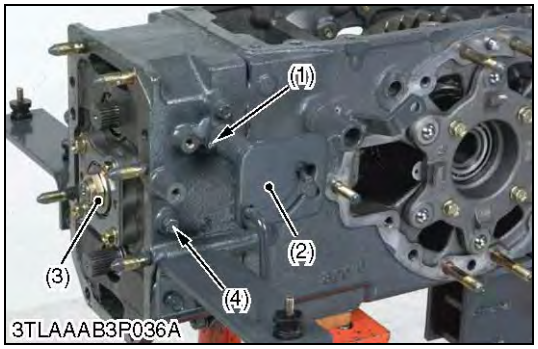

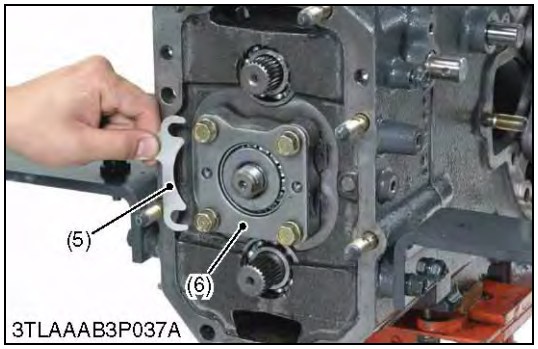

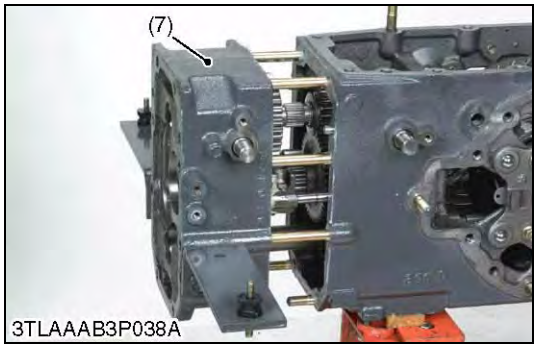

Mid Case

1. Tap out the spring pin (1).
2. Remove the guide plate (2).
3. Remove the lock nut (3) and lock bolt (4).
4. Remove the pinion bearing cover (6) and shims (5).
5. Separate the mid case (7) from the transmission case.

(When reassembling)

- Make sure of the number of shims in the pinion bearing cover.
- Replace the lock nut (3) with a new one, and stake the lock nut firmly after installing the parts on the shaft.
- Apply liquid gasket (Three Bond 1206C or equivalent) to joint face of mid case and transmission case.

Tightening torque	Lock nut	150 to 190 N·m 15 to 20 kgf·m 110 to 140 lbf·ft
	Pinion bearing case mounting screw	40 to 44 N·m 4.0 to 4.5 kgf·m 29 to 32 lbf·ft

(1) Spring Pin
(2) Guide Plate
(3) Lock Nut
(4) Lock Bolt
(5) Shim
(6) Pinion Bearing Cover
(7) Mid Case

9Y1211121TRS0052US0

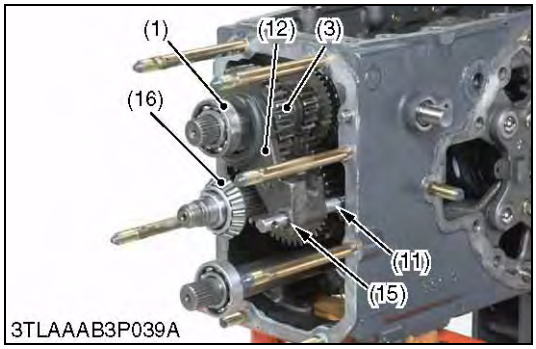

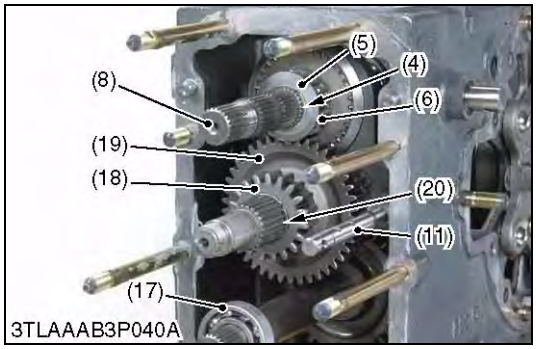

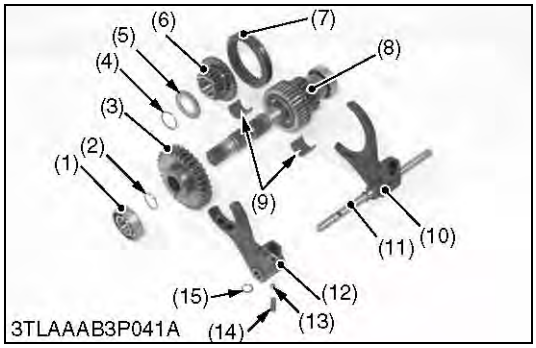

Sub Shaft

1. Remove the bearing (1) and (16) with bearing puller.
2. Remove the external cir-clip (2) and (15).
3. Remove the shift fork (12) and 31T gear (3).
4. Remove the external cir-clip (4) and collar (5).
5. Remove the bearing (17) and external cir-clip (20).
6. Take out the 19T gear (18) and 42T gear (19).
7. Remove the 18T gear (6).
8. Remove the shift fork (10) and shift rod (11) with shifter (7).
9. Tap out the sub shaft (8) to the front.

(When reassembling)

- Take care not to damage or lose ball or spring.

(1)	Bearing	(11)	Shift Rod
(2)	External Cir-clip	(12)	Shift Fork
(3)	31T Gear	(13)	Ball
(4)	External Cir-clip	(14)	Spring
(5)	Collar	(15)	External Cir-clip
(6)	18T Gear	(16)	Bearing
(7)	Shifter	(17)	Bearing
(8)	Sub Shaft Assembly	(18)	19T Gear
(9)	Needle Bearing	(19)	42 T Gear
(10)	Shift Fork	(20)	External Cir-clip

9Y1211121TRS0053US0

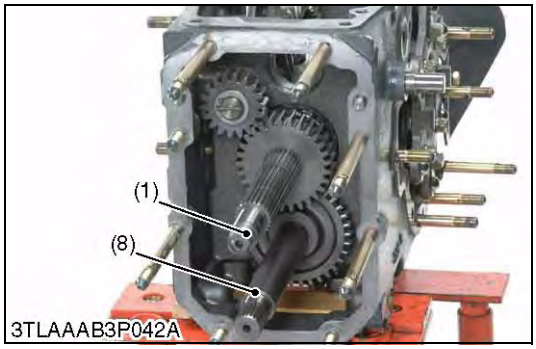

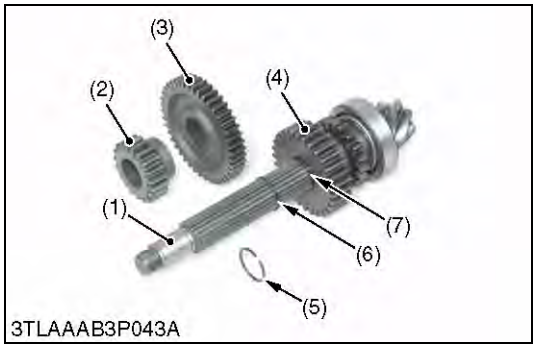

Pinion Shaft

1. Remove the pinion shaft (1) and PTO drive shaft assembly (8).

(1)	Bearing	(5)	External Cir-clip
(2)	19T Gear	(6)	External Cir-clip
(3)	42T Gear	(7)	External Cir-clip
(4)	29T Gear	(8)	PTO Drive Shaft Assembly

9Y1211121TRS0054US0

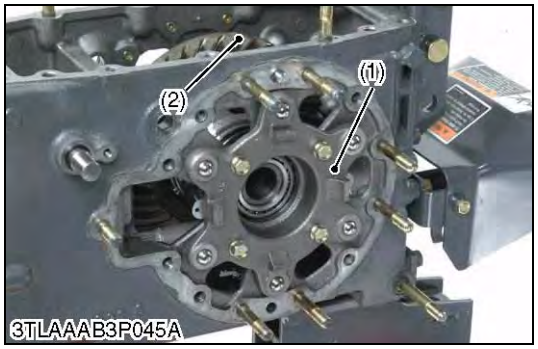

Differential Gear Assembly

1. Remove the differential bearing case (1) mounting screws.
2. Remove the differential bearing case (1), noting the number of left and right shims.
3. Take out the differential gear assembly (2) from transmission case.

(When reassembling)

- Use same number of shim as before disassembling.
- Replace the left and right bearing cases on the same sides as before.
- Apply grease to ball and ball seats.

(1) Differential Bearing Case (2) Differential Gear Assembly

9Y1211121TRS0055US0

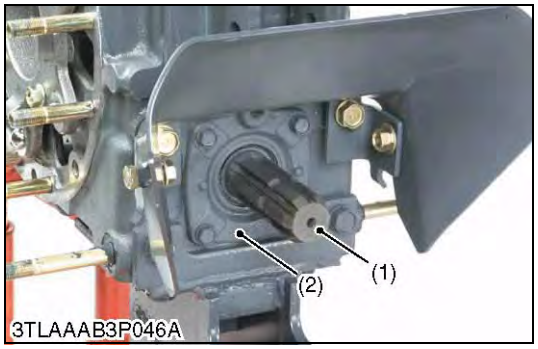

PTO Bearing Case

1. Remove the bearing case (2) mounting screws.
2. Take out the PTO shaft (1) with bearing case.

(1) PTO Shaft (2) PTO Bearing Case

9Y1211121TRS0056US0

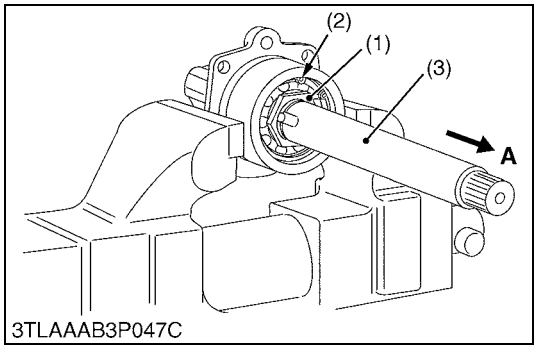

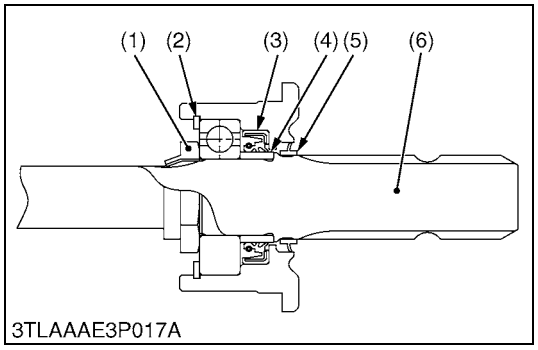

PTO Shaft

1. Remove the internal cir-clip (2).
2. Tap out the PTO shaft (6) to the front **"A"**.

(When reassembling)

- In the lock nut (1) was removed, replace a new one, and after tightening it to the specified torque, be sure to stake it firmly.
- Install the slinger (5) firmly.
- After applying liquid gasket (Three Bond 1206C or equivalent) to joint face of the collar (4), and insert the collar to PTO shaft.
- Apply grease to oil seal (3) and install it, noting its direction.

Tightening torque	Lock nut	150 to 190 N·m 15 to 20 kgf·m 110 to 140 lbf·ft

(1) Lock Nut
(2) Internal Cir-clip
(3) Oil Seal
(4) Collar
(5) Slinger
(6) PTO Shaft

9Y1211121TRS0057US0

(3) Disassembling Differential Gear Assembly

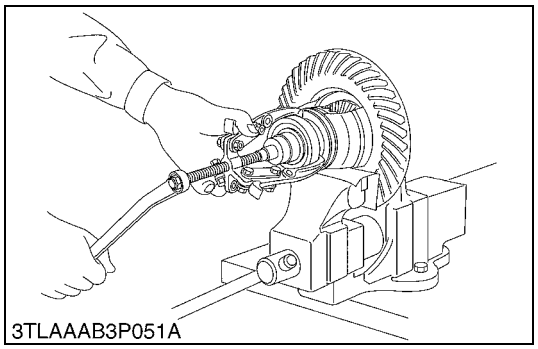

Bearing and Differential Lock Shifter

1. Secure the differential gear in a vise.
2. Remove the ball bearing with a puller.
3. Remove the differential lock shifter.

9Y1211121TRS0058US0

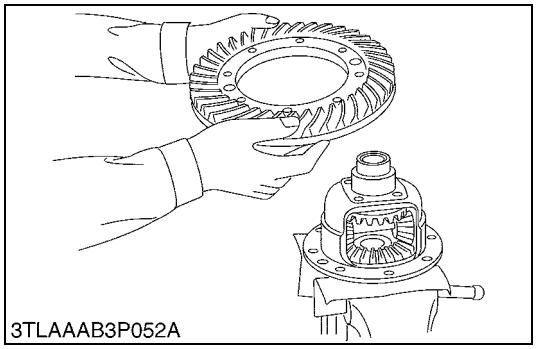
3TLAAAB3P052A

Spiral Bevel Gear

1. Remove the spiral bevel gear.

(When reassembling)

- Check the spiral bevel gear for wear or damage. If it is no longer serviceable, replace it. Then, also replace the spiral bevel pinion.
- Apply liquid lock (Three Bond 1324 or equivalent) to the spiral bevel gear UBS screws.

Tightening torque	Spiral bevel gear UBS screw	69 to 88 N·m 7.0 to 9.0 kgf·m 51 to 65 lbf·ft

9Y1211121TRS0059US0

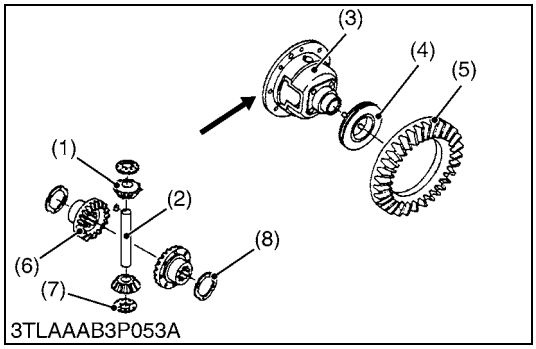

3TLAAAB3P053A

Differential Pinion and Differential Side Gear

1. Draw out the differential pinion shaft (2).
2. Take out the differential pinions (1), differential pinion washers (7) and the differential side gears (6), differential side gear washers (8).

■ **NOTE**

- **Arrange the parts to know their original position.**

(When reassembling)

- Examine the thrust and bearing surface of both differential side gears (6). If they are worn or damaged, bores in the differential case may also be damaged.
- Check the differential pinions (1) and pinion shaft (2) for excessive wear. If these parts are damaged or excessively worn, also replace parts they are in mesh with, or they are sliding on.
- Apply molybdenum disulfide (Three Bond 1901 or equivalent) to the inner circumferential surface of the differential pinions.
- Install the parts to their original position.

(1) Differential Pinion
(2) Differential Pinion Shaft
(3) Differential Case
(4) Differential Lock Shifter
(5) Spiral Bevel Gear
(6) Differential Side Gear
(7) Differential Pinion Washer
(8) Differential Side Gear Washer

9Y1211121TRS0060US0

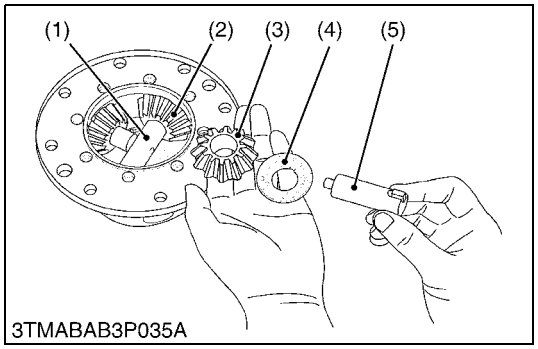

3TMABAB3P035A

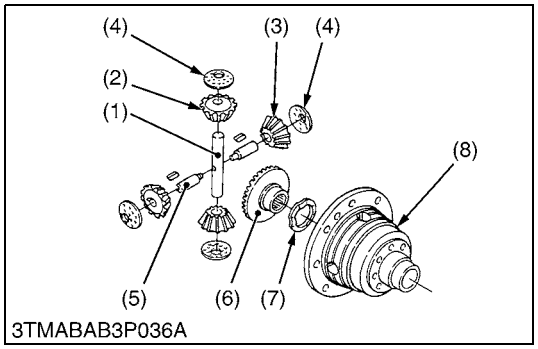

3TMABAB3P036A

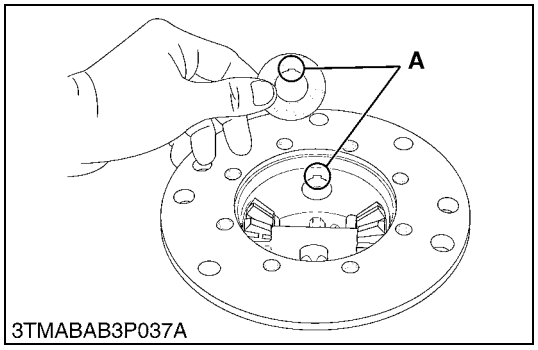

3TMABAB3P037A

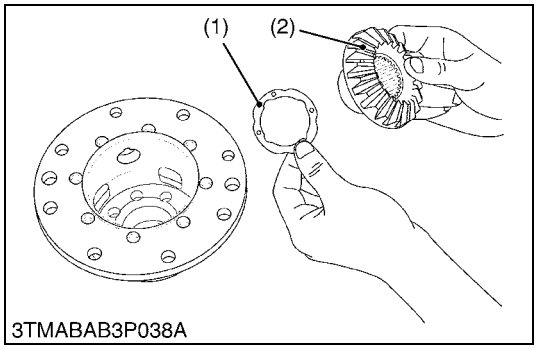

3TMABAB3P038A

Differential Pinion Shaft and Differential Pinion

1. Draw out the differential pinion shaft 2 (5), and take out the differential pinion (3) and differential pinion washer (4).
2. Draw out the differential pinion shaft (1), and take out the differential pinion (2) and differential pinion washer.

■ **NOTE**

- **Arrange the parts to know their original position.**

(When reassembling)

- Check the differential pinions (2) and (3), and pinion shaft (1) and (5) for excessive wear. If these parts are damaged or excessively worn, replace their parts they are in mesh with, or they sliding on.
- Apply molybdenum disulfide (Three Bond 1901 or equivalent) to the inner circumferential surface of the differential pinions.
- Install the parts to their original position.
- Install the differential pinion washer (4), noting its groove position.

(1) Differential Pinion Shaft
(2) Differential Pinion
(3) Differential Pinion
(4) Differential Pinion Washer
(5) Differential Pinion Shaft 2
(6) Differential Side Gear
(7) Differential Side Gear Washer
(8) Differential Case

A: Fit Groove

9Y1211121TRS0061US0

Differential Side Gear

1. Take out the differential side gear (2) and differential side gear washer (1).

(When reassembling)

- Check the thrust and bearing surface of both differential side gears (2). If they are worn or damaged, bores in the differential case may also be damaged. Be sure to replace their parts.

(1) Differential Side Gear Washer
(2) Differential Side Gear

9Y1211121TRS0062US0

[2] HST TYPE

(1) Clutch Housing

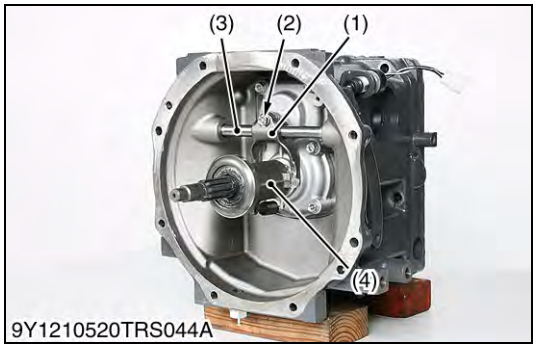

9Y1210520TRS044A

Clutch Lever, Release Fork and Release Bearing

1. Remove the release fork mounting screws (2).
2. Draw out the clutch lever (3) to remove the release fork (1).
3. Remove the release bearing and release hub (4) together.

(When reassembling)

- Apply grease to the sliding surface of the clutch release hub.
- Apply grease to the clutch lever.

(1) Release Fork
(2) Release Fork Mounting Screw
(3) Clutch Lever
(4) Release Hub

9Y1211121TRS0063US0

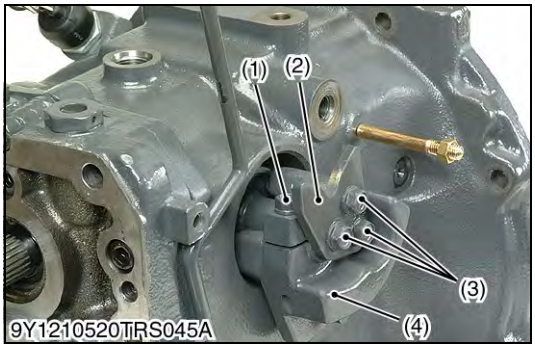

Plate and Neutral Holder

1. Remove the plate mounting screws (3) and plate (2).
2. Remove the neutral holder mounting screw (1) and neutral holder (4).

(When reassembling)

- Be sure to adjust the HST neutral position. (See page 3-S12.)

Tightening torque	Plate mounting screw	24 to 27 N·m 2.4 to 2.8 kgf·m 18 to 20 lbf·ft
	Neutral holder mounting screw	24 to 27 N·m 2.4 to 2.8 kgf·m 18 to 20 lbf·ft

(1) Neutral Holder Mounting Screw
(2) Plate
(3) Plate Mounting Screw
(4) Neutral Holder

9Y1211121TRS0064US0

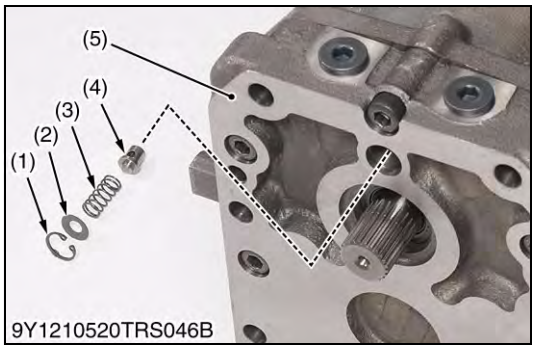

Case Relief Valve

1. Remove the internal cir-clip (1).
2. Remove the holder (2), spring (3) and valve poppet (4).

(When reassembling)

- Apply hydrostatic transmission oil to the poppet before reassembling.

(1) Internal Cir-clip
(2) Holder
(3) Spring
(4) Valve Poppet
(5) Port Block

9Y1211121TRS0065US0

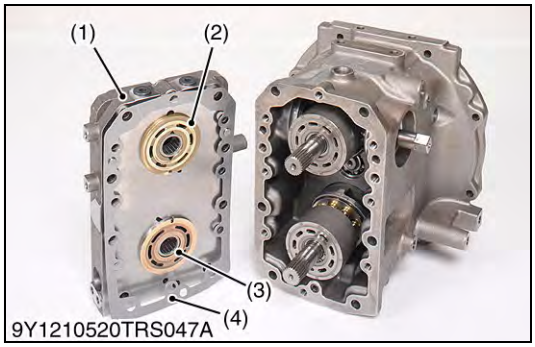

Port Block

1. Remove the port block mounting hex. head screws.
2. Pull and remove the port block (1) from clutch housing.

(When reassembling)

- Install port block (1) with valve plates (2), (3) and new gasket (4) in place.

■ **NOTE**

- **Valve plates (2), (3) may stick to the port block but they are not fixed. Take care not to drop them.**
  And these valve plates are not interchangeable.

Tightening torque	Port block mounting hex. socket screw	61 to 70 N·m 6.2 to 7.2 kgf·m 45 to 52 lbf·ft

(1) Port Block
(2) Valve Plate (Pump)
(3) Valve Plate (Motor)
(4) Gasket

9Y1211121TRS0066US0

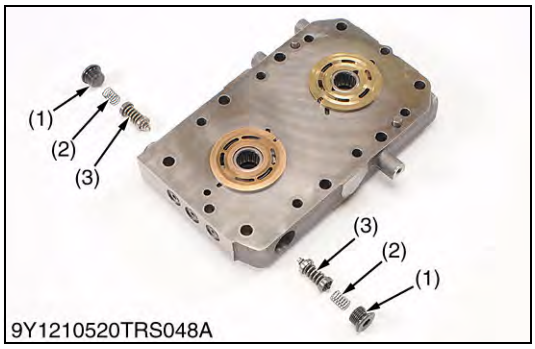

Check and High Pressure Relief Valve

1. Remove the hex. head plug (1) and remove the spring (2) and relief valve assembly (3).

(When reassembling)

- When replacing the valves, check and adjust the setting pressure (see page 3-S10).

■ **NOTE**

- **Take care not to damage the O-ring on the hex. head plug.**

Tightening torque	Hex. head plug	59 to 78 N·m 6.0 to 8.0 kgf·m 44 to 57 lbf·ft

(1) Hex. Head Plug
(2) Spring
(3) Check and High Pressure Relief Valve

9Y1211121TRS0067US0

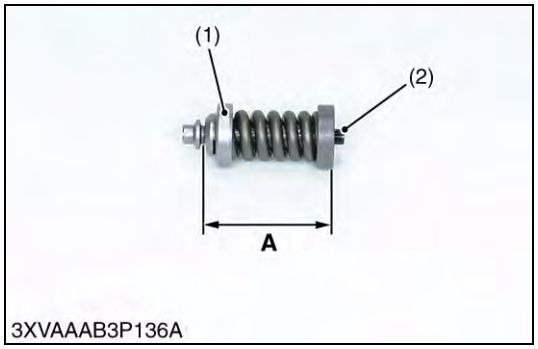

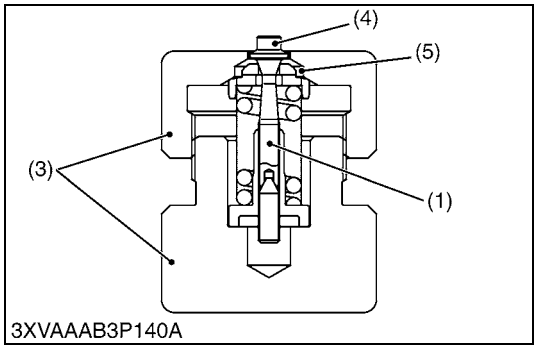

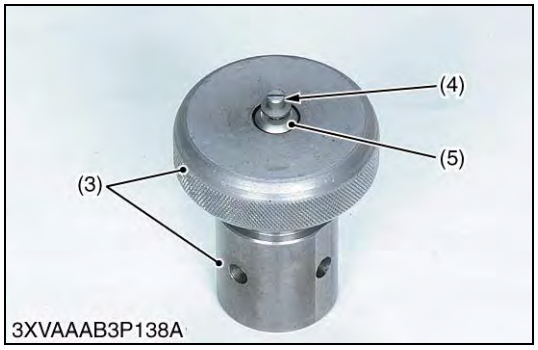

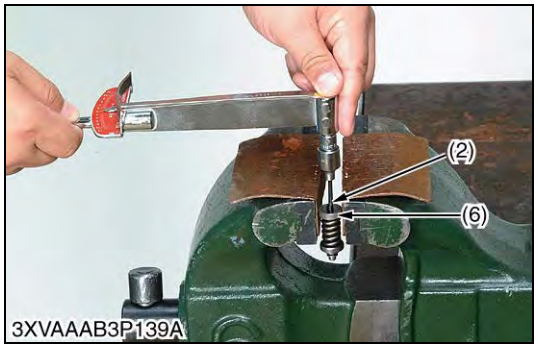

Readjustment of Relief Valve (When the HST does not work due to its loose hexagon socket head screw)

■ **IMPORTANT**

- **The KUBOTA does not recommend the readjustment of relief valve. And KUBOTA will recommend the exhaust with genuine parts.**
- **As the HST may be damaged if the pressure is set to higher by mistake, be careful when adjusting it.**

■ **NOTE**

- **The relief pressure is set in between 33.4 to 36.2 MPa (340 to 370 kgf/cm^2, 4840 to 5260 psi) when shipped from the factory. But, for the purpose of after-sales services, as it is impossible to reset the pressure precisely as set in the factory, its setting range is defined as a slightly wider range between 31.4 to 35.3 MPa (320 to 360 kgf/cm^2, 4560 to 5120 psi).**

1. Measure the pre-adjustment distance **A**.
2. Compress the spring of the relief valve with a relief valve assembling tool (3). (See page G-49.)
3. Then, find the distance **A** by turning the poppet (4) with a screwdriver.
   Reference: The distance **A** changes by about 1.5 mm (0.02 in.) per one turn of the poppet (4).
4. Repeat the same operation a few times to find the distance **A** as it is difficult to acquire at the first time.
5. After finding the distance **A**, hold the setscrew (6) to a vice and fasten the hexagon socket head screw (2) with specified torque. On this occasion, use a copper plate, etc. for the vice jaws not to damage the setscrew (6).
6. Install the relief valve in the HST.
7. Check the relief pressure as indicated in page 3-S10.
   The distance **A** is for refresh only. Make sure to check the relief pressure after readjustment.
8. If the relief pressure does not fall within the readjustment pressure range, repeat the processes of the above item 1 onward.
   Reference: The pressure changes by 1.5 MPa (15 kgf/cm^2, 210 psi) per 0.1 mm (0.004 in.) in distance **A**.

Tightening torque	Hex. socket head screw	25 to 29 N·m 2.5 to 3.0 kgf·m 18 to 21 lbf·ft

Relief valve readjusting pressure	Factory specification	32.4 to 35.3 MPa 330 to 360 kgf/cm^2 4700 to 5120 psi

Distance **A**	Reference value	37.90 to 38.00 mm 1.493 to 1.496 in.

(1) Relief Valve Assembly
(2) Hexagon Socket Head Screw
(3) Relief Valve Assembling Tool
(4) Poppet
(5) Valve Seat
(6) Setscrew

9Y1211121TRS0068US0

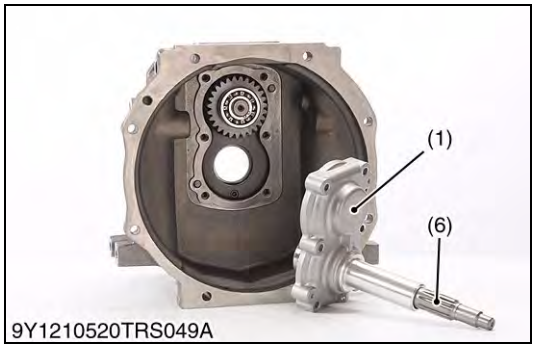

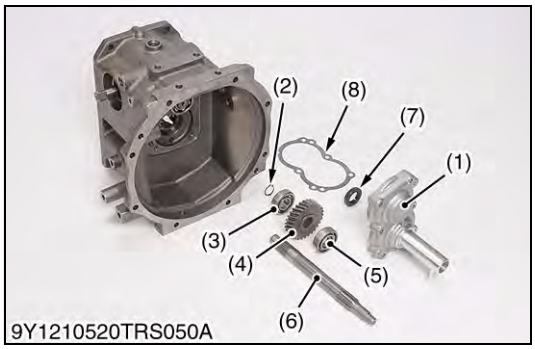

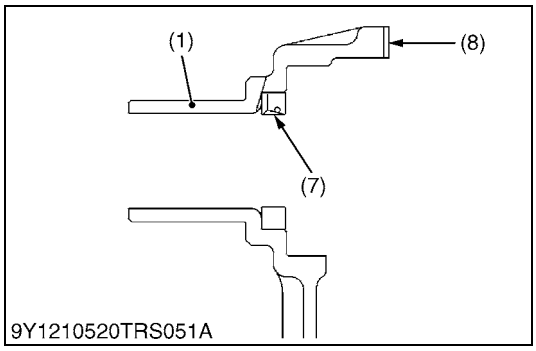

Shaft Case, Input Shaft and Gear

1. Remove the shaft case mounting screws.
2. Screw down the two M6 screws into the shaft case (1).
3. Take out the shaft case (1) with the input shaft assembly.
4. Separate the input shaft assembly with shaft case (1).
5. Remove the external cir-clip (2).
6. Remove the bearings (3), (5) with a bearing puller and 28T gear (4).

(When reassembling)

- Install the shaft case (1) the new gasket (8) in the place.
- Install the oil seal (7) as shown in the figure, noting its direction.
- Apply grease to the oil seal (7).

(1)	Shaft Case	(5)	Bearing
(2)	External Cir-clip	(6)	Input Shaft
(3)	Bearing	(7)	Oil Seal
(4)	28T Gear	(8)	Gasket

9Y1211121TRS0069US0

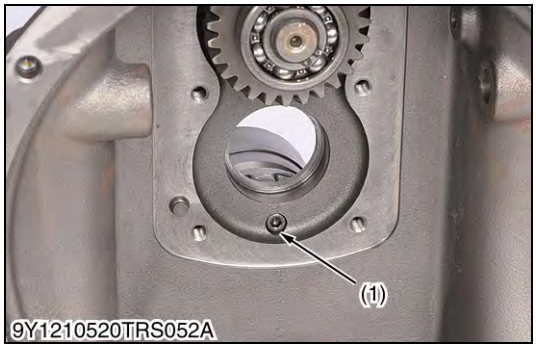

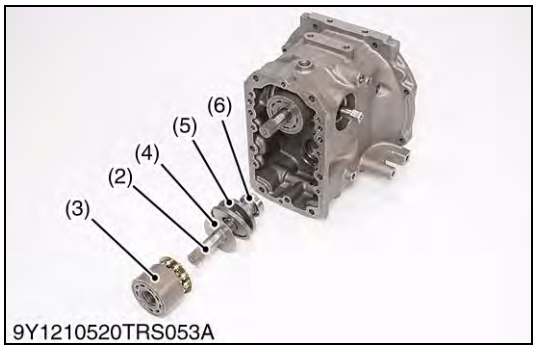

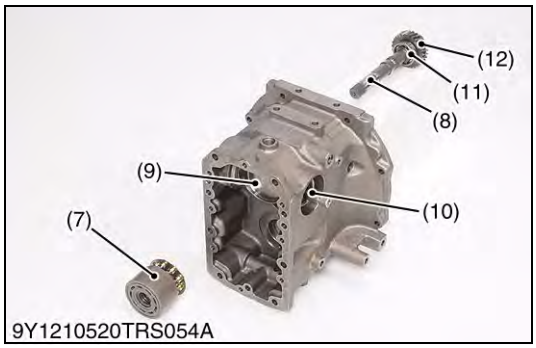

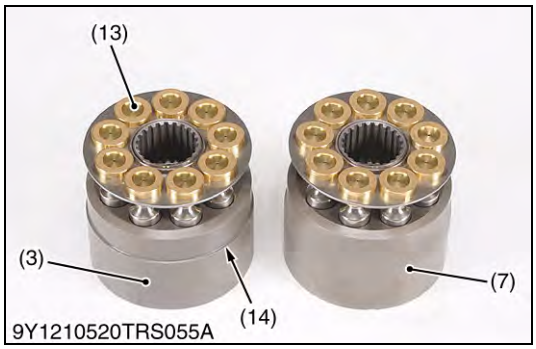

Cylinder Block Assemblies

1. Remove the motor swashplate setting hex. head screw (1).
2. Remove the motor cylinder block assembly (3) with a motor shaft (2).
3. Remove the pump cylinder block assembly (7) and pump shaft (8).

(When reassembling)

- Apply clean hydrostatic transmission oil to cylinder block.
- When installing the swashplate to clutch housing, be sure to align the hole of swashplate and straight pin.

■ **NOTE**

- **Take care not to damage the surface of cylinder block, pistons.**
- **Do not interchange pistons between pump and motor cylinder block.**

Tightening torque	Swashplate mounting hex. head screw	29 to 35 N·m 2.9 to 3.6 kgf·m 21 to 26 lbf·ft

(1) Swashplate setting hex. head Screw
(2) Output Shaft (Motor)
(3) Motor cylinder Block Assembly
(4) Thrust Plate
(5) Swashplate
(6) Bearing
(7) Pump Cylinder Block Assembly
(8) Pump Shaft
(9) Thrust Plate
(10) Trunnion
(11) Bearing
(12) 27T Gear
(13) Piston
(14) Identification Groove

9Y1211121TRS0070US0

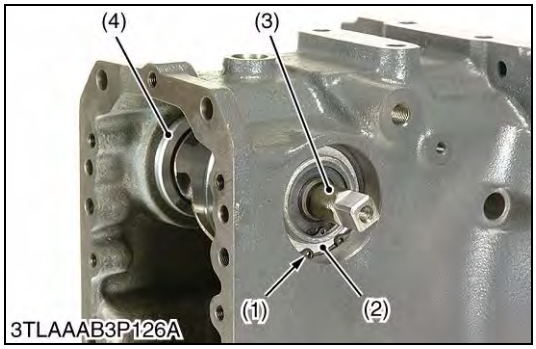

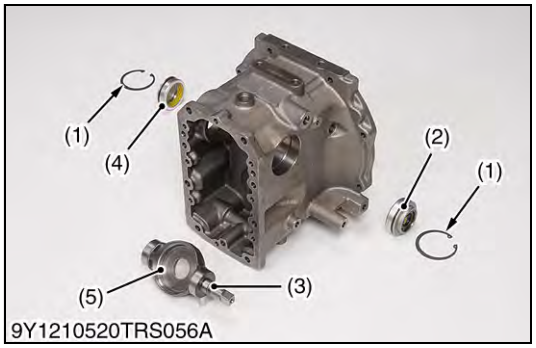

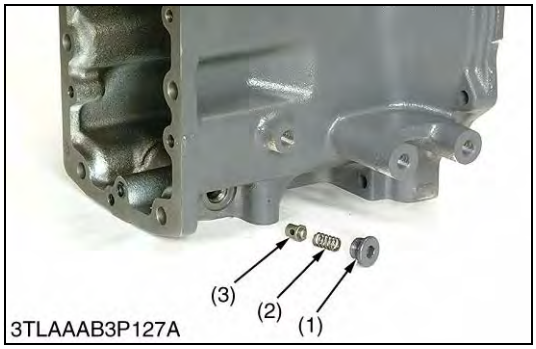

Trunnion

1. Remove the internal cir-clip (1) both side.
2. Remove the cover (2) and (4).
3. Remove the trunnion (3).

(When reassembling)

- Apply transmission oil to the O-ring.

■ **NOTE**

- **Take care not to damage the O-ring with cover (4).**

(1) Internal Cir-clip
(2) Cover
(3) Trunnion
(4) Cover
(5) Thrust Plate

9Y1211121TRS0071US0

Charge Relief Valve

1. Remove the hex. head plug (1).
2. Remove the spring (2) and valve poppet (3).

(When reassembling)

- When replacing the valves, check and adjust the setting pressure. (See page 3-S11.)

■ **NOTE**

- **Take care not to damage the O-ring.**

Tightening torque	Hex. head plug	31 to 37 N·m 3.1 to 3.8 kgf·m 23 to 27 lbf·ft

(1) Hex. Head Plug
(2) Spring
(3) Valve Poppet

9Y1211121TRS0072US0

(2) Mid Case

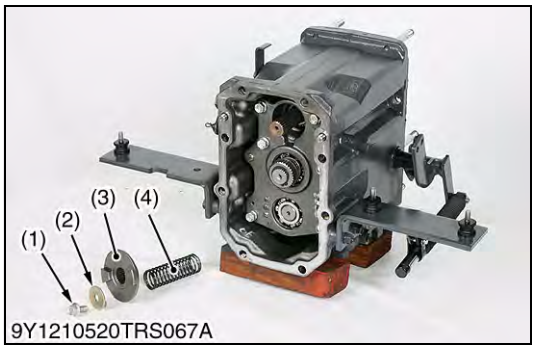

PTO Clutch

1. Remove the PTO clutch mounting screw (1).
2. Remove the washer (2), clutch cam (3) and spring (4).

(When reassembling)

Tightening torque	Clutch cam mounting screw	61 to 70 N·m 6.2 to 7.2 kgf·m 45 to 52 lbf·ft

(1) Screw
(2) Washer
(3) Clutch Cam
(4) Spring

9Y1211121TRS0073US0

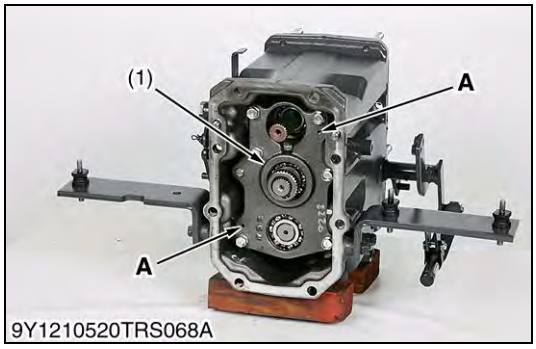

Bearing Holder

1. Remove the bearing holder mount screws.
2. Jack up the bearing holder (1) by using the two jack screws then remove the bearing holder (1).

(When reassembling)

- Tap in the bearing holder (1) with plastic hummer until contact to mid case and then tighten the screws to specified torque.

Tightening torque	Bearing holder mounting screw	48 to 55 N·m 4.9 to 5.7 kgf·m 36 to 41 lbf·ft

(1) Bearing Holder **A: Hole for Jack Screw**

9Y1211121TRS0074US0

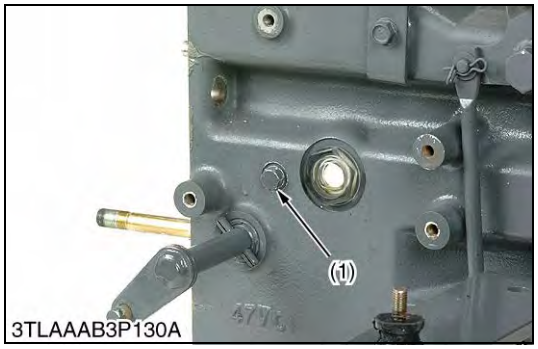

Gears and Shafts

1. Remove the screw (1).
2. Tap out the PTO counter shaft (2).
3. Remove the shift fork (3) and sub shaft assembly (4).
4. Remove the 13T gear shaft assembly (5).

(1) Screw
(2) PTO Counter Shaft
(3) Shift Fork
(4) Sub Shaft Assembly
(5) 13T Gear Shaft Assembly

9Y1211121TRS0075US0

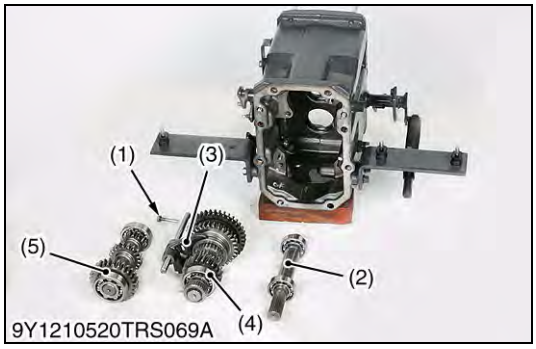

(3) Transmission Case

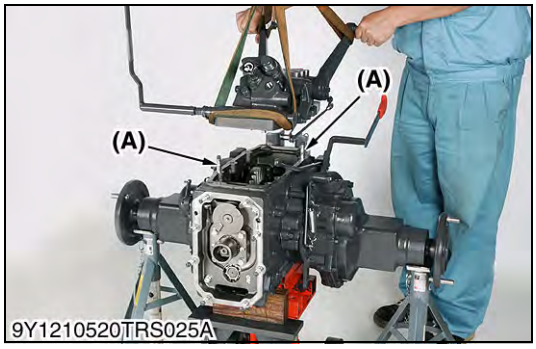

Hydraulic Cylinder Assembly

1. Loosen and remove the hydraulic cylinder assembly mounting screws and nuts.
2. Support the hydraulic cylinder assembly with nylon lift strap and hoist, and then take out it.

(When reassembling)

- Apply liquid gasket (Three Bond 1206C or equivalent) to joint face of the hydraulic cylinder assembly and transmission case after eliminate the water, oil and stuck liquid gasket.
- When replacing the hydraulic cylinder assembly mounting stud bolts, apply liquid lock (Three Bond 1324 or equivalent) to **(A)** portion of the stud bolt.

■ **NOTE**

- **Reassemble the hydraulic cylinder assembly to the tractor, be sure to adjust the position control rod. (See page 8-S8.)**

9Y1211121TRS0076US0

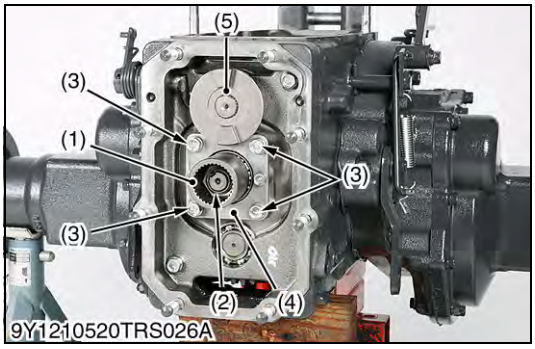

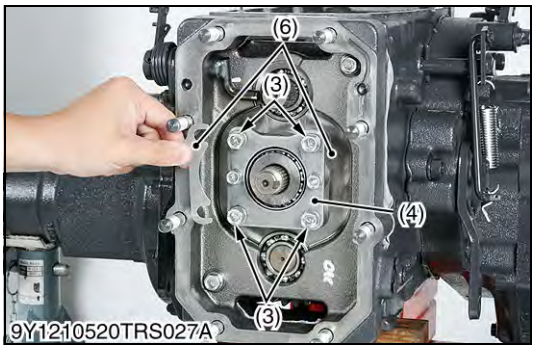

PTO Clutch and Pinion Bearing Holder

1. Remove the coupling (1) and the PTO clutch cam (5).
2. Remove the screws (3) and pinion bearing holder assembly (4).
3. Remove the lock nut (2).

(When reassembling)

- Make sure of the number of shims in the pinion bearing holder.
- Replace the lock nut (1) with a new one, and stake the lock nut firmly after installing the parts on the shaft.

Tightening torque	Lock nut	150 to 190 N·m 15 to 20 kgf·m 110 to 140 lbf·ft
	Pinion bearing holder mounting screw	40 to 44 N·m 4.0 to 4.5 kgf·m 29 to 32 lbf·ft

(1) Coupling (Pinion Shaft)
(2) Lock Nut
(3) Screw (Pinion Bearing Cover)
(4) Pinion Bearing Holder Assembly
(5) PTO Clutch Cam
(6) Shim

9Y1211121TRS0077US0

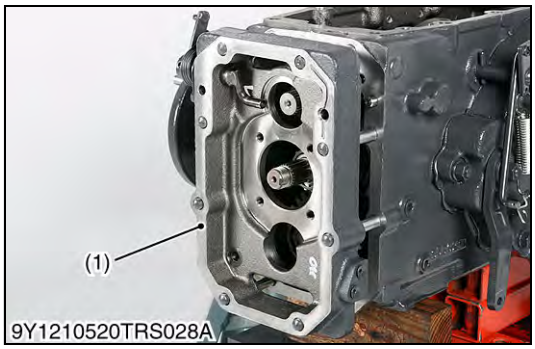

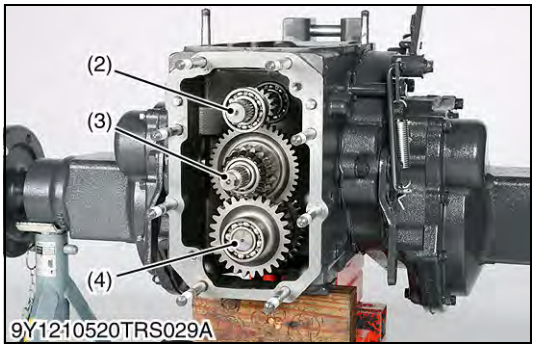

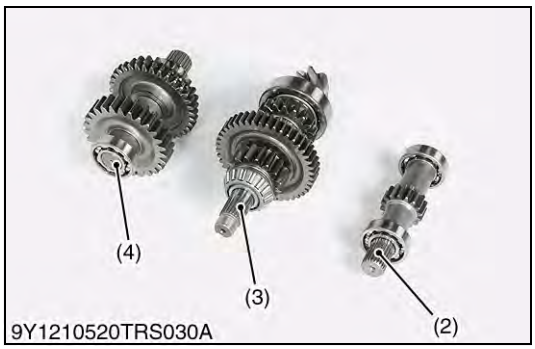

Gear and Shaft Assembly

1. Remove the spacer mounting screws.
2. Separate the spacer (1) from the transmission case.
3. Remove the 16T gear shaft assembly (2).
4. remove the pinion shaft assembly (3) and PTO drive shaft assembly (4).

(When reassembling)

- Apply liquid gasket (Three Bond 1206C or equivalent) to joint faces of spacer and transmission case.

Tightening torque	Spacer mounting screw	48 to 55 N·m 4.9 to 5.7 kgf·m 36 to 41 lbf·ft

(1) Spacer
(2) 16T Gear Shaft Assembly
(3) Pinion Shaft Assembly
(4) PTO Drive Shaft Assembly

9Y1211121TRS0078US0

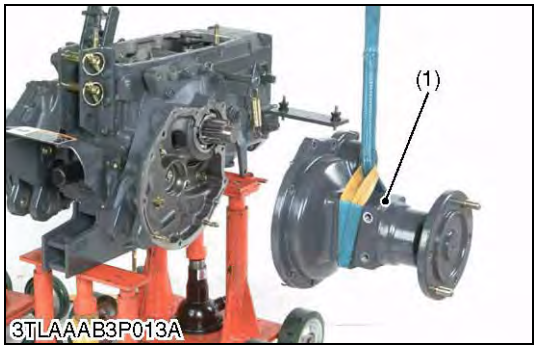

Rear Axle Case

1. Loosen and remove the rear axle case mounting screws and nuts.
2. Support the rear axle case (1) with the nylon lift strap and hoist.
3. Separate the rear axle case from brake case.
4. Follow the same procedure as above for the other side.

(When reassembling)

- Apply liquid gasket (Three Bond 1206C or equivalent) to joint face of the rear axle case and brake case, after eliminating the water, oil and stuck liquid gasket.

(1) Rear Axle Case

9Y1211121TRS0079US0

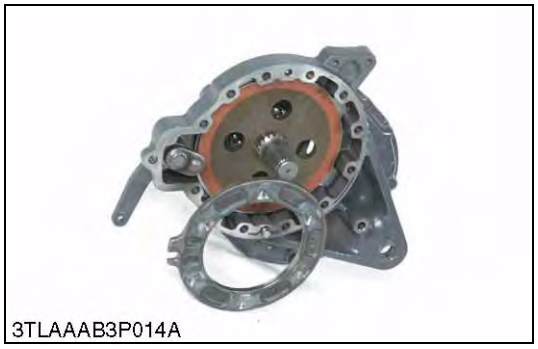

Brake Case

1. Loosen the remove the brake case mounting screws and nut.
2. Separate the brake case, tapping the brake case lever lightly.

(When reassembling)

- Apply grease to the brake ball seats. (Do not grease excessively.)
- Apply liquid gasket (Three Bond 1206C or equivalent) to joint face of the brake case and transmission case, after eliminating the water, oil and stuck liquid gasket.
- Before installing the brake case to the transmission case, install the cam plate to the transmission case.
- Apply liquid lock (Three Bond 1324 or equivalent) to **(A)**, **(B)**, **(C)**, **(D)** portions of the stud bolts, R.H. and L.H..

9Y1211121TRS0080US0

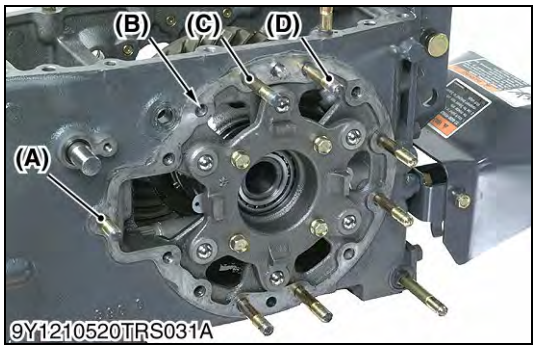

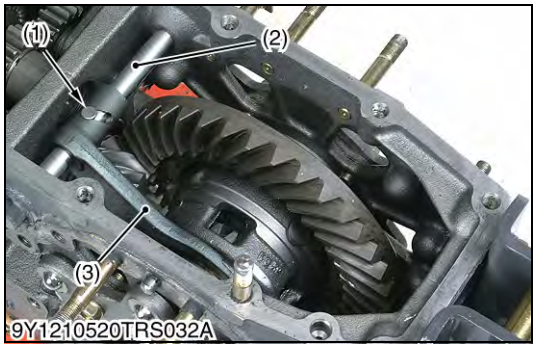

Differential Lock

1. Remove the clevis pin (1).
2. Draw out the differential lock fork shaft (2).
3. Take out the shift fork (3).

(1) Clevis Pin
(2) Fork Shaft
(3) Shift Fork

9Y1211121TRS0081US0

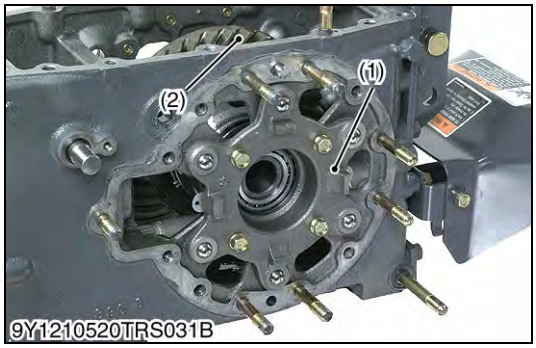

Differential Gear Assembly

1. Remove the differential bearing case (1) mounting screws.
2. Remove the differential bearing case (1), noting the number of left and right shims.
3. Take out the differential gear assembly (2) from transmission case.

(When reassembling)

- Use same number of shim as before disassembling.
- Replace the left and right bearing cases on the same sides as before.
- Apply grease to ball and ball seats.

(1) Differential Bearing Case
(2) Differential Gear Assembly

9Y1211121TRS0082US0

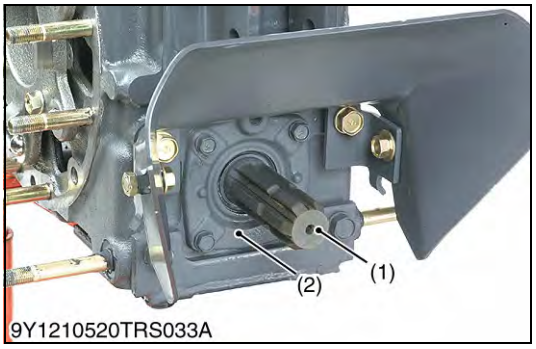

PTO Bearing Case

1. Remove the bearing case (2) mounting screws.
2. Take out the PTO shaft (1) with bearing case.

(1) PTO Shaft
(2) PTO Bearing Case

9Y1211121TRS0083US0

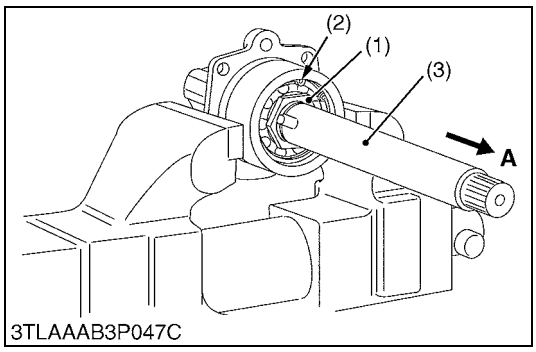

PTO Shaft

1. Remove the internal cir-clip (2).
2. Tap out the PTO shaft (6) to the front **"A"**.

(When reassembling)

- In the lock nut (1) was removed, replace a new one, and after tightening it to the specified torque, be sure to stake it firmly.
- Install the slinger (5) firmly.
- After applying liquid gasket (Three Bond 1206C or equivalent) to joint face of the collar (4), and insert the collar to PTO shaft.
- Apply grease to oil seal (3) and install it, noting its direction.

Tightening torque	Lock nut	150 to 190 N·m 15 to 20 kgf·m 110 to 140 lbf·ft

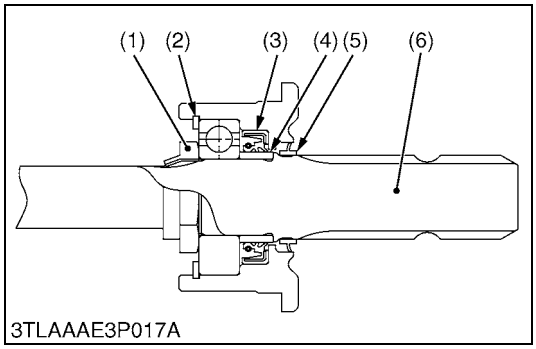

(1) Lock Nut
(2) Internal Cir-clip
(3) Oil Seal
(4) Collar
(5) Slinger
(6) PTO Shaft

9Y1211121TRS0057US0

(4) Disassembling Differential Gear Assembly

Refer to "Disassembling Differential Gear Assembly" at this section (See page 3-S41).

9Y1211121TRS0084US0

(5) Disassembling Cruise Control (Option)

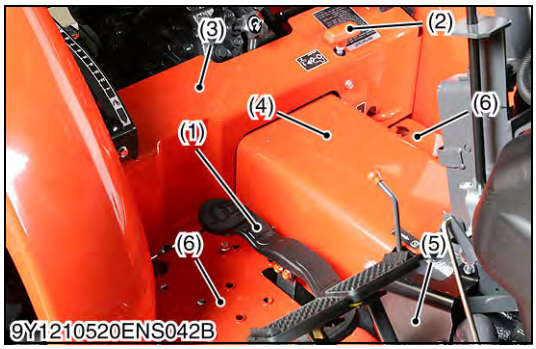

Outer Components

1. Remove the rear tire L.H. and the fender L.H..
2. Remove the speed control pedal (1).
3. Remove the grip (2) and the floor sheet cover (3).
4. Remove the center cover (4) and the neutral holder cover (5).
5. Remove the brake pedal return spring (R.H., L.H.).
6. Remove the step (6).

(1)	Speed Control Pedal	(4)	Center Cover
(2)	Grip	(5)	Neutral Holder Cover
(3)	Floor Sheet Cover	(6)	Step

9Y1211121TRS0085US0

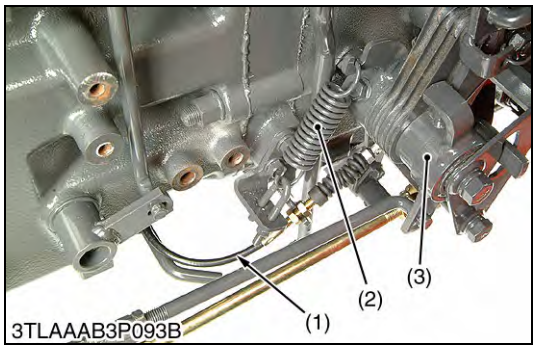

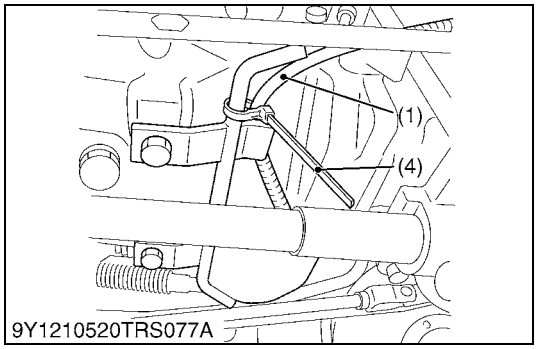

Disassembling Cruise Control

1. Remove the clip (4) and disconnect the cruise cable (1).
2. Disconnect the speed set rod and the cruise spring.
3. Remove the cruise lever.
4. Disconnect the speed set spring (2) and remove the cruise holder assembly (3).

(When reassembling)

■ **NOTE**

- **Connect the cruise cable (1), and then adjust the cruise control release linkage. (See page 3-S13.)**

Tightening torque	Cruise control boss screw (M12)	78 to 90 N·m 7.9 to 9.2 kgf·m 58 to 66 lbf·ft
	Rear axle case screw (M12)	78 to 90 N·m 7.9 to 9.2 kgf·m 58 to 66 lbf·ft

(1)	Cruise Cable	(3)	Cruise Holder Assembly
(2)	Speed Set Spring	(4)	Clip

9Y1211121TRS0086US0

7. SERVICING

[1] CLUTCH HOUSING CASE

(1) Manual Transmission Type

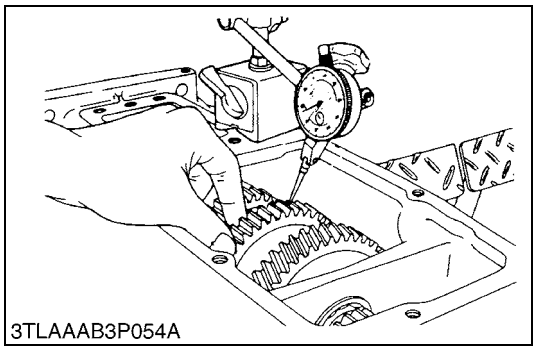
3TLAAAB3P054A

Gear Backlash

1. Set a dial indicator (lever type) on one of the tooth faces.
2. Clamp the mating gear.
3. Measure backlash by turning the gear to be measured.
4. If the reading exceeds the allowable limit, replace the gear.

Gear backlash	Factory specification	0.1 to 0.3 mm 0.004 to 0.01 in.
	Allowable limit	0.4 mm 0.02 in.

9Y1211121TRS0087US0

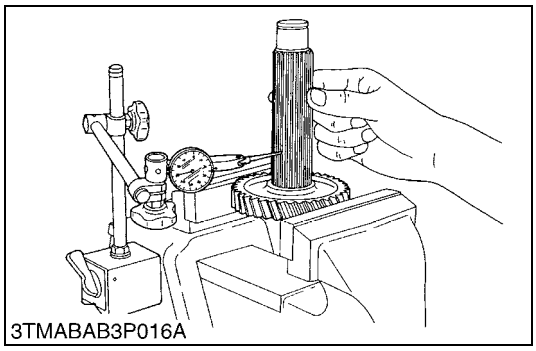
3TMABAB3P016A

Clearance between Gear and Spline

1. Secure the gear with a vise.
2. Set a dial indicator (lever type) with its finger on the spline.
3. Move the shaft to measure the clearance.
4. If the clearance exceeds the allowable limit, replace them.

Clearance between gear and spline	Factory specification	0.030 to 0.078 mm 0.0012 to 0.0030 in.
	Allowable limit	0.2 mm 0.008 in.

9Y1211121TRS0088US0

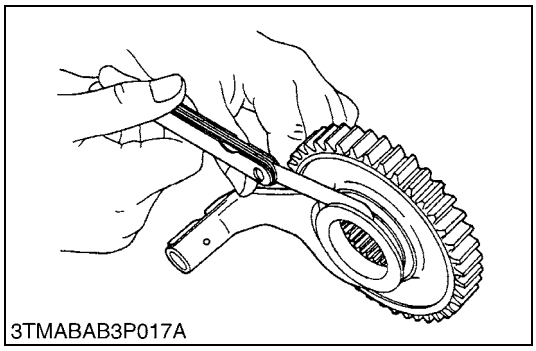
3TMABAB3P017A

Clearance between Shift Fork and Shift Gear Groove or Shifter Groove

1. Place for in the groove to check clearance with feeler gauge.
2. If the clearance exceeds allowable limit, replace.

Clearance between shift fork and shift gear groove	Factory specification	0.15 to 0.40 mm 0.0059 to 0.015 in.
	Allowable limit	0.6 mm 0.02 in.
Clearance between shift fork and shifter groove	Factory specification	0.15 to 0.40 mm 0.0059 to 0.015 in.
	Allowable limit	0.6 mm 0.02 in.

9Y1211121TRS0089US0

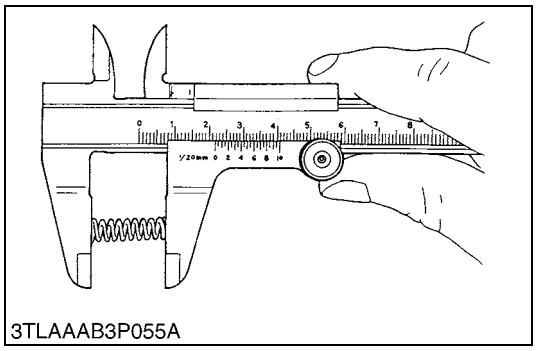
3TLAAAB3P055A

Free Length of the Shift Fork Spring

1. Measure free length of spring with vernier caliper.
2. If the free length is less than the allowable limit, replace.

Free length of the shift fork spring	Factory specification	22 mm 0.87 in.
	Allowable limit	20 mm 0.79 in.

9Y1211121TRS0090US0

(2) HST Type

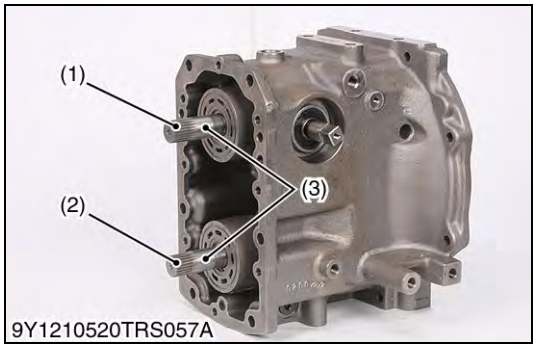

Pump Shaft and Motor Shaft

1. Check the oil seal surface (3).
2. If the pump shaft (1) and motor shaft (2) are rough or groove, replace them.

(1) Pump Shaft
(2) Motor Shaft
(3) Oil Seal Surface

9Y1211121TRS0091US0

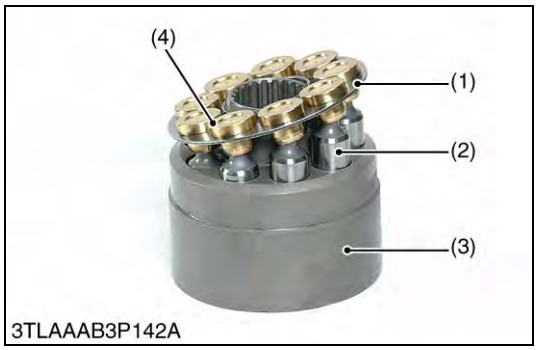

Cylinder Block Bore and Pistons

1. Lift the pistons gently with the retainer plate (1).
2. Check the pistons for their free movement in the cylinder block bores.
3. If the piston or the cylinder block bore is scored, replace cylinder block assembly.
4. Check the slipper (4) for flatness.
5. If rounded, replace.

■ **IMPORTANT**

- **Do not interchange pistons between pump and motor cylinder block.**

(1) Retainer Plate
(2) Piston
(3) Cylinder Block
(4) Piston Slipper

9Y1211121TRS0092US0

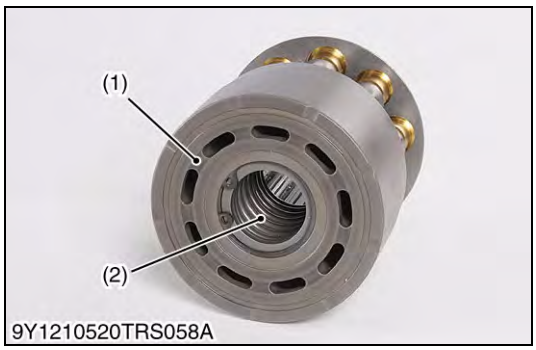

Cylinder Block Face

1. Check the polished face (1) of cylinder block for scoring.
2. If scored, replace cylinder block assembly.
3. Check the spring (2) for breakage.
4. If broken, replace cylinder block assembly.

(1) Polished Face
(2) Spring

9Y1211121TRS0093US0

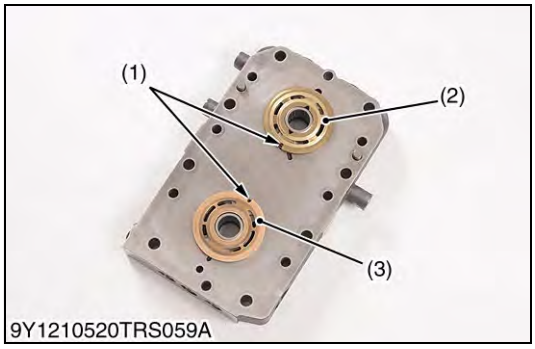

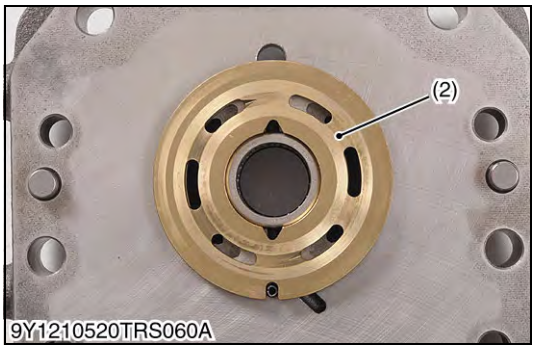

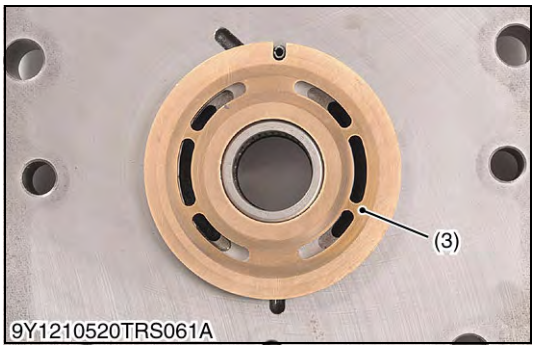

Valve Plate

1. Check the engagement of the valve plate (2), (3) and the anchor pin (1).
2. Pushing the valve plate against the anchor pin, lift it to remove.
3. Check the valve plate for foreign particles.
4. Clean the valve plate and dry with compressed air.
5. Check the valve plate for scratches, wear and erosion. (Run a finger nail across the valve plate surface. If worn, it will be felt.)
6. If worn or scored, replace.

■ **NOTE**
- **After checking, coat them with transmission oil.**
- **Valve plates are not interchangeable.**

(1) Anchor Pin
(2) Valve Plate (Pump Side)
(3) Valve Plate (Motor Side)

9Y1211121TRS0094US0

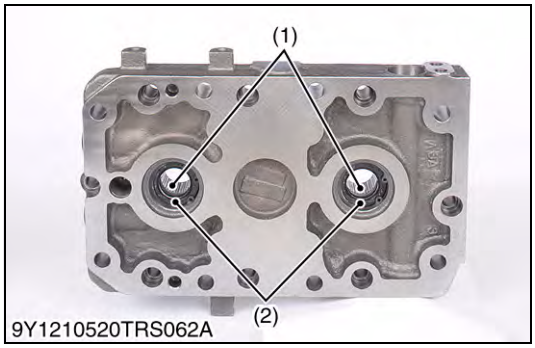

Oil Seals and Bearing for Shaft

1. Remove the internal snap ring and check the oil seals (2) for damage.
2. Check the bearings (1) for wear.
3. If the bearings are worn, replace.

■ **NOTE**
- **After checking, coat the bearing with transmission oil and the oil seal lip with grease.**

(1) Needle Bearing
(2) Oil Seal

9Y1211121TRS0095US0

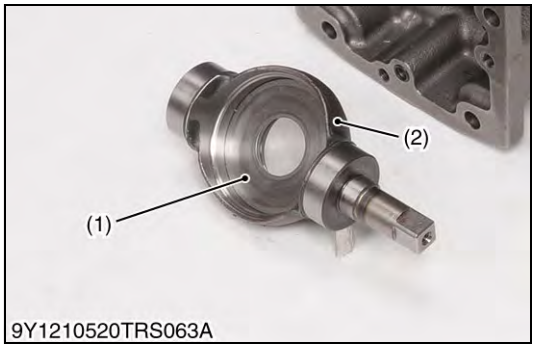

Thrust Plate and Trunnion

1. Check the piston contact face of the thrust plate (1), and the thrust plate contact face of trunnion (2) for scratches and excessive wear.
2. If the thrust plate (1) and the trunnion (2) are worn and scored, replace them.

(1) Thrust Plate
(2) Trunnion

9Y1211121TRS0096US0

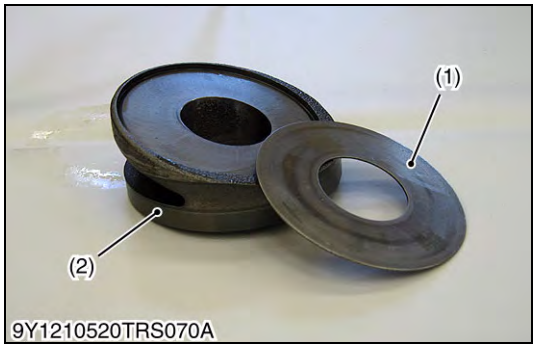

Thrust Plate and Swashplate

1. Check the piston contact face of the thrust plate (1), and the thrust plate contact face of the swashplate (2) for scratches and excessive wear.
2. If the thrust plate (1) and the swashplate (2) are worn and scored, replace them.

(1) Thrust Plate
(2) Swashplate

9Y1211121TRS0097US0

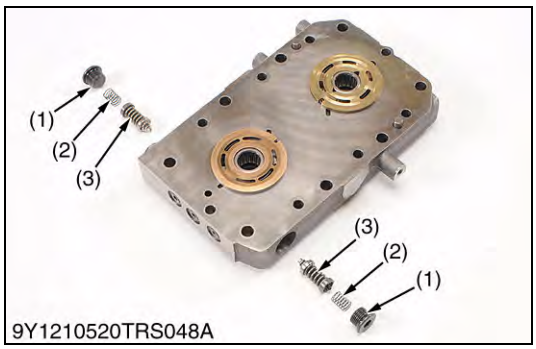

Check and High Pressure Relief Valve

1. Check the spring (2) and check and high pressure relief valve (3) for scratches and damage.
2. Check the valve seal in the port block cover for damage.
3. If anything is unusual, replace the check and high pressure relief valve as an assembly.

(1) Hex. Head Plug
(2) Spring
(3) Check and High Pressure Relief Valve

9Y1211121TRS0098US0

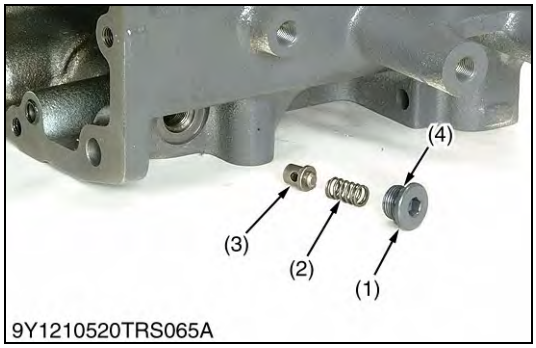

Charge Relief Valve

1. Check the plug (1), O-ring (4), the spring (2) and the valve poppet (3) for scratches, damage and breakage.
2. If anything is unusual, replace it.

(1) Plug
(2) Spring
(3) Valve Poppet
(4) O-ring

9Y1211121TRS0099US0

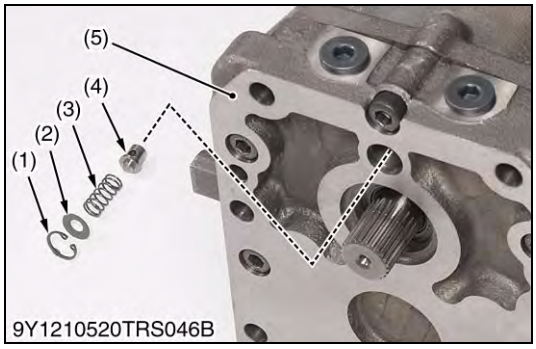

Case Relief Valve

1. Check the spring (3) and the poppet (4) for scratches, damage and breakage.
2. If anything is unusual, replace it.

(1) Internal Cir-clip
(2) Holder
(3) Spring
(4) Valve Poppet
(5) Port Block

9Y1211121TRS0100US0

[2] TRANSMISSION CASE

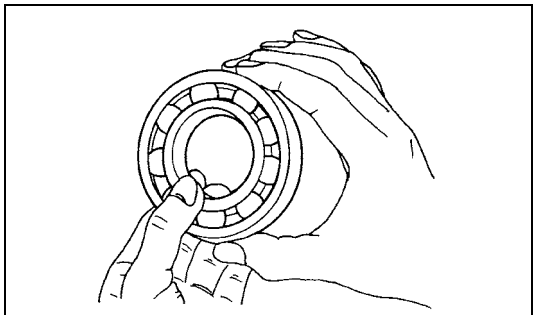
3TMABAB3P015A

Checking Bearing

1. Hold the inner race, and push and pull the outer race in all directions to check for wear and roughness.
2. Apply transmission fluid to the bearing, and hold the inner race. Then turn the outer race to check rotation.
3. If there is any defect, replace it.

9Y1211121TRS0101US0

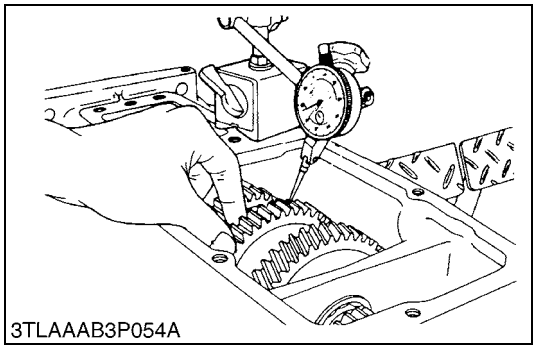
3TLAAAB3P054A

Gear Backlash

1. Set a dial indicator (lever type) on one of the tooth faces.
2. Clamp the mating gear.
3. Measure backlash by turning the gear to be measured.
4. If the reading exceeds the allowable limit, replace the gear.

Gear backlash	Factory specification	0.1 to 0.3 mm 0.004 to 0.01 in.
	Allowable limit	0.4 mm 0.02 in.

9Y1211121TRS0102US0

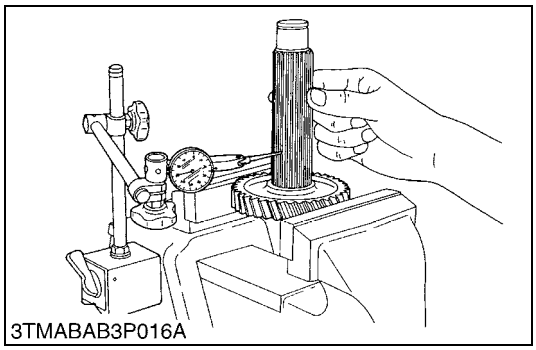
3TMABAB3P016A

Clearance between Gear and Spline

1. Secure the gear with a vise.
2. Set a dial indicator (lever type) with its finger on the spline.
3. Move the shaft to measure the clearance.
4. If the clearance exceeds the allowable limit, replace them.

Clearance between gear and spline	Factory specification	0.030 to 0.078 mm 0.0012 to 0.003 in.
	Allowable limit	0.2 mm 0.008 in.

9Y1211121TRS0103US0

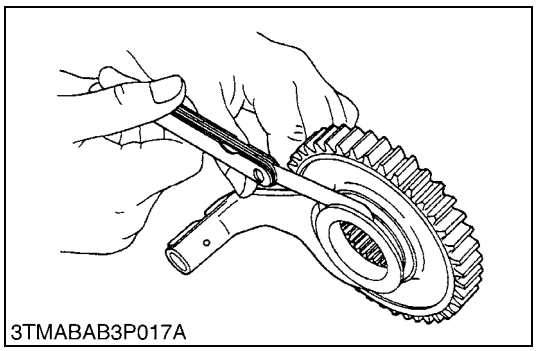
3TMABAB3P017A

Clearance between Shift Fork and Shift Gear Groove or Shifter Groove

1. Place for in the groove to check clearance with feeler gauge.
2. If the clearance exceeds allowable limit, replace.

Clearance between shift fork and shift gear groove	Factory specification	0.15 to 0.40 mm 0.0059 to 0.015 in.
	Allowable limit	0.6 mm 0.02 in.

9Y1211121TRS0104US0

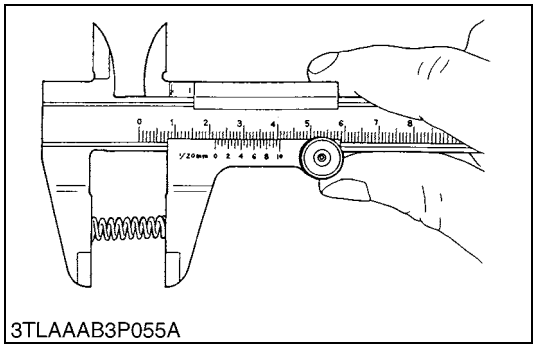
3TLAAAB3P055A

Free Length of the Shift Fork Spring

1. Measure free length of spring with vernier caliper.
2. If the free length is less than the allowable limit, replace.

Free length of the shift fork spring	Factory specification	22 mm 0.87 in.
	Allowable limit	20 mm 0.79 in.

9Y1211121TRS0105US0

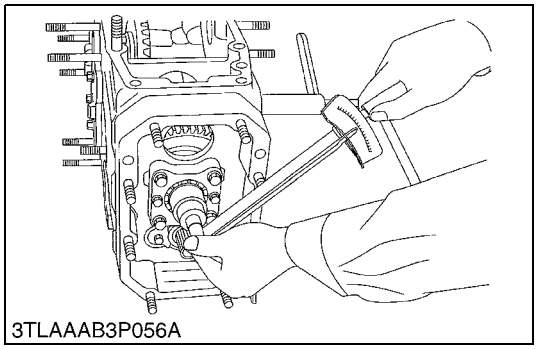
3TLAAAB3P056A

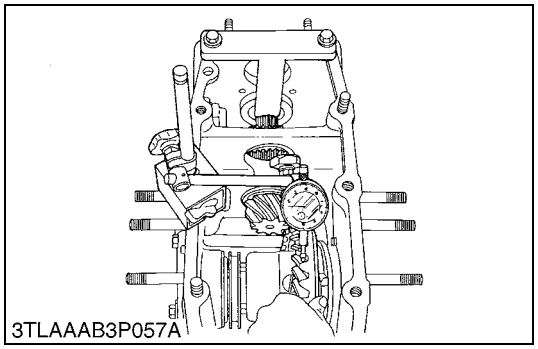
3TLAAAB3P057A

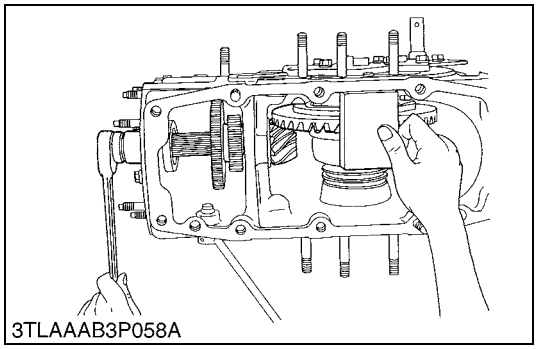
3TLAAAB3P058A

Spiral Bevel Pinion Turning Torque (with Differential Gear)

1. Grip the spiral bevel pinion nut with a torque wrench and measure the turning torque.
2. If the turning torque is not within the factory specifications, check the differential gear turning force, backlash and tooth contact again.

Differential gear rotating torque (Combined)	Factory specification	4.0 to 6.3 N·m 0.40 to 0.65 kgf·m 2.9 to 4.7 lbf·ft

9Y1211121TRS0106US0

Backlash and Tooth Contact between Bevel Gear and 8T Spiral Bevel Pinion

1. Set the dial indicator (lever type) with its finger on the tooth surface.
2. Measure the backlash by fixing the 8T spiral bevel pinion and moving the bevel gear by hand.
3. If the backlash exceeds the factory specification, decrease the number of shims at right bearing case (right) and insert the removed shims to the left bearing case (left).
   If the backlash is less than the factory specification, decrease the number of shims at left bearing case (left) and insert the removed shims to the right bearing case (right).
4. Adjust the backlash properly by repeating the above procedures.

Backlash between spiral bevel gear and 8T spiral bevel pinion	Factory specification	0.15 to 0.30 mm 0.0059 to 0.011 in.

5. Apply red lead lightly over several teeth at three positions equally spaced on the bevel gear.
6. Turn the 8T spiral bevel pinion while pressing a wooden piece against the periphery of the bevel gear.
7. Check the tooth contact. If not proper, adjust according to the instructions below.

(Reference)

- Thickness of differential side shims :
  0.1 mm (0.004 in.) (Parts No. 37150-26170)
  0.2 mm (0.007 in.) (Parts No. 37150-26160)
  0.5 mm (0.02 in.) (Parts No. 37150-26180)
- Thickness of spiral bevel pinion shims :
  0.1 mm (0.004 in.) (Parts No. 34150-22630)
  0.2 mm (0.007 in.) (Parts No. 34150-22620)
  0.5 mm (0.02 in.) (Parts No. 37450-22610)

9Y1211121TRS0107US0

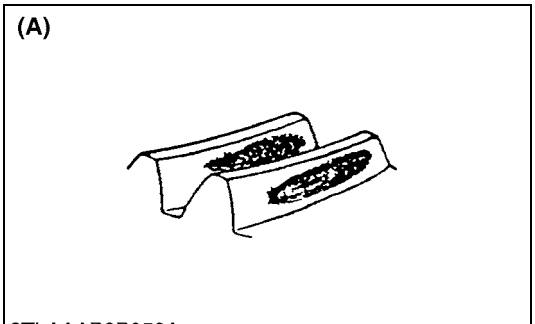

3TLAAAB3P059A

Proper Contact

More than 35 % red lead contact area on the gear tooth surface.

The center of tooth contact at 1/3 of the entire width from the small end.

(A) Proper Contact

9Y1211121TRS0108US0

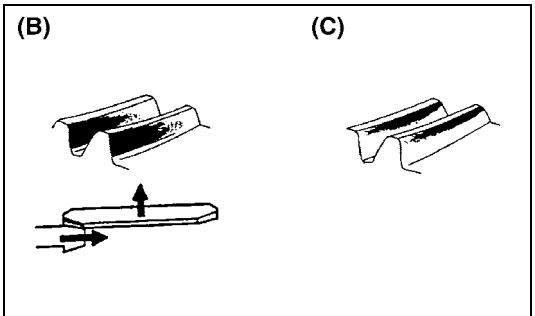

3TLAAAB3P060A

Heel Contact and Tip Contact

Replace the adjusting shim with thicker one to move the bevel pinion shaft forward.

And place the left side shim to the right to move the bevel gear rightward.

Repeat above until the proper tooth contact and backlash are achieved.

(B) Heel Contact **(C) Tip Contact**

9Y1211121TRS0109US0

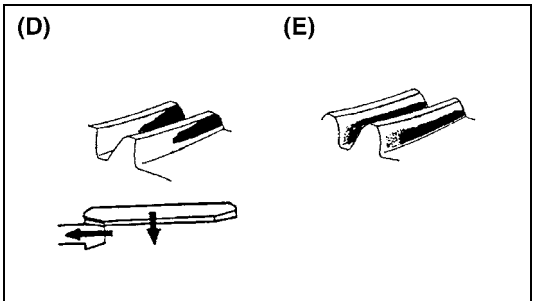

3TLAAAB3P061A

Toe Contact and Base Contact

Replace adjusting shim with thicker one to move the bevel pinion shaft forward.

And place the right side shim to the left to move the bevel gear leftward.

Repeat above until the proper tooth contact and backlash are achieved.

(D) Toe Contact **(E) Base Contact**

9Y1211121TRS0110US0

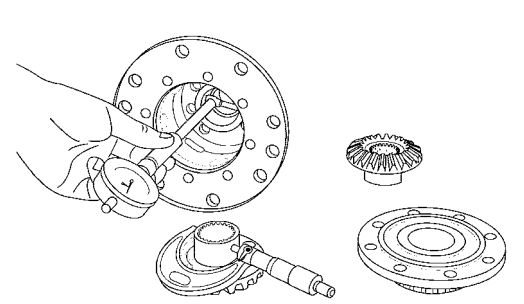
3TMABAB3P046A

Clearance between Differential Case Bore (Differential Case Cover Bore) and Differential Side Gear Boss

1. Measure the bore I.D. of the differential case and differential case cover.
2. Measure the differential side gear boss O.D. and calculate the clearance.
3. If the clearance exceeds the allowable limit, replace them.

Clearance between differential case bore and differential side gear boss	Factory specification	0.0500 to 0.151 mm 0.00197 to 0.00594 in.
	Allowable limit	0.35 mm 0.014 in.

Differential case bore I.D.	Factory specification	40.500 to 40.562 mm 1.5945 to 1.5969 in.
Differential side gear boss O.D.	Factory specification	40.411 to 40.450 mm 1.5910 to 1.5925 in.

Clearance between differential case cover bore and differential side gear boss	Factory specification	0.090 to 0.169 mm 0.00355 to 0.00665 in.
	Allowable limit	0.35 mm 0.014 in.

Differential case cover bore I.D.	Factory specification	40.540 to 40.580 mm 1.5961 to 1.5976 in.
Differential side gear boss O.D.	Factory specification	40.411 to 40.450 mm 1.5910 to 1.5925 in.

9Y1211121TRS0111US0

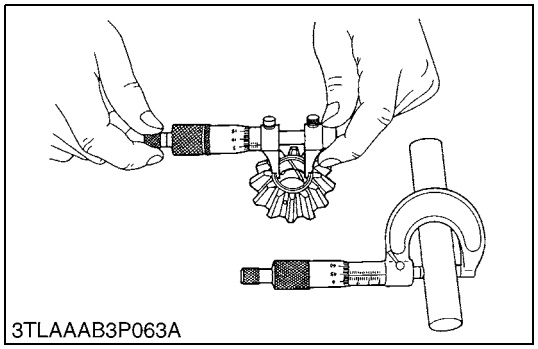
3TLAAAB3P063A

Clearance between Differential Pinion Shaft and Differential Pinion

1. Measure the differential pinion shaft O.D.
2. Measure the differential pinion I.D. and calculate the clearance.
3. If the clearance exceed the allowable limit, replace them.

Clearance between differential pinion shaft and differential pinion	Factory specification	0.0800 to 0.122 mm 0.00315 to 0.00480 in.
	Allowable limit	0.30 mm 0.012 in.

Differential pinion shaft O.D.	Factory specification	19.959 to 19.980 mm 0.78579 to 0.78661 in.
Differential pinion I.D.	Factory specification	20.060 to 20.081 mm 0.78977 to 0.79059 in.

9Y1211121TRS0112US0

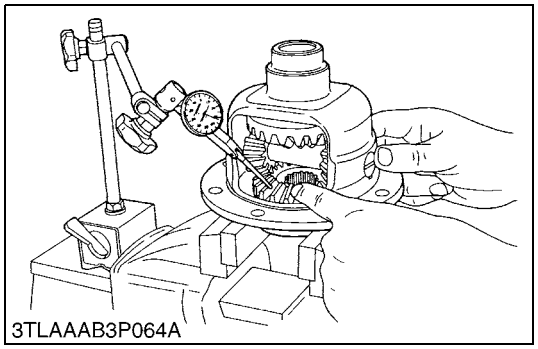
3TLAAAB3P064A

Backlash between Differential Pinion and Differential Side Gear

1. Secure the differential case in a vise.
2. Set a dial indicator (lever type) on the tooth of the differential side gear.
3. Hold the differential pinion and move the differential side gear to measure the backlash.
4. If the measurement exceeds the allowable limit, adjust with the differential side gear washer.

Backlash between differential pinion and differential side gear	Factory specification	0.15 to 0.30 mm 0.0059 to 0.011 in.
	Allowable limit	0.4 mm 0.02 in.

(Reference)

- Thickness of differential side gear washers :
  1.5 mm (0.059 in.) (Parts No. TD270-26472)
  1.6 mm (0.062 in.) (Parts No. TD270-26482)
  1.7 mm (0.067 in.) (Parts No. TD270-26492)
  1.8 mm (0.071 in.) (Parts No. TD270-32760)
  2.0 mm (0.074 in.) (Parts No. TD270-32780)

9Y1211121TRS0113US0

https://truckmanualshub.com/

4 REAR AXLE

https://truckmanualshub.com/

MECHANISM

CONTENTS

1. STRUCTURE..... 4-M1

1. STRUCTURE

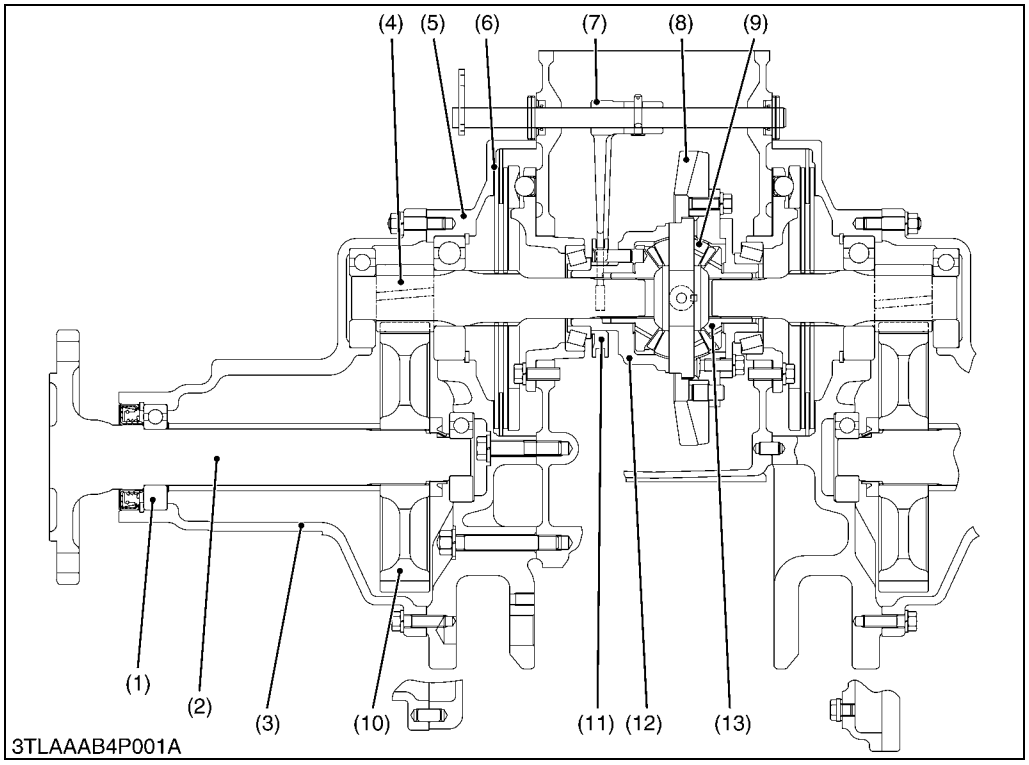

(1) Ball Bearing
(2) Rear Axle
(3) Rear Axle Case
(4) Differential Gear Shaft
(5) Brake Case
(6) Brake Disc
(7) Differential Lock Shift Fork
(8) 37T Bevel Gear
(9) Differential Pinion
(10) Final Gear
(11) Differential Lock Shifter
(12) Differential Case
(13) Differential Side Gear

The final gears (10) are final reduction mechanism which further reduces the speed of rotation. The direction of power transmitted is changed by the differential gear.

The rear axles (2) are the final transmission mechanisms which transmit the power from the transmission to the rear wheels. The rotation speed is reduced by the final gears (10).

The rear axles are the semi-floating type with the ball bearing (1) between the rear axle (2) and rear axle case (3), which support the rear wheel load besides transmitting power to the rear wheel. The rear axles also support the weight of the tractor.

9Y1211121RAM0001US0

https://truckmanualshub.com/

SERVICING

CONTENTS

1. TROUBLESHOOTING....4-S1
2. TIGHTENING TORQUES....4-S2
3. DISASSEMBLING AND ASSEMBLING....4-S3
   [1] SEPARATING REAR AXLE CASE....4-S3
   [2] DISASSEMBLING REAR AXLE....4-S7
4. SERVICING....4-S8

1. TROUBLESHOOTING

Symptom	Probable Cause and Checking Procedure	Solution	Reference Page
Excessive or Unusual Noise at all time	1. Insufficient or improper type of transmission fluid used	Fill or change	G-9
	2. Improper backlash between differential gear shaft and final reduction gear	Replace	4-S7
	3. Bearing worn	Replace	4-S8
Noise while Turning	1. Differential gear shaft and final gear worn or damaged	Replace	4-S7

9Y1211121RAS0009US0

2. TIGHTENING TORQUES

Tightening torques of screws, bolts and nuts on the table below are especially specified.
(For general use screws, bolts and nuts: See page G-11.)

Item	N·m	kgf·m	lbf·ft
Rear wheel mounting screw and nut	197 to 225	20.0 to 23.0	145 to 166
ROPS lower frame mounting screw	167 to 196	17.0 to 20.0	123 to 144
Rear axle lock nut	200 to 240	20 to 25	150 to 180

9Y1211121RAS0001US0

3. DISASSEMBLING AND ASSEMBLING

[1] SEPARATING REAR AXLE CASE

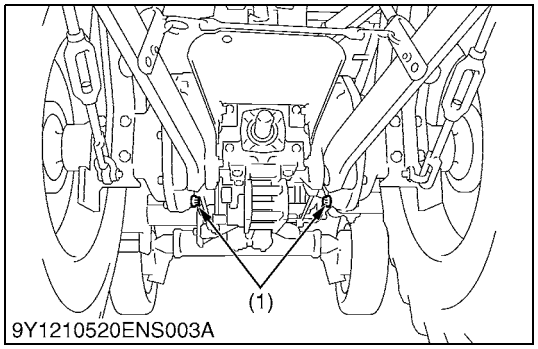

9Y1210520ENS003A

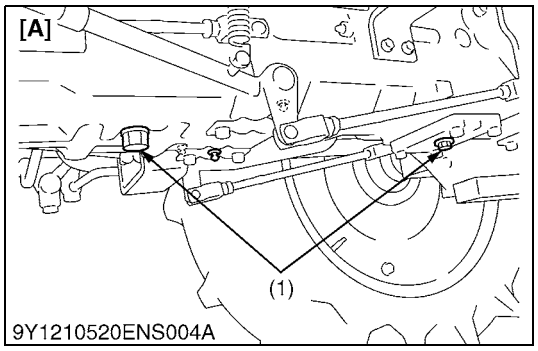

9Y1210520ENS004A

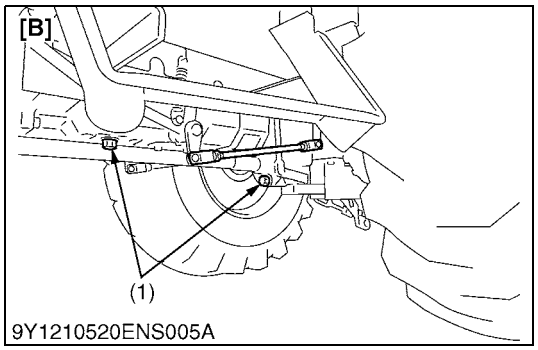

9Y1210520ENS005A

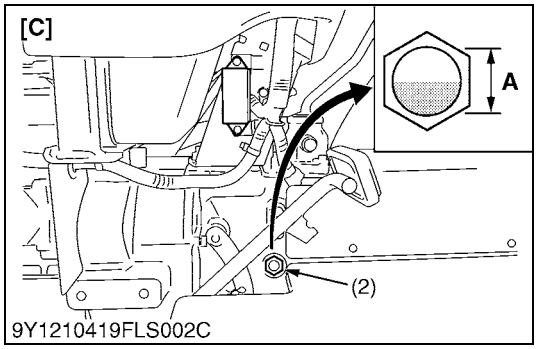

9Y1210419FLS002C

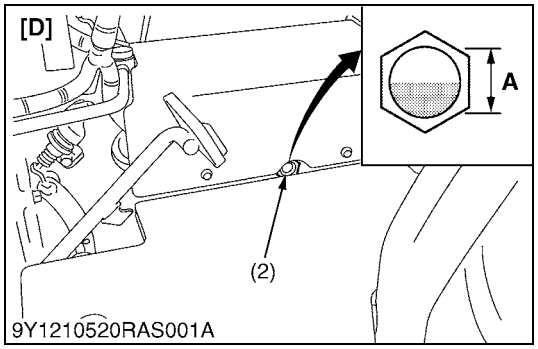

9Y1210520RAS001A

Draining the Transmission Fluid

WARNING

To avoid personal injury or death:

- **Be sure to stop the engine before changing the oil filter cartridge.**
- **Allow engine to cool down sufficiently, oil can be hot and can burn.**

1. Remove the drain plugs (1) at the bottom of the transmission case and drain the oil completely into the oil pan.
2. After draining reinstall the drain plugs.

(When reassembling)

- Fill up new oil to the upper line of the gauge (2) from the oil inlet port after removing the oil inlet plug (3).
- After running the engine for a few minutes, stop it and check the fluid level again, if low, add fluid prescribed level **"A"**.

IMPORTANT

- **Use only multi-grade transmission fluid. Use of other fluids may damage the transmission or hydraulic system.**
- **Refer to "LUBRICANTS, FUEL AND COOLANT". (See page G-9.)**
- **Never work the tractor immediately after changing the transmission fluid. Keeping the engine at medium speed for a few minutes to prevent damage to the transmission.**
- **Do not mix different brands oil together.**

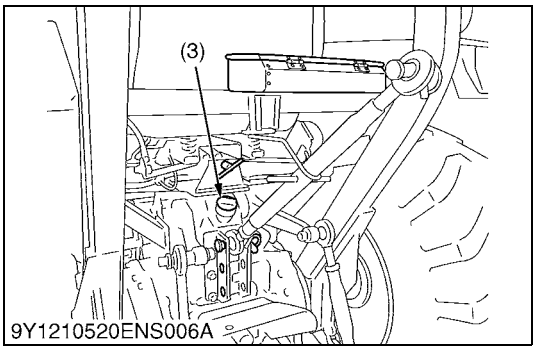

9Y1210520ENS006A

Transmission fluid capacity	2WD	27.0 L 7.1 U.S.gals 5.9 Imp.gals
	4WD	27.5 L 7.3 U.S.gals 6.1 Imp.gals
	HST	23.5 L 6.2 U.S.gals 5.2 Imp.gals

(1) Drain Plug
(2) Gauge
(3) Oil Inlet Plug

[A] 2WD
[B] 4WD
[C] Manual Transmission Type
[D] HST Type
A: Oil level is acceptable within this range.

9Y1211121RAS0002US0

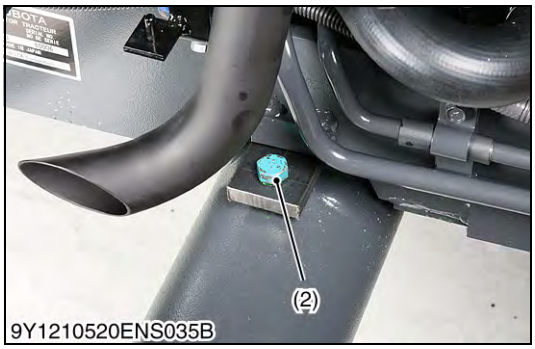

Battery Negative Cable and Front Axle Rocking Restrictor

1. To open the bonnet, hold the bonnet with a hand and pull the release lever and open the bonnet.
2. Disconnect the battery negative cable (1).
3. Install the front axle rocking restrictor (2) (refer to "SPECIAL TOOLS" (see page G-55)) to the front axle bracket and chock the wheels.

(1) Negative Cable
(2) Front Axle Rocking Restrictor

9Y1211121TRS0036US0

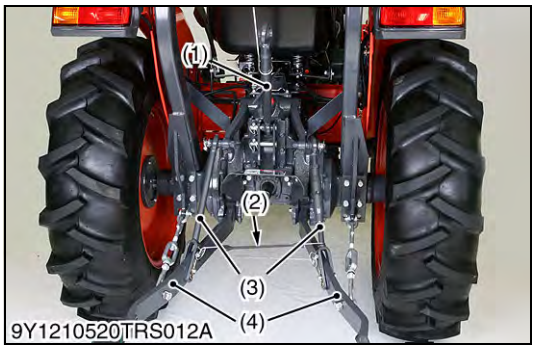

Three Point Linkage

1. Remove the top link (1).
2. Remove the rubber spring (2), the lift rod (3) and the lower link (4).

(1) Top Link
(2) Rubber Spring
(3) Lift Rod
(4) Lower Link

9Y1211121TRS0018US0

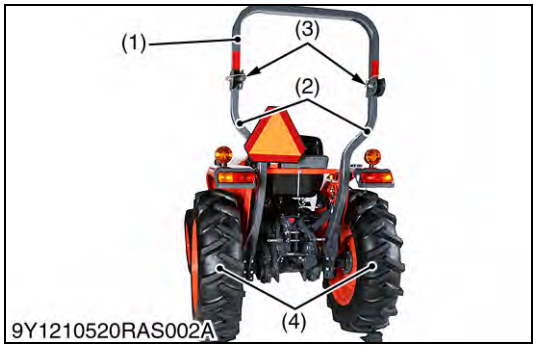

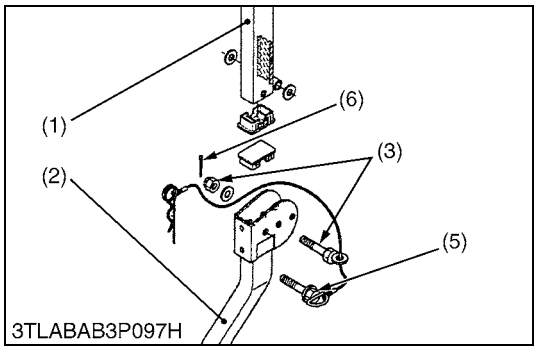

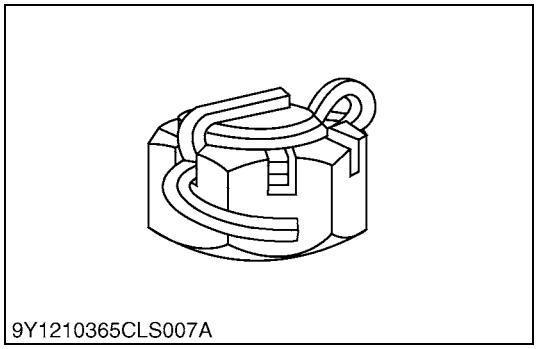

ROPS and Rear Wheel

1. Place the disassembling stand under the transmission case.
2. Remove the ROPS upper frame (1).
3. Remove the ROPS lower frame (2).
4. Loosen and remove the rear wheel mounting screws and nuts.
5. Remove the rear wheel (4).

(When reassembling)

- After tighten the ROPS fulcrum screw (3) and nut, install the cotter pin (6) as shown in the figure.
- Tighten the ROPS fulcrum screw (3) and nut so that the ROPS upper frame (1) does not fall down when the ROPS upper frame (1) positioned at horizontal.

■ **NOTE**

- **Do not firmly tighten all upper frame mounting screws until most components are attached.**

Tightening torque	Rear wheel mounting screw and nut	197 to 225 N·m 20.0 to 23.0 kgf·m 145 to 166 lbf·ft
	ROPS lower frame mounting screw	167 to 196 N·m 17.0 to 20.0 kgf·m 123 to 144 lbf·ft

(Reference)

Tightening torque	ROPS fulcrum screw and nut	118 to 137 N·m 12.0 to 14.0 kgf·m 86.8 to 101 lbf·ft

(1) ROPS Upper Frame
(2) ROPS Lower Frame
(3) ROPS Fulcrum Screw and Nut
(4) Rear Wheel
(5) Lock Screw
(6) Cotter Pin

9Y1211121RAS0003US0

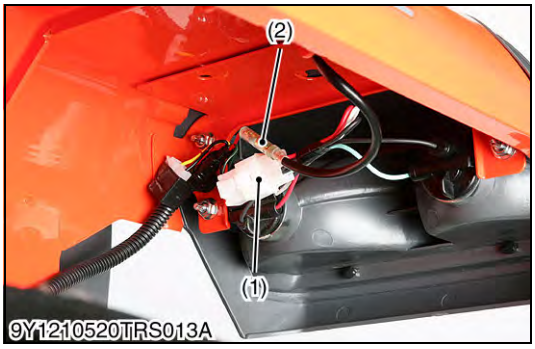

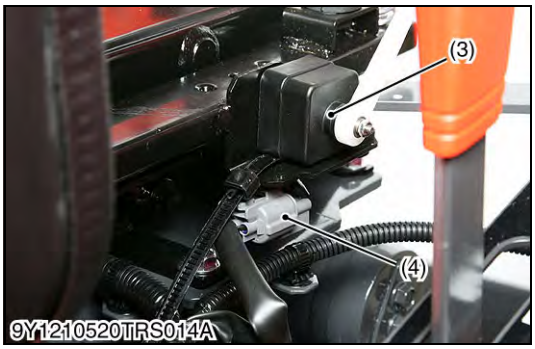

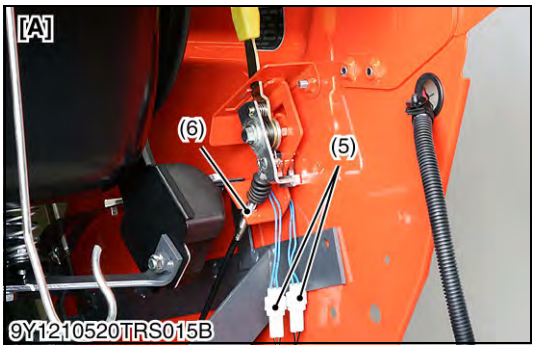

Electrical Wiring and PTO Wire

1. Disconnect the **4P** connector (1) and the **1P** connector (2).
2. Remove the seat switch (3) from seat adjuster and disconnect the **3P** connector (4).
3. Disconnect the **2P** connectors (5) and PTO wire (6).

(1) **4P** Connector (Rear Combination Lamp)
(2) **1P** Connector (Hazard Lamp)
(3) Seat Switch
(4) **3P** Connector (Seat Switch)
(5) **2P** Connector (PTO Lever Neutral Switch)
(6) PTO Wire

[A] HST Type

9Y1211121RAS0004US0

Fender

1. Remove the fender (R.H.) (1).
2. Remove the grip (2) and the fender support assembly (3).
3. Follow the same procedure as above for the other side.

(1) Rear Fender (R.H.)
(2) Grip (Position Control Lever)
(3) Fender Support Assembly

9Y1211121RAS0005US0

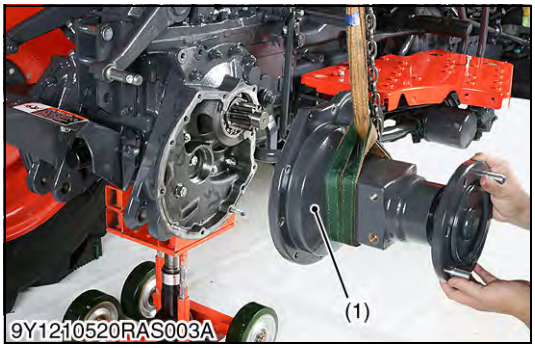

Rear Axle Case

1. Loosen and remove the rear axle case mounting screws and nuts.
2. Support the rear axle case (1) with the nylon lift strap and hoist.
3. Separate the rear axle case from brake case.
4. Follow the same procedure as above for the other side.

(When reassembling)

- Apply liquid gasket (Three Bond 1206C or equivalent) to joint face of the rear axle case and brake case, after eliminating the water, oil and stuck liquid gasket.

(1) Rear Axle Case

9Y1211121RAS0006US0

[2] DISASSEMBLING REAR AXLE

Rear Axle

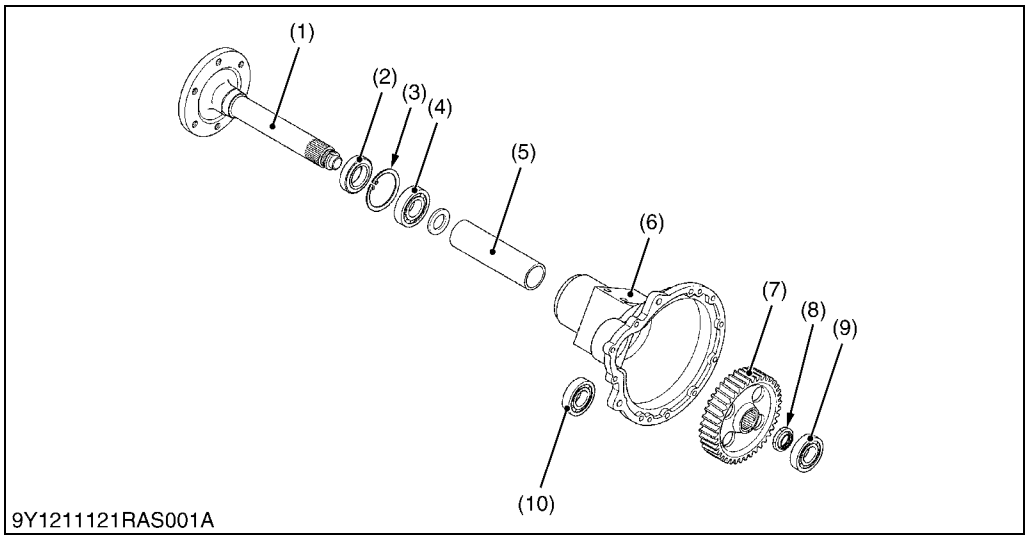

(1) Rear Axle
(2) Oil Seal
(3) Internal Snap Ring
(4) Ball Bearing
(5) Spacer
(6) Rear Axle Case
(7) Gear
(8) Lock Nut
(9) Ball Bearing
(10) Ball Bearing

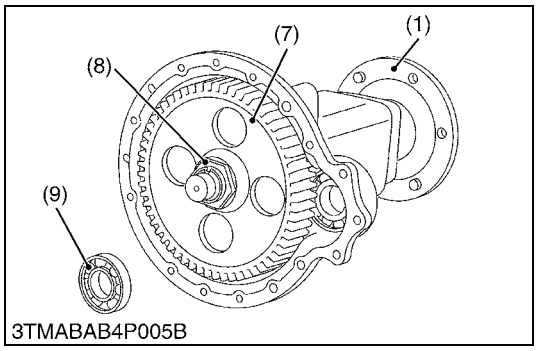

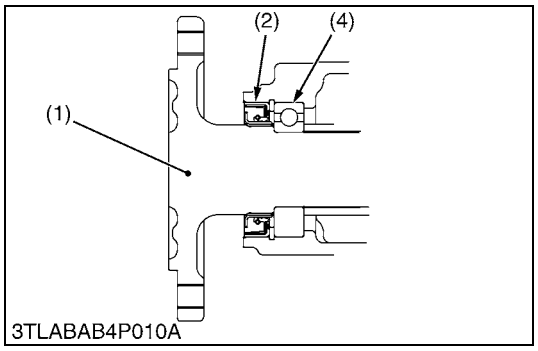

1. Remove the ball bearing (9) with a puller.
2. Remove the stake of lock nut (8).
3. Secure the rear axle (1) in a vise and remove the lock nut.
4. Take out the gear (7) and spacer (5).
5. Tap out the rear axle (1).

(When reassembling)

- Apply grease to the oil seal (2) and install it.
- Replace the lock nut with new one, and after tightening it to specified torque, stake it firmly.
- Assemble the oil seal (2) with correct direction. (See figure on the left.)

Tightening torque	Rear axle lock nut	200 to 240 N·m 20 to 25 kgf·m 150 to 180 lbf·ft

9Y1211121RAS0007US0

4. SERVICING

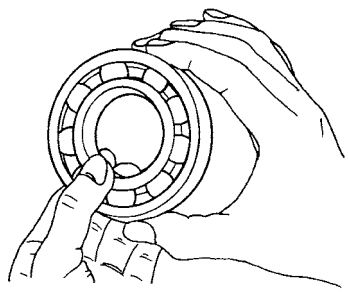

3TMABAB3P015A

Checking Bearing

1. Hold the inner race, and push and pull the outer race in all directions to check for wear and roughness.
2. Apply transmission fluid to the bearing, and hold the inner race. Then turn the outer race to check rotation.
3. If there is any problem, replace it.

9Y1211121RAS0008US0

https://truckmanualshub.com/

5 BRAKES

https://truckmanualshub.com/

MECHANISM

CONTENTS

1. FEATURES..... 5-M1
2. OPERATION..... 5-M2

1. FEATURES

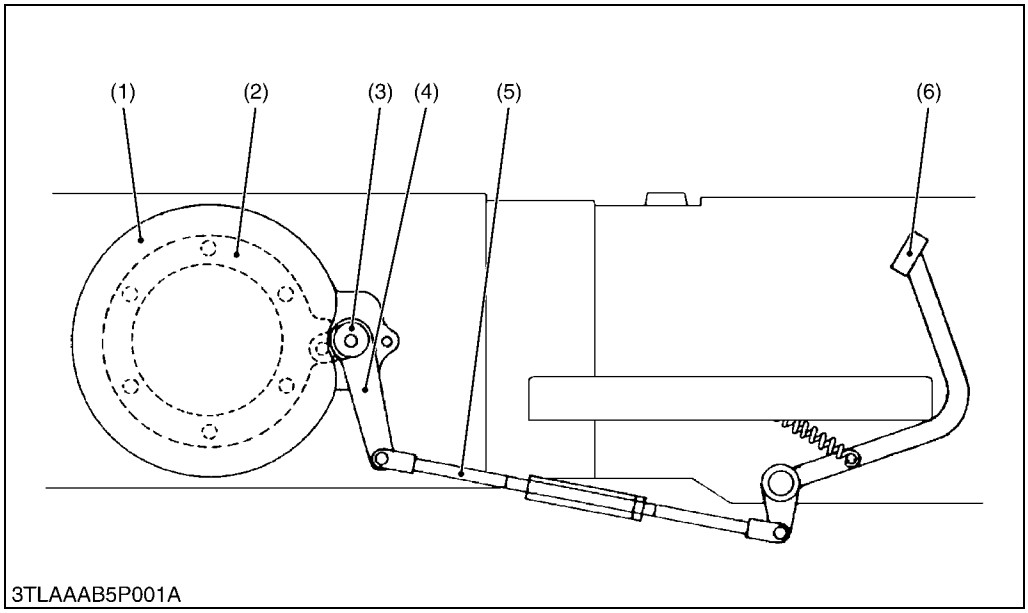

(1) Brake Case
(2) Cam Plate
(3) Brake Cam
(4) Brake Cam Lever
(5) Brake Rod
(6) Brake Pedal

Independent mechanical wet disc brakes are used for the right and left traveling brakes. They are operated by the brake pedals through the mechanical linkages.

The parking brake is a mechanical type which is designed to actuate the traveling brakes through the linkage. Pushing the parking brake lever results in the same state as that obtained when the brake pedals are pressed.

9Y1211121BRM0001US0

2. OPERATION

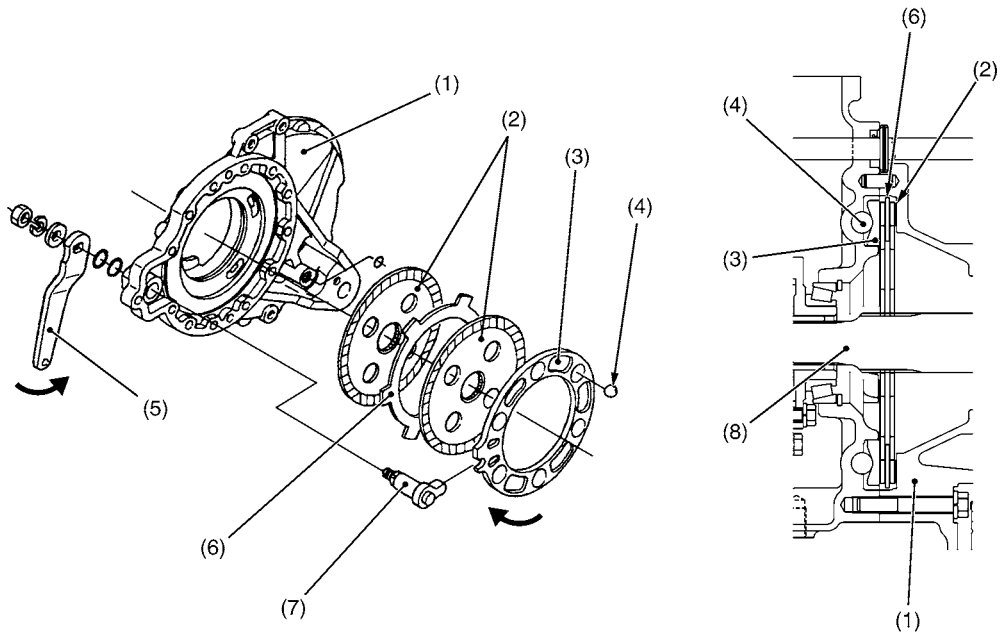

3TLABAB5P001A

(1) Brake Case	(3) Cam Plate	(5) Brake Cam Lever	(7) Brake Cam
(2) Brake Disc	(4) Steel Ball	(6) Plate	(8) Brake Shaft

The brakes are provided on the power transmitting shafts (brake shafts (8)) through which power is transmitted to the final reduction system. The brakes are incorporated in the brake case (1) filled with transmission oil. They are designed to brake when the brake discs (2), spline-coupled and rotating with the brake shaft, are pressed against the brake case by cam plate (3) with the cam mechanism incorporating steel balls (4). For greater braking force, two brake discs are provided respectively, and the plate (6) fixed to the brake case are arranged between the brake discs.

■ **During Braking**

When the brake pedal is pressed, the force causes the brake cam lever (5) to move in the direction of allow through the brake rod. At the same time, the brake cam (7) spline-couples with the brake cam lever also moves. Due to this force, cam plate (3) moves in the direction of arrow. Since the steel balls (4) are set in the grooves of differential case, cam plate (3) is pushed out against the brake discs (2), causing braking with the friction force created.

9Y1211121BRM0002US0

https://truckmanualshub.com/

SERVICING

CONTENTS

1. TROUBLESHOOTING.....5-S1
2. SERVICING SPECIFICATIONS.....5-S2
3. TIGHTENING TORQUES.....5-S3
4. CHECKING AND ADJUSTING.....5-S4
5. DISASSEMBLING AND ASSEMBLING.....5-S5
   [1] SEPARATING BRAKE CASE.....5-S5
   [2] DISASSEMBLING THE BRAKE CASE.....5-S10
6. SERVICING.....5-S11

1. TROUBLESHOOTING

Symptom	Probable Cause and Checking Procedure	Solution	Reference Page
Uneven Braking Force	1. Brake pedal free travel unevenly adjusted	Adjust	G-24, 5-S4
	2. Brake disc worn	Replace	5-S11
	3. Cam plate warped	Replace	5-S11
Brake Drags	1. Brake pedal free travel too small	Adjust	G-24, 5-S4
	2. Uneven wear of ball holes on cam plate	Replace	5-S11
	3. Brake cam rusted	Replace	5-S11
Poor Braking Force	1. Brake pedal free travel excessive	Adjust	G-24, 5-S4
	2. Use of improper type of transmission fluid	Change	G-9
	3. Brake cam or lever damaged	Repair or replace	5-S11
	4. Brake disc worn	Replace	5-S11
	5. Cam plate warped	Replace	5-S11

9Y1211121BRS0012US0

2. SERVICING SPECIFICATIONS

Item		Factory Specification	Allowable Limit
Brake Pedal	Free Travel	15 to 20 mm 0.6 to 0.8 in.	–
Cam Plate	Flatness	–	0.3 mm 0.01 in.
Cam Plate and Ball	Height	20.9 to 21.1 mm 0.823 to 0.830 in.	20.5 mm 0.807 in.
Brake Disc	Thickness	4.60 to 4.80 mm 0.182 to 0.188 in.	4.2 mm 0.17 in.
Plate	Thickness	2.54 to 2.66 mm 0.100 to 0.104 in.	2.1 mm 0.083 in.

9Y1211121BRS0001US0

3. TIGHTENING TORQUES

Tightening torques of screws, bolts and nuts on the table below are especially specified.
(For general use screws, bolts and nuts: See page G-11.)

Item	N·m	kgf·m	lbf·ft
Rear wheel mounting screw and nut	197 to 225	20.0 to 23.0	145 to 166
ROPS lower frame mounting screw	167 to 196	17.0 to 20.0	123 to 144

9Y1211121BRS0002US0

4. CHECKING AND ADJUSTING

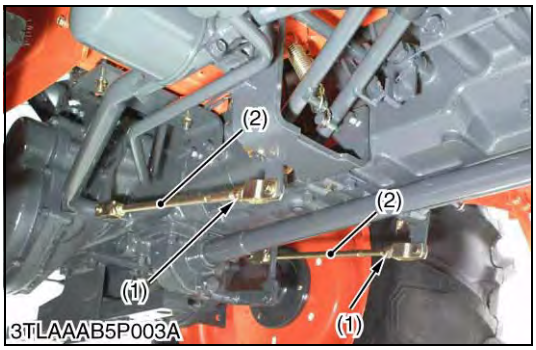

Brake Pedal Free Travel

WARNING

To avoid personal injury or death:

- **Stop the engine and remove the key, then chock the wheel before checking brake pedals.**

1. Release the parking brake.
2. Slightly depress the brake pedals and measure free travel **"A"** at top of pedal stroke.
3. If the measurement is not within the factory specifications, loosen the lock nuts (1) and turn the brake rods (2) to adjust them within the factory specifications.

Brake pedal free travel **A**	Factory specification	15 to 20 mm 0.6 to 0.8 in.

■ **IMPORTANT**

- **Keep the free travel in the right and left brake pedals equal.**

■ **NOTE**

- **The difference between the right and left pedal free travels must be less than 5 mm (0.2 in.).**
- **After checking brake pedal free travel, be sure to engage the parking brake lock fully and check to see that the brake pedals are securely locked.**

(1) Lock Nut
(2) Brake Rod

A: Free Travel

9Y1211121BRS0003US0

5. DISASSEMBLING AND ASSEMBLING

[1] SEPARATING BRAKE CASE

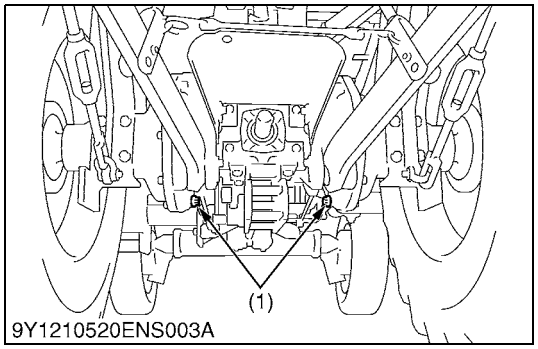

9Y1210520ENS003A

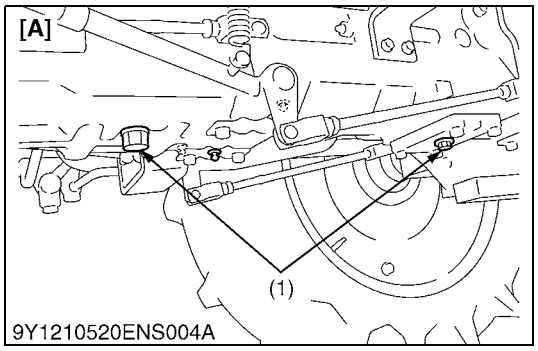

9Y1210520ENS004A

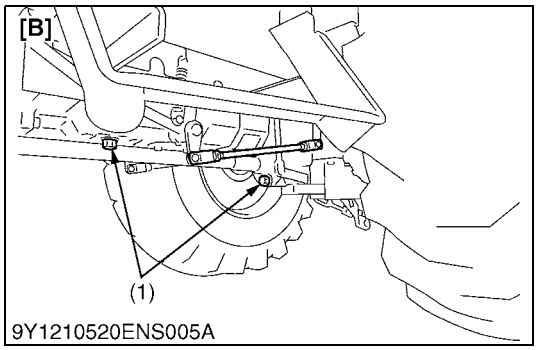

9Y1210520ENS005A

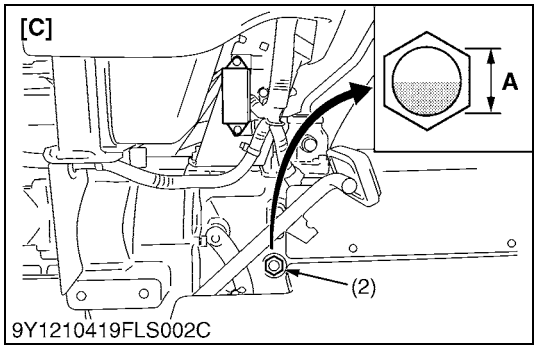

9Y1210419FLS002C

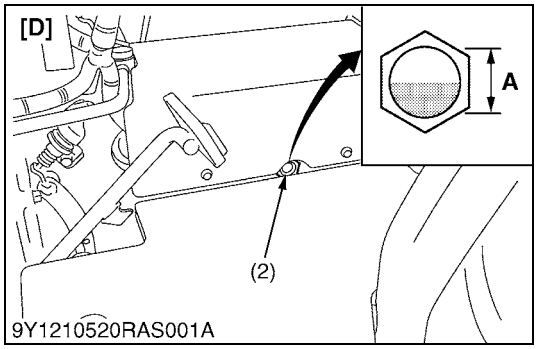

9Y1210520RAS001A

Draining the Transmission Fluid

WARNING

To avoid personal injury or death:

- **Be sure to stop the engine before changing the oil filter cartridge.**
- **Allow engine to cool down sufficiently, oil can be hot and can burn.**

1. Remove the drain plugs (1) at the bottom of the transmission case and drain the oil completely into the oil pan.
2. After draining reinstall the drain plugs.

(When reassembling)

- Fill up new oil to the upper line of the gauge (2) from the oil inlet port after removing the oil inlet plug (3).
- After running the engine for a few minutes, stop it and check the fluid level again, if low, add fluid prescribed level **"A"**.

IMPORTANT

- **Use only multi-grade transmission fluid. Use of other fluids may damage the transmission or hydraulic system.**
- **Refer to "LUBRICANTS, FUEL AND COOLANT". (See page G-9.)**
- **Never work the tractor immediately after changing the transmission fluid. Keeping the engine at medium speed for a few minutes to prevent damage to the transmission.**
- **Do not mix different brands oil together.**

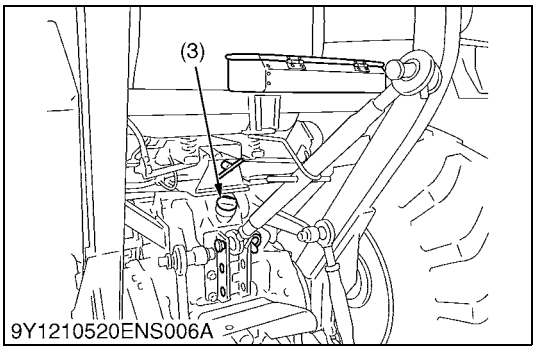

9Y1210520ENS006A

Transmission fluid capacity	2WD	27.0 L 7.1 U.S.gals 5.9 Imp.gals
	4WD	27.5 L 7.3 U.S.gals 6.1 Imp.gals
	HST	23.5 L 6.2 U.S.gals 5.2 Imp.gals

(1) Drain Plug
(2) Gauge
(3) Oil Inlet Plug

[A] 2WD
[B] 4WD
[C] Manual Transmission Type
[D] HST Type
A: Oil level is acceptable within this range.

9Y1211121RAS0002US0

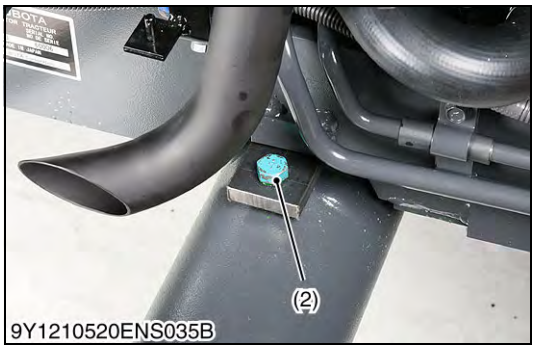

Battery Negative Cable and Front Axle Rocking Restrictor

1. To open the bonnet, hold the bonnet with a hand and pull the release lever and open the bonnet.
2. Disconnect the battery negative cable (1).
3. Install the front axle rocking restrictor (2) (refer to "SPECIAL TOOLS" (see page G-55)) to the front axle bracket and chock the wheels.

(1) Negative Cable
(2) Front Axle Rocking Restrictor

9Y1211121TRS0036US0

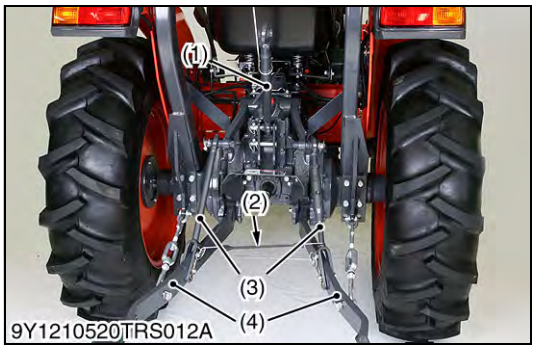

Three Point Linkage

1. Remove the top link (1).
2. Remove the rubber spring (2), the lift rod (3) and the lower link (4).

(1) Top Link
(2) Rubber Spring
(3) Lift Rod
(4) Lower Link

9Y1211121TRS0018US0

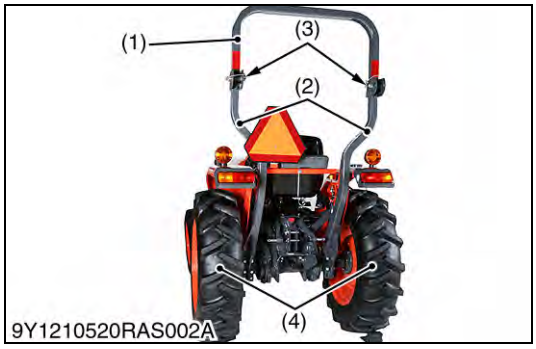

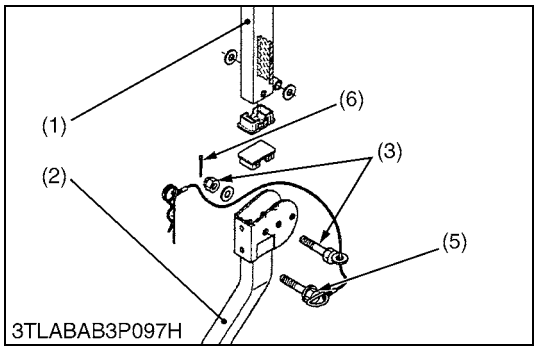

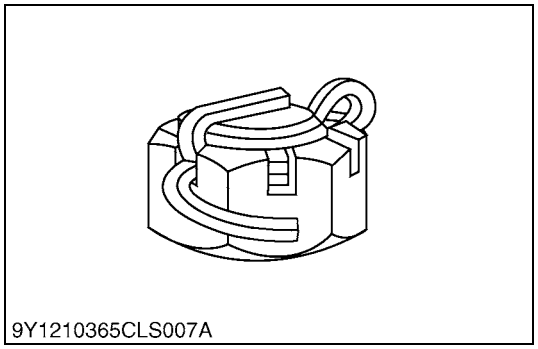

ROPS and Rear Wheel

1. Place the disassembling stand under the transmission case.
2. Remove the ROPS upper frame (1).
3. Remove the ROPS lower frame (2).
4. Loosen and remove the rear wheel mounting screws and nuts.
5. Remove the rear wheel (4).

(When reassembling)

- After tighten the ROPS fulcrum screw (3) and nut, install the cotter pin (6) as shown in the figure.
- Tighten the ROPS fulcrum screw (3) and nut so that the ROPS upper frame (1) does not fall down when the ROPS upper frame (1) positioned at horizontal.

■ **NOTE**

- **Do not firmly tighten all upper frame mounting screws until most components are attached.**

Tightening torque	Rear wheel mounting screw and nut	197 to 225 N·m 20.0 to 23.0 kgf·m 145 to 166 lbf·ft
	ROPS lower frame mounting screw	167 to 196 N·m 17.0 to 20.0 kgf·m 123 to 144 lbf·ft

(Reference)

Tightening torque	ROPS fulcrum screw and nut	118 to 137 N·m 12.0 to 14.0 kgf·m 86.8 to 101 lbf·ft

(1) ROPS Upper Frame
(2) ROPS Lower Frame
(3) ROPS Fulcrum Screw and Nut
(4) Rear Wheel
(5) Lock Screw
(6) Cotter Pin

9Y1211121RAS0003US0

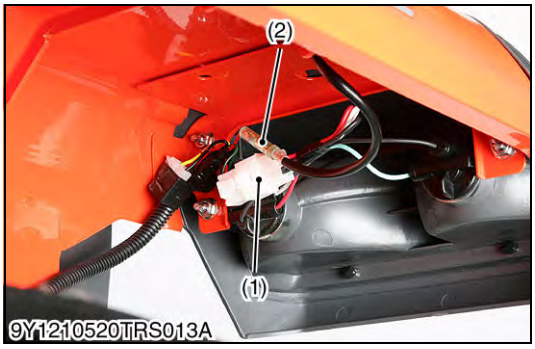

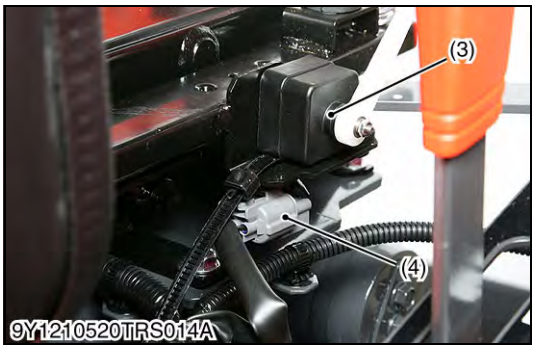

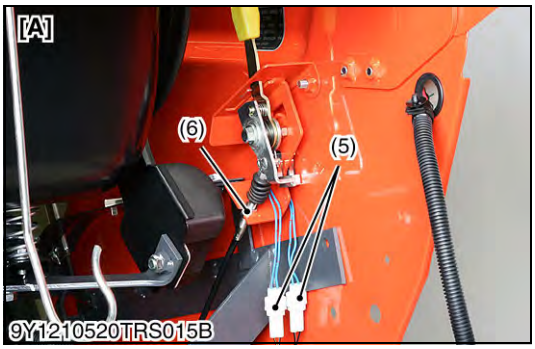

Electrical Wiring and PTO Wire

1. Disconnect the **4P** connector (1) and the **1P** connector (2).
2. Remove the seat switch (3) from seat adjuster and disconnect the **3P** connector (4).
3. Disconnect the **2P** connectors (5) and PTO wire (6).

(1) **4P** Connector (Rear Combination Lamp)
(2) **1P** Connector (Hazard Lamp)
(3) Seat Switch
(4) **3P** Connector (Seat Switch)
(5) **2P** Connector (PTO Lever Neutral Switch)
(6) PTO Wire

[A] HST Type

9Y1211121RAS0004US0

Fender

1. Remove the fender (R.H.) (1).
2. Remove the grip (2) and the fender support assembly (3).
3. Follow the same procedure as above for the other side.

(1) Rear Fender (R.H.)
(2) Grip (Position Control Lever)
(3) Fender Support Assembly

9Y1211121RAS0005US0

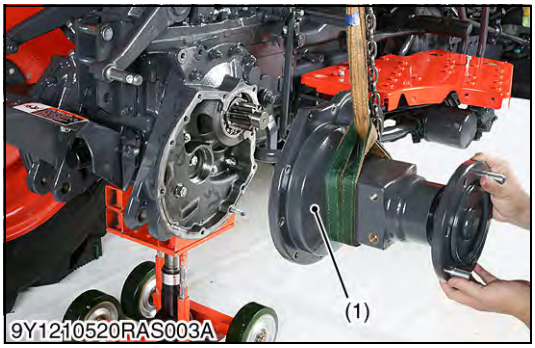

Rear Axle Case

1. Loosen and remove the rear axle case mounting screws and nuts.
2. Support the rear axle case (1) with the nylon lift strap and hoist.
3. Separate the rear axle case from brake case.
4. Follow the same procedure as above for the other side.

(When reassembling)

- Apply liquid gasket (Three Bond 1206C or equivalent) to joint face of the rear axle case and brake case, after eliminating the water, oil and stuck liquid gasket.

(1) Rear Axle Case

9Y1211121RAS0006US0

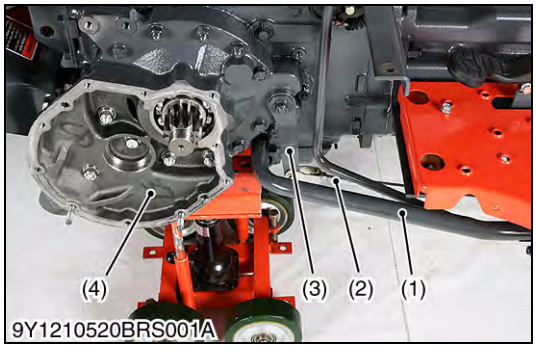

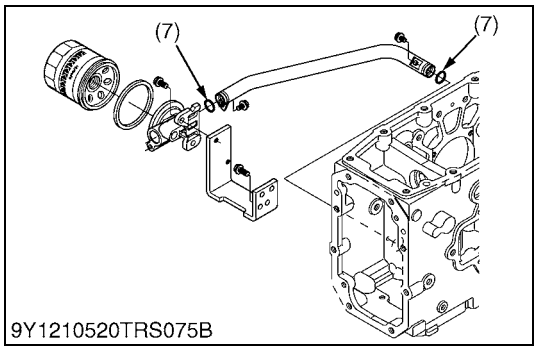

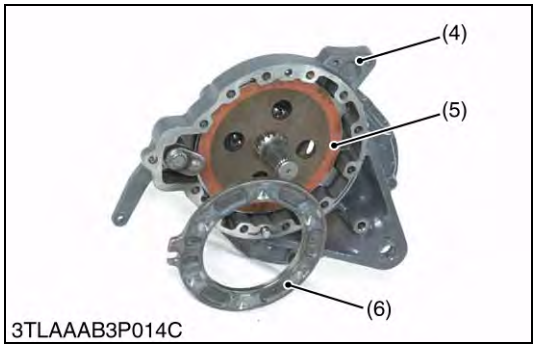

Brake Case

1. Remove the suction pipe (1).
2. Remove the brake rod (2).
3. Separate the brake case (4), tapping the brake cam lever (3).

(When reassembling)

- Apply grease to the brake ball seats. (Do not grease excessively.)
- Apply liquid gasket (Three Bond 1206C or equivalent) to joint face of the brake case and transmission case, after eliminating the water, oil and stuck liquid gasket.
- Before installing the brake case to the transmission case, install the cam plate around the four protrusions on the differential bearing case.
- Apply liquid lock (Three Bond 1324 or equivalent) to the stud bolts.
- Be sure to check there are 6 balls one side.

■ **NOTE**

- **Take care not to damage the O-rings (7).**
- **If the O-rings (7) are damaged, change them.**

(1) Suction Pipe
(2) Brake Rod
(3) Brake Cam Lever
(4) Brake Case
(5) Brake Disc
(6) Cam Plate
(7) O-ring

9Y1211121BRS0004US0

[2] DISASSEMBLING THE BRAKE CASE

Brake Case

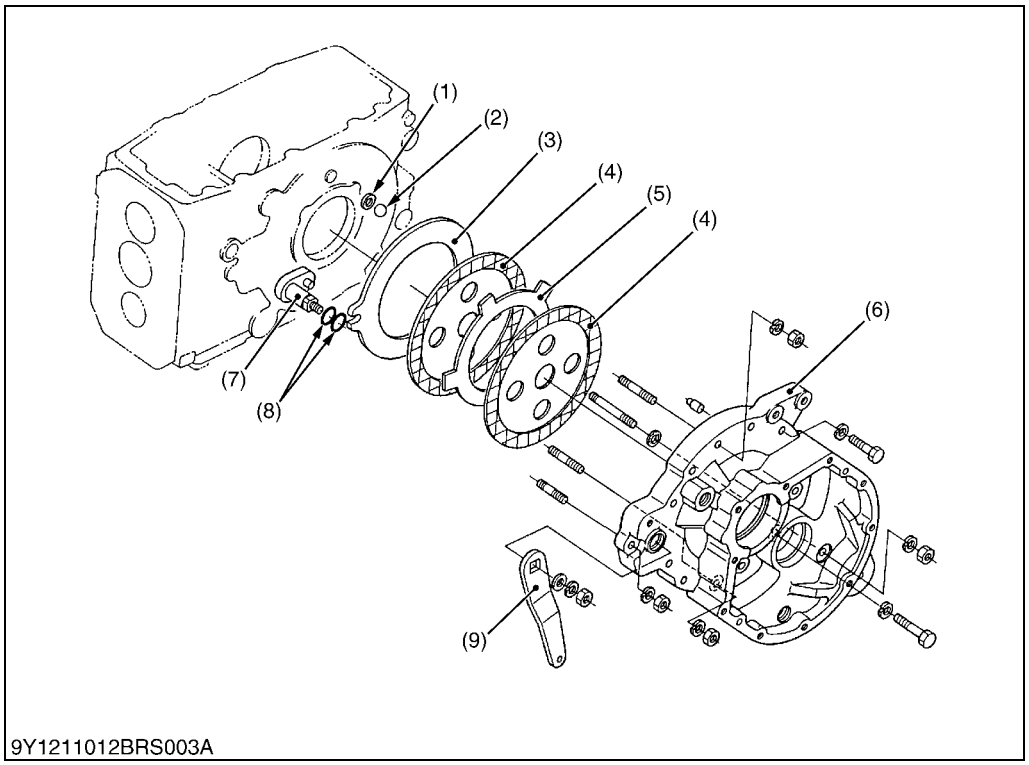

(1) Ball Seat
(2) Ball
(3) Cam Plate
(4) Brake Disc
(5) Plate
(6) Brake Case
(7) Brake Cam
(8) O-ring
(9) Brake Cam Lever

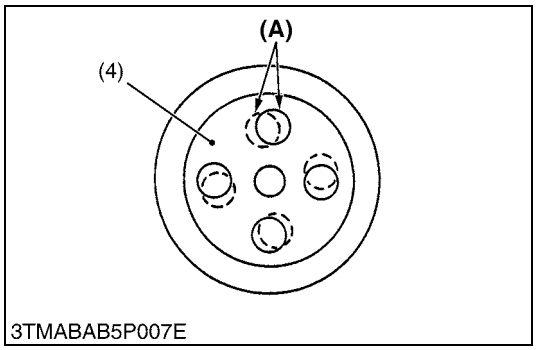

■ **It is possible to disassemble as shown in the figure above.**

(When reassembling)

- Place the brake discs (4) so that the hole **(A)** of the second disc should be overlapped 50 % or more.

9Y1211121BRS0005US0

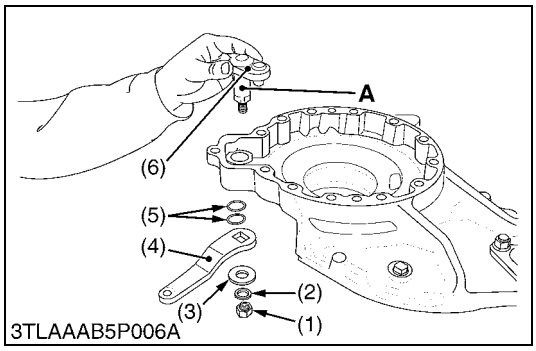

Brake Cam

1. Remove the nut (1) on the brake cam (6).
2. Remove the brake cam (6) and brake cam lever (4).

(When reassembling)

- Apply grease to the O-ring (5) and take care not to damage them.
- Apply small amount of grease to the journal **A** to prevent rust problem that leads to lock up.

(1) Nut
(2) Spring Washer
(3) Plain Washer
(4) Brake Cam Lever
(5) O-ring
(6) Brake Cam

9Y1211121BRS0006US0

6. SERVICING

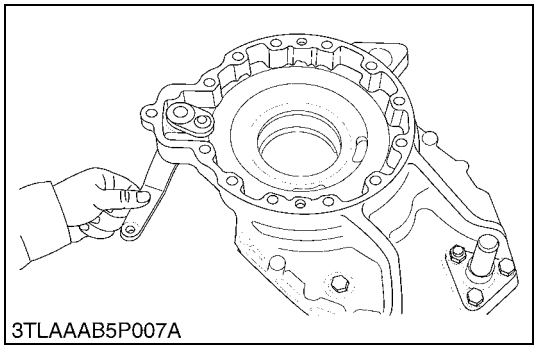
3TLAAAB5P007A

Brake Cam Lever Movement

1. Move the brake cam lever by hand to check the movement.
2. If the movement is heavy, refine the brake cam with sandpaper.

9Y1211121BRS0007US0

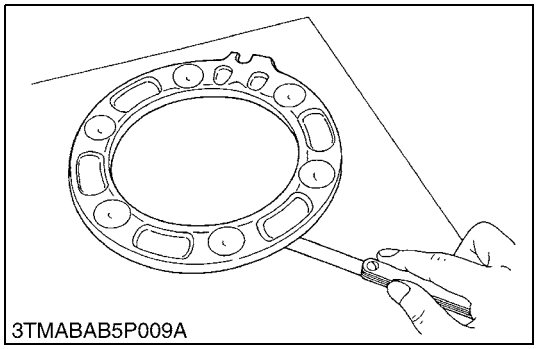
3TMABAB5P009A

Cam Plate Flatness

1. Place the cam plate on the surface plate.
2. Use a feeler gauge of 0.3 mm (0.012 in.) thick for judgement of the cam plate flatness. Measure the flatness diagonally at more than four locations.
3. If the measurement exceed the allowable limit, replace it.

Cam Plate Flatness	Allowable limit	0.3 mm 0.01 in.

9Y1211121BRS0008US0

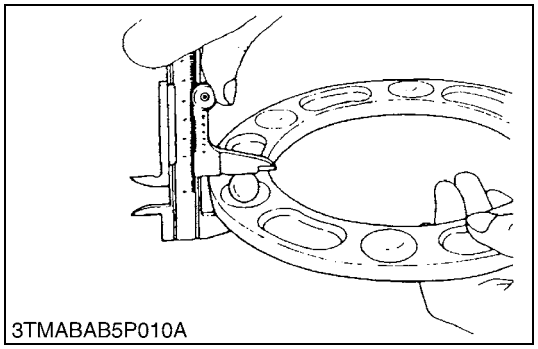
3TMABAB5P010A

Height of Brake Cam Plate and Ball

1. Measure the dimensions of the brake cam plate with the ball installed.
2. If the measurement is less than the allowable limit, replace the cam plate and balls.
3. Inspect the ball holes of cam plate for uneven wear. If the uneven wear is found, replace it.

Height of brake cam plate and ball	Factory specification	20.9 to 21.1 mm 0.823 to 0.830 in.
	Allowable limit	20.5 mm 0.807 in.

9Y1211121BRS0009US0

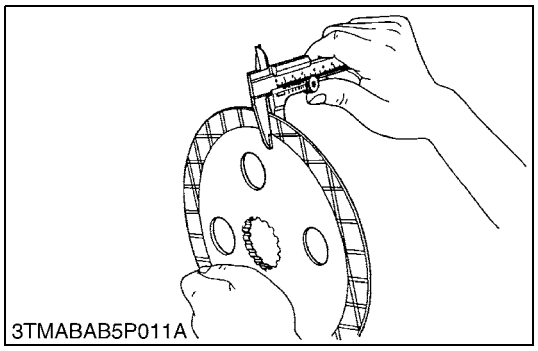
3TMABAB5P011A

Brake Disc Wear

1. Measure the brake disc thickness with vernier calipers.
2. If the measurement is less than the allowable limit, replace it.

Brake disc thickness	Factory specification	4.60 to 4.80 mm 0.182 to 0.188 in.
	Allowable limit	4.2 mm 0.17 in.

9Y1211121BRS0010US0

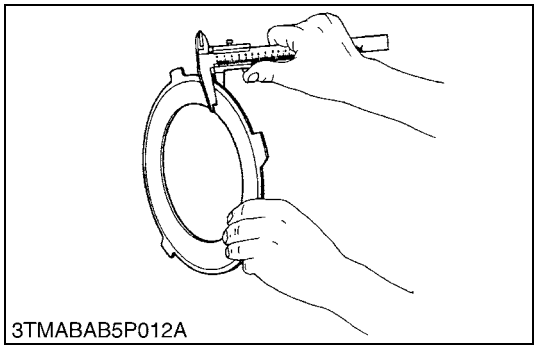
3TMABAB5P012A

Plate Wear

1. Measure the plate thickness with vernier calipers.
2. If the measurement is less than the allowable limit, replace it.

Plate thickness	Factory specification	2.54 to 2.66 mm 0.100 to 0.104 in.
	Allowable limit	2.1 mm 0.083 in.

9Y1211121BRS0011US0

https://truckmanualshub.com/

6 FRONT AXLE

https://truckmanualshub.com/

MECHANISM

CONTENTS

1. STRUCTURE 6-M1
[1] 2WD 6-M1
[2] 4WD 6-M2

1. STRUCTURE

[1] 2WD

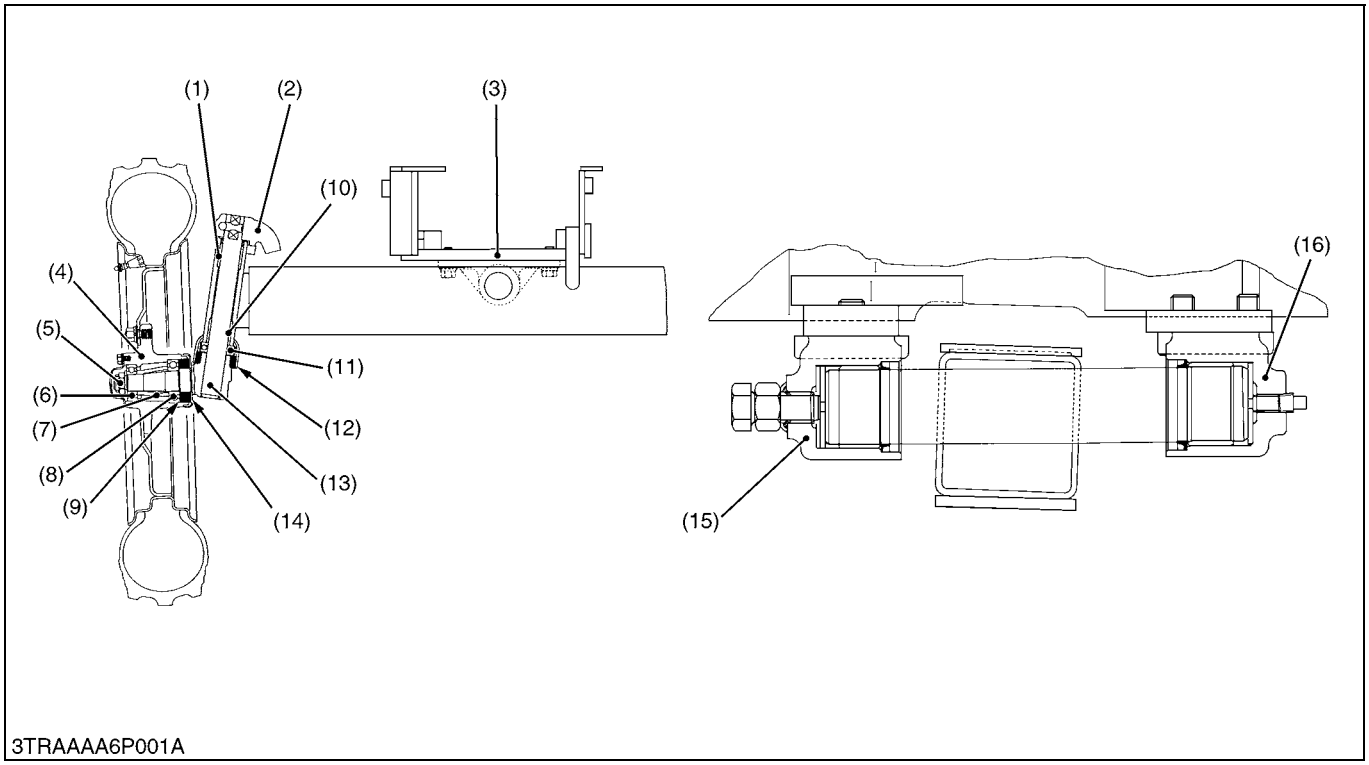

(1) Bushing
(2) Knuckle Arm
(3) Front Axle Frame
(4) Front Wheel Hub
(5) Slotted Nut
(6) Ball Bearing
(7) Spacer
(8) Ball Bearing
(9) Oil Seal
(10) Bushing
(11) Thrust Ball Bearing
(12) Oil Seal
(13) Knuckle Shaft
(14) Dust Cover
(15) Front Axle Bracket (Front Side)
(16) Front Axle Bracket (Rear Side)

The front axle of the 2WD is constructed as shown above. The shape of the front axle is relatively simple, and the front axle is supported at its center with the front axle brackets (15), (16) on the front axle frame (3), so that steering operation is stable even on an uneven grounds in a farm field.

9Y1211121FAM0001US0

[2] 4WD

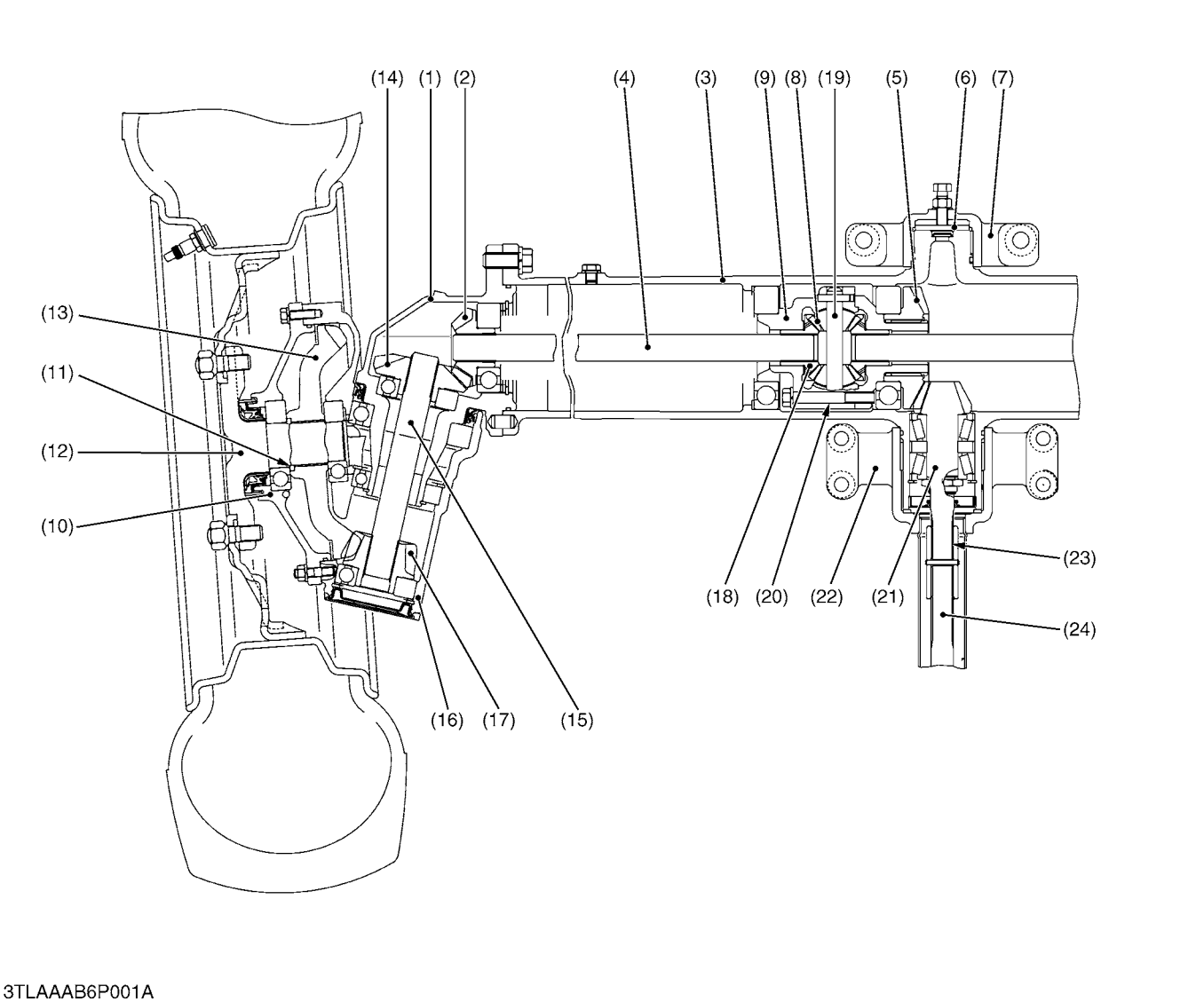

(1) Bevel Gear Case
(2) Bevel Gear
(3) Front Axle Case
(4) Differential Yoke Shaft
(5) Spiral Bevel Gear
(6) Collar
(7) Front Axle Bracket (Front Side)
(8) Differential Pinion
(9) Differential Case
(10) Axle Flange
(11) Collar
(12) Axle
(13) Bevel Gear
(14) Bevel Gear
(15) Bevel Gear Shaft
(16) Front Gear Case
(17) Bevel Gear
(18) Differential Side Gear
(19) Pinion Shaft
(20) Differential Assembly
(21) Spiral Bevel Pinion Shaft
(22) Front Axle Bracket (Rear Side)
(23) Coupling
(24) Propeller Shaft

The front axle of the 4WD is constructed as shown above. Power is transmitted from the transmission through the propeller shaft (24) and to the spiral bevel pinion shaft (21), then to the spiral bevel gear (5) after that to the differential gear.

The power through the differential is transmitted to the differential yoke shaft (4), and to the bevel gear shaft (15) in the bevel gear case (1).

The revolution is greatly reduced by the bevel gears (17), (13), then the power is transmitted to the axle (12).

The differential system allows each wheel to rotate at a different speed to make turning easier.

9Y1211121FAM0002US0

https://truckmanualshub.com/

SERVICING

CONTENTS

1. TROUBLESHOOTING 6-S1
2. SERVICING SPECIFICATIONS 6-S2
3. TIGHTENING TORQUES 6-S4
4. CHECKING AND ADJUSTING 6-S5
5. DISASSEMBLING AND ASSEMBLING 6-S7
   [1] SEPARATING FRONT AXLE 6-S7
   [2] DISASSEMBLING FRONT AXLE 6-S10
      (1) 2WD 6-S10
      (2) 4WD 6-S11
6. SERVICING 6-S15
   [1] 2WD 6-S15
   [2] 4WD 6-S16

1. TROUBLESHOOTING

Symptom	Probable Cause and Checking Procedure	Solution	Reference Page
Front Wheels Wander to Right or Left	1. Tire pressure uneven	Adjust	G-56
	2. Improper toe-in adjustment	Adjust	G-26, 6-S5
	3. Front wheel sway excessive	Replace	6-S5
	4. Air sucked in power steering circuit	Bleed	–
	5. Tie-rod end loose	Tighten	6-S8
	6. Front axle rocking force too small	Adjust	6-S6
	7. Clearance between front axle case boss and front axle bracket (front, rear) bushing excessive	Replace	6-S15, 6-S19
	8. Knuckle shaft bushing worn [2WD]	Replace	6-S15
Front Wheels Can Not Be Driven [4WD]	1. Coupling displaced	Repair	6-S7
	2. Propeller shaft broken	Replace	6-S7
	3. Front differential gear broken	Replace	6-S14
	4. Shift fork broken	Replace	3-S35
	5. Front wheel drive gears in transmission broken	Replace	3-S35
Noise [4WD]	1. Oil insufficient	Fill	G-9
	2. Spiral bevel pinion shaft turning force improper	Adjust	3-S59
	3. Bearings damaged or broken	Replace	–
	4. Gears damaged or broken	Replace	–
	5. Gear backlash excessive	Adjust	6-S17, 6-S18

9Y1211121FAS0003US0

2. SERVICING SPECIFICATIONS

[2WD]

Item		Factory Specification	Allowable Limit
Toe-in		2 to 8 mm 0.08 to 0.3 in.	–
Front Wheel	Axial Sway	Less than 5.0 mm 0.2 in.	–
Front Axle	Rocking Force	49 to 118 N 5.0 to 12.0 kgf 11.1 to 26.4 lbf	–
Front Axle Middle Boss to Front Axle Shaft Bracket Bushing	Clearance	0 to 0.177 mm 0 to 0.00696 in.	0.3 mm 0.01 in.
• Front Axle Middle Boss	O.D.	39.938 to 40.000 mm 1.5724 to 1.5748 in.	–
• Bushing	I.D.	40.000 to 40.115 mm 1.5748 to 1.5793 in.	–
Knuckle Shaft (Kingpin) to Bushing	Clearance	0 to 0.285 mm 0 to 0.0112 in.	0.4 mm 0.02 in.
• Knuckle Shaft	O.D.	27.880 to 27.900 mm 1.0977 to 1.0984 in.	–
• Bushing	I.D.	27.900 to 28.165 mm 1.0985 to 1.1088 in.	–

[4WD]

Item		Factory Specification	Allowable Limit
Toe-in		2 to 8 mm 0.08 to 0.3 in.	–
Front Wheel	Axial Sway	Less than 5.0 mm 0.2 in.	–
Spiral Bevel Pinion Shaft	Turning Torque	0.98 to 1.1 N·m 0.10 to 0.12 kgf·m 0.73 to 0.86 lbf·ft	–
Bevel Gear Case to Stopper	Clearance	1.0 to 3.0 mm 0.040 to 0.11 in.	–
Differential Case to Differential Side Gear	Clearance	0.0500 to 0.114 mm 0.00197 to 0.00448 in.	0.35 mm 0.014 in.
• Differential Case	I.D.	32.000 to 32.025 mm 1.2599 to 1.2608 in.	–
• Differential Side Gear	O.D.	31.911 to 31.950 mm 1.2564 to 1.2578 in.	–

Item		Factory Specification	Allowable Limit
Pinion Shaft to Differential Pinion	Clearance	0.0640 to 0.100 mm 0.00252 to 0.00393 in.	0.25 mm 0.0098 in.
• Pinion Shaft	O.D.	13.950 to 13.968 mm 0.54922 to 0.54992 in.	–
• Differential Pinion	I.D.	14.032 to 14.050 mm 0.55244 to 0.55314 in.	–
Differential Pinion to Differential Side Gear	Backlash	0.1 to 0.3 mm 0.004 to 0.01 in.	–
Spiral Bevel Pinion Shaft to Spiral Bevel Gear	Backlash	0.1 to 0.3 mm 0.004 to 0.01 in.	–
11T Bevel Gear to 16T Bevel Gear	Backlash	0.15 to 0.35 mm 0.0059 to 0.013 in.	–
11T Bevel Gear to 42T Bevel Gear.	Backlash	0.15 to 0.35 mm 0.0059 to 0.013 in.	–
Front Axle Case Boss (Front) to Bracket Bushing	Clearance	0.025 to 0.16 mm 0.00089 to 0.0062 in.	0.35 mm 0.014 in.
• Front Axle Case Boss (Front)	O.D.	49.950 to 49.975 mm 1.9666 to 1.9675 in.	–
• Bushing	I.D.	50.00 to 50.11 mm 1.969 to 1.972 in.	–
Front Axle Case Boss (Rear) to Bracket Bushing	Clearance	0.025 to 0.19 mm 0.00098 to 0.0074 in.	0.35 mm 0.014 in.
• Front Axle Case Boss (Rear)	O.D.	70.000 to 70.035 mm 2.7559 to 2.7572 in.	–
• Bushing	I.D.	70.060 to 70.190 mm 2.7583 to 2.7633 in.	–
Press Fitting Bushing A (Front)	Length	12 mm 0.47 in.	–
Press Fitting Bushing B (Rear)	Length	18 mm 0.71 in.	–

9Y1211121FAS0001US0

3. TIGHTENING TORQUES

Tightening torques of screws, bolts and nuts on the table below are especially specified.
(For general use screws, bolts and nuts: See page G-11.)

[2WD]

Item	N·m	kgf·m	lbf·ft
Tie-rod lock nut	113 to 122	11.5 to 12.5	83.2 to 90.4
Front axle rocking force adjusting screw lock nut	24 to 27	2.4 to 2.8	18 to 20
Tie-rod end nut	49 to 68	5.0 to 7.0	37 to 50
Shaft brackets (front) mounting screws	166 to 196	17.0 to 20.0	123 to 144
Shaft bracket (rear) mounting screws	103 to 118	10.5 to 12.0	76.0 to 87.0
Front wheel mounting lug nuts	137	14.0	101
Front wheel mounting stud bolts	64 to 73	6.5 to 7.5	47 to 54
Front wheel hub slotted nut	49 to 68	5.0 to 7.0	37 to 50
Knuckle arm mounting bolt and nut	78 to 90	7.9 to 9.2	58 to 66

[4WD]

Item	N·m	kgf·m	lbf·ft
Tie-rod lock nut	113 to 122	11.5 to 12.5	83.2 to 90.4
Front axle adjusting screw	49 to 118	5.0 to 12.0	36.2 to 86.7
Front axle rocking force adjusting screw lock nut	24 to 27	2.4 to 2.8	18 to 20
Tie-rod end nut	35 to 44	3.5 to 4.5	26 to 32
Shaft bracket 1 (front) mounting screws	240 to 260	24.5 to 26.5	177 to 181
Shaft bracket 2 (rear) mounting screws	78 to 90	7.9 to 9.2	58 to 66
Front wheel mounting lug nuts	137	14.0	101
Front wheel mounting stud bolt	64 to 73	6.5 to 7.5	47 to 54
Axle flange mounting screws and nuts	24 to 27	2.4 to 2.8	18 to 20

9Y1211121FAS0002US0

4. CHECKING AND ADJUSTING

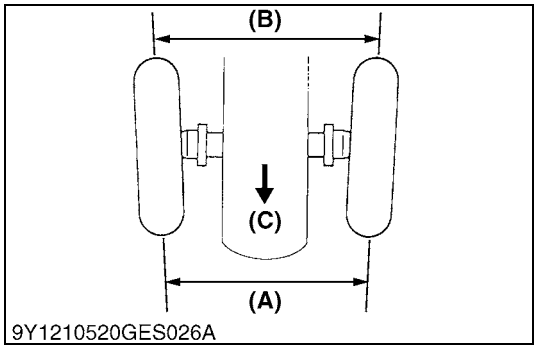

9Y1210520GES026A

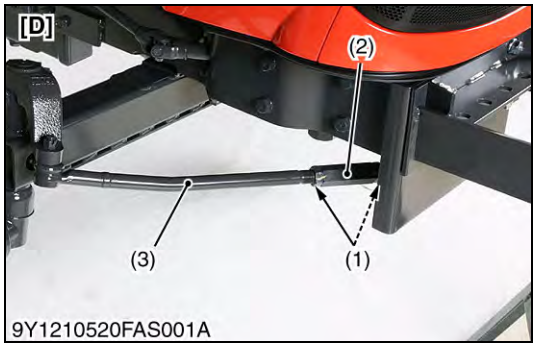

9Y1210520FAS001A

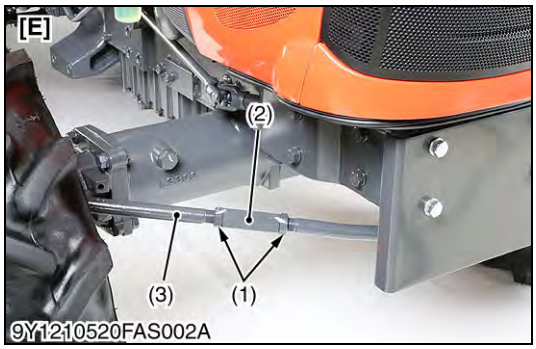

9Y1210520FAS002A

9Y1210520FAS003A

Toe-in

1. Park the tractor on a flat place.
2. Inflate the tires to the specified pressure.
3. Turn steering wheel so front wheels are in the straight ahead position.
4. Lower the implement, lock the parking brake and stop the engine.
5. Measure distance between tire beads at front of tire, hub height.
6. Measure distance between tire beads at rear of tire, hub height.
7. Front distance should be 2 to 8 mm (0.08 to 0.3 in.) less than rear distance.
8. If the measurement is not within the factory specifications, adjust by changing the tie-rod length.

Toe-in (**(B)** - **(A)**)	Factory specification	2 to 8 mm 0.08 to 0.3 in.

■ Adjusting

1. Loosen the tie-rod lock nut (1) and turn the turnbuckle (2) to adjust the tie-lock rod length until the proper toe-in measurement is obtained.
2. Retighten the tie-rod lock nut (1).

Tightening torque	Tie-rod lock nut	113 to 122 N·m 11.5 to 12.5 kgf·m 83.2 to 90.4 lbf·ft

■ IMPORTANT

- **A right and left tie-rod joint should be adjusted to the same length.**

(1) Tie-rod Lock Nut
(2) Turnbuckle
(3) Tie-rod

[A] Wheel to Wheel Distance at front
[B] Wheel to Wheel Distance at rear
[C] Front
[D] 2WD
[E] 4WD

9Y1211121FAS0004US0

Axial Sway of Front Wheel

1. Jack up the front side of tractor.
2. Set a dial gauge on the outside of rim.
3. Turn the wheel slowly and read the runout of rim.
4. If the runout exceeds the factory specifications, check the bearing, rim, and front wheel hub.

Axial sway of front wheel	Factory specification	Less than 5.0 mm 0.2 in.

9Y1211121FAS0005US0

9Y1210520FAS004A

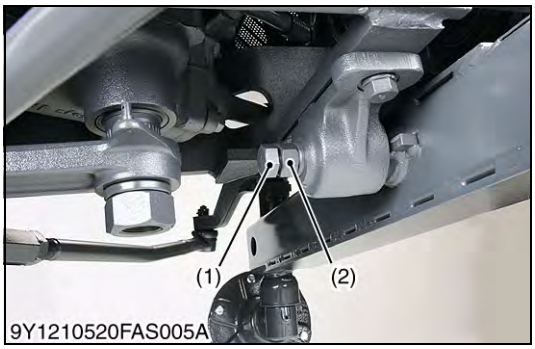

9Y1210520FAS005A

Front Axle Rocking Force [2WD]

1. Jack up the front side of tractor.
2. Set a spring balance to the front axle flange.
3. Measure the front axle rocking force.
4. If the measurement is not within the factory specifications, adjust with the adjusting screw (1).
5. Tighten the lock nut (2) firmly.

Front axle rocking force	Factory specification	49 to 118 N 5.0 to 12.0 kgf 11.1 to 26.4 lbf

(When reassembling)

Tightening torque	Front axle rocking force adjusting screw lock nut	24 to 27 N·m 2.4 to 2.8 kgf·m 18 to 20 lbf·ft

(1) Adjusting Screw (2) Lock Nut

9Y1211121FAS0006US0

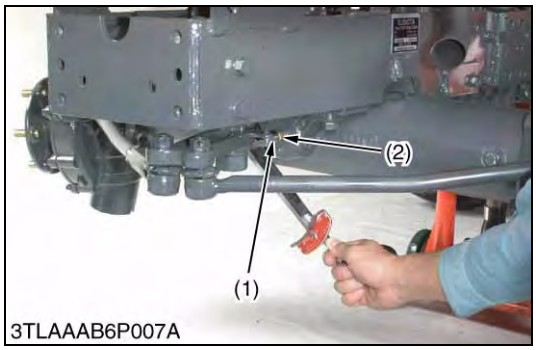

3TLAAAB6P007A

Adjusting Front Axle Pivot [4WD]

1. Jack up the tractor body, then loosen the lock nut (2).
2. Measure the adjusting screw tightening torque.
3. If tightening torque is not within the factory specifications, adjust the adjusting screw (1).
4. After adjustment, tighten the lock nut firmly.

(When reassembling)

Tightening torque	Front axle adjusting screw	49 to 118 N·m 5.0 to 12.0 kgf·m 36.2 to 86.7 lbf·ft
	Front axle rocking force adjusting screw lock nut	24 to 27 N·m 2.4 to 2.8 kgf·m 18 to 20 lbf·ft

(1) Adjusting Screw (2) Lock Nut

9Y1211121FAS0007US0

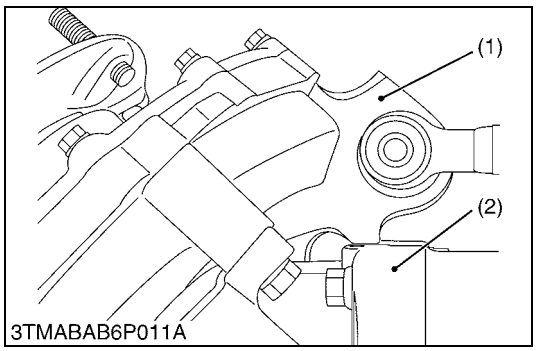

3TMABAB6P011A

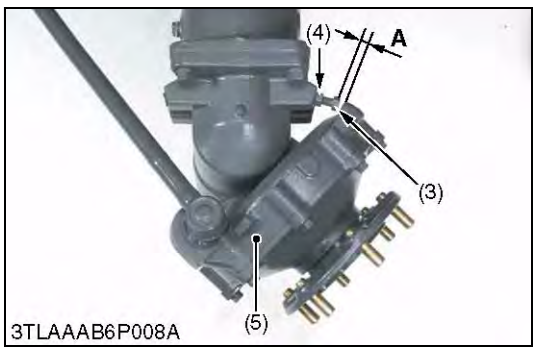

3TLAAAB6P008A

Front Wheel Steering Angle [4WD]

1. Inflate the tires to the specified pressure.
2. Steer the wheels to the extreme right until the front gear case (1) contacts with the bevel gear case (2) at right hand side of the front axle.
3. If the front gear case (1) can not be contacted with the bevel gear case (2), shorten the length of stopper (3).
4. Keeping the front gear case (1) contact with the bevel gear case (2), make a specified clearance **"A"** as shown in the lower table.
5. After adjustment, secure the stopper with the lock nut (4).
6. For adjusting the left steering angle, perform the same procedure as mentioned in right steering angle.

Clearance **A** between bevel gear case and stopper	Factory specification	1.0 to 3.0 mm 0.040 to 0.11 in.

(1) Front Gear Case
(2) Bevel Gear Case
(3) Stopper
(4) Lock Nut
(5) Front Gear Case

A: Clearance

9Y1211121FAS0008US0

5. DISASSEMBLING AND ASSEMBLING

[1] SEPARATING FRONT AXLE

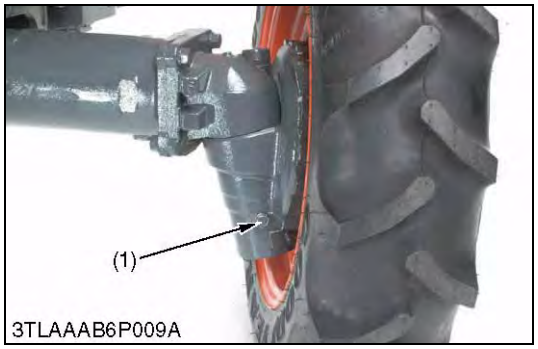

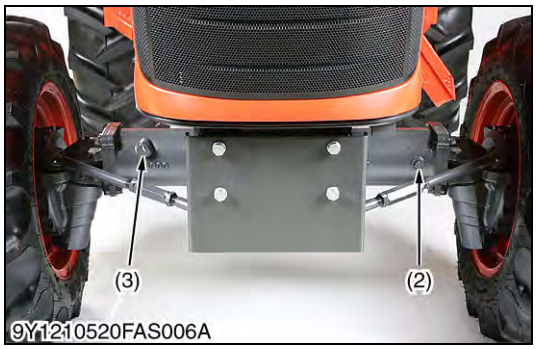

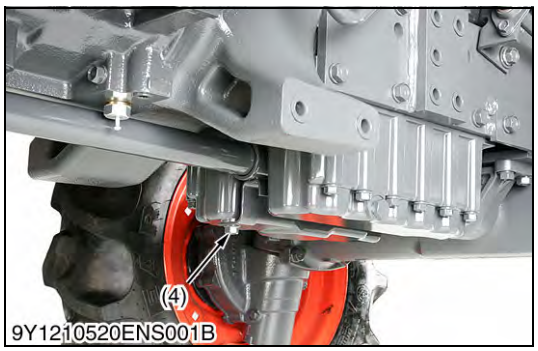

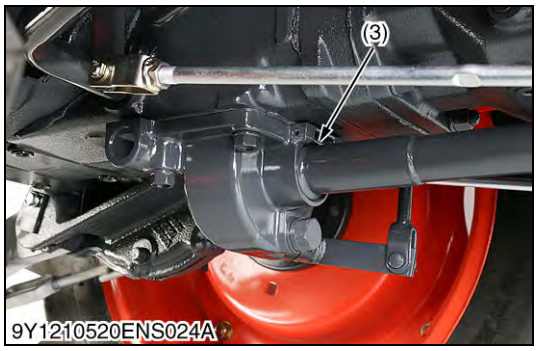

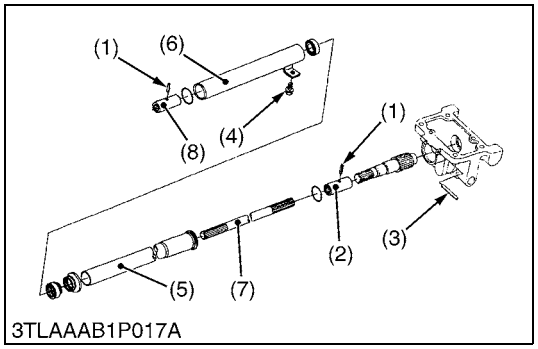

Draining Front Axle Case Oil [4WD]

1. Place the oil pans underneath the front axle case.
2. Remove the drain plug (1) both sides and filling port plug (3) to drain the oil.
3. After draining, reinstall the drain plugs (1) and filling port plug (3).

(When refilling)

- Remove the filling port plug (3) and check plug (2).
- Fill with the new oil up to the check plug port.
- After filling, reinstall the check plug (2) and filling port plug (3).

Front axle case oil	Capacity	4.5 L 4.8 U.S.qts 4.0 Imp.qts

■ **IMPORTANT**

- **Use KUBOTA SUPER UDT fluid or SAE 80, 90 gear oil. Refer to "LUBRICANTS, FUEL AND COOLANT". (See page G-9.)**

(1) Drain Plug
(2) Check Plug
(3) Filling Port Plug

9Y1211121FAS0009US0

Propeller Shaft [4WD]

1. Remove the screw (4) then tap out the spring pin (3).
2. Slide the propeller shaft cover 1 (5) to the front and the cover 2 (6) to the rear.
3. Tap out the spring pins (1) and then slide the coupling (2) to the front and coupling (8) to the rear.

(When reassembling)

- Apply grease to the splines of the propeller shaft (7) and pinion shaft.

(1) Spring Pin
(2) Coupling
(3) Spring Pin
(4) Screw
(5) Propeller Shaft Cover 1
(6) Propeller Shaft Cover 2
(7) Propeller Shaft
(8) Coupling

9Y1211121CLS0013US0

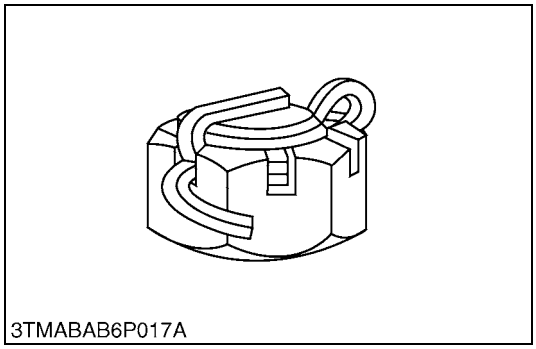

Bumper and Tie-rods

1. Remove the bumper.
2. Remove the tie-rods with the tie-rod end lifter.
   In this case, take special care not to damage the tie-rod end nut (slotted nut). (It is preferable to replace it with an unrequired nut.)
3. Reinstall the bumper.

Tightening torque	Tie-rod end nut	2WD	49 to 68 N·m 5.0 to 7.0 kgf·m 37 to 50 lbf·ft
		4WD	35 to 44 N·m 3.5 to 4.5 kgf·m 26 to 32 lbf·ft

■ **IMPORTANT**

- **After tightening the tie-rod end nut to the specified torque, install a cotter pin as shown in the figure left.**

[A] 2WD **[B] 4WD**

9Y1211121FAS0010US0

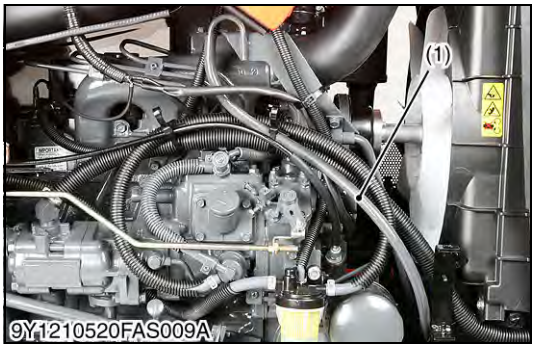

Breather Pipe [4WD]

1. Remove the breather pipe (1).

(1) Breather Pipe

9Y1211121FAS0011US0

9Y1210520FAS010A

Front Axle

1. Place the disassembling stand under the front axle, and hang up the front bumper by the hoist to support it.
2. Remove the shaft bracket 1 mounting screws and shaft bracket 2 mounting screws.
3. Separate the front axle from the front axle support.
4. Remove the front wheels.

(When reassembling)

- Apply thread locker (Three Bond 1324 or equivalent) to shaft bracket 1 (front) mounting screws.

Tightening torque	Shaft brackets (front) mounting screws [2WD]	166 to 196 N·m 17.0 to 20.0 kgf·m 123 to 144 lbf·ft
	Shaft bracket (rear) mounting screws [2WD]	103 to 118 N·m 10.5 to 12.0 kgf·m 76.0 to 87.0 lbf·ft
	Shaft bracket 1 (front) mounting screws [4WD]	240 to 260 N·m 24.5 to 26.5 kgf·m 177 to 181 lbf·ft
	Shaft bracket 2 (rear) mounting screws [4WD]	78 to 90 N·m 7.9 to 9.2 kgf·m 58 to 66 lbf·ft
	Front wheel mounting lug nuts	137 N·m 14.0 kgf·m 101 lbf·ft
	Front wheel mounting stud bolts	64 to 73 N·m 6.5 to 7.5 kgf·m 47 to 54 lbf·ft

9Y1211121FAS0012US0

[2] DISASSEMBLING FRONT AXLE

(1) 2WD

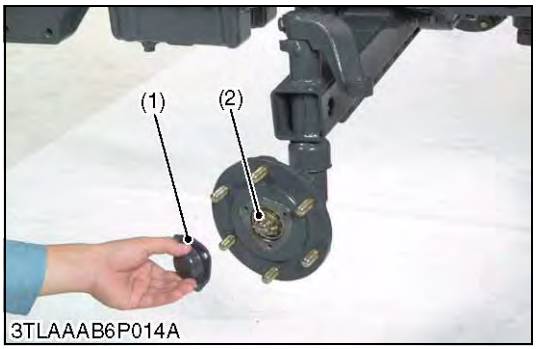

3TLAAAB6P014A

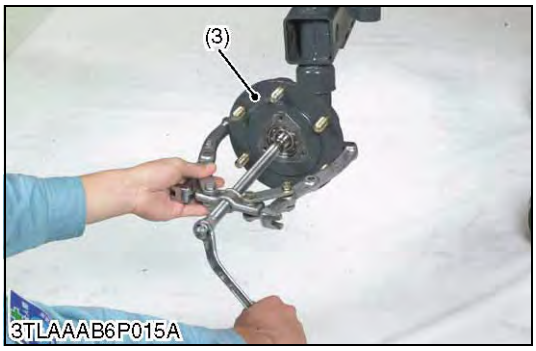

3TLAAAB6P015A

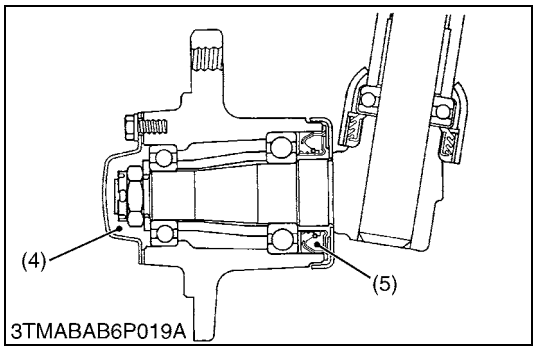

3TMABAB6P019A

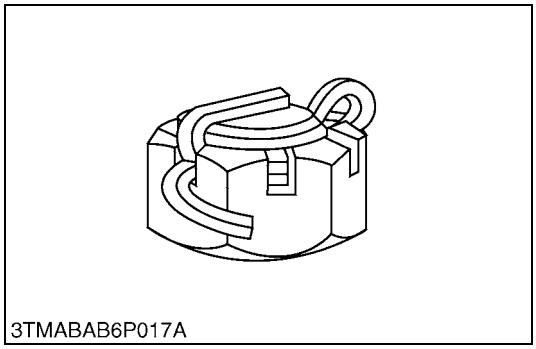
3TMABAB6P017A

Front Wheel Hub

1. Place the disassembling stand under the transmission case.
2. Remove the tie-rod with the tie-rod end lifter.
3. Remove the front wheel.
4. Remove the front wheel hub cap (1).
5. Draw out the cotter pin.
6. Remove the slotted nut (2).
7. Remove the collar.
8. Remove the front wheel hub (3) with a puller.

(When reassembling)

- Replace cotter pin with a new one.
- Apply grease to the oil seal in the front wheel hub.

■ **IMPORTANT**

- **After tightening the slotted nut to the specified torque, insert a cotter pin and bend it as shown in the figure.**
- **Pack in the grease to the bearing in the front wheel hub.**

Tightening torque	Front wheel hub slotted nut	49 to 68 N·m 5.0 to 7.0 kgf·m 37 to 50 lbf·ft

(1) Front Wheel Hub Cap
(2) Slotted Nut
(3) Front Wheel Hub
(4) Grease
(5) Oil Seal

9Y1211121FAS0013US0

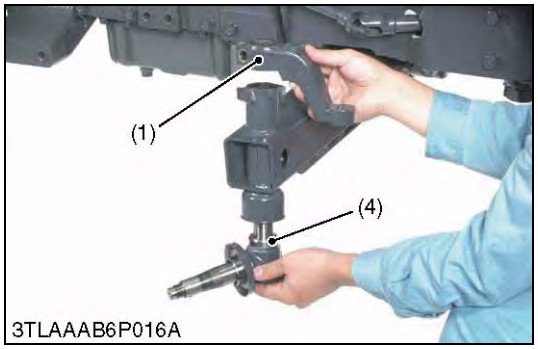

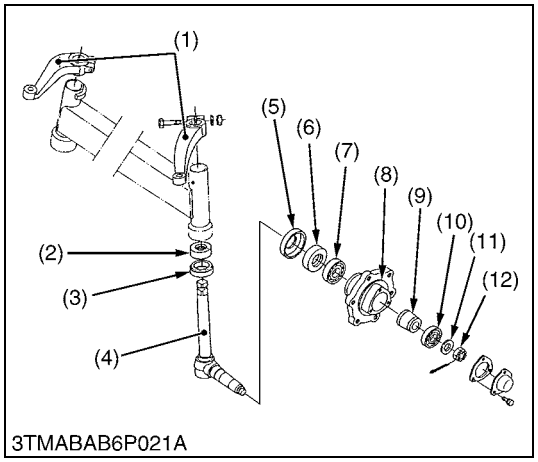

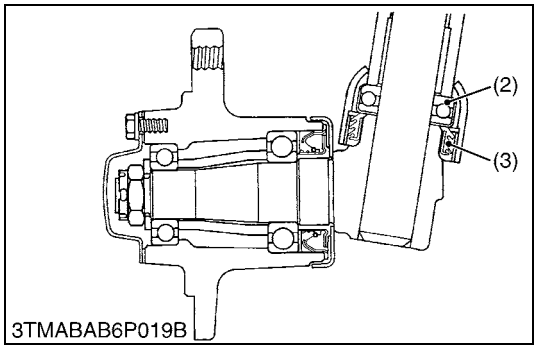

Knuckle Shaft

1. Remove the knuckle arm (1) and draw out the knuckle shaft (4) from the front axle.

(When reassembling)

- Insert the thrust ball bearing (2) and oil seal (3), noting its direction.
- Apply grease to the oil seals (3), (6).
- Do not interchange right and left knuckle arms.
- When lift the knuckle shaft, the knuckle arms must be mounted so that the clearance between the knuckle arms and front axle is 0.30 to 1.0 mm (0.012 to 0.039 in.).

Tightening torque	Knuckle arm mounting bolt and nut	78 to 90 N·m 7.9 to 9.2 kgf·m 58 to 66 lbf·ft

(1) Knuckle Arm
(2) Thrust Ball Bearing
(3) Oil Seal
(4) Knuckle Shaft
(5) Dust Cover
(6) Oil Seal
(7) Ball Bearing
(8) Front Wheel Hub
(9) Spacer
(10) Ball Bearing
(11) Washer
(12) Slotted Nut

9Y1211121FAS0014US0

(2) 4WD

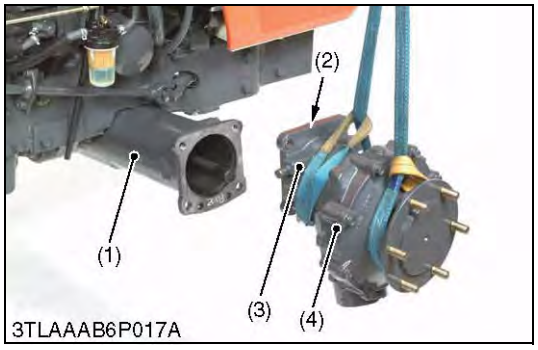

Bevel Gear Case and Front Gear Case

1. Remove the bevel gear case mounting screws.
2. Remove the bevel gear case (3) and front gear case (4) as a unit from the front axle case (1).

(When reassembling)

- Apply grease to the O-ring (2) and take care not to damage it.
- Do not interchange right and left bevel gear case assemblies and front gear case assemblies.

(1) Front Axle Case
(2) O-ring
(3) Bevel Gear Case
(4) Front Gear Case

9Y1211121FAS0015US0

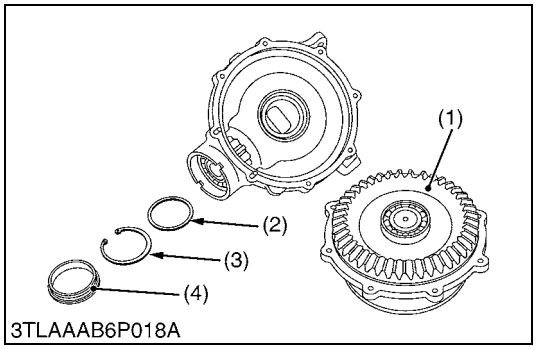

3TLAAAB6P018A

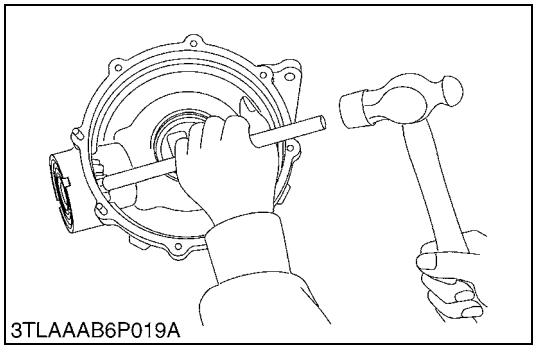
3TLAAAB6P019A

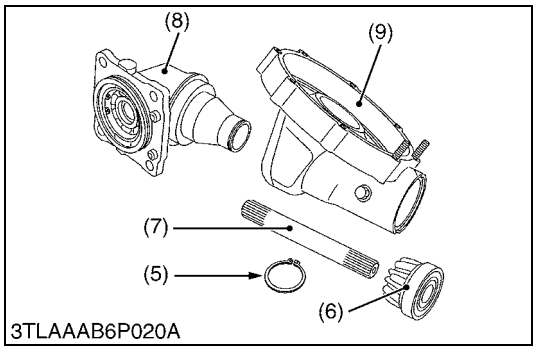

3TLAAAB6P020A

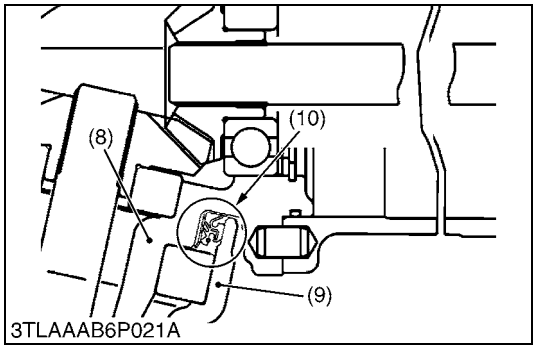

3TLAAAB6P021A

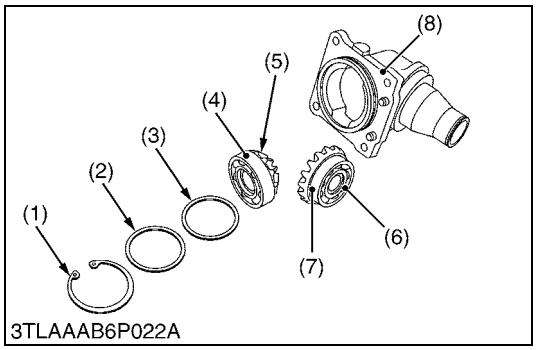

3TLAAAB6P022A

Bevel Gear Case, Axle Flange and Front Gear Case

1. Remove the plug (4).
2. Remove the internal snap ring (3) and shim (2).
3. Remove the axle flange (1).
4. Tap out the bevel gear (6) and ball bearing.
5. Draw out the bevel gear shaft (7).
6. Remove the external snap ring (5).
7. Tap the bevel gear case (8), and separate it from the front gear case (9).

(When reassembling)

- Apply grease to the O-rings of axle flange (1).
- Tighten the axle flange mounting screws and nuts diagonally in several steps.
- Install the oil seal (10) of bevel gear case, noting its direction as shown in the figure below.

Tightening torque	Axle flange mounting screws and nuts	24 to 27 N·m 2.4 to 2.8 kgf·m 18 to 20 lbf·ft

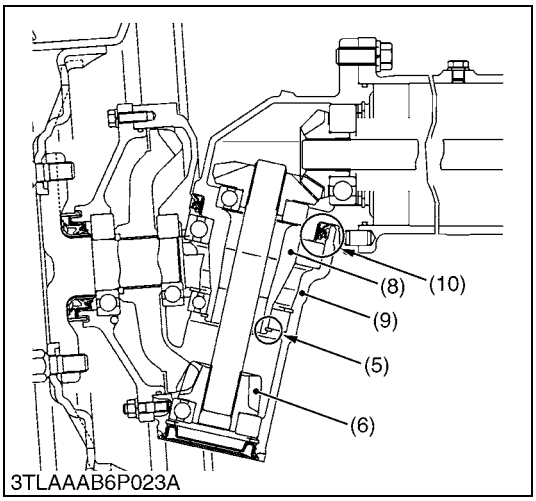

3TLAAAB6P023A

(1) Axle Flange
(2) Shim
(3) Internal Snap Ring
(4) Plug
(5) External Snap Ring
(6) Bevel Gear
(7) Bevel Gear Shaft
(8) Bevel Gear Case
(9) Front Gear Case
(10) Oil Seal

9Y1211121FAS0016US0

Bevel Gear Case Gears

1. Remove the internal snap ring (1).
2. Take out the bevel gears (5), (7) with ball bearings (4), (6), collar (2) and shims (3).

(When reassembling)

- Install the same shims (3) before they are removed.

(1) Internal Snap Ring
(2) Collar
(3) Shim
(4) Ball Bearing
(5) Bevel Gear
(6) Ball Bearing
(7) Bevel Gear
(8) Bevel Gear Case

9Y1211121FAS0017US0

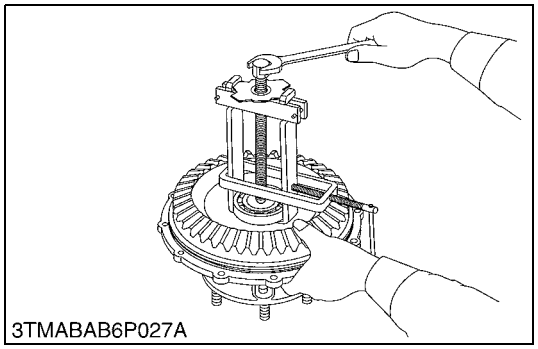
3TMABAB6P027A

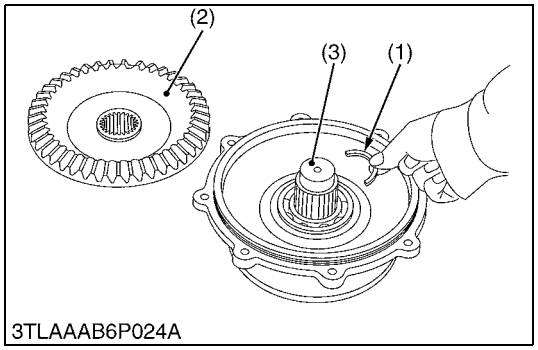

3TLAAAB6P024A

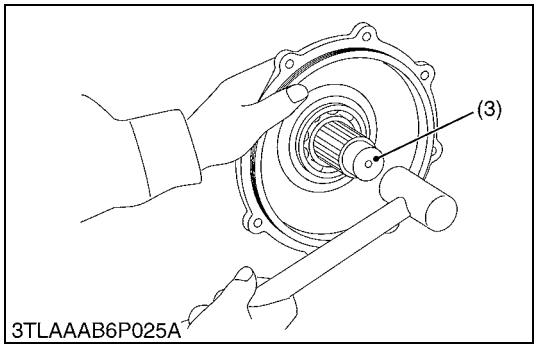

3TLAAAB6P025A

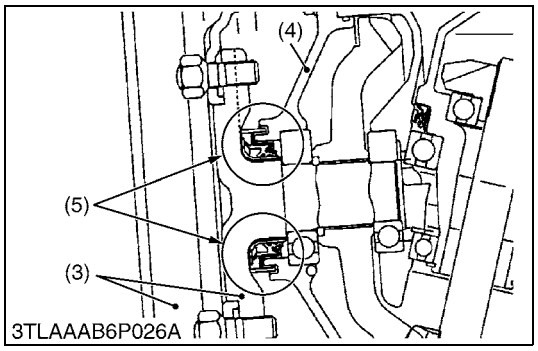

3TLAAAB6P026A

Axle

1. Remove the bearing with a special use puller set.
2. Take out the bevel gear (2).
3. Take out the collar (1).
4. Tap out the axle (3).

(When reassembling)

- Install the oil seal (5) of axle flange (4), noting its direction as shown in the figure below.

(1)	Collar	(4)	Axle Flange
(2)	Bevel Gear	(5)	Oil Seal
(3)	Axle		

9Y1211121FAS0018US0

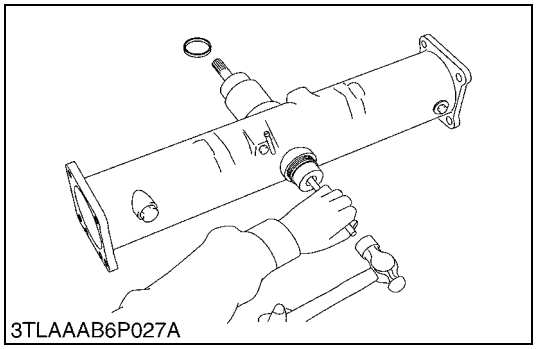
3TLAAAB6P027A

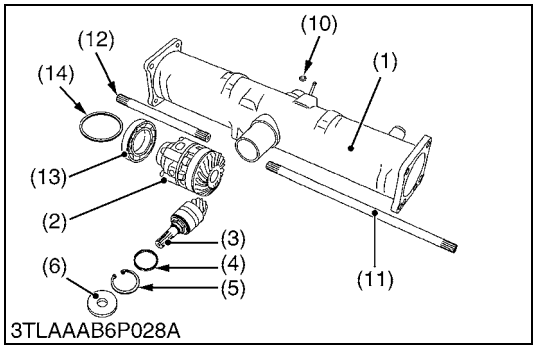

3TLAAAB6P028A

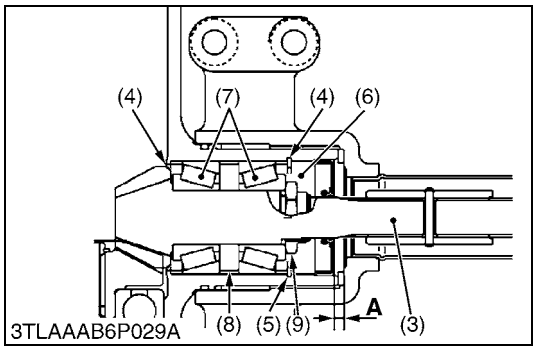

3TLAAAB6P029A

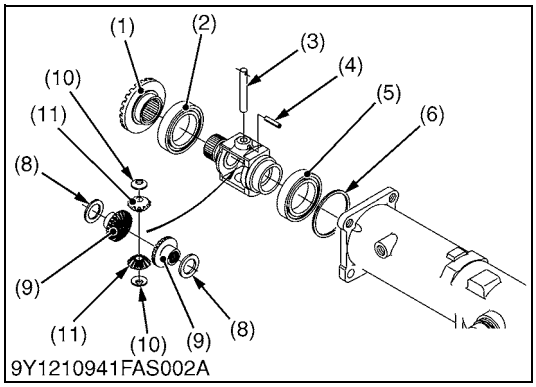

9Y1210941FAS002A

Spiral Bevel Pinion Shaft and Differential Gear Assembly

1. Take out the differential yoke shaft (11), (12) both sides.
2. Remove the oil seal (6) and internal snap ring (5).
3. Remove the plug (10), and then tap out the spiral bevel pinion shaft (3) by the brass rod and hammer.
4. Take out the differential gear assembly (2), ball bearing (13) and shim (14) from right side of front axle case (1).
5. Remove the stake of lock nut (9), and then remove the lock nut (9).
6. Remove the taper roller bearings (7).

(When reassembling)

- Replace the lock nut (9), oil seal (6) and plug (10) with new ones.
- Apply grease to the oil seal (6).
- Install the same shims and collars before they are removed.
- Install the taper roller bearings correctly, noting their direction, and apply gear oil to them.
- When press-fitting a oil seal (6), observe the dimension **"A"** described in the figure.
- Stake the lock nut (9) firmly.
- Tighten up the lock nut (9) until the turning force of the spiral bevel pinion shaft reaches the factory specifications.

Turning torque of spiral bevel pinion shaft	Factory specification	0.98 to 1.1 N·m 0.10 to 0.12 kgf·m 0.73 to 0.86 lbf·ft

(1) Front Axle Case
(2) Differential Gear Assembly
(3) Spiral Bevel Pinion Shaft
(4) Adjusting Collar
(5) Internal Snap Ring
(6) Oil Seal
(7) Taper Roller Bearing
(8) Collar
(9) Lock Nut
(10) Plug
(11) Differential Yoke Shaft R.H.
(12) Differential Yoke Shaft L.H.
(13) Ball Bearing
(14) Shim

A: 1 mm (0.04 in.)

9Y1211121FAS0019US0

Differential Gear

1. Remove ball bearing (2) and spiral bevel gear (1) as a unit with puller.
2. Remove the spring pin (4).
3. Pull out the pinion shaft (3) and remove the differential pinions (11) and differential side gears (9).

■ **NOTE**

- **Arrange the parts to see their original positions.**

(When reassembling)

- Apply molybdenum disulfide (Three Bond 1901 or equivalent) to the following position.
  – Differential side gears (9) (contact face with differential case (7))
  – Shims (8) (contact face with differential case (7))
  – Differential pinions (11) (contact face with thrust collar (10))
- Install the pinion shaft (3) so that the hole on it aligns with the hole on differential case (7) and install spring pin (4) noting its direction.

(1) Spiral Bevel Gear
(2) Ball Bearing
(3) Pinion Shaft
(4) Spring Pin
(5) Ball Bearing
(6) Shim
(7) Differential Case
(8) Shim
(9) Differential Side Gear
(10) Thrust Collar
(11) Differential Pinion

9Y1211121FAS0020US0

6. SERVICING

[1] 2WD

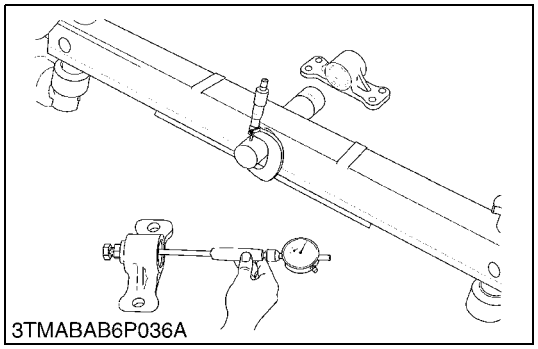
3TMABAB6P036A

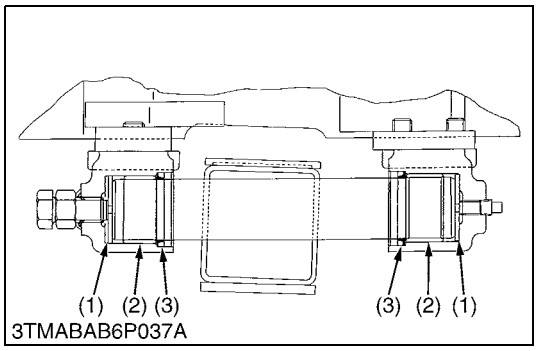

3TMABAB6P037A

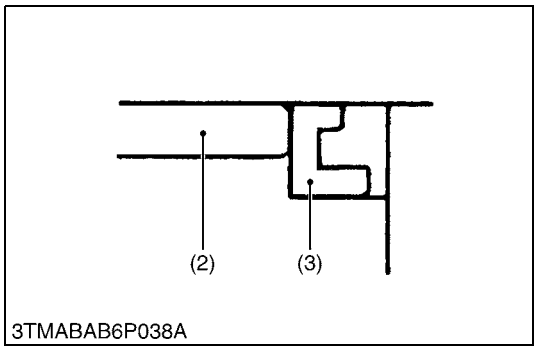

3TMABAB6P038A

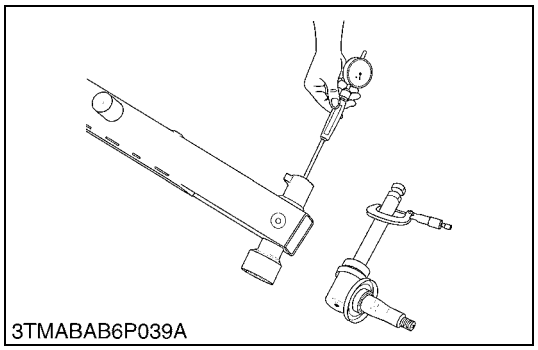
3TMABAB6P039A

Clearance between Front Axle Middle Boss and Shaft Bracket Bushing

1. Measure the front axle middle boss O.D. at several points where it contacts with the bushing.
2. Measure the shaft bracket 1 bushing I.D. and bracket 2 bushing I.D. in the same method, and calculate the clearance.
3. If the clearance exceeds the allowable limit, replace them.

(When reassembling)

- Before press-fitting the bushing, install the new thrust collar.
- Install the oil seals, noting their direction. (Refer to figure left.)

■ **IMPORTANT**

- **After replacing the bushing, be sure to adjust the front axle rocking force. (See page 6-S6.)**

Clearance between front axle middle boss and bushing	Factory specification	0 to 0.177 mm 0 to 0.00696 in.
	Allowable limit	0.3 mm 0.01 in.

Front axle middle boss O.D.	Factory specification	39.938 to 40.000 mm 1.5724 to 1.5748 in.
Bushing I.D.	Factory specification	40.000 to 40.115 mm 1.5748 to 1.5793 in.

(1) Thrust Collar
(2) Bushing
(3) Oil Seal

9Y1211121FAS0021US0

Clearance between Knuckle Shaft (Kingpin) and Bushing

1. Measure the shaft O.D. at several points where it contacts with the bushings.
2. Measure the bushing I.D. in the same method, and calculate the clearance.
3. If the clearance exceeds the allowable limit, replace the bushing.

(When reassembling)

- Remove the bushing with a bushing puller.

Clearance between knuckle shaft (kingpin) and bushing	Factory specification	0 to 0.285 mm 0 to 0.0112 in.
	Allowable limit	0.4 mm 0.02 in.

Knuckle shaft O.D.	Factory specification	27.880 to 27.900 mm 1.0977 to 1.0984 in.
Bushing I.D.	Factory specification	27.900 to 28.165 mm 1.0985 to 1.1088 in.

9Y1211121FAS0022US0

[2] 4WD

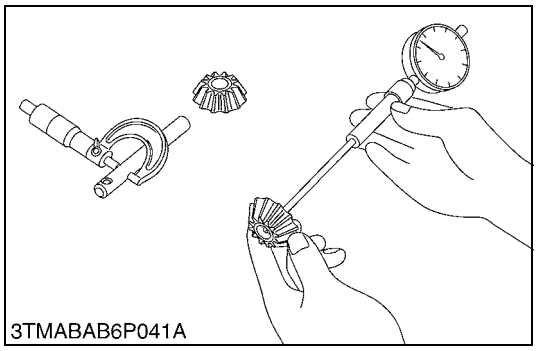
3TMABAB6P041A

Clearance between Pinion Shaft and Differential Pinion

1. Measure the pinion shaft O.D..
2. Measure the differential pinion I.D. and calculate the clearance.
3. If the clearance exceeds the allowable limit, replace faulty parts.

Clearance between pinion shaft and differential pinion	Factory specification	0.0640 to 0.100 mm 0.00252 to 0.00393 in.
	Allowable limit	0.25 mm 0.0098 in.

Pinion shaft O.D.	Factory specification	13.950 to 13.968 mm 0.54922 to 0.54992 in.
Differential pinion I.D.	Factory specification	14.032 to 14.050 mm 0.55244 to 0.55314 in.

9Y1211121FAS0023US0

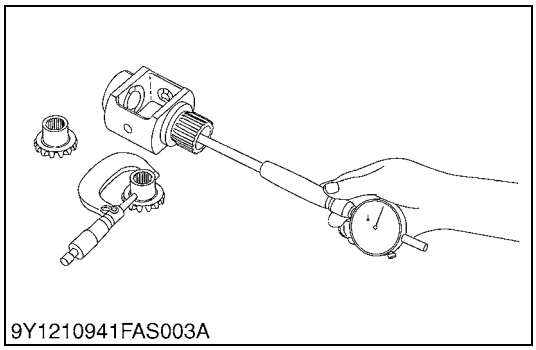
9Y1210941FAS003A

Clearance between Differential Case and Differential Side Gear

1. Measure the differential side gear boss O.D..
2. Measure the differential case bore I.D. and calculate the clearance.
3. If the clearance exceeds the allowable limit, replace faulty parts.

Clearance between differential case and differential side gear	Factory specification	0.0500 to 0.114 mm 0.00197 to 0.00448 in.
	Allowable limit	0.35 mm 0.014 in.

Differential case bore I.D.	Factory specification	32.000 to 32.025 mm 1.2599 to 1.2608 in.
Differential side gear O.D.	Factory specification	31.911 to 31.950 mm 1.2564 to 1.2578 in.

9Y1211121FAS0024US0

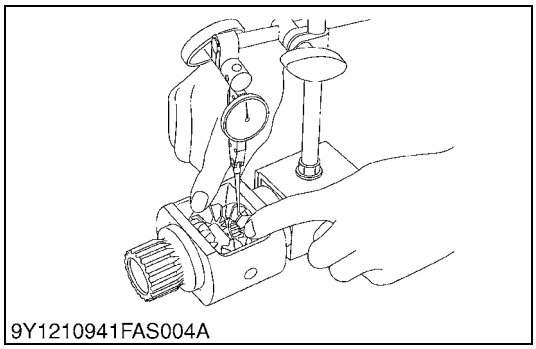
9Y1210941FAS004A

Backlash between Differential Pinon and Differential Side Gear

1. Set a dial gauge (lever type) on a tooth of the differential pinion.
2. Fix the differential side gear and move the differential pinion to measure the backlash.
3. If the measurement exceeds the factory specifications, adjust with the differential side gears shims.

Backlash between differential pinion and differential side gear	Factory specification	0.1 to 0.3 mm 0.004 to 0.01 in.

(Reference)

- Thickness of adjusting shims:
  0.40 mm (0.016 in.)
  0.60 mm (0.024 in.)
  0.80 mm (0.031 in.)
  1.0 mm (0.039 in.)
  1.2 mm (0.047 in.)
- Tooth contact:
  More than 35 %
- Center of tooth contact:
  1/3 to 1/2 of the entire width from the small end.

9Y1211121FAS0025US0

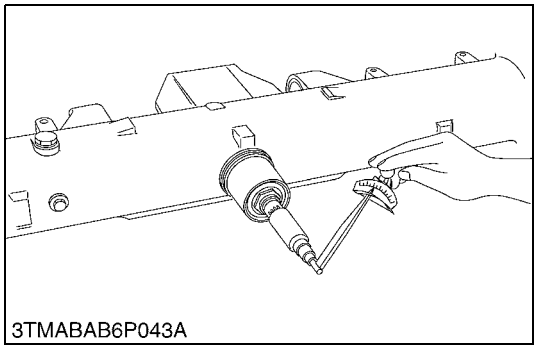
3TMABAB6P043A

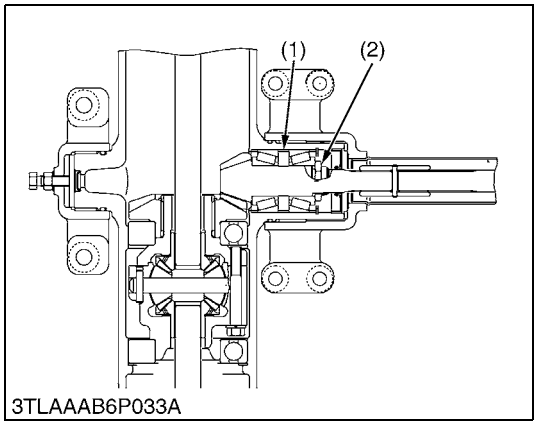

3TLAAAB6P033A

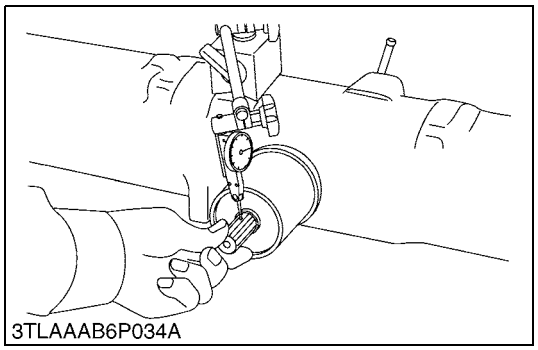
3TLAAAB6P034A

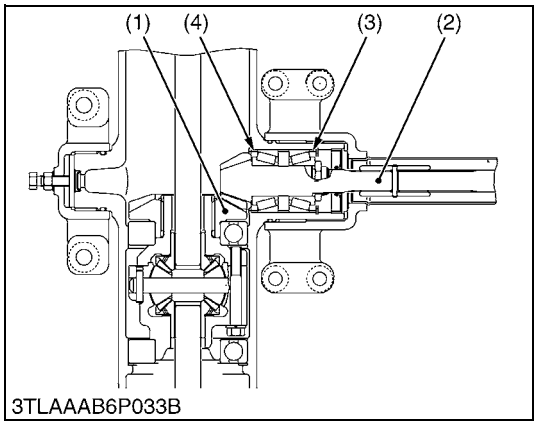

3TLAAAB6P033B

Turning Force of Spiral Bevel Pinion Shaft (Pinion Shaft Only)

1. Install the spiral bevel pinion shaft assembly only to the front axle case.
2. Measure the turning torque of spiral bevel pinion shaft.
3. If the turning torque is not within the factory specifications, adjust with the lock nut.
   If the turning torque is not able to adjust by lock nut (2), change the thickness of collar (1) and adjust with lock nut (2) again.

(Reference)

- Standard size of collar (1) :
  10.0 mm (0.349 in.) of thickness

Turning torque of spiral bevel pinion shaft	Factory specification	0.98 to 1.1 N·m 0.10 to 0.12 kgf·m 0.73 to 0.86 lbf·ft

■ **NOTE**

- **After turning torque adjustment, be sure to stake the lock nut.**

(1) Collar (2) Lock Nut

9Y1211121FAS0026US0

Backlash between Spiral Bevel Pinion Shaft and Spiral Bevel Gear

1. Set a dial gauge (lever type) with its finger on the spline of spiral bevel pinion shaft.
2. Measure the backlash by moving the spiral bevel pinion shaft by hand lightly.
3. If the backlash is not within the factory specifications, change the adjusting collars (3), (4). Change the adjusting collar (4) to 0.1 mm (0.004 in.) smaller size, and change the adjusting collar (3) to 0.1 mm (0.004 in.) larger size.
4. Adjust the backlash properly by repeating the above procedures.

Backlash between spiral bevel pinion shaft and spiral bevel gear	Factory specification	0.1 to 0.3 mm 0.004 to 0.01 in.

(1) Spiral Bevel Gear (3) Adjusting Collar
(2) Spiral Bevel Pinion Shaft (4) Adjusting Collar

9Y1211121FAS0027US0

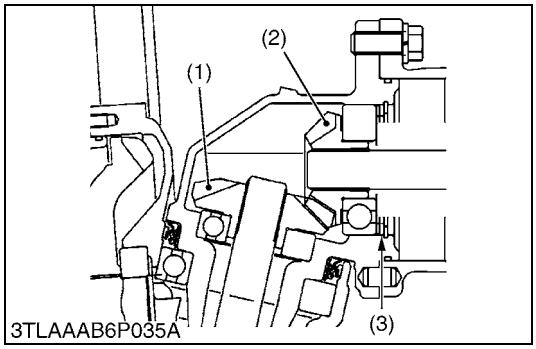

Backlash between 11T Bevel Gear and 16T Bevel Gear

1. Stick a strip of plastigauge to three spots on the 16T bevel gear (1).
2. Fix the front axle case, bevel gear case and front gear case.
3. Turn the axle.
4. Remove the bevel gear case from front axle case and measure the amount of the flattering with the scale and get the backlash.
5. If the backlash is not within the factory specifications, adjust with shim (3).

Backlash between 11T bevel gear and 16T bevel gear	Factory specification	0.15 to 0.35 mm 0.0059 to 0.013 in.

(Reference)

- Thickness of adjusting shims (3):
  0.4 mm (0.016 in.)
  0.6 mm (0.024 in.)
  0.8 mm (0.031 in.)
  1.0 mm (0.039 in.)
  1.2 mm (0.047 in.)
  1.4 mm (0.055 in.)
- Tooth contact:
  More than 35 %
- Center of tooth contact:
  1/3 to 1/2 of the entire width from the small end.

(1) 16T Bevel Gear
(2) 11T Bevel Gear
(3) Shim

9Y1211121FAS0028US0

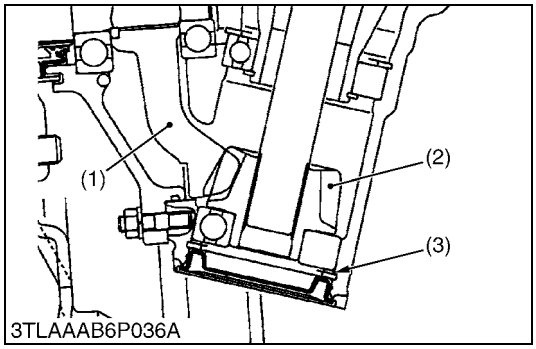

Backlash between 11T Bevel Gear and 42T Bevel Gear

1. Stick a strip of plastigauge to three spots on the 42T bevel gear (1).
2. Fix the axle flange and front gear case.
3. Turn the axle.
4. Remove the axle flange from front gear case and measure the amount of the flattering with the scale and get the backlash.
5. If the backlash is not within the factory specifications, adjust with shim (3).

Backlash between 11T bevel gear and 42T bevel gear	Factory specification	0.15 to 0.35 mm 0.0059 to 0.013 in.

(Reference)

- Thickness of adjusting shims (3):
  1.0 mm (0.039 in.)
  1.2 mm (0.047 in.)
  1.4 mm (0.055 in.)
  1.6 mm (0.063 in.)
  1.8 mm (0.071 in.)
  2.0 mm (0.079 in.)
  2.2 mm (0.087 in.)
- Tooth contact
  More than 35 %

(1) 42T Bevel Gear
(2) 11T Bevel Gear
(3) Shim

9Y1211121FAS0029US0

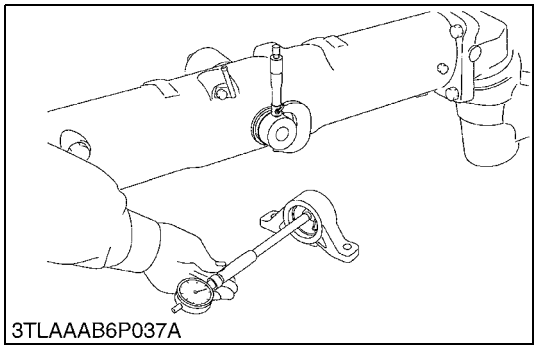
3TLAAAB6P037A

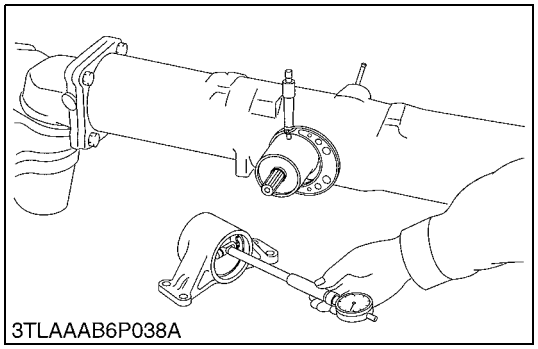
3TLAAAB6P038A

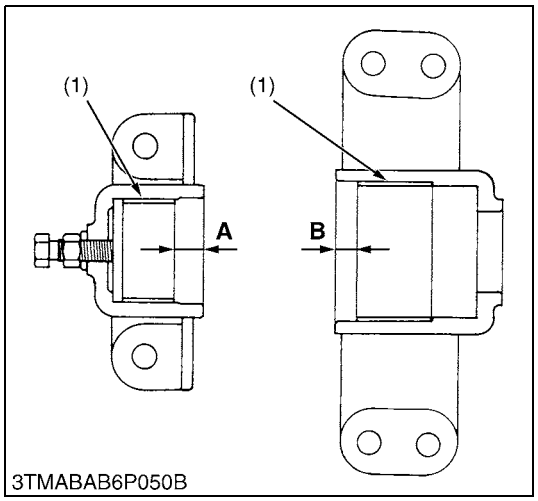

3TMABAB6P050B

Clearance between Front Axle Case Bosses and Bracket Bushings

1. Measure the front axle case bosses O.D. with an outside micrometer.
2. Measure the bracket bushing I.D. with an inside micrometer and calculate the clearance.
3. If the clearance exceeds the allowable limit, replace the bracket bushing.
4. If the clearance still exceeds the allowable limit, replace the front axle case.

Clearance between front axle case boss (front) and bracket bushing (front)	Factory specification	0.025 to 0.16 mm 0.00089 to 0.0062 in.
	Allowable limit	0.35 mm 0.014 in.

Front axle case boss (front) O.D.	Factory specification	49.950 to 49.975 mm 1.9666 to 1.9675 in.
Bracket bushing (front) I.D.	Factory specification	50.00 to 50.11 mm 1.969 to 1.972 in.

Clearance between front axle case boss (rear) and bracket bushing (rear)	Factory specification	0.025 to 0.19 mm 0.00098 to 0.0074 in.
	Allowable limit	0.35 mm 0.014 in.

Front axle case boss (rear) O.D.	Factory specification	70.000 to 70.035 mm 2.7559 to 2.7572 in.
Bracket bushing (rear) I.D.	Factory specification	70.060 to 70.190 mm 2.7583 to 2.7633 in.

■ **Press-fitting Bushing**

- When press-fitting a new bushing, observe the dimension described in the figure.

Press-fit depth of bushing **A**	Factory specification	12 mm 0.47 in
Press-fit depth of bushing **B**	Factory specification	18 mm 0.71 in

- Be sure to set the hole of bushing to the hole of front axle case boss.

■ **NOTE**

- **After replacing the bushing, be sure to adjust the front axle rocking force. (See page 6-S6.)**

(1) Bushing **A: Depth of Bushing**

9Y1211121FAS0030US0

https://truckmanualshub.com/

7 STEERING

https://truckmanualshub.com/

MECHANISM

CONTENTS

1. STRUCTURE..... 7-M1
2. HYDRAULIC CIRCUIT 7-M2
3. STEERING GEAR BOX..... 7-M3
   [1] STRUCTURE 7-M3
   [2] OPERATION 7-M4

1. STRUCTURE

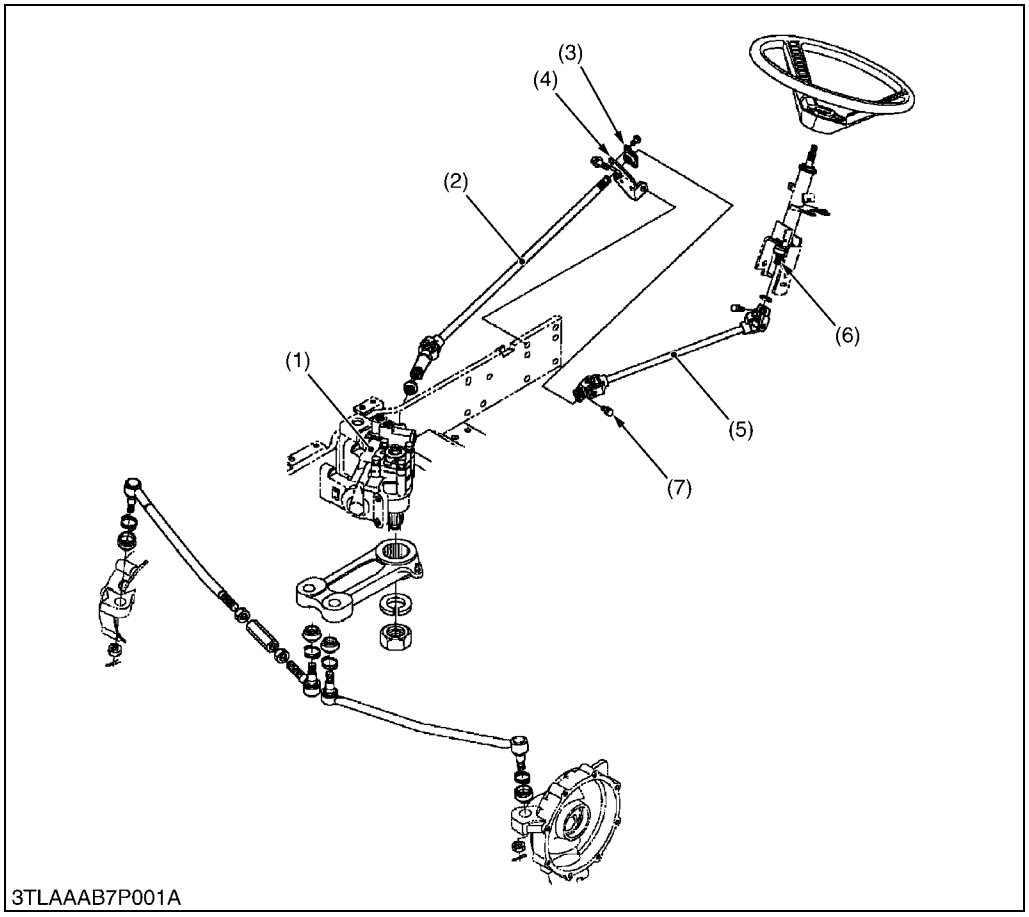

(1) Power Steering Controller (Steering Gear Box)
(2) Joint Shaft 2
(3) Mini-Flange
(4) Support
(5) Joint Shaft
(6) Steering Shaft
(7) Bolt
(8) Hydraulic Pump
(9) Delivery Pipe
(10) Return Hose (Manual Transmission Type) HST Delivery Pipe (HST Type)

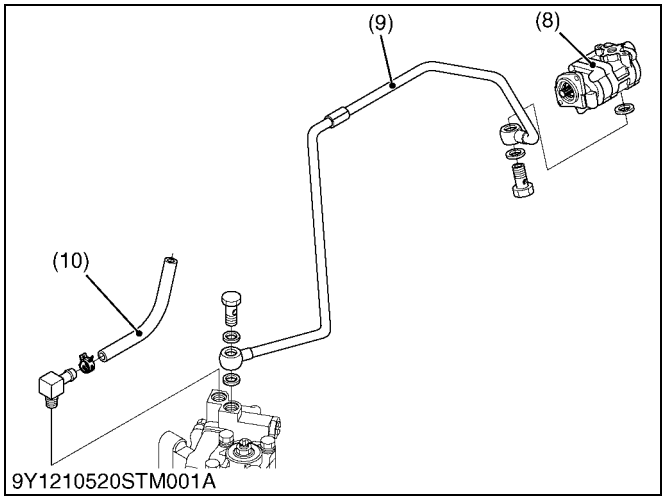

The integral type power steering is used on this tractor. This steering system is composed of steering wheel, steering joint shafts, steering gear box and other components shown in the figure.

9Y1211121STM0001US0

2. HYDRAULIC CIRCUIT

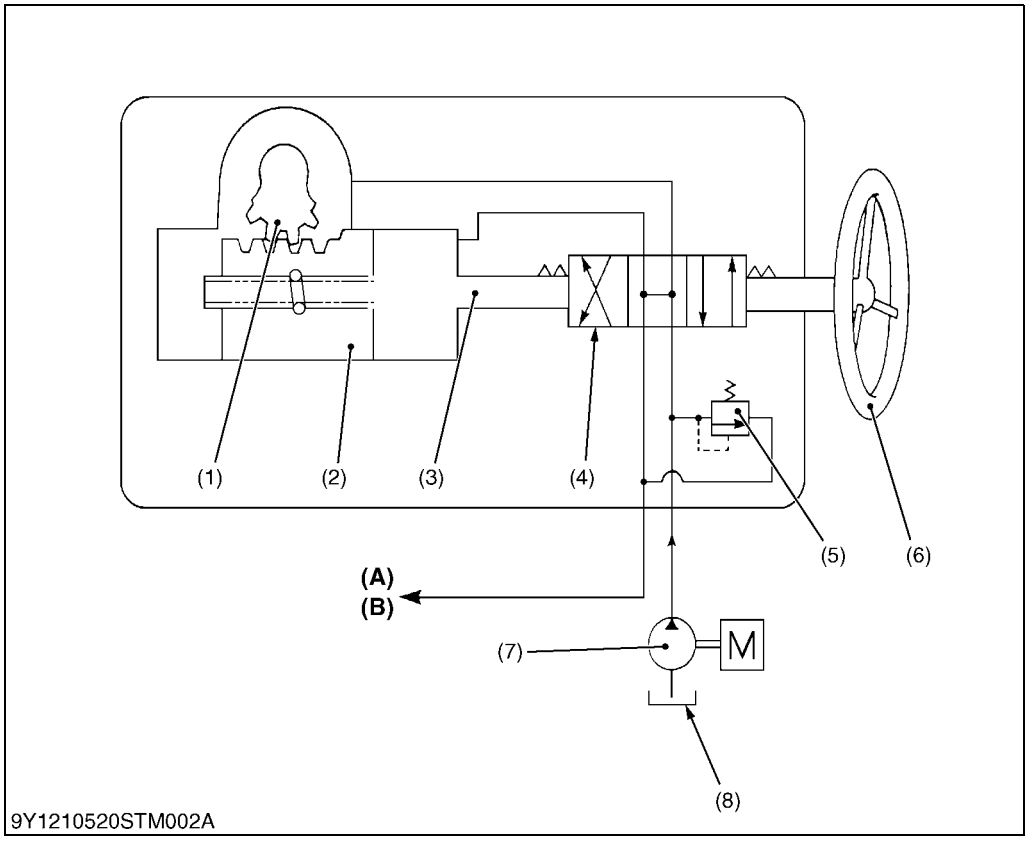

(1) Sector Gear Shaft
(2) Rack (Piston)
(3) Worm Shaft
(4) Control Valve
(5) Relief Valve
(6) Steering Wheel
(7) Hydraulic Pump
(8) Transmission Case

(A) To Hydraulic Pump (Manual Transmission Type)
(B) To HST Unit (HST Type)

This tractor is equipped with integral type power steering that of rotary type control valve with torsion bar.
The oil sent from hydraulic pump (7) flows in gear case through control valve (4) and moves rack (2).
And at the same time, the oil from gear case flows to hydraulic pump or HST unit to through control valve (4).

9Y1211121STM0002US0

3. STEERING GEAR BOX

[1] STRUCTURE

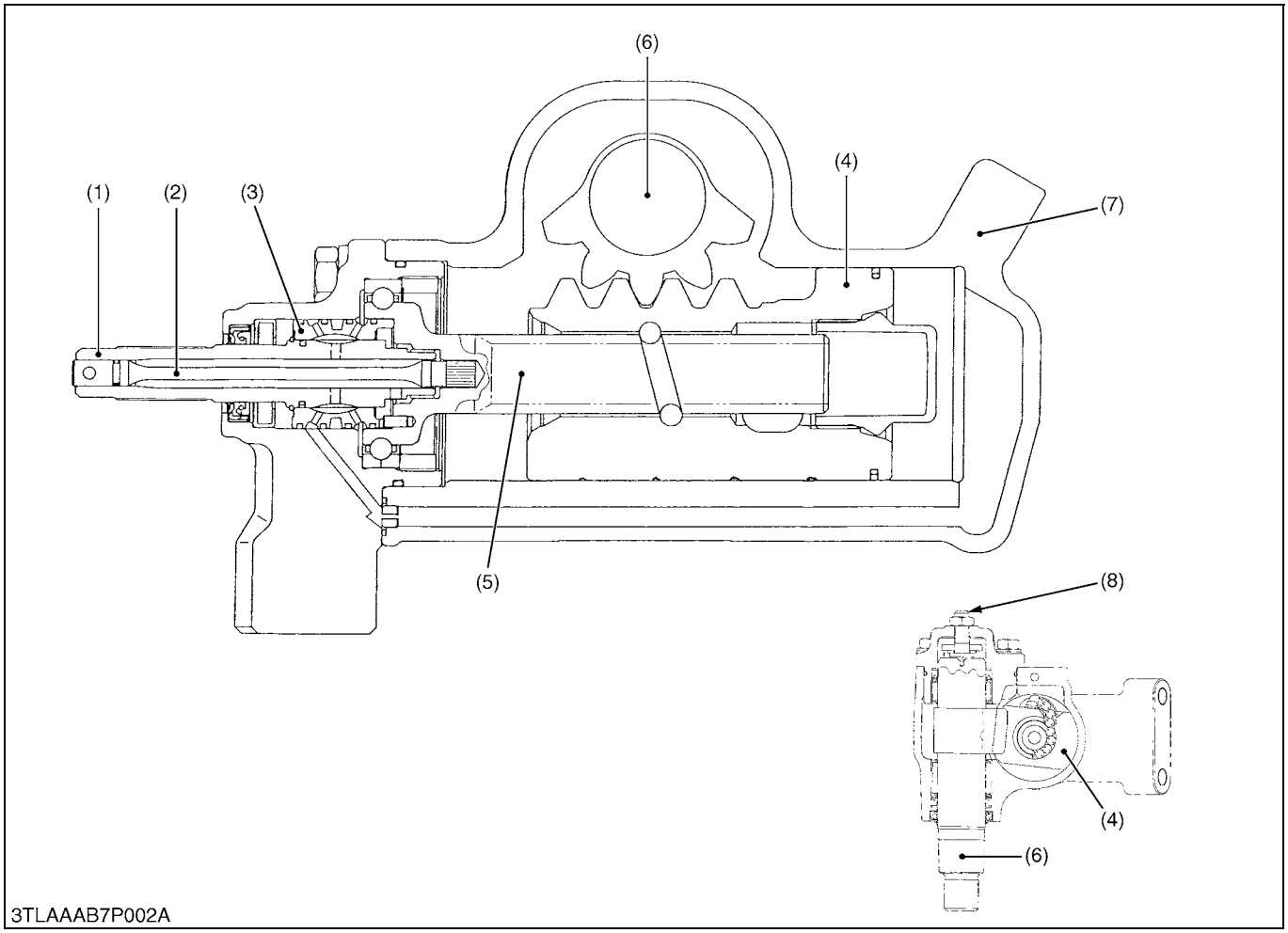

(1)	Input Shaft	(3)	Sleeve	(5)	Main Shaft	(7)	Gear Box
(2)	Torsion Bar	(4)	Ball Nut	(6)	Sector Shaft	(8)	Adjust Screw

This integral power steering mechanism consists of the following two major components as shown above: hydraulic control valve and steering force assist hydraulic cylinder. The control valve is housed in the casing and composed of sleeve (3), input shaft (1) and other parts. The hydraulic cylinder, on the other hand, is composed of gear box (7) (cylinder tube), ball nut (4) (piston) and other parts. When the steering wheel is turned, the reaction force from the tires is exerted through the sector shaft (6) onto the main shaft (5). The torsion bar (2) is then twisted to make a gap between the input shaft (1) and sleeve (3). Such gap activates the valve to switch the oil flow direction. The sector shaft's pinion, which comes in mesh with the ball nut's rack, is tapered along the teeth. In this way, the sector shaft (6) that turns by the adjust screw (8) changes the clearance between the rack and pinion, adjusting the play of the steering wheel. (Tighten the adjust screw and the play becomes smaller, and vice versa.)

9Y1211121STM0003US0

[2] OPERATION

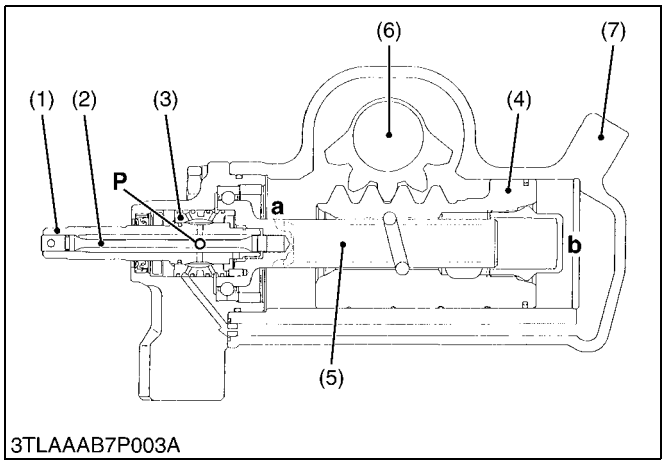

Neutral Position

While the steering wheel is not moved, the torsion bar (2) is not twisted. There is no gap between the input shaft (1) and sleeve (3). This makes no pressure difference between the chambers **"a"** and **"b"** of the cylinder, which keeps the ball nut (4) and sector shaft (6) in their positions.

(1)	Input Shaft	**a:**	**Chamber**
(2)	Torsion Bar	**b:**	**Chamber**
(3)	Sleeve	**P:**	**Pump Port**
(4)	Ball Nut		
(5)	Main Shaft		
(6)	Sector Shaft		
(7)	Gear Box		

9Y1211121STM0004US0

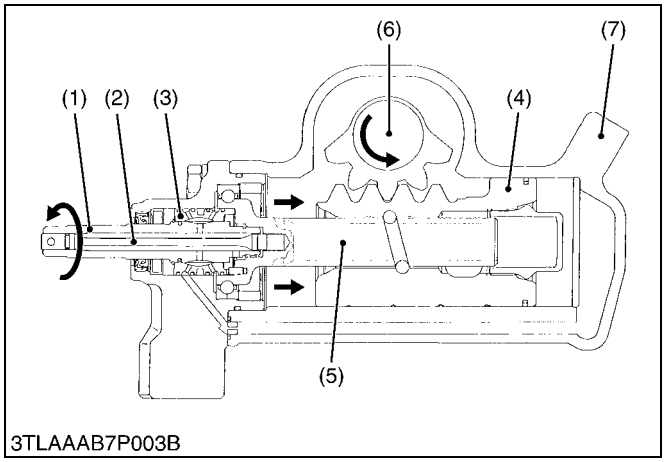

Left Turn

When the steering wheel is turned left, the initial friction between the tires and the road surface keeps the ball nut (4) and sector shaft (6) in their positions. The torsion bar (2) alone is twisted to produce a gap between the input shaft (1) and sleeve (3) and to activate the valve. By so doing, the cylinder's chamber **"a"** comes under high pressure and the ball nut (4) is moved to the right. Finally the sector shaft (6) gets turned to turn the machine to the left.

(1)	Input Shaft	(5)	Main Shaft
(2)	Torsion Bar	(6)	Sector Shaft
(3)	Sleeve	(7)	Gear Box
(4)	Ball Nut		

9Y1211121STM0005US0

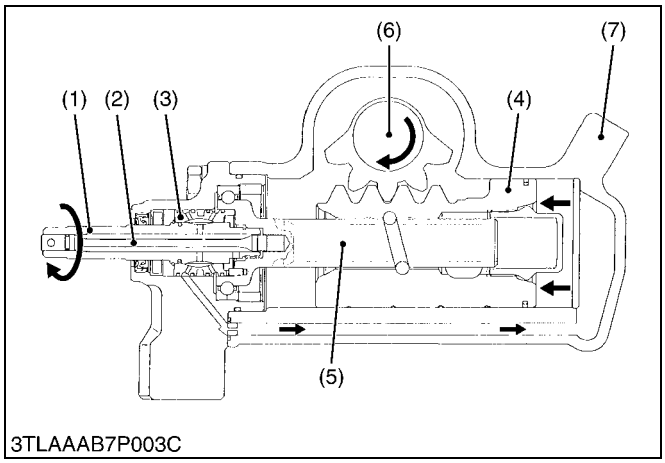

Right Turn

The operating principle is the same as with the left turn. For the right turn, however, the gap between the input shaft (1) and sleeve (3) is in the direction opposite to that of left turn. By so doing, the cylinder's chamber **"b"** comes under high pressure and the ball nut (4) is moved to the left. Finally the sector shaft (6) gets turned to turn the machine to the right.

(1)	Input Shaft	(5)	Main Shaft
(2)	Torsion Bar	(6)	Sector Shaft
(3)	Sleeve	(7)	Gear Box
(4)	Ball Nut		

9Y1211121STM0006US0

Manual Operation in Case of Hydraulic System Failure

Let's suppose that the hydraulic system gets in trouble due to a defective pump, damaged pipe or the like and that the steering resistance is too high to use the power steering system. In such case, the steering wheel can be in the manual mode. When the steering wheel is turned, the torsion bar is twisted for the valve's stroke and from now on the steering wheel functions in the manual mode. It should be noted that the steering wheel's play becomes larger than that in the power steering mode.

9Y1211121STM0007US0

https://truckmanualshub.com/

SERVICING

CONTENTS

1. TROUBLESHOOTING 7-S1
2. SERVICING SPECIFICATIONS 7-S2
3. TIGHTENING TORQUES 7-S3
4. CHECKING AND ADJUSTING 7-S4
   [1] STEERING WHEEL PLAY 7-S4
   [2] STEERING GEAR BOX 7-S5
5. DISASSEMBLING AND ASSEMBLING 7-S6
   [1] SEPARATING STEERING GEAR BOX 7-S6
   [2] DISASSEMBLING GEAR BOX 7-S9
6. SERVICING 7-S11

1. TROUBLESHOOTING

Symptom	Probable Cause and Checking Procedure	Solution	Reference Page
Noise	1. Insufficient oil	Fill	G-9
	2. Air sucked in pump from suction circuit	Bleed	–
Excessive Steering Wheel Play	1. Backlash between sector gear shaft and rack (piston) too large	Adjust	7-S4
	2. Sector gear shaft worn	Replace	7-S11
Front Wheels Vibration	1. Improper toe-in adjustment	Adjust	6-S5
Front Wheels Wander to Right or Left	1. Improper toe-in adjustment	Adjust	6-S5
	2. Tire pressure uneven	Inflate	G-56
	3. Backlash between sector gear shaft and rack (piston) too small	Adjust	7-S4
Steering Wheel Does Not Returnto Neutral Position	1. Valve housing and sleeve jammed	Repair or replace	7-S10
	2. Valve housing oil seal damaged	Replace	7-S10
Hard Steering	1. Oil leak from pipe joint	Solution order 1. Retighten	7-S7, 7-S8
		2. Replace copper washer	8-S9
	2. Insufficient oil	Fill	G-9
	3. Tire pressure uneven	Inflate	G-56
	4. Air sucked in pump from suction circuit	Bleed	–
	5. Improper relief valve adjustment	Adjust	7-S5
	6. Valve housing and sleeve malfunctioning	Replace	7-S10
	7. Seals in steering gear box damaged	Replace	7-S9
Steering Force Fluctuate	1. Insufficient oil	Fill	G-9
	2. Air sucked in pump from suction circuit	Bleed	–
	3. Valve housing and sleeve malfunctioning	Replace	7-S10

9Y1211121STS0001US0

2. SERVICING SPECIFICATIONS

Item		Factory Specification	Allowable Limit
Steering Wheel	Play	20 to 50 mm 0.79 to 1.9 in.	–
Relief Valve **Condition** • Engine Speed: Maximum • Oil Temperature 40 to 60 °C (104 to 140 °F)	Steering Pressure [2WD] Steering Pressure [4WD]	7.8 to 8.8 MPa 80 to 90 kgf/cm^2 1200 to 1300 psi 10.7 to 11.7 MPa 110 to 119 kgf/cm^2 1560 to 1690 psi	– –
Sector Gear and Ball Nut	Backlash	0.3 mm 0.01 in.	–
Valve Housing and Sleeve	Clearance	0.17 to 0.28 mm 0.0067 to 0.011 in.	0.4 mm 0.02 in.
Steering Gear Box and Ball Nut	Clearance	0.035 to 0.080 mm 0.0014 to 0.0031 in.	0.15 mm 0.0059 in.
Ball Nut Assembly	Axial Play	0.02 mm 0.0008 in.	0.04 mm 0.001 in.

9Y1211121STS0002US0

3. TIGHTENING TORQUES

Tightening torques of screws, bolts and nuts on the table below are especially specified.
(For general use screws, bolts and nuts: See page G-11.)

Item	N·m	kgf·m	lbf·ft
Steering wheel play adjusting screw lock nut	30 to 39	3.0 to 4.0	22 to 28
Power steering delivery hose joint screw	40 to 48	4.0 to 4.9	29 to 35
Tie-rod end nut (2WD)	49 to 68	5.0 to 7.0	37 to 50
Tie-rod end nut (4WD)	35 to 44	3.5 to 4.5	26 to 32
Delivery pipe joint screw	40 to 49	4.0 to 5.0	29 to 36
Retaining nut (with HST delivery pipe)	49 to 58	5.0 to 6.0	37 to 43
Screw (Steering gear box)	78 to 90	7.9 to 9.2	58 to 66
Pitman arm mounting nut	147 to 196	15.0 to 20.0	109 to 144
Side cover mounting screw	98 to 118	10 to 12	73 to 86
Valve housing mounting screw	98 to 118	10 to 12	73 to 86
Ball nut lock nut	88.3 to 107	9.00 to 11.1	65.1 to 79.5
Relief Valve lock nut	35 to 44	3.5 to 4.5	26 to 32

9Y1211121STS0003US0

4. CHECKING AND ADJUSTING

[1] STEERING WHEEL PLAY

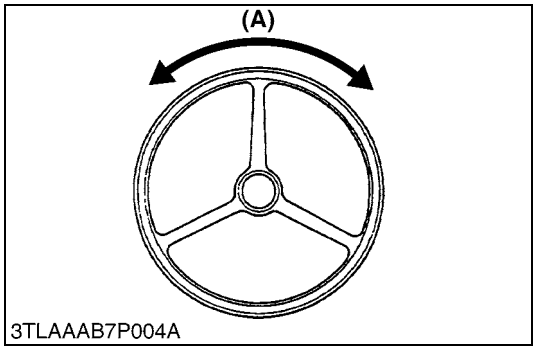

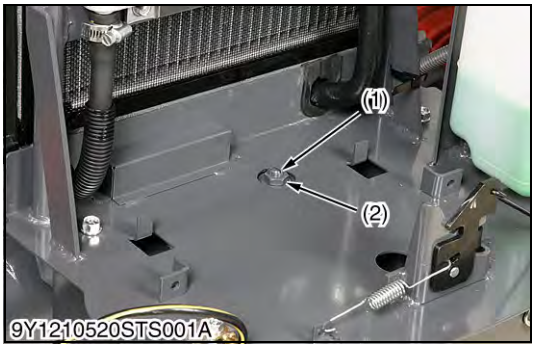

Steering Wheel Play

1. Turn the front wheels straight ahead.
2. Rotate the steering wheel lightly by hand, and measure the play **(A)**.
3. If the play **(A)** is not within the factory specifications, turn the adjusting screw (1) to adjust.

Steering wheel play **(A)**	Factory specification	20 to 50 mm 0.79 to 1.9 in.

(Adjusting)

- Remove the battery.
- Loosen the lock nut (2) and turn the adjusting screw (1) with a screwdriver to adjust the play **(A)**.
  When the adjusting screw (1) is turned clockwise, the play **(A)** decreases.
- After adjustment, fix it with lock nut (2) while holding the adjusting screw (1).

Tightening torque	Steering wheel play adjusting screw lock nut	30 to 39 N·m 3.0 to 4.0 kgf·m 22 to 28 lbf·ft

(1) Adjusting Screw
(2) Lock Nut
(A) Play

9Y1211121STS0004US0

[2] STEERING GEAR BOX

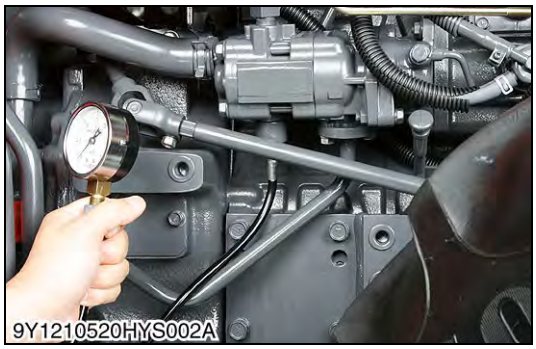

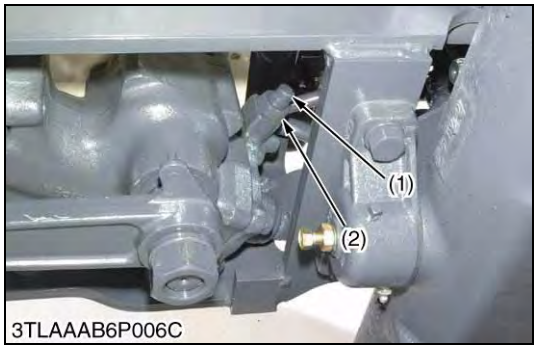

Relief Valve Setting Pressure

1. Disconnect the power steering delivery pipe joint bolt.
2. Install the power steering pump adaptor (refer to "SPECIAL TOOLS" (see page G-55)) instead of joint bolt, and set a thread joint, cable and hydraulic pressure gauge.
3. Start the engine and set the engine speed at max. speed.
4. Fully turn the steering wheel to the left or right and read the pressure when the relief valve functions.
5. Stop the engine.
6. If the pressure is not within the factory specifications, check the pump delivery line, adjust the relief valve by the adjusting screw (1), or repair the power steering.

Power steering relief valve setting pressure	Factory specifica-tion	2WD	7.8 to 8.8 MPa 80 to 90 kgf/cm^2 1200 to 1300 psi
		4WD	10.7 to 11.7 MPa 110 to 119 kgf/cm^2 1560 to 1690 psi

(Reference)

- One quarter turn of the adjusting screw (1) changes the relief setting pressure by approx. 1.3 MPa (13 kgf/cm^2, 180 psi).
- When the adjusting screw (1) is turned clockwise, the relief valve setting pressure rises.

Tightening torque	Power steering delivery hose joint screw	40 to 48 N·m 4.0 to 4.9 kgf·m 29 to 35 lbf·ft

Condition

- Engine speed
  Maximum
- Oil temperature
  40 to 60 °C (104 to 140 °F)

(1) Adjusting Screw (2) Lock Nut

9Y1211121STS0005US0

5. DISASSEMBLING AND ASSEMBLING

[1] SEPARATING STEERING GEAR BOX

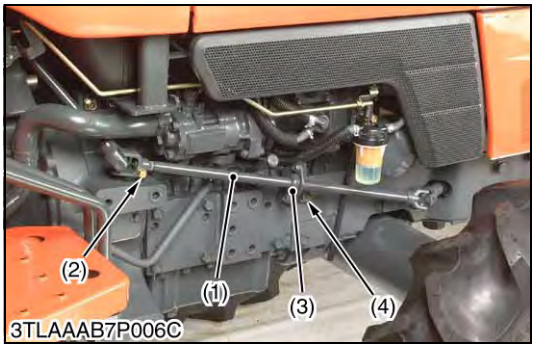

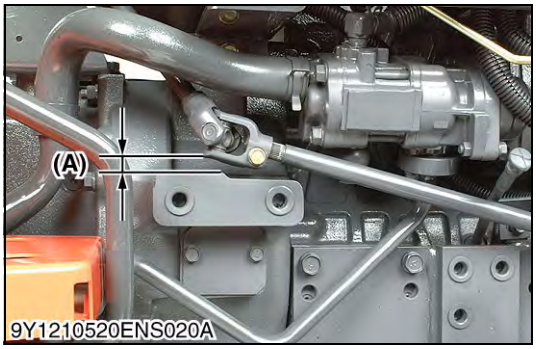

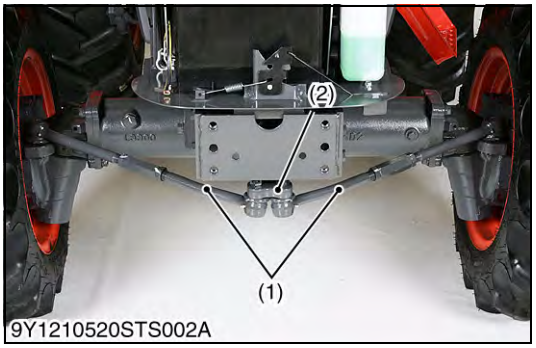

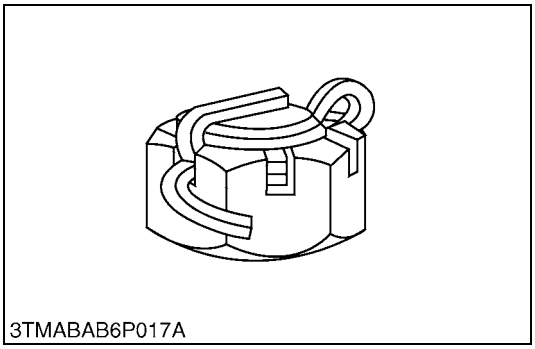

Joint Shaft

1. Remove the support (3) mounting screw.
2. Remove the screw (2).
3. Remove the joint shaft (1).

(When reassembling)

- Lift the universal joint so that there should be a clearance **(A)** of more than 5 mm (0.2 in.) between the universal joint and flywheel housing. Then fit the support (3) is position.
- Be sure to insert the screw (2) into cut-off part of joint shaft (1).
- Apply grease to spline part of joint shaft (1).

Tightening torque	Screw (joint shaft)	23.5 to 27.4 N·m 2.4 to 2.8 kgf·m 18 to 20 lbf·ft
	Screw (bearing support)	23.5 to 27.4 N·m 2.4 to 2.8 kgf·m 18 to 20 lbf·ft

(1) Joint Shaft
(2) Screw (Joint Shaft)
(3) Support
(4) Screw (Bearing Support)
(A) Clearance

9Y1211121STS0006US0

Bumper and Tie-rods

1. Place the disassembling stand under the transmission case.
2. Remove the bumper.
3. Remove the tie-rods with the tie-rod end lifter.
   In this case, take special case not to damage the tie-rod end nut (slotted nut). (It is preferable to replace it with an unrequired nut.).
4. Reinstall the bumper.

Tightening torque	Tie-rod end nut	2WD	49 to 68 N·m 5.0 to 7.0 kgf·m 37 to 50 lbf·ft
		4WD	35 to 44 N·m 3.5 to 4.5 kgf·m 26 to 32 lbf·ft

■ **IMPORTANT**

- **After tightening the tie-rod end nut to the specified torque, install a cotter pin as shown in the figure left.**

(1) Tie-rod
(2) Pitman Arm

9Y1211121STS0007US0

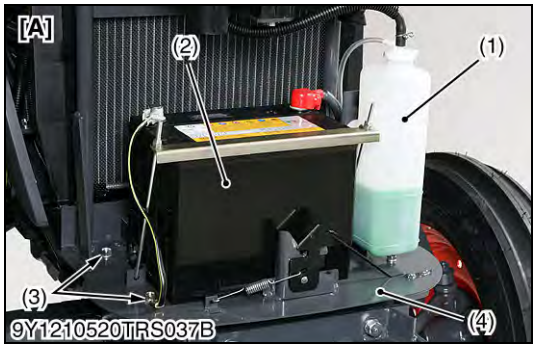

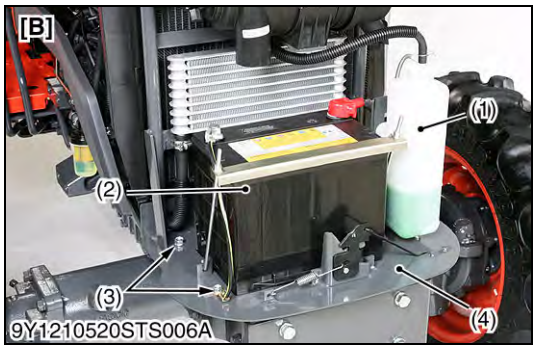

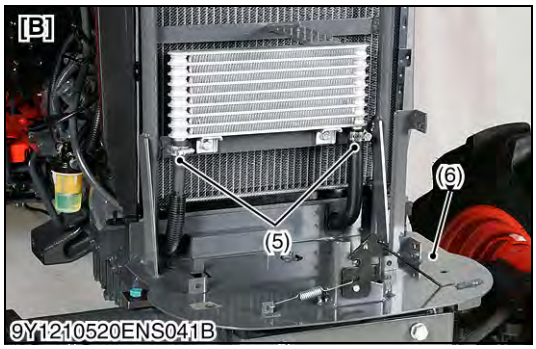

Reserve Tank, Battery and Battery Support Assembly

1. Disconnect the reserve tank hoses and remove the reserve tank (1).
2. Remove the battery (2) and the screws (3).
3. Remove the battery support (4).
4. Disconnect the hoses (5) from the oil cooler.
5. Remove the battery support assembly (6).

(1) Reserve Tank
(2) Battery
(3) Screw (Battery Support)
(4) Battery Support
(5) Hose
(6) Battery Support Assembly

[A] Manual Transmission Type
[B] HST Type

9Y1211121STS0008US0

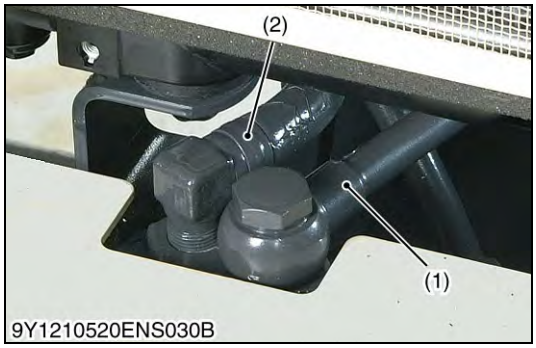

Delivery Pipe and Return Hose [Manual Transmission Type]

1. Disconnect the power steering delivery pipe (1) and return hose (2).

(When reassembling)

- Install the new copper washers to the delivery pipe joint screw securely.
- Wind seal tape on joint elbow part of return hose (2).

Tightening torque	Delivery pipe joint screw	40 to 49 N·m 4.0 to 5.0 kgf·m 29 to 36 lbf·ft

(1) Delivery Pipe
(2) Return Hose

9Y1211121STS0009US0

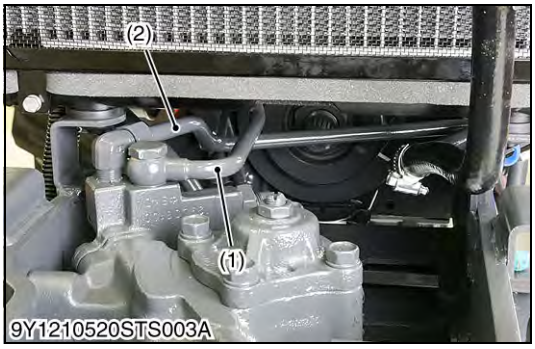

Delivery Pipe [HST Type]

1. Disconnect the delivery pipe (2).
2. Remove the joint screw and disconnect the delivery pipe (1).

(When reassembling)

- Install the new copper washers to the delivery pipe joint screw securely.
- Wind seal tape on joint elbow part of delivery pipe (2).

Tightening torque	Delivery pipe joint screw	40 to 49 N·m 4.0 to 5.0 kgf·m 29 to 36 lbf·ft
	Retaining nut (with HST delivery pipe)	49 to 58 N·m 5.0 to 6.0 kgf·m 37 to 43 lbf·ft

(1) Delivery Pipe (Power Steering) (2) Delivery Pipe (HST)

9Y1211121STS0010US0

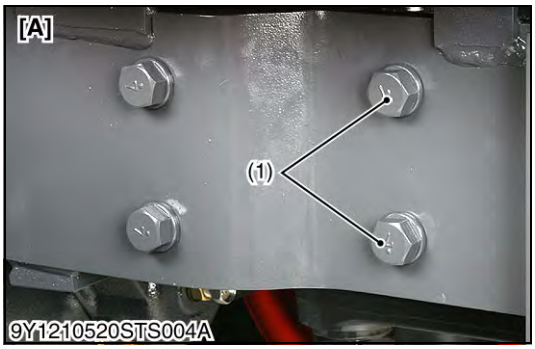

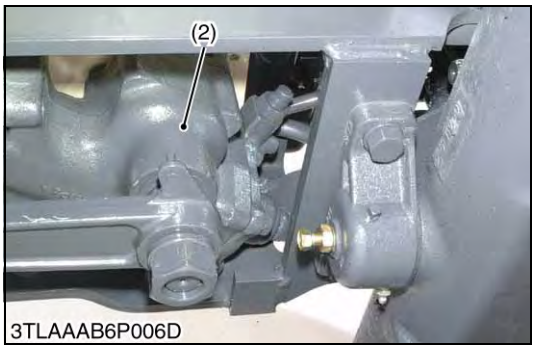

Steering Gear Box Assembly

1. Remove the screws (1).
2. Remove the steering gear box (2).

(When reassembling)

Tightening torque	Screw (Steering gear box)	78 to 90 N·m 7.9 to 9.2 kgf·m 58 to 66 lbf·ft

(1) Screw (Steering Gear Box Mounting)
(2) Steering Gear Box

[A] Right Side
[B] Left Side

9Y1211121STS0011US0

[2] DISASSEMBLING GEAR BOX

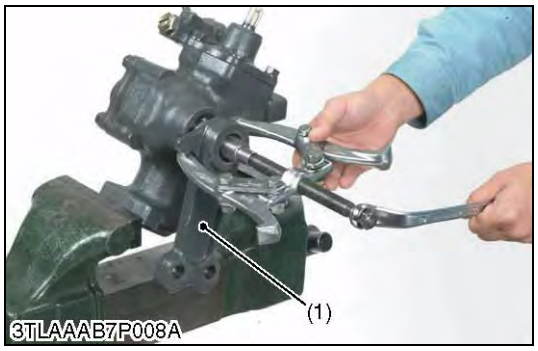

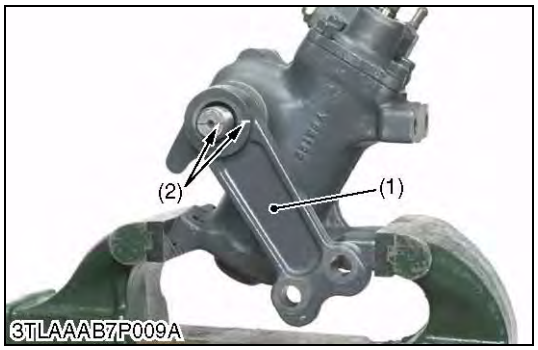

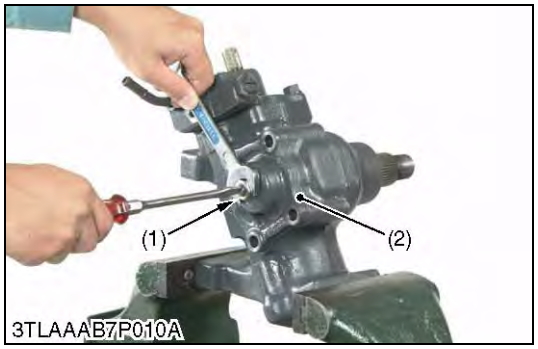

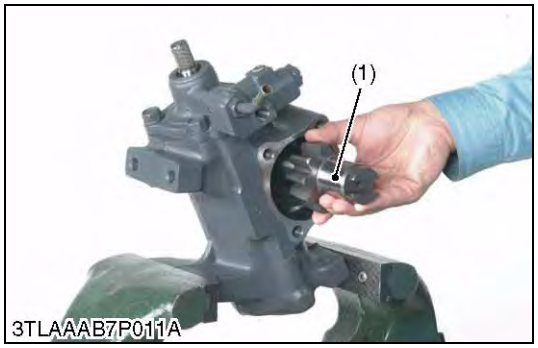

Pitman Arm

1. Turn the input shaft clockwise and counterclockwise several time to drain oil from gear box.
2. Secure the power steering gear box with a vise.
3. Remove the nut and spring washer.
4. Remove the pitman arm (1) with puller.

(When reassembling)

- Install the pitman arm to the sector shaft, aligning their aligning marks (2).

Tightening torque	Pitman arm mounting nut	147 to 196 N·m 15.0 to 20.0 kgf·m 109 to 144 lbf·ft

(1) Pitman Arm (2) Aligning Mark

9Y1211121STS0012US0

Side Cover

1. Loosen the lock nut (1).
2. Remove the side cover mounting screws, turn the adjusting screw clockwise, and remove the side cover (2).

(When reassembling)

Tightening torque	Steering wheel play adjusting screw lock nut	30 to 39 N·m 3.0 to 4.0 kgf·m 22 to 28 lbf·ft
	Side cover mounting screw	98 to 118 N·m 10 to 12 kgf·m 73 to 86 lbf·ft

(1) Lock Nut (2) Side Cover

9Y1211121STS0013US0

Sector Gear Shaft

1. Remove the sector gear shaft (1) from the side cover.

(1) Sector Gear Shaft

9Y1211121STS0014US0

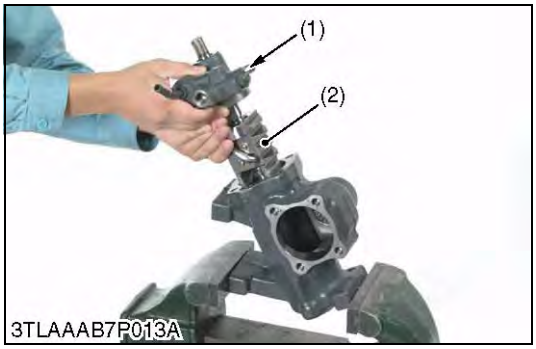

Valve Assembly

1. Remove the valve housing mounting screws.
2. Remove the valve assembly (1) and ball nut (2).

(When reassembling)

- Apply oil to O-ring and oil seal.

Tightening torque	Valve housing mounting screw	98 to 118 N·m 10 to 12 kgf·m 73 to 86 lbf·ft

(1) Valve Assembly (2) Ball Nut

9Y1211121STS0015US0

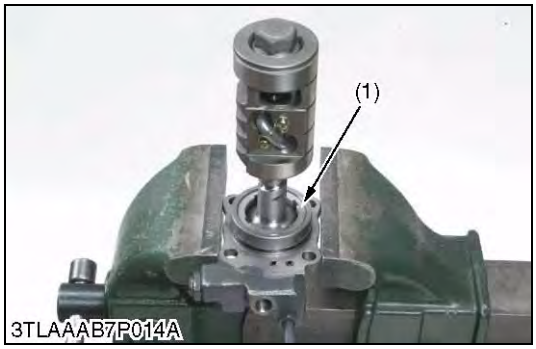

Ball Nut Assembly

1. Remove the lock nut (1).
2. Take out the ball nut assembly (2).

(When reassembling)

- Apply oil to sleeve.

Tightening torque	Ball nut lock nut	88.3 to 107 N·m 9.00 to 11.0 kgf·m 65.1 to 79.5 lbf·ft

(1) Lock Nut (2) Ball Nut Assembly

9Y1211121STS0016US0

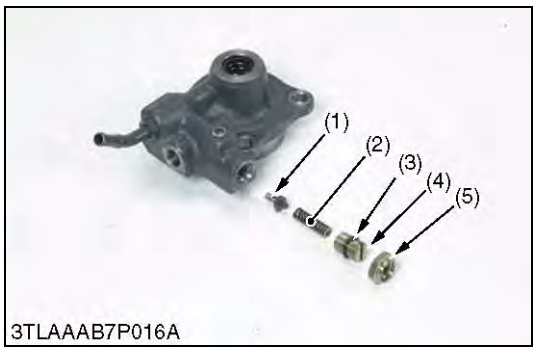

Relief Valve

1. Loosen the lock nut (5) and remove the adjusting screw (4).
2. Take out the spring (2) and poppet (1).

(When reassembling)

- Apply grease to O-ring (3).
- Be sure to adjust the relief valve pressure. (See page 7-S5.)

Tightening torque	Relief valve lock nut	35 to 44 N·m 3.5 to 4.5 kgf·m 26 to 32 lbf·ft

(1) Poppet
(2) Spring
(3) O-ring
(4) Adjusting Screw
(5) Lock Nut

9Y1211121STS0017US0

6. SERVICING

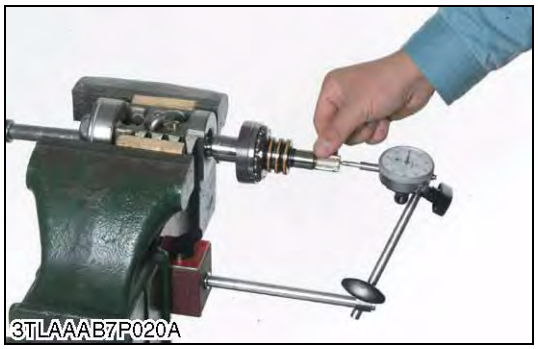

Backlash between Sector Gear and Ball Nut

1. Set a dial indicator with its finger on the pitman arm.
2. Move the pitman arm lightly, and measure the pitman arm deflection.
3. If the measurement is not within the factory specifications, adjust the backlash with the adjusting screw.

Backlash between sector gear and ball nut	Factory specification	0.3 mm 0.01 in.

9Y1211121STS0018US0

Clearance between Valve Housing and Sleeve

1. Measure the sleeve O.D. with an outside micrometer.
2. Measure the valve housing I.D. with a caliper gauge.
3. If the clearance exceeds the allowable limit, replace the steering gear box assembly.

Clearance between valve housing and spool	Factory specification	0.17 to 0.28 mm 0.0067 to 0.011 in.
	Allowable limit	0.4 mm 0.02 in.

9Y1211121STS0019US0

Clearance between Gear Box and Ball Nut

1. Measure the gear box cylinder I.D. with a cylinder gauge.
2. Measure the ball nut O.D. with an outside micrometer.
3. If the clearance exceeds the factory specifications, replace the steering gear box assembly.

Clearance between gear box and ball nut	Factory specification	0.035 to 0.080 mm 0.0014 to 0.0031 in.
	Allowable limit	0.15 mm 0.0059 in.

9Y1211121STS0020US0

Axial Play of Ball Nut Assembly

1. Set a dial indicator with its finger on the worm shaft of the ball nut assembly.
2. Move the worm shaft axially and measure the play.
3. If the play exceeds the allowable limit, replace the steering gear box assembly.

■ **NOTE**

- **Check ball nut assembly for smooth rotation by holding the ball nut horizontally, and slowly rotating the worm shaft. If rotation is not smooth, replace the steering gear box assembly.**

Axial play of ball nut assembly	Factory specification	0.02 mm 0.0008 in.
	Allowable limit	0.04 mm 0.001 in.

9Y1211121STS0021US0

https://truckmanualshub.com/

8 HYDRAULIC SYSTEM

https://truckmanualshub.com/

MECHANISM

CONTENTS

1. STRUCTURE 8-M1
   [1] MANUAL TRANSMISSION TYPE 8-M1
   [2] HST TYPE 8-M2
2. HYDRAULIC CIRCUIT 8-M3
   [1] MANUAL TRANSMISSION TYPE 8-M3
   [2] HST TYPE 8-M4
3. THREE POINT HITCH HYDRAULIC SYSTEM 8-M5
   [1] THREE POINT HITCH HYDRAULIC CIRCUIT 8-M5
   [2] HYDRAULIC CYLINDER 8-M6
   [3] LINKAGE MECHANISM 8-M7
   [4] POSITION CONTROL VALVE 8-M10
   [5] HYDRAULIC PUMP 8-M12
   [6] SAFETY VALVE 8-M12
4. FRONT HYDRAULIC BLOCK 8-M13
   [1] STRUCTURE 8-M13
   [2] HYDRAULIC CIRCUIT 8-M13
   [3] RELIEF VALVE 8-M14

1. STRUCTURE

[1] MANUAL TRANSMISSION TYPE

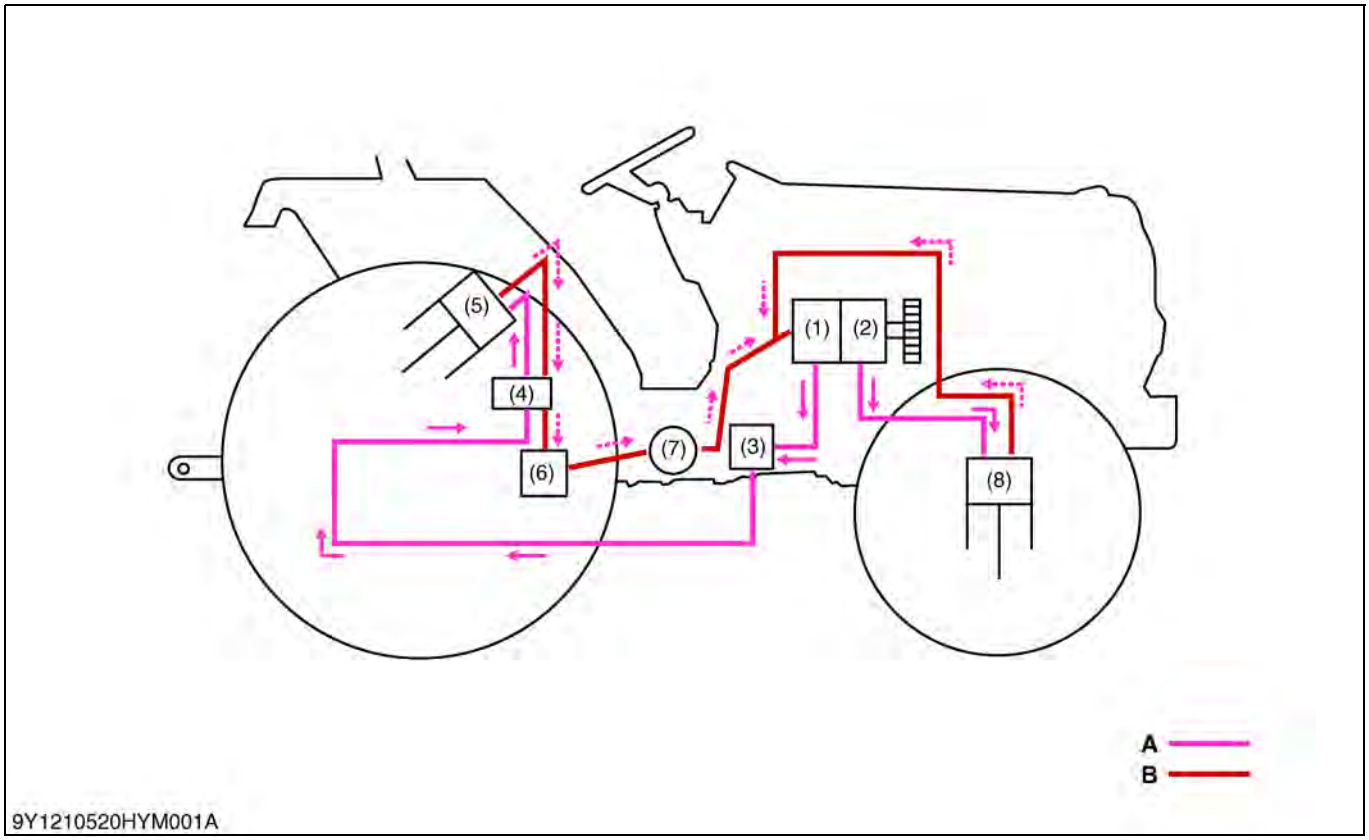

(1) Hydraulic Pump (Three Point Hitch)
(2) Hydraulic Pump (Power Steering)
(3) Front Hydraulic Block (with Relief Valve)
(4) Position Control Valve
(5) Hydraulic Cylinder
(6) Oil Tank (Transmission Case)
(7) Hydraulic Oil Filter
(8) Control Valve (Steering Gear)

A: Delivery Lines
B: Suction or Drain Lines

Hydraulic system of this tractors is composed of main components as shown in the figure. This system has functions as follows :

- To raise and lower the implement connected to the three point hitch.
  For this motion, the position control valve (4) and the linkage installed on the hydraulic cylinder body provide three difference applications: position control, draft control, and mixed control.
- Takes out hydraulic power from the front hydraulic block assembly (3) to operate an implement's hydraulic actuator.

9Y1211121HYM0001US0

[2] HST TYPE

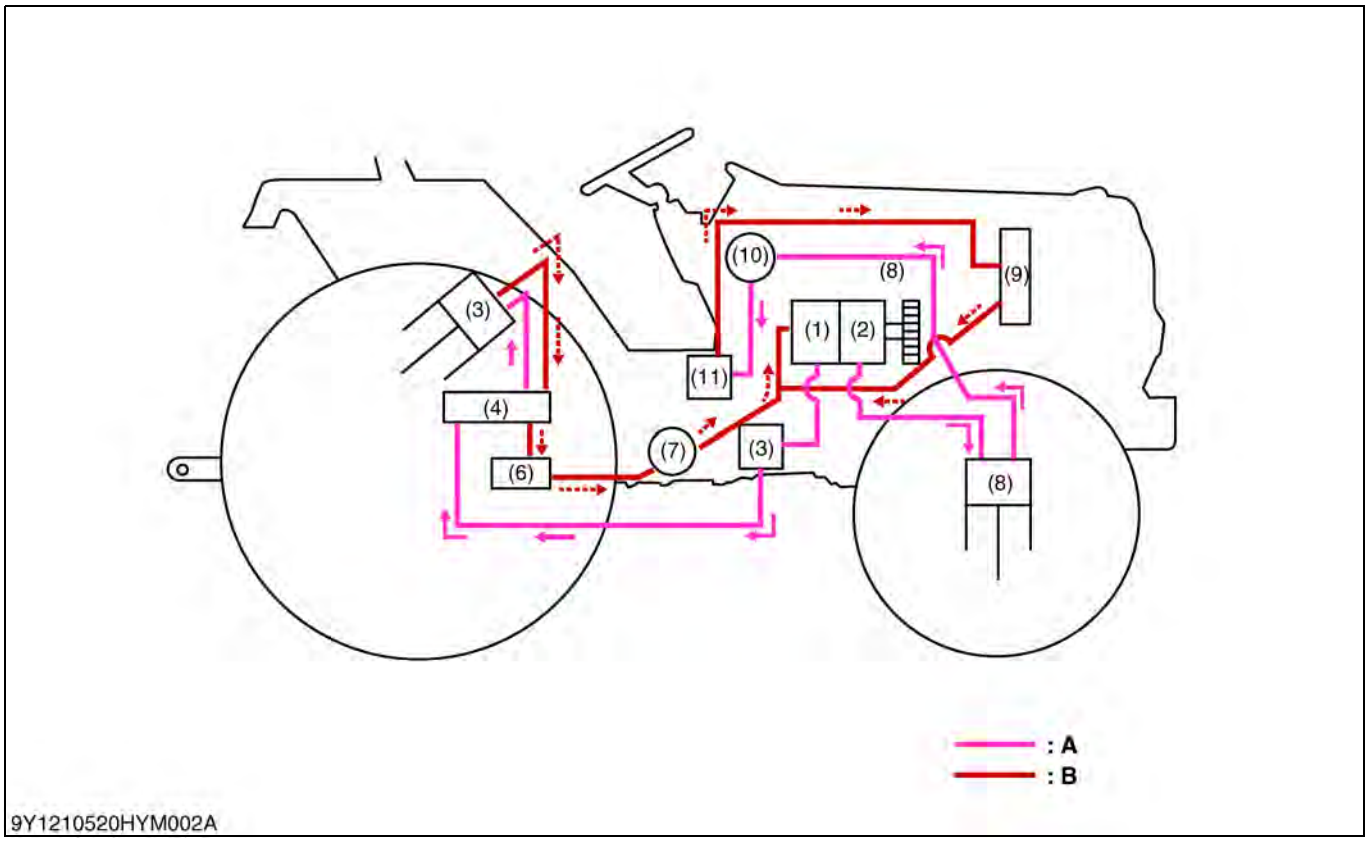

(1) Hydraulic Pump (Three Point Hitch)
(2) Hydraulic Pump (Power Steering)
(3) Front Hydraulic Block Assembly (with Relief Valve)
(4) Position Control Valve
(5) Hydraulic Cylinder
(6) Oil Tank (Transmission Case)
(7) Hydraulic Oil Filter
(8) Control Valve (Steering Gear)
(9) Oil Cooler
(10) Hydraulic Oil Filter (HST)
(11) HST Unit

A: Delivery Lines
B: Suction or Drain Lines

Hydraulic system of this tractors is composed of main components as shown in the figure. This system has functions as follows :

- To raise and lower the implement connected to the three point hitch.
  For this motion, the position control valve (4) and the linkage installed on the hydraulic cylinder body provide three difference applications: position control, draft control, and mixed control.
- Takes out hydraulic power from the front hydraulic block assembly (3) to operate implements hydraulic actuator.

9Y1211121HYM0002US0

2. HYDRAULIC CIRCUIT

[1] MANUAL TRANSMISSION TYPE

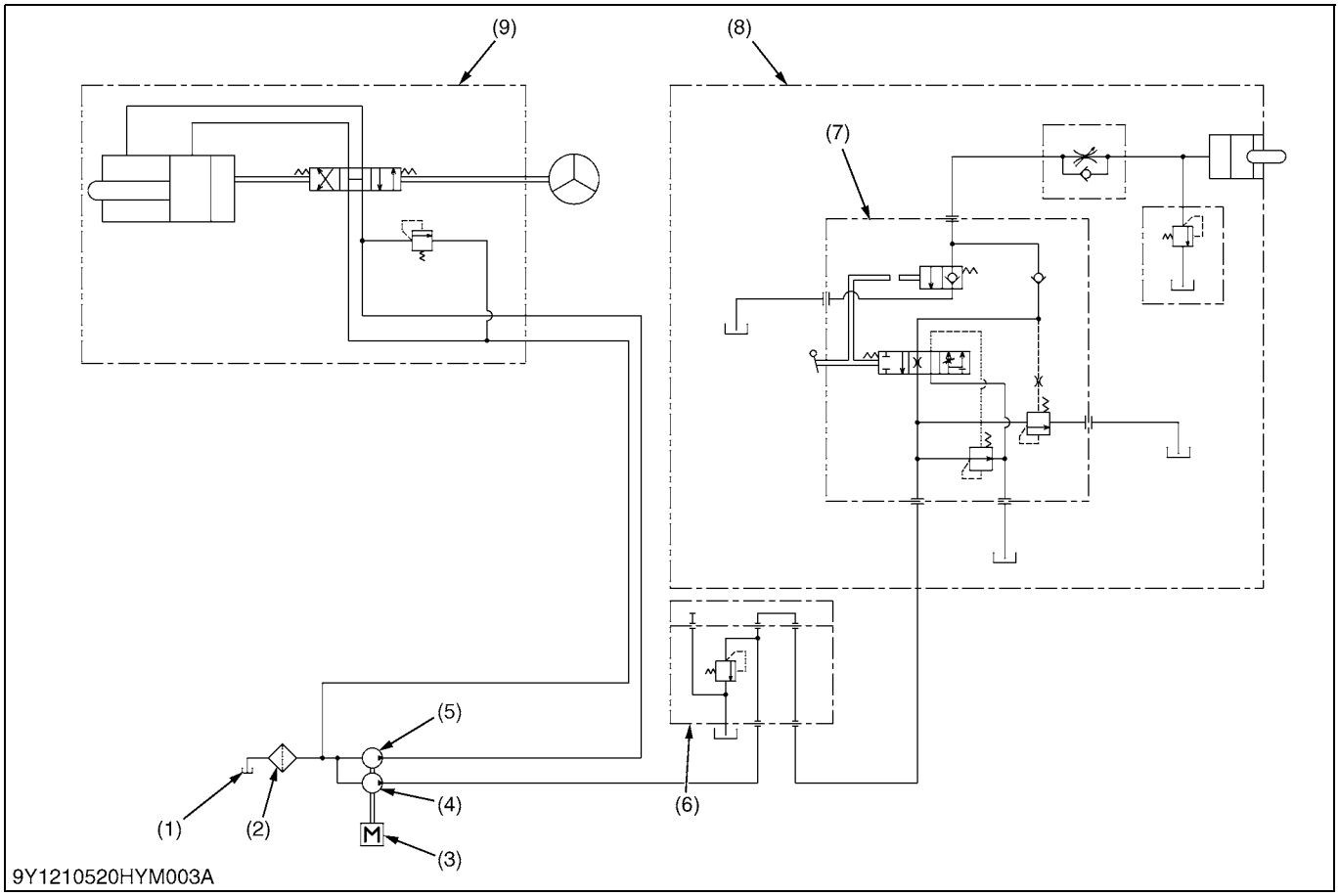

(1) Oil Tank (Transmission Case)
(2) Hydraulic Oil Filter
(3) Engine
(4) Hydraulic Pump (Three Point Hitch)
(5) Hydraulic Pump (Power Steering)
(6) Front Hydraulic Block
(7) Position Control Valve
(8) Hydraulic Cylinder Block
(9) Power Steering Controller

9Y1211121HYM0003US0

[2] HST TYPE

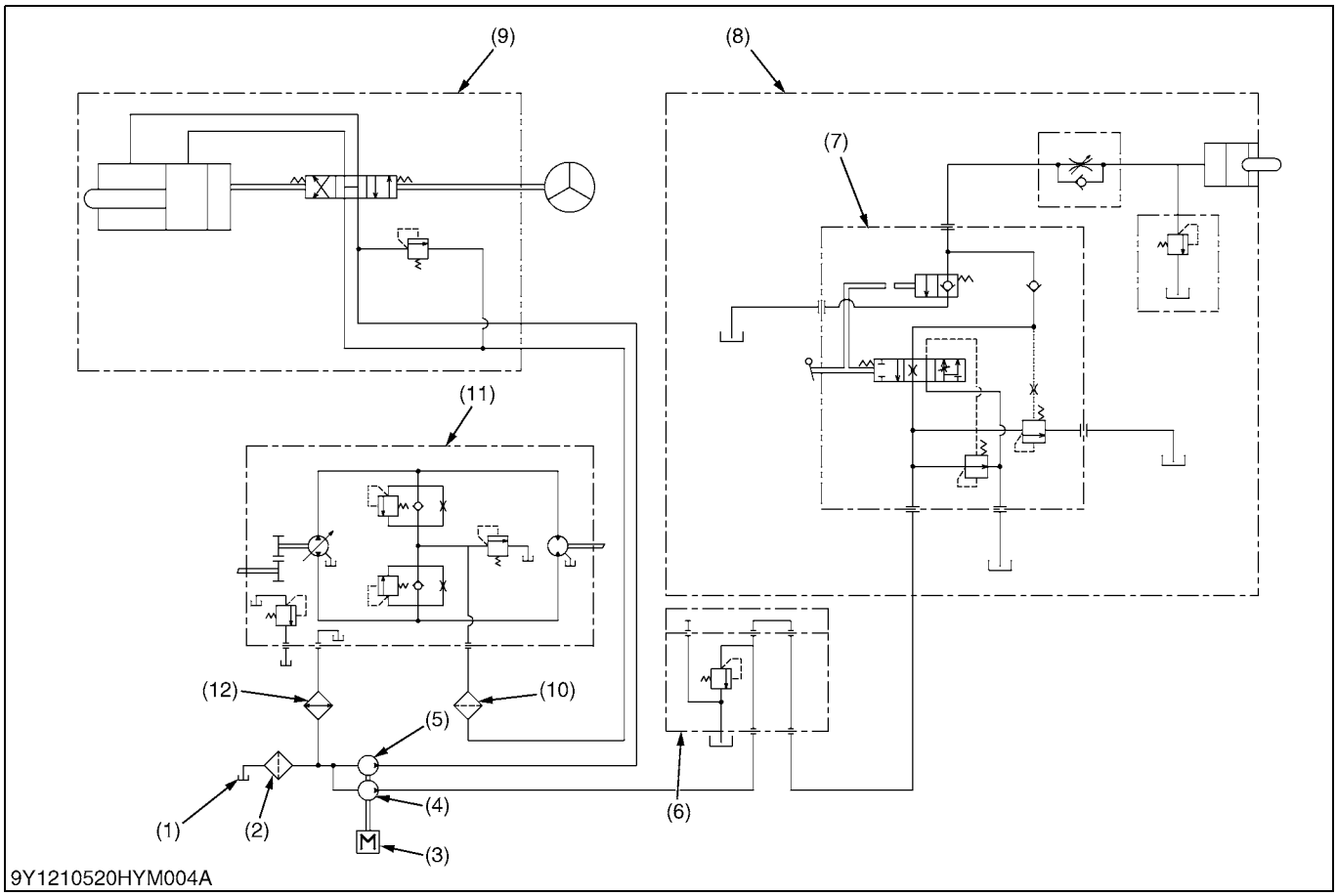

(1) Oil Tank (Transmission Case)
(2) Hydraulic Oil Filter
(3) Engine
(4) Hydraulic Pump (Three Point Hitch)
(5) Hydraulic Pump (Power Steering)
(6) Front Hydraulic Block
(7) Position Control Valve
(8) Hydraulic Cylinder Block
(9) Power Steering Controller
(10) Hydraulic Oil Filter (HST)
(11) HST Unit
(12) Oil Cooler

9Y1211121HYM0004US0

3. THREE POINT HITCH HYDRAULIC SYSTEM

[1] THREE POINT HITCH HYDRAULIC CIRCUIT

Hydraulic Oil Flow

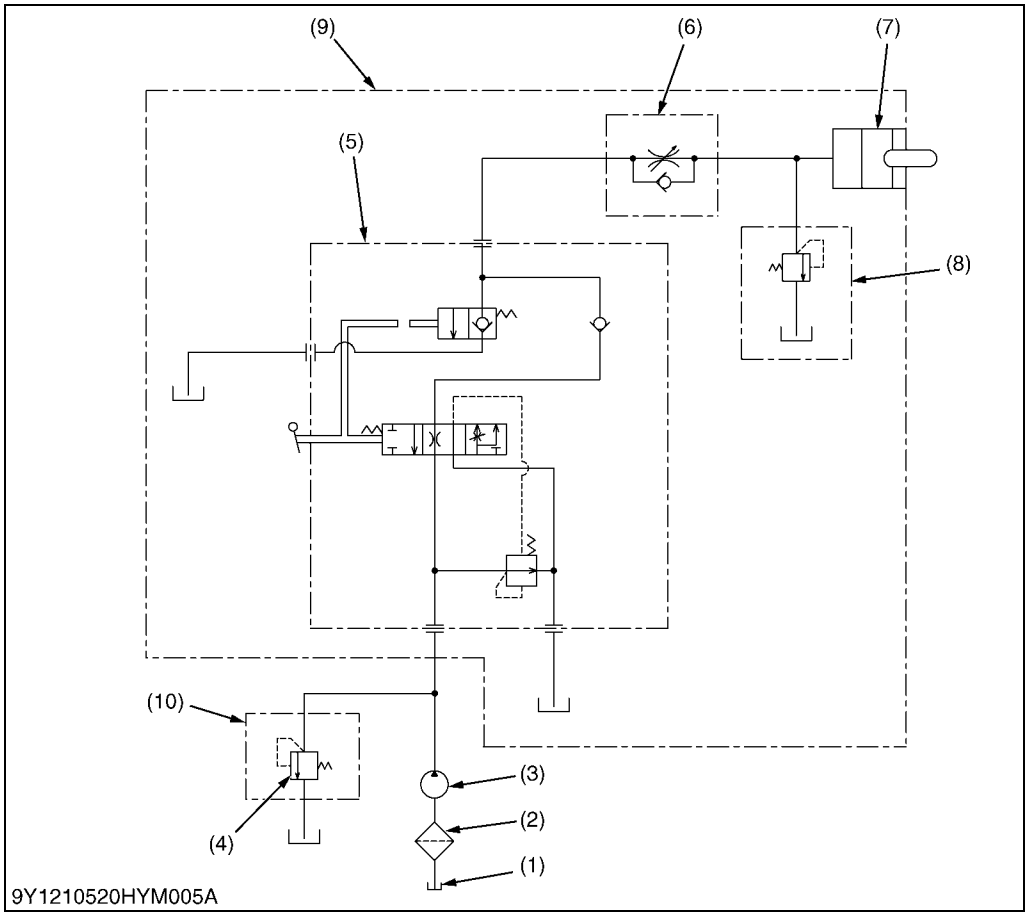

(1) Oil Tank (Transmission Case)
(2) Hydraulic Oil Filter
(3) Hydraulic Pump
(4) Relief Valve
(5) Position Control Valve
(6) Lowering Speed Adjusting Valve
(7) Hydraulic Cylinder
(8) Cylinder Safety Valve
(9) Hydraulic Cylinder Block
(10) Front Hydraulic Block

1. When the engine is started, the hydraulic pump (3) is rotated to draw oil from the transmission case (1) through the suction pipe. Supplied oil is filtered by the hydraulic oil filter (2).
2. Filtered oil is forced out by the hydraulic pump to the position control valve (5) through the delivery pipe.
3. The position control valve (5) switches the oil flow, and oil is channelled to the hydraulic cylinder (7) for the three-point hydraulic system or returned to the oil tank (1).

- The hydraulic system has a relief valve (4) which restricts the maximum pressure in the circuit.

9Y1211121HYM0005US0

[2] HYDRAULIC CYLINDER

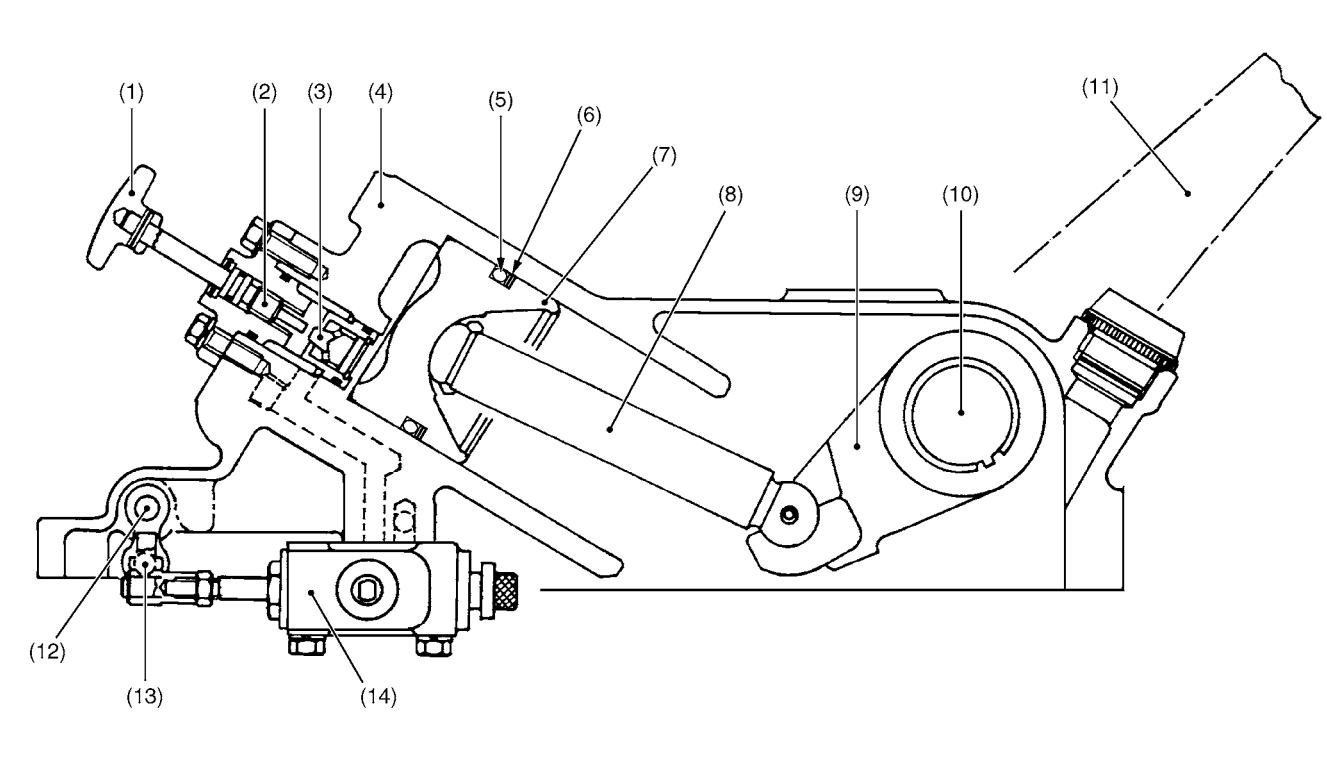

(1) Lowering Speed Adjusting Knob
(2) Lowering Speed Adjusting Shaft
(3) Lowering Speed Adjusting Valve
(4) Hydraulic Cylinder
(5) O-ring
(6) Back-up Ring
(7) Hydraulic Piston
(8) Hydraulic Rod
(9) Hydraulic Arm
(10) Hydraulic Arm Shaft
(11) Lift Arm
(12) Position Control Arm
(13) Spool Drive Lever
(14) Position Control Valve

The main components of the hydraulic cylinder are shown in the figure above.

While the lift arm (11) is rising, oil from the hydraulic pump flows into the hydraulic cylinder (4) through the position control valve (14). Then oil pushes the hydraulic piston (7) out.

While the lift arm (11) is lowering, oil in the hydraulic cylinder (4) is discharged to the transmission case through the position control valve (14) by the weight of the implement. At this time, the lowering speed of the implement can be controlled by the lowering speed adjusting valve (3) attached to the hydraulic cylinder (4). Turning the lowering speed adjusting knob (1) clockwise decreases the lowering speed, and counterclockwise increases lowering speed. When the lowering speed adjusting valve (3) is completely closed, the lift arm (11) is held at its position since oil in the hydraulic cylinder (4) is sealed between the hydraulic piston (7) and the position control valve (14).

9Y1211121HYM0006US0

[3] LINKAGE MECHANISM

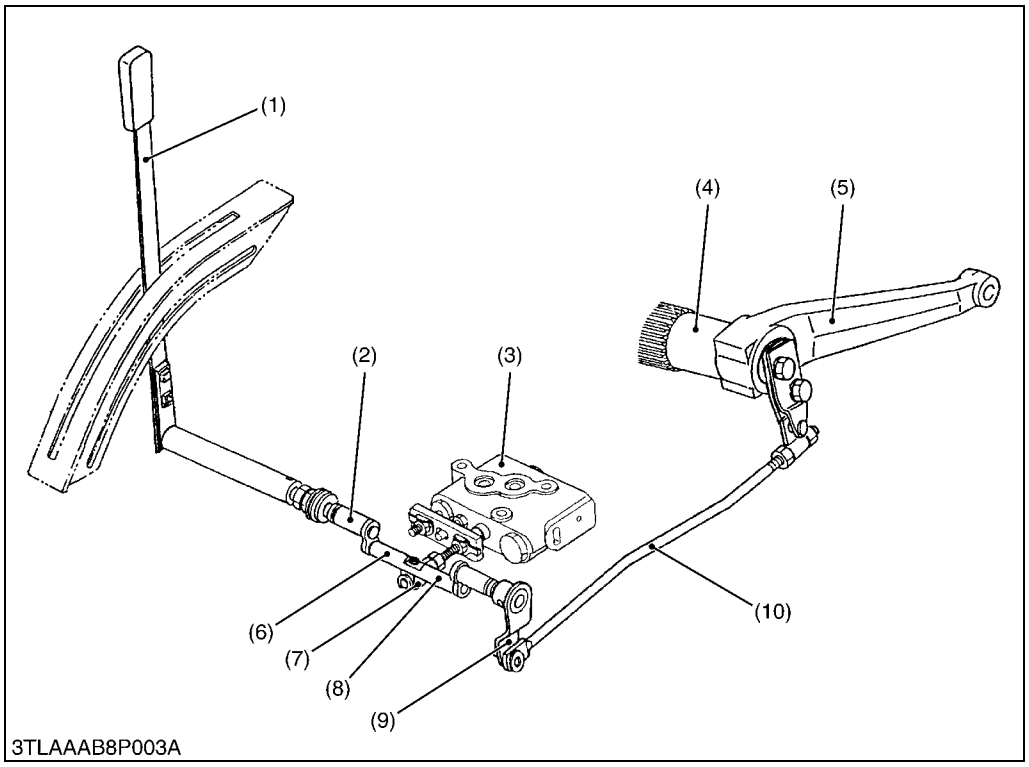

(1) Position Control Lever
(2) Control Arm
(3) Control Valve
(4) Hydraulic Arm Shaft
(5) Lift Arm
(6) Spool Drive Lever
(7) Spool Joint
(8) Feedback Lever Shaft
(9) Feedback Lever
(10) Position Control Rod

Position control is a mechanism to raise or lower the implement attached to the tractor in proportion to the movement of the position control lever (1).

The implement can be positioned at any height by moving the position control lever (1). Fine position adjustment is also easy.

9Y1211121HYM0007US0

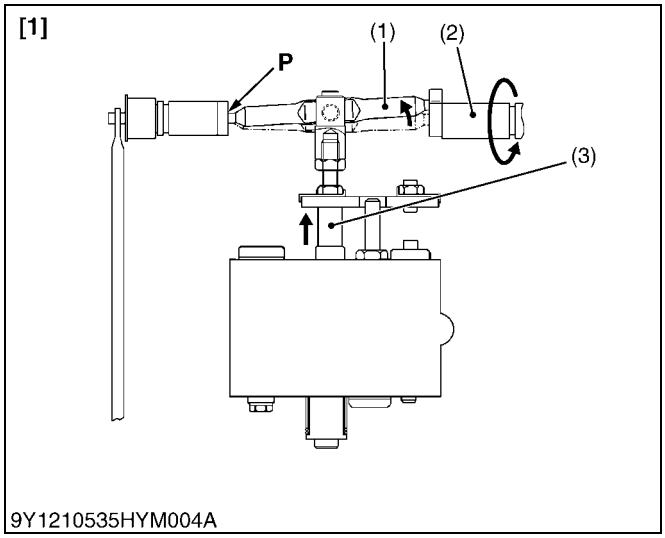

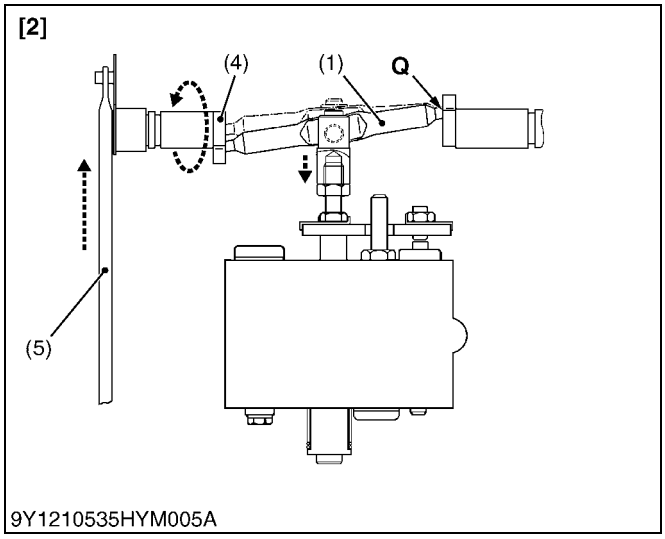

Lifting

1. When the position control lever is moved to the **LIFT** position, the control arm (2) rotates to the arrow. Therefore, the spool drive lever (1) moves around the fulcrum **P** and pull the spool (3) opening the **LIFT** circuit.
2. When the lift arm moves upward, the feedback lever shaft (4) is rotated to the arrow, since the feedback rod (5) is actuated. Therefore, the spool drive lever (1) moves around the fulcrum **Q** and pushes the spool (3).
3. The lift arm stops when the spool returns to the neutral position.

(1) Spool Drive Lever
(2) Control Arm
(3) Spool
(4) Feedback Lever Shaft
(5) Feedback Rod

[1] Lifting
[2] Lifting to Neutral

9Y1211121HYM0008US0

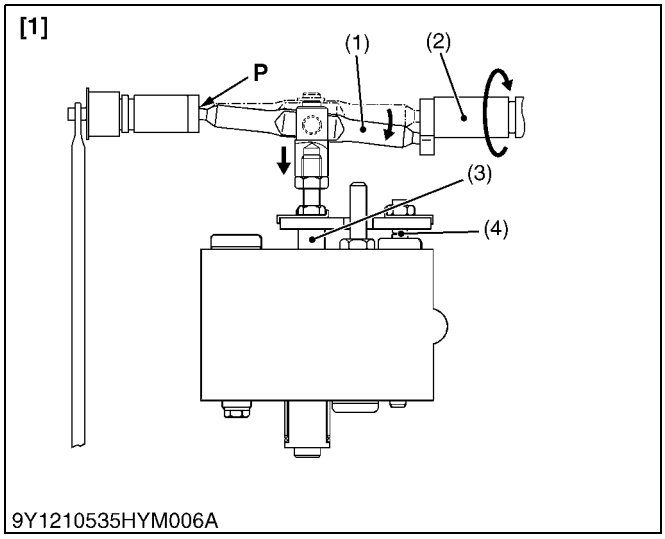

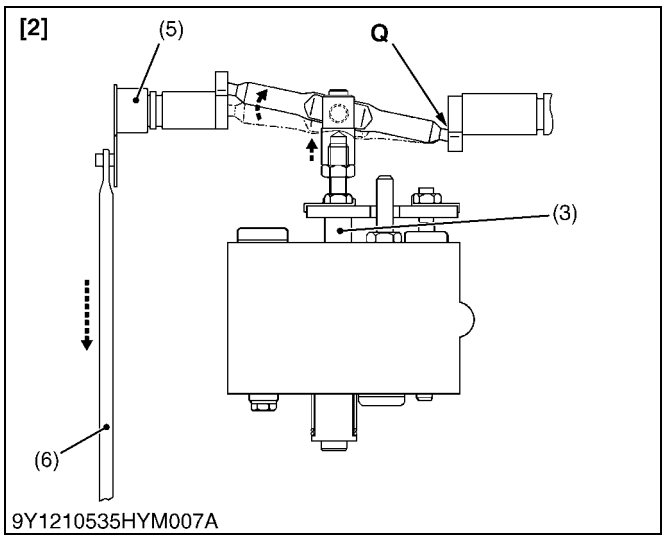

Lowering

4. When the position control lever is moved to the **Lowering** position, the control arm (2) rotates to the arrow. Therefore, the spool drive lever (1) moves around the fulcrum **P** and push the spool (3) and poppet 2 (4) opening the Lowering circuit.
5. When the lift arm moves downward, the feedback lever shaft (5) is rotated to the arrow, since the feedback rod (6) is actuated. Therefore, the spool drive lever (1) moves around the fulcrum **Q** and pull the spool (3).
6. The lift arm stops when the spool (3) returns to the neutral position.

(1) Spool Drive Lever
(2) Control Arm
(3) Spool
(4) Poppet 2
(5) Feedback Lever Shaft
(6) Feedback Rod

[1] Lowering
[2] Lowering to Neutral

9Y1211121HYM0009US0

[4] POSITION CONTROL VALVE

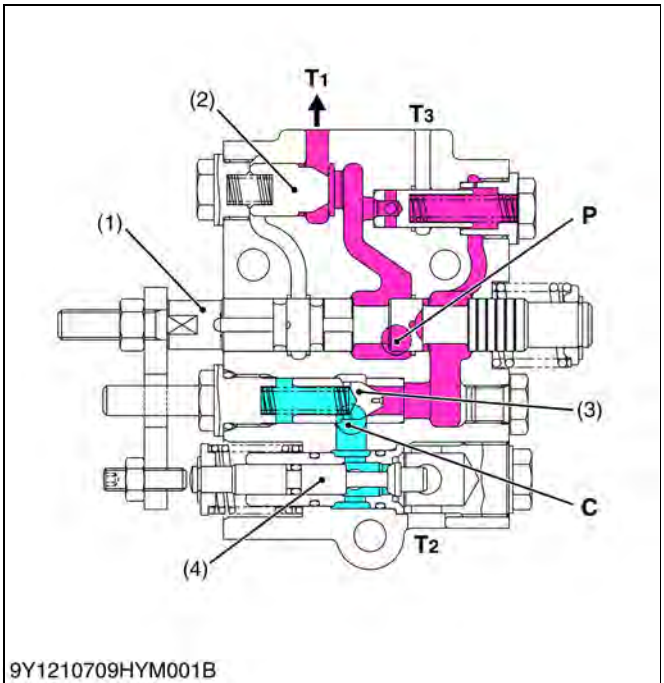

9Y1210709HYM001B

■ Neutral

Pressurized oil delivered from the **P** port, pushes the unload poppet (2) and returns to the transmission case from **T_1** port.

Since the poppet 1 (3) is closed by the spring located behind the poppet 1 (3), the oil in the hydraulic cylinder is not drained to the transmission case.

At this condition, position control is kept at **"NEUTRAL"**.

The oil in the hydraulic cylinder is cut off by the actions of poppet 1 (3) and poppet 2 (4).

(1)	Spool	**C:**	**C (Cylinder) Port**
(2)	Unload Poppet	**P:**	**P (Pump) Port**
(3)	Poppet 1	**T_1:**	**T_1 Port (To Transmission Case)**
(4)	Poppet 2	**T_2:**	**T_2 Port (To Transmission Case)**
		T_3:	**T_3 Port (To Transmission Case)**

9Y1211121HYM0010US0

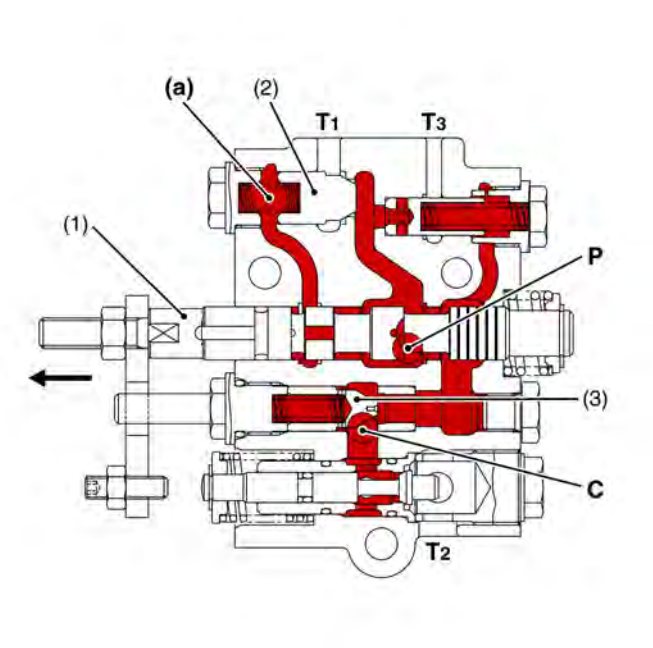

9Y1210709HYM002B

■ Lifting

When the control lever is moved to **"UP"** position, the spool (1) is pulled out from the position control valve body as shown in the figure.

The high-pressured oil delivered from **P** port flows through the oil passage of the spool (1) into the **A** chamber **(a)**.

Since the spring behind the unload poppet (2) and the pressured oil entered to the **A** chamber **(a)** push and close the unload poppet (2).

At this condition, the pressured oil flows to the **C** port.

Since the poppet 1 (3) is opened by the pressured oil, the pressured oil flows through **C** port to the hydraulic cylinder, lifting a implement.

(1)	Spool	**C:**	**C (Cylinder) Port**
(2)	Unload Poppet	**P:**	**P (Pump) Port**
(3)	Poppet 1	**T_1:**	**T_1 Port (To Transmission Case)**
(a)	**A Chamber**	**T_2:**	**T_2 Port (To Transmission Case)**
		T_3:	**T_3 Port (To Transmission Case)**

9Y1211121HYM0011US0

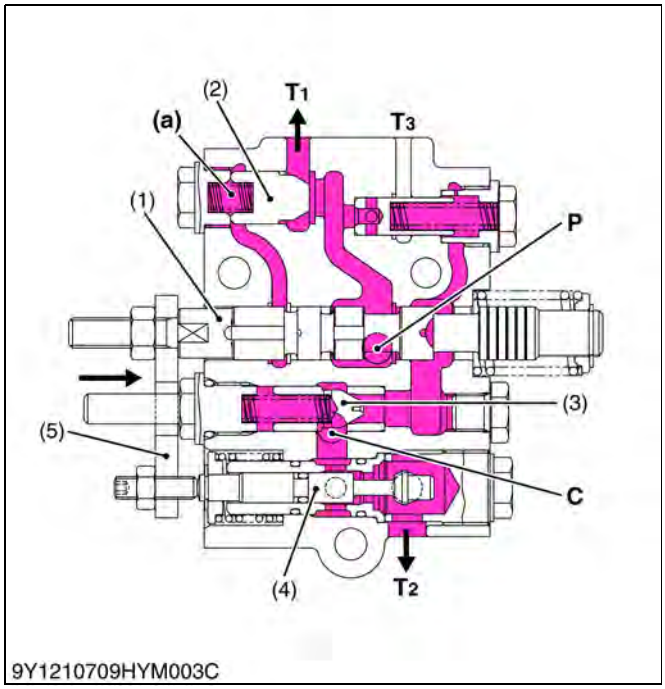

■ Lowering

When the control lever is moved to **"DOWN"** position, the spool (1) is pushed into the position control valve body as shown in the figure.

Since the spool (1) blocks the oil entering to **A** chamber **(a)**, pressured oil from **P** port opens the unload poppet (2) and drains to $\mathbf{T_1}$ port.

The oil remaining in the **A** chamber **(a)** returns to the transmission case through the clearance between spool (1) and the control valve body.

Since the poppet 2 (4) is pushed by the plate (5) connected to the spool (1), the oil circuit between **C** port and $\mathbf{T_2}$ port is formed.

The oil in the hydraulic cylinder is forced out by the weight of the implement, and returns to the transmission case through $\mathbf{T_2}$ port, lowering the implement.

<Floating>

When the control lever is moved all the way to the bottom, the spool (1) and the poppet 2 (4) remain in the positions described for **"Lowering"**. The oil flows freely between the hydraulic cylinder and the transmission case.

(1)	Spool	**C:**	**C (Cylinder) Port**
(2)	Unload Poppet	**P:**	**P (Pump) Port**
(3)	Poppet 1	**T_1:**	**T_1 Port (To Transmission Case)**
(4)	Poppet 2		
(5)	Plate	**T_2:**	**T_2 Port (To Transmission Case)**
(a)	**A Chamber**	**T_3:**	**T_3 Port (To Transmission Case)**

9Y1211121HYM0012US0

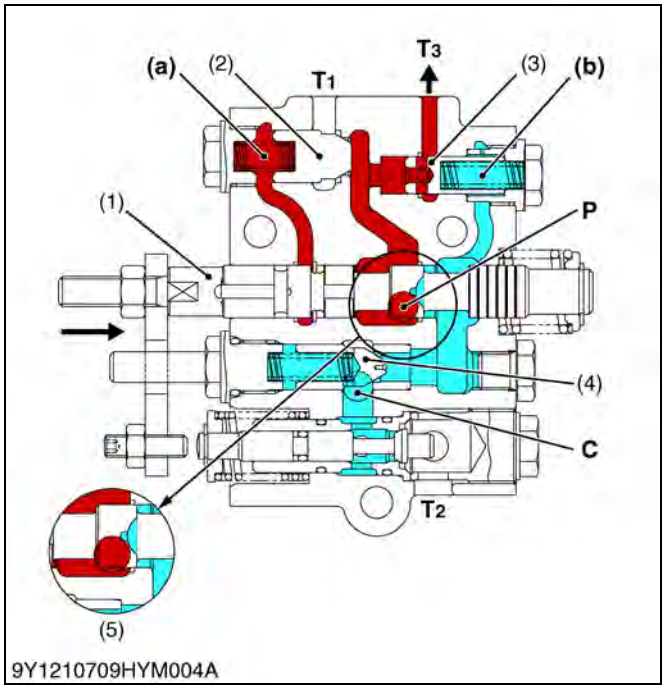

■ Lifting to Neutral

When moving the position control lever from **"LIFTING"** to **"NEUTRAL"**, the spool (1) is pushed back as shown in the figure.

When the **"NEUTRAL"** position comes near, the tapered portion (5) of the spool (1) makes the pressure difference at the **P** port and **C** port.

Therefore, the poppet 1 (4) gradually closes, and absorbs any shock at the **A** chamber **(a)** behind the unload poppet (2), the unload poppet (2) does not open.

However, the poppet 3 (3) opens because of the low pressure in **B** chamber **(b)**, and then the oil from the pump returns to the transmission case through $\mathbf{T_3}$ port.

(1)	Spool	**C:**	**C (Cylinder) Port**
(2)	Unload Poppet	**P:**	**P (Pump) Port**
(3)	Poppet 3	**T_1:**	**T_1 Port (To Transmission Case)**
(4)	Poppet 1		
(5)	Tapered Portion	**T_2:**	**T_2 Port (To Transmission Case)**
(a)	**A Chamber**	**T_3:**	**T_3 Port (To Transmission Case)**
(b)	**B Chamber**		

9Y1211121HYM0013US0

[5] HYDRAULIC PUMP

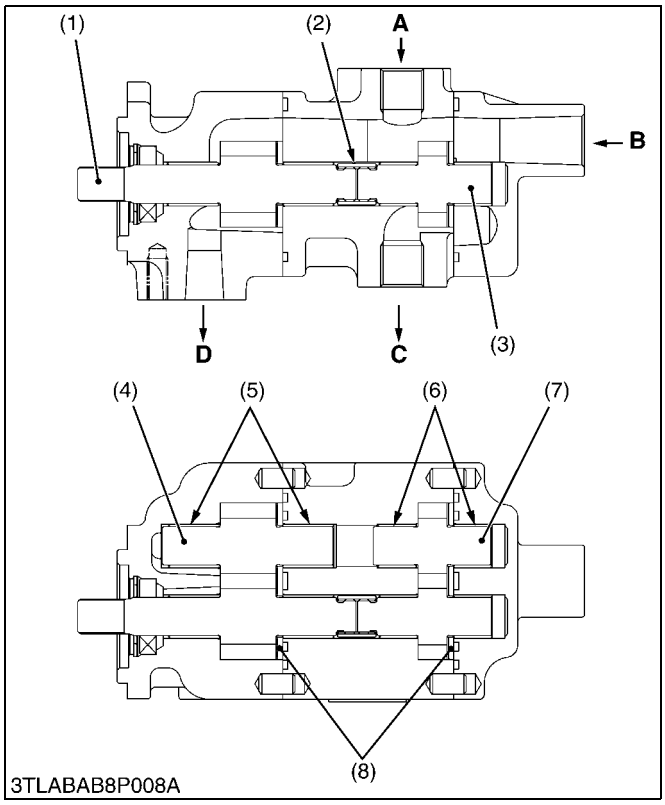

The gear type hydraulic pump is adopted for these models. This pump is called as tandem type and composed two pair of gears, side plates, bushings and other components as shown in the figure.

The hydraulic pump pressurize oil from transmission case through oil filter and send the oil to power steering circuit and main hydraulic circuit.

(1) Drive Gear 1
(2) Coupling
(3) Drive Gear 2
(4) Driven Gear 1
(5) Bushing
(6) Bushing
(7) Driven Gear 2
(8) Side Plate

A: From Power Steering Controller (Manual Transmission Type) From Oil Cooler (HST Type)
B: From Transmission Case
C: To Power Steering Controller
D: To Main Hydraulic Circuit

9Y1211121HYM0014US0

[6] SAFETY VALVE

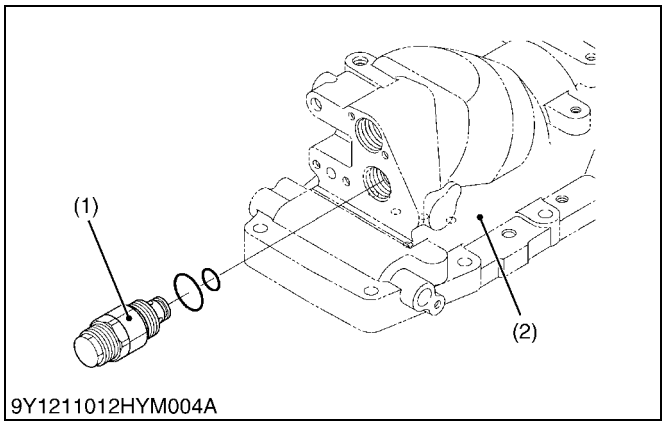

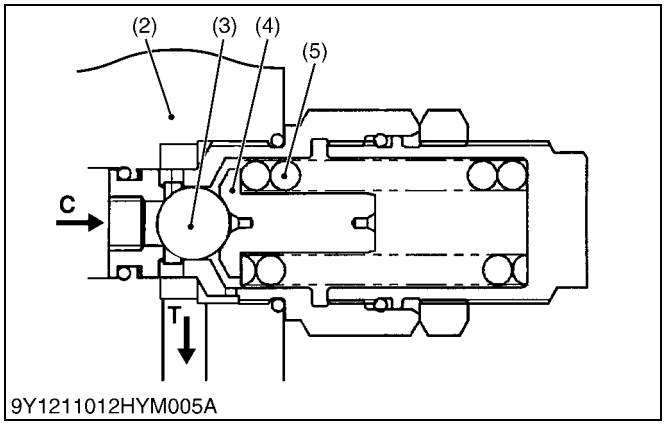

The cylinder safety valve (1) is equipped on the hydraulic cylinder assembly (2).

This model uses a direct acting safety valve which is suitable for less frequent operation.

This valve operates to prevent damage to three point hydraulic system components only in case shock pressure is caused. For example, bouncing of heavy implements.

If pressure in the hydraulic cylinder (2) becomes too large, oil pressure pushes ball (3), valve seat (4) and compress the spring (5). The oil in the hydraulic cylinder flows to transmission case through the **T** port.

(1) Cylinder Safety Valve
(2) Hydraulic Cylinder Assembly
(3) Ball
(4) Valve Seat
(5) Spring

C: C port (From Hydraulic Cylinder)
T: T port (To Transmission Case)

9Y1211121HYM0015US0

4. FRONT HYDRAULIC BLOCK

[1] STRUCTURE

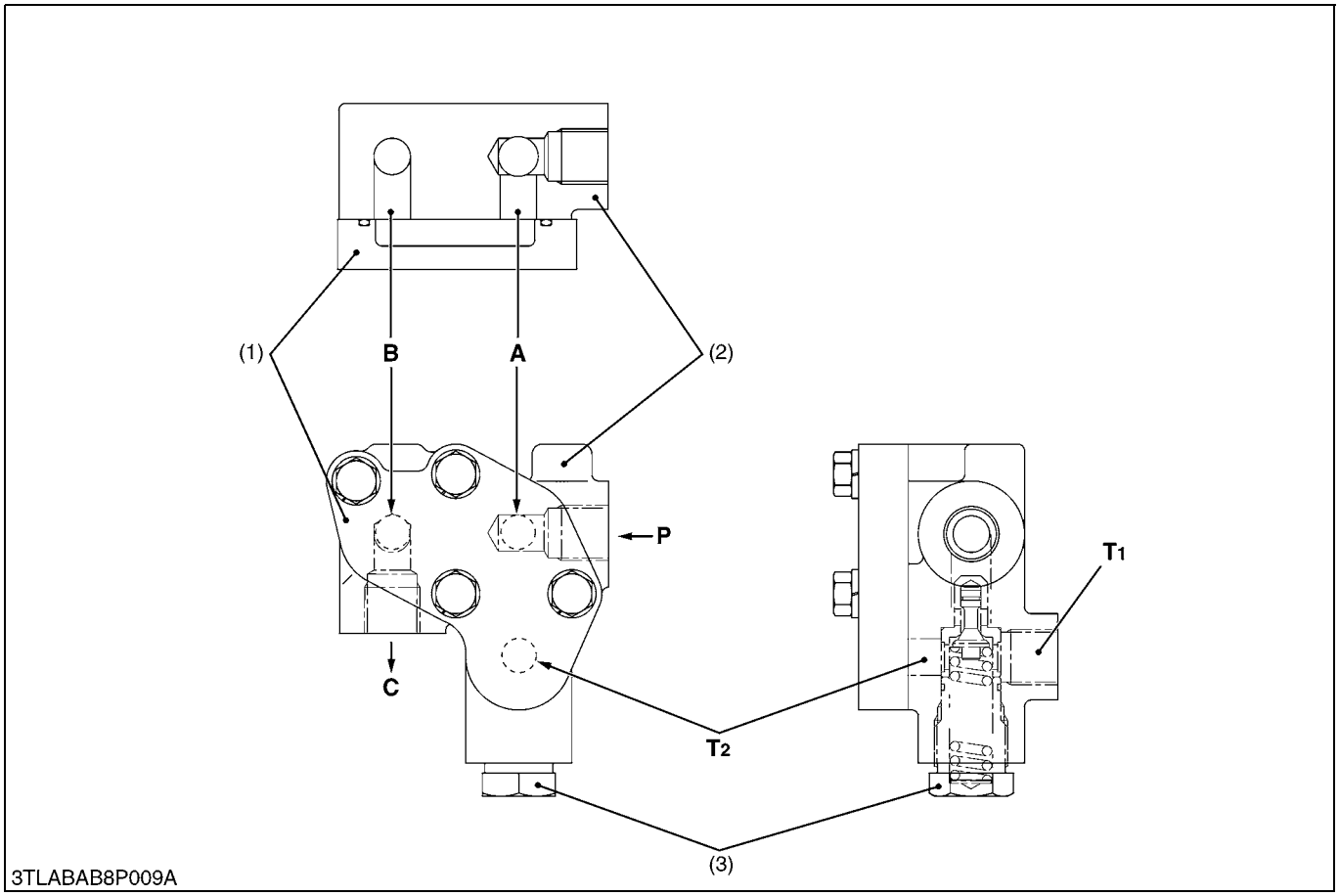

(1) Cap	**A: To Implement Control Valve**	**C: To Position Control Valve**	**T_1: To Transmission Case**
(2) Front Hydraulic Block	**B: From Implement Control Valve**	**P: From Hydraulic Pump**	**T_2: From Implement Control Valve**
(3) Relief Valve			

The front hydraulic block (2) is provided to take power out from the tractor to operate the hydraulic cylinders on the implement, such as front loader, front blade and so on.

9Y1211121HYM0016US0

[2] HYDRAULIC CIRCUIT

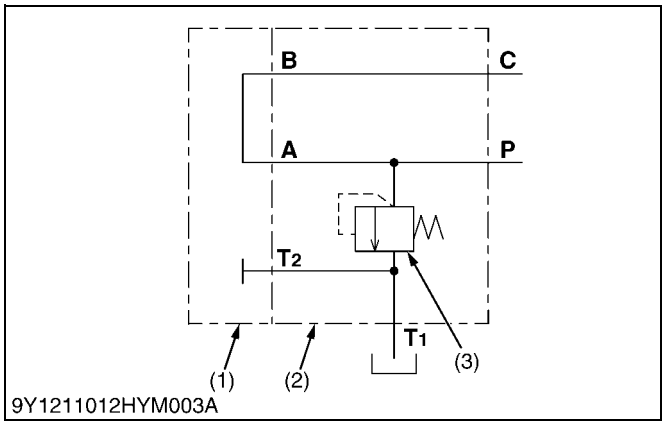

(1) Cap
(2) Front Hydraulic Block
(3) Relief Valve

A: To Implement Control Valve
B: From Implement Control Valve
C: To Position Control Valve
P: From Hydraulic Pump
T_1: To Transmission Case
T_2: From Implement Control Valve

9Y1211121HYM0017US0

[3] RELIEF VALVE

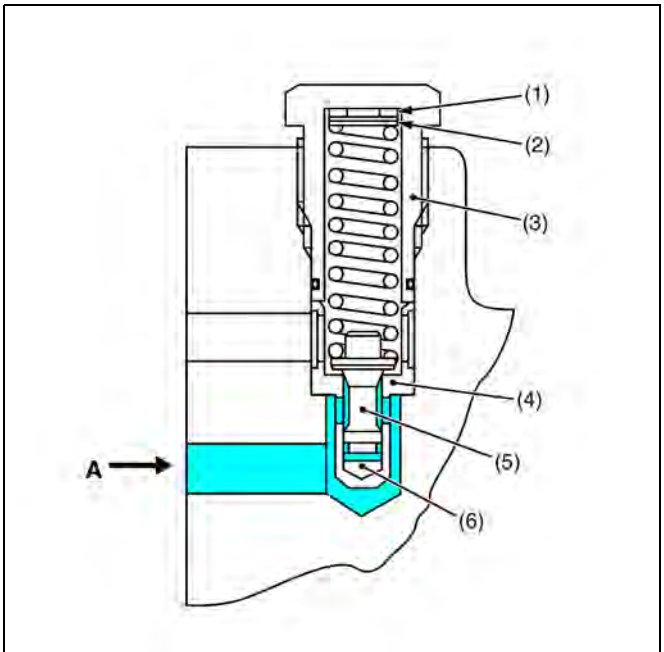

9Y1210721HYM006A

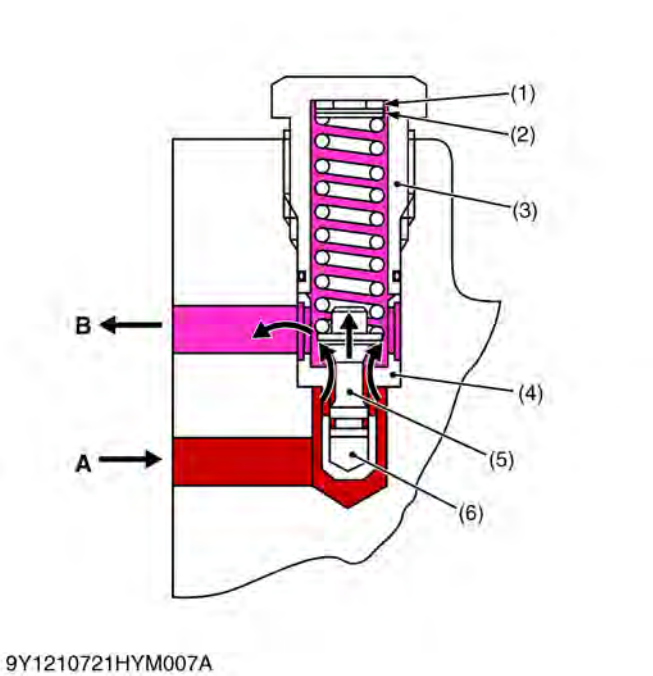

9Y1210721HYM007A

The 3-point hydraulic circuit has a relief valve to restrict the maximum pressure in its circuit.

This is a guide piston relief valve with damper, a direct acting relief valve suitable for relatively high pressure and capacity, and constructed so as to prevent chattering and other unstableness associated with direct acting relief valves. As shown in the figure, the poppet (5) has a guide, and there is a valve chamber called a damping chamber (6) in the base of this guide piston.

The valve inlet is connected to this chamber through the clearance between the guide surface and the seat so that the chamber provides a damping effect, controlling valve vibration.

When the pressure in the circuit rises, the pressure in the damping chamber also rises, and when it exceeds the relief pressure setting the spring is compressed, making a clearance between the poppet and the seat.

The hydraulic oil can escape to the transmission case through this clearance, controlling the pressure rise.

(1) Washer
(2) Shim
(3) Plug
(4) Seat
(5) Poppet
(6) Damping Chamber
A: From Pump
B: To Transmission Case

9Y1211121HYM0018US0

https://truckmanualshub.com/

SERVICING

CONTENTS

1. TROUBLESHOOTING....8-S1
2. SERVICING SPECIFICATIONS....8-S3
3. TIGHTENING TORQUES....8-S5
4. CHECKING AND ADJUSTING....8-S6
   [1] RELIEF VALVE AND SAFETY VALVE....8-S6
   [2] POSITION CONTROL ROD....8-S8
5. DISASSEMBLING AND ASSEMBLING....8-S9
   [1] HYDRAULIC PUMP (THREE POINT HITCH HYDRAULIC SYSTEM)....8-S9
   [2] HYDRAULIC CYLINDER....8-S11
   [3] POSITION CONTROL VALVE....8-S14
   [4] RELIEF VALVE....8-S16
6. SERVICING....8-S17
   [1] HYDRAULIC PUMP (THREE POINT HITCH HYDRAULIC SYSTEM)....8-S17
   [2] HYDRAULIC CYLINDER....8-S18

1. TROUBLESHOOTING

Symptom	Probable Cause and Checking Procedure	Solution	Reference Page
Implement Does Not Rise (Noise)	1. Relief valve setting pressure too low	Adjust	8-S6
	2. Hydraulic oil filter clogged	Replace	G-18
	3. Hydraulic piston O-ring, cylinder damaged	Replace	8-S13
	4. Hydraulic pump malfunctioning	Repair or replace	8-S9
Implement Does Not Rise (Not Noise)	1. Control linkage improperly adjusted	Adjust	8-S8
	2. Relief valve spring weaken or broken	Replace	8-S16
	3. Control linkage improperly assembled or damaged	Replace	8-S8
	4. Position control valve malfunctioning	Repair or replace	8-S15
Implement Does Not Reach Maximum Height	1. Top link length improperly adjusted	Adjust	–
	2. Position feedback rod improperly adjusted	Adjust	8-S8
	3. Position control valve improperly adjusted	Adjust	8-S15
	4. Hydraulic arm shaft, hydraulic arm, lift arm improperly adjusted	Adjust	8-S14
Implement Does Not Lower	1. Set screw improperly adjusted	Adjust	8-S15
	2. Poppet 2 damaged	Replace	8-S15
Implement Drops by Weight	1. Poppet 1 O-ring damaged (control valve)	Replace	8-S15
	2. Poppet 1 seat surface damaged (control valve)	Replace	8-S15
	3. Poppet 2 O-ring damaged (control valve)	Replace	8-S15
	4. Poppet 2 seat surface damaged (control valve)	Replace	8-S15
	5. Hydraulic piston and O-ring worn or damaged	Replace	8-S13
	6. Hydraulic cylinder worn or damaged	Replace	8-S18
Implement Hunts (Moves Up and Down)	1. Control valve O-rings worn or damaged	Replace	8-S15
	2. Poppet 1, poppet 2, poppet 3 seat surface damaged (control valve)	Replace	8-S15

Symptom	Probable Cause and Checking Procedure	Solution	Reference Page
Oil Temperature Increases Rapidly	1. Relief Valve operating	Adjust	8-S6
	2. Hydraulic pump leak or damaged	Repair or replace	8-S9
	3. Oil leak from control valve	Replace	8-S15

9Y1211121HYS0001US0

2. SERVICING SPECIFICATIONS

Item		Factory Specification	Allowable Limit
Housing Bore	Depth of Scratch	–	0.09 mm 0.004 in.
Bushing to Gear Shaft	Clearance	0.020 to 0.081 mm 0.00079 to 0.0031 in.	0.15 mm 0.0059 in.
• Gear Shaft	O.D.	14.97 to 14.98 mm 0.5894 to 0.5897 in.	–
• Bushing	I.D.	15.000 to 15.051 mm 0.59056 to 0.59255 in.	–
Side Plate	Thickness	2.48 to 2.50 mm 0.0977 to 0.0984 in.	2.40 mm 0.0945 in.

RELIEF VALVE (THREE POINT HITCH SYSTEM)

Item		Factory Specification	Allowable Limit
Relief Valve **Condition** • Engine Speed Maximum • Oil Temperature 40 to 60 °C (104 to 140 °F)	Setting Pressure	15.2 to 16.2 MPa 155 to 165 kgf/cm^2 2210 to 2340 psi	–

CYLINDER SAFETY VALVE

Item		Factory Specification	Allowable Limit
Cylinder Safety Valve	Operating Pressure	19.7 to 22.5 MPa 200 to 230 kgf/cm^2 2850 to 3270 psi	–

CONTROL LINKAGE

Item		Factory Specification	Allowable Limit
Lift Arm	Free Play (at Maximum Raising Position)	10 to 15 mm 0.40 to 0.59 in.	–

HYDRAULIC CYLINDER

Item		Factory Specification	Allowable Limit
Cylinder Bore	I.D.	75.00 to 75.05 mm 2.953 to 2.954 in.	71.15 mm 2.801 in.
Hydraulic Arm Shaft to Bushing	Clearance (Right)	0.125 to 0.230 mm 0.00493 to 0.00905 in.	0.5 mm 0.02 in.
	Clearance (Left)	0.125 to 0.220 mm 0.00493 to 0.00866 in.	0.50 mm 0.02 in.
Hydraulic Arm Shaft	O.D. (Right)	44.920 to 44.950 mm 1.7685 to 1.7696 in.	–
	O.D. (Left)	39.920 to 39.950 mm 1.57165 to 1.57283 in.	–
Bushing	I.D. (Right)	45.075 to 45.150 mm 1.7746 to 1.7775 in.	–
	I.D. (Right)	40.075 to 40.140 mm 1.5778 to 1.5803 in.	–
Press-fit location of bushings	Dimension **A**	21.75 to 22.75 mm 0.8563 to 0.8956 in.	–
	Dimension **B**	26.50 to 27.50 mm 1.044 to 1.082 in.	–

9Y1211121HYS0002US0

3. TIGHTENING TORQUES

Tightening torques of screws, bolts and nuts on the table below are especially specified.
(For general use screws, bolts and nuts: See page G-11.)

Item	N·m	kgf·m	lbf·ft
Relief valve plug	35 to 44	3.5 to 4.5	26 to 32
Safety valve assembly	40 to 49	4.0 to 5.0	29 to 36
Safety valve lock nut	59 to 78	6.0 to 8.0	44 to 57
Screw (joint shaft)	23.5 to 27.4	2.4 to 2.8	18 to 20
Screw (support)	23.5 to 27.4	2.4 to 2.8	18 to 20
Delivery pipe joint screw	49 to 68	5.0 to 7.0	37 to 50
Hydraulic pump assembly mounting screw and nut	24 to 27	2.4 to 2.8	18 to 20
Pump cover mounting screw	40 to 44	4.0 to 4.5	29 to 32
Position control valve mounting screws	24 to 27	2.4 to 2.8	18 to 20
Plug 1	40 to 58	4.0 to 6.0	29 to 43
Plug 2	30 to 49	3.0 to 5.0	22 to 36
Unload plug	40 to 58	4.0 to 6.0	29 to 43

9Y1211121HYS0003US0

4. CHECKING AND ADJUSTING

[1] RELIEF VALVE AND SAFETY VALVE

9Y1210520HYS004A

9Y1210520HYS005A

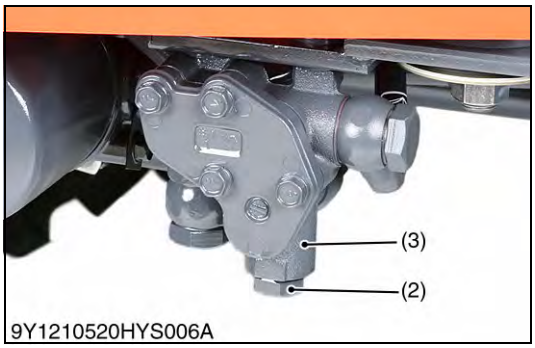

9Y1210520HYS006A

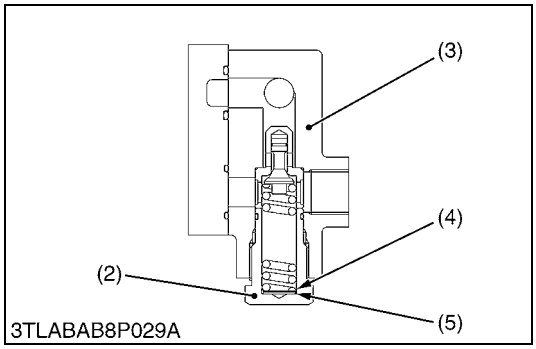

3TLABAB8P029A

Relief Valve Setting Pressure

1. Remove the plug from hydraulic cylinder.
2. Connect the cable and pressure gauge to hydraulic cylinder (thread size Rp (PS) 1/4).
3. Remove the position control lever stopper (1).
4. Start the engine and set at maximum speed.
5. Move the position control lever all way up to operate the relief valve and read the gauge.
6. If the pressure is not within the factory specifications, remove the relief valve plug (2) of front hydraulic block (3) and adjust with the adjusting shims (4).
7. After the relief valve setting pressure test, reset the position control lever stopper firmly.

Tightening torque	Relief valve plug	35 to 44 N·m 3.5 to 4.5 kgf·m 26 to 32 lbf·ft

Relief valve setting pressure	Factory specification	15.2 to 16.2 MPa 155 to 165 kgf/cm^2 2210 to 2340 psi

Condition

- Engine speed
  Maximum
- Oil temperature
  40 to 60 °C (104 to 140 °F)

(Reference)

- Thickness of shims (4)
  0.1 mm (0.004 in.)
  0.2 mm (0.008 in.)
  0.4 mm (0.02 in.)
- Pressure change per 0.1 mm (0.004 in.) shim
  Approx. 260 kPa (2.7 kgf/cm^2, 38 psi)

(1) Stopper
(2) Relief Valve Plug
(3) Front Hydraulic Block
(4) Adjusting Shim
(5) Washer

9Y1211121HYS0004US0

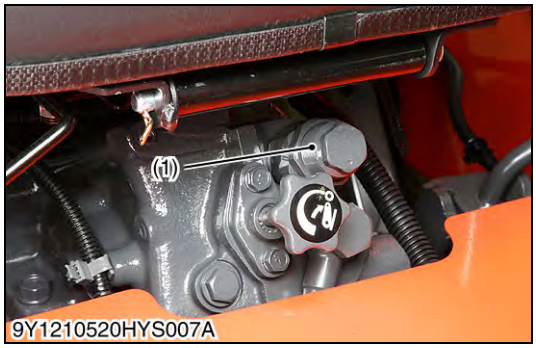

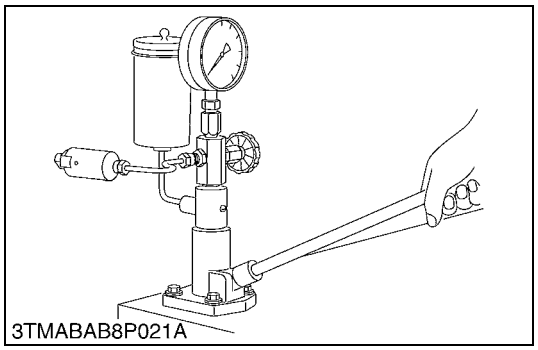

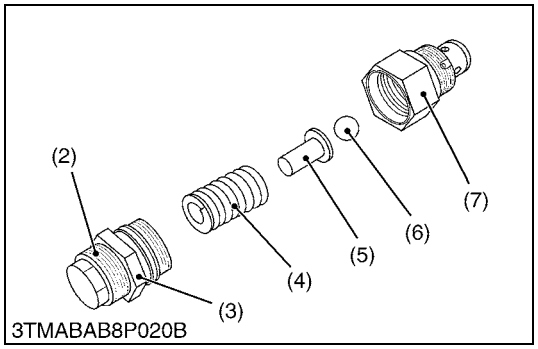

Safety Valve Setting Pressure Test Using Injection Nozzle Tester

1. Remove the safety valve assembly (1).
2. Attach the safety valve to an injection nozzle tester with a safety valve setting adaptor (Refer to "SPECIAL TOOLS" (see page G-54)).
3. Measure the operating pressure of the safety valve.
4. If the operating pressure is not within the factory specifications, adjust by turning the adjusting screw (2).
5. After adjustment, tighten the lock nut (3) firmly.

(When reassembling)

- Install the safety valve to the rear hydraulic block, taking care not to damage the O-ring and apply transmission fluid.

Tightening torque	Safety valve assembly	40 to 49 N·m 4.0 to 5.0 kgf·m 29 to 36 lbf·ft
	Safety valve lock nut	59 to 78 N·m 6.0 to 8.0 kgf·m 44 to 57 lbf·ft

Safety valve operating pressure	Factory specification	19.7 to 22.5 MPa 200 to 230 kgf/cm^2 2850 to 3270 psi

■ **NOTE**

- **Use specified transmission fluid (Refer to "LUBRICANTS, FUEL AND COOLANT" (see page G-9)) to test the operating pressure of the cylinder safety valve.**

(1) Safety Valve Assembly
(2) Adjusting Screw
(3) Lock Nut
(4) Spring
(5) Seat
(6) Ball
(7) Housing

9Y1211121HYS0005US0

[2] POSITION CONTROL ROD

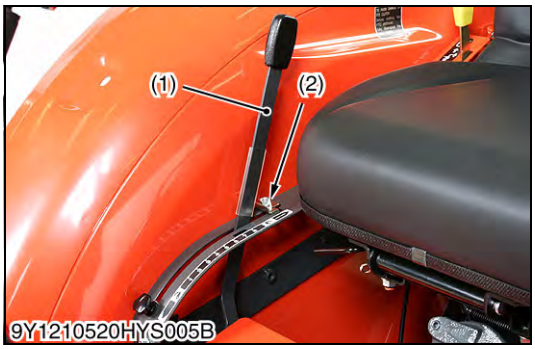

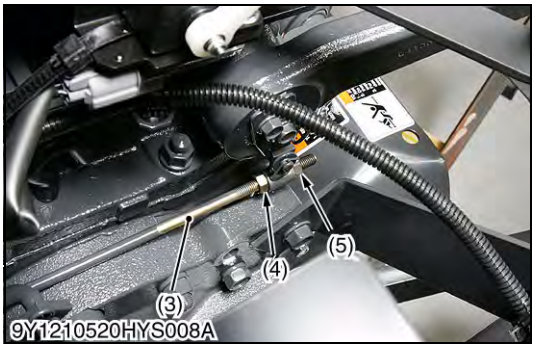

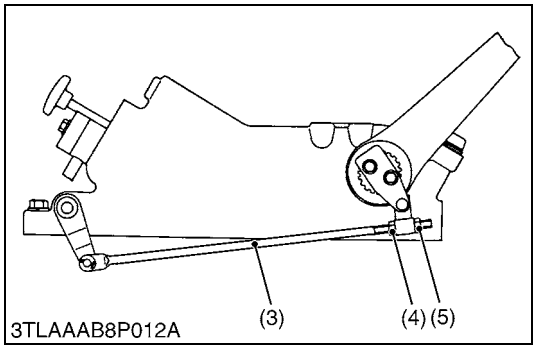

Position Control Rod Adjustment

1. Set the position control lever (1) to the lowest position.
2. Start the engine, and after warming-up, set the engine speed to idle.
3. Move the position control lever (1) to the uppermost position.
4. While pushing the feedback rod forward, turn the adjusting nut (5) counterclockwise until the relief valve begins to be operated.
5. From the relief valve operating position, turn the adjusting nut (5) clockwise 2 turns.
6. Tighten the lock nut (4).
7. Set the engine speed to maximum.
8. Move the position control lever (1) to the lowest position and uppermost position to check the relief valve does not operate.
9. Set the position control lever (1) to the uppermost position, then move the lift arm to the upper end by hand and measure the free play.
10. If the measurement is not within the factory specifications, adjust the position control rod setting length.
    To reduce lift arm free play
    → Lengthen the position control rod (3).
    To increase lift arm free play
    → Shorten the position control rod (3).

Lift arm free play at maximum raising position	Factory specification	10 to 15 mm 0.40 to 0.59 in.

(1) Position Control Lever
(2) Stopper
(3) Position Control Rod
(4) Lock Nut
(5) Adjusting Nut

9Y1211121HYS0006US0

5. DISASSEMBLING AND ASSEMBLING

[1] HYDRAULIC PUMP (THREE POINT HITCH HYDRAULIC SYSTEM)

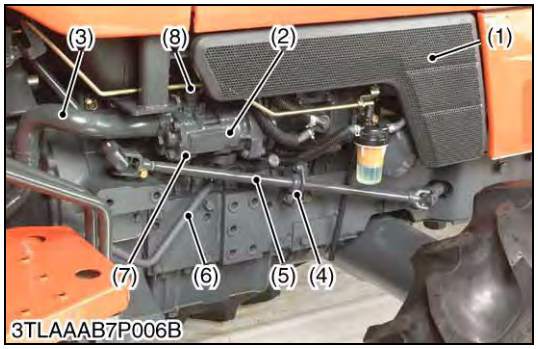

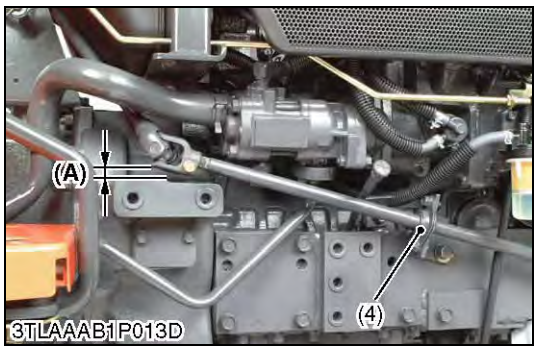

Hydraulic Pump Assembly

1. Remove the side cover (1).
2. Remove the steering joint shaft (5).
3. Disconnect the suction hose (3).
4. Disconnect the return hose (8).
5. Remove the delivery pipe (6), (7).
6. Remove the hydraulic pump (2).

(When reassembling)

- Lift the joint shaft (5) so that there should be a clearance **(A)** of more than 5 mm (0.2 in.) between the joint shaft (5) and flywheel housing.
  Then fit the support (4) in position.
- Be sure to insert the screw into cut-out of joint shaft (5).
- Apply grease to spline part of joint shaft (5).
- Apply transmission fluid to the O-ring and take care not to damage it.
- Wind seal tape to the joint of return hose (8).

Tightening torque	Screw (joint shaft)	23.5 to 27.4 N·m 2.4 to 2.8 kgf·m 18 to 20 lbf·ft
	Screw (support)	23.5 to 27.4 N·m 2.4 to 2.8 kgf·m 18 to 20 lbf·ft
	Delivery pipe joint screw	49 to 68 N·m 5.0 to 7.0 kgf·m 37 to 50 lbf·ft
	Hydraulic pump assembly mounting screw and nut	24 to 27 N·m 2.4 to 2.8 kgf·m 18 to 20 lbf·ft

(1) Side Cover
(2) Hydraulic Pump
(3) Suction Hose
(4) Support
(5) Joint Shaft
(6) Delivery Pipe
(7) Delivery Pipe
(8) Return Hose

(A) Clearance

9Y1211121HYS0007US0

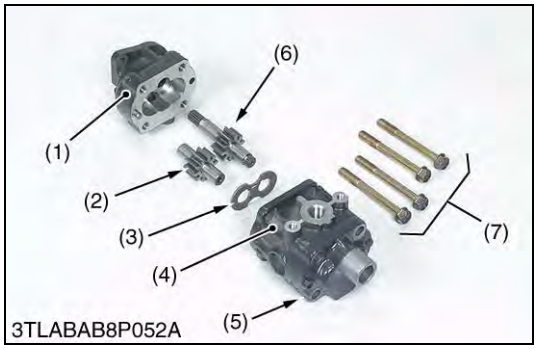

Hydraulic Pump Assembly

1. Remove the pump cover mounting screw (7).
2. Remove the drive gear (6), driven gear (2) and side plate (3) from the casing.

(When reassembling)

- Take care no to damage the gasket.
- Align the hole of the pump cover (4) and casing 2 (5).
- Install the side plate, noting its location and direction.
- Install the gears, noting its direction.

Tightening torque	Pump cover mounting screw	40 to 44 N·m 4.0 to 4.5 kgf·m 29 to 32 lbf·ft

(1) Casing 1
(2) Driven Gear
(3) Side Plate
(4) Pump Cover
(5) Casing 2
(6) Drive Gear
(7) Screw

9Y1211121HYS0008US0

Hydraulic Pump Running-in

After reassembly, perform break-in operation in the following manner, and check the pump for abnormality before use. If the pump temperature should rise noticeably during running-in, recheck soul be performed.

1. Install the hydraulic pump to the tractor, and mount the suction pipe and delivery pipe securely.
2. Set the engine speed at 1300 to 1500 mm^{-1} (rpm), and operate the hydraulic pump at no load for about 10 minutes.
3. Set the engine speed at 2000 to 2200 mm^{-1} (rpm), and with the hydraulic pump applied with 2.9 MPa (30 kgf/cm^2, 430 psi) to 4.9 MPa (50 kgf/cm^2, 710 psi) pressure, operate it for approx. 15 minutes.
4. With the engine set to maximum speed, fully turn the steering wheel to the left or right, then actuate the relief valve five times for 25 seconds (one time 5 seconds).

9Y1211121HYS0009US0

[2] HYDRAULIC CYLINDER

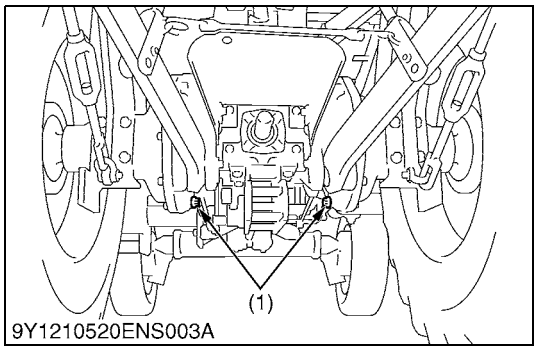

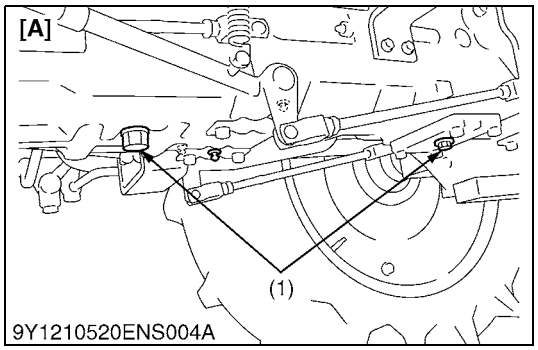

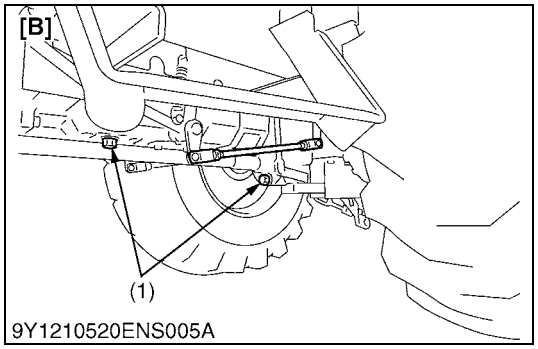

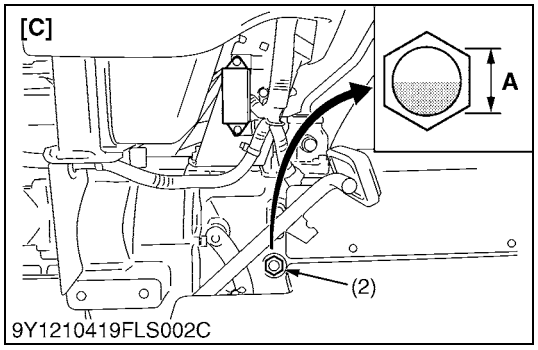

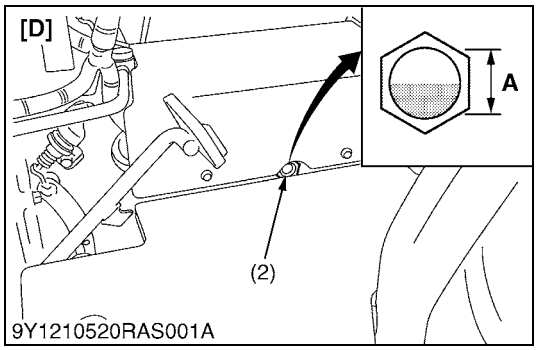

Draining the Transmission Fluid

WARNING

To avoid personal injury or death:

- **Be sure to stop the engine before changing the oil filter cartridge.**
- **Allow engine to cool down sufficiently, oil can be hot and can burn.**

1. Remove the drain plugs (1) at the bottom of the transmission case and drain the oil completely into the oil pan.
2. After draining reinstall the drain plugs.

(When reassembling)

- Fill up new oil to the upper line of the gauge (2) from the oil inlet port after removing the oil inlet plug (3).
- After running the engine for a few minutes, stop it and check the fluid level again, if low, add fluid prescribed level **"A"**.

IMPORTANT

- **Use only multi-grade transmission fluid. Use of other fluids may damage the transmission or hydraulic system.**
- **Refer to "LUBRICANTS, FUEL AND COOLANT". (See page G-9.)**
- **Never work the tractor immediately after changing the transmission fluid. Keeping the engine at medium speed for a few minutes to prevent damage to the transmission.**
- **Do not mix different brands oil together.**

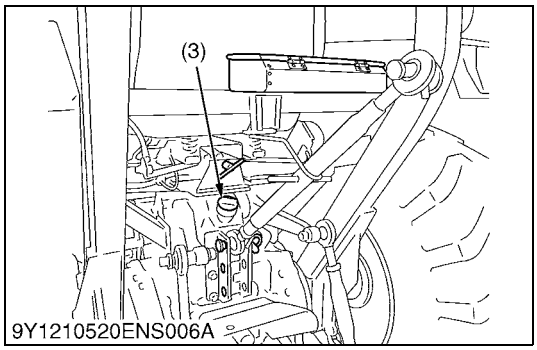

Transmission fluid capacity	2WD	27.0 L 7.1 U.S.gals 5.9 Imp.gals
	4WD	27.5 L 7.3 U.S.gals 6.1 Imp.gals
	HST	23.5 L 6.2 U.S.gals 5.2 Imp.gals

(1) Drain Plug
(2) Gauge
(3) Oil Inlet Plug

[A] 2WD
[B] 4WD
[C] Manual Transmission Type
[D] HST Type
A: Oil level is acceptable within this range.

9Y1211121RAS0002US0

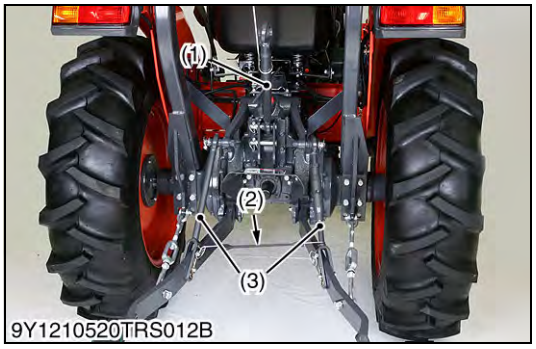

Lift-rod and Battery Negative Cable

1. Remove the top link (1).
2. Remove the rubber spring (2) and lift-rods (3).
3. Disconnect the negative cable.

(1) Top Link
(2) Rubber Spring
(3) Lift-rod

9Y1211121HYS0010US0

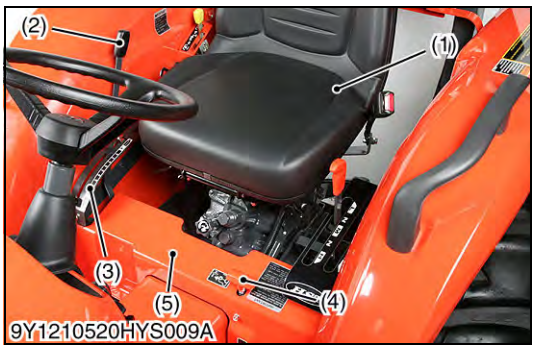

Outer Components

1. Remove the seat (1).
2. Remove the grip (2).
3. Remove the grip (4) [4WD].
4. Remove the position control lever guide (3).
5. Remove the floor seat cover (5).

(1) Seat
(2) Grip (for Position Control Lever)
(3) Position Control Lever Guide
(4) Grip (for Front Drive Lever)
(5) Floor Sheet Cover

9Y1211121HYS0011US0

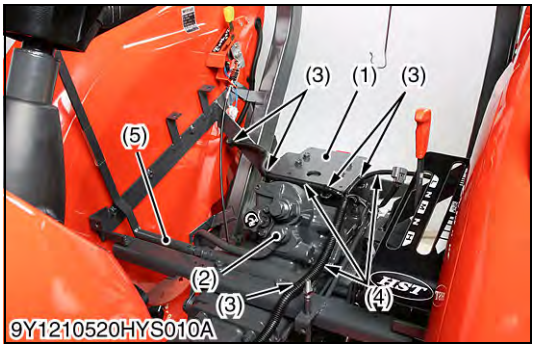

Wirings

1. Remove the support (1) and the position lever (5).
2. Remove the joint screw (2).
3. Remove the clips (3).
4. Disconnect the wirings (4).

(When reassembling)

- When tightening the joint screw (2), install the new copper washers firmly.

Tightening torque	Delivery pipe joint screw	49 to 68 N·m 5.0 to 7.0 kgf·m 37 to 50 lbf·ft

(1) Support (Seat)
(2) Joint Screw (Delivery Pipe)
(3) Clip
(4) Wirings
(5) Position Lever

9Y1211121HYS0012US0

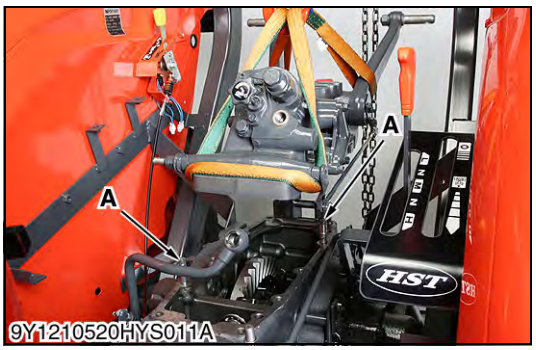

Hydraulic Cylinder

1. Loosen and remove the hydraulic cylinder assembly mounting screws and nuts.
2. Support the hydraulic cylinder assembly with nylon lift strap and hoist, and then take out it.

■ **NOTE**

- **Reassemble the hydraulic cylinder assembly to the tractor, be sure to adjust the position control rod. (See page 8-S8.)**

9Y1211121HYS0013US0

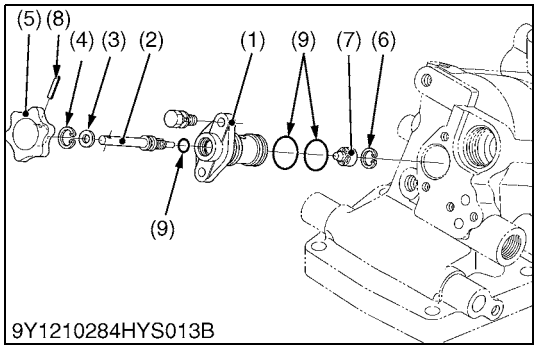

Lowering Speed Adjusting Valve

1. Remove the lowering speed adjusting valve from hydraulic cylinder block.
2. Tap out the spring pin (8), and remove the grip (5).
3. Remove the internal cir-clip (4), and remove the hydraulic adjusting shaft (2).
4. Remove the internal cir-clip (6) and draw out the adjusting collar (7).

(When reassembling)

- Install the hydraulic adjusting shaft (2) and valve body (1), noting O-ring (9).

(1)	Valve Body	(6)	Internal Cir-clip
(2)	Hydraulic Adjusting Shaft	(7)	Adjusting Collar
(3)	Washer	(8)	Spring Pin
(4)	Internal Cir-clip	(9)	O-ring
(5)	Grip		

9Y1211121HYS0014US0

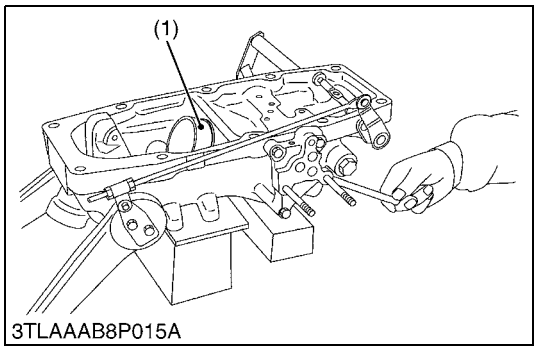

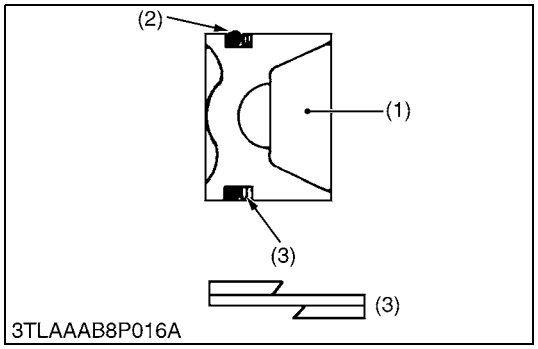

Hydraulic Rod and Hydraulic Piston

1. Tap out the spring pin.
2. Remove the hydraulic rod.
3. Push out the hydraulic piston (1).

(When reassembling)

- Install the piston, noting O-ring and back-up ring (3). (See figure.)
- Apply grease to the piston bottom contacts with hydraulic rod.
- Apply transmission fluid to the cylinder, and then install the hydraulic piston (1).

(1)	Hydraulic Piston	(3)	Back-up Ring
(2)	O-ring		

9Y1211121HYS0015US0

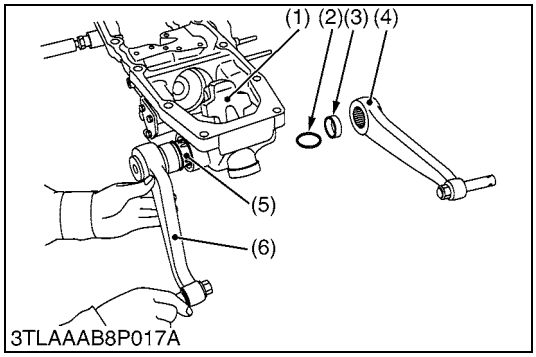

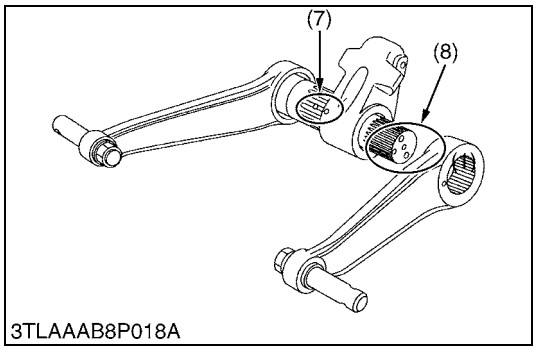

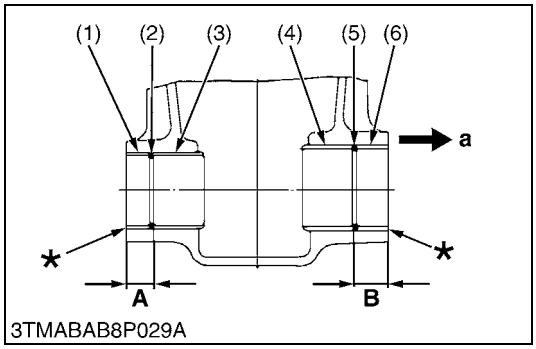

Lift Arm, Hydraulic Arm and Hydraulic Arm Shaft

1. Disconnect the position control rod from feedback lever.
2. Remove the lift arm setting screws.
3. Draw out the hydraulic arm shaft (5) and right lift arm (6) as a unit.
4. Take out the hydraulic arm (1).
5. Remove the collar (3) and O-ring (2).

(When reassembling)

- Align the alignment marks of the hydraulic arm and hydraulic arm shaft (7).
- Align the alignment marks of the lift arm and hydraulic arm shaft (8).
- Apply grease to the right and left bushings of hydraulic cylinder block and O-rings (2).
- Take care not to damage the O-ring (2).

(1) Hydraulic Arm
(2) O-ring
(3) Collar
(4) Lift Arm (Left)
(5) Hydraulic Arm Shaft
(6) Lift Arm (Right)
(7) Alignment Mark (Hydraulic Arm Shaft and Hydraulic Arm)
(8) Alignment Mark (Hydraulic Arm Shaft and Lift Arm)

9Y1211121HYS0016US0

Bushings

1. Remove the bushings right (4) and left side (3).

(When reassembling)

- When press-fitting new bushings (3), (4) with a press-fitting tool (see page G-51) observe the dimensions described in the figure.
- Apply transmission fluid to the hydraulic cylinder boss and bushing.
- Press- fit the bushing so that each seam face upward.

Press-fit location of bushings	Factory specification	Dimension **A**	21.75 to 22.75 mm 0.8563 to 0.8956 in.
		Dimension **B**	26.50 to 27.50 mm 1.044 to 1.082 in.

(1) Collar (Left)
(2) O-ring
(3) Bushing (Left)
(4) Bushing (Right)
(5) O-ring
(6) Collar (Right)

a: Right Side
***Flush the end of collar with the end of hydraulic cylinder body.**

9Y1211121HYS0017US0

[3] POSITION CONTROL VALVE

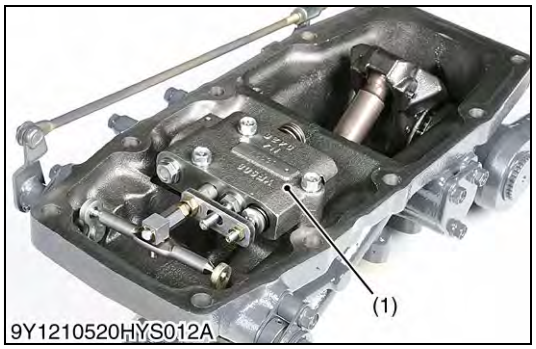

Position Control Valve

1. Loosen and remove the position control valve mounting screws.
2. Take out the position control valve (1).

(When reassembling)

- Take care not to damage the O-rings.

Tightening torque	Position control valve mounting screws	20 to 24 N·m 2.0 to 2.5 kgf·m 15 to 18 lbf·ft

■ **IMPORTANT**

- **Measure the distance between the spool edge and spool joint 2 edge before disassembling.**

(1) Position Control Valve

9Y1211121HYS0018US0

Disassembling Position Control Valve

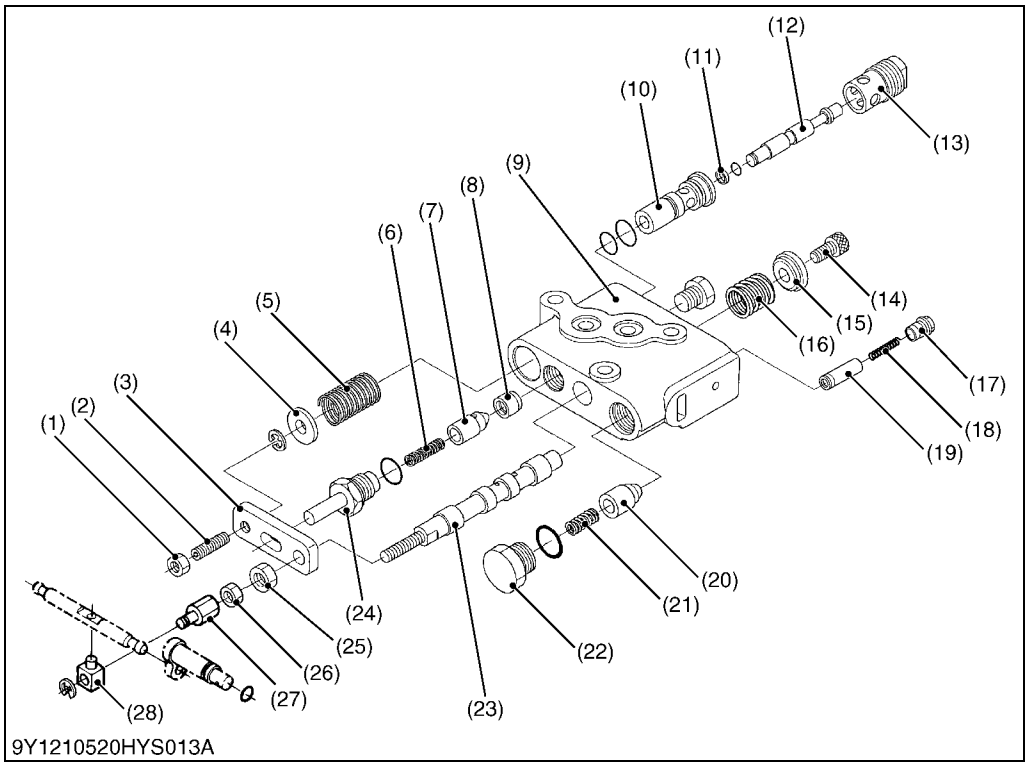

(1) Nut 1
(2) Set Screw
(3) Plate 1
(4) Washer
(5) Spring
(6) Spring
(7) Poppet 1
(8) Valve Seat
(9) Valve Body
(10) Sleeve
(11) Backup Ring
(12) Poppet 2
(13) Plug 1
(14) Screw
(15) Spring Holder
(16) Spring
(17) Plug
(18) Spring
(19) Poppet 3
(20) Unload Poppet
(21) Spring
(22) Unload Plug
(23) Spool
(24) Plug 2
(25) Nut
(26) Lock Nut
(27) Spool Joint 1
(28) Spool Joint 2

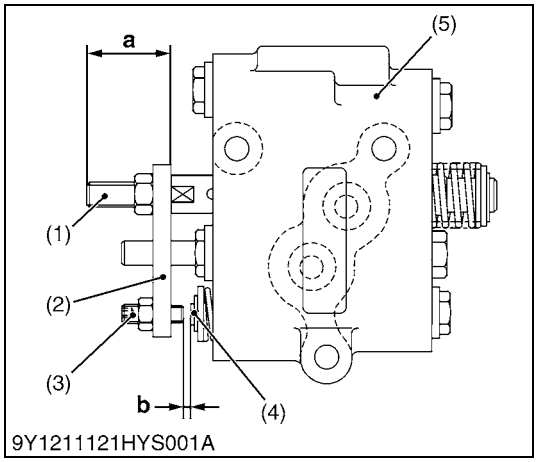

■ **IMPORTANT**

- **Set screw (3) and spool (1) are adjusted to very close accuracy. Do not disassemble them unless necessary.**
  If disassembled due to unavoidable reasons, be sure to make the following adjustments before assembling.

■ **Spool (1)**

1. Adjust the spool (1) so that the dimension **"a"** between the spool (1) and the plate 1 (2) is 47.5 to 48.5 mm (1.87 to 1.90 in.).
2. After the adjustment, be sure to adjust the position control feedback rod (see page 8-S8).

■ **Set screw (3)**

1. Set the dimension **"b"** between the plate 1 (2) and the poppet 2 (4) to 0.1 to 0.2 mm (0.004 to 0.008 in.).
2. After the adjustment, be sure to adjust the position control feedback rod (see page 8-S8).

(When reassembling)

Tightening torque	Plug 1	40 to 58 N·m 4.0 to 6.0 kgf·m 29 to 43 lbf·ft
	Plug 2	30 to 49 N·m 3.0 to 5.0 kgf·m 22 to 36 lbf·ft
	Unload plug	40 to 58 N·m 4.0 to 6.0 kgf·m 29 to 43 lbf·ft

(1) Spool
(2) Plate 1
(3) Set Screw
(4) Poppet 2
(5) Valve Body

a: Dimension
b: Clearance

9Y1211121HYS0019US0

[4] RELIEF VALVE

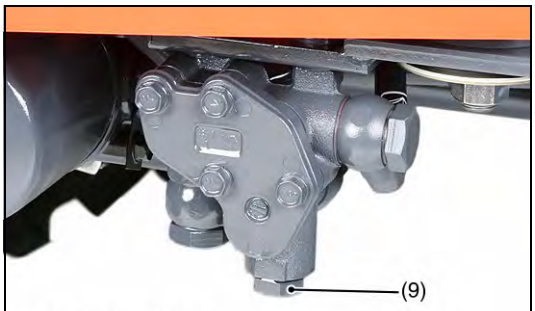

9Y1210520HYS006B

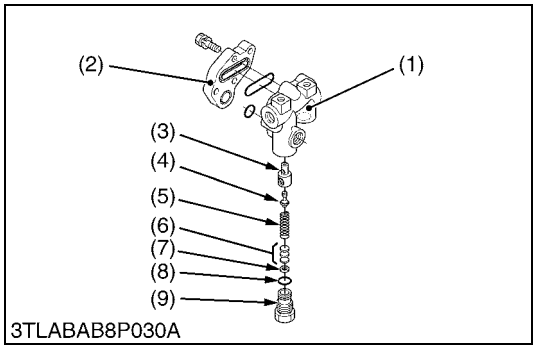

3TLABAB8P030A

Disassembling Relief Valve

1. Remove the plug (9), and draw out the spring (5) and the poppet (4).
2. Take out the valve seat (3).

(When reassembling)

- Take care not to damage the O-ring.

Tightening torque	Relief valve plug	35 to 44 N·m 3.5 to 4.5 kgf·m 26 to 32 lbf·ft

■ **IMPORTANT**

- **After disassembling and assembling the relief valve, be sure to adjust the relief valve setting pressure.**

(1) Front Hydraulic Block
(2) Cap
(3) Valve Seat
(4) Poppet
(5) Spring
(6) Adjusting Shim
(7) Washer
(8) O-ring
(9) Plug

9Y1211121HYS0020US0

6. SERVICING

[1] HYDRAULIC PUMP (THREE POINT HITCH HYDRAULIC SYSTEM)

Housing Bore (Depth of Scratch)

1. Check for the scratch on the interior surface of the housing caused by the gear.
2. If the scratch reaches more than half the area of the interior surface of the housing, replace at pump assembly.
3. Measure the housing I.D. where the interior surface is not scratched, and measure the housing I.D. where the interior surface is scratched.
4. If the valves obtained in the two determinations differ by more than the allowable limit, replace the hydraulic pump as a unit.

Depth of scratch	Allowable limit	0.09 mm 0.004 in.

(Reference)

- Use a cylinder gauge to measure the housing I.D.

9Y1211121HYS0021US0

Clearance between Bushing and Gear Shaft

1. Measure the gear shaft O.D. with and outside micrometer.
2. Measure the bushing I.D. with and inside micrometer or cylinder gauge, and calculate the clearance.
3. If the clearance exceeds the allowable limit, replace the gear shaft and the bushings as a unit.

Clearance between bushing and gear shaft	Factory specification	0.020 to 0.081 mm 0.00079 to 0.0031 in.
	Allowable limit	0.15 mm 0.0059 in.

Gear shaft O.D.	Factory specification	14.97 to 14.98 mm 0.5894 to 0.5897 in.
Bushing I.D.	Factory specification	15.000 to 15.051 mm 0.59056 to 0.59255 in.

9Y1211121HYS0022US0

Side Plate Thickness

1. Measure the side plate thickness with an outside micrometer.
2. If the thickness is less than the allowable limit, replace it.

Side plate thickness	Factory specification	2.48 to 2.50 mm 0.0977 to 0.0984 in.
	Allowable limit	2.40 mm 0.0945 in.

9Y1211121HYS0023US0

[2] HYDRAULIC CYLINDER

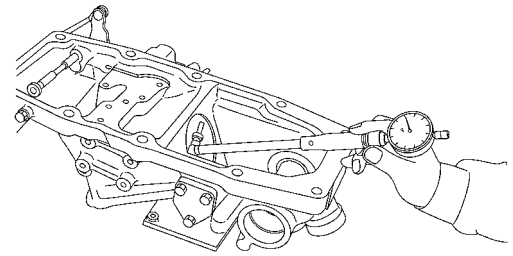
3TMABAB8P034A

Hydraulic Cylinder Bore

1. Check the cylinder internal surface for scoring or damage.
2. Measure the cylinder I.D. with a cylinder gauge.
3. If the measurement exceeds the allowable limit, replace.

Cylinder I.D.	Factory specification	75.00 to 75.05 mm 2.953 to 2.954 in.
	Allowable limit	75.15 mm 2.801 in.

9Y1211121HYS0024US0

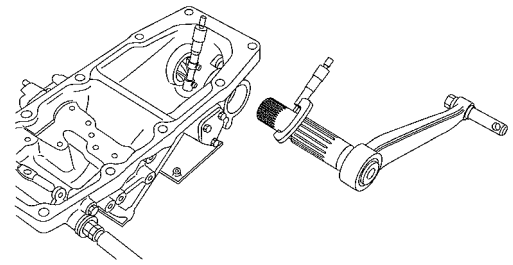
3TMABAB8P022A

Clearance between Hydraulic Arm Shaft and Bushing

1. Measurement the hydraulic arm shaft O.D. with an outside micrometer.
2. Measurement the bushing I.D. with a cylinder gauge or inside micrometer.
3. If the clearance exceeds the allowable limit. replace.

Clearance between hydraulic arm shaft and bushing	Factory specification	Right	0.125 to 0.230 mm 0.00493 to 0.00905 in.
		Left	0.125 to 0.220 mm 0.00493 to 0.00866 in.
	Allowable limit	Right	0.5 mm 0.02 in.
		Left	0.5 mm 0.02 in.

Hydraulic arm shaft O.D.	Factory specification	Right	44.920 to 44.950 mm 1.7685 to 1.7696 in.
		Left	39.920 to 39.950 mm 1.5717 to 1.5728 in.

Bushing I.D. (after press fitted).	Factory specification	Right	45.075 to 45.150 mm 1.7746 to 1.7775 in.
		Left	40.075 to 40.140 mm 1.578 to 1.5803 in.

9Y1211121HYS0025US0

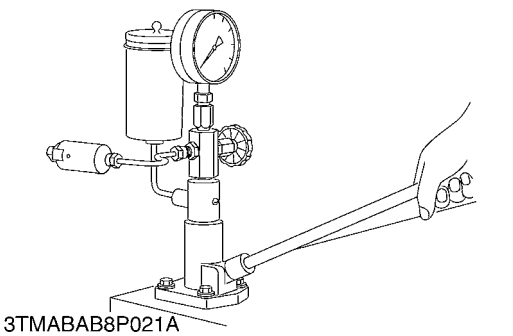
3TMABAB8P021A

Operating Pressure of Cylinder Safety Valve

1. Attach the cylinder safety valve to injection nozzle tester with a safety valve setting adaptor.
2. Measurement the operating pressure of the cylinder safety valve.
3. If the operating pressure is not within the factory specifications, adjust by turning the adjusting screw (1).
4. After adjustment, tighten the lock nut (2) firmly.

■ **NOTE**

- **Use specified transmission fluid (See page G-9) to test the operating pressure of the cylinder safety valve.**

Cylinder safety valve operating pressure	Factory specification	19.7 to 22.5 MPa 200 to 230 kgf/cm^2 2850 to 3270 psi

Tightening torque	Safety valve lock nut	59 to 78 N·m 6.0 to 8.0 kgf·m 44 to 57 lbf·ft

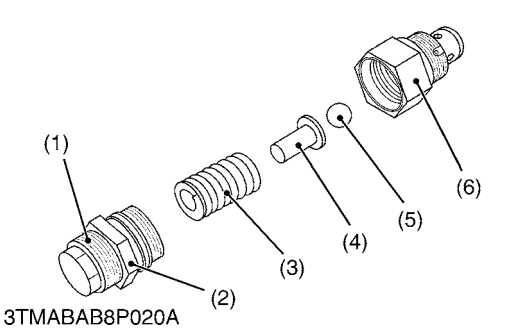

3TMABAB8P020A

(1) Adjusting Screw
(2) Lock Nut
(3) Spring
(4) Seat
(5) Ball
(6) Housing

9Y1211121HYS0026US0

https://truckmanualshub.com/

9 ELECTRICAL SYSTEM

https://truckmanualshub.com/

MECHANISM

CONTENTS

1. WIRING DIAGRAM 9-M1
   [1] MANUAL TRANSMISSION TYPE 9-M1
   [2] HST TYPE 9-M2
2. ELECTRICAL CIRCUIT 9-M3
   [1] MANUAL TRANSMISSION TYPE 9-M3
   [2] HST TYPE 9-M4
3. INSTRUMENT PANEL 9-M5
   [1] INDICATION ITEMS OF METER PANEL 9-M5
   [2] EASY CHECKER™ 9-M5
4. ENGINE STARTING SYSTEM 9-M6
   [1] ELECTRIC CIRCUIT 9-M6
      (1) Manual Transmission Type 9-M6
      (2) HST Type 9-M8
   [2] SAFETY SWITCH 9-M10
      (1) Manual Transmission Type 9-M10
      (2) HST Type 9-M10
5. OPERATOR PRESENCE CONTROL (OPC) SYSTEM 9-M12
   [1] ELECTRICAL CIRCUIT 9-M12
      (1) Manual Transmission Type 9-M12
      (2) HST Type 9-M22
   [2] SAFETY SWITCH 9-M30

1. WIRING DIAGRAM

[1] MANUAL TRANSMISSION TYPE

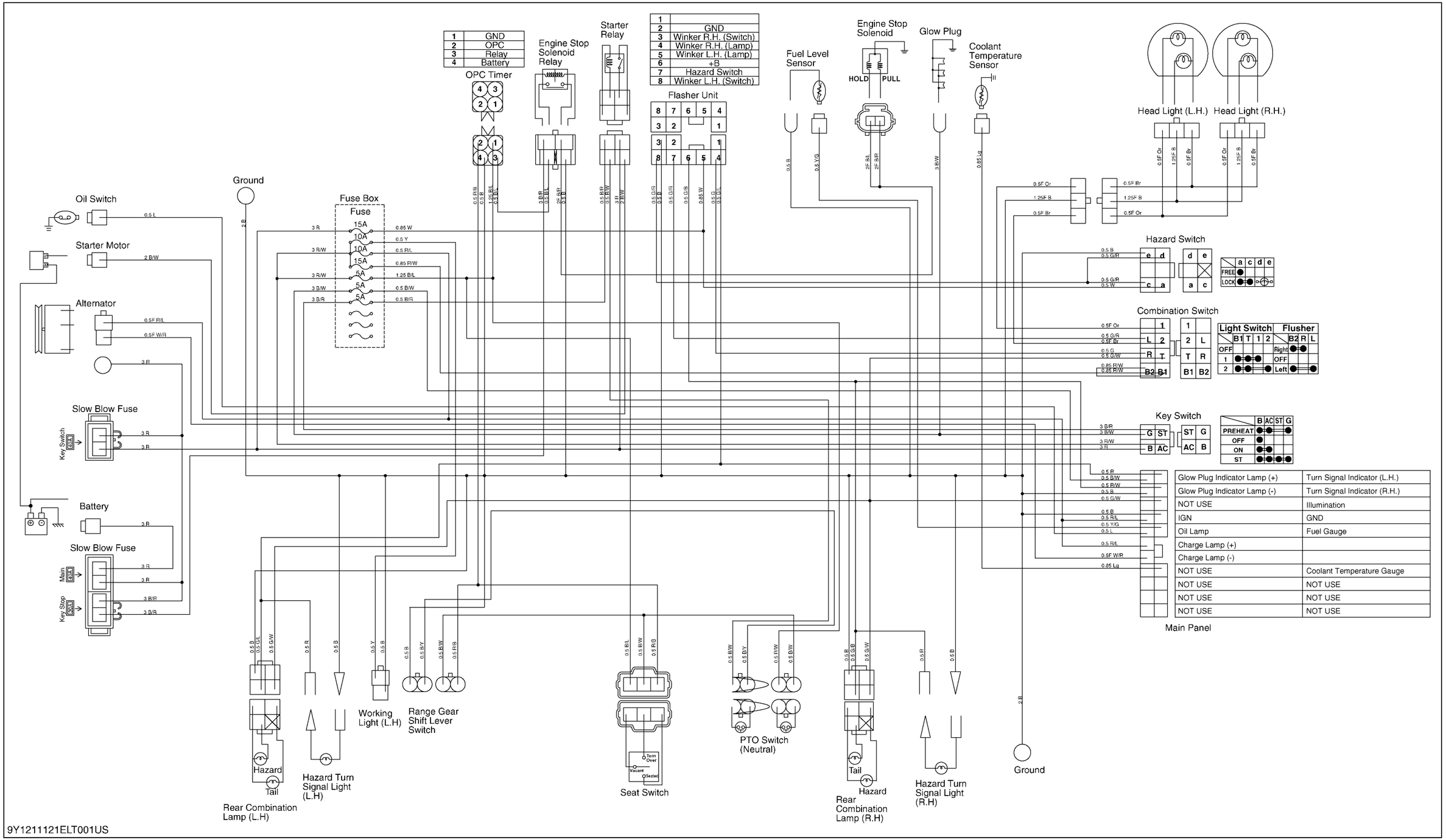

[2] HST TYPE

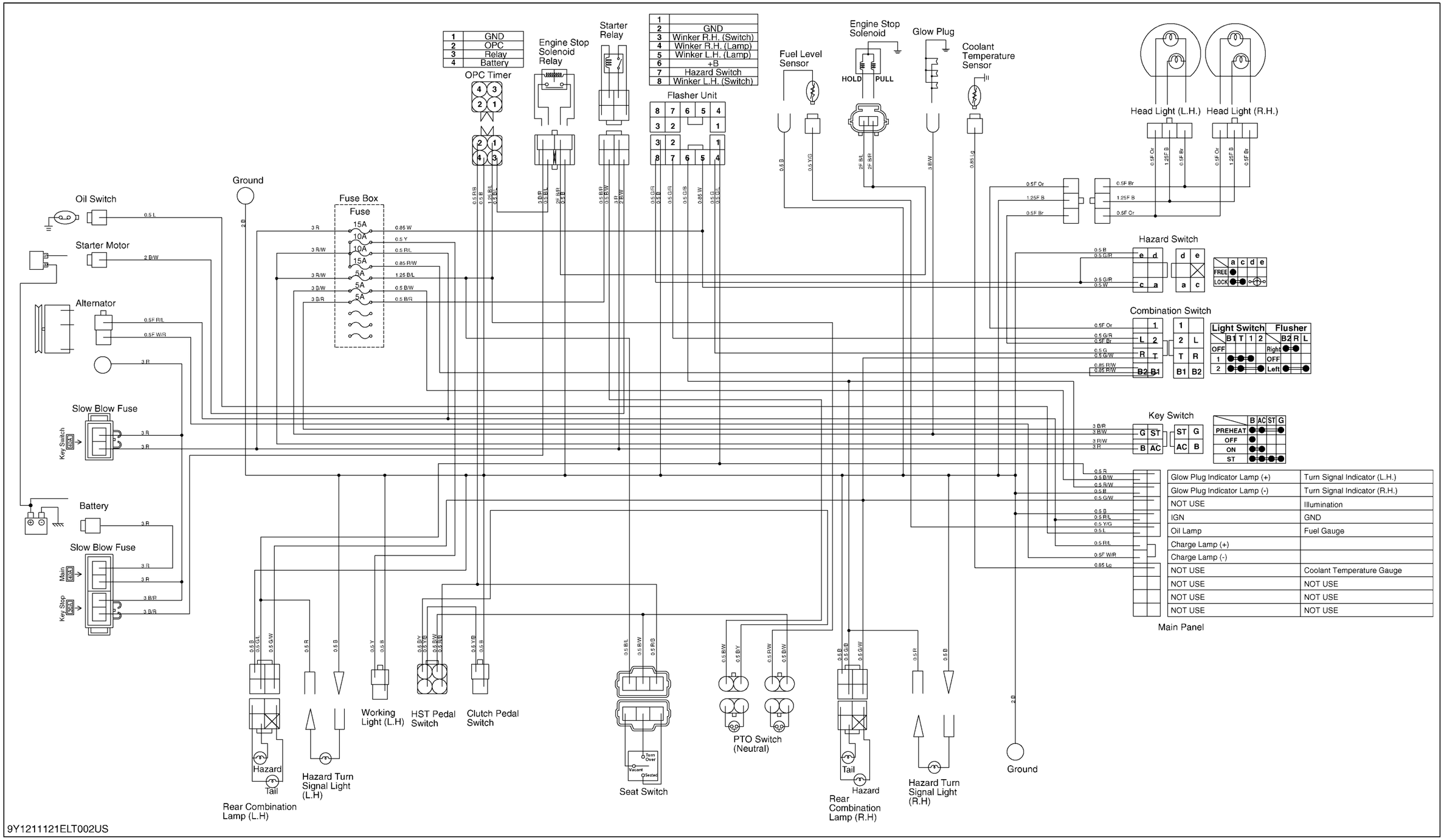
OPC Timer
1 GND
2 OPC
3 Relay
4 Battery
Engine Stop Solenoid Relay
Starter Relay
Flasher Unit
1
2 GND
3 Winker R.H. (Switch)
4 Winker R.H. (Lamp)
5 Winker L.H. (Lamp)
6 +B
7 Hazard Switch
8 Winker L.H. (Switch)
Fuel Level Sensor
Engine Stop Solenoid
HOLD PULL
Glow Plug
Coolant Temperature Sensor
Head Light (L.H.)
Head Light (R.H.)
Ground
Oil Switch
Starter Motor
Alternator
Fuse Box
Fuse
15A
10A
10A
15A
5A
5A
5A
Hazard Switch
FREE
LOCK
Combination Switch
Light Switch
Flusher
OFF
1
2
Right
OFF
Left
Key Switch
PREHEAT
OFF
ON
ST
Slow Blow Fuse
Key Switch 40A
Battery
Slow Blow Fuse
Main 40A
Key Stop 20A
Glow Plug Indicator Lamp (+) | Turn Signal Indicator (L.H.)
Glow Plug Indicator Lamp (-) | Turn Signal Indicator (R.H.)
NOT USE | Illumination
IGN | GND
Oil Lamp | Fuel Gauge
Charge Lamp (+)
Charge Lamp (-)
NOT USE | Coolant Temperature Gauge
NOT USE | NOT USE
NOT USE | NOT USE
NOT USE | NOT USE
Main Panel
Working Light (L.H)
HST Pedal Switch
Clutch Pedal Switch
Hazard
Tail
Rear Combination Lamp (L.H)
Hazard Turn Signal Light (L.H)
Seat Switch
Turn Over
Vacant
Seatsw
PTO Switch (Neutral)
Tail
Hazard
Rear Combination Lamp (R.H)
Hazard Turn Signal Light (R.H)
Ground
9Y1211121ELT002US

2. ELECTRICAL CIRCUIT

[1] MANUAL TRANSMISSION TYPE

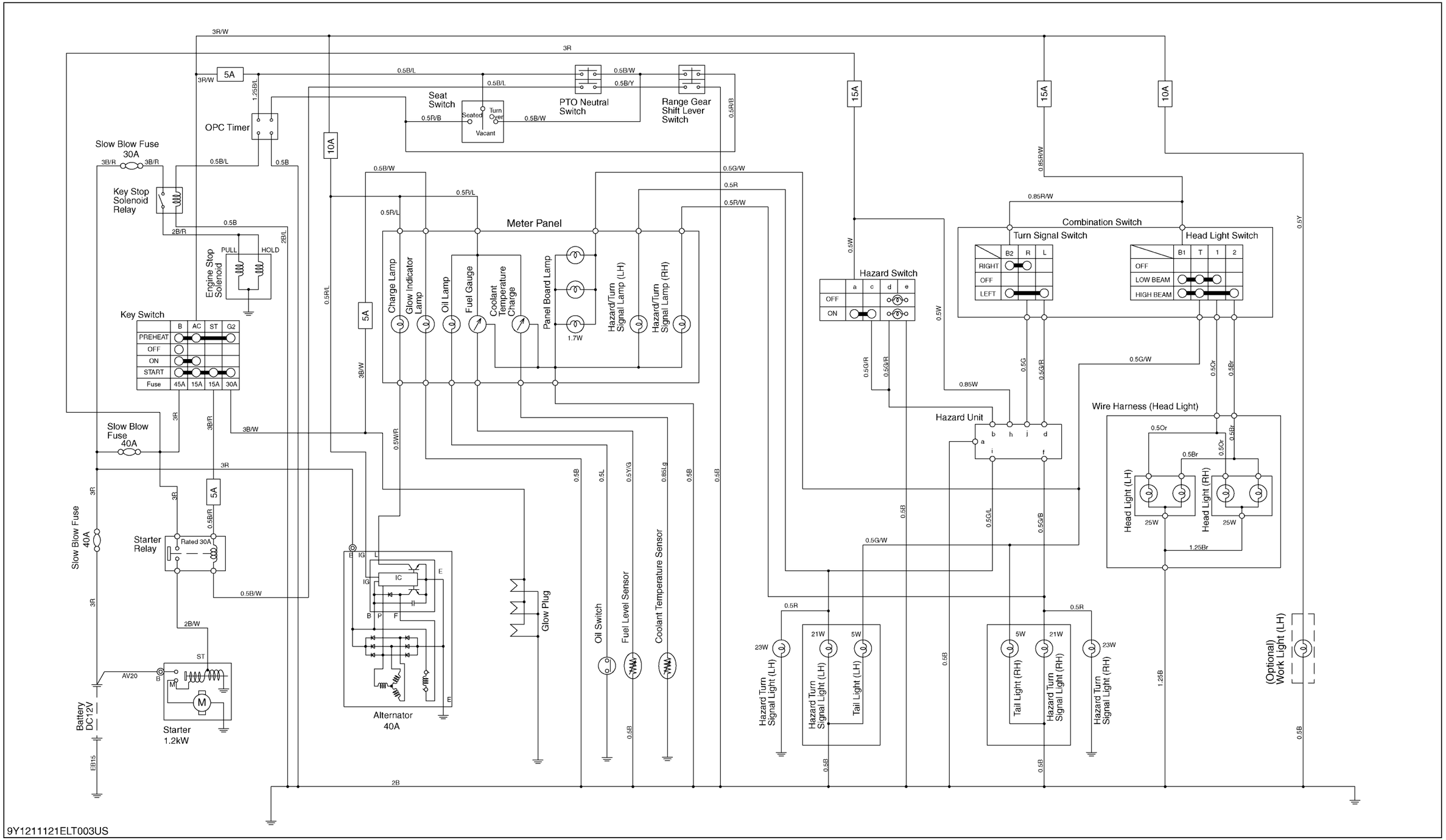

[2] HST TYPE

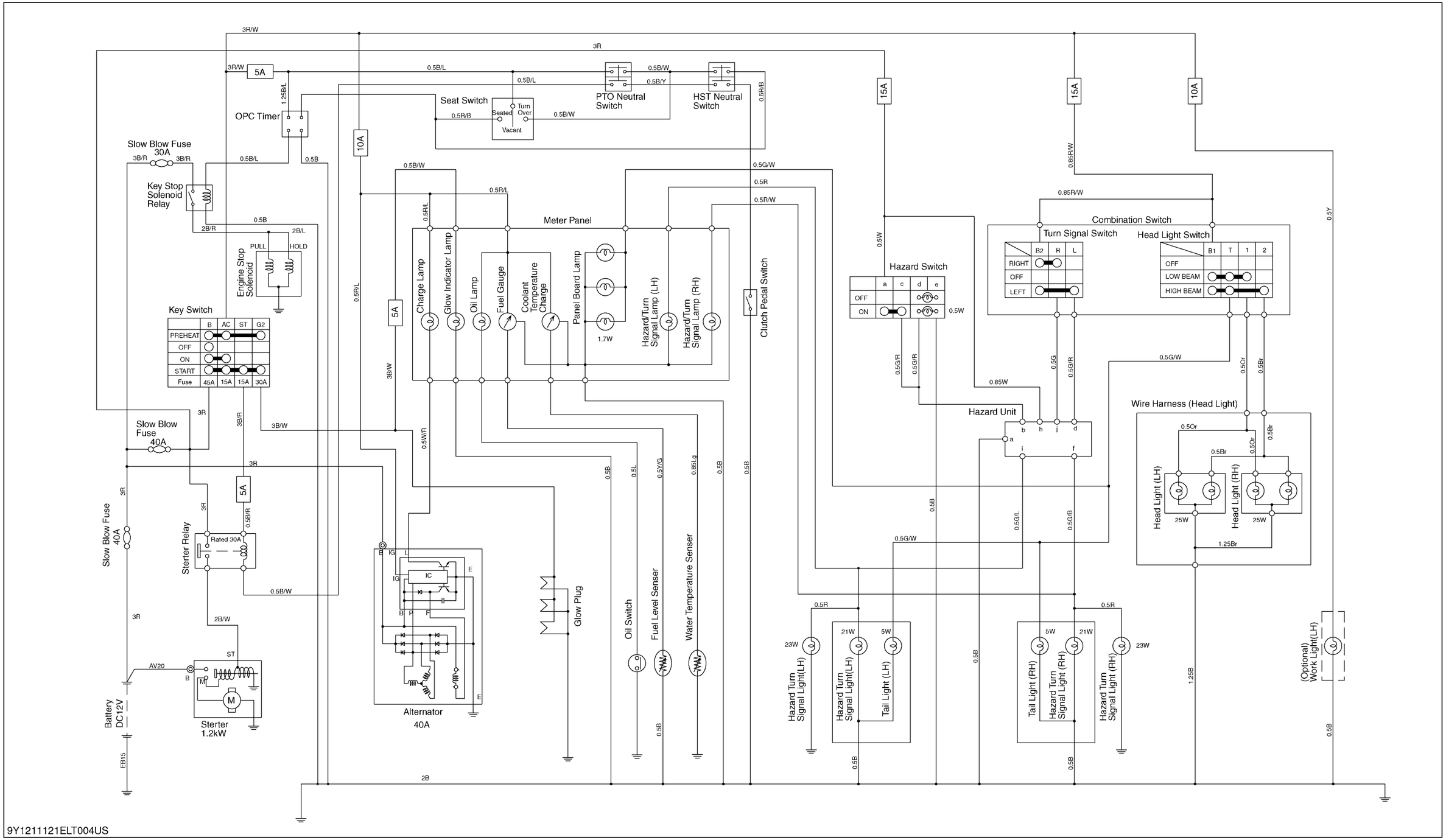

Slow Blow Fuse 30A
Key Stop Solenoid Relay
Engine Stop Solenoid
PULL
HOLD
Key Switch
PREHEAT
OFF
ON
START
Fuse
Slow Blow Fuse 40A
Sterter Relay
Rated 30A
Battery DC12V
Sterter 1.2kW
OPC Timer
Seat Switch
Seated
Turn Over
Vacant
PTO Neutral Switch
HST Neutral Switch
Meter Panel
Charge Lamp
Glow Indicator Lamp
Oil Lamp
Fuel Gauge
Coolant Temperature Charge
Panel Board Lamp
Hazard/Turn Signal Lamp (LH)
Hazard/Turn Signal Lamp (RH)
Clutch Pedal Switch
Alternator 40A
Glow Plug
Oil Switch
Fuel Level Senser
Water Temperature Senser
Hazard Switch
Combination Switch
Turn Signal Switch
Head Light Switch
RIGHT
LEFT
LOW BEAM
HIGH BEAM
Hazard Unit
Wire Harness (Head Light)
Head Light (LH)
Head Light (RH)
Hazard Turn Signal Light(LH)
Tail Light (LH)
Tail Light (RH)
Hazard Turn Signal Light (RH)
(Optional) Work Light(LH)
9Y1211121ELT004US

3. INSTRUMENT PANEL

[1] INDICATION ITEMS OF METER PANEL

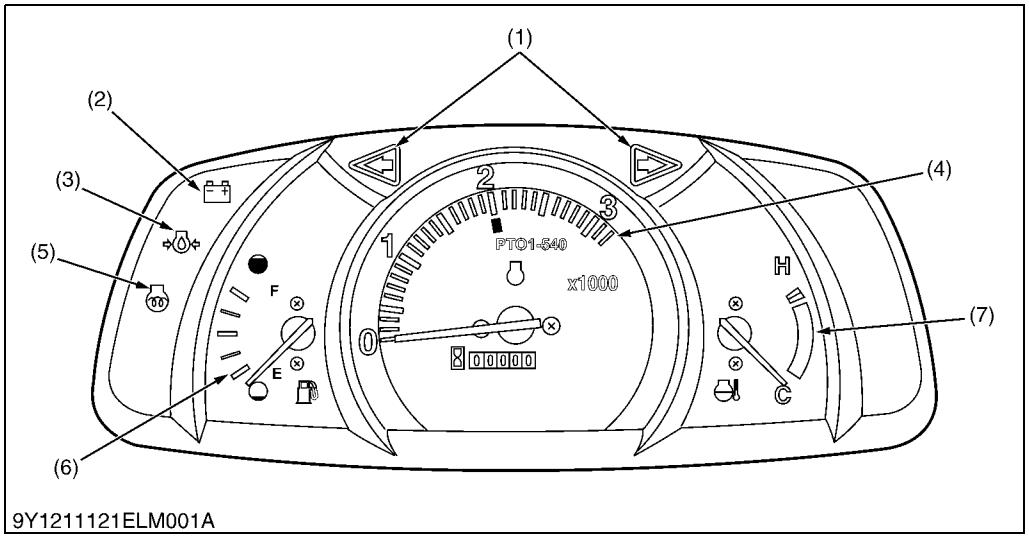

(1) Hazard/Turn Signal Indicator
(2) Electrical Charge Indicator
(3) Engine Oil Pressure Indicator
(4) Tachometer
(5) Glow Plug Indicator
(6) Fuel Gauge
(7) Coolant Temperature Gauge

9Y1211121ELM0005US0

[2] EASY CHECKER™

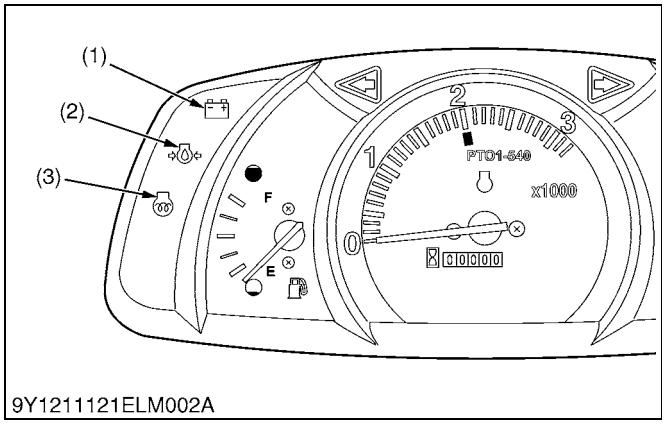

If the warning lamps in the Easy Checker™ come on during operation, immediately stop the engine, and find the cause as shown below.

Never operate the tractor while Easy Checker™ lamp is on.

■ **Engine Oil Pressure**

If the oil pressure in the engine goes below the prescribed level, the warning lamp in the Easy Checker™ will come on.

If this should happen during operation, and it does not go off when the engine is accelerated to more than 1000 min^{-1} (rpm), check level of engine oil.

■ **Glow Indicator Lamp**

If the main switch is turned to **"PREHEAT"** position, the glow indicator lamp comes on.

For the appropriate preheating time, refer to the table below.

Temperature	Preheating Time
Over 0 °C (32 °F)	2 to 3 sec.
0 to −5 °C (32 to 23 °F)	5 sec.
−5 to −15 °C (23 to 5 °F)	10 sec.

■ **Electrical Charge**

If the alternator is not charging battery, the Easy Checker™ will come on.

If this should happen during operation, check the electrical charging system.

(1) Electrical Charge Indicator
(2) Engine Oil Pressure Indicator
(3) Glow Plug Indicator

9Y1211121ELM0006US0

4. ENGINE STARTING SYSTEM

[1] ELECTRIC CIRCUIT

(1) Manual Transmission Type

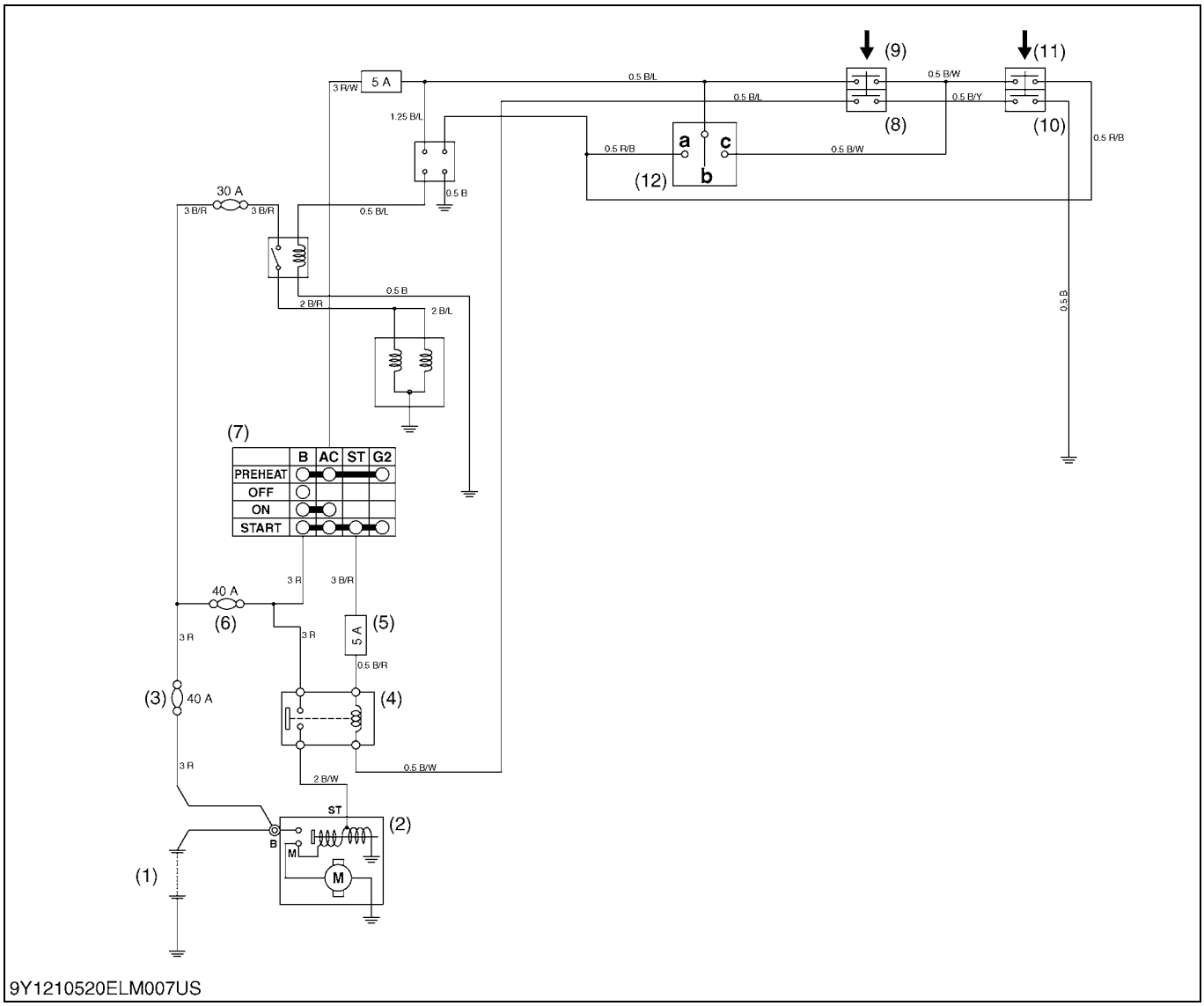

9Y1210520ELM007US

(1) Battery
(2) Starter
(3) Slow Blow Fuse (40 A)
(4) Starter Relay
(5) Fuse (5 A)
(6) Slow Blow Fuse (40 A)
(7) Key Switch
(8) PTO Switch 1
(9) PTO Switch 2
(10) Range Gear Shift Lever Switch 1
(11) Range Gear Shift Lever Switch 2
(12) Seat Switch

a: When operator sits on the seat.
b: When operator does not sit on the seat (When operator gets up from the seat).
c: When seat is tilted forward.

(To be continued)

(Continued)

	PTO Lever	Range Gear Shift Lever	Engine Starting
No.	• Disengaged : PTO neutral switch **"ON"** • Engaged : PTO neutral switch **"OFF"**	• Shift to **"High"** or **"Low"** or **"Reverse"** position : Range gear shift lever switch **"OFF"** • Shift to **"Neutral"** position: Range gear shift lever switch **"ON"**	• Can start: Battery current through three safety switches to starter relay and starter • Can not start: No Battery current to starter relay and starter
1	Disengaged	Neutral	Can start
2	Disengaged	High or Low or Reverse	Can not start
3	Engaged	Neutral	Can not start
4	Engaged	High or Low or Reverse	Can not start

When the PTO lever is set to **"Disengaged"** position and the range gear shift lever is set to **"Neutral"** position, the engine can be started.

9Y1211121ELM0007US0

(2) HST Type

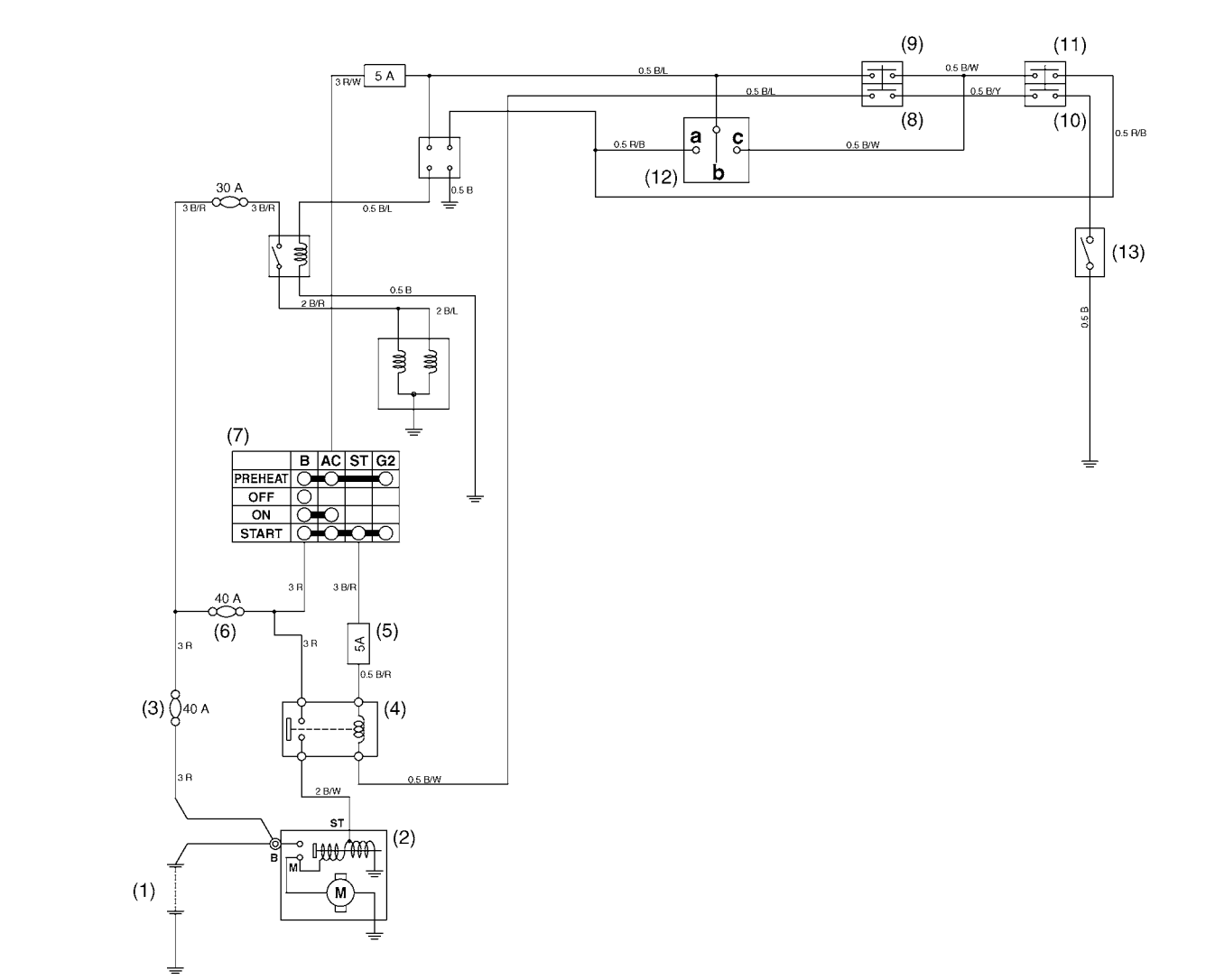

9Y1210520ELM008US

(1) Battery
(2) Starter
(3) Slow Blow Fuse (40 A)
(4) Starter Relay
(5) Fuse (5A)
(6) Slow Blow Fuse (40 A)
(7) Key Switch
(8) PTO Switch 1
(9) PTO Switch 2
(10) HST Switch 1
(11) HST Switch 2
(12) Seat Switch
(13) Clutch Switch

a: When operator sits on the seat.
b: When operator does not sit on the seat (When operator gets up from the seat).
c: When seat is tilted forward.

(To be continued)

(Continued)

	PTO Lever	HST Pedal	Clutch Pedal	Engine Starting
No.	• Disengaged : Switch **"ON"** • Engaged : Switch **"OFF"**	• Neutral : Switch **"ON"** • Forward or Reverse : Switch **"OFF"**	• Depressed : Switch **"ON"** • Not depressed : Switch **"OFF"**	• Can start: Battery current through three safety switches to starter relay and starter • Can not start: No Battery current to starter relay and starter
1	Disengaged	Neutral	Depressed	Can start
2	Disengaged	Neutral	Not depressed	Can not start
3	Disengaged	Forward or Reverse	Not depressed	Can not start
4	Engaged	Neutral	Depressed	Can not start
5	Engaged	Forward or Reverse	Not depressed	Can not start

When the PTO lever is set to **"Disengaged"** position, the HST pedal is set to **"Neutral"** position and the clutch pedal is depressed, the engine can be started.

9Y1211121ELM0008US0

[2] SAFETY SWITCH

(1) Manual Transmission Type

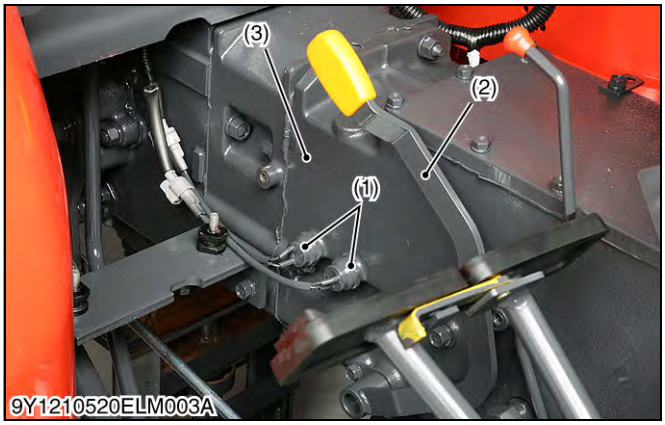

PTO Gear Shift Lever Switch

PTO gear shift lever switch (1) is mounted on the clutch housing case (3).

When the PTO gear shift lever (2) is set to **"OFF"** position, the switch is turned to **"ON"**.

It serves as a safety switch of engine starting and OPC system.

(1) PTO Gear Shift Lever Switch
(2) PTO Gear Shift Lever
(3) Clutch Housing Case

9Y1211121ELM0009US0

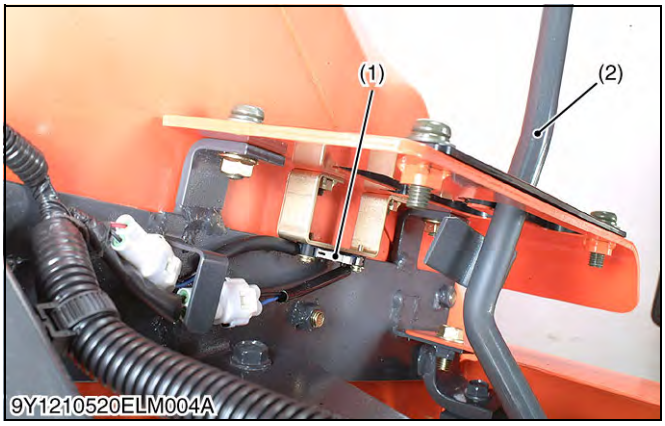

Range Gear Shift Lever Switch

Range gear shift lever switch (1) is mounted on the switch stay under the guide.

When the range gear shift lever (2) is set to **"Neutral"** position, the switch is turned to **"ON"**.

It serves as a safety switch of engine starting.

(1) Range Gear Shift lever Switch
(2) Range Gear Shift lever

9Y1211121ELM0010US0

(2) HST Type

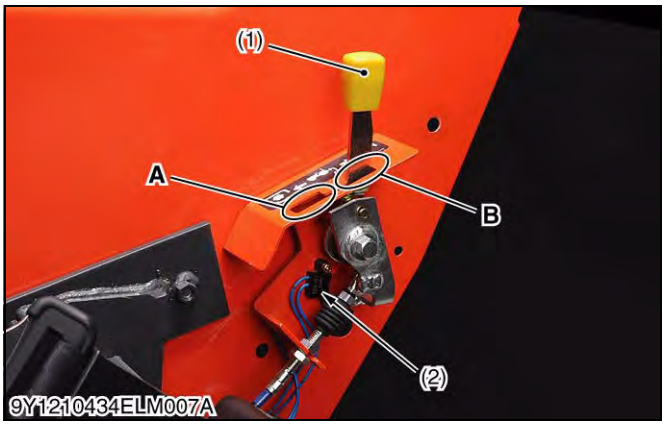

PTO Switch

PTO switch (2) is mounted on the PTO shift lever stay.

It serves as a safety switch of engine starting and OPC system.

(1) PTO Shift Lever
(2) PTO Switch

A: "Engaged" position
B: "Disengaged" position

9Y1211121ELM0011US0

HST Switch

HST switch (1) is mounted on the holder with steering support (2).

When the HST pedal is set to **"Neutral"** position, the switch is turned to **"ON"**.

HST switch (1) serves as a safety switch of engine starting and OPC system.

(1) HST Switch
(2) Steering Support
(3) Holder (HST Pedal Switch)
(4) Clutch Housing Case

9Y1211121ELM0012US0

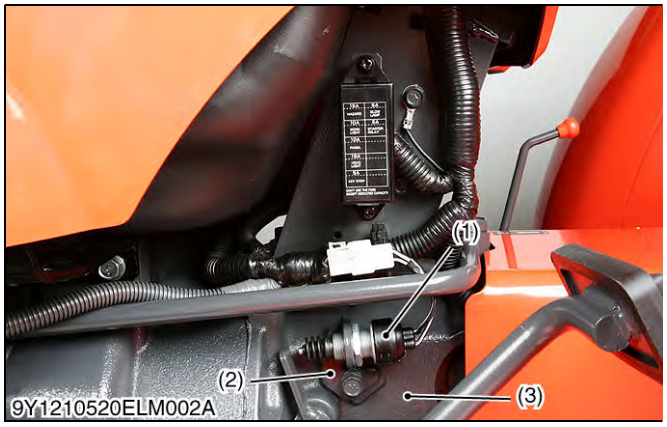

Clutch Switch

Clutch switch (1) is mounted on the bracket (2) with the clutch housing case (3).

The clutch switch (1) is turned to **"ON"** when the clutch pedal is depressed.

It serves as a safety switch of engine starting.

(1) Clutch Switch
(2) Bracket (Clutch Switch)
(3) Clutch Housing Case

9Y1211121ELM0013US0

5. OPERATOR PRESENCE CONTROL (OPC) SYSTEM

[1] ELECTRICAL CIRCUIT

(1) Manual Transmission Type

This tractor is equipped with Operator Presence Control (OPC) system which automatically stops the engine when operator stands up from the seat while shifting the PTO lever.

The system is controlled by a seat switch (13), OPC timer (11), key stop solenoid relay (9), key stop solenoid (8), PTO switch (14), (15) and range gear shift lever switch (16), (17).

9Y1211121ELM0014US0

Engine Does Not Stop (Case 1)

- PTO Gear Shift Lever: **"OFF"**
- Range Gear Shift Lever: **"Neutral"**
- Seat: **"When Operator Sits on the Seat"**

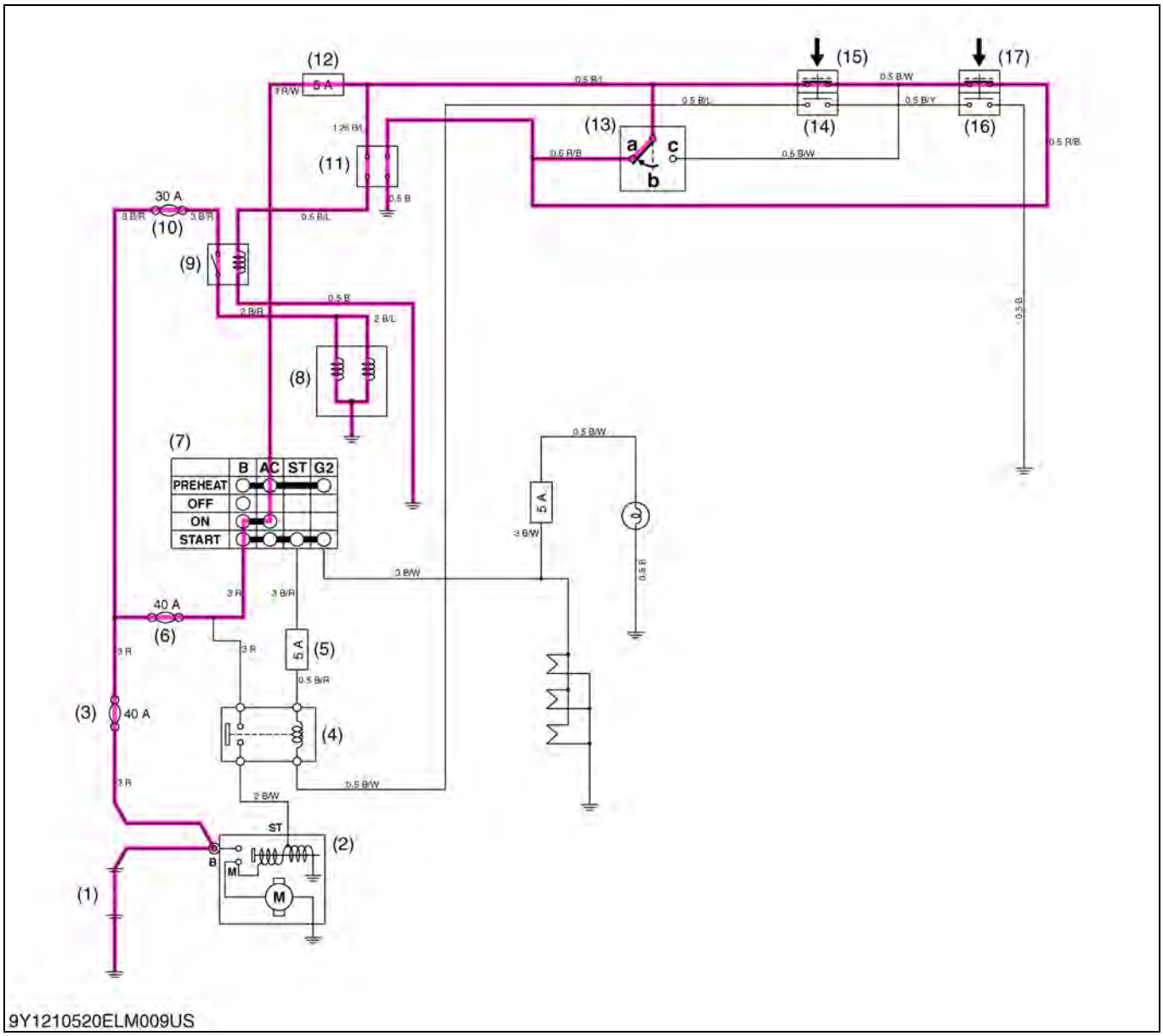

(1) Battery
(2) Starter
(3) Slow Blow Fuse (40 A)
(4) Starter Relay
(5) Fuse (5 A)
(6) Slow Blow Fuse (40 A)
(7) Key Switch
(8) Key Stop Solenoid
(9) Key Stop Solenoid Relay
(10) Slow Blow Fuse (30 A)
(11) OPC Timer
(12) Fuse (5 A)
(13) Seat Switch
(14) PTO Switch 1
(15) PTO Switch 2
(16) Range Gear Shift Lever Switch 1
(17) Range Gear Shift Lever Switch 2

a: When operator sits on the seat.
b: When operator does not sit on the seat (When operator gets up from the seat).
c: When seat is tilted forward.

(To be continued)

(Continued)

The operator presence control (OPC) system which automatically stops the engine when operator stands up from the seat while shifting the PTO shift lever or range gear shift lever.

This system is controlled by the seat switch (13), the PTO switch 1 (14), the range gear shift lever switch 1 (16), the OPC timer (11), the key stop solenoid relay (9) and the key stop solenoid (8).

1. When sitting on the seat in the state of the key switch (7) **"ON"**, the battery voltage passes the seat switch (13) and the OPC timer (11), and maintains the key stop solenoid relay (9).
2. When standing up from the operator's seat, the circuit from the seat switch (13) to the OPC timer (11) is cut. However, if the PTO shift lever (or seat is tilted forward) and the range gear shift lever is set to **"Neutral"** position, the circuit from the battery (1) to the key stop solenoid relay (9) is formed with the PTO switch 1 (14), the seat switch (13) and the range gear shift lever switch 1 (16).
3. When standing up from the seat while shifting the PTO gear shift lever and the range gear shift lever, the circuit from the battery (1) to the key stop solenoid relay (9) is cut, and the engine is stopped by function of the key stop solenoid (8).

9Y1211121ELM0015US0

: Engine Stops (Case 2)

- PTO Gear Shift Lever: **"OFF"**
- Range Gear Shift Lever: **"Forward"** or **"Reverse"**
- Seat: **"When Operator Does Not Sit on the Seat"**

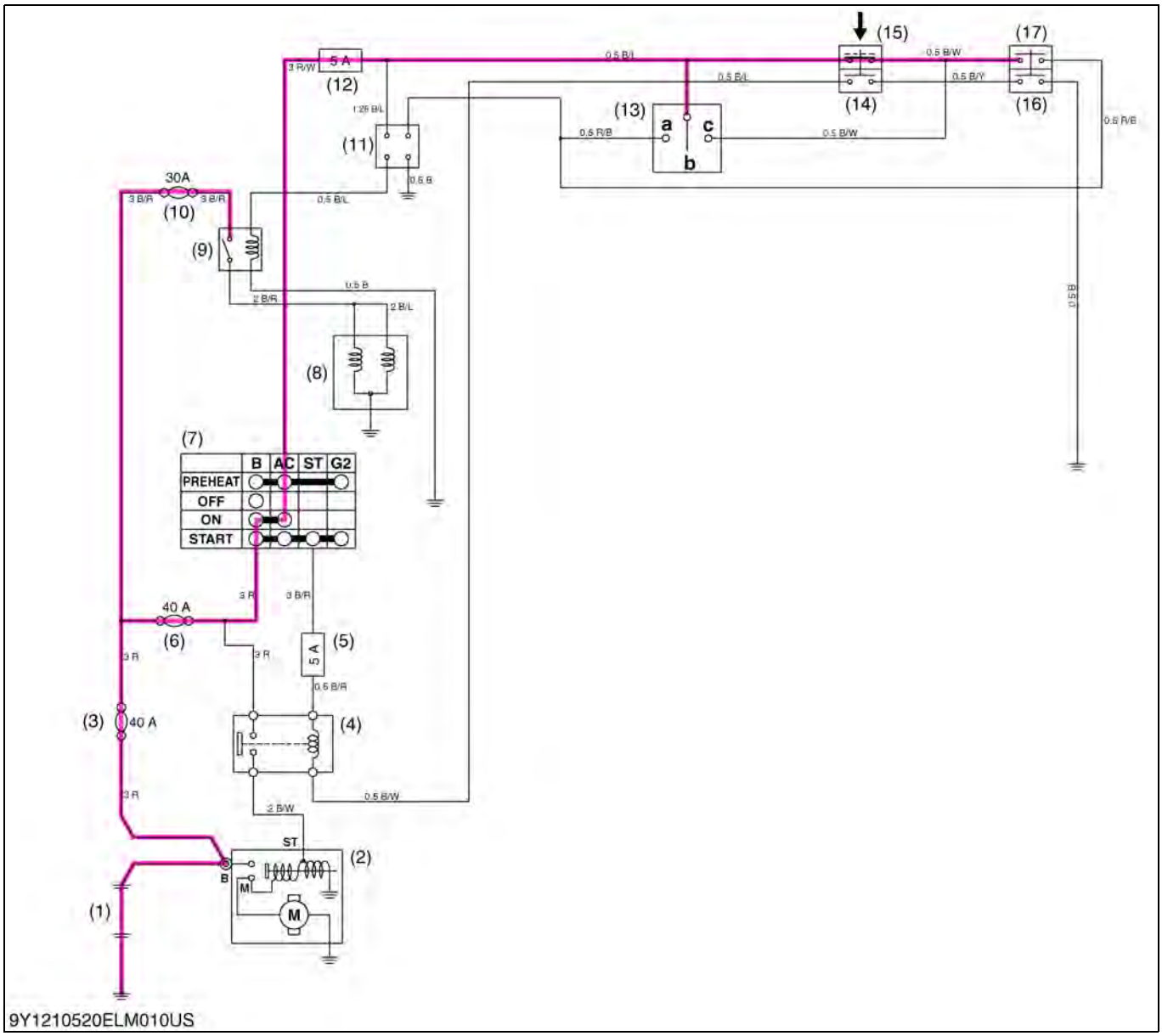

(1) Battery
(2) Starter
(3) Slow Blow Fuse (40 A)
(4) Starter Relay
(5) Fuse (5 A)
(6) Slow Blow Fuse (40 A)
(7) Key Switch
(8) Key Stop Solenoid
(9) Key Stop Solenoid Relay
(10) Slow Blow Fuse (30 A)
(11) OPC Timer
(12) Fuse (5 A)
(13) Seat Switch
(14) PTO Switch 1
(15) PTO Switch 2
(16) Range Gear Shift Lever Switch 1
(17) Range Gear Shift Lever Switch 2

a: When operator sits on the seat.
b: When operator does not sit on the seat (When operator gets up from the seat).
c: When seat is tilted forward.

(To be continued)

(Continued)

PTO lever at **"OFF"**	PTO switch 2 (15) at **"ON"**
Range gear shift lever **"High"** or **"Low"** or **"Reverse"**	Range gear shift lever switch 1 (16) **"OFF"**
Seat **"When Operator Does Not Sit on the Seat"**	Seat switch (13) **"OFF"**
OPC timer (11)	OPC timer switch (11) **"OFF"**
Key stop solenoid relay (9)	Key stop solenoid relay (9) switch **"OFF"**
Key stop solenoid (8)	Not energized
Engine	Running stops (injection pump control rack is pushed to fuel **"0"** fuel injection position by the key stop solenoid.)

As shown in the above electric circuit, the battery voltage does not flow to the key stop solenoid. And the pulling and the holding coil in the key stop solenoid is not electrical magnet. The spring in the key stop solenoid pushes the push rod and the injection pump control rack to **"0"** fuel injection position. And the engine stops immediately.

9Y1211121ELM0016US0

Engine Stops (Case 3)

- PTO Gear Shift Lever: **"ON"**
- Range Gear Shift Lever: **"Neutral"**
- Seat: **"When Operator Does Not Sit on the Seat"**

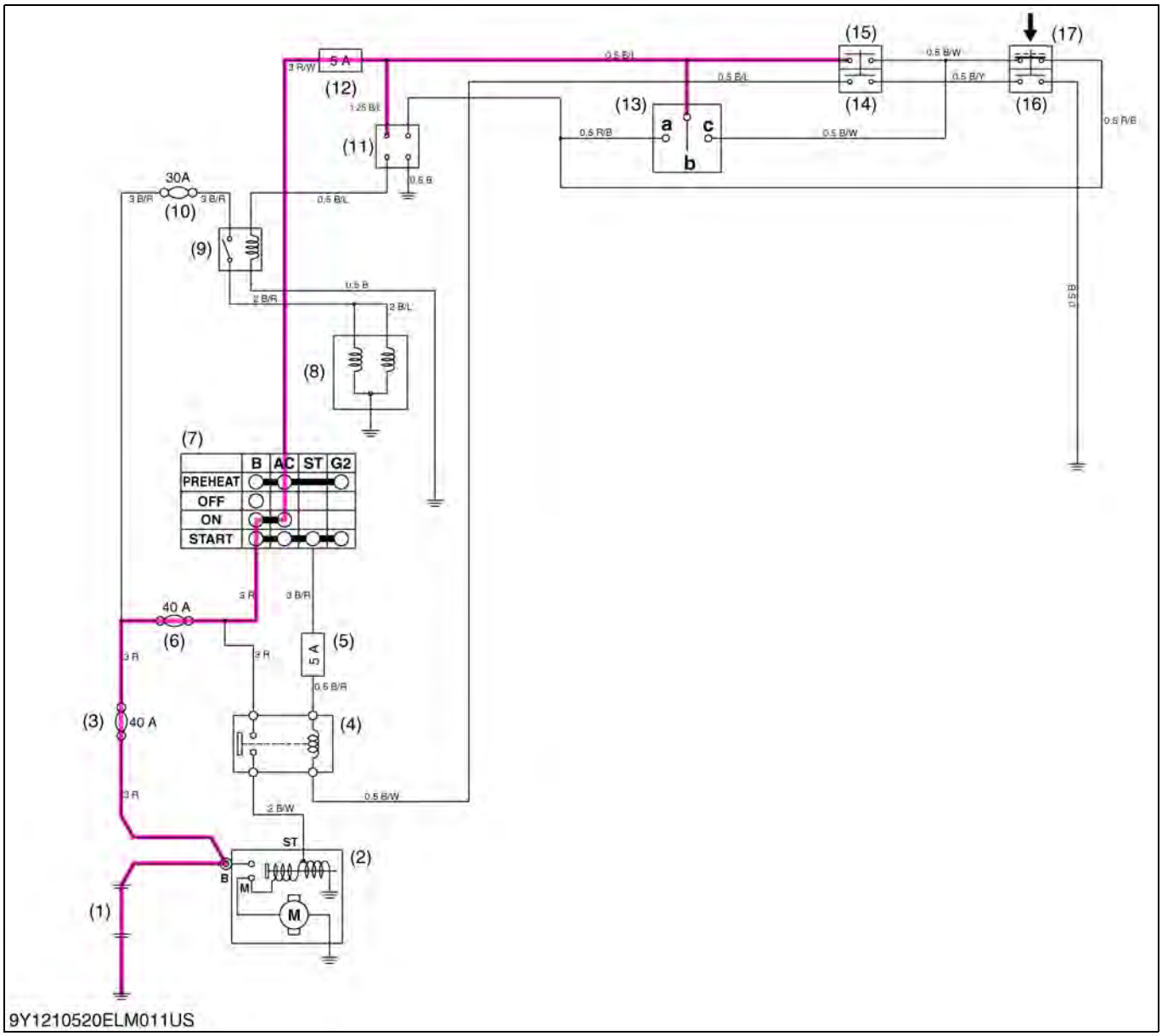

(1) Battery
(2) Starter
(3) Slow Blow Fuse (40 A)
(4) Starter Relay
(5) Fuse (5 A)
(6) Slow Blow Fuse (40 A)
(7) Key Switch
(8) Key Stop Solenoid
(9) Key Stop Solenoid Relay
(10) Slow Blow Fuse (30 A)
(11) OPC Timer
(12) Fuse (5 A)
(13) Seat Switch
(14) PTO Switch 1
(15) PTO Switch 2
(16) Range Gear Shift Lever Switch 1
(17) Range Gear Shift Lever Switch 2

a: When operator sits on the seat.
b: When operator does not sit on the seat (When operator gets up from the seat).
c: When seat is tilted forward.

(To be continued)

(Continued)

PTO lever at **"ON"**	PTO switch 2 (15) **"OFF"**
Range gear shift lever **"Neutral"**	Range gear shift lever switch 1 (16) **"ON"**
Seat **"When operator does not set on the seat"**	Seat switch (13) **"OFF"**
OPC timer (11)	OPC timer switch (11) **"OFF"**
Key stop solenoid relay (9)	Key stop solenoid relay (9) switch **"OFF"**
Key stop solenoid (8)	Not energized
Engine	Running stops (injection pump control rack is pushed to fuel **"0"** fuel injection position by the key stop solenoid.)

As shown in the above electric circuit, the battery voltage does not flow to the key stop solenoid. And the pulling and the holding coil in the key stop solenoid is not electrical magnet. The spring in the key stop solenoid pushes the push rod and the injection pump control rack to **"0"** fuel injection position. And the engine stops immediately.

9Y1211121ELM0017US0

Engine Does Not Stop (Case 4)

- PTO Gear Shift Lever: **"OFF"**
- Range Gear Shift Lever: **"Neutral"**
- Seat: **"When Operator Does Not Sit on the Seat"**

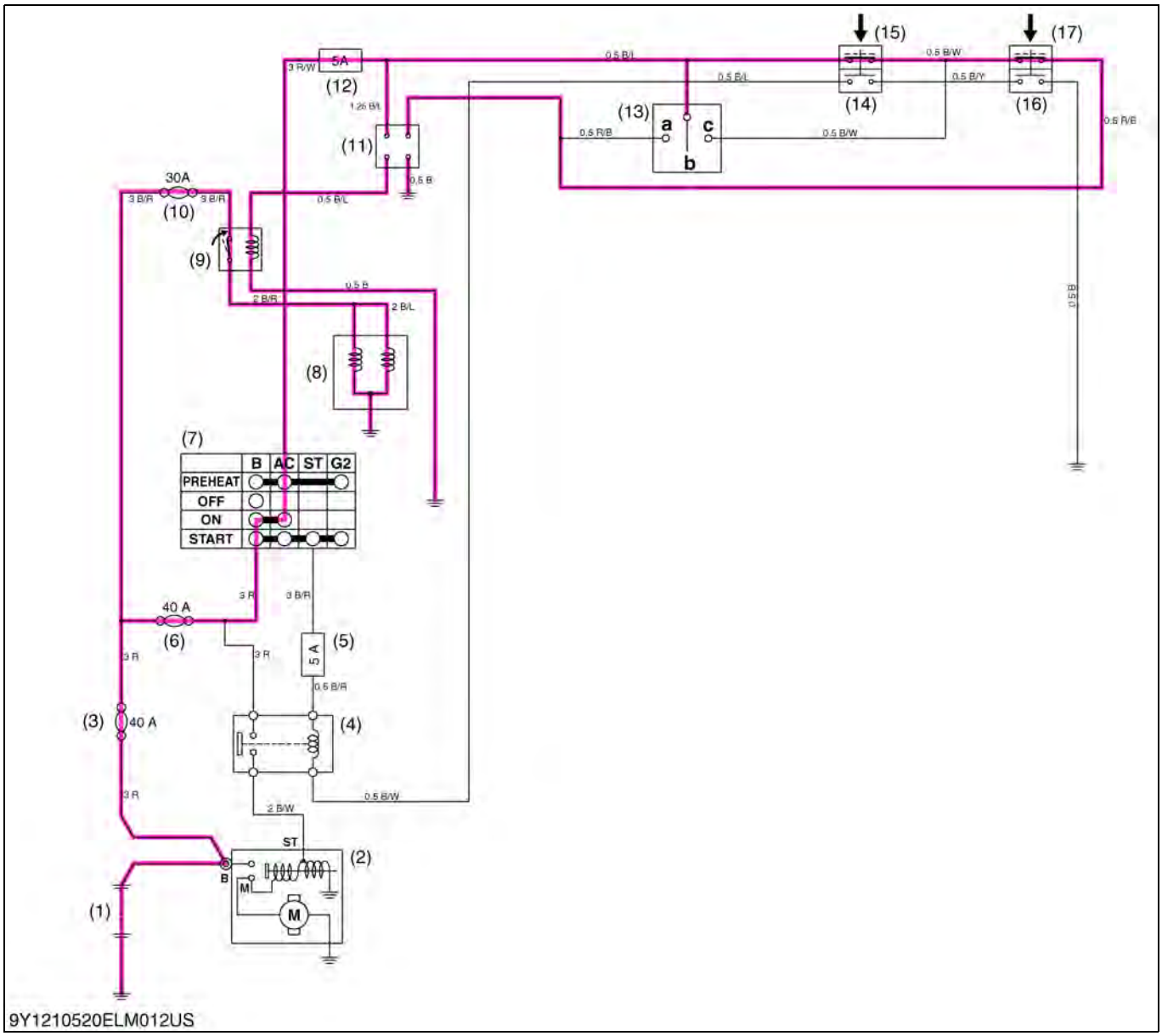

(1) Battery
(2) Starter
(3) Slow Blow Fuse (40 A)
(4) Starter Relay
(5) Fuse (5 A)
(6) Slow Blow Fuse (40 A)
(7) Key Switch
(8) Key Stop Solenoid
(9) Key Stop Solenoid Relay
(10) Slow Blow Fuse (30 A)
(11) OPC Timer
(12) Fuse (5 A)
(13) Seat Switch
(14) PTO Switch 1
(15) PTO Switch 2
(16) Range Gear Shift Lever Switch 1
(17) Range Gear Shift Lever Switch 2

a: When operator sits on the seat.
b: When operator does not sit on the seat (When operator gets up from the seat).
c: When seat is tilted forward.

(To be continued)

(Continued)

PTO lever at **"OFF"**	PTO switch 2 (15) **"ON"**
Range gear shift lever **"Neutral"**	Range gear shift lever switch 1 (16) **"ON"**
Seat **"When operator does not set on the seat"**	Seat switch (13) **"OFF"**
OPC timer (11)	OPC timer switch (11) **"ON"**
Key stop solenoid relay (9)	Key stop solenoid relay (9) switch **"ON"**
Key stop solenoid (8)	Energized
Engine	Engine does not stop (injection pump control rack is not pushed to fuel **"0"** fuel injection position by the key stop solenoid.)

As shown in the above electric circuit, the battery voltage flows to the key stop solenoid. And the pulling and the holding coil in the key stop solenoid is electrical magnet. The spring in the key stop solenoid is pulled, the key stop solenoid rod does not push the injection pump control rack to **"0"** fuel injection position. And the engine still runs.

9Y1211121ELM0018US0

Engine Does Not Stop (Case 5)

- PTO Gear Shift Lever: **"ON"**
- Range Gear Shift Lever: **"Neutral"**
- Seat: **"When Operator Gets Up from the Seat"**

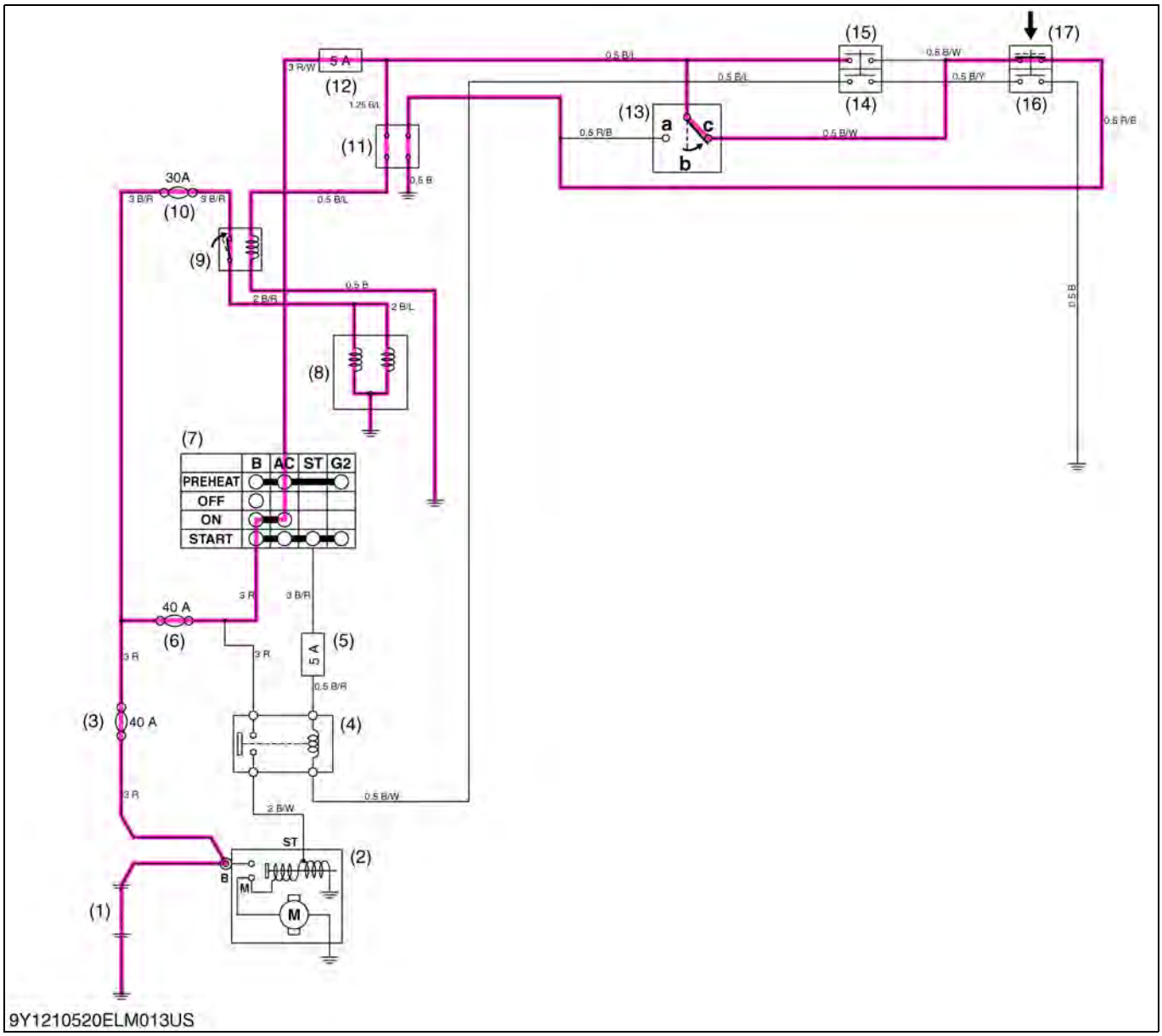

(1) Battery
(2) Starter
(3) Slow Blow Fuse (40 A)
(4) Starter Relay
(5) Fuse (5 A)
(6) Slow Blow Fuse (40 A)
(7) Key Switch
(8) Key Stop Solenoid
(9) Key Stop Solenoid Relay
(10) Slow Blow Fuse (30 A)
(11) OPC Timer
(12) Fuse (5 A)
(13) Seat Switch
(14) PTO Switch 1
(15) PTO Switch 2
(16) Range Gear Shift Lever Switch 1
(17) Range Gear Shift Lever Switch 2

a: When operator sits on the seat.
b: When operator does not sit on the seat (When operator gets up from the seat).
c: When seat is tilted forward.

(To be continued)

(Continued)

PTO lever at **"ON"**	PTO switch 2 (15) **"OFF"**
Range gear shift lever **"Neutral"**	Range gear shift lever switch 1 (15) **"ON"**
Seat **"When operator gets up from the seat"**	Seat switch (13) **"ON"**
OPC timer (11)	OPC timer switch (11) **"ON"**
Key stop solenoid relay (9)	Key stop solenoid relay (9) switch **"ON"**
Key stop solenoid (8)	Energized
Engine	Engine does not stop (injection pump control rack is not pushed to fuel **"0"** fuel injection position by the key stop solenoid.)

As shown in the above electric circuit, the battery voltage flows to the key stop solenoid. And the pulling and the holding coil in the key stop solenoid is electrical magnet. The spring in the key stop solenoid is pulled, the key stop solenoid rod does not push the injection pump control rack to **"0"** fuel injection position. And the engine still runs.

9Y1211121ELM0019US0

(2) HST Type

This tractor is equipped with Operator Presence Control (OPC) system which automatically stops the engine when operator stands up from the seat while shifting the PTO lever or the HST pedal.

The system is controlled by a seat switch (13), OPC timer (11), key stop solenoid relay (9), key stop solenoid (8), PTO neutral switch (14), (15) and HST switch (16), (17).

9Y1211121ELM0020US0

Engine Does Not Stop (Case 1)

- PTO gear shift lever: **"OFF"**
- HST pedal: **"Neutral"**
- Seat: **"When operator sits on the seat"**

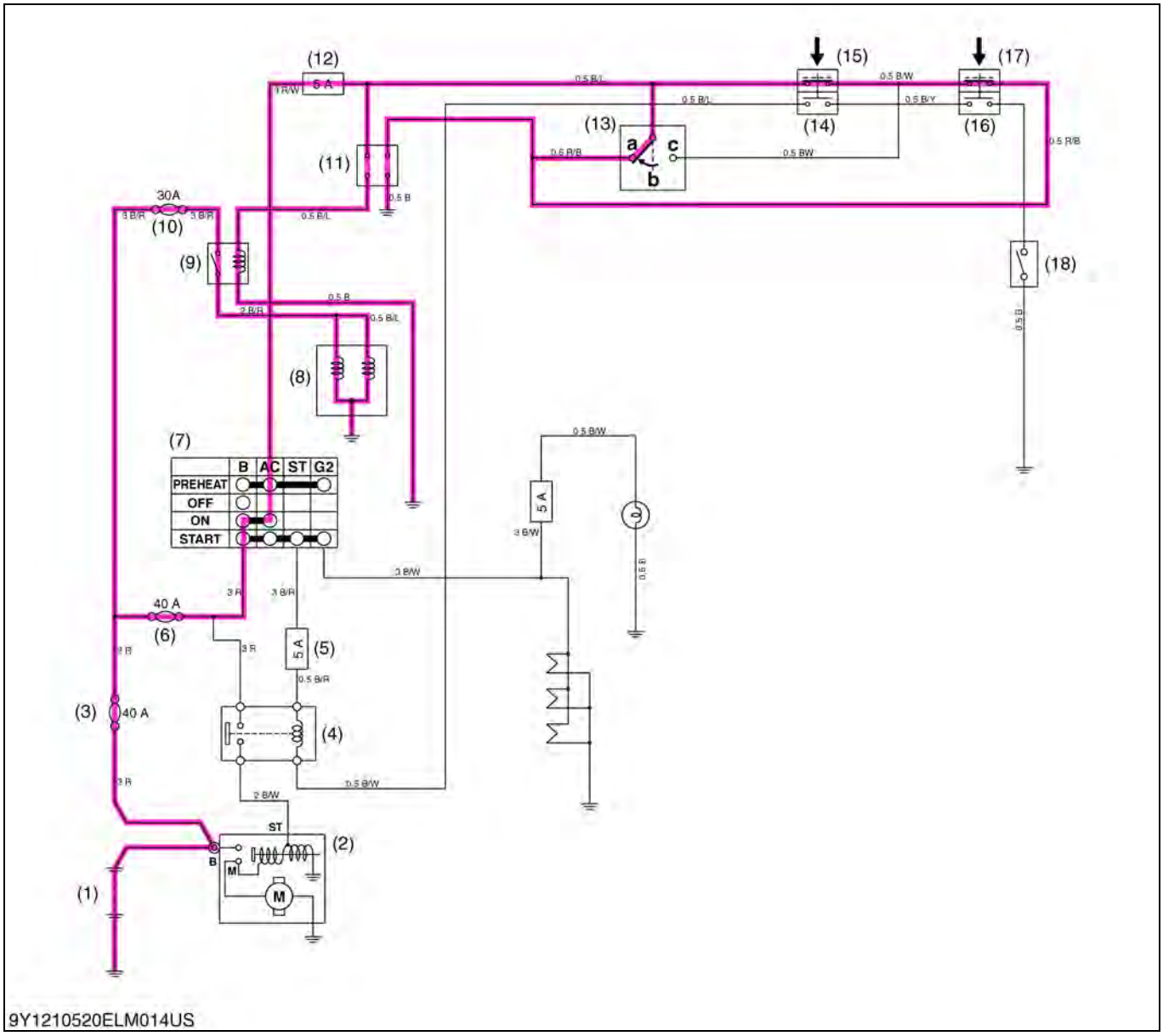

(1)	Battery	(7)	Key Switch	(13)	Seat Switch	**a:**	**When operator sits on the seat.**
(2)	Starter	(8)	Engine Stop Solenoid	(14)	PTO Switch 1	**b:**	**When operator does not sit on the seat (When operator gets up from the seat)**
(3)	Slow Blow Fuse (40 A)	(9)	Engine Stop Solenoid Relay	(15)	PTO Switch 2	**c:**	**When seat is tilted forward**
(4)	Starter Relay	(10)	Slow Blow Fuse (30 A)	(16)	HST Switch 1		
(5)	Fuse (5 A)	(11)	OPC Timer	(17)	HST Switch 2		
(6)	Slow Blow Fuse (40 A)	(12)	Fuse (5 A)	(18)	Clutch Switch		

■ **NOTE**

- **PTO switch is "ON" when PTO lever is in "OFF" position.**
- **HST neutral switch is "ON" when HST pedal is in "Neutral" position.**

9Y1211121ELM0021US0

Engine Stops (Case 2)

- PTO gear shift lever: **"OFF"**
- HST pedal: **"Forward"** or **"Reverse"**
- Seat: **"When operator does not sit on the seat"**

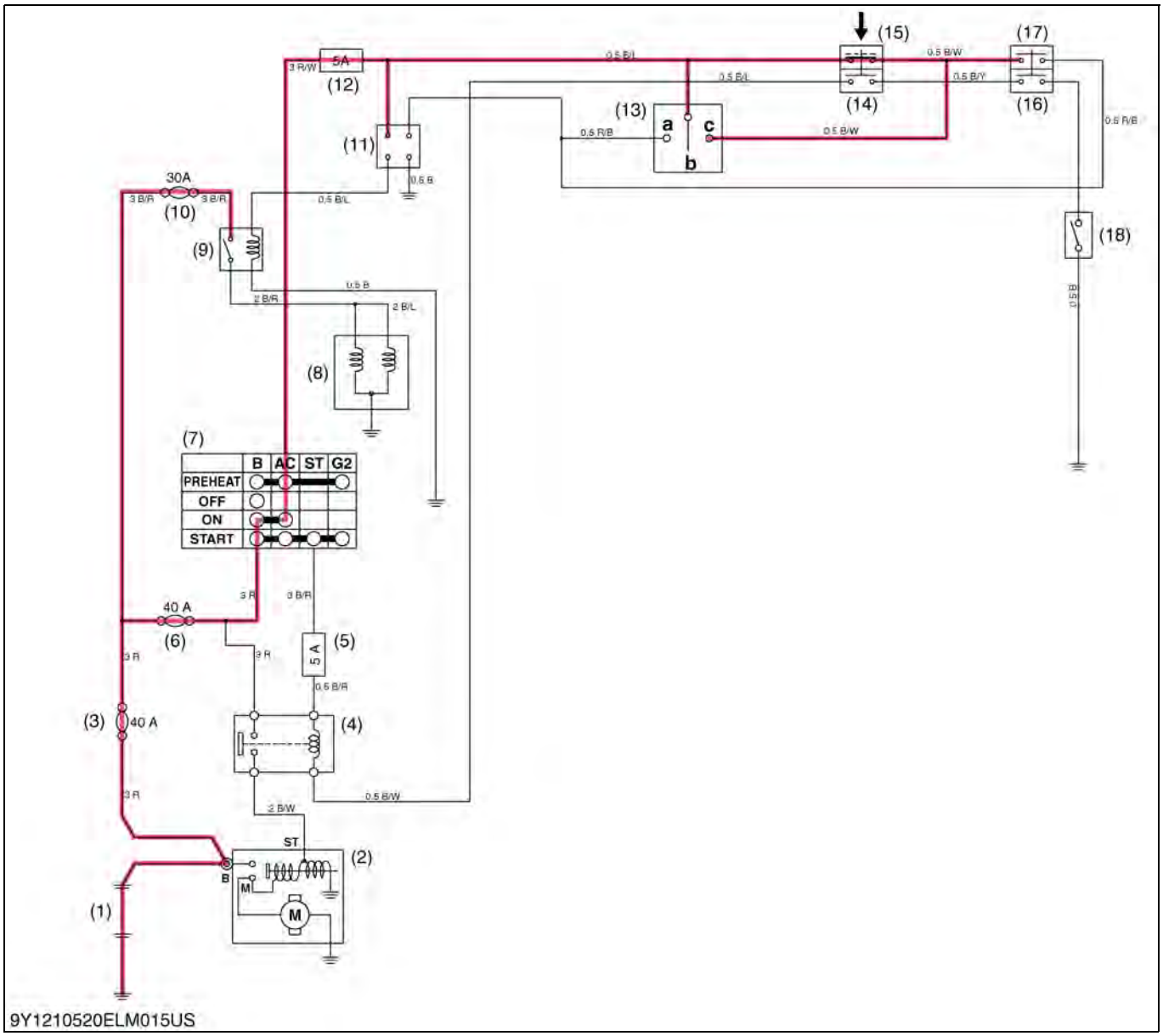

(1)	Battery	(7)	Key Switch	(13)	Seat Switch	**a:**	**When operator sits on the seat.**
(2)	Starter	(8)	Engine Stop Solenoid	(14)	PTO Switch 1	**b:**	**When operator does not sit on the seat (When operator gets up from the seat)**
(3)	Slow Blow Fuse (40 A)	(9)	Engine Stop Solenoid Relay	(15)	PTO Switch 2	**c:**	**When seat is tilted forward**
(4)	Starter Relay	(10)	Slow Blow Fuse (30 A)	(16)	HST Switch 1		
(5)	Fuse (5 A)	(11)	OPC Timer	(17)	HST Switch 2		
(6)	Slow Blow Fuse (40 A)	(12)	Fuse (5 A)	(18)	Clutch Switch		

(To be continued)

(Continued)

PTO shift lever at **"OFF"**	PTO switch 2 (15) at **"ON"**
HST pedal shift lever **"Forward"** or **"Reverse"**	HST switch 1 (16) **"OFF"**
Seat **"When operator does not sit on the seat"**	Seat switch (13) **"OFF"**
OPC timer (11)	OPC timer switch (11) **"OFF"**
Key stop solenoid relay (9)	Key stop solenoid relay (9) switch **"OFF"**
Key stop solenoid (8)	Not energized
Engine	Running stops (injection pump control rack is pushed to fuel **"0"** fuel injection position by the key stop solenoid.)

As shown in the above electric circuit, the battery voltage does not flow to the key stop solenoid. And the pulling and the holding coil in the key stop solenoid is not electrical magnet. The spring in the key stop solenoid pushes the push rod and the injection pump control rack to **"0"** fuel injection position. And the engine stops immediately.

9Y1211121ELM0022US0

Engine Stops (Case 3)

- PTO gear shift lever: **"OFF"**
- HST pedal: **"Neutral"**
- Seat: **"When operator does not sit on the seat"**

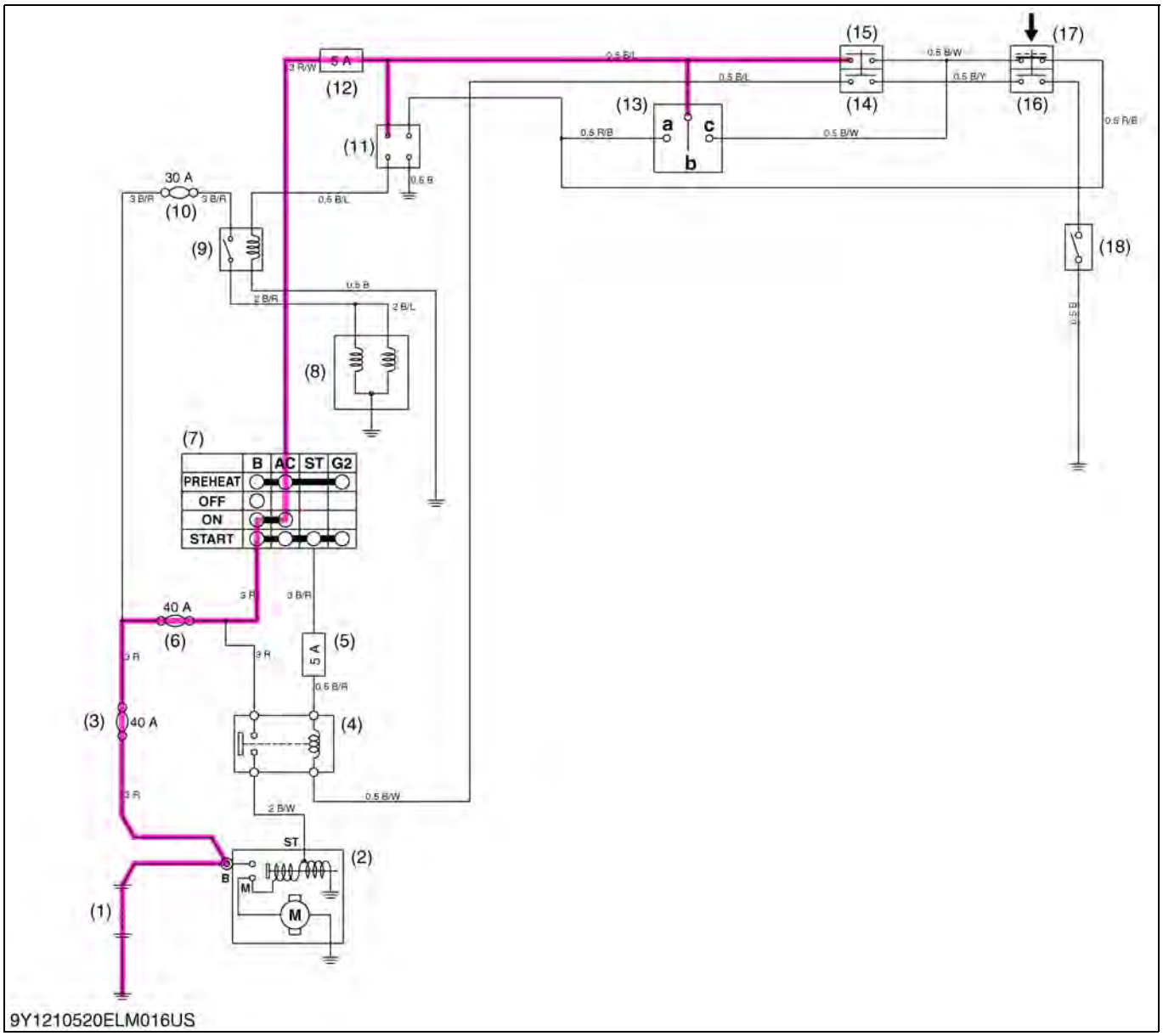

(1)	Battery	(7)	Key Switch	(13)	Seat Switch	**a:**	**When operator sits on the seat.**
(2)	Starter	(8)	Engine Stop Solenoid	(14)	PTO Switch 1	**b:**	**When operator does not sit on the seat (When operator gets up from the seat)**
(3)	Slow Blow Fuse (40 A)	(9)	Engine Stop Solenoid Relay	(15)	PTO Switch 2	**c:**	**When seat is tilted forward**
(4)	Starter Relay	(10)	Slow Blow Fuse (30 A)	(16)	HST Switch 1		
(5)	Fuse (5 A)	(11)	OPC Timer	(17)	HST Switch 2		
(6)	Slow Blow Fuse (40 A)	(12)	Fuse (5 A)	(18)	Clutch Switch		

(To be continued)

(Continued)

PTO shift lever at **"ON"**	PTO switch 2 (15) **"OFF"**
PTO pedal **"Neutral"**	HST switch 1 (16) **"ON"**
Seat **"When operator does not sit on the seat"**	Seat switch (13) **"OFF"**
OPC timer (11)	OPC timer switch (11) **"OFF"**
Key stop solenoid relay (9)	Key stop solenoid relay (9) switch **"OFF"**
Key stop solenoid (8)	Not energized
Engine	Running stops (injection pump control rack is pushed to fuel **"0"** fuel injection position by the key stop solenoid.)

As shown in the above electric circuit, the battery voltage does not flow to the key stop solenoid. And the pulling and the holding coil in the key stop solenoid is not electrical magnet. The spring in the key stop solenoid pushes the push rod and the injection pump control rack to **"0"** fuel injection position. And the engine stops immediately.

9Y1211121ELM0023US0

Engine Does Not Stop (Case 4)

- PTO gear shift lever: **"OFF"**
- HST pedal: **"Neutral"**
- Seat: **"When operator does not sit on the seat"**

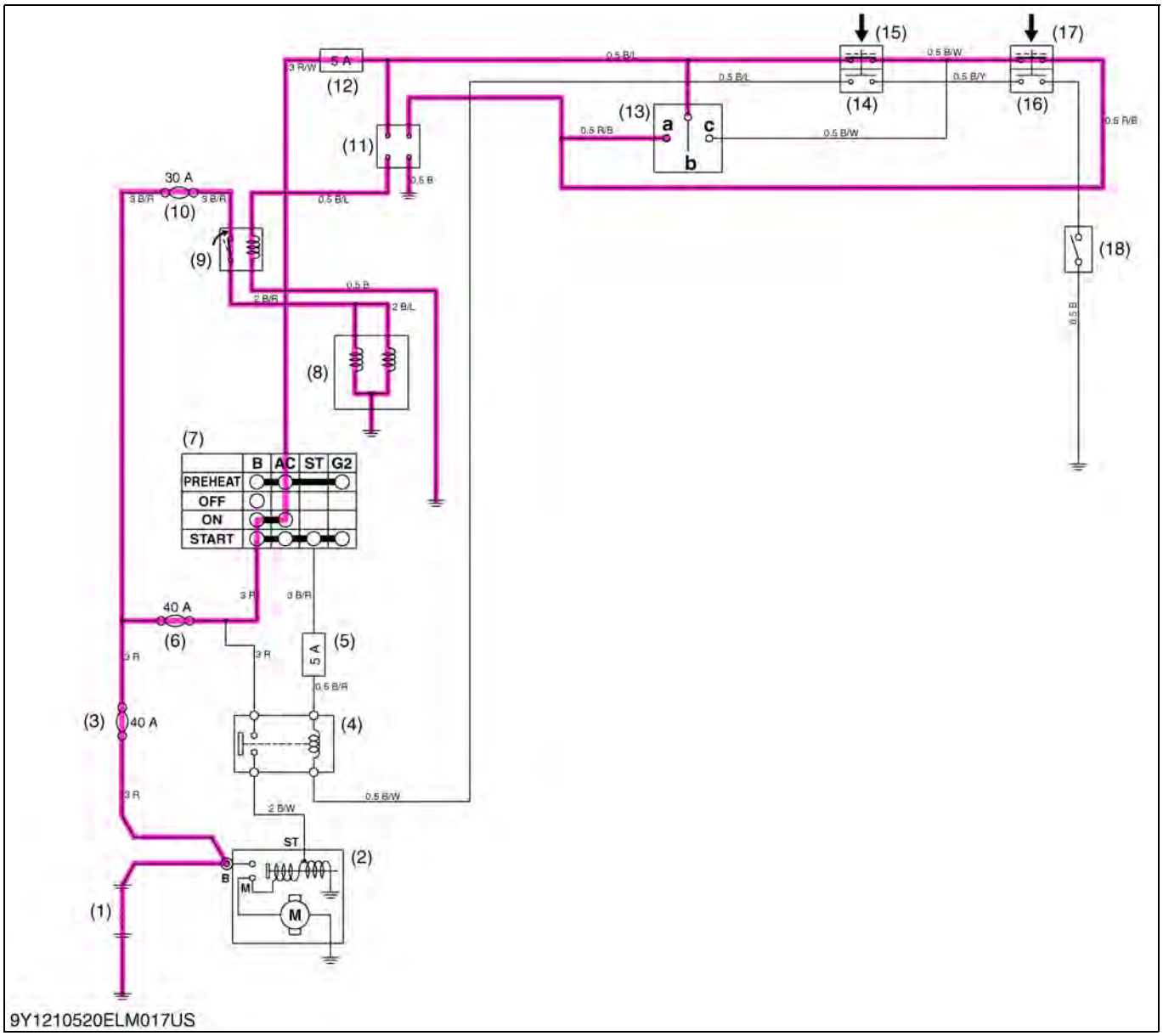

(1)	Battery	(7)	Key Switch	(13)	Seat Switch	**a:**	**When operator sits on the seat.**
(2)	Starter	(8)	Engine Stop Solenoid	(14)	PTO Switch 1	**b:**	**When operator does not sit on the seat (When operator gets up from the seat)**
(3)	Slow Blow Fuse (40 A)	(9)	Engine Stop Solenoid Relay	(15)	PTO Switch 2	**c:**	**When seat is tilted forward**
(4)	Starter Relay	(10)	Slow Blow Fuse (30 A)	(16)	HST Switch 1		
(5)	Fuse (5 A)	(11)	OPC Timer	(17)	HST Switch 2		
(6)	Slow Blow Fuse (40 A)	(12)	Fuse (5 A)	(18)	Clutch Switch		

(To be continued)

(Continued)

PTO shift lever at **"OFF"**	PTO switch 2 (15) **"ON"**
HST pedal **"Neutral"**	HST switch 1 (16) **"ON"**
Seat **"When operator does not sit on the seat"**	Seat switch (13) **"OFF"**
OPC timer (11)	OPC timer switch (11) **"ON"**
Key stop solenoid relay (9)	Key stop solenoid relay (9) switch **"ON"**
Key stop solenoid (8)	Energized
Engine	Engine does not stop (injection pump control rack is not pushed to fuel **"0"** fuel injection position by the key stop solenoid.)

As shown in the above electric circuit, the battery voltage flows to the key stop solenoid. And the pulling and the holding coil in the key stop solenoid is electrical magnet. The spring in the key stop solenoid is pulled, the key stop solenoid rod does not push the injection pump control rack to **"0"** fuel injection position. And the engine still runs.

9Y1211121ELM0024US0

Engine Does Not Stop (Case 5)

- PTO gear shift lever: **"OFF"**
- HST pedal: **"Neutral"**
- Seat: **"When operator does not sit on the seat"**

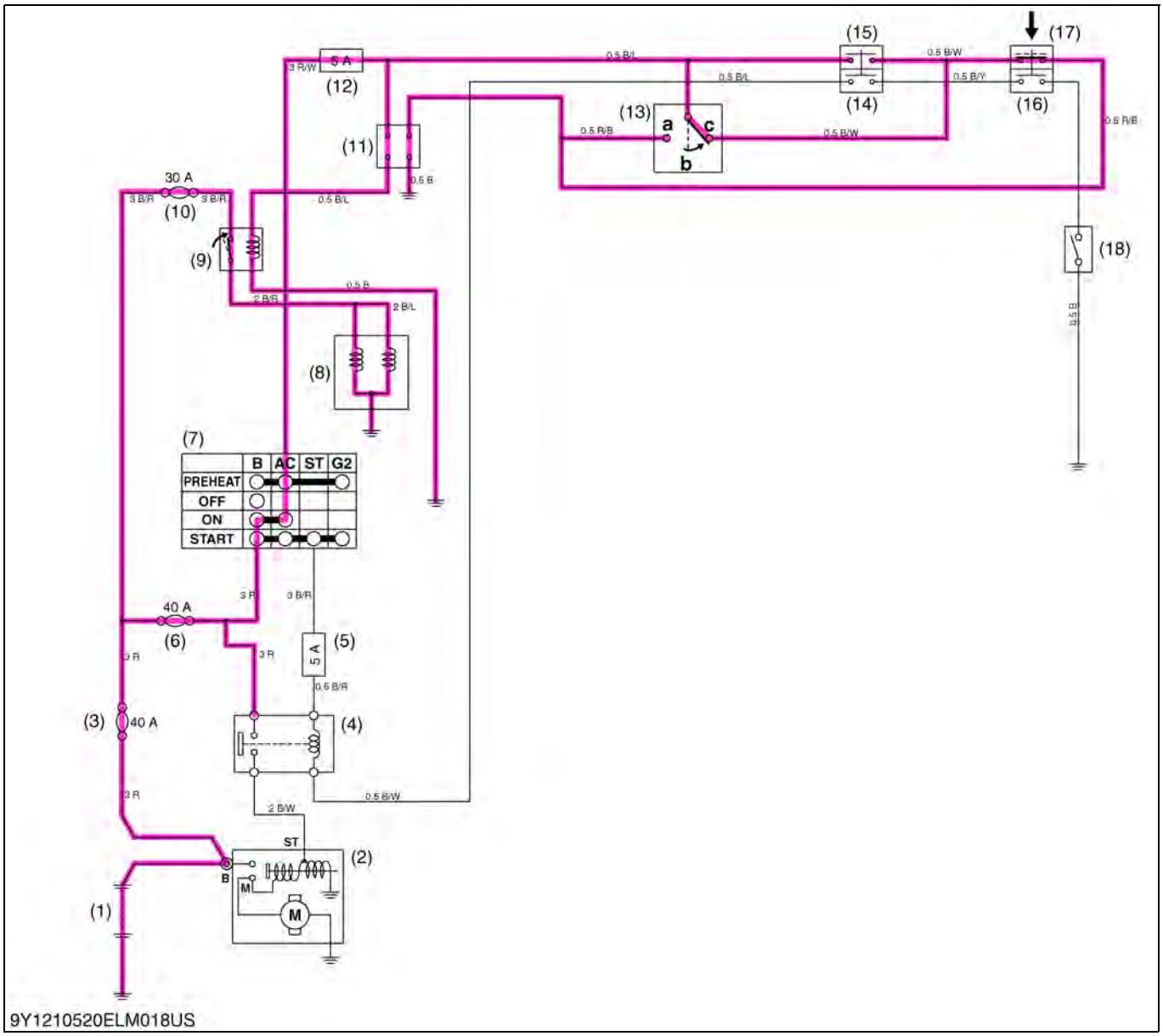

(1)	Battery	(7)	Key Switch	(13)	Seat Switch	**a:**	**When operator sits on the seat.**
(2)	Starter	(8)	Engine Stop Solenoid	(14)	PTO Switch 1	**b:**	**When operator does not sit on the seat (When operator gets up from the seat)**
(3)	Slow Blow Fuse (40 A)	(9)	Engine Stop Solenoid Relay	(15)	PTO Switch 2	**c:**	**When seat is tilted forward**
(4)	Starter Relay	(10)	Slow Blow Fuse (30 A)	(16)	HST Switch 1		
(5)	Fuse (5 A)	(11)	OPC Timer	(17)	HST Switch 2		
(6)	Slow Blow Fuse (40 A)	(12)	Fuse (5 A)	(18)	Clutch Switch		

(To be continued)

(Continued)

PTO shift lever at **"ON"**	PTO switch 2 (15) **"OFF"**
HST pedal **"Neutral"**	HST switch 1 (15) **"ON"**
Seat **"When seat is tilted forward"**	Seat switch (13) **"ON"**
OPC timer (11)	OPC timer switch (11) **"ON"**
Key stop solenoid relay (9)	Key stop solenoid relay (9) switch **"ON"**
Key stop solenoid (8)	Energized
Engine	Engine does not stop (injection pump control rack is not pushed to fuel **"0"** fuel injection position by the key stop solenoid.)

As shown in the above electric circuit, the battery voltage flows to the key stop solenoid. And the pulling and the holding coil in the key stop solenoid is electrical magnet. The spring in the key stop solenoid is pulled, the key stop solenoid rod does not push the injection pump control rack to **"0"** fuel injection position. And the engine still runs.

9Y1211121ELM0025US0

[2] SAFETY SWITCH

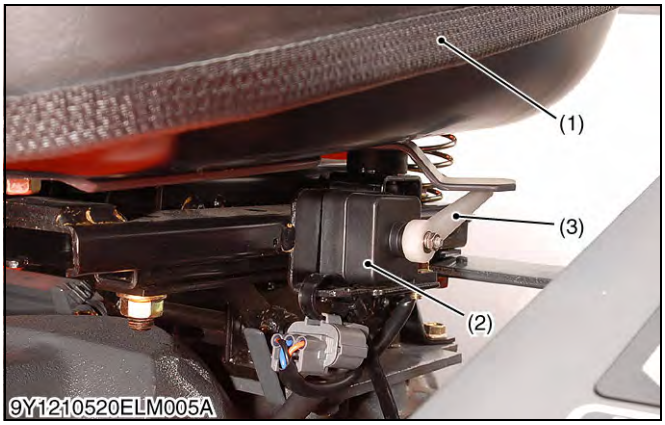

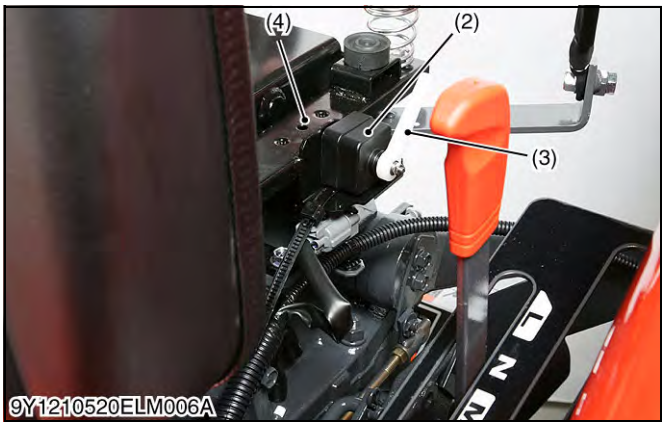

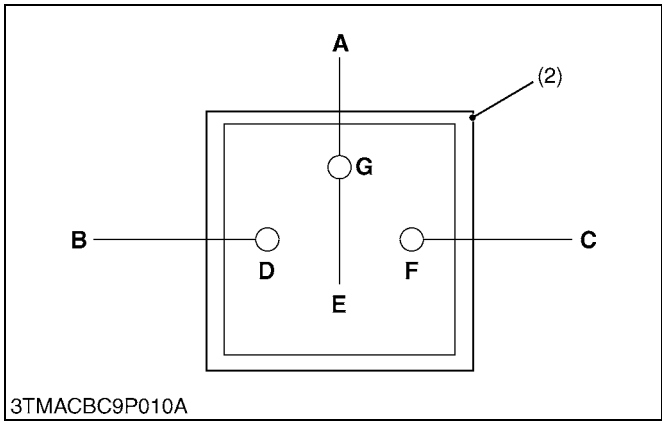

Seat Switch

The seat switch (2) is mounted on the seat rail (4) under the operator's seat (1).

It serves as a safety switch of OPC system.

It detects the position of the operator's seat.

When no body sits on the operator's seat (1), the battery current does not flow from the key switch **"AC"** terminal, through the seat switch **"AC"** terminal (**G**), to the OPC timer.

When operator sits on the operator's seat (1), the seat switch lever (3) is set to **"Seated"** position (**D**).

The battery current flows from the key switch **"AC"** terminal, through the seat switch **"AC"** terminal (**G**), to the OPC timer.

(1) Seat
(2) Seat Switch
(3) Seat Switch Lever
(4) Seal Rail

A: Connected to Starter "AC" Terminal
B: Connected to OPC Timer
C: Connected to Shuttle Lever Neutral Switch
D: Operator Sits on the Seat, "Seated" Position
E: "Vacant" Position
F: Seat is Turned-over, "Turned-over" position
G: Seat Switch "AC" terminal

9Y1211121ELM0026US0

https://truckmanualshub.com/

SERVICING

CONTENTS

1. TROUBLESHOOTING 9-S1
2. SERVICING SPECIFICATIONS 9-S5
3. TIGHTENING TORQUES 9-S6
4. CHECKING AND ADJUSTING 9-S7
   [1] BATTERY 9-S7
   [2] ENGINE STARTING AND STOPPING SYSTEM 9-S9
      (1) Main Switch 9-S9
      (2) Safety Switch 9-S10
      (3) Starter and Starter Relay 9-S12
      (4) Glow Control System 9-S14
      (5) Engine Stop Solenoid 9-S14
      (6) Operator Presence Control (OPC) System 9-S16
      (7) Charging System 9-S18
      (8) Fuse and Ground Cable 9-S19
   [3] LIGHT SWITCHES AND FLASHER UNIT 9-S20
      (1) Combination Switch 9-S20
      (2) Hazard Switch 9-S22
      (3) Flasher Unit 9-S24
   [4] INSTRUMENT PANEL 9-S25
   [5] GAUGES 9-S30
      (1) Fuel Level Sensor 9-S30
      (2) Coolant Temperature Sensor 9-S31
5. DISASSEMBLING AND ASSEMBLING 9-S32
   [1] STARTER 9-S32
6. SERVICING 9-S33
   [1] STARTER 9-S33

1. TROUBLESHOOTING

ALL ELECTRICAL EQUIPMENTS

Symptom	Probable Cause and Checking Procedure	Solution	Reference Page
All Electrical Equipments Do Not Operate	1. Battery discharged or damaged	Recharge or replace	G-23, 9-S7
	2. Battery positive cable disconnected or improperly connected	Repair	9-S7
	3. Battery negative cable disconnected or improperly connected	Repair	9-S7
	4. Slow blow fuse blown	Replace	G-35

BATTERY

Symptom	Probable Cause and Checking Procedure	Solution	Reference Page
Battery Discharges too Quickly	1. Battery damaged	Replace	G-22
	2. Alternator damaged	Replace	9-S18
	3. Wiring harness disconnected or improperly connected (between battery positive terminal and alternator **B** terminal)	Repair or replace	9-S18
	4. Cooling fan belt slipping	Adjust	G-24

STARTING SYSTEM

Symptom	Probable Cause and Checking Procedure	Solution	Reference Page
Starter Motor Does Not Run	1. Safety switch improperly adjusted	Adjust	9-S10, 9-S11
	2. Battery damaged	Recharge or replace	G-22
	3. Safety switch damaged	Replace	9-S10, 9-S11
	4. Slow blow fuse blown	Replace	G-35
	5. Fuse blown	Replace	G-35
	6. Main switch damaged	Replace	9-S9
	7. Starter motor damaged	Replace	9-S12
	8. OPC timer damaged	Replace	9-S17

CHARGING SYSTEM

Symptom	Probable Cause and Checking Procedure	Solution	Reference Page
Charging Lamp Does Not Light when Main Switch is Turned ON	1. Fuse blown	Replace	G-35
	2. Wiring harness disconnected or improperly connected (between main switch **AC** terminal and panel board, between panel board and alternator **L** terminal)	Repair or replace	9-M1, 9-M2
	3. Bulb of the lamp blown	Replace	G-36
	4. Mater Panel damaged	Replace	9-S26
Charging Lamp Does Not Go OFF when Engine Is Running	1. Short circuit between alternator **L** terminal lead and chassis	Replace	9-S18
	2. Alternator damaged	Replace	9-S18

LIGHTING SYSTEM

Symptom	Probable Cause and Checking Procedure	Solution	Reference Page
Head Light Does Not Light	1. Fuse blown	Replace	G-35
	2. Bulb blown	Replace	G-36
	3. Wiring harness disconnected or improperly connected (between main switch **AC** terminal and combination switch **1** terminal and head light, between combination switch **2** terminal and head light)	Repair or replace	9-M1, 9-M2
	4. Combination switch damaged	Replace	9-S20
Hazard and Turn Signal Light Does Not Light	1. Slow blow fuse blown	Replace	G-35
	2. Fuse blown	Replace	G-35
	3. Bulb blown	Replace	G-36
	4. Wiring harness disconnected or improperly connected (between slow blow fuse and hazard unit, between hazard switch and hazard unit, between hazard unit and turn signal switch **R** or **L** terminal, between hazard unit and hazard and turn signal lights)	Repair or replace	9-M1, 9-M2
	5. Combination switch damaged	Replace	9-S20
	6. Hazard switch damaged	Replace	9-S22
	7. Flasher unit damaged	Replace	9-S24

Symptom	Probable Cause and Checking Procedure	Solution	Reference Page
Hazard and Turn Signal Indicator Lamp Does not Light	1. Bulb blown	Replace	G-36
	2. Mater Panel damaged	Replace	9-S26
Hazard and Turn Signal Light Does Not Go ON and OFF	1. Flasher unit damaged	Replace	9-S24
Illumination Light Does Not Light	1. Fuse blown	Replace	G-35
	2. Bulb blown	Replace	G-36
	3. Wiring harness disconnected or improperly connected (between combination switch terminal and panel board)	Repair or replace	9-M1, 9-M2
Tail Light Does Not Light	1. Fuse blown	Replace	G-35
	2. Bulb blown	Replace	G-36
Work Light Does Not Light	1. Fuse blown	Replace	G-35
	2. Bulb blown	Replace	G-36
	3. Wiring harness disconnected or improperly connected (between main switch **AC** terminal and work light)	Repair or replace	9-M1, 9-M2

EASY CHECKER™

Symptom	Probable Cause and Checking Procedure	Solution	Reference Page
Engine Oil Pressure Lamp Lights Up When Engine Is Running	1. Engine oil insufficient	Fill	G-9
	2. Engine oil pressure too low	Check	1-S12
	3. Engine oil pressure switch damaged	Replace	9-S29
	4. Mater panel damaged	Replace	9-S26
Engine Oil PressureLamp Does Not Light When Main Switch IsTurned ON and Engine Is Not Running	1. Engine oil pressure switch damaged	Replace	9-S29
	2. Bulb blown	Replace	G-36
	3. Wiring harness disconnected or improperly connected (between meter panel and engine oil pressure switch)	Repair or replace	9-M1, 9-M2
	4. Mater Panel damaged	Replace	9-S26

GAUGES

Symptom	Probable Cause and Checking Procedure	Solution	Reference Page
Fuel Gauge DoesNot Function	1. Fuel level sensor damaged	Replace	9-S30
	2. Wiring harness disconnected or improperly connected (between meter panel and fuel level sensor)	Repair or replace	9-M1, 9-M2
	3. Mater Panel damaged	Replace	9-S27
Coolant Temperature Gauge does Not Function	1. Coolant temperature sensor damaged	Replace	9-S31
	2. Wiring harness disconnected or improperly connected (between meter panel and coolant temperature sensor)	Repair or replace	9-M1, 9-M2
	3. Mater Panel damaged	Replace	9-S28

9Y1211121ELS0001US0

2. SERVICING SPECIFICATIONS

STARTER MOTOR

Item		Factory Specification	Allowable Limit
Commutator	O.D.	30.0 mm 1.18 in.	29.0 mm 1.14 in.
Difference	O.D.	Less than 0.02 mm 0.0008 in.	0.05 mm 0.002 in.
Mica	Undercut	0.5 to 0.8 mm 0.02 to 0.03 in.	0.2 mm 0.008 in.
Brush	Length	15.0 mm 0.590 in.	11.0 mm 0.433 in.
B Terminal	Voltage	Approx. battery voltage	–

GLOW PLUG

Item		Factory Specification	Allowable Limit
Glow Plug	Resistance	Approx. 0.9 Ω	–

RELAYS

Item		Factory Specification	Allowable Limit
Starter Relay (Coil side)	Resistance	Approx. 80 Ω	–
Engine Stop Solenoid Relay (Coil side)	Resistance	Approx. 60 Ω	–

CHARGING SYSTEM

Item		Factory Specification	Allowable Limit
No-Load Test	Voltage	More than 14 V	–

FLASHER UNIT

Item		Factory Specification	Allowable Limit
Functional Check		60 to 80 times / minutes	–

FUEL LEVEL SENSOR

Item		Factory Specification	Allowable Limit
Fuel Level Sensor	Resistance	1 to 5 Ω at upper-most position 103 to 117 Ω at lower-most position	– –

COOLANT TEMPERATURE SENSOR

Item		Factory Specification	Allowable Limit
Resistance (Sensor Terminal - Chassis)	Resistance	Approx. 670 Ω at 35 °C (95 °F) Approx. 118 Ω at 80 °C (176 °F) Approx. 55 Ω at 105 °C (221 °F)	– – –

9Y1211121ELS0002US0

3. TIGHTENING TORQUES

Tightening torques of screws, bolts and nuts on the table below are especially specified.
(For general use screws, bolts and nuts: See page G-11.)

Item	N·m	kgf·m	lbf·ft
Steering wheel mounting nut	49 to 55	5.0 to 5.7	37 to 41

9Y1211121ELS0003US0

4. CHECKING AND ADJUSTING

DANGER

To avoid the possibility of battery explosion, for the refill type battery, follow the instruction below.

- **Do not use or charge the refillable type battery if the fluid level is below the LOWER (lower limit level) mark. Otherwise, the battery component parts may prematurely deteriorate, which may shorten the battery's service life or cause an explosion. Check the fluid level regularly and add distilled water as required so that the fluid level is between the UPPER and LOWER levels.**

WARNING

To avoid personal injury or death:

- **To avoid accidental short circuit, be sure to attach the positive cable to the positive terminal before the negative cable is attached to the negative terminal.**
- **Never remove the battery cap while the engine is running.**
- **Keep electrolyte away from eyes, hands and clothes. If you are spattered with it, wash it away completely with water immediately and get medical attention.**
- **Keep open sparks and flames away from the battery at all times. Hydrogen gas mixed with oxygen becomes very explosive.**
- **Wear eye protection and rubber gloves when working around the battery.**

■ **IMPORTANT**

- **If the machine is to be operated for a short time without battery (using a slave battery for starting), use additional current (lights) while engine is running and insulate terminal of battery. If this advice is disregarded, damage to alternator and regulator may result.**

9Y1211121ELS0004US0

[1] BATTERY

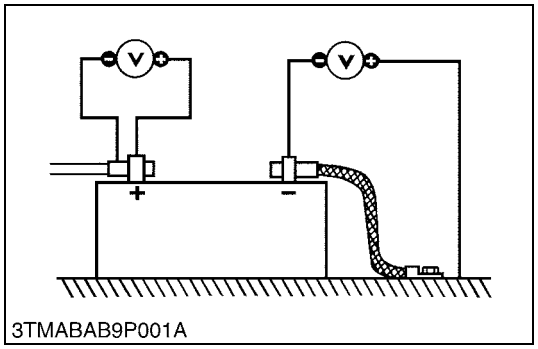

Battery Voltage

1. Stop the engine and turn the main switch off.
2. Connect the COM (−) lead of the voltmeter to the battery's negative terminal post and the (+) lead to the positive terminal post, and measure the battery voltage.
3. If the battery voltage is less than the factory specification, check the battery indicator and recharge the battery.

Battery voltage	Reference value	More than 12 V

9Y1211121ELS0005US0

Battery Terminal Connection

1. Turn the main switch on, and turn on the head light.
2. Measure the voltage across the battery's positive terminal post and the cable terminal, the voltage across the battery's negative terminal post and the chassis.
3. If the measurement exceeds the factory specification, clean the battery terminal posts and cable clamps, and tighten them firmly.

Potential difference	Reference value	Less than 0.1 V

WSM000001ELS0001US0

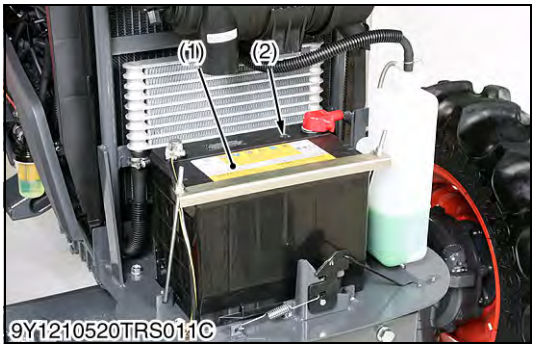

Battery Condition Indicator

1. Check the battery condition by reading the indicator (2).

State of indicator display	
Green	Specific gravity of electrolyte and quality of electrolyte are both in good condition.
Black	Needs charging battery
White	Needs changing battery

■ **IMPORTANT**

- **The factory installed battery is of non-refillable type. If the indicator turns white, do not charge the battery but replace it with new one.**

(1) Battery (2) Indicator

9Y1211121ELS0006US0

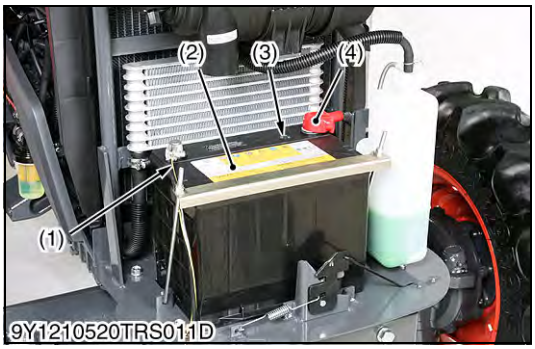

Recharging

WARNING

To avoid personal injury or death:

- **When the battery is being activated, hydrogen and oxygen gases in the battery are extremely explosive. Keep open sparks and flames away from the battery at all times, especially when charging the battery.**
- **When charging battery, ensure the vent caps are securely in place (if equipped).**
- **When disconnecting the cable from the battery, start with the negative terminal first.**
  When connecting the cable to the battery, start with the positive terminal first.
- **Never check battery charge by placing a metal object across the posts.**
  Use a voltmeter or hydrometer.

1. To slow charge the battery, connect the battery positive terminal to the charger positive terminal and the negative to the negative, then recharge in the standard fashion.
2. A boost charge is only for emergencies. It will partially charge the battery at a high rate and in a short time.
   When using a boost-charged battery, it is necessary to recharge the battery as early as possible.
   Failure to do this will shorten the battery's service life.
3. The battery is charged if the indicator display turns green from black.
4. When exchanging an old battery into new one, use battery of equal specification shown in table 1.

Table 1

Battery Type	Volt (V)	Reserve Capacity (min)	CCA (SAE) (A)	Normal Charging Rate (A)
75D26R	12	123	490	6.5

CCA: Cold Cranking Ampere

(1) Negative Terminal (3) Indicator
(2) Battery (4) Positive Terminal

9Y1211121ELS0007US0

Directions for Storage

1. When storing the tractor for long periods of time, remove the battery from tractor, adjust the electrolyte to the proper level and store in a dry place out of direct sunlight.
2. The battery self-discharges while it is stored.
   Recharge it once every three months in hot seasons and once every six months in cold seasons.

9Y1211121ELS0008US0

[2] ENGINE STARTING AND STOPPING SYSTEM

(1) Main Switch

9Y1210520ELS001A

9Y1210520ELS002A

Remove the Main Switch

1. Remove the panel cover.
2. Disconnect the main switch connector (2).
3. Perform the following checking.

(1) Main Switch (2) Main Switch Connector

9Y1211121ELS0009US0

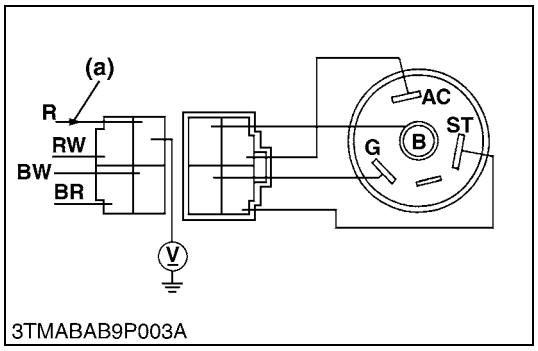

3TMABAB9P003A

Connector Voltage

1. Measure the voltage with a voltmeter across the connector **B** terminal and chassis.
2. If the voltage differs from the battery voltage (11 to 14 V), the wiring harness is faulty.

Voltage	Connector **B** terminal – Chassis	Approx. battery voltage

(a) From Battery Positive Terminal

9Y1211121ELS0010US0

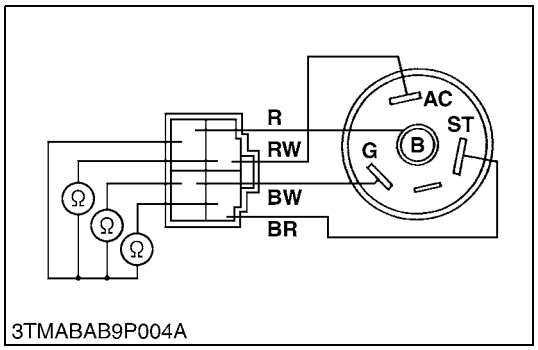

3TMABAB9P004A

Main Switch Key at OFF Position

1. Turn the main switch off.
2. Measure the resistance with an ohmmeter across the **B** terminal and the **AC** terminal, **B** terminal and **ST** terminal, and **B** terminal and **G** terminal.
3. If infinity is not indicated, the contact of the main switch are faulty.

Resistance	**B** terminal – **AC** terminal	Infinity
	B terminal – **ST** terminal	Infinity
	B terminal – **G** terminal	Infinity

9Y1211121ELS0011US0

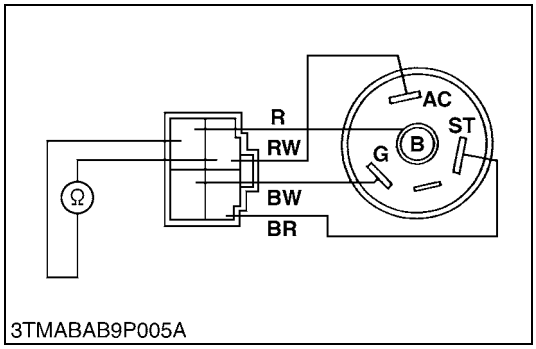

3TMABAB9P005A

Main Switch Key at ON Position

1. Turn the main switch on.
2. Measure the resistance with an ohmmeter across the **B** terminal and the **AC** terminal.
3. If 0 ohm is not indicated, the **B** – **AC** contacts of the main switch are faulty.

Resistance	**B** terminal – **AC** terminal	0 Ω

9Y1211121ELS0012US0

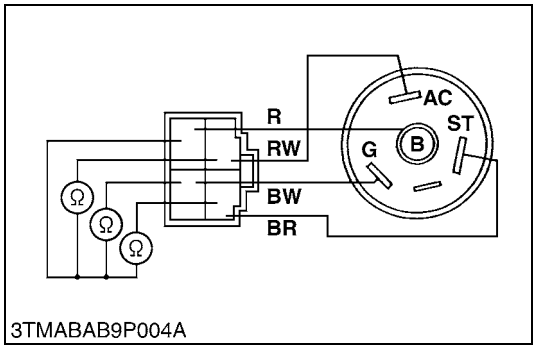

3TMABAB9P004A

Main Switch Key at START Position

1. Turn and hold the main switch key at the **START** position.
2. Measure the resistance with an ohmmeter across the **B** terminal and the **G** terminal, and across the **B** terminal and the **AC** terminal, and across the **B** terminal and the **ST** terminal.
3. If 0 ohm is not indicated, these contacts of the main switch are faulty.

Resistance	**B** terminal – **G** terminal	0 Ω
	B terminal – **ST** terminal	0 Ω
	B terminal – **AC** terminal	0 Ω

9Y1211121ELS0013US0

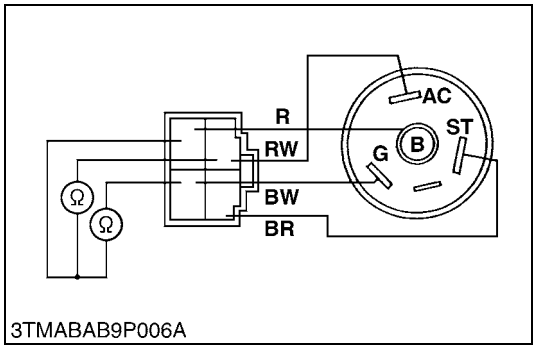

3TMABAB9P006A

Main Switch Key at PREHEAT Position

1. Turn and hold the main switch key at the **PREHEAT** position.
2. Measure the resistance with an ohmmeter across the **B** terminal and the **G** terminal, and across the **B** terminal and the **AC** terminal.
3. If 0 ohm is not indicated, these contacts of the main switch are faulty.

Resistance	**B** terminal – **G** terminal	0 Ω
	B terminal – **AC** terminal	0 Ω

9Y1211121ELS0014US0

(2) Safety Switch

[A] Manual Transmission Type

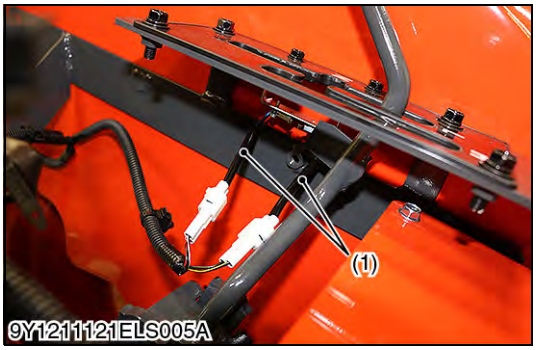

Range Gear Shift Lever Switch

1. Remove the safety leads.
2. Connect the circuit tester to the safety switch leads.
3. Measure the resistance between leads.
4. If the safety switch (1) is damaged, replace it.

Resistance (Across switch terminal)	When switch is pushed	0 Ω
	When switch is released	Infinity

(1) Switch (Range Gear Shift Lever)

9Y1211121ELS0015US0

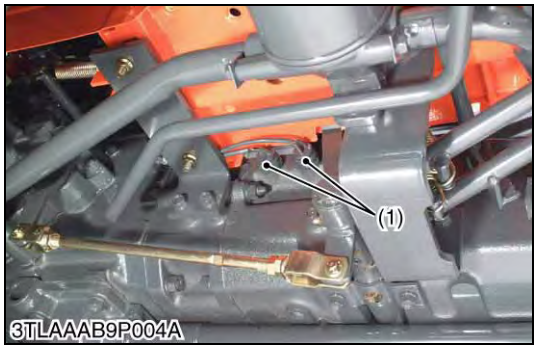

PTO Gear Shift Lever Switch

1. Remove the safety leads.
2. Connect the circuit tester to the safety switch leads.
3. Measure the resistance between leads.
4. If the safety switch (1) is damaged, replace it.

Resistance (Across switch terminal)	When switch is pushed	0 Ω
	When switch is released	Infinity

(1) Switch (PTO Gear Shift Lever)

9Y1211121ELS0016US0

[B] HST Type

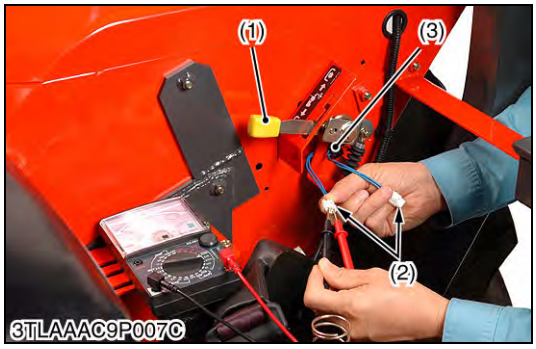

PTO Lever Switch

1. Disconnect the **2P** connector (2) from PTO lever safety switch.
2. Connect the circuit tester to each safety switch's terminals.
3. Push the switch. Measure the resistance between terminals.
4. If 0 ohm is not indicated, switch is faulty.

Resistance (Across switch terminal)	When switch is pushed	0 Ω
	When switch is released	Infinity

(1) PTO Lever
(2) **2P** Connector (PTO Lever Switch)
(3) Switch (PTO Lever)

9Y1211121ELS0017US0

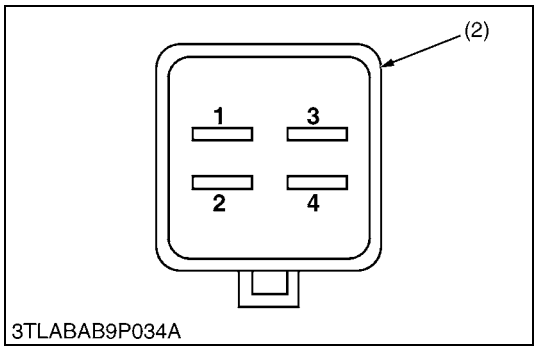

HST Pedal Switch

1. Disconnect the **4P** connector.
2. Remove the HST neutral switch (1).
3. Push the switch and measure the resistance between terminal **1** and **2**, and between terminal **3** and **4**.
4. If 0 ohm is not indicated, switch is faulty.

Resistance while pushing the switch	Terminal **1** – **2**	0 Ω
	Terminal **3** – **4**	

(1) HST Switch
(2) **4P** Connector (HST Switch)

9Y1211121ELS0018US0

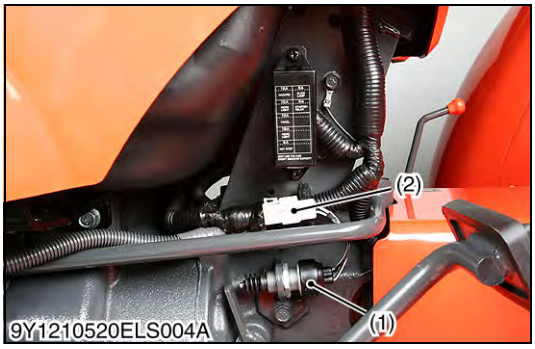

Clutch Pedal Switch

1. Disconnect the **2P** connector (2).
2. Measure the resistance between connector terminals while pushing the clutch pedal switch.
3. If 0 ohm is not indicated, switch is faulty.

Resistance (Across switch terminal)	When switch is pushed	0 Ω
	When switch is released	Infinity

(1) Clutch Pedal Switch (2) **2P** Connector (Clutch Pedal Switch)

9Y1211121ELS0019US0

(3) Starter and Starter Relay

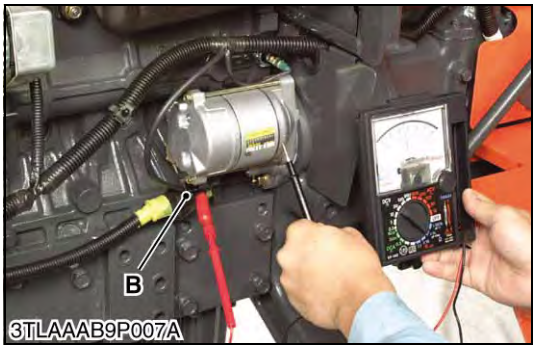

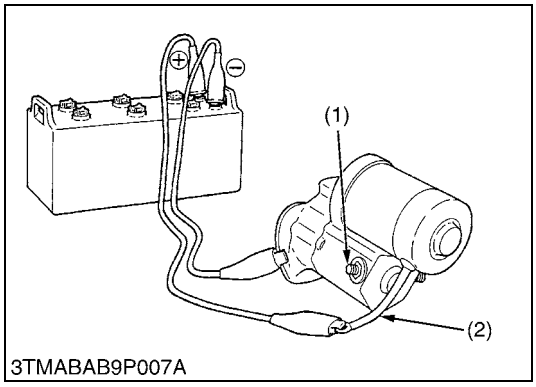

Starter Motor B Terminal Voltage

1. Measure the voltage across the **B** terminal and chassis.
2. If the voltage differs from the battery voltage, check the battery's cable.

Voltage	Starter **B** terminal – chassis	Approx. battery voltage

9Y1211121ELS0020US0

Motor Test

CAUTION

- **Secure the starter to prevent if from jumping up and down while testing the motor.**

1. Disconnect the battery negative cable from the battery.
2. Disconnect the battery positive cable and the leads from the starter.
3. Remove the starter from the engine.
4. Disconnect the connecting lead (2) from the starter **C** terminal (1).
5. Connect a jumper lead from the connecting lead (2) to the battery positive terminal post.
6. Connect a jumper lead momentarily between the starter motor housing and the battery negative terminal post.
7. If the motor does not run, check the motor.

(1) **C** Terminal (2) Connecting Lead

9Y1211121ELS0021US0

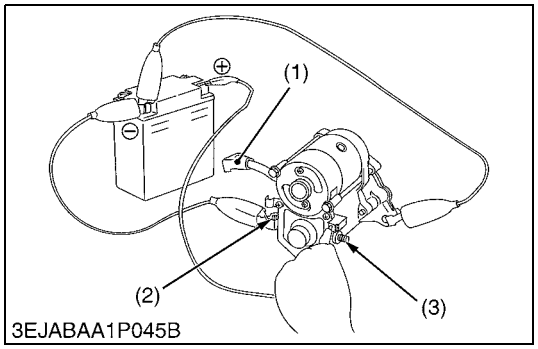

Magnetic Switch Test

1. Disconnect the battery negative cable from the battery.
2. Disconnect the battery positive cable and the leads from the starter.
3. Remove the starter from the engine.
4. Disconnect the connecting lead (1) from the starter **C** terminal (2).
5. Connect a jumper lead from the starter **S** terminal (3) to the battery positive terminal post.
6. Connect a jumper lead momentarily between the starter **C** terminal (2) and the battery negative terminal post.
7. If the pinion gear does not pop out, check the magnetic switch.

■ **NOTE**

- **This test should be carried out for a short time, about 3 to 5 seconds.**

(1) Connecting Lead
(2) **C** Terminal
(3) **S** Terminal

9Y1211121ELS0022US0

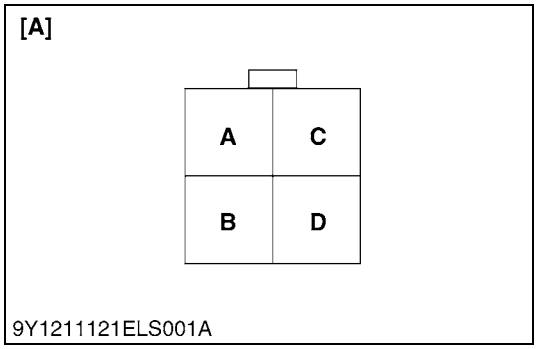

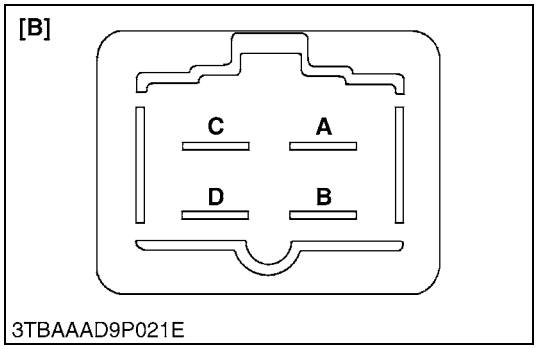

Checking Starter Relay

1) Connector Voltage

Relay	Terminal	Color of Wiring
Starter Relay	A	B/R
	B	B/W
	C	R
	D	B/W

1. Turn the main switch off.
2. Remove the starter relay.
3. Measure the voltage across the terminal **C** and chassis.
4. Measure the voltage across the terminal **A** and chassis while turn the main switch to **START** position.
5. If the voltage is different from the battery voltage, battery, slow blow fuse, wiring harness and main switch is faulty.

Voltage	**C** terminal – Chassis	Approx. battery voltage
	A terminal – Chassis (while main switch is in **START** position)	Approx. battery voltage

2) Starter Relay

1. Measure the resistance across the terminal **A** and **B**.
2. If the resistance notably differs from the factory specifications, starter relay is faulty.
3. Apply battery voltage across the terminal **A** and **B**, and check for continuity across the terminal **C** and **D**.
4. If there is no continuity, starter relay is faulty.

Resistance	**A** terminal – **B** terminal	80 Ω

(1) Starter Relay

[A] Connector of Wiring Harness side
[B] Engine Stop Solenoid Relay side

9Y1211121ELS0023US0

(4) Glow Control System

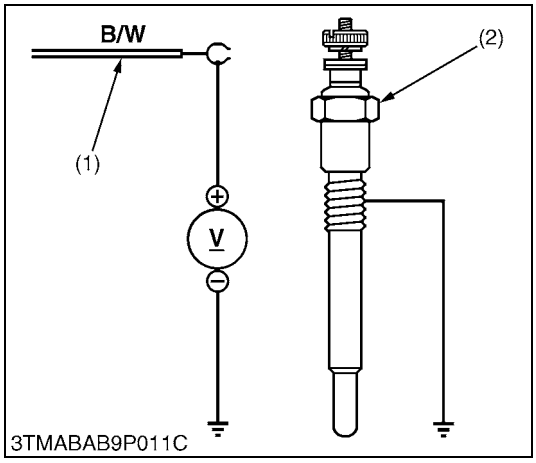

Glow Plug Lead Terminal Voltage

1. Disconnect the wiring lead (1) from the glow plug (2) after turning the main switch off.
2. Turn the main switch key to the **"PREHEAT"** position, and measure the voltage between the lead terminal and the chassis.
3. Turn the main switch key to the **"START"** position, and measure the voltage between the lead terminal and the chassis.
4. If the voltage at either position differs from the battery voltage, the wiring harness or main switch is faulty.

Voltage (Lead terminal - Chassis)	Main switch key at **"PREHEAT"**	Approx. battery voltage
	Main switch key at **"START"**	Approx. battery voltage

(1) Wiring Lead (Positive) (2) Glow Plug

9Y1211121ELS0024US0

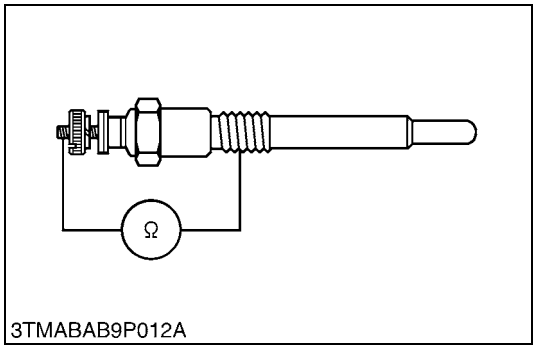

Glow Plug Continuity

1. Disconnect the lead from the glow plugs.
2. Measure the resistance between the glow plug terminal and the chassis.
3. If 0 ohm is indicated, the screw at the tip of the glow plug and the housing are short-circuited.
4. If the factory specification is not indicated, the glow plug is faulty.

Glow plug resistance	Factory specification	Approx. 0.9 Ω

9Y1211121ELS0025US0

(5) Engine Stop Solenoid

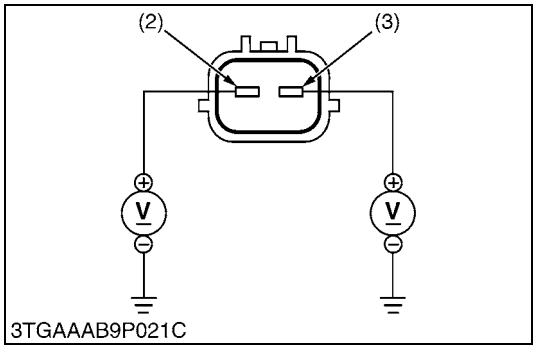

Connector Voltage

1. Disconnect the **2P** connector from engine stop solenoid.
2. Turn the main switch to **"ON"** position and set all levers to **NEUTRAL** position.
3. Measure the voltage between the terminal **1**, terminal **2** and chassis.
4. If the voltage differs from the battery, battery, slow blow fuse, safety switches, OPC timer, engine stop relay or wiring harness is faulty.

Voltage	Terminal **1** – Body	Approx. battery voltage
	Terminal **2** – Body	

(1) Engine Stop Solenoid (3) Terminal **2**
(2) Terminal **1**

9Y1211121ELS0026US0

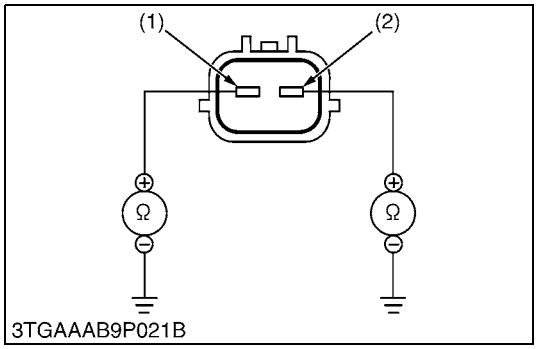

Stop Solenoid Coil

1. Disconnect the **2P** connector from engine stop solenoid.
2. Measure the resistance between the terminal **1**, terminal **2** of engine stop solenoid and body.
3. If resistance differs from the factory specification, the coil is faulty.

Resistance	Terminal **1** – Body	Approx. 0.375 Ω
	Terminal **2** – Body	Approx. 15.6 Ω

(1) Terminal **1** (Pulling Coil) (2) Terminal **2** (Holding Coil)

9Y1211121ELS0027US0

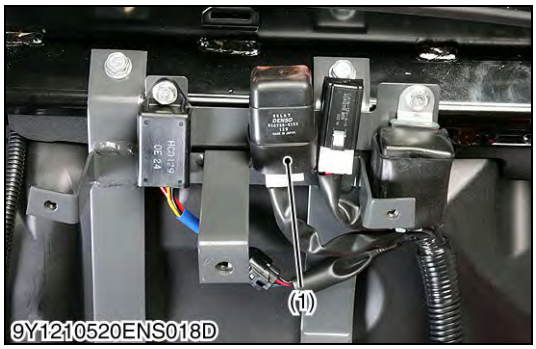

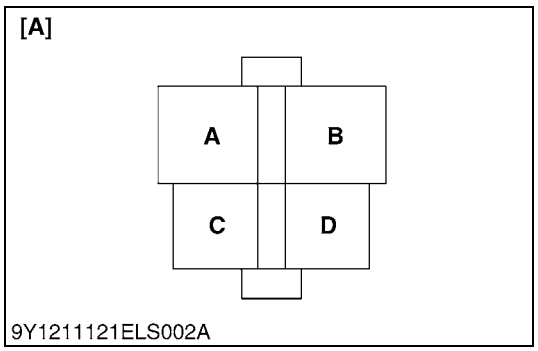

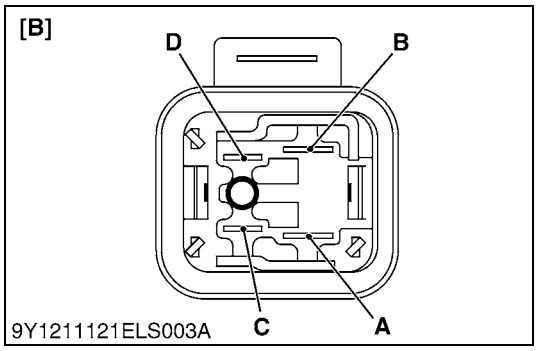

Engine Stop Solenoid Relay

1) Connector Voltage

Relay	Terminal	Color of Wiring
Engine Stop Solenoid Relay	A	B/R
	B	B/R
	C	B/L
	D	B

1. Turn the main switch off.
2. Disconnect the engine stop solenoid relay.
3. Measure the voltage across the terminal **A** and chassis.
4. If the voltage differs from the battery voltage, slow blow fuse or wiring harness is faulty.
5. Set all levers to **NEUTRAL** position and turn the main switch on.
6. Measure the voltage across the terminal **C** and chassis.
7. If the voltage differs from the battery voltage, battery, slow blow fuse, safety switches, OPC timer or wiring harness is faulty.

Voltage	**C** terminal – Chassis	Approx. battery voltage
	A terminal – Chassis (while main switch is in **START** position)	Approx. battery voltage

2) Engine Stop Solenoid Relay

1. Measure the resistance across the terminal **C** and **D**.
2. If resistance notably differs from the factory specification, engine stop solenoid relay is faulty.
3. Apply battery voltage across the terminal **C** and **D**, and check for continuity across the terminal **A** and **D**.
4. If there is no continuity, engine stop solenoid relay is faulty.

Resistance	**C** terminal – **D** terminal	60 Ω

(1) Engine Stop Solenoid Relay **[A] Connector of Wiring Harness Side** **[B] Engine Stop Solenoid Relay Side**

9Y1211121ELS0028US0

(6) Operator Presence Control (OPC) System

Checking OPC System (Manual Transmission Type)

1. Sit on operator's seat.
2. Set the parking brake and stop the engine.
3. Shift the range gear shift lever to **"NEUTRAL"** position.
4. Shift the PTO gear shift lever to **"OFF"** position.
5. Fully depress the clutch pedal.
6. Start the engine.
7. Engage the PTO gear shift lever.
8. Stand up. (Do not get off the machine.)
9. The engine must shut off after approximately 1 second.

9Y1211121ELS0029US0

Checking OPC System (HST Type)

1. Sit on operator's seat.
2. Set the parking brake.
3. Depress the HST pedal (Forward or Reverse position) to **"NEUTRAL"** position.
4. Shift the PTO lever (PTO clutch control lever) to **"OFF"** position.
5. Fully depress the clutch pedal and start the engine.
6. Check the OPC system by following four steps listed in the table below.

Step	PTO Lever	HST Pedal	Operator	OPC system is "NORMAL" if
1	**"OFF"** position (Switch: **ON**)	**"Forward"** or **"Reverse"** (Switch: **OFF**)	Gets up from the seat (Seat switch: **OFF**)	Engine stops
2	**"ON"** position (Switch: **OFF**)	**"NEUTRAL"** (Switch: **ON**)	Gets up from the seat (Seat switch: **OFF**)	Engine stops
3	**"OFF"** position (Switch: **ON**)	**"NEUTRAL"** (Switch: **ON**)	Gets up from the seat (Seat switch: **OFF**)	Engine does not stop
4	**"OFF"** position (Switch: **ON**)	**"NEUTRAL"** (Switch: **ON**)	Gets off the tractor, tilts the seat forward, and then place PTO lever in **ON** position (Seat switch: **ON**)	Engine does not stop

9Y1211121ELS0030US0

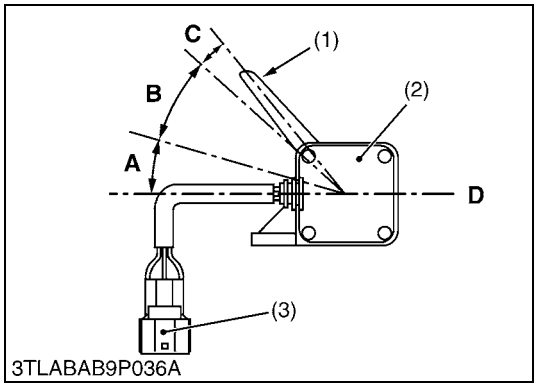

3TLABAB9P036A

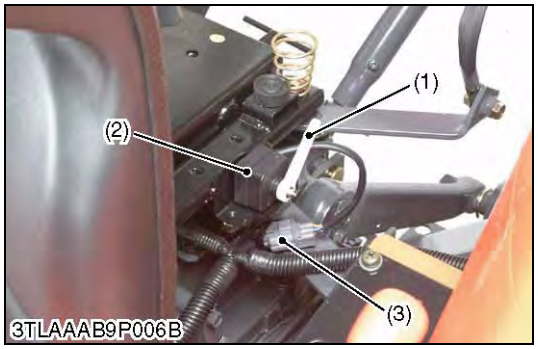

3TLAAAB9P006B

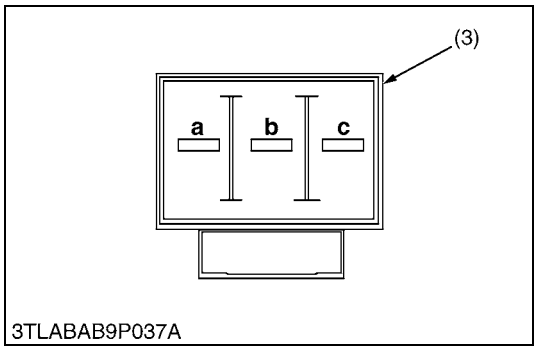

3TLABAB9P037A

Checking Seat Switch

1. Remove the seat.
2. Disconnect the seat switch connector (3).
3. Change the sensor bar angle (1) and measure the resistance between connector terminals, referring to the table below.
4. If the measurement does not between as table, switch is faulty.

Sensor bar angle	Measuring terminal	Resistance
Approx. 18 ° (Angle **A**)	**a** - **c**	0 Ω
	a - **b**, **b** - **c**	Infinity
Approx. 25 ° (Angle **B**)	**a** - **b**, **a** - **c**, **b** - **c**	Infinity
Approx. 5 ° (Angle **C**)	**b** - **c**	0 Ω
	a - **b**, **a** - **c**	Infinity

(1) Sensor Bar
(2) Seat Switch
(2) Seat Switch Connector

D: Reference Line (Seat Suspension Plate Line)

9Y1211121ELS0031US0

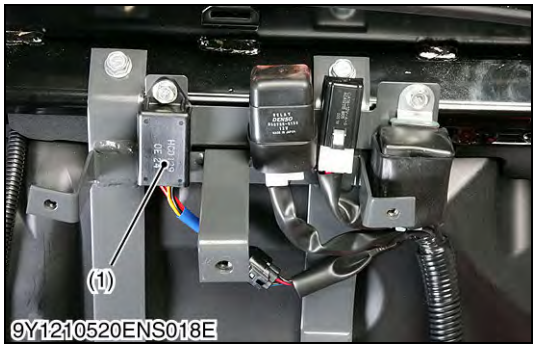

9Y1210520ENS018E

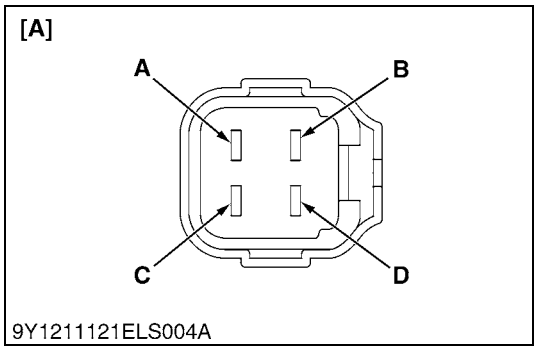

9Y1211121ELS004A

Checking OPC Timer

1. Remove the timer. (OPC timer is located behind the panel.)
2. Connect jumper leads across the battery positive terminal and the timer **3** terminal, and across the battery positive terminal and the timer **4** terminal.
3. Connect jumper leads across the battery negative terminal and the timer **2** terminal, and across the battery negative terminal and the bulb terminal.
4. Connect jumper leads across the timer **1** terminal and the bulb terminal.
5. The bulb lights up when disconnecting a jumper lead from the **3** terminal 0.7 to 1.3 seconds late, the timer is proper.

(1) OPC Timer
(2) Load (Lamp)
(2) Battery (12 V)

[A] OPC Timer Relay Side Connector 4A

9Y1211121ELS0032US0

(7) Charging System

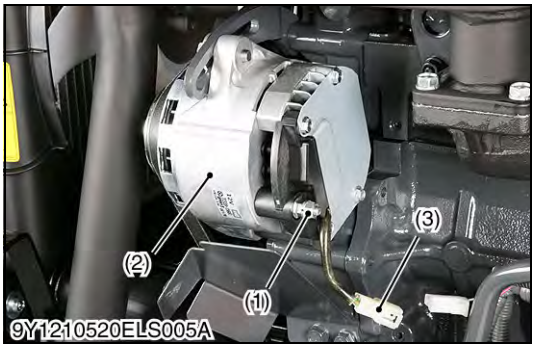

Checking Alternator

1. Disconnect the **2P** connector (3) from alternator (2) after turning the main switch **OFF**.
2. Perform the following checkings.

(1) Terminal **B**
(2) Alternator
(3) **2P** Connector

9Y1211121ELS0033US0

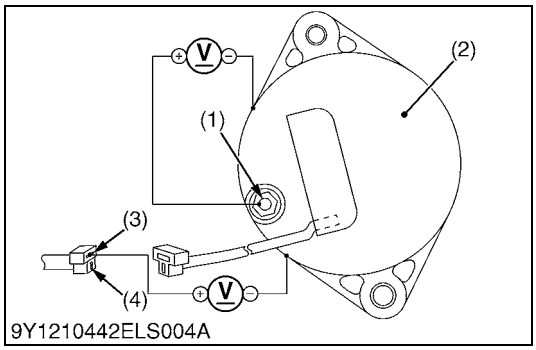

Checking Connector Voltage

1. Turn the main switch **OFF**. Measure the voltage between the terminal **B** (1) and the chassis.
2. Turn the main switch **ON**. Measure the voltage between the terminal **IG** (3) and the chassis.

Voltage (Main switch at **OFF**)	Terminal **B** – chassis	Approx. battery voltage
Voltage (Main switch at **ON**)	Terminal **IG** – chassis	Approx. battery voltage

(1) Terminal **B**
(2) Alternator
(3) Terminal **IG**
(4) Terminal **L**

9Y1211121ELS0034US0

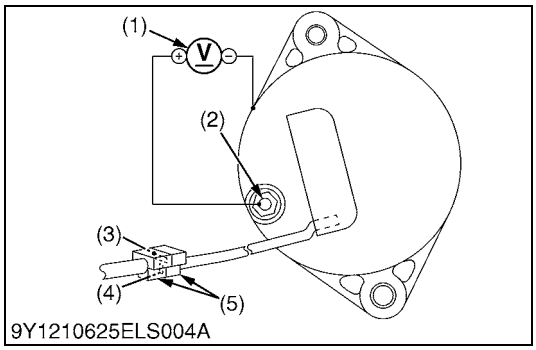

No-Load Test

1. Connect the **2P** connector (5) to previous position of the alternator after turning the main switch **OFF**.
2. Start the engine and then set at idling speed.
3. Measure the voltage between the terminal **B** (2) and the chassis. (Switch off all the lamps)
4. The voltage rises gradually and if it reaches 14V, the alternator is normal.

■ **NOTE**

- **It takes about 5 to 10 minutes until the voltage value stabilizes**

5. If the voltage value does not rise to 14V, the alternator is faulty. Replace the alternator.

Voltage	Terminal **B** – chassis	More than 14 V

(Reference)

- Once the engine has started, the alternator temperature rises quickly up to an ambient temperature of 70 to 90 °C (158 to 194 °F). As the temperature goes higher than 50 °C (122 °F), the alternator voltage slowly drops; at higher than 100 °C (212 °F), it drops by about 1 V.

(1) Voltmeter
(2) Terminal **B**
(3) Terminal **IG**
(4) Terminal **L**
(5) **2P** Connector

9Y1211121ELS0035US0

(8) Fuse and Ground Cable

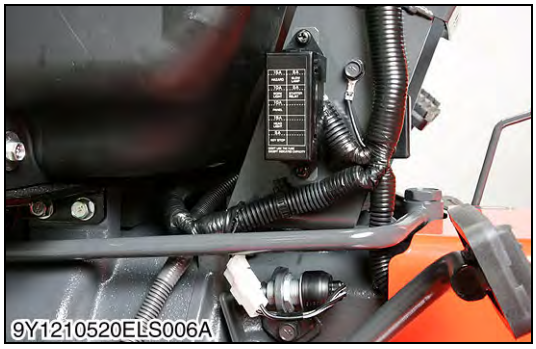

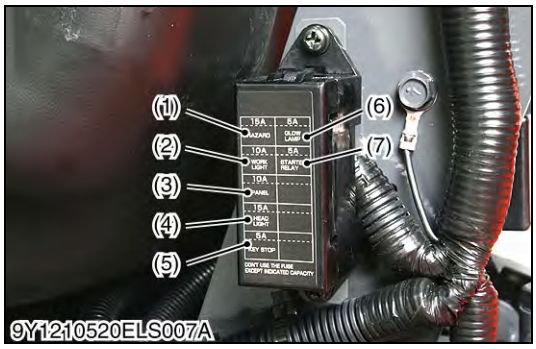

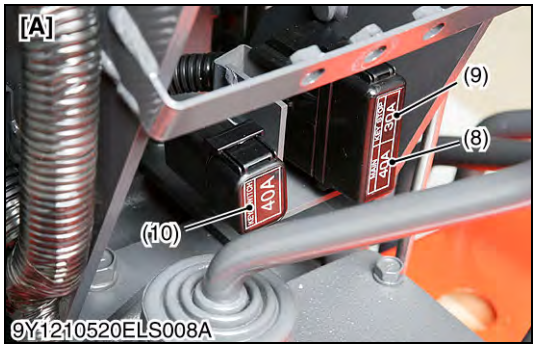

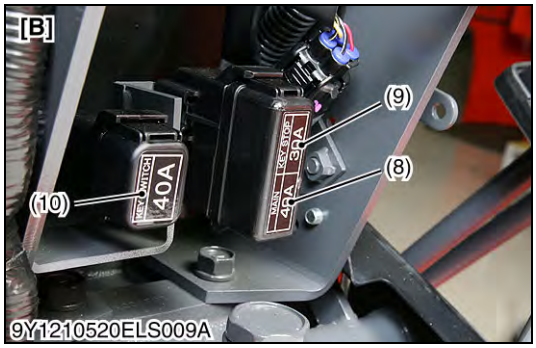

Checking Fuse

1. Check the fuse.
2. If any of the fuses is blown, replace it with one having same capacity.

■ **IMPORTANT**

- **If a fuse is blown, check the cause and be sure to replace it with the one having same capacity.**

Fuse No.	Capacity (A)	Protected Circuit
(1)	15	Hazard
(2)	10	Work light
(3)	10	Panel
(4)	15	Head light
(5)	5	Key stop
(6)	5	Glow lamp
(7)	5	Starter relay
(8)	40	Main
(9)	30	Key stop
(10)	40	Key switch

[A] Manual Transmission Type **[B] HST Type**

9Y1211121ELS0036US0

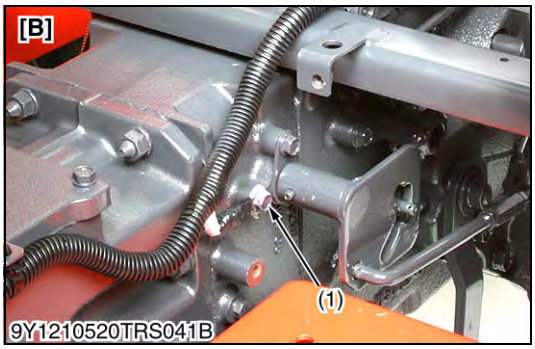

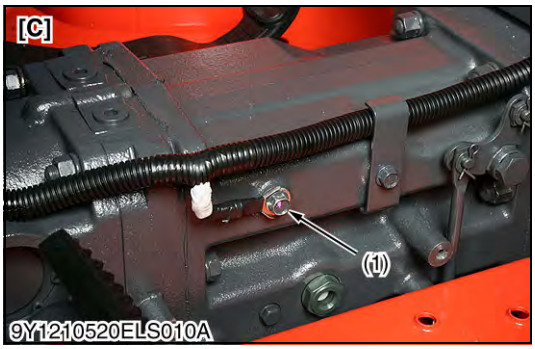

Checking Ground Cable

1. Check the whether the ground cable (1) is connected securely to the tractor chassis.
2. If the ground cable is broken or disconnected, replace it.

(1) Ground Cable

[A] Left Side of Steering Support Frame
[B] Left Side of Transmission Case [Manual Transmission Type]
[C] Left Side of Mid Case [HST Type]

9Y1211121ELS0037US0

[3] LIGHT SWITCHES AND FLASHER UNIT

(1) Combination Switch

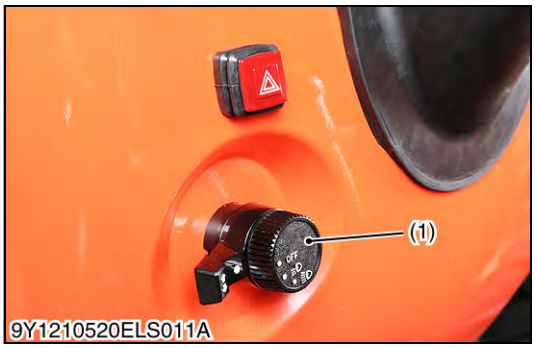

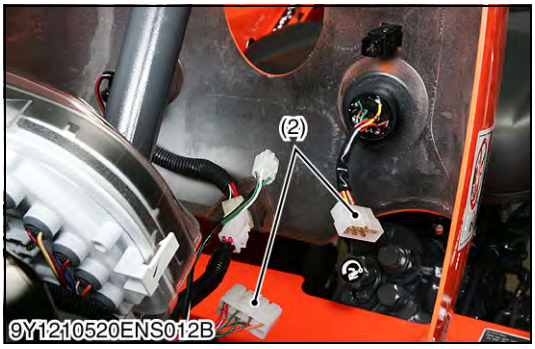

Remove the Combination Switch

1. Remove the steering wheel and rear bonnet and disconnect **8P** connector (2) after turning the main switch **OFF** position.
2. Perform the following checkings.

(1) Combination Switch
(2) **8P** Connector

9Y1211121ELS0038US0

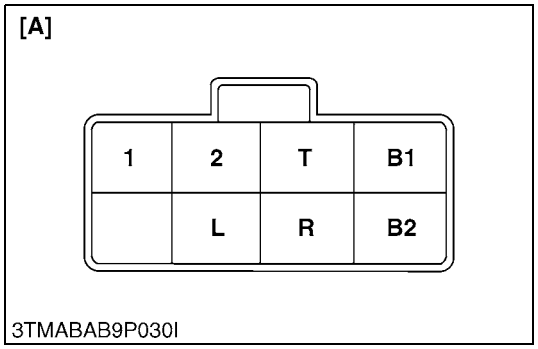

Connector Voltage

1. Disconnect the **8P** connector **(A)** from the combination switch.
2. Measure the voltage with a voltmeter across the connector **B1** terminal and chassis when the main switch is **ON** position.
3. If the voltage differs from the battery voltage, main switch or wiring harness is faulty.
4. Measure the voltage with a voltmeter across the connector **B2** terminal and chassis when the main switch is **ON** position.
5. If the voltage differs from the battery voltage, check the wiring harness and main switch.

Voltage	Main switch at **"ON"** position	**B1** terminal – Chassis	Approx. battery voltage
	Main switch at **"ON"** position	**B2** terminal – Chassis	

[A] 8P Connector (Wire Harness Side)

9Y1211121ELS0039US0

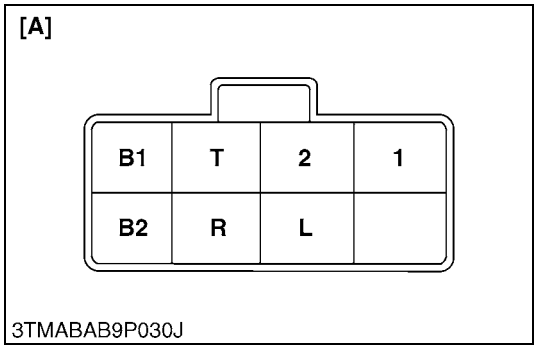

Head Light Switch Continuity when Setting Switch at OFF Position

1. Disconnect the **8P** connector **(A)** from the combination switch.
2. Set the light switch to the **OFF** position.
3. Measure the resistance with an ohmmeter across the **B1** terminal to the **T** terminal, the **B1** terminal to the **1** terminal and the **B1** terminal to the **2** terminal.
4. If infinity is not indicated, renew the combination switch.

Resistance (Switch at **OFF** position)	**B1** terminal – **T** terminal	Infinity
	B1 terminal – **1** terminal	
	B1 terminal – **2** terminal	

[A] 8P Connector (Combination Switch Side)

9Y1211121ELS0040US0

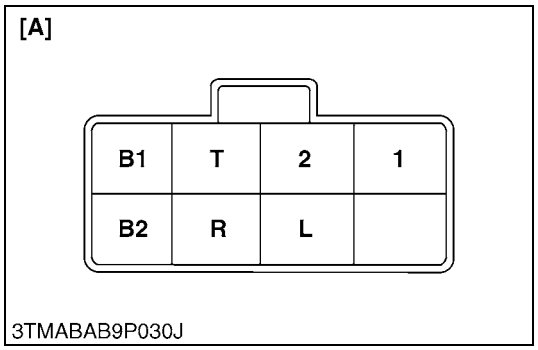

Head Light Switch Continuity when Setting Switch to HI-BEAM Position

1. Disconnect the **8P** connector **(A)** from the combination switch.
2. Set the light switch to **HI-BEAM** position.
3. Measure the resistance with an ohmmeter across the **B1** terminal to the **T** terminal and the **B1** terminal to the **1** terminal.
4. If 0 ohm is not indicated, renew the combination switch.

Resistance (Switch at **HI-BEAM** position)	**B1** terminal – **T** terminal	0 Ω
	B1 terminal – **1** terminal	

[A] 8P Connector (Combination Switch Side)

9Y1211121ELS0041US0

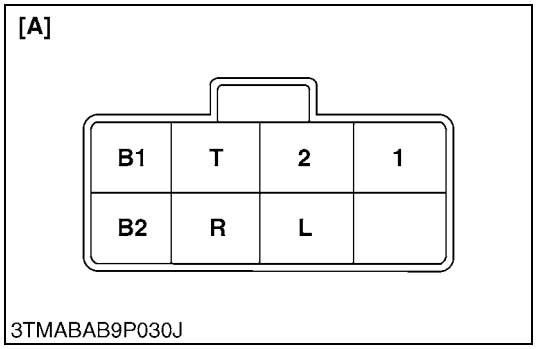

Head Light Switch Continuity when Setting Switch to LOW-BEAM Position

1. Disconnect the **8P** connector **(A)** from the combination switch.
2. Set the light switch to **LOW-BEAM** position.
3. Measure the resistance with an ohmmeter across the **B1** terminal to the **T** terminal and the **B1** terminal to the **2** terminal.
4. If 0 ohm is not indicated, renew the combination switch.

Resistance (Switch at **LO-BEAM** position)	**B1** terminal – **T** terminal	0 Ω
	B1 terminal – **2** terminal	

[A] 8P Connector (Combination Switch Side)

9Y1211121ELS0042US0

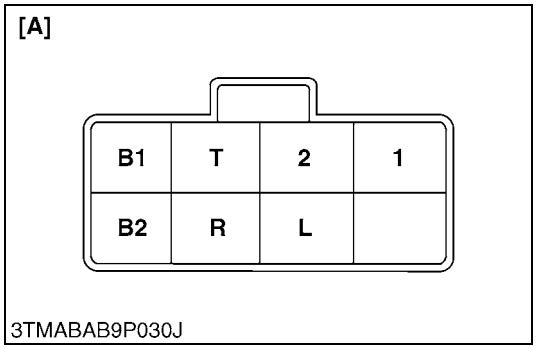

Turn Signal Switch Continuity when Setting Switch to Right Turn Position

1. Disconnect the **8P** connector **(A)** from the combination switch.
2. Set the turn signal switch to **Right Turn** position.
3. Measure the resistance with an ohmmeter across the **B2** terminal to the **R** terminal.
4. If 0 ohm is not indicated, replace the combination switch.

Resistance (Switch at **Right Turn** position)	**B2** terminal – **R** terminal	0 Ω

[A] 8P Connector (Combination Switch Side)

9Y1211121ELS0043US0

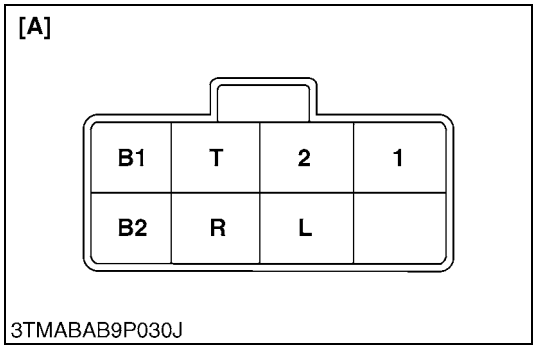

Turn Signal Switch Continuity when Setting Switch to Left Turn Position

1. Disconnect the **8P** connector **(A)** from the combination switch.
2. Set the turn signal switch to **Left Turn** position.
3. Measure the resistance with an ohmmeter across the **B2** terminal to the **L** terminal.
4. If 0 ohm is not indicated, replace the combination switch.

Resistance (Switch at **Left Turn** position)	**B2** terminal – **L** terminal	0 Ω

[A] 8P Connector (Combination Switch Side)

9Y1211121ELS0044US0

(2) Hazard Switch

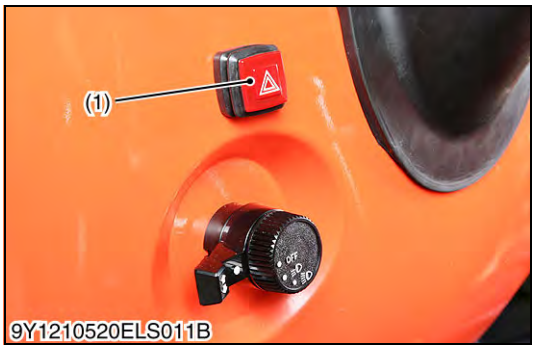

Hazard Switch

1. Remove the meter panel and disconnect the **6P** connector from hazard switch (1) after disconnect the battery negative code.
2. Remove the hazard switch (1).
3. Perform the following checking.

(1) Hazard Switch

9Y1211121ELS0045US0

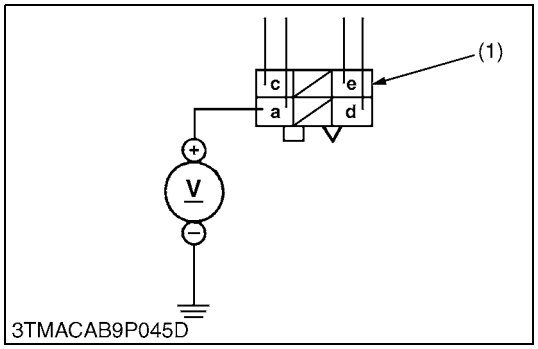

Connector Voltage

1. Connect the battery negative code, then measure the voltage across the a terminal and chassis.
2. If the voltage differ from the battery voltage, the wiring harness is faulty.

Voltage	**a** Terminal – Chassis	Approx. battery voltage

(1) **6P** Connector (WIre Harness Side)

9Y1211121ELS0046US0

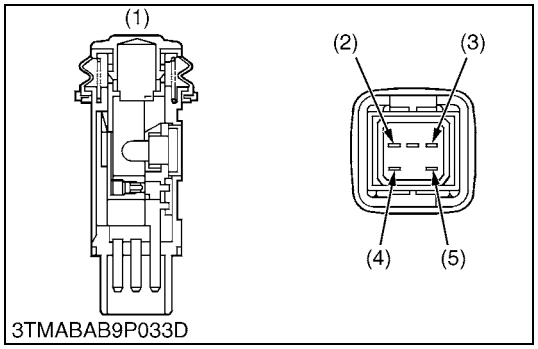

Hazard Switch Continuity

1. Measure the resistance with ohmmeter across the **a** terminal and **c** terminal, and across the **d** terminal and **e** terminal.
2. If the measurement is not same as below, the hazard switch or the bulb are faulty.

Resistance (Switch at **OFF**)	**a** Terminal – **c** Terminal	Infinity
Resistance (Switch at **ON**)	**a** Terminal – **c** Terminal	0 Ω
Resistance (Bulb)	**d** Terminal – **e** Terminal	Approx. 13 Ω

(1) Hazard Switch
(2) **a** Terminal
(3) **d** Terminal
(4) **c** Terminal
(5) **e** Terminal

9Y1211121ELS0047US0

(3) Flasher Unit

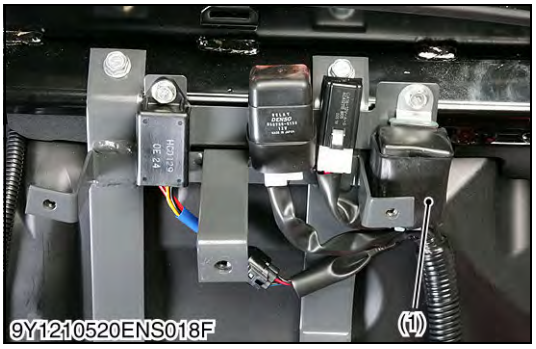

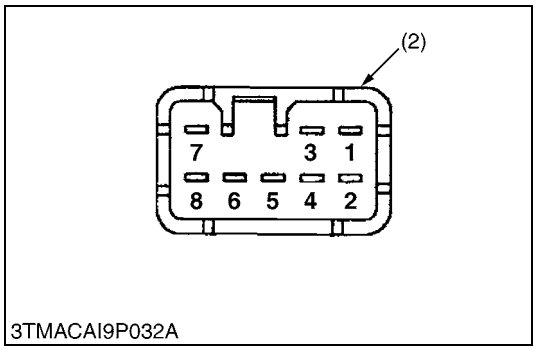

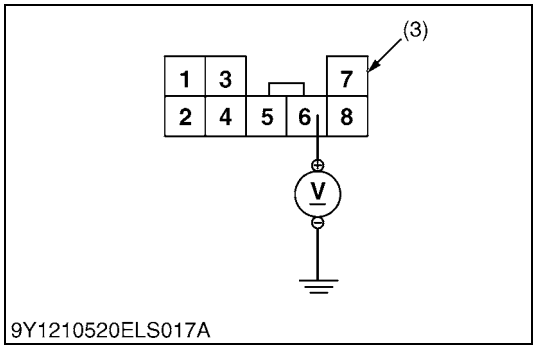

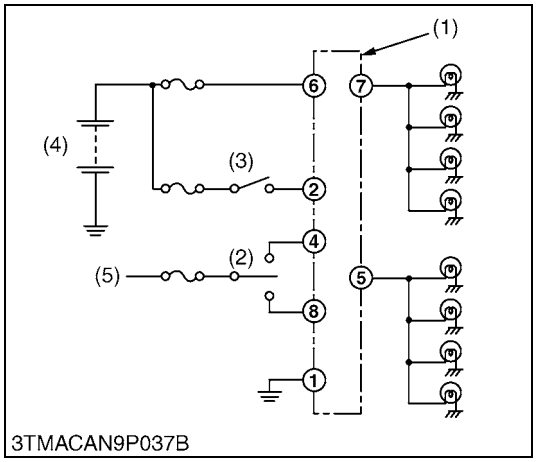

Connector Voltage

1. Disconnect the flusher unit connector.
2. Measure the voltage with voltmeter across the connector of wiring harness side terminal **5** and chassis.
3. If the voltage differs from the battery voltage, the wiring harness or fuse is faulty.

Voltage	Terminal **5** – Chassis	Approx. battery voltage

(Reference)

Terminal	Color	Terminal Connector
1	0.5 B	GND
2	0.5 G/R	Hazard (Input)
3		Vacancy
4	0.5 G/R	Turning signal L.H. (Input)
5	0.5 G/B	Turning signal R.H. (Output)
6	0.85 W	Battery Voltage
7	0.5 G/L	Turning signal L.H. (Output)
8	0.5 G	Turning Signal R.H. (Input)

(1) Flusher Unit
(2) **8P** Connector (Flusher Unit Side)
(3) **8P** Connector (Wiring Harness Side)

9Y1211121ELS0048US0

Functional Check

1. Turn on the turn signal switch (2) or hazard switch (3).
2. Count the number of blinking.
3. If the factory specification is not indicated, replace the flasher unit.

Times of blinking light	Factory specification	60 to 80 times / minutes

(1) Flasher Unit
(2) Turn Signal Switch
(3) Hazard Switch
(4) Battery
(5) ACC

9Y1211121ELS0049US0

[4] INSTRUMENT PANEL

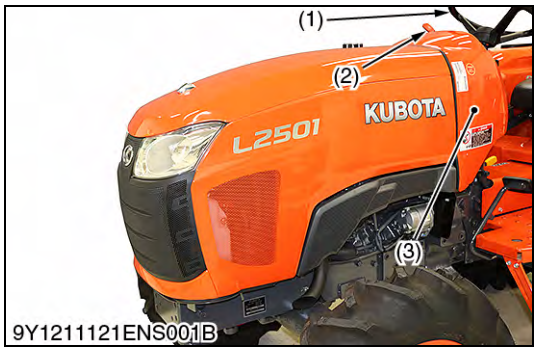

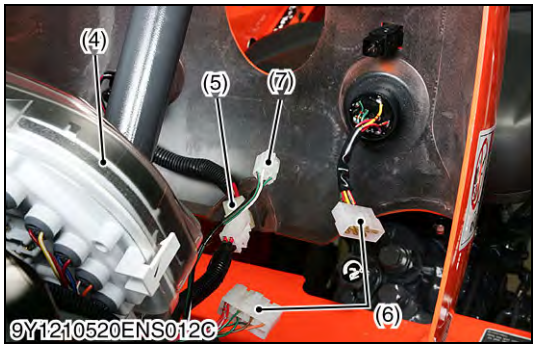

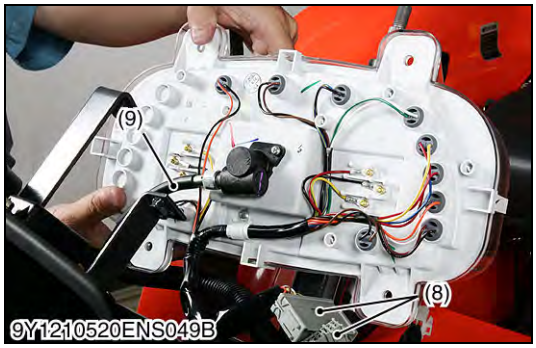

Disconnecting Instrument Panel Connector

1. Remove the steering wheel (1) with steering puller.
2. Remove the steering rubber cover and the grip (2).
3. Remove the rear bonnet (3).
4. Disconnect the **4P** connectors (5), (7) and the **8P** connector (6).
5. Remove the instrument panel (4).
6. Disconnect the **20P** connector (8).
7. Disconnect the hour-meter cable.

(When reassembling)

Tightening torque	Steering wheel mounting nut	49 to 55 N·m 5.0 to 5.7 kgf·m 37 to 41 lbf·ft

(1) Steering Wheel
(2) Grip (Accelerator Lever)
(3) Rear Bonnet
(4) Instrument Panel
(5) **4P** Connector (Main Switch)
(6) **8P** Connector (Combination Switch)
(7) **6P** Connector (Hazard Switch)
(8) **20P** Connector (Meter Panel)
(9) Hour-meter Cable

9Y1211121ELS0050US0

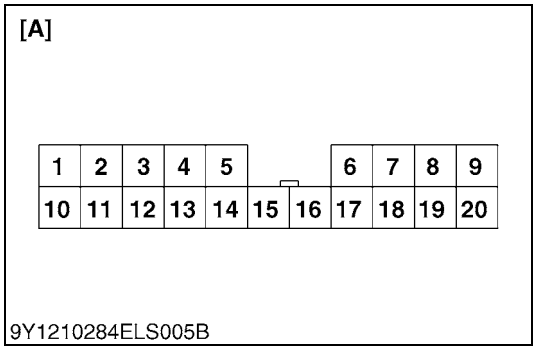

Connector Voltage

1. Set all levers to **"NEUTRAL"** position.
2. Turn the main switch **ON**.
3. Measure the voltage with a voltmeter across the **13** terminal on the **20P** connector and chassis.
4. If the voltage differs from the battery voltage, the wiring harness, fuse, safety switches or main switch is faulty.

Voltage	**13** Terminal – Chassis	Approx. battery voltage

No.	Color of wiring	Item
1	R	Turn **L**
2	R/W	Turn **R**
3	G/W	Illumination
4	B	GND
5	Y/G	Fuel unit
6	Lg	Temperature unit
7		Not used
8		Not used
9		Not used
10	B/W	Glow plug (+)
11	B	Glow plug (–)
12		Not used
13	R/L	IGN
14	L	Engine oil pressure
15	R/L	Charge lamp (+)
16	W/R	Charge lamp (–)
17		Not used
18		Not used
19		Not used
20		Not used

[A] 20P Connector of Wire Harness Side

9Y1211121ELS0051US0

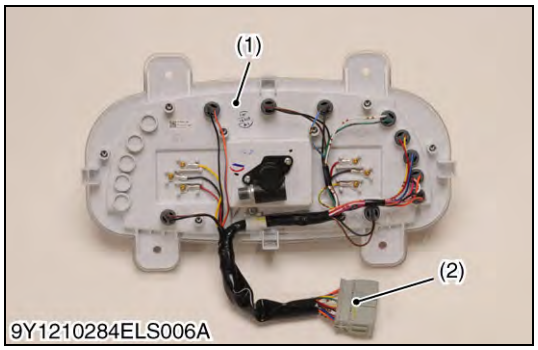

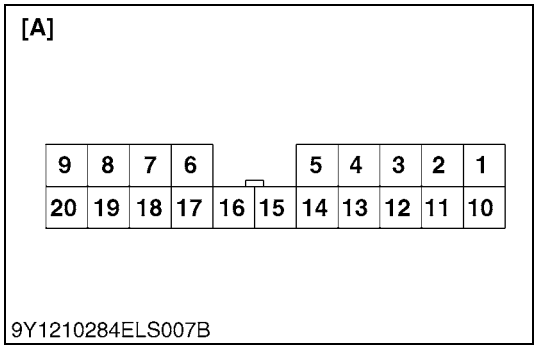

Functional Check of Fuel Gauge

1. Check the continuity with an ohmmeter across the **5** terminal to **13** terminal and the **5** terminal to **4** terminal on panel board.
2. If infinity is indicated, the fuel gauge is faulty.

No.	Color of wiring	Item
1	L/Y	Turn **L**
2	O/L	Turn **R**
3	Br	Illumination
4	B	GND
5	Y/G	Fuel unit
6	Y	Temperature unit
7		Not used
8		Not used
9		Not used
10	L/B	Glow plug (+)
11	R/B	Glow plug (–)
12		Not used
13	R	IGN
14	Y/W	Engine oil pressure
15	G	Charge lamp (+)
16	W	Charge lamp (–)
17		Not used
18		Not used
19		Not used
20		Not used

(1) Meter Panel
(2) **20P** Connector

[A] 20P Connector of Panel side

9Y1211121ELS0052US0

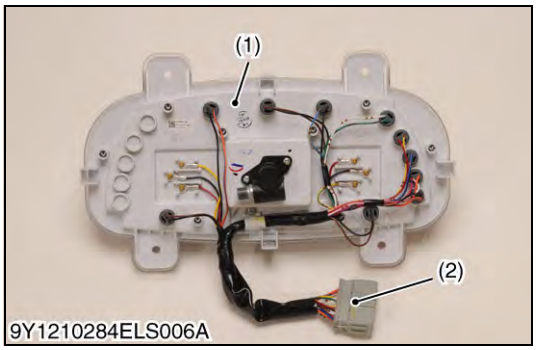

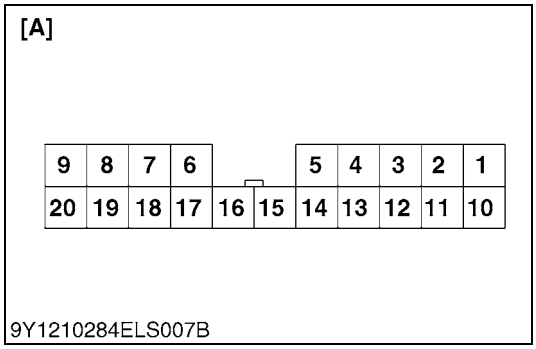

Functional Check of Coolant Temperature

1. Check the continuity with an ohmmeter across the **6** terminal to **13** terminal and the **6** terminal to **4** terminal on panel board.
2. If infinity is indicated, the coolant temperature gauge is faulty.

No.	Color of wiring	Item
1	L/Y	Turn **L**
2	O/L	Turn **R**
3	Br	Illumination
4	B	GND
5	Y/G	Fuel unit
6	Y	Temperature unit
7		Not used
8		Not used
9		Not used
10	L/B	Glow plug (+)
11	R/B	Glow plug (–)
12		Not used
13	R	IGN
14	Y/W	Engine oil pressure
15	G	Charge lamp (+)
16	W	Charge lamp (–)
17		Not used
18		Not used
19		Not used
20		Not used

(1) Meter Panel
(2) **20P** Connector

[A] 20P Connector of Panel side

9Y1211121ELS0053US0

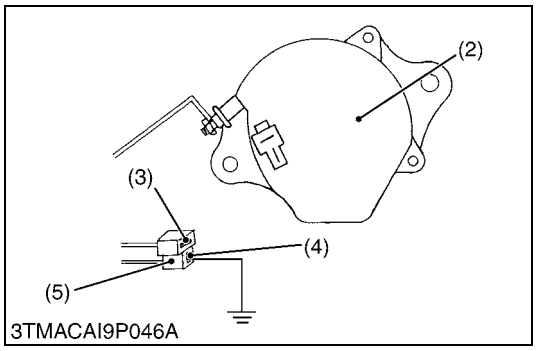

Charging Circuit (Panel Board and Wiring Harness)

1. Disconnect the **2P** connector from the alternator after turning the main switch **OFF**.
2. Turn the main switch **ON**.
3. Connect a jumper lead from **L** terminal on the connector (5) to the chassis.
4. If the charge lamp (1) does not light, the panel board circuit, alternator, wiring harness, or fuse is fault.

(1) Charge Lamp
(2) Alternator
(3) **IG** Terminal
(4) **L** Terminal
(5) Connector (Wire Harness)

9Y1211121ELS0054US0

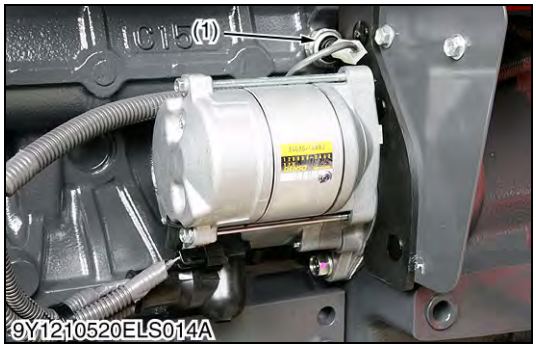

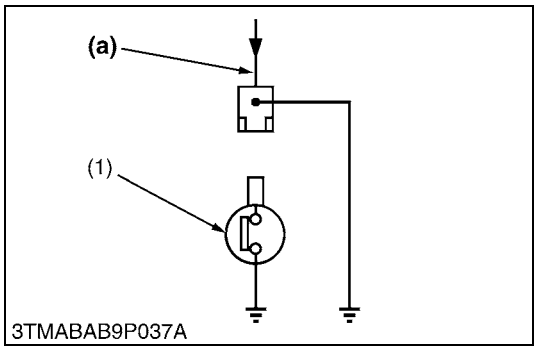

Engine Oil Pressure Switch Panel Board and Wiring Harness

1. Disconnect the lead from the engine oil pressure switch (1) after turning the main switch **OFF**.
2. Turn the main switch **ON** and connect a jumper lead from the lead to the chassis.
3. If the engine oil pressure indicator lamp does not light, the panel board circuit or the wiring harness is faulty.

(1) Engine Oil Pressure Switch **(a) From Oil Pressure Lamp**

9Y1211121ELS0055US0

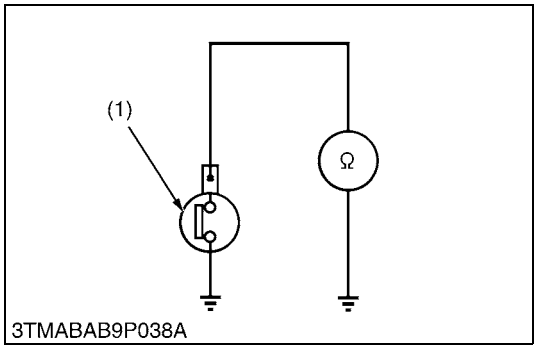

Engine Oil Pressure Switch Continuity

1. Measure the resistance across the switch terminal and the chassis.
2. If 0 ohm is not indicated in the normal state, the switch is faulty.
3. If infinity is not indicated at pressure over 50 kPa (0.5 kgf/cm^2, 7 psi), the switch is faulty.

Resistance (Switch terminal – Chassis)	In normal state	0 Ω
	At pressure over approx. 50 kPa (0.5 kgf/cm^2, 7 psi)	Infinity

(1) Engine Oil Pressure Switch

9Y1211121ELS0056US0

[5] GAUGES

(1) Fuel Level Sensor

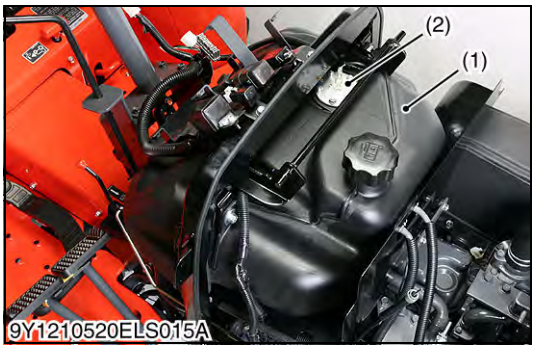

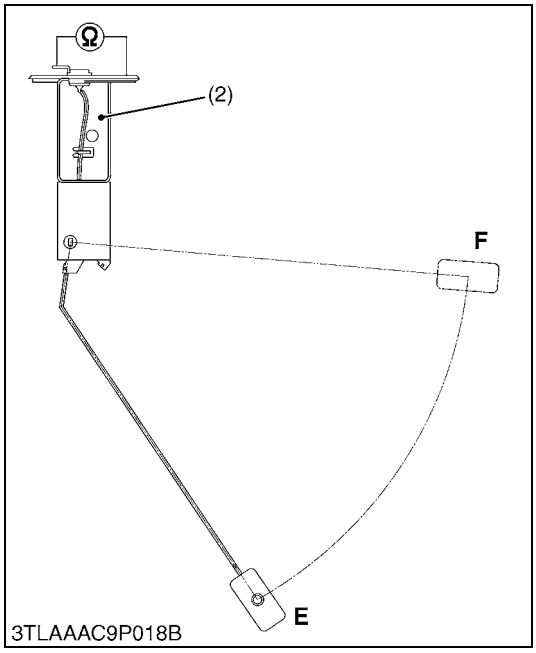

Fuel Level Sensor

1. Remove the fuel level sensor from the fuel tank.
2. Measure the resistance across the sensor terminal and its body.
3. If resistance does not meet reference value, the sensor is faulty.

Resistance (Sensor terminal - its body)	Reference value	Float at upper-most position	1 to 5 Ω
		Float at lower - most position	103 to 117 Ω

(1) Fuel Tank
(2) Fuel Level Sensor

F: Fuel "Full" Level
E: Fuel "Empty" Level

9Y1211121ELS0057US0

(2) Coolant Temperature Sensor

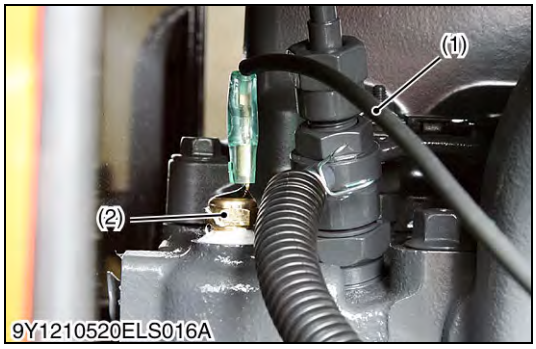

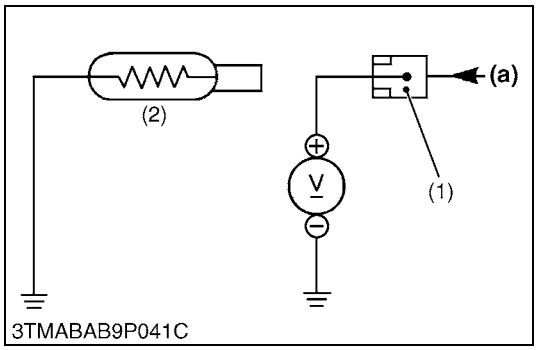

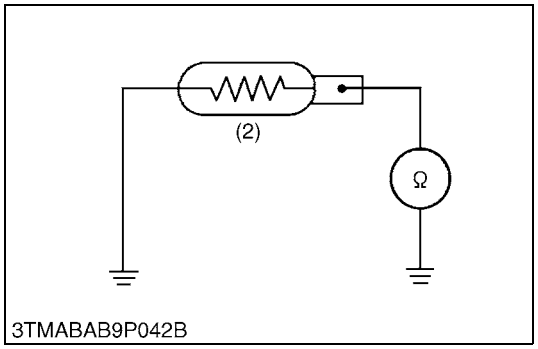

Coolant Temperature Sensor

1) Lead Terminal Voltage

1. Disconnect the lead from the coolant temperature sensor after turning the main switch off.
2. Turn the main switch on and measure the voltage with a voltmeter across the lead terminal and the chassis.
   If the voltage differs from the battery voltage, the wiring harness, fuse or coolant temperature gauge is faulty.

Voltage (Main switch at **ON** position)	Lead terminal – Chassis	Approx. battery voltage

2) Sensor Continuity

1. Measure the resistance across the sensor terminal and the chassis.
2. If the measurement is not indicated, the sensor is faulty.

Resistance (Sensor terminal – Chassis)	Factory specification	Approx. 670 Ω at 35 °C (95 °F) Approx. 118 Ω at 80 °C (176 °F) Approx. 55 Ω at 105 °C (221 °F)

(1) Lead
(2) Coolant Temperature Sensor
(a) From Battery

9Y1211121ELS0058US0

5. DISASSEMBLING AND ASSEMBLING

[1] STARTER

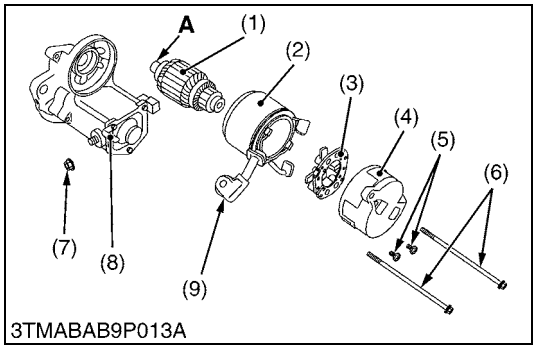

3TMABAB9P013A

Disassembling Motor

1. Disconnect the connecting lead (9) from the magnet switch (8).
2. Remove the screws (6), and then separate the end frame (4), yoke (2) and armature (1).
3. Remove the two screws (5), and then take out the brush holder (3) from the end frame (4).

(When reassembling)

- Apply grease to the spline teeth **"A"** of the armature (1).

(1)	Armature	(7)	Nut
(2)	Yoke	(8)	Magnet Switch
(3)	Brush Holder	(9)	Connecting Lead
(4)	End Frame		
(5)	Screw	**A:**	**Spline Teeth**
(6)	Screw		

9Y1211121ELS0059US0

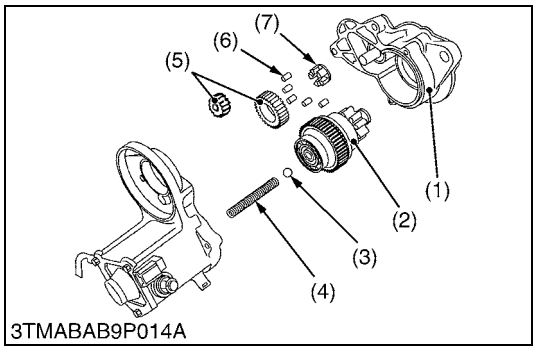

3TMABAB9P014A

Disassembling Magnet Switch

1. Remove the drive end frame (1) mounting screws.
2. Take out the overrunning clutch (2), ball (3), spring (4), gears (5), rollers (6) and retainer (7).

(When reassembling)

- Apply grease to the gear teeth of the gears (5) and overrunning clutch (2), and ball (3).

(1)	Drive End Frame	(5)	Gear
(2)	Overrunning Clutch	(6)	Roller
(3)	Ball	(7)	Retainer
(4)	Spring		

9Y1211121ELS0060US0

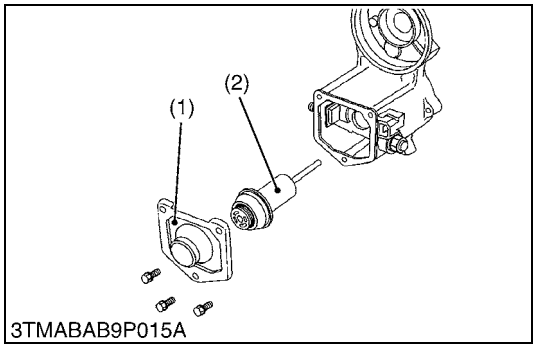

3TMABAB9P015A

Plunger

1. Remove the end cover (1).
2. Take out the plunger (2).

(1)	End Cover	(2)	Plunger

9Y1211121ELS0061US0

6. SERVICING

[1] STARTER

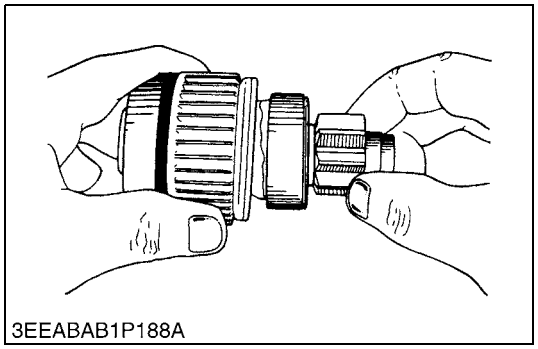
3EEABAB1P188A

Overrunning Clutch

1. Inspect the pinion for wear or damage.
2. If there is any defect, replace the overrunning clutch assembly.
3. Check that the pinion turns freely and smoothly in the overrunning direction and does not slip in the cranking direction.
4. If the pinion slips or does not rotate in the both directions, replace the overrunning clutch assembly.

9Y1211121ELS0062US0

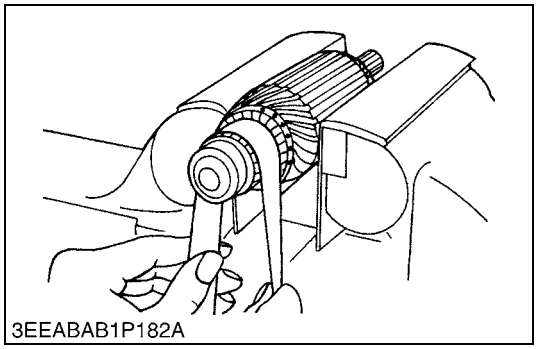
3EEABAB1P182A

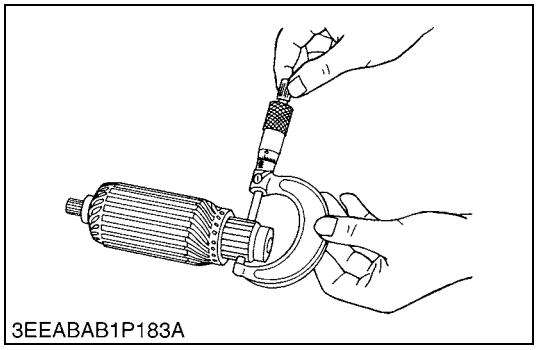
3EEABAB1P183A

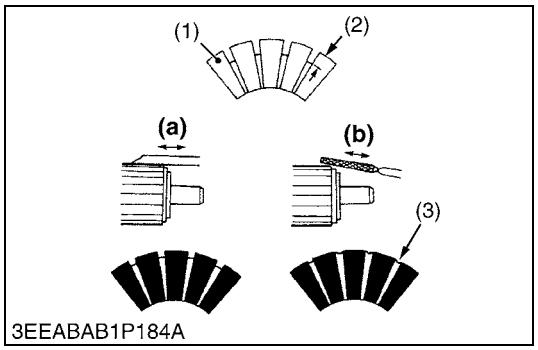

3EEABAB1P184A

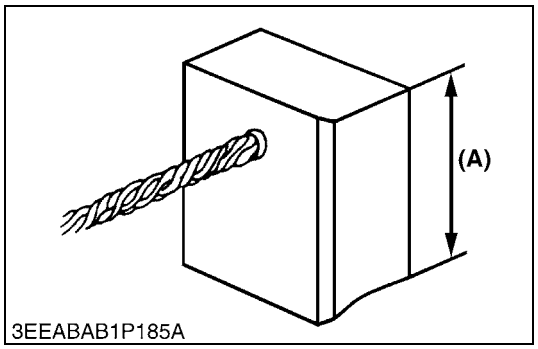

3EEABAB1P185A

Commutator and Mica

1. Check the contact face of the commutator for wear, and grind the commutator with emery paper if it is slightly worn.
2. Measure the commutator O.D. with an outside micrometer at several points.
3. If the minimum O.D. is less than the allowable limit, replace the armature.
4. If the difference of the O.D.'s exceeds the allowable limit, correct the commutator on a lathe to the factory specification.
5. Measure the mica undercut.
6. If the undercut is less than the allowable limit, correct it with a saw blade and chamfer the segment edges.

Commutator O.D.	Factory specification	30.0 mm 1.18 in.
	Allowable limit	29.0 mm 1.14 in.

Difference of O.D.'s	Factory specification	Less than 0.02 mm 0.0008 in.
	Allowable limit	0.05 mm 0.002 in.

Mica undercut	Factory specification	0.5 to 0.8 mm 0.02 to 0.03 in.
	Allowable limit	0.2 mm 0.008 in.

(1) Segment
(2) Undercut
(3) Mica

(a) Correct
(b) Incorrect

9Y1211121ELS0063US0

Brush Wear

1. If the contact face of the brush is dirty or dusty, clean it with emery paper.
2. Measure the brush length **(A)** with vernier calipers.
3. If the length is less than the allowable limit, replace the yoke assembly and brush holder.

Brush length **(A)**	Factory specification	15.0 mm 0.590 in.
	Allowable limit	11.0 mm 0.433 in.

9Y1211121ELS0064US0

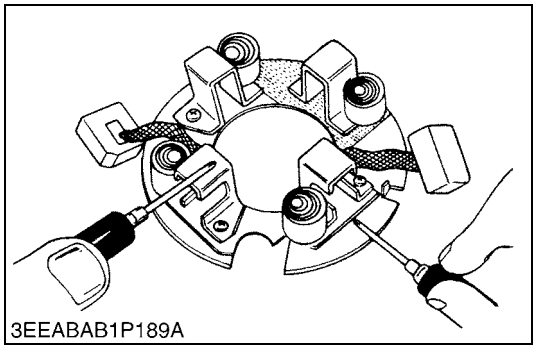
3EEABAB1P189A

Brush Holder

1. Check the continuity across the brush holder and the holder support with an ohmmeter.
2. If it conducts, replace the brush holder.

Resistance	Brush holder – Holder support	Infinity

9Y1211121ELS0065US0

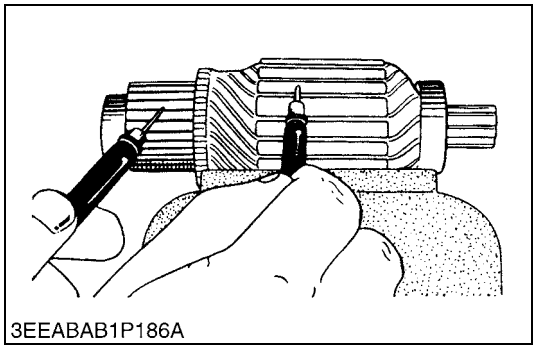
3EEABAB1P186A

Armature Coil

1. Check the continuity across the commutator and armature coil core with an ohmmeter.
2. If it conducts, replace the armature.
3. Check the continuity across the segments of the commutator with an ohmmeter.
4. If it does not conduct, replace the armature.

9Y1211121ELS0066US0

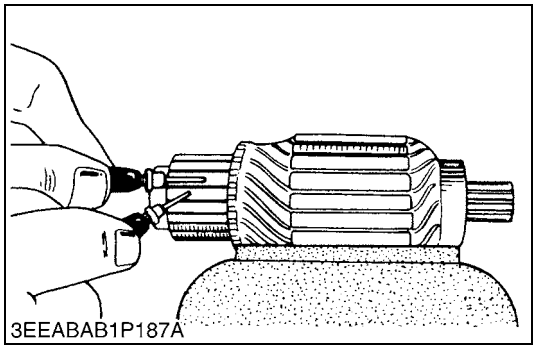
3EEABAB1P187A

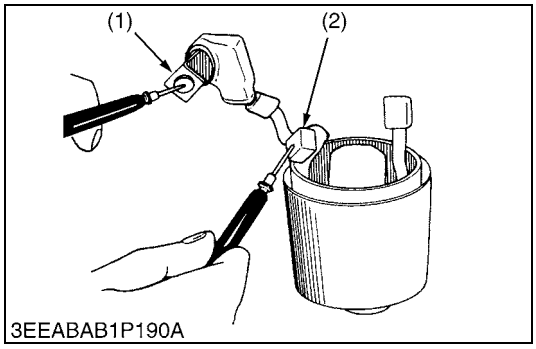

3EEABAB1P190A

Field Coil

1. Check the continuity across the lead (1) and brush (2) with an ohmmeter.
2. If it does not conduct, replace the yoke assembly.
3. Check the continuity across the brush (2) and yoke (3) with an ohmmeter.
4. If it conducts, replace the yoke assembly.

(1) Lead
(2) Brush
(3) Yoke

9Y1211121ELS0067US0

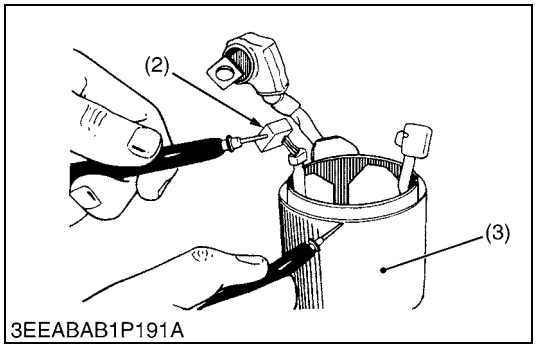

3EEABAB1P191A

https://truckmanualshub.com/

EDITOR:
KUBOTA FARM & INDUSTRIAL MACHINERY SERVICE, LTD.
64, ISHIZU-KITAMACHI, SAKAI-KU, SAKAI-CITY, OSAKA, 590-0823, JAPAN
PHONE : (81)72-241-1129
FAX : (81)72-245-2484
E-mail : ks_g.ksos-pub@kubota.com

KUBOTA Corporation

Printed in Japan 2014. 09, S, EI, EI, engusa Code No.9Y111-11210