https://truckmanualshub.com/

https://truckmanualshub.com/

Contents

Preface …….. 3

Chapter Ⅰ. Main Technical Specifications of the Tractor …….. 4

Ⅰ Specifications of the Tractor ……... 4

Ⅱ Engine ……. 5

Ⅲ Transmission System …….. 5

Ⅳ Wheels and Steering System……... 5

Ⅴ Braking System …….. 6

Ⅵ Hydraulic Lifting and PTO……. 6

Ⅶ Electrical Equipment and Instruments ……... 7

Ⅷ Filling Capacities……. 7

Chapter Ⅱ. Safety Regulations and Notices in Operation …….. 9

Ⅰ Safety Regulations……. 9

Ⅱ Important Notices…….. 9

Chapter Ⅲ. Running-in of the Tractor……. 11

Ⅰ Preparatory Work before Running-in…… 11

Ⅱ Running-in of the Tractor…….. 11

Ⅲ Works after the Running-in……... 12

Chapter Ⅳ. Operation of the Tractor……. 13

Ⅰ Control Mechanism Instruments and Switches……. 13

Ⅱ Control and Operation of the Tractor…… 15

https://truckmanualshub.com/

A. Starting of the Engine……... 15

B. Driving of the Tractor……... 16

C. Steering of the Tractor…….. 17

D. Gear Shifting of the Tractor……. 17

E. Braking of the Tractor……... 18

F. Operation of Front Drive……... 18

G. Operation of Differential Lock……. 19

H. Stopping of Tractor and Shutting off of Engine……... 19

III Control and Operation of Working Devices…….. 20

A. Control and Operation of Hydraulic Hitch……... 21

B. Control and Operation of P.T.O Shaft…….. 22

C .Control and Operation of Pulley in Stationary Operation…… 22

Chapter Ⅴ. Technical Maintenance of the Tractor…… 24

I Shift Maintenance……. 24

II Technical Maintenance after 250h Accumulated Working Hours…… 24

III Technical Maintenance after 500h Accumulated Working Hours…… 25

IV Technical Maintenance after 1000h Accumulated Working Hours…….. 25

V Special Maintenance in Winter……. 26

Chapter Ⅵ. Main Components Adjustment of the Tractor…… 27

I Clutch…… 27

II Transmission……. 28

III Differential…… 28

https://truckmanualshub.com/

IV Transfer Case……. 30

V Brake……. 30

VI Steering Gear……. 31

VII Front Axle……. 33

VIII Wheel ……... 35

IX Hydraulic Hitch Linkages……. 36

X Electrical Equipment……. 37

Chapter VII Main Troubles and Their Disposals of the Tractor…….. 40

Appendix I …….. 44

I Oil Seal Detailed Table of the Tractor –BY350(400)……... 44

II Bearing Detailed Table of the Tractor –BY350(400)…… 44

III Fitting Clearance of the Chassis Main Parts……. 45

IV Auxiliary Equipment (ordered Additionally by Users)……. 46

V On-Vehicle Tools (ordered Additionally by Users)……... 46

VI Spare Parts (ordered Additionally by Users)……. 47

VII Lubrication Chart (ordered Additionally by Users)…….. 48

Appendix II ……. 49

I Bearing Detailed Table –BY354(404)……... 49

II O-ring Detailed Table –BY 354(404)…… 49

III Oil Seal Detailed Table –BY 354(404)……. 50

IV Fit Clearance of Main Parts –BY 354(404)…….. 50

V Lubrication Chart –BY 354(404)…….. 50

https://truckmanualshub.com/

Appendix Ⅲ…….. 51

Ⅰ Sketch of Transmission System ……. 51

Ⅱ Diagram of Linkage Hitch …….. 52

https://truckmanualshub.com/

Preface

Model BENYE 35-40 Series Tractor is of medium-size wheeled agricultural tractor, suitable for both paddy and dry fields. The tractor is featured by reasonable structure, easy operation, sensitive steering, easy maintenance and so on. Equipped with different farm implements, it can perform ploughing, harrowing, sowing, harvesting and transporting. Besides, it can also supply stationary operations with power.

The tractor is newly designed and developed by our Corporation, adopting with direct-injection diesel engine, with characteristics of easy starting in low temperature, and low fuel consumption, and of choosing pendulum towing device and fitting gearshift mechanisms to meet agricultural requirements,etc. BY-354 and BY-404 tractors adopt the advanced full hydraulic steering and full seal drive front axle, especially suitable for performing in paddy and muddy fields.

In order to let the user know correctly the performances, and the adjusting and maintenance methods, keep the products in good working and technical conditions, and prolong the service-life, he is suggested to read this look carefully before operating, and is appreciated to let us know by mail his accumulated experiences and advice for us to improve further the quality of the products.

The products are being constantly modified and developed, and the content of the book is possibly a little different from the products manufactured. Hope to be noticed and understood.

Chapter Ⅰ Main Technical Specifications of the Tractor

Ⅰ. Specifications of the Tractor

Model			BY350	BY354	BY400	BY404
Type			Dry & Paddy Fields, Two-wheel Drive	Dry & Paddy Fields, Four-wheel Drive	Dry & Paddy Fields, Two-wheel Drive	Dry & Paddy Fields, Four-wheel Drive
Rated Towing Force (kN)			6.4(Dry Field), 7.4(Paddy Field)	9.7	8.5	11
Power of RTO shaft(kW)			24	24	27.3	27.3
Towing Power (kW)			≥19.3	≥19.3	≥22.05	≥22.05
Overall Dimension (mm)	Length (including the lower link)		3445	3440	3510	3505
	Width (normal wheel base)		1590	1590	1590	1590
	Height	(To the top of the steering wheel)	1550	1560	1550	1560
		(To the top of the exhaust pipe)	2030	2040	2020	2030
Wheel Tread	Front wheel		1300 (1300-1500)	1300	1300 (1300-1500)	1300
	Rear wheel		1200 (1200-1500)	1200 (1200-1500)	1200 (1200-1500)	1200 (1200-1500)
Wheel Base(mm)			1900	189.5	1960	1955
Min. Ground Clearance(mm)			396	323	396	323
Construction Mass(kg)			1525	1688	1535	1698
Mass Distri-but ion	Front(kg)		626	810	635	820
	Rear(kg)		1013	1025	1030	1061
Balance Weight	Front(kg)		105	105	105	105
	Rear(kg)		28	328	328	28
Turning Radius	without side brake (m)		3.6	4.2	3.8	4.4
	with one-side brake(m)		3.2	3.4	3.3	3.8
Running Speeds (Km/h)	Gear		Engine speed at 2300r/min,rear wheel rad. 572mm, uncalculated the value when slipping		Engine speed at 2400r/min,rear wheel rad. 572mm, uncalculated the value when slipping	
	Ⅰ		2.04	1.88	2.13	1.96
	Ⅱ		5.86	2.37	2.69	2.48
	Ⅲ		4.18	3.85	4.36	4.02
	Ⅳ		6.56	6.13	6.94	6.39

	Ⅴ	8.68	8.00	9.06	8.35
	Ⅵ	10.96	10.10	11.44	10.54
	Ⅶ	17.85	16.44	18.62	17.16
	Ⅷ	28.30	28.08	29.53	27.21
	Reverse Ⅰ	1.90	1.75	1.99	1.83
	Reverse Ⅱ	8.10	7.46	8.45	7.79

Ⅱ Engine

Model of Tractor		BY350	BY354	BY400	BY404
Engine	Model	TY395IT (Jiangdong)		490T(Xinchang)	
	Type	Vertical, water-cooled, 4-stroke direct-injection combustion chamber			
Number of Cylinder		3		4	
Cylinder bore × piston stroke(mm)		Φ95×105		Φ90×100	
Rated Power (kW)		27.5		29.4	
Rated speed (r/min)		2300		2400	
Fuel Consumption (g/kW·h)		≤243		≤238.8	
Oil Consumption (g/kW·h)		≤2.04		≤1.63(2.72)	

Ⅲ Transmission

Clutch		Single-disk, dry friction, constantly engaging,10″			
Gear Box		2-shaft,Spur gear (4+1) ×2 combustion type, sliding gear shift			
Central Transmission		Helical bevel gear			
Differential		Two planetary gears in bevel gear form			
Final Transmission		Externally meshed spur gear form			
Front Drive Axle	Type		Middle-positioned		Middle-positioned
	Central Transmission		Helical Bevel Gear		Helical Bevel Gear
	Differential		Bevel Gear		Bevel Gear

Ⅳ. Wheels and Steering System

Frame Type	No Frame			
Front Shaft	Front shaft arm adjustable		Front shaft arm adjustable	

Front Axle			Planetary gear final drive		Planetary gear final drive
Tires	Front Tire	2×5.50-16	2×7.50-16	2×5.50-16	2×7.50-16
	Rear Tire (ordinary type)	2×11.2-28			
	Rear Tire (high lug rubber type for paddy field)	2×11-28			
Tire Inflation Pressure (kpa)	Front Wheel	220-250	190-210	220-250	190-210
	Rear Wheel (ordinary type)	80-110			
	Rear Wheel (high lug type for paddy field)	160-180			
Front Toe-in (mm)		4-8			
Type of Steering		Mechanical type, front wheel steering	Separate type, fully hydraulic, front wheel steering	Mechanical type, front wheel steering	Separate type, fully hydraulic, front wheel steering
Steering Gear		Circular ball with rack type ratio 21.4	Open-heart hydro-static type	Circular ball with rack type ratio 21.4	Open-heart hydro-static type
Steering Pump (Constant Flow Pump)			CBTT1-E306H L062L(HLCB-D06106-Left)		CBTT1-E306H L062L(HLCB-D06106-Left)
Diameter of Steering Wheel		425 (mm)			

Ⅴ Brake System

Brake	Dry disc, self boosted
Type of Control	Mechanical
Brake for Stopping Tractor	Pedal-locked type
Brake of Trailer	Air brake

Ⅵ Hydraulic Lifting and PTO.

A. Hydraulic hitch system

Type of Hydraulic System	Semi-separated
Model of Hydraulic Pump	CBN-E310 gear pump
Releasing Pressure of Safety Valve	16
Lift	Draft and position control
Hitch Linkage Type	Rear 3-points hitch linkage
Ram Piston Diameter × Stroke (mm)	ϕ85×102

Max. Lifting Capacity (kN)		At the point of 610mm frame point ≥ 5.79
Hydraulic Output Joint	Position	Rear location on right side
	Inside Specification	M16×1.5 inside diameter ≥ϕ8
	Output Hole Numbers	1
	Pressure	16
	Theoretical Flow Rate of Oil Pump	20.65(2300r/min),24(2400r/min)

B. PTO shaft

Type	Dependent
Standard Speed (r/min) (with 80%-90% of the rated engine speed) Low Gear High Gear	 540 1000
Dimensions of Spline Shaft(mm)	8-38×32×6 (for domestic market) 6-34.79×28.9×8.69(for abroad market)

C. Belt pulley of PTO shaft

Width(m)		125
Liner Speed	At Low Gear	12
	At High Gear	22

D. Towing and trailing devices

Type	Fixed(for domestic market)	Rocker (optional)
Towing Height Front Ground	570	394
Towing Pin Diameter (mm)	ϕ40	ϕ33
Trailing Device		

Ⅶ Electrical Equipment and Instruments

Tractor Type	With ordinary instrument	With combined instrument	With combined switch
Electrical System	12V negative ground, single wire system		
Generator	JF121A (14V 200W)		
Voltage Regulator	FT111 JFT149(for export)	FT126C JFT126C(for export)	
Starter	QD1315A(12V,25kW)		
Battery	3-QA-150 (6V 150 Ah) 2		

Lighter and Signaling Device	Front Head Lamp	ND140×90T-1,2		
	Rear Lamp	WD140×90T-1		
	Front Light	H107,2		
	Rear Light	XH8-5,NJ130,2(for export)		
	Horn	DL1290		
Controlling and Alarming Device	Ammeter	307C 30A/12V	ZB114A	ZB114A
	Water Temperature	302A(CA10)40-100 ° C/12V		
	Oil Pressure Gauge	308A(CA10)0-0.5Mpa/12V		
	Hour Meter	D-704-1F(for export)		

VIIIMain Filling Capacities.

Place Filled	Fillings, Type of Oils		Capacity (L)
Main Fuel Tank	In Summer	No.0 Light Diesel GB252	36
	In Winter	No.-10 Light Diesel GB252	
Cooling System	In All seasons	Clean Soft Water	8.8
Engine Oil Sump	In Summer	No.40 Diesel Engine Lubricating Oil GB5323	6
	In Winter	No.20 or 30 Diesel Engine Lubricating Oil GB5323	
Mechanical Steering System	In All seasons	No.26 or 80W/90 Gear Lubricating Oil	0.6
Hydraulic Steering System	In All seasons	No.32 Low Condensation Point Hydraulic Oil	1.8
Lift	In All seasons	N0.100 Lubricating Oil for Hydraulic System and Gears	10
Transmission	In All seasons	N0.100 Lubricating Oil for Hydraulic System and Gears	20
Pulley			0.55
Air Filter	In Summer	No.40 Diesel Engine Lubricating Oil GB5323	0.88
	In Winter	No.20 or 30 Diesel Engine Lubricating Oil GB5323	
Front Axle	In All seasons	No.100 Lubricating Oil for Hydraulic System and Sears	7
All Grease Nipples	In All seasons	No.2 Calcium Base Grease	

Chapter II. Safety Regulations and Important Notices in Operation of the Tractor

I . Safety Regulations.

A. The tractor can be operated only by the especially trained operator.
B. Before starting-up, it is necessary to see whether there is any obstacle on road, or any person between the tractor and farm implement or trailer.
C. In driving, no one is allowed to climb up or get down the tractor. It is forbidden to make any inspection or repair under the tractor while the engine is running, or to touch the rotating parts or the exhaust pipe.
D. Before getting off the tractor, the operator is asked to put all gearshift levers in neutral positions.
E. Lightening instruments should be ensured completely reliable while the tractor works at night.
F. On steep road, only low speed gears can be used. Rolling down a steep slope, the tractor is never driven with the gearshift lever in neutral position.
G. In transportation, the left and right brake pedals should be joined together.
H. When the tractor running at high speed, neither a sharp turn nor a single side brake for a sharp turn is permitted.
I . When not being used, the differential lock must be put in the state of disengagement, and must be strictly forbidden in the state of "engagement" while the tractor is driven.
.

II. Important Notices

A. A new or overhauled tractor can be operated to take normal load after its running-in according to the "Running -in of the New Tractor".
B. Nuts, bolts and all the other easily loosening accessories and connecting parts, such as the nuts of the guide and drive wheels, the connecting bolts of the draw bar at the rear end of the tractor and of the transmission, should be often checked. If any loose, it needs to be tightened.
C. Check oil line, electrical circuit and cooling water before starting. It is the precondition to keep engine work normally by using clean diesel. In any case , no unfiltered fuel is allowed to be poured into the fuel tank. The readings of the instruments should be carefully noticed after starting.
D. The shut-off valve on the right side of lift needs to be closed when the tractor with implement is driven.
E. In stationary operation with pulley, the auxiliary gearshift levers are put in neutral position, of which the main gearshift lever is put in Gear-I or Gear -II position in order to ensure the front bearing of the Primary Shaft in gearbox normally lubricated.
F. The tractor with high lug tires is used only for farm operations or driving in field, and not allowed to be driven on road at high speed.
G. The respective four screw holes of M12 and M18 on the both sides of the bridge case are used to fix driver's cab, farm implements or accessories. If being fixed with front loader or

other heavy implement, four-wheel-drive tractors are recommended..

H. The tractor can be attached with a four-wheel-trailer less than 4 tons.

I. Remove weeds and dust on radiator in time to ensure normal radiation. When a radiator is overheated, cold water is forbidden to be poured into the engine or the radiator to avoid of damaging the block. At this moment, reduce the load, and after the temperature decreases, add up cooling water while the engine is running.

Chapter III. Running-in of the Tractor

A new or overhauled tractor can be only used after the running-in. Otherwise, the service life shall be shortened.

I. Preparatory Work Before Running-in.

A. Clean up the appearance of the tractor.
B. Check and tighten the outer nuts and bolts.
C. Fill lubricating oil, fuel and water to the specific levels.

II. Running-in of the Tractor.

A. 10 minutes running-in of engine in idle speed.
Start the engine as the stipulated process, increase the rotating speed with increase of the water temperature and oil pressure. Check whether there is any oil or air leakage, listen to the engine attentively and notice the readings of ammeter, water thermometer and oil gauge. Continue the next running-in only after the normal operation of the engine has been confirmed.
B. 10 minutes running -in of hydraulic hitch linkages.
After a implement has been mounted, the hitch linkage is raised and lowered smoothly for 10 minutes, not less than 20 times, with control of the raise--lower lever at the rated running speed of the engine. To avoid of damage, the implement can not be raised or lowered on hard ground, and the oil pump stops its working after the running -in.
C. 2-hour running-in of driving without any load.
The tractor should be started and driven according to its regular way, and the following stipulations and process be carried out for the running -in.

Gear	III	IV	V	VI	Reverse I
Time of Running-in (min)	20	30	30	30	10

In idle running-in of driving, the operation of left and right steering and appropriate application of braking should be practiced. In the course of running -in, it is necessary to pay attention to the followings.

a. Listen to the engine, transmission, and running and steering system.
b. Check whether the clutch, brake, and gearshift are normal and easy.
c. Check whether the readings of the instruments and electrical equipment are correct. Once an abnormal case occurs, the problem is necessary to be analyzed and disposed before restarting the running-in.

D. 48-hour running -in of the tractor under loaded conditions.
Loaded running-in means to drive a tractor with a certain given load when a running-in is going on. The load should be gradually increased from the light to the heavier, while the speed from the

low gear to the higher.

List of loaded running-in and the loads

Load(N)	Gear	III	IV	V	VI	Total	Approximate Towing Force
2000	Time(h)	3	4	5	5	17	4-wheel trailer attached, load 2500 kgs, transportation on road.
4000		3	5	5	5	18	3-share plough draft, tillage width 68 cm, depth 14 cm.
5000~6000		3	5	5		13	4-share plough, drafted tillage width 90 cm, depth 14 cm

III. The works after running-in

After running-in, there must be metal scraps or powder remained in the lubricating oil of transmission, lubricating and hydraulic systems. A thorough cleaning should be performed and it is necessary to change all the lubricating oil and the oil in hydraulic system. The tractor can be used after the necessary technical maintenance. The followings are to be performed.

A. Drain out the oil from the engine oil sump when it is hot, clean the fuel, oil and air filters, and then fill with new oil.

B. Tighten the nuts of cylinder head, inspect and adjust the valve clearance.

C. Drain out the lubricating oil in the housings of the gearbox, the front and rear axles, and the left and right end transmission when it is hot, and fill with clean and light diesel. Drain out the light diesel immediately when stopping the tractor after running with II-speed for 2–5 minutes.

D. Drain out the hydraulic oil from the steering oil tank and the steering oil cylinder, and then fill with new hydraulic oil.

E. Change the cooling water.

F. Follow the indications of the lubricating drawing, and put grease into the lubricating points.

G. Inspect the toe-in, clutch and brake pedals' free travels, and adjust them if necessary.

H. Inspect and tighten all bolts and nuts outside.

https://truckmanualshub.com/

Chapter IV. Operation of the Tractor

I. Control Mechanism, Instruments and Switches

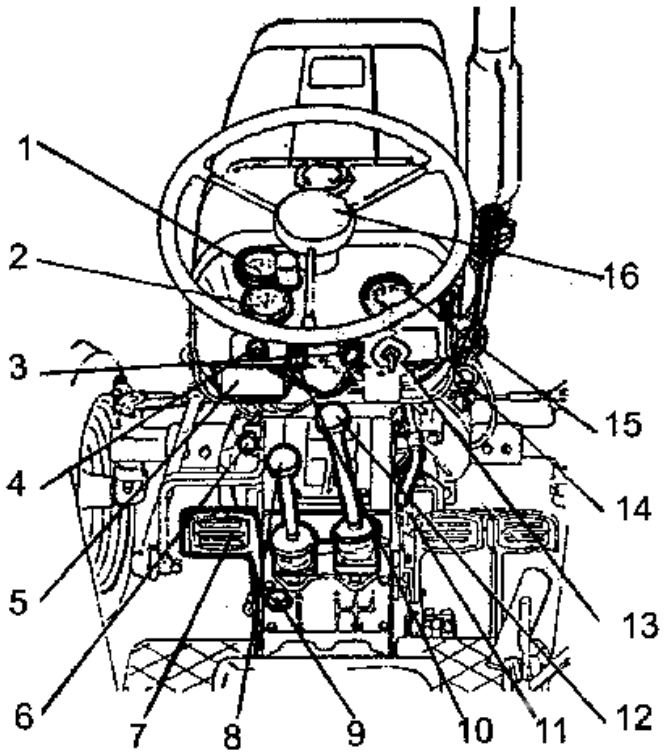

Fig.4-1

1. water thermometer 2. oil pressure gauge 3. rear lamp switch
4. signal switch 5. relay 6. engine shut-off pull rod
7. clutch pedal 8. auxiliary gearshift lever
9. oil inlet plug ,transmission (oil dipstick) 10. 3-throw light switch
11. decompression lever 12. main gearshift lever 13. preheating switch
14. hand throttle 15. ammeter 16. horn button

A. Preheating Switch

When the key is inserted into the switch at the position "O", all circuits are disconnected, and when it is turned clockwise to the position "D", all circuits expect the starting and pre-heating circuits, are connected. (After starting, the key has to be kept in this position.) It is turned to the position "Y" to actuate the preheating plug; tumed to the position "Q" to connect the starting loop; and turned counter-clockwise to the position "Q", to start directly.

B. Hand Throttle

Pulling the handle can increase fuel supplying, and pushing the handle can decrease the supplying.

C. Decompression Lever

Decompression is obtained by turning it clockwise.(Serial 40 not equipped with this device)

D. Shut -off Pull Rod

Pulling the rod leads to shut-off of the engine. The pull rod is always to be pushed back to the original position for the next starting.

E. 3-throw Light Switch.

When the switch is pushed to the final position, all the lights are switched off. When pulled out to the 1st position, the corner lamps, panel lamps and rear lamps are lit; when to the 2nd ,the head lamps, panel lamps and rear lamps are lit, and finally when to the 3rd, head lamps, panel lamps and rear lamps are lit.

F. PTO Drive Shaft Handle.

It is the main controller of lifting mechanism, oil gear pump and PTO shaft. In the "engaged" position, power is transmitted to the above three places; while in the "disengaged"

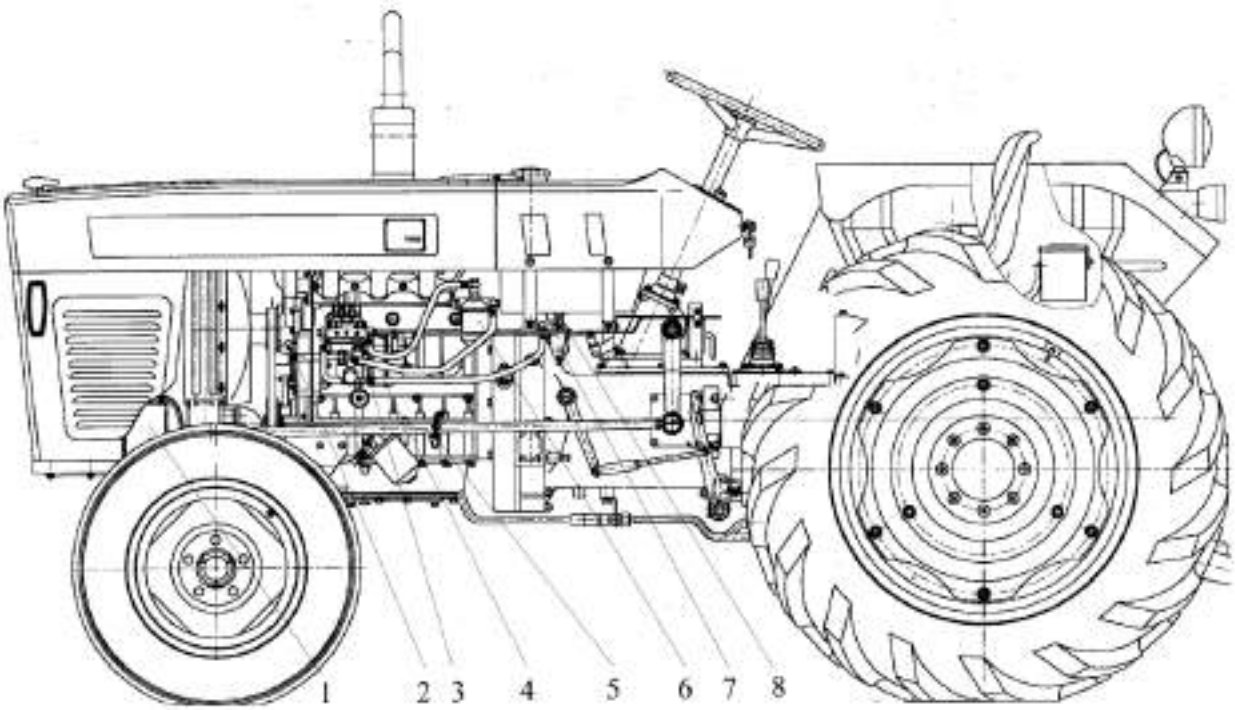

Fig.4-2

1. battery 2. engine oil inlet 3. fuel pump 4. injection pump assy
5. oil dipstick 6. fuel filter 7. sediment cup 8. switch of fuel tank

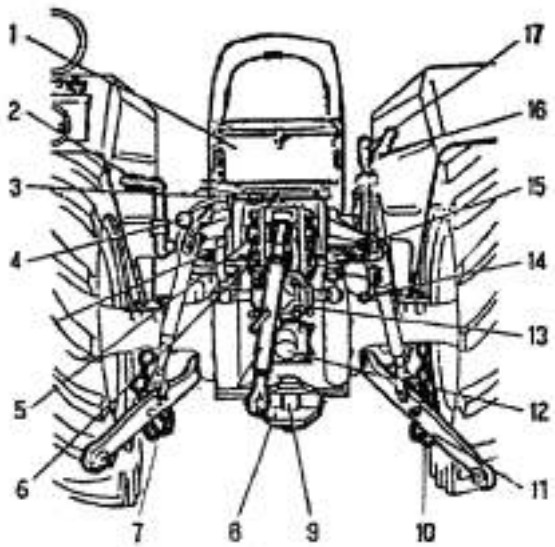

Fig.4-3

1. tool box 2. crank of engine
3. oil inlet, hydraulic lift 4. PTO shaft handle
5. joint point, upper link draft control
6. joint point, upper link position control
7. upper link 8. draw bar
9. draw bar .pin 10. position-limit chain
11. lower link 12. shield, PTO. shaft
13. gear pump 14. length adjusting handle, lift link
15. oil outlet pipe, lift 16. draft control lever
17. position control lever

position, power is cut off. The clutch pedal must be pressed down before its engagement.

G. Draft and Position Adjusting Levers

Push either the draft lever or the position lever forward to lower the implement. But in lifting, the both levers must be put in the lifting position (the final end).

H. PTO Shaft Handle

Push the handle forwards for low speeds, and push backwards for higher speeds. When the handle is in the middle position, the shaft is disengaged. The clutch pedal must be pressed down before gearshift.

I. Differential lock handle.

Pushing to the right side means connection, and pulling to the left side means separation.

II. Operation and Driving the Tractor

A. Start of the Engine.

a. Preparatory work

(1).Check with oil dipstick the lubricating oil level of engine sump and gearbox, which necessarily remains between the upper and lower scale lines (Fig.4-4 and 4-5). For the four -wheel- drive tractor, it is necessary to check with oil dipstick the oil level of the front axle (front axle in level position), which exists within 5 mm above or below the dipstick scale line. Besides, sufficient cooling water and fuel are needed by the radiator and the fuel tank.

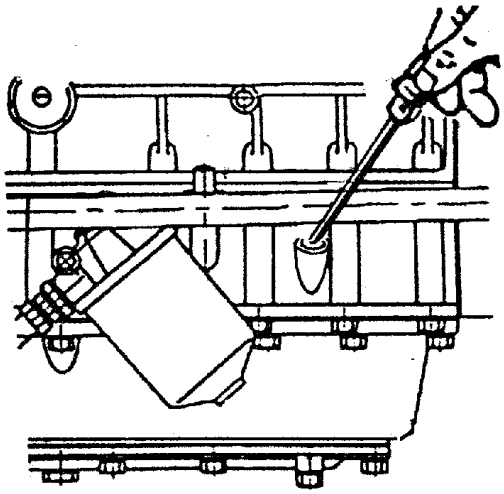

Fig.4-4

Check the lubricating oil level of the engine sump

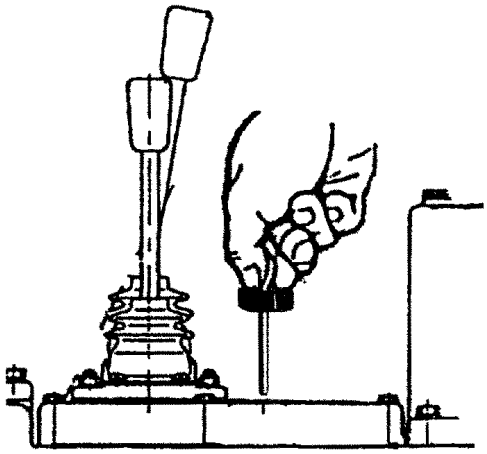

Fig.4-5

Check the lubricating oil level of the gearbox

(2).Check the lubricating oil level of the steering oil tank (steering oil cylinder fully filled with the oil.).(Fig.4-6)

(3)Unscrew the switch of the sediment cup. (Fig 4-7)

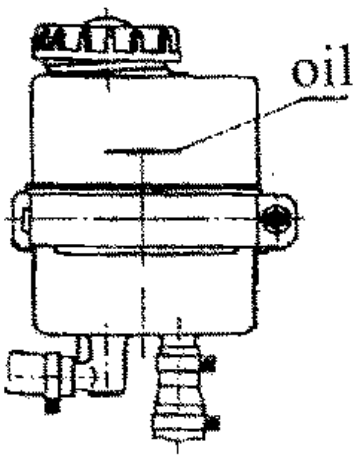

Fig.4-6

Check the lubricating oil in the steering oil tank

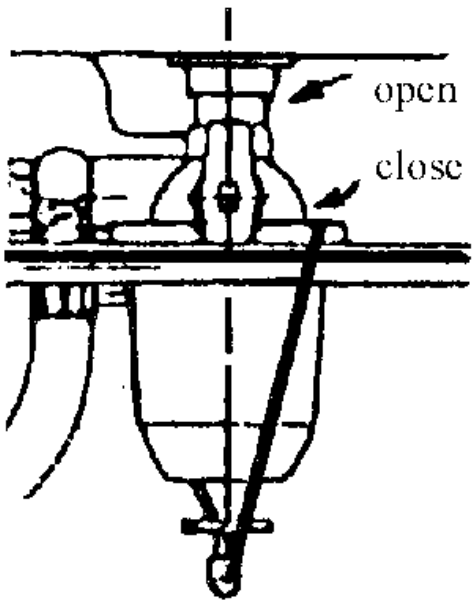

Fig.4-7

The direction indication of the sediment switch

(4). Push the shut -off lever to the fuel -supplying position.
(5). Hand throttle in semi-open state (medium fuel supply position).
(6).Put the control levers of gearbox PTO shaft and front-drive handle in neutral position.
(7). Insert the key into the preheating switch.
(8) If restart a tractor being cold or being stored for a long time, loosen the air-releasing screw in injection pump, press with hand the Handle-2 of the pump, and tighten the air releasing screw after the air is released. (Fig. 4-8).

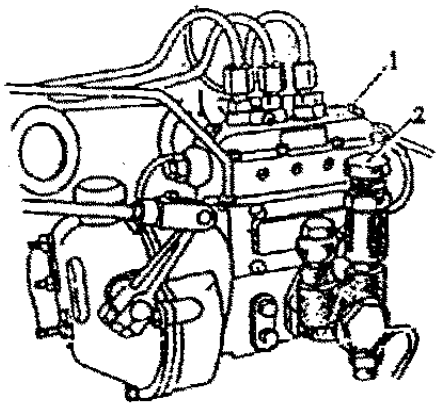

Fig.4-8 Injection Pump

1. air releasing screw
2. handle, injection pump

b. Start of the engine.

(1). Start of the cold engine.(the environmental temperature above 5 ^{0}C)

Turn the decompression lever clockwise to the level position and the key of preheating switch counter-clockwise to position "Q". As soon as the engine has been started , the decompression level should be immediately returned to its original position, and the key is turned clockwise to position "D" to switch on the whole circuits.(See Fig.4-1). The hand throttle is necessary to be put in the less fuel supply position after the engine has been started.

(2). Preheating start (environmental temperature below 5 ^{0}C)

Turn clockwise the decompression lever to the level position, and the preheating switch to position "Y" for 30--40 seconds preheating and then to "D". As soon as the engine has been started, it is necessary to return immediately the decompression lever to its original position and tum counter-clockwise the key to "D" to connect the whole tractor circulation.(See Fig.4-1). After the engine has been started, the hand throttle should be put to the less fuel supply position.

c. Cautions for starting.

(1) The starting can not exceed 15 seconds. The engine can be restart 2 minutes later to protect the battery and the starter. If the engine can not be continuously started for three times, it is recommended to find out the reasons before other restartings.
(2) Keep the engine in idle running at the speed of about 600r/min.for several minutes after the starting. The tractor permits to be started off only on the condition that the oil pressure has reached a certain value (0.2--0.5Mpa) and the water temperature has been increased.
(3) To keep the engine easily started in Winter, pour hot water (80--90 ^{0}C) into the radiator and switch on the water tap of the engine. Switch off the water tap when the draining water temperature is about 40--50 ^{0}C , and at the same time, pour the warmed oil (60--70^{0}C) into the engine (after the cold oil has been drained out.).

B. Start off the tractor.

a. Whistle and watch whether there is any obstacle around.
b. When the engine runs at low speed, step down the clutch pedal to the end, and put the main and auxiliary gearshift levers to the required gears.(see Fig.4--9 and 4--10).
c. Slowly release the clutch pedal and simultaneously increase fuel supply (foot throttle available Fig.4--11) to start off the tractor smoothly. After the tractor is started off immediately release the clutch pedal to avoid of wearing of the clutch.

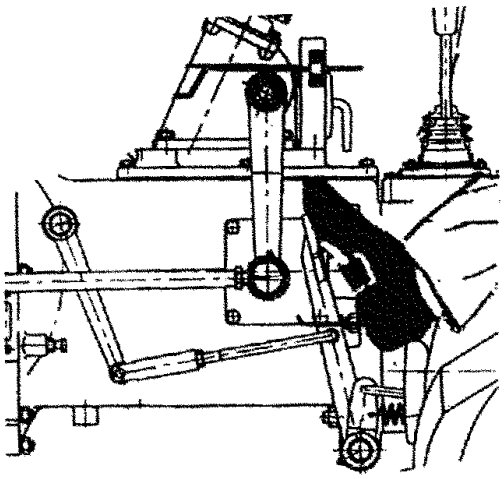

Fig.4-9 Separating the Clutch

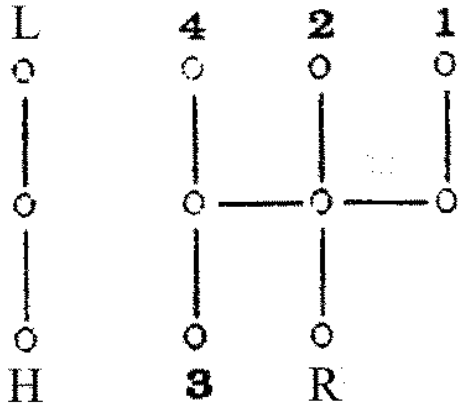

Fig.4-10 Gears of the Main and Auxiliary Gearshift Levers

C. Steering of the tractor

a. Tractor steering is actuated by steering the wheel. A sharp-turn is allowed only at lower running speeds. On farm working (especially in paddy field),one-side-braking can be used to promote productivity and maneuverability by reducing turning radius. While working at higher speeds or in transportation, it is forbidden to make a sharp-turn with one-side-braking to avoid of turning-over of the tractor.

b. When the fully hydraulic steering resistance exceeds the stipulated value, the safety valve begins to work and zi-zi-zi noise occurs because of the overflow. At the moment, the steering wheel is returned a little to avoid of long time overload of the steering system.

D. Selection of proper gears.

a. The highest productivity and the maxim economization can be obtained by selection of proper gears.

Generally: Gear I and II: for roto-tilling and transplanting.
Gear III: for harvesting.
Gear IV, V and VI, for ploughing, harrowing and sowing.
Gear VII and VIII, for highway transportation.

Gear I and II can not be used in ploughing or drafting heavy load. Otherwise, the transmission system will be damaged by the severe overload. A tractor should never be overloaded. Overload can be discriminated by the following ways.

If a overload tractor works on the Gear V with the foot throttle semi-open, the speed is increased whether foot throttle is quickly pushed to full-open, which indicates that the tractor is overloaded

The tractor, working on the Gear V, may indicate overload if it releases heavy sound and dark smoke. In such a case, it is necessary to shift to Gear IV. Each gearshift requires to step down the clutch pedal to the end to protect the gears from being clashed.

b. When shifting gears, first of all, step down the clutch pedal to have the clutch disengaged (see fig.4-9). After the tractor stops the gearshift lever of the gearbox should be smoothly put to the required gear positions. If the required gear can not be reached, engage and disengage the clutch again to get the gear. The gear shifting position of gearbox is shown in Fig.4-10.

c. Notices in driving.

1. The readings of the gauges should always be noticed. The readings of oil gauge should be within 196--343 Kpa (2--3.5 Kg/cm ^{2}); that of the water thermometer within 70--90 ^{0}C; that of the ammeter in middle position, or "+" direction of charging. If any of the gauges is out of order, it should be repaired or changed, and never be remained in service.
2. Listen attentively to the engine and the transmission. If some abnormal clashing sounds are heard, the engine should be stopped at once and the troubles be disposed off.
3. Notice the color of exhausted gas. It should not be black, and the engine is not allowed to work under the over-loaded condition.
4. If slippage or incomplete disengagement in clutching, or no sensitivity in braking occurs, the driving needs to be stopped and the tractor to be repaired.
5. If the front end of the tractor is cocking (generally occurs in deep paddy fields), the foot throttle should be reduced at first, and then the clutch detached slowly to unload the tractor and prevent it from tilting over.
6. In driving, do not put foot on clutch pedal, or control the speed of the tractor with the clutch.

E. Braking of the tractor.

a. Generally, firstly reduce the foot throttle, step down the clutch pedal, and then gradually step down the brake pedal according to necessity (see Fig.4-12) to stop the tractor smoothly.

b. In case of emergency stopping, both pedals of the clutch and the brake should be stepped down simultaneously, instead of only stepping down the brake pedal to avoid of the braking friction disk heavily worn and the shut-off of the engine,

c. In transportation or driving on road, the left and right brake pedals must be joined together and locked. When the tractor is stopped, especially on a slope ground , the brake pedal must be locked by the lock pawl and the ratchet to keep the tractor from skidding.

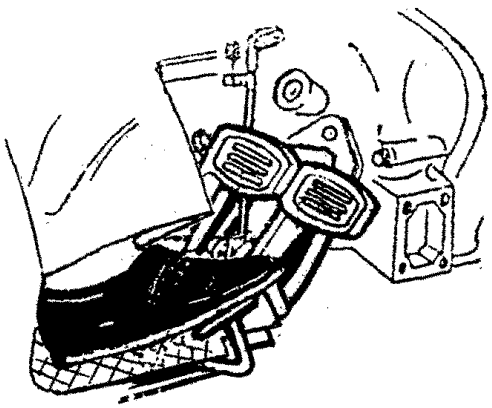

Fig.4-11 Foot Throttle Control

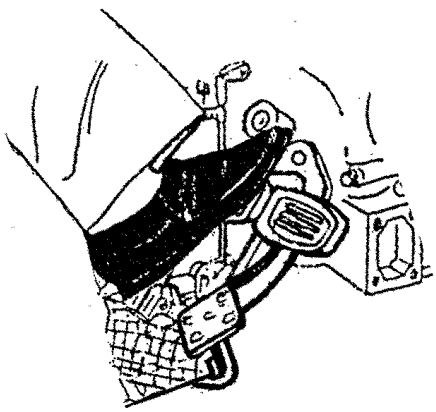

Fig.4-12 Braking Control

F. Use of Front Drive

The front drive part of the four-wheel-drive tractor, is controlled by the control handle (1)(See- -fig.4--13) ,which is located on the left lower side of the seat. When the control handle (1) is lifted up, power is transmitted to the front drive ; while the control handle is pressed down, power to the front-drive, is cut off. It should be noticed that clutch pedal (2) is stepped

down for complete separation, and then the control handle should be lifted up or pressed down before the power is supplied or cut off.

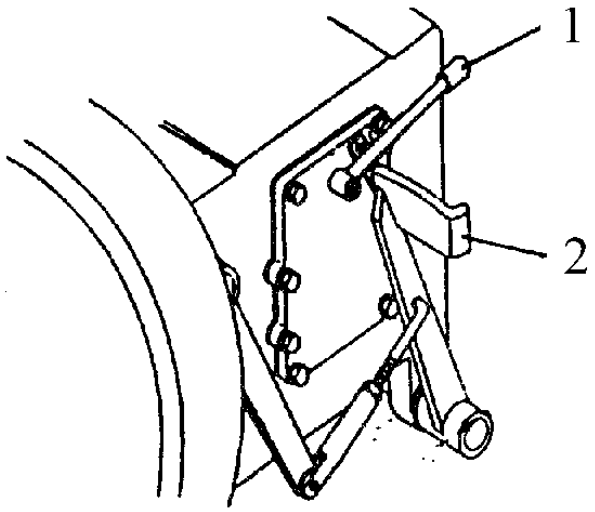

Fig.4-13 The Front-drive Control

1. front -drive handle 2. clutch pedal

G. Use of Differential Lock.

When one side of the rear wheels of the tractor slips and sanks, the differential lock handle should be pushed to the right , and the two semi-shaft gears and the block of the differential are rigidly locked together to make the two rear wheels moving at the same time and passing through sliding field. Afterwards, the differential handle is released immediately and the differential mechanism automatically backs to its original position. The differential handle is used only when the tractor stops or runs at low speeds and is strictly forbidden to be used in the case of sharp-turning or running at high speeds.

H. Stop of the Tractor and Shut-Off of the Engine

a. Reduce the foot throttle to slow down the speed of the tractor(Fig.4--11)
b. Step down the clutch pedal and then depress the brake pedal when the tractor stops, put the main gearshift lever to neutral position.(Fig.4--9and 4--10).
c. Release the clutch and brake pedals and let the engine run in idle speed.
   Notice; On emergency stopping, follow No.5.2.
d. Keep the engine running at lower speed for a period of time to decrease slowly the temperature of the oil and the water. Strictly forbid to stop the engine running at high temperature.
e. Push the hand throttle to the off position.
f. Draw out the shut-off rod to stop fuel supplying to the injection pump, and the engine shuts off immediately. Push the rod back to the fuel supplying position (See Fig.4--1).
g. Take the key out of the preheating switch.(Fig.4--7 and 4–1)
h. To protect the machine body from cracking due to freezing of the cooling water in Winter, unscrew the two water draining valves and the cap of water tank to release the water completely.
i. Turn off oil tank cock in case of long time stopping of the tractor.

https://truckmanualshub.com/

Ⅲ. Control and Operation of Working Devices

A. Control and Operation of Hydraulic Hitch.

The hydraulic hitch system is used to lift the implement when the tractor is driven to another place, to adjust the tillage depth of the implement in tillage ,and to supply pressure oil to another equipped machines (such as automatic unloading tractor) . The hydraulic system is operated by two levers, the draft control the lever and position control lever. When the system is not in use , the both levers should be put in the lowest position(Never put the both levers in lifting position at the same time.).

To have the hydraulic system into working state , step down the clutch pedal, put the PTO handle in "engagement" position(Fig.4--14),and then release the clutch pedal.

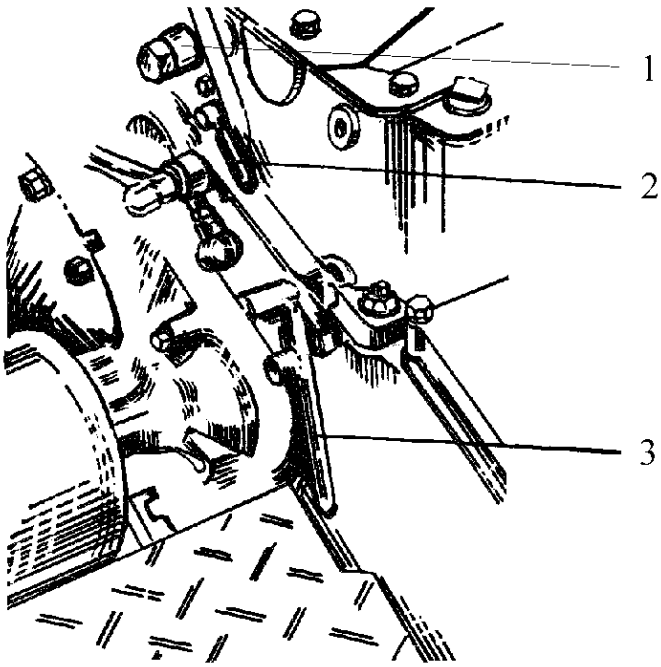

Fig.4-14 PTO Drive Shaft Release Handle
1. screw plug 2. adjusting valve handle
3. PTO drive shaft release handle

a. Mounting of the Implement

When a implement is mounted, the draft and the position control handles of the lift control mechanism, are put in low position (Fig.4--15), and the tractor is slowly driven inversely to approach the implement. At first, the implement is connected with the left lower link, and then with the right low link. If the shaft of the implement is not correct alignment the hole of the right lower link, the length of the right lower link can be adjusted by turning the adjusting handle of the right lift link. Finally, the upper links are connected. Afterwards, all the links are locked with lock pins.

The implement in level direction can be adjusted by turning the screw sleeve at the middle of upper link. After the adjustment, it should be clamped by a spring lock.

b. Lifting , lowering and transporting of implement.

Both draft and position control handles can lift and lower implement. But they are used in different cases respectively. When either of them is in use , the other must be put and locked in lifting position. The implement is lowered when it is moved forward, and vice versa. It usually takes 3 seconds to raise the implement and 1 second to lower it. The speeds have already been well

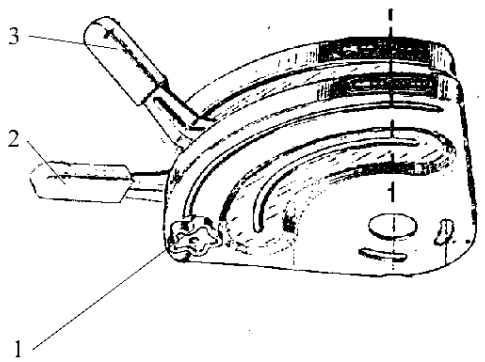

Fig.4-15 Lift Control Mechanism
1. position -fixed hand wheel
2. position control handle
3. draft control handle

adjusted before leaving the manufacturer. It is unnecessary to change them.

Working on farm, the implement should be lifted up before the tractor tums, and lowered only after it has turned and is running in straight line. The draft control handle does not permit to lower the implement on hard ground, which could destroy the handle due to high speed lowering.

The implement mounted on a tractor for a long distance driving, should be locked on the lifting position by screwing in the shut-off valve adjusting handwheel on the right side of the lift . The draft and position control handles are put in lowering position (Fig.4-16). The PTO shaft is in "disengagement" to stop the working of the hydraulic system, and is put back to the "engagement" position after the driving. When a tractor is hitched a trailer and used for transportation , the lifting arm should be put in lowering position and the shut-off valve be screwed in and locked to prevent from unnecessary wearing.

Notice to screwing in the shut-off valve. The valve rod nut is used to lock after screwing in the shut-off valve. When screwing in or unscrewing off the shut-off valve, the nut should be loosened and returned to the outer end to guarantee the valve screwed in completely.

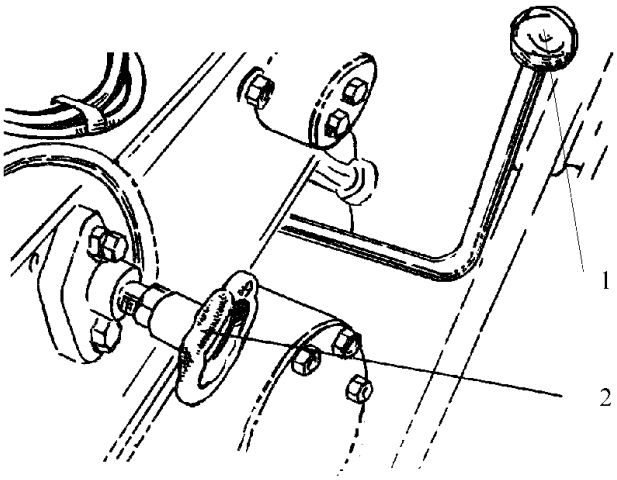

Fig.4-16 PTO. Control Mechanism

1. The draft control handle
2. the shut-off valve adjusting handwheel

c. Operation of Draft Control Handle .

Draft control can ensure the tillage depth and the towing force, mainly used in working on rolling field. Ploughing work generally adapts this control.

When the draft control handle is put forward, the implement begins to fall down and penetrate into the earth. After the implement reaches the required depth, the handle moving has to be stopped and the draft control handle has to be limited by the position-fixed handwheel (Fig.4--15).The handle is pushed to such a fixed position whenever the falling of the implement is needed.

d. Operation of Position Control Handle

The distinct feature of the position control is that a implement falls when the position control handle is pushed forward. The more the handle is pushed , the more the implement falls down. Against each position of the position control handle , there is a corresponding position keeping a relevant relation between the implement and the tractor.(Fig.4--15).

The position control is usually used in roto-tilling and other non-farm work, such as harvesting , lifting bulldozing ,trailer--dumping ,etc. However, it can also be used in ploughing if the field is comparatively flat and the variation of soil resistance is little. When the implement has reached the needed depth in ploughing, the position control handle should be limited by a position-fixed handwheel to keep the implement fall to the same depth every time.

e. Selection of joint point of upper link.

With draft control in controlling tillage depth, the front end of the upper link connects to the

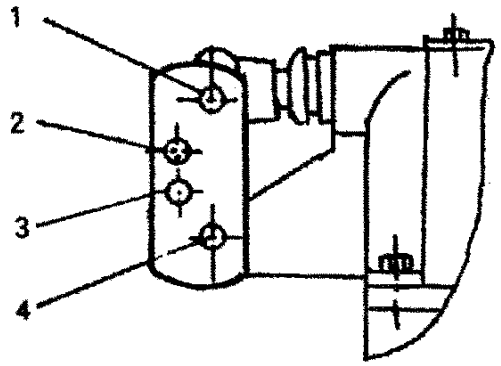

Fig. 4-17 Selection of joint point of upper link

position No.2 of the joint point in the rock arm. In case of great earth resistance, the front end of the upper link connects to the position No.3 of the joint pin in the rocker arm to ensure the tillage depth.

With the position control in controlling tillage depth, the front end of the upper link is connected to position No.4. To keep the upper link from clapping the joint pin in position No,2. When lifting, the joint pin in position No.2 is placed in position No.3 in rocker arm (Fig.4-17). The joint pins of the upper link should never be used in towing to protect the lift.

f. Hydraulic Output.

Step down the clutch pedal, put the output drive shaft release handle in the "disengaged" position and put the draft and position control handles in the falling position. After releasing the remained oil ,screw in the shut-off valve control handwheel on the left side of the lift, and lock the draft control handle after being put in the position. Screw off the oil outlet plug on the right side of the lift, set on the output oil pipe assy, and connect it with the implement or the trailer. Step down the clutch pedal again, put the output drive shaft release handle in the engaged position, you can obtain the control of the hydraulic output circulation with the position control handle. If not required, stop the power supply of the oil pump, set on the oil outlet plug and the washer, and screw off the shut-off valve control handwheel to restore the function of the lift.(Fig.4-14, 4--15 and 4--16).

B. Control and Operation of PTO Shaft.

When the PTO shaft is required , the operating process is as follows.

a. After the control handle of the PTO shaft has been put in neutral position and the safety shield of it taken off ,the working machine is connected to it.After the clutch pedal has been stepped down to the end and the release handle of the PTO shaft handle put in the "engaged" position, the shaft handle can be shifted in the necessary gears according to the requirement of the working machine.
b. When the clutch pedal is slowly released , the working machine begins to start running. The operation of the working machine should be examined at low speed before it has been put into normal working.

C. Operation of Pulley in Stationary Operation.

When the tractor work s with pulley in stationary operation, the operating process is as follows.

a. Take off the shield of PTO shaft, gear oil pump, upper and lower lift rods, slop lift rod and towing plate.

https://truckmanualshub.com/

b. Take off the sealing cover and its paper gasket from the oil pump and fasten them.
c. Fix the pulley assy. on the PTO shaft.
d. Push the auxiliary gearshift lever to the neutral position, the main lever in the positions of Gear I and II (to have the bearing of the I-shaft completely lubricated), the output drive shaft handle in the engaged position, the PTO shaft handle in low speed positions, and then keep the pulley running at low speeds.
e. After driving the tractor to a suitable place, shut off the engine and push the PTO shaft handle to neutral position.
f. Fix the stationary machine, have the pulley in correct position and keep the belt with suitable tension. If necessary, move the machine or the tractor.
g. Pull the belt by hand to check the installation, and then fix the machine and the tractor.
h. Start the engine to drive the belt. At the beginning, keep the engine running at low speed and then check the work of the engine with running at higher speeds.
i. While a mechanical group works normally, its required running speed can be obtained by adjusting the hand throttle. But it is not suitable to reduce the running speed too much because the output is reduced with decreasing of the running speed. Notice: When the engine runs , it is always to step down the clutch pedal .

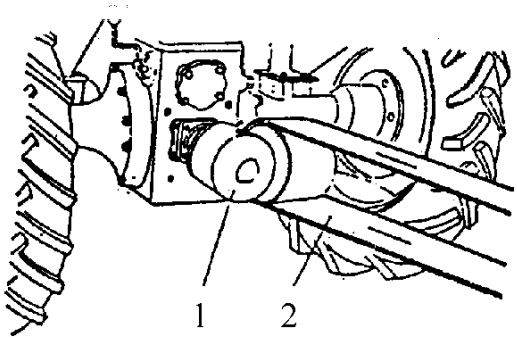

Fig.4-18 PTO Shaft Operation with Pulley

1. pulley 2. belt

Chapter V. Technical Maintenance of the Tractor

In order to keep the tractor in normal working condition and prolong its service life, the technical maintenance should be strictly carried out. Based on the working hours, the technical maintenance regulations are classified as follows.

A. Technical maintenance every shift.
B. Technical maintenance after 250 accumulated working hours.
C. Technical maintenance after 500 accumulated working hours.
D. Technical maintenance after 1000 accumulated working hours.
E. Special maintenance in Winter.

I. Technical Maintenance Every Shift

A. Clean away any dust and mud on tractor.
B. Check oil levels of radiator, wash the radiator, and clean away any weed remained in it.
C. Check water level of radiator, wash it and clean away any weed remained in it.
D. Check whether the fuel in tank is enough.
E. Check the depositing cup to see whether there is any scale or water in it; if necessary, it should be cleaned and the air in the oil line be disposed off.
F. Check the joints and engine. If there is any leakage of fuel , oil or water, it should be eliminated.
G. Check the electrolyte level of battery. The electrolyte level should be 5--8 mm above the pole plate. If lower than it, replenish with distilled water.
H. Check the inflation pressure of tires. The front wheel inflation pressure should be kept within 220--250 Kpa (2.2--2.5 kg.f/cm ^{2}), and the rear wheel pressure within 80--110 Kpa (0.8--1.1 kg.f/cm ^{2}).If there is no pressure gauge in hand, it can be checked by observing whether 2--3 lugs of tire are on ground.
I. Check whether the structures of the tractor and the engine are reliable.
J. The following places must be greased with grease gun.
   a. King pin bearing of steering knuckle, steering connector pivot shaft and hub of front wheel.
   b. Sleeve of brake pedal shaft.
   c. Adjusting rod of linkage hitch.
   d. Drive shaft.
K. The maintenance is carried out according to the general technical maintenance regulations in The Operation Manual Of Diesel Engine.

II. Technical maintenance after accumulated 250 working hours

A. Complete all the work of every shift.
B. Change the oil in engine oil sump, wash the oil filter and change the filter element.
C. Check the tension of pulley belt (trapping down about 15 mm by pressing with hand).
D. Wash the fuel filter.

E. Screw off the screw plug of fuel tank to release the fuel and wash it.
F. Brush the air cleaner.
G. Clean the outlook of battery, inspect the specific gravity of electrolyte of battery (1.285). If necessary, recharge it additionally. Clean away rust on battery poles, and coat them with grease against corrosion.
H. Clean the oil filter in lift.
I. Check and adjust the brake.
J. Check and adjust the travel of clutch.
K .Check and adjust the front wheel toe-in.

III. Technical Maintenance after 500 Accumulated Working Hours

A. Complete the technical maintenance of 500 accumulated working hours.
B. Check the following parts of engine.
   a. Check the injection pressure and the condition of atomization of injection element. If necessary, clean and adjust the injector, or change it.
   b. Check the clearance between the spring of valve and the valve (the inlet valve TY395 IT is 0.35 mm, the exhaust valve is 0.4 mm , and the clearance of inlet valve 490 T is 0.4--0.5 mm) and adjust them.
   c. Make sure that tightness of the nuts of cylinder head and the bolts of the connecting rod and flywheel are fixed well and reliable.
   d. Check the seal between the valve and its retainer whether leakage exists. If necessary, polish it and clean away the accumulated carbon in the gas pipe..
C. Check and adjust the free backlash angle of the steering wheel. It can be adjusted when necessary.
D. Change the lubricating oil in transmission.
E. Wash the interior of lift housing , and change the oil.
F. Check and wash the key pin and its sleeve of the steering knuckle of the front axle. Check and adjust the clearance of front wheel bearing.
G. Check the wire connection of electrical system, clean away the greasy dirt and rust spot.

IV. Technical Maintenance After 1000 Accumulated Working Hours.

A. Complete the technical maintenance after 500 accumulated working hours.
B. Check the following parts of the engine
   a. Clean away the carbon on the cylinder head, check the sealing of the valve (polish it if necessary). Clean away the carbon on the piston. Check the clearance of the gap of the piston ring and the wearing of the cylinder of the bearing of the connecting rod and crankshaft.
   b. Check the wearing of cam, pull-rod and rocker-arm.
   c. Check the fuel supply uniformity and the advance angle of injection pump. Adjust them if necessary.
   d. Check the moving flexibility of the cooling pump shaft and the seal ring. If there is any damage, change them.
C. Clean away the incrustation in the cooling system..

https://truckmanualshub.com/

D. Change the diesel, oil and air filter elements.
E. Check and adjust the gear pair bearing clearance in the central transmission.
F. Replace the grease in the bearings of the front hub.
G. Check the sleeve of each gear, the seal ring and the frame oil seal , replace them if necessary.
H.Check the oil level in the steering gear case. Replenish it if not enough.
I .Eliminate the carbon in the muffler.

V. Special Maintenance in Winter.

A. Use the lubricating oil and fuel for Winter.
B. Release all the water in radiator after each shift.
C. Start the engine as prescribed in the book respecting the engine starting in Winter.
D. Battery should always be kept with much fluid, and the discharge rate does not exceed 25%.
E. The tractor is advised to be stored in a warm shed or a garage after its operation.

https://truckmanualshub.com/

Chapter VI. Main Components Adjustment of the Tractor.

This chapter mainly introduces checking and adjusting the main components of the chassis. The checking and adjusting of the diesel engine should be carried out as stipulated in Diesel Engine Operator's Manual.

I. Clutch.

A. Adjustment of the clutch and the control system.

The normal clearances between the surfaces of the three release levers and the release clutch bearing, is 2--3.5 mm. When disengaging the clutch, a force is applied on the clutch pedal to eliminate the clearance.

The respective pedal moving distance of the release lever is called as "free travel". The free travel of BY350, BY400 is 20--30 mm. At this moment, stepping down the pedal continuously causes the release rocker to move forward until it reaches the limit screw. Such a straight traveled distance is called as "working travel". The working travel of BY 350 and BY 400, is 100--150 mm. (Fig.6--1).

a. Free travel adjustment of clutch pedal.

When operating with clutch, the wearing of the driven clutch disk and the pressure plate causes gradual reduction of clearance between the release levers and the release bearing end, and even causes some touch between them, which makes the clutch slipping and the free travel disappearing. At the moment, it is necessary to check and adjust the control system. The adjusting method is as follows: turn the adjusting fork (3) to shorten or extend the push rod (2) to adjust the free travel to the stipulated value, and then screw in or out the limit screw (5) to keep the working travel. Finally, lock the nuts on the push rod and the limit screw.

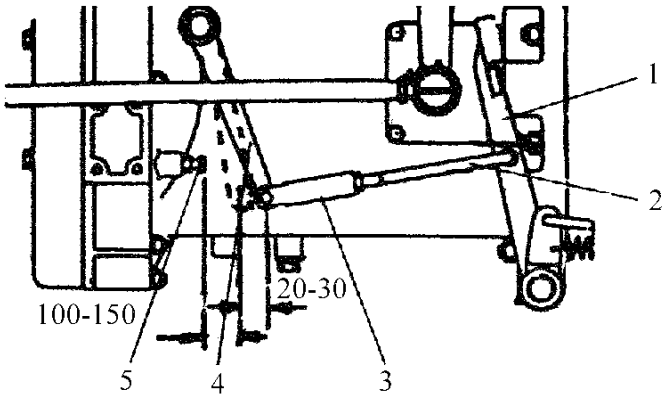

Fig.6-1 Free travel adjustment of clutch pedal

1. clutch pedal 2. push rod 3. adjusting fork
4. release rocker arm 5. limit screw

b. Adjustment of release lever of clutch pressure plate.

If a free travel of 20--30 mm can not be realized by the way of (1), there must be wearing of the pressure plate and the disk, or back movement of release bearing seat. In such a case, the engine and the bridge case should be separated, the nuts (5) (Fig.6--2) of the three release levers on the clutch pressure plate should be adjusted to keep the distance of 42.5 mm from the flywheel surface of engine to the three release levers. The three release levers should be remained on the same surface, whose allowance is less than 0.4 mm.

After the adjustment, screw the nut (7) tightly, connect the engine and the bridge case together, and then check whether the free travel of the clutch pedal is within 20--30 mm. (Fig.6--1).

B. Maintenance of clutch

a. The screw plug at the bottom of the flywheel should be often turned out to check whether there is any water or oil leaked in to avoid of clutch disk slipping due to the oil or water. In the case of any oil or water leaked in, the oil seals at the rear of the engine crank shaft and the Primary Shaft of the gear box should be checked immediately.

b. The high-melting-point grease has been already put into the release bearing. It is unnecessary to put additionally any other lubricating grease into it or to clean it.

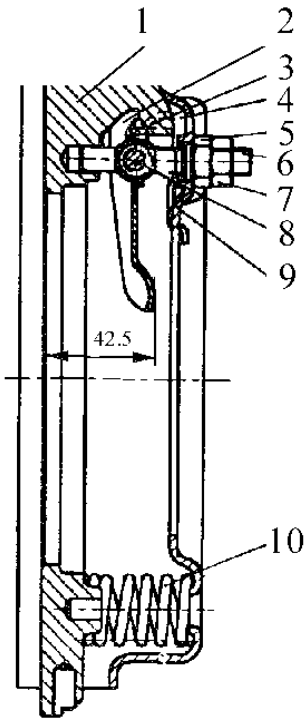

Fig.6-2 The Clutch Pressure Plate Assy

1. clutch pressure plate
2. clutch release lever
3. gibs of release lever
4. spring of release lever
5. adjusting nut of release lever
6. adjusting bolt of release lever
7. nut
8. pin of release lever
9. cover of clutch
10. pressure spring of clutch

c. When being mounted, the clutch assy can be put into a specific shaft at first , and then put into a bearing hole of the engine flywheel ,which ensures it concentric with the spline hole of the friction disk, and easy to be connected with the engine and the gear box.

II. Transmission Case.

The transmission case consists of a 2nd shaft speed-shift with 8 forward and 2 reverse gears and a planet differential device. It is operated by a main and an auxiliary gearshift lever (Fig.4--1), which is necessary to be adjusted in usual operations.

Cautions in Operation.

a. When shifting a gear, the clutch has to be completely separated to avoid of gear impact during the operation.

b. When shifting a gear, the main and the auxiliary gear shifting levers have to be operated smoothly and slowly. If the gear is unable to be released, the shifting can be tried again after the clutch has been slightly engaged.

c. The transmission case is interlinked with the end transmission and they enjoy the lubricating oil together. It is only to turn out the screw plug at the bottom of the gear box of take off the cover at the bottom in case of releasing the oil.

III. Differential.

a. Structure of differential. (Fig.6--3)

The differential is of bevel gear type, with 2 planet gears. The big bevel gear (5) is fixed with 6 bolts (2) on the differential housing. Two free turning semi-shaft gears are fixed in the differential housing, attached to the end transitional pinion with spline hole, and installed on the planet gear shaft (7) of the differential housing, which is fixed by the planet gear (9) engaged

with two semi-shaft gears. The differential component lock (11) is set on the differential housing.

b. Adjustment of Differential Assy.

Put the differential assy into the middle of the differential housing (the big bevel gear put on the right side), set the internal circles of the bearing 7212 E and the adjusting nuts if the differential on the two shaft neck ends respectively, fix the differential bearing seats with external circles of the bearing 7212 E through the big holes on both sides of the housing, and finally fasten the adjusting nuts of the differential. Observe the mesh of the big bevel gear and the 2nd shaft, and adjust them. After the adjustment, set respectively on the upper part of the differential adjusting nut (on the transmission case), the adjusting nut locator, and two M8x16 bolts with their locating locker. Lock the six corners of the bolt by the means of bending the locker.

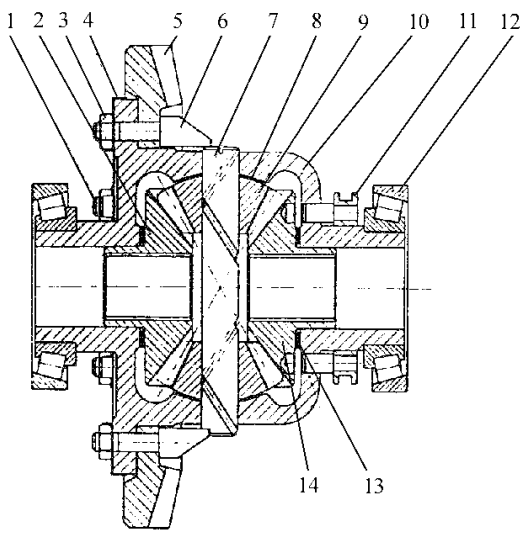

Fig. 6-3

1. big bevel gear bolt 2. semi-shaft gear ,the differential assy
3. nut 4. washer 5. big bevel gear 6. thrust bolt
7. planet gear shaft 8. planet gear washer 9. planet gear
10. differential case 11. differential lock
12. bevel roll bearing 7212 E 13. semi-shaft gear washer
14. right semi-shaft gear

The adjustment of spiral bevel gear should be stared after 1--2 minutes testing in positive and negative direction running when there is no oil in transmission. The backlash between the spiral bevel gears should be within 0.15--0.25 mm, and the ideal imprint is as shown in Fig.6--4. The imprint of the pinion should be a little higher than that of the large one. With light load, the length of the imprint should be about half of the total length of the gear tooth. Because shifting to the larger ends of the gears with full load, the imprints of the gears, should approach the small ends while in installing inspection. The adjustment of a pair of spiral bevel gears under various conditions, is shown in Fig.6--5.

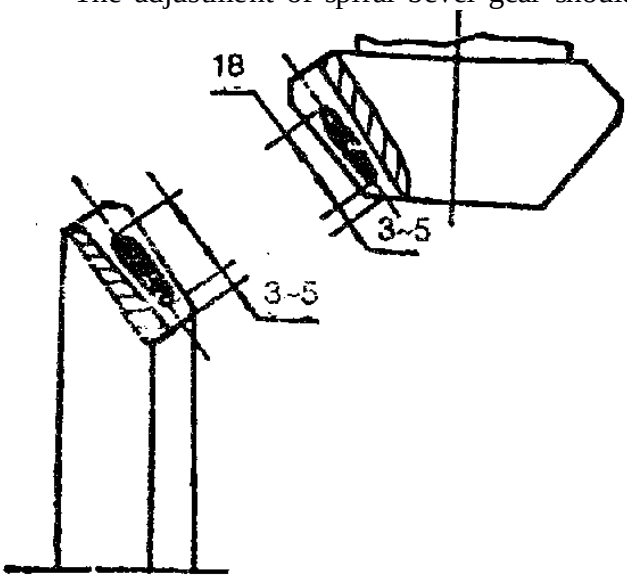

Fig.6-4 Ideal Imprint of Spiral Bevel Gears

The adjustment of the imprint of the spiral bevel gear is realized by increasing or decreasing the number of shims of the II-shaft and the adjusting nuts on the both sides of the rotating differential. At the same time, the adjusting nuts are also used to pre-tighten the bearings of the differential. After the pre-tightening, the measured total friction torque of the small spiral

bevel gear of the II-shaft should be kept within the range of 0.98--1.47 N.m.(0.1--0.15 Kg.fm).

Meshing Section of Big Gear	Adjusting Direction	Moving Direction of Gear
	Normal imprint	
	Shift the big gear off the pinion. If the backlash is too big, shift the pinion inwards	
	Shift the big gear to the pinion. If the backlash is too small, shift the big gear outwards	
	Shift the big gear to the big gear. If the backlash is too small, shift the big gear outwards	
	Shift the pinion off the big gear. If the backlash is too small, shift the big gear inwards	

Fig.6-5 Adjustment of Imprint of Spiral Bevel Gear

IV. Transfer Case.

The transfer case of BY354 and 404 four-wheel-drive tractors, is fixed below the carrier case, consists of a gear shaft connecting shaft , PTI and PTO shafts, gears, a transmission shaft, etc., and is used to take out or cut off the power from the front drive axle and to keep the front and rear drive wheels synchronously rotating. During its operation and maintenance, the transfer case is generally unnecessary to be adjusted, while the following items should be noticed.

A. Only when the tractor works on farm or draws heavy load, the font drive control handle (Fig.4--13) can be raised to the "engaged" position. While in other cases, the control handle should be pressed down to cut off the power for the front drive.

B. The front drive control handle can be used only when the clutch is disengaged or the transfer case is in neutral position.

C. The lubricating oil in the transfer case is interlinked with the one in the transmission case. The discharge plug of the transfer case has to be turned out when releasing the oil.

V. Brake .

Two disk brakes are symmetrically mounted on the left and right end small gear shafts of the both sides of the rear axle case , and connected to braking control mechanism. The free travel of the clutch pedal is 75--85 mm.

The brake has been adjusted before leaving the manufacturer. The left and right pedals can be easily linked together or separated. In the case of locking together, the left and right drive wheels can be braked simultaneously when the pedals are stepped down. Wearing of the brake friction disk can cause the free travel longer and unindentical brake of the two wheels. At the moment, it is necessary to adjust it.

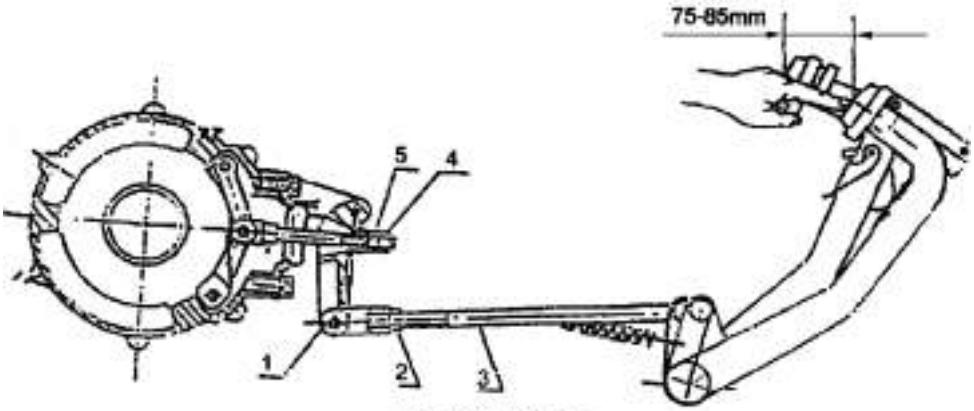

Fig.6-6 Brake

1. coupling fork 2. nut 3. pull rod 4. locking nut 5. Nut

When adjusting, loosen the locking nut (4) as shown in Fig.6--6, and turn the adjusting nut (5) clockwise to reduce the free travel , and vice versa. When the free travel is very long, change the length of the pull rod (3), and keep the same free travel of the left and right brake pedals. Lock the licking nuts(2) and(4) to keep from any loose affecting the braking work after the pedal has been adjusted to the specific free travel. When the two rear wheels brake unidentically, the left and right brakes should be adjusted simultaneously after the one ,capable of braking, has been loosened. Never rashly shorten the length of the one incapable of braking. In case of oil dirt on the friction plate, gasoline should be selected to clean it. In case of a plate being severely bumt or worn to the pin, a new plate should be replaced.

Caution :When the tractor is driven on road , single -side-braking is forbidden, and the left and right brake pedals should be locked together by a interlock.

VI. Steering Gear.

BY--350 and BY 400 tractors adopt circulating ball steering gear of mechanical screw and nut, and BY 354 and 404 tractors adopt separating fully hydraulic steering gear. Before leaving factory, the stipulated travel of the steering gear has been adjusted, less than 30^0. .

A. Adjustment of steering Mechanism.

a. Adjustment of bearing clearance.

b. To keep the steering in normal working condition, bearings at the two extremities of the worm rod must be pre-fastened. The clearance caused by wearing, can be eliminated by adjusting the washer between the steering gear, the upper cover (2) and the case (3).The pre-fastening suitability means that the steering wheel can be moved when the steering rocker arm (7), is not fixed and the force applied on the steering wheel is 3--5 N.

c. Backlash adjustment of gear sector and gear rack.

d. Due to wearing of gear sector and gear rack in operation, the backlash of the gear mesh is increased , which also causes the free travel increased. It should be adjusted when the free

travel exceeds 30 ^{0}.

When adjusting, loosen the nut (5) on the right side if steering gear case, turn clockwise the adjusting screw (4) and decrease the backlash of the mesh until when the steering pitman is on the middle position and the steering wheel can be turned to the left and right within 45 ^{0} , there would be no backlash between gear rack and gear sector. At this time, lock the nut.

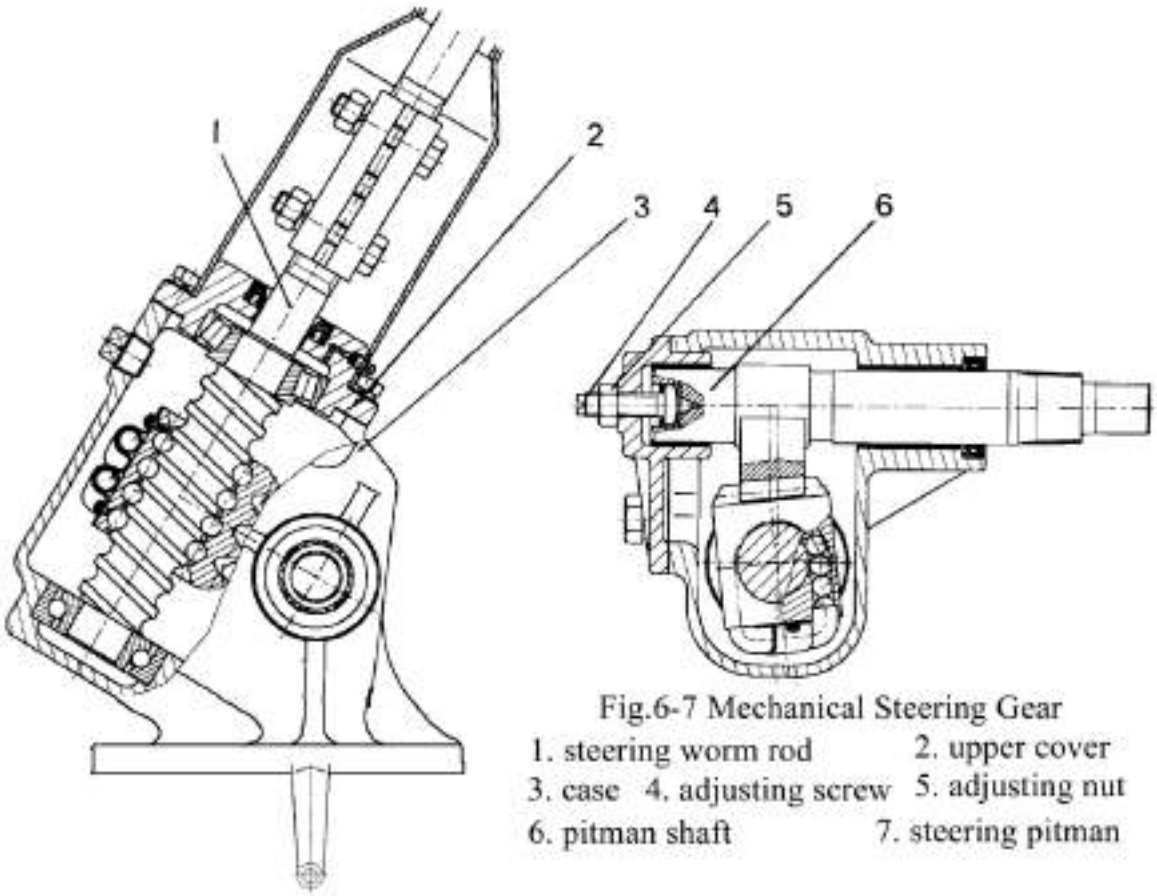

Fig.6-7 Mechanical Steering Gear

1. steering worm rod 2. upper cover
3. case 4. adjusting screw 5. adjusting nut
6. pitman shaft 7. steering pitman

B. Fully hydraulic steering gear

BY354 and 404 tractors adopt remote type fully hydraulic steering , consisting of fully hydraulic steering gear of cyclical turning -valve type , steering oil cylinder and tank, front-located constant flow pump, tie rod, oil pipe and so on. The steering cylinder is fixed at the front of the drive axle or on the left side of the front wheel, acting as a longitude pull rod.

Generally, fully hydraulic steering gear is unnecessary to be adjusted. The notices for maintenance are as follows.

A. Regularly check the oil cleanness and the oil level in the steering oil tank (The steering oil cylinder and the pipe must be fully filled with oil before refilling oil). If not enough, add up the oil in time.

B. Fasten all the inlet and outlet connecting parts of the constant flow pump, oil tank, oil steering cylinder, and all the pipe connectors to prevent from leakage.

C. Regularly check the oil seals or the piston rod of the steering cylinder whether leaking oil.

D. When pulled and pushed after the engine is shut off, the tractor is never allowed to be steered rudely to avoid of the concerning parts to be destroyed.

https://truckmanualshub.com/

VII. Front Axle.

I . The front axle of BY--350 and 400 tractors is of U pipe and adjustable wheel base, which connects the front part of engine with pendulum shaft through the front bracket. Equipped with front wheels, it bears the weight of the front part of the tractor

A. Adjustment of Front Toe-in.

The normal value of the front toe-in is 4--8 mm. During operation, due to the wearing and deformation of the steering mechanism and the front axle , the front toe-in can be changed. If not being adjusting in time, the front tire wearing shall be quickened. When being adjusted, the tractor is parked on a flat ground, with the steering wheel tumed in the middle position, and the loosening tie rod is prolonged or shortened by turning it after the locking nuts at the two extremities of the tie rod are loosened. The locking nuts can be locked until the front distance of the two front wheel outer edges become 4–8mm less than the rear ones when being checked at the height of the front wheel shaft. (Fig.6-0-8.B > A 4--8mm.)

B. Adjustment of Front Wheel Base

The grade adjustment of front wheel base can be realized by prolonging or shortening the front shaft arm within 1300--1500 mm, 100mm each grade .(adjusting the left and right arms of the front shaft respectively 50 mm). When adjusting , loosen the nuts on the tie rod ,take out the bolt of the tie rod ,move left and right arms of the front shaft to the required positions, and finally fasten the nuts and bolts.

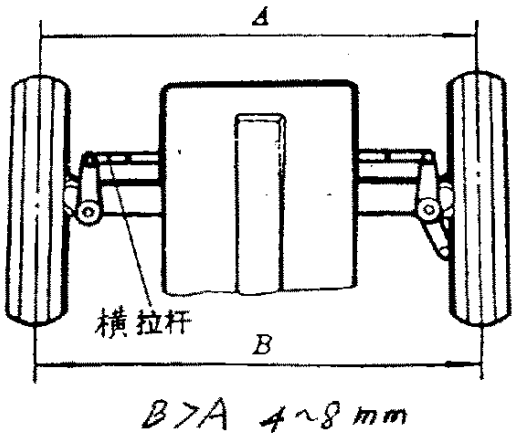

Fig.6-8 Front Toe-in Adjustment Diagram

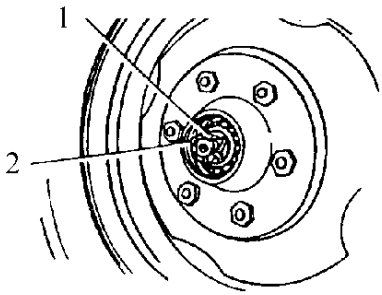

Fig.6-9 Clearance Adjustment of Front Wheel Bearing

1. channel nut 2. Linchpin

C. Clearance Adjustment of Front Wheel Bearing

When the tractor is operated, the front wheel bearing is worn and the clearance is increased. If not replaced, the bearing shall be easily damaged. When being adjusted, the front wheel shaft is supported with something to leave the ground for bearing no loads. Take off the wheel cover and the linchpin(2), fasten the channel nut(1) tightly, return it 1/8--1/12 round (30--40), and then set on the linchpin and the front wheel cover (Fig.6--9).After the adjustment , the tires are possibly to rotate flexibly without any blocking or any axial movement.

D. Clearance Adjustment of Steering Joint .

The wearing of the steering ball pin and the ball pin seat results in the free travel increased. Consequently, it is necessary to adjust the clearance as follows (Fig.6--10); take off the linchpin(1), screw in the spiral cover to the end ,return it 1/4--1/2 round, and insert the linchpin to

ensure the necessary clearance.

II. BY--354 /404 Four -Wheel-Drive Tractor

The power of the front-drive is transmitted into the front central transmission by the roll shaft coupler of the transfer case under the bridge body, and then is provided to the both sides of the semi-shaft. When it reaches the front end, the front wheels begin to run.

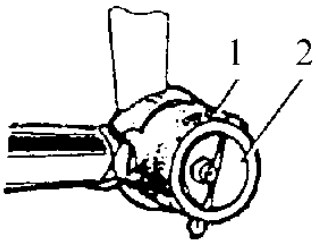

Fig.6-10 Clearance Adjustment of Steering Joint

1. linchpin 2. screw cover

A. Adjustment of Front Toe-in .

When the front wheels (1) run in straight line , the front toe-in should be kept within 4–8 mm, otherwise, it should be adjusted . Loosen the two locking nuts (2) on the two extremities of the connecting sleeve (3) on the tie rod, tum the tie rod assy (4), adjust the front and rear end distance of the front wheels, keep the front end distance of the front wheels 4--8mm less than the rear(the steering wheel in the middle position when being measured).

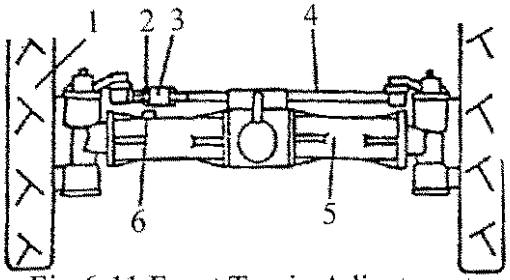

Fig.6-11 Front Toe-in Adjustment

1. front drive wheel 2. locking nut
3. connecting sleeve 4. tie rod assy
5. front drive axle 6. screw plug

B. Adjustment of Front-drive Bevel Gear Bearing

The two bearings (5) and (7) for supporting the bevel gear(8), are pre-tightened when in assembling. Due to the wearing of the bearings, the bevel gear possesses axial play during operation. So, loosen the small round nut (4), draw off proper thickness of shims to restore the normal play, and then loosen and lock tightly the small round nut(4). If necessary, adjust the adjusting nut (9) on the both sides of the differential to restore the normal play (Fig.6--12).

When the tractor works in a paddy field, mud is easily to immerse the ends of the front and rear swing sleeves (6) and have them worn out, which results in the axial play increasing. Thus, to ensure the normal axial play, the two thrust shims (3) are respectively set on the ends between the front axle assy and the swing seat (1) for the future repairing or replacing because of long time wearing (Fig.6--12).

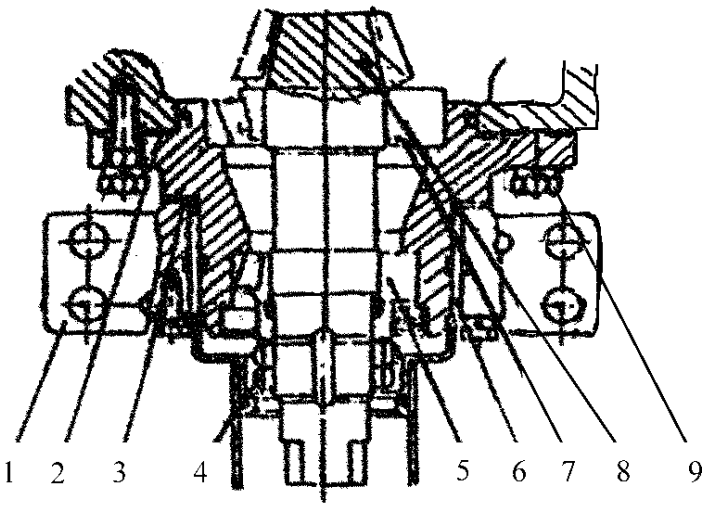

Fig.6-12 Adjustment of Drive Bevel Gear Bearing

1. swing seat 2. adjusting shim 3. thrust washer
4. small round nut 5. bearing 2007107E
6. swing sleeve 7. bearing 7028E 8. drive gear
9. adjusting nut

C. Check and Adjust the Mesh of the Bevel Gear.

The bevel gear is adjusted after the oil in the front-drive axle has been exhausted, and the front- drive axle has rotated positively and negatively for 1--2 minutes. The gear side backlash should be kept within the range of 0.15--0.25 mm, and the method of adjusting the imprint may refer to that of the spiral bevel gear (Fig.6--5).

D. Differential.

The left and right bearings of the differential pre-tightened before assembly, can be

performed without adjusting their clearance. The structure is as indicated in Fig.6--13.

E. Maintenance of Front Axle

a. According to the stipulated technical maintenance in the operator's manual, unscrew the bolt (6) on the top of the semi-shaft housing (Fig.6--11),and check the oil level in the front axle. If not enough, add up to 5 mm above or below the scale of the dipstick. If releasing oil, unscrew respectively the three bolts under the front central transmission housing and under the rear part of the internal side of the transmission housing on the front left and right ends.

b. The drive and driven bevel gears of the front central transmission have to be replaced in pair for operation.

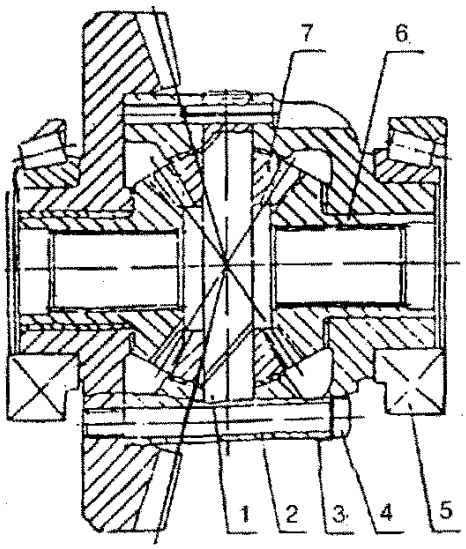

Fig.6-13 Differential Assy

1. planet gear shaft 2. differential cover
3. single ear shrim 4. bolt
5. bearing 7212 6. semi-shaft gear
7. planet gear

VIII. Wheel

The front wheels of BY350 and BY400 tractors adopt 5.5--16 directory tires with strip figure against the side slipping, and the front wheels of BY354 and 404 adopt 7.5--16 drive tires. The rear wheels of the four types of the tractors totally adopt 11.2--28 drive tires.

A. Adjustment of Wheel Tread.

a. Front wheel tread adjustment of BY350 and BY400 Tractors.

The front wheel tread is adjusted by extending or shortening the front shaft arm within the range of 1300---1600 mm, 100 mm every grade .

b. The front tread of BY354 and BY404 tractors is unadjustable.

c. The rear wheel tread of the four model tractors is adjusted by means of changing different installing places of the drive wheel and the radial plate as well as the radial plate and steel ring ,within the range of 1200--1500 mm,100 mm every grade. See Fig.6--14.

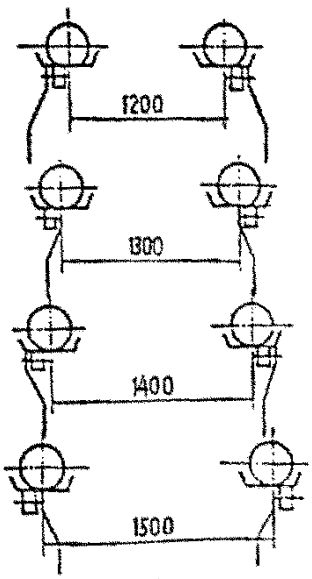

Fig.6-14 Adjustment of Rear Wheel Tread

B. Maintenance of Tire

Proper use and maintenance of tires can greatly prolong its service life. Please respect the following maintenance.

a. Keep the tire inflation pressure as required ; front wheel;220--250 Kpa (2.2--2.5 Kg f/cm ^{2}), and always check them.

b. Neither allow to drive the tractor at high speed on not flat road. Do not brake emergently as possible as you can.

c. Do not have fuel or oil on the tire . If any, wash or clean it.

d. Always keep it clean.

e. Change the installing place of the tire if it is not even worn.

f. When the tractor stops for a long time, support the tractor off the

ground to prevent the tires from being pressed. Do not release the air off.

IX. Hydraulic Hitch Linkage

The hydraulic hitch linkage is combined by a lift, a gear pump, a pipe assy., and a hitch linkage.

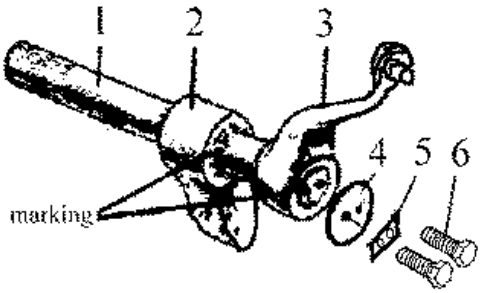

Fig.6-15 Correct Assembly of Internal Lifting Arm,Lifting Shaft and Lifting Arm
1. lifting shaft 2. internal lifting arm
3. lifting arm
4. pressing plate of lifting arm
5. thrust shim 6. bolt

A. The fixing place of the lift arm on the lifting shaft.

In order to keep the lift in normal working condition, it is necessary to mount the internal lifting arm and the shaft, and the lifting shaft and the arm in accurate angles, which makes the small circles impressed on the three parts alignment. (Fig.6--15).

B. Adjustment of Draft Control

Without any external pressure , the draft control spring assy is neither compressed ,nor kept any clearance with the spring seat of the neighbouring parts and the spring pressing plate. After working a period of time due to spring deformation, rusting and so on, there would occur clearance between the spring and the neighboring part. If pushing or pulling slightly the rocker arm joint and obtaining 1 mm free movement, adjust it as follows; take off the pin(12),loosen the nut (6) ,take out the resistant adjusting spring assy, and the pin (8), turn the spring lever with screw to the clearance eliminated, insert the pin (8), fix the draft adjusting spring assy into the end of the lift housing, screw in the nut until the axial clearance between the draft spring assy and the case, is eliminated. At the moment, keep the rocker arm joint with notch upwards, properly turn the big nut to let its small hole against the notch, insert the pin, and cover the dust guard cap on the big nut.

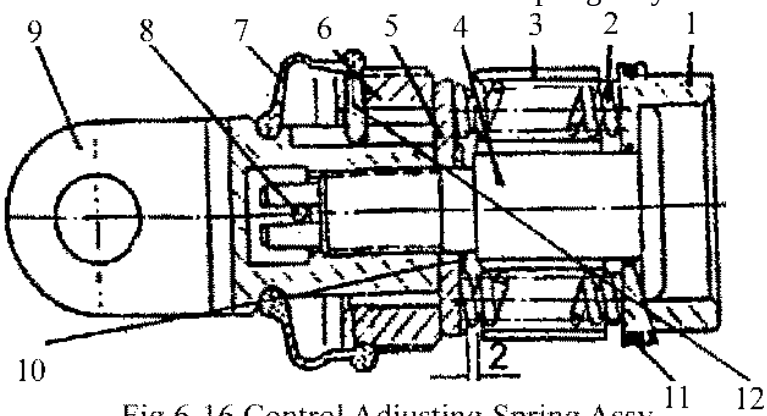

Fig.6-16 Control Adjusting Spring Assy
1. spring seat 2. draft spring 3. spring spacer
4. spring lever 5. spring pressing plate 6. nut
7. dust guard cap 8. pin 9. rocker arm joint
10. adjusting shim 11. O type seal 12. pin

C. Adjustment of fan plate.(Fig.4--15)

Check the place of the fan plate at first. The position control handle (2) is in vertical place (indicated as the imaginary line), and the lifting position of the draft control handle (3) is 20^0 at the back of the position control handle. In such a case m the handle should touch the upper-stop of the fan plate . If not satisfied, loosen the two nuts below the fan plate, turn it to the required position, and then tighten the nuts to fix it.

D. Adjustment of Lift. (Fig.6--17)

The handle is put in lifting position and the loft arm is raised to the highest position., which

forms 60 ^{0} with the level plane. When a heel of 8 mm thick is inserted between the internal lift arm and the lift housing for convenient adjustment, the current lift arm position is considered as reaching the place required. Loosen the tightening bolt on the position control cam (29), turn the position control cam to extend the main control valve 17 mm from the distributor housing, and tighten the bolt on the cam. Then adjust the draft control lever, loosen the nut, turn the draft control pulling rod to keep 6.5 mm clearance between the control end of the draft control lever and the outermost end of the main control valve, and finally tighten the nut on the draft control lover assay(9).

After the adjustment, move the lift arm up and down repeatedly, and measure whether the above mentioned 17 mm and 6.5 mm are changed. If any change, readjust it.

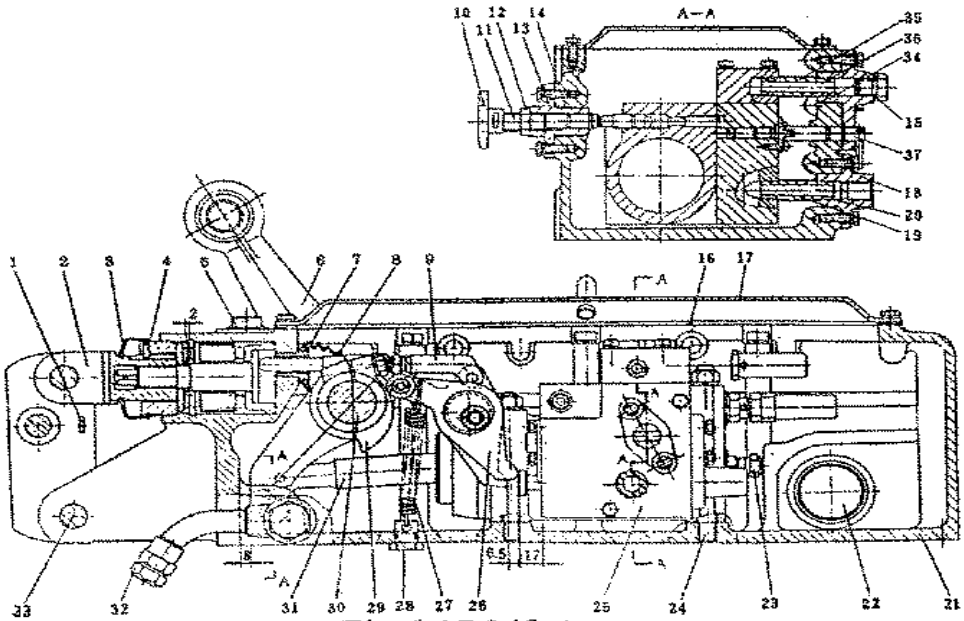

Fig.6-17 Lift Assy

1. rocker arm--locking pin assy 2. draft control spring assy
3. dust guard cap 4. pin 5. dipstick assy 6. lifting arm
7. seal cover seat 8. seal sleeve 9. draft control lever assy
10. adjusting handwheel 11. shut-off valve adjusting lever
12. locking nut assy 13. flange 14. O-ring 15. copper washer
16. Gasket,hydraulic power lift cover plate
17. hydraulic power lift cover plate 18. flange 19. oil pipe
20. O type ring 21. lift housing 22. filter element
23. supporting bolt 24. stud 25. oil cylinder --distributor assy
26. position control lever assy 27. extension spring
28. spring shackle seat 29. position control cam 30. lift shaft
31. internal lift arm--piston post rod assy 32. oil plug
33. rock arm--connecting pin assy 34. flange 35. oil pipe
36. O type ring 37. flow control valve

X. Electrical Equipment

The electrical equipment of BY35--40 tractor adopts rectifier generator of voltage 12V with negative terminal ground single wire system. It consists of power resource, starting device, lightening, signaling circulate and instruments as well as auxiliary device, whose circulate diagram is as shown in Diagram 6--18.

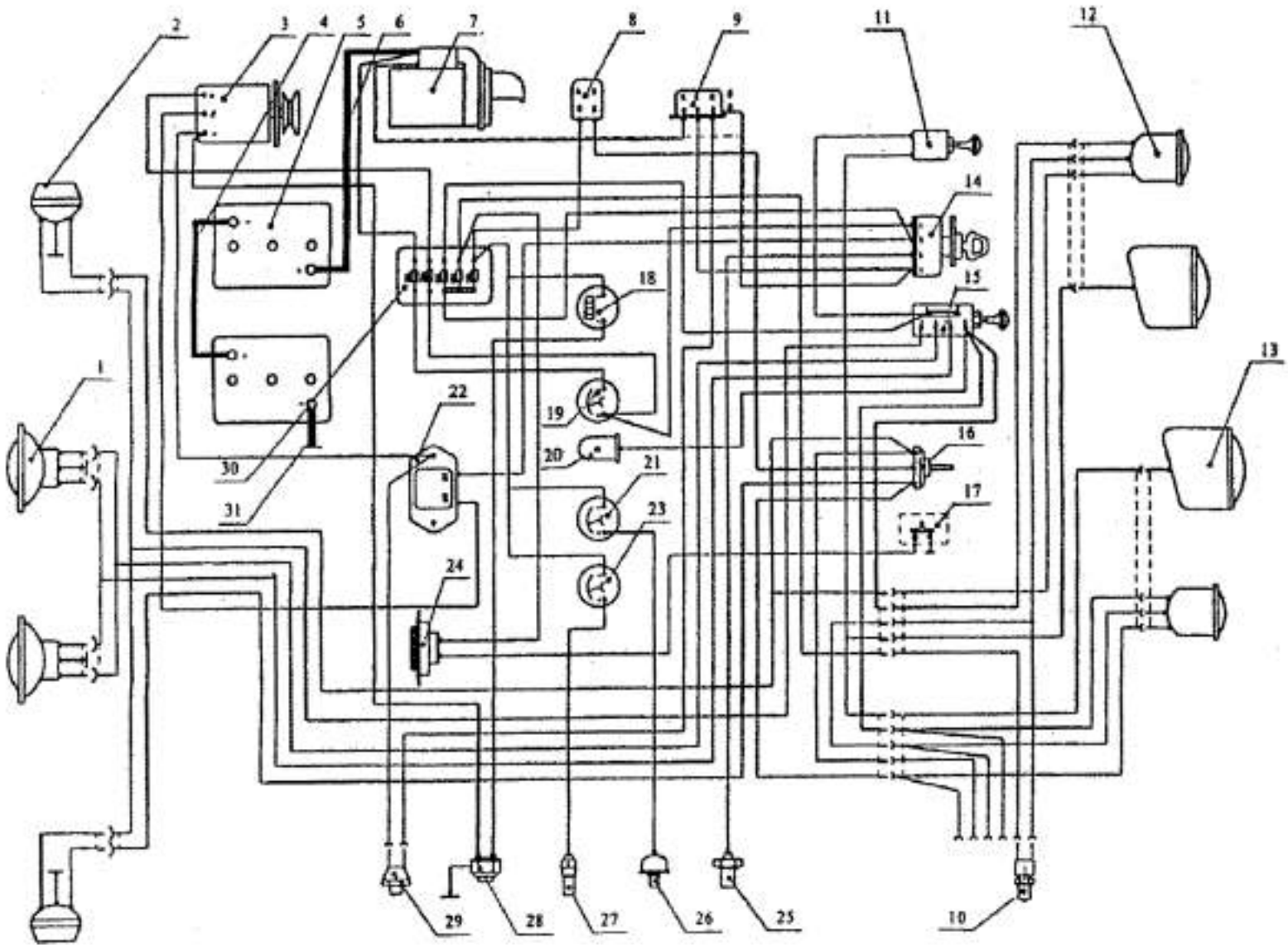

Fig. 6-18

1. front head lamp
2. front light
3. A.C generator
4. battery series connecting cable
5. battery
6. cable from battery to starter
7. starter
8. flasher
9. starting relay
10. brake light switch
11. single stage switch
12. rear direction light
13. rear lamp
14. igniting and starting switch
15. 3-stage switch
16. direction light switch
17. steering indicator
18. timing meter
19. ammeter
20. Meter light seat
21. oil pressure gauge
22. voltage regulator
23. temperature gauge
24. horn
25. preheating plug
26. sensor, oil pressure gauge
27. sensor, temperature gauge
28. pressure switch
29. Starting switch
30. fuse box
31. negative cable, battery

https://truckmanualshub.com/

A . Power Resource

The power resource consists of a battery, a generator and a controller. The ammeter inspects the working state, and two 30 A fuse links protect respectively the charging and the releasing circulates.

Analysis of power resource working state when engine running at high speed.

a.: pointer of ammeter pointing to "0".

In normal state: After the battery has been fully charged, the starter supplies electricity to the lightening and signaling circulates, instead of supplying to the battery.

In abnormal state: When the hom button is pressed or the head lamp is switched on , the pointer of ammeter still points to "0", not flickering , which means that the generator controller or the fuse of the charging circulate has breakdown. In this case, recharging the battery is not permitted, and the inspecting and repairing is advisable.

b. pointer of ammeter pointing to "+".

In normal state: When the battery becomes weak, the starter begins to charge. With the increasing of electric power, the charging current gradually decreases. That the pointer points to "0" means the battery has been fully charged . The greater the pointer reading becomes, the weaker the battery is. In this case, an immediate charging should be done at the moment . Before the battery is fully charged, the starting device is switched on to avoid of the battery being damaged.

In abnormal state: The voltage controller has some breakdown when the pointer readings are always greater than 20 A for a long time ,which needs to be inspected and repaired.

c. pointer of ammeter pointing to "--".

In abnormal state: There must be some breakdown in the generator ,voltage controller, or fuse. Do not charge the battery before removing the breakdown.

Caution: When the device of starting the engine or lightning the signal for stoppage is switched on , the ammeter pointer points to "--", which means normal release of the battery.

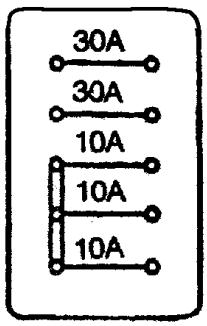

Fig. 6-19

B. Protecting Device of Electrical Equipment.

The 5--stage fuse in fuse box is used to protect the electrical equipment. The protected working electrical current and respective equipment of each--stage fuse are listed as follows.

Fuse stage	I	II	III	IV	V
Rated Working Current(A)	30	30	10		
Equipment Protected	general fuse, steering device	charging circuit	front head lamp,front and rear lamps, and working light	Brake light, horn	Steering signal light, meter or gauge

If a blowout is caused by breakdown of the electrical equipment, fuse with the same specification fuse must be set on after the breakdown has been removed.

The combination device consists of a temperature gauge, a oil pressure gauge, a ammeter, a

https://truckmanualshub.com/

rotating timer, steering indicating lights, a charging-alarm indicating device, etc.

Chapter VII. Main Troubles and Their Disposal

(If there is any trouble in the engine, you are suggested to refer to The Engine Manual.)

Clutch

Symptoms	Possible Causes	Remedies
a. clutch slipping. (with heavy load, the sound of exhaust gas is not heavy, but the speed of the engine is decreased. This is called slipping.)	a. friction disk contaminated with oil. b. compression spring weak or broken c. free travel too short or vanished. d. driven disk curled or worn nonuniformly	a. wash with gasoline and eliminate the severe leakage of oil. b. replace it with a new spring. c. readjust it as required. d. replace it.
b. disengaging the clutch not thoroughly, having noise or being difficult in shifting gears.	a. free travel too long and working travel too short. b. driven dish too much cured. c. adjusting nuts of three release levers loose.	a. readjust as required. b. replace. c. replace again.
c. tractor vibration in start-off	friction disk broken	replace the friction disk

Gear Box

Symptoms	Possible Causes	Remedies
a. self trip-stop.	a. pressure of gearshift shaft self-locking spring not enough b. axial force due to open tape of gear spline. c. After gearshift, drive and driven gears are not engaged with complete gear width. d. Incorrect teeth direction or tooth surface worn ununiformly.	a. replace the spring b. replace the gear c. inspect the travel of gear shift and the position of gears d. replace the gear.
b. gearshift difficult or impossible.	a. clutch disengagement incompletely. b. rounding of gear end worn or broken.	a. inspect as per clutch trouble b. replace the gear . c. repair with oilstone to obtain suitable fitting.

	c. over tight fitting between slide gear and spline shaft	
c. abnormal sound from transfer case of gear box .	a. lubricating oil not enough. b. bearing or gear severely worn. c. rag or hard spot on tooth surface .	a. add to the stipulated level. b. replace the gear or bearing. c. remove with oilstone.

Brake

Symptoms	Possible Causes	Remedies
a. braking not sensitive	a. braking band contaminated with oil. b. braking band severely worn out . c. the braking pedal free travel too long.	a. wash with gasoline. b. replace. c. readjust.
b. at braking, tractor running to one side.	a. travel of the left and right braking pedals not the same. b. oil leaking into one side of brake.	a. readjust. b. take apart and wash,
c. brake unable to be released and being hot.	a. free travel of braking pedal too short b. spring return force of braking shoe too weak. c. too short clearance between braking bands . d braking pedal unable to return	a. readjust b. replace c. readjust. d. Check whether the return spring is workable.

Steering Mechanism

Symptoms	Possible Causes	Remedies
a. free travel of steering wheel too long.	a. thrust bearing of steering wheel worn out. b. steering worm and ball worn out.	a. replace the bearing . b. replace the worn part.
b. steering wheel control draft increased.	a. hydraulic oil not enough. b. hydraulic oil pressure not enough. c. filter screen blocked.	a. add up to the specific level. b. adjust the oil pump to specific level. c. wash the filter screen.
c. steering wheel incapable of	a. decentrarction of steering	a. adjust the concentration.

returning automatically to the middle position,	shaft and spool. b. no axial play between steering shaft and spool.. c. return spring broken.	b. adjust the play. c. replay the piston sealing ring.
d. steering without man's control.	a. axial and radial play of stator and rotor. b. Due to poor sealing of the piston of the oil cylinder, the steering wheel moves and the oil cylinder does not work when the tractor is steered with man's control.	a. replace the stator and rotor. b. replace the piston seal ring.

Front axle

Symptoms	Possible Causes	Remedies
a. front wheel swinging	a. ball head pin of steering tie rod or ball head seat. b. unsuitable front toe-in adjustment. c. slanting front wheel rim. d. air leaking into cylinder . e. too big bevel gearing clearance in front wheel case. f. too big free travel of steering mechanism.	a.adjust or replace b.readjust. c.correct or replace. d.check oil level and air release. e. adjust. f. adjust.
b. front wheel early worn out	a. unsuitable adjustment of front toe-in. b. Front wheel inflation pressure insufficient. c. power transmitted into front axle on no-farm operation.	a. readjust. b. replenish air to the stipulated inflation pressure. c. put control lever of sliding gear in transfer case in neutral position.

Hydraulic System.

Symptoms	Possible Causes	Remedies
a. impossibly or slowly lifting in case of bearing load	a. much air intaken in oil line. b. filter blocked. c. too low pressure of safety. d. oil cylinder sealing ring damaged. e. severely internal linkage in oil pump.	a. remove the leaking place in low oil pressure line or add up oil. b. clean filter screen , c. correct the pressure . d. replace the valve.

		e. repair or replace.
b. unable to lift in case of bearing no load	a. no oil pressure in the system. severely short of oil in lift housing; connector seal ring of oil pipe damaged, or poor self-tightening oil seal of hydraulic oil pump. b. unworkable oil cylinder sealing ring c. oil-returning valve blocked in "on" position. d. severe leakage of safety valve.	a. add up oil to the stipulated level. b. replace. c. clean or replace. d. clean or replace.
c. lift unable to lower.	a. main control valve blocked in lifting position. b. oil-returning valve blocked in lifting position. c. spring of position control tension not enough.	a. clean. b. clean. c. replace the tension spring
d. frequent jumping or vibrating when being fully lifted, and in neutral position and state falling.	a. severe wearing and poor sealing between the main control valve and the valve sleeve. b. oil cylinder severely worn out , sealing ring damaged. c. poor sealing of one-way valve. d. poor sealing of safety valve. e. unsuitable or over-weight implement.	a. replace the parts. b. clean and repair. c. use the stipulated implement.

Electrical System

Symptoms	Possible Causes
Starter does not run.	a. battery in deficit electricity state, cable connector loose, or pole too dirty. b. connector of starter switch burnt or circuit not closed due to unsuitable adjustment. c. magnetic field coil or armature winding with broken circuit, short-circuit or grounding. d. brush insulation broken grounding. f. preheating switch connector burnt.
Starter runs weakly	a. battery in weak capacity, cable connecting loose or pole too dirty resulting in poor connecting. b. brush worn severely or pressure of brush spring weak resulting in poor connecting, commutator too dirty. c. partial short-circuit and grounding of magnetic field coil or armmator winding, starter switch connector burnt.
Starter in idle running.	a. single clutch sliding. b. attracted-iron travel of starter switch too long.

Unable to be engaged between starter drive gear and flywheel gear, and with impacting noise.	a. starter drive gear and flywheel gear being worn. b. early closure of switch resulting in starter to run before engagement of starter drive gear and flywheel gear.

Appendices. I

I . Detailed List of oil Seal BY350 (400)

No.	Drawing No.	Part Name	Main Dimension	Place Fixed	Qty./ set
1.	JB2600-80	Frame Rubber Oil Seal	PD80x105x12	Pressing cover, drive shaft,	4
2	JB2600-80	Frame Rubber Oil Seal	PD65x105x12	Drive shaft.	6
3	JB2600-80	Frame Rubber Oil Seal	PD55x105x12	Pulley	1
4	JB2600-80	Frame Rubber Oil Seal	SD17x30x8	Gear pump	1
5	JB2600-80	Frame Rubber Oil Seal	SD45x65x10	Pulley	1
				Transmission	2
6	HG4-692-67	Frame Rubber Oil Seal	35x56x12	Front cover, Ist shaft,	2
7	GB98771-88	Frame Rubber Oil Seal	60x85x8	Front hub	4
8	BY130-3401010	Frame Rubber Oil Seal	32x44x10 (the same as BJ 130)	Steering gear.	1
9	350.31.125.	Frame Rubber Oil Seal Frame Rubber Oil Seal	50x68x4	Main pin, front wheel.	2
10	GB98771.1-88	Frame Rubber Oil Seal	50x68x8	Main pin, front wheel.	2
11	JB2600-80	Frame Rubber Oil Seal	PD 45x75x12	Brake	4

II . Detailed Bearing List of Tractor BY350 (400)

.No	Type	Part Name.	Main Dimension	Place Fixed	Qty/ Tractor	Standard.
1	10-6	Single-row, radial ball bearing.	30x55x13	Pulley, transmission case	1/1	GB276--89
2	208	Single-row, radial ball bearing.	40x80x18	Transmission Case	1	GB276--89
3	211	Single-row, radial ball bearing.	55x100x21	Pulley	1	GB276--89
4	214	Single-row, radial ball bearing.	70x125x24	End Transmission	2	GB276--89
5	306	Single-row, radial ball bearing.	30x72x19	Transmission Case	3	GB276--89
6	306	Single-row, radial ball bearing.	30x72x19	Pulley	2	GB276--89
7	307	Single-row, radial ball bearing.	35x80x21	Transmission Case	1	GB276--89

8	308	Single-row, radial ball bearing.	40x90x23	End Transmission	2	GB276--89
9	50307	Ball bearing with stop groove	35x80x21	Transmission Case	1	GB277--89
10	50309	Ball bearing with stop groove	45x100x25	End Transmission	2	GB277-89
11	60203	Single-row, radial ball bearing with dust cup.	17x40x12	Flywheel	1	GB278-82
12	92608	Single-row radial small cylindrical roller bearing	40x90x23	Transmission Case	1	GB278-81
13	32312E	Single-row radial small cylindrical roller bearing	60x130x31	End Transmission	2	GB283-31
14	7506E	Single-row tapered roller bearing	30x62x21	Front Hub.	2	GB297-84
15	7508E	Single-row tapered roller bearing	40x80x25	Front Hub.	2	GB297-84
16	7212E	Single-row tapered roller bearing	60x110x24	Differential	2	GB297-84
17	27305	Big taper roller bearing	25x62x17	Transmission Case	2	GB297-84
18	8108	Single direction thrust bearing	40x60x13	Steering Joint	2	GB301-84
19	986911 (NJ131)	Single direction thrust bearing	53x80x20	Clutch	1	BY30,40have passed, not standard
20	7304	Single-row tapered roller bearing	20x52x16	Steering Gear	2	GB297-84
21	Ball 13/32"	Ball	13/32"	Drive Coupling	4	GB308-89 for BY354,404
22	Ball 9/32"	Ball	9/32"	Steering Gear	64	GB308-89
23	Ball 11/32	Ball	11/32"	Transmission Case	6	GB309-89
24	Ball 1/8	Ball	1/8"C III	Distributor	3	GB308-89
25	Ball	Ball	Φ7CIII	Safety Valve	2	GB308-84
26	Quill roller 2.5x16	Quill Roller	2.5X16	Transfer Case	34	GB309-84
27	Quill roller 3x24	Quill Roller	3X24	Transfer Case	72	GB309-84

Ⅲ. Fitting Clearance of Main Parts in Tractor Frame.

(Unit: mm)

No.	Name of Fitted Components	Standard Dimension		Type of Fitting	Required Range	Using Limit
		Hole	Shaft			
1	Release bearing & its seat.	Φ53	Φ53	Transition		
2	Height tolerance of three release levers			Not the same height	0.15	
3	Swing shaft & bush	Φ35+0.039 0	Φ35-0.025 -0.064	Clearance	0.025--0.050	
4	Swing shaft sleeve & bush	Φ42+0.039 0	Φ42+0.109 +0.070	Shrink	0.035--0.055	
5	Main pin & bush	Φ40+0.039 +0	Φ40-0.009 -0.034	Clearance	0.015--0.040	
6	Main pin sleeve & bush.	Φ48+0.039 +0	Φ48+0.109 +0.070	Shrink	0.035--0.055	
7	Steering rocker arm and bush	Φ32+0.064 +0.025	Φ32-0.025 -0.050	Clearance	0.050--0.070	
8	Shift fork shaft & its hole	Φ15+0.027 0	Φ15-0.016 -0.059	Clearance	0.020--0.050	
9	I-VI gears sliding gear & I- shaft	Φ28+0.021 0	Φ28-0.020 -0.041	Clearance	0.025--0.045	
10	I-III gear of driven gear & spline bush of II shaft	Φ60+0.060 0	Φ60-0.030 -0.060	Clearance	0.030--0.070	
11	Sliding gear, high & low gears, & II shaft	Φ32+0.025 0	Φ32-0.025 -0.050	Clearance	0.030--0.070	
12	Output sliding gear and output shaft	Φ32+0.062 0	Φ32-0.025 -0.050	Clearance	0.030--0.070	
13	Output high & low speed gear & shaft	Φ34+0.050 0	Φ28-0.025 -0.050	Clearance	0.030--0.070	
14	Pulley & PTO shaft	Φ38+0.039 0	Φ38+0.025 -0.087	Clearance	0.025--0.070	
15	Gear pump axial assembly dimension			Gear shaft axial play	0.080--0.100	
16	Hydraulic oil cylinder & piston.	Φ85+0.035 0	Φ85-0.036 -0.090	Clearance selected	0.030--0.060	
17	Main control valve & its sleeve	Φ14+0.015 0	Φ14+0.008 -0.007	Clearance selected	0.004--0.010	
18	Distributor housing main control valve	Φ26+0.033 0	Φ26+0.015 -0.018	Shrink selected	0.002--0.008	

19	Oil return valve & its sleeve	Φ10+0.033 0	Φ10+0.006 -0.009	Clearance selected	0.006--0.012	
20	Distribution housing & oil return valve sleeve	Φ22+0.033 0	Φ22+0.015 -0.018	Transition selected	-0.001--0.018	

IV. Attachment (Selected additionally by users.)

.No.	Part Code. No.	Component	Qty.	Remarks.
1	350.45.001	Driver's roof assy.	1	Against sunlight, wind, and rain.
2	18.52.001	Pulley assy.	1	For stationary power supply
3		High lug paddy field wheel assy.	1 pair	For operation in paddy field
4		Roll over protecting brace	1	
5	350.34.104	Balance weight	Front ; 7/ Rear; 4--8	For operation in dry field.

V . On--Vehicle Tools.

No	Tool's Name	Specification	Qty.		No.	Name	Specification	Qty.
1	Grease gun		1		8	Ship-joint pliers	6"--8"	1
2	Double-end wrench	8x10	1		9	Circlip pliers for hole		1
3	Double-end wrench	13x16	1		10	Circlip pliers for shaft		1
4	Double-end wrench	16x18	1		11	Cross-head screw driver	100x5	1
5	Double-end wrench	21x24	1		12	Plastic oil can		1
6	Double end hexagon socket.	S=27	1		13	Hand hammer.	1 pound.	1
7	Hexagon wench	S=6,s=8	1/each					

VI. Spare Parts

A. Gasket.

No.	Drawing	Outside Dia. x Aperture	Material	Qty	Purposes

	No.	Dia .x Width		.	
1	CB5-75	26x20.2x2	Red copper	6	Low pressure pipe of gear pump, release oil pipe of lift.
2	CB5-75	23x17.2x2	Red copper	4	High pressure oil pipe of gear pump, head of oil intake component.
3	CB5-75	22.5x16.5x2	Red copper	4	Screw plug of oil release pipe, screw plug of output hole, oil cylinder safety valve.

B. Frame Oil Seal.

No.	Standard	Open type, Bore Dia. x Exradius x Width	Qty.	Purposes.
1	JB2600-80	PD80 X105X 12	4	Drive shaft gland
2	JB2600-80	PD 55X75X12	4	Brake
3	JB2600-80	SD45X65X10	2	PTO shaft, main pin, pulley.
4	HG4-692-67	35X56X12	2	Primary shaft front bearing cap.
5	GB98771.1 -88	60X85X8	4	Front hub.
6	BY130-3401010	32X44X10	1	Steering gear.

C. O-type Seal Ring.

No.	Drawing No.	External (inner) Dia. X Cross Dia.	Qty.	Purposes.
1	GB1235-76	90X5.7	1	Bearing cap of II shaft ,transmission.
2	GB1235-76	18X2.4	1	Lift oil cylinder, spring shackle seat of φ85 bore
3	GB1235-76	68X3.1	2	Gear pump housing
4	GB3452.1-82	40X5.3	2	Front wheel main pin.
5	Q/ZB248-77	YxD85(for hole)	4	Piston φ85, cylinder.
6	GB3452.1-82	34.5x3.55	2	Swing shaft, front axle
7	GB1235-76	32x3.1	1	Reverse gear shaft.
			4	Front and rear cap, gear pump.
8	GB1235-76	31x3.5	1	Transmission coupling.
9	GB1235-76	26x2.4	3	Main control valve bush.
10	GB1235-76	25x2.4	1	Low pressure connector and oil pump.
11	GB1235-76	22x2.4	1	Front cap of valve
			1	Oil-returning valve plug.
			1	Upper cover, distributor.
			2	Pin shaft, rear axle.
			2	Oil-returning valve bush.
			2	Cam shaft, brake.
12	GB1235-76	20x2.4	1	Control plate, lift.
			1	Oil pump and high pressure connector.
			2	Fork shaft, PTO shaft

13	GB1255-76	16x2.4	1	Adjusting lever of shut-off valve.
			2	Oil inlet pipe of lift and distributor housing.
			1	Safety valve assy.
			1	Connecting surface of distributor and oil cylinder.
			1	Universal drive shaft of speed-control valve and lift housing.
14	GB1235-76	13x1.9	1	Plug of distributor.
			2	Outlet oil pipe, lift.
			1	Connecting surface of upper cover and distributor.
			1	Shut-off valve and oil cylinder.
15	GB1235-76	10x1.9	1	Lift control plate
			1	Speed control valve and distributor housing
16	CB1-75	52x5.7	2	Lifting shaft
17	CB1-75	30x2.4	1	Filter element of lift
18	CB1-75	18x1.9	1	Spring shackle seat.

D. Yx Type Seal Ring.

1	JB/ZQ4264-88	Yx D85	1	lift piston of cylinderφ85

E. Packing Cup.

1	350.43.013	Packing cup assy.	2	brake

VII Lubricating Chart.

No.	Lubricating Positions	Qty.	Type of Grease
1	Swing shaft sleeve	1	grease
2	Front end lift rod	1	grease
3	Main pin	2	grease
4	Tie rod	2	grease
5	Front hub	2	grease
6	Oil sump of engine	1	oil
7	Steering gear	1	gear oil
8	Rear end of lift rod	1	grease
9	Transmission case	1	oil
10	Braking pedal shaft	4	grease
11	Lift	1	oil
12	Left lift rod	1	grease
13	Lift rod	2	grease
14	Drive shaft	2	grease

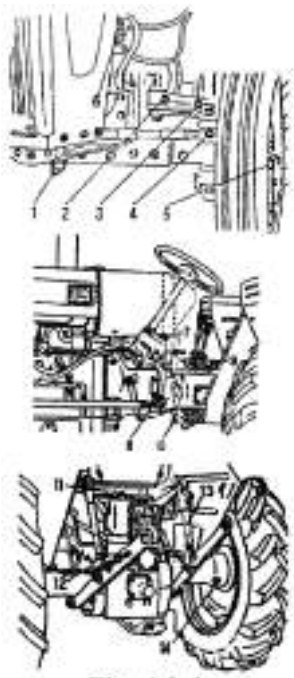

Fig. A1-1

https://truckmanualshub.com/

Select different lubricatings according to different weather conditions. The details are as per Chapter I: Lubricating Oil of the Tractor.

Appendix II.

I. Detailed List of Bearing.

No.	Type	Part Name	Main Dimension	Place Fixed	Qty/ Set	Code
1	206	Single-row radial ball bearing	30x62x16	PTO shaft of transfer case	1	GB276-82
2	209	Single-row radial ball bearing	45x85x19	Front drive bevel gear(1)	2	GB276-82
3	304	Single-row radial ball bearing	20x52x15	PTI shaft of transfer case.	1	GB276-82
4	304	Single-row radial ball bearing	20x52x15	Middle shaft of transfer case	2	GB276-82
5	305	Single-row radial ball bearing	25x62x17	PTI shaft of transfer case.	1	GB276-82
6	305	Single-row radial ball bearing	25x62x17	PTO shaft of transfer case	1	GB276-82
7	207	Single-row radial ball bearing	35x72x17	Clutch shaft	1	GB276-82
8	310	Single-row radial ball bearing	50x110x27	Front drive shaft	2	GB276-82
9	2208	Single-row radial small cylindrical roller bearing	40x80x18	Front drive shaft	2	GB283-81
10	7208E	Single-row tapered roller bearing	40x80x18	Front drive bevel gear	2	GB297-84
11	7210E	Single-row tapered roller bearing	50x90x17	Front end transmission gear	2	GB297-84
12	7211E	Single-row tapered roller bearing	55x110x21	Differential assy.	2	GB297-84
13	7208E	Single-row tapered roller bearing	40x80x18	Drive gear assy	1	GB297-84
14	2007107E	Single-row tapered roller bearing	35x62x17	Drive gear assy	1	GB297-84
15	981911k(nj131)	Single direction thrust bearing	53x80x20	Clutch	1	Not standard for BY35,40.
16	Ball 1/2"	ball	1/2"	Roller shaft coupling	8	GB308-84
17	Ball 11/32"	ball	11/32"	Front (right and left) end transmission assy	2	GB308-84
18	Ball 11/32"	ball	11/32"	Front drive shifting fork assy	1	GB308-84
19	Ball	ball	13/32"	Drive shaft coupling of clutch	4	GB308-89

	13/32"					

II. Detailed List of O-type Ring.---BY354(404)

No.	Code No.	External (inner) Dia. x End Surface Dia.	Qty	Place Fixed
1	GB1235-76	16X2.4	1	Front central transmission screw plug
2	GB1235-76	16X2.4	2	(left and right) Final transmission screw plug.
3	GB1235-76	16X2.4	1	Oil release plug of transfer case.
4	GB1235-76	20X2.4	1	Fork assy. of front drive
5	GB1235-76	30X3.1	1	Dipstick assy.
6	GB1235-76	50X3.5	2	Left and right steering arms
7	GB1235-76	50X3.1	2	Pipe against dust.
8	GB1235-76	54X3.5	2	Sleeve
9	GB1235-76	56X3.5	1	Pipe seat against dust..
10	GB1235-76	68X3.1	2	Oil seal seat of transfer case
11	GB1235-76	85X3.1	2	Drive gear shaft seat.
12	GB1235-76	95X3.1	2	Low end cover of left and right final transmission
13	GB1235-76	95X3.7	2	Main pin shaft seat.
14	GB1235-76	100X3.1	1	Drive gear shaft seat.
15	GB1235-76	100X5.7	2	Left and right main pin case.
16	GB1235-76	135x3.1		Transfer case housing
17	GB1235-76	270x5.7		Front drive end cover.
18	24S.31.126	38x3.1	1	Drive gear.
19	24S.31.126	90x3.5		Drive gear shaft seat.

III. Oil Seal Detailed List.----BY354(404)

No.	Code No.	Part Name	Main Dimension	Place Fixed	Qty.
1	GB9877.1-88	Frame oil seal	FB35x55x8	Clutch shaft.	2
2	JB2600-80	Frame oil seal	SD45X70X10	Front central transmission support sleeve.	1
3	JB2600-80	Frame oil seal	SD65X90X12	Front end transmission.	2
4	JB2600-80	Frame oil seal	PG30X50X8	Oil seal seat of transfer case.	2
5	24S.312.180	End surface oil seal		Front drive cover.	2
6	24.31.130A	Connector oil seal		Lift rod and tie rod.	4

IV. Main Component Fitting Clearance.---BY354(404)

No.	Name of Fitted Components	Standard Dimension		Type of Fitting	Required Range
		Hole	Shaft		
1	Swing sleeve	+0.054	-0.036	clearance	0.040-0.080

	and shaft seat	φ84H8(0)	φ84f6(-0.058)		
2	Sleeve and main pin shaft end	+0.039 φ45H8(0)	-0.050 φ45e6(-0.066)	clearance	0.050-0.080
3	Sleeve and semi-shaft gear.	φ35FB(+0.064) (+0.025)	φ35h8(0) (-0.039)	clearance	0.025--0.06
4	PTO gear and PTO shaft of transfer case	+0.052 φ28H9(0)	-0.020 φ28f7(-0.041)	clearance	0.030--0.06

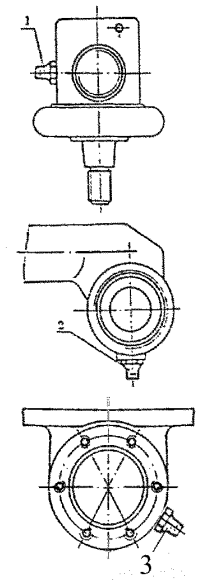

Fig. A2-1

V . Lubricating Chart--.--BY354(404)

No.	Place	Qty	Type of Grease	Remark
1	Left and right steering arms	2	grease	
2	Tie rod joint assy.	2	grease	
3	Swing seat assy.	1	grease	
4	Semi-shaft housing	1	oil	No.6 in Drawing 2
5	Clutch pedal assy.	2	grease	No.3 in Drawing 1
6	Front final transmission	6	grease	Oil cup in Drawing 3.

https://truckmanualshub.com/

Appendix III

I. Transmission System Diagram

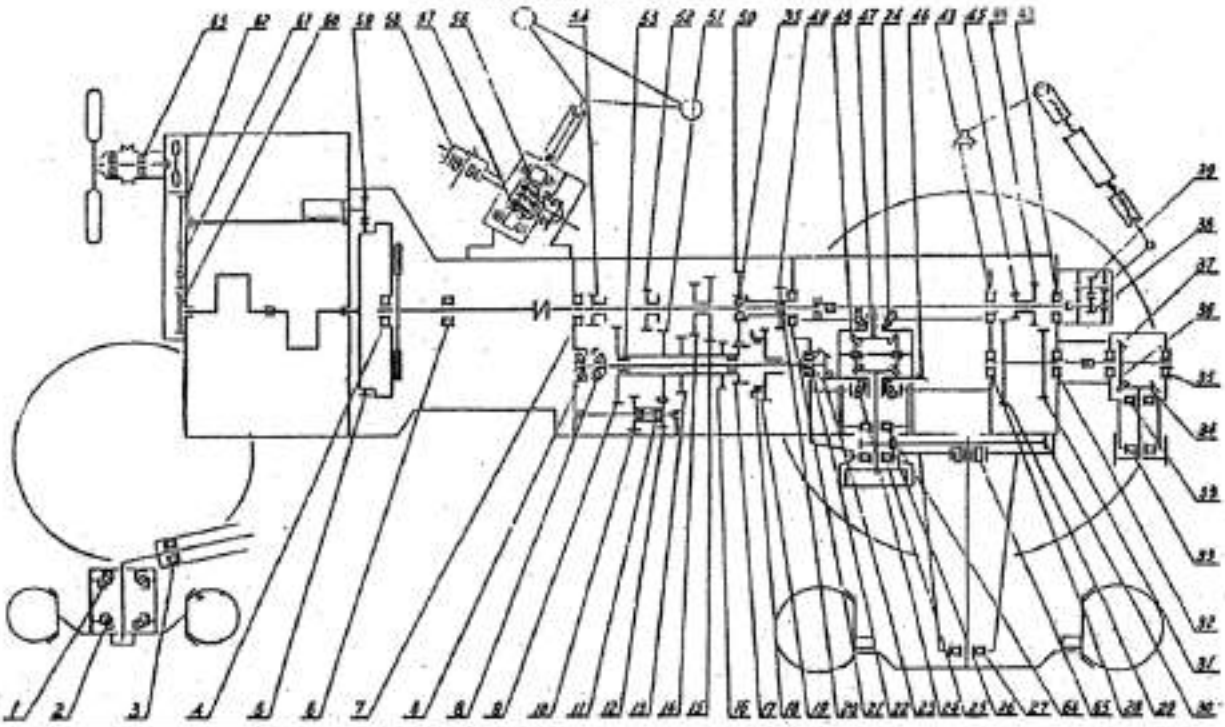

No.	1	2	3	4	5	6	7	8
Number of tooth x Modulus								
Type of bearing	7508E	7506E	8108	60203		986911B	307	27305E

9	10	11	12	13	14	15	16	17	18	19	20
44x3	23x3		17x3	34x3	27x3	34x3	27x3	22x3	22x3	36x3.5	
											25x16x34

21	22	23	24	25	26	27	28	29	30	31	32
		★▲ 10x6			15x4			48x1.5	77x4	42x3.5	
208	92608		7212	50309		214	306				50307

33	34	35	36	37	38	39	40	41	42	43	44
	★ 15x4		★ 31x4		10x3	10x3					21x3.5
306		106		211						306	

45	46	47	48	49	50	51	52	53	54	55	56
14x3.5	★▲ 43x6	★ 20x5	★ 12x5	15x35	39x3	41x3	20x3		17x3		
								3x24x36			7304

57	58	59	60	61	62	63	64	65
7304	922205						308	32312E

★	Modulus at large end
▲	Pitch angle 36°21'51"
⊙	Pitch angle 16°
×	Modulus in normal direction

II. Dimensional Sketch of linkage System.

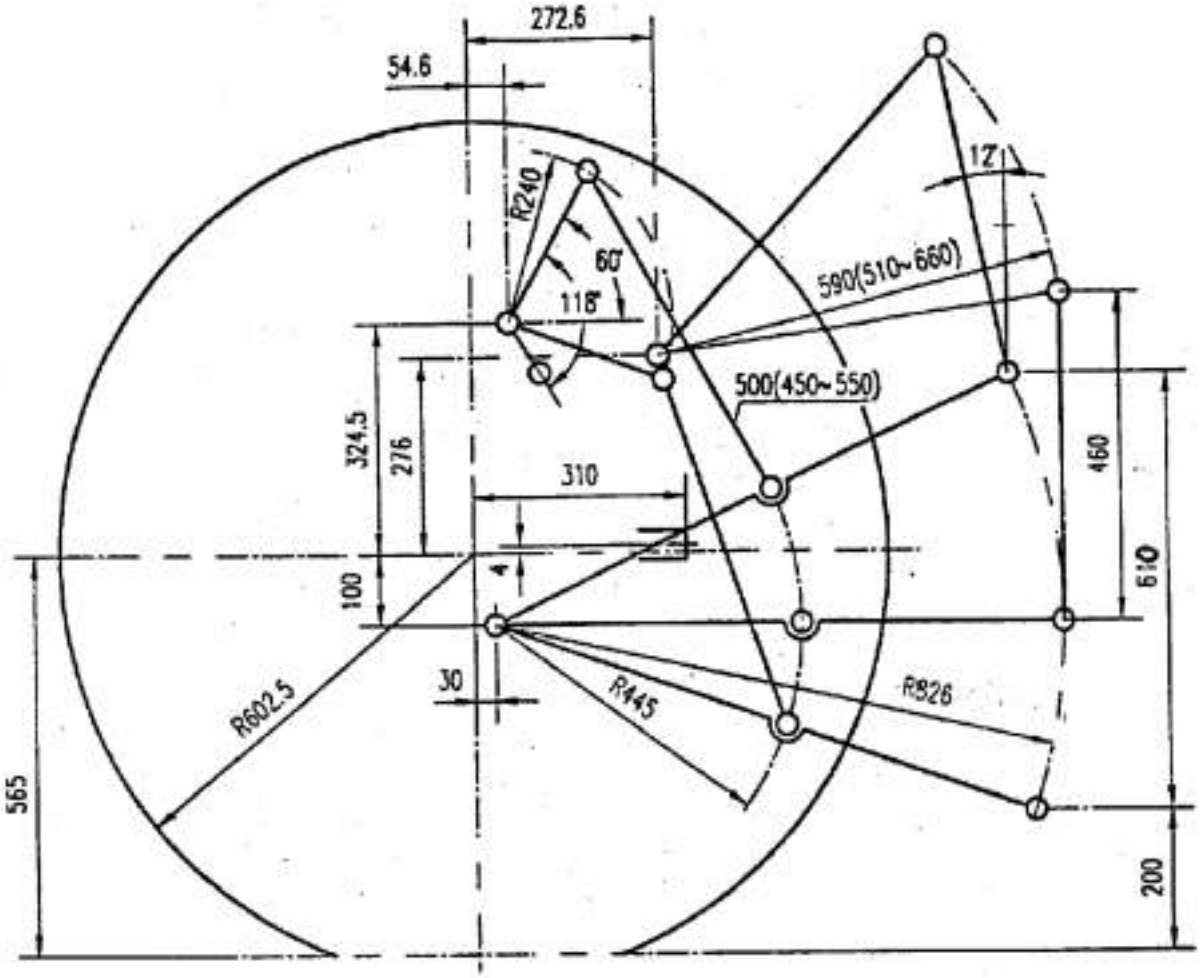

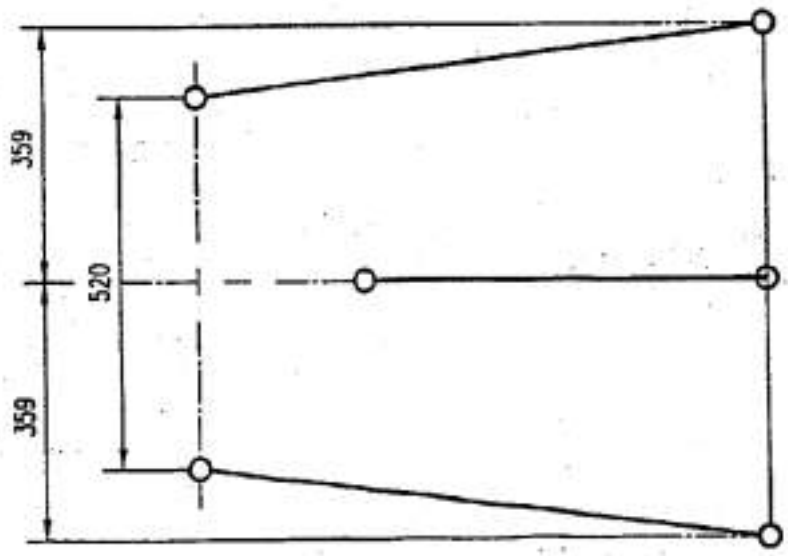

II. Dimensional Sketch of linkage System

---------END----------

https://truckmanualshub.com/