https://truckmanualshub.com/

DE12, DE12T & DE12TI & DE12TIS DIESEL ENGINE

Shop Manual

65.99892-8030B

Daewoo reserves the right to improve our products in a continuing process to provide the best possible product to the market place. These improvements can be implemented at any time with no obligation to change materials on previously sold products. It is recommended that consumers periodically contact their distributors for recent documentation on purchased equipment.

This documentation may include attachments and optional equipment that is not available in your machine's package. Please call your distributor for additional items that you may require.

Illustrations used throughout this manual are used only as a representation of the actual piece of equipment, and may vary from the actual item.

https://truckmanualshub.com/

FOREWORD

This manual has been prepared to help you use and maintain the DE series diesel engines (DE12, DE12T, DE12TI and DE12TIS) safely and correctly.

These economical and high-performance diesel engines(6 cylinders, 4 strokes, in-line, direct injection type) have been designed and manufactured to be used for overland transport or industrial purpose. They meet all the requirements such as low noise, fuel economy, high engine speed and durability.

Nonetheless, to obtain the best performance and long life of an engine, it is essential to operate it appropriately and to carry out periodic checks as instructed in this manual. You are requested to thoroughly read this manual from cover to cover and to acquaint yourself with all the information contained in this manual.

All information, illustration and specifications continued in this literature are based on the latest product information available at the time of publication approval. The right is reserved to make changes at any time without notice.

Please contact Daewoo dealer for the answers to any questions you may have about DE series engine's features, operation or manuals.

https://truckmanualshub.com/

CONTENTS

1. General information **1**

1.1. Engine characteristics
1.2. Main data and specifications
1.3. Engine specification('98 type)
1.4. Engine performance curve
1.5. Exterior view of engine

2. Major maintenance **22**

2.1. Preventive maintenance
2.2. Diagnostics and troubleshooting for the engine

3. Disassembly and reassembly of major components **37**

3.1. Disassembly
3.2. Inspection
3.3. Reassembly
3.4. Breaking-in

4. Maintenance of major components **79**

4.1. Cooling system
4.2. Lubricating system
4.3. Fuel system
4.4. Turbocharger

5. Scan pole diagnosis for DE12TIS **142**

5.1. Wire harness connection
5.2. System & Vehicle selection
5.3. Self-diagnosis(current)
5.4. Sensor data
5.5. Actuator test
5.6. Flight record

6. Maintenance specifications **154**

6.1. Tightening torque
6.2. Maintenance specification table

● **WORLDWIDE NETWORK**

https://truckmanualshub.com/

1. General information

1.1. Engine characteristics

1.1.1. OMEGA combustion bowl

The OMEGA combustion bowl is a unit designed to perform high-efficiency, low- emission combustion. As the rim around the combustion bowl port of the upper of the piston has been machined in a smaller size than the interior of the combustion bowl, strong swirl is produced in the combustion bowl and strong squish flow makes the fuel be mixed more sufficiently with air.

Due to the application of OMEGA combustion system and optimal ultilization of intake and exhaust port configuration within the cylinder head, the DE12 series engines discharge a very low level of hazardous exhaust gases such as smoke, nitrogen oxide, hydrocarbon, or carbon monoxide and thus ensure high performance and low fuel consumption.

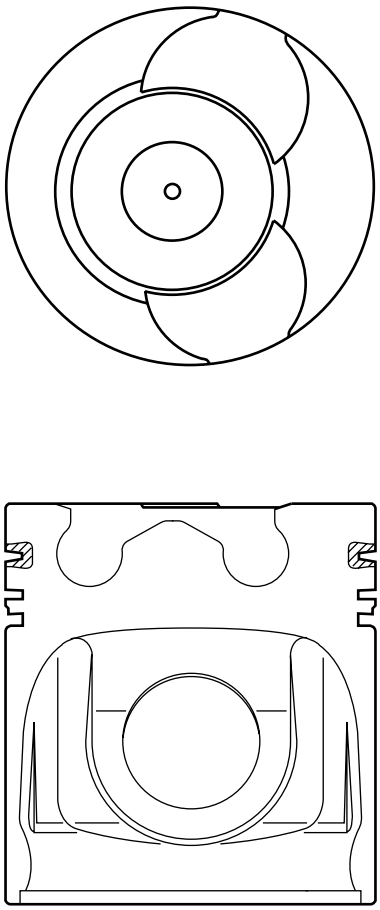

EA2M1001

<Figure. 1-1> OMEGA combustion bowl

1.1.2. Wastegated turbocharging system

1) What is the wastegated turbocharging system?
   Turbocharger is a system designed to pressurize the intake air to increase engine output and decrease fuel consumption by using the energy of exhaust gas discharged from the engine. However, the turbocharger has a weak point at low engine speed, its performance may drop, thus performance at low speed is relatively low.
   The WASTEGATED TURBOCHARGING SYSTEM is an up-to-date turbocharging system remedying such a defect, and the working principle is as follows:
   A small-sized high performance turbine is used to improve engine performance at low speeds. As high charging efficiency can be obtained even If a small amount of exhaust gas is present at low speed. On the other hand, if higher charging pressure is produced than what is present at high speed, fuel consumption increases. To correct this, part of exhaust gas is forced to be discharged into the exhaust manifold through the waste gate, not through the turbine.
   The waste gate is controlled by the ACTUATOR mounted in the turbocharger, and if the pressure in the turbocharger becomes higher than what is required for the engine, the waste gate is forced to open.

2) DE12T, DE12TI and DE12TIS engines are featured by the application of turbochager so that the torque in low speeds can be increased by 30% or more, not only to create high performance, just from the time of starting off the vehicle but also to greatly reduce fuel consumption.

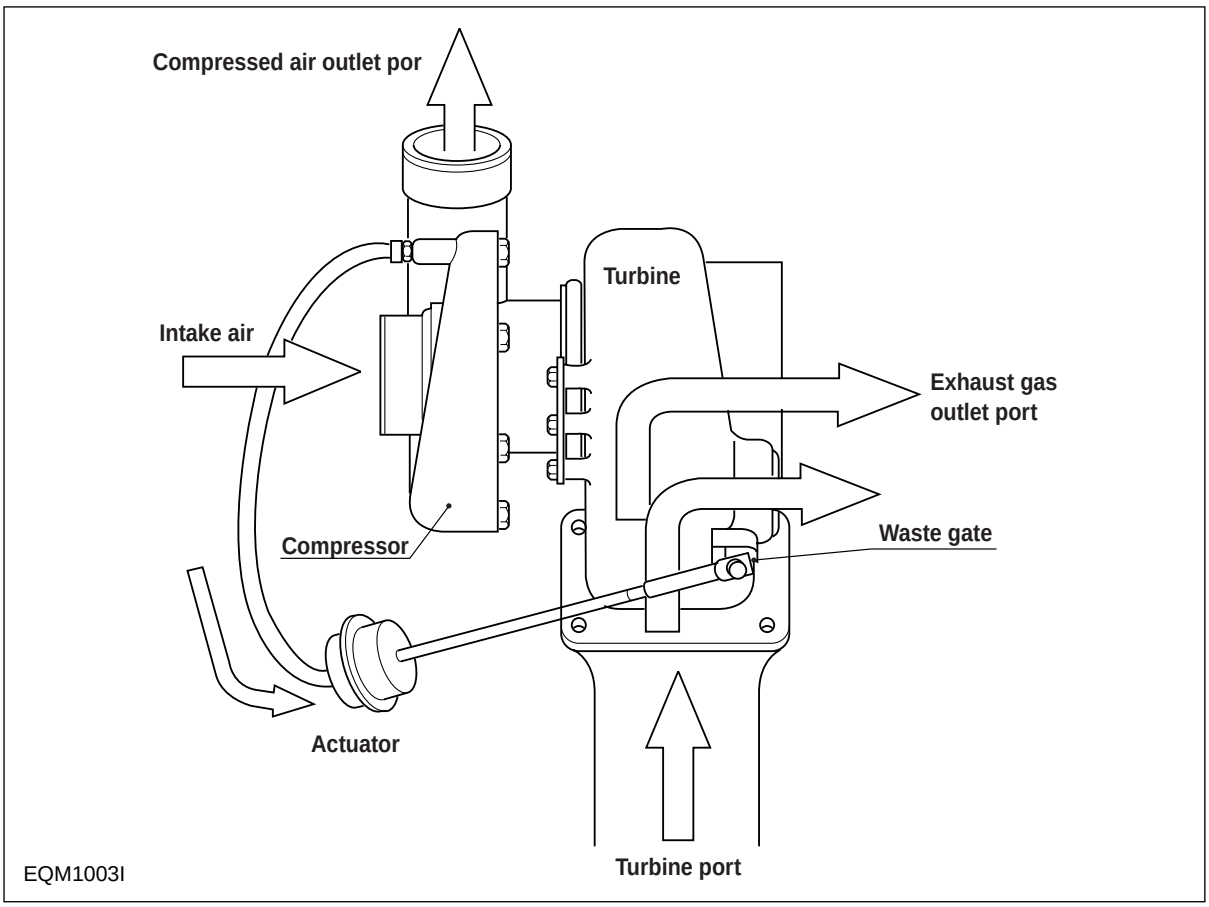

<Figure 1-3> Turbochager

https://truckmanualshub.com/

1.2. Main data and specifications

Engine Model	DE12	DE12T	DE12TI	DE12TIS
Type	In-line, 4-stroke, vertical type			
Combustion chamber type	OMEGA Combustion bowl			
Fuel injection	Direct injection type			
Bore×stroke-No. of cylinders	123mm × 155 - 6			
Total displacement	11,051cc			
Compression ratio	17.1:1	17.1:1	16.5:1	16.8
Maximum power(PS)	225 ps/2,200 rpm	300 ps/2,200 rpm	340 ps/2,100 rpm	←
Maximum torque	81.5 kg·m/1,400 rpm	110 kg·m/1,300 rpm	135 kg·m/1,260 rpm	←
Injection timing	12° BTDC	9° BTDC	12° BTDC	1.0° BTDC
Firing order	1-5-3-6-2-4	←	←	←
Injection pump type	S3000	S3000	S3S	HD-TICS
Governor type	RFD-C/RLD	RFD-C	RFD-D	RLD-J
Timer type	SP	SP	SPG	Electronically control
Nozzle type	Multi-hole type(5-ϕ0.29)	Multi-hole type(5-ϕ0.31)	Multi-hole type(5-ϕ0.33)	Multi-hole type(5-ϕ0.29)
Feed pump type	K-P	K-P	K-PS	←
Valve Timing				
Intake valve open at	BTDC 18°	←	←	BTDC 18°
Intake valve close at	ABDC 34°	←	←	ABDC 32°
Exhaust valve open at	BBDC 46°	←	←	BBDC 70°
Exhaust valve close at	ATDC 14°	←	←	ATDC 30°
Oil pump type	Gear type	←	←	←
Oil cooler type	Water-cooler	←	←	←
Fuel filter type	Full flow type	←	←	←
Oil capacity	20ℓ(Oil pan 17ℓ)	←	←	←
Coolant capacity	19ℓ	←	←	←
Thermostat type	Wax-pallet	←	←	←
Starter : Voltage-output	24V-6.0Kw	←	←	←
Alternator : Voltage-capacity	24V-45A	←	←	←

1.3. Engine specification('98 type)

Item				DE12-228	DE12TI-280	DE12TI-310	DE12TIS
Engine	Manufacturer			DHI	←	←	←
	Mounting location			Under Seat	←	←	←
	Starting type			SELF	←	←	←
	Engine type			Diesel 4 Cycle	Turbocharged & Intercooled	←	←
	Cylinder(No. arrangement)			In-line, vertical	←	←	←
	Combustion chamber type			Direct injection	←	←	←
	Valve position			OHV	←	←	←
	Diameter x stroke			123x155	←	←	←
	Compression ratio			17.1	16.1	←	16.8
	Comp. pressure(kg/cm²-rpm)			28-200	←	←	←
	Average efficient comp.(kg/cm²)			9.27	13.08	14.21	←
	Max. horse power(ps/rpm)			228/2,200	280/2,100	310/2,100	340/2,100
	Max. torque(kg•m/rpm)			80/1,400	115/1,260	125/1,260	140/1,260
	Firing order			1-5-3-6-2-4	←	←	←
	Engine dimension(LxWxH)			1,317x747x1,015	1,317x847x1,064	←	←
	Dry weight(kg)			872	909	910	←
	Cycle			4	←	←	←
	Piston Material			AL	←	←	←
	No. of piston ring		Comp. ring	2	←	←	←
			Oil ring	1	←	←	←
	In. & Ex. Valve timing	Intake	Open	BTDC 18°	←	←	BTDC 18°
			Close	ABDC 34°	←	←	ABDC 32°
		Exhaust	Open	BBDC 46°	←	←	BBDC 70°
			Close	ATDC 14°	←	←	ATDC 30°
	Valve clearance (cold engine)		Intake	0.3	←	←	←
			Exhaust	0.3	←	←	←
	Lubricatring system	Engine speed at no load		550~600	←	←	←
		Lubricating Type		Forced pressure type	←	←	←
		Oil pump type		Gear	←	←	←
		Oil filter type		Strainer	←	←	←
		Oil capacity(ℓ)		20	←	←	←
		Oil cooler type		Water cooled	←	←	←

Item				DE12-228	DE12TI-280	DE12TI-310	DE12TIS
Engine	Turbocharger type			-	Exhaust gas driven	←	←
	Intercooler type			-	Air cooled	←	←
	Cooling system	Cooling type		Forced water circulation	←	←	←
		Coolant capacity		19(engine only)	←	←	←
		Water pump type		Centrifugal	←	←	←
		Thermostat type		Wax pellet	←	←	←
Fuel system	Fuel pump type			Plunger	←	←	←
	Fuel filter type			Full flow	←	←	←
	Fuel injection type			Mechanical	←	←	Electronic control
	Inj. pump system	Type		Inline	←	←	←
		Timing		BTDC 8°	BTDC 12°	←	BTDC 1.0°
		Plunger Dia.		12	←	←	←
		Cam lift(mm)		11	12	←	14
	Inj. nozzle	Nozzle mounting		Flange	←	←	←
		Nozzle type		Multi hole	←	←	←
		Orifice	No	5	←	←	←
			Dia.(mm)	0.29	0.33	←	0.29
		Inj. pressure(kg/cm^2)		220	130/220	←	163/224
Electric system	Voltage(V)			24V	←	←	←
	Preheat-ing system	Type		Electric	←	←	←
		Voltage(V) - Amp(A)		22-120	←	←	←
	Alternator	Output(V-A)		-	-	-	-
		Regulator		-	-	-	-
	Starter	Type		Reduction	←	←	←
		Output(kW)		24V-6.0kW	←	←	←
	Ignition	Type		Air compression	←	←	←

https://truckmanualshub.com/

1.4. Engine performance curve

1.4.1. DE12

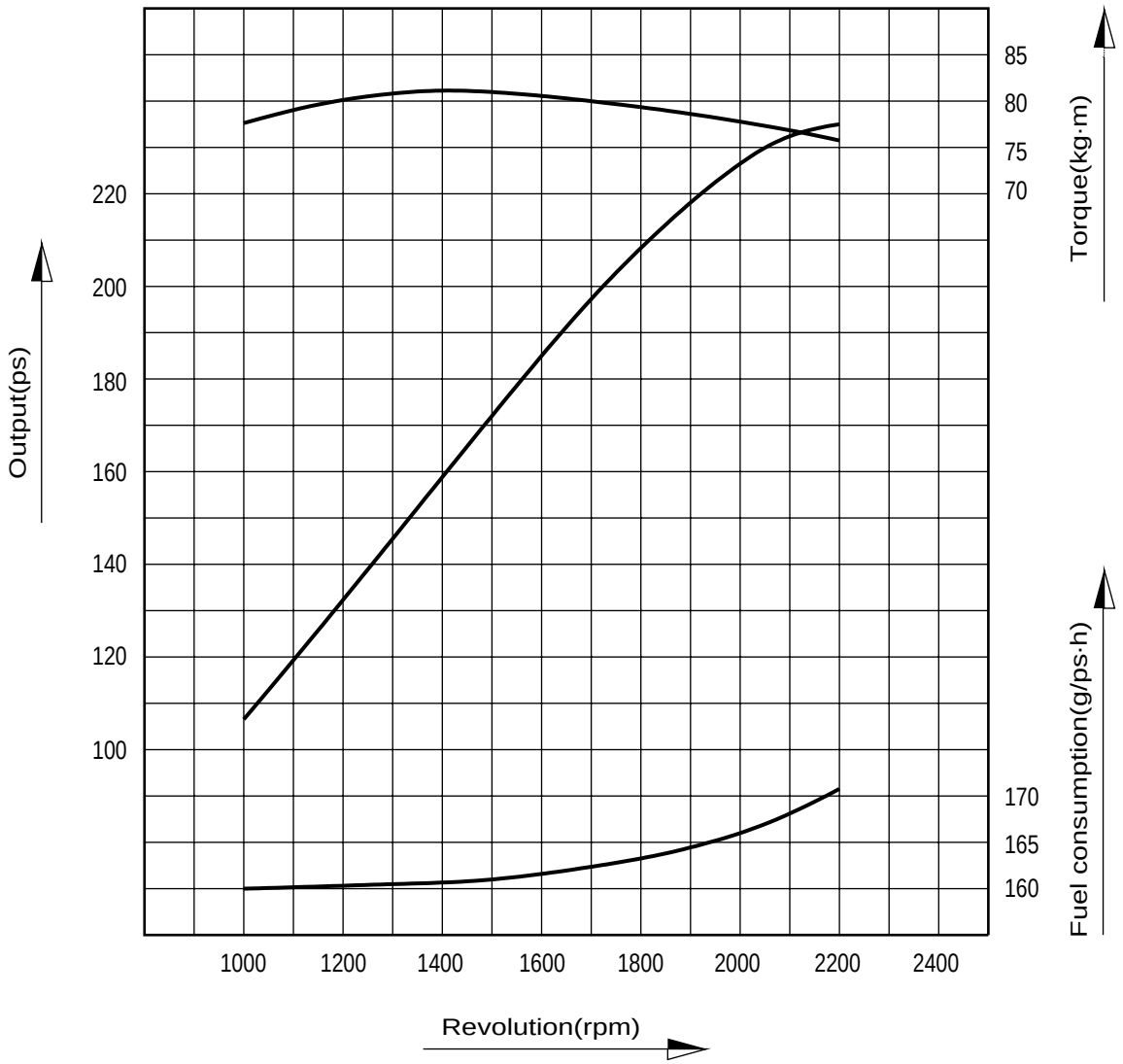

Performance criteria	ISO 1585(SAE J1349)
Output(Max.)	235 ps/2,200 rpm
Torque(Max.)	81.5 kg·m/1,400 rpm
Fuel consumption ratio(min.)	160 g/ps·h

EQM1004I

https://truckmanualshub.com/

1.4.2. DE12('98 type)

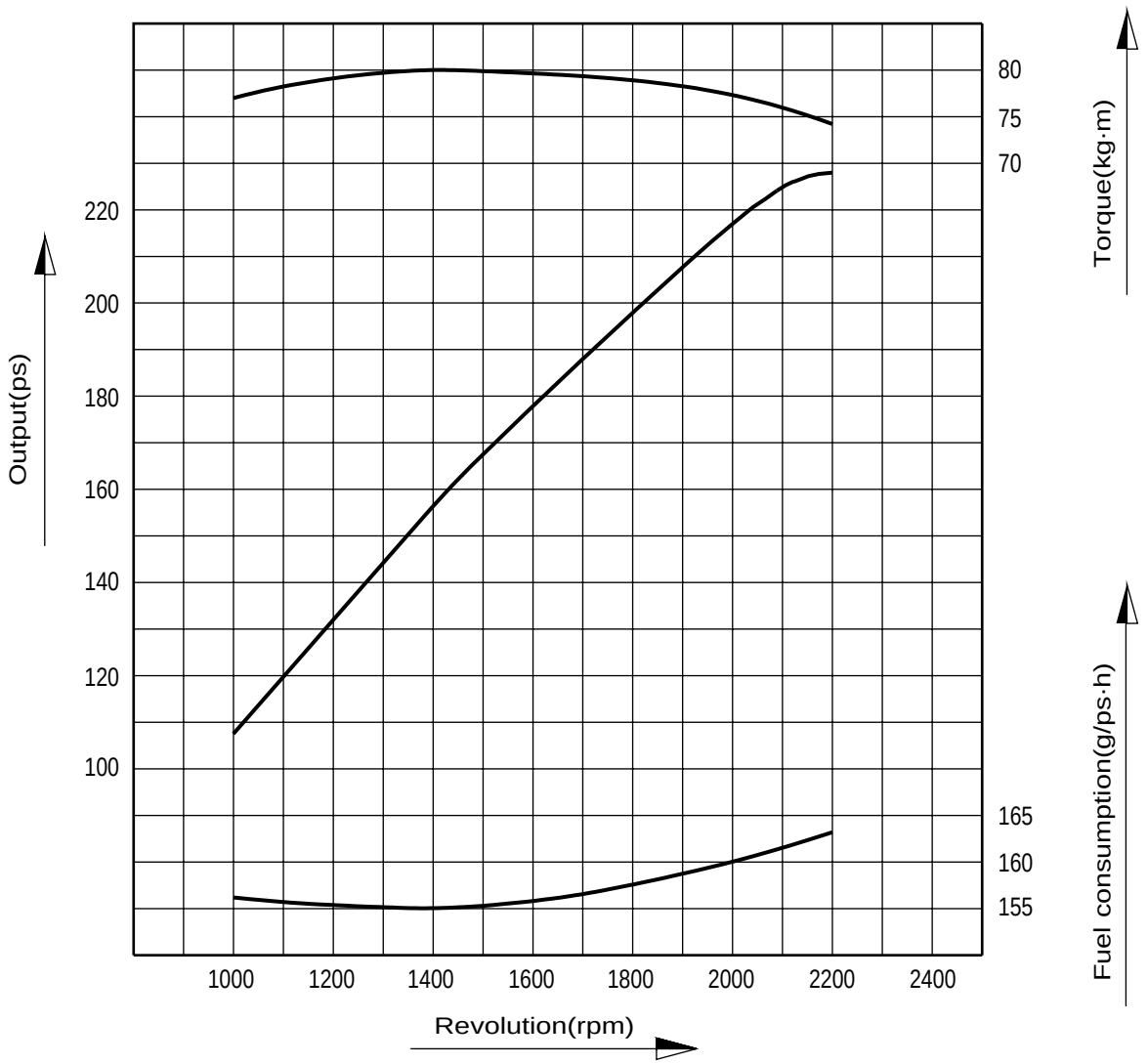

Performance	ISO 1585(SAE J1349)
Output(Max.)	228 ps/2,200 rpm
Torque(Max.)	80 kg·m/1,400 rpm
Fuel consumption ratio(min.)	155 g/ps·h

EQM1005I

https://truckmanualshub.com/

1.4.3. DE12T

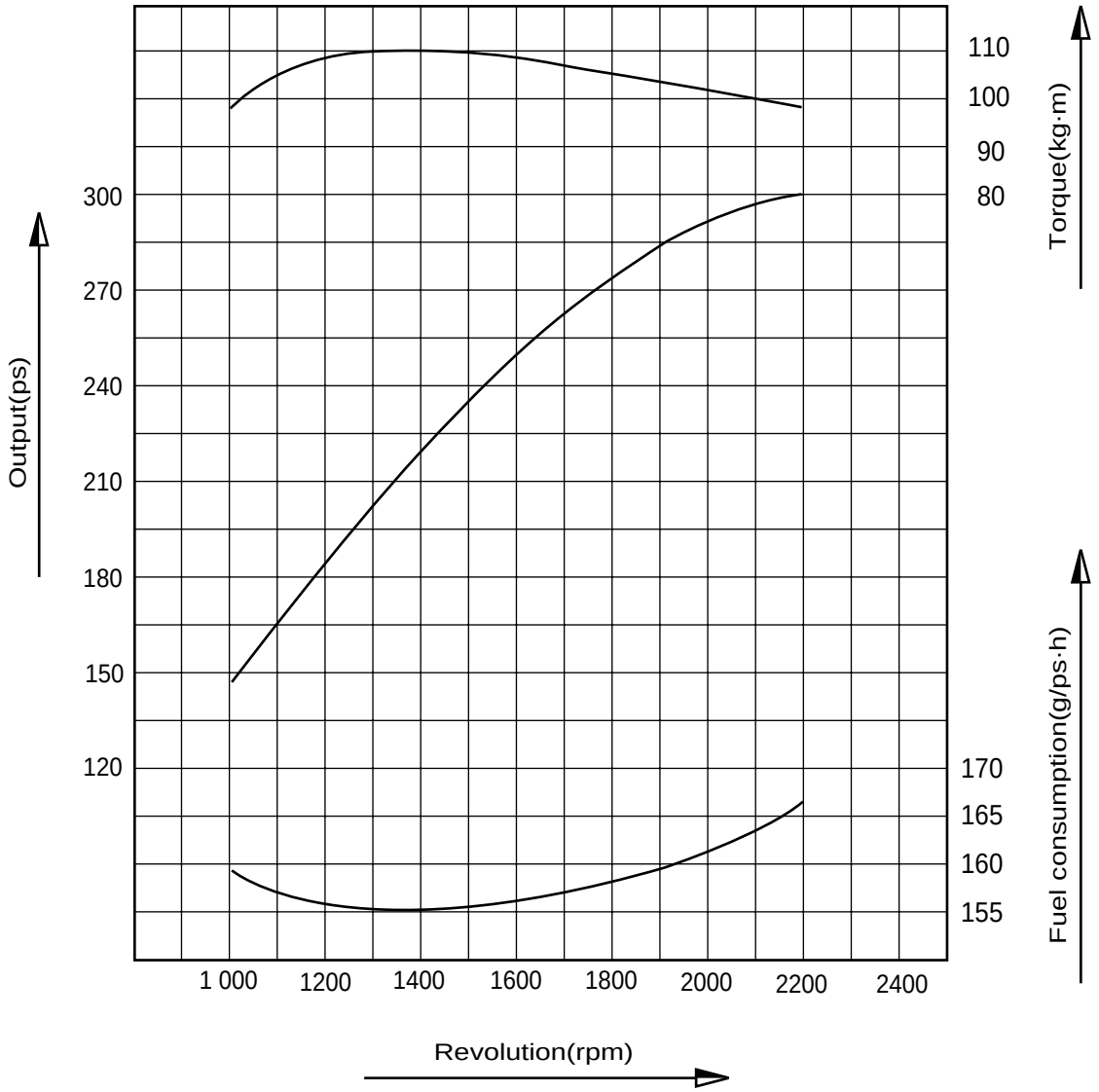

Performance	ISO 1585(SAE J1349)
Output(Max.)	300 ps/2,200 rpm
Torque(Max.)	110 kg·m/1,300 rpm
Fuel consumption ratio(min.)	155 g/ps·h

EQM1006I

https://truckmanualshub.com/

1.4.4. DE12TI

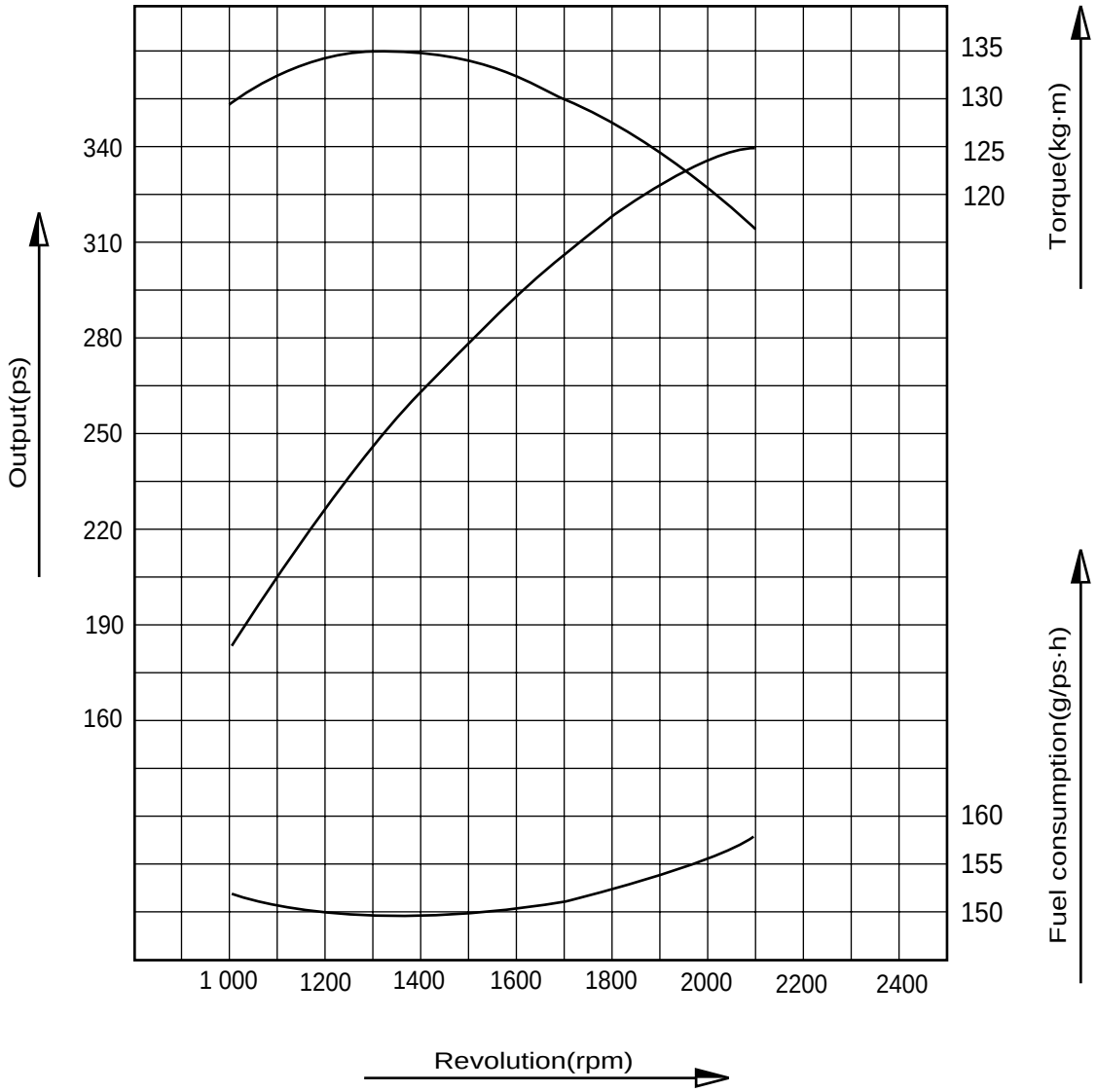

Performance	ISO 1585(SAE J1349)
Output(Max.)	340 ps/2,100 rpm
Torque(Max.)	135 kg·m/1,260 rpm
Fuel consumption ratio(min.)	147 g/ps·h

EQM1007I

https://truckmanualshub.com/

1.4.5. DE12TI(280 ps : '98 type)

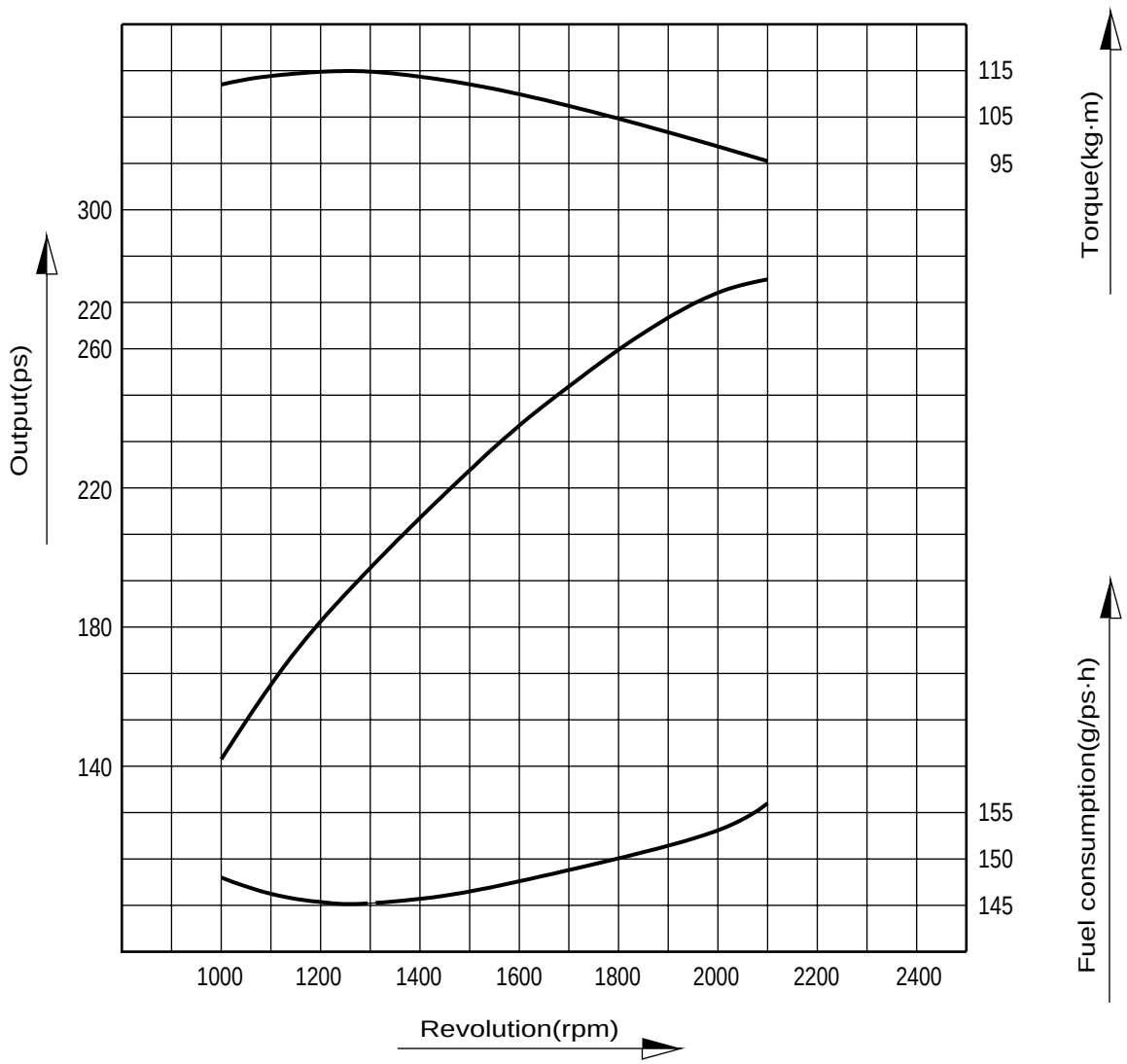

Performance	ISO 1585(SAE J1349)
Output(Max.)	280 ps/2,100 rpm
Torque(Max.)	115 kg·m/1,260 rpm
Fuel consumption ratio(min.)	145 g/ps·h

EQM1008I

https://truckmanualshub.com/

1.4.6. DE12TI(310 ps : '98 type)

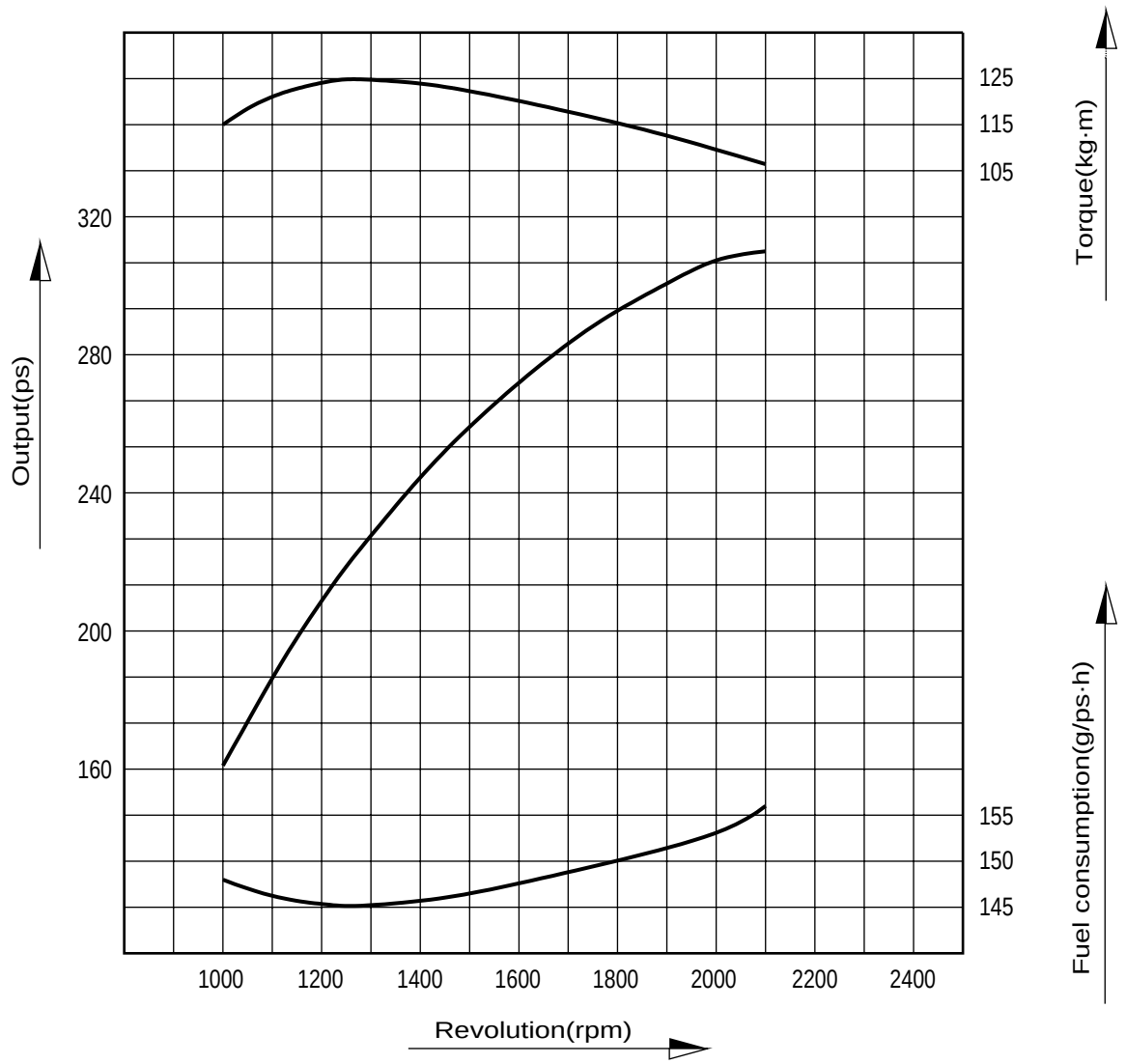

Performance	ISO 1585(SAE J1349)
Output(Max.)	310 ps/2,100 rpm
Torque(Max.)	125 kg·m/1,260 rpm
Fuel consumption ratio(min.)	145 g/ps·h

EQM1009I

1.4.7. DE12TIS

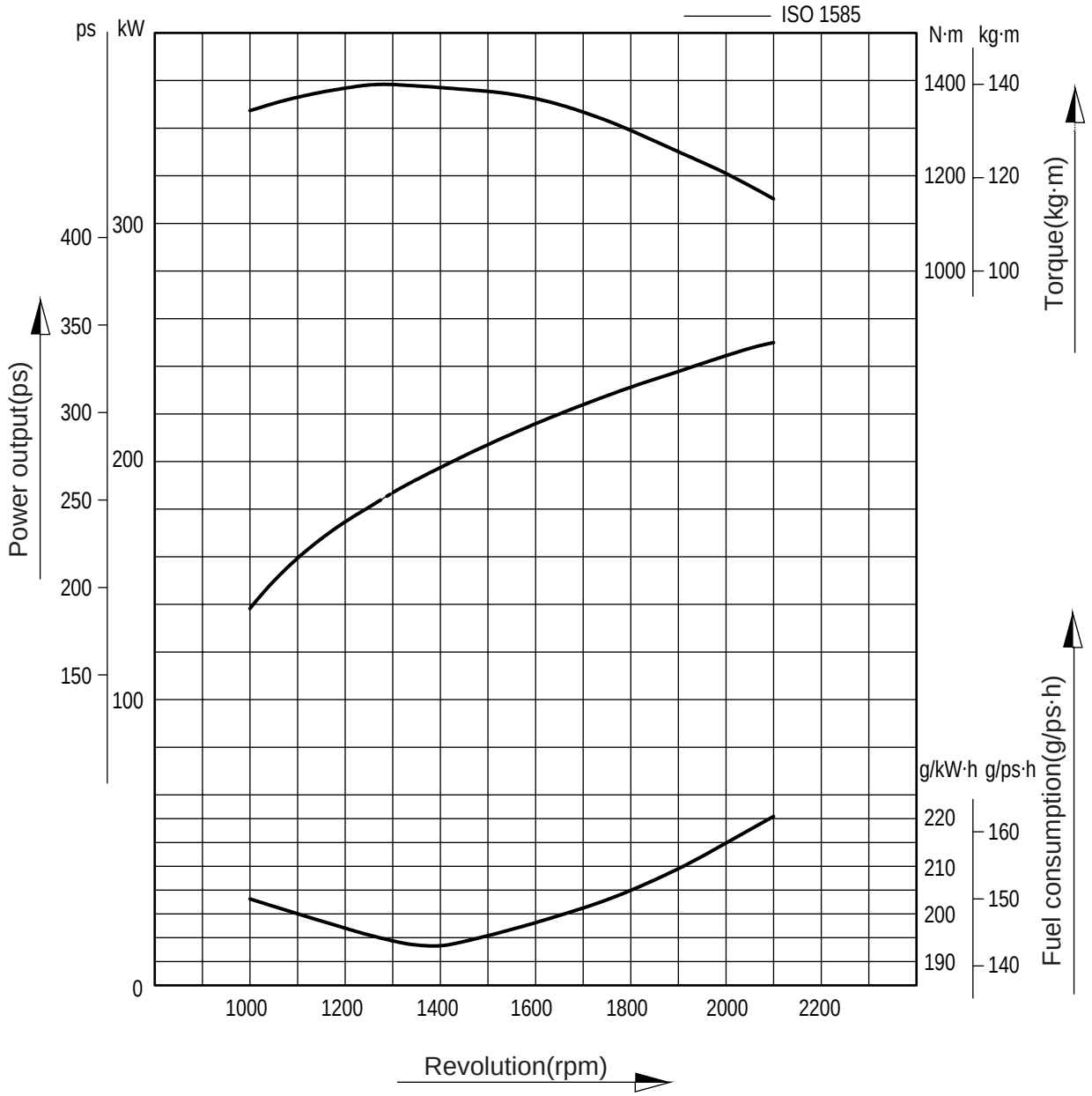

Performance	ISO 1585(SAE J1349)
Output(Max.)	340 ps/2,100 rpm
Torque(Max.)	140 kg·m/1,260 rpm
Fuel consumption ratio(min.)	143 g/ps·h

EA2M1002

https://truckmanualshub.com/

1.5. Exterior view of engine

1.5.1. DE12- for Bus

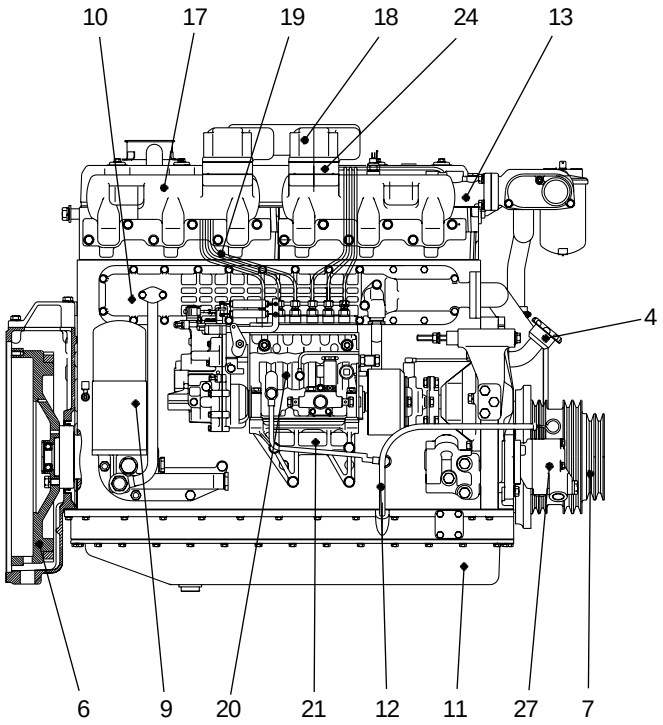

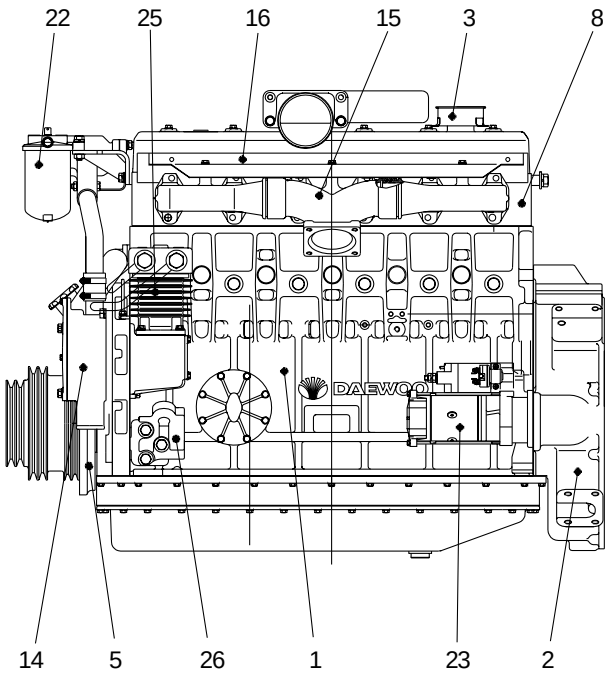

1. Cylinder block
2. Flywheel housing
3. Breather
4. Oil filler pipe
5. Vibration damper
6. Flywheel
7. V-pulley
8. Cylinder head
9. Oil filter
10. Oil cooler
11. Oil pan
12. Oil dipstick
13. Cooling water pipe
14. Water pump
15. Exhaust manifold
16. Heat shield
17. Intake manifold
18. Intake stake
19. Injection pipe
20. Injection pump
21. Injection pump bracket
22. Fuel filter
23. Starter
24. Air heater
25. Air compressor
26. Mounting bracket
27. Power steering pump

EQM1010I

https://truckmanualshub.com/

1.5.2. DE12- for Truck

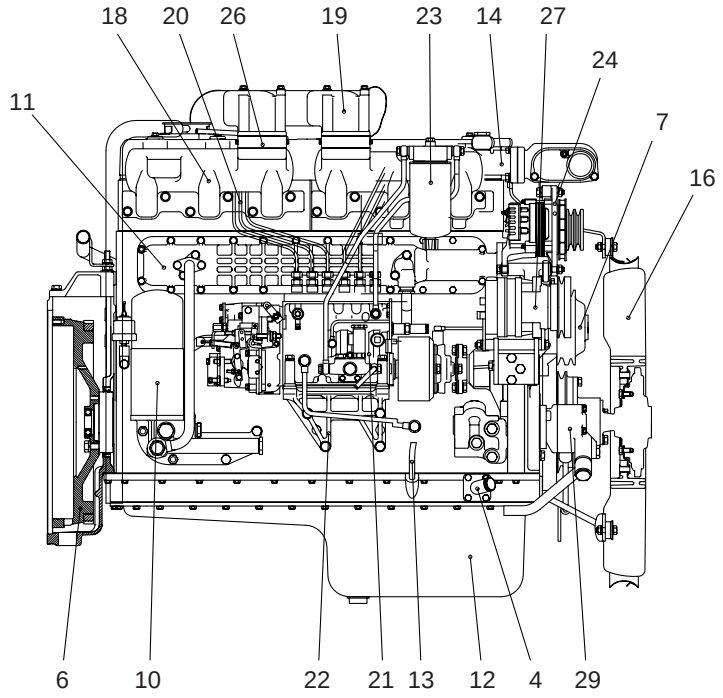

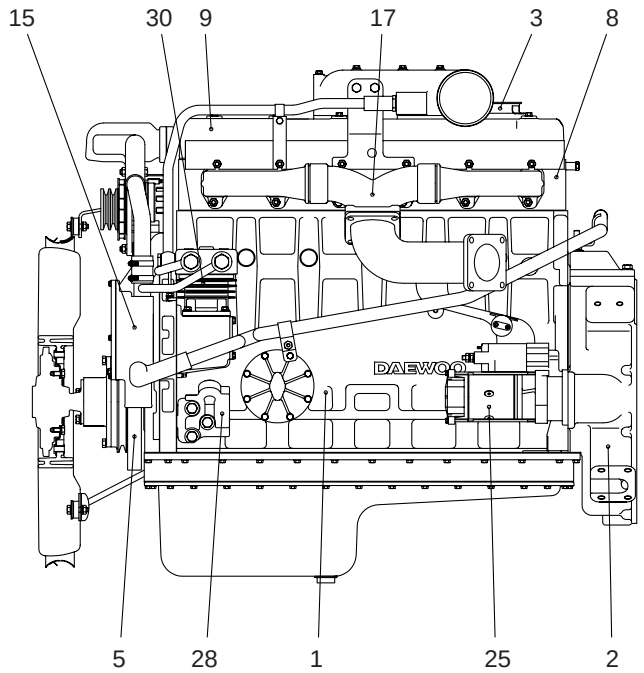

EA2M1003

1. Cylinder block
2. Flywheel housing
3. Breather
4. Oil filler pipe
5. Vibration damper
6. Flywheel
7. Idle pulley
8. Cylinder head
9. Cylinder head cover
10. Oil filter
11. Oil cooler
12. Oil pan
13. Oil dipstick
14. Cooling water pipe
15. Water pump
16. Cooling fan
17. Exhaust manifold
18. Intake manifold
19. Intake stake
20. Injection pipe
21. Injection pump
22. Injection pump bracket
23. Fuel filter
24. Alternator
25. Starter
26. Air heater
27. Air-conditioning compressor
28. Engine mounting bracket
29. Power steering pump
30. Air compressor

https://truckmanualshub.com/

1.5.3. DE12T- for Bus

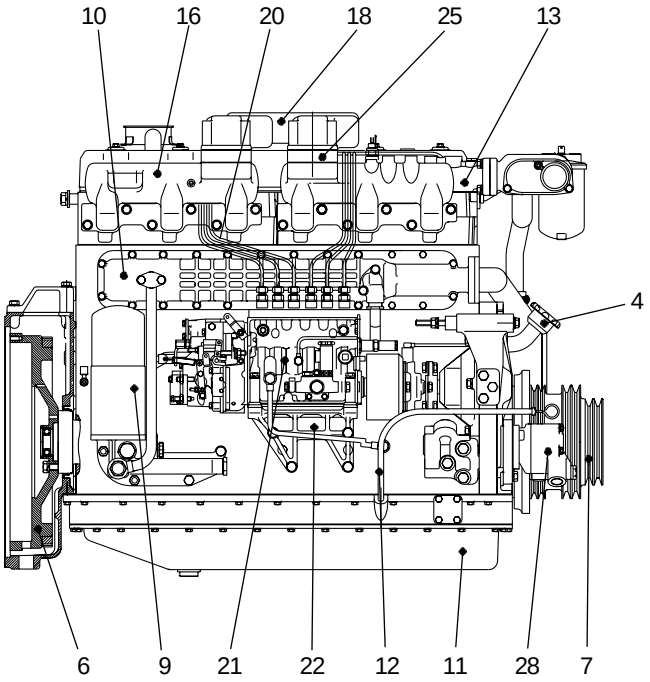

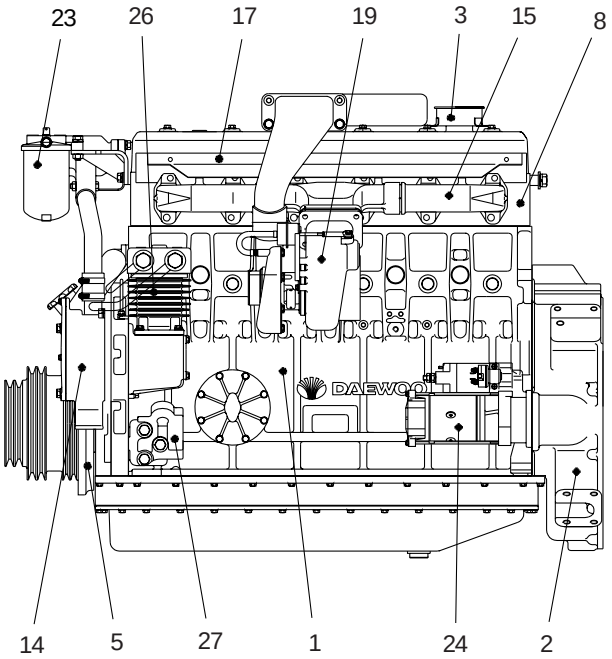

1. Cylinder block
2. Flywheel housing
3. Breather
4. Oil filler pipe
5. Vibration damper
6. Flywheel
7. V-pulley
8. Cylinder head
9. Oil filter
10. Oil cooler
11. Oil pan
12. Oil dipstick
13. Cooling water pipe
14. Water pump
15. Exhaust manifold
16. Intake manifold
17. Heat shield
18. Intake stake
19. Turbocharger
20. Injection pipe
21. Injection pump
22. Injection pump bracket
23. Fuel filter
24. Starter
25. Air heater
26. Air compressor
27. Mounting bracket
28. Power steering pump

EQM1011I

1.5.4. DE12TI(340 ps)- for Bus

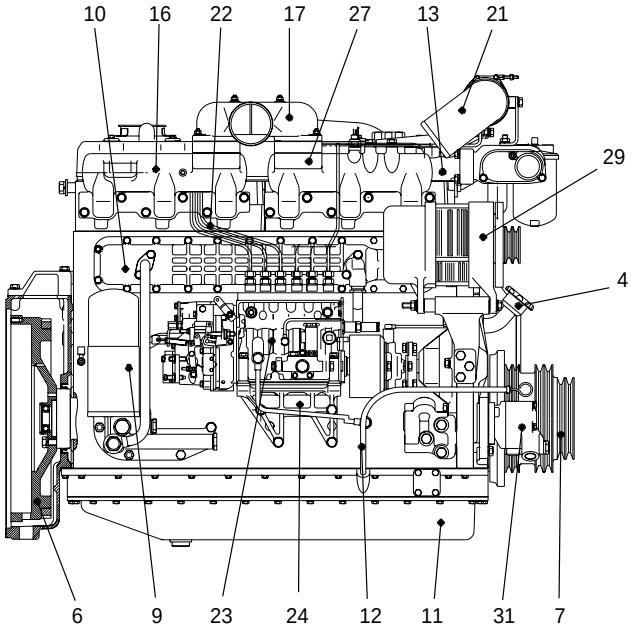

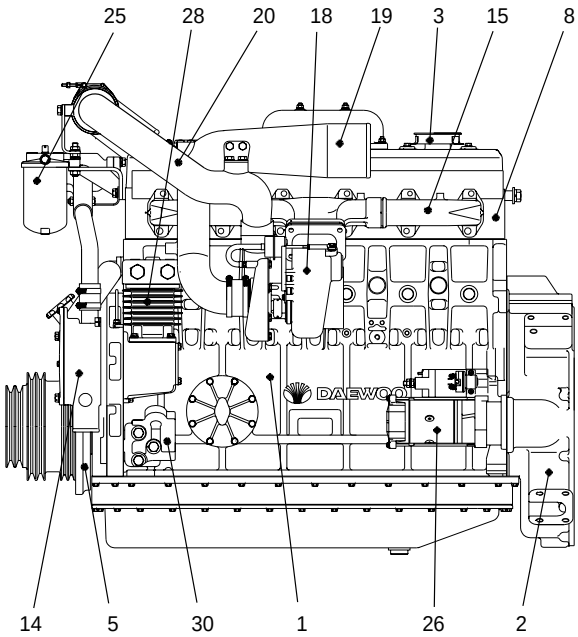

1. Cylinder block
2. Flywheel housing
3. Breather
4. Oil filler pipe
5. Vibration damper
6. Flywheel
7. V-pulley
8. Cylinder head
9. Oil filter
10. Oil cooler
11. Oil pan
12. Oil dipstick
13. Cooling water pipe
14. Water pump
15. Exhaust manifold
16. Intake manifold
17. Intake stake
18. Turbocharger
19. Air pipe, T/C-A/P
20. Air pipe, A/P-I/C
21. Air pipe, A/P-I/C
22. Injection pipe
23. Injection pump
24. Injection pump bracket
25. Fuel filter
26. Starter
27. Air heater
28. Air compressor
29. Alternator
30. Mounting bracket
28. Power steering pump

EQM1012I

https://truckmanualshub.com/

1.5.5. DE12TI(280 ps : ’98 type)- for Bus

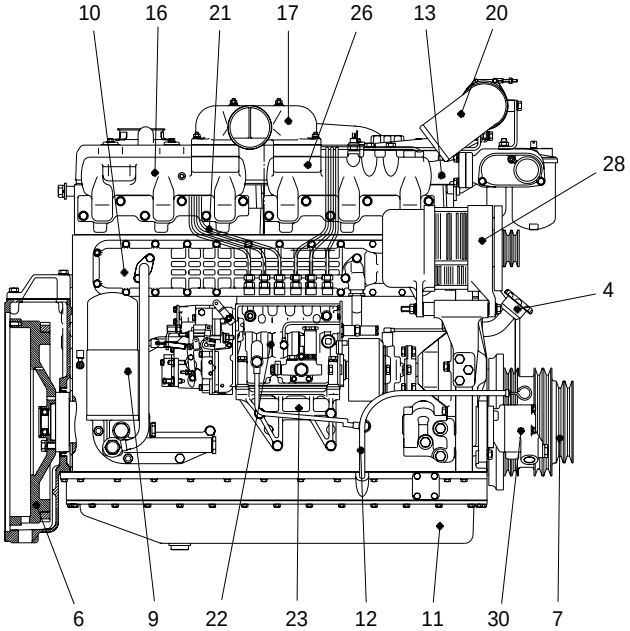

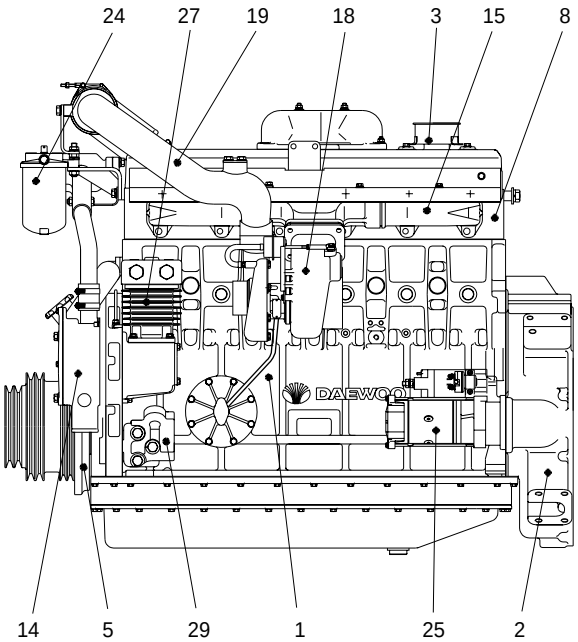

1. Cylinder block
2. Flywheel housing
3. Breather
4. Oil filler pipe
5. Vibration damper
6. Flywheel
7. V-pulley
8. Cylinder head
9. Oil filter
10. Oil cooler
11. Oil pan
12. Oil dipstick
13. Cooling water pipe
14. Water pump
15. Exhaust manifold
16. Intake manifold
17. Intake stake
18. Turbocharger
19. Air pipe, T/C-A/P
20. Air pipe, A/P-I/C
21. Injection pipe
22. Injection pump
23. Injection pump bracket
24. Fuel filter
25. Starter
26. Air heater
27. Air compressor
28. Alternator
29. Mounting bracket
30. Power steering pump

EQM1013I

1.5.6. DE12TI(310 ps : ’98 type)- for Bus

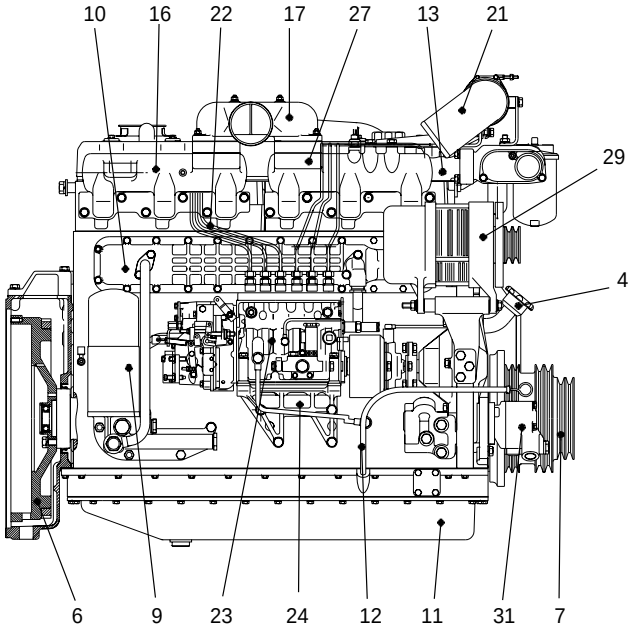

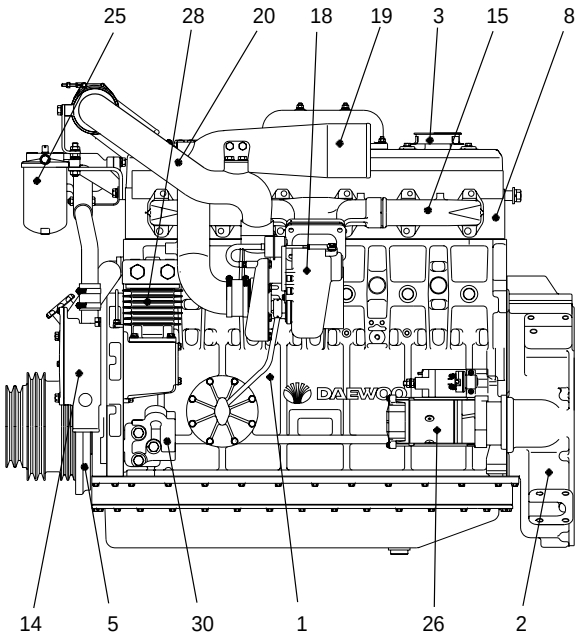

1. Cylinder block
2. Flywheel housing
3. Breather
4. Oil filler pipe
5. Vibration damper
6. Flywheel
7. V-pulley
8. Cylinder head
9. Oil filter
10. Oil cooler
11. Oil pan
12. Oil dipstick
13. Cooling water pipe
14. Water pump
15. Exhaust manifold
16. Intake manifold
17. Intake stake
18. Turbocharger
19. Air pipe, T/C-A/P
20. Air pipe, A/P-I/C
21. Air pipe, A/P-I/C
22. Injection pipe
23. Injection pump
24. Injection pump bracket
25. Fuel filter
26. Starter
27. Air heater
28. Air compressor
29. Alternator
30. Mounting bracket
31. Power steering pump

EQM1014I

https://truckmanualshub.com/

1.5.7. DE12TI - for Truck

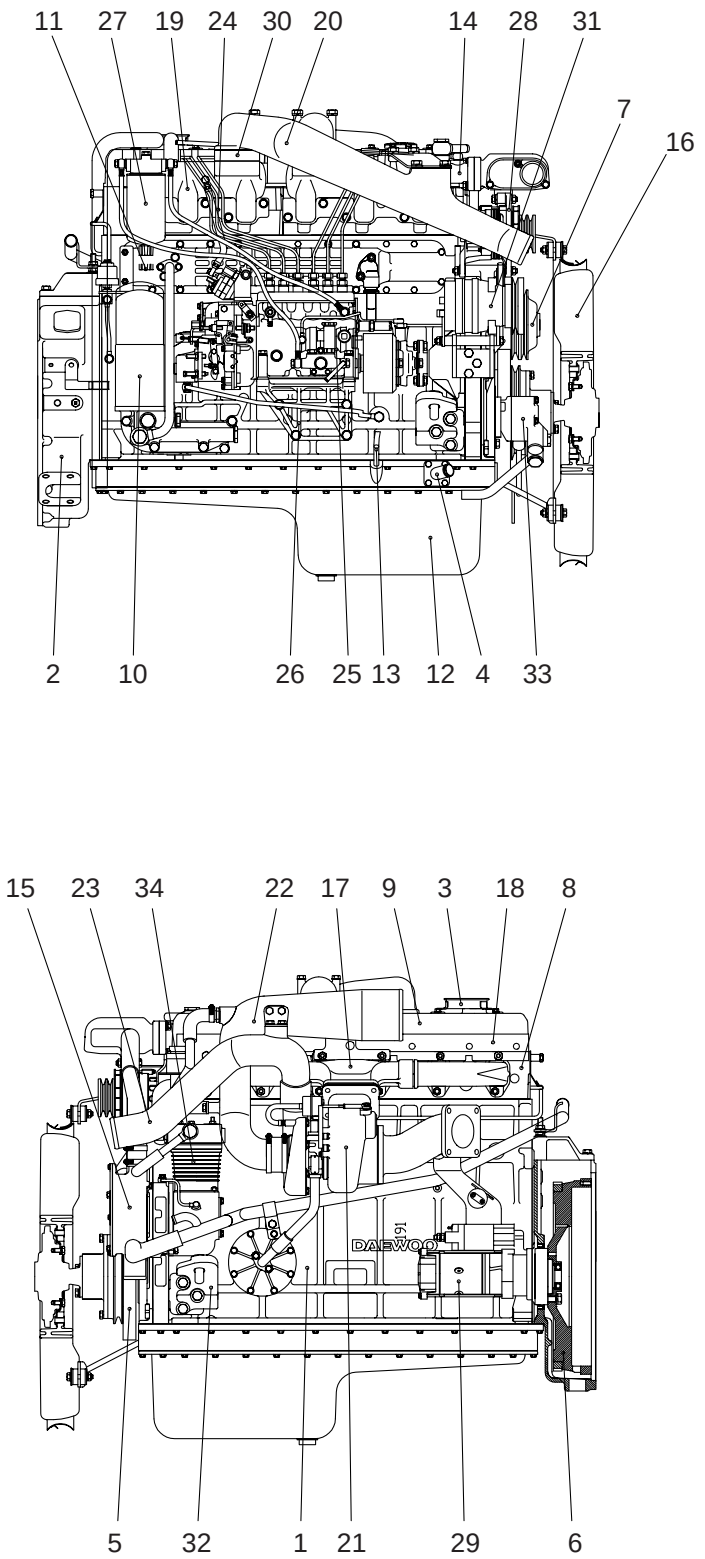

1. Cylinder block
2. Flywheel housing
3. Breather
4. Oil filler pipe
5. Vibration damper
6. Flywheel
7. Idle pulley
8. Cylinder head
9. Cylinder head cover
10. Oil filter
11. Oil cooler
12. Oil pan
13. Oil dipstick
14. Cooling water pipe
15. Water pump
16. Cooling fan
17. Exhaust manifold
18. Heat screen
19. Intake manifold
20. Intake stake
21. Turbocharger
22. Air pipe, A/C-T/C
23. Air pipe, T/C-I/C
24. Injection pipe
25. Injection pump
26. Injection pump bracket
27. Fuel filter
28. Alternator
29. Starter
30. Air heater
31. Air-conditioning compressor
32. Engine mounting bracket
33. Power steering pump
34. Air compressor

https://truckmanualshub.com/

1.5.8. DE12TIS - for Bus

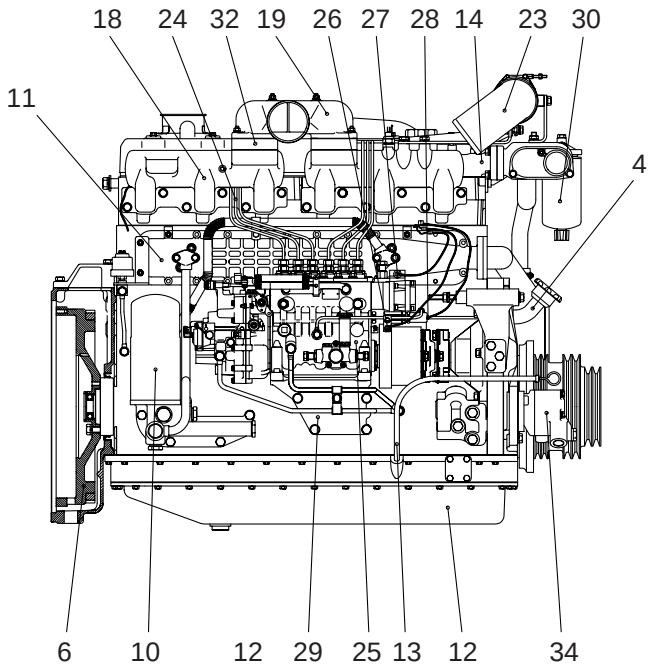

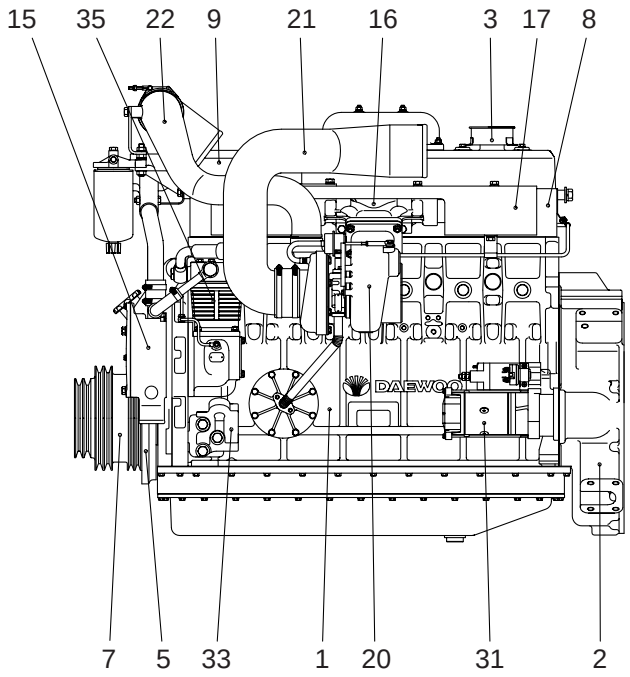

EA2M1005

1. Cylinder block
2. Flywheel housing
3. Breather
4. Oil filler pipe
5. Vibration damper
6. Flywheel
7. Crank shaft pulley
8. Cylinder head
9. Cylinder head cover
10. Oil filter
11. Oil cooler
12. Oil pan
13. Oil dipstick
14. Cooling water pipe
15. Water pump
16. Exhaust manifold
17. Heat screen
18. Intake manifold
19. Intake stake
20. Turbocharger
21. Air pipe, A/C-T/C
22. Air pipe, T/C-A/P
23. Air pipe, A/P-I/C
24. Injection pipe
25. Injection pump
26. Pick-up sensor
27. Prestroke actuator sensor
28. Rack sensor
29. Injection pump bracket
30. Fuel filter
31. Starter
32. Air heater
33. Engine mounting bracket
34. Power steering pump
35. Air compressor

https://truckmanualshub.com/

1.5.9. DE12TIS - for Truck

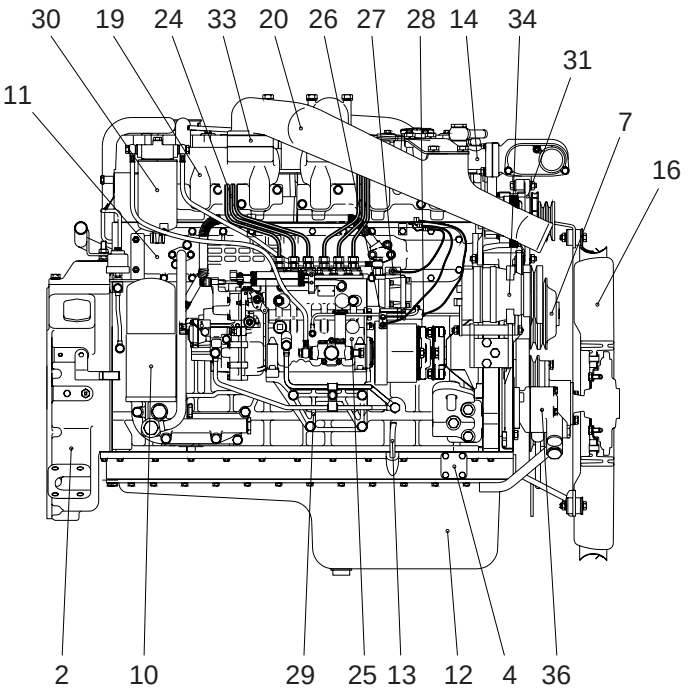

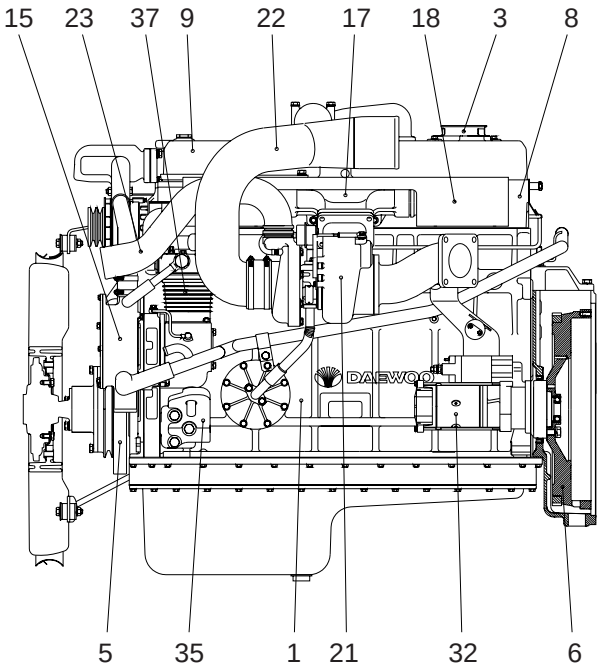

EA2M1006

1. Cylinder block
2. Flywheel housing
3. Breather
4. Oil filler pipe
5. Vibration damper
6. Flywheel
7. Idle pulley
8. Cylinder head
9. Cylinder head cover
10. Oil filter
11. Oil cooler
12. Oil pan
13. Oil dipstick
14. Cooling water pipe
15. Water pump
16. Cooling fan
17. Exhaust manifold
18. Heat screen
19. Intake manifold
20. Intake stake
21. Turbocharger
22. Air pipe, A/C-T/C
23. Air pipe, T/C-I/C
24. Injection pipe
25. Injection pump
26. Pick-up sensor
27. Prestroke actuator sensor
28. Rack sensor
29. Injection pump bracket
30. Fuel filter
31. Alternator
32. Starter
33. Air heater
34. Air-conditioning compressor
35. Engine mounting bracket
36. Power steering pump
37. Air compressor

https://truckmanualshub.com/

2. Major maintenance

2.1. Preventive maintenance

2.1.1. Cooling water

1) Check the coolant level of the radiator by removing the radiator filler cap, and add coolant if necessary.
2) Check the pressure valve opening pressure using a radiator cap tester. Replace the radiator filler cap assembly if the measured value does not reach the specified limit.
3) When injecting antifreeze solution, first drain out the old coolant from the cylinder block and radiator, and then clean them with cleaning solution.
4) Be sure to mix soft water with antifreeze solution .
5) A proportion of antifreeze is represented as the ratio of antifreeze in volume, and antifreeze must be added according to each ambient temperature as described below:

Antifreeze solution(%)	Freezing point(℃)
20	-10
27	-15
33	-20
40	-25
44	-30
50	-40

⚠ CAUTION

If you add antifreeze in excess of 50% in volume, the engine may be overheated. Avoid this.
As the individual freezing points corresponding to the above proportions of antifreeze are subject to change slightly according to the kind of antifreeze, you must follow the specifications provided by the antifreeze manufacturer.

6) When the ratio of antifreeze in the mixture decreases new coolant should be added to make up for the loss in old coolant resulting from engine operation, check the mix ratio with every replenishment of coolant, and top up as necessary.
7) To prevent corrosion or air bubbles in the coolant path, be sure to add a specific additive, i.e. corrosion inhibitor, to the coolant.
   - Type : DAC65L
   - Mix ratio : 1.5ℓ of inhibitor to 50ℓ of coolant
     (Namely, add corrosion inhibitor amounting to 3% of water capacity.)
8) Add antifreeze of at least 5% in volume to prevent possible engine corrosion in hot weather.

2.1.2. Fan belt

1) Use a fan belt of specified dimensions, and replace if damaged, frayed, or deteriorated.

2) Check the fan belt for belt tension. If belt tension is lower than the specified limit, adjust the tension by relocating the alternator and air conditioner. (Specified deflection: 10~15mm when pressed down with thumb)

2.1.3. Engine oil

1) Check oil level using the oil dipstick and replenish if necessary.

2) Check the oil level with the vehicle stationary on a level ground, engine cooled. The oil level must be between MAX and MIN lines on the stick.

3) Engine oil should be changed at the specified intervals. Oil in the oil filter also should be changed simultaneously.
(First oil change : 1,000km running)

• Suggested engines oils

Engine Model	SAE NO.	API NO
DE12, DE12T,DE12TI	15W40	CD grade or above
DE12TIS	15W40	CG grade

2.1.4. Oil filter

1) Check for oil pressure and oil leaks, and repair or replace the oil filter if necessary.
2) Change the oil filter element simultaneously at every replacement of engine oil.

2.1.5. Fuel filter

1) Drain water in cartridge with losen the cock under filter from time to time.
2) The fuel filter should be replaced at every 20,000km

2.1.6. Air cleaner

1) Replace any deformed or broken element or cracked air cleaner.
2) Clean or replace the element at regular intervals

https://truckmanualshub.com/

2.1.7. Valve clearance

1) Turn the crank shaft so that the piston in No. 1 cylinder reaches the TDC on compression stroke, then adjust the valve clearance.
2) After releasing the lock nut for the rocker arm adjusting screw, insert a feeler gauge of specified thickness into the clearance between the rocker arm and valve stem, and adjust the clearance with the adjusting screw. Fully tighten the lock nut when a correct adjustment is obtained.
3) Carry out the same adjusting operation according to the firing order(1-5-3-6-2-4)
   (Valve clearance(with engine cooled): 0.30mm for both intake and exhaust)

2.1.8. Cylinder compression pressure

1) Stop the engine after warming up, then remove the nozzle holder assembly.
2) Install a special tool(gauge adapter) in nozzle holder hole and mount the compression gauge in position of the nozzle holder.

Standard	28 kg/cm^2 over
Limit	24 kg/cm^2 or less
Difference between each cylinder	±10% or less

3) Cut off fuel circulation, rotate the starter, then measure compression pressure in each cylinder.

※ Testing conditions: Coolant temperature 20℃, Engine speed, 200 rpm (10 turns)

2.1.9. Injection nozzle

1) Assemble a nozzle to a nozzle tester.
2) Check injection pressure, and adjust the nozzle using the adjusting shim if the pressure does not meet the specified limit.
3) Check nozzle spray patterns and replace if damaged.

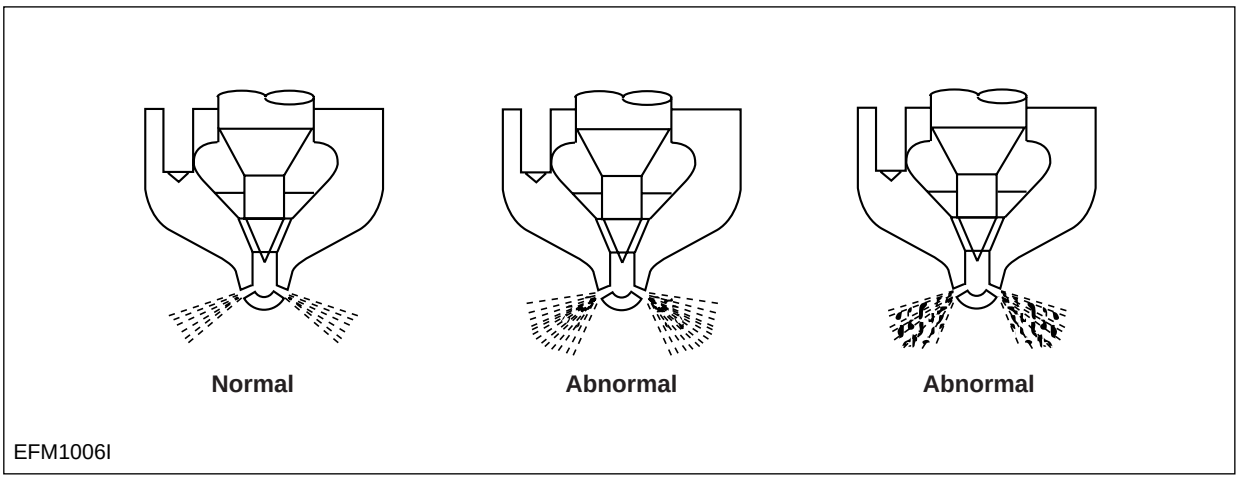

<Figure 2-1> Nozzle spray patterns

https://truckmanualshub.com/

2.1.10. Fuel injection pump

1) Check the fuel injection pump housing for cracks or breaks, and replace if damaged.
2) Check and see if the lead seal for idling control and speed control levers have not been removed.

2.1.11. Battery

1) Check the battery for damage or leaking of battery fluid(electrolyte) from cracks on the battery. Replace the battery if damaged.
2) Check battery fluid level and add distilled water if necessary.
3) Measure the specific gravity of the electrolyte in the battery. Recharge the battery if the hydrometer readings are lower than the specified limit(1.12~1.28)

2.2. Diagnostics and trouble shooting for the engine

2.2.1. Diagnostics

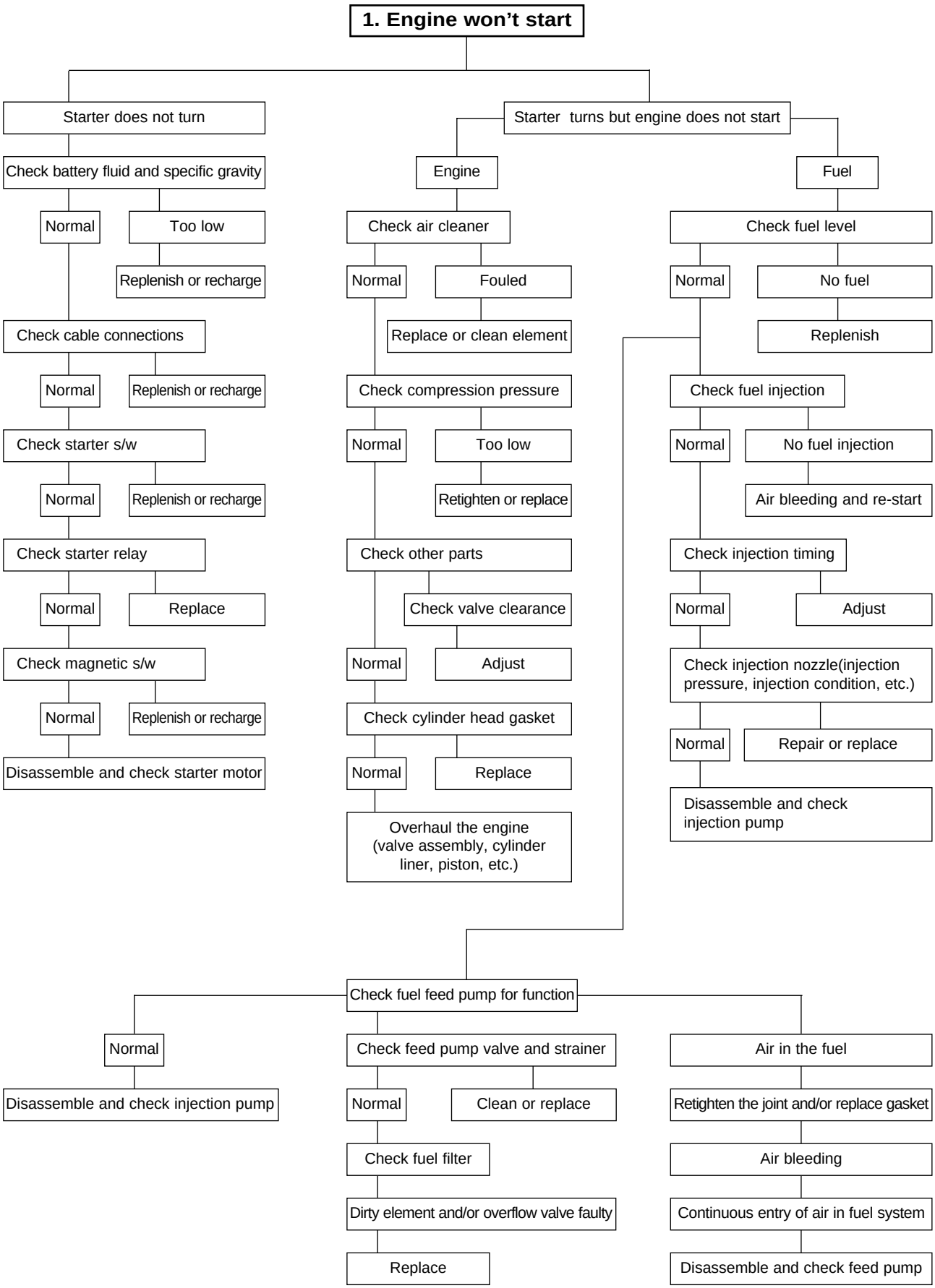

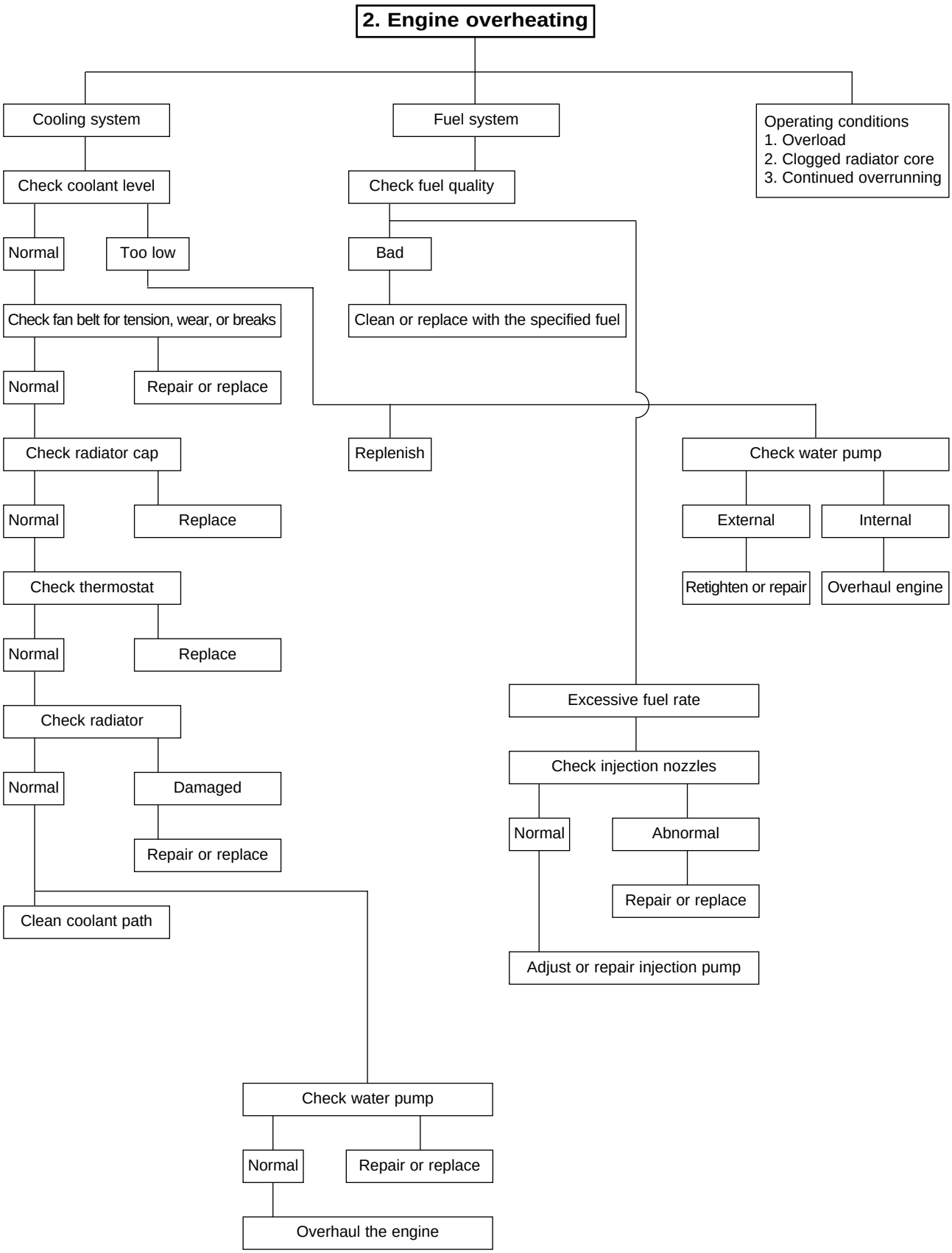
2. Engine overheating
Cooling system
Fuel system
Operating conditions
1. Overload
2. Clogged radiator core
3. Continued overrunning
Check coolant level
Check fuel quality
Normal
Too low
Bad
Check fan belt for tension, wear, or breaks
Clean or replace with the specified fuel
Normal
Repair or replace
Check radiator cap
Replenish
Check water pump
Normal
Replace
External
Internal
Check thermostat
Retighten or repair
Overhaul engine
Normal
Replace
Excessive fuel rate
Check radiator
Check injection nozzles
Normal
Damaged
Normal
Abnormal
Repair or replace
Repair or replace
Clean coolant path
Adjust or repair injection pump
Check water pump
Normal
Repair or replace
Overhaul the engine

https://truckmanualshub.com/

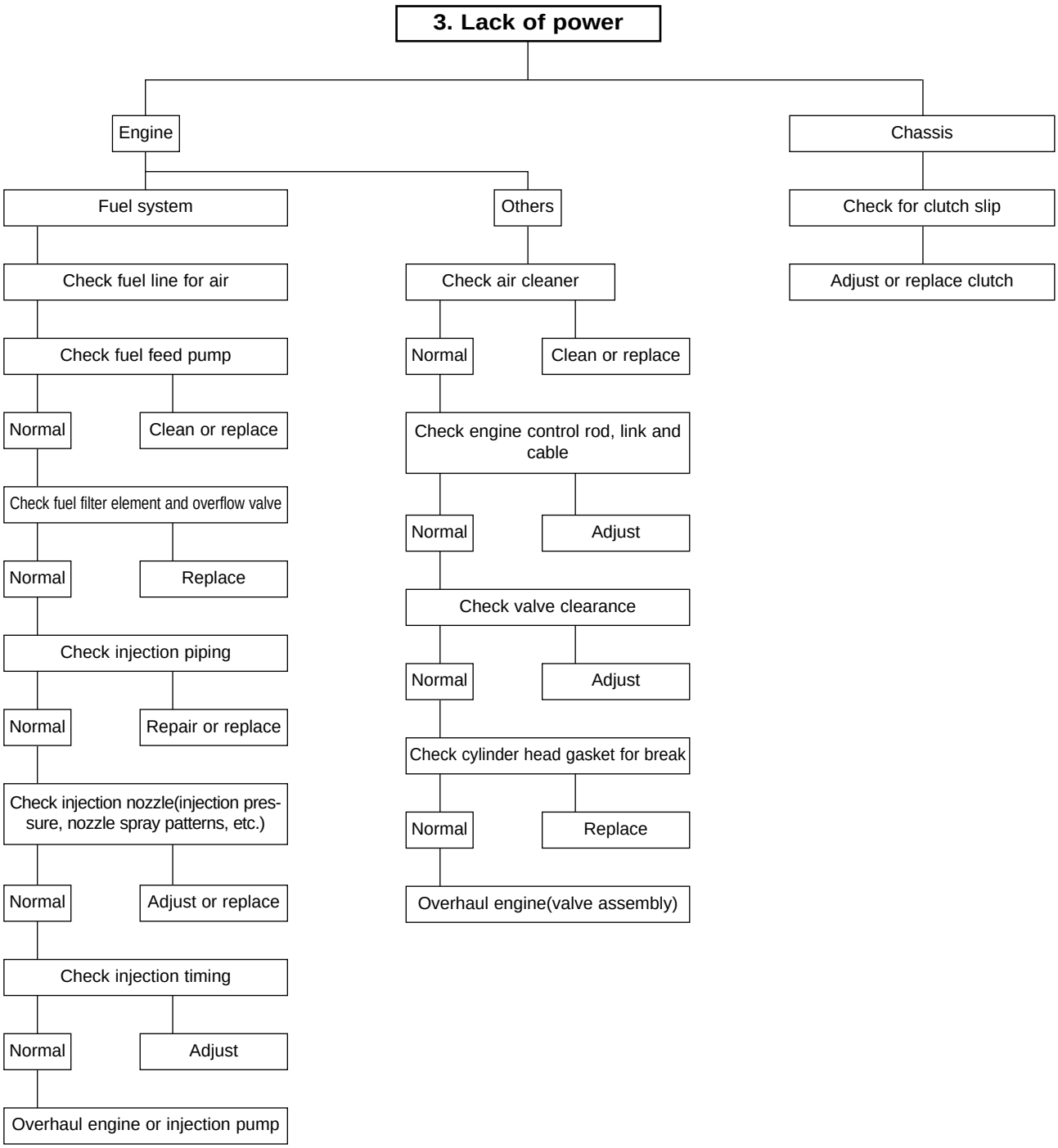

https://truckmanualshub.com/

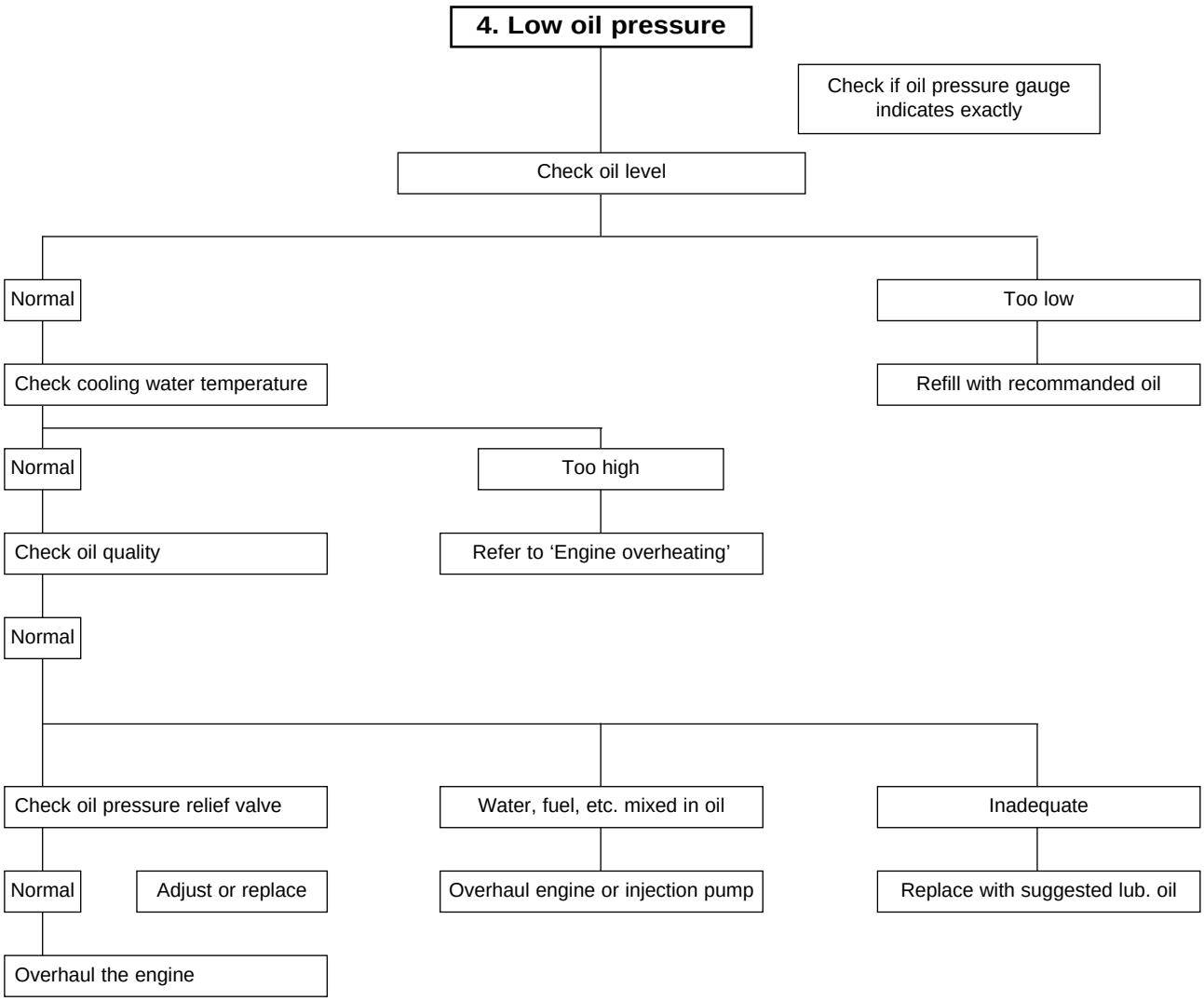

5. High fuel consumption

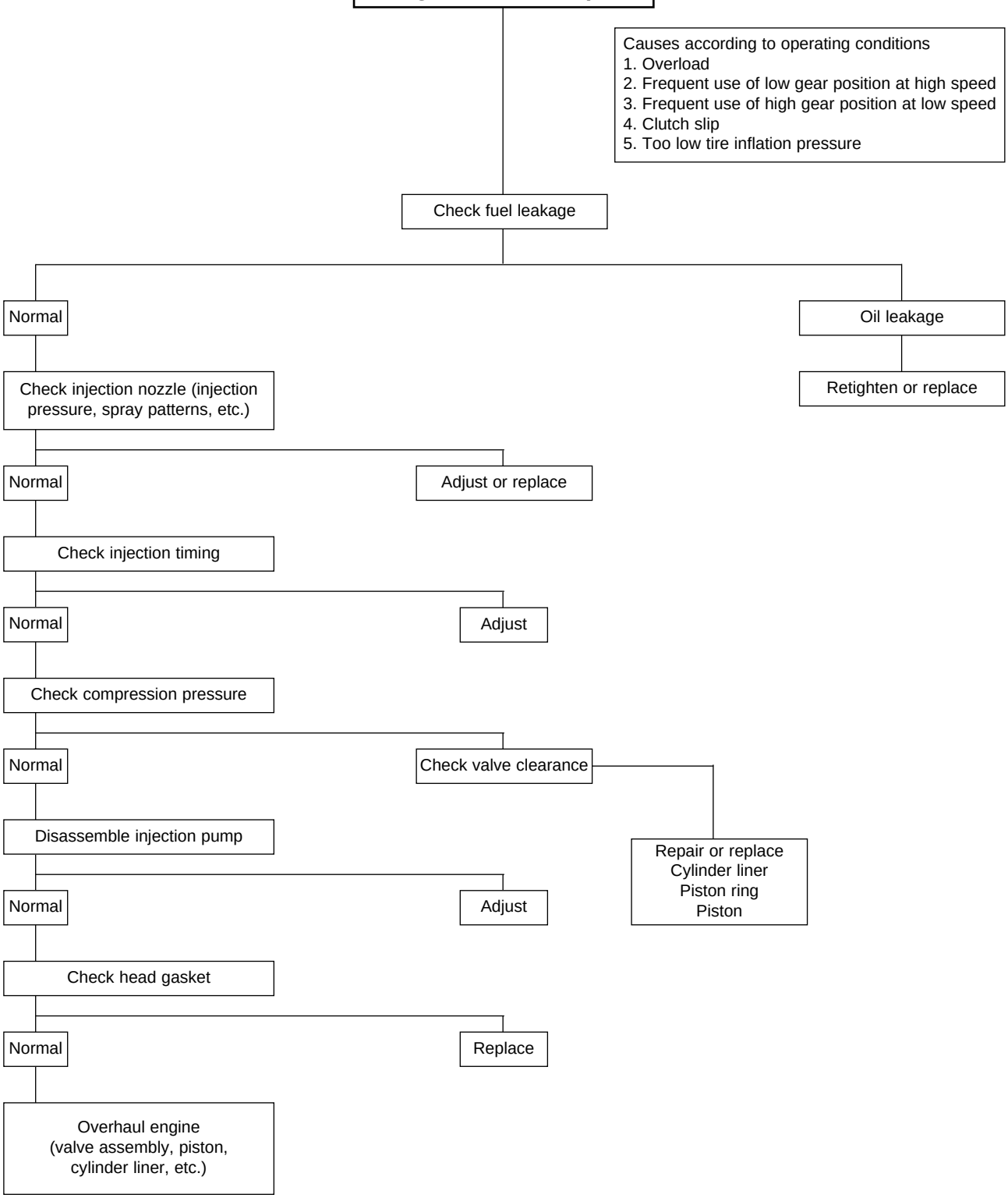

https://truckmanualshub.com/

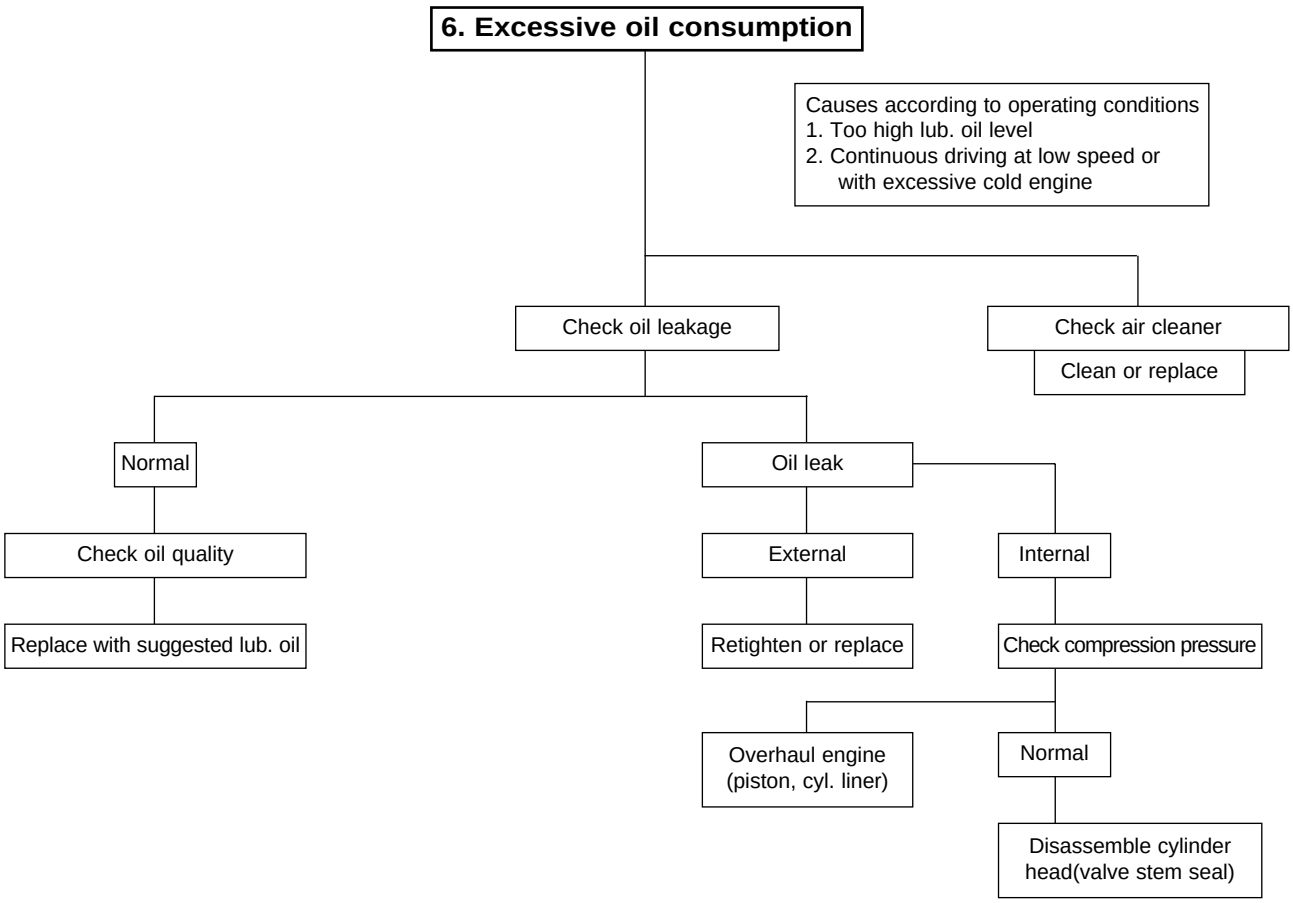

https://truckmanualshub.com/

7. Engine knocks(excessive)

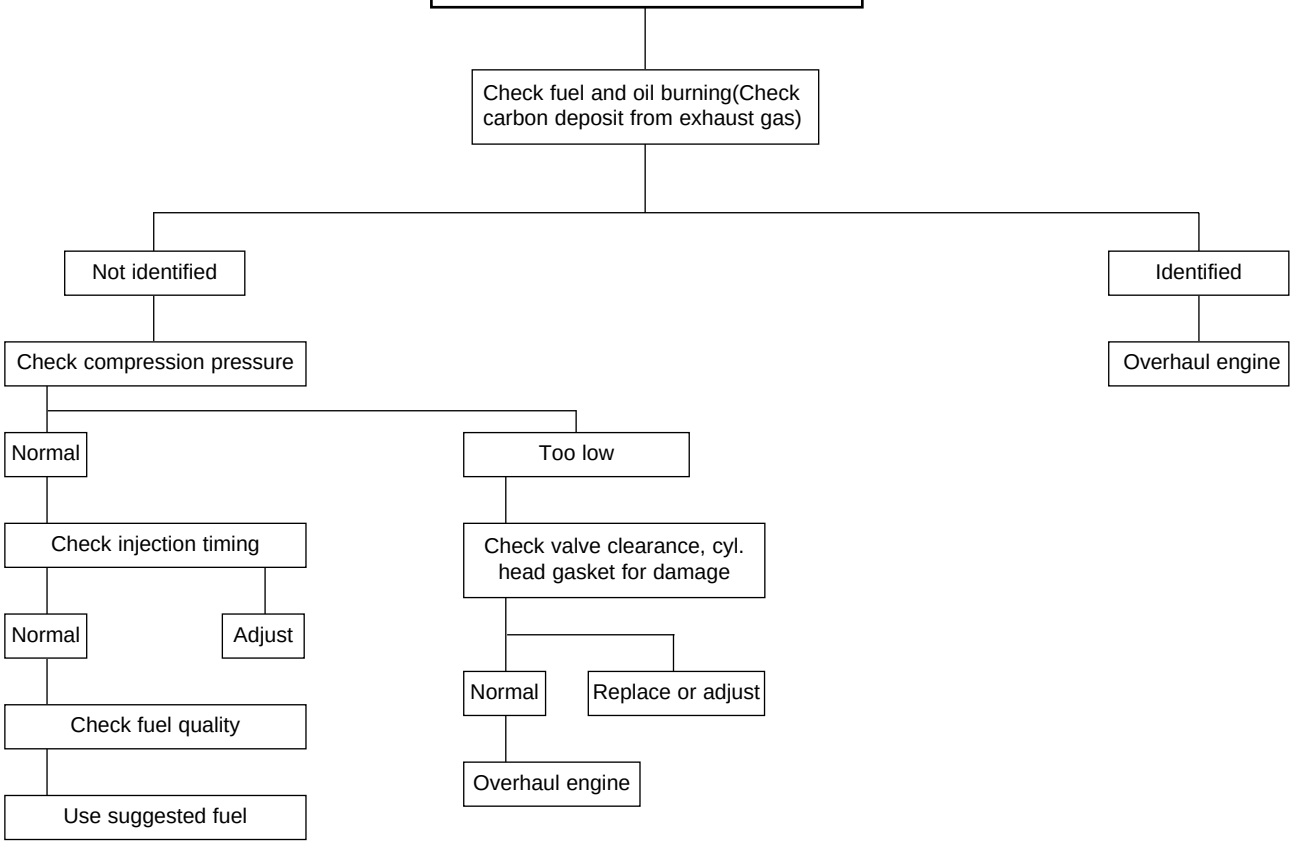

https://truckmanualshub.com/

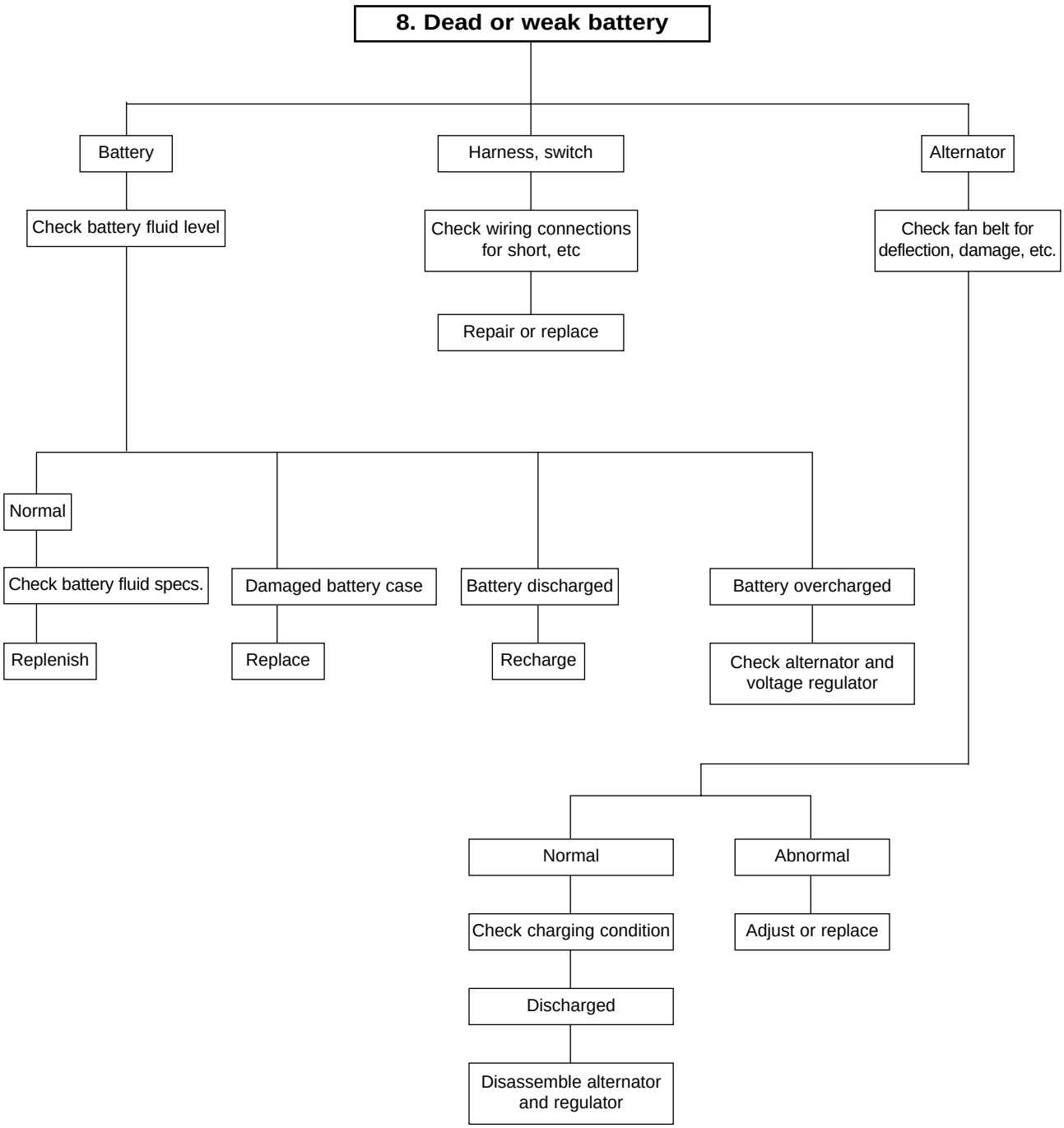

2.2.2. Trouble shooting

Complaint	Cause	Correction
1) Difficulty in engine starting		
(1) Trouble in starter	(See <2.2.1>)	
(2) Trouble in fuel system	(See <Section 4.3 Fuel system>)	Check valve and valve seat, then repair or replace
(3) Lack of compression pressure	① Valves holding open, skewed valve stem	
	② Valve springs damaged	Replace valve springs
	③ Leaky cylinder head gasket	Replace gasket
	④ Worn pistons, piston ring, or liner	Replace
2) Rough engine idling		
	① Wrong injection timing	Adjust
	② Air in injection pump	Air bleeding
3) Lack of engine power		
(1) Engine continues to lack power	① Valve clearance incorrect	Adjust
	② Valve poorly seated	Repair
	③ Leaky cylinder head gasket	Replace gasket
	④ Piston rings worn, sticking, or damaged	Replace piston rings
	⑤ Injection timing incorrect	Adjust
	⑥ Volume of fuel delivery insufficient	Adjust injection pump
	⑦ Nozzle injection pressure incorrect or nozzles seized	Adjust or replace nozzles
	⑧ Feed pump faulty	Repair or replace
	⑨ Restrictions in fuel pipes	Repair
	⑩ Volume of intake air insufficient	Clean or replace air cleaner
(2) Engine lacks power on acceleration	① Compression pressure insufficient	Overhaul engine
	② Injection timing incorrect	Adjust
	③ Volume of fuel delivery insufficient	Adjust injection pump
	④ Injection pump timer faulty	Repair or replace
	⑤ Nozzle injection pressure or spray angle incorrect	Repair or replace
	⑥ Feed pump faulty	Repair or replace
	⑦ Volume of intake air insufficient	Clean or replace air cleaner
4) Engine overheating		
	① Lack of engine oil or poor oil	Replenish or replace
	② Lack of coolant	Replenish or replace
	③ Fan belts slipping, worn or damaged	Adjust or replace
	④ Water pump faulty	Repair or replace
	⑤ Thermostat inoperative	Replace
	⑥ Valve clearance incorrect	Adjust
	⑦ Back pressure in exhaust line	Clean or replace

Complaint	Cause	Correction
5) Engine noises	It is important to correctly locate the causes of noise since generally noises may originate from various engine components such as rotating parts, sliding parts, etc.	
(1) Crankshaft	① Oil clearance excessive due to worn bearings or crankshaft ② Crankshaft worn out-of-round ③ Restrictions in oil ports and resultant lack of oil supply ④ Bearings seized up	Replace bearings and grind crankshaft Grind or replace crankshaft Clean oil path Replace bearings and grind crankshaft
(2) Conn. rod and conn. rod bearings	① Conn. rod bearings worn out-of-round ② Crank pin worn out-of-round ③ Conn. rod skewed ④ Bearings seized up ⑤ Restrictions in oil ports and resultant lack of oil supply	Replace bearings Grind crankshaft Repair or replace Replace bearings and grind crankshaft Clean oil path
(3) Pistons, piston pins, and piston rings	① Piston clearance excessive due to worn piston and piston rings ② Piston or piston pin worn ③ Piston seized up ④ Piston poorly seated ⑤ Piston rings damaged	Replace pistons and piston rings Replace pistons and piston rings Replace pistons Replace pistons Replace piston rings
(4) Others	① Crankshaft and/or thrust bearing worn ② Camshaft end play excessive ③ Idle gear end play excessive ④ Timing gear backlash excessive ⑤ Valve clearance excessive ⑥ Tappets and cams worn	Replace thrust bearings Replace thrust plate Replace thrust washers Adjust or replace Adjust valve clearance Replace tappets and camshaft
6) Excessive fuel consumption	① Injection timing incorrect ② Volume of fuel injection excessive ③ Tire under-inflated ④ Gear selection inadequate(frequent use of low gears)	Adjust Adjust injection pump Adjust Select gears correctly according to load

https://truckmanualshub.com/

Complaint	Cause	Correction
7) High oil consumption		
(1) Oil leaking into combustion chamber	① Clearance between cylinder liner and piston excessive	Replace
	② Piston rings and ring grooves worn excessively	Replace pistons and piston rings
	③ Piston rings broken, worn, or sticking	Replace piston rings
	④ Piston rings gaps set incorrectly	Correct
	⑤ Piston skirt portion broken, worn excessively	Replace pistons
	⑥ Oil return holes in oil control ring restricted	Replace piston rings
	⑦ Oil ring seated incorrectly	Replace piston rings
	⑧ Breather piping restricted	Clean or replace
(2) Oil leaking past cylinder head	① Valve stems and valve guide loose excessively	Replace as complete set
	② Valve stem seals worn	Replace seals
	③ Leaky cylinder head gasket	Replace gasket
(3) Oil leaks	① Applicable parts loosened	Replace or repair gasket
	② Applicable packings worn	Replace packings
	③ Oil seals worn	Replace oil seals

https://truckmanualshub.com/

3. Disassembly and reassembly of major components

3.1. Disassembly

3.1.1. General precautions

1) Maintenance operation should be carried out in a bright and clean place.
2) Before disassembly, provide parts racks for storage of various tools and disassembled parts.
3) Arrange the disassembled parts in the disassembly sequence and take care to prevent any damage to them.

3.1.2. Engine oil

1) Take out the oil dipstick.
2) Remove the drain plug from the oil pan and drain out the engine oil into a container.
3) Reassemble the drain plug with the oil pan after draining out the engine oil.

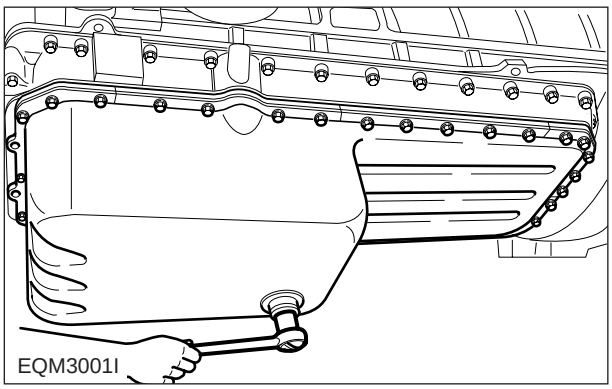
EQM3001I

3.1.3. Cooling water

1) Remove the drain plug from the cylinder block and drain out the cooling water into a container.

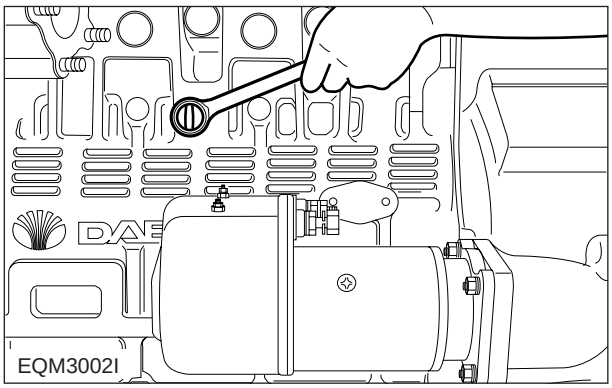
EQM3002I

3.1.4. Fan belt

1) Remove the fan guide and bracket.
2) Loosen the tension adjusting nuts installed on the alternator and air-conditioning compressor, and take off the fan belt.

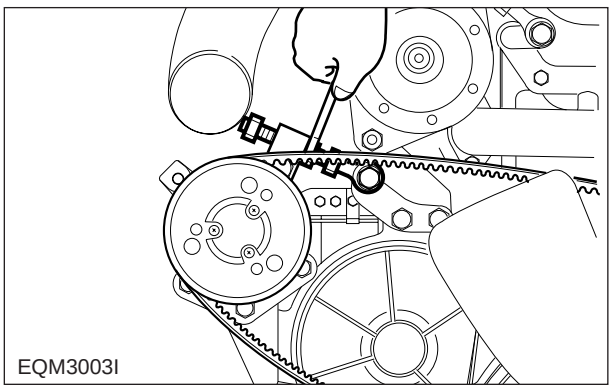
EQM3003I

3.1.5. Cooling fan

1) Remove the flange fixing bolts, then take off the flange and cooling fan.

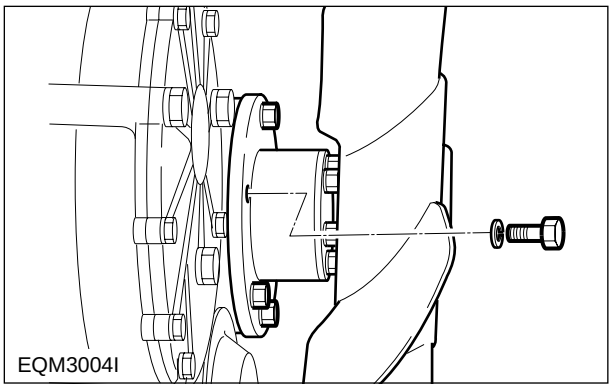

3.1.6. Oil level gauge guide tube

1) Loosen the flange nut installed on the ladder frame to remove the guide tube.

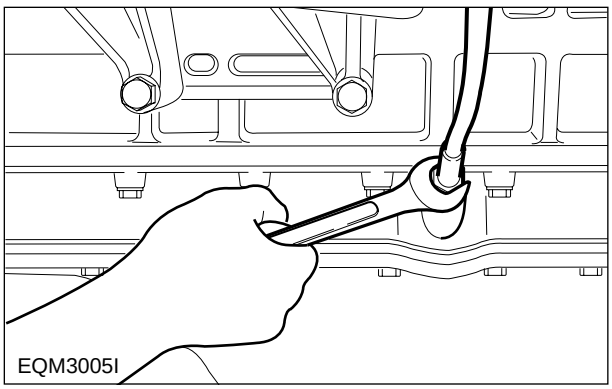

3.1.7. Alternator

1) Loosen the alternator fixing bolts to disassemble the alternator, then remove the tension adjusting bolt and bracket.

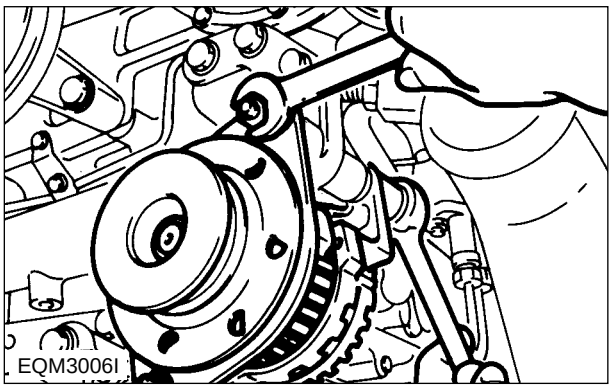

3.1.8. Air-conditioning compressor

1) Remove the compressor fixing bolts and disassemble the A/C compressor.
2) Disassemble the A/C compressor tension adjusting bolt and alternator fixing bracket.
3) Disassemble the A/C compressor fixing bracket.

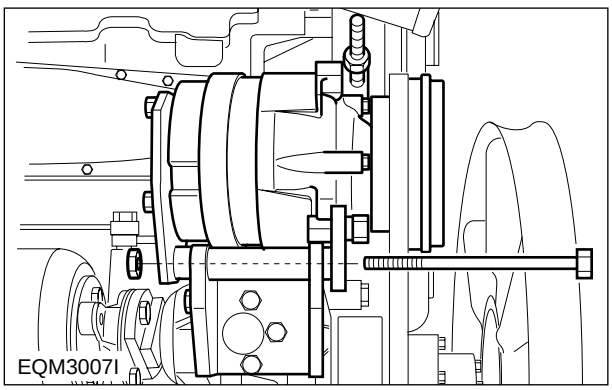

https://truckmanualshub.com/

3.1.9. Fuel filter

1) Remove fuel hoses connected to the fuel injection pump, take off the bracket fixing bolts, then disassemble the fuel filter.

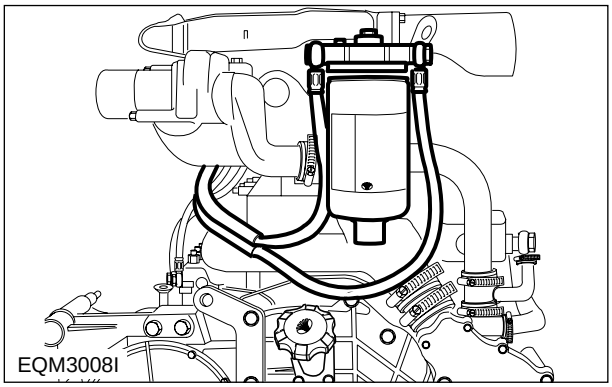

3.1.10. Breather

1) Loosen the clamp screw to remove the rubber hose.

3.1.11. Injection pipe

1) Unscrew the hollow screws to disassemble the fuel return pipe.
2) Remove the nuts installed on the fuel injection pump and nozzles, then disassemble the injection pipe.

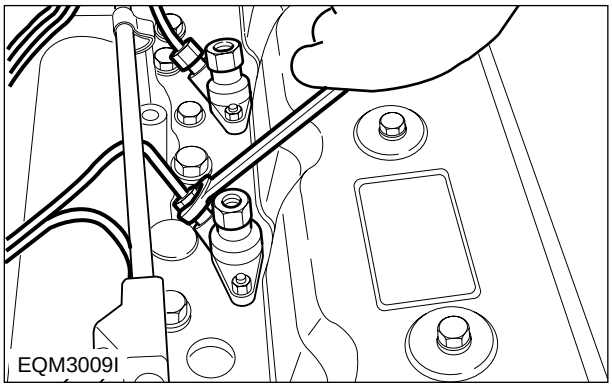

3.1.12. Air heater

1) Remove the electrical wiring for the air heater.
2) Disassemble the intake pipes by loosening the nuts installed thereon.
3) Disassemble the air heater and gasket.

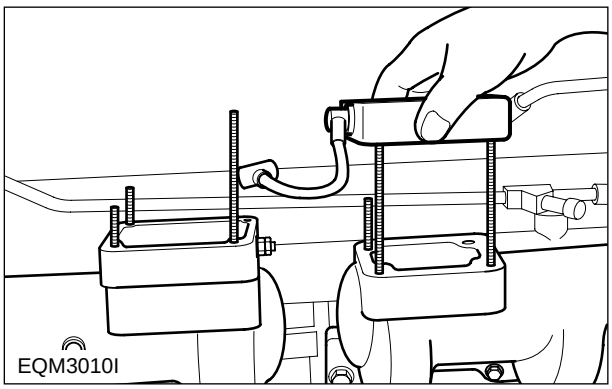

3.1.13. Intake manifold

1) Remove the air hose connected to the fuel injection pump.
2) Loosen the intake manifold fixing bolts, then disassemble the intake manifold.

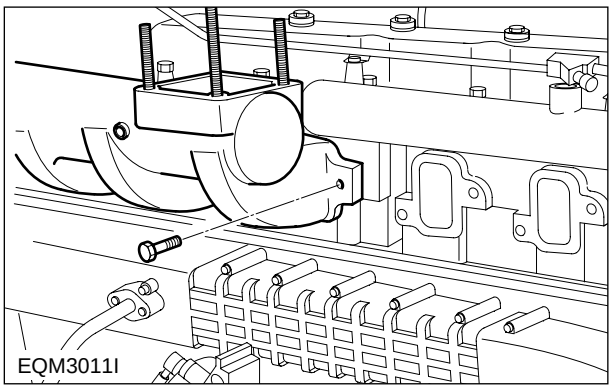

3.1.14. Turbocharger (for DE12T / DE12TI / DE12TIS only)

1) Release the clamp screw of the rubber hose connected to the intake manifold, and take off the intake pipes both simultaneously.
2) Unscrew the exhaust pipe bracket fixing bolts, release the nuts installed on the turbocharger, then disassemble the exhaust pipe.
3) Remove the turbocharger after removing the oil supply pipe and return pipe and releasing the fixing nuts.

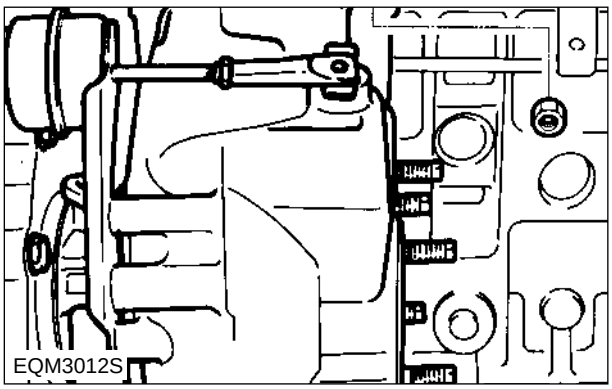
EQM3012S

3.1.15. Exhaust manifold

1) Release the exhaust manifold fixing bolts, disassemble the exhaust manifold, then remove the heat shield and gasket.

Note : Make sure to release the nuts one after another because the exhaust manifold will be removed if you unscrew the two nuts simultaneously.

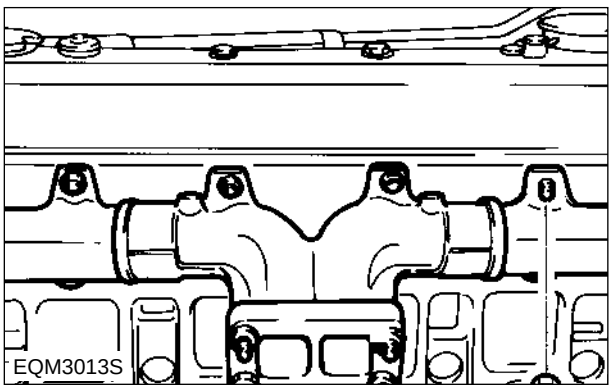
EQM3013S

3.1.16. Starter

1) Unscrew the starter fixing bolts, then disassemble the starter.

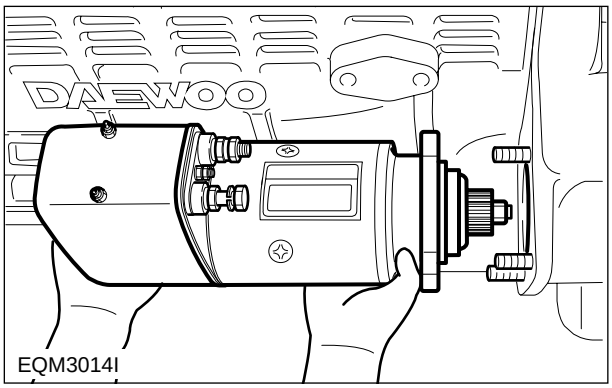

EQM3014I

3.1.17. Thermostat

1) Remove the by-pass pipe connected to the water pump, unscrew the thermostat fixing bolts, then dissemble the thermostat assembly.
2) Disassemble the thermostat housing and remove the thermostat.
3) Disassemble the water pipe by unscrewing the bolts and nuts installed on the cylinder head.

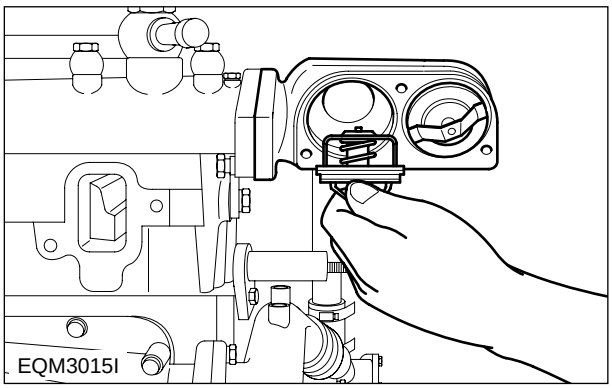
EQM3015I

https://truckmanualshub.com/

3.1.18. Fuel injection pump

1) Remove the oil supply pipe and return pipe connected to the fuel injection pump.
2) Unscrew the bolts connecting the coupling and drive shaft, loosen the injection pump attaching bolts, then disassemble the injection pump.

Note : Place the No.1 cylinder in the exact 'OT' position to disassemble the injection pump.

3) Release the pump fixing bracket bolts to disassemble the bracket from the cylinder block.

Note : Do not interchange the shims as they must be installed in their original positions at reassembly.

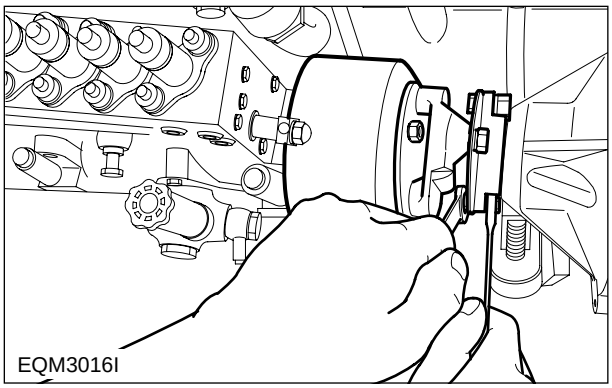
EQM3016I

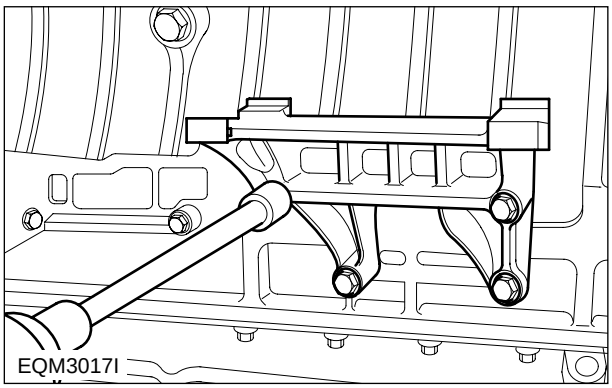
EQM3017I

3.1.19. Oil filter

1) Using a filter remover, remove the filter element.
2) Remove the pipe connected to the oil cooler.
3) Loosen the oil filter fixing bolts and disassemble the oil filter head from the cylinder block.

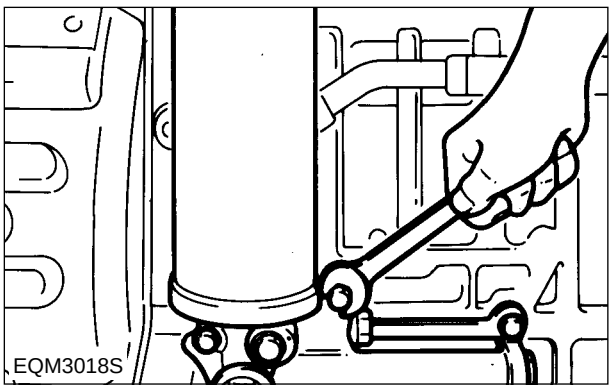
EQM3018S

3.1.20. Idle pulley

1) Remove the bolts and disassemble the idle pulley.

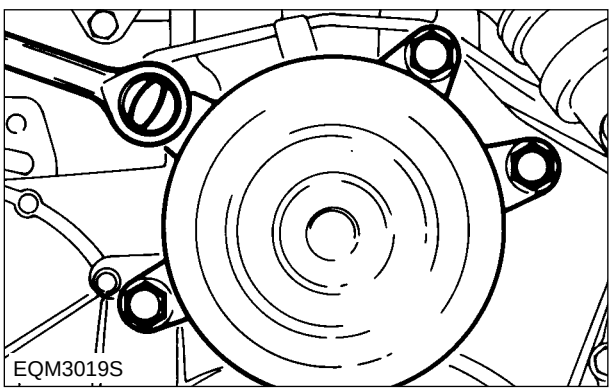
EQM3019S

3.1.21. Power steering pump

1) Remove the oil hoses.
2) Unscrew the hex bolts and remove the steering pump.

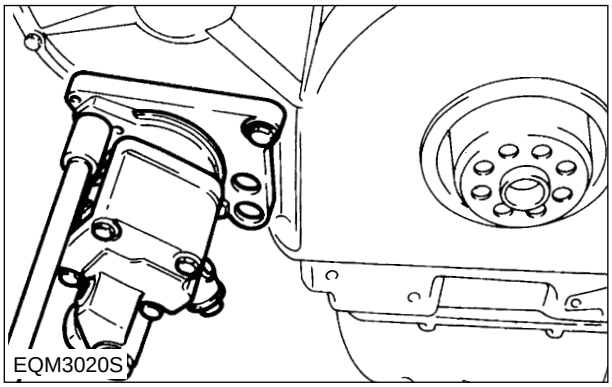
EQM3020S

3.1.22. Water pump

1) Remove the water pipe connected to the expansion tank
2) Remove the water pipe and hoses connected to the water pump.
3) Unscrew the water pump fixing bolts and remove the water pump.

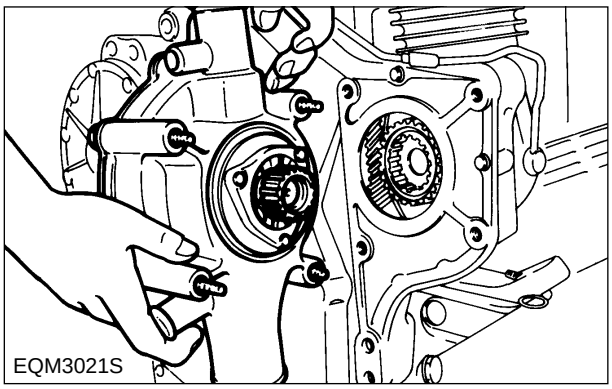
EQM3021S

3.1.23. Air compressor

1) Remove the oil hose, water pipe, air pipe connected to the air compressor, remove the air cooler fixing bolts, then disassemble the air compressor from the timing gear case.

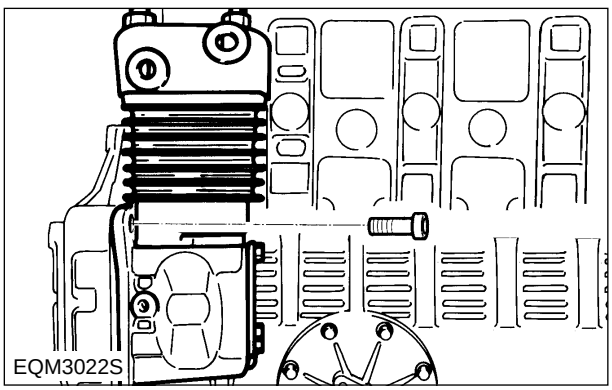
EQM3022S

3.1.24. Vibration damper

1) Unscrew the pulley fixing bolts and disassemble the pulley-vibration damper assembly.
2) Unscrew the vibration damper fixing bolts and disassemble the damper from the pulley.

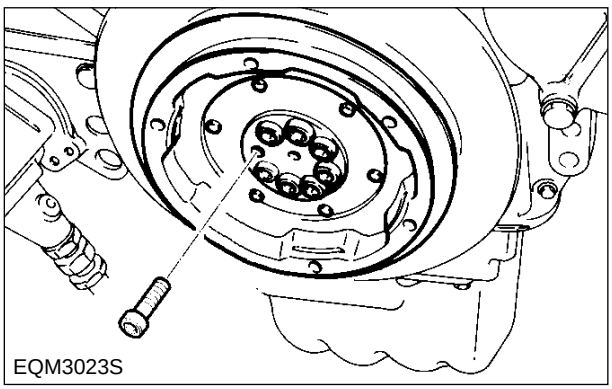
EQM3023S

3.1.25. Timing gear case cover

1) Disassemble the oil seal using an oil seal removing jig.
2) Remove the cover fixing bolts and disassemble the cover from the timing gear case.

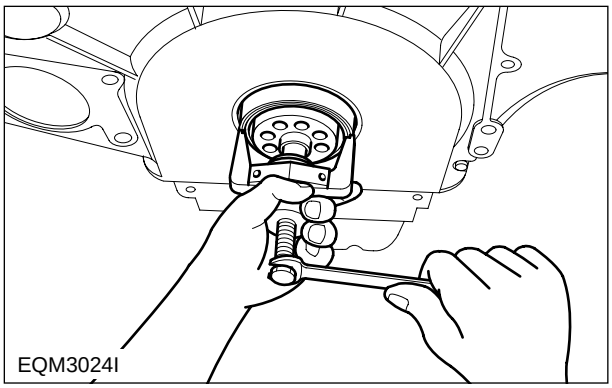
EQM3024I

3.1.26. Idle gear

1) Unscrew the idle gear fixing bolts and disassemble the thrust washer and idle gear.
2) Disassemble the idle gear pin using a rubber hammer to prevent damage to them.

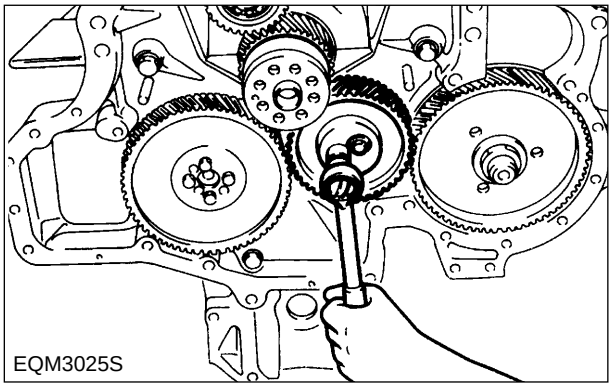
EQM3025S

3.1.27. Fuel injection pump drive assembly

1) Remove the dowel pin for the steering pump.
2) Unscrew the injection pump drive shaft bearing housing fixing bolts and remove the injection pump drive assembly in which the shaft, gear, bearings, and housing are put together.

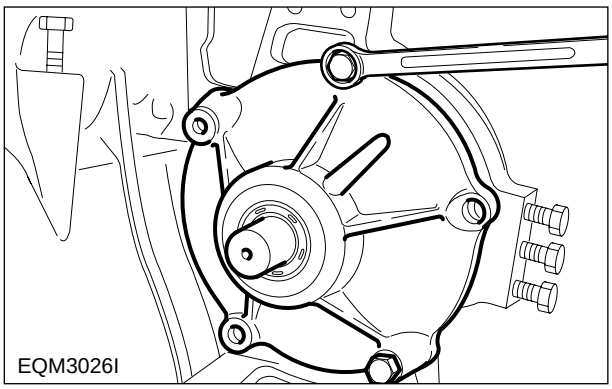
EQM3026I

3.1.28. Cylinder head cover

1) Unscrew the cover fixing bolts and disassemble the cover.
2) Keep the bolts in an assembly state so that the packings and washers may not be lost, and keep the cover packing as assembled with the cover.

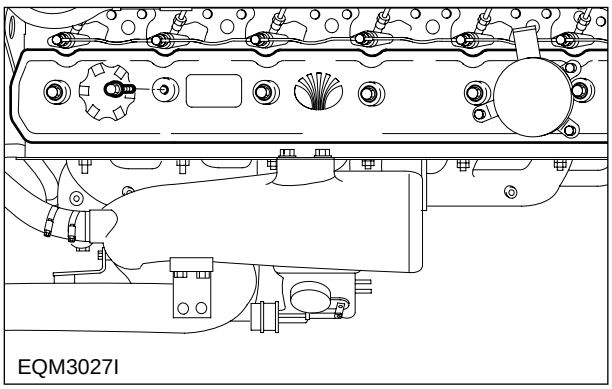
EQM3027I

3.1.29. Rocker arm assembly

1) Unscrew the rocker arm bracket bolts and remove the rocker arm assembly.
2) Take off the snap rings to remove the washers and rocker arm, then unscrew the bracket fixing bolts to take off the bracket and springs.
3) Take out the push rods.

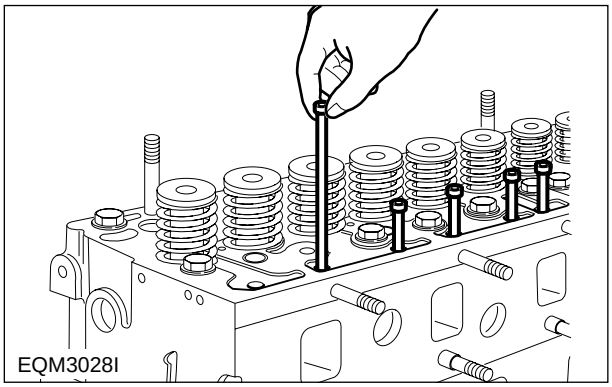
EQM3028I

3.1.30. Injection nozzle

1) Remove the nozzle fixing nuts and extract the nozzles.
2) Remove the nozzle tube using nozzle tube removing jig.

   Do not perform disassembly operation unless coolant, gas, etc. leak out.

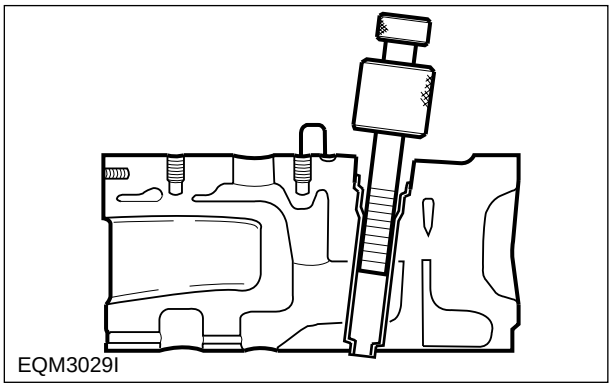
EQM3029I

3.1.31. Cylinder head

1) Unscrew the cylinder head fixing bolts and take off the cylinder head.
2) Remove the cylinder head gasket.

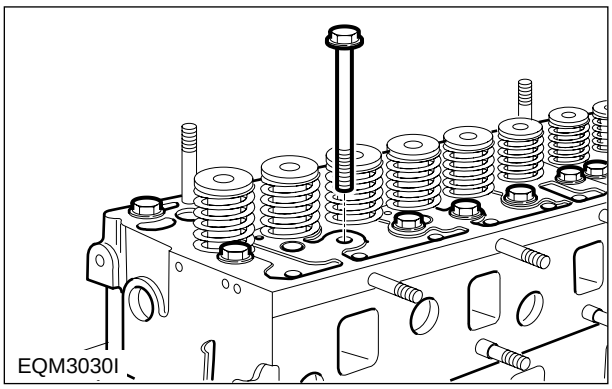
EQM3030I

3.1.32. Valve and valve stem seal

1) Compress the valve spring retainer using a jig and take off the valve cotter pin.
2) Disassemble the valve springs and retainer.
3) Take off the valve.
4) Remove and discard the valve stem seal using a general tool as it should not be re-used.

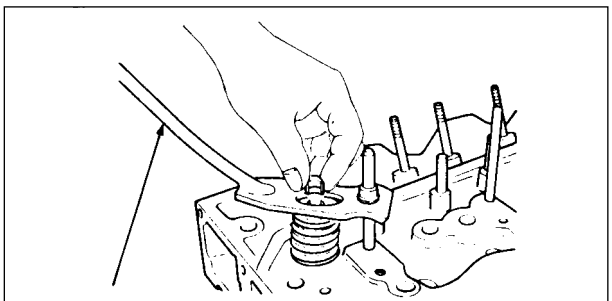
Compress the spring

EJM3027S

https://truckmanualshub.com/

3.1.33. Oil cooler

1) Remove the water pipe connected to the water pump.
2) Unscrew the oil cooler cover fixing bolts and disassemble the oil cooler assembly from the cylinder block.
3) Unscrew the oil cooler fixing bolts and remove the oil cooler from the oil cooler cover.

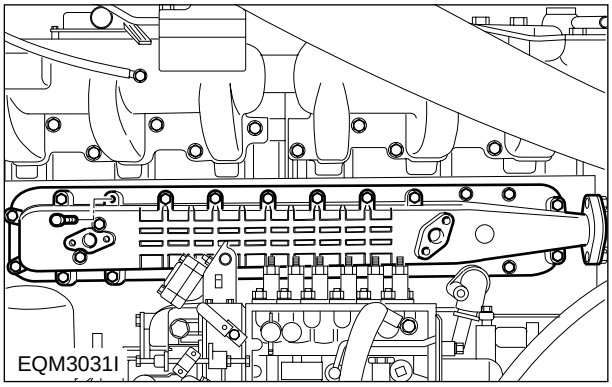
EQM3031I

3.1.34. Oil pan

1) Stand the engine with the flywheel housing facing toward the bottom.
2) Release the oil pan fixing bolts, remove the stiffeners, then disassemble the oil pan.

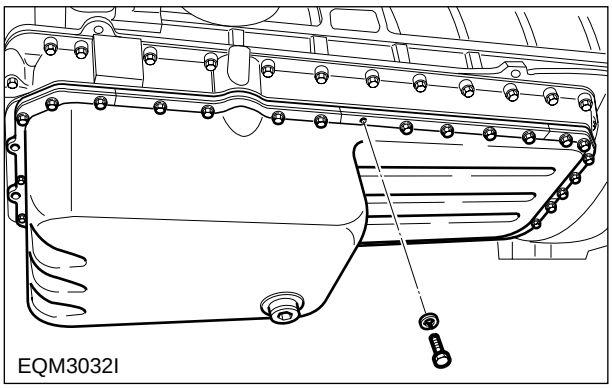
EQM3032I

3.1.35. Oil pump and oil pipe

1) Unscrew the oil inlet pipe bracket bolts, releasing the pipe fixing bolts, then disassemble the oil suction pipe assembly.
2) Disassemble the oil pipe feeding oil from the oil pump to the cylinder block.
3) Unscrew the oil pump fixing bolts and disassemble the oil pump.

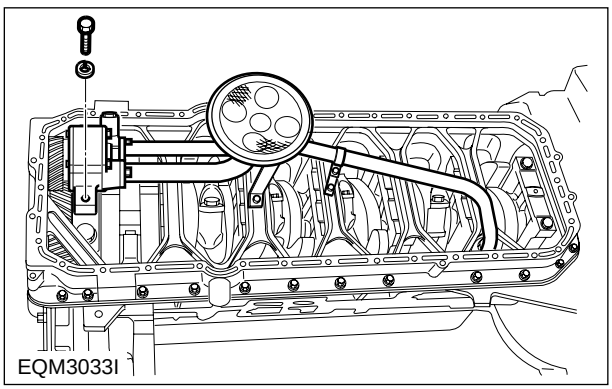
EQM3033I

3.1.36. Ladder frame

1) Disassemble the ladder frame.

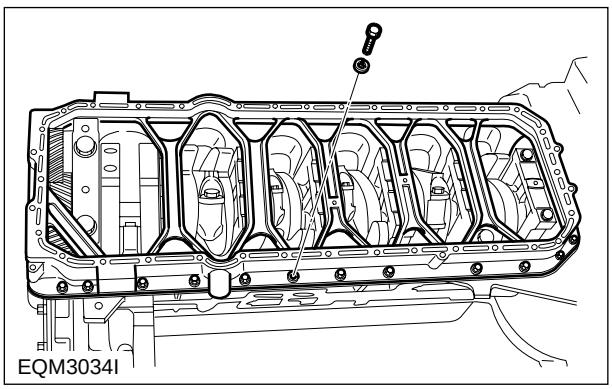
EQM3034I

https://truckmanualshub.com/

3.1.37. Piston and connection rod

1) Disassemble the pistons by two hands while turning the crankshaft.
2) Unscrew the conn. rod fixing bolts and take off the pistons and conn. rods in the direction of piston.

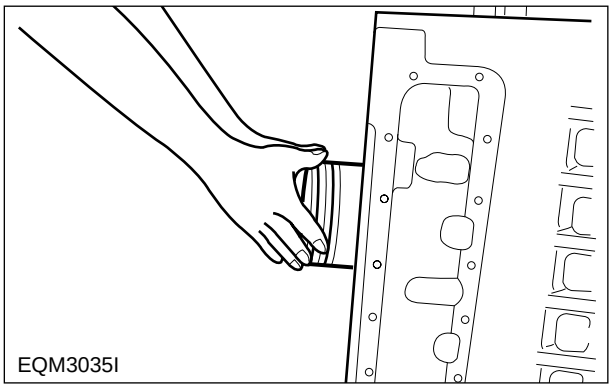
EQM3035I

3) Remove the piston pin snap rings, take off the piston pin, then disconnect the conn. rod from the piston.

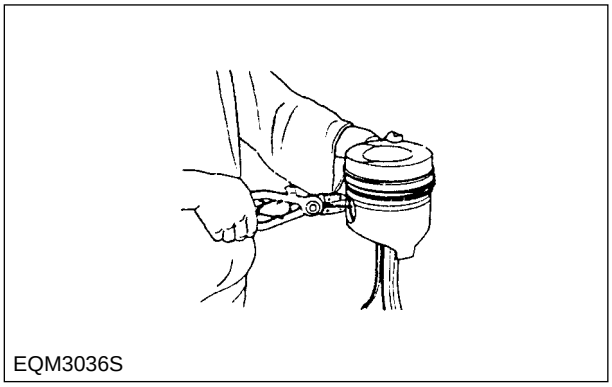
EQM3036S

4) Disassemble the piston rings using ring pliers.
5) Take care not to interchange the disassembled parts and keep them in the sequence of cylinder No.

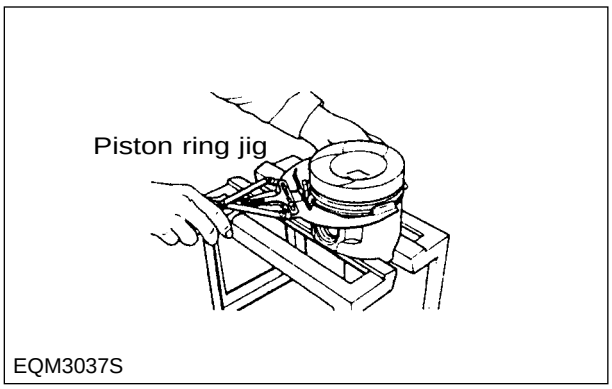

EQM3037S

3.1.38. Cylinder liner

1) Take off the cylinder liner.

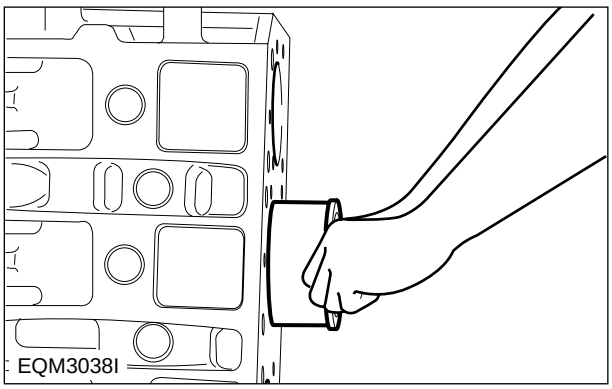
EQM3038I

https://truckmanualshub.com/

3.1.39. Flywheel

1) Position the engine so that the head installing surface of the cylinder block faces down.
2) Unscrew the flywheel fixing bolts and fit a dowel pin.
3) Install flywheel disassembling bolts in the bolt holes machined on the flywheel, and disassemble the flywheel.

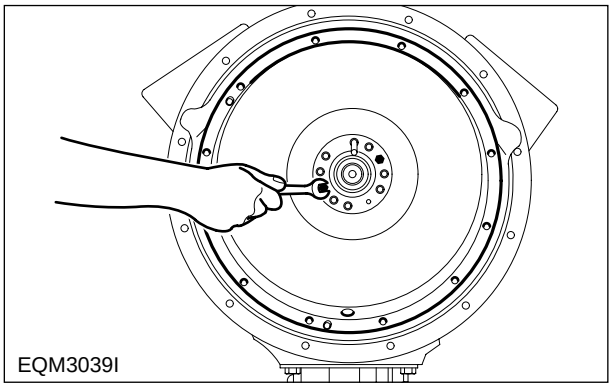
EQM3039I

3.1.40. Oil seal

1) Take off the rear oil seal using an oil seal disassembling jig.
2) If only the inside guide ring is removed, use a general tool to take off the outside seal.

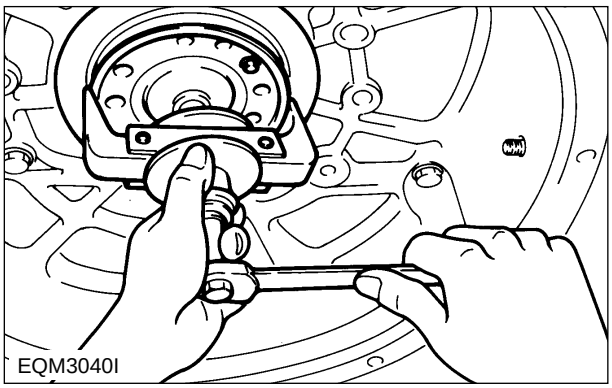
EQM3040I

3.1.41. Flywheel housing

1) Loosen the housing fixing bolts and disassemble the flywheel housing.

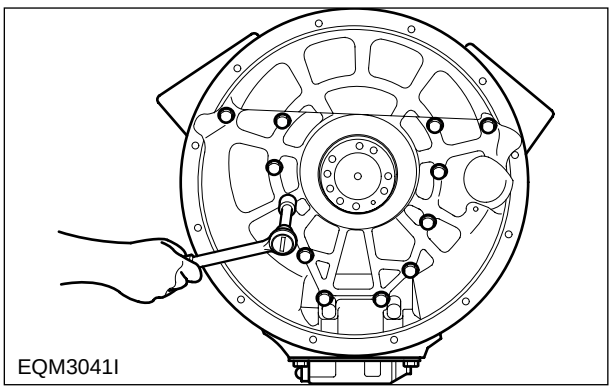
EQM3041I

3.1.42. Cam shaft and tappet

1) Remove the cam shaft gear.
2) Take off the cam shaft gear thrust washer.
3) Take out the cam shaft carefully not to damage the cam shaft.
4) Slide out the tappets by hand.

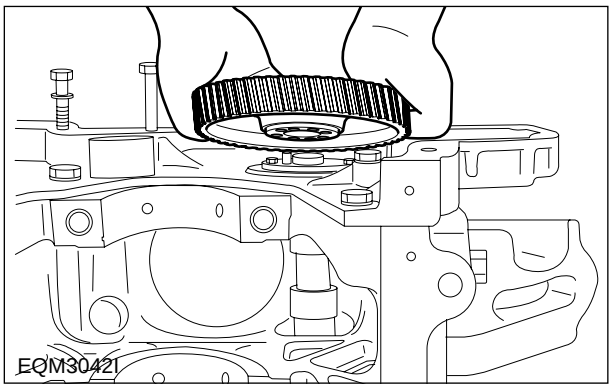
EQM3042I

3.1.43. Crankshaft gear and oil pump idle gear

1) Loosen the socket head bolts and take out the oil pump idle gear.
2) Use a puller to remove the crankshaft gear.

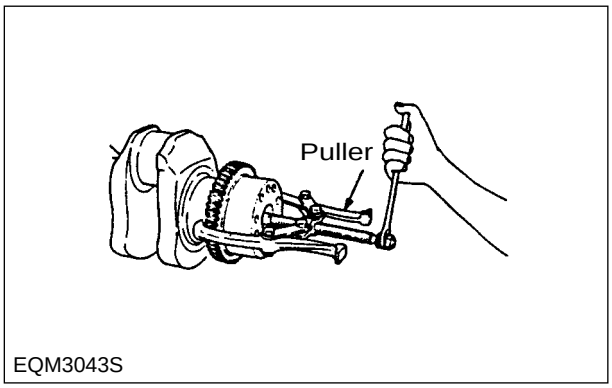

EQM3043S

3.1.44. Timing gear case

1) Unscrew the case fixing bolts and disassemble the timing gear case.

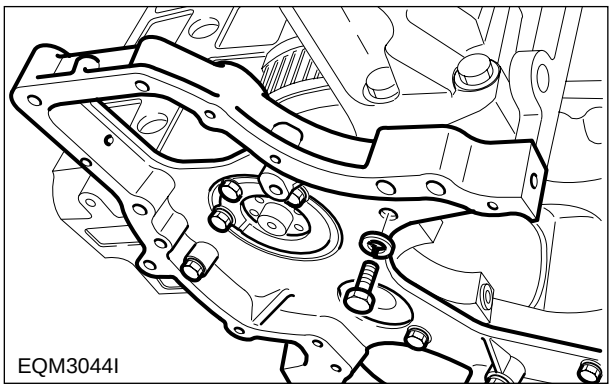
EQM3044I

3.1.45. Crankshaft

1) Unscrew the main bearing cap fixing bolts and remove the bearing cap.
2) Take off the crankshaft.
3) Take off the main bearing.

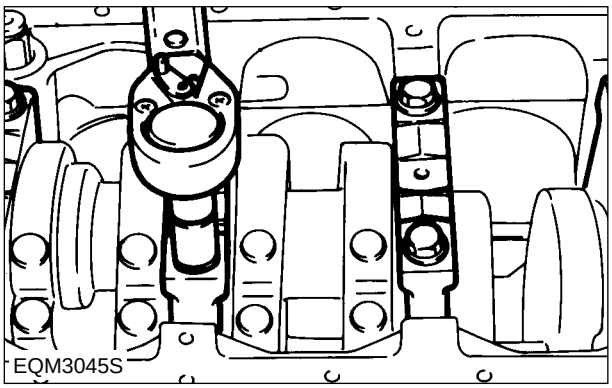
EQM3045S

3.1.46. Oil spray nozzle

1) Remove the oil spray nozzles.

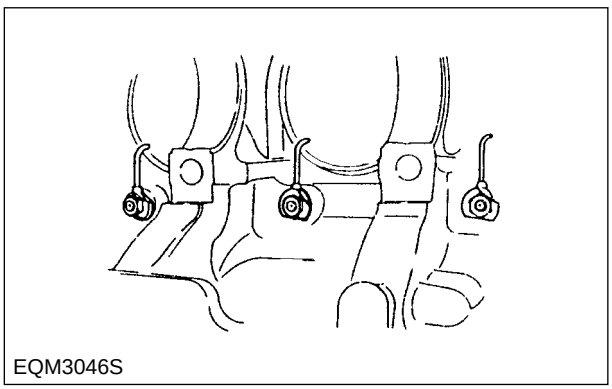
EQM3046S

https://truckmanualshub.com/

3.2. Inspection

3.2.1. Cylinder block

1) Clean the cylinder block thoroughly and make a visual inspection for cracks or damage.
2) Replace if cracked or severely damaged, and correct if slightly damaged.
3) Check oil and water flow lines for restriction or corrosion.
4) Make a hydraulic test to check for any cracks or air leaks.
   (Hydraulic test) :
   Stop up each outlet port of water/oil passages in the cylinder block, apply air pressure of about 4kg/cm^2 against the inlet ports, then immerse the cylinder block in water for about 1 minute to check any leaks. (Water temperature: 70℃)

3.2.2. Cylinder head

1) Check the cylinder head for cracks or damage.
   (1) Carefully remove carbon from the lower face of the cylinder head using nonmetallic material to prevent scratching of the valve seat faces.
   (2) Check the entire cylinder head for very fine cracks or damage invisible to ordinary sight using a hydraulic tester or a magnetic flaw detector.

2) Check the lower face of the cylinder head for distortion.
   (1) Measure the amount of distortion using a straight edge and a feeler gauge at six positions as shown in the figure right.
   (2) If the measured value exceeds the standard value(0.2mm), reface the head with grinding paper of fine grain size to correct such defect.
   (3) If the measured value exceeds the maximum allowable limit(0.3mm), replace the cylinder head.
3) Measure flatness of the intake/exhaust manifolds fitting surfaces on the cylinder head using a straight edge and a feeler gauge.
4) Hydraulic test method for the cylinder head is the same as that for cylinder block.

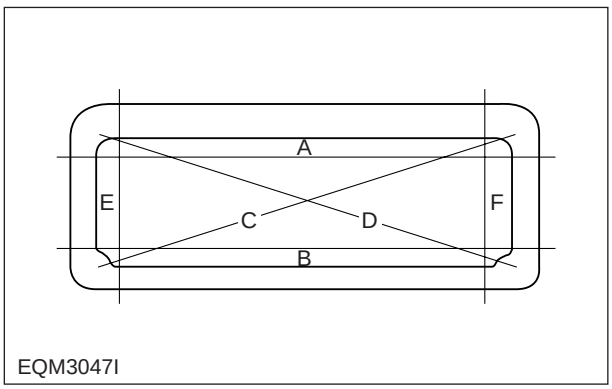

<Figure 3-1> Measuring cylinder head distortion

https://truckmanualshub.com/

3.2.3. Valve and valve guide

1) Inspecting the valve

Clean the valves with clean diesel oil, then inspect them as follows:

(1) Measure the valve stem outer diameter at 3 positions(top, middle, and bottom). If the amount of wear is beyond the limit(0.18mm), replace the valve.

Dimensions / Descriptions	Standard	Limit
Intake valve stem (mm)	ϕ10.950~10.970	10.87
Exhaust valve stem (mm)	ϕ10.935~10.955	10.84

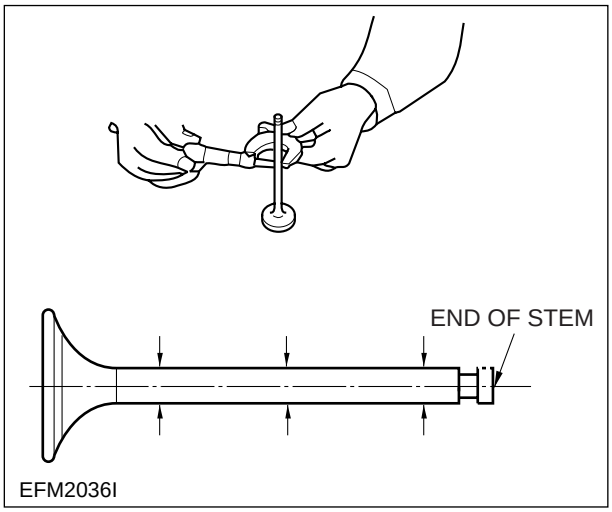

<Figure 3-2> Measuring valve stem

(2) Check the valve seat contacting faces for scratches or wear, and correct the faces with grinding paper as necessary. Replace if severely damaged.

(3) Measure the valve head thickness, and replace the valve if the measured value is 1mm or less(a).

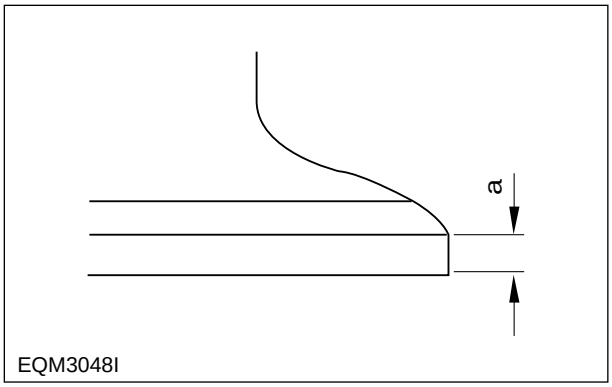

<Fig. 3-3> Measuring thickness of valve head

2) Inspection and measurement of valve guide

(1) Install the valve into the valve guide and measure the clearance between them by valve movement. If the clearance is excessive, measure the valve and replace either the valve or the valve guide, whichever worn more.

(2) Install the valve into the cylinder head valve guide, then check and see if it is centered with the valve seat using a special tool.

https://truckmanualshub.com/

3) Inspection and correction of valve seat

(1) Measure the contacting face between the intake valve seat and exhaust valve seat for valve seat wear, and replace if the measured value exceeds the specified limit.

(2) Install the valve into the valve seat on the cylinder head, and check the amount of depression of the valve from the lower portion of the cylinder head using a dial gauge.

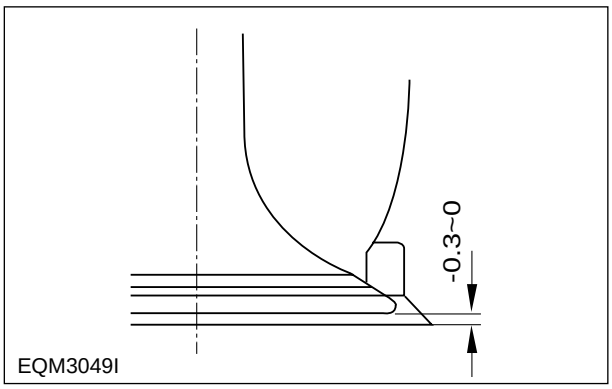

If the amount of depression is beyond the specified limit, replace the valve seat.

(3) For removal of the valve seat, apply arc welding work to two points of valve seat insert, and pull out valve seat insert with inner extractor.

(4) Undercool a new valve seat with dry ice for about 2 hours and press the valve seat insert into position in the cylinder head using a special tool(bench press).

(5) Apply valve lapping compound to the valve head seating face on the valve seat and lap the valve seat by turning it until it is seated in position, then wipe out the lapping compound.

4) Inspection and correction of valve spring

(1) Visually check the exterior of the valve springs for damage, and replace if necessary.

(2) Measure free length and spring tension with a valve spring tester.

(3) Measure the spring inclination with a square.

(4) Compare the measured value with the standard value to determine whether to replace or repair.

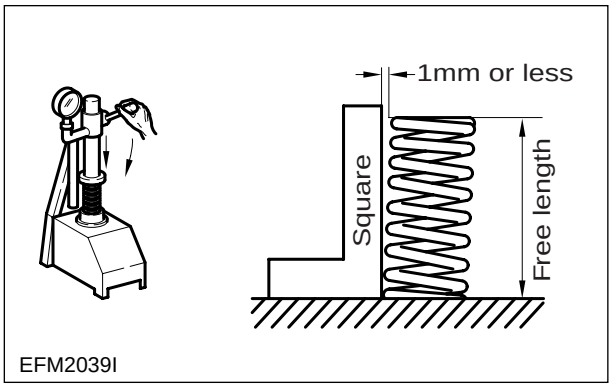

<Figure 3-4> Measuring spring tension and inclination

https://truckmanualshub.com/

3.2.4. Rocker arm shaft assembly

1) Measurement of rocker arm shaft
   (1) Place the rocker arm shaft on two V-blocks and inspect the shaft for bend using a dial gauge.
   If the amount of this run-out is small, press the shaft with a bench press to correct the run-out. Replace the shaft if the measured value exceeds the limit.

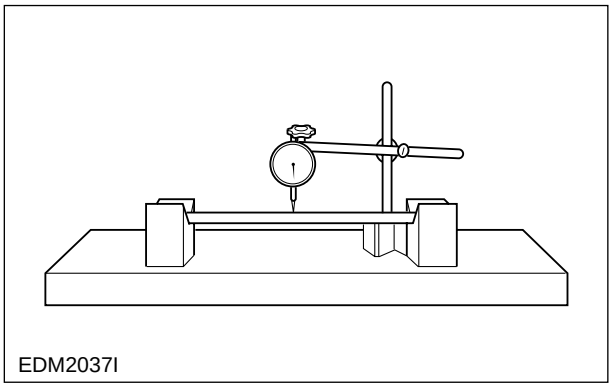

<Figure 3-5> Measuring run-out of rocker arm shaft

   (2) With an outside micrometer, measure the rocker arm shaft diameter at the point where the rocker arms have been installed. Replace the rocker arm if the amount of wear is beyond the specified limit.
2) Inspection of rocker arm
   (1) Visually check the face of the rocker arm in contact with the valve stem end for scores and step wear. If the wear is small, correct it with an oil stone or grinding paper of fine grain size. Rocker arm with a considerable amount of step wear should be replaced.
   (2) Measure the inside diameter of the rocker arm bushing with an inside micrometer or vernier calipers, and compare the measured values with the rocker arm shaft diameter. If the clearance exceeds the limit, replace either bushing or shaft, whichever worn more.

3) Inspection of tappet and push rod
   (1) Measure the outer diameter of the tappets with an outside micrometer. If the amount of wear is beyond the specified limit, replace tappets.
   (2) Visually check the face of the tappets in contact with the cam for pitting, scores or cracks, and replace if severely damaged. If the amount of cracks or pitting is small, correct with an oil stone or grinding paper.
   (3) Support the push rod on two V-blocks and check for bend using a feeler gauge.

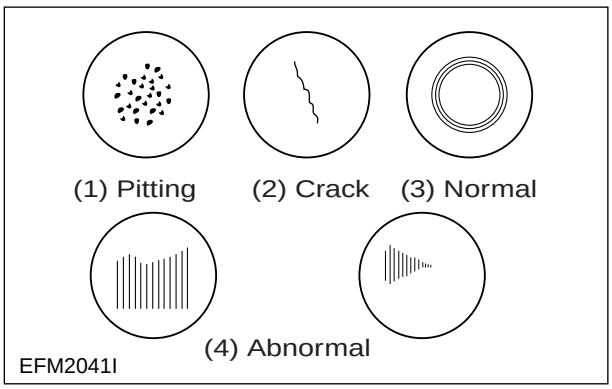

<Figure 3-6> Inspecting tappet face

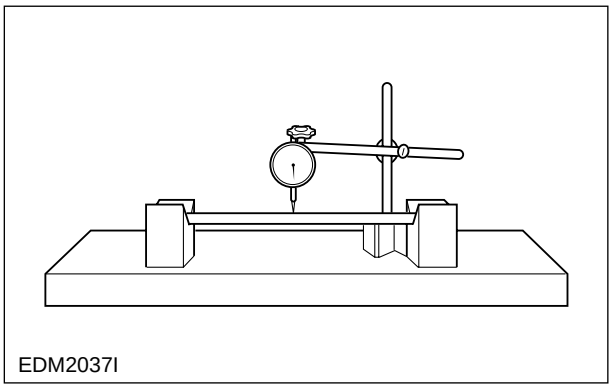

<Figure 3-7> Measuring push rod run-out

https://truckmanualshub.com/

3.2.5. Cam shaft

1) Inspection of cam
   (1) Measure the cam height with a micrometer and replace the camshaft if the measured value is beyond the specified limit.
   (2) Inspect the cam face for scratch or damage.
   Slight step wear or damage on the cam face may be corrected with oil stone or oiled grinding paper. But, replace if severely damaged.

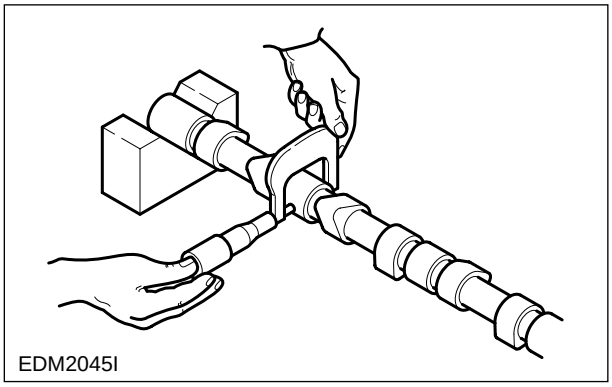

<Figure 3-8> Measuring cam height

2) Inspection of cam shaft
   (1) With an outside micrometer, measure the camshaft journal diameter.
   (2) Measure the inside diameter of the camshaft bushing on the cylinder block using a cylinder bore indicator, and compare the measured value with the camshaft outside diameter to determine the clearance.
   (3) Replace the bushing if the measured value is beyond the specified limit.
   (4) Support the cam shaft on two V-blocks and check for run-out using a dial indicator. Correct or replace the cam shaft if the amount of run-out is beyond the value indicating need for servicing.

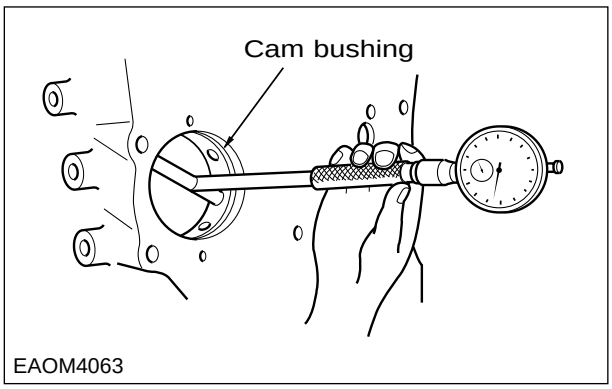

<Figure 3-9> Measuring inside diameter of cam shaft bushing on cylinder block

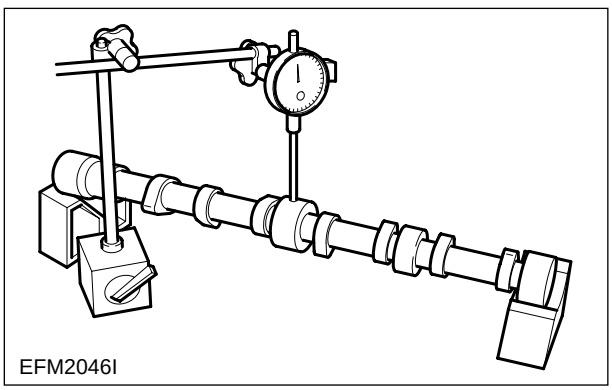

<Figure 3-10> Measuring cam shaft run-out

3) Cam shaft end play
   (1) Push the thrust plate toward the cam gear.
   (2) With a feeler gauge, measure the clearance between the thrust plate and cam shaft journal.
   (3) If the end play is excessive, replace the thrust plate.

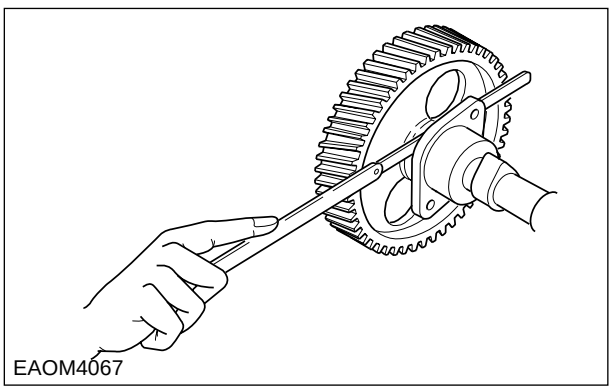

<Figure 3-11> Measuring cam shaft axial play

https://truckmanualshub.com/

3.2.6. Crank shaft

1) Inspection for scores or cracks
   (1) Visually check the crank shaft journal and crank pins for scores or cracks.
   (2) Using a magnetic power and color check, inspect the crank shaft for cracks, and replace the crank shaft which has cracks.
2) Checking crank shaft for wear
   (1) With an outside micrometer, measure the diameter of the crank shaft journals and pins in the directions as shown, and compare the measured values to determine the amount of wear.
   (2) If the amount of wear is beyond the limit, have the crank shaft ground and install under-size bearings. However, if the amount of wear is within the limit, you can correct the wear using an oil stone or oiled grinding paper of fine grain size.
   (Be sure to use grinding paper which has been immersed in oil.)

•Undersize bearings available
(1) Standard
(2) 0.25 (Inside diameter is 0.25mm lesser than the standard size.)
(3) 0.50 (Inside diameter is 0.50mm lesser than the standard size.)
(4) 0.75 (Inside diameter is 0.75mm lesser than the standard size.)
(5) 1.00 (Inside diameter is 1.00mm lesser than the standard size.)
Undersize bearings are available in 4 different sizes as indicated above, and the crankshaft can be reground to the above sizes.

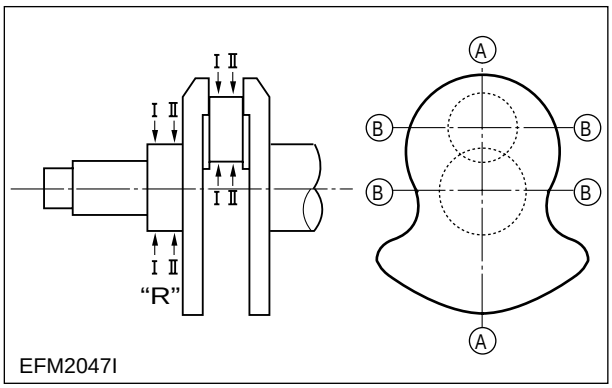

<Figure 3-12> Measuring crank shaft outer diameter

Note : When regrinding the crank shaft as described above, the fillet section 'R' should be finished correctly.
Avoid sharp corners or insufficient fillet.

Standard values of 'R'
① Crankshaft pin 'R' : 4.5
② Crankshaft journal 'R' : 4

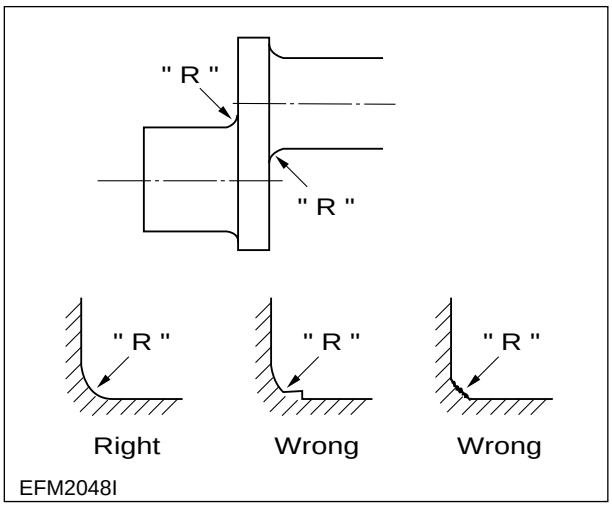

<Figure 3-13> The shape of crankshaft 'R'

3) Measurement of crankshaft run-out
   (1) Support the crankshaft on V-blocks.
   (2) Turn the crankshaft with a dial indicator placed on the surface plate and take the amount of crank shaft run-out.

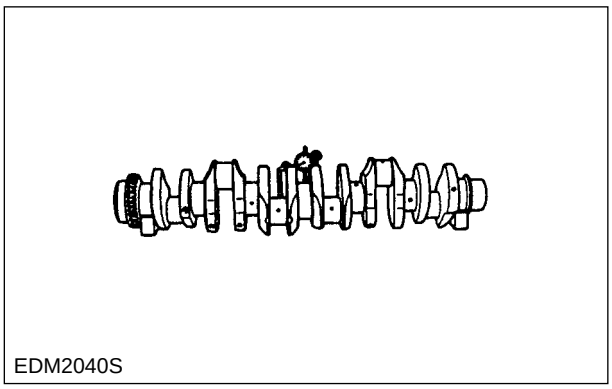

<Figure 3-14> Measuring crank shaft run-out

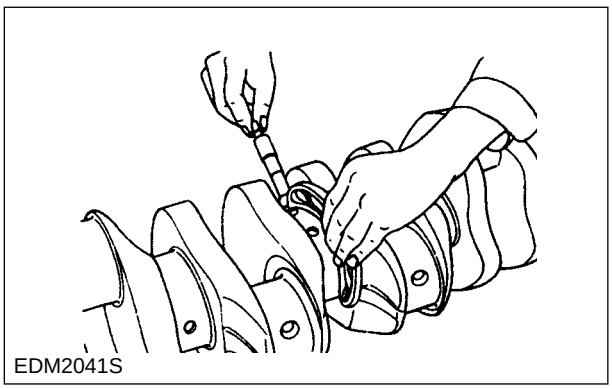

<Figure 3-15> Measuring crank shaft outer diameter

3.2.7. Crank shaft bearing and connecting rod bearing

1) Visually check the crank shaft bearing and connecting rod bearing for scores, uneven wear or damage.
2) Check oil clearance between crankshaft and bearing.
   (1) Install the main bearing in the cylinder block, tighten the bearing cap to specified torque, then measure the inside diameter.

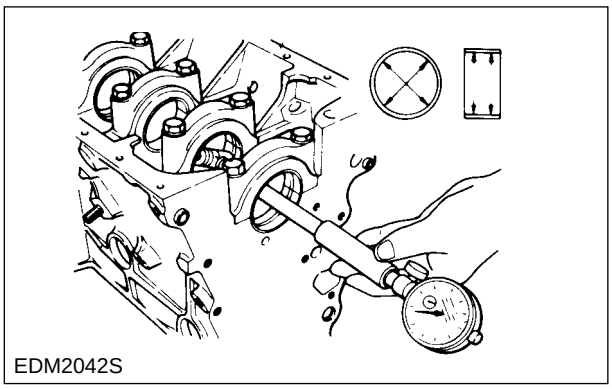

<Figure 3-16> Measuring main bearing inside diameter

   (2) Install the connecting rod bearing in the conn. rod bearing cap, tighten the connecting rod cap bolts to specified torque, then measure the inside diameter.

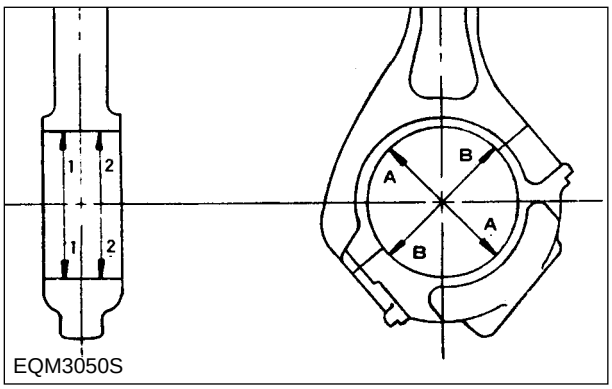

(3) Compare the two values obtained through measurement of bearing inside diameter with the outside diameters of crankshaft journals and pins to determine the oil clearance.

(4) If the clearance deviates from the specified range, have the crankshaft journals and pins ground and install undersize bearings.

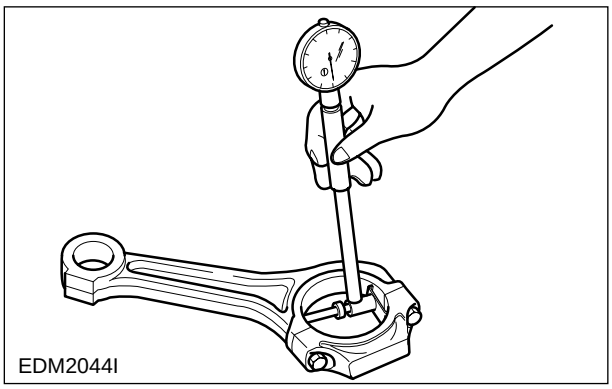

<Figure 3-17> Measuring conn. rod bearing inside diameter

3) Inspection of bearing spread and crush

(1) Check to see that the bearing requires a considerable amount of finger pressure at reassembly operation.

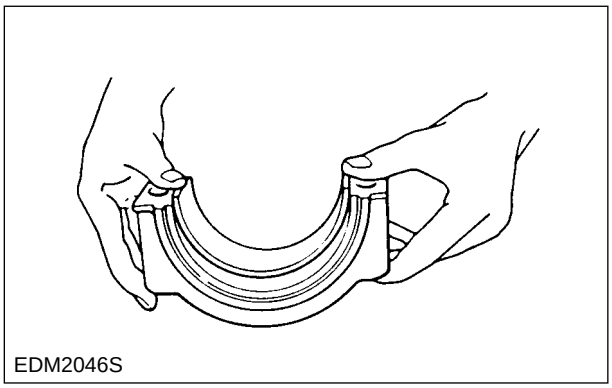

<Figure 3-18> Checking bearing tension

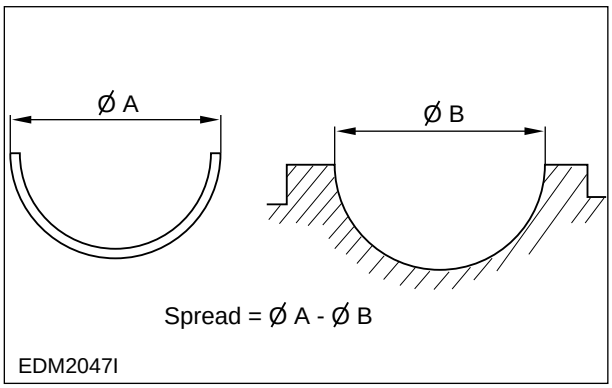

<Figure 3-19> Bearing and cylinder block

(2) With a bearing crush aligner, measure bearing crush.

•Standard bearing crush

Crank shaft bearing crush(mm)	0.15~0.25
Conn. rod bearing crush(mm)	0.3~0.5

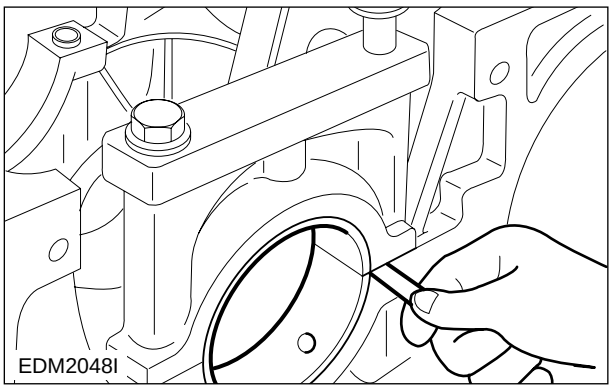

<Figure 3-20> Measuring main bearing crush

(3) Conn. rod bearing crush can be checked as follows:
Install the bearing and cap in the conn. rod big end, retighten the bolts to specified torque, unscrew out one bolt completely, then measure the clearance between the bearing cap and conn. rod big end using a feeler gauge.

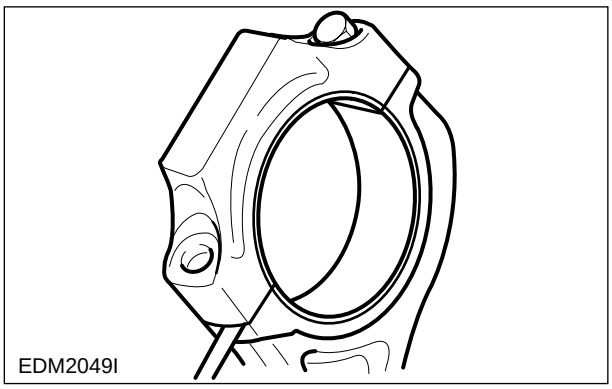

<Figure 3-21> Conn. rod bearing crush

4) Measurement of crank shaft end play
(1) Assemble the crankshaft to the cylinder block.
(2) With a dial gauge, measure crank shaft end play.

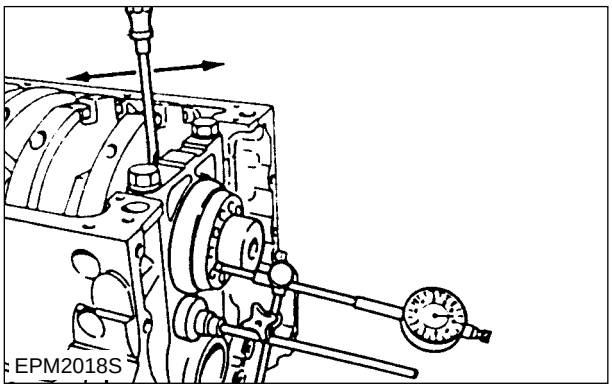

<Figure 3-22> Measuring crankshaft end play

3.2.8. Piston

1) Visually check the pistons for cracks, scuff or wear, paying particular attention to the ring groove.
2) Measurement of the clearance between the piston and cylinder liner.
(1) With an outside micrometer, measure the piston outside diameter at a point 18mm away from the lower end of piston skirt in a direction at a right angle to the piston pin hole.

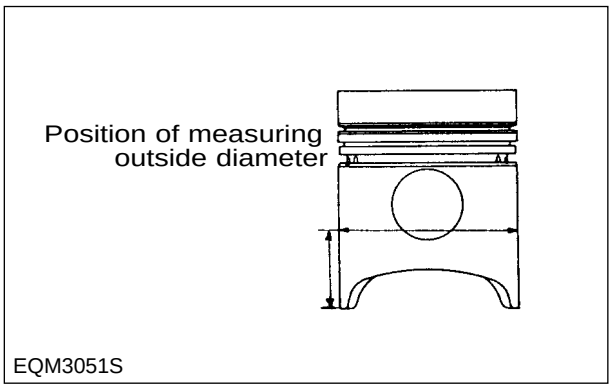

<Figure 3-23> Measuring piston outside diameter

(2) Using a cylinder bore gauge, measure cylinder liner inside diameter at 3 points (cylinder top ring contacting face, middle, and oil ring contacting face on BDC) in a direction at an angle of 45°. Take the mean value with the largest and smallest values excepted.

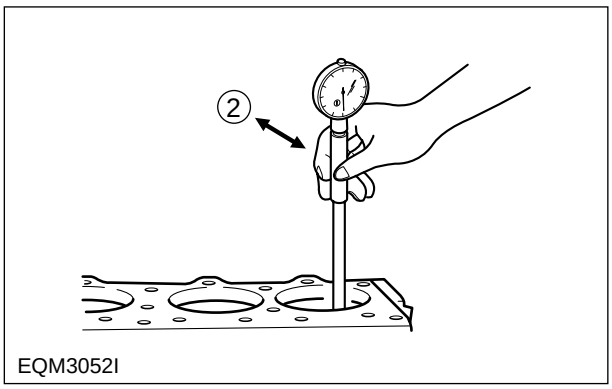

<Figure 3-24> Measuring cylinder liner inside diameter

https://truckmanualshub.com/

(3) The clearance is computed by subtracting the piston outside diameter from the cylinder liner inside diameter. Replace either piston or cylinder liner, whichever damaged more, if the clearance is beyond the specified limit.

Liner	Standard	Limit
Cylinder line inside diameter (mm)	$\phi 123^{+0.005}_{-0.015}$	123.225

3.2.9. Piston rings

1) Replace the piston rings with new ones if detected worn or broken when the engine is overhauled.
2) Measure piston ring gap.
   (1) Insert the piston ring into the upper portion of the cylinder liner bore so that it is held at a right angle to the cylinder liner wall.
   (2) Measure the piston ring gap with a feeler gauge.
   (3) Replace piston rings with new ones if the gap is beyond the limit.

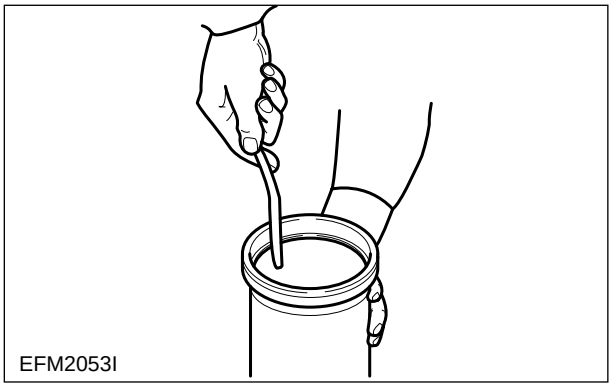

<Figure 3-25> Measuring piston ring gap

Dimensions / Descriptions	Standard(mm)	Limit(mm)
Top ring	0.40~0.65	1.5
2nd ring	0.40~0.65	1.5
Oil ring	0.30~0.60	1.5

3) Measure piston ring side clearance.
   (1) Fit the compression ring and oil ring in the piston ring groove.
   (2) With a feeler gauge, measure side clearance of each ring, and replace either the ring or piston if the measured value is beyond the specified limit.

Dimensions / Descriptions	Standard(mm)	Limit(mm)
Top ring	-	
2nd ring	0.07~0.102	0.15
Oil ring	0.05~0.085	0.15

4) With a tension tester, measure piston ring tension. Replace the piston ring if the measured value is beyond the limit.

3.2.10. Piston pin

1) Measure the amount of wear on the piston pin
   (1) Measure the amount of wear on the piston pin at the points as shown. The measured values are beyond the limit(0.005mm or greater), replace the pin.
   (2) Measure the clearance between the piston pin and conn. rod bushing, and replace either of them, which ever damaged more, if the measured value is beyond the limit(0.011mm).
2) Check the engaged condition of the piston and piston pin. If it is possible to force the pin into the piston heated with piston heater, the piston is normal. When replacing the piston, be sure to replace the piston pin together.

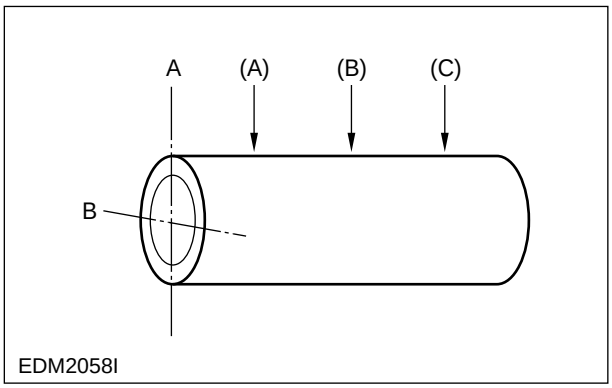

<Figure 3-26> Measuring piston pin

https://truckmanualshub.com/

3.2.11. Connecting rod

1) Check the connecting rod for distortion. As shown in the figure right, install the conn. rod to the conn. rod tester, and check for distortion using a feeler gauge. If the conn. rod is found distorted, never re-use it and replace it with a new one.

2) Measure the alignment of the conn. rod piston ring bushing holes with conn. rod big end holes. At this time also, use both conn. rod tester and feeler gauge.

3) Inspection of the amount of wear on the conn. rod big end and small end
   (1) Assemble the conn. rod to the crank shaft and measure conn. rod big end side clearance using a feeler gauge.
   (2) Assemble the conn. rod to the piston and measure conn. rod small end side clearance.
   (3) If the measured values are beyond the limit(0.5mm), replace the connecting rod.

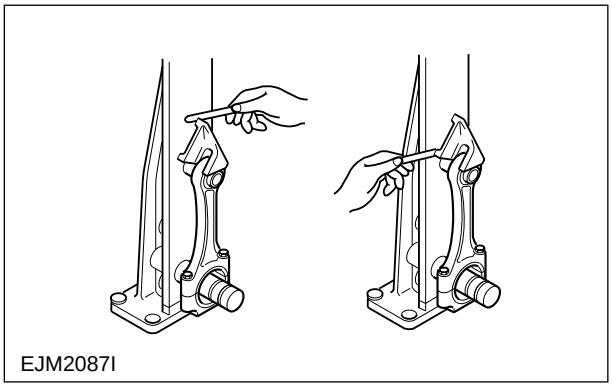

<Figure 3-27> Measuring alignment of conn. rod

3.2.12. Tappet

1) Check the tappets for cracks, scores, or damage.
2) With an outside micrometer, measure the tappet outside diameter. If the measured value is beyond the limit, replace tappets.

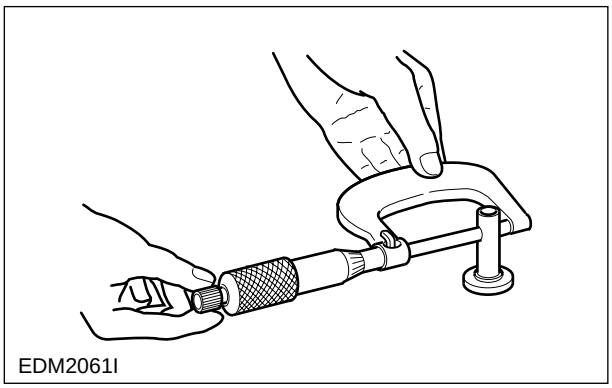

<Figure 3-28> Measuring tappet outside diameter

https://truckmanualshub.com/

3.3. Reassembly

3.3.1. General precautions

1) Wash clean all the disassembled parts, particularly oil and water ports, using compressed air, then check that they are free from restrictions.
2) Arrange the general and special tools for engine assembly operation.
3) To wet each sliding part, prepare clean engine oil.
4) Prepare service materials such as sealant, etc.
5) Discard used gaskets, seal rings, and consumable parts, and replace with new ones.
6) Apply only the specified torque for bolts in the specified tightening order and avoid over-tightening.
7) Be sure to check that all the engine parts operate smoothly after being reassembled.
8) Check the bolts for looseness after preliminary reassembly.
9) After completing the engine reassembly operation, check if there is missing parts or shortage of parts.
10) Keep your hands clean during the working

3.3.2. Cylinder block

1) Cover the floor of the workshop with wood plate or thick paper to prevent damage to the cylinder head, and place the cylinder block with the head fitting surface facing downward.

3.3.3. Oil spray nozzle

1) Tighten and assemble the oil spray nozzle flange with fixing bolts.

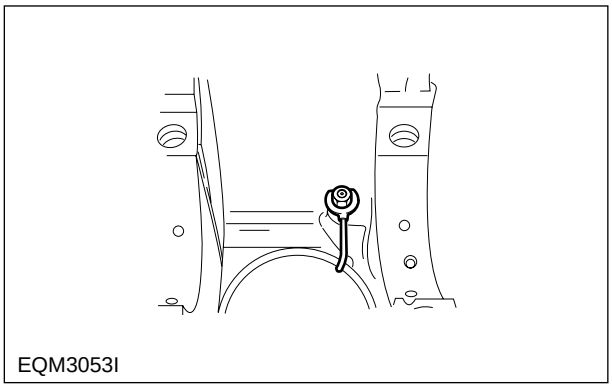
EQM3053I

3.3.4. Tappet and cam shaft

1) Undercool a new bush with dry ice for about 2 hours and press it into position in the cylinder block using a bench press. After the pressing operation, measure the inside diameter of the cam bush to check if it is not deformed.
2) Apply engine oil to the entire face of the tappets and slide them into the tappet holes on the cylinder block.

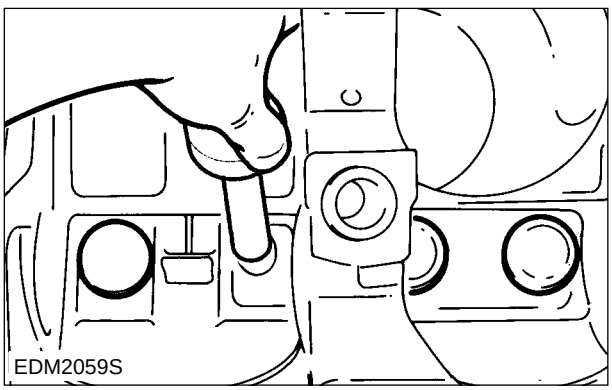
EDM2059S

3) Wet the cam bush inside diameter and cam shaft with oil, and carefully assemble them while turning the cam shaft.
4) Check to see that the cam shaft rotates smoothly.

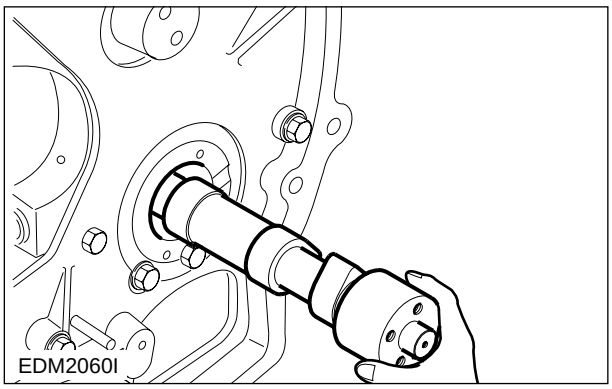
EDM2060I

3.3.5. Crank shaft

1) Install the main bearing machined with two holes in the cylinder block so that the key is aligned with the key groove, then apply oil to the bearing surface.

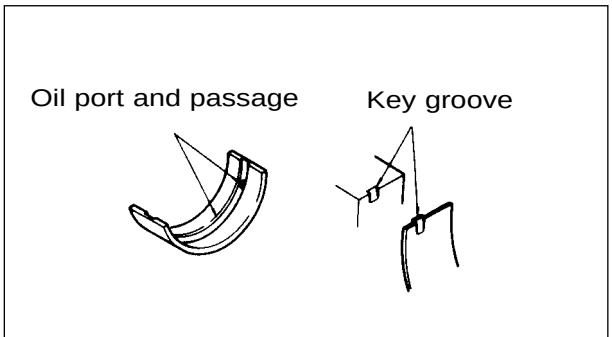

EQM3054S

2) Apply sealant in the inside wall of the crank shaft gear evenly before placing over the shaft
3) Semi-tighten a bolt at both sides of the crank shaft, apply engine oil to journals and pins, then assemble the crank shaft with the cylinder block by tightening the fixing bolts.

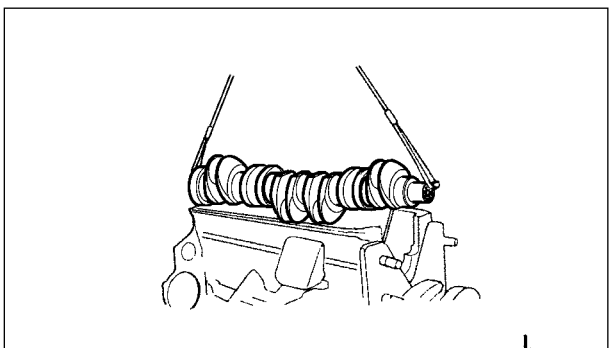
EQM3055S

4) Install the oiled thrust washers with the oil groove facing outward.

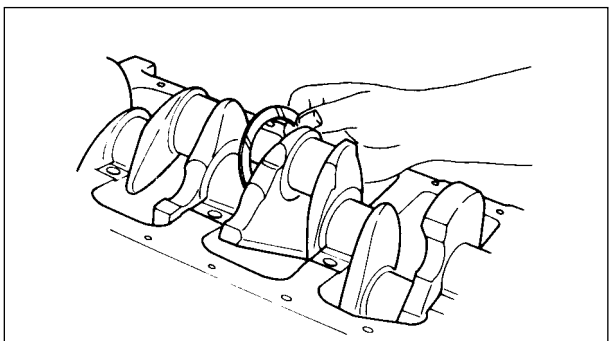
EQM3056S

5) Install the bearing and thrust washers to the bearing cap and apply oil to the bearing and thrust washers.

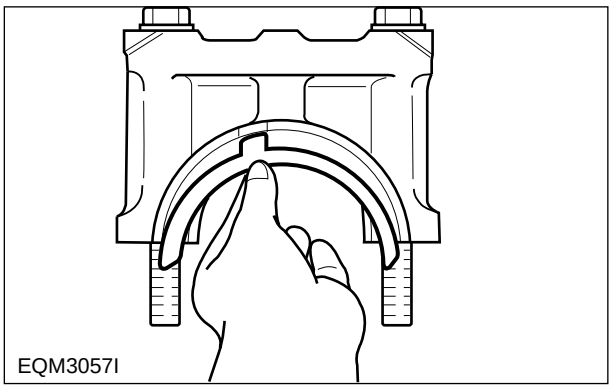
EQM3057I

6) Install the bearing cap by matching the cylinder block No. with the bearing cap No.
7) Apply oil to the entire part of the bearing cap bolts, then tighten in tightening sequence to specified torque(30kg•m).
8) After semi-tightening both bolts evenly, tighten them diagonally to about 15kg•m for the first stage and 25kg•m for the second stage respectively, then tighten them completely to the specified torque using a torque wrench.
9) Tighten the bearing cap in the sequence of 4-3-5-2-6-1-7.
10) Check to see that the assembled crank shaft turns smoothly.

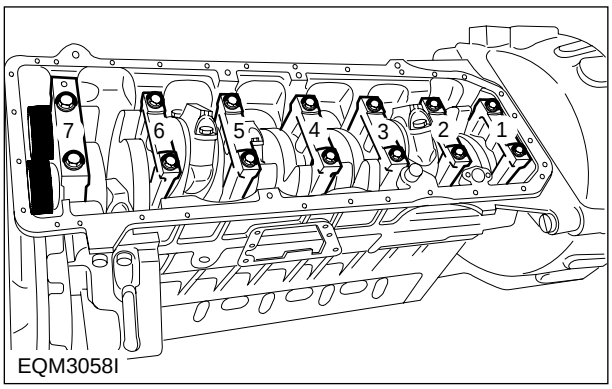

EQM3058I

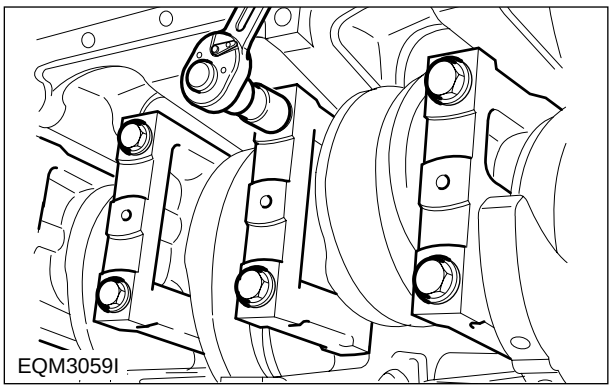
EQM3059I

3.3.6. Flywheel housing

1) Temporarily install the guide bar on the cylinder block.
2) Apply gasket to the cylinder block.
3) Using the dowel pin and guide bar, install the flywheel housing and tighten the fixing bolts in a diagonal sequence to specified torque(12kg°m)

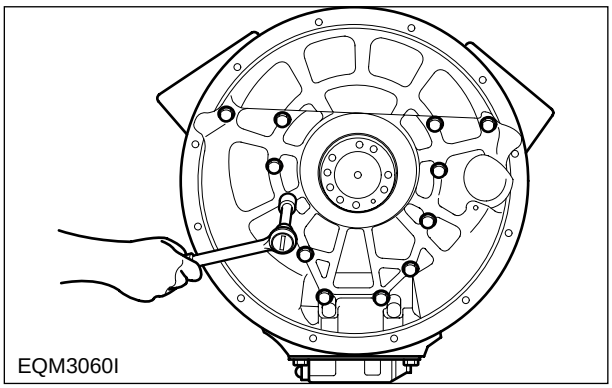
EQM3060I

https://truckmanualshub.com/

3.3.7. Rear oil seal

1) Apply lubricating oil to the outside of the oil seal and flywheel inside diameter and fit them over the crank shaft, then assemble the oil seal using an oil seal fitting jig.

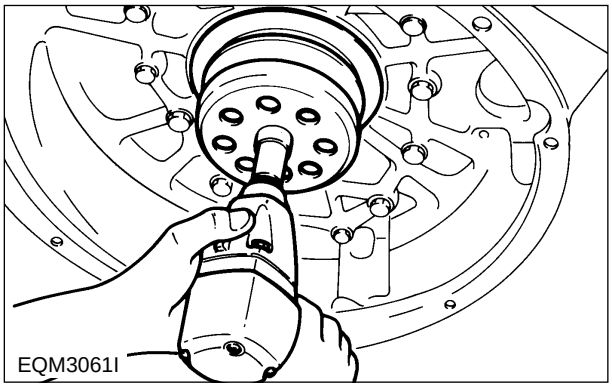

3.3.8. Flywheel

1) Install a guide bar into a bolt hole on the crank shaft, and lift the flywheel to align the dowel pin with the pin hole on the flywheel for temporary assembly operation.
2) Install bolts in the remaining holes with no guide bar installed, take out the guide bar, then install a bolt in the hole where the guide bar had been inserted.
3) Tighten the fixing bolts using a torque wrench in a diagonal sequence to specified torque(18kg•m).

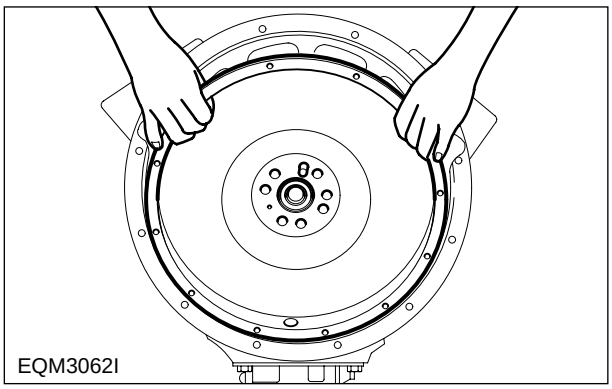

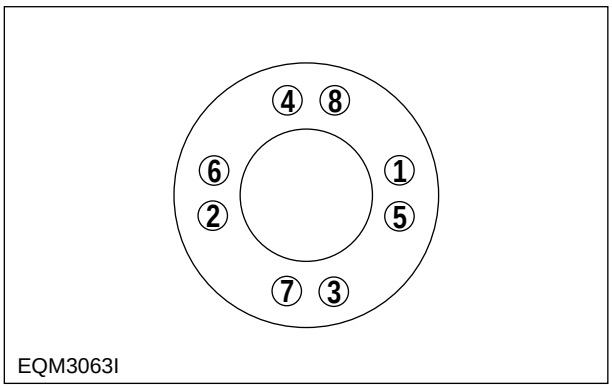

<Tightening sequence for flywheel fixing bolts>

3.3.9. Timing gear case

1) Mount gasket using dowel pin.
2) Install the timing gear case by aligning the dowel pin with the dowel pin hole on the timing gear case.

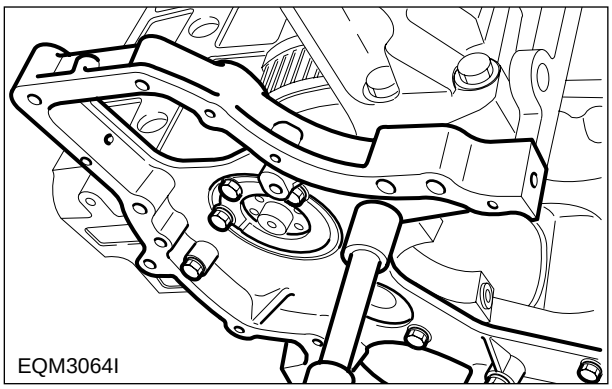

https://truckmanualshub.com/

3.3.10. Fuel injection pump drive gear assembly

1) Mount gasket by aligning the bolt holes with the pin holes on the bearing housing.
2) Tighten up the fixing bolts in the direction of fuel injection pump.

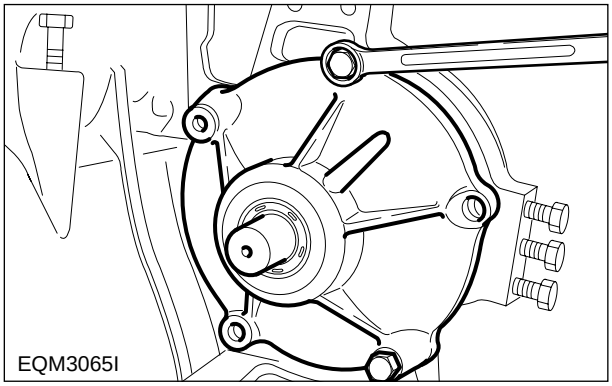

3.3.11. Timing gear

1) Install the oil pump idle gear onto the No. 7 bearing cap.
2) Install a thrust washer over the cam shaft and assemble the cam gear by aligning it with cam shaft key groove.
3) With the oil port on the idle gear pin facing the cylinder head, install the idle gear pin.
4) Install the idle gear by coinciding the marks impressioned on the crank gear, cam gear, fuel injection pump drive gear, and idle gear.
5) Install a thrust washer on the idle gear and tighten to specified torque (6.2kg•m).
6) Check and adjust the amount of backlash between gears using a feeler gauge. (backlash : 0.1~0.2)

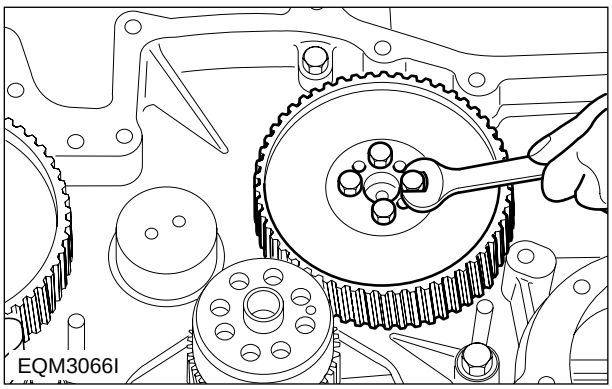

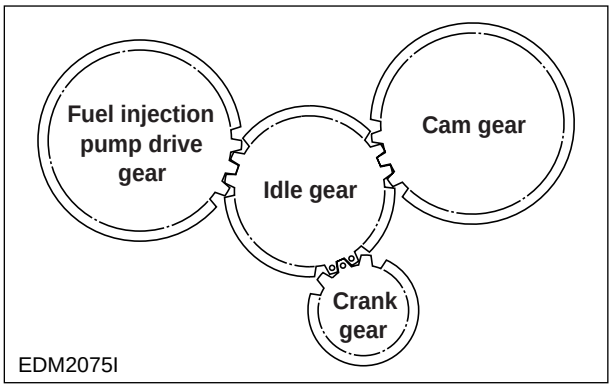

<Timing gear marks>

3.3.12. Timing gear case cover

1) Install dowel pin on the timing gear case.
2) Mount a gasket by aligning the fixing bolt holes with those on the gasket.
3) Align the dowel pin with the cover pin hole, then install the cover with a light tap.
4) Tighten the fixing bolts beginning with the oil pan fitting face.

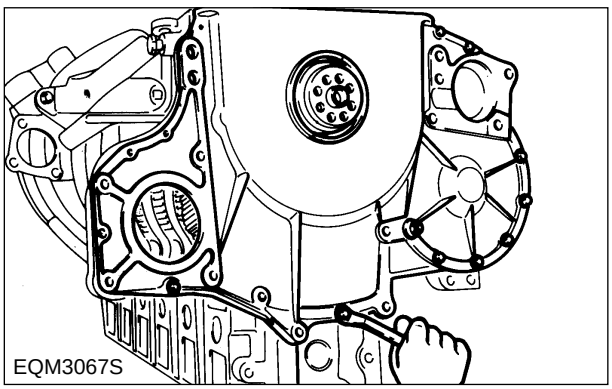

https://truckmanualshub.com/

3.3.13. Front oil seal

1) Apply lubricating oil to the outside of the oil seal and timing gear case inside diameter and fit them over the crank shaft, then assemble the oil seal using an oil seal fitting jig.

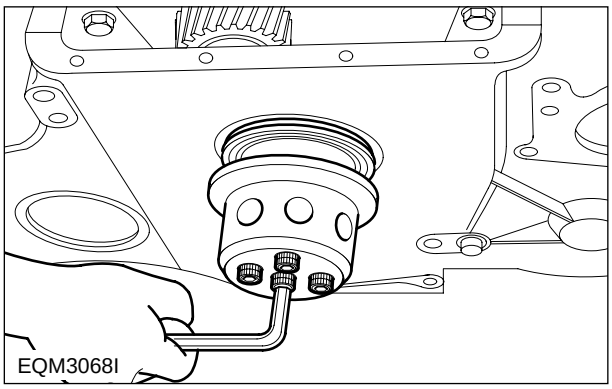
EQM3068I

3.3.14. Cylinder liner

1) Stand the cylinder block so that the flywheel faces downward.
2) Thoroughly clean the liner flange fitting surface and bore inside with compressed air to prevent the entry of foreign substances.
3) After the cleaning operation, make the cylinder liner dried up and push it into the cylinder block by hand.
4) Wet the liner inside diameter with engine oil.

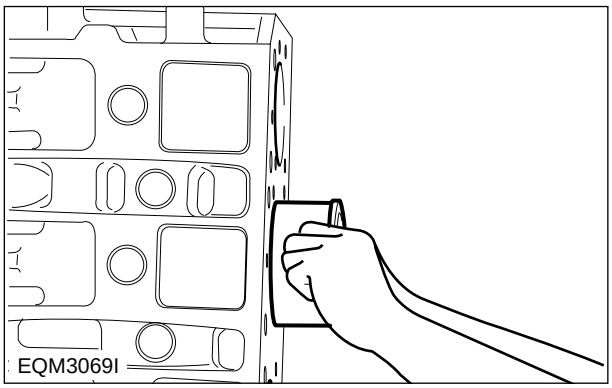
EQM3069I

3.3.15. Piston and connecting rod

1) Align the piston pin hole with the oiled connecting rod small end and press the piston pin (by lightly tapping with a rubber hammer) to assemble the conn. rod with the piston.
2) Noting the direction of the piston, make the longer side(machined with key groove on the bearing) of the conn. rod big end and the mark of ' ' impressioned on the inside of the piston face each other in opposite directions.
   On the piston head surface, the longer side of conn. rod big end is in opposite direction from the valve seating surface as well as in the same direction with the narrow margin of combustion chamber.
3) Install the snap rings and check to see that it is securely assembled.

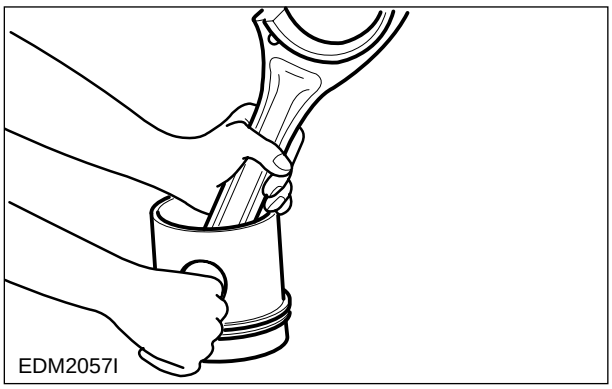
EDM2057I

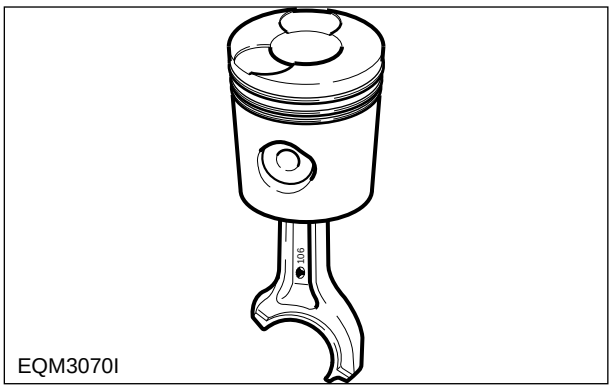
EQM3070I

https://truckmanualshub.com/

4) Install the piston ring in the piston using piston ring pliers.
5) Identify the mark "Y" or "TOP" on the ring end to prevent the top and bottom of the piston ring from being interchanged and make the marked portion face upward.

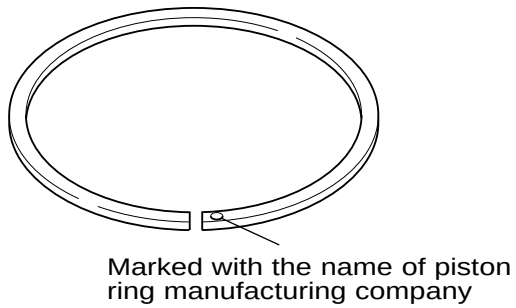

EQM3071I

6) Adjust the angle among individual piston ring gaps to 120° and fit a piston assembling jig onto the piston. Use care not to match the ring gaps with the pin direction.
7) Install the bearing by aligning it with the conn. rod key groove and apply oil to the bearing and piston.

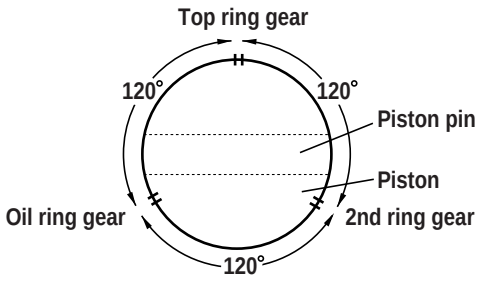

EFM2069I

8) Position the valve seating surface toward the tappet hole and insert the piston with hand.
   Take care not to damage the cylinder liner and piston, and slightly lift and insert the piston into the cylinder so that the ring may not be damaged by the fillet of the liner.

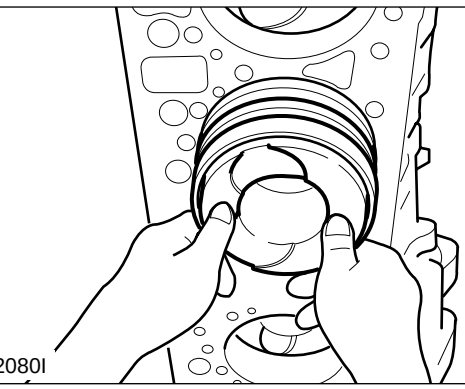
EDM2080I

9) Install the bearing in the conn. rod cap and apply oil.
10) Make sure that the manufacture numbers impressioned on the conn. rod cap and conn. rod big end are identical, and install the conn. rod cap by aligning it with dowel pin.
11) Wet the fixing bolts with oil, semi-tighten them with hand, tighten them to 15kg•m for 1st stage and 22kg•m for 2nd stage respectively, and finally to specified torque(28kg•m).

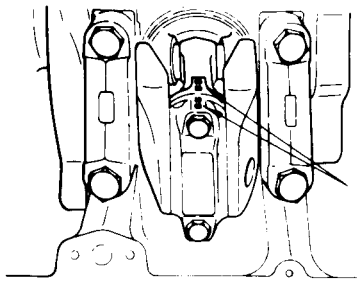
EQM3072S

12) Move the bearing cap with hand, and release and reassemble it if no movement is detected.

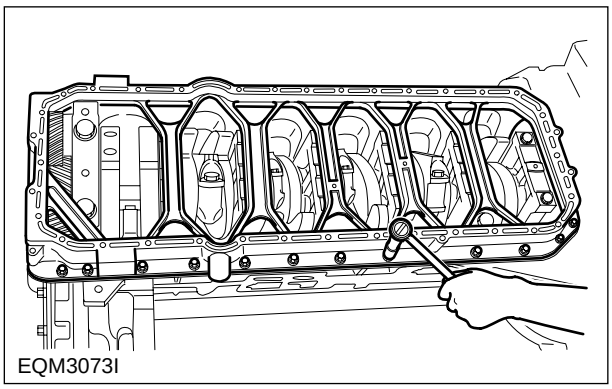
EQM3073I

3.3.16. Ladder frame

1) Cut out the gasket protruding from the joints of the timing gear case, case cover, and flywheel housing.
2) Apply silicon to each joint and attach gasket to the cylinder block.
3) Tighten fixing bolts at both ends, intermediate bolts, and remaining bolts in the described order.

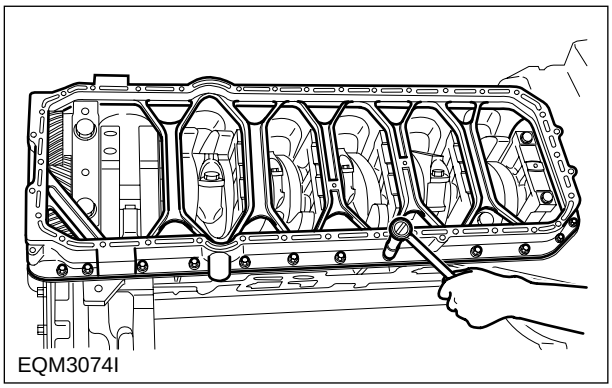
EQM3074I

3.3.17. Oil pump and oil pipe

1) Install a dowel pin in the No.7 bearing cap, mount gasket, then assemble the oil pump.
2) Install the fixing bolts and bend the fixing washers to prevent looseness of bolts.
3) Assemble the oil suction pipe with the delivery pipe, then install the bracket on the ladder frame.

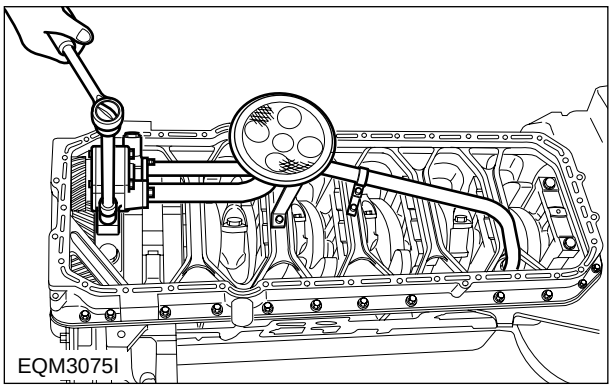
EQM3075I

3.3.18. Oil pan

1) Mount gasket and put the oil pan thereon.
2) Place stiffeners and tighten bolts.
3) Align the bolt holes with gasket holes to prevent damage to the gasket and tighten to specified torque(2.2kg•m).

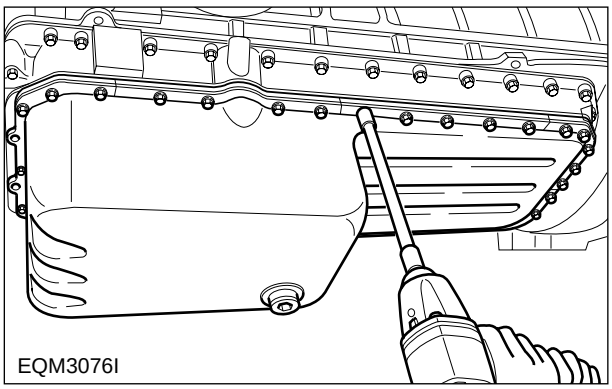
EQM3076I

3.3.19. Intake and exhaust valves

1) Identify the marks of "IN" and "EX" impressioned on the valve head before assembling the valve with the valve head.
2) With a valve stem seal fitting jig, assemble the valve stem seal with the valve guide.

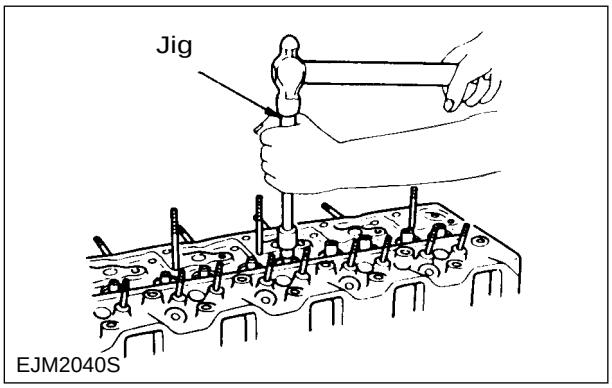

EJM2040S

3) After installing valve springs and spring retainer, press the retainer with a jig, then install cotter pin.
4) Tap the valve stem lightly with a rubber hammer to check that the valve is assembled correctly.

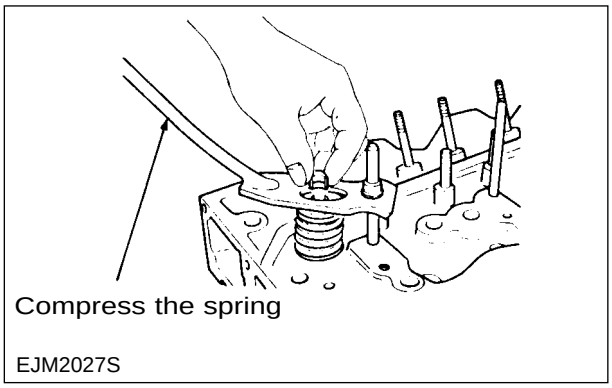

EJM2027S

3.3.20. Nozzle tube

1) Apply sealant (LOCTITE 620) to the nozzle tube and place the O-ring over the cylinder head fitting face on the nozzle tube, then install the nozzle tube in the cylinder head.
2) Install a nozzle tube pressing tool into the cylinder head, then tighten the nozzle fixing nuts.
3) Apply engine oil to an expander and install it onto the special tool.
4) Tighten the bolts until the expander is forced out of the cylinder head bottom.
5) After mounting the nozzle tube, make a hydraulic test to check for water leaks. (Test pressure: 2kg/cm^2)

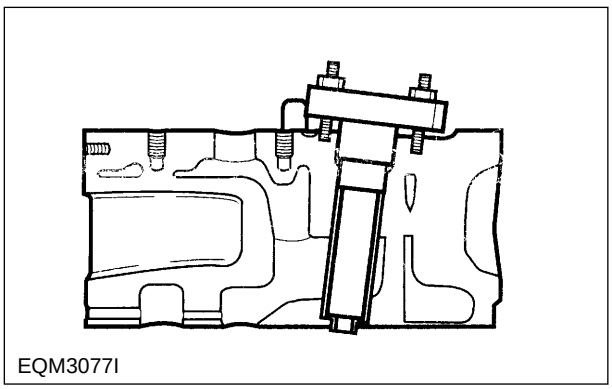
EQM3077I

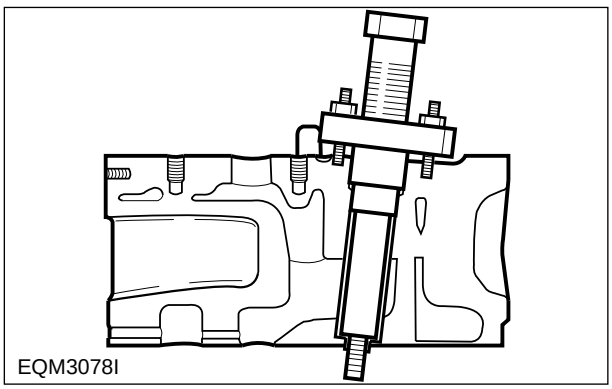
EQM3078I

https://truckmanualshub.com/

3.3.21. Rocker arm assembly

1) Apply lubricating oil to the rocker arm bush and shaft, and assemble the intermediate bracket with the rocker arm using fixing bolts.
2) Semi-install valve clearance adjusting bolts onto the rocker arm.
3) Install the washer, rocker arm, spring, rocker arm, washer, bracket, spring, washer, and snap ring in the described sequence.
4) Install the rocker arm and bracket in the same direction.

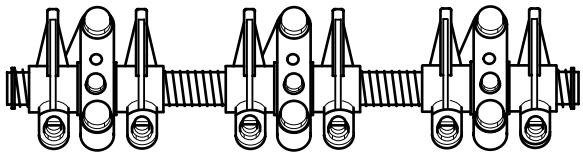

EQM3079I

3.3.22. Cylinder head

1) Install the injection nozzle fixing stud bolts and water pipe fixing stud bolts.
2) Clean the head bolt holes on the cylinder block with compressed air to remove foreign substances and thoroughly clean the gasket fitting face of the cylinder block.
3) Install head gasket, with 'TOP' mark facing upward, on the cylinder block by aligning the holes with dowels.
4) Check the inside of combustion chamber for foreign substances, and carefully mount the cylinder head assembly in the block by aligning the dowel pin with the dowel pin hole. Be careful not to damage the head gasket. If the dowel pin is not in alignment, lift the cylinder head again and then re-mount it.
5) Coat the head bolts with engine oil, then tighten them in proper sequence to the specified torque(24.5kg•m).

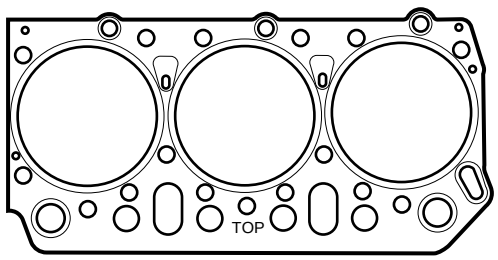

EQM3080I

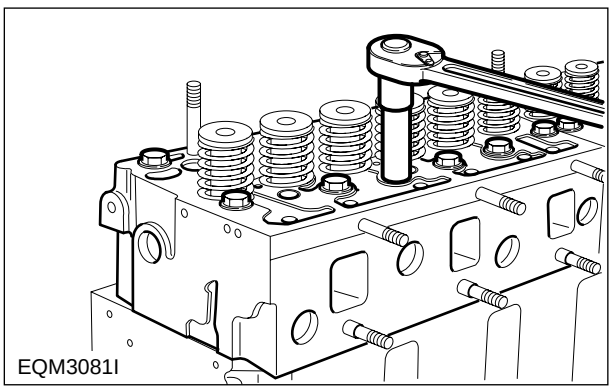

EQM3081I

https://truckmanualshub.com/

6) Coat the push rod with engine oil and insert it into the push rod hole.
7) Mount the rocker arm assembly on the cylinder head and tighten the rocker arm bracket fixing bolts to specified torque(4.4kg•m).
8) Adjust the valve clearance.

●Guide for valve clearance adjustment

- Place No. 1 piston in the "OT" position and adjust valve clearance at six positions as shown in th right-hand figure.
  At this time, the intake and exhaust valves of No. 6 cylinder are in an overlapped state.
- Turn the crank 360 degrees to bring the No. 6 piston in the "OT" position, then adjust the remaining valve clearance.
- Determine the sequence of the cylinders and intake/exhaust valves beginning with the flywheel housing size.
- Intake valve clearance : 0.3mm
- Exhaust valve clearance : 0.3mm

9) Adjust valve clearance with a feeler gauge and tighten the fixing nuts to specified torque(4.4kg•m).

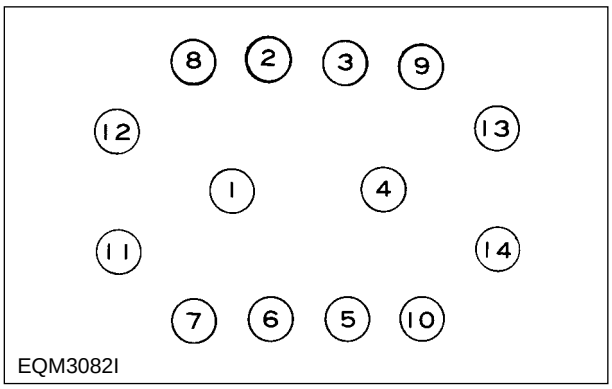

<Tightening sequence of cylinder head fixing bolts>

Cylinder No. / Adjusting valve	1		2		3		4		5		6	
	IN	EX	IN	EX	IN	EX	IN	EX	IN	EX	IN	EX
No. 1 TDC	○	○	○			○	○			○		
No. 6 TDC				◎	◎			◎	◎		◎	◎

● Cylinder No.

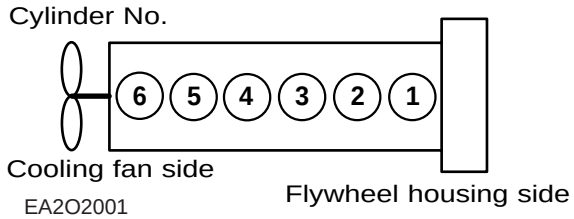

ENGINE TOP VIEW

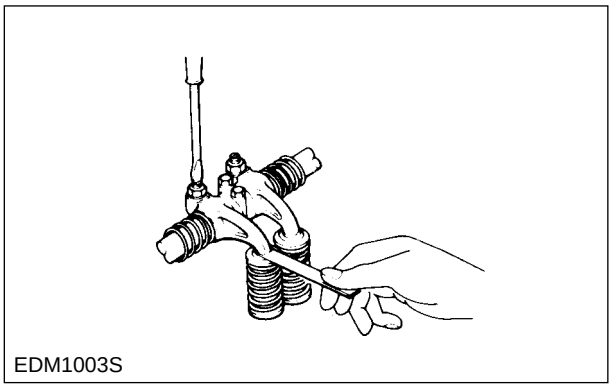

3.3.23. Injection nozzle

1) Install the dust seal with its round portion facing downward.
2) Mount a seal ring(0.5mm) on the seal ring seating surface of the nozzle tube and assemble it with the stud bolt with the nozzle pipe installing direction facing outward.
3) Be sure to follow the specified torque (1.0kg•m).

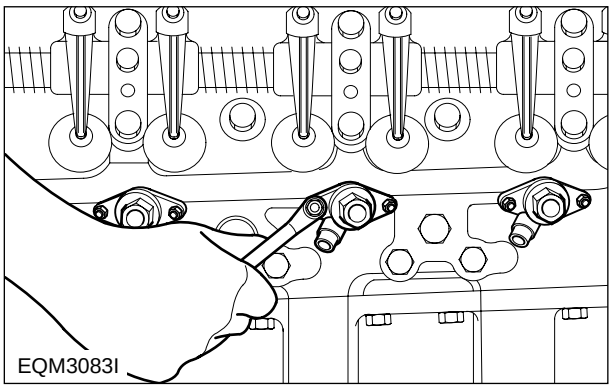

3.3.24. Water pipe and thermostat

1) Install the water pipe onto the cylinder head.
2) Install the thermostat in the housing.
3) With socket head bolts, install the thermostat housing onto the water pipe.

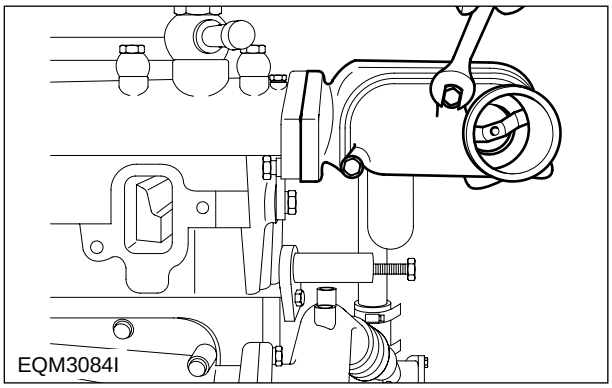
EQM3084I

3.3.25. Oil cooler

1) Install the oil cooler onto the oil cooler cover.
   Carefully apply the gasket to prevent oil leakage.
2) Do not damage the gasket and install the cover onto the cylinder block.
3) Connect a connection pipe between the water pump and oil cooler.

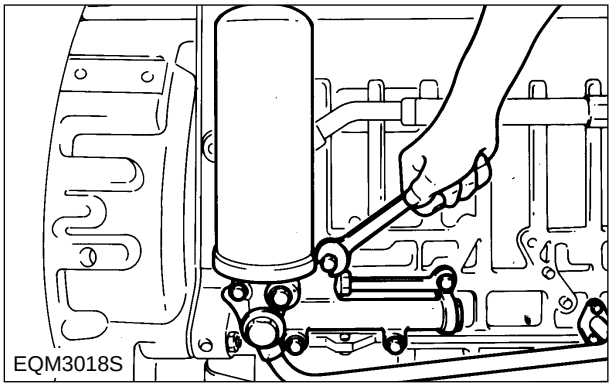
EQM3018S

3.3.26. Oil filter

1) With the hollow screw, assemble the oil pipe connected between the oil cooler and cylinder block.
2) Install a connection pipe between the oil cooler and oil filter.
3) Install the oil cooler connecting pipe.
4) Install packing and assemble the oil filter using a filter assembling wrench.

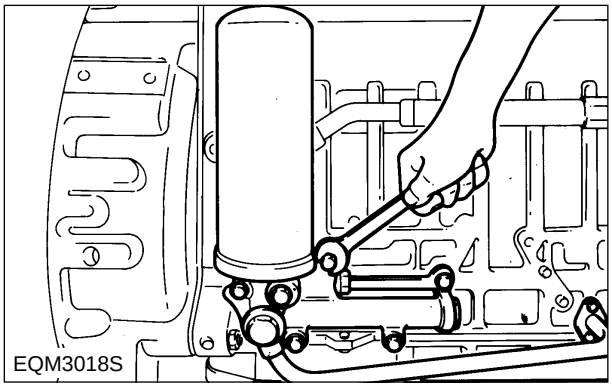
EQM3018S

3.3.27. Injection pump

1) Install the fuel injection pump bracket in the cylinder block.
2) After measuring the amount of run-out with an alignment setting jig, disassemble the bracket, adjust the shims, then reassemble it.
3) Mount the top/bottom adjusting shims in the bracket and then mount the fuel injection pump.

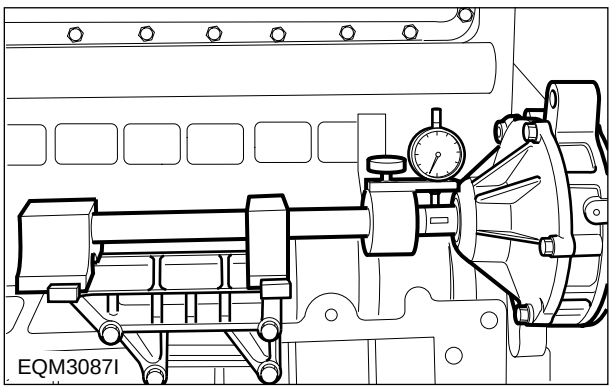
EQM3087I

4) Tighten the fixing bolts in a diagonal sequence to specified torque (4.4kg•m).
5) Turn the flywaheel until No. 1 piston is placed in the "OT" position, and then turn again the flywheel clockwise until, of notch marks on the flywheel, the notch mark under the figure corresponding to the injection timing is aligned with the pointer(⬇) on the flywheel housing.
6) Turn the timer until the notch mark of the indicator plate attached to the fuel injection pump is aligned with the notch mark of the timer.

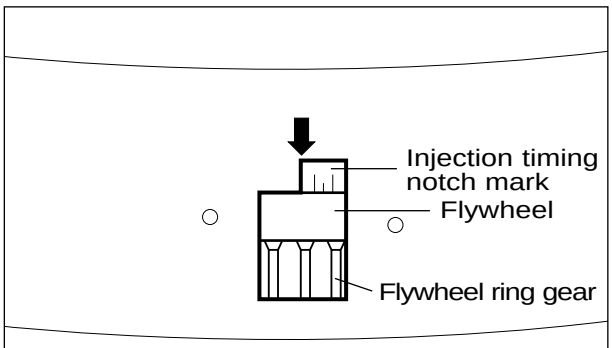

EQM3088I

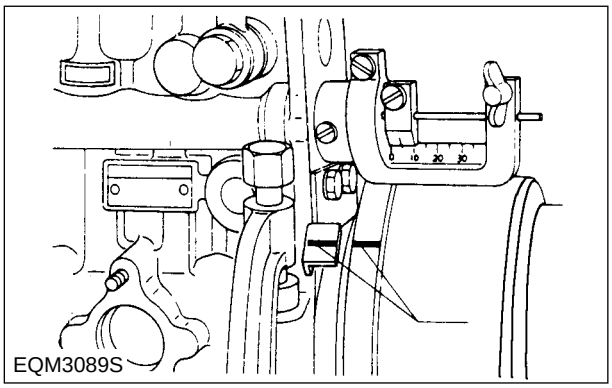
EQM3089S

7) Tighten the coupling fixing bolts and nuts to specified torque(6.0kg•m).
8) Tighten the drive shaft connecting flange fixing bolts to specified torque(7.5~8.5kg•m).
9) Install the oil delivery pipe and return pipe.
10) At the same time, install the oil delivery pipe which feeds oil to the air compressor.

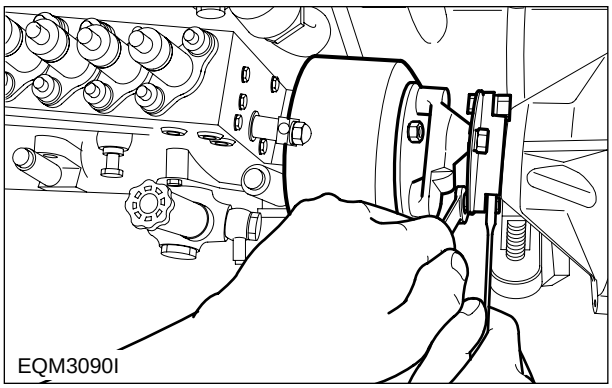
EQM3090I

3.3.28. Power steering pump

1) Mount gasket, align the dowel pin with the pin hole, then assemble the power steering pump by using hammer not to damage the gears .

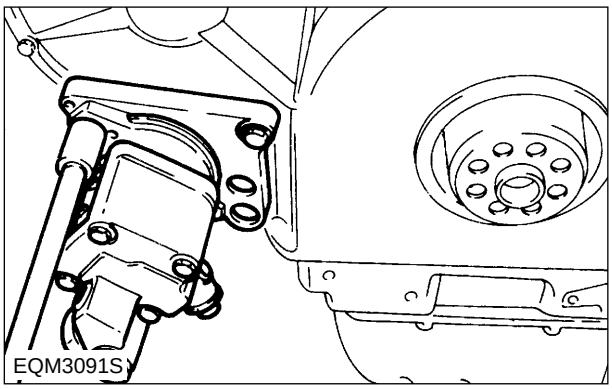
EQM3091S

3.3.29. Vibration damper and pulley

1) Install the vibration damper on the crank shaft pulley.
2) Install the crank shaft pulley assembly on the crank shaft, then tighten the bolts and thrust washers.
   (bolt tightening torque : 13.4kg•m)

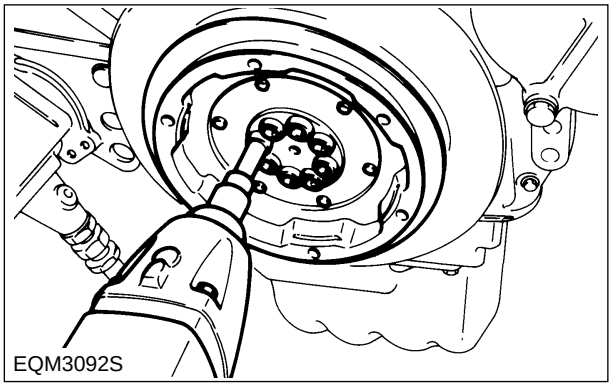
EQM3092S

3.3.30. Idle pulley

1) Install the idle pulley onto the timing gear case cover.

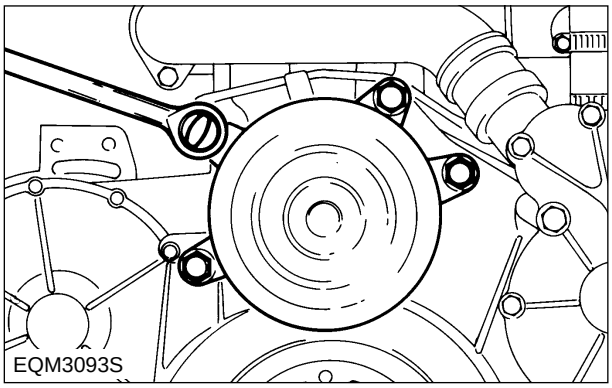
EQM3093S

3.3.31. Air compressor

1) Mount gasket and assemble the air compressor assembly with care to prevent damage.
2) Using hollow screw, assemble the oil delivery pipe with the adaptor.
3) Install water hoses to the water pump.
4) Connect the air hoses and pipes to the air compressor.

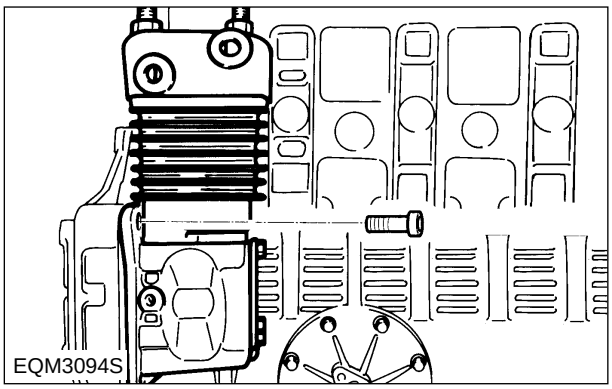
EQM3094S

3.3.32. Water pump

1) Mount a new gasket.
2) Install the water pump drive pinion over the air compressor spline.
3) Connect water pipes, by-pass pipe, and air compressor cooling water hoses to the water pump.
4) Connect a water pipe to the expansion tank.

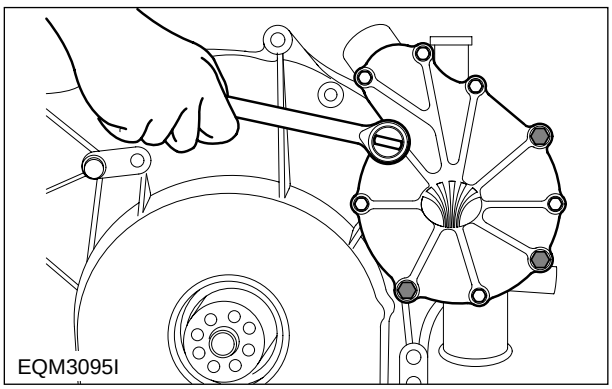
EQM3095I

3.3.33. Exhaust manifold

1) Install the exhaust manifold gasket over the stud bolts by aligning the gasket with the exhaust port on the cylinder head so that the face and back of the gasket can be positioned correctly.
2) Semi-assemble the exhaust manifold and install the heat resisting plate.
3) First, install the nuts and then place an additional nut on each of them to prevent looseness.

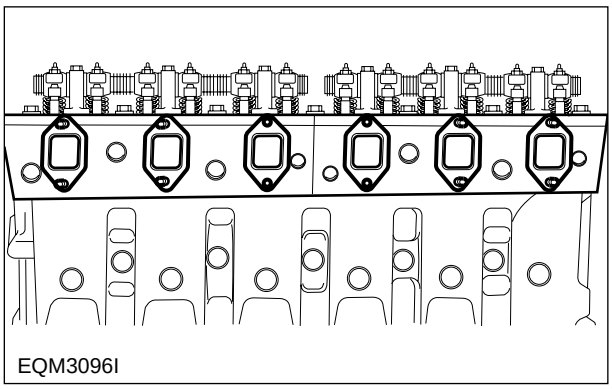
EQM3096I

3.3.34. Turbocharger

1) Fit a new gasket over the stud bolts of the exhaust manifold before tightening those turbocharger fixing bolts.
2) Install the oil supply pipe and return pipe.
3) Fit a gasket on the exhaust side of the turbocharger to assemble the exhaust elbow, then install the bracket onto the cylinder block.
4) Semi-assemble the bracket to the intake pipe, connect a rubber hose between the turbocharger and intake pipe using rubber hose, then assemble the bracket completely.

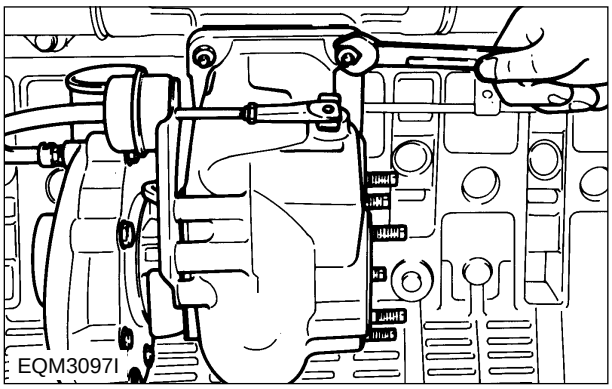
EQM3097I

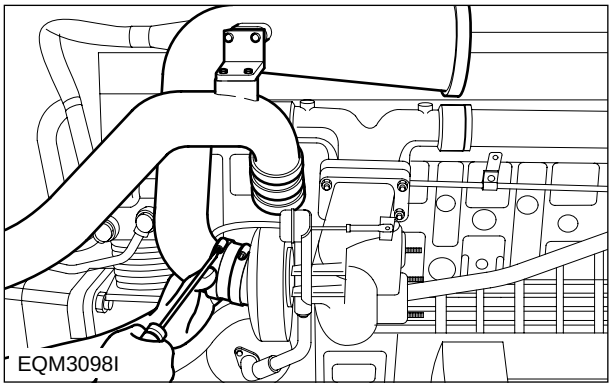
EQM3098I

3.3.35. Starter

1) Assemble the starter in position on the flywheel housing.

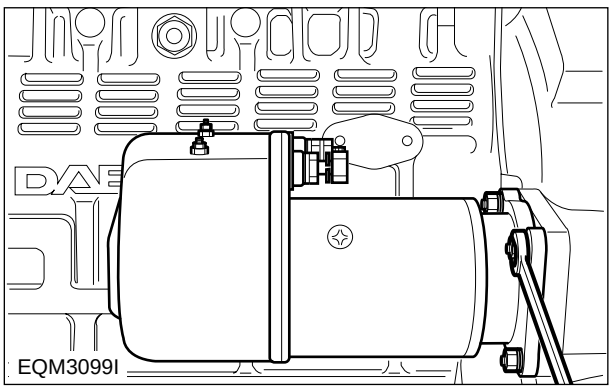
EQM3099I

https://truckmanualshub.com/

3.3.36. Intake manifold

1) Fit a gasket on the intake manifold before assembling the intake manifold.
2) Mount the air heater gasket on the intake manifold, then assemble the air heater with the intake manifold.
3) Connect the air hose to the boost compensator mounted on the fuel injection pump.

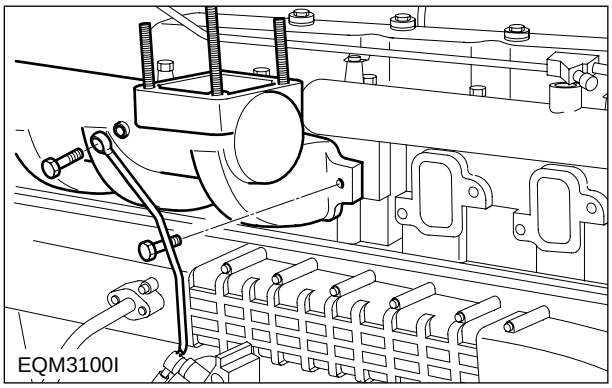
EQM3100I

3.3.37. Injection pipe

1) Semi-assemble a nut at both ends of the fuel high pressure pipe and tighten them up one by one to specified torque.
2) Tighten hollow screws to assemble the fuel return pipe.
3) Assemble the fuel return hose with the fuel injection pump.

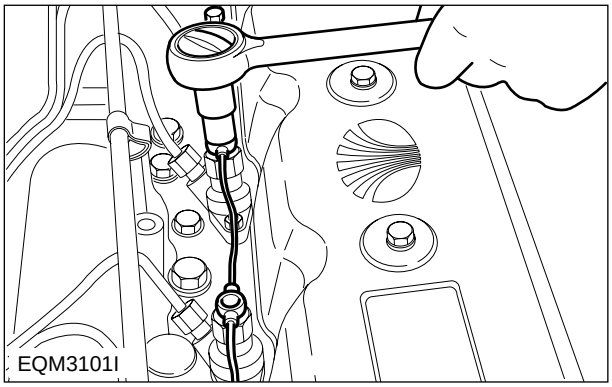
EQM3101I

3.3.38. Fuel filter

1) Assemble the fuel filter at bracket.
2) Assemble the fuel hose.

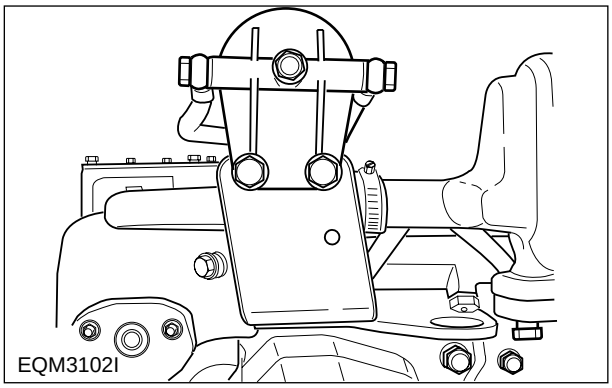
EQM3102I

3.3.39. Cylinder head cover

1) Assemble the cover packing with the cover, install the cover on the head, then tighten the fixing bolts in sequence to specified torque (1.5kg•m).
2) Assemble the breather hose with PCV valve.

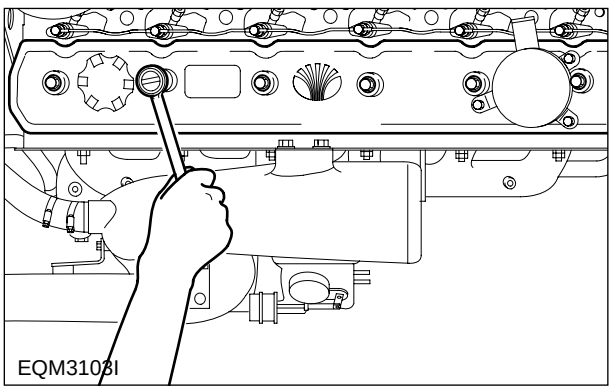
EQM3103I

3.3.40. Air-conditioning compressor

1) Install the A/C compressor mounting bracket on the timing gear case.
2) Install the alternator mounting bracket on the timing gear case, then install A/C compressor fixing bolts.
3) Tighten the fixing bolts.

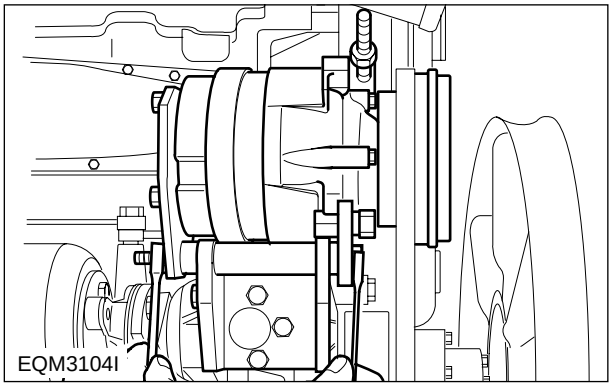
EQM3104I

3.3.41. Alternator

1) Install the alternator mounting bracket with a fixing bolt onto the cylinder head.
2) Install the alternator in position.

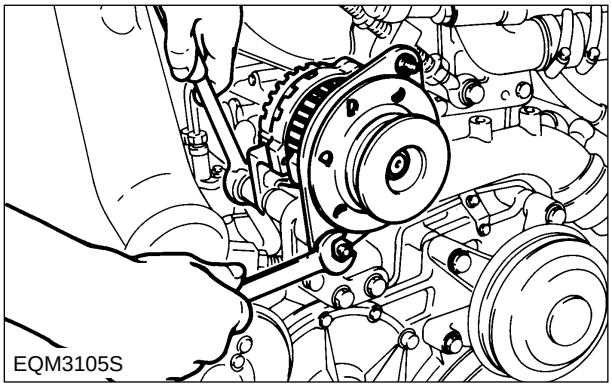
EQM3105S

3.3.42. Cooling fan

1) Install the cooling fan and flange onto the fan coupling.
2) Install the flange onto the crank pulley.

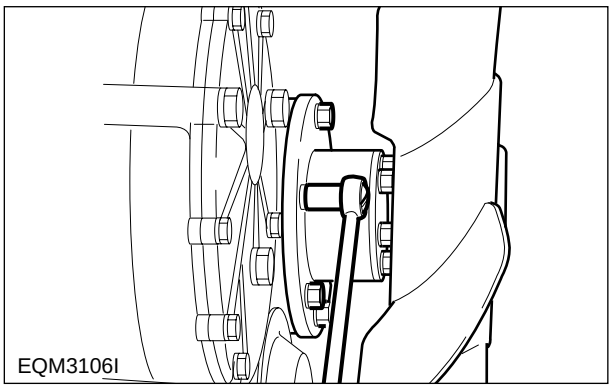
EQM3106I

3.3.43. V-belt

1) Install the V-belt on the crank pulley, idle pulley and alternator pulley.
2) Adjust the V-belt tension using the A/C compressor tension adjusting bolt.
3) Install another V-belt on the idle pulley and alternator pulley.
4) Adjust the V-belt tension using the alternator tension adjusting bolt.

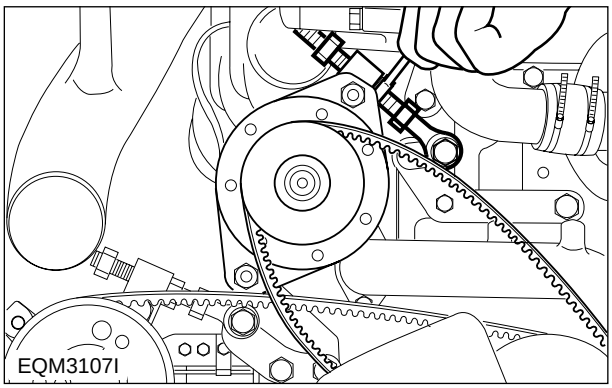
EQM3107I

https://truckmanualshub.com/

3.3.44. Fan guide

1) Install the three fan guide brackets.
2) Install the fan guide to the bracket.

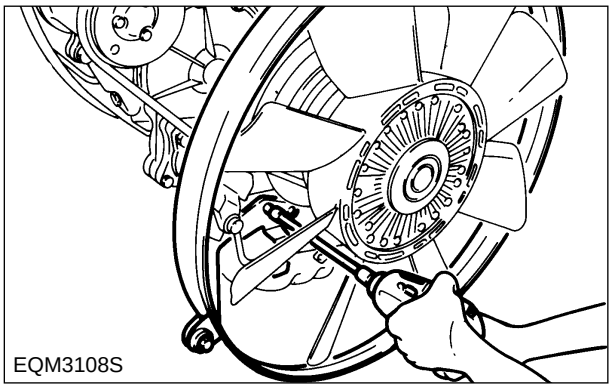
EQM3108S

3.3.45. Oil level gauge

1) Assemble the oil level gauge to the ladder frame.

3.4. Breaking-in

3.4.1. Preparations for breaking-in

1) Fill 20ℓ of new engine oil through the oil filler cap.
   When measuring the oil level with the oil dip stick with the engine mounted, the oil level must indicate about 10mm above the MAX line.
2) Connect water hose and fill up cooling water.
3) Connect the fuel hose to the fuel tank and to top(radiator or surge tank). check the air bleeding of the fuel system.
4) Connect the electrical systems such as starter, air heater, etc. with power source.

3.4.2. Breaking-in

1) Idle the engine for about 30 minutes.
2) Run the engine at 1,200~1,600 rpm for about 2 hours.
3) Run the engine at the maximum speed for about 10 minutes when the temperature of cooling water reaches 80°~95°.
4) Keep checking the oil pressure while running the engine.
5) Make sure to check for leaks of oil, fuel, or cooling water and pay particular attention to exhaust gases and unusual sound.

3.4.3. Diagnostics after the breaking-in

1) Readjust the valve clearance with the engine cooled down.
2) Recheck the oil level and replenish as required.

https://truckmanualshub.com/

4. Maintenance of major components

4.1. Cooling system

4.1.1. General descriptions and main data

This engine is water-cooling type. Heat from the combustion chamber and engine oil heat are cooled down by coolant and radiated to the outside, resulting in the normal operation of the engine.

Looking into the cooling system, the water pumped up by the water pump circulates around the oil cooler through the water pipe to absorb the oil heat, and then flows through the water jacket of the cylinder block and water passage of the cylinder head to absorb the heat of the combustion chamber.

The water absorbing the oil heat and combustion chamber heat goes on to the thermostat through the water pipe, and circulates to the water pump if water temperature is lower than the valve opening temperature on the thermostat, while circulating to the radiator at water temperature higher than the valve opening temperature. At the radiator, the heat absorbed in the coolant is radiated to cool down and the coolant recirculates to the water pump.

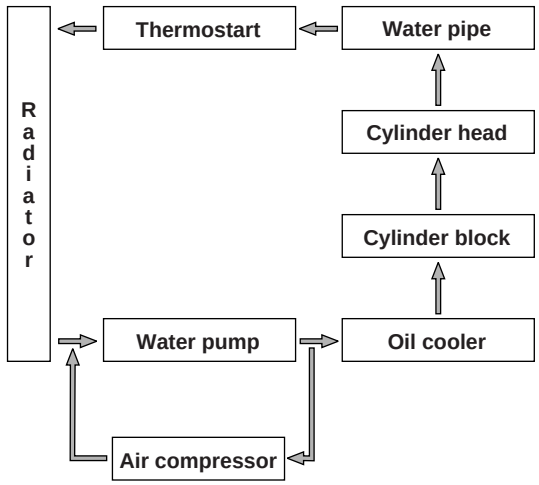

EQM4001I

<Figure 4-1> Diagram of cooling system

● **Specifications**

Item	Specifications
1. Water pump	Centrifugal type
Type	
Delivery(ℓ/min)	About 350
Pumping speed	2,100 rpm
Pump back pressure	760mmHg
2. Thermostat	
Operating temperature(℃)	83~95
3. Cooling fan and belt	
Fan diameter × Number of blades	700 × 8
Fan belt tension	15mm/deflection by thumb

https://truckmanualshub.com/

4.1.2. Water pump

1) Loosen the bolt (14) to disassemble the housing cover (13).
2) Heat the impeller (5) slightly, then remove it using a puller.
3) Remove the mechanical seal.
4) Remove the shaft and bearing assembly from the housing.
5) With a press, remove the spline shaft and bearing.
6) Reverse the disassembly sequence for reassembly operation.
7) Replace the oil seal (6) with a new one at reassembly.
8) To reassemble the impeller, maintain a constant gap(0.3~0.6mm) between the impeller and pump housing using a feeler gauge.

https://truckmanualshub.com/

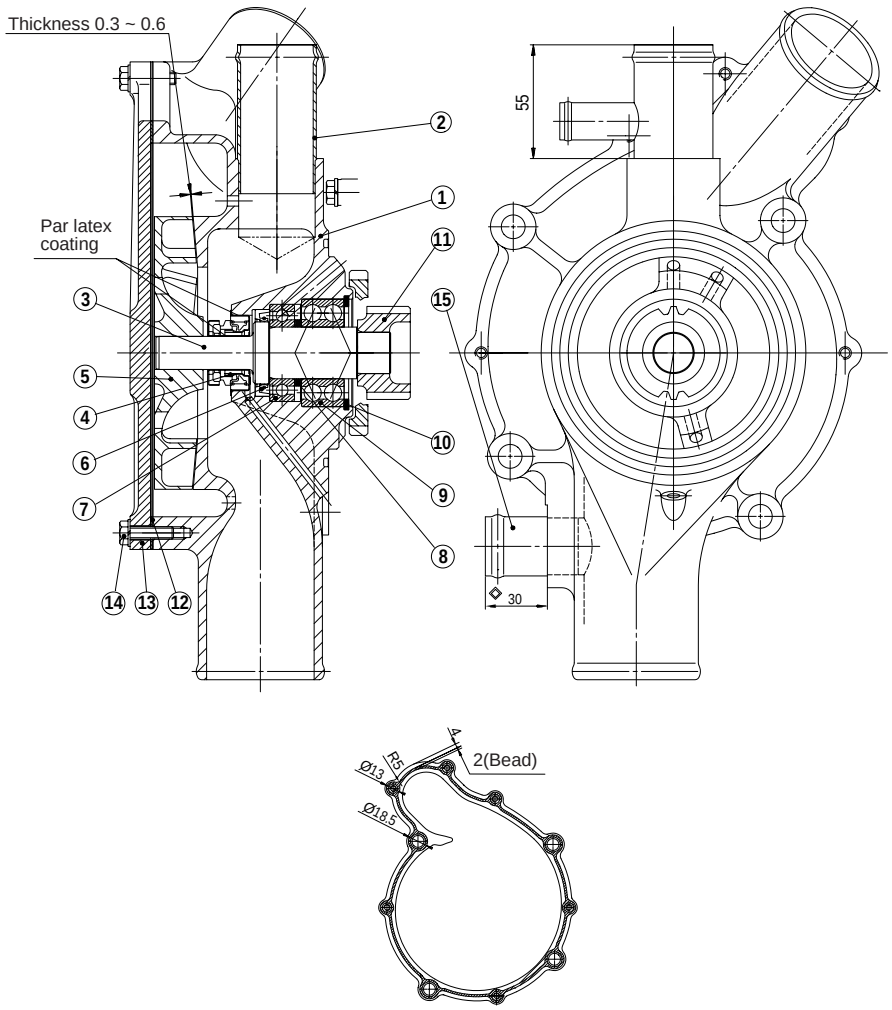

EQM4003I

1. Water pump housing
2. Pipe
3. Shaft
4. Mechanical seal
5. Impeller
6. Oil seal
7. Ball bearing
8. Spacer
9. Ang. contact ball
10. Stop ring
11. Spline shaft
13. Cover, water pump housing
14. Bolt ass'y
15. Pipe for surge tank

https://truckmanualshub.com/

4.1.3. Thermostat

1) General descriptions and main data

The thermostat maintains a constant temperature of coolant(90 ~95℃) and improve thermal efficiency of the engine by preventing heat loss.

Namely, when the temperature of coolant is low, the thermostat valve is closed to make the coolant bypass to directly enter the water pump; when the coolant temperature rises to open wide the thermostat valve, the bypass circuit is closed and the water passage to the radiator is opened so that the coolant is forced to flow into the radiator.

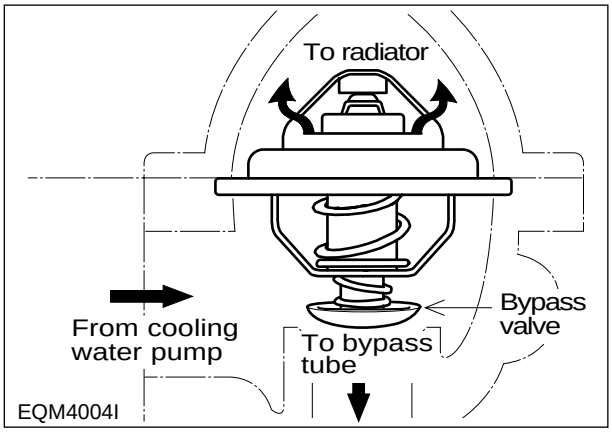

<Figure 4-3> Thermostat

Item	Specifications
Type	Wax-pallet type
Open at(℃)	83
Open wide at(℃)	95
Valve lift mm	8 or more

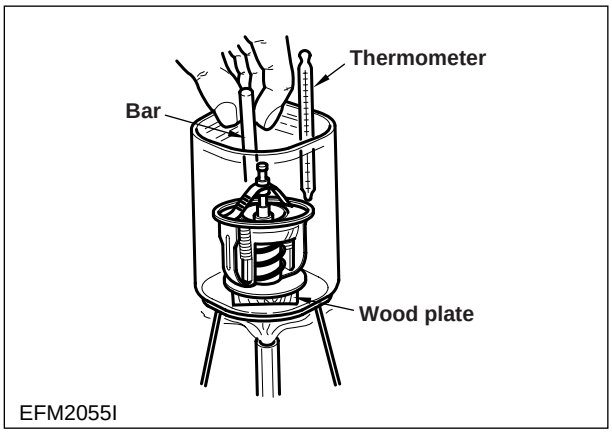

<Figure 4-4> Checking thermostat

2) Inspection

(1) Check the wax pallet and spring for damage.

(2) Put the thermostat in a container of water, then heat the water slowly and check temperature with a thermometer. If the valve lift is 0.1mm(starting to open) at temperature of 83℃ and 8mm or more(opening wide) at temperature of 95℃, the thermostat is normal.

3) Replacing thermostat and precautions for handling

(1) Precautions for handling

The wax pallet type thermostat does not react as quickly as bellows type one to a variation of temperature of coolant. Such relatively slow reaction is mainly due to the large heat capacity of the wax pellet type thermostat. Therefore, to avoid a sharp rise of coolant temperature, it is essential to idle the engine sufficiently before running it. In cold weather, do not run the engine at overload or overspeed it immediately after starting off.

(2) When draining out or replenishing coolant, do it slowly so that air is bled sufficiently from the entire cooling system.

(3) Replacing thermostat

If the thermostat is detected defective, replace with a new one.

4.1.4. Diagnostics and troubleshooting

Complaints	Possible causes	Corrections
1. Engine overheating	(1) Lack of coolant	(1) Replenish coolant
	(2) Radiator cap pressure valve spring weakened	(2) Replace cap
	(3) Fan belt loosened or broken	(3) Adjust or replace fan belt
	(4) Fan belt fouled with oil	(4) Replace fan belt
	(5) Thermostat inoperative	(5) Replace thermostat
	(6) Water pump defective	(6) Repair or replace
	(7) Restrictions in water passages due to deposit of scales	(7) Clean radiator and water passages
	(8) Injection timing incorrect	(8) Adjust injection timing correctly
	(9) Restriction in radiator core	(9) Clean exterior of radiator
	(10) Gases leaking into water jacket due to broken cylinder head gasket	(10) Replace cylinder head gasket
2. Engine overcooling	(1) Thermostat inoperative	(1) Replace thermostat
	(2) Ambient temperature too low	(2) Install radiator curtain
3. Lack of coolant	(1) Radiator leaky	(1) Correct or replace
	(2) Radiator hoses loosely connected or damaged	(2) Retighten clamps or replace hoses
	(3) Radiator cap valve spring weakened	(3) Replace cap
	(4) Water pump leaky	(4) Repair or replace
	(5) Heater hoses loosely connected or broken	(5) Tighten or replace hoses
	(6) Cylinder head gasket leaky	(6) Replace cylinder head gasket
	(7) Cylinder head or cylinder block cracked	(7) Replace cylinder head block
4. Cooling system noisy	(1) Water pump bearing defective	(1) Replace bearing
	(2) Fan loosely fitted or bent	(2) Retighten or replace fan
	(3) Fan out of balance	(3) Replace fan
	(4) Fan belt defective	(4) Replace fan belt

https://truckmanualshub.com/

4.2. Lubricating system

4.2.1. General descriptions and main data

1) General descriptions

All the engine oil pumped up from the oil pan by the gear type oil pump is filtrated through the oil cooler and oil filter, and this filtrated oil is forced through the main oil gallery in the cylinder block from where it is distributed to lubricate the various sliding parts, fuel injection pump, and air compressor in order to ensure normal engine performance.

2) Specifications

Item	Specifications	Item	Specifications
Lubricating system	Forced pressure circulation	Oil filter type	Full-flow
Oil pump type	Gear type	Bypass for filter element	
Relief valve opening pressure	10±1.5	Valve opening pressure(kg/cm²)	1.8~2.3
(kg/cm²)		Bypass for entire oil filter	
Bypass for oil cooler		Valve opening pressure(kg/cm²)	4.0~4.8
Opening pressure (kg/cm²)	5+1		
Adjusting valve for spray nozzle			
Opening pressure (kg/cm²)	1.5~1.8		

3) Diagram of lubricating system

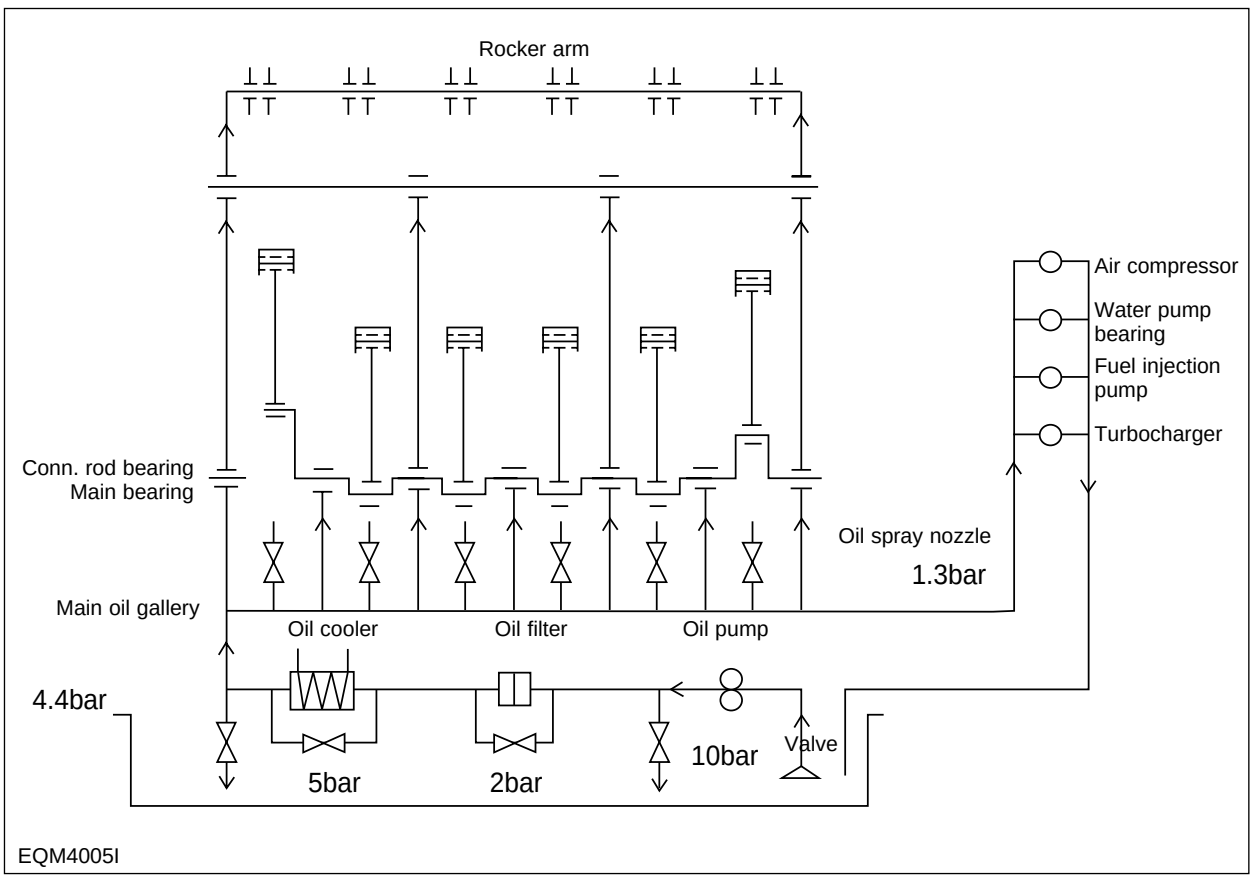

<Figure 4-5> Diagram of lubricating system

https://truckmanualshub.com/

4.2.2. Oil pump

1) Disassembly

(1) Disassembly of oil pump drive gear

a. Unscrew the screw and disassemble the oil relief valve.

b. Loosen the washer for the oil pump drive gear fixing nut and remove the nut.

c. Disassemble the drive gear.

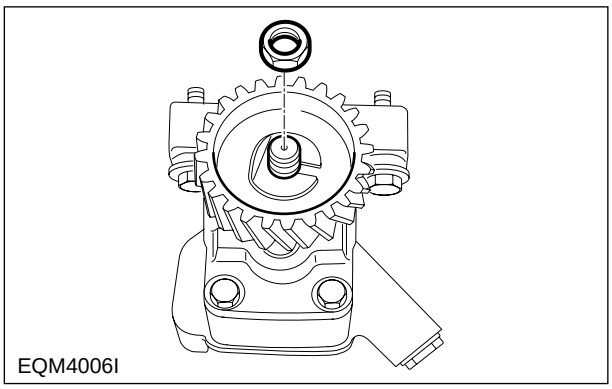

<Figure 4-6> Disassembling drive gear

(2) Remove the oil pump cover fixing nuts and disassemble the oil pump cover.

The oil pump cover is fixed with the two dowel pins.

(3) Disassemble the drive gear and driven gear.

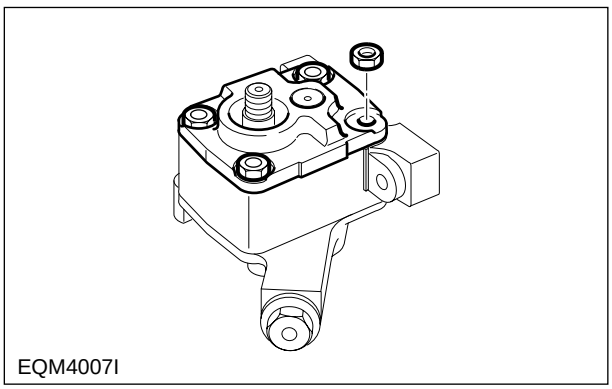

<Figure 4-7> Disassembling pump cover

2) Inspection and correction

(1) With steel rule and feeler gauge, measure the axial end play of the oil pump gear.

Replace if the measured value is beyond the limit.

Limit (mm)	0.025~0.089

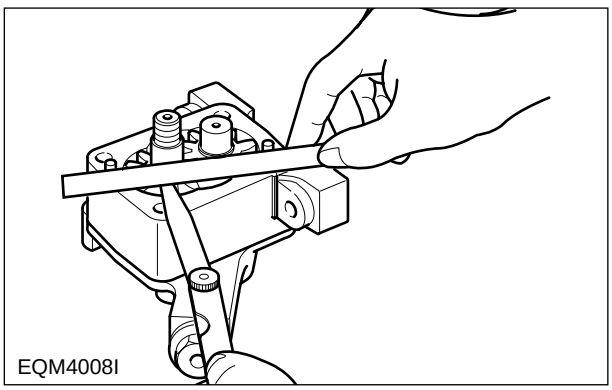

<Figure 4-8> Measuring end play

(2) With a feeler gauge, measure the amount of back lash between the oil pump drive gear and driven gear.

Replace if the measured value is beyond the limit(0.50~0.64mm).

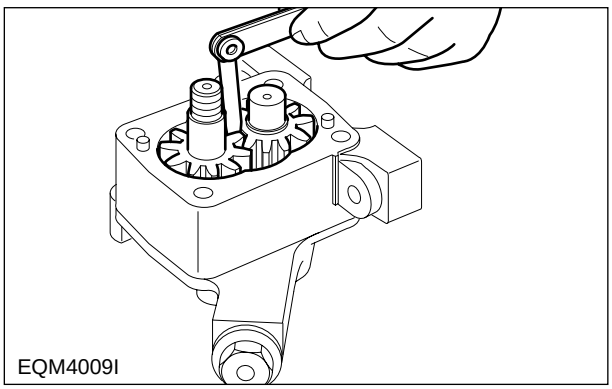

<Figure 4-9> Measuring gear back lash

https://truckmanualshub.com/

(3) Measuring clearance between drive shaft and bushing

a. Measure the outside diameter of the drive shaft and driven shaft, and replace if the measured values are less than the limit (ϕ16.95mm).

b. Measure the inside diameter of the pump body bushing to determine the clearance between the bushing and shaft, and compare the measured value with the standard value to determine whether to replace or not.
(Clearance : 0.032~0.077mm)

3) Reassembly

(1) For reassembly, reverse the disassembly sequence.

4.2.3. Oil filter

The oil filter mounted in this engine is of cartridge type, so it is necessary to replace it with a new one at the specified intervals.

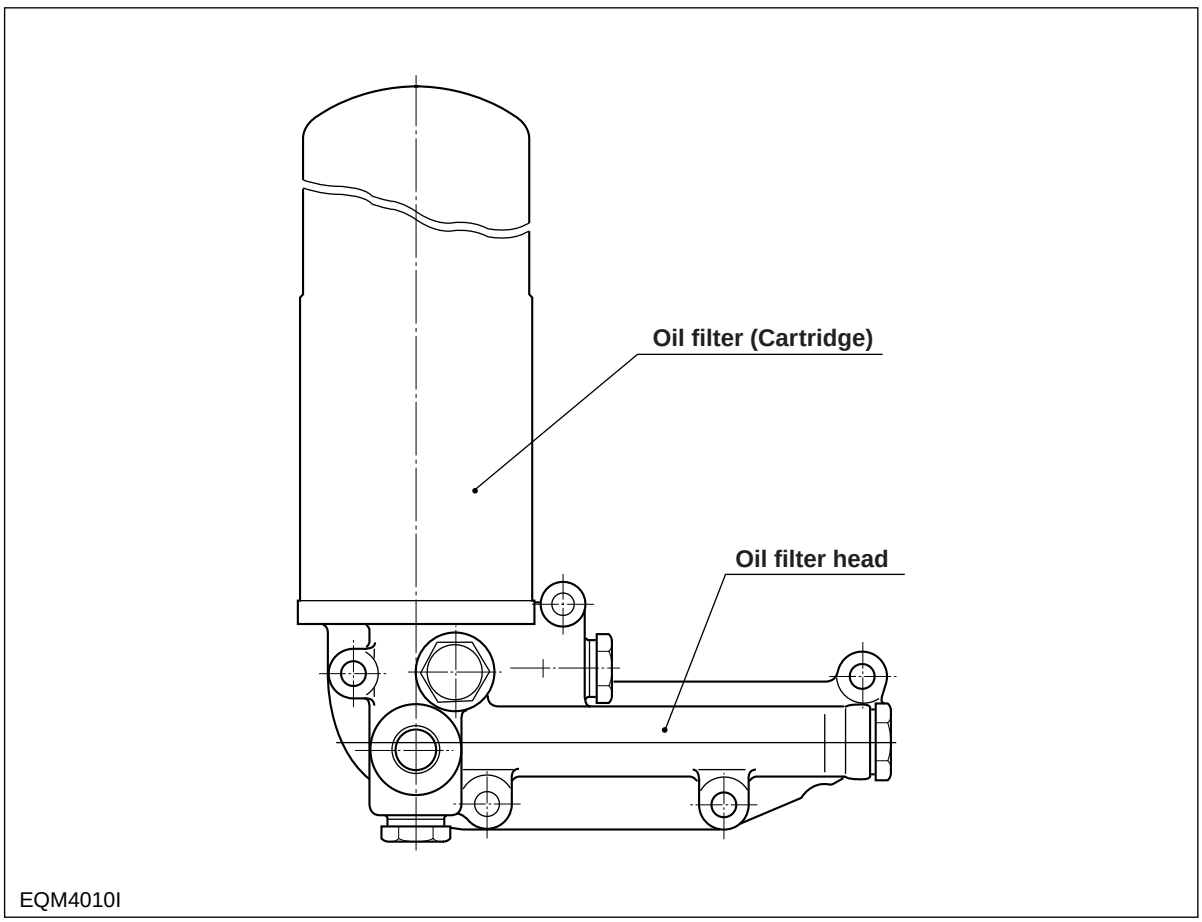

<Figure 4-10> Oil filter

4.2.4. Diagnostics for oil

Complaints	Possible causes	Corrections
Oil consumption excessive	(1) Poor oil (2) Oil seal or packing leaky (3) Pistons or piston rings worn (4) Cylinder liner worn (5) Piston rings sticking (6) Valve guide oil seals or valve guides, or valve stem worn	(1) Use suggested oil (2) Replace cap (3) Replace pistons and/or piston rings (4) Replace cylinder liner (5) Replace pistons and/or piston rings (6) Replace
Oil pressure too low	(1) Poor oil (2) Relief valve sticking (3) Restrictions in oil pump strainer (4) Oil pump gear worn (5) Oil pump feed pipe cracked (6) Oil pump defective (7) Oil pressure gauge defective (8) Various bearings worn	(1) Use suggested oil (2) Replace (3) Clean strainer (4) Replace (5) Replace (6) Correct or replace (7) Correct or replace (8)Replace
Oil deteriorates quickly	(1) Restriction in oil filter (2) Gases leaking (3) Wrong oil used	(1) Replace filter element (2) Replace piston rings and cylinder liner (3) Use suggested oil

https://truckmanualshub.com/

4.3. Fuel system

4.3.1. General descriptions

The fuel system consists of the fuel tank, injection pump, injection nozzle, fuel filter, and fuel lines such as pipes and hoses necessary to connect those components.

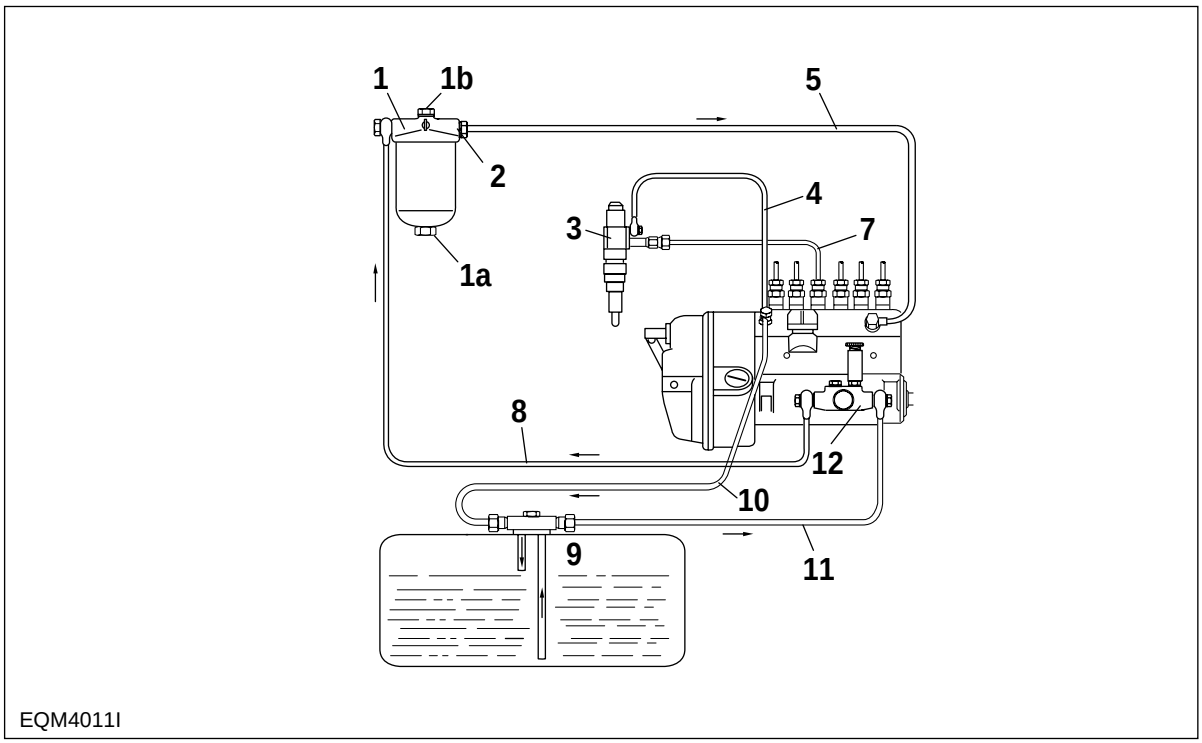

<Figure 4-11> Diagram of fuel system

1. Fuel filter ass'y
1a. Fuel water drain plug
1b. Air bleeding plug (for fuel filter)
2. Fuel pipe connector
3. Injection nozzle
4. Overflow tube
5. Fuel pipe (filter - injection pump)
6. Overflow valve
7. Delivery pipe
8. Fuel pipe (manual pump - filter)
9. Fuel tank
10. Fuel return pipe
11. Suction pipe
12. Feed pump
13. Injection pump

4.3.2. Injection pump

The components related to the injection pump should be serviced at regular intervals as the plunger and delivery valve may be worn after a given length of time for use and cause the deterioration of the engine.

Make sure that servicing should be performed at the professional maintenance shop as authorized by Bosch or Zexel Company.

For adjustment of fuel injection volume, refer to the 'Specifications of fuel injection pump' described on the following pages.

1) DE12

(1) DE12(A)

(a) Main data and specifications

Part No. : 65.11101-7260(106671-9170)
Model : PE6P type
Governor : RFD+C type
Timer : SD type, range of operation: 5.5°/600-1100 rpm
Plunger : 65.11125-0010
Delivery valve : 65.11108-6009
Fuel feed pump : 65.12101-7013
Pre-stroke : 4.7±0.05mm
Rotating direction : C.W. at driving gear side
Injection order : 1-5-3-6-2-4
Injection timing : BTDC 12°

(b) Calibration data

Adjusting point	Rack position (mm)	Pump speed (rpm)	Injection volume (mm^3/1,000st)	Variation rate (%)	Basic point	Fixing point	Ref.
A	9.4	700	123±2	±2	0		
B	9.4	1,100	117±3	±3			
C	8.9	500	110±2	±3			
D	5.2	250	14.5±1.5	±15			
E	-	100	100 or more	-			

	Contents	Specifications	Engine application
Adjusting conditions	Nozzle holder assembly	105780-8140	65.10101-7070
	Nozzle	105780-0000	65.10102-6032
	Nozzle holder	105780-2080	
	Opening pressure	175 kg/cm^2	220 kg/cm^2
	Injection pipe	ϕ8 × ϕ3 - 600mm	ϕ6 × ϕ2 - 650mm
	Fuel delivery pressure	1.6 kg/cm^2	
	Fuel temperature	35~45 ℃	

https://truckmanualshub.com/

(c) Adjusting governor

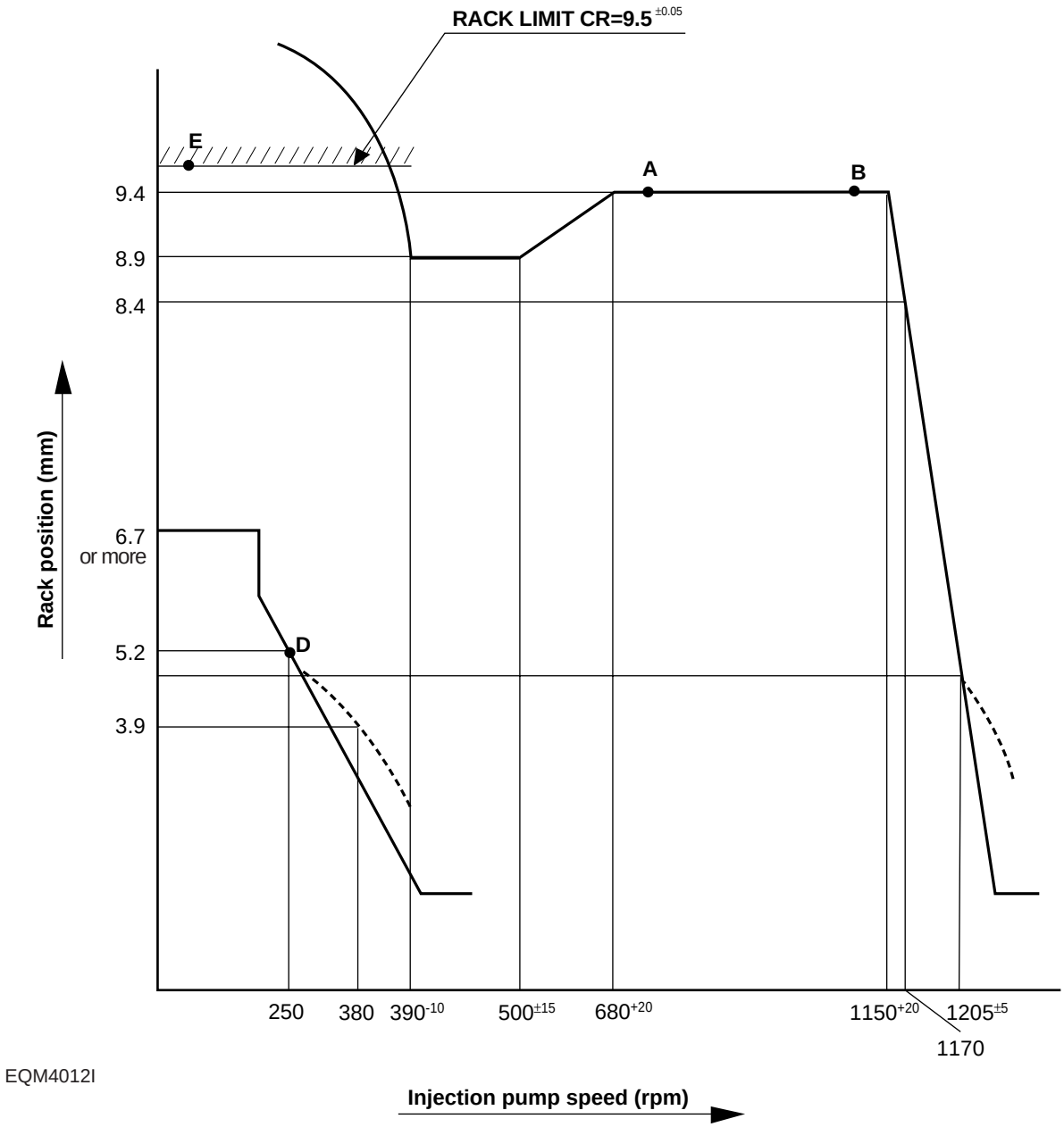

EQM4012I

(2) DE12(B)

(a) Main data and specifications

Part No. : 65.11101 - 7296
Model : PE6P type
Governor : RLD+J type
Timer : SD type, range of operation: 6°/600-950 rpm
Plunger : 65.11125-0021
Delivery valve : 65.11108-6019
Fuel feed pump : 65.12101-7027
Pre-stroke : 4.7±0.05mm
Rotating direction : C.W. at driving gear side
Injection order : 1-5-3-6-2-4
Injection timing : BTDC 8°

(b) Calibration data

Adjusting point	Rack position (mm)	Pump speed (rpm)	Injection volume (mm^3/1,000st)	Variation rate (%)	Basic point	Fixing point	Ref.
A	12°	700	99	±2	0		
B	12.3	1,100	95±3	–			
C	11.3	500	81	–			
D	8.5	250	14.5	±15			
E	-	100	95±3	-			

	Contents	Specifications	Engine application
Adjusting conditions	Nozzle holder assembly	105780-8140	65.10101-7070
	Nozzle	105780-0000	65.10102-6032
	Nozzle holder	105780-2080	
	Opening pressure	175 kg/cm^2	220 kg/cm^2
	Injection pipe	ϕ8 × ϕ3 - 600mm	ϕ6 × ϕ2 - 650mm
	Fuel delivery pressure	1.6 kg/cm^2	
	Fuel temperature	35~45 ℃	

https://truckmanualshub.com/

(c) Adjusting governor

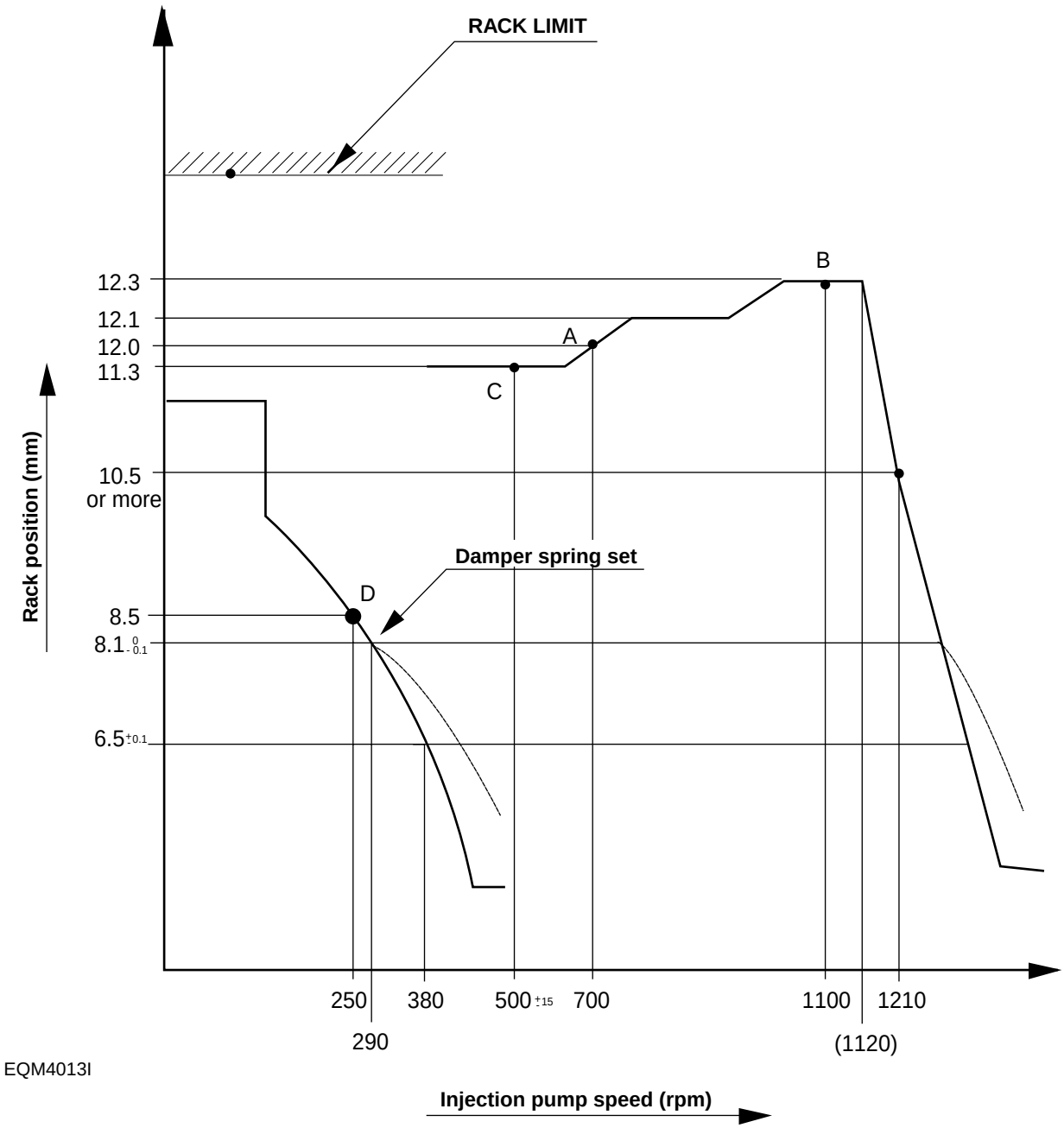

https://truckmanualshub.com/

2) DE12T

(1) DE12T(A)

(a) Main data and specifications

Part No. : 65.1101-7261(106671-9170)
Model : PE6P type
Governor : RFD+C type
Timer : SD type, range of operation: 3°/700-1100 rpm
Plunger : 65.11125-0010
Delivery valve :
Fuel feed pump : 65.12101-7013
Pre-stroke : 4.2±0.05mm
Rotating direction : C.W. at driving gear side
Injection order : 1-5-3-6-2-4
Injection timing : BTDC 9°

(b) Calibration data

Adjusting point	Rack position (mm)	Pump speed (rpm)	Injection volume (mm^3/1,000st)	Variation rate (%)	Basic point	Fixing point	Ref.
A	10.9	700	161.5±2	±2	0		
B	10.9	1,100	152±3	±3			
C	-	500	(97)	–			
D	5.2	250	14.5±1.5	±15			
E	-	100	165±5	-			

	Contents	Specifications	Engine application
Adjusting conditions	Nozzle holder assembly	105780-8140	65.10101-7071
	Nozzle	105780-0000	65.10102-6033
	Nozzle holder	105780-2080	
	Opening pressure	175 kg/cm^2	220 kg/cm^2
	Injection pipe	ϕ8 × ϕ3 - 600mm	ϕ6 × ϕ2.2 - 650mm
	Fuel delivery pressure	1.6 kg/cm^2	
	Fuel temperature	35~45 ℃	

https://truckmanualshub.com/

(c) Adjusting governor

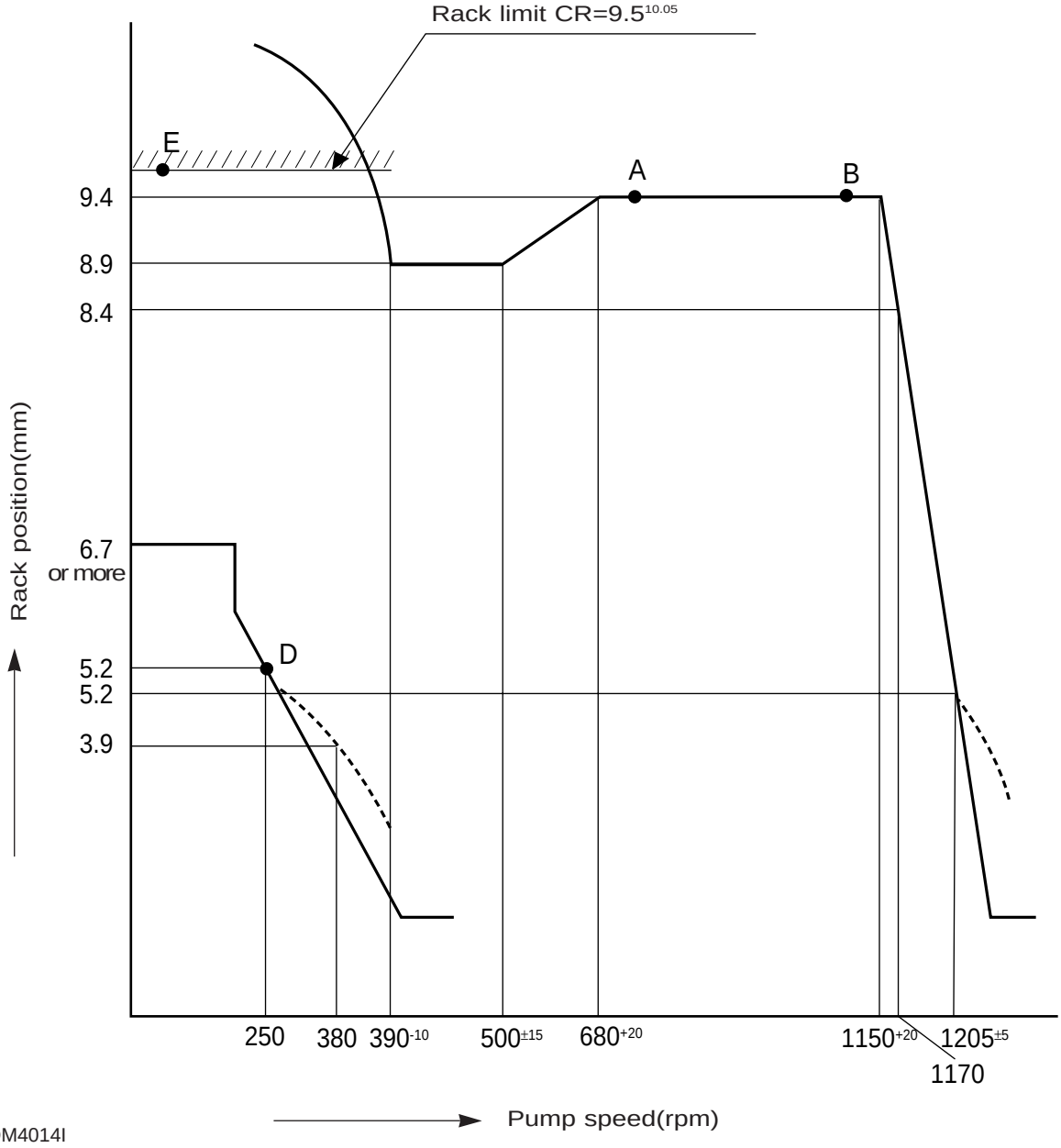

EQM4014I

3) DE12TI

(1) DE12TI-280

(a) Main data and specifications

Part No. : 65.11101 - 7296
Model : PE6P type
Governor : RFD+D type
Timer : SPG type, range of operation: 3°/700-1100 rpm
Plunger : 65.11125-0010
Delivery valve : 65.11108-6009
Fuel feed pump : 65.12101-7013
Pre-stroke : 4.2±0.05mm
Rotating direction : C.W. at driving gear side
Injection order : 1-5-3-6-2-4
Injection timing : BTDC 12°

(b) Calibration data

Adjusting point	Rack position (mm)	Pump speed (rpm)	Injection volume (mm^3/1,000st)	Variation rate (%)	Basic point	Fixing point	Ref.
A	8.2	1,050	135±2	±2	0		
B	5.1	250	16±1.5	±15			
C	-	100	90 or More	-			
D	8.7	500	150±3	-			
E	7.1	500	(115)±3	-			

	Contents	Specifications	Engine application
Adjusting conditions	Nozzle holder assembly	105780-8140	65.10101-7072
	Nozzle	105780-0000	65.10102-6034
	Nozzle holder	105780-2080	
	Opening pressure	175 kg/cm^2	1st : 160 kg/cm^2, 2nd : 220 kg/cm^2
	Injection pipe	ϕ8 × ϕ3 - 600mm	ϕ6 × ϕ2 - 650mm
	Fuel delivery pressure	1.6 kg/cm^2	
	Fuel temperature	35~45 ℃	

https://truckmanualshub.com/

(c) Adjusting governor

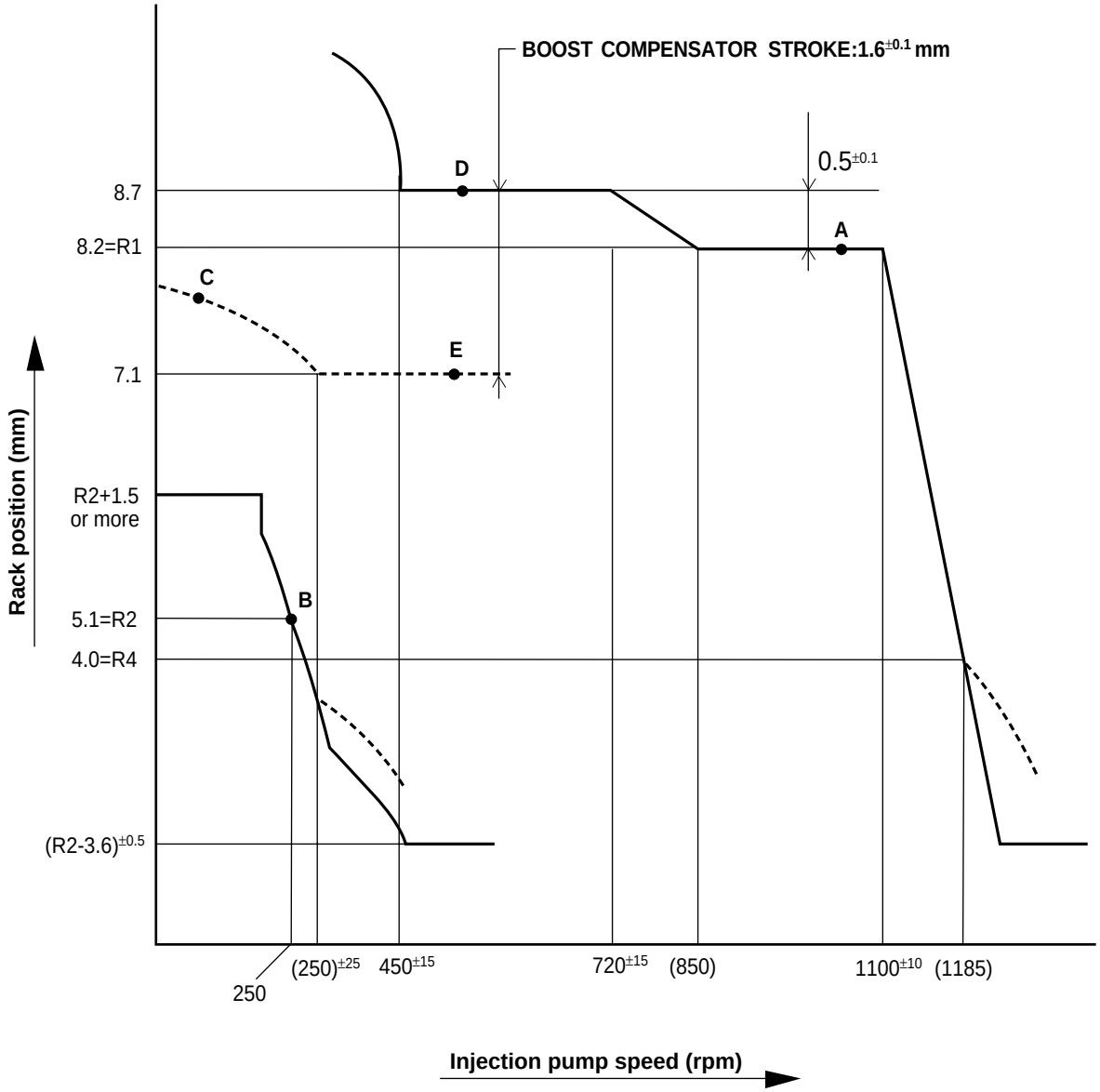

EQM4016I

(2) DE12TI-310

(a) Main data and specifications

Part No. : 65.11101 - 7297
Model : PE6P type
Governor : RFD+D type
Timer : SPG type, range of operation: 3°/700-1100 rpm
Plunger : 65.11125-0010
Delivery valve : 65.11108-6009
Fuel feed pump : 65.12101-7013
Pre-stroke : 4.2±0.05mm
Rotating direction : C.W. at driving gear side
Injection order : 1-5-3-6-2-4
Injection timing : BTDC 12°

(b) Calibration data

Adjusting point	Rack position (mm)	Pump speed (rpm)	Injection volume (mm^3/1,000st)	Variation rate (%)	Basic point	Fixing point	Ref.
A	9.2	1,050	154±2	±2	0		
B	5.1	250	16±1.5	±15			
C	-	100	100	-			
D	9.7	500	170±3	-			
E	7.1	500	115±3	-			

	Contents	Specifications	Engine application
Adjusting conditions	Nozzle holder assembly	105780-8140	65.10101-7072
	Nozzle	105780-0000	65.10102-6034
	Nozzle holder	105780-2080	
	Opening pressure	175 kg/cm^2	1st : 160 kg/cm^2, 2nd : 220 kg/cm^2
	Injection pipe	ϕ8 × ϕ3 - 600mm	ϕ6 × ϕ2 - 650mm
	Fuel delivery pressure	1.6 kg/cm^2	
	Fuel temperature	35~45 ℃	

https://truckmanualshub.com/

(c) Adjusting governor

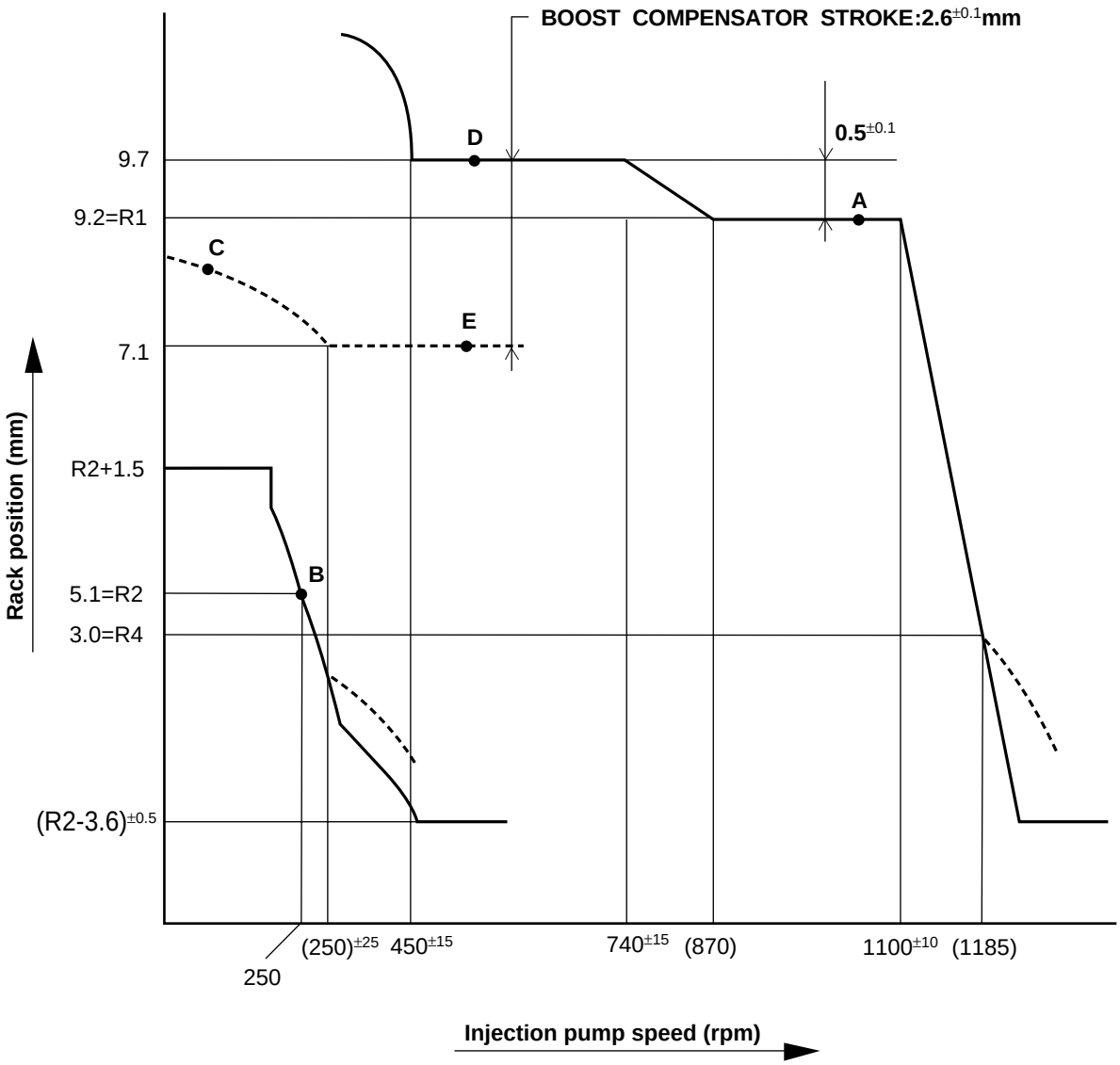

EQM4017I

(3) DE12TI(A)

(a) Main data and specifications

Part No. : 65.1101-7287(106671-9130)
Model : PE6P type
Governor : RFD+D type
Timer : SD type, range of operation: 3°/700-1100 rpm
Plunger : 65.11125-0010
Delivery valve : 65.11108-6009
Fuel feed pump : 65.12101-7013
Pre-stroke : 4.2±0.05mm
Rotating direction : C.W. at driving gear side
Injection order : 1-5-3-6-2-4
Injection timing : BTDC 12°

(b) Calibration data

Adjusting point	Rack position (mm)	Pump speed (rpm)	Injection volume (mm^3/1,000st)	Variation rate (%)	Basic point	Fixing point	Ref.
A	R1	1,050	171±2	±2	0		
B	R2	250	14.5±1.5	±15			
C	-	100	115	-			
D	R1±0.5	500	(186.5)±3	-			
E	R1±2.5	500	(122)±3	-			

	Contents	Specifications	Engine application
Adjusting conditions	Nozzle holder assembly	105101-7971	65.10101-7294
	Nozzle	105029-1320	65.10102-6043
	Nozzle holder	105030-4711	
	Opening pressure	175 kg/cm^2	1st : 160, 2nd : 220 kg/cm^2
	Injection pipe	ϕ8 × ϕ3 - 600mm	ϕ6 × ϕ2.2 - 650mm
	Fuel delivery pressure	1.6 kg/cm^2	
	Fuel temperature	35~45 ℃	

https://truckmanualshub.com/

(c) Adjusting governor

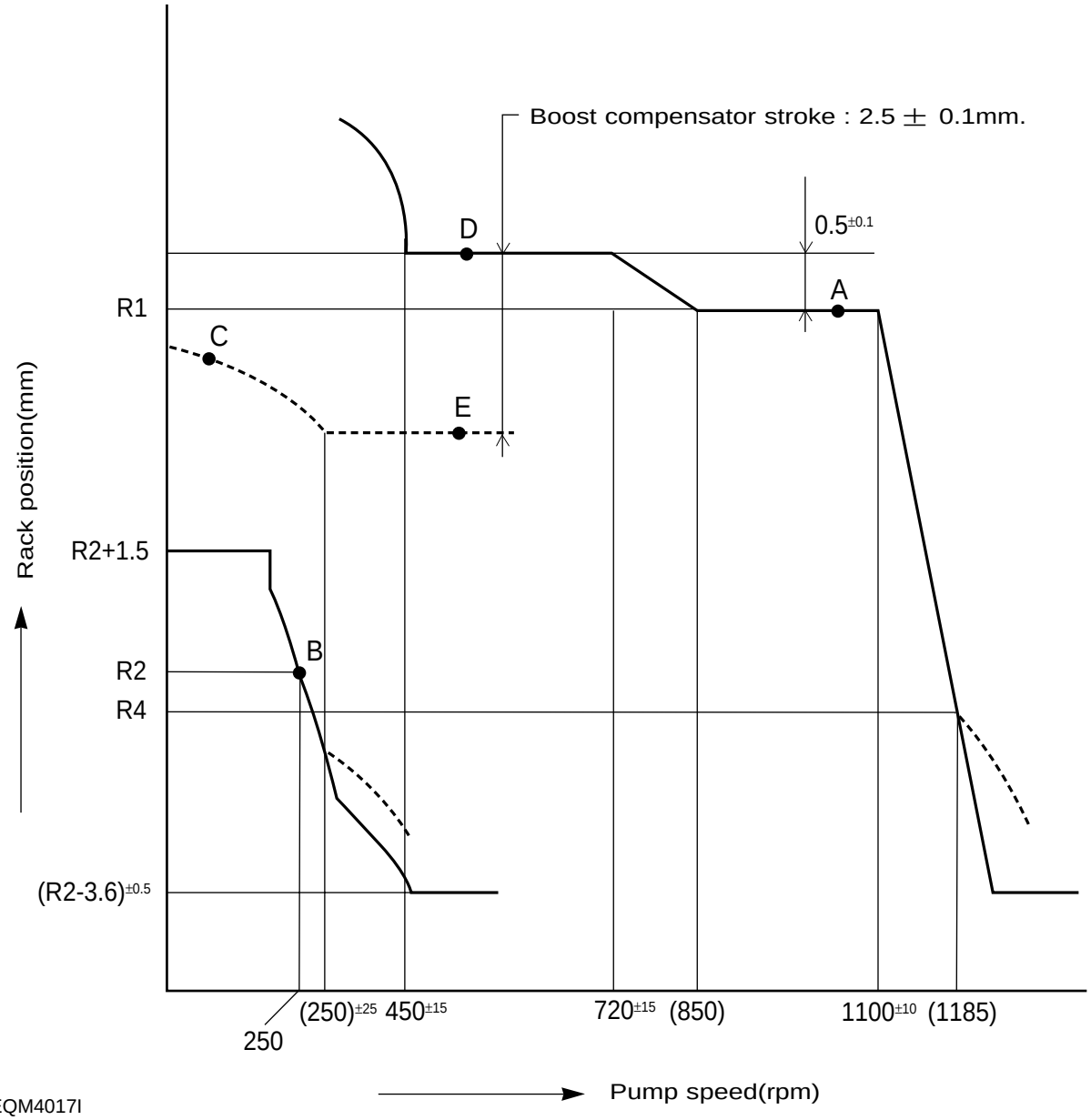

EQM4017I

4) DE12TIS

(1)DE12TIS

(a) Main data and specifications

Part No. : 65.11101-7661(108622-4000)
Model : HD-TICS
Governor : RLD+J type
Timer : Dummy timer + electronically controled
Plunger :
Delivery valve : 65.11108-6009
Fuel feed pump : 65.12101-7013
Pre-stroke : 6.3±0.05mm
Rotating direction : C.W. at driving gear side
Injection order : 1-5-3-6-2-4
Injection timing : BTDC 1°

(b) Calibration data

Adjusting point	Rack position (mm)	Pump speed (rpm)	Injection volume (mm^3/1,000st)	Variation rate (%)	Basic point	Fixing point	Ref.
A	R1	1,050	158.0±2	±2	0		
B	R1-1.5	630	162.3±3	±15			
C	R1-1.85	500	173.8±3	-			
I	R2±2.0	100	45.8	-			
H	R2	300	2.3	-			

	Contents	Specifications	Engine application
Adjusting conditions	Nozzle holder assembly	105780-8250	65.10101-7298
	Nozzle	105780-0120	
	Nozzle holder	105780-0120	
	Opening pressure	220 kg/cm^2	1st : 160, 2nd : 220 kg/cm^2
	Injection pipe	ϕ8 × ϕ3 - 600mm	ϕ6 × ϕ2.2 - 600mm
	Fuel delivery pressure	2.6 kg/cm^2	
	Fuel temperature	35~45 ℃	

https://truckmanualshub.com/

(c) Adjusting governor

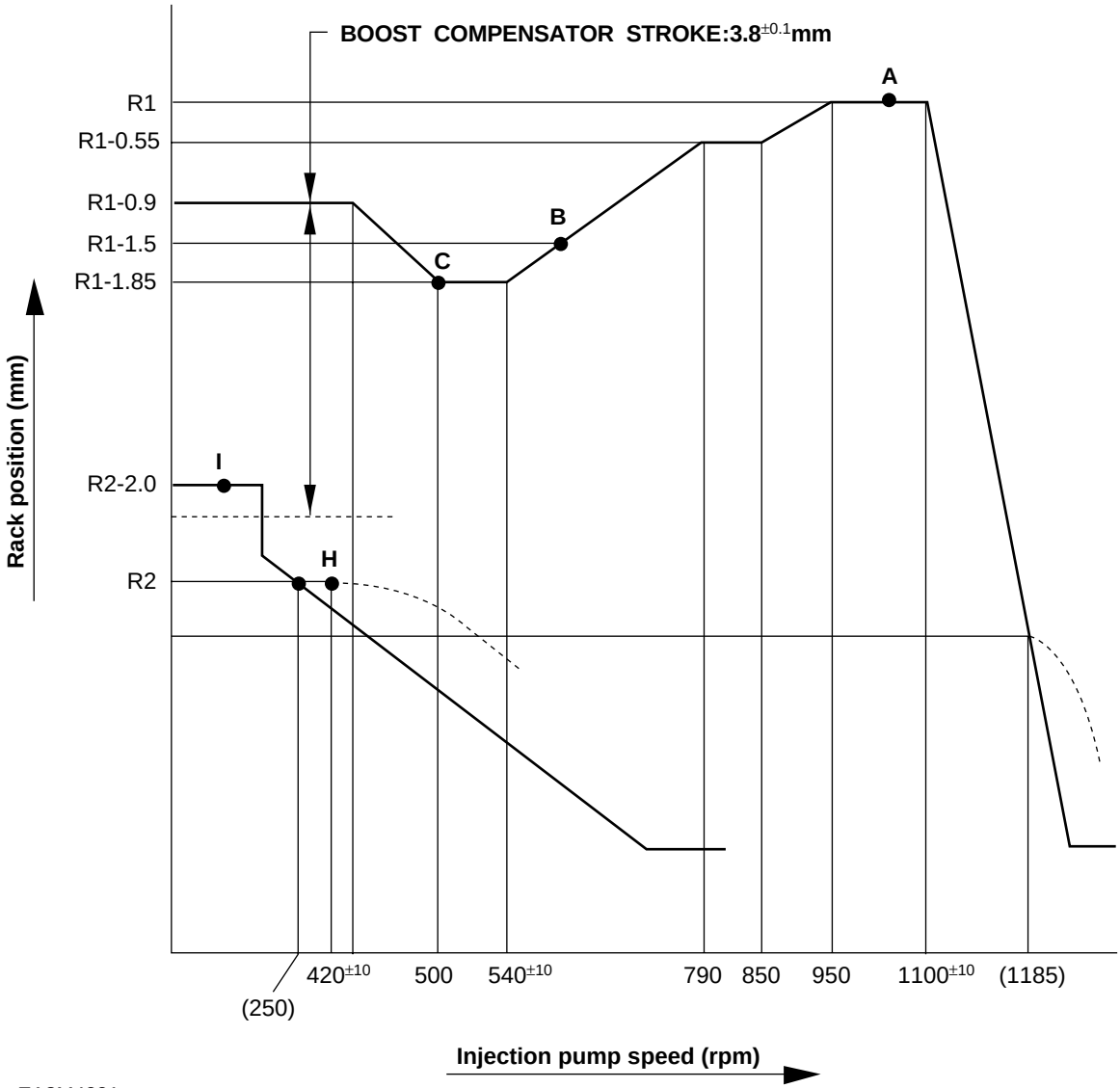

EA2M4001

4.3.3. Fuel feed pump

1) General descriptions and construction

The P-type injection pump is mounted with K-ADS or KP type feed pump. These pumps have the same basic construction and operation, and the general descriptions of the KP type pump are given below:

The following figures show its construction and operation. The piston in the fuel feed pump is driven by the push rod and tappet via the cam shaft of injection pump and performs reciprocating operation to control the suction and delivery of fuel. When the cam reaches the Bottom Dead Center as shown in the figure, the fuel is drawn in through the check valve on the inlet side.

The fuel pressurized as the cam rotates on flows through the check valve on the outlet side as shown in (B). If the feeding pressure increases abnormally, the spring is compressed, resulting in interrupting further delivery of fuel as shown in (C).

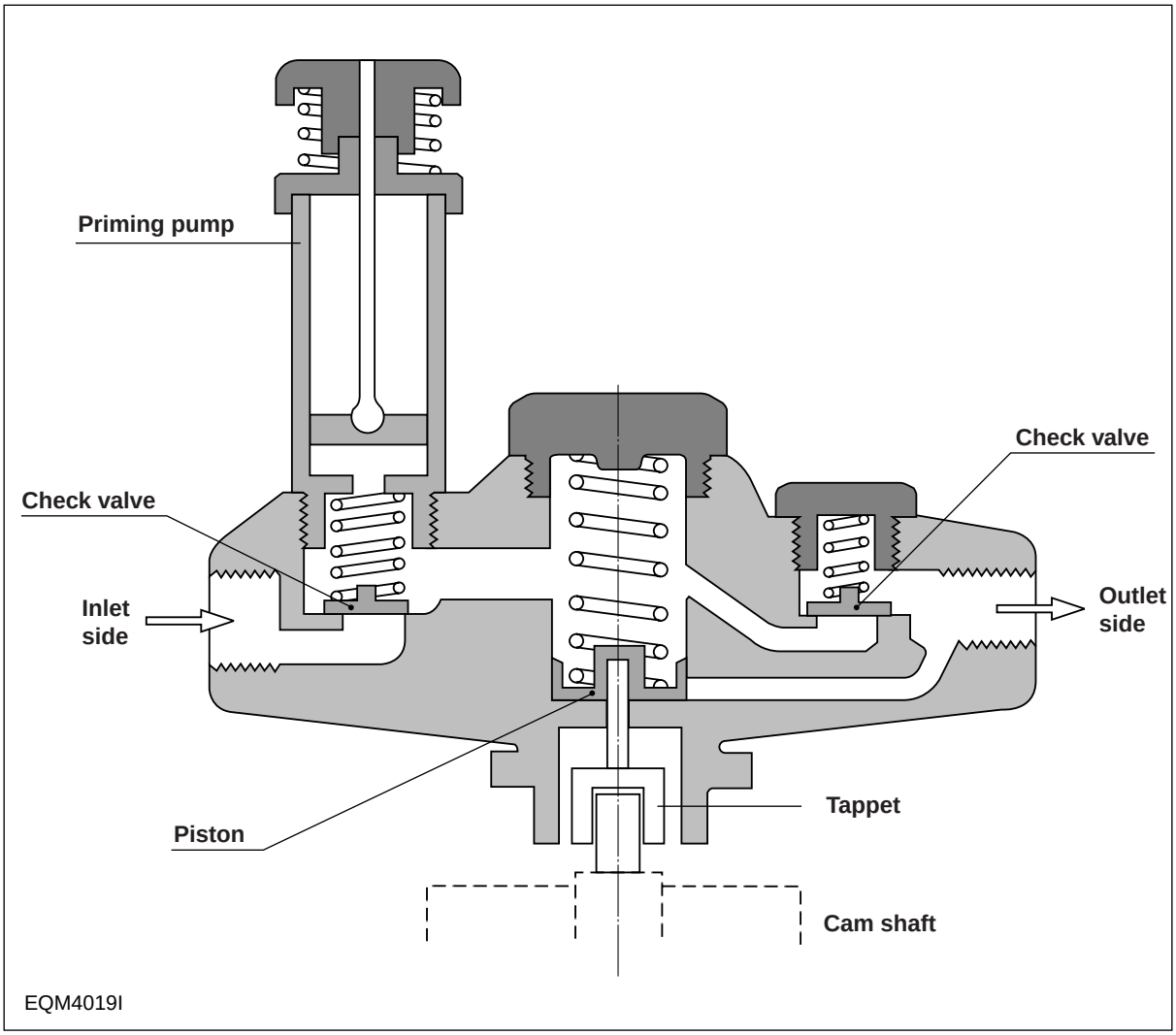

<Figure 4-12> Section drawing of feed pump

https://truckmanualshub.com/

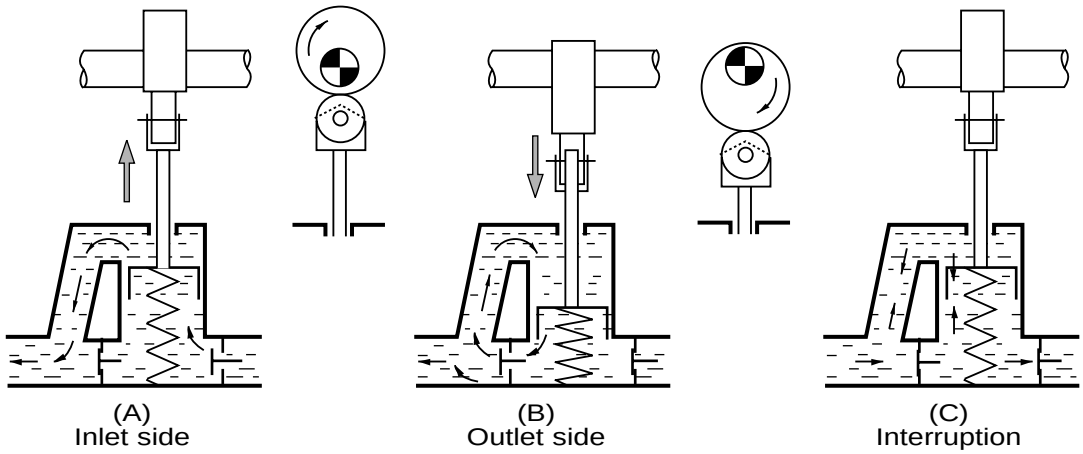

EQM4020I

This feed pump is mounted with a priming pump designed to permit manual feeding of fuel from the fuel tank with the injection pump mounted in the engine. During the manual feeding operation, air must be bled from the fuel lines.

When using the priming pump, fix it securely to prevent the possible entry of moisture or other foreign substances inside of feed pump.

In addition, a gauge filter is fitted into joint bolt on the inlet side of the fuel feed pump to filtrate any foreign substances possibly mixed in fuel.

2) Disassembly

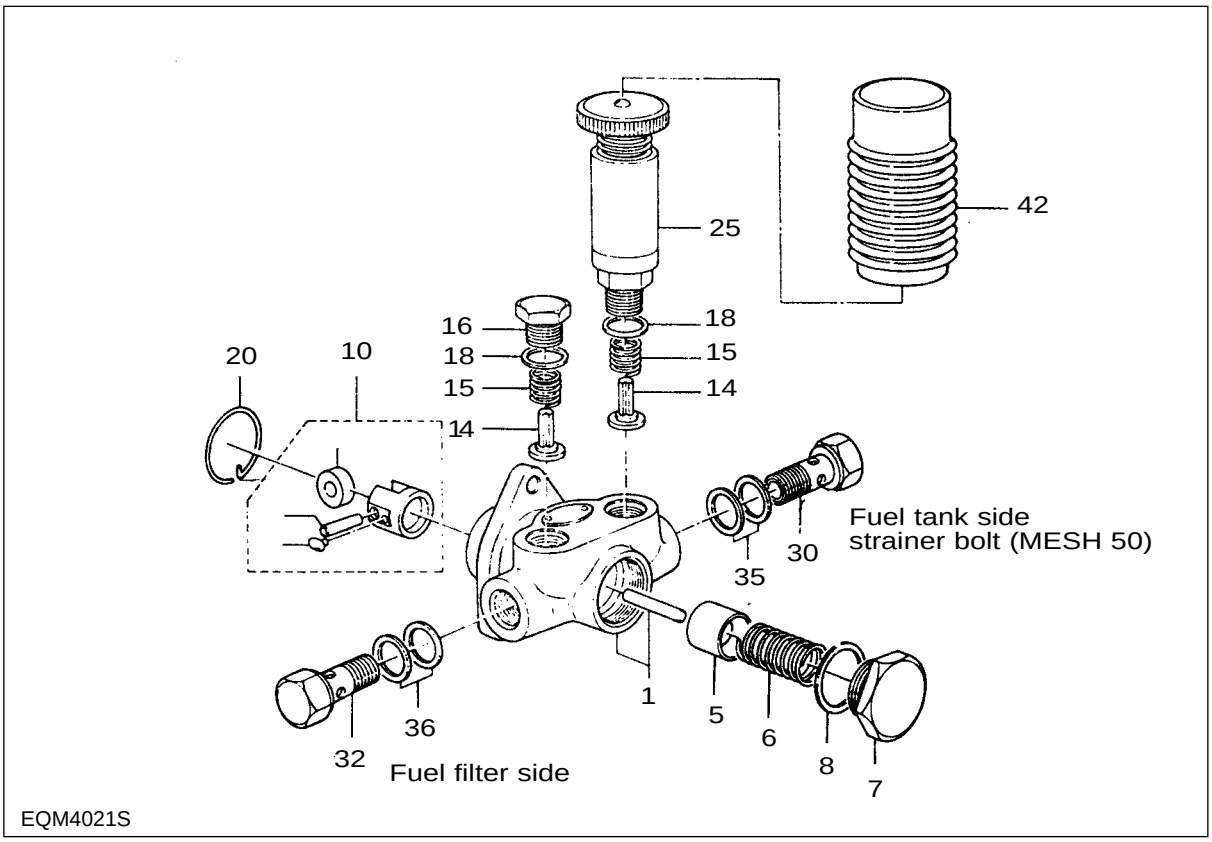

<Figure 4-14> Exploded view of fuel feed pump

(1) Clamp the feed pump with a vise and disassemble the plugs(30, 32) and gaskets(35, 36).
(2) Take off the priming pump(25), plug(16), both gaskets(18), spring(15), and check valve(14).
(3) Take off the plug(7), gasket(8), spring(6), and piston(5) on the piston side.
(4) Pull out the snap ring(20) holding the tappet(10).
(5) Disassemble the snap ring, then take off the tappet(10) and push rod(1).

3) Inspection

(1) If the check valve is damaged or scored on its seat face, replace it with a new one.
(2) Inspect the piston and tappet for damage.
(3) Replace the push rod if excessively worn, and replace together with the pump housing if required.
The inspection for wear should be performed in the same procedure as for suction pressure test described below.

4) Reassembly

Reassembly operation is performed in reverse order of disassembly. All the gaskets must be replaced with new ones at reassembly.

NOTICE

Check the item no. 30 before assembling it whether it is the fuel strainer bolt.
Clean it when fuel filter cartrige is replaceded.

https://truckmanualshub.com/

5) Testing

(1) Suction capacity test

Connect one end of a hose to the inlet side of the feed pump and immerse the other end of it into the fuel tank as illustrated.

Hold the feed pump in position about 1m above the level of fuel in the fuel tank.

Operate the tappet at the rate of 100 rpm and check to see if fuel is drawn in and delivered for 40 seconds or so.

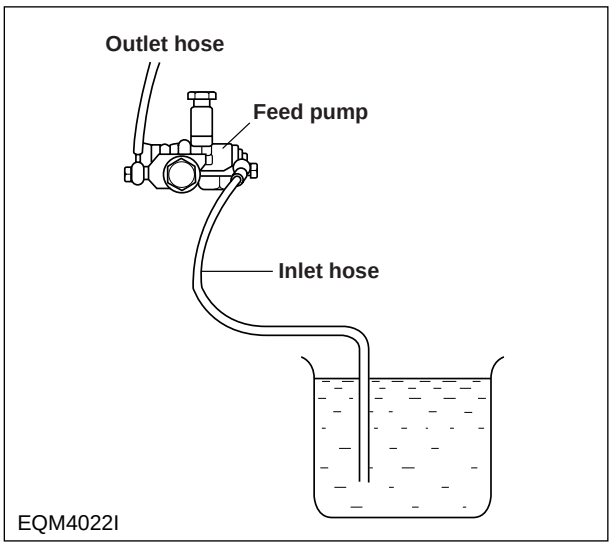

(2) Delivery test

Make a test with the the feed pump mounted on a pump tester as illustrated.

Operate the the pump at the rate of 1,000 rpm and check to see if the pump delivery is more than 405cc/15 seconds.

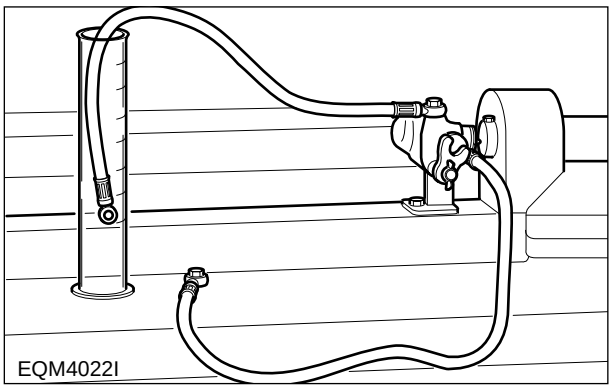

<Figure 4-16> Delivery test

(3) Sealing test

Plug up the delivery port on the feed pump and apply compressed air of 2kg/cm^2 into the inlet side.

Submerge the feed pump in a container of diesel fuel and check for air leak.

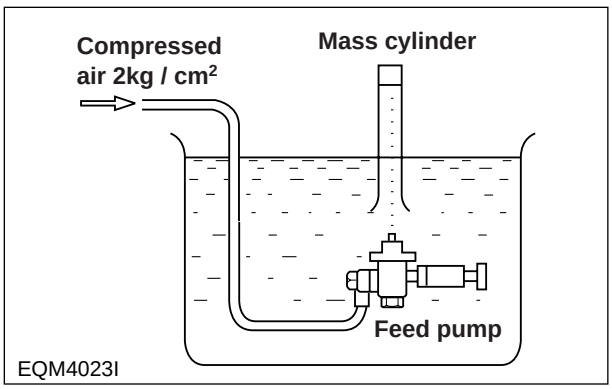

<Figure 4-17> Air pressure test

https://truckmanualshub.com/

4.3.4. Injection nozzle

1) General descriptions

Pressurized fuel delivered from the fuel injection pump is sprayed into the combustion chamber past the injection nozzle at proper spray pressure and spray angle, then burnt completely to achieve effective engine performance.

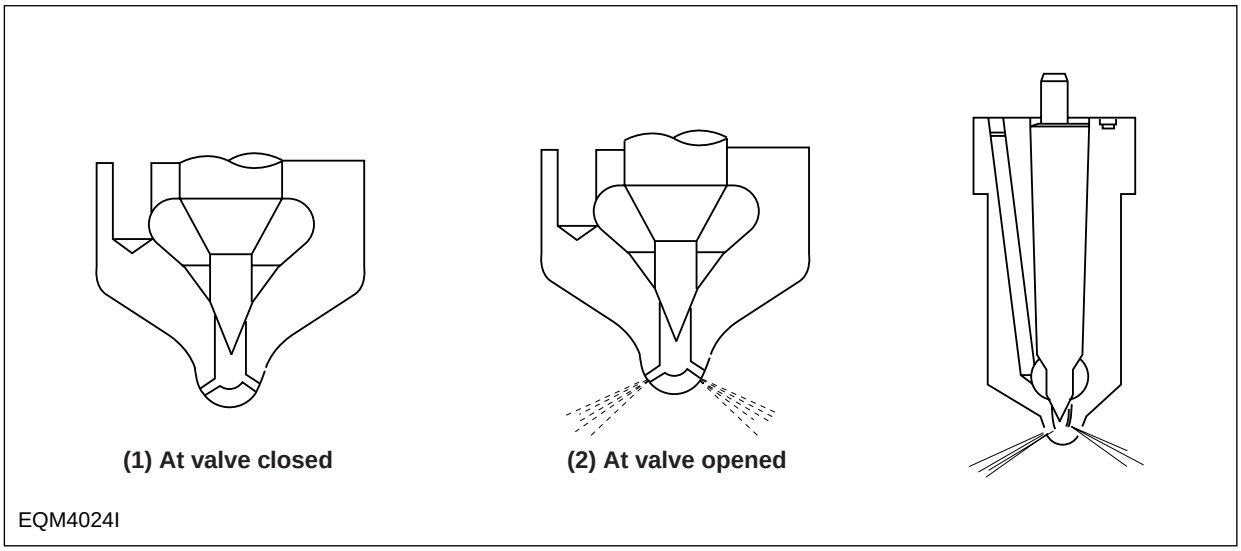

<Figure 4-18> Spray patterns

2) 1-spring type

(1) Disassembly

1. Cap nut
2. Adjusting screw
3. Spring
4. Push rod
5. Connector
6. Retaining nut
7. Needle valve
8. Nozzle
9. Nozzle holder

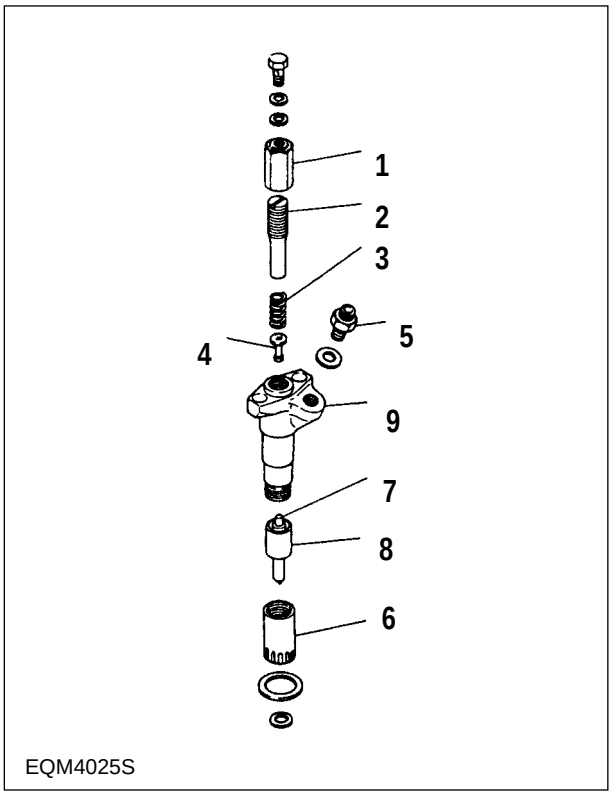

<Figure 4-19> Exploded view of 1-spring

https://truckmanualshub.com/

(2) Reassembly

a. After removing carbon deposit, submerge the nozzle in diesel oil and clean it.

b. Replace all the gaskets with new ones.

c. Assemble the parts and tighten them to specified torque.

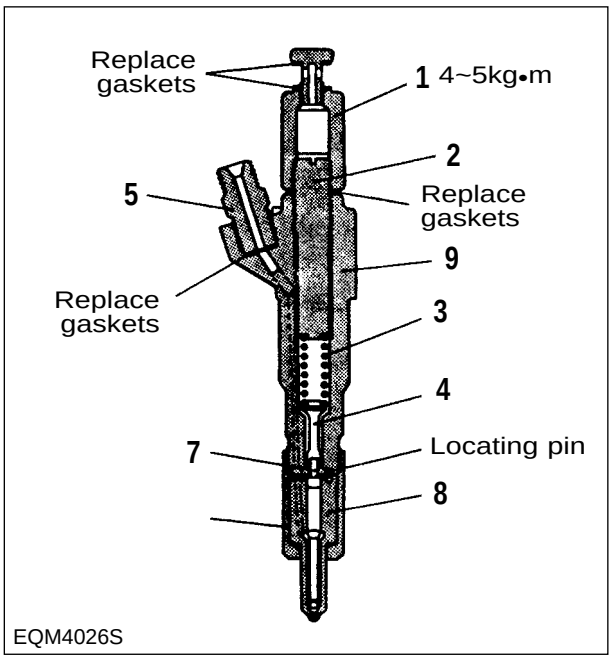

<Figure 4-20>

(3) Adjustment

a. Remove the cap nut and assemble a nozzle to a nozzle tester.

b. With the adjusting screw loosened, operate the nozzle 2~3 times to bleed it.

c. Operate the nozzle tester lever at the specified rate.

d. Adjust the injection pressure to the standard pressure using the adjusting screw.

e. After adjusting the injection pressure, tighten the cap nut to specified torque.

f. Re-check the injection pressure and see if the spray pattern is normal.

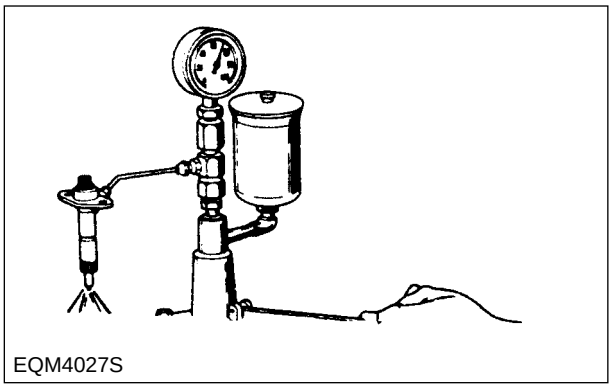

<Figure 4-21>

(4) Testing

With the nozzle assembled to a nozzle tester and pressure of 200~210 bar applied, check the nozzle for fuel leakage.

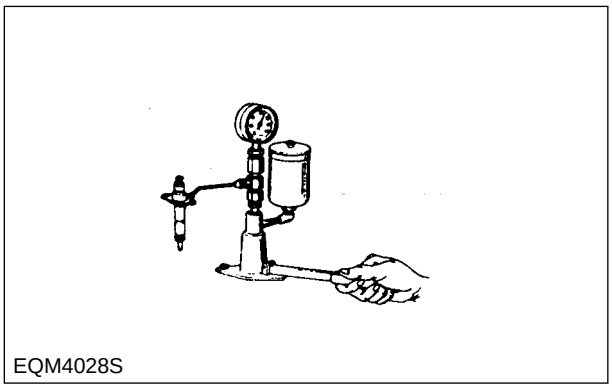

<Figure 4-22>

https://truckmanualshub.com/

3) 2-spring type

(1) Disassembly

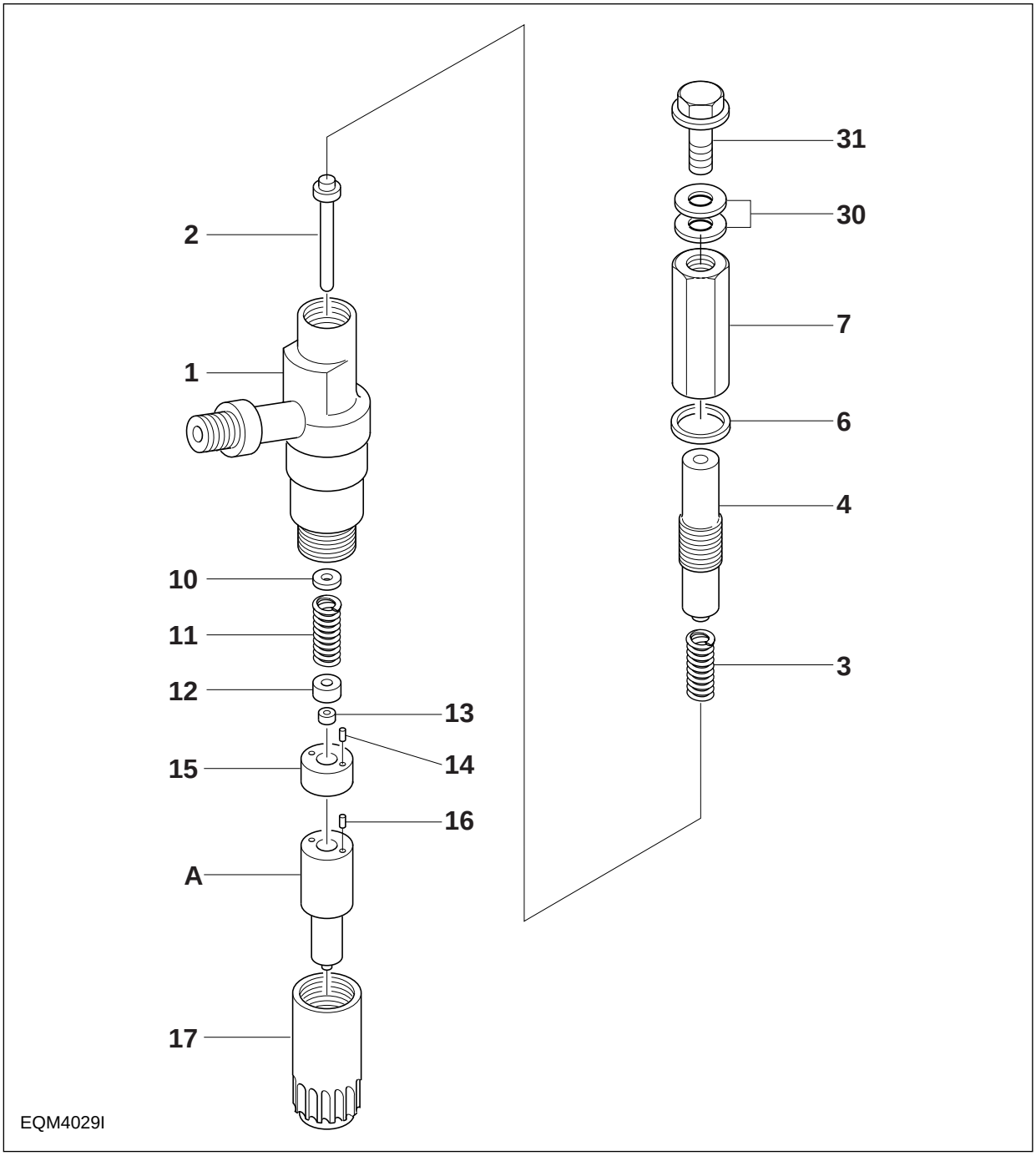

<Fig 4-23> Exploded view of 2-spring

1. Nozzle holder body
2. Push rod
3. Primary spring
4. Adjusting screw
6. Gasket
7. Cap nut
10. Adjusting shim
11. Secondary spring
12. Spring seat
13. Lift pin
14. Pin
15. Spacer
16. Pin
17. Retaining seat
30. Gasket
31. Eye bolt
A. Nozzle

https://truckmanualshub.com/

(2) Inspection and adjustment

Adjusting the primary opening pressure

a. Install the plate of plate assembly (157944 -9520) onto a vise.

Note: Use the plate assembly (157944-9520) in fixing a nozzle holder having a flange. A nozzle holder without flange should be directly installed onto a vise.

b. With the nut, install the two pins on the plate.

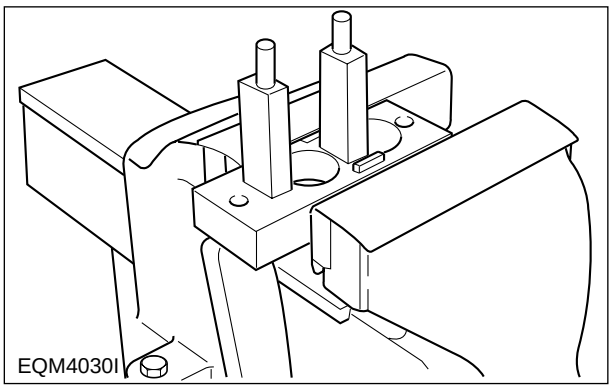

<Figure 4-24> Installing plate

c. Install the nozzle holder body(1) onto the plate with the cap nut side facing downward.

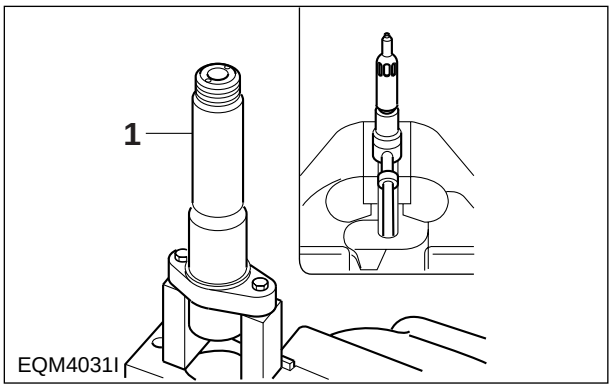

<Figure 4-25> Installing nozzle holder

d. Assemble adjusting shim(10), secondary spring(11), and spring seat(12) on the nozzle holder body in the order as described. (Figure 4-26)

Note: The secondary spring is the same one as the primary spring.

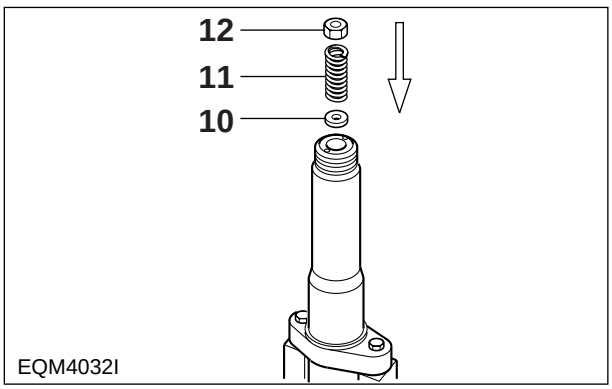

<Figure 4-26> Installing adjusting shim, secondary spring and spring seat

https://truckmanualshub.com/

e. Assemble the pin(14), lift piece(13), and spacer(15) with the nozzle holder body. (Figure 4-27)

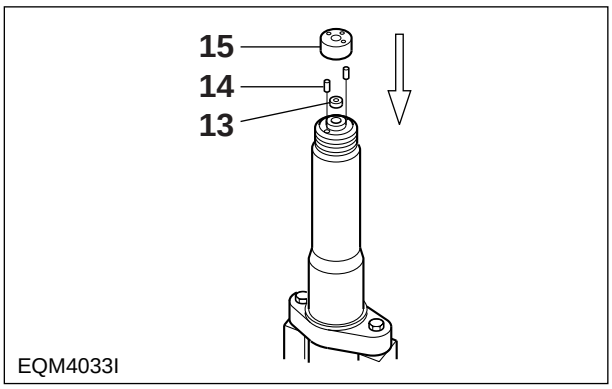

<Figure 4-27> Installing pin, lift piece, and spacer

f. Install the pin(16) and nozzle(A) onto the spacer.

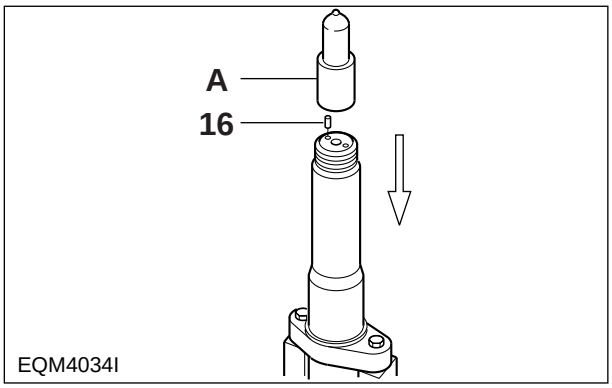

<Figure 4-28> Installing pin and nozzle

g. After installing the gasket(157892-1500) on the nozzle, use the retaining nut(157892-4000:SW22mm) to fix the nozzle onto the nozzle holder. (Figures 4-28 and 4-29)

Note: While tightening the retaining nut, keep checking to see if the lock pin comes all the way into the nozzle.

Note: Tighten the retaining nut until it resists hand tightening, then further tighten it using a torque wrench.

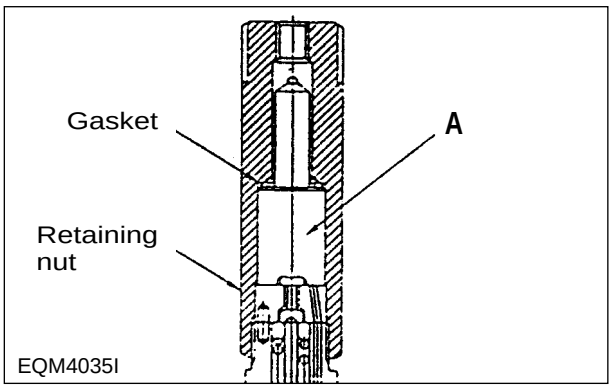

<Figure 4-29> Installing gasket and retaining nut

https://truckmanualshub.com/

h. Be sure to follow the specified torque rating when tightening the adjusting retaining nut.
Specified torque : 59~78N•m (6.0~8.0kg•m)

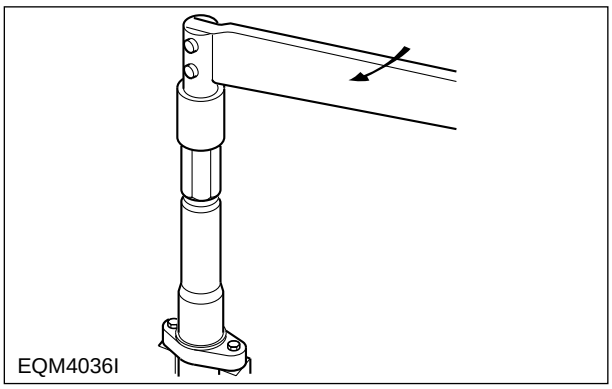

<Figure 4-30> Fixing the nozzle

i. With the cap nut facing upward, install the nozzle holder on the plate. (Figure 4-31)

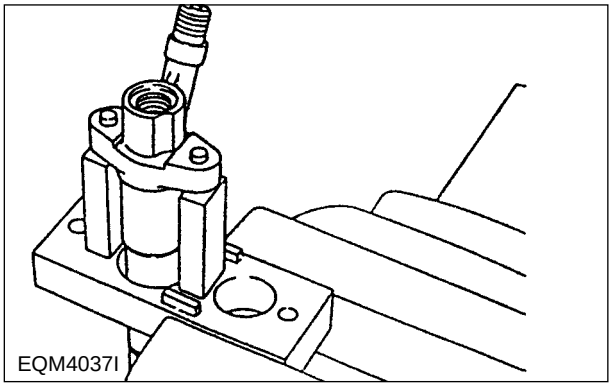

<Figure 4-31> Installing nozzle holder

j. Assemble the push rod(2), primary spring(3), and adjusting screw(4) on the nozzle holder in the order described. (Figure 4-32)
k. Install the gasket(6) and cap nut(7) onto the adjusting screw(4).

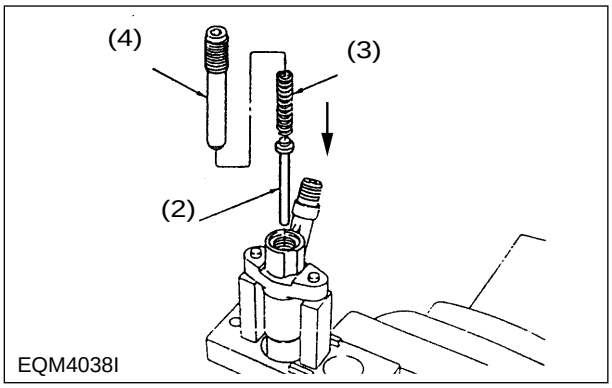

<Figure 4-32> Assembling secondary push rod, primary spring, and adjusting screw

https://truckmanualshub.com/

l. Assemble the nozzle and nozzle holder assembly to the nozzle tester (105785-1010). (Figure 4-33)

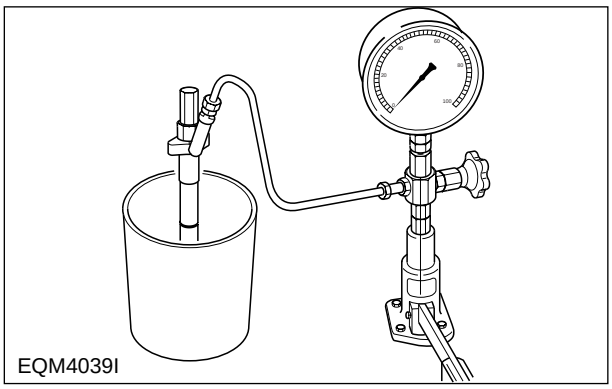

<Figure 4-33> Nozzle test, nozzle and nozzle holder assembly

m. Adjust the primary opening pressure to the specified pressure using the adjusting screw(4). (Figure 4-34)

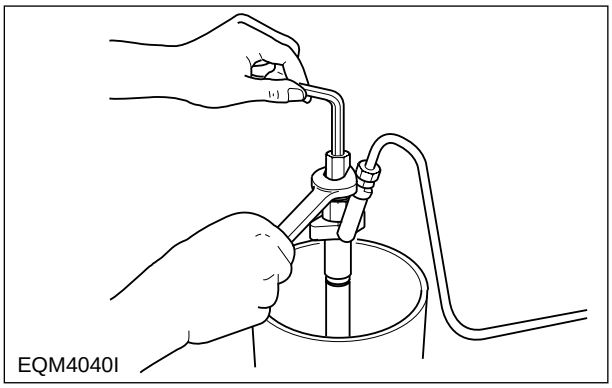

<Figure 4-34> Adjusting the primary opening pressure

n. With a monkey wrench, fix the nozzle holder securely and tighten the cap nut(SW19mm) to specified torque. (Figure 4-35)
Cap nut tightening torque :
29~39N•m (3.0~4.0kg•m)

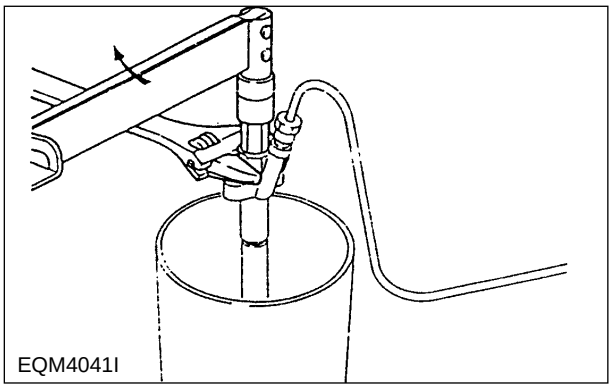

<Figure 4-35> Tightening cap nut

https://truckmanualshub.com/

●Inspecting the needle valve for full lift

a. Install gasket(30) and plug (31) onto the adjusting retaining nut (7). (Figure 4-36)

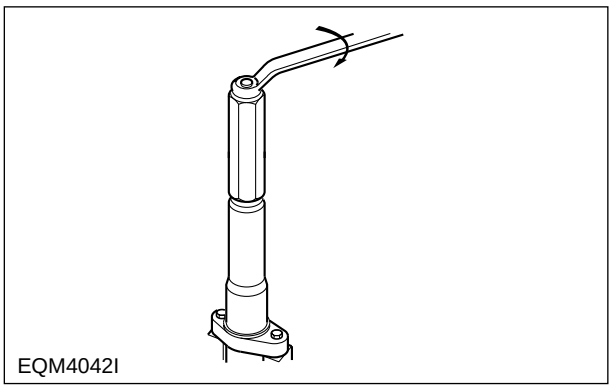

<Figure 4-36> Installing gasket and plug

b. Install the nozzle holder on the plate with the cap nut facing upward.

c. Install the holder into the cap nut. (Figure 4-37)

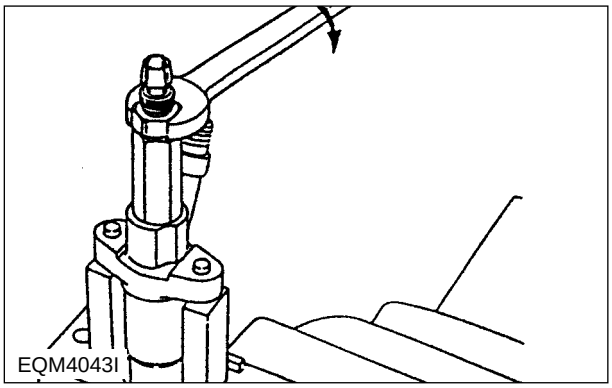

<Figure 4-37> Installing nozzle holder

d. Install a nut(157892-1000: 17mm) on the holder.

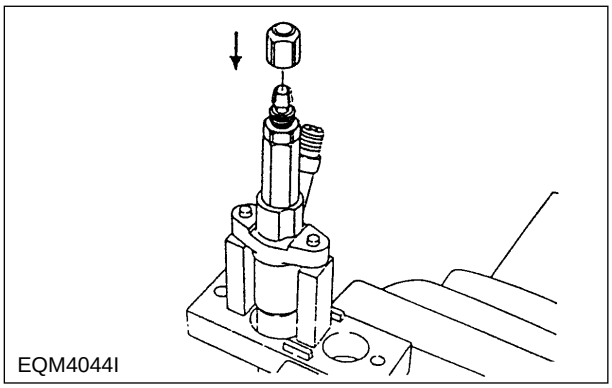

<Figure 4-38> Installing the nut

https://truckmanualshub.com/

e. Assemble the pin(157892-4200 or 157892-4300) to the dial gauge (157954-3800). (Figure 4-39)

Part No.	L (mm)
157892-4200	160
157892-4300	110

Note: "L" means the length of the pin except the threaded portion.

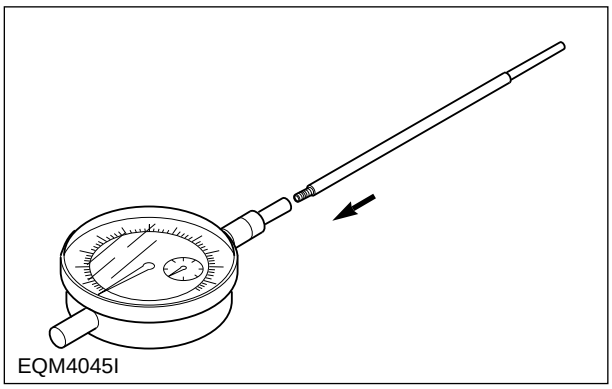

<Figure 4-39> Installing pin

f. Install the dial gauge on the holder assembly so that the pin is brought into contact with the upper end of the push rod, then fix the pin with the nut. (Figure 4-40)

Note 1: Fix the dial gauge so that a stroke of 2mm or so can be measured.

Note 2: Overtightening the nut may cause a sticking of the dial gauge seat.

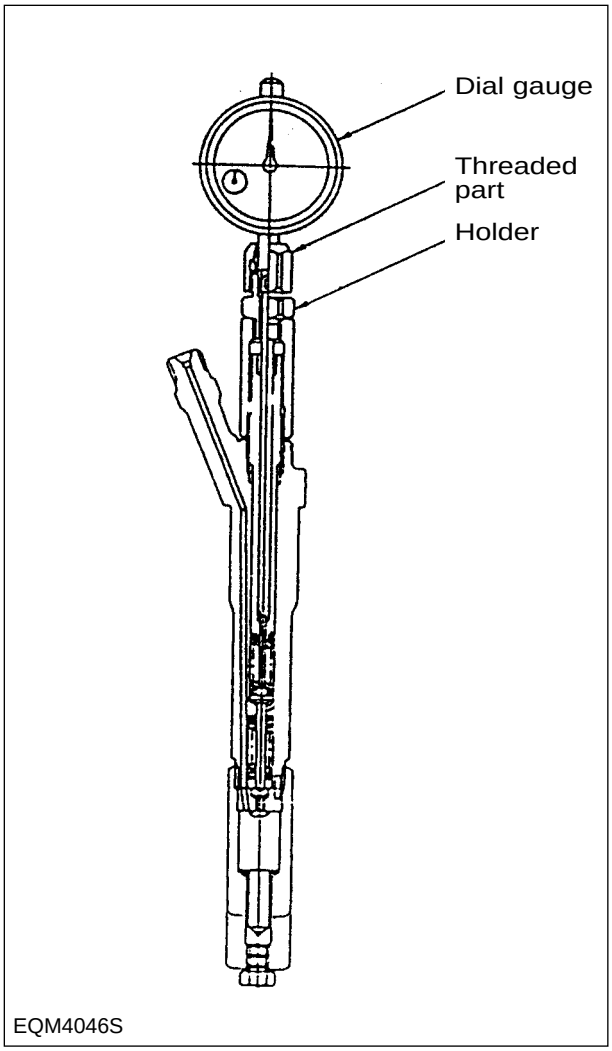

<Figure 4-40> Installing dial gauge

https://truckmanualshub.com/

g. Assemble the nozzle and nozzle holder assembly to the nozzle tester and zero the dial gauge.

h. Operate the nozzle tester, bleed the retaining nut, and check for fuel leakage. (Figure 4-41)

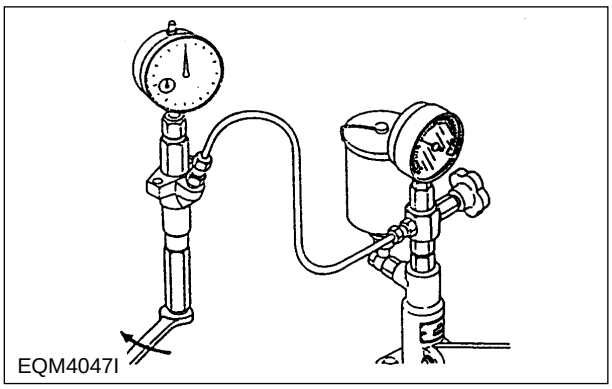

<Figure 4-41> Air in the retaining nut

i. Operate the nozzle tester and increase the tester pressure up to 350~450 kgf/cm² in order that the needle valve can be fully lifted. Then, record the full lift value "L". (Figure 4-42)

Note: This testing is to be made in order to check the nozzle seat portion for unusual wear or whether the nozzle assembly is a standard item.

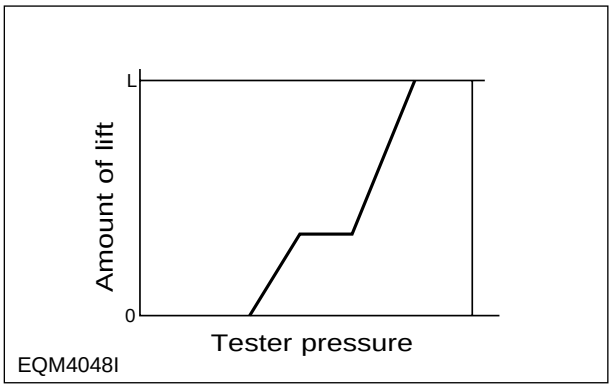

<Figure 4-42> Checking full lift of needle valve

https://truckmanualshub.com/

●Inspection of pre-lift

a. If the nozzle tester handle is released with the needle valve engaged in a full lift condition, the tester pressure drops, being accompanied by decrease in the needle valve lift value(indicated value on the dial gauge). (Figures 4-43 and 4-44)

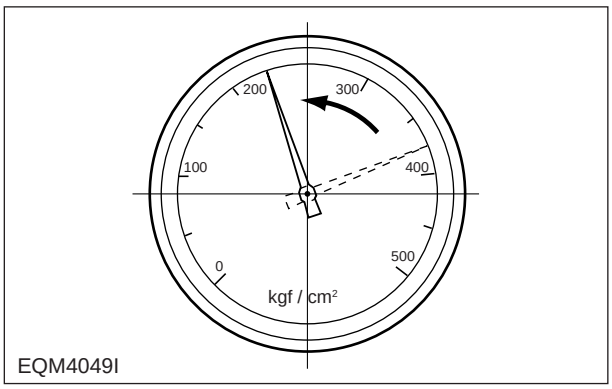

<Figure 4-43> Drop of tester pressure

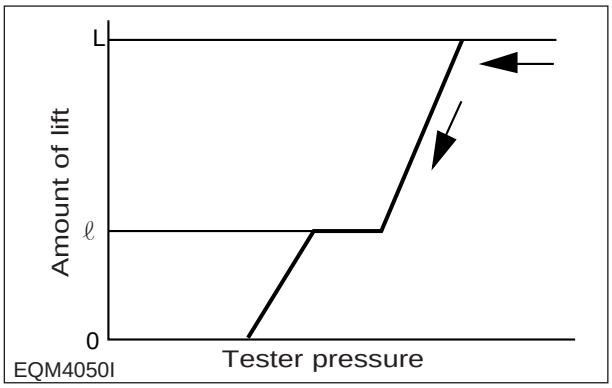

<Figure 4-44> Descent of needle valve

b. Take the indicated value on the dial gauge at the point of time when the secondary spring completes its operation and the needle valve puts an end to descent(the position of needle valve lift value "l" as shown in the figures 4-44 and 4-45) and check that the value is within the specified limit.

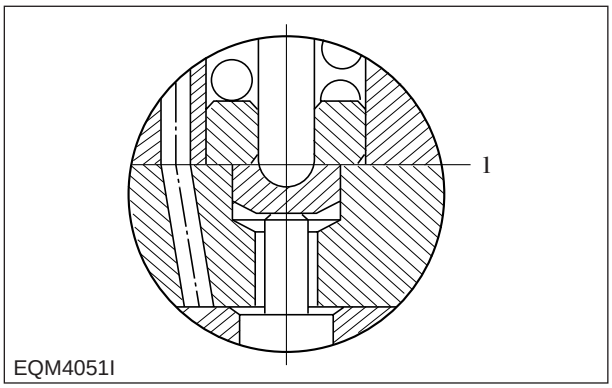

<Figure 4-45> Position of "l" of needle valve

Measuring point for pre-lift

Take the indicated value on the dial gauge at a point of primary opening pressure + approx. 10kgf/cm² .

Note: Locate the point of primary opening pressure + approx. 10kgf/cm² while dropping the pressure.

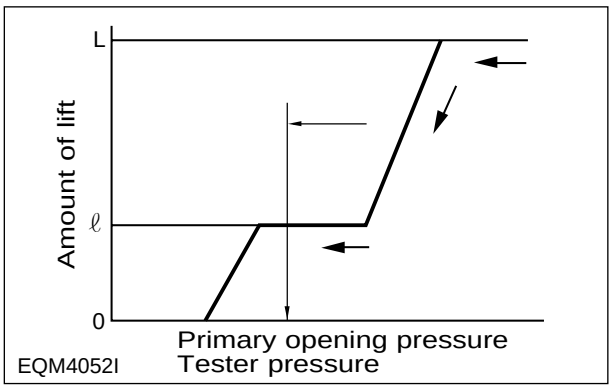

<Figure 4-46> Measuring pre-lift

c. If the measured pre-lift value deviates from the specified limit, replace the pin(14, 16), lift piece(13), spacer(15), and nozzle assembly(A) with a new "nozzle service kit". (Figure 4-47)

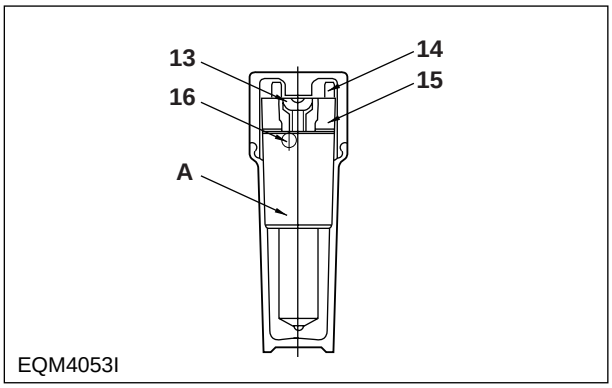

<Figure 4-47> Nozzle service kit

•Inspection of secondary opening pressure

a. After confirming the pre-lift, operate the nozzle tester and increase the internal pressure up to 350~450kgf/cm² to fully lift the needle valve. (Figure 4-48)

b. Release the nozzle tester handle to decrease the tester pressure, then take a note of the movements of the dial gauge

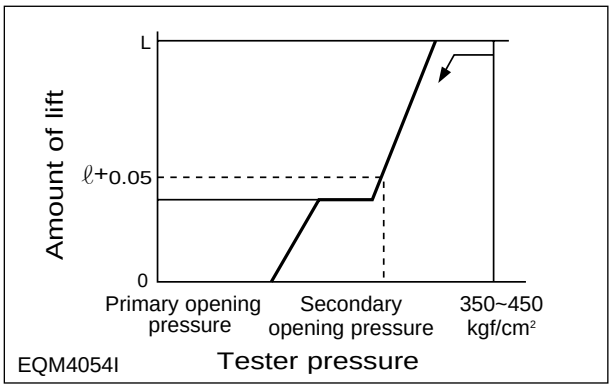

<Figure 4-48> Operation of nozzle tester

https://truckmanualshub.com/

c. Take the indicated value on the pressure gauge at the point of time when the needle of the dial gauge indicates the specified needle valve lift value(in general, pre-lift "ℓ" + 0.05mm). (Figure 4-50)

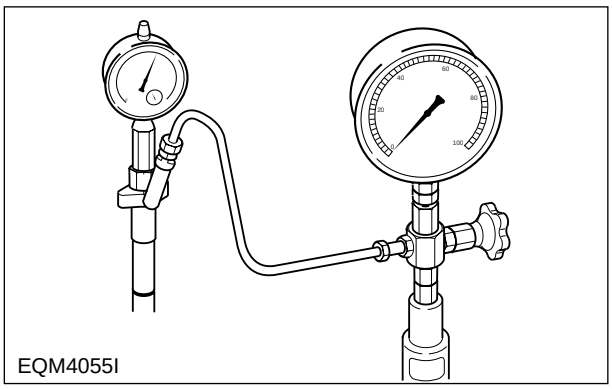

<Figure 4-49> Checking the secondary opening pressure by means of cover method

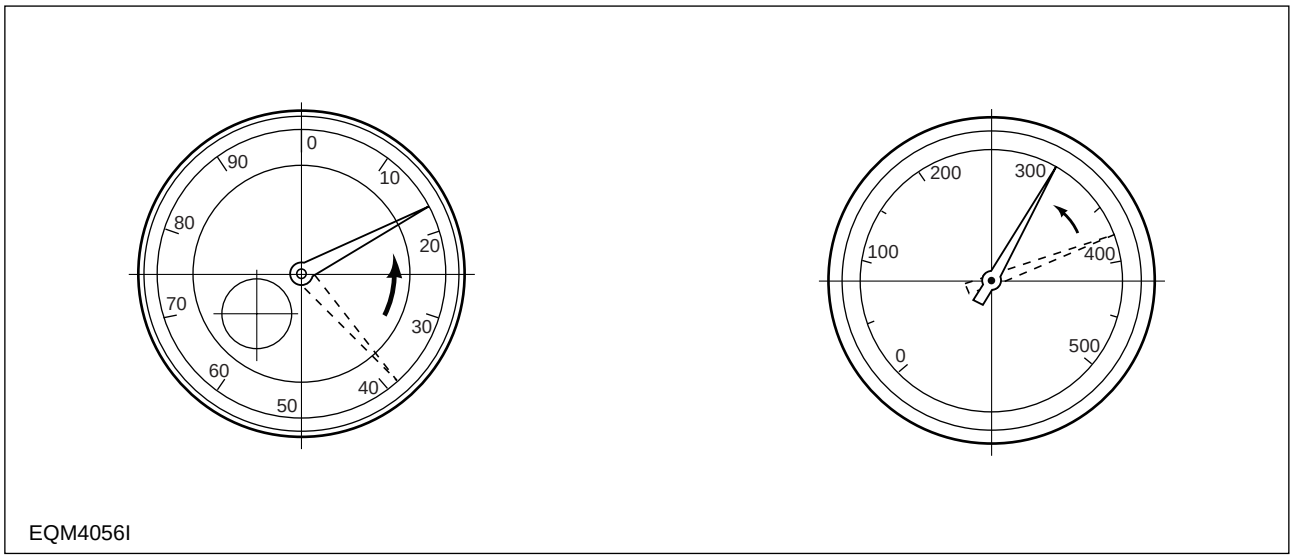

<Figure 4-50> Taking needle valve lift value and measuring secondary opening pressure

●Adjusting secondary opening pressure

a. In the event that the measured value deviates from the specified limit, readjust the primary opening pressure if the amount of deviation is small. (to the standard range of the primary opening pressure) (Figure 4-51)

- If the secondary opening pressure is lower than the standard value: Adjust the primary opening pressure up to the top limit of the standard value, and then measure the secondary opening pressure.
- If the secondary opening pressure is higher than the standard value: In a reverse manner, readjust the primary opening pressure down to the bottom limit of the standard value.

b. If the secondary opening pressure still deviates from the specified limit in spite of the readjusting the primary opening pressure, take off the nozzle fixing portion from the nozzle holder and remove the adjusting shim(10). (Figure 4-52)

c. If the secondary opening pressure is higher than the standard value, fit a thinner adjusting shim than the existing one.

d. After replacing the existing adjusting shim, measure the secondary opening pressure and continue the adjustment until a value satisfying the standard value is obtained.

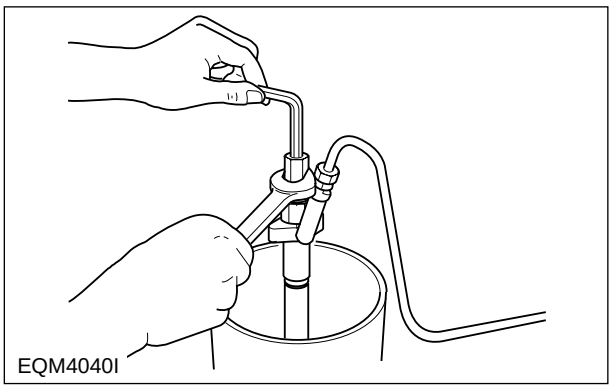

<Figure 4-51> Readjusting primary opening pressure

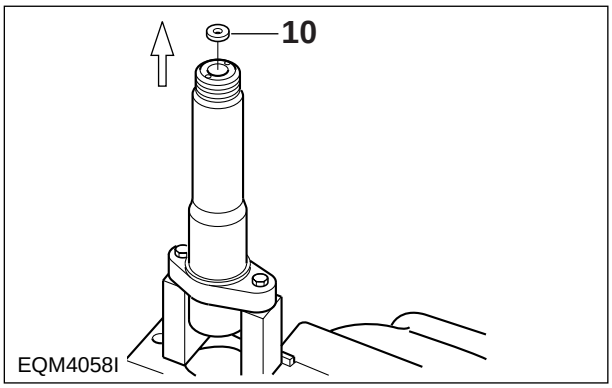

<Figure 4-52> Removing adjusting shim

※Adjusting shim for secondary opening pressure(D=ϕ 9.5:d=ϕ4.5)

Part No.	Thickness(mm)	Part No.	Thickness(mm)
150538-4900	0.40	150538-5300	0.56
150538-5000	0.50	150538-5400	0.58
150538-5100	0.52	150538-5500	0.60
150538-5200	0.54	150538-5600	0.70

https://truckmanualshub.com/

4.3.5. DE12TIS fuel injection pump inspection & adjustment only

1) Pre-stroke actuator inspection drive shaft.

Replace the drive shaft if the ball section is bent,worn or damaged.

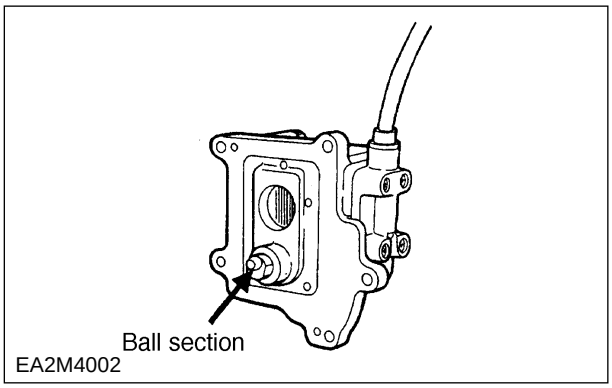

2) Electrical components

(1) Check the resistances between the prestroke actuator terminals shown in the figure at left using a circuit tester. Their resistances are shown below.

Terminal	Resistance(Ω)
1~2	2.45~2.95
3~4	5.5~6.1
5~6	5.5~6.1

Also, check that the resistance between the terminals and the housing is ∞.

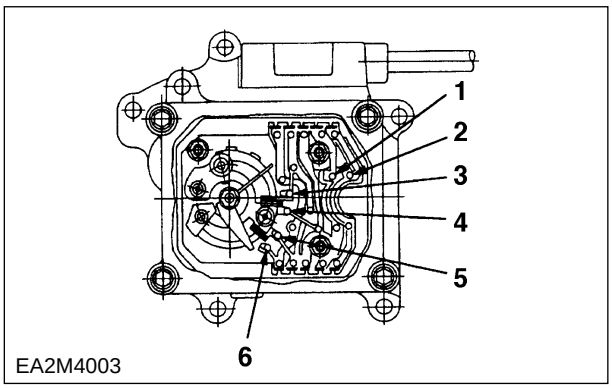

(2) Check the conductance between each of the pre-stroke acuator terminals and connectors using a circuit tester.

⚠ **COUTION : The connector terminal layouts and shapes differ with maker and engine.**

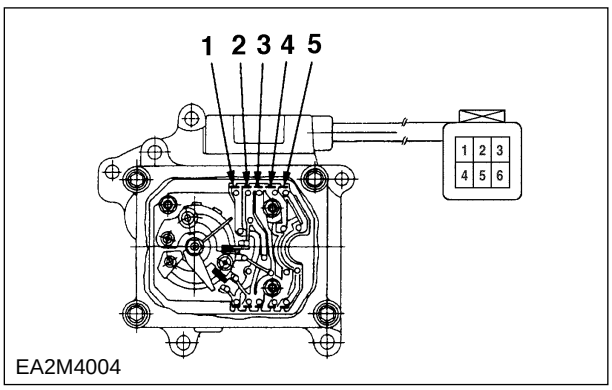

Con. term no	Act. term no	Harness color	Remarks
1	6	Green	Act drive(-)
2	5	Yellow	Act drive(+)
3	4	Black/White	Shield
4	3	Black	P/s sen(GND)
5	2	White	P/s sen(MDL)
6	1	Blue	P/s sen(OSC)

(3) Check the resistances between each of the rack sensor terminals shown in the figure using a circuit tester. Their resistances at 25˚C are shown in the table below.

Wire color	Resistance(Ω)
Red(OSC)~White(MID)	92.5~101.5
Black(GND)~White(MID)	92.5~101.5

Also, check that the resistance between the terminals and the housing is ∞.

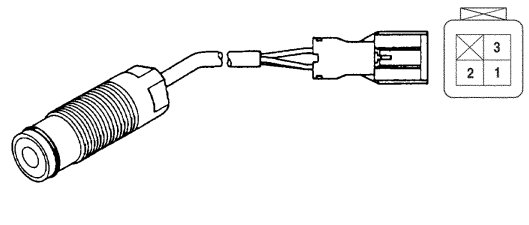

EA2M4005

(4) Check the resistances between the speed sensor terminals (if installed) shown in the figure using a circuit tester. Their resistance is snown in the table below

Wire color	Resistance(kΩ)
Yellow(SIGNAL)~ Black(GND)	2.1~2.5

Note : The above apply to speed sensors with the following part numbers.

479748-6201
479748-6600
479748-6800

Also, check that the resistance between the terminals and the housing is ∞.

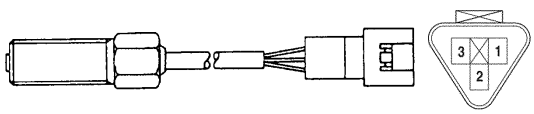

EA2M4006

3) Pre-stroke actuator installation

(1) Insert the ball on the end of the actuator's shaft into the top of the U-shaped link's opening.

Temporarily tighten the pre-stroke actuator's five bolts.

Specified torque :

1.0~4.9 N•m(0.1~0.5 kgf•m)

Note : When installing the actuator, turn it as far as possible clockwise (viewed from the drive side) to facilitate later adjustment.

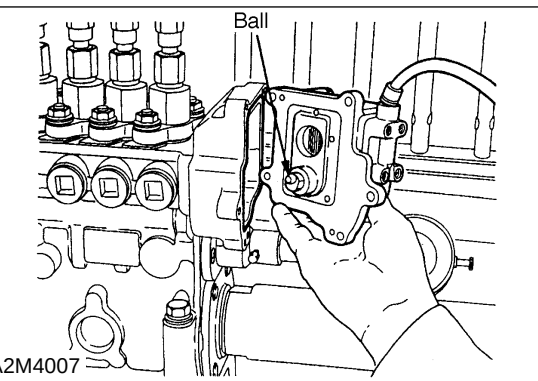

EA2M4007

https://truckmanualshub.com/

(2) Confirm that the actuator's pre-stroke position sensor plate moves smoothly when moved with a finger, as shown at left.

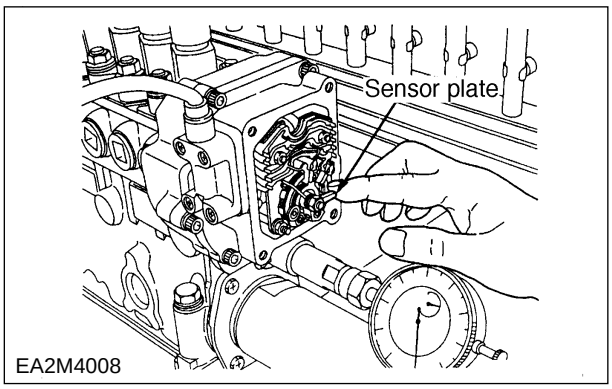

(3) Install the actuator cover on the actuator and tighten the bolts to the specified torque.

Specified torque :

4.9~6.9 N•m(0.5~0.7 kgf•m)

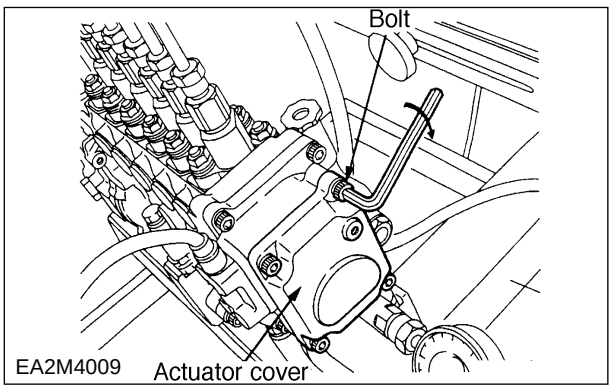

(4) Connect the fuel hose to the rear of the actuator.

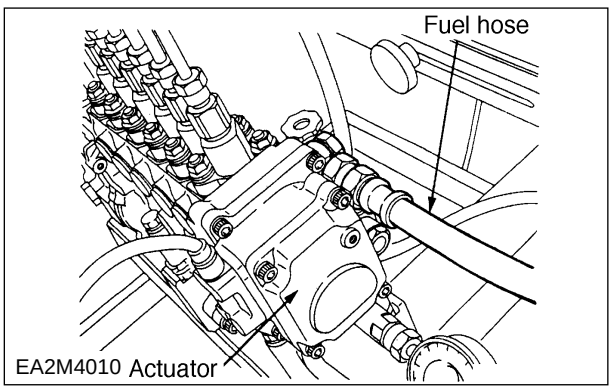

4) Pre-stroke actuator adjustment

(1) Adjustment checker (including control unit)

This control unit is used especially for adjustment of TICS pumps. In addition to the control unit, a constant voltage power supply and a digital voltmeter(both commercially available) are necessary.

The figure below shows the names and functions of each control panel switch, dial and terminal.

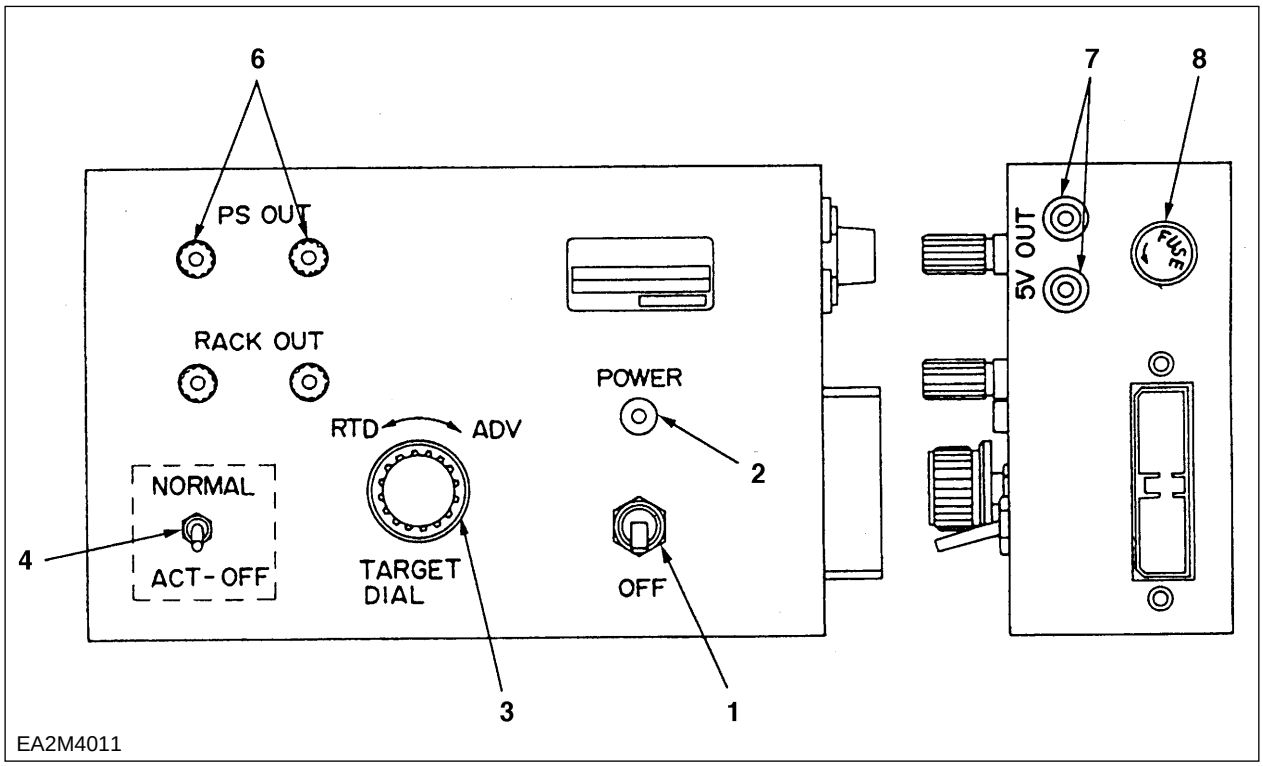

Key no	Name	Remarks
1	Power switch	Used to turn the checker's power ON add Off
2	Pilot lamp	
3	Target dial	Used to set the pre-stroke actuator's output voltage
4	Actuator operation switch	Switch to 'Normal' when operating the actuator, and 'Act-OFF' when not operating the actuator
5	Rack sensor output terminals	Used to connect the racd sensor to the digital voltmeter
6	Ps actuator output terminals	Used to connect the Ps actuator output terminals
7	5 Volt output terminals	Not used at present
8	Fuse	

5) Wiring harness

(1) The wiring harness layout is as shown below.

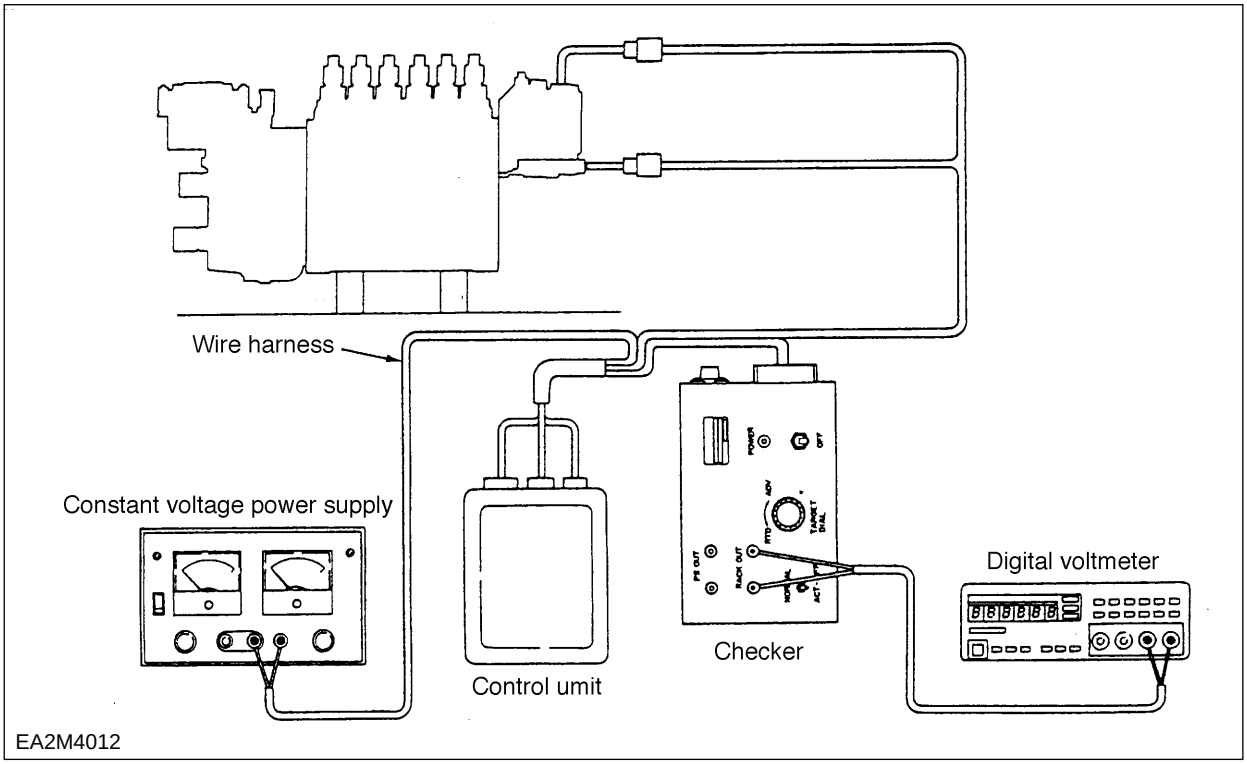

(2) Position each switch on the checker(407980-2090) as shown at left.

⚠ COUTION : Leave the power switch OFF to prevent the pre-stroke actuator from overheating.

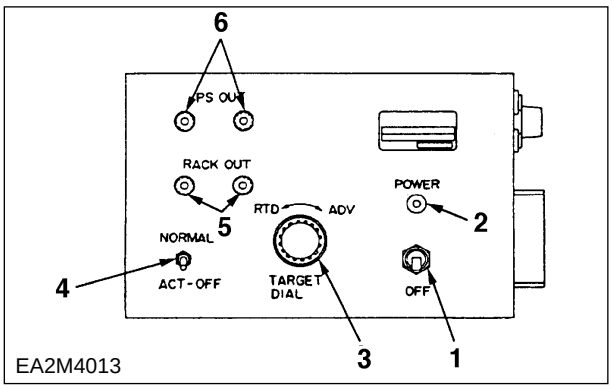

(3) Reinstall the measuring device (105782 -4371) on the No.1 cylinder as described in 'Injection timing adjustment'.

(4) Adjust the pump test stand's fuel oil supply pressure to as low a pressure as possible (eg. 20 kPa(0.2 kgf/cm^2)).

(5) Turn the pump test stand's flywheel and adjust the No.1 cylinder's lift to 4±0.05mm (refer to pages 50 and 51).

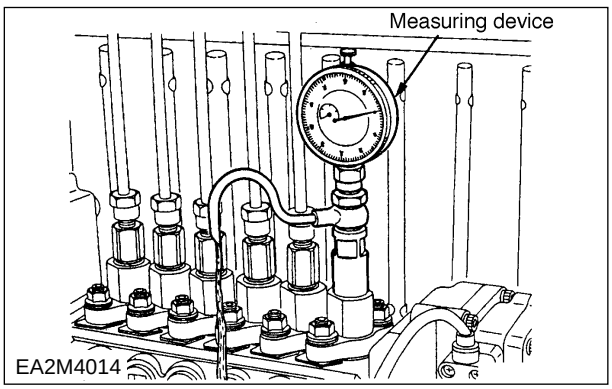

(6) Set the constant voltage power supply at 24 V.

(7) Turn on the digital voltmeter's power switch.

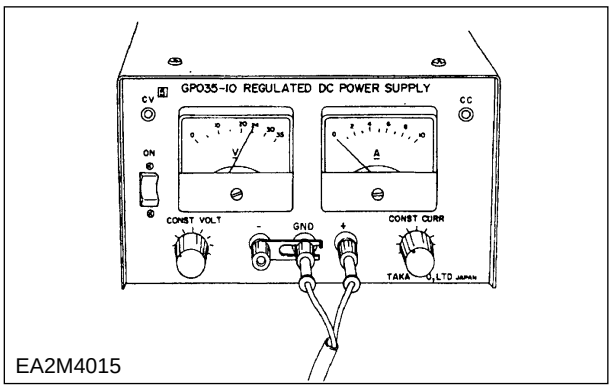

EA2M4015

(8) Turn the checker's power ON.

(9) Trun the 'Normal-Act Off' switch to 'Normal'

(10) Turn the target dial until the fuel stops flowing.

If the pre-stroke sensor output is not 2.62±0.01 V, turn the pre-stroke actuator in a counterclockwise direction (viewed from the drive side) until 2.62±0.01 V is obtained.

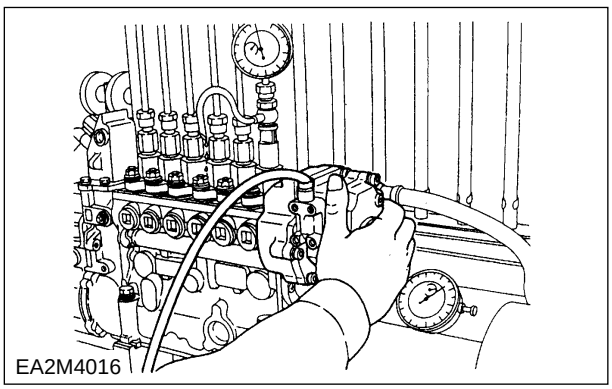
EA2M4016

6) Installation confirmation

(1) Set the control unit's power switch OFF to cut the power to the actuator.

(2) Turn the pump test stand's flywheel and confirm that the pre-stroke is 6.4±0.03mm(refer to pages 51 and 52).

(3) Turn the checker's power switch on and then turn the 'Normal-Act OFF' switch to 'Act-OFF'.

At this time confirm that the pre-stroke sensor output is 1.2±0.2 V

(4) Set the control unit's 'Normal-Act OFF' switch to 'Normal', and position each switch, etc, as shown at left.

(5) Turn the rarget dial, and adjust the rack sensor output to 3-0.02 V.

(6) Turn the pump test stand's flywheel and confirm that the No.1 cylinder's pre-stroke does not exceed 3.4mm.

If the above results cannot be obtained, repeat all procedures from 'Timing rod assembly.

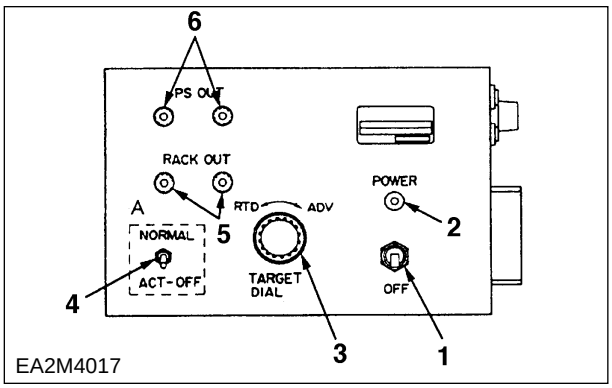

EA2M4017

(7) The relationship between pre-stroke and pre-stroke sensor output is shown at left.

⚠ COUTION : The values at left are only examples. Refer to the data sheet.

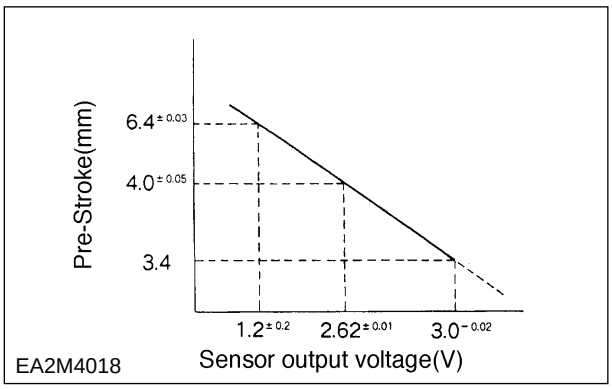

7) Injection quantity adjustment setting the control rod's '0' position

(1) Remove the measuring device (105782-4371) from the No.1 cylinder and reinstall the delivery valve, the delivery valve spring, and the delivery valve holder. Then, tighten the delivery valve holder to the specified torque.

(2) Attach the measuring device (105782 -6370) to the end of the control rod.

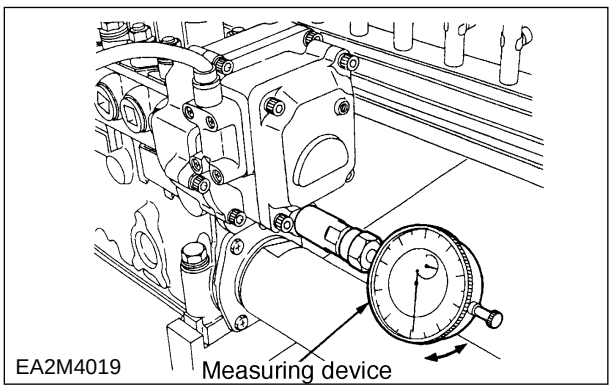

(3) Lock the control lever near the idling position.

(4) Fully tighten the governor shaft to loosen the governor spring. Then, loosen the idling spring's plate plug to loosen the idling spring.

(5) Increase the pump speed to 1,000~ 1,200 r/min and push the end of the measuring device, mounted on the end of the control rod, fully toward the governor side until the control rod stops to obtain the '0' position.

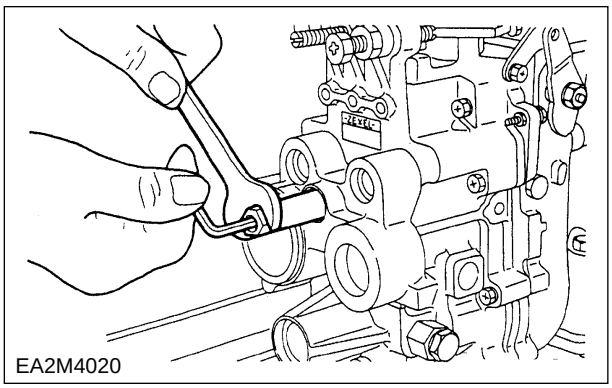

8) Injection quantity adjustment

When adjusting the TC(S) HD type pump's fuel injection quantity, operate the pre-stroke actuator with the pre-stroke set as specified.

(1) Turn the 'Normal-Act OFF' switch to the 'Normal" position and rotate the target dial to set the sensor output to 2.62±0.01 V, corresponding to a pre-stroke of 4.0±0.05mm.

(2) Then, adjust the fuel injection quantity until the specified quantities ard obtained at the specified pump speed and in the specified control rod position.

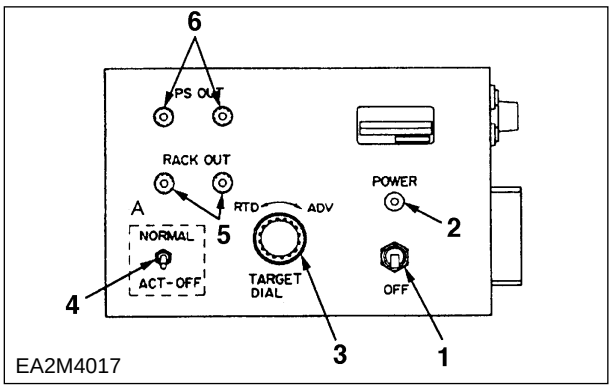

EA2M4017

(3) If not as specified, loosen the injection pipe, loosen the two nuts fixing the plunger barrel's flange, and then turn the flange right or left to adjust the injection quantity.

Note : When the sleeve flange is turned as shown in the figure at left (right helix plunger), the injection quantity increases.

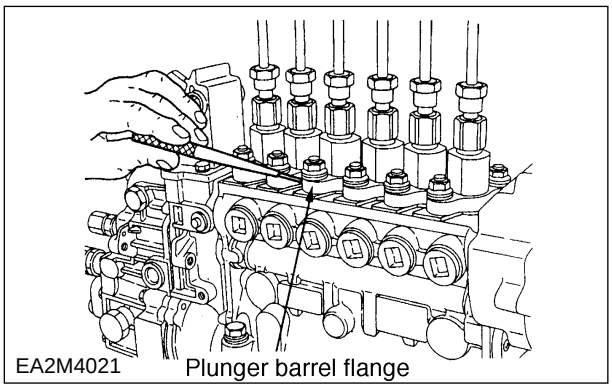

EA2M4021

(4) Idling fuel quantity confirmation

Rotate the target dial to set the sensor output to $V=V_1+0.05\pm0.01$ V, corresponding to a pre-stroke of 6.3±0.03mm,and then check the idling fuel quantity.

(5) When the variation between each cylinder's injection quantity satisfies the specified value, tighten the flange fixing nuts to the specified torque.

Specified torque :

39~44 N•m(4~4.5 kgf•m)

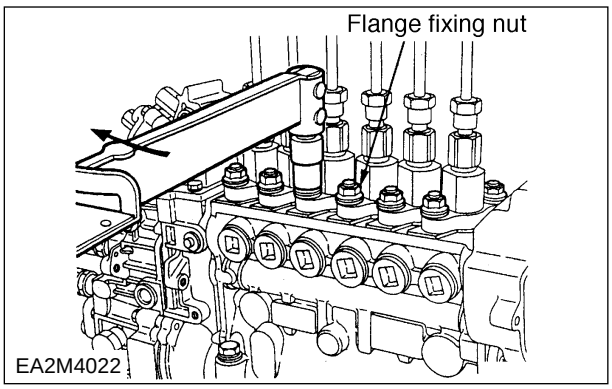

EA2M4022

9) Rack sensor adjustment

(1) Rack limiter adjustment

Secure the control rod in the position where the fuel quantity 'I' is obtained.

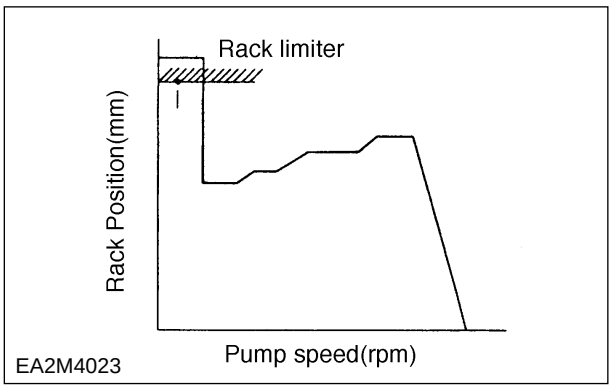

(2) Install the block and measure the distance 'X'.

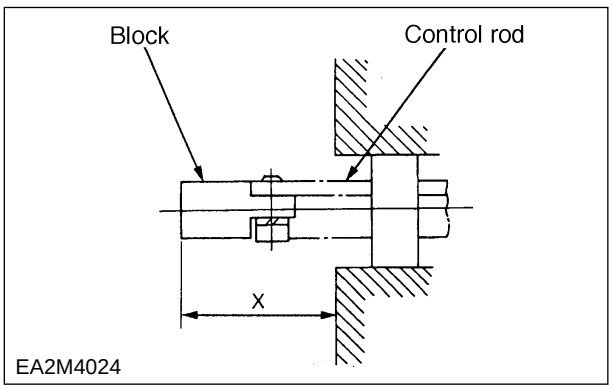

(3) Install the joint and measure the distance 'Y'.

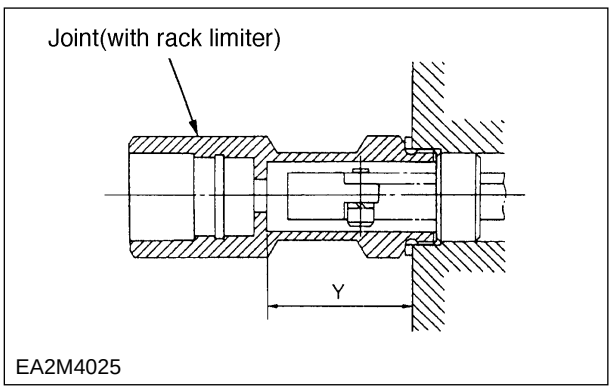

(4) Install the core and adjust the dimension 'X' using shims until it equals 'Y'. After adjusting the distance 'Y', install the joint and check the fuel injection quantity.

Note : If not as specified, add or remove shims until it is as specified.

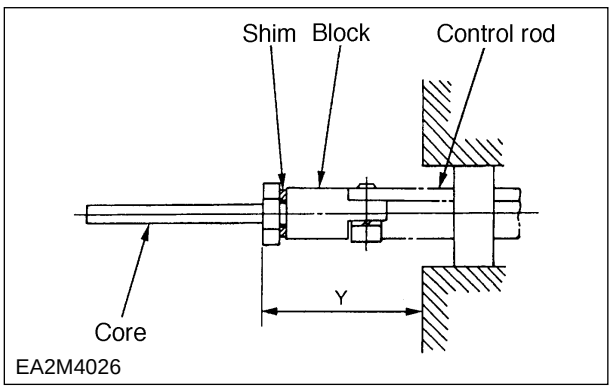

(5) Screw in the bobbin until the edge of the bobbin contacts the bottom of the joint.

Note : Before installing the bobbin in the joint, apply grease to the O-ring.

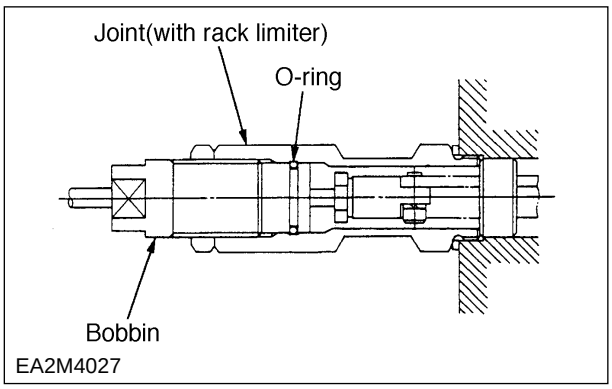

10) Rack sensor adjustment

(1) Secure the control lever in the full speed position.

(2) Specified output voltage
Read the specified output voltage and the specified rack position from the Rack position - Voltage graph in the calibration data.

(3) Read the pump speed that corresponds to the specified rack position from the governor graph of the fuel injection quantity adjustment table (page 1 of the data sheet) and set the pump speed to the speed specified.

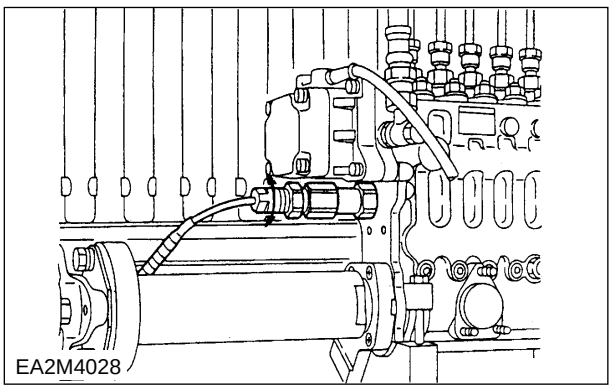

(4) Then, adjust the depth that the bobbin is screwed in so that the rack sensor output voltage is 2.00±0.01 V.

⚠ COUTION : The values at left vary with the pump. Refer to the data sheet at adjustment.

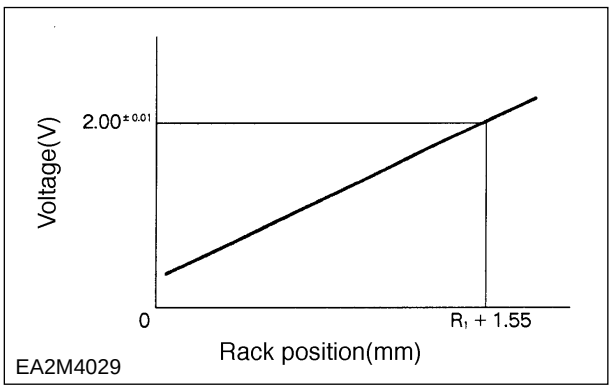

(5) After adjustment, tighten the bobbin using the nut.

(6) Move the pump's lever 2~3 times and confirm that the voltage is 2.00±0.01 V when it is returned to the full position.

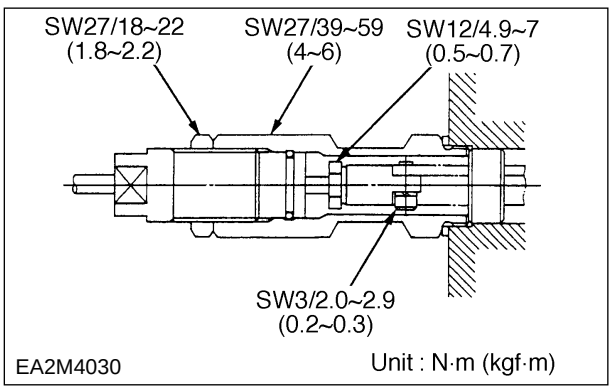

11) Ecu circuit diagram

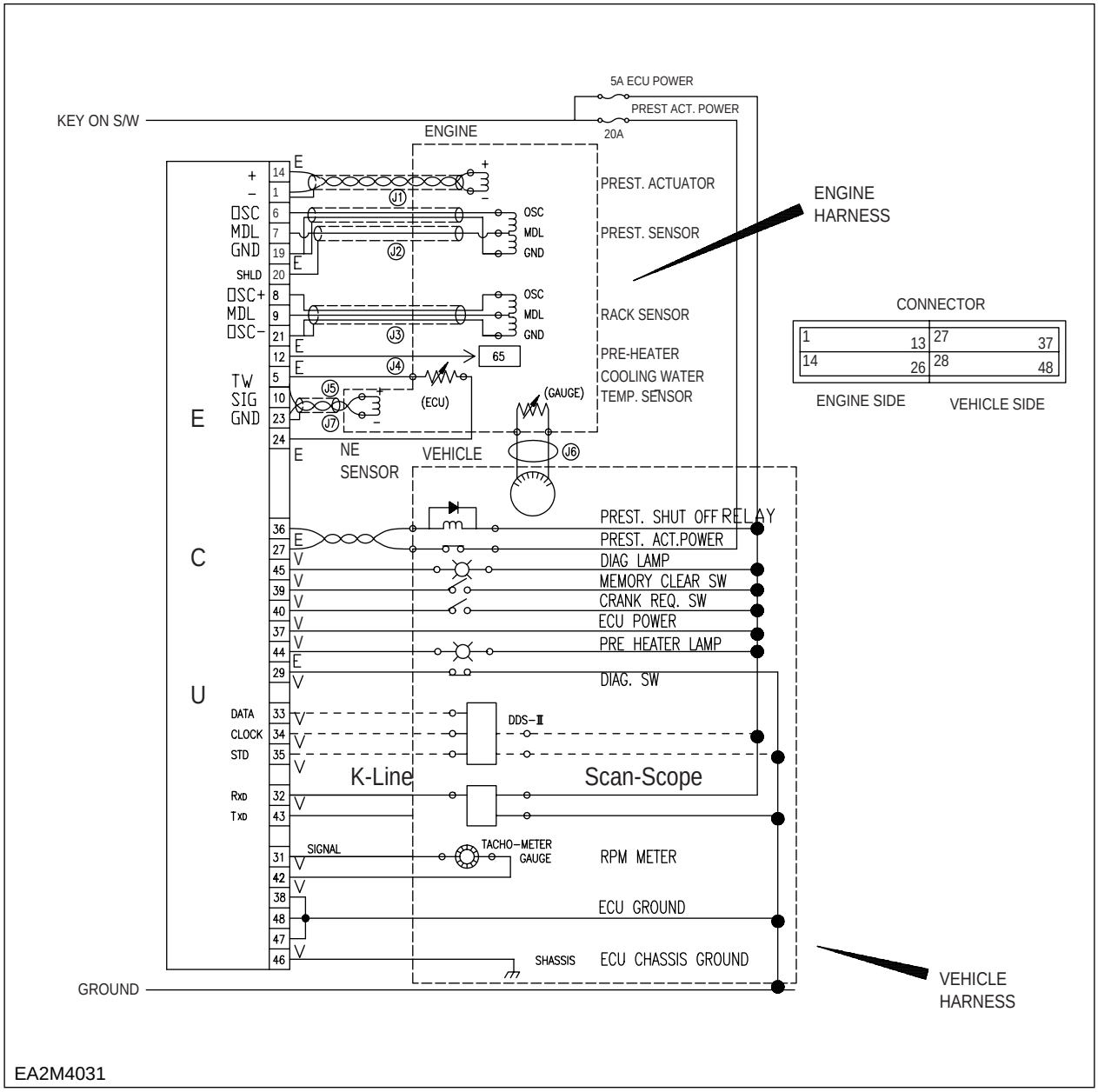

1. Prest.ACT(-)
5. TW sensor
6. Prest. sensor(OSC)
7. Prest. sensor(MDL)
8. Rack sensor(OSC)
9. Rack sensor(MDL)
10. Ne sensor(SIG)
12. Pre. heater relay
14. Prest ACT.(+)
19. Prest. sensor(GND)
20. Prest. sensor(SHLD)
21. Prest. sensor(GND)
23. Ne sensor(GND)
27. Prest. power(VB)
29. Diag. SW
31. Tacho(SIG)
32. K-line
33. DDS 3(data)
34. DDS 3(clock)
35. DDS 3(stb)
36. Prest. shut off relay
37. VB
38. Prest. Power(GND)
39. Memory clear SW
40. Start SW
42. tacho(GND)
44. Air heater lamp
45. DIAG. lamp
46. Chassis groung
47. GND
48. GND

https://truckmanualshub.com/

●Retaining nut

a. Take out the dial gauge, nut, holder and gasket from the cap nut(7).

b. Remove the adjusting retaining nut and gasket, and install the original retaining ring nut(17:SW19mm). (Figure 4-53)

Retaining nut tightening torque 59~78 N•m (6.0~8.0kgf•m)

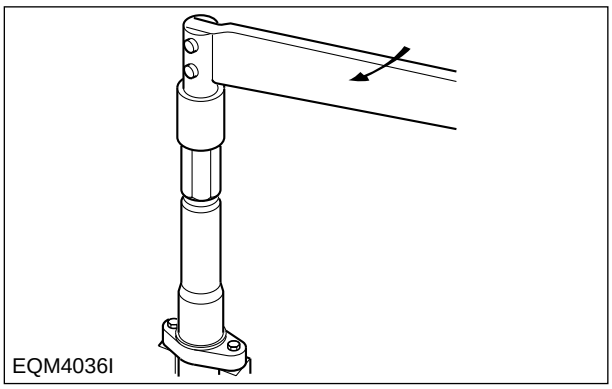

<Figure 4-53> Installing retaining nut

●Inspection at completion

a. Assemble the nozzle holder to a nozzle tester and check the primary opening pressure, spray patterns, oil tightness of seat portion, and oil leakage from each part. (Figure 4-54)

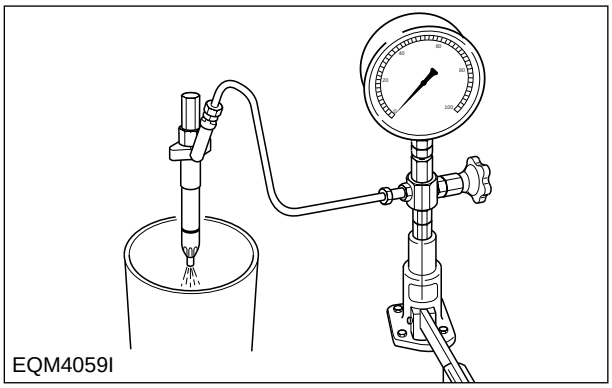

<Figure 4-54> Inspection at completion

b. When replacing the nozzle, replace it with a new "nozzle service kit" integrated with a nozzle, lift piece, and spacer as a complete set. (Figure 4-55)

Note: If only a nozzle is replaced, the amount of pre-lift will deviate from the specified value.

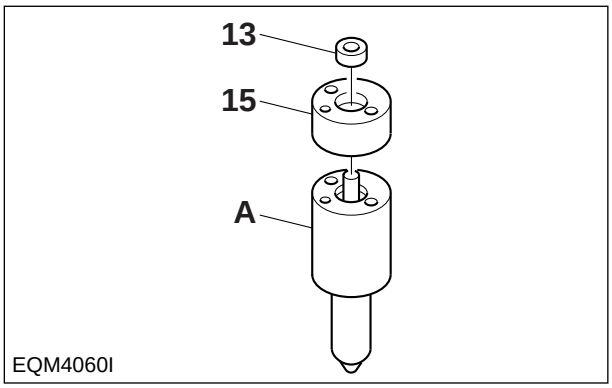

<Figure 4-55> Nozzle, lift piece, and spacer

4.3.6. Diagnostics and troubleshooting

Complaints	Possible causes	Corrections
1. Engine won't start 1) Fuel not being pumped out from feed pump	(1) Fuel pipes clogged or air into pipe line (2) Feed pump valve defective (3) Feed pump piston or push rod sticking	Correct Replace Disassemble, correct
2) Fuel not being injected from injection pump	(1) Fuel filter element restricted (2) Air in fuel filter or injection pump (3) Plunger and/or delivery valve sticking or defective	Clean Bleed Disassemble, correct
3) Fuel injection timing incorrect	(1) Injection pump not properly installed on pump bracket (2) Injection pump tappet incorrectly adjusted (3) Cams on cam shaft worn excessively	Check, correct Check, correct Replace
4) Injection nozzles inoperative	(1) Needle valves sticking (2) Fuel leaking past clearance between nozzle and needle valve (3) Injection pressure incorrect	Correct or replace Correct or replace Adjust
2. Engine starts but stalls immediately	(1) Pipe from feed pump to injection pump clogged or filter clogged (2) Air in fuel (3) Feed pump delivery insufficient (4) Fuel delivery insufficient due to clogging of fuel tank air breather	Clean Bleed Disassemble, correct Replace breather
3. Engine lacks power	(1) Plunger worn excessively (2) Injection timing incorrect (3) Delivery valves defective (4) Nozzle leaks excessively (5) Nozzle not working normally	Replace Adjust Replace Correct or replace Disassemble, correct
4. Engine knocking	(1) Injection timing too fast (2) Nozzle injection pressure too high (3) Nozzles not working normally	Adjust Adjust Disassemble, correct
5. Engine knocks seriously producing excessive exhaust smoke	(1) Injection timing incorrect (2) Nozzle injection pressure too low (3) Nozzle spring broken (4) Nozzles not working normally (5) Plungers worn excessively (6) Delivery valves seat defective (7) Supply of fuel excessively	Adjust Adjust Replace Replace Adjust Replace Check feed pump

https://truckmanualshub.com/

Complaints	Possible causes	Corrections
6. Engine output unstable	(1) Supply of fuel insufficient (2) Air in fuel (3) Water in fuel (4) Operation of plungers unsmooth (5) Movement of control rack sluggish (6) Nozzles defective (7) Injection starting pressure of each barrel incorrect (8) Automatic timer defective	Check feed pump Bleed Replace fuel Disassemble, correct Disassemble, correct Disassemble, correct Adjust Disassemble, correct Disassemble, correct
7. Engine does not reach maximum speed	(1) Nozzles not working normally (2) Governor defective	Disassemble, correct Disassemble, correct
8. Engine idling unstable	(1) Movement of control rod sluggish (2) Operation of plungers unsmooth (3) Control pinions not engaged with control rod correctly	Disassemble, correct Disassemble, correct

4.4. Turbocharger

4.4.1. Main data and specifications

1) Main data and specifications

Model		Specifications
At maximum output	Air pressure at compressor outlet	About 1,257kg/cm² Gauge
	Air suction volume	About 19.0m³/min
	Speed of turbine revolution	About 95,000rpm
Maximum allowable speed		110,000rpm
Max. allowable temperature of exhaust gas at turbine inlet		750℃
Lubricating system		External oil supply
Weight		14kg

2) Working principle

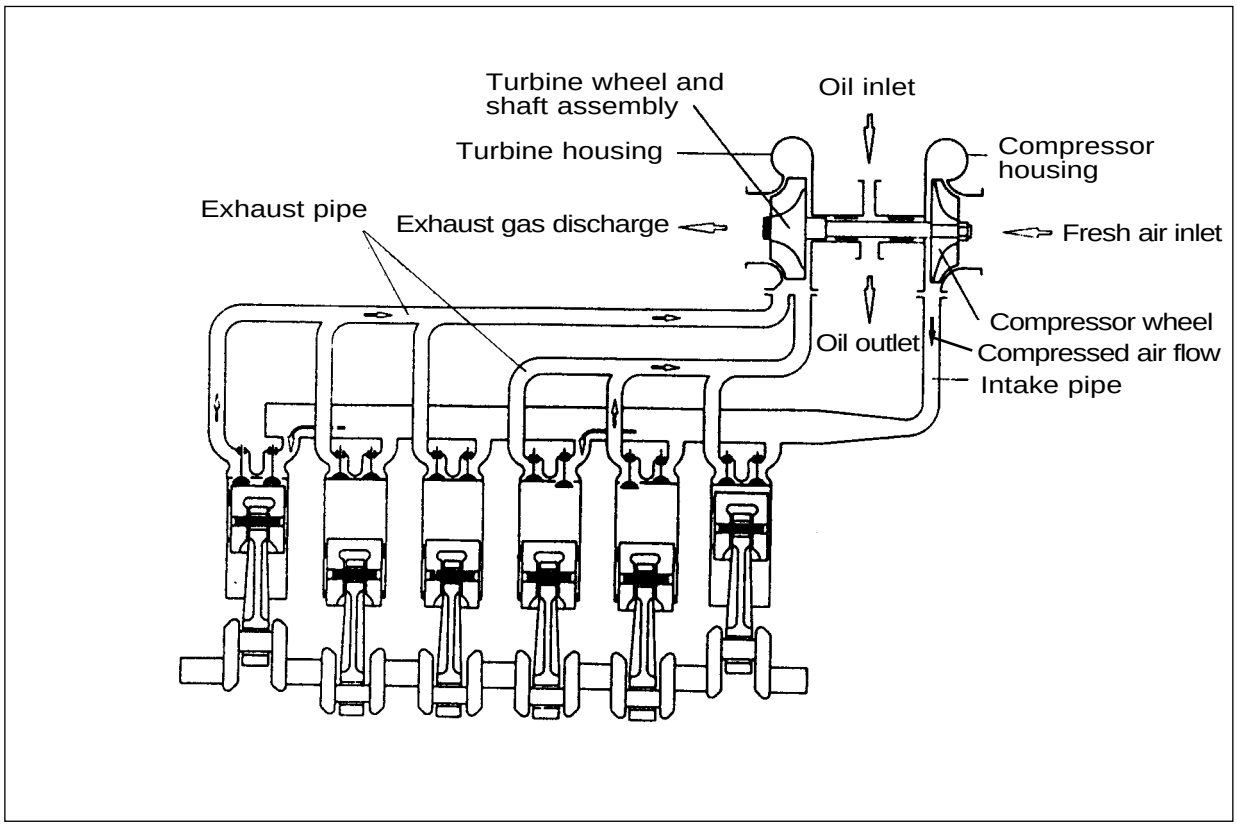

<Figure 4-56> Operating principle of turbocharger

The turbocharger is a system designed to make use of the engine exhaust gas energy to charge high-density air into the cylinders, thereby to increase the engine output.

3) Construction

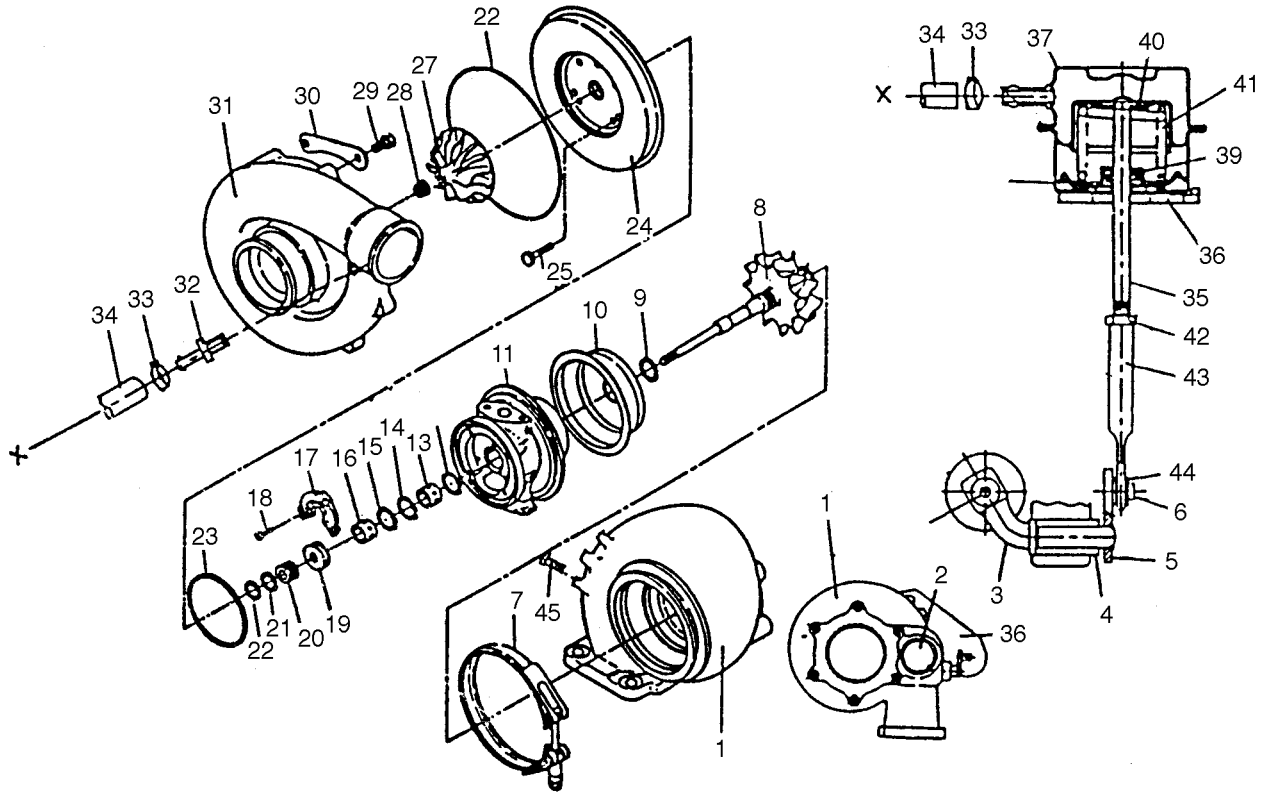

EQM4062S

1	Turbine housing	16	Bearing	31	Compressor housing
2	Plug	17	Thrust collar	32	Elbow
3	Arm and valve	18	Screw	33	Clamp
4	Bush	19	Thrust bearing	34	Hose
5	Crank	20	Thrust space	35	Piston
6	Retaining ring	21	Piston ring	36	Bracket, body
7	V-band	22	Seal ring	37	Cove
8	Wheel	23	Seal ring	38	Retainer
9	Piston ring	24	Rear plate	39	Gimble
10	Wheel shroud	25	Bolt	40	Diaphragm
11	Center housing	26	O-ring	41	Spring
12	Retaining ring	27	Compressor wheel	42	Nut
13	Bearing	28	Nut	43	End rod
14	Retaining ring	29	Bolt	44	Retaining ring
15	Retaining ring	30	Clamp	45	Bolt

4.4.2. General descriptions

The engine output is determined by the fuel delivery volume and engine efficiency.
To burn the supplied fuel completely to change into effective power for the engine, the volume of air enough to burn the fuel completely should be supplied into the cylinders.

Therefore, the engine output is determined substantially by the cylinder capacity, and the greater volume of compressed air is charged into the cylinders of given capacity, the greater engine output can be obtained as a greater volume of air charged into the cylinders burns so much more fuel.

As explained, the compressing of air to supply into the cylinders is called "Supercharging" and the making use of the energy of exhaust gas discharged from the combustion chamber to charge the compressed air into the cylinders is called "Turbocharging".

4.4.3. Functions

1) Turbine
   Exhaust gas discharged from the combustion chamber distributes its own energy to the turbine blades while passing the inside of the turbine housing, with the result that the turbine shaft can get rotating force. This is the working principle of 'turbine', which is mounted with seal rings and heat protector to prevent exhaust gas from affecting the bearings adversely.
2) Compressor
   The compressor, which is connected to the turbine over the one and same shaft to form a rotating body, takes in and compresses ambient air with rotating force transmitted from the turbine shaft. Then, the compressed air is delivered to the intake pipe. This is the working principle of the compressor.
3) Bearings
   (1) Thrust bearing
   The turbine wheel creates thrust force. Therefore, exercise care so that the shaft is not deviated from its original position due to this thrust.
   (2) Journal bearing
   This journal bearing of floating type forms a dual oil film on both the inside and outside of the bearing so that the bearing can rotate independently. As the dual oil film plays a role as a damper, the sliding speed of the bearing surface becomes lower than the rotating speed of the shaft, resulting in assurance of stability in its movement.
4) Sealing-Compressor shaft
   The compressor is of a dual construction type composed of seal plate and seal ring to prevent the leak of compressed air or lubricating oil.

https://truckmanualshub.com/

4.4.4. Precautions for operation

1) Precautions for operation of engine

The following precautions should be observed when starting, operating, or stopping the engine:

Complaints	Possible causes	Corrections
When starting the engine	1) Check oil level 2) Crank the engine with starter to check the increase in oil pressure(until the needle of pressure gauge starts to move or pressure indicator lamp is actuated) before starting the engine. 3) When having replaced oil, oil filter element, or lubricating parts, or when having stopped the engine for extended period of time, or in a cold place, loosen the oil pipe connections and operate the starter motor until oil is discharged. After completing the operation, be sure to retighten the oil pipe connections portion before starting the engine.	2) Abrupt starting of the engine causes the engine to rotate with oil not being distributed not only to each part but also to the turbocharger, resulting in abnormal wear or seizure on the bearing due to insufficient supply of oil. 3) In the case of the engine stopped for extended time or in a cold place, oil fluidity within the pipes can be deteriorated.
Immediately after starting	1) Run the engine at idle for 5 minutes after starting off.	1) Applying load abruptly If load is abruptly applied with the engine and turbocharger rotating unsmoothly, such parts that a sufficient amount of oil has not reached can be seized up.
Immediately after starting	2) Check each part for leakage of oil, gas, and air, and take proper measure.	2) Leakage of oil, gas, and air (especially, oil leak) causes drop in oil pressure and loss of oil. resulting in seizure of the bearing.
During operation	Check the followings: 1) Oil pressure At idle: 0.8kg/cm^2 or more At full load: 3.0~4.8kg/cm^2 2) If unusual sound or vibration is heard or felt, reduce engine revolutions slowly and locate the cause.	1) Excessively low oil pressure causes unusual wear or seizure of the bearing. Too high pressure causes oil leakage. 2) The engine is operated continuously with unusual sound or vibration not corrected, it can be damaged beyond repair.
When stopping the engine	1) Run the engine at idle for 5 minutes before stopping.	1) If the engine is put to a stop after being operated at high load, heat from the red-hot turbine blades is transmitted to the bearing portion and burns oil to cause seizure of the bearing metal and rotating shaft.

4.4.5. Walk-around check and servicing

As the condition of turbocharger depends greatly on how well the engine is serviced, it is very important to maintain the engine in accordance with the specified maintenance procedure.

1) Intake system

Pay particular attention to the air cleaner when servicing the intake system.

In the case of wet-type air cleaner, if the level of oil surface is lower than specified, cleaning effect is poor; if too high, the cleaner draws in oil to foul the case.

Especially, if the rotor is fouled, the sophisticatedly-tuned balance is broken to create vibration and to cause seizure and unusual wear to the bearing. Therefore, it is very important to use a good quality air cleaner all the time.

In the case of dry-type air cleaner, it is essential to clean it according to the readings on the dust indicator to reduce intake resistance as much as possible.

2) Exhaust system

Pay particular attention to prevent gas leaks and seizure when servicing the exhaust system because leakage of exhaust gas from discharge pipes, turbocharger fixing portions, etc. lowers charging effect.

As such components as turbine chamber that becomes red-hot during operation use heat resisting steel nuts, do not interchange these nuts with ordinary steel nuts. In addition, apply anti-seizure coating to fixing nuts on the portions as designated.

3) Fuel system

If the full load stopper regulating the maximum injection volume and the maximum speed stopper regulating the maximum speed in the fuel injection pump are adjusted without using a pump tester, the turbocharger rotates at excessively rapid speed and may suffer damage.

Besides it, if spray pattern from the fuel injection nozzles is bad or the injection timing is incorrect, temperature of exhaust gas rises up to affect the turbocharger adversely. To avoid such trouble, be sure to make a nozzle test.

4) Lubricating system

Pay particular attention to oil quality and oil filter change intervals when servicing the lubricating system. Deteriorated engine oil affects adversely not only the engine but also the turbocharger. Suggested engine oils for the turbocharger-mounted engine are as follows:

(1) During hot season: SAE 30(CD grade), DE12TIS SAE 30(CG grade)

(2) During cold season: SAE 10W(CD grade), DE12TIS SAE 10W(CG grade)

(3) During both seasons: SAE 10W~30(CD grade), DE12TIS SAE 10W~30(CG grade)

4.4.6. Periodical checking and servicing

Make it a rule to check the turbocharger assembly for condition and contamination periodically.

1) Guide for checking the rotor for rotating condition

The inspection of the rotor assembly for rotating condition should be performed by the degree of unusual sound. If a sound detecting bar is used, install its tip on the turbocharger housing and increase the engine revolutions slowly. If a high-pitch sound is heard continuously, it means that the rotor assembly is not normal. In this case, as the metal bearing and rotor are likely to be in abnormal conditions, the turbocharger should be replaced or repaired.

2) Guide for checking rotor end play

Disassemble the turbocharger from the engine, then check the rotor axial play and radial play. When disassembling the turbocharger, be sure to plug the oil inlet and outlet ports with tape, etc.

(1) Rotor axial play

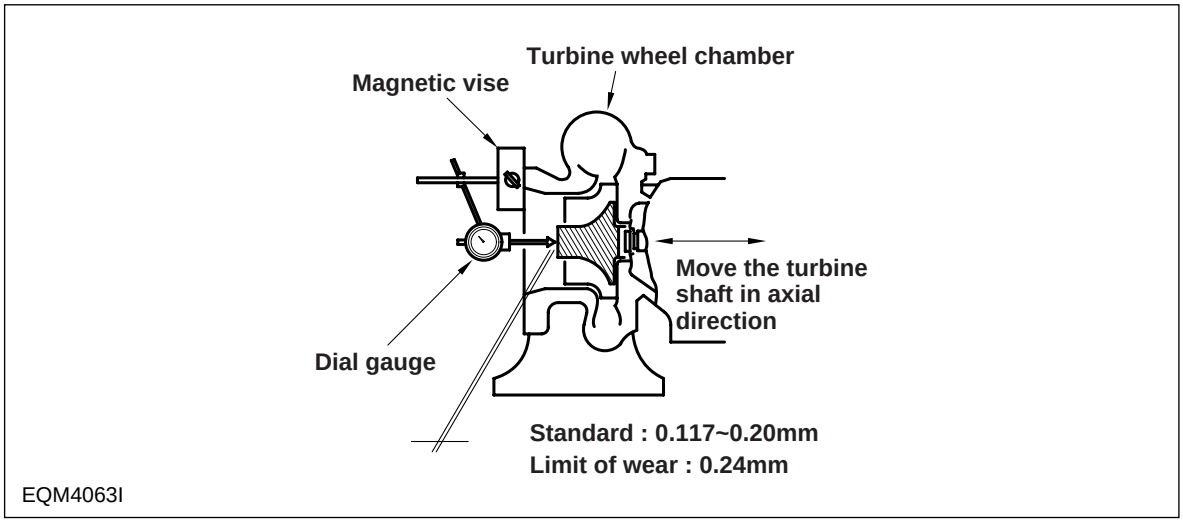

<Figure 4-57> Measuring rotor axial play

(2) Rotor radial play

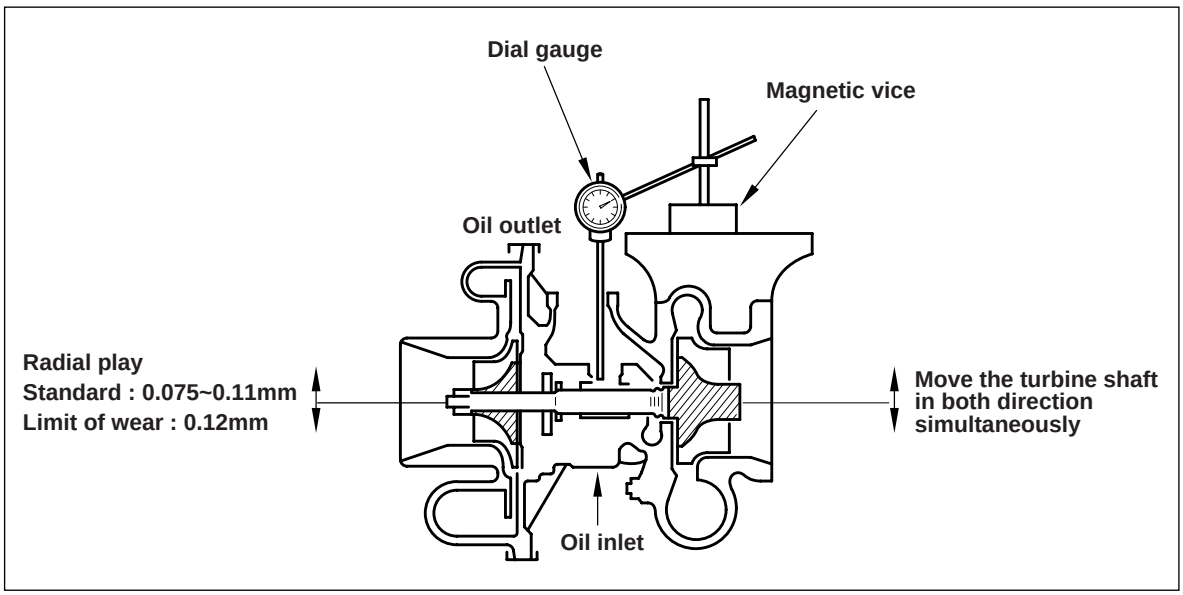

<Figure 4-58> Measuring rotor radial play

(3) If the measured axial and radial plays are beyond the limit of wear, replace or repair the turbocharger.

3) Guide for disassembling/cleaning and checking the turbocharger

First, disassemble the turbocharger from the engine and clean/check it with the oil inlet and outlet plugged with tape and so on.

4) Precautions for reassembling the turbocharger onto the engine

For reassembly of the turbocharger or handling it after disassembly operation, be sure to observe the following precautions: Especially, exercise extreme care to prevent foreign matters from entering the inside of the turbocharger.

(1) Lubricating system

a. Before reassembling the turbocharger onto the engine, inject new oil in the oil inlet port and lubricate the journal and thrust bearings by rotating them with hand.

b. Clean not only the pipes installed between the engine and oil inlet port but also the oil outlet pipe and check them for damage or foreign matters.

c. Assemble each joint on oil pipes securely to prevent oil leaks.

(2) Intake system

a. Check the inside of the intake system for foreign matters.

b. Assemble each joint on the intake duct and air cleaner securely to prevent air leaks.

(3) Exhaust system

a. Check the inside of the exhaust system for foreign matters.

b. Be sure to use heat resisting steel bolts and nuts. Do not interchange them with ordinary steel bolts and nuts when performing reassembly operation. Apply anti-seizure coating to the bolts and nuts.

c. Assemble each joint on the exhaust pipes securely to prevent gas leaks

4.4.7. Diagnostics and troubleshooting

Complaints	Possible causes	Corrections
1. Excessive black smoke	1) Air cleaner element clogged 2) Restrictions in air duct 3) Leakage at intake manifold 4) Turbocharger seized up and not rotating 5) Turbine blades and compressor blades coming in contact with each other or damaged 6) Exhaust piping deformed or clogged	Replace or clean Check and correct Check and correct Disassemble/repair or replace Disassemble/repair or replace Check and correct
2. Excessive white smoke	1) Oil leak into turbine and compressor 2) Worn or damaged seal ring due to excessive wear of bearing	Disassemble/repair or replace Disassemble/repair or replace
3. Low engine output	1) Gas leak at each part of exhaust system 2) Air cleaner element restricted 3) Turbocharger fouled or damaged 4) Leakage at discharge port on compressor side	Check and correct Replace or clean Disassemble/repair or replace Check and correct
4. Unusual sound or vibration	1) Rotor assembly coming in contact 2) Unbalanced rotation of rotor 3) Seized up 4) Each joint loosened	Disassemble/repair or replace Disassemble/repair or replace Disassemble/repair or replace Check and correct

https://truckmanualshub.com/

5. Scan pole diagnosis for DE12TIS

5.1. Wire harness connection

To test for a auto with Scan pole, user should connect wire harness as illustrated on the right:

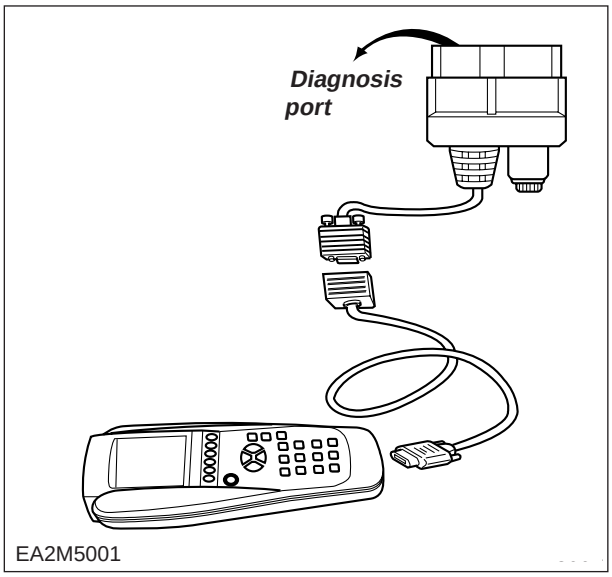

EA2M5001

5.2. System & vehicle selection

5.2.1 Initial screen

To turn on Scan Pole, press the [ON/OFF] key.
After 0.5 sec Scan Pole will respond by displaying the initial screen as follows.

To turn off Scan Pole, press the [ON/OFF] key once more. In this case to change the screen, press any key.

Press any key if ok marks are displayed to the system check and memory check items of the scan pole screen.

EA2M5002

SCAN POLE	
Device No.	: E990119
System check	: OK!
Memory check	: OK!
Program virsion	: 99/02/04

5.2.2 Select function

Follow screen is the main menu screen. in here, user can select a test item.

Selecting method is two ways.

Move to the test item by means of using up, down ([↑], [↓]) key and press the [ENTER] key.

If user selects the [ELECTONIC VEHICLETEST] then following screen will be displayed.

SELECT FUNCTION

01. ELECTRONIC VEHICLE TEST
02. FLIGHT RECORD OUTPUT
03. PROGRAM UPDATE

If user selects the DAEWOO BUS model then following screen will be displayed.in here, user can select a test target unit.

```
SELECT DAEWOO VEHICLE
01. DAEWOO BUS
02. DAEWOO TRUCK
```

And, if user selects the Engine Control Unit

```
SELECT CONTROL UNIT
01. Engine Control Unit
02. Antilock Brake System
```

then the right screen will be displayed.

In here, user must select Daewoo vehicle model one of them.

```
SELECT BUS MODEL
01. DIESEL 4500 SOHC(ZEXEL)
02. DIESEL 4500 SOHC(BOSCH)
03. CNG 4500C(WOODWARD)
```

If user selects a model and press the ENTER key then the right messages will be displayed.

```
Line and unit
checking now
Please wait a
moment
```

[NORMAL]

```
COMMUNICATION ERROR
Communication falt !
Check on connection and do it
again
```

[FAULT]

If Daewoo vehicle model was not matched with communication protocol or any error occurred, then above FAULT message is displayed.
If NORMAL message displayed, then program goes on next screen.

And the right screen will be displayed as a result of unit check.

```
COMMUNICATION CHECK
ENGINE MODEL     : DE12TIS
DHI ECU NO       : 65.12201-7001
DHI ROM NO       : 65.99901-0001
ZEXEL ECU NO     : 2860
ZEXEL ROM NO     : 1320
PART NO          : EF.123-157
```

In here, press the ENTER key to go on next screen.

Now, user can test concerned with electroic control engine.

```
SELECT DIAGNOSIS ITEM
01. SELF-DIAG (CURRENT)
02. SELP-DIAG (PAST)
03. SENSOR DATA
04. ACTUATOR TEST
05. FLIGHT RECORD
```

https://truckmanualshub.com/

5.3. Self-Diagnosis(current)

If user selects the SELF-DIAGNOSIS in diagnosis item menu when prestroke acturator and fuel rack sensor fail, then following screen is displayed

* SELF-DIAGNOSIS (PAST) FUNCTION IS SAME.

```
DIAGNOSIS (CURRENT)
C15. PRESTROKE ACTUATOR POWER ERROR
C22. FUEL RACK SENSOR ERROR
HELP   ERASE                    PRINT
```

↓ Repair Hint ↓ Fail code erase ↓ Fail item printing

5.3.1 Basic application

As you know in this function, user can see screen in which fail code & concerned item are displayed.

These fail codes are added on the way of diagnosis communication when more fail codes happen. Fail code is over 11, then use up, down (↑, ↓) key to see more fail code message.

5.3.2. Help & repair message

Press the HELP : F1 function key for self-diagnosis helps message of each item or REPAIR HINT display as follows.

This is the message for solving the C15 error.

```
DIAGNOSIS (CURRENT)
Error in prestroke actuator power voltage is
below 0.8V
<Repair Hint>
1. Check the voltage between pin no. 27 pin
   and pin no.47 ECU
   CHECKING CONDITION-Key ON
   REGULAR VALUE-24V
2. Check if cable is short or open
3. Check the contacts of connector
HELP   ERASE                    PRINT
```

5.3.3 Fault memory erase

User can erase the fault memory of ECU under the condition of vehicle battery term undetached.

Press the ERASE : F2 function key at self-diagnosis screen then display as shown on the right

In here, press the YES key for erase or press the NO key for cancel.

```
Erase fault memory?
Erase : YES     Cancel : NO
```

Then you can see the screen with Self-diagnosis result is normal as shown onthe right.

```
DIAGNOSIS (CURRENT)
Self-diagonosis result is nomal
HELP   ERASE                    PRINT
```

5.3.4 Printing

User can print the self-diagnosis result or help message and repair hint to press the PRINT : F6 function key.

Before printing Scan Pole must be connected with printer via PC connection cable.

https://truckmanualshub.com/

5.4. Sensor data

If user selects the SENSOR DATA at DIAGNOSIS ITEM SELECT menu screen then display as follows.

```
SENSOR DATA
01 ENGINE RPM............................ RPM
02 FUEL RACK SENSOR...................... V
03 PRESTROKE TARGET...................... V
04 PRESTROKE ACTUAL...................... V
05 WATER TEMP.SENSOR................... °C
06 RACK SENSOR OFFSET.................... V
07 PRESTROKE OFFSET...................... V
08 MEMORY CLEAR SWITCH.............. ON
09 ENGINE START SWITCH.............. OFF

SELECT  FULL  GRAPH  MULT  PRINT
```

Displayed sensor data can scroll to use the up, down (↑,↓) key.And then regular value of each sensor data is displayed at bottom line of the screen.

At the SENSOR DATA screen, operation of each function key is described as follows.

F1 = SELECT : Select a sensor for graph - ic view.

F2 = FULL : Full screen display for all sensor data.

F3 = GRAPH : Graphic view about selected sensor data.

F4 = MULTI : Test a volt or resistance or frequency & duty ratio in comparison with displayed sensor data.

F6 = PRINT : Print a sensor data.

5.4.1 Sensor data basic application

Current sensor data is displayed on the screen.
User can test and see each sensor data for more exact diagnosIs.

5.4.2 SELECT function

User can select a sensor to press the SELECT F1 function key. And then left Selection indication bar display '*'mark at the same time sensor data displayed on top of the screen.

```
SENSOR DATA
*  08 MEMORY CLEAR SWITCH........... OFF
*  09 ENGINE START SWITCH.............. OFF
   01 ENGINE RPM.............................RPM
   02 FUEL RACK SENSOR...................... V
   03 PRESTROKE TARGET...................... V
   04 PRESTROKE ACTUAL...................... V
   05 WATER TEMP.SENSOR.................. °C
   06 RACK SENSOR OFFSET................... V
   07 PRESTROKE OFFSET..................... V

SELECT  FULL  GRAPH  MULT  PRINT
```

Selected data is used to graph function or to see concerned sensor's value. If user wants to deselect it then press the SELECT F1 function key again.

5.4.3 FULL function

Press the FULL F2 function key then 22 sensors data is displayed on the screen. But the full screen does not display regular sensor data value

If sensors data are over 22 then use the PGUP , PGDN key to view next page se - nsor data.

SENSOR DATA FULL SCREEN

ENG.RPM	RPM	HEATER L	OFF
RACK SEN	V	HEATER R	OFF
P.TARGET	V		
P.ACTUAL	V		
W.T.S	°C		
R.OFFSET	V		
P.OFFSET	V		
M.CLEAR	OFF		
START SW	ON		
DIAG.SW	ON		
SHUT-OFF	OFF		

5.4.4 GRAPH function

Press the GRAPH F3 function key then you can select sensor data displayed by graph. At first, user selects a sensor to use the SELECT F1 function key.

F1 = FIX : Graph value displayed on screen is frozen to allow analysis.

SENSOR DATA

MAX MIN	EENGINE RPM..... 1024 RPM -- ----- ----------
MAX MIN	WATER TEMP.SENSOR ... 60°C --- ---- - - ---------- ------ --- -- - -- -

FIX

5.4.5 MULTI function

In this function, user can test a volt or frequency or duty ratio in comparison with the displayed sensor data via oscilloscope probe.

⚠ **User must remember the ECU pin number before MULTI test to use REPAIR HINT or refer to D12TIS DIAGNOSIS & REAIR HINT.**

Press the MULTI F4 function key then the screen for sensor data & multimeter will be displayed as shown on the right.

SENSOR DATA & MULTIMETER

01 ENGINE RPM.....RPM
02 FUEL RACK SENSOR.....V
03 PRESTROKE TARGET.....V
04 PRESTROKE ACTUAL.....V

VOLT METER CH : A
00.0 V
RANGE : DC 0 - 50 VOLT

FIX VOLT FREQ DUTY

F1 = FIX : Testing value displayed on screen is frozen to allow analysis during pressing the F1 key.

F2 = VOLT : Voltage meter

F3 = FREQ : Frequency meter

F4 = DUTY : Duty meter

Tested value of each meter is displayed at each 1 μs sampling term.

5.5. Actuator test

If user selects the ACTUATOR TEST item in DIAGNOSIS ITEM, user can see item as shown on the right :

```
ACTUATOR TEST
1. PRESTROKE ACTUATOR TEST
2. TACHO METER TEST
3. AIR HEATER LAMP TEST
4. AIR HEATER RELAY TEST
5.DIAGNOSTICS LAMP TEST
Press Key,refer to the item.
```

If user press No.key, refer to the item, user can do actuator test.

```
PRESTROKE ACTUATOR   TEST
ENGINE RPM.....RPM
PRESTROKE TARGET.....V
PRESTOKE ACTUAL.....V
PRESTROKE OFFSET..... V
PRESTROKE SHUT-OFF.....OFF
          ----
CONONDITION : IDLE,WARM-UP
METHOD : 1.Check on ENG.RPM
         2.Check on sensor,relay
         3.Compare target position with
           actual position
+      -      STOP
```

F1, + : Increase the prestroke actuator operation (target position)

F2, - : Decrease the prestroke actuator operation (target position)

F3, STOP : Stop the prestroke actuator operation

In case, engine is not operation condition. the screen is as follows :

```
Now it is not engine running
Please starting engine!
```

To cancel, press the ESC key.

5.6. Flight record

The flight record mode allows for the display and recording of data generated by the ECU as determined by the user of Scan Pole.

If user selects the FLIGHT RECORD in DIAGNOSIS ITEM then display as shown on the right

```
FLIGHT RECORD
01 ENGINE RPM.....RPM
02 FUEL RACK SENSOR.....V
03 PRESTROKE TARGET.....V
04 PRESTROKE ACTUAL.....V
05 WATER TEMP.SENSOR.....°C
06 RACK SENSOR OFFSET.....V
07 PRESTROKE OFFSET.....V
08 MEMORY CLEAR SWITCH .....OFF
09 ENGINE START SWITCH. .....OFF
   TIME INTERVAL : sec
SELECT RECORD TIME OUTPUT GRAPH PRINT
```

The function of the FLIGHT RECORD facility is determined by the following function key.

1) F1, SELECT : Select item.
2) F2, RECORD : Flight record
3) F3, TIME : Adjust interval of recording time (0.1 - 10.0sec)
4) F4, OUTPUT : RECORD data output.
5) F5, GRAPH : RECORD data graph output
6) F6, PRINT : RECORD data printing

User can adjust interval of recording time using F3, TIME key.(Time Interval : 0.1~10.0 sec)

https://truckmanualshub.com/

5.6.1 Flight record basic application

The FLIGHT RECORD is the function which checks to occur fail condition sometimes.This function is very useful to search fail of vehicle cause of using analysis of record data.

5.6.2 SELECT function

To select a record item, press the SELECT F1 key.

When user presses the SELECT F1 key, the “RECORD” mark is displayed as shown on the right. If user wants to cancel record selection then press F1 key once more.

⚠ Maximum selection items are 8 items.

```
FLIGHT RECORD
01 ENGINE RPM..................... RECORD
05 WATER TEMP.SENSOR....... RECORD
06 RACK SENSOR OFFSET...... RECORD
07 PRESTROKE OFFSET.......... RECORD
02 FUEL RACK SENSOR.....................V
03 PRESTROKE TARGET.....................V
04 PRESTROKE ACTUAL.....................V
08 MEMORY CLEAR SWITCH..........OFF
09 ENGINE START SWITCH.............OFF
TIME INTERVAL : sec
SELECT RECORD TIME OUTPUT GRAPH PRINT
```

5.6.3 RECORD function

The RECORD is the function which records the selected sensor data by time interval. If user presses the RECORD F2 key then display as shown on the right.

```
FLIGHT RECORD
CAR N0.                    : 1 2 3 4 5 6
DATE          : 9 6 /  6 /1 0
MEMORY No.(0~9)   : 0
YES                    NO
TIME INTERVAL : sec
```

User must input car number, test date and Memory number by means of using up, down, right, left, (↑, ↓, →, ←) ENTER keys.
When user input completely, press the YES key.

Then diagnosis code will be read before recording.

```
SELF-DIAGNOSIS DATA
DIAGNOSIS code reading now.
```

And diagnosis fault numbers are displayed as shown on the right.

```
SELF-DIAGNOSIS DATA
Diagnosis fault : 03 EA
```

And then press the ENTER key to start recording.

```
FLIGHT RECORD
01 ENGINE RPM..................... RECORD
05 WATER TEMP.SENSOR....... RECORD
06 RACK SENSOR OFFSET...... RECORD
07 PRESTROKE OFFSET.......... RECORD
RECORDING.        STEP : 00001
STOP
```

User can finish the recording to press the STOP F3 key.

https://truckmanualshub.com/

5.6.4 TIME function

User must adjust a interval of recording time use the TIME F3 key before flight record started.

The time change interval is 0.1 sec and the time range is 0.1 sec ~ 10.0 sec.

```
FLIGHT RECORD
01 ENGINE RPM........................ RECORD
05 WATER TEMP.SENSOR....... RECORD
06 RACK SENSOR OFFSET......RECORD
07 PRESTROKE OFFSET.........RECORD
IME INTERVAL : 0.1 sec
SELECT RECORD TIME OUTPUT GRAPH PRINT
```

5.6.5 OUTPUT function

This function is used to display the recorded data using the OUTPUT F4 key. When user presses the F4 key as shown on the right :

```
FLIGHT RECORD OUTPUT
MEMORY No.(0~9) : 1
Select a saved memory number.
```

Input the flight record saved memory number.

And press the OUTPUT F1 key for the output screen.

Self-diagnosis fault sensor number should be displayed at first and then recorded sensor data displayed as shown on the right.

```
SELF-DIAGNOSIS DATA
Diagnosis fault : 03 EA
C15 C21 C22
TOTAL : 10 STEP : 00
PRINT
```

Then press the up(↑) key for see STEP 01.

User can see flight record data each one step by means of using up, down keys (↑,↓) for increase one step, or using left, right keys (←,→) for move 10 steps.

```
FLIGHT RECORD
01 ENGINE RPM.............................RPM
05 WATER TEMP.SENSOR.................. °C
06 RACK SENSOR OFFSET...................V
07 PRESTROKE OFFSET.......................V
TOTAL : 0010 STEP : 0001
PRINT
```

⚠ **There will be no output when total step is 0.**

5.6.6 GRAPH function

RAPH F5 key is used to see graph view for the items recorded.

```
SENSOR DATA
MAX   EENGINE RPM........ 800RPM
      --
        -----
            ----------------------
MIN
MAX   WATER TEMP.SENSOR ... 40°C
                                ---
                            ------
                  ---  - ----
        ------ --- -- -
      --    -
MIN   -
FIX
```

5.6.7 PRINT function

User can print the recorded data to press the PRINT : F6 function key. Before printing Scan Pole must be connected with printer via PC connection cable.

Printer is option.

5.6.8 D12TIS diagnosis & repair hint

CODE	Fault Point	Regular Specification	Repair Hint
C15	PRESTROKE ACTUATORPOWER ERROR	Error in prestroke actuator power voltage is below 0.8V	CHECKING CONDITION-Key ON REGULAR VALUE-24V 1.Check the voltage between pin no.27 pin and pin no.47 ECU 2.Check if cable is short or open 3.Check the contacts of connector
C21	WATER TEMP.SENSOR ERROR	Error in water temperature sensor circuit or water temperature sensor	CHECKING CODITION-Key ON 1.Check the resistance between pin NO.5 pinand NO.24ofECU as follow TEMP. ① RESISTANCE 20 ① 2500 ⑤ 40 ① 1170 ⑤ 60 ① 594 ⑤ 80 ① 310 ⑤ 2.Check the water temperature sensor 3.Check if cable is short or open 4.Check the contacts of connector
C22	FUEL RACK SENSOR ERROR	Error is fuel rack sensor or circuit	CHECKING CONDITION-Key on, Running REGULAR VALUE - Running = below 0.2V - IDLE : below 3.49V 1.Check the voltage between pin NO.8 pin and pin No.9 of ECU 2.Check the fuel rack sensor 3.Check if cable is short or open 4.Check the contacts of connector
C23	INTAKE AIR HEATER RELAY ERROR	Fail in intake air heater relay or circuit	CHECKING CONDITION-Key off ->Key on REGULAR VALUE -Key OFF : 24V Key ON : 0V 1.Check the voltage between pin no. 12 and pin No.47 of ECU 2.Check the intake air heater relay 3.Check if the cable is short or open 4.Check the contacts of connector

CODE	Fault Point	Regular Specification	Repair Hint
C16	ENGINE SPEED SENSOR ERROR	Error in engine RPM sensor	1.Check the signal between pin No.10 pin and pin No.23 of ECU 2.Check the resistance of pick-up sensor : 2.5`0.5K⑤ 3.Check if cable is short or open 4.Check the contracts of connector
C14	PRESTROKE OFFSET LEARNING ERROR	Error in prestroke offset learning	CHECKING CONDITION-Key on 1.Check the resistance of prestroke actuator sensor as follow pin No.6 pin and pin No.7 of ECU pin No.6 pin and pin No. 19 of ECU pin No.7 pin and pin No. 29 of ECU 2.Check the ECU 3.Check if cable is short or open 4.Check the contacts of connector
C13	PRESTROKE SENSOR ERROR	Error in prestroke sensor	CHECKING CONDITION-Key on REGULAR VALUE-f=18`2kHz 1.Check the resistance of prestroke actuator sensor as follow pin No.6 pin and pin No.7 of ECU pin No.6 pin and pin No.19 of ECU pin No.7 pin and pin No.29 of ECU 2.Check the prestroke sensor 3.Check if cable is short or open 4.Check the contacts of connector
C12	PRESTROKE CONTROL SERVO ERROR	Error in prestroke actuator servo control	CHECKING CONDITION-Key on 1.Check the voltage of prestroke actuator sensor as follow pin No.6 pin and pin No.7 of ECU pin No.6 pin and pin No.19 of ECU pin No.7 pin and pin No.29 of ECU 2.Check the prestroke actuator status 3.Check if cable is short or open 4.Check the contacts of connector

https://truckmanualshub.com/

5.6.9. Special tools

No.	Description	Part No.	Illustration
1	Nozzle tube Insert ass'y	DPN-5337	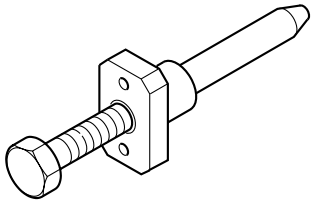
2	Nozzle tube Extracter ass'y	EF.123-082	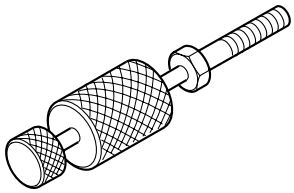
3	Inj, pump setting ass'y	EF.123-015 (DE12/T/TI) EF.123-156 (DE12TIS)	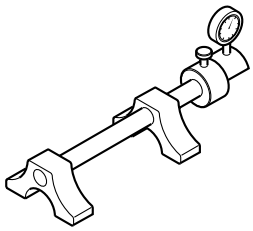
4	Oil seal insert ass'y(FR)	EF.123-126	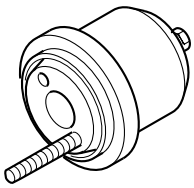
5	Oil seal insert ass'y(RR)	EF.123-053	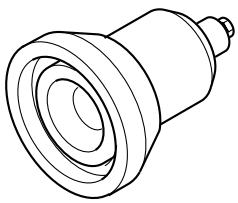
6	Oil seal puller ass'y(FR)	EF.123-052	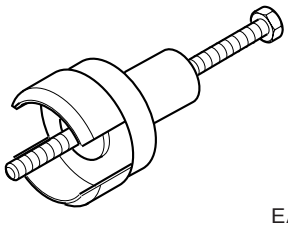 EA2M5003

https://truckmanualshub.com/

No.	Description	Part No.	Illustration
7	Oil seal puller ass'y(RR)	EF.123-048	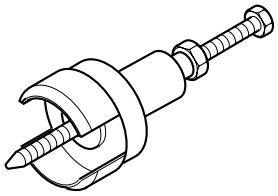
8	Cylinder pressure tester adapter	EU.2-0531	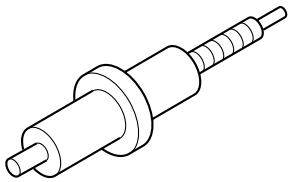
9	Cylinder liner puller ass'y	EU.123-087	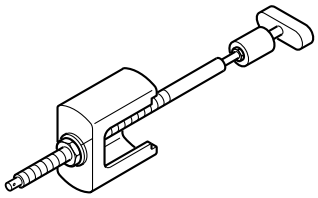
10	Stem seal insert	EF.123-066	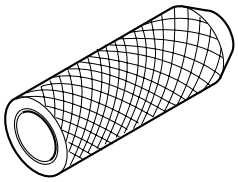
11	Valve clearance adjust ass'y	EU.2-0131	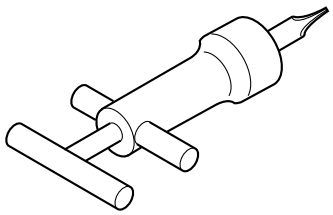
12	Valve cottor extracter ass'y	EF.123-065	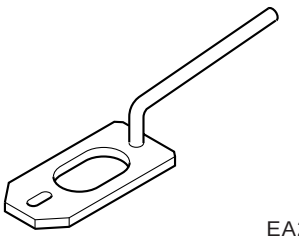 EA2M5003

https://truckmanualshub.com/

6. Maintenance specifications

6.1. Tightening torque

6.1.1. Major part tightening torque

Part	Dia.×pitch(mm)	Grade	Tightening torque
Cylinder head bolt	M14×1.5	12.9T	24.5
Conn. rod bearing cap bolt	M16×1.5	12.9T	28
Crankshaft main bearing cap bolt	M16×1.5	12.9T	30
Balance weight fixing bolt	M14×1.5	10.9T	9
Flywheel fixing bolt	M14×1.5	10.9T	18
Crankshaft gear fixing bolt	M12×1.5	10.9T	13.4

6.1.2. Injection pump system

1) Injection pump delivery valve holder : 2~3kg•m
2) Nozzle holder fixing cap nut : 7kg•m
3) Nozzle fixing cap nut : 6~8kg•m
4) High pressure injection pipe fixing cap nut : Max. 3~5kg•m

6.1.3. Standard bolt tightening torque table

Refer to the following table for bolts other than described above.

Diameter × pitch (mm)		Degree of strength									
	3.6	4.6	4.8	5.6	5.8	6.6	6.8	6.9	8.8	10.9	12.9
	(4A)	(4D)	(4S)	(5D)	(5S)	(6D)	(6S)	(6G)	(8G)	(10K)	(12K)
		Limit value for elasticity (kg/mm²)									
	20	24	32	30	40	36	48	54	64	90	108
		Tightening torque (kg•m)									
M5	0.15	0.16	0.25	0.22	0.31	0.28	0.43	0.48	0.50	0.75	0.90
M6	0.28	0.30	0.45	0.40	0.55	0.47	0.77	0.85	0.90	1.25	1.50
M7	0.43	0.46	0.70	0.63	0.83	0.78	1.20	1.30	1.40	1.95	2.35
M8	0.70	0.75	1.10	1.00	1.40	1.25	1.90	2.10	2.20	3.10	3.80
M8×1	0.73	0.80	1.20	1.10	1.50	1.34	2.10	2.30	2.40	3.35	4.10
M10	1.35	1.40	2.20	1.90	2.70	2.35	3.70	4.20	4.40	6.20	7.40
M10×1	1.50	1.60	2.50	2.10	3.10	2.80	4.30	4.90	5.00	7.00	8.40
M12	2.40	2.50	3.70	3.30	4.70	4.20	6.30	7.20	7.50	10.50	12.50
M12×1.5	2.55	2.70	4.00	3.50	5.00	4.60	6.80	7.70	8.00	11.20	13.40
M14	3.70	3.90	6.00	5.20	7.50	7.00	10.00	11.50	12.00	17.00	20.00
M14×1.5	4.10	4.30	6.60	5.70	8.30	7.50	11.10	12.50	13.00	18.50	22.00
M16	5.60	6.00	9.00	8.00	11.50	10.50	15.50	17.90	18.50	26.00	31.00
M6×1.5	6.20	6.50	9.70	8.60	12.50	11.30	17.00	19.50	20.00	28.00	33.50
M18	7.80	8.30	12.50	11.00	16.00	14.50	21.00	24.20	25.00	36.00	43.00
M18×1.5	9.10	9.50	14.50	12.50	18.50	16.70	24.50	27.50	28.50	41.00	49.00
M20	11.50	12.00	18.00	16.00	22.00	19.00	31.50	35.00	36.00	51.00	60.00
M20×1.5	12.80	13.50	20.50	18.00	25.00	22.50	35.00	39.50	41.00	58.00	68.00
M22	15.50	16.00	24.50	21.00	30.00	26.00	42.00	46.00	49.00	67.00	75.00
M22×1.5	17.00	18.50	28.00	24.00	34.00	29.00	47.00	52.00	56.00	75.00	85.00
M24	20.50	21.50	33.00	27.00	40.00	34.00	55.00	58.00	63.00	82.00	92.00
M24×1.5	23.00	25.00	37.00	31.00	45.00	38.00	61.00	67.00	74.00	93.00	103.00

Others:

1. The above torque ratings have been determined to 70% or so of the limit value for bolt elasticity.
2. Tension is calculated by multiplying tensile strength by cross section of thread.
3. Special screws should be tightened to 85% or so of the standard value.
   For example, a screw coated with MOS2 should be tightened to 60% or so of the standard value.

https://truckmanualshub.com/

6.2. Maintenance specification table

Assembly	Part	Check items		Nominal value	Standard value for assembly	Limit for use	Correction	Remarks
Engine body	Cylinder block	Inside diameter of cyl. liner for wear		123	123~123.025	123.22	Replace liner	Measure unworn portion beneath the rim of the upper side
		Projected portion of liner			0.03~0.08	5		
		The upper surface of cylinder block for distortion			0.05		Correct with a surface grinder	Per distortion length for 200mm
		Hydraulic test for 1 minute (kg/cm²)			4		Replace if leaky	
	Cylinder head	Valve seat depression Cylinder head	Intake		-0.3~0			In case of new valve and valve seat
			Exhaust		-0.3~0	-0.55		
		Height			114.9~115	-0.55	Replace cyl. head	
		Hydraulic test for 1 minute (kg/cm²)			4	113.9	Replace if leaky	Water temp : 70℃
Major moving parts	Piston	Piston diameter(18mm from the lower side)			122.433~122.863			
		Clearance between piston and liner			0.123~0.162			
		Width of piston ring grooves	Tor ring		3.5		Replace piston if groove width is beyond specified value	
			2nd ring		3.060~3.080			
			Oil ring		4.040~4.060			
		Piston projection from cylinder block upper surface			0~0.12			Measure unworn portion beneath the rim of the upper side
	Piston ring	Piston ring gap	Top ring		0.30~0.45	1.5		Standard gauge inside diameter : ϕ123
			2nd ring		0.35~0.50	1.5		
			Oil ring		0.30~0.50 *0.4~0.7	1.5		
		Permissible weight difference of each piston				96g		
			Top ring				Replace ring or piston	Limit for use if for standard clearance
			2nd ring		0.07~0.102	0.15		
			Oil ring		0.05~0.085	0.15		
		Direction of ring gap					Install ring by 120°	

*Adapted only in DE12TIS

https://truckmanualshub.com/

Assembly	Part	Check items	Nominal value	Standard value for assembly	Limit for use	Correction	Remarks
Major moving parts	Crank shaft	Axial run-out of journal and pin	ϕ96 g6 ϕ83 g6	0.05	0.1	Correct with a grinder	In horizontal and vertical directions
		Outside diameter of journal	ϕ96 g6	95.966~95.988	ϕ94.966	Replace crank shaft	
		Outside diameter of pin	ϕ83 g6	82.966~82.988	ϕ81.966	Replace crank shaft	
		Out of round of journal & pin		0.008	0.025		
		Permissible radial run-out of journal & pin		0.01	0.03		
		Permissible taper of journal & pin		0.01	0.03		
		Clearance between crank shaft & bearing		0.072~0.142	0.25	Replace bearing	Measure in the position of crown
		End play of crank shaft		0.15~0.325	0.5	Replace thrust bearing	
		Run-out of crank shaft		0.05	0.1 or less	Adjust by a press if bent	No.4 bearing(holding Nos. 1 & 7)
		Balance of crank shaft		60	60 or less	Check dynamic balance	Measure at 400 rpm
		Tightening torque of journal bearing cap bolt		30		Apply oil to bolt	No foreign matters on bearing cap installing surface
		Journal bearing crush		0.15~0.25			Measure by tightening metal cap and then loosening one stud bolt
		Oil seal for wear				Replace oil seal if oil leaking	Replace with new one, use shim
	Conn. rod	Clearance between conn. bearing & crank pin		0.032~0.102	0.20	Replace bearing	
		End play of conn. rod		0.22~0.319	0.5	Replace conn. rod	
		Clearance between small end bush & piston pin		0.050~0.080	0.12		
		Conn. rod bearing crush		0.3~0.5			After completing installation of bearing, loosen one stud bolt and measure
		Permissible weight difference of each conn. rod		56g			
		Tightening torque of conn. rod bearing cap bolt (kg•m)		28		Apply oil to bolt	
	Cam shaft	Outside diameter of cam shaft	ϕ60	59.860~59.880			
		Clearance between cam shaft and bush		0.050~0.128	0.20		
		Axial play of cam shaft		0.13~0.27	0.3	Replace thrust plate	
	Timing gear	Clearance between idle gear shaft and inserting hole		0.025~0.091	0.15		
		End play of idle gear shaft		0.043~0.167	0.3	Replace thrust collar	

https://truckmanualshub.com/

Assembly	Part	Check items			Nominal value	Standard value for assembly	Limit for use	Correction	Remarks
Valve	Valve		Between crank gear & idle gear		Idle	0.10~0.20		Replace gear	
			Between idle gear & cam shaft gear			0.10~0.20			
		Outside diameter of intake valve stem			ϕ11	10.950-10.970	10.87	Replace valve & valve guide	Replace valve guide together when replacing valve
		Outside diameter of exhaust valve stem			ϕ11	10.935-10.955	10.84		
		Clearance between valve stem and valve guide		Intake		0.030~0.065	0.15	Replace valve & valve guide	
				Exhaust		0.045~0.080	0.18		
		Thickness of valve		Intake	1.5	-	1 or more	Replace	
				Exhaust	1.5	-	0.9 or more		
		Perm. radial run-out between valve stem & valve head			-				
		Clearance between valve guide & cyl. head installing hole				0.01~0.39			Apply oil to valve guide and press in
		Clearance between valve guide & valve spring seat		Intake		22			
				Exhaust		22			
		Intake Spring	Free length			75.5 *85.9	72		
			Spring tension(set length : 37mm) kg		65	61.8~68.3 *57.1±3	61.8 *51		
			Straightness(against free length)				10		
		Exhaust Spring	Inner	Free length		65	61.75 *76.4		
				Spring tension(set length : 34mm) kg	38	36.1~39.9 *32.7±1.5	36.1 *48	Replace valve spring	
				Straightness(against free length)			1.0		
			Outer	Free length		75.5 *85.9	72		
				Spring tension(set length : 37mm) kg	65	61.8~68.3 *57.1±3	61.8 *51	Replace valve spring	
				Straightness(against free length)			1.0		
		Valve clearance(at cold)		Intake		0.3		Adjust	
				Exhaust		0.3			

*Adapted only in DE12TIS

https://truckmanualshub.com/

Assembly	Part	Check items	Nominal value	Standard value forassembly	Limit for use	Correction	Remarks
Valve System	Valve	Contacting face of valve stem & rocker arm				Correct or replace if severely pitted on tip of arm and stem	
		Clearance between rocker arm shaft & rocker arm bush		0.020~0.093	0.2	Replace bush or shaft	
		Rocker arm shaft for wear	ϕ24	23.978~23.959	23.75	Replace	
		Permissible taper of push rod			0.3	Replace	
Lubricating System	Tappet	Clearance between tappet & cyl. block	-	0.035~0.077	0.15	Replace tappet	
		Outside diameter of tappet	ϕ22	19.944~19.965		Replace tappet	
		Contacting face of tappet & cam	-	-	-	Replace if excessively worn or deformed	
	Oil Pressure	Oil pressure(nominal speed) kg/cm²	-	4.8 or less	-	Correct oil leakage and clearance between each part	
		Oil pressure(idling) kg/cm²	-	0.8~1.4	0.6	Use suggested oil	
	Oil temp	Max. permissible oil temperature ℃	-	-	110		Temperature above this not allowable
		Permissible oil temperature in short time ℃	-	-	120		
	Oil pump	Axial play of oil pump gear		0.055~0.105	-	Replace gear or cover	
		Clearance between gear shaft & oil pump over hole	-	0.032~0.077	-	Replace gear or cover	
		Clearance between drive gear bushing & cover hole	-	0.040~0.089	-	Replace bushing or cover	
		Outside diameter of gear shaft	ϕ 17e7	16.950~16.968	-	Replace gear	
		Outside diameter of drive gear bushing	ϕ 28e7	27.939~27.960	-	Replace bushing	
		Backlash: Between crank gear & oil pump drive gear	-	0.15~0.25	0.8		
		Backlash: Between oil pump drive gear and intermediate gear	-	0.15~0.25	0.8	Adjust backlash	
	Valve opening pressure	Oil pressure control valve (kg/cm²)	-	4~5	-	Replace valve	
		By-pass valve for filter element (kg/cm²)	-	1.8~2.3	-	Replace valve	
		By-pass valve for full oil filter (kg/cm²)	-	4.0~4.8	-	Replace valve	
		By-pass valve for oil cooler (kg/cm²)	-	5~6	-	Replace valve	
		Relief valve for oil pump (kg/cm²)	-	8.5~11.5	-	Replace valve	
		Control valve for spray nozzle (kg/cm²)	-	1.5~1.8	-	Replace valve	
	Oil filter	Oil filter element for damage				Clean or replace	

https://truckmanualshub.com/

Assembly	Part	Check items	Nominal value	Standard value forassembly	Limit for use	Correction	Remarks
Cooling system	Radiator	Radiator & water pump for corrosion, damage & improper connecting	-	-	-	Correct or replace	
		Test for leakage(air pressure) kg/cm²	-	1.0332	-	Submerge in water and replace if air bubbles found	
		Pressure valve for opening pressure kg/cm²	-	0.5	-		
		Negative pressure valve for opening pressure mmHg	-	20	-		
	Water pump	Delivery volume l/min: Pump speed 2,500rpm; Water temp 24℃; Negative pressure 1.0bar		Approx. 314			
		Clearance between pump impeller & pump body	-	0.3~0.6	-	Replace if contacted impeller and pump body	
	Cooling water temp	Operating temperature(permissible temp.) ℃	-	90~95	95	Temperature above this not allowable	
		Permissible temperature in a short time ℃	-	105	105		
	Thermostat	Thermostat opening temp. (under atmospheric pressure) ℃	-	83	-	Replace if defective	
		Full opening temp. ℃	-	95 or lower	-		Stroke : minimum 8mm
Compression pressure		Cylinder compression pressure (kg/cm²)	28 or higher	24~28 or higher	24 or higher	Overhaul the engine	at 200 rpm or more
Fuel System	Piping and the other	Fuel pipe, injection pipe & Nozzle holder for damage, cracks, looseness, bad packing				Correct or replace	
		Fuel filter element for damage				Clean or replace	
	Injection pressure of injection nozzle (kg/cm²)			220		Adjust by shim	Ti Engine 1st : 160, 2nd : 220
	Opening pressure of overflow valve (kg/cm²)					Replace valve	
	Height of projected nozzle on the cyl. head (mm)			4.3		Replace cyl. head and nozzle	
	Clearance between injection pump coupling and timer (mm)			0.2~0.4			
Electric Devices	Charging and discharging indication	Warning lamp				Correct electrical device if unusual sound	
	Oil filter	The terminal of electric wire for loosening, short, or damaged					Correct

https://truckmanualshub.com/

Assembly	Part	Check items			Nominal value	Standard value for assembly	Limit for use	Correction	Remarks
Electric device	AC Alternator	Rotor	Run-out of shaft				0.1 or more	Replace rotor	
			Bearing for noise					Replace bearing	
		Slip ring face for fouling						Correct with sandpaper if fouled or damaged	
		Brush	Brush & brush spring	Brush length mm	14		7	Correct or replace if defective	
				Tension g	300	255~345			
		Perform-ance	Performance idling speed rpm		28V		1,050 or less		
			Output speed rpm		28V15A		5,000 or more		
	Voltage regulator	Perform-ance	Regulated voltage V			27.5~29.5		Correct if terminal point is defective	
			Field relay cut-in voltage V			8~12 or less		Correct if damaged	
	Starter	Bolt tightening for loose						Correct	
		Armature	Run-out of shaft		ϕ14		0.1 or less	Correct	
			Gap between shaft & brush	Front bearing	ϕ14		0.1		
				Center bearing	ϕ20.4		0.1	Replace bush or shaft	
				Pinion bearing	ϕ14		0.2		
		Commutator	Diameter of commutator		ϕ48		ϕ45	Replace	
			Out-of-round of commutator			0.05 or less	0.4 or less	Correct	
			Depth of under cut insulator from surface of commutator			0.5~0.8	0.2 or less	Correct	
			Surface of commutator					Correct with sandpape if fouled or damaged	
		Brush	Brush and spring	Length fo brush	19.5		12.5	Correct or replace if surface of commutator is defective, or brush spring pressure or strength is improper, or brush is severely damaged or worn, or brush & brush holder contact with each other poorly.	
				Spring pressure of brush g	1300	1300	1100		

https://truckmanualshub.com/

Assembly	Part	Check items		Nominal value	Standard value for assembly	Limit for use	Correction	Remarks
Electric device	Starter	Magnetic switch	Operating voltage V	-	16	-		
			Holding voltage V	-	8	-		
		Pinion stroke		-	15	+1.0 or less	Correct or replace if excessively worn or damaged	
		Gap between pinion and ring gear		-	3~5			
		Perform-ance	Unload speed(24V, 70A or less) rpm	-	4,000 or more	-		
			Load torque(390A or less) kg•m		1.5(2060rpm or more)			
			Constrained torque(750A or less) kg•m	-	3.3 or more			
	Pre-heater plug	Control resistor, air heater					Replace if short	Temp. converting coefficient(based on 20℃ every additional + 1℃ : -0.0007 every additional -1℃ : +0.0007
	Battery	Battery terminal					Replace if corroded or rusted	
		Pole plate, separator, cell, etc.					Correct if damaged	
		Electrolyte for muddiness					Replace if muddied	
		Specific gravity of electrolyte(at 20℃ after recharging)			1240~1260	10.8 or more	Adjust specific gravity	
		Capacity(20 hrs rate)			24-65×2			
		Terminal voltage			12.6 or more	0.8 or more	Recharge	
		Height of electrolyte level			Specified level		Replenish distilled water if low	
Inspetion at completion		Running-in the engine					Refer to SUPPLEMENT “Running-in”	Retighten head bolt after running in
		Compression pressure of cylinder (kg/cm^2)		28 or more	24~28	24 or more	Correct	At 20℃, 200 rpm
		Compression pressure differences of each cyl.			±10% or less against average		Correct	At 20℃, 200 rpm
		Oil pressure (kg/cm^2)			3~4.5			
		Test of output			240(305 ps or more)			Values for brand-new engine are regarded as 100%
		Test of fuel consumption volume			110% or less			
		Idling speed rpm			450~500		Adjust	