www.HEAVY EQUIPMENTS.ORG
https://truckmanualshub.com/

DETROIT DIESEL

Series 50

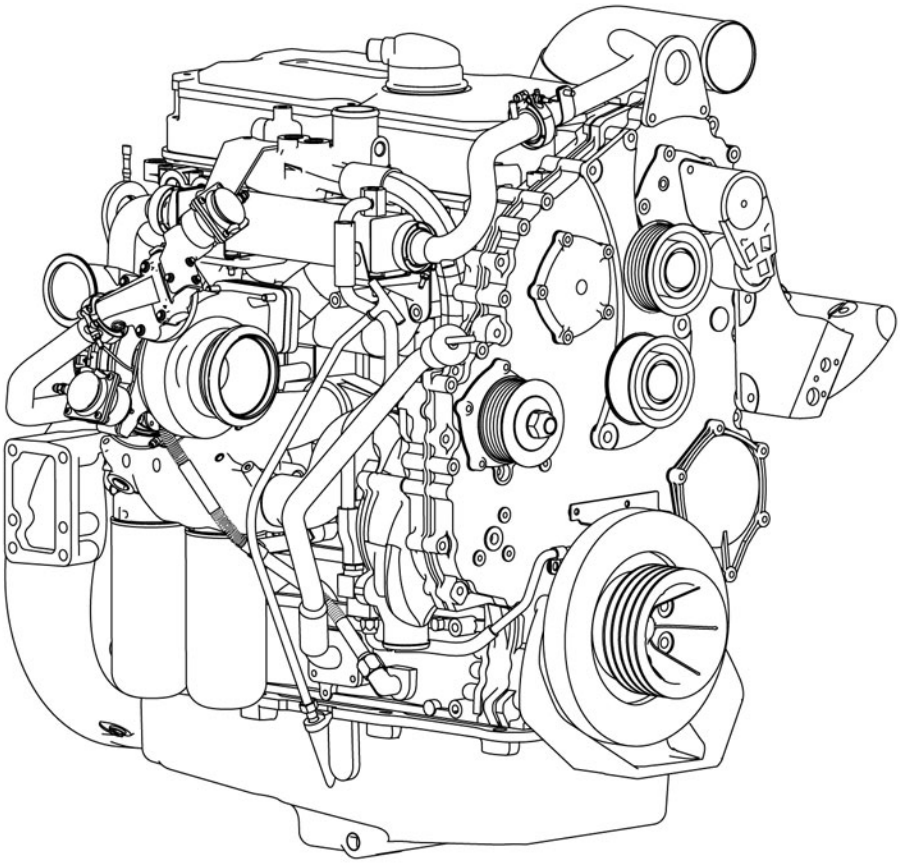

Engine Operator's Guide

www.HEAVY EQUIPMENTS.ORG
https://truckmanualshub.com/

CALIFORNIA
Proposition 65 Warning

Diesel engine exhaust and some of its constituents are known to the State of California to cause cancer, birth defects, and other reproductive harm.

42824

www.HEAVY EQUIPMENTS.ORG
https://truckmanualshub.com/

To the Operator

This guide contains instructions on the safe operation and preventive maintenance of your Detroit Diesel Series 50® engine used in vehicle, stationary, construction/industrial, agricultural, generator set or fire fighting apparatus applications. Maintenance instructions cover routine engine services such as lube oil and filter changes in enough detail to permit self-servicing, if desired.

The operator should become familiar with the contents of this guide before operating the engine or carrying out maintenance procedures.

Power-driven equipment is only as safe as the person operating the controls. You are urged, as the operator of this diesel engine, to keep fingers and clothing away from the revolving belts, drive shafts, pulleys, etc. on the engine installation.

Throughout this guide **CAUTIONS** regarding personal safety and **NOTICES** regarding engine performance or service life will appear. To avoid personal injury and ensure long engine service life, always heed these instructions.

Whenever possible, it will benefit you to rely on an *authorized* Detroit Diesel service outlet for all your service needs from maintenance to major parts replacement. Authorized service outlets worldwide stock factory-original parts and have the specialized equipment and experienced, trained personnel to provide prompt preventive maintenance and skilled engine repairs.

The information and specifications in this publication are based on the information in effect at the time of approval for printing. Contact an authorized Detroit Diesel service outlet for information on the latest revision. The right is reserved to make changes at any time without obligation.

 Copyright © 2004 DETROIT DIESEL CORPORATION

www.HEAVY EQUIPMENTS.ORG
https://truckmanualshub.com/

NOTICE:

Failure to check and maintain SCA (supplemental coolant additive) levels at required concentrations will result in severe damage (corrosion) to the engine cooling system and related components. Coolant must be inhibited with the recommended SCAs listed in this engine operator's guide.Refer to section How to Select Coolant. In addition, the engine can be equipped with a coolant filter/inhibitor system as an installed option or as an after-sale item.

WARRANTY

The limited warranties for each engine application are covered in the Limited Warranty pages of this guide and in the booklet, “Warranty Information for Series 50 Engines,” available from authorized Detroit Diesel service outlets.

Keep this Operator's Guide with the engine installation at all times. It contains important operating, maintenance, and safety instructions.

Trademark Information

Detroit Diesel®, DDC®, DDEC®, Series 50®, Optimized Idle®, ProManager®, reliabilt®, *Power Trac*®, *Power* Cool®, and *Power Guard*® are registered trademarks of Detroit Diesel Corporation. Delco Remy® is a registered trademark of Delco Remy America, Inc. Bosch® is a registered trademark of Robert Bosch Company N.A. Fuel Pro®, Sea Pro® and Mega Filter® are registered trademarks of Davco Manufacturing, L.L.C. The PowerBand® is a registered trademark of Gates Rubber Company. Tectyl® is a registered trademark of Daubert Chemical Company, Inc. Biobor® is a registered trademark of United States Borax and Chemical Corporation. DuPont® is a registered trademark of E.I. DuPont de Nemours and Company, Inc. All other trademarks used are the property of their respective owners.

All information subject to change without notice. (Rev. 01/ 04)
6SE550 0401 Copyright © 2004 DETROIT DIESEL CORPORATION

www.HEAVY EQUIPMENTS.ORG
https://truckmanualshub.com/

TABLE OF CONTENTS

INTRODUCTION 1
NON-GENUINE AND REBUILT COMPONENT QUALITY ALERT .. 1

CAUTION SUMMARY 3
ENGINE OPERATION 3
PREVENTIVE MAINTENANCE 4
ELECTRICAL SYSTEM 7
COOLING SYSTEM 8
AIR INTAKE SYSTEM 8
FUEL SYSTEM 9
STARTING AIDS 10
COMPRESSED AIR 11
LUBRICATING OIL AND FILTERS 11

ENGINE MODEL AND SERIAL NUMBER DESIGNATION 12
OPTION LABELS 13
CERTIFICATION LABELS 14

OPERATING INSTRUCTIONS FOR A FIRST TIME START 15
PREPARATIONS FOR STARTING THE ENGINE THE FIRST TIME 15
COOLING SYSTEM CHECKS 15
LUBRICATION SYSTEM CHECKS 16
EXTENDED STORAGE 16
FUEL SYSTEM CHECKS 17
OTHER CHECKS 18
STARTING THE ENGINE 18
INITIAL ENGINE START 19
ELECTRIC STARTER 19
AIR STARTER 20
RUNNING THE ENGINE 20
OIL PRESSURE 20
WARM-UP 20
INSPECTION 20
AVOID UNNECESSARY IDLING 21

 Copyright © 2004 DETROIT DIESEL CORPORATION

www.HEAVY EQUIPMENTS.ORG
https://truckmanualshub.com/

STOPPING THE ENGINE 21
EMERGENCY JUMP STARTING 22

DDEC IV SYSTEM 23
DDEC SYSTEM 23
ENGINE PROTECTION 24
IDLE SHUTDOWN TIMER 24
CRUISE CONTROL 24
ENGINE BRAKES 26
DATA RECORDING CAPABILITY 27
DDEC IV OPERATION 27
IMMEDIATE SPEED REDUCTION OPTION 28
STOP ENGINE LIGHT 28
DIAGNOSTIC DATA READER 28
DIAGNOSTIC CODE LIST 30

DDEC IV ENGINE DRIVING TIPS 37
ACCELERATING THE VEHICLE 37
CRUISE CONTROL 37
ENGINE BRAKES AND CRUISE CONTROL 39
SHIFTING 39
IDLING 40
WINTER FRONTS 40

ENGINE BRAKE SYSTEM 41
DRIVER CONTROL SWITCHES 41
LOW/HIGH SWITCH 41
LOW/MED/HIGH SWITCH 41
CLUTCH PEDAL AND THROTTLE POSITION CONTROLS 41
ENGINE BRAKE OPERATION 42
ANTI-LOCK BRAKING SYSTEMS 43
DRIVING ON FLAT, DRY PAVEMENT 43
DESCENDING A LONG, STEEP GRADE 43
DRIVING ON WET OR SLIPPERY PAVEMENT 45

ENGINE SYSTEMS 46
FUEL SYSTEM 46
LUBRICATION SYSTEM 46
AIR SYSTEM 46
COOLING SYSTEM 46

All information subject to change without notice. (Rev. 01/ 04)
6SE550 0401 Copyright © 2004 DETROIT DIESEL CORPORATION

www.HEAVY EQUIPMENTS.ORG
https://truckmanualshub.com/

ELECTRICAL SYSTEM 46
EXHAUST SYSTEM 46
EXHAUST GAS RECIRCULATION SYSTEM 46

MAINTENANCE 47
PREVENTIVE MAINTENANCE INTERVALS 63
ITEM 1 – LUBRICATING OIL 63
ITEM 2 – FUEL AND FUEL TANK 65
ITEM 3 – FUEL LINES, FLEXIBLE HOSES 66
LEAKS 66
HOSES AND FITTINGS 67
HOSE SERVICE LIFE 67
ITEM 4 – COOLING SYSTEM 67
COOLANT LEVEL 67
COOLANT INHIBITORS 68
COOLANT DRAIN INTERVAL 68
ITEM 5 – TURBOCHARGER, AIR-TO-AIR CHARGE COOLER . 70
WASTEGATED TURBOCHARGERS 70
ITEM 6 – BATTERY 71
ITEM 7 – TACHOMETER DRIVE 72
ITEM 8 – DRIVE BELTS 72
V-BELTS 73
2-GROOVE POWERBAND 73
12–RIB POLY-V BELT 74
BELT REPLACEMENT 74
ITEM 9 – AIR COMPRESSOR 74
ITEM 10 – AIR CLEANER 75
ITEM 11 – LUBRICATING OIL FILTERS 75
ITEM 12 – FUEL FILTERS 76
FUEL PRO® 382 FILTERS 76
SPIN-ON FILTERS 76
ITEM 13 – WATER PUMP AND COOLANT INHIBITOR ELEMENT 77
WATER PUMP DRAIN HOLE 77
COOLANT INHIBITOR ELEMENT 77
ITEM 14 – CRANKING MOTOR 78
ITEM 15 – AIR SYSTEM 78
ITEM 16 – EXHAUST SYSTEM 78
ITEM 17 – ENGINE (STEAM CLEAN) 78

 Copyright © 2004 DETROIT DIESEL CORPORATION

www.HEAVY EQUIPMENTS.ORG
https://truckmanualshub.com/

ITEM 18 – RADIATOR 78
ITEM 19 – OIL PRESSURE 79
ITEM 20 – BATTERY-CHARGING ALTERNATOR 79
BOSCH® T1 ALTERNATOR SERVICE REQUIREMENTS 80
GENERAL SERVICE REQUIREMENTS – BOSCH® AND DELCO REMY® ALTERNATORS 80
ITEM 21 – ENGINE AND TRANSMISSION MOUNTS 80
ITEM 22 – CRANKCASE PRESSURE 80
ITEM 23 – FAN HUB 81
ITEM 24 – THERMOSTATS AND SEALS 81
ITEM 25 – CRANKCASE BREATHER 81
ITEM 26 – ENGINE TUNE-UP 82
ITEM 27 – VIBRATION DAMPER 82

HOW-TO SECTION 83
HOW TO SELECT LUBRICATING OIL 83
LUBRICANT REQUIREMENTS 83
EGR-EQUIPPED ENGINES 83
NON-EGR ENGINES 83
ENGINES BUILT PRIOR TO 1998 83
COLD WEATHER STARTING 84
SYNTHETIC OILS 84
THE USE OF SUPPLEMENTAL ADDITIVES 85
WHEN TO CHANGE OIL 85
DISPOSING OF WASTE OIL 86
HOW TO REPLACE THE LUBE OIL FILTERS 86
REPLACE SPIN-ON TYPE OIL FILTER 86
HOW TO SELECT FUEL OIL 88
QUALITY 88
FUEL CONTAMINATION 88
PROHIBITED ADDITIVES 88
USED LUBRICATING OIL 89
GASOLINE 89
HOW TO REPLACE THE FUEL FILTERS 89
REPLACE SPIN-ON FILTER ELEMENTS 89
REPLACE FUEL/WATER SEPARATOR ELEMENT 91
REPLACE FUEL PRO FILTER ELEMENT 92
ENGINE OUT OF FUEL — HOW TO RESTART 94
ENGINES WITH SPIN-ON FILTERS 95

All information subject to change without notice. (Rev. 01/ 04)
6SE550 0401 Copyright © 2004 DETROIT DIESEL CORPORATION

www.HEAVY EQUIPMENTS.ORG
https://truckmanualshub.com/

ENGINES WITH FUEL PRO FILTERS 95
HOW TO SELECT COOLANT 96
DEFINITIONS 96
ANTIFREEZE 96
COOLANT 96
DROP-OUT 96
FULLY FORMULATED ANTIFREEZE 96
INITIAL–FILL COOLANT 96
OAT 96
SCA 96
APPROVED COOLANTS 97
EG OR PG & WATER + SCA INHIBITOR 98
MIXING EG OR PG ANTIFREEZE AND WATER 98
RECYCLED ANTIFREEZE 100
EG OR PG & WATER + OAT INHIBITOR 100
WATER ONLY + SCA OR WATER ONLY + OAT INHIBITOR . 101
WATER REQUIREMENTS 102
COOLANTS NOT RECOMMENDED 102
ALL ANTIFREEZES AND COOLANTS CONTAINING PHOSPHATE 102
AUTOMOTIVE TYPE COOLANTS 102
METHYL ALCOHOL-BASED ANTIFREEZE 103
METHOXY PROPANOL-BASED ANTIFREEZE 103
GLYCOL-BASED COOLANTS FORMULATED FOR HVAC 103
ADDITIVES NOT RECOMMENDED 103
SOLUBLE OIL ADDITIVES 103
CHROMATE ADDITIVES 103
COOLANT MAINTENANCE 103
COOLANT INHIBITOR TEST INTERVALS 103
SUPPLEMENTAL ADDITIVES 104
COOLANT MAINTENANCE INTERVALS 105
SCA TEST PROCEDURES 107
NEED-RELEASE FILTERS (NON-OAT SYSTEMS) 108
DROPOUT 108
EXTENDER ADDITIVE FOR OAT COOLANT 109
OAT COOLANT DRAIN INTERVAL 109
CHRONIC COOLANT SYSTEM PROBLEMS 109
MAINTENANCE PRODUCTS 109

 Copyright © 2004 DETROIT DIESEL CORPORATION

www.HEAVY EQUIPMENTS.ORG
https://truckmanualshub.com/

POWER COOL SCAS 109
POWER COOL COOLANT FILTER ELEMENTS 110
POWER COOL CLEANERS 110
SUMMARY OF COOLANT RECOMMENDATIONS 110
HOW TO DRAIN AND FLUSH THE COOLING SYSTEM 112
WHEN TO SERVICE THE DRY TYPE AIR CLEANER 114

BASIC TROUBLESHOOTING 115

ENGINE STORAGE 120
PREPARING THE ENGINE FOR STORAGE 120
TEMPORARY STORAGE (30 DAYS OR LESS) 120
EXTENDED STORAGE (MORE THAN 30 DAYS) 121
RESTORING ENGINE TO SERVICE 124

SERIES 50 SERVICE PUBLICATIONS 126

CUSTOMER ASSISTANCE 127
IN U.S. AND CANADA CALL 1–800–445–1980 130
WORKING WITH DDC SERVICE OUTLETS 130

ON-HIGHWAY VEHICLE ENGINE WARRANTY 133
TERMS OF COVERAGE: ON-HIGHWAY VEHICLE ENGINE APPLICATIONS 133
USES 133
DEFECTS 133
REPAIRS 133
WARRANTY PERIOD 133
LIKE REPLACEMENT ENGINE 134
SERVICE SUPPLIES 134
ENGINE REMOVAL AND REINSTALLATION 135
THIS WARRANTY DOES NOT COVER: 135
REPAIRS DUE TO ACCIDENTS, MISUSE, STORAGE DAMAGE, NEGLIGENCE OR CERTAIN MODIFICATIONS 135
BRAKING DEVICES 135
FUEL INJECTORS AFTER 100,000 MILES/160,000 KILOMETERS 135
MAINTENANCE 135
INCIDENTAL OR CONSEQUENTIAL DAMAGE 135
OTHER LIMITATIONS 136

All information subject to change without notice. (Rev. 01/ 04)
6SE550 0401 Copyright © 2004 DETROIT DIESEL CORPORATION

www.HEAVY EQUIPMENTS.ORG
https://truckmanualshub.com/

URBAN BUS, MOTOR COACH OR MOTOR HOME ENGINE WARRANTY 137
TERMS OF COVERAGE: URBAN BUS, MOTOR COACH OR MOTOR HOME ENGINE APPLICATIONS 137
USES 137
DEFECTS 137
REPAIRS 137
WARRANTY PERIOD 137
SERVICE SUPPLIES 138
LIKE REPLACEMENT ENGINE 138
ENGINE REMOVAL AND REINSTALLATION 139
THIS WARRANTY DOES NOT COVER: 139
REPAIRS DUE TO ACCIDENTS, MISUSE, ALTERATION, STORAGE DAMAGE, NEGLIGENCE OR CERTAIN MODIFICATIONS 139
BRAKING DEVICES 139
FUEL INJECTORS AFTER 200,000 MILES/320,000 KILOMETERS 139
MAINTENANCE 139
INCIDENTAL OR CONSEQUENTIAL DAMAGE 139
OTHER LIMITATIONS 139

CONSTRUCTION/ INDUSTRIAL ENGINE WARRANTY 141
TERMS OF COVERAGE: CONSTRUCTION/INDUSTRIAL ENGINE APPLICATIONS 141
USES 141
DEFECTS 141
REPAIRS 141
WARRANTY PERIOD 141
SERVICE SUPPLIES 141
ENGINE REMOVAL AND REINSTALLATION – CONSTRUCTION/INDUSTRIAL APPLICATIONS 142
MECHANIC'S TRAVEL EXPENSES 142
LIKE REPLACEMENT ENGINE 142
THIS WARRANTY DOES NOT COVER: 143
REPAIRS DUE TO ACCIDENTS, MISUSE, STORAGE DAMAGE, NEGLIGENCE OR CERTAIN MODIFICATIONS 143
ENGINE REMOVAL AND REINSTALLATION – AGRICULTURAL MACHINERY AND STAND-BY PUMP APPLICATIONS 143

 Copyright © 2004 DETROIT DIESEL CORPORATION

www.HEAVY EQUIPMENTS.ORG
https://truckmanualshub.com/

NON-DDC SUPPLIED/MANUFACTURED COMPONENTS 143
MAINTENANCE 143
INCIDENTAL OR CONSEQUENTIAL DAMAGE 143
OTHER LIMITATIONS 144

AGRICULTURAL MACHINERY ENGINE WARRANTY 145
TERMS OF COVERAGE: AGRICULTURAL MACHINERY ENGINE APPLICATIONS 145
USES 145
DEFECTS 145
REPAIRS 145
WARRANTY PERIOD 146
THIS WARRANTY DOES NOT COVER: 146
REPAIRS DUE TO ACCIDENTS, MISUSE, STORAGE DAMAGE, NEGLIGENCE OR CERTAIN MODIFICATIONS 146
ENGINE REMOVAL AND REINSTALLATION 146
NON-DDC SUPPLIED/MANUFACTURED COMPONENTS 146
MAINTENANCE 146
INCIDENTAL OR CONSEQUENTIAL DAMAGE 147
OTHER LIMITATIONS 147

PRIME POWER GENERATOR SET ENGINE WARRANTY 148
TERMS OF COVERAGE: PRIME POWER GENERATOR SET ENGINE APPLICATIONS 148
USES 148
DEFECTS 148
REPAIRS 148
WARRANTY PERIOD 148
LIKE REPLACEMENT ENGINE 148
SERVICE SUPPLIES 149
MECHANIC'S TRAVEL EXPENSES 149
THIS WARRANTY DOES NOT COVER: 149
REPAIRS DUE TO ACCIDENTS, MISUSE, STORAGE DAMAGE, NEGLIGENCE OR CERTAIN MODIFICATIONS 149
ENGINE REMOVAL AND REINSTALLATION 149
NON-DDC SUPPLIED/MANUFACTURED COMPONENTS 150
MAINTENANCE 150
INCIDENTAL OR CONSEQUENTIAL DAMAGE 150
OTHER LIMITATIONS 150

All information subject to change without notice. (Rev. 01/ 04)
6SE550 0401 Copyright © 2004 DETROIT DIESEL CORPORATION

www.HEAVY EQUIPMENTS.ORG
https://truckmanualshub.com/

STAND-BY GENERATOR SET ENGINE WARRANTY 151
TERMS OF COVERAGE: STAND-BY GENERATOR SET ENGINE APPLICATIONS 151
USES 151
DEFECTS 151
REPAIRS 151
WARRANTY PERIOD 152
LIKE REPLACEMENT ENGINE 152
SERVICE SUPPLIES 152
MECHANIC'S TRAVEL EXPENSES 152
THIS WARRANTY DOES NOT COVER: 152
REPAIRS DUE TO ACCIDENTS, MISUSE, STORAGE DAMAGE, NEGLIGENCE OR CERTAIN MODIFICATIONS 152
ENGINE REMOVAL AND REINSTALLATION 152
NON-DDC SUPPLIED/MANUFACTURED COMPONENTS 152
MAINTENANCE 153
INCIDENTAL OR CONSEQUENTIAL DAMAGE 153
OTHER LIMITATIONS 153

SPECIFICATIONS 154
FUEL AND LUBRICATING OIL FILTER REQUIREMENTS 154
OIL PAN 154
OIL PAN CAPACITY 154
TOTAL OIL CAPACITY OF THE ENGINE 154
POWER COOL ENGINE PRODUCTS 155
FULLY FORMULATED IEG COOLANT 155
LATIN AMERICAN COOLANT 155
2000 SUPPLEMENTAL COOLANT ADDITIVE 156
3000 SUPPLEMENTAL COOLANT ADDITIVE 156
3000 SUPPLEMENTAL ADDITIVE COOLANT FILTERS 157
SUPPLEMENTAL ADDITIVE NEED RELEASE FILTERS 157
PLUS EXTENDED LIFE OAT COOLANT 158
PLUS EXTENDER FOR USE WITH POWER COOL PLUS OAT COOLANT 158
PLUS 6000 OAT INHIBITOR FOR WATER-ONLY SYSTEMS 159
COOLING SYSTEM CLEANERS 159
COOLANT TESTING AND ANALYSIS PRODUCTS 160

 Copyright © 2004 DETROIT DIESEL CORPORATION

www.HEAVY EQUIPMENTS.ORG
https://truckmanualshub.com/

All information subject to change without notice. (Rev. 01/ 04)
6SE550 0401 Copyright © 2004 DETROIT DIESEL CORPORATION

www.HEAVY EQUIPMENTS.ORG
https://truckmanualshub.com/

INTRODUCTION

This guide is intended for use by the operator of a Detroit Diesel Series 50® engine used in the following applications:

- ☐ On-Highway Vehicles
- ☐ Construction/Industrial
- ☐ Agricultural Machinery
- ☐ Generator Drive Engines

Operators of Series 50 engines used in prime power or stand-by generator set applications should also refer to the Detroit Diesel *Generator Set Operator's Guide,* 6SE513. Guides are available from authorized Detroit Diesel distributors.

NON-GENUINE AND REBUILT COMPONENT QUALITY ALERT

In recent years, electronic engine controls have been instrumental in aiding engine manufacturers in meeting the stringent emission requirements of the U.S. Environmental Protection Agency (U.S. EPA) and the California Air Resources Board (CARB) and also in meeting the ever-increasing performance demands of the customer.

Maintenance procedures are to be followed in order to continue satisfactory performance and durability and to ensure coverage of the engine under the manufacturer's warranty. Many of these maintenance procedures also ensure that the engine continues to comply with applicable emissions standards. The U.S. EPA specifically defines an engine's "useful emission life" — currently established as 290,000 miles (464,000 kilometers) for on-highway engines. Proper maintenance procedures, using specific components engineered to comply with emissions regulations, may be performed by an authorized Detroit Diesel distributor or dealer, an independent outlet or the operator or owner. The owner is responsible for determining the suitability of components to maintain emissions compliance during the engine's useful emission life.

Electronic controls and components have significantly increased in sophistication, but the fundamental objective remains the same — precise timing and delivery of fuel. The very heart of the Detroit Diesel electronic controls is the electronic unit injector (EUI). The proper functioning of the EUI is absolutely paramount if the benefits of electronic controls are to be realized. Detroit Diesel Corporation has built over 650,000 engines with electronic unit injectors — more than anyone else in the business.

 Copyright © 2004 DETROIT DIESEL CORPORATION

www.HEAVY EQUIPMENTS.ORG
https://truckmanualshub.com/

Detroit Diesel cautions that the indiscriminate rebuilding of precision components, without the benefit of specifications, specialized equipment, and knowledge of the electronic operating system, will jeopardize performance or lead to more serious problems, and can take the engine outside of compliance with U.S. EPA or CARB emissions standards.

There are other components in an engine, such as turbocharger, camshaft, piston, etc., which are specifically designed and manufactured to exacting standards for emissions compliance. It is important that these components, if replaced, modified or substituted, can be verified to ensure that the engine remains in compliance with emissions standards. The use of inadequately engineered, manufactured or tested components in repair or rebuild of the engine may be in violation of the federal Clean Air Act and applicable U.S. EPA or CARB regulations.

Furthermore, modern engines exhibit operating parameters which require the use of proper fluids, such as fuel, coolant and lubricating oil, to maintain long engine life. The use of fluids that do not meet Detroit Diesel Corporation specifications may result in early wear out or engine failure.

All information subject to change without notice. (Rev. 01/ 04)
6SE550 0401 Copyright © 2004 DETROIT DIESEL CORPORATION

www.HEAVY EQUIPMENTS.ORG
https://truckmanualshub.com/

CAUTION SUMMARY

The following cautions must be observed by the operator of the vehicle or equipment in which this engine is installed and/or by those performing basic engine preventive maintenance. Failure to read and heed these cautions and exercise reasonable care for personal safety and the safety of others when operating the vehicle/equipment or performing basic engine preventive maintenance may result in personal injury and engine and/or vehicle/equipment damage.

Engine Operation

Observe the following cautions when operating the engine.

CAUTION:

To avoid injury from loss of vehicle/vessel control, the operator of a DDEC equipped engine must not attempt to use or read the Diagnostic Data Reader when the vehicle/vessel is moving.

CAUTION:

Diesel engine exhaust and some of its constituents are known to the State of California to cause cancer, birth defects, and other reproductive harm.

- **Always start and operate an engine in a well ventilated area.**
- **If operating an engine in an enclosed area, vent the exhaust to the outside.**
- **Do not modify or tamper with the exhaust system or emission control system.**

CAUTION:

To avoid injury from engine shutdown in an unsafe situation, ensure the operator knows how to override the stop engine condition on a DDEC-equipped unit.

 Copyright © 2004 DETROIT DIESEL CORPORATION

www.HEAVY EQUIPMENTS.ORG
https://truckmanualshub.com/

CAUTION:

To avoid injury from loss of vehicle control, do not activate the Engine Brake system under the following conditions:

- **On wet or slippery pavement, unless the vehicle is equipped with ABS (anti-lock braking system) and you have had prior experience driving under these conditions.**
- **When driving without a trailer (bobtailing) or pulling and empty trailer.**
- **If the tractor drive wheels begin to lock or there is fishtail motion after the Engine Brake is activated. *Deactivate the brake system immediately, if this occurs.***

Failure to observe these precautions may result in loss of vehicle control and/or personal injury.

CAUTION:

To avoid injury from the loss of vehicle control, do not use cruise control under these conditions:

- **When it is not possible to keep the vehicle at a constant speed (on winding roads, in heavy traffic, in traffic that varies in speed, etc.).**
- **On slippery roads (wet pavement, ice-or snow-covered roads, loose gravel, etc.).**

Preventive Maintenance

Observe the following cautions when performing preventative maintenance.

CAUTION:

To avoid injury when working near or on an operating engine, remove loose items of clothing, jewelry, tie back or contain long hair that could be caught in any moving part causing injury.

All information subject to change without notice. (Rev. 01/ 04)
6SE550 0401 Copyright © 2004 DETROIT DIESEL CORPORATION

www.HEAVY EQUIPMENTS.ORG
https://truckmanualshub.com/

CAUTION:

To avoid injury when working on or near an operating engine, wear protective clothing, eye protection, and hearing protection.

CAUTION:

To avoid injury from hot oil, do not operate the engine with the rocker cover(s) removed.

CAUTION:

To avoid injury from fire, contain and eliminate leaks of flammable fluids as they occur. Failure to eliminate leaks could result in fire.

CAUTION:

To avoid injury from contact with the contaminants in used engine oil, wear protective gloves and apron.

CAUTION:

To avoid injury from slipping and falling, immediately clean up any spilled liquids.

CAUTION:

To avoid injury from the expulsion of hot coolant, never remove the cooling system pressure cap while the engine is at operating temperature. Remove the cap slowly to relieve pressure. Wear adequate protective clothing (face shield or safety goggles, rubber gloves, apron, and boots).

CAUTION:

To avoid injury from hot surfaces, allow engine to cool before removing any component. Wear protective gloves.

 Copyright © 2004 DETROIT DIESEL CORPORATION

www.HEAVY EQUIPMENTS.ORG
https://truckmanualshub.com/

CAUTION:

To avoid injury, use care when working around moving belts and rotating parts on the engine.

CAUTION:

To avoid injury from rotating belts and fans, do not remove and discard safety guards.

CAUTION:

To avoid injury from fire caused by heated lubricating-oil vapors:

- **Keep those people who are not directly involved in servicing away from the engine.**
- **Stop the engine immediately if an oil leak is detected.**
- **Do not allow open flames or smoke when working on an operating engine.**
- **Wear adequate protective clothing (face shield, insulated gloves, apron, etc.) to avoid burns.**
- **To prevent a buildup of potentially volatile vapors, keep the engine area well ventilated during operation.**

Lubricating oil is relatively harmless at ambient temperatures.

CAUTION:

To avoid injury from contact with rotating parts when an engine is operating with the air inlet piping removed, install an air inlet screen shield over the turbocharger air inlet. The shield prevents contact with rotating parts.

CAUTION:

To avoid injury when using caustic cleaning agents, follow the chemical manufacturers usage, disposal, and safety instructions.

All information subject to change without notice. (Rev. 01/ 04)
6SE550 0401 Copyright © 2004 DETROIT DIESEL CORPORATION

www.HEAVY EQUIPMENTS.ORG
https://truckmanualshub.com/

Electrical System

Observe the following cautions when jump starting an engine, charging a battery, or working with the vehicle/application electrical system.

CAUTION:

To avoid injury from accidental engine startup while servicing the engine, disconnect/disable the starting system.

CAUTION:

To avoid injury from electrical shock, do not touch battery terminals, alternator terminals, or wiring cables while the engine is operating.

CAUTION:

To avoid injury from battery explosion or contact with battery acid, work in a well-ventilated area, wear protective clothing, and avoid sparks or flames near the battery. Always establish correct polarity before connecting cables to the battery or battery circuit. If you come in contact with battery acid:

- ☐ **Flush your skin with water.**
- ☐ **Apply baking soda or lime to help neutralize the acid.**
- ☐ **Flush your eyes with water.**
- ☐ **Get medical attention immediately.**

 Copyright © 2004 DETROIT DIESEL CORPORATION

www.HEAVY EQUIPMENTS.ORG
https://truckmanualshub.com/

Cooling System

Observe the following cautions when servicing the cooling system.

CAUTION:

To avoid injury from the expulsion of hot coolant, never remove the cooling system pressure cap while the engine is at operating temperature. Remove the cap slowly to relieve pressure. Wear adequate protective clothing (face shield or safety goggles, rubber gloves, apron, and boots).

CAUTION:

To avoid injury from slipping and falling, immediately clean up any spilled liquids.

Air Intake System

Observe the following cautions when working on the air intake system.

CAUTION:

To avoid injury from hot surfaces, allow engine to cool before removing any component. Wear protective gloves.

CAUTION:

To avoid injury from contact with rotating parts when an engine is operating with the air inlet piping removed, install an air inlet screen shield over the turbocharger air inlet. The shield prevents contact with rotating parts.

All information subject to change without notice. (Rev. 01/ 04)
6SE550 0401 Copyright © 2004 DETROIT DIESEL CORPORATION

www.HEAVY EQUIPMENTS.ORG
https://truckmanualshub.com/

Fuel System

Observe the following cautions when fueling the vehicle or working with the fuel system.

CAUTION:

To avoid injury from fire, keep all potential ignition sources away from diesel fuel, open flames, sparks, and electrical resistance heating elements. Do not smoke when refueling.

CAUTION:

To avoid injury from fire, contain and eliminate leaks of flammable fluids as they occur. Failure to eliminate leaks could result in fire.

CAUTION:

To avoid injury from fire caused by heated diesel-fuel vapors:

- **Keep those people who are not directly involved in servicing away from the engine.**
- **Stop the engine immediately if a fuel leak is detected.**
- **Do not allow open flames or smoke when working on an operating engine.**
- **Wear adequate protective clothing (face shield, insulated gloves and apron, etc.).**
- **To prevent a buildup of potentially volatile vapors, keep the engine area well ventilated during operation.**

Diesel fuel is relatively harmless at ambient temperatures.

CAUTION:

To avoid increased risk of a fuel fire, do not mix gasoline and diesel fuel.

 Copyright © 2004 DETROIT DIESEL CORPORATION

www.HEAVY EQUIPMENTS.ORG
https://truckmanualshub.com/

Starting Aids

Observe the following cautions when using starting aids.

CAUTION:

To avoid injury from flames, explosion, and toxicants when using ether, the following precautions must be taken:

- **Always wear goggles when testing.**
- **If fluid enters the eyes or if fumes irritate the eyes, wash eyes with large quantities of clean water for 15 minutes. A physician, preferably an eye specialist, should be contacted.**
- **Contents of cylinder are under pressure. Store cylinders in a cool dry area. Do not incinerate, puncture or attempt to remove cores from cylinders.**

CAUTION:

To avoid injury from flames, explosion, and toxicants when using ether, the following precautions must be taken:

- **Do not smoke when servicing ether system.**
- **Work in well-ventilated area.**
- **Do not work near open flames, pilot flames (gas or oil heaters), or sparks.**
- **Do not weld or carry an open flame near the ether system if you smell ether or otherwise suspect a leak.**

All information subject to change without notice. (Rev. 01/ 04)
6SE550 0401 Copyright © 2004 DETROIT DIESEL CORPORATION

www.HEAVY EQUIPMENTS.ORG
https://truckmanualshub.com/

Compressed Air

Observe the following cautions when using compressed air.

CAUTION:

To avoid injury from flying debris when using compressed air, wear adequate eye protection (face shield or safety goggles) and do not exceed 40 psi (276 kPa) air pressure.

Lubricating Oil and Filters

Observe the following cautions when replacing the engine lubricating oil and filters.

CAUTION:

To avoid injury from slipping and falling, immediately clean up any spilled liquids.

CAUTION:

To avoid injury from fire caused by heated lubricating-oil vapors:

- **Keep those people who are not directly involved in servicing away from the engine.**
- **Stop the engine immediately if an oil leak is detected.**
- **Do not allow open flames or smoke when working on an operating engine.**
- **Wear adequate protective clothing (face shield, insulated gloves, apron, etc.) to avoid burns.**
- **To prevent a buildup of potentially volatile vapors, keep the engine area well ventilated during operation.**

Lubricating oil is relatively harmless at ambient temperatures.

 Copyright © 2004 DETROIT DIESEL CORPORATION

www.HEAVY EQUIPMENTS.ORG
https://truckmanualshub.com/

ENGINE MODEL AND SERIAL NUMBER DESIGNATION

The engine serial number and model number are laser etched on the cylinder block on the left side just below the intake manifold and above the cast-in Detroit Diesel logo (as viewed from the flywheel end). See Figure 1

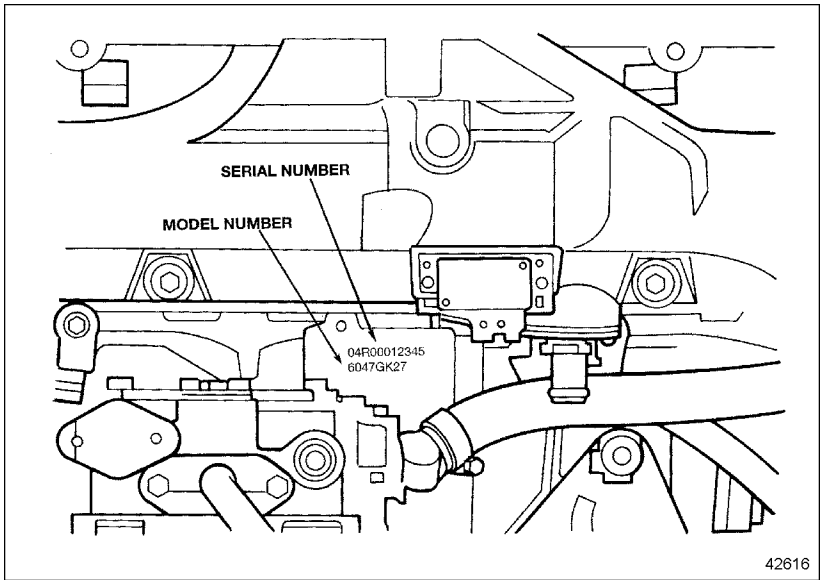

Figure 1 Location of Engine Serial and Model Numbers

All information subject to change without notice. (Rev. 01/ 04)
6SE550 0401 Copyright © 2004 DETROIT DIESEL CORPORATION

www.HEAVY EQUIPMENTS.ORG
https://truckmanualshub.com/

Option Labels

Computerized engine option labels are attached to the valve rocker cover. These labels contain the engine serial number and model number and, in addition, list any optional equipment used on the engine. Labels also include required tune-up information (injection timing, valve lash, maximum no-load rpm, etc.).

With any order for parts, the engine model and serial number must be given. If a type number is shown on the option label covering the equipment required, this number should also be included on the parts order. See Figure 2.

Transmissions and power take-offs generally carry their own name plates. The model and serial number information on these plates is useful when ordering parts for these assemblies.

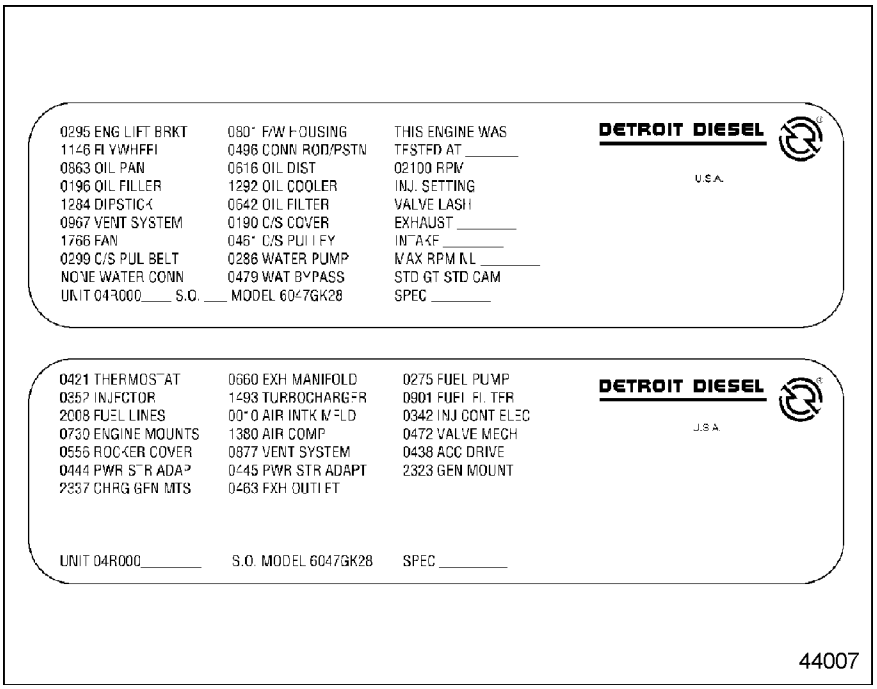

Figure 2 Typical Option Labels

 Copyright © 2004 DETROIT DIESEL CORPORATION

www.HEAVY EQUIPMENTS.ORG
https://truckmanualshub.com/

Certification Labels

If required, a certification label is attached to the valve rocker cover. This label certifies that the engine conforms to federal and certain state emissions regulations for its particular application. It also gives the operating conditions under which certification was made. See Figure 3.

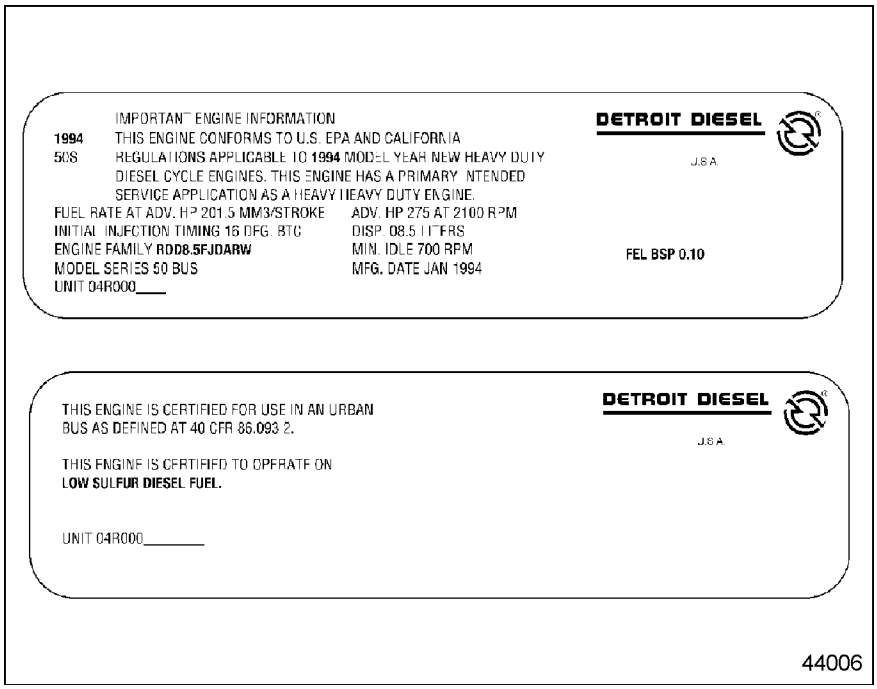

Figure 3 Typical Engine Certification Labels

All information subject to change without notice. (Rev. 01/ 04)
6SE550 0401 Copyright © 2004 DETROIT DIESEL CORPORATION

www.HEAVY EQUIPMENTS.ORG
https://truckmanualshub.com/

OPERATING INSTRUCTIONS FOR A FIRST TIME START

When preparing to start a new or newly overhauled engine which has been in storage, perform all of the operations listed below. Failure to follow these instructions may result in serious engine damage. Before a routine start, see the "Daily" checks for your engine in the MAINTENANCE section.

CAUTION:

Diesel engine exhaust and some of its constituents are known to the State of California to cause cancer, birth defects, and other reproductive harm.

- ❑ **Always start and operate an engine in a well ventilated area.**
- ❑ **If operating an engine in an enclosed area, vent the exhaust to the outside.**
- ❑ **Do not modify or tamper with the exhaust system or emission control system.**

CAUTION:

To avoid injury when working near or on an operating engine, remove loose items of clothing, jewelry, tie back or contain long hair that could be caught in any moving part causing injury.

System Checks

Perform the following system checks before starting for the first time.

Cooling System Checks

Check the cooling system as follows:

1. Make sure all drain cocks in the cooling system are installed (drain cocks are often removed for shipping) and are closed tightly.
2. Remove the radiator pressure control cap and fill with genuine Detroit Diesel *Power Cool* antifreeze or an equivalent quality ethylene glycol or propylene glycol-base antifreeze solution in the required concentration. In extremely hot environments, **properly inhibited** water may be used in the summer. Keep the coolant level at the bottom of the filler neck to allow for

 Copyright © 2004 DETROIT DIESEL CORPORATION

www.HEAVY EQUIPMENTS.ORG
https://truckmanualshub.com/

expansion of the coolant. For more detailed recommendations, refer to the How to Select Coolant section in this guide.

3. Entrapped air must be purged after filling the cooling system. To do this, allow the engine to warm up with the pressure cap removed. With the transmission in neutral, increase engine speed above 1,000 rpm and add coolant to the radiator as required.
4. Check to make sure the front of the radiator and air-to-air charge cooler (if equipped) are unblocked and free of debris.

Lubrication System Checks

The lubricating oil film on the rotating parts and bearings of a new or newly overhauled engine, or one which has been in storage for six months or more, may be insufficient when the engine is started for the first time.

NOTICE:
Insufficient lubrication at startup can cause serious damage to engine components.

To insure an immediate flow of oil to all bearing surfaces at initial engine startup, the engine lubrication system should be charged with a commercially available pressure pre-lubricator. If this is impractical, rocker covers should be removed and clean lubricating oil should be poured over the rocker arms. The oil should be the same weight and viscosity as that used in the crankcase. After pre-lubricating, add additional oil to bring the level to the proper mark on the dipstick. See Figure 4.

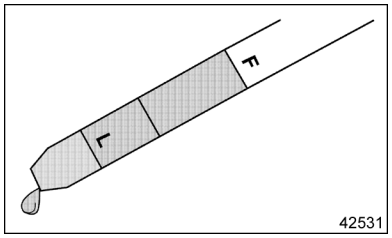

Figure 4 Check Lube Oil Level Before Starting

For lubricant recommendation, refer to the How to Select Lubricating Oil section in this guide.

Extended Storage — An engine in storage for an extended period of time (over winter, for example) may accumulate water in the oil pan through normal condensation of moisture (always present in the air) on the cold, internal surfaces of the engine. Lube oil diluted by water cannot provide adequate bearing protection at engine startup. For this reason, Detroit Diesel recommends

All information subject to change without notice. (Rev. 01/ 04)
6SE550 0401 Copyright © 2004 DETROIT DIESEL CORPORATION

www.HEAVY EQUIPMENTS.ORG
https://truckmanualshub.com/

replacing the engine lubricating oil and filters after extended storage.

NOTICE:

Failure to eliminate water-diluted lubricating oil may lead to serious engine damage at startup.

Fuel System Checks

Fill the tanks with the recommended fuel. Keeping tanks full reduces water condensation and helps keep fuel cool, which is important to engine performance. Full tanks also reduce the chance for microbe (black slime) growth. For fuel recommendations, refer to the How to Select Fuel Oil section in this guide. Make sure the fuel shutoff valve (if used) is open.

To insure prompt starting and even running, the fuel system *must* be primed if air has entered the fuel system. Priming is done by connecting a manual or electric priming pump to the *secondary* fuel filter adaptor. Authorized Detroit Diesel service outlets are properly equipped and have the trained technicians to perform this service.

Priming is not normally required if the filter elements are filled with clean fuel when installed and the manifolds are not drained of fuel.

NOTICE:

Prolonged use of the starting motor and engine fuel pump to prime the fuel system can result in damage to the starter, fuel pump and injectors and may cause erratic engine operation due to the amount of air in the lines and filters from the fuel supply tank to the cylinder head. Engines equipped with starting devices dependent on compressed air or gas reservoirs should always be primed before initial startup. Otherwise, reserve pressure can be exhausted and injectors may be damaged from lack of lubrication and cooling.
Under no circumstances should a starting aid such as ether be used to run the engine until the fuel system is primed. Injector damage will result if this method is used. The heat generated by the external fuel source will cause the injector tips to be damaged when the fuel cools them. The injector plunger and bushing can be scored from running without lubrication.

 Copyright © 2004 DETROIT DIESEL CORPORATION

www.HEAVY EQUIPMENTS.ORG
https://truckmanualshub.com/

If the engine is equipped with a fuel/water separator, drain off any water that has accumulated. Water in fuel can seriously affect engine performance and may cause engine damage. Detroit Diesel recommends installation of a fuel/water separator wherever water contamination is a concern.

Other Checks

Make sure the transmission is filled to the proper level with the fluid recommended by the gear manufacturer. Do not overfill.

Make sure cable connections to the storage batteries are clean and tight. Check the hydrometer "eye" of maintenance-free batteries for charge. See Figure 5.

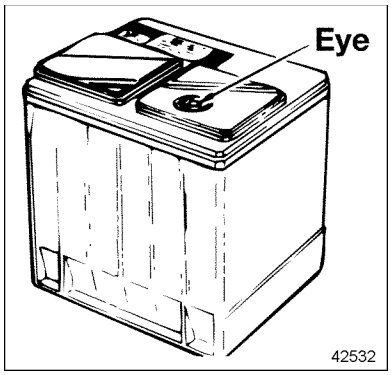

Figure 5 Check "Eye" of Maintenance-Free Batteries

Check drive belts to make sure they are in good condition (not cracked, torn, worn or glazed) and are properly adjusted.

If lead-acid or low-maintenance batteries are used, make sure battery electrolyte level is normal.

Check the turbocharger for signs of oil or exhaust leaks. Leaks should be corrected before starting the engine.

Check engine mounting bolts for tightness. Bolts should be retightened, if necessary.

Starting the Engine

Before starting the engine the first time, refer to the System Checks section and perform the operations listed.

NOTICE:
The turbocharger may be seriously damaged if the engine is cranked with the air shutdown in the *closed* position.

If the engine has an emergency manual or automatic shutdown system, make sure the control is set in the *open* position before starting.

The engine may require the use of a cold weather starting aid if the ambient temperature is below 40^{c} F (4^{c} C).

All information subject to change without notice. (Rev. 01/ 04)
6SE550 0401 Copyright © 2004 DETROIT DIESEL CORPORATION

www.HEAVY EQUIPMENTS.ORG
https://truckmanualshub.com/

CAUTION:

To avoid injury from flames, explosion, and toxicants when using ether, the following precautions must be taken:

- ❑ **Do not smoke when servicing ether system.**
- ❑ **Work in well-ventilated area.**
- ❑ **Do not work near open flames, pilot flames (gas or oil heaters), or sparks.**
- ❑ **Do not weld or carry an open flame near the ether system if you smell ether or otherwise suspect a leak.**

Initial Engine Start

To start a Series 50 engine, make sure the transmission is in neutral and turn the ignition key on.

You will notice that both the yellow Check Engin Light (CEL) and the red Stop Engine Light (SEL) will come on.

This is the result of theDetroit Diesel Electronic Control (DDEC®) computer diagnosing the system to ensure everything is functional, including the light bulbs for the warning lights. If everything is OK, both lights will go out in approximately five seconds.

Start the engine *after* the lights go out. If starting a vehicle, start the engine with foot *off* the foot pedal.

NOTICE:

If the operating lights stay on, consult with DDC Technical Service. Operating the engine under these circumstances may result in engine damage.

Electric Starter — Start an engine equipped with an electric starting motor as follows:

1. With foot OFF the foot pedal, press the starter switch firmly.

NOTICE:

To prevent serious starting motor damage, do not press the starter switch again after the engine has started.

2. If the engine fails to start within 15 seconds, release the starter switch and allow the starter to cool for 15 seconds before trying again. If the engine fails to start after four attempts, an inspection should be made to determine the cause.

 Copyright © 2004 DETROIT DIESEL CORPORATION

www.HEAVY EQUIPMENTS.ORG
https://truckmanualshub.com/

Air Starter — Because of the limited volume of most compressed air storage tanks and the relatively short duration of the cranking cycle, *it is important to make sure the engine is ready to start before activating the air starter.* Start an engine equipped with an air starter as follows:

1. Check the pressure in the air storage tank. If necessary, add air to bring the pressure up to at least the recommended minimum for starting.
2. With foot OFF the foot pedal, press the starter button firmly and hold until the engine starts.

Running the Engine

While the engine is operating, monitor the battery charge indicator light, the oil pressure and avoid excessive idling.

Oil Pressure

Observe the oil pressure gage immediately after starting the engine. A good indicator that all moving parts are getting lubrication is when the oil pressure gage registers pressure (5 psi or 35 kPa at idle speed). If no pressure is indicated within 10 to 15 seconds, stop the engine and check the lubrication system. The pressure should not drop below 28 psi or 193 kPa at 1800 rpm, and normal operating pressure should be higher. If oil pressure does not fall within these guidelines, it should be checked with a manual gage.

CAUTION:

To avoid injury from hot oil, do not operate the engine with the rocker cover(s) removed.

Warm-up

Run the engine at part throttle for about five minutes to allow it to warm up before applying a load.

Inspection

While the engine is idling, inspect the transmission, check for fluid leaks, check the crankcase and turbocharger.

Transmission – While the engine is idling, check the automatic transmission (if equipped) for proper oil level and add oil as required.

Fluid Leaks – Look for coolant, fuel or lubricating oil leaks. If any are found, shut down the engine immediately and have the leaks repaired after the engine has cooled.

All information subject to change without notice. (Rev. 01/ 04)
6SE550 0401 Copyright © 2004 DETROIT DIESEL CORPORATION

www.HEAVY EQUIPMENTS.ORG
https://truckmanualshub.com/

Crankcase – If the engine oil was replaced, stop the engine after normal operating temperature has been reached. Allow the oil to drain back into the crankcase for about twenty minutes, then check the oil level. If necessary, add oil to bring the level to the proper mark on the dipstick. Use only the heavy-duty oils recommended. Refer to the How to Select Lubricating Oil section in this guide.

Turbocharger – Make a visual inspection of the turbocharger for oil leaks, exhaust leaks, excessive noise or vibration. Stop the engine immediately if a leak or unusual noise or vibration is noted. ***Do not restart the engine until the cause of the concern has been investigated and corrected.*** Authorized Detroit Diesel service outlets are properly equipped to perform this service.

Avoid Unnecessary Idling

Whenever possible, avoid unnecessary idling.

During long engine idling periods with the transmission in neutral, the engine coolant temperature may fall below the normal operating range. The incomplete combustion of fuel in a cold engine will cause crankcase oil dilution, formation of lacquer or gummy deposits on the valves, pistons, and rings, and rapid accumulation of sludge in the engine. When prolonged idling is necessary, maintain at least 850 rpm spring/summer and 1200 rpm fall/winter.

Stopping the Engine

Stop an engine under normal operating conditions as follows:

1. Reduce engine speed to idle and put all shift levers in the neutral position.

NOTICE:

Stopping a turbocharged engine immediately after high-speed operation without allowing a sufficient cool-down period may cause damage to the turbocharger, as it will continue to turn without an oil supply to the bearings.

2. Allow the engine to run between idle and 1000 rpm with no load for four or five minutes. This allows the engine to cool and permits the turbocharger to slow down. After four or five minutes, shut down the engine.

 Copyright © 2004 DETROIT DIESEL CORPORATION

www.HEAVY EQUIPMENTS.ORG
https://truckmanualshub.com/

Emergency Jump Starting

The DDEC IV system operates on 12 or 24 volts DC. If an engine with an electric starting motor requires emergency jump starting, *do not exceed 32 volts DC.*

NOTICE:

Jump starting with voltages greater than those indicated *or* reversing battery polarity may damage the Electronic Control Module.

CAUTION:

To avoid injury from battery explosion when jump starting the engine, do not attach the cable end to the negative terminal of the disabled battery.

NOTICE:

Failure to connect jumper cables in the proper sequence can result in alternator and/or equipment damage.

Before attempting to jump start the engine, make sure the jumper cables are connected properly (positive to positive, negative to negative ground) and in the proper sequence (negative to negative ground *last*).

CAUTION:

To avoid injury from battery explosion or contact with battery acid, work in a well-ventilated area, wear protective clothing, and avoid sparks or flames near the battery. Always establish correct polarity before connecting cables to the battery or battery circuit. If you come in contact with battery acid:

- ☐ **Flush your skin with water.**
- ☐ **Apply baking soda or lime to help neutralize the acid.**
- ☐ **Flush your eyes with water.**
- ☐ **Get medical attention immediately.**

All information subject to change without notice. (Rev. 01/ 04)
6SE550 0401 Copyright © 2004 DETROIT DIESEL CORPORATION

www.HEAVY EQUIPMENTS.ORG
https://truckmanualshub.com/

DDEC IV SYSTEM

The DDEC sytem's engine-mounted Electronic Control Module (ECM) includes control logic to provide overall engine management. The ECM continuously performs self-diagnostic checks and monitors other system components. System diagnostic checks are made at ignition-on and continue throughout all engine-operating modes.

Detroit Diesel Series 50 engines equipped with DDEC IV are identified by the letter "K" in the sixth position of the model number. Example: 6047G**K**27.

The DDEC engine is equipped with an electronically controlled fuel injection system. There are no control racks or mechanical linkages to adjust. This system not only helps to improve fuel economy and vehicle performance, it also helps to reduce cold starting time and increase initial idle speed for fast engine warm-up and virtual elimination of cold smoke.

The DDEC engine has no mechanical governor. Engine horsepower, torque, idle, and engine speed are contained in the internal electronics. Therefore, there are no mechanical governor spring adjustments for idle and high-speed control.

There is no need for a throttle delay. Emission control is performed through the electronic control module (ECM).

The Electronic Foot Pedal Assembly (EFPA) eliminates the need for any throttle linkage.

DDEC Features

DDEC offers a variety of options designed to warn the operator of an engine malfunction. Options can range from the CEL and SEL panel lights to automatic reduction in engine power followed by automatic engine shutdown.

The power-down/shutdown option may be activated by a low coolant level, low oil pressure or high engine oil or coolant temperature.

The DDEC engine has the ability to perform diagnostics for self-checks and continuous monitoring of other system components. Depending on the application, DDEC can also monitor oil temperature, coolant temperature, oil pressure, fuel pressure, coolant level and remote sensors (if used). This diagnostic system is connected to the CEL and the SEL to provide a visual warning of a system malfunction.

 Copyright © 2004 DETROIT DIESEL CORPORATION

www.HEAVY EQUIPMENTS.ORG
https://truckmanualshub.com/

Engine Protection

The DDEC engine protection system monitors all engine sensors and electronic components, and recognizes system malfunctions. If a critical fault is detected, the CEL and SEL illuminate. The malfunction codes are logged into the ECM's memory.

The standard parameters which are monitored for engine protection are: low coolant level, high coolant temperature, low oil pressure, and high oil temperature

This system features a 30-second, stepped-power shutdown sequence or an immediate speed reduction without shutdown in the event a major engine malfunction occurs, such as low oil pressure, high oil or coolant temperature, or low coolant level.

CAUTION:

To avoid injury from engine shutdown in an unsafe situation, ensure the operator knows how to override the stop engine condition on a DDEC-equipped unit.

NOTICE:

Engines equipped with the power-down/shutdown option have a system override button or switch to allow engine operation for a short period of time. Using the override button so the engine does not shutdown in 30 seconds but operates for an extended period may result in engine damage

Idle Shutdown Timer

The DDEC engine may also have an optional 1 to 100 minute idle shutdown system. The purpose of this system is to conserve fuel by eliminating excessive idling and to allow for a turbocharger cool-down period. To activate the shutdown, the transmission must be in neutral with the vehicle parking brakes set and the engine in idle or fast-idle mode.

Cruise Control

Cruise Control is available with any DDEC engine. Cruise Control maintains a set vehicle or engine speed setting. The driver/operator has switches to set, activate and deactivate the system. See Figure 6. A slight pressure on the brake or clutch deactivates the system, as well. The minimum speed at which cruise control can be used is programmable.

All information subject to change without notice. (Rev. 01/ 04)
6SE550 0401 Copyright © 2004 DETROIT DIESEL CORPORATION

www.HEAVY EQUIPMENTS.ORG
https://truckmanualshub.com/

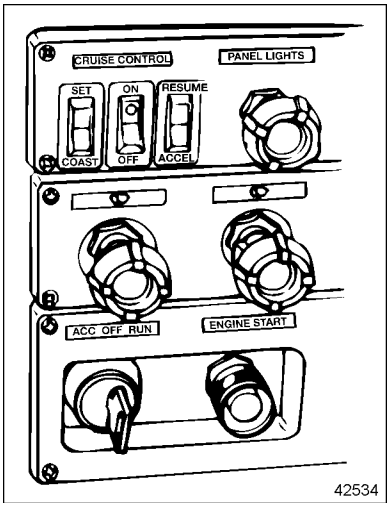

Figure 6 Typical Cruise Control Switches

Cruise Control may also be programmed to permit fast idle using the cruise control switches. With the engine at normal idle, transmission in neutral and service brakes on, turn on the cruise control "ON/OFF" switch, and use the "Resume" switch. The engine rpm should increase to a pre-defined speed. The engine rpm can be raised or lowered from this point using the "Set" and "Resume" switches.

Cruise Control will maintain the set speed under normal road and load conditions.

CAUTION:

To avoid injury from the loss of vehicle control, do not use cruise control under these conditions:

- **When it is not possible to keep the vehicle at a constant speed (on winding roads, in heavy traffic, in traffic that varies in speed, etc.).**
- **On slippery roads (wet pavement, ice-or snow-covered roads, loose gravel, etc.).**

NOTICE:

When descending a hill with cruise control OFF, do not allow the engine to exceed 2,500 rpm under any conditions. Failure to observe this precaution can result in overspeeding and serious engine damage.

Cruise Control cannot limit vehicle speeds on down grades if available engine braking effort is exceeded, nor can it maintain speed on upgrades if power requirements exceed engine power capability.

 Copyright © 2004 DETROIT DIESEL CORPORATION

www.HEAVY EQUIPMENTS.ORG
https://truckmanualshub.com/

When the Cruise Control switch is in the ON position, cruise control is engaged by momentarily contacting the “Set/Coast” switch to the ON position. Holding the switch in the ON position allows the vehicle to slow to a lower speed. Toggling the switch will result in a one mile-per-hour (1.6 kph) decrease in vehicle speed. If cruise control has been disabled, toggling the “Resume/Accel” switch restores the vehicle to the previously set cruise speed.

Using either the brake or the clutch will disable cruise control.

Engine Brakes

Engine brakes are enabled by an ON/OFF switch mounted on the dash. A separate intensity switch is used to select *low, medium or high* braking power. The engine brakes will only operate when the electronic foot pedal assembly (EFPA) is fully released. Disengaging the clutch will prevent the engine brakes from operating.

Engine brakes will supply braking power even when in cruise control. The electronic control module (ECM) will control the amount of engine braking with respect to the cruise control set speed. The maximum amount of braking (*low, medium, high*) is selected with the dash switches.

CAUTION:

To avoid injury from loss of vehicle control, do not activate the Engine Brake system under the following conditions:

- **On wet or slippery pavement, unless the vehicle is equipped with ABS (anti-lock braking system) and you have had prior experience driving under these conditions.**
- **When driving without a trailer (bobtailing) or pulling and empty trailer.**
- **If the tractor drive wheels begin to lock or there is fishtail motion after the Engine Brake is activated. *Deactivate the brake system immediately, if this occurs.***

Failure to observe these precautions may result in loss of vehicle control and/or personal injury.

All information subject to change without notice. (Rev. 01/ 04)
6SE550 0401 Copyright © 2004 DETROIT DIESEL CORPORATION

www.HEAVY EQUIPMENTS.ORG
https://truckmanualshub.com/

Data Recording Capability

DDEC Reports is a data recording capability that is standard on all DDEC IV engines. DDEC Reports contains information on driver activities, engine performance and critical incidence reporting. The information can be extracted with Detroit Diesel Diagnostic Link® 2.1 (DDDL 2.1) or later software. To perform the extraction, at least a 486 computer with a 16-MB RAM is required.

DDEC IV Operation

NOTE:
This engine is equipped with DDEC software. This software generally assures optimal engine performance. The installation of software upgrades may cause minor changes in features and engine performance.

Since the DDEC system is electronic, a battery is required to operate the computer. The system operates at 12 or 24 volts. However, in the event of a power supply malfunction, the system will continue to operate at reduced voltage. When this occurs, the CEL will come on.

The engine will only operate at reduced rpm until the battery voltage reaches a point where the ECM will no longer function and the engine shuts down.

Should the CEL come on for any reason, the vehicle can still be operated and the driver can proceed to the required destination. *This condition should be reported to an authorized Detroit Diesel distributor or dealer.*

NOTICE:

When the SEL comes on, the computer has detected a major malfunction in the engine that requires immediate attention. **It is the operator's responsibility to shut down the engine to avoid serious damage.**

The engine can be configured to give a warning only, to ramp down (reduce power) or to shut down. Ramp down will reduce engine rpm to a pre-determined speed, but will not shut down the engine. With the 30-second shutdown option, the engine will begin a 30-second, stepped power-down sequence until it shuts down completely.

Stop Engine Override can be supplied in case the vehicle is to operate in a critical location.

NOTE:
The Stop Engine Override switch and the Diagnostic Request switch are the same.

 Copyright © 2004 DETROIT DIESEL CORPORATION

www.HEAVY EQUIPMENTS.ORG
https://truckmanualshub.com/

In this situation the operator may elect to override the automatic stop engine sequence by pressing the Stop Engine Override switch every 15 to 20 seconds to prevent engine shutdown from occurring.

NOTE:
For some applications, holding down the Stop Engine Override switch will not prevent the engine shutdown sequence. You must continue to reset the automatic shutdown system by pressing the Stop Engine Override switch at intervals of approximately 15 to 20 seconds.

It takes 30 seconds from the time the automatic shutdown sequence begins until engine shutdown. Therefore, the operator *must* press the override switch just prior to engine shutdown and continue to do so until the vehicle can be brought to a stop in a safe location.

Immediate Speed Reduction Option

The immediate speed reduction option will bring engine rpm back to a predetermined speed, but will not shut down the engine.

The engine should not be restarted after it has been shut down by the engine protection system, unless the problem has been located and corrected.

Stop Engine Light

The conditions that will cause theSEL to come on are:

- ☐ High coolant temperature
- ☐ Loss of coolant
- ☐ High oil temperature
- ☐ Low oil pressure
- ☐ Auxiliary shutdown

It is important to point out that whenever the CEL or the SEL comes on, the DDEC computer will determine where the problem is and will then store this information in its memory.

If the malfunction is intermittent, the lights will come on and go off as the computer senses the changing engine condition.

Diagnostic Data Reader

The Diagnostic Data Reader (DDR) is a special diagnostic tool that can be plugged into the engine computer memory to extract information related to the cause of the problem. See Figure 7.

All information subject to change without notice. (Rev. 01/ 04)
6SE550 0401 Copyright © 2004 DETROIT DIESEL CORPORATION

www.HEAVY EQUIPMENTS.ORG
https://truckmanualshub.com/

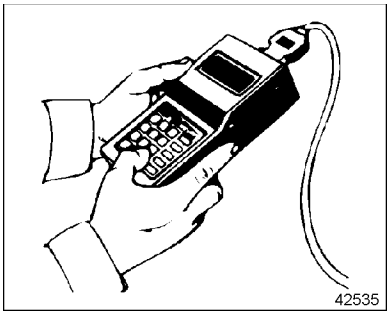

Figure 7 Diagnostic Data Reader J 38500

Once the malfunction has been corrected, the DDEC system will return the engine to normal operation.

The DDR can distinguish between codes now active and those stored in the ECM memory (inactive).

The malfunction code recorded in the computer memory will remain until it is erased by a technician.

The malfunction code can also be obtained by the operator. A "Diagnostic Request" switch is provided which, when pressed, will cause the "Check Engine" light (CEL) to flash a code number. It will, for example, flash twice. . . pause . . . flash once. . . pause. In other words, a code 21. Code 21 indicates the throttle position sensor input voltage is high. See Figure 8.

NOTE:
A code 25 (two flashes followed by 5 flashes) indicates all systems are working satisfactorily.

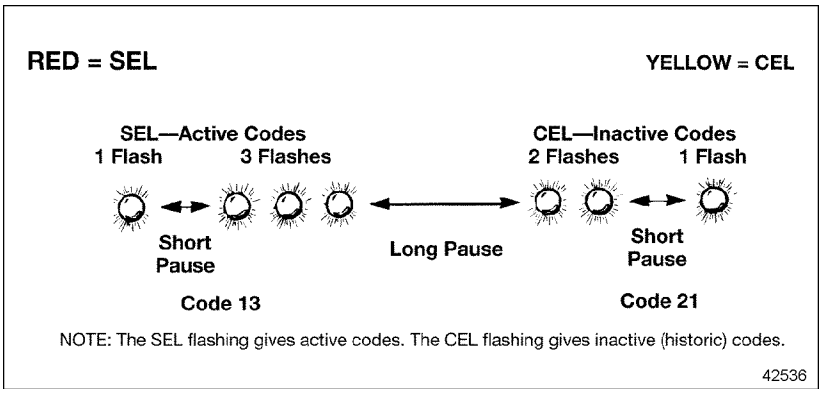

Figure 8 SEL/CEL Flashing Code Examples

 Copyright © 2004 DETROIT DIESEL CORPORATION

www.HEAVY EQUIPMENTS.ORG
https://truckmanualshub.com/

Active Codes – The active codes will be flashed on the SEL in the order of most recent to least recent occurrence based on engine hours. If there are no active codes, a code 25 will be flashed.

Inactive Codes – The inactive codes will be flashed on the CEL in the order of most recent to least recent occurrence based on engine hours. If there are no inactive codes, a code 25 will be flashed.

Only One Light Flashes at a Time – Only one light will be flashing codes at any time. When code flashing is initiated, the active codes (or code 25) will be flashed on the SEL. Then the inactive codes (or code 25) will be flashed on the CEL. When all the inactive codes (or code 25) have been flashed, the process of flashing all the active codes followed by all the inactive codes will repeat until the conditions for code flashing are no longer satisfied.

To Read Codes: Use the diagnostic data reader (DDR) or depress and hold the diagnostic request switch with the ignition ON and the engine AT IDLE or NOT RUNNING. Press and hold the switch. Active codes will be flashed on the SEL first, followed by inactive codes flashed on the CEL.

The codes will continue to flash and repeat as long as the diagnostic request switch is held in the ON position with the ignition on.

Diagnostic Code List

Diagnostic codes are listed in the next several pages.

CAUTION:

To avoid injury from engine shutdown in an unsafe situation, ensure the operator knows how to override the stop engine condition on a DDEC-equipped unit.

CAUTION:

To avoid injury from loss of vehicle/vessel control, the operator of a DDEC equipped engine must not attempt to use or read the Diagnostic Data Reader when the vehicle/vessel is moving.

All information subject to change without notice. (Rev. 01/ 04)
6SE550 0401 Copyright © 2004 DETROIT DIESEL CORPORATION

www.HEAVY EQUIPMENTS.ORG
https://truckmanualshub.com/

Flash Code	Description
11	Variable Speed Governor Sensor Voltage Low
11	Variable Speed Governor Switch System Not Responding
12	Variable Speed Governor Sensor Voltage High
13	Coolant Level Sensor Input Voltage Low
13	Add Coolant Level Sensor Input Voltage Low
14	Intercooler Coolant Temperature Sensor Input Voltage High
14	Coolant Temperature Sensor Input Voltage High
14	Oil Temperature Sensor Input Voltage High
15	Intercooler Coolant Temperature Sensor Input Voltage Low
15	Coolant Temperature Sensor Input Voltage Low
15	Oil Temperature Sensor Input Voltage Low
16	Coolant Level Sensor Input Voltage High
16	Add Coolant Level Sensor Input Voltage High
17	Throttle Plate Position Sensor Input Voltage High
17	Blower Bypass Position Input Voltage High
17	Relative Humidity Sensor Circuit Failed High
18	Throttle Plate Position Sensor Input Voltage Low
18	Blower Bypass Position Input Voltage Low
18	Relative Humidity Sensor Circuit Failed Low
21	Throttle Position Sensor Input Voltage High
22	Throttle Position Sensor Input Voltage Low
23	Fuel Temperature Sensor Input Voltage High
23	Oxygen Content Circuit Input Voltage High
24	Fuel Temperature Sensor Input Voltage Low
24	Oxygen Content Circuit Input Voltage Low
25	Reserved for ‘‘No Codes"
26	Aux. Shutdown #1 Active
26	Aux. Shutdown #2 Active
27	Intake Manifold Temperature Sensor Input Voltage High

 Copyright © 2004 DETROIT DIESEL CORPORATION

www.HEAVY EQUIPMENTS.ORG
https://truckmanualshub.com/

Flash Code	Description
27	Ambient Air Temperature Sensor Input Voltage High
27	Air Temperature Sensor Input Voltage High
28	Intake Manifold Temperature Sensor Input Voltage Low
28	Ambient Air Temperature Sensor Input Voltage Low
28	Air Temperature Sensor Input Voltage Low
29	TCI Temperature Circuit Failed Low
29	Turbo Compressor Temperature Out Sensor Input Voltage Low
31	Aux. Output #3 or #4 Open Circuit (High Side)
31	Aux. Output #3 or #4 Short To Ground (High Side)
31	Aux. Output #3 or #4 Mechanical System Failure
32	SEL or CEL Short to Battery (+)
32	SEL or CEL Open Circuit
33	Turbo Boost Pressure Sensor Input Voltage High
34	Turbo Boost Pressure Sensor Input Voltage Low
35	High Range Oil Pressure Sensor Input Voltage High
35	Oil Pressure Sensor Input Voltage Low
36	High Range Oil Pressure Sensor Input Voltage High
36	Oil Pressure Sensor Input Voltage Low
37	High Range Fuel Pressure Sensor Input Voltage High
37	Fuel Restriction or Fuel Pressure Sensor Input Voltage High
38	High Range Fuel Pressure Sensor Input Voltage Low
38	Fuel Restriction or Fuel Pressure Sensor Input Voltage Low
39	EGR Leak — Boost Power
39	EGR Leak — Boost Jake
39	EGR Valve Not Responding
39	VNT Vanes Not Responding — Boost Power
39	VNT Vanes at Max — Jake
39	VNT Vanes Not Responding — Boost Jake

All information subject to change without notice. (Rev. 01/ 04)
6SE550 0401 Copyright © 2004 DETROIT DIESEL CORPORATION

www.HEAVY EQUIPMENTS.ORG
https://truckmanualshub.com/

Flash Code	Description
39	EGR Flow too Low
39	VNT Vanes Not Responding — EGR
41	Too Many SRS (missing TRS)
42	Too few SRS (missing SRS)
43	Coolant Level Low
44	Intercooler Coolant Temperature High
44	Engine Derate Due to Intake Manifold Temp or Coolant Temp
44	Intake Manifold Temp, Coolant Temp, Air Inlet Temp, or Oil Temp High
45	High Range Oil Pressure Low
45	Oil Pressure Low
46	ECM Battery Voltage Low
46	RTC Backup Battery Voltage Low
46	Sensor Supply Voltage Low
47	High Range Fuel Pressure, Fuel Pressure, Turbo Boost Pressure, Air Inlet Pressure, or Injection Control Pressure High
48	High Range Fuel Pressure, Fuel Pressure, Air Inlet Pressure, or Injection Control Pressure Low
48	TCI Temperature Below Range
48	Turbo Compressor Temperature Out High
48	EGR Differential Pressure or EGR Temperature Low
49	TCI Temperature Above Range
49	Turbo Compressor Out Temperature High
49	Engine Derate Due to TCO Temperature
51	TCI Temperature Circuit Failed High
51	Turbo Compressor Out Temperature Sensor Input Voltage High
52	A/D Conversion Fail
53	Nonvolatile Checksum Incorrect

 Copyright © 2004 DETROIT DIESEL CORPORATION

www.HEAVY EQUIPMENTS.ORG
https://truckmanualshub.com/

Flash Code	Description
53	EEPROM Write Error
53	Out of Calibration
54	Vehicle Speed Sensor Fault
55	Missing information from another ECU
55	J1939 Data Link, Proprietary Data Link (Master), or Proprietary Data Link (Receiver) Fault
56	J1587 Data Link or J1922 Data Link Fault
58	Torque Overload
61	Injector xxx Response Time Long
62	Aux. Output #1, #2, #5, #6, #7, or #8 Short to Battery (+), Open Circuit, or Mechanical System Not Responding Properly
63	PWM #1, #2, #3, or #4 Above Normal Range, Below Normal Range, Short to Battery (+), or Open Circuit
64	Turbo Overspeed
64	Turbo Speed Sensor Input Failure — Abnormal Period
65	Throttle Plate Position Above Normal Range, Below Normal Range, Erratic, or Not Responding
65	Air Filter Restriction Sensor Voltage High or Low
66	Oil Filter Restriction Sensor Voltage High or Low
66	Engine Knock Level Above Normal Range
66	Engine Knock Level Sensor Input Voltage High, Low, or Not Responding
67	High Range Coolant Pressure Sensor Input Voltage High
67	High Range Coolant Pressure Sensor Input Voltage Low
67	Air Inlet Pressure Sensor Input Voltage High or Low
67	Coolant Pressure Sensor Input Voltage High or Low
68	TPS Idle Validation Circuit Fault (open circuit or short to ground)
71	Injector xxx Response Time Short
72	Vehicle Overspeed

All information subject to change without notice. (Rev. 01/ 04)
6SE550 0401 Copyright © 2004 DETROIT DIESEL CORPORATION

www.HEAVY EQUIPMENTS.ORG
https://truckmanualshub.com/

Flash Code	Description
72	Vehicle Overspeed (Absolute)
72	Oxygen Content Too High or Too Low
73	Air Filter Restriction High
73	Gas Valve Position Above or Below Normal Range
73	Gas Valve Position Input Voltage High or Low
73	Gas Metering Valve Not Responding
73	ESS Transmission Stuck in Gear
73	Transmission Neutral Switch Failure (ESS Transmission)
73	Aux Analog Input Data Erratic, Intermittent, or Incorrect (ESS Transmission)
73	Aux Analog Input #1 Voltage High or Low (ESS Transmission)
74	Optimized Idle Safety Loop Short to Ground
74	Oil Filter Restriction High
75	ECM Battery Voltage High
75	RTC Backup Battery Voltage High
75	Sensor Supply Voltage High
76	Engine Overspeed With Engine Brake
77	Miscellaneous Faults – Refer to BASIC TROUBLESHOOT-ING
78	Cruise Control/Adaptive Cruise Control Fault
81	Oil Level Sensor Input or Crankcase Pressure Sensor Input Voltage High
81	Extended Crankcase Pressure Input Voltage High
81	Injection Control Pressure or Exhaust Temperature Sensor Input Voltage High
81	EGR Differential Pressure Sensor Circuit or EGR Temperature Circuit Failed High
81	Timing Actuator Failed High or Low
81	Exhaust Port Temperature #1, #2, #3, #4, #5, #6, #7, #8, #9, #10, #11, #12, #13, #14, #15 or #16 Sensor Voltage High
81	EGR Mass Flow Smart Sensor not Responding or Failed

 Copyright © 2004 DETROIT DIESEL CORPORATION

www.HEAVY EQUIPMENTS.ORG
https://truckmanualshub.com/

Flash Code	Description
82	Oil Level Sensor or Crankcase Pressure Sensor Input Voltage Low
82	Extended Crankcase Pressure Input Voltage Low
82	Injection Control Pressure Sensor or Exhaust Temperature Sensor Input Voltage Low
82	EGR Temperature Circuit or EGR Diffferential Pressure Sensor Circuit Failed Low
82	Exhaust Port Temperature #1, #2, #3, #4, #5, #6, #7, #8, #9, #10, #11, #12, #13, #14, #15 or #16 Sensor Voltage Low
82	EGR Temperature Smart Sensor not Responding or Failed
83	Oil Level, Pump Pressure, or Crankcase Pressure High
83	Extended Crankcase Pressure High
83	Exhaust Temperature High
83	EGR Differential Pressure or EGR Temperature High
83	Exhaust Port Temperature #1 — #16 Sensor Voltage High
84	Oil Level or Crankcase Pressure Low
84	Extended Crankcase Pressure Low
85	Engine Overspeed
85	Engine Overspeed Signal
86	Pump Pressure Sensor or Barometric Pressure Sensor Input Voltage High
87	Pump Pressure Sensorr or Barometric Pressure Sensor Input Voltage Low
88	High Range Coolant Pressure or Coolant Pressure Low
89	Fuel Restriction High
89	Maintenance Alert Coolant Level Fault

All information subject to change without notice. (Rev. 01/ 04)
6SE550 0401 Copyright © 2004 DETROIT DIESEL CORPORATION

www.HEAVY EQUIPMENTS.ORG
https://truckmanualshub.com/

DDEC IV ENGINE DRIVING TIPS

Driving with an electronically controlled engine feels different from driving with a mechancially governed engine.

Accelerating the Vehicle

Engine response versus pedal movement may feel different from the mechanical-governed engine you were driving. The electronic foot pedal assembly (EFPA) was designed to communicate “percentage” foot pedal travel to the engine's electronic control module (ECM). The engine will respond accordingly to the driver's demand.

Another throttle or governor characteristic you may need time to get used to is the DDEC limiting speed governor. This allows the driver to command total engine response between idle and rated speed, such as accelerating at half throttle — an advantage when driving under slippery conditions.

If you require wide-open throttle engine response, either accelerating or just plain pulling hard, the throttle (EFPA) will have to be held to the floor. To obtain 100% fueling at any speed, the foot pedal will have to be maintained at the fully depressed position.

Cruise Control

For added driver convenience and comfort, DDEC IV also features a cruise control option that works just like the system in your car. It can be operated in any gear above 1000 rpm or road speed faster than 20 mph (32 kph), up to the rated engine speed. And it can be programmed to hold your road speed at or below the maximum vehicle speed. The switch to energize cruise control is usually mounted on the instrument panel. See Figure 9.

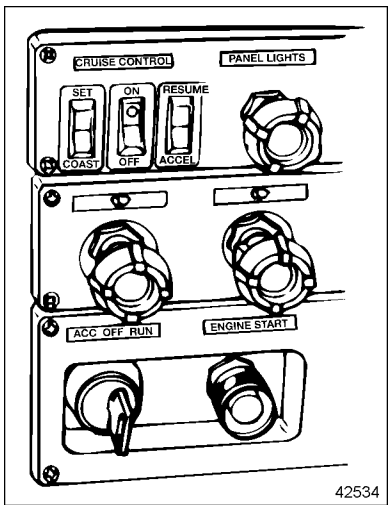

Figure 9 Typical Cruise Control Switches

 Copyright © 2004 DETROIT DIESEL CORPORATION

www.HEAVY EQUIPMENTS.ORG
https://truckmanualshub.com/

Turn the switch ON to energize the system. When you reach your road speed, press the “Set” switch to activate cruise control. The cruise light will come on. To increase road speed in one mile-per-hour (1.6 kilometer-per-hour) increments, press the “Resume/Accel” switch. To reduce road speed, press and hold the “Set/Coast” switch until the lower speed is reached.

Cruise control is deactivated by slightly depressing the service brakes, clutch pedal, or trailer brake. The “On/Off” switch will also deactivate cruise control.

Cruise control will maintain vehicle speed even on up grades, unless power requirements demand a downshift. And, of course, cruise control does not limit your speed on down grades. Most likely, cruise control will feel stronger than driving with the foot pedal because of the instantaneous and wide-open throttle response. That's why cruise control use is not suggested during slippery driving conditions.

Use cruise control after down shifting on a hill to pull the hill. Hitting the “Resume” switch (not the “Set” switch) will keep the truck accelerating in the lower gears up to the rated engine speed.

Cruise control will disengage below 1100 rpm or 20 mph (32 kph) road speed. When using cruise control, if you want to pull the engine below 1100 rpm, remember to hold the throttle pedal to the floor to keep the engine pulling at wide-open throttle. Realistically, the engine will pull to about 1050 rpm.

Remember: The electronic data programmed into the ECM will not allow you to hurt or overfuel the engine at low or “lug” engine speeds. There is enough oil pressure to withstand hard pulls at low engine speeds.

All information subject to change without notice. (Rev. 01/ 04)
6SE550 0401 Copyright © 2004 DETROIT DIESEL CORPORATION

www.HEAVY EQUIPMENTS.ORG
https://truckmanualshub.com/

Engine Brakes and Cruise Control

If your engine is equipped with both cruise control and engine brake retarders, the engine retarders can operate automatically while you are in cruise control. If the cruise control/engine brake function is turned ON in the ECM (electronic control module) programming, the engine retarders will come on “low” when your set road speed increases a few miles-per-hour (kilometers per hour) above your cruise set speed. If your speed continues to increase, the ECM will increase the engine retarders' braking power progressively. When the vehicle returns to the set cruise speed, the engine retarders will “turn off” until you need them.

For safety reasons, don't use cruise control when it is not possible to keep the vehicle at constant speed due to:

- ☐ Winding roads
- ☐ Heavy traffic
- ☐ Slippery pavement
- ☐ Descending grades that call for engine brake assistance.

For an explanation of the engine brake retarder system and recommendations for proper operation, refer to section ENGINE BRAKE SYSTEM.

Shifting

Depending on your transmission model, the gear split may vary from 500 to 300 rpm. The electronic governor provides almost no overrun capability; and, if the transmission is downshifted too early, you will experience a temporary loss of pulling power until the engine speed falls below rated speed.

In general, when using a 7- or 9-speed transmission, you should always downshift between 1250 and 1300 rpm. This is true even on steep grades with heavy loads. When using an 18-, 15- or 13-speed transmission, you will need to downshift at an rpm that allows “less than rated” rpm before throttle application in the next gear down. You may want to limit engine speed to 1900 rpm in all gears. The Series 50 provides constant horsepower from 1800 rpm through 2100 rpm, but fuel economy is not as efficient above 1800 rpm.

 Copyright © 2004 DETROIT DIESEL CORPORATION

www.HEAVY EQUIPMENTS.ORG
https://truckmanualshub.com/

If you decide to drive at lower rpm's for improved fuel economy, don't let different engine noises throw you off guard. The Series 50 sounds quiet at 1400 rpm, almost as if it had quit pulling. Don't believe it! If you had a boost gage to look at while driving, you would notice the turbocharger maintaining steady intake manifold pressure, even as rpm's fall. Depending on the air intake arrangement, you may also experience a “chuffing” sound as the engine starts to pull hard at lower rpm's. This is caused by the velocity changes of the air flow within the air intake plumbing. Electronic engines can actually deliver more fuel at lower engine speeds than at rated speed.

Idling

The common belief that idling a diesel engine causes no engine damage is wrong. Idling produces sulfuric acid, which breaks down the oil and eats into bearings, rings, valve stems and engine surfaces. If you must idle the engine for cab heat or cooling, the *high idle* function of the cruise control switches should be used. An idle speed of 1100 rpm should be enough to provide cab heat in above 32° F (0 °C) ambients.

Winter Fronts

A winter front may be used to improve cab heating while idling, but it should never cover more than 3/4 of the grille while driving. Winter fronts should only be used when the ambient temperature remains below 10° F (-12.2 °C).

All information subject to change without notice. (Rev. 01/ 04)
6SE550 0401 Copyright © 2004 DETROIT DIESEL CORPORATION

www.HEAVY EQUIPMENTS.ORG
https://truckmanualshub.com/

ENGINE BRAKE SYSTEM

Certain Series 50 vehicle engines are equipped with engine brakes, commonly referred to as *retarders*. Before operating the vehicle, you *must* familiarize yourself with the retarder system to obtain optimum benefit from it. Engine brake control systems may vary slightly, depending on the engine brake configuration and cab design. However, basic operator controls are similar for all models.

Driver Control Switches

Vehicles with manual transmissions allow the driver to turn the engine brake on and off and select a low, medium or high level of braking. Two types of switches are available.

Low/High Switch

The “Low” setting on this switch activates three (3) brake cylinders, supplying approximately 50% of normal engine braking horsepower. The “High” setting activates all six (6) cylinders, providing full engine braking horsepower.

Low/Med/High Switch

The “Low” setting on this switch activates two (2) brake cylinders, yielding about one-third engine braking horsepower. The “Medium” activates four (4) cylinders, supplying about two-thirds engine braking horsepower. The “High” setting activates all six (6) cylinders, providing full braking horsepower.

Clutch Pedal and Throttle Position Controls

Engine brakes have two additional controls, one activated by the position of the clutch pedal and the other activated by the position of the throttle. These controls permit fully automatic operation of the engine braking system.

 Copyright © 2004 DETROIT DIESEL CORPORATION

www.HEAVY EQUIPMENTS.ORG
https://truckmanualshub.com/

Engine Brake Operation

NOTICE:

Proper operation of the engine brake retarder system depends on the free flow of engine oil. To ensure positive engine brake engagement when required, allow the engine to warm to normal operating temperature before activating the engine brake system.

The engine brake retarder system depends on a full-pressure flow of warm engine lubricating oil for proper lubrication of moving parts and optimum performance. That's why it's important to allow the engine to reach full operating temperature before switching on the engine brake system.

Under normal driving conditions the engine brake system is left in the ON position. However, this should change if roads become wet or slippery.

After it is switched on, the engine brake system is automatically activated each time you remove your feet completely from the clutch pedal and throttle. The engine brake automatically deactivates itself when you depress the clutch pedal while shifting gears.

CAUTION:

To avoid injury from loss of vehicle control, do not activate the Engine Brake system under the following conditions:

- **On wet or slippery pavement, unless the vehicle is equipped with ABS (anti-lock braking system) and you have had prior experience driving under these conditions.**
- **When driving without a trailer (bobtailing) or pulling and empty trailer.**
- **If the tractor drive wheels begin to lock or there is fishtail motion after the Engine Brake is activated. *Deactivate the brake system immediately, if this occurs.***

Failure to observe these precautions may result in loss of vehicle control and/or personal injury.

NOTE:
Some systems may be programmed to activate themselves only when the brake pedal is depressed, so read your vehicle owner's manual thoroughly to find out if you have this option.

All information subject to change without notice. (Rev. 01/ 04)
6SE550 0401 Copyright © 2004 DETROIT DIESEL CORPORATION

www.HEAVY EQUIPMENTS.ORG
https://truckmanualshub.com/

NOTICE:

Do not attempt to "double clutch" the transmission while the engine brake system is turned on. Shifting gears without depressing the clutch or using the engine brake to reduce engine rpm may result in serious powertrain damage.

Anti-Lock Braking Systems

Vehicles equipped with ABS (anti-lock braking systems) have the ability to turn the engine brake retarder OFF if a wheel-slip condition is detected. The engine brake will automatically turn itself ON once the wheel slip is no longer detected. The DDEC system will deactivate the engine brake system when the engine speed falls below 1000 rpm or when the vehicle slows down to a pre-set speed, depending on DDEC programming. This prevents stalling the engine. Engine brakes can also be used with vehicle cruise control TURNED ON.

Driving on Flat, Dry Pavement

Use the following guidelines when driving on flat, dry pavement:

1. If driving on flat, dry, open stretches with a light load and greater slowing power is not required, place the progressive braking switch in the LOW position.
2. If you find you are still using the service brakes, move the switch to a higher position until you do not need to use the service brakes to slow the vehicle down.
3. If you are carrying a heavier load and road traction is good, move the progressive braking switch to the "High" position.
4. Check your progressive braking switch often for proper position, since road conditions can change quickly. *Never skip a step when operating the progressive braking switch.* Always go from OFF to LOW, and then to a higher position.

Descending a Long, Steep Grade

An explanation of "control speed" may be helpful in understanding how to use the engine brake system while descending a grade. *Control Speed* is the constant speed at which the forces pushing the vehicle forward on a grade are equal to the forces holding it back, without using the vehicle service brakes. In other words, *this is the speed the vehicle will maintain without using the service brakes or fueling.*

 Copyright © 2004 DETROIT DIESEL CORPORATION

www.HEAVY EQUIPMENTS.ORG
https://truckmanualshub.com/

CAUTION:

To avoid personal injury, do not over apply the vehicle service brakes when descending a long, steep grade. Excessive use of the vehicle brakes will cause them to heat up, reducing their stopping ability. This condition, referred to as "brake fade", may result in loss of braking, which could lead to personal injury or vehicle/property damage or both.

You could descend a 6% grade under control only at 10 mph (16 kph) without an engine brake, but at 25 mph (40 kph) with an engine brake. You could not descend that same hill at 50 mph (80 kph) and still expect to remain under control. Know how much slowing power your engine brake can provide. Know your engine brake system *before* climbing hills and do not exceed a safe control speed.

Use the following guidelines when descending a long, steep grade:

1. Before beginning a long, steep descent, first determine if your engine brake system is operating properly by lifting your foot briefly off the throttle. You should feel the system activate.
2. When descending the grade, make sure the progressive braking switch is in the appropriate power position.

CAUTION:

Failure to keep the vehicle within safe control speed limits while descending a grade may result in loss of vehicle control, which could cause personal injury.

NOTICE:

Failure to keep the vehicle within safe control speed limits while descending a grade may result in vehicle or property damage or both.

3. When descending a grade, do not exceed the *safe control speed* of your vehicle.
4. Check your progressive braking switch often for proper position, since road conditions can change quickly. *Never skip a step when operating the progressive braking switch.* Always go from OFF to LOW and then to a higher position when on slippery roads.

All information subject to change without notice. (Rev. 01/ 04)
6SE550 0401 Copyright © 2004 DETROIT DIESEL CORPORATION

www.HEAVY EQUIPMENTS.ORG
https://truckmanualshub.com/

Driving on Wet or Slippery Pavement

Do not attempt to use the engine brake system on wet or slippery roads until you have some experience with it on dry pavement.

CAUTION:

To avoid injury from loss of vehicle control, do not activate the Engine Brake system under the following conditions:

- ❒ **On wet or slippery pavement, unless the vehicle is equipped with ABS (anti-lock braking system) and you have had prior experience driving under these conditions.**
- ❒ **When driving without a trailer (bobtailing) or pulling and empty trailer.**
- ❒ **If the tractor drive wheels begin to lock or there is fishtail motion after the Engine Brake is activated. *Deactivate the brake system immediately, if this occurs.***

Failure to observe these precautions may result in loss of vehicle control and/or personal injury.

NOTE:
On single trailers or combinations, a light air application of the trailer brakes may be desirable to help keep the trailer stretched out. Follow the manufacturer's recommended operating procedure when using your trailer brakes.

On wet or slippery pavement, start with the master switch in the OFF position and use the gear you would normally use under these conditions.

If the vehicle is maintaining traction, place the selective braking switch in the LOW position and turn ON the engine brake system. If the drive wheels are maintaining traction and you desire greater slowing power, move the braking switch to the next highest position.

However, if the tractor drive wheels begin to lock or there is a fishtail motion, turn the engine brake system OFF immediately and do not activate it until road conditions improve.

Check your progressive braking switch often for proper position, since road conditions can change quickly. Never skip a step when operating the progressive braking system. Always go from OFF to LOWand then to a higher position

 Copyright © 2004 DETROIT DIESEL CORPORATION

www.HEAVY EQUIPMENTS.ORG
https://truckmanualshub.com/

ENGINE SYSTEMS

The engine system are the following:

Fuel System

The fuel system consists of the DDEC, fuel injectors, fuel manifolds (integral with the cylinder head), fuel pump, a cooling plate for the ECM on non-automotive engines, primary and secondary fuel filters, and the necessary connecting fuel lines.

Lubrication System

The lubricating oil system consists of an oil pump, oil cooler, two full-flow oil filters, bypass valves at the oil pump and oil filter adaptor, and oil pressure regulator valve in the cylinder block vertical oil gallery.

Air System

The outside air drawn into the engine passes through the air filter and is pulled into the turbocharger and compressed. It then moves to the air-to-air charge cooler (heat exchanger) and is cooled. Next it flows to the intake manifold and into the cylinders, where it mixes with atomized fuel from the injectors.

For optimum protection of the engine from dust and other airborne contaminants, *service the dry type air cleaners when the maximum allowable air restriction has been reached, or annually, whichever occurs first.*

Cooling System

A radiator/thermo-modulated fan cooling system is used on Series 50 engines. This system has a centrifugal type fresh water pump to circulate coolant within the engine. Two full-blocking type thermostats located in a housing attached to the right side of the cylinder head control the flow of coolant.

Electrical System

The electrical system consists of a starting motor, starting switch, battery-charging alternator, storage batteries, and the necessary wiring.

Exhaust System

Hot exhaust gas flowing from the exhaust manifold into the exhaust riser is used to drive the turbocharger.

Exhaust Gas Recirculation System

The purpose of the Exhaust Gas Recirculation System (EGR) is to reduce engine exhaust gas emissions in accordance with EPA regulations.

All information subject to change without notice. (Rev. 01/ 04)
6SE550 0401 Copyright © 2004 DETROIT DIESEL CORPORATION

www.HEAVY EQUIPMENTS.ORG
https://truckmanualshub.com/

MAINTENANCE

The following is intended as a guide for establishing preventive maintenance intervals. The recommendations given should be followed as closely as possible to obtain long life and optimum performance from your engine. Maintenance intervals indicated are time (hours) of actual operation. The intervals shown apply only to the maintenance functions described. These functions should be coordinated with other regularly scheduled maintenance.

A description of the maintenance to be performed for each item in the following tables can be found in the PREVENTIVE MAINTENANCE INTERVALS section

Recommended maintenance intervals for Series 50 on-highway truck and parlor coach engines are listed in Table 1, Table 2 and Table3. Recommended maintenance intervals for Series 50 transit coach engines are listed in Table 4, Table 5, and Table 6. Recommended maintenance intervals for Series 50 construction/industrial and stationary engines are listed in Table 7, Table 8, and Table 9. Recommended maintenance intervals for Series 50 fire fighting, crash/rescue, and emergency vehicle engines are listed in Table 10, Table 11, and Table 12. Recommended maintenance intervals for Series 50 generator drive engines are listed in Table 13, Table 14, and Table 15.

NOTICE:

Failure to check and maintain SCA (supplemental coolant additive) levels at required concentrations will result in severe damage (corrosion) to the engine cooling system and related components. Coolant must be inhibited with the recommended SCAs listed in this guide. Refer to section How to Select Coolant. In addition, the engine can be equipped with a coolant filter/inhibitor system as an installed option or as an after-sale item.

 Copyright © 2004 DETROIT DIESEL CORPORATION

www.HEAVY EQUIPMENTS.ORG
https://truckmanualshub.com/

Item	Daily Checks	7,500 Miles (12,000 Km)	15,000 Miles (24,000 Km)
1. Lubricating Oil	I		R
2. Fuel Tank	I		
3. Fuel Lines & Flex Hoses	I		
4. Cooling System	I		
5. Turbocharger	I		I
6. Battery		I	
8. Drive Belts		I	
9. Air Compressor		I	
10. Air Cleaner			I
11. Lube Oil Filters			R
12. Fuel Filters			R
13. Coolant/Inhibitor Level			I

All items are described in PREVENTIVE MAINTENANCE INTERVALS.
I – Inspect, service, correct or replace as necessary.
R – Replace.

Table 1 On-Highway Truck, Motor Coach, Urban Bus and Motor Home Daily, 7,500 Mile, and 15,000 Mile Checks

All information subject to change without notice. (Rev. 01/ 04)
6SE550 0401 Copyright © 2004 DETROIT DIESEL CORPORATION

www.HEAVY EQUIPMENTS.ORG
https://truckmanualshub.com/

Item	Months	6	12	18	24	30	36	42	48	54	60
	Miles/Km (X 1000)	15/ 24	30/ 48	45/ 72	60/ 96	75/ 120	90/ 144	105/ 168	120/ 192	135/ 216	150/ 240
1. Lubricating Oil		Replace lubricating oil every 15,000 miles (24,000 km).									
2. Fuel Tank			I		I		I		I		I
4. Cooling System					I				I		
5. Turbocharger		I	I	I	I	I	I	I	I	I	I
8. Drive Belts		I	I	I	I	I	I	I	R	I	I
9. Air Compressor		I	I	I	I	I	I	I	I	I	I
11. Lube Oil Filters		Replace when lubricating oil is changed.									
12. Fuel Filters		R	R	R	R	R	R	R	R	R	R
13. Coolant Pump/ Inhibitor Level		I	I	I	I	I	I	I	I	I	I
14. Cranking Motor		Follow manufacturer's recommendations.									
15. Air System		I	I	I	I	I	I	I	I	I	I
16. Exhaust System		I	I	I	I	I	I	I	I	I	I

All items are described in PREVENTIVE MAINTENANCE INTERVALS.
I – Inspect, service, correct or replace as necessary.
R – Replace.

Table 2 On-Highway Truck, Motor Coach, Urban Bus and Motor Home Regular Maintenance Intervals

 Copyright © 2004 DETROIT DIESEL CORPORATION

www.HEAVY EQUIPMENTS.ORG
https://truckmanualshub.com/

Item	Months	6	12	18	24	30	36	42	48	54	60
	Miles/Km (X 1000)	15/ 24	30/ 48	45/ 72	60/ 96	75/ 120	90/ 144	105/ 168	120/ 192	135/ 216	150/ 240
17. Engine (Steam Clean)					I				I		
18. Radiator & A/A Charge Cooler			I		I		I		I		I
19. Oil Pressure					I				I		
20. Battery Charging Alternator		I	I	I	I	I	I	I	I	I	I
21. Engine & Transmission Mounts					I				I		
22. Crankcase Pressure					I				I		
23. Fan Hub									I		
24. Thermostats & Seals									I		
25. Crankcase Breather									I		
26. Engine Tune-Up					I						
27. Vibration Damper		Replace at major engine overhaul or earlier if dented or leaking.									

All items are described in PREVENTIVE MAINTENANCE INTERVALS.
I – Inspect, service, correct or replace as necessary.
R – Replace.

Table 3 On-Highway Truck, Motor Coach, Urban Bus and Motor Home Regular Maintenance Intervals (continued)

All information subject to change without notice. (Rev. 01/ 04)
6SE550 0401 Copyright © 2004 DETROIT DIESEL CORPORATION

www.HEAVY EQUIPMENTS.ORG
https://truckmanualshub.com/

Item	Daily Checks	6,000 Miles (9,600 Km)	7,500 Miles (12,000 Km)	15,000 Miles (24,000 Km)
1. Lubricating Oil	I	R		
2. Fuel Tank	I			
3. Fuel Lines & Flexible Hoses	I			
4. Cooling System	I			
5. Turbocharger	I			I
6. Battery			I	
8. Drive Belts			I	
9. Air Compressor			I	
10. Air Cleaner				I
11. Lube Oil Filters		R		
12. Fuel Filters				R
13. Coolant/ Inhibitor Level				I

All items are described in PREVENTIVE MAINTENANCE INTERVALS.
I – Inspect, service, correct or replace as necessary.
R – Replace.

Table 4 Transit Coach, Pick-Up and Delivery, Stop-and-Go and Short Trip Daily, 6,000 Mile, 7,500 Mile, and 15,000 Mile Checks

 Copyright © 2004 DETROIT DIESEL CORPORATION

www.HEAVY EQUIPMENTS.ORG
https://truckmanualshub.com/

Item	Months	6	12	18	24	30	36	42	48	54	60
	Miles/Km (X 1000)	15/ 24	30/ 48	45/ 72	60/ 96	75/ 120	90/ 144	105/ 168	120/ 192	135/ 216	150/ 240
1. Lubricating Oil		Replace lubricating oil every 6,000 miles (9,600 km) or every three months, whichever comes first. On transit coach model 6047MK1E only, replace oil every 3,000 miles (4,800 km).									
2. Fuel Tank			I		I		I		I		I
4. Cooling System					I				I		
5. Turbocharger		I	I	I	I	I	I	I	I	I	I
7. Tachometer Drive		I	I	I	I	I	I	I	I	I	I
8. Drive Belts		I	I	I	I	I	I	I	R	I	I
9. Air Compressor		I	I	I	I	I	I	I	I	I	I
11. Lube Oil Filters		Replace when lubricating oil is changed.									
12. Fuel Filters		R	R	R	R	R	R	R	R	R	R
13. Coolant Pump/ Inhibitor Level		I	I	I	I	I	I	I	I	I	I
14. Cranking Motor		Follow manufacturer's recommendations.									
15. Air System		I	I	I	I	I	I	I	I	I	I

All items are described in PREVENTIVE MAINTENANCE INTERVALS.
I – Inspect, service, correct or replace as necessary.
R – Replace.

Table 5 Transit Coach, Pick-Up and Delivery, Stop-and-Go and Short Trip Regular Maintenance Intervals

All information subject to change without notice. (Rev. 01/ 04)
6SE550 0401 Copyright © 2004 DETROIT DIESEL CORPORATION

www.HEAVY EQUIPMENTS.ORG
https://truckmanualshub.com/

Item	Months	6	12	18	24	30	36	42	48	54	60
	Miles/Km (X 1000)	15/ 24	30/ 48	45/ 72	60/ 96	75/ 120	90/ 144	105/ 168	120/ 192	135/ 216	150/ 240
16. Exhaust System		I	I	I	I	I	I	I	I	I	I
17. Engine (Steam Clean)					I				I		
18. Radiator & A/A Cooler			I		I		I		I		I
19. Oil Pressure					I				I		
20. Battery Charging Alternator		I	I	I	I	I	I	I	I	I	I
21. Engine & Transmission Mounts					I				I		
22. Crankcase Pressure					I				I		
23. Fan Hub									I		
24. Thermostats & Seals									I		
25. Crankcase Breather									I		
26. Engine Tune-Up					I						
27. Vibration Damper		Replace at major engine overhaul or earlier if dented or leaking.									

All items are described in PREVENTIVE MAINTENANCE INTERVALS.
I – Inspect, service, correct or replace as necessary.
R – Replace.

Table 6 Transit Coach, Pick-Up and Delivery, Stop-and-Go and Short Trip Maintenance Intervals (continued)

 Copyright © 2004 DETROIT DIESEL CORPORATION

www.HEAVY EQUIPMENTS.ORG
https://truckmanualshub.com/

Item	Daily Checks	100 Hr or 3,000 Mi	150 Hr or 4,500 Mi	200 Hr or 6,000 Mi	300 Hr or 9,000 Mi
1. Lubricating Oil	I		R		
2. Fuel Tank	I				I
3. Fuel Lines & Flexible Hoses	I				
4. Cooling System	I				
5. Turbocharger	I				
6. Battery*		I			
7. Tachometer Drive			I		
8. Drive Belts		I			
9. Air Compressor			I		
10. Air Cleaner			I		
11. Lube Oil Filters			R		
12. Fuel Filters			R		
13. Coolant/ Inhibitor Level				I	
18. Radiator					I
20. Battery Charging Alternator					I

All items are described in PREVENTIVE MAINTENANCE INTERVALS.
I – Inspect, service, correct or replace as necessary.
R – Replace.

Table 7 Stationary or Construction/Industrial Engine Daily, 100 Hour, 150 Hour, 200 Hour, and 300 Hour Checks

All information subject to change without notice. (Rev. 01/ 04)
6SE550 0401 Copyright © 2004 DETROIT DIESEL CORPORATION

www.HEAVY EQUIPMENTS.ORG
https://truckmanualshub.com/

Item	Hours	150	300	450	600	750	900	1050	1200	1350	1500
	Miles/Km (X 1000)	4.5/ 7.2	9.0/ 14.4	13.5/ 21.6	18/ 28.8	22.5/ 36	27/ 43.2	31.5/ 50.4	36/ 57.6	40.5/ 64.6	45/ 72
1. Lubricating Oil		Replace lubricating oil every 150 hours or 4,500 miles (7,200 km), whichever comes first.									
2. Fuel Tank			I		I		I		I		I
4. Cooling System					I				I		
5. Turbocharger		I	I	I	I	I	I	I	I	I	I
7. Tachometer Drive		I	I	I	I	I	I	I	I	I	I
8. Drive Belts		I	I	I	I	I	I	I	R	I	I
9. Air Compressor		I	I	I	I	I	I	I	I	I	I
11. Lube Oil Filters		Replace when lubricating oil is changed.									
12. Fuel Filters		R	R	R	R	R	R	R	R	R	R
13. Coolant Pump/ Inhibitor Level		I	I	I	I	I	I	I	I	I	I
14. Cranking Motor		Follow manufacturer's recommendations.									
15. Air System		I	I	I	I	I	I	I	I	I	I

All items are described in PREVENTIVE MAINTENANCE INTERVALS.
I – Inspect, service, correct or replace as necessary.
R – Replace.

Table 8 Stationary or Construction/Industrial Regular Maintenance Intervals

 Copyright © 2004 DETROIT DIESEL CORPORATION

www.HEAVY EQUIPMENTS.ORG
https://truckmanualshub.com/

Item	Hours	150	300	450	600	750	900	1050	1200	1350	1500
	Miles/Km (X 1000)	4.5/ 7.2	9.0/ 14.4	13.5/ 21.6	18/ 28.8	22.5/ 36	27/ 43.2	31.5/ 50.4	36/ 57.6	40.5/ 64.6	45/ 72
16. Exhaust System		I	I	I	I	I	I	I	I	I	I
17. Engine (Steam Clean)											
18. Radiator & A/A Charge Cooler			I		I		I		I		I
19. Oil Pressure					I				I		
20. Battery Charging Alternator			I		I		I		I		I
21. Engine & Transmission Mounts					I				I		
22. Crankcase Pressure					I				I		
23. Fan Hub								I			
24. Thermostats & Seals											
25. Crankcase Breather								I			
26. Engine Tune-Up											I
27. Vibration Damper		Replace at major engine overhaul or earlier if dented or leaking.									

All items are described in PREVENTIVE MAINTENANCE INTERVALS.
I – Inspect, service, correct or replace as necessary.
R – Replace.

Table 9 Stationary or Construction/Industrial Regular Maintenance Intervals (continued)

All information subject to change without notice. (Rev. 01/ 04)
6SE550 0401 Copyright © 2004 DETROIT DIESEL CORPORATION

www.HEAVY EQUIPMENTS.ORG
https://truckmanualshub.com/

Item	Daily Checks	100 Hours or 3,000 Miles (4,800 Km)	300 Hours or 6,000 Miles (9,600 Km)
1. Lubricating Oil	I		R
2. Fuel Tank	I		
3. Fuel Lines & Flexible Hoses	I		
4. Cooling System	I		
5. Turbocharger	I		
6. Battery		I	
7. Tachometer Drive			I
8. Drive Belts		I	
9. Air Compressor			I
10. Air Cleaner			I
11. Lube Oil Filter			R
12. Fuel Filters			R
13. Coolant/ Inhibitor Level			I
18. Radiator			I
20. Battery Charging Alternator			I

All items are described in PREVENTIVE MAINTENANCE INTERVALS.
I – Inspect, service, correct or replace as necessary.
R – Replace.

Table 10 Fire Fighting, Crash/Rescue and Emergency Vehicle Engine Daily, 100 Hour and 300 Hour Checks

 Copyright © 2004 DETROIT DIESEL CORPORATION

www.HEAVY EQUIPMENTS.ORG
https://truckmanualshub.com/

Item	Hours	300	600	900	1,200	1,500
	Miles/Km (X 1000)	6/1.6	12/9.6	18/28.8	24/38.4	30/48
1. Lubricating Oil		Replace lubricating oil every 300 hours or 6,000 miles (1,600 km), whichever comes first.				
2. Fuel Tank		I	I	I	I	I
4. Cooling System			I		I	
5. Turbocharger		I	I	I	I	I
7. Tachometer Drive		I	I	I	I	I
9. Air Compressor		I	I	I	I	I
11. Lube Oil Filters		Replace when lubricating oil is changed.				
12. Fuel Filters		R	R	R	R	R
13. Coolant Pump/ Inhibitor Level		I	I	I	I	I
14. Cranking Motor*		Follow manufacturer's recommendations.				
15. Air System		I	I	I	I	I
16. Exhaust System		I	I	I	I	I

All items are described in PREVENTIVE MAINTENANCE INTERVALS.
I – Inspect, service, correct or replace as necessary.
R – Replace.

Table 11 Fire Fighting, Crash/Rescue and Emergency Vehicle Engine Regular Maintenance Intervals

All information subject to change without notice. (Rev. 01/ 04)
6SE550 0401 Copyright © 2004 DETROIT DIESEL CORPORATION

www.HEAVY EQUIPMENTS.ORG
https://truckmanualshub.com/

Item	Hours	300	600	900	1,200	1,500
	Miles/Km (X 1000)	6/1.6	12/9.6	18/28.8	24/38.4	30/48
17. Engine (Steam Clean)						
18. Radiator & A/A Charge Cooler		I	I	I	I	I
19. Oil Pressure			I		I	
20. Battery Charging Alternator*		I	I	I	I	I
21. Engine & Transmission Mounts			I		I	
22. Crankcase Pressure			I		I	
23. Fan Hub					I	
24. Thermostats & Seals						
25. Crankcase Breather					I	
26. Engine Tune-Up						I
27. Vibration Damper		Replace at major engine overhaul or earlier if dented or leaking.				

All items are described in PREVENTIVE MAINTENANCE INTERVALS.
I – Inspect, service, correct or replace as necessary.
R – Replace.

Table 12 Fire Fighting, Crash/Rescue and Emergency Vehicle Engine Regular Maintenance Intervals (continued)

 Copyright © 2004 DETROIT DIESEL CORPORATION

www.HEAVY EQUIPMENTS.ORG
https://truckmanualshub.com/

Item	Prime Daily	Standby Monthly
1. Lubricating Oil	I	I*
2.]Fuel Tank	I	I
3. Fuel Lines & Flexible Hoses	I	
4. Cooling System	I	I*
5. Turbocharger	I	
6. Battery		I
8. Drive Belts	I	I
10. Air System, Cleaner	I	I
12. Fuel Filters, Water Separator	I	I*
16. Exhaust System	I	
19. Oil Pressure	I	I*
Load Test		P

All items are described in PREVENTIVE MAINTENANCE INTERVALS.
I – Inspect, service, correct or replace as necessary.
P – Perform
***** Perform these items at time of load test. Load test should be at least 35% of the unit's full rated output. Refer to generator set manufacturer's instructions.

Table 13 Generator Set Engine Prime Daily and Standby Monthly Maintenance Intervals

All information subject to change without notice. (Rev. 01/ 04)
6SE550 0401 Copyright © 2004 DETROIT DIESEL CORPORATION

www.HEAVY EQUIPMENTS.ORG
https://truckmanualshub.com/

Item	Hours							
	150	300	600	1,000	1,500	2,000	3,000	4,000
1. Lubricating Oil	Standby: Replace every 150 hours or 1 year, whichever comes first. Prime: Replace every 250 hours or 3 months, whichever comes first.							
2. Fuel Tank			I					
3. Fuel Lines & Flexible Hoses			I			R		
4. Cooling System								R
6. Battery	I							
7. Tachometer Drive	I							
8. Drive Belts	I							
10. Air Cleaner	I							
11. Lube Oil Filters	Replace when lubricating oil is changed.							
12. Fuel Filters	Standby: Replace every 150 hours or 1 year, whichever comes first. Prime: Replace every 150 hours or 3 months, whichever comes first.							
13. Coolant Pump/ Inhibitor Level							I	
14. Cranking Motor	Follow manufacturer's recommendations.							

All items are described in PREVENTIVE MAINTENANCE INTERVALS.
I – Inspect, service, correct or replace as necessary.
R – Replace

Table 14 Generator Set Engine Regular Maintenance Intervals

 Copyright © 2004 DETROIT DIESEL CORPORATION

www.HEAVY EQUIPMENTS.ORG
https://truckmanualshub.com/

Item	Hours							
	150	300	600	1,000	1,500	2,000	3,000	4,000
16. Exhaust System			I					
17. Engine (Steam Clean)						I		I
18. Radiator	I							
19. Oil Pressure			I					
20. Battery Charging Alternator		I						
21. Engine & Generator Mounts			I					
22. Crankcase Pressure			I					
23. Fan Hub				I				
24. Thermostats & Seals								R
25. Crankcase Breather				I				R
26. Engine Tune-Up					I			
27. Vibration Damper	Replace at major engine overhaul or earlier if dented or leaking.							

All items are described in PREVENTIVE MAINTENANCE INTERVALS.
I – Inspect, service, correct or replace as necessary.
R – Replace

Table 15 Generator Set Engine Regular Maintenance Intervals (continued)

All information subject to change without notice. (Rev. 01/ 04)
6SE550 0401 Copyright © 2004 DETROIT DIESEL CORPORATION

www.HEAVY EQUIPMENTS.ORG
https://truckmanualshub.com/

PREVENTIVE MAINTENANCE INTERVALS

The following is intended as a guide for establishing preventive maintenance intervals. The recommendations given should be followed as closely as possible to obtain long life and optimum performance from your engine. Maintenance intervals indicated are time (hours) of actual operation.

The intervals shown apply only to the maintenance functions described and should be coordinated with other regularly scheduled maintenance.

The "Daily" instructions apply to routine or daily starting of the engine. They do not apply to a new engine or one that has been operated for a considerable period of time.

For new or stored engines, refer to Section 13.1, "Preparations for Starting the Engine the First Time," in the *Series 50 Service Manual* (6SE50).

Preventive maintenance other than the "Daily" checks should be performed by authorized Detroit Diesel service outlets. These outlets have the trained personnel and special tools to properly perform all services.

Item 1 – Lubricating Oil

Check the oil level daily with the engine stopped. If the engine has just been stopped and is warm, wait approximately 20 minutes to allow the oil to drain back into the oil pan before checking. Add the proper grade of oil to maintain the correct level on the dipstick. See Figure 10.

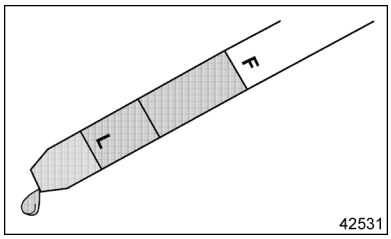

Figure 10 Check Oil Level Daily

NOTICE:

When adding lubricating oil, do not overfill. Oil may be blown out through the crankcase breather if the crankcase is overfilled.

 Copyright © 2004 DETROIT DIESEL CORPORATION

www.HEAVY EQUIPMENTS.ORG
https://truckmanualshub.com/

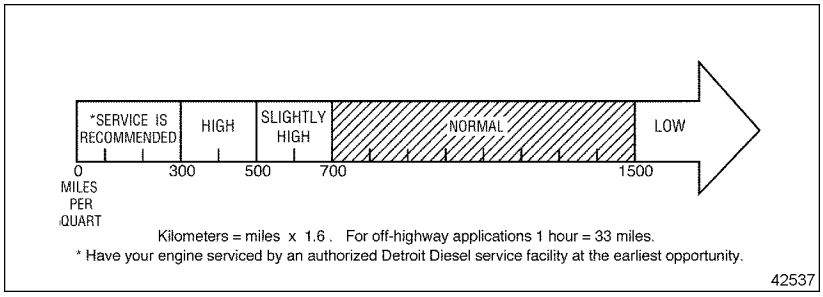

Figure 11 Engine Oil Consumption Guidelines

All diesel engines are designed to use some oil, so the periodic addition of oil is normal. See Figure 11 to determine the degree of oil usage.

NOTICE:

If the oil level is constantly above normal and excess oil has not been added to the crankcase, consult with an authorized Detroit Diesel service outlet. Fuel or coolant dilution of lubricating oil can result in serious engine damage.

Before adding lubricating oil, refer to How to Select Lubricating Oil in this guide. Change lubricating oil and filters at the intervals listed in Table 16 when using fuel with a sulfur content of less than 0.05 mass percent. When using fuel with a higher sulfur content, refer to When to Change Oil in this guide.

All information subject to change without notice. (Rev. 01/ 04)
6SE550 0401 Copyright © 2004 DETROIT DIESEL CORPORATION

www.HEAVY EQUIPMENTS.ORG
https://truckmanualshub.com/

Service Application	Lube Oil and Filter Change Interval*
Highway Truck & Motor Coach	15,000 Miles (24,000 Kilometers)
City Transit Coach except model 6047MK1E	6,000 Miles (9,600 Kilometers), 300 Hours or 3 Months, whichever comes first
City Transit Coach Model 6047MK1E	3,000 Miles (4,800 Kilometers)
Fire Fighting, Crash/Rescue, & Emergency Vehicles	6,000 Miles (9,600 Kilometers), 300 Hours or 1 Year, whichever comes first
Construction, Industrial & Agricultural	250 Hours or 1 Year, whichever comes first
Stationary Generator – Prime Power or Continuous	300 Hours or 3 Months, whichever comes first
Stationary Generator – Standby	150 Hours or 1 Year, whichever comes first

* Change both full-flow filters when lube oil is changed.

Table 16 Recommended Engine Oil Drain and Filter Change Intervals (Diesel Fuel Sulfur Content Less Than 0.05 Mass %)

Item 2 – Fuel and Fuel Tank

Keep the fuel tank filled to reduce condensation. See Figure 12.

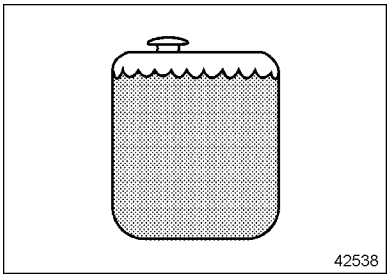

Figure 12 Filled Fuel Tank

Before adding fuel, refer to section How to Select Fuel Oil in the **How To** section of this guide.

Refill the tank at the end of each day's operation to prevent condensation from contaminating the fuel. Condensation formed in a partially filled tank promotes the growth of microorganisms that can clog fuel filters and restrict fuel flow.

To prevent microbe growth, add a biocide to the fuel tank or primary fuel supply.

 Copyright © 2004 DETROIT DIESEL CORPORATION

www.HEAVY EQUIPMENTS.ORG
https://truckmanualshub.com/

Water accumulation can be controlled by using additives containing methyl carbitol or butyl cellusolve. Follow manufacturer's usage, handling and safety precautions.

Open the drain at the bottom of the fuel tank every 30,000 miles (48,000 kilometers) or 300 hours for construction/industrial applications to drain off any water and/or sediment.

CAUTION:

To avoid injury from improper use of chemicals, follow the chemical manufacturer's usage, handling, and disposal instructions. Observe all manufacturer's cautions.

Every 120,000 miles (192,000 kilometers), 12 months, or 600 hours for construction/industrial applications tighten all fuel tank mountings and brackets. At the same time, check the seal in the fuel tank cap, the breather hole in the cap and the condition of the flexible fuel lines. Repair or replace the parts, as necessary.

NOTICE:

Galvanized steel fuel tanks, fittings, pipes or supply lines should never be used, because the fuel reacts chemically with the zinc coating to form powdery flakes that can quickly clog the fuel filters and damage the fuel pump and injectors.

Item 3 – Fuel Lines, Flexible Hoses

A pre-start inspection for leaks and of hosese and fittings must be made.

Leaks — Make a visual check for fuel leaks at all engine-mounted fuel lines and connections, and at the fuel tank suction and return lines. Since fuel tanks are susceptible to road hazards, leaks in this area may best be detected by checking for an accumulation of fuel under the tank.

CAUTION:

To avoid injury from fire, contain and eliminate leaks of flammable fluids as they occur. Failure to eliminate leaks could result in fire.

All information subject to change without notice. (Rev. 01/ 04)
6SE550 0401 Copyright © 2004 DETROIT DIESEL CORPORATION

www.HEAVY EQUIPMENTS.ORG
https://truckmanualshub.com/

Leaks are not only detrimental to machine operation, but they can also result in added expense caused by the need to replace lost fluids.

Hoses and Fittings — Check hoses daily as part of the pre-start inspection. Examine hoses for leaks, and check all fittings, clamps and ties carefully. Make sure hoses are not resting on or touching shafts, couplings, heated surfaces including exhaust manifolds, any sharp edges, or other obviously hazardous areas. Since all machinery vibrates and moves to a certain extent, clamps and ties can fatigue with age. To ensure continued proper support, inspect fasteners frequently and tighten or replace them as necessary. If fittings have loosened or cracked or if hoses have ruptured or worn through, take corrective action immediately.

Hose Service Life — A hose has a finite service life. With this in mind, all hoses should be thoroughly inspected at least every 500 operating hours (1,000 hours for fire-resistant fuel and lubricating oil hoses) and/or annually. Look for cover damage and/or indications of twisted, worn, crimped, brittle, cracked or leaking lines. Hoses with their outer cover worn through or with damaged metal reinforcements should be considered unfit for further service.

All hoses in and out of machinery should be replaced during major overhaul and/or after a maximum of five (5) years of service.

NOTE:
Fire-resistant fuel and lube oil hose assemblies do not require automatic replacement after five years of service or at major overhaul, but should be inspected carefully before being put back into service.

Item 4 – Cooling System

The cooling system must be *full* for proper operation of the engine.

CAUTION:

To avoid injury from the expulsion of hot coolant, never remove the cooling system pressure cap while the engine is at operating temperature. Remove the cap slowly to relieve pressure. Wear adequate protective clothing (face shield or safety goggles, rubber gloves, apron, and boots).

Coolant Level — Check the coolant level daily and maintain it near the bottom of the filler neck on the radiator. On some installations this is done by checking an overflow bottle or sight glass. Add coolant as

 Copyright © 2004 DETROIT DIESEL CORPORATION

www.HEAVY EQUIPMENTS.ORG
https://truckmanualshub.com/

required, but do not overfill. Before adding coolant, refer to section How to Select Coolant in this guide.

Make a daily visual check for cooling system leaks. Look for an accumulation of coolant when the engine is running and when it is stopped. Coolant leaks may be more apparent on a engine when it is cold.

Coolant Inhibitors — The inhibitors in antifreeze solutions *must* be replenished with a non-chromate corrosion inhibitor supplement when indicated by testing the coolant. Refer to section How to Select Coolant for required test intervals and inhibitor levels.

NOTICE:

Failure to check and maintain SCA (supplemental coolant additive) levels at required concentrations will result in severe damage (corrosion) to the engine cooling system and related components. Coolant *must* be inhibited with the recommended SCA's listed in this guide. In addition, the engine can be equipped with a coolant filter/inhibitor system as an installed option or as an after-sale item.

Coolant Drain Interval — Detroit Diesel recommends replacing coolant at the intervals listed in Table 17.

A coolant system properly maintained and protected with supplemental coolant inhibitors can be operated up to the intervals listed. At these intervals the coolant *must* be drained and disposed of in an environmentally responsible manner according to state and/or federal (EPA) recommendations.

All information subject to change without notice. (Rev. 01/ 04)
6SE550 0401 Copyright © 2004 DETROIT DIESEL CORPORATION

www.HEAVY EQUIPMENTS.ORG
https://truckmanualshub.com/

Coolant Type	Coolant Replacement Interval
A 50/50 mix of *PowerCool*® fully formulated, inhibited ethylene glycol antifreeze and water or a 50/50 mix of fully formulated, inhibited propylene glycol antifreeze and water	With proper maintenance[1] coolant can be operated 2 years, 300,000 miles (480,000 km), or 4,000 hours, whichever comes first. At this time the cooling system must be completely drained and cleaned before refill.
A 50/50 mix of phosphate-free TMC RP-329 “Type A“ (propylene glycol) antifreeze and water.	With proper maintenance[1] coolant can be operated for the life of the engine until overhaul.[2] For life to overhaul, pre-charged coolant in combination with a need-release filter *must* be used. At this time the cooling system must be completely drained and cleaned before refill.
A 50/50 mix of OAT (organic acid technology) coolant and water.	With proper maintenance coolant can be operated 4 years, 600,000 miles (960,000 km), or 10,000 operating hours, whichever comes first. [3] At this time the cooling system must be completely drained and cleaned before refill.

[1] Proper maintenance involves periodic evaluation using PowerTrac® 3-Way Coolant Test Strips and the addition of required SCA, as indicated by the test strip.

[2] To verify coolant acceptability, submit a sample to DDC for coolant analysis every 3 years, 300,000 miles (480,000 km) or 6,000 operating hours, whichever comes first. Submit sample using PowerTrac coolant analysis kit, part number 23516921 (IEG/IPG coolant) or 23523398 (organic coolant).

[3] OAT coolants require the addition of an extender every 2 years, 300,000 miles (480,000 km), or 5,000 hours, whichever comes first. Use 1 pint to 20 gallons of OAT coolant.

Table 17 Coolant Drain Intervals

 Copyright © 2004 DETROIT DIESEL CORPORATION

www.HEAVY EQUIPMENTS.ORG
https://truckmanualshub.com/

Item 5 – Turbocharger, Air-to-Air Charge Cooler

Visually inspect the turbocharger mountings, intake and exhaust ducting and connections for leaks daily. Check the lube oil inlet and outlet lines for leaks or restrictions to oil flow. Check for unusual noise or vibration and, if excessive, stop the engine and do not operate until the cause is determined.

CAUTION:

To avoid injury from hot surfaces, allow engine to cool before removing any component. Wear protective gloves.

Periodically inspect the air-to-air charge cooler (if used) for buildup of dirt, mud, etc. and wash off. Check the charge cooler, ductwork, and flexible connections for leaks and have repaired or replaced, as required.

Check turbocharger heat-insulating exhaust system blankets (if used) for damage on a daily basis. Torn, matted, crushed, oil-soaked or otherwise damaged insulation blankets *must* be replaced immediately.

Wastegated Turbochargers — The turbocharger wastegate actuator is factory-calibrated and is not adjustable. Check actuator operation at the intervals shown in the maintenance schedule.

CAUTION:

To avoid injury from flying debris when using compressed air, wear adequate eye protection (face shield or safety goggles) and do not exceed 40 psi (276 kPa) air pressure.

NOTICE:

Do not exceed 30 psi (207 kPa) air pressure when checking wastegate actuator operation. Excessive air pressure can damage the actuator.

To verify correct wastegate actuator operation, apply 30 psi (207 kPa) of *regulated* shop air and watch for actuator rod movement.

All information subject to change without notice. (Rev. 01/ 04)
6SE550 0401 Copyright © 2004 DETROIT DIESEL CORPORATION

www.HEAVY EQUIPMENTS.ORG
https://truckmanualshub.com/

Item 6 – Battery

Check the hydrometer “eye” of maintenance-free batteries for charge. See Figure 13.

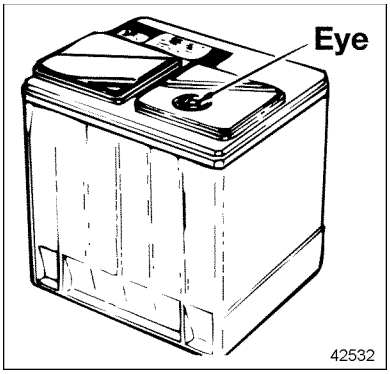

Figure 13 Check “Eye” of Maintenance-Free Batteries

CAUTION:

To avoid injury from accidental engine startup while servicing the engine, disconnect/disable the starting system.

If lead-acid or low-maintenance batteries are used, check the specific gravity of each cell every 150 operating hours. Check more frequently in warm weather due to the more rapid loss of water through evaporation.

Maintain the electrolyte level according to the battery manufacturer's recommendations, but *do not overfill.* Overfilling can cause poor battery performance or early failure.

Keep the terminal side of the battery clean. When necessary, wash with a solution of baking soda and water. Rinse with fresh water. Do not allow the soda solution to enter the cells.

Inspect the cables, clamps and hold-down brackets regularly. Clean and reapply a light coating of petroleum jelly when needed. Have corroded or damaged parts replaced.

If the engine is to be out of service for more than 30 days, remove the batteries and store in a cool, dry place. Keep batteries fully charged, if possible. Replace any battery that fails to hold a charge.

Periodically check battery connections for corrosion and tightness. If necessary, remove connections and wire brush any corrosion from terminals and cable ends. Replace damaged wiring.

 Copyright © 2004 DETROIT DIESEL CORPORATION

www.HEAVY EQUIPMENTS.ORG
https://truckmanualshub.com/

Item 7 – Tachometer Drive

A typical tachometer drive take-off location is the camshaft drive gear access cover on the front of the gear case cover. Lubricate the tachometer drive (if so equipped) every 150 hours or 15,000 miles (24,000 km) with an all-purpose grease. At temperatures above –1° C (+30° F) use a No. 2 grade grease. Use a No. 1 grade grease below this temperature.

Item 8 – Drive Belts

Belts should be neither too tight nor too loose. Belts that are too tight impose extra loads on the crankshaft, fan and/or alternator bearings, shortening both belt and bearing life. Excessively overtightened belts can result in crankshaft breakage. A loose belt will slip and may cause damage to accessory components.

CAUTION:

To avoid injury from rotating belts and fans, do not remove and discard safety guards.

Use a belt tension gage, such as Kent-Moore® tool J 23586–B (V-belt), J 23600–B (poly-V belt), J 41251 (PowerBand® and 12–rib poly-V belt), or equivalent, when tensioning drive belts. Tension belts to the values listed in Table 18.

Fan Drive		
Single Belt	**2 or 3 Belts**	
80 – 100 lbs (356 – 445 N)	60 – 80 lbs (267 – 356 N)	
Alternator Drive		
Belt	**New**	**Used**
Two 1/2–in. V-Groove	125 lbs (556 N)	100 lbs (445 N)
2–Groove PowerBand®	200 lbs (890 N)	150 lbs (667 N)
12–Rib Poly-V (50 DN Alternator)	350 lbs (1,557 N)	250 lbs (1,112 N)

Table 18 Drive Belt Tensioning

All information subject to change without notice. (Rev. 01/ 04)
6SE550 0401 Copyright © 2004 DETROIT DIESEL CORPORATION

www.HEAVY EQUIPMENTS.ORG
https://truckmanualshub.com/

V-Belts — New standard V-belts will stretch after the first few hours of operation. Tighten V-belts as listed in Table 18. Run the engine for 10 to 15 minutes to seat the belts, then readjust tension. Check and retension belts after 1/2 hour and again after 8 hours or 250 miles (400 km) of operation. Thereafter, check the tension of the drive belts every 100 hours or 6,000 miles (10,000 km) and adjust, if necessary.

If a belt tension gage is not available, adjust the belt tension so that a firm push with the thumb, at a point midway between the two pulleys, will depress the belt .50 in. – .75 in. (13 – 19 mm).

2-Groove PowerBand — The 2-groove PowerBand® is used with the 50 DN alternator. To provide proper running tension for the belt, current Series 50 engines use an auto belt tensioner, which requires no adjustment. See Figure 14.

Earlier-built Series 50 engines have a manual belt tensioner assembly. See Figure 15.

Tighten a new PowerBand® drive belt to 200 lbs (890 N), then run the engine for 10 minutes at 1200 rpm. Stop the engine and allow a 10 – 15 minute cool down period. Check tension. If less than 150 lbs (667 N), retension to 150 lbs (667 N). Following initial tensioning, measure belt tension every month or every 7,500 miles (12,000 km), whichever comes first. Retension belt to 150 lbs (667 N) at these intervals.

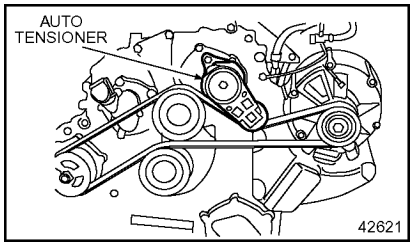

Figure 14 Auto Belt Tensioner Assembly with 50 DN Alternator

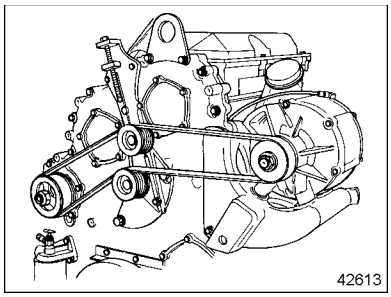

Figure 15 Manual Tensioner Assembly with 50 DN Alternator

 Copyright © 2004 DETROIT DIESEL CORPORATION

www.HEAVY EQUIPMENTS.ORG
https://truckmanualshub.com/

12–Rib Poly-V Belt — Tighten a 12–rib poly-V belt to 350 lbs (1,557 N), then run the engine at high idle for 30 minutes. Stop the engine and allow a 10 – 15 minute cool down period. Check tension with tool J 41251–B or equivalent. If tension is 250 lbs (1,112 N) or more, no retensioning is required. If tension is less than 250 lbs (1,112 N), retension to 250 lbs (1,112 N). Measure belt tension every month or every 7,500 miles (12,000 km), whichever comes first. Retension to 250 lbs (1,112 N) as required.

Belt Replacement — Drive belts (V and poly-V) should be replaced every 2,000 hours or 100,000 miles (160,000 km).

Replace all belts in a set when one is worn. Single belts of similar size should not be used as a substitute for a matched belt set. Premature belt wear can result because of belt length variation. All belts within a matched set are within .032 in. (0.8 mm) of their specified center distances.

When installing or adjusting an accessory drive belt, be sure the bolt at the accessory adjusting pivot point is properly tightened, as well as the bolt in the adjusting slot. In addition, check the torque on the alternator and bracket mounting bolts. Retighten as required.

Item 9 – Air Compressor

All air compressor intake parts should be removed and cleaned at the following intervals:

- ☐ On Highway Vehicle Engines – 7,500 miles (12,000 km)
- ☐ Industrial Engines – 150 Hours or 4,500 miles (7,200 km)

To clean either the hair type or the polyurethane type compressor air strainer element, saturate it and squeeze it in fuel oil or any other cleaning agent that is not detrimental to the element until it is dirt-free. Then saturate the element in lubricating oil and squeeze it dry before placing it back into the air strainer.

For air strainer replacement, contact the nearest servicing dealer. Replace hair type elements with the polyurethane type, if available.

The air compressor mounting bolts should be tightened every 12 months or 30,000 miles (48,000 km) for on-highway engines or every 300 hours for industrial applications.

All information subject to change without notice. (Rev. 01/ 04)
6SE550 0401 Copyright © 2004 DETROIT DIESEL CORPORATION

www.HEAVY EQUIPMENTS.ORG
https://truckmanualshub.com/

Item 10 – Air Cleaner

The air cleaner element should be inspected every 15,000 miles (24,000 km) for vehicle engines, 150 hours for non-vehicle engines, or more often if the engine is operated under severe dust conditions. Replace the element, if necessary. Check the gaskets for deterioration and replace, if necessary. If the dry type air cleaner is equipped with an aspirator, check for aspirator damage or clogging. Clean, repair or replace, as necessary.

Dry type air cleaner elements should be replaced after one year of service or when the maximum allowable air intake restriction has been reached, whichever comes first. Refer to section When to Service the Dry Type Air Cleaner in this guide for additional information.

NOTICE:

Do not allow the air inlet restriction to exceed 20 inches of water (5.0 kPa) under any engine operating conditions. A clogged air cleaner element will cause excessive intake restriction and a reduced air supply to the engine. This, in turn, can result in increased fuel consumption, inefficient engine operation and reduced engine life.

Inspect the entire air system for leaks daily. Look especially for torn air inlet piping or boots and loose or damaged clamps. Have worn or damaged parts repaired or replaced, as required. Retighten loose connections.

Item 11 – Lubricating Oil Filters

For on-highway vehicle engines, install new spin-on oil filters at a **maximum** of 15,000 miles (24,000 km). For city transit coach engines, install filters at a **maximum** of 6,000 miles (9,600 km). For industrial engines, install filters every 150 hours of operation or each time the engine oil is changed, whichever comes first.

CAUTION:

To avoid injury from slipping and falling, immediately clean up any spilled liquids.

Install the new filters, turning them until they contact the gasket fully with no side movement. Turn full-flow filters an additional 2/3 turn **by hand**, or as indicated on the filter. See Figure 16.

 Copyright © 2004 DETROIT DIESEL CORPORATION

www.HEAVY EQUIPMENTS.ORG
https://truckmanualshub.com/

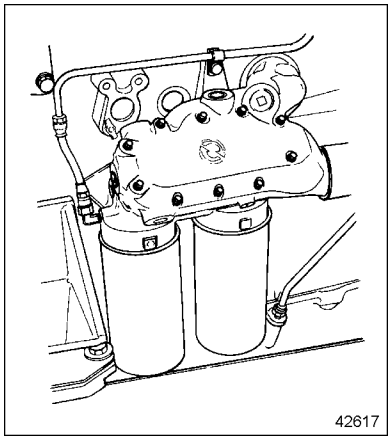

Figure 16 Lubricating Oil Filters

Make a visual check of all lubricating oil lines for wear and/or chafing. If any indication of wear is evident, replace the oil lines and correct the cause.

Check for oil leaks after starting the engine.

Item 12 – Fuel Filters

One method of determining when filters are plugged to the extent that they need replacing is based on the fuel pressure at the cylinder head fuel inlet fitting and the inlet restriction at the fuel pump. In a clean system the maximum pump inlet restriction should not exceed 6 inches of mercury (20.3 kPa). In a dirty system it must not exceed 12 inches of mercury (41 kPa).

At normal operating speed and with the standard .080 inch restriction fittings, the fuel pressure is 55 – 70 psi (375 – 483 kPa). Change the fuel filters whenever the inlet restriction at the pump reaches 12 inches of mercury (41 kPa) at normal operating speeds and whenever the fuel pressure at the inlet fitting falls to the minimum fuel pressure of 6 inches of mercury (20.3 kPa).

NOTE:
Filter change intervals may be shortened to conform with established preventive maintenance schedules, but should never be extended.

Fuel Pro® 382 Filters — Install new Fuel Pro® 382 primary fuel filter elements when the fuel level in the see-thru cover reaches the top of the element or after one year of service, whichever comes first.

Spin-On Filters — Install new spin-on primary and secondary fuel filter elements on vehicle engines every 15,000 miles (24,000 km) or every six months, whichever comes first. See Figure 17.

All information subject to change without notice. (Rev. 01/ 04)
6SE550 0401 Copyright © 2004 DETROIT DIESEL CORPORATION

www.HEAVY EQUIPMENTS.ORG
https://truckmanualshub.com/

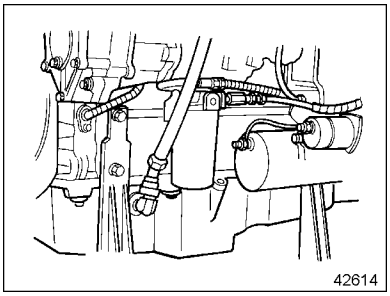

Figure 17 Spin-On Fuel Filter Location

Install new spin-on filter elements on non-vehicle engines every 150 hours. Replace spin-on filter elements immediately if plugging is indicated, regardless of mileage or hour intervals.

Item 13 – Water Pump and Coolant Inhibitor Element

Check the water pump and the coolant inhibitor element.

Water Pump Drain Hole — The water pump drain hole should be inspected every 6 months to make sure it is open. A small chemical build-up or streaking at the drain hole may occur. **This is not an indication of a defective water pump or seal.** Remove the build-up with a mild detergent cleaner and a brush. If coolant does not leak from the drain hole under normal conditions, do not replace the water pump.

Coolant Inhibitor Element — If the cooling system is protected by a supplemental coolant additive (SCA) element, the coolant must be tested at required intervals and the element replaced, if required. See Figure 18.

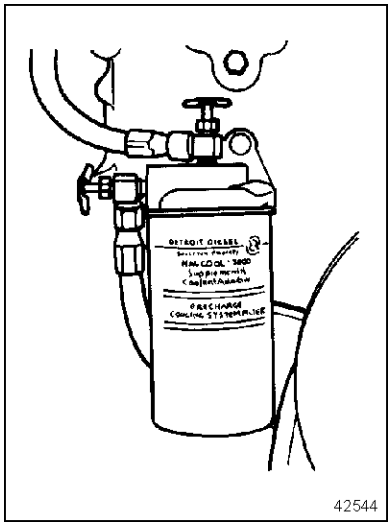

Figure 18 Coolant Inhibitor Element

Required test intervals are listed in Table 25. For SCA test procedures refer to How to Select Coolant and then SCA Test Procedures in this guide. Use the coolant filter element required.

 Copyright © 2004 DETROIT DIESEL CORPORATION

www.HEAVY EQUIPMENTS.ORG
https://truckmanualshub.com/

Refer to SPECIFICATIONS for element part number listing. The valves mounted on the filter adaptor head *must* be opened after the element is replaced.

Item 14 – Cranking Motor

For cranking motor (starter) information, contact an authorized Delco Remy® or Bosch® service center, depending on manufacturer.

Item 15 – Air System

All the connections in the air system should be checked to make sure they are tight and leak free. Check all hoses and ducting for punctures, deterioration or other damage and replace, if necessary.

Item 16 – Exhaust System

Have the exhaust manifold retaining bolts and other connections checked for tightness. Have the exhaust pipe rain cap checked for proper operation, if so equipped.

Item 17 – Engine (Steam Clean)

Steam clean the engine and engine compartment every 60,000 miles (96,000 km) or 2,000 hours, whichever comes first.

NOTICE:

Do not apply steam or solvent directly to the battery-charging alternator, starting motor, DDEC components, sensors or other electrical components, as damage to electrical equipment may result.

Item 18 – Radiator

The exterior of the radiator core should be inspected every 30,000 miles (48,000 km), 12 months, or 300 hours (industrial applications) and cleaned, if necessary.

CAUTION:

To avoid injury from flying debris when using compressed air, wear adequate eye protection (face shield or safety goggles) and do not exceed 40 psi (276 kPa) air pressure.

Use a quality grease solvent, such as mineral spirits, and dry with compressed air. **Fuel oil, kerosene or gasoline should not be used.**

It may be necessary to clean the radiator more frequently if the engine is being operated in extremely dusty or dirty areas.

All information subject to change without notice. (Rev. 01/ 04)
6SE550 0401 Copyright © 2004 DETROIT DIESEL CORPORATION

www.HEAVY EQUIPMENTS.ORG
https://truckmanualshub.com/

If the low coolant level sensor is installed in the top tank of the radiator, it should be tested for proper operation every 100,000 miles (160,000 km) or 12 months, whichever comes first. Authorized Detroit Diesel distributors are properly equipped to perform this service.

Item 19 – Oil Pressure

Under normal operation, oil pressure is noted each time the engine is started. In the event the equipment has warning lights rather than pressure indicators, the pressure should be checked and recorded every 60,000 miles (96,000 km) for vehicle engines or 600 hours for stationary and industrial engines.

Item 20 – Battery-Charging Alternator

Precautions must be taken when working on or around the alternator. The diodes and transistors in the alternator circuit are very sensitive and can be easily destroyed.

1. Avoid grounding the output terminal. Grounding an alternator's output wire or terminal (which is always “hot,” regardless of whether or not the engine is running) and accidentally reversing the battery polarity will result in equipment damage.
2. Do not reverse battery connections. This can also cause damage.
3. Never disconnect the battery while the alternator is operating. Disconnecting the battery can result in damage to the battery diodes. In applications which have two (2) sets of batteries, switching from one set to the other while the engine is running will momentarily disconnect the batteries. This can result in equipment damage.
4. If a booster battery is to be used, batteries must be connected correctly (negative to negative, positive to positive) to avoid equipment damage.
5. Never use a fast charger with the batteries connected or as a booster for battery output.

For information on the alternator assembly, contact an authorized Delco Remy® or Bosch® distributor, depending on manufacturer.

 Copyright © 2004 DETROIT DIESEL CORPORATION

www.HEAVY EQUIPMENTS.ORG
https://truckmanualshub.com/

CAUTION:

To avoid injury from battery explosion or contact with battery acid, work in a well-ventilated area, wear protective clothing, and avoid sparks or flames near the battery. Always establish correct polarity before connecting cables to the battery or battery circuit. If you come in contact with battery acid:

- ❑ **Flush your skin with water.**
- ❑ **Apply baking soda or lime to help neutralize the acid.**
- ❑ **Flush your eyes with water.**
- ❑ **Get medical attention immediately.**

Bosch® T1 Alternator Service Requirements — The transistor regulator must be replaced every 100,000 miles (160,000 km) using kit part number 23524613 (includes regulator assembly and brushes). Front and rear bearings must be replaced every 200,000 miles (320,000 km) using kit 23524614 (includes bearings, seals and spacer ring). Authorized Bosch distributors have the parts, tools and trained personnel to perform these services.

General Service Requirements – Bosch® and Delco Remy® Alternators — Terminals should be checked for corrosion and loose connections and wiring inspected for damage and frayed insulation. Have wiring repaired or replaced, as required.

Check torque on alternator mounting bolts and bracketing every 15,000 miles (24,000 km) on truck and coach engines or every 300 hours on all other engines. Retighten, if necessary.

Item 21 – Engine and Transmission Mounts

The engine and transmission mounting bolts and the condition of the mounting pads should be checked every 60,000 miles (96,000 km) or 600 hours. Tighten and/or repair as necessary.

Item 22 – Crankcase Pressure

The crankcase pressure should be checked and recorded every 60,000 miles (96,000 km) or 600 hours.

All information subject to change without notice. (Rev. 01/ 04)
6SE550 0401 Copyright © 2004 DETROIT DIESEL CORPORATION

www.HEAVY EQUIPMENTS.ORG
https://truckmanualshub.com/

Item 23 – Fan Hub

If the fan bearing hub assembly has a grease fitting, use a hand grease gun to lubricate the bearings with one shot of quality lithium-base, multi-purpose grease every 100,000 miles (160,000 km) for vehicle engines or 1,000 hours for non-vehicle engines. Care should be taken not to overfill the bearing housing.

Item 24 – Thermostats and Seals

Replace the thermostats and seals every 240,000 miles (384,000 km) on vehicle engines. On non-vehicle engines, replace the thermostats and seals every 4,000 hours or 24 months, whichever comes first.

Item 25 – Crankcase Breather

The internally mounted (in the engine rocker cover) crankcase breather assembly *should be removed and the steel mesh pad washed in clean fuel oil* every 100,000 to 120,000 miles (160,000 to 192,000 km) on vehicle engines or every 1,000 hours of operation on non-vehicle engines. This cleaning period may be reduced or lengthened according to the severity of service. See Figure 19).

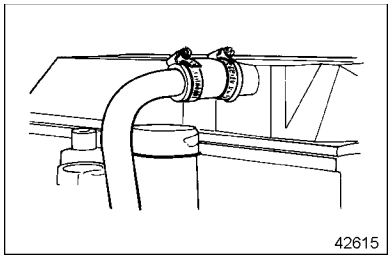

Figure 19 Internal (in Rocker Cover) Breather Location

The rocker cover-mounted breather assembly (part number 23512984) used in the closed crankcase breather system *should be replaced* every 4000 operating hours. It is not reusable and no attempt should be made to clean or reuse it. See Figure 20.

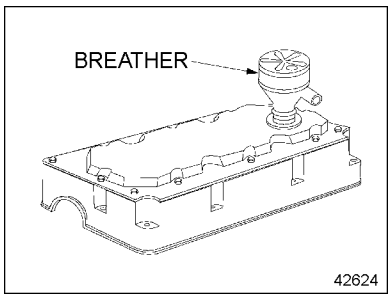

Figure 20 Rocker Cover-Mounted Breather

 Copyright © 2004 DETROIT DIESEL CORPORATION

www.HEAVY EQUIPMENTS.ORG
https://truckmanualshub.com/

Item 26 – Engine Tune-Up

There is no scheduled interval for performing an engine tune-up. However, the valve lash and injector heights *must* be measured and, if necessary, adjusted at the initial interval listed in Table 19. Once the initial measurements/adjustments have been made, any adjustments beyond this point should be made only as required to maintain satisfactory engine performance.

Item 27 – Vibration Damper

The viscous vibration damper should be inspected periodically and replaced if dented or leaking. See Figure 21.

Heat from normal engine operation may, over a period of time, cause the fluid within the damper to break down and lose its dampening properties. For this reason the viscous vibration damper *must* be replaced at time of normal major engine overhaul, regardless of apparent condition.

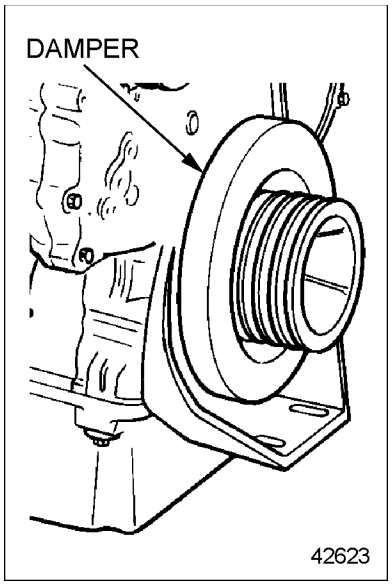

Figure 21 Viscous Vibration Damper

Engine Application	Initial Valve Lash and Injector Height Measurement/Adjustment Period
Vehicle Engines	60,000 Miles (96,000 km) or 24 Months*
Stationary, Construction/Industrial, Agricultural, or Generator Set Engines	1,500 Hours or 45,000 Miles (72,000 km)*

* Whichever comes first.

Table 19 Valve Lash and Injector Height Adjustment

All information subject to change without notice. (Rev. 01/ 04)
6SE550 0401 Copyright © 2004 DETROIT DIESEL CORPORATION

www.HEAVY EQUIPMENTS.ORG
https://truckmanualshub.com/

HOW-TO SECTION

This section covers Detroit Diesel's recommendations on how to select lubricating oil, fuel oil, and coolant and includes basic engine maintenance procedures which can be performed by the operator.

NOTICE:

The manufacturer's warranty applicable to Series 50 engines provides in part that the provisions of such warranty shall not apply to any engine unit that has been subject to misuse, negligence or accident. Accordingly, malfunctions attributable to neglect or failure to follow the manufacturer's fuel or lubricating recommendations may not be within the coverage of the warranty.

How to Select Lubricating Oil

The selection of the proper lubricating oil is important to achieve the long and trouble-free service which Detroit Diesel engines are designed to provide. The proper lubricating oil for all Detroit Diesel engines is selected based on SAE viscosity grade and API (American Petroleum Institute) service designation. Only oils licensed to display the API symbol should be used. See Figure 22.

SAE Viscosity Grade: 15W-40
API Classification: CI -4

42541

Figure 22 API Symbol

Lubricant Requirements

Lubricant requirements are different for the EGR-equipped and non-EGR engines.

EGR-Equipped Engines — API CI-4 oils *must* be used in October 2002 and later–build Series 50 engines with cooled EGR (exhaust gas recirculation) devices. API Service Category CI-4 is intended for use with cooled EGR engines meeting 2002 and later exhaust emission regulations.

Non-EGR Engines — API CI-4 or CH-4 oils are recommended for use in all non-EGR engines.

Engines Built Prior to 1998 — Lubricants meeting API Service

 Copyright © 2004 DETROIT DIESEL CORPORATION

www.HEAVY EQUIPMENTS.ORG
https://truckmanualshub.com/

Category CG-4 may be used in engines built prior to 1998 when API CI-4 or CH-4 oils are not available.

NOTE:
The use of CG-4 oils in these engines may require a reduction in oil drain interval, depending upon the application and the fuel sulfur level.

Cold Weather Starting

At ambient temperatures below –20° C (–4 °F) when sufficient starter speed cannot be achieved with SAE 15W-40 oils, the use of 5W-XX oils and 10W-XX oils, where XX is 30 or 40, is allowed to improve startability, provided they are API CI-4 (for EGR-equipped engines) *or* API CI-4 or CH-4 (for non-EGR-equipped engines) and have demonstrated field performance in DDC engines. These oils must possess a HT/HS of 3.7 minimum.

NOTICE:

Monograde oils should not be used in Series 50 engines, regardless of API service classification. Monograde oils gel at lower ambient temperatures, reducing lubricant flow, and they do not provide adequate lubricity at higher engine operating temperatures. These factors can result in severe engine damage.

NOTE:
Do not use fuel with sulfur content above 0.05 mass percent for Detroit Diesel EGR-equipped engines.

When the use of high sulfur fuel (greater than 0.05% mass sulfur) in ***non-EGR engines*** is unavoidable, high alkalinity (TBN) lubricants are recommended. High sulfur fuels require modification to oil drain intervals. For further information, refer to publication *Engine Requirements – Lubricating Oil, Fuel and Filters*, 7SE270, available from authorized Detroit Diesel distributors.

Synthetic Oils

Synthetic oils may be used in Detroit Diesel engines, provided they are API licensed and meet the performance and chemical requirements of non-synthetic oils outlined in this publication. Synthetic oils offer improved low-temperature flow properties and high-temperature oxidation resistance. However, they are generally more costly than non-synthetic oils.

Product information about synthetic oils should be reviewed carefully. Performance additive systems often respond differently in synthetic oils. Their use does not permit extension of recommended oil drain intervals.

All information subject to change without notice. (Rev. 01/ 04)
6SE550 0401 Copyright © 2004 DETROIT DIESEL CORPORATION

www.HEAVY EQUIPMENTS.ORG
https://truckmanualshub.com/

The Use of Supplemental Additives

Lubricants meeting the Detroit Diesel specifications outlined in this publication already contain a balanced additive treatment. Supplemental additives are generally not necessary and can even be harmful. These additives may be marketed as either oil treatments or engine treatments and are discouraged from use in Detroit Diesel engines. **Engine damage resulting from the use of such materials is not covered by your Detroit Diesel Corporation warranty.** Detroit Diesel will not provide statements beyond this publication relative to their use.

When to Change Oil

CAUTION:

To avoid injury from contact with the contaminants in used engine oil, wear protective gloves and apron.

The length of time an engine may operate before an oil change depends upon the lubricant and fuel used, engine oil consumption, and the operating cycle. The maximum interval at which the engine may operate before the oil and filters must be changed is listed in Table 20.

Engine Application	Drain Interval
Highway Truck & Motor Coach	15,000 Miles (24,000 km)
City Transit Coach#	6,000 Miles (9,600 km), 300 Hours or 3 Months, whichever comes first
City Transit Coach Model 6047MK1E	3,000 Miles (4,800 km)
Construction, Industrial or Agriculture	250 Hours or 1 Year, whichever comes first
Stationary Generator, Prime Power or Continuous	300 Hours or 3 Months, whichever comes first
Stationary Generator, Standby	150 Hours or 1 Year, whichever comes first

All Series 50 transit coach engines, except model 6047MK1E.

Table 20 Maximum Oil Drain and Filter Change Interval (Fuel Sulfur 0.05 Weight Percent or Less)

 Copyright © 2004 DETROIT DIESEL CORPORATION

www.HEAVY EQUIPMENTS.ORG
https://truckmanualshub.com/

Oil analysis may be used to determine whether this interval should be shortened, but it should not be used to lengthen the interval.

The use of fuels with sulfur content above 0.05 mass percent will require a shortening of drain intervals and/or the use of a higher TBN oil. See the information listed in Table 20. For detailed information refer to publication *Engine Requirements – Lubricating Oil, Fuel and Filters* (7SE270), available from authorized Detroit Diesel distributors.

Disposing of Waste Oil

Dispose of used lubricating oil and filters in an environmentally responsible manner, according to federal (EPA) and/or state recommendations. The disposal of waste oil may be best addressed by the engine oil supplier, who may accept responsibility for proper disposal of this material as part of the business of providing lubricant.

How to Replace the Lube Oil Filters

Filters are an integral part of the lubricating oil system. Proper filter selection and maintenance are important to satisfactory engine performance and service life. Filters should be used to maintain a clean system, not to clean up a contaminated system. Filter part numbers are listed in the **Specifications** section of this guide.

Replace Spin-On Type Oil Filter

Replace spin-on type filters as follows:

1. Place a suitable container under the engine oil pan, remove drain plug and drain the lubricating oil. Replace the drain plug and tighten securely.
2. Remove spin-on filters using tool J 29917, or equivalent, and a 1/2-inch drive socket wrench and extension.

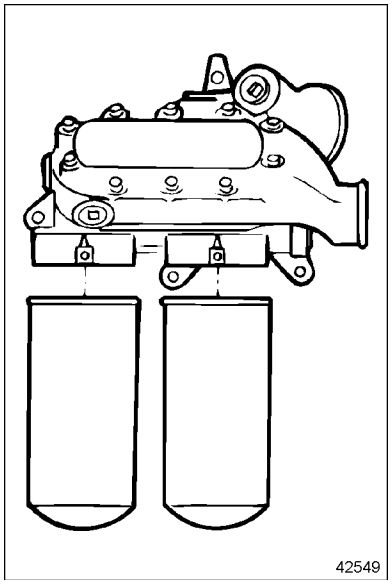

Figure 23 Spin-On Oil Filters

All information subject to change without notice. (Rev. 01/ 04)
6SE550 0401 Copyright © 2004 DETROIT DIESEL CORPORATION

www.HEAVY EQUIPMENTS.ORG
https://truckmanualshub.com/

3. Dispose of used oil and filters in an environmentally responsible manner, according to federal (EPA) and/or state recommendations.
4. Clean the filter gasket-contact surface of the adaptor head with a clean, lint-free cloth.
5. Fill the new filters with clean lubricating oil and lightly coat the filter gaskets with the same oil.
6. Start the new filters on the adaptor head and tighten by hand until the gaskets touch the mounting adaptor head. **Tighten filters an additional two-thirds turn by hand, or as indicated on the filter.**

NOTICE:

Do not overtighten filters. Overtightening may crack or distort the filter adaptor.

7. Add oil as required to bring the level to the “Full” mark on the dipstick.

CAUTION:

Diesel engine exhaust and some of its constituents are known to the State of California to cause cancer, birth defects, and other reproductive harm.

- **Always start and operate an engine in a well ventilated area.**
- **If operating an engine in an enclosed area, vent the exhaust to the outside.**
- **Do not modify or tamper with the exhaust system or emission control system.**

8. Start and run the engine for a short period and check for leaks. After any leaks have been corrected, stop the engine long enough for oil from various parts of the engine to drain back to the crankcase (approximately 20 minutes). Add oil as required to bring the level to the “Full” mark on the dipstick.

 Copyright © 2004 DETROIT DIESEL CORPORATION

www.HEAVY EQUIPMENTS.ORG
https://truckmanualshub.com/

NOTICE:

If the engine oil level is constantly above normal and excess lube oil has not been added to the crankcase, consult with an authorized Detroit Diesel service outlet for the cause. Fuel or coolant dilution of lube oil can result in serious engine damage.

How to Select Fuel Oil

Detroit Diesel engines are designed to operate on most diesel fuels marketed today.

Quality

Fuel quality is an important factor in obtaining satisfactory engine performance, long engine life, and acceptable exhaust emission levels.

In general, fuels meeting the properties of ASTM designation D 975 (grades 1-D and 2-D) have provided satisfactory performance.

The fuels used must be clean, completely distilled, stable, and non-corrosive. For more information regarding the significance of these properties and selection of the proper fuel, refer to publication, *Engine Requirements – Lubricating Oil, Fuel and Filters* (7SE270), available from authorized Detroit Diesel distributors.

Fuel Contamination

Generally, fuel contamination occurs as the result of improper fuel handling. The most common types of contamination are water, dirt, and microbial growth (“black slime”). The formation of varnishes and gums resulting from poor stability or extended storage (“stale fuel”) also affects fuel quality. The best treatment for contamination is prevention by maintaining a clean storage system and choosing a reputable fuel supplier.

Supplemental additives are not recommended due to potential injector system or engine damage. Our experience has been that such additives increase operating costs without providing benefit.

The use of supplemental fuel additives does not necessarily void the engine warranty. **However, repair expenses which result from fuel system or engine component malfunctions or damage attributed to their use will not be covered.** These products should be accompanied by performance data supporting their merit. It is not the policy of Detroit Diesel Corporation to test, evaluate, approve or endorse such products.

Prohibited Additives

The following fuel additives are not allowed and MUST NOT be mixed with diesel fuel.

All information subject to change without notice. (Rev. 01/ 04)
6SE550 0401 Copyright © 2004 DETROIT DIESEL CORPORATION

www.HEAVY EQUIPMENTS.ORG
https://truckmanualshub.com/

Used Lubricating Oil — Detroit Diesel specifically prohibits the use of used lubricating oil in diesel fuel. Used lubricating oil contains combustion acids and particulate materials which can severely erode fuel injector components, resulting in loss of power and increased exhaust emissions. In addition, the use of drained lubricating oil will increase maintenance requirements due to filter plugging and combustion deposits.

Gasoline — The addition of gasoline to diesel fuel will create a serious fire hazard. The presence of gasoline in diesel fuel will reduce fuel cetane number and increase combustion temperatures.

CAUTION:

To avoid increased risk of a fuel fire, do not mix gasoline and diesel fuel.

Tanks which contain such mixtures should be drained and cleaned as soon as possible.

Detroit Diesel Corporation will not be responsible for any detrimental effects it determines resulted from adding drained lubricating oil or gasoline to the diesel fuel.

How to Replace the Fuel Filters

Filters are an integral part of the fuel system. Proper filter selection and maintenance are important to satisfactory engine operation and service life. Filters should be used to maintain a clean system, not to clean up a contaminated system. Refer to the **Specifications** section of this guide for proper filter selection.

Spin-on type primary and secondary fuel filters are used on Series 50 engines. The spin-on type filter consists of a shell, element and gasket unitized into a single cartridge and a filter adaptor which includes threaded inserts to accept the spin-on cartridges. An optional fuel/water separator may be installed in place of the standard primary filter.

Replace Spin-On Type Primary or Secondary Fuel Filter Elements

Replace spin-on fuel filter elements as follows:

1. Shut down the engine and allow it to cool.
2. With the engine at ambient temperature and cool to the touch, place a suitable container under the filter.
3. A fuel shutoff valve may be installed on the discharge side

 Copyright © 2004 DETROIT DIESEL CORPORATION

www.HEAVY EQUIPMENTS.ORG
https://truckmanualshub.com/

of the secondary fuel filter. If installed, turn the handle on the shutoff valve to the **closed** position (perpendicular to the valve).

NOTICE:

To improve engine starting, have replacement filters filled with fuel and ready to install immediately after used filters are removed. This will prevent possible siphoning and fuel system aeration.

4. Using a suitable band type filter wrench, remove the primary and secondary fuel filters. See Figure 24. Dispose of the filters in an environmentally responsible manner, according to federal (EPA) and/or state recommendations.
5. If not previously filled, fill new replacement filters with clean diesel fuel and coat the gaskets lightly with the fuel oil.
6. Thread the new filters onto the adaptor inserts until the gaskets make full contact with the adaptor head and no side movement is evident. Tighten filters an additional one-half turn **by hand,** or as indicated on the filter.

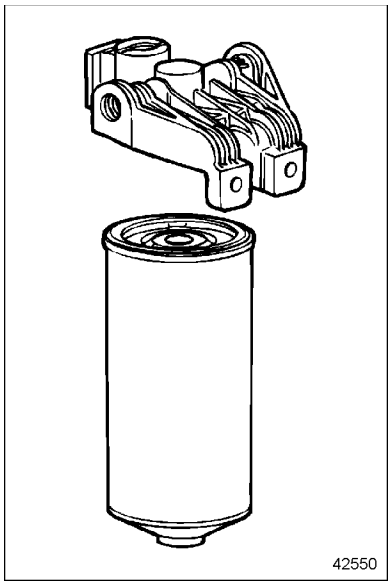

Figure 24 Typical Spin-On Type Fuel Filter

NOTICE:

Do not overtighten the filter. Overtightening may crack or distort the adaptors.

7. Turn the handle on the shutoff valve to the **Open** position (in line with the valve).

All information subject to change without notice. (Rev. 01/ 04)
6SE550 0401 Copyright © 2004 DETROIT DIESEL CORPORATION

www.HEAVY EQUIPMENTS.ORG
https://truckmanualshub.com/

CAUTION:

Diesel engine exhaust and some of its constituents are known to the State of California to cause cancer, birth defects, and other reproductive harm.

- ❑ **Always start and operate an engine in a well ventilated area.**
- ❑ **If operating an engine in an enclosed area, vent the exhaust to the outside.**
- ❑ **Do not modify or tamper with the exhaust system or emission control system.**

8. Start the engine and check for leaks. Shut down the engine. Correct any leaks with the engine off.

If the engine fails to start after filter replacement, the fuel system will require priming with tool J 5956, or equivalent. Authorized Detroit Diesel distributors are properly equipped to perform this service.

NOTICE:

Under no circumstances should the starting motor and fuel pump be used to prime the fuel filters. Prolonged used of the starting motor and fuel pump to prime the fuel system can result in damage to the starter, fuel pump and injectors and cause erratic running of the engine due to the amount of air in the fuel lines and filters.

Replace Fuel/Water Separator Element

If an optional primary filter/water separator is installed, replace the element as follows:

1. Shut down the engine and allow it to cool.
2. With the engine at ambient temperature and cool to the touch, place a suitable container under the filter.
3. A fuel shutoff valve may be installed on the discharge side of the fuel/water separator. If installed, turn the shutoff valve handle to the **closed** position (perpendicular to the valve).
4. Drain off some fuel by opening the drain
5. Using a strap wrench, remove the element and bowl together, then remove the bowl from the

 Copyright © 2004 DETROIT DIESEL CORPORATION

www.HEAVY EQUIPMENTS.ORG
https://truckmanualshub.com/

element. The filter and bowl have right-hand threads, so turn counter-clockwise to remove.

6. Clean the bowl and O-ring seal.
7. Apply a light coating or clean fuel or grease to the O-ring seal, thread the bowl onto the new filter and tighten **by hand**.

NOTICE:

To avoid damaging the bowl or the filter, do not use tools when tightening.

8. Apply a light coating of clean fuel oil or grease to the new O-ring seal on the top of the filter. Thread the filter and bowl assembly onto the filter head and tighten **by hand** until snug.
9. To eliminate air from the filter, operate the primer pump on the filter head (if equipped) until the fuel purges at the filter assembly.
10. Start the engine and check for leaks. Shut down the engine. Correct leaks with the engine off.

Replace "Fuel Pro® 382/382E" Fuel Filter Element

The Fuel Pro 382/383E diesel fuel filter system consists of a permanently mounted fuel processor, a replaceable filter element and sealing grommet assembly, a filter spring, as see-thru cover and seal, a cover collar, and a vent cap and seal. See Figure 25.

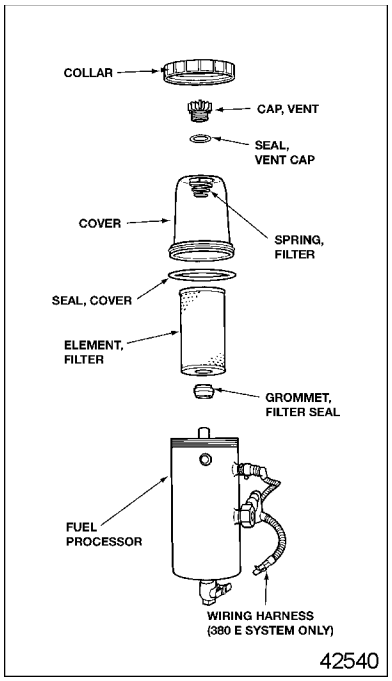

Figure 25 Fuel Pro 382E Fuel Processor Assembly

The Fuel Pro 382E system also includes a fuel heater element, thermostatic switch and wiring harness.

Replace the element as follows:

1. Shut down the engine and allow it to cool.

All information subject to change without notice. (Rev. 01/ 04)
6SE550 0401 Copyright © 2004 DETROIT DIESEL CORPORATION

www.HEAVY EQUIPMENTS.ORG
https://truckmanualshub.com/

2. With the engine at ambient temperature and cool to the touch, place a suitable container under the filter.
3. A fuel shutoff valve may be installed on the discharge side of the fuel filter. If installed, turn the handle on the shutoff valve to the **closed** position (perpendicular to the valve).
4. Open the drain valve at the base of the fuel processor and drain the fuel until it is below the bottom of the filter in the see-thru cover. Close the drain valve. The fuel may be returned to the tank.
5. Using filter collar/vent cap wrench part number 232002 or equivalent, remove the collar by turning counter-clockwise. Remove the cover, filter spring and cover seal ring by lifting straight up and over the filter element.
6. Remove the element from the center stud (fuel outlet pipe) by pulling upward and twisting slightly.

NOTE:
Current filter elements include an integral sealing grommet. If a former element is replaced, make sure the separate sealing grommet is removed from the center stud before installing the new element.

7. Dispose of the used element and grommet in an environmentally responsible manner, according to federal (EPA) and/or state recommendations.
8. Check to make sure the sealing grommet is included in the base of the replacement filter element, then install the element onto the center stud by pushing down and twisting slightly.
9. Check to make sure the spring is installed at the top of the cover. If missing, this spring must be replaced to insure proper filter operation. Wipe the cover lip and cover seal clean.

NOTICE:
To avoid cover or collar damage, do not use a wrench to tighten the collar.

10. After making sure the seal is properly positioned at the base of the cover, install the cover and collar onto the fuel processor. Tighten the collar **by hand** until secure.
11. Using filter collar/vent cap wrench 232002 or equivalent, remove the vent cap from the top of the cover by turning the cap counter-clockwise. Fill the cover full of clean fuel.

 Copyright © 2004 DETROIT DIESEL CORPORATION

www.HEAVY EQUIPMENTS.ORG
https://truckmanualshub.com/

NOTICE:

To avoid cover or vent cap damage, do not use tools to tighten the vent cap.

12. After making sure the O-ring seal is installed on the vent cap, reinstall the cap and tighten **by hand**.
13. Open the fuel shutoff valve (if installed) and start the engine. When the lubrication system reaches its normal operating pressure, increase engine speed to high idle for 2 to 3 minutes.

NOTICE:

Do not allow the fuel level in the see-thru cover to fall below the top of the collar, since this may lead to interruption of the fuel flow and engine stalling.

14. After the air is purged and with the engine still running, loosen the vent cap. The fuel level in the cover will start falling. When the fuel level falls to the top of the collar, tighten the vent cap quickly **by hand**.
15. Shut down the engine and tighten the collar again **by hand** .
16. Restart the engine and check for leaks.

NOTE:
The filter cover will not fill completely during engine operation. It will gradually fill over time, and the fuel level will rise as the filter medium becomes clogged. **The filter element does nor require changing until the fuel level has risen to the top of the element, or after one year of service, whichever comes first.**

Engine Out of Fuel — How to Restart

When an engine has run out of fuel, there is a definite procedure to follow when restarting it.

NOTICE:

Under no circumstances should the starting motor and fuel pump be used to prime the fuel filters. Prolonged used of the starting motor and fuel pump to prime the fuel system can result in damage to the starter, fuel pump and injectors and cause erratic running of the engine due to the amount of air in the fuel lines and filters.

All information subject to change without notice. (Rev. 01/ 04)
6SE550 0401 Copyright © 2004 DETROIT DIESEL CORPORATION

www.HEAVY EQUIPMENTS.ORG
https://truckmanualshub.com/

Engines with Spin-On Filters

Use the following procedure for an engine with spin-on filters.

1. Fill the fuel tank with the recommended grade of fuel. If only partial filling is possible, add a minimum of 10 gallons (38 liters) of fuel to the tank.
2. Close the fuel shutoff valve (if installed) on the secondary filter head and remove the spin-on fuel filters. Fill with clean fuel through the fuel inlet holes (the outer ring of small holes on the element) to insure the fuel is filtered. Thread the elements onto the adaptor inserts until the gaskets make full contact with the adaptor head and no side movement is evident. Tighten filters an additional one-half turn **by hand,** or as indicated on the filter.
3. Open the fuel shutoff valve (if installed), start the engine and check for leaks. Shut down the engine before correcting leaks.

NOTE:
If the engine fails to start after replacement of fuel filters, the fuel system will require priming with tool J 5956, or equivalent. Authorized Detroit Diesel distributors are properly equipped to perform this service.

Engines with Fuel Pro Filters

Use the following procedure for an engine with Fuel Pro filters:

1. Remove the vent cap from the top of the filter by turning counter-clockwise. Fill the cover full of *clean* fuel. After making sure the O-ring seal is installed on the vent plug, reinstall the plug and tighten **by hand** only.

NOTICE:
To avoid cover or vent cap damage, do not use tools to tighten the vent cap.

NOTICE:
Do not allow the fuel level in the see-thru cover to fall below the top of the collar, since this may lead to interruption of the fuel flow and engine stalling.

2. Start the engine and allow the lubrication system to reach its normal operating pressure, then increase engine speed to high idle for 2 to 3 minutes. After the air is purged and with the engine still running, loosen the vent cap on the filter cover. the fuel level in the cover will start falling. When the fuel level falls to the top of the collar on the Fuel Pro cover,

 Copyright © 2004 DETROIT DIESEL CORPORATION

www.HEAVY EQUIPMENTS.ORG
https://truckmanualshub.com/

tighten the vent cap quickly **by hand**.

NOTE:
If the engine fails to start after replacement of fuel filters, the fuel system will require priming with tool J 5956, or equivalent. Authorized Detroit Diesel distributors are properly equipped to perform this service.

How to Select Coolant

The section coves selection of the required coolant for Series 50 engines.

Definitions

This section covers selection of the required coolant for Series 50 engines. To help ensure complete understanding of the information, the definitions of the following terms are provided:

Antifreeze — Ethylene glycol or propylene glycol containing a corrosion inhibitor package and which meets an appropriate heavy-duty specification (i.e., TMC RP-329 for ethylene glycol or TMC RP-330 for propylene glycol).

Coolant — The fluid mixture circulating in the engine cooling system, typically a mixture of 50% water and 50% antifreeze.

Drop-Out — Precipitated sludge or deposit formation on cooling system components.

Fully Formulated Antifreeze — Contains all the necessary inhibitors to protect a diesel engine, and does not, therefore, require a pre-charge of SCA before its first use.

Initial–Fill Coolant — The coolant that is used in a new or rebuilt engine, or any time the cooling system is emptied and then refilled with coolant.

OAT — Organic Acid Technology. An inhibitor system based on organic acid inhibitors, instead of traditional North American inhibitor formulations.

SCA — Supplemental Coolant Additive. SCAs are used in a preventive maintenance program to prevent corrosion, cavitation, and the formation of deposits.

All information subject to change without notice. (Rev. 01/ 04)
6SE550 0401 Copyright © 2004 DETROIT DIESEL CORPORATION

www.HEAVY EQUIPMENTS.ORG
https://truckmanualshub.com/

Approved Coolants

The approved and preferred coolants for Series 50 engines are listed in Table 21. Once installed, these coolants should be maintained according to the procedures discussed under **Maintenance** in this section.

NOTICE:

Required specifications for water, ethylene glycol, propylene glycol, inhibitor packages and inhibitor concentration are included in this section. To avoid possible engine damage from inadequate or overconcentrated coolant, this information should be read thoroughly before the coolant is replaced.

Coolant Fill Option	Product
Ethylene Glycol & Water + Corrosion Inhibitors [1]	DDC *Power Cool*
Commercial Equivalent of DDC *Power Cool*	Fully Formulated TMC RP-329 Type A Antifreeze & Water
Propylene Glycol & Water + Corrosion Inhibitors [1]	DDC *Power Cool* Plus
Ethylene Glycol & Water + OAT Inhibitors	DDC *Power Cool* Plus
Water Only + Corrosion Inhibitors [2]	Water + DDC *Power Cool* 3000
Water Only + OAT Inhibitors [2]	Water + DDC *Power Cool* Plus 6000

[1] Preferred Coolant
[2] Water-only coolant systems offer no freeze protection and should not be used where ambient temperatures can fall to 32 °F (0 °C).

Table 21 Initial Fill Coolant Options

 Copyright © 2004 DETROIT DIESEL CORPORATION

www.HEAVY EQUIPMENTS.ORG
https://truckmanualshub.com/

Ethylene Glycol & Water Plus SCA Inhibitor or Propylene Glycol & Water Plus SCA Inhibitor — These products are available as fully formulated, phosphate-free, extended service interval (ESI) coolants. They are commercially available from Detroit Diesel (recommended) and other manufacturers as either a concentrated antifreeze or as a pre-mixed antifreeze. The pre-mixed antifreeze is ready for use, while the concentrated coolant must be mixed with water prior to use.

Detroit Diesel *Power Cool* engine coolant (part number 23512138) is the preferred ethylene glycol coolant. If other commercial brands of ethylene glycol are used, they must be equivalent to the *Power Cool* (see following paragraph). Detroit Diesel does not market a propylene glycol coolant. If a propylene glycol coolant is used, it must also meet the requirements listed in the following paragraph.

Fully formulated ethylene glycol-based, low silicate antifreeze or coolant must meet TMC RP-329 "Type A" requirements. Fully formulated propylene glycol-based antifreeze or coolant must meet TMC RP-330 "Type A" requirements. *Fully formulated antifreeze does not require a dosage of SCA (supplemental coolant additive) prior to initial use.*

Mixing EG or PG Antifreeze and Water — If a concentrated ethylene glycol (EG) or propylene glycol (PG) antifreeze is purchased, mix the antifreeze with water meeting the required quality standards listed in Table 24 and fill the cooling system.

If a pre-diluted, fully formulated coolant is purchased, simply fill the cooling system. For best overall performance, a coolant consisting of 50% concentration of antifreeze (50% antifreeze, 50% water) is *recommended*. An antifreeze concentration over 67% (67% antifreeze, 33% water) is *not recommended* due to poor heat transfer, reduced freeze protection (IEG only), and possible silicate dropout. An antifreeze concentration below 33% (33% antifreeze, 67% water) offers too little freeze and/or corrosion protection and is *not recommended*.

All information subject to change without notice. (Rev. 01/ 04)
6SE550 0401 Copyright © 2004 DETROIT DIESEL CORPORATION

www.HEAVY EQUIPMENTS.ORG
https://truckmanualshub.com/

See Figure 26 for ethylene glycol-base coolant concentration versus freezing and boiling temperatures.

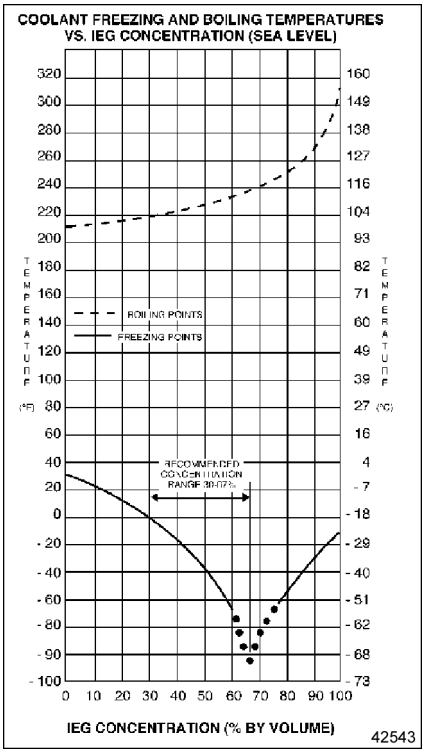

Figure 26 Coolant Temperatures vs. IEG Concentration (Sea Level)

See Figure 27 for propylene glycol-base coolant concentration versus freezing and boiling temperatures.

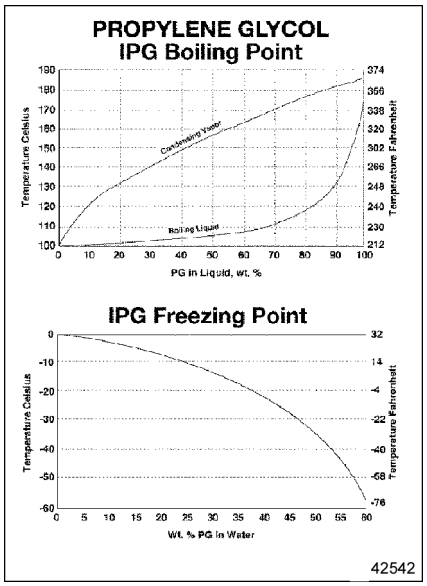

Figure 27 Coolant Temperatures vs. IPG Concentration (Sea Level)

Always verify that the freeze point and nitrite concentration of the antifreeze/water mixture are correct by using a *Power Trac*® 3–Way Coolant Test Strip. If chemical analysis is used, elements in the coolant must fall within the limits listed in Table 22.

 Copyright © 2004 DETROIT DIESEL CORPORATION

www.HEAVY EQUIPMENTS.ORG
https://truckmanualshub.com/

Fully Formulated Glycol Coolant Concentration Limits	
Boron	125 – 500 PPM
Nitrite	900 – 3200 PPM
Nitrate	200 – 3200 PPM
Silicon	50 – 250 PPM
Phosphorous	0 PPM
pH	8.0 – 11.0

Table 22 Fully Formulated Glycol Coolant Limits with TMC RP-329, TMC RP-330 Chemistry Type A (50/50 Coolant/Water Mixture)

Recycled Antifreeze — Antifreeze or coolant recycled by reverse osmosis, distillation, and ion exchange, properly re-inhibited to meet TMC RP-329 Type A or TMC RP-330 Type A requirements, has been demonstrated to provide service equivalent to virgin antifreeze. Recycled antifreeze or coolants of these types are *preferred.* Other recycled coolants, especially coolants recycled through filtration processes, are *not recommended*.

Ethylene Glycol/Water + OAT Inhibitor or Propylene Glycol/Water + OAT Inhibitor — Ethylene glycol and propylene glycol are also available with an OAT (Organic Acid Technology) corrosion package. These coolants require less maintenance over the useful life of the engine. OAT coolants, maintained as detailed in the **Maintenance** section of this guide, may be operated up to 4 years, 600,000 miles (960,000 km), or 10,000 operating hours, whichever comes first. Refer to section Coolant Maintenance. The cooling system should either be equipped with a "blank" coolant filter, or the coolant filter and piping may be omitted from the system.

OAT fully formulated antifreezes are available as concentrated and pre-mixed. Concentrated antifreezes should be mixed 50% (50% antifreeze, 50% water).

OAT coolants should not be mixed with conventional coolants. If they are mixed, no damage will result, but the long-life advantages of the OAT coolant will be lost. In this event, the coolant should be maintained as a fully formulated IEG coolant, not as an OAT (Organic Acid Technology) coolant.

All information subject to change without notice. (Rev. 01/ 04)
6SE550 0401 Copyright © 2004 DETROIT DIESEL CORPORATION

www.HEAVY EQUIPMENTS.ORG
https://truckmanualshub.com/

Detroit Diesel markets a OAT-inhibited ethylene glycol coolant, DDC *Power Cool* Plus, which contains all the required additives. If a non-DDC OAT antifreeze is used, it must conform to TMC 338 specification. *Do not add extender to new OAT antifreeze or coolant.*

Water Only + SCA or Water Only + OAT Inhibitor — In warm climates a coolant based on water with corrosion inhibitors is approved for use. Water-only systems need to be treated with the proper dosage of corrosion inhibitors. Detroit Diesel-approved SCAs or OAT corrosion inhibitors *must* be added to the water to provide required corrosion and cavitation erosion protection. OAT inhibitors such as *Power Cool* Plus 6000 are available for water-only systems. Inhibitor should be mixed at 7.5% – 10% by volume with water. For a list of *Power Cool* products, refer to section SPECIFICATIONS in this guide. Traditional SCA (*Power Cool* 3000) can also be used to protect the engine. *Power Cool* 3000 concentration limits are listed in Table 23.

NOTE:
Do not use Power Trac 3–Way Test Strips to test OAT coolant.

Power Cool 3000 SCA inhibitors should be mixed at 5% by volume with water. This is 1 quart per 5 gallons of water. These additions can be made by adding liquid SCAs available in a variety of sizes. Coolant filters are also available for different cooling system capacities. These filters release the proper amount of SCA at initial fill.

***Power Cool* 3000 Coolant Concentration Limits**	
Boron	125 – 500 PPM
Nitrite	900 – 3200 PPM
Nitrate	0 – 1000 PPM
Silicon	50 – 250 PPM
Phosphorous	0 PPM
pH	8.0 – 11.0

Table 23 *Power Cool* 3000 Concentration Limits (5% *Power Cool* 3000/ 95% Water)

 Copyright © 2004 DETROIT DIESEL CORPORATION

www.HEAVY EQUIPMENTS.ORG
https://truckmanualshub.com/

Water Requirements — Distilled, reverse osmosis-purified, or de-ionized water which eliminates the adverse effects of minerals in tap water is preferred. High levels of dissolved chlorides, sulfates, magnesium, and calcium in some tap water causes scale deposits and/or corrosion. These deposits have been shown to result in water pump failures and poor heat transfer, resulting in overheating. If tap water is used, the mineral content in the water must be below the maximum allowable limits listed in Table 24.

NOTICE:

Do not add additional SCA to new, fully formulated antifreeze or coolant. This can result in dropout and/or the formation of deposits.

Coolants Not Recommended

The coolants in the following sections are *not recommended* for use in Detroit Diesel engines.

All Antifreezes and Coolants Containing Phosphate — These coolants should be avoided. Drop out, overheating and water pump seal failures can result from the use of coolant or inhibitor packages based on phosphate.

Automotive Type Coolants — These coolants generally contain high levels of phosphate and silicate, offer no liner pitting protection, and are *not suitable* for use in Detroit Diesel engines.

Tap Water Components	Maximum Allowable	
	Parts per Million	Grains per Gallon
Chlorides	40	2.5
Sulfates	100	5.8
Total Dissolved Solids	340	20
Total Hardness – Magnesium and Calcium	170	10

Table 24 Satisfactory Water Limits

All information subject to change without notice. (Rev. 01/ 04)
6SE550 0401 Copyright © 2004 DETROIT DIESEL CORPORATION

www.HEAVY EQUIPMENTS.ORG
https://truckmanualshub.com/

Methyl Alcohol-Based Antifreeze — This coolant must not be used because of its effect on the non-metallic components of the cooling system and its low boiling point.

Methoxy Propanol-Based Antifreeze — This coolant must not be used because it is not compatible with the fluoroelastomer seals found in the cooling system.

Glycol-based Coolants Formulated For HVAC — These coolants formulated for heating/ventilation/air conditioning (HVAC) should not be used. These coolants generally contain high levels of phosphates, which can deposit on hot internal engine surfaces and reduce heat transfer.

Additives Not Recommended

The additives in the following sections are *not recommended* for use in Series 50 engines cooling systems.

Soluble Oil Additives — These additives are not approved for use because a small amount of oil adversely affects heat transfer. For example, a 1.25% concentration of soluble oil increases fire deck temperature 6%. A 2.50% concentration increases fire deck temperature 15%. The use of soluble oil additives may result in engine overheating and/or failure.

Chromate Additives — These additives are not approved for use because chromate additives can form chromium hydroxide, commonly called “green slime.” This, in turn, can result in engine damage due to poor heat transfer. Cooling systems operated with chromium-inhibited coolant must be chemically cleaned with *Power Cool* dry chemical cooling system cleaner/conditioner (or equivalent sulfamic acid/sodium carbonate cleaner) and flushed.

Coolant Maintenance

Coolant maintenance involves checking the coolant inhibitor levels at regular intervals and checking to ensure that the coolant has the proper concentration of SCA.

Coolant Inhibitor Test Intervals — The coolant inhibitor level should be checked at the intervals listed in Table 25. If topping off is needed, add coolant which is identical to the initial fill coolant.

 Copyright © 2004 DETROIT DIESEL CORPORATION

www.HEAVY EQUIPMENTS.ORG
https://truckmanualshub.com/

Service Application	Inhibitor Test Interval
On-Highway Trucks and Motor Coaches	20,000 Miles (32,000 Kilometers)
City Transit Coaches, Pick-Up and Delivery, Short Trip, and Emergency Vehicles	6,000 Miles (9,600 Kilometers) or 3 Months, whichever comes first
Industrial, Continuous– Duty Generator Set and All Other Applications, except Standby Generator Set	500 Hours or 3 Months, whichever comes first
Stand-By Generator Set	200 Hours or Yearly, whichever comes first

Table 25 Required Coolant Inhibitor Test Intervals

Supplemental Coolant Additives for Fully Formulated Coolant — The concentrations of some inhibitors will gradually deplete during normal engine operation. SCAs replenish the protection for cooling system components. The coolant *must* be maintained with the proper concentration of SCA. Detroit Diesel *Power Cool* maintenance SCAs are recommended. The proper application of SCA will provide:

- ☐ pH control.
- ☐ Restored inhibitor levels to prevent corrosion.
- ☐ Water softening to deter formation of mineral deposits.
- ☐ Cavitation protection to protect wet sleeve cylinder liners.

NOTICE:

Failure to properly maintain coolant with SCA can result in damage to the cooling system and its related components. Conversely, over-concentration of SCA inhibitor can result in poor heat transfer, leading to engine damage. Always maintain concentrations at recommended levels. *Do not use traditional SCAs with OAT coolant.*

All information subject to change without notice. (Rev. 01/ 04)
6SE550 0401 Copyright © 2004 DETROIT DIESEL CORPORATION

www.HEAVY EQUIPMENTS.ORG
https://truckmanualshub.com/

Coolant Maintenance Intervals — Check the nitrite concentration at the regular intervals listed in Table 26 with a *Power Trac* 3–Way Test Strip. Nitrite levels *must* be within the ranges listed in Table 22. Additional SCA *must* be added to the coolant when it becomes depleted, as indicated by a nitrite concentration of 900 PPM or less. *If the nitrite concentration is greater than 900 PPM, do not add additional SCA*. If the nitrite concentration is above 3200 PPM, the system is over-inhibited and should be partially drained and filled with a 50/50 mix of water and EG or PG.

In this case the EG or PG should contain no inhibitors and should conform to ASTM D4985. This will dilute the over-concentrated inhibitors.

NOTE:
In non-OAT systems, nitrite concentration of 5000 PPM or higher on a Series 50 engine suggests problematic additive over-concentration. This condition *must* be corrected by immediate draining and flushing of the cooling system. Refill the system with new fully formulated or pre-charged coolant. Check the nitrite concentration level at the next maintenance interval with a Power Trac 3–Way Test Strip.

 Copyright © 2004 DETROIT DIESEL CORPORATION

www.HEAVY EQUIPMENTS.ORG
https://truckmanualshub.com/

Coolant	Interval [1]	Action
Antifreeze / Water + SCA Inhibitor (DDC *Power Cool*)	**A.** 20,000 Miles (32,000 km) or 3 Months* **B.** 500 Hours or 3 Months*	Test nitrite concentration with test strip. Add SCA or dilute coolant as needed.
	A. 300,000 Miles (480,000 km) **B.** 2 Years or 4,000 Hours*	Drain and clean system. Replace with new coolant.
Ethylene Glycol / Water + SCA Inhibitor or Propylene Glycol / Water + SCA Inhibitor	**A.** 20,000 Miles (32,000 km) or 3 Months* **B.** 500 Hours or 3 Months*	Test nitrite concentration with test strip. Add SCA or dilute coolant as needed.
	A. 300,000 Miles (480,000 km) **B.** 2 Years or 4,000 Hours*	Drain and clean system. Replace with new coolant.
Ethylene Glycol / Water + OAT Inhibitor or Propylene Glycol / Water + OAT Inhibitor	**A.** 300,000 Miles (480,000 km) or 2 Years* **B.** 5,000 Hours	Add *Power Cool* Plus Extender
	A. 600,000 Miles (960,000 km) **B.**4 Years or 10,000 Hours*	Drain and clean system. Replace with new coolant.
Water Only + SCA Inhibitor	**A.** 20,000 Miles (32,000 km) or 3 Months* **B.** 500 Hours or 3 Months*	Test nitrite concentration with test strip. Add SCA or dilute coolant as needed.
	A. 300,000 Miles (480,000 km) **B.** 2 Years or 4,000 Hours	Drain and clean system. Replace with new coolant.
Water Only + OAT Coolant	**A.** 300,000 Miles (480,000 km) or 2 Years* **B.** 5,000 Hours	Add *Power Cool* Plus Extender
	A. 600,000 Miles (960,000 km) **B.** 4 Years or 10,000 Hours	Clean and drain. Replace with new coolant.

[1] Maintenance interval based on application. Drain interval dependent on proper maintenance.

A. On-Highway Trucks and Motor Coaches, City Transit Coaches, Pick-Up and Delivery, Short Trip and Emergency Vehicles

B. Industrial, Generator Set and Other Applications

Table 26 Coolant Maintenance Intervals

All information subject to change without notice. (Rev. 01/ 04)
6SE550 0401 Copyright © 2004 DETROIT DIESEL CORPORATION

www.HEAVY EQUIPMENTS.ORG
https://truckmanualshub.com/

SCA Test Procedures

Detroit Diesel Power Trac 3–Way Coolant Test Strips should be used to measure nitrite and glycol concentrations. Part numbers are Listed in Table 46. Cavitation/corrosion is indicated on the strip by the level of nitrite concentration. Freeze/boil over protection is determined by glycol concentration.

CAUTION:

To avoid injury from the expulsion of hot coolant, never remove the cooling system pressure cap while the engine is at operating temperature. Remove the cap slowly to relieve pressure. Wear adequate protective clothing (face shield or safety goggles, rubber gloves, apron, and boots).

For best results make the test while the coolant is between 50 – 140 °F (10.0 – 60 °C). Wait at least 60, but not longer than 75, seconds before reading the nitrite level. Use the test strips as follows:

1. Dip the strip into coolant for one second. Remove and shake briskly to eliminate excess fluid.
2. Immediately compare the pad end (% glycol) to the color chart on the container.
3. Sixty seconds (one minute) after dipping, compare the nitrite pad to the color chart.
4. Color change of the additive indicator (middle pad) indicates the presence of inhibitor that is not approved by Detroit Diesel.

Promptly replace and tighten the test strip container cap after each use. Discard unused strips if they have turned light pink or tan.

A factory coolant analysis program is available through authorized Detroit Diesel service outlets. Part numbers are listed in Table 46 in the **Specifications** section. To verify coolant acceptability, submit a sample for coolant analysis every three (3) years, 300,000 miles (480,000 km), or 6,000 operating hours, whichever comes first.

 Copyright © 2004 DETROIT DIESEL CORPORATION

www.HEAVY EQUIPMENTS.ORG
https://truckmanualshub.com/

Need-Release Coolant Filters (Non-OAT Systems)

Spin-on coolant filters are available for Detroit Diesel engines. Membranes in the filters release SCAs before the coolant approaches a corrosive condition, protecting the engine from corrosion. The elements release the SCA charge as needed, as opposed to the maintenance SCA elements, which instantaneously release the SCA charge. Coolant filter elements should be replaced after one (1) year, 120,000 miles (192,000 km) or 2,000 operating hours, whichever comes first.

Dropout

Excessive amounts of some inhibitors in the coolant can cause a gel or crystalline deposit that reduces heat transfer and coolant flow. The deposit, called "dropout," takes the color of the coolant when wet, but appears as a white or gray powder when dry. It can pick up solid particles in the coolant and become gritty, causing excessive wear of water pump seals and other cooling system components.

CAUTION:

To avoid injury when using caustic cleaning agents, follow the chemical manufacturers usage, disposal, and safety instructions.

The wet gel can be removed by using a non-acid (alkali) type heavy-duty cleaner, such as Detroit Diesel *Power Cool* On-Line Cleaner (sodium nitrite/sodium tetraborate). Part numbers are listed in Table 45.

NOTE:
If the gel is allowed to dry, it is necessary to disassemble the engine and clean it with a caustic solution or physically clean individual components.

All information subject to change without notice. (Rev. 01/ 04)
6SE550 0401 Copyright © 2004 DETROIT DIESEL CORPORATION

www.HEAVY EQUIPMENTS.ORG
https://truckmanualshub.com/

Coolant Extender Inhibitor Additive for "OAT" Coolant

The inhibitors in OAT coolant must also be maintained, but less often than traditional SCA-type coolants. A portable test is available to test the levels of OAT inhibitors in coolant. Where this is not used, fleet testing has determined that a OAT coolant extender package should be added to the coolant at 300,000 miles (480,000 km), two (2) years, or 5,000 hours, whichever comes first. The proper maintenance dosages for all OAT coolants are listed in Table 26 , reflecting 0.6% by volume extender. This dosage should be added to the water-only and the glycol systems at the same interval.

The proper application of extender to OAT coolant will provide:

- ☐ pH Control
- ☐ Restored inhibitor levels to prevent corrosion
- ☐ Cavitation protection to protect wet sleeve cylinder liners

NOTE:
Do not use traditional SCAs in OAT coolant, and do not use OAT extender in traditional coolant.

OAT Coolant Drain Interval — A properly maintained OAT-inhibited coolant will last 600,000 miles (960,000 km), four (4) years, or 10,000 operating hours, whichever comes first. At this time the coolant should be drained, and the cooling system should be thoroughly cleaned, flushed, and filled with new, properly inhibited OAT coolant.

Chronic Coolant System Problems

The most commonly seen coolant system problems result from maintenance and formulation factors such as:

- ☐ Hard water
- ☐ Dilution of the coolant by the addition of untreated water
- ☐ Over dosage or under dosage of corrosion inhibitors
- ☐ Improper corrosion inhibitor (most often phosphated)
- ☐ Mixing SCAs
- ☐ Improper testing

Detroit Diesel Cooling System Maintenance Products

***Power Cool* SCAs —** *Power Cool* SCAs are water-soluble chemical compounds. These products are available in coolant filter elements,

 Copyright © 2004 DETROIT DIESEL CORPORATION

www.HEAVY EQUIPMENTS.ORG
https://truckmanualshub.com/

liquid packages, and in fully formulated *Power Cool* antifreeze.

NOTE:
Power Cool 3000 liquid SCA is more compatible with hard water than Power Cool 2000 SCA.

***Power Cool* Coolant Filter Elements —** Power Cool coolant filter elements (spin-on canisters) are available in various sizes suitable for cooling systems of varying capacities. Selection of the proper element size is vital when pre-charging non-fully formulated coolant (i.e., water) at initial fill and at maintenance intervals. **A fully formulated antifreeze must not have SCA added at initial fill. Do not use SCA-containing filters with OAT antifreeze or coolant.** The need for maintenance elements is determined by the results of the nitrite concentration test performed at each cooling system interval. *Do not automatically install maintenance elements at maintenance intervals, unless the nitrite concentration falls below 900 parts per million.*

***Power Cool* Cleaners —** *Power Cool* Liquid On-Line Cleaner is used for light deposits. *Power Cool* Dry Chemical Cleaner/Conditioner is used for heavy deposits or scale.

Summary of Coolant Recommendations

CAUTION:

To avoid injury from the expulsion of hot coolant, never remove the cooling system pressure cap while the engine is at operating temperature. Remove the cap slowly to relieve pressure. Wear adequate protective clothing (face shield or safety goggles, rubber gloves, apron, and boots).

1. Always maintain the engine coolant to meet Detroit Diesel specifications.
2. Only use water that meets the specifications listed in Table 24. Distilled, de-mineralized (reverse osmosis) or de-ionized water is preferred.
3. The proper dosage of inhibitors *must* be included in the coolant at initial fill for all Detroit Diesel engines. This dosage is usually included in the fully formulated antifreeze used, or it may need to be added if water alone or if less than 50% antifreeze is used. *The user is urged to refer to the full text of this section to determine the proper dosage.* Mixing of different manufacturers'

All information subject to change without notice. (Rev. 01/ 04)
6SE550 0401 Copyright © 2004 DETROIT DIESEL CORPORATION

www.HEAVY EQUIPMENTS.ORG
https://truckmanualshub.com/

technologies (brands) could cause cooling system problems.

4. Maintain the inhibitor at the prescribed concentration. Test the nitrite concentration by using a titration kit or Detroit Diesel Power Trac 3-Way Coolant Test Strips. Add SCA only if the nitrite concentration is below 900 PPM. *Do not use SCA in OAT coolant, and do not use Power Trac 3-Way Coolant Test Strips to test OAT coolant.*
5. Do not use another manufacturer's test kit to measure the SCA concentration of Detroit Diesel maintenance products.
6. Pre-mix coolant makeup solutions to the proper concentration before adding to the cooling system.
7. Do not mix OAT and other coolants in the same engine.
8. Do not use automotive coolants or coolants with phosphates.
9. Where antifreeze/boil over protection is required, use only antifreeze that meets TMC RP-329 “Type A” (EG) or TMC RP-330 “Type A” (PG) specifications. Always maintain coolant at the proper level.
10. Coolant Life of Glycol Coolant: A *properly maintained* cooling system, filled with phosphate-free coolant consisting of a 50/50 mix of antifreeze and water per TMC RP-329 “Type A” (EG) or TMC RP-330 “Type A” (PG) specifications can be operated for the life of the engine until overhaul. The proper maintenance involves periodic evaluation using Power Trac 3-Way Coolant Test Strips and the addition of SCA as needed, indicated by the strip test. To verify coolant acceptability, submit a sample for coolant analysis every 300,000 miles (480,000 km), three (3) years, or 5,000 operating hours, whichever comes first. Submit the sample in a DDC Power Trac Coolant Test Bottle. Required part numbers are listed in Table 46.
11. Coolant Life of OAT Coolant: A properly maintained OAT coolant may be operated 600,000 miles (960,000 km), four (4) years, or until overhaul, whichever comes first. At this time the system *must* be completely drained, thoroughly cleaned, and refilled. OAT Coolants require the addition of an extender at 300,000 miles (480,000 km), two (2) years, or 5,000 hours, whichever comes first. Use 1 pint of extender for every 20 gallons of coolant.
12. Coolant Life of Other Coolants: Other properly maintained

 Copyright © 2004 DETROIT DIESEL CORPORATION

www.HEAVY EQUIPMENTS.ORG
https://truckmanualshub.com/

coolants may be operated up to 250,000 miles (480,000 km), two (2) years, or 4,000 operating hours, whichever comes first. At this time the system *must* be completely drained, thoroughly cleaned, and refilled.

13. Do not use the following in Detroit Diesel engine cooling systems:
    - ☐ Soluble oil
    - ☐ High silicate, automotive-type antifreeze
    - ☐ Chromate SCAs
    - ☐ Methoxy propanol-base coolant
    - ☐ Methyl alcohol-base coolant
    - ☐ Sealer additives or coolant containing sealer additives.
    - ☐ HVAC coolant
    - ☐ Phosphated coolants

How to Drain and Flush the Cooling System

CAUTION:

To avoid injury from the expulsion of hot coolant, never remove the cooling system pressure cap while the engine is at operating temperature. Remove the cap slowly to relieve pressure. Wear adequate protective clothing (face shield or safety goggles, rubber gloves, apron, and boots).

1. With the engine cool, drain the previous solution from the engine and radiator. Dispose of the coolant in an environmentally friendly manner, according to state and/or federal (EPA) recommendations.
2. Refill the cooling system with clean, soft water and a good cooling system cleaning compound, such as those listed in Table 45 in the **Specifications** section. If the engine is warm, fill slowly to prevent the rapid cooling and distortion of the metal castings.
3. Start the engine and operate it for fifteen minutes to circulate the solution thoroughly.

All information subject to change without notice. (Rev. 01/ 04)
6SE550 0401 Copyright © 2004 DETROIT DIESEL CORPORATION

www.HEAVY EQUIPMENTS.ORG
https://truckmanualshub.com/

4. Stop the engine and allow it to cool.
5. With the engine cool, drain the cooling system completely.
6. Refill the cooling system with clean, soft water and operate it for fifteen minutes.
7. Stop the engine and allow it to cool.
8. With the engine cool, drain the cleaner residue from the cooling system.
9. Refill the system with the required coolant. Refer to section How to Select Coolant.
10. Entrapped air must be purged after filling the cooling system. To do this, allow the engine to warm up without the pressure cap installed. With the transmission in neutral, increase engine speed above 1000 RPM and add coolant as required. Install the pressure cap after the coolant level has stabilized at the bottom of the radiator filler neck.

NOTICE:

If the engine overheats and the coolant level is satisfactory, the cooling system may require cleaning with a descaling solvent and backflushing. Authorized Detroit Diesel service outlets are properly equipped to perform these services.

In addition to the cleaning procedure, other components of the cooling system should be checked periodically to keep the engine operating at peak efficiency.

Hoses. Cooling system hoses should be inspected and any hose that shows obvious signs of damage or feels abnormally soft or hard should be replaced. Damaged clamps should also be replaced. All external leaks should be corrected as soon as detected.

NOTE:
If Detroit Diesel ***Power Cool*** antifreeze/coolant (or equivalent fully formulated, precharged antifreeze) is used, a precharge element is not required. Coolant inhibitor levels *must* be checked at the intervals listed in Table 25.

 Copyright © 2004 DETROIT DIESEL CORPORATION

www.HEAVY EQUIPMENTS.ORG
https://truckmanualshub.com/

When to Service the Dry Type Air Cleaner

Replace dry type air cleaner elements when the maximum allowable air cleaner restriction (20 inches of water or 5.0 kPa) has been reached or annually, whichever comes first. Some air cleaners are equipped with a restriction indicator which aids in determining the servicing interval.

Cleaning and/or reusing dry paper type air cleaner elements is not recommended unless the cleaning method used removes clogging without damaging the element. Inspection and cleaning of elements *must* be done in accordance with the air cleaner manufacturer's recommendations, if any.

All information subject to change without notice. (Rev. 01/ 04)
6SE550 0401 Copyright © 2004 DETROIT DIESEL CORPORATION

www.HEAVY EQUIPMENTS.ORG
https://truckmanualshub.com/

BASIC TROUBLESHOOTING

This section covers basic troubleshooting of engine operation or performance malfunctions and their probable causes. In addition to operating the engine carefully and maintaining it properly, make sure to correct any malfunction promptly.

Objectionable Exhaust Symptoms and Probable Causes			
Probable Causes	**Black or Gray Smoke**	**Blue Smoke**	**White Smoke**
Damaged or dirty air cleaner	X		
Improper grade of fuel	X		
Excessive exhaust back pressure	X		
Misfiring cylinders			X
Lubricating oil not burned in cylinder (being burned in exhaust manifold or turbocharger)		X	
Faulty injector timing	X		
Faulty oil control rings		X	
Excessive installation angle		X	
Excessive oil in crankcase		X	
High ambient temperature	X		
Thin air (high altitude)	X		
Cetane rating of fuel too low			X
Air in the fuel system			X

 Copyright © 2004 DETROIT DIESEL CORPORATION

www.HEAVY EQUIPMENTS.ORG
https://truckmanualshub.com/

Hard Starting Symptoms and Probable Causes			
Probable Causes	**Engine Will Not Rotate**	**Low Cranking Speed**	**Engine Cranks But Will Not Start**
Low Battery Voltage	X	X	
Loose cranking motor connections	X		
Faulty cranking motor	X	X	
Faulty cranking motor switch	X	X	X
Internal seizure	X		
Improper lube oil		X	
Circuit breaker/electronic control malfunction			X
Fuse blown or missing			X
Insufficient Fuel Supply			
Air in fuel			X
Out of fuel			X
Loose fuel connections			X
Cracked fuel lines			X
Obstructed fuel filters/lines			X
Faulty fuel pump			X
Faulty injector operation			X
Restricted fuel fitting missing			X
DDEC Malfunction			X
Installation/operation of fuel check valve or shutoff valve			X
Low Compression			
Worn intake and exhaust valves			X
Worn piston rings/liners			X
Leaking cylinder head gasket			X
Improper intake and exhaust valve adjustments			X

All information subject to change without notice. (Rev. 01/ 04)
6SE550 0401 Copyright © 2004 DETROIT DIESEL CORPORATION

www.HEAVY EQUIPMENTS.ORG
https://truckmanualshub.com/

Abnormal Engine Operation Symptoms and Probable Causes			
Probable Causes	**Rough Running or Frequent Stalling**	**Low Power**	**Detonation**
Misfiring cylinder	X	X	
Insufficient fuel	X	X	
High return fuel temperature	X	X	
Low compression	X	X	
DDEC malfunction	X	X	
High air inlet restriction/exhaust back pressure		X	
Engine application		X	
High air inlet temperature		X	
High altitude operation		X	
Incorrect engine gear train timing		X	
Low coolant temperature			X
Oil picked up by inlet airstream			X
Faulty injector operation			X
Incorrect injector height setting		X	X

 Copyright © 2004 DETROIT DIESEL CORPORATION

www.HEAVY EQUIPMENTS.ORG
https://truckmanualshub.com/

Abnormal Operating Condition Symptoms and Probable Causes		
Probable Causes	**High Lubricating Oil Consumption**	**Low Oil Pressure**
Loose connections	X	
Cracked lines	X	
Damaged gaskets or seal rings	X	
* Lube oil loss at breather tube	X	
* Lube oil loss at dipstick tube	X	
Leaking oil cooler	X	
Leaking valve stem seals	X	
Worn/broken oil control rings	X	
Scored liner and/or piston	X	
Excessive engine installation angle	X	
Crankcase overfilled	X	
Oil in air tanks (air compressor malfunction)	X	
Plugged crankcase breather	X	
Oil level low		X
Improper engine oil viscosity (fuel in the oil)		X
Faulty oil pressure regulator or relief valve		X
Worn crankshaft, camshaft or connecting rod bearings		X
Missing cup plugs in rocker arm shafts		X
Air leaks in oil pump (suction side)		X
Worn or damaged oil pump		X
Faulty oil pressure gage		X
Faulty electrical components (for gage)		X
Plugged oil line or orifice		X

* Indicates high crankcase pressure

All information subject to change without notice. (Rev. 01/ 04)
6SE550 0401 Copyright © 2004 DETROIT DIESEL CORPORATION

www.HEAVY EQUIPMENTS.ORG
https://truckmanualshub.com/

Abnormal Coolant Temperature Symptoms and Probable Causes		
Probable Causes	**Above Normal Temperature**	**Below Normal Temperature**
Restricted cooling system passages	X	
Restricted radiator core passages	X	
Slipping fan drive belts	X	
Faulty temperature-controlled fan	X	
Obstruction in front of radiator or intercooler	X	
Low coolant level	X	
Damaged hoses	X	
Faulty thermostats	X	
Faulty water pump	X	
Faulty radiator pressure cap	X	
Air in coolant	X	
Thermostats not fully closed		X
Leakage around thermostat seals		X
Faulty temperature-controlled fan		X

 Copyright © 2004 DETROIT DIESEL CORPORATION

www.HEAVY EQUIPMENTS.ORG
https://truckmanualshub.com/

ENGINE STORAGE

When an engine is to be stored or removed from operation for a period of time, special precautions should be taken to protect the interior and exterior of the engine, transmission and other parts from rust accumulation and corrosion. The parts requiring attention and the recommended preparations are given below.

Preparing the Engine for Storage

It will be necessary to remove all rust or corrosion completely from any exposed part before applying rust preventive compound. Therefore, it is recommended that the engine be processed for storage as soon as possible after removal from operation.

The engine should be stored in a building that is dry and can be heated during the winter months. Moisture-absorbing chemicals are available commercially for use when excessive dampness prevails in the storage area.

Temporary Storage (30 Days or Less)

To protect the engine for a temporary period of time (30 days or less), follow this procedure:

1. With the engine at ambient temperature and cool to the touch, drain engine crankcase oil into a suitable container. Dispose of the oil in an environmentally friendly manner, according to state and/or federal (EPA) recommendations.
2. Fill the crankcase to the proper level with the recommended viscosity and grade of oil.
3. Fill the fuel tank with the recommended grade of fuel oil. Operate the engine for two (2) minutes at 1200 rpm and no load. **Do not drain the fuel system or the crankcase after this run.**
4. Check the air cleaner and service it, if necessary.
5. If freezing weather is expected during the storage period, check the antifreeze/coolant for required freeze and inhibitor protection. Add antifreeze solution to the cooling system in accordance with DDC's recommendations.

All information subject to change without notice. (Rev. 01/ 04)
6SE550 0401 Copyright © 2004 DETROIT DIESEL CORPORATION

www.HEAVY EQUIPMENTS.ORG
https://truckmanualshub.com/

Refer to section How to Select Coolant.

NOTE:
If an antifreeze solution is not required during storage, flush the cooling system with a good soluble oil (3% – 5% by volume) rust inhibitor to prevent rusting of the outside diameter of the cylinder liners.

CAUTION:

To avoid injury from flying debris when using compressed air, wear adequate eye protection (face shield or safety goggles) and do not exceed 40 psi (276 kPa) air pressure.

6. Clean the exterior of the engine (except electrical parts) with fuel oil and dry with compressed air.
7. Seal all engine openings. The material used must be waterproof, vaporproof and possess sufficient physical strength to resist puncture and damage from the expansion of entrapped air.

An engine prepared in this manner can be returned to service in a short time by removing the seals at the engine openings and by checking the engine coolant, fuel oil, lubricating oil and transmission oil levels.

Extended Storage (More than 30 Days)

To prepare an engine for extended storage (more than 30 days), follow this procedure:

1. Drain the cooling system and flush with clean, soft water. Refill with clean, soft water and add a rust inhibitor to the cooling system.
2. Circulate the coolant by operating the engine until normal operating temperature is reached.
3. Stop the engine.
4. With the engine at ambient temperature and cool to the touch, drain the engine crankcase oil into a suitable container. Remove the oil filters. Dispose of the oil and filters in an environmentally friendly manner, according to state and/or federal (EPA) recommendations. Replace the drain plug and tighten to 45 – 50 N·m (33 – 37 lb-ft) torque.
5. Install new lubricating oil filters. Fill the crankcase to the proper level with Tectyl® 930A preservative lubricating oil or an equivalent 30–weight preservative lubricating oil meeting Mil-L-21260C, Grade 2 Specification.

 Copyright © 2004 DETROIT DIESEL CORPORATION

www.HEAVY EQUIPMENTS.ORG
https://truckmanualshub.com/

6. Drain the fuel tank. Refill with enough clean No. 1 diesel fuel or pure kerosene to permit the engine to operate for about ten (10) minutes. If draining the fuel tank is not convenient, use a separate, portable supply of recommended fuel.

NOTE:
If engines are stored where condensation of water in the fuel tank may be a problem, additives containing methyl carbitol or butyl cellusolve may be added to the fuel. Follow manufacturer's instructions for treatment. Where biological contamination of fuel may be a problem, add a biocide such as Biobor® JF (or equivalent) to the fuel. When using a biocide, follow the manufacturer's concentration recommendations and observe all cautions and warnings.

7. Drain the fuel system and remove the fuel filters. Dispose of used filters in an environmentally responsible manner, according to state and/or federal (EPA) recommendations. Fill the new filters with No. 1 diesel fuel or pure kerosene and install on the engine.
8. Operate the engine for five (5) minutes to circulate the clean fuel throughout the engine. Be sure the engine fuel system is full.
9. Stop the engine and allow to cool. Then disconnect the fuel return line and the inlet line at the primary filter and securely plug both to retain the fuel in the engine.
10. **Transmission:** Follow the manufacturer's recommendations for prolonged storage.
11. **Power Take-Off:** If equipped, follow manufacturer's recommendations for prolonged storage.

NOTICE:

Failure to properly seal off the turbocharger air inlet and exhaust outlet openings before engine storage may permit air drafts to circulate through the turbocharger and rotate the turbine/compressor shaft without an adequate flow of lubricating oil to the center housing bearings. This can result in severe bearing damage.

12. **Turbocharger:** Since turbocharger bearings are pressure lubricated through the external oil line leading from the oil filter adaptor while the engine is operating, no further attention is required. However,

All information subject to change without notice. (Rev. 01/ 04)
6SE550 0401 Copyright © 2004 DETROIT DIESEL CORPORATION

www.HEAVY EQUIPMENTS.ORG
https://truckmanualshub.com/

the turbocharger air inlet and turbine exhaust outlet connection should be sealed off with moisture-resistant tape.

13. Apply a non-friction rust preventive compound to all exposed engine parts. If convenient, apply the rust preventive compound to the engine flywheel. If not, disengage the clutch mechanism to prevent the clutch disc from sticking to the flywheel.

NOTE:
Do not apply oil, grease or any wax-base compound to the flywheel. The cast iron will absorb these substances, which can “sweat” out during operation and cause the clutch to slip.

14. Drain the engine cooling system.
15. Drain the preservative oil from the engine crankcase. Reinstall and torque the 3/4” – 14 square, magnetic drain plug to 45 – 50 N·m (33 – 37 lb-ft).
16. Remove and clean the battery and battery cables with a baking soda-water solution and rinse with fresh water. Do not allow the soda solution to enter the battery. Add distilled water to the electrolyte (if necessary) and fully charge the battery. Store the battery in a cool (never below 0° C or 32° F) dry place. Keep the battery fully charged and check the level and specific gravity of the electrolyte regularly.
17. Insert heavy paper strips between the pulleys and drive belts to prevent sticking.
18. Seal all engine openings, including the exhaust outlet, with moisture-resistant tape. Use cardboard, plywood or metal covers where practical.
19. Clean and dry the exterior painted surfaces of the engine and spray with a suitable liquid automobile body wax, a synthetic resin varnish, or a rust preventive compound.
20. Protect the engine with a good weather-resistant tarpaulin and store it under cover, preferably in a dry building which can be heated during the winter months.

Outdoor storage of the engine is not recommended. If units must be kept out of doors, follow the preparation and storage instructions already given. Protect units with quality, weather-resistant tarpaulins (or other suitable covers) arranged to provide for air circulation.

 Copyright © 2004 DETROIT DIESEL CORPORATION

www.HEAVY EQUIPMENTS.ORG
https://truckmanualshub.com/

NOTICE:

Do not use plastic sheeting for outdoor storage. Plastic is fine for indoor storage. When used outdoors, however, enough moisture can condense on the inside of the plastic to rust ferrous metal surfaces and pit aluminum surfaces. If a unit is stored outside for any extended period of time, severe corrosion damage can result.

The stored engine should be inspected periodically. If there are any indications of rust or corrosion, corrective steps must be taken to prevent damage to the engine parts. Perform a complete inspection at the end of one year and apply additional treatment as required.

Procedure for Restoring to Service an Engine that Has Been in Extended Storage

If an engine has been in extended storage, prepare it for service as follows:

1. Remove the covers and tape from all the openings of the engine, fuel tank and electrical equipment. Do not overlook the exhaust outlet.
2. Remove the plugs from the inlet and outlet fuel lines and reconnect the lines to their proper positions.
3. Wash the exterior of the engine with fuel oil to remove the rust preventive. **Do not wash electrical components.**
4. Remove the rust preventive from the flywheel. Flush any soluble oil rust inhibitor (if used) in the cooling system.
5. Remove the paper strips from between the pulleys and drive belts.
6. Fill the crankcase to the proper level with the required grade of lubricating oil. Use a pressure lubricator to insure all bearings and rocker shafts are lubricated.
7. Fill the fuel tank with the required fuel.
8. Close all drain cocks and fill the engine cooling system with clean, soft water and required inhibitors. If the engine is to be exposed to freezing temperatures, install genuine Detroit Diesel ***Power Cool*** antifreeze or an equivalent ethylene glycol-base or propylene glycol-base antifreeze solution which provides required freeze, boilover, and inhibitor protection. Refer to section How to Select Coolant.

All information subject to change without notice. (Rev. 01/ 04)
6SE550 0401 Copyright © 2004 DETROIT DIESEL CORPORATION

www.HEAVY EQUIPMENTS.ORG
https://truckmanualshub.com/

9. Install and connect the battery. Make sure the average specific gravity of the battery is 1.260 or higher. Charge the battery, if necessary.
10. Service the air cleaner, if required.
11. **Transmission:** Follow the manufacturer's recommendations covering the return of the transmission to service.
12. **Power Take-Off:** If equipped, follow the manufacturer's recommendations covering the return of the power take-off to service.
13. **Turbocharger:** Remove the covers from the turbocharger air inlet and turbine outlet connections. Reconnect piping as required. Prelube the turbocharger center bearing housing. Refer to section Lubrication System Checks in section *Preparations for Starting the Engine the First Time*.

CAUTION:

Diesel engine exhaust and some of its constituents are known to the State of California to cause cancer, birth defects, and other reproductive harm.

- **Always start and operate an engine in a well ventilated area.**
- **If operating an engine in an enclosed area, vent the exhaust to the outside.**
- **Do not modify or tamper with the exhaust system or emission control system.**

14. After all preparations are completed, start the engine.

NOTE:
The small amount of rust preventive which remains in the fuel system will cause smoky exhaust for a few minutes.

NOTE:
Before subjecting the engine to a load or high speed, allow it to reach normal operating temperature. Then monitor the DDEC Diagnostic Data Link (DDL) for trouble codes.

 Copyright © 2004 DETROIT DIESEL CORPORATION

www.HEAVY EQUIPMENTS.ORG
https://truckmanualshub.com/

SERIES 50 SERVICE PUBLICATIONS

The service manual covering Detroit Diesel Series 50 engines and various reference works which may be of interest to the owner/operator are listed in Table 27.

To purchase a copy of any of these publications, contact an authorize Detroit Diesel distributor in the U.S. or Canada. Check the Yellow Pages under “Engine, Diesel” or refer to the Distributor and Dealer Directory listed below for the distributor or service outlet nearest you.

Description	Form No.
Series 50 Engine Service Manual	6SE50
DDEC III/IV Single ECM Troubleshooting Guide	6SE497
U.S. and Canada Distributor/Dealer Directory	6SE280
International Distributor/Dealer Directory	6SE281
Series 50/60 Service Outlet Directory	6SA336
Engine Requirements – Lubricating Oil, Fuel and Filters	7SE270
Coolant Requirements for Engine Cooling Systems	7SE298
Technician's Guide – Used Lubricating Oil Analysis	7SE398
Technician's Guide – Turbocharger	7SE374
Technician's Guide – Cooling System	7SE390
Series 50 Bus Engine Poster	31SA412

Table 27 Service Publications

All information subject to change without notice. (Rev. 01/ 04)
6SE550 0401 Copyright © 2004 DETROIT DIESEL CORPORATION

www.HEAVY EQUIPMENTS.ORG
https://truckmanualshub.com/

CUSTOMER ASSISTANCE

The satisfaction and goodwill of the owners of Detroit Diesel engines are of primary concern to Detroit Diesel Corporation and its distributor/dealer organizations.

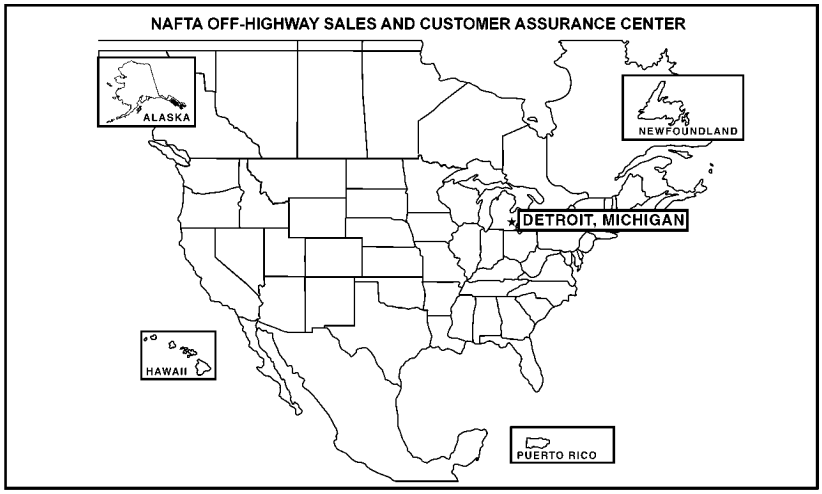

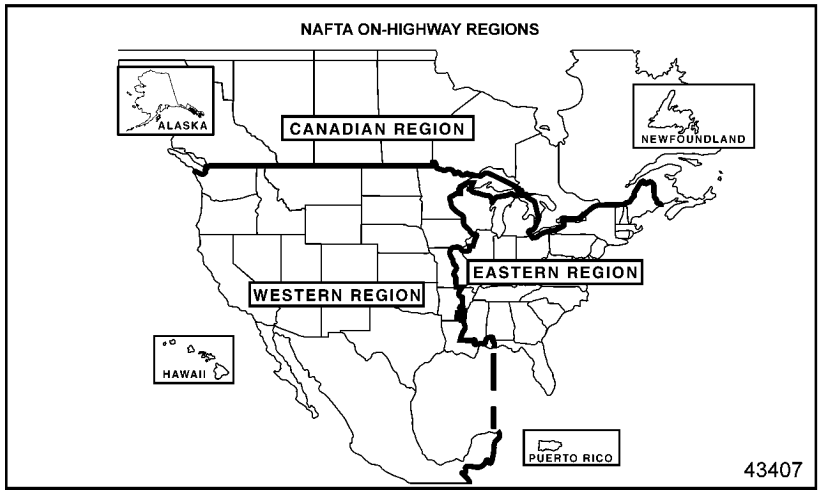

 Copyright © 2004 DETROIT DIESEL CORPORATION

www.HEAVY EQUIPMENTS.ORG
https://truckmanualshub.com/

Detroit Diesel North American NAFTA On-Highway Offices

Western Region
Irvine, California
7700 Irvine Center, Suite 275
Irvine, CA 92618
Telephone: 949-753-7710
Fax: 949-753-7711

Eastern Region
Piscataway, New Jersey
169 Old New Brunswich Road
Piscataway, NJ 08854
Telephone: 732-926-9622
Fax: 732-926-8522

Canadian Region
London, Ontario
Detroit Diesel of Canada, Ltd.
150 Dufferin Ave., Suite 701
London, ON N5A 5N6
Phone: 519-661-0149
Fax: 519-661-0171

DDC/MTU Off-Highway Sales and Customer Assurance Center Offices

Construction, Industrial and Mining Sales (BX7)
13400 Outer Drive, West
Detroit, MI 48239-4001
Phone: 313-592-5608
Fax: 313-592-5625

Marine Sales (BX6)
13400 Outer Drive, West
Detroit, MI 48239-4001
Phone: 313-592-5124
Fax: 313-592-5137

Powergen and Oil Field Sales (BX11)
13400 Outer Drive, West
Detroit, MI 48239-4001
Phone: 313-592-5708
Fax: 313-592-5158

Government Sales (BX11)
13400 Outer Drive, West
Detroit, MI 48239-4001
Phone: 313-592-5875
Fax: 313-592-5158

Customer Assurance (M24)
13400 Outer Drive, West
Detroit, MI 48239-4001
Phone: 313-592-5550
Fax: 313-592-5717

All information subject to change without notice. (Rev. 01/ 04)
6SE550 0401 Copyright © 2004 DETROIT DIESEL CORPORATION

www.HEAVY EQUIPMENTS.ORG
https://truckmanualshub.com/

DDC INTERNATIONAL REGIONAL OFFICE LOCATIONS

EUROPE, MIDDLE EAST, AFRICA (EMA) REGION (On/Off-Highway)
The Netherlands
Ridderpoort 9
2984 Ridderkerk
The Netherlands
Phone: (31) 180-442-900
Fax: (31) 180-419-544

LATIN AMERICAN REGION (Off-Highway)
Miami, Florida
2277 N.W. 14th Street
Latin America Building
Miami, FL 33125-0068
Phone: 305-637-1555
Fax: 305-637-1580

ASIAN REGION (On-Highway)
13400 Outer Drive, West
Detroit, Michigan 48239
Phone: 313-592-5990
Fax: 313-592-5887

ASIA/PACIFIC REGION (Off-Highway)
Singapore
No. 1 Benoi Place
Singapore 629923
Phone: (65) 686-15922
Fax: (65) 686-11550

PACIFIC REGION (Off-Highway)
Australia
11–13 Garling Road
Kings Park, NSW 2148
Beaumaris, Victoria 3193
Australia
Phone: (612) 8822-7000
Fax: (612) 8822-7083

AUSTRALIAN REGION (On-Highway)
P.O. Box 1472
Canterbury, Victoria 3124
Australia
Phone: (61) 39-836-0775
Fax: (61) 39-836-0770

MEXICO (On/Off-Highway)
Detroit Diesel Allison de Mexico, S.A.
Av. Santa Rosa 58
Col. Ampliacion Norte
San Juan Ixtacala, Tlanepantla
C.P. 54160, Edo de Mexico
Phone: 52-555-333-1802
52-5555-333-1870

 Copyright © 2004 DETROIT DIESEL CORPORATION

www.HEAVY EQUIPMENTS.ORG
https://truckmanualshub.com/

Road Service In U.S. and Canada

If you require road service for any reason in the U.S. or Canada, you may call the **1–800–445–1980** customer assistance phone number. An operator will assist you in determining what type of service is required. Not all problems are engine related and not all problems are covered by engine or vehicle warranties. *YOU MAY BE RESPONSIBLE FOR REPAIR EXPENSES.*

Before calling Customer Assistance, please do the following:

- ☐ Check coolant level
- ☐ Check fuel level
- ☐ Check DDEC fuses
- ☐ Check for fuel leaks
- ☐ Make sure manual shutoff valve (if installed) on the fuel filter adaptor, fuel processor body or fuel supply line is open.
- ☐ Check the oil level on the dipstick.
- ☐ Check diagnostic codes, refer to the Diagnostic Code List section in this guide.

If you call, have the following information available:

- ☐ Engine serial number
- ☐ Truck, bus or equipment make and model
- ☐ Odometer mileage (kilometers) or hourmeter hours
- ☐ Truck, bus or equipment owner/company name

Working with DDC Service Outlets

As the owner of a Detroit Diesel product you have a complete network of over 2,000 Detroit Diesel service outlets in the U.S. and Canada, plus many outlets worldwide that are prepared to meet your parts and service needs.

- ☐ Service by trained personnel.
- ☐ Sales team to help determine your specific power requirements.
- ☐ In many areas, emergency service 24 hours a day.
- ☐ Complete parts support, including reliabilt® remanufactured components.
- ☐ Product information and literature.

All information subject to change without notice. (Rev. 01/ 04)
6SE550 0401 Copyright © 2004 DETROIT DIESEL CORPORATION

www.HEAVY EQUIPMENTS.ORG
https://truckmanualshub.com/

We recognize, however, that despite the best intentions of everyone concerned, misunderstandings may occur. Normally, any situation that arises in connection with the sale, operation or service of your product will be handled by the authorized service outlet in your area. In the U.S. and Canada, check the Yellow Pages for the Detroit Diesel service outlet nearest you.

To further assure your complete satisfaction, we have developed the following procedure to be followed in the event you have a problem that has not been handled satisfactorily.

Step One

Discuss your problem with a member of management from the authorized service outlet. Frequently, complaints are the result of a breakdown in communication and can quickly be resolved by a member of management. If you have already discussed the problem with the Sales or Service Manager, contact the General Manager. If your complaint originates with a dealer, explain the matter to a management member of the distributorship with whom the dealer has a service agreement.

Step Two

When it appears that your problem cannot be readily resolved at the distributor level without additional assistance, contact the Detroit Diesel Regional Product Support Manager or Operations Manager responsible for your local distributor. You will be assisted by a member of the manager's staff, depending upon the nature of your problem.

Prior to this contact, have the following information available:

- ☐ Engine model* 604 _ _ _ _ _ .
- ☐ Engine serial number* 04R0_ _ _ _ _ _ .
- ☐ Type and make of equipment.
- ☐ Engine delivery date and accumulated miles or hours of operation.
- ☐ Nature of problem.
- ☐ Chronological summary of engine's history.
- ☐ Name and location of authorized service outlet.

***Important:** Your engine model number and serial number should be written on the lines provided. They will identify your engine and all service parts, plus provide warranty and extended coverage information.

 Copyright © 2004 DETROIT DIESEL CORPORATION

www.HEAVY EQUIPMENTS.ORG
https://truckmanualshub.com/

Step Three

If you are still not satisfied, present the entire matter in writing or by phone to:

Vice President, Customer Assurance
Detroit Diesel Corporation
13400 Outer Drive, West
Detroit, MI 48239–4001
Phone: 313–592–7357
FAX: 313–592–7888

When contacting the regional or home office, please keep in mind that ultimately your problem will likely be resolved at the distributorship or dealership, utilizing their facilities, equipment, and personnel. Therefore, it is suggested that you follow the above steps in sequence when experiencing a problem.

All information subject to change without notice. (Rev. 01/ 04)
6SE550 0401 Copyright © 2004 DETROIT DIESEL CORPORATION

www.HEAVY EQUIPMENTS.ORG
https://truckmanualshub.com/

LIMITED WARRANTY ON ENGINES USED IN ON-HIGHWAY VEHICLE APPLICATIONS

Terms Of Coverage: On-Highway Vehicle Engine Applications

Uses

This warranty applies to the first retail purchaser and subsequent owners during the WARRANTY PERIOD of new Detroit Diesel Series 50® Engines (referred to as Engine) manufactured by Detroit Diesel Corporation and/or supplied by Detroit Diesel Corporation, Detroit Diesel of Canada Limited, or Detroit Diesel Overseas Distribution Corporation (all which are collectively referred to as DDC) which are used in on-highway vehicle applications.

Defects

This warranty covers Engine REPAIRS to correct any malfunction occurring during the WARRANTY PERIOD resulting from defects in material and workmanship.

Repairs

To obtain warranty repairs, you must request the needed repairs within the WARRANTY PERIOD from an authorized DDC service outlet. Only new genuine parts or remanufactured parts or components supplied or approved by DDC will be used. DDC may, at its discretion, replace rather than repair components. A reasonable time must be allowed to perform the warranty repair after taking the engine to the authorized service outlet. The owner is responsible for the percentage of repair costs shown in the warranty period chart. Repairs will be performed during normal business hours.

Warranty Period

The WARRANTY PERIOD begins on the date the engine is delivered to the first retail purchaser or put in use prior to sale at retail, whichever date comes first, and ends at the time or mileage/kilometer limits in the WARRANTY PERIOD chart (Table 28).

 Copyright © 2004 DETROIT DIESEL CORPORATION

www.HEAVY EQUIPMENTS.ORG
https://truckmanualshub.com/

WARRANTY PERIOD				
Item	**Warranty Limitations (Whichever Occurs First)**		**Repair Charges to Be Paid by Owner**	
	Months	**Miles/ Kilometers**	**Parts**	**Labor**
Engine #	0–24	Unlimited	No Charge	No Charge
Accessories	0–24	0–100,000 Miles 0–160,000 Km	No Charge No Charge	No Charge No Charge
Upon expiration of the 24-month warranty coverage, but within 500,000 miles/ 800,000 km of use, the warranty continues to apply as follows:				
Major Components †	25 – 60	0 – 500,000 Miles 0–800,000 Km	No Charge	100% of Service Outlet's Normal Charge

Includes Jacobs Vehicle Systems braking devices and 50DN or T1 alternators, if installed.

† Cylinder Block/Head, Crankshaft, Camshaft, Main Bearing Bolts, Flywheel Housing, Connecting Rod Assemblies, Oil Cooler Housing, Water Pump Housing and Air Inlet Housing.

Table 28 Warranty Period Chart – On-Highway Vehicle Applications

Like Replacement Engine

Engine(s) supplied by DDC as a replacement for an engine still under warranty will assume the identity of the Engine being replaced and be entitled to the remaining warranty coverage.

Service Supplies

The cost of service supplies such as coolant, oil and filters which are not reusable due to needed warranty repairs is covered by this warranty.

All information subject to change without notice. (Rev. 01/ 04)
6SE550 0401 Copyright © 2004 DETROIT DIESEL CORPORATION

www.HEAVY EQUIPMENTS.ORG
https://truckmanualshub.com/

Engine Removal and Reinstallation

Labor costs for Engine removal and reinstallation, when necessary to make a warranty repair, are covered by this warranty.

This Warranty Does Not Cover:

Repairs Due to Accidents, Misuse, Storage Damage, Negligence or Certain Modifications

Repairs due to an accident, misuse, misapplication, storage damage, negligence or modification exceeding DDC specifications are not covered by this warranty.

Braking Devices

DDC is not responsible for the repair of non-factory-installed or DDC distributor-installed mechanical braking devices installed on the engine. Such devices are warranted by the brake manufacturer.

Fuel Injectors after 100,000 Miles/160,000 Kilometers

The repair or replacement of fuel injectors after 100,000 miles/160,000 kilometers of operation is not covered by this warranty.

Maintenance

DDC is not responsible for the cost of maintenance or repairs due to the lack of performance of required maintenance services as recommended by DDC, or the failure to use fuel, oil, lubricants and coolant meeting DDC-recommended specifications. Performance of the required maintenance and use of proper fuel, oil, lubricants and coolant are the responsibility of the owner. Refer to the MAINTENANCE section in this guide for details.

Incidental or Consequential Damage

Detroit Diesel Corporation is not responsible for incidental or consequential costs or expenses which the owner may incur as a result of a malfunction or failure covered by this warranty, such as communication expenses, meals, lodging, overtime, towing, loss of use of the engine or vehicle (“downtime”), loss of time, inconveniences, cargo loss or damage, and other similar costs and expenses.

 Copyright © 2004 DETROIT DIESEL CORPORATION

www.HEAVY EQUIPMENTS.ORG
https://truckmanualshub.com/

Other Limitations

The performance of REPAIRS is the exclusive Owner's remedy under this warranty. DDC does not authorize any person to assume or create for it any other obligation or liability in connection with the engine or accessories.

THIS LIMITED WARRANTY AND THE EMISSIONS CONTROL WARRANTY ARE THE ONLY WARRANTIES APPLICABLE TO THE ENGINE AND ACCESSORIES AS USED IN ON-HIGHWAY VEHICLE APPLICATIONS. DETROIT DIESEL CORPORATION MAKES NO OTHER WARRANTIES EXPRESS OR IMPLIED, INCLUDING ANY IMPLIED WARRANTY OF MERCHANTABILITY OR FITNESS FOR A PARTICULAR PURPOSE. DETROIT DIESEL CORPORATION SHALL NOT BE LIABLE FOR ANY INCIDENTAL OR CONSEQUENTIAL DAMAGES AS DESCRIBED ABOVE.

Some states do not allow the limitation of how long this warranty may last or the limitation or exclusion of incidental or consequential damages, so the above may not apply to you. This warranty gives you specific legal rights, and you may also have other rights which may vary from state to state.

All information subject to change without notice. (Rev. 01/ 04)
6SE550 0401 Copyright © 2004 DETROIT DIESEL CORPORATION

www.HEAVY EQUIPMENTS.ORG
https://truckmanualshub.com/

LIMITED WARRANTY ON ENGINES POWERING URBAN BUS, MOTOR COACH OR MOTOR HOME APPLICATIONS

Terms Of Coverage: Urban Bus, Motor Coach Or Motor Home Engine Applications

Uses

This warranty applies to the first retail purchaser and subsequent owners during the WARRANTY PERIOD of new Detroit Diesel Series 50® Engines (referred to as Engine) manufactured by Detroit Diesel Corporation and/or supplied by Detroit Diesel Corporation, Detroit Diesel of Canada Limited, or Detroit Diesel Overseas Distribution Corporation (all which are collectively referred to as DDC) powering urban bus, motor coach or motor home applications sold at retail on or after January 1, 2004.

Defects

This warranty covers Engine REPAIRS to correct any malfunction occurring during the WARRANTY PERIOD resulting from defects in material and workmanship.

Repairs

To obtain warranty repairs, you must request the needed repairs within the WARRANTY PERIOD from an authorized DDC service outlet. Only new genuine parts or remanufactured parts or components supplied or approved by DDC will be used. DDC may, at its discretion, replace rather than repair components. A reasonable time must be allowed to perform the warranty repair after taking the engine to the authorized service outlet. The owner is responsible for the percentage of repair costs shown in the Warranty Period Chart. Repairs will be performed during normal business hours.

Warranty Period

The WARRANTY PERIOD begins on the date the engine is delivered to the first retail purchaser or put in use prior to sale at retail, whichever date comes first, and ends at the time or mileage/kilometer limits in the WARRANTY PERIOD chart (Table 29).

 Copyright © 2004 DETROIT DIESEL CORPORATION

www.HEAVY EQUIPMENTS.ORG
https://truckmanualshub.com/

Warranty Period				
Item	**Warranty Limitations (Whichever Occurs First)**		**Repair Charge to Be Paid By Owner**	
	Months	**Miles/ Kilometers**	**Parts**	**Labor**
Engine *	0 – 24	Unlimited	No Charge	No Charge
Accessories	0 – 24	0–100,000 Miles 0–160,000 Km	No Charge	No Charge
	Upon expiration of the 24-month warranty coverage, but within 500,000 miles/800,000 km of use, the warranty continues to apply as follows:			
Major Components †	25 – 60	0 – 500,000 Miles 0 – 800,000 Km	No Charge	100% of service outlet's normal charge

* Includes Jacobs Vehicle Systems braking devices, 50DN or T1 alternators, if so equipped.

† Cylinder Block/Head, Crankshaft, Camshaft, Main Bearing Bolts, Flywheel Housing, Connecting Rod Assemblies, Oil Cooler Housing, Water Pump Housing and Air Inlet Housing.

Table 29 Warranty Period Chart – Urban Bus, Motor Coach and Motor Home Applications

Service Supplies

The cost of service supplies such as coolant, oil and filters which are not reusable due to needed warranty repairs is covered by this warranty.

Like Replacement Engine

Engine(s) supplied by DDC as a replacement for an engine still under warranty will assume the identity of the Engine being replaced and be entitled to the remaining warranty coverage.

All information subject to change without notice. (Rev. 01/ 04)
6SE550 0401 Copyright © 2004 DETROIT DIESEL CORPORATION

www.HEAVY EQUIPMENTS.ORG
https://truckmanualshub.com/

Engine Removal and Reinstallation

Reasonable labor costs for Engine removal and reinstallation, when necessary to make a warranty repair, are covered by this warranty.

This Warranty Does Not Cover:

Repairs Due to Accidents, Misuse, Alteration, Storage Damage, Negligence or Certain Modifications

Repairs due to an accident, misuse, alteration, misapplication, storage damage, negligence or modification exceeding DDC specifications are not covered by this warranty.

Braking Devices

DDC is not responsible for the repair of non-Jacobs Vehicle Systems mechanical braking devices installed on the Engine. Such devices are warranted by the brake manufacturer.

Fuel Injectors after 200,000 Miles/320,000 Kilometers

The repair or replacement of fuel injectors after 200,000 miles/320,000 kilometers of operation is not covered by this warranty.

Maintenance

DDC is not responsible for the cost of maintenance or repairs due to the lack of performance of required maintenance services or the failure to use fuel, oil, lubricants and coolant meeting DDC-recommended specifications. Performance of the required maintenance and use of proper fuel, oil, lubricants and coolant are the responsibility of the owner. Refer to the MAINTENANCE section in this guide for details.

Incidental or Consequential Damage

Detroit Diesel Corporation is not responsible for incidental or consequential costs or expenses which the owner may incur as a result of a malfunction or failure covered by this warranty, such as communication expenses, meals, lodging, loss of use of the engine or vehicle (“downtime”), loss of time, inconvenience, cargo loss or damage, and other similar costs and expenses.

Other Limitations

The performance of REPAIRS is the exclusive Owner's remedy under this warranty. DDC does not authorize any person to assume or create for it any other obligation or liability in connection with the Engine.

 Copyright © 2004 DETROIT DIESEL CORPORATION

www.HEAVY EQUIPMENTS.ORG
https://truckmanualshub.com/

THIS LIMITED WARRANTY AND THE EMISSIONS CONTROL WARRANTY ARE THE ONLY WARRANTIES APPLICABLE TO THESE ENGINES POWERING URBAN BUS, MOTOR COACH OR MOTOR HOME APPLICATIONS. DETROIT DIESEL CORPORATION MAKES NO OTHER WARRANTIES EXPRESS OR IMPLIED, INCLUDING ANY IMPLIED WARRANTY OF MERCHANTABILITY OR FITNESS FOR A PARTICULAR PURPOSE. DETROIT DIESEL CORPORATION SHALL NOT BE LIABLE FOR ANY INCIDENTAL OR CONSEQUENTIAL DAMAGES AS DESCRIBED ABOVE.

Some states do not allow the limitation of how long this warranty may last or the limitation or exclusion of incidental or consequential damages, so the above may not apply to you. This warranty gives you specific legal rights, and you may also have other rights which may vary from state to state.

All information subject to change without notice. (Rev. 01/ 04)
6SE550 0401 Copyright © 2004 DETROIT DIESEL CORPORATION

www.HEAVY EQUIPMENTS.ORG
https://truckmanualshub.com/

LIMITED WARRANTY ON ENGINES AND ENGINE ACCESSORIES USED IN CONSTRUCTION/INDUSTRIAL APPLICATIONS

Terms Of Coverage: Construction/Industrial Engine Applications

Uses

This warranty applies to the first retail purchaser and subsequent owners during the WARRANTY PERIOD of new Detroit Diesel Series 50® Engines (referred to as Engine) manufactured by Detroit Diesel Corporation and/or supplied by Detroit Diesel Corporation, Detroit Diesel of Canada Limited, or Detroit Diesel Overseas Distribution Corporation (all which are collectively referred to as DDC) which are used in construction/industrial applications.

Defects

This warranty covers Engine REPAIRS to correct any malfunction occurring during the WARRANTY PERIOD resulting from defects in material and workmanship.

Repairs

To obtain warranty repairs, you must request the needed repairs within the WARRANTY PERIOD from an authorized DDC service outlet. Only new genuine parts or remanufactured parts or components supplied or approved by DDC will be used. DDC may, at its discretion, replace rather than repair components. A reasonable time must be allowed to perform the warranty repair after taking the engine to the authorized service outlet. Repairs will be performed during normal business hours.

The owner is responsible for the percentage of repair costs shown in the WARRANTY PERIOD chart (Table 30).

Warranty Period

The WARRANTY PERIOD begins on the date the engine is delivered to the first retail purchaser or put in use prior to sale at retail, whichever date occurs first, and ends at the time or hour limits shown in the WARRANTY PERIOD chart (Table 30).

Service Supplies

The cost of service supplies such as coolant, oil and filters which are not reusable due to warranted repairs is covered by this warranty.

 Copyright © 2004 DETROIT DIESEL CORPORATION

www.HEAVY EQUIPMENTS.ORG
https://truckmanualshub.com/

Warranty Period				
Item	**Warranty Limitations (Whichever Occurs First)**		**Adjustments to Be Paid by the Owner**	
	Months	**Engine Hours**	**Parts**	**Labor**
Engine	0 – 12	No Limit	No Charge	No Charge
Accessories	0 – 12	0 – 2,000	No Charge	No Charge
	Upon expiration of the twelve (12) month warranty coverage, but within 12,000 hours of use, the warranty continues to apply as follows:			
Block, Crankshaft and Connecting Rods	13 – 36	0 – 12,000	No Charge	No Charge

Table 30 Warranty Period Chart – Construction/Industrial Applications

Engine Removal and Reinstallation – Construction/Industrial Applications

Reasonable labor costs for Engine removal and reinstallation, when necessary to make a warranty repair, are covered by this warranty during the first twelve (12) months of service.

Mechanic's Travel Expenses

DDC will pay reasonable travel expenses for the repairing mechanic to travel to and from the repair site.

Like Replacement Engine

Engine(s) supplied by DDC as a replacement for an Engine still under warranty will assume the identity of the Engine being replaced and be entitled to the remaining warranty coverage.

All information subject to change without notice. (Rev. 01/ 04)
6SE550 0401 Copyright © 2004 DETROIT DIESEL CORPORATION

www.HEAVY EQUIPMENTS.ORG
https://truckmanualshub.com/

This Warranty Does Not Cover:

Repairs Due to Accidents, Misuse, Storage Damage, Negligence or Certain Modifications

Repairs due to an accident, misuse, misapplication, storage damage, negligence or modification exceeding DDC specifications are not covered by this warranty.

Engine Removal and Reinstallation – Agricultural Machinery and Stand-by Pump Applications

Labor and material costs for engine removal and reinstallation, when necessary to make a warranty repair, are not covered by this warranty when the engine is in an agricultural machinery or stand-by pump application.

Non-DDC Supplied/Manufactured Components

DDC is not responsible for repair of components and/or assemblies which are manufactured or supplied by another manufacturer, such as non-DDC power take-offs and intake and exhaust systems. Such items are covered by the equipment manufacturer.

Maintenance

DDC is not responsible for the cost of maintenance or repairs due to lack of performance of required maintenance services as recommended by DDC, or the failure to use fuel, oil, lubricants and coolant meeting DDC-recommended specifications. Performance of the required maintenance and use of proper fuel, oil, lubricants and coolant are the responsibility of the owner. Refer to the MAINTENANCE section in this guide for details.

Incidental or Consequential Damage

DDC is not responsible for incidental or consequential costs or expenses which the owner may incur as a result of a malfunction or failure covered by this warranty, such as communication expenses, meals, lodging, overtime, towing, and any associated loss of use of the Engine or equipment (“downtime”), loss of time, inconvenience, cargo loss or damage, and other similar costs and expenses.

 Copyright © 2004 DETROIT DIESEL CORPORATION

www.HEAVY EQUIPMENTS.ORG
https://truckmanualshub.com/

Other Limitations

The performance of REPAIRS is the exclusive Owner's remedy under this warranty. DDC does not authorize any person to assume or create for it any other obligation or liability in connection with the Engine or the Accessories.

THIS LIMITED WARRANTY AND THE EMISSIONS CONTROL WARRANTY ARE THE ONLY WARRANTIES APPLICABLE TO THE ENGINE AND ACCESSORIES AS USED IN CONSTRUCTION/INDUSTRIAL, AGRICULTURAL MACHINERY AND STAND-BY PUMP APPLICATIONS. DETROIT DIESEL CORPORATION MAKES NO OTHER WARRANTIES EXPRESS OR IMPLIED, INCLUDING ANY IMPLIED WARRANTY OF MERCHANTABILITY OR FITNESS FOR A PARTICULAR PURPOSE. DETROIT DIESEL CORPORATION SHALL NOT BE LIABLE FOR ANY INCIDENTAL OR CONSEQUENTIAL DAMAGES AS DESCRIBED ABOVE.

Some states do not allow the limitation of how long this warranty may last or the limitation or exclusion of incidental or consequential damages, so the above may not apply to you. This warranty gives you specific legal rights, and you may also have other rights which may vary from state to state.

All information subject to change without notice. (Rev. 01/ 04)
6SE550 0401 Copyright © 2004 DETROIT DIESEL CORPORATION

www.HEAVY EQUIPMENTS.ORG
https://truckmanualshub.com/

LIMITED WARRANTY ON ENGINES USED IN AGRICULTURAL MACHINERY

Terms Of Coverage: Agricultural Machinery Engine Applications

Uses

This warranty applies to the first retail purchaser and subsequent owners during the WARRANTY PERIOD of new Detroit Diesel Series 50® Engines (referred to as Engine) manufactured by Detroit Diesel Corporation and/or supplied by Detroit Diesel Corporation, Detroit Diesel of Canada Limited, or Detroit Diesel Overseas Distribution Corporation (all which are collectively referred to as DDC) which are used in agricultural machinery.

Defects

This warranty covers Engine REPAIRS to correct any malfunction occurring during the WARRANTY PERIOD resulting from defects in material and workmanship.

Warranty Period				
Item	Warranty Limitations (Whichever Occurs First)		Repair Charges to Be Paid by Owner	
	Months	Engine Hours	Parts	Labor
Engine	Up to 36	Up to 2,500	No Charge	No Charge
Accessories	Up to 12	Up to 2,000	No Charge	No Charge

Table 31 Warranty Period Chart – Agricultural Machinery

Repairs

To obtain warranty repairs, you must request the needed repairs within the WARRANTY PERIOD from an authorized DDC service outlet. Only new genuine parts or remanufactured parts or components supplied or approved by DDC will be used. DDC may, at its discretion, replace rather than repair components. A reasonable time must be allowed to perform the warranty repair after taking the engine to the authorized service outlet. Repairs will be performed during normal business hours.

 Copyright © 2004 DETROIT DIESEL CORPORATION

www.HEAVY EQUIPMENTS.ORG
https://truckmanualshub.com/

The owner is responsible for the percentage of repair costs shown in the WARRANTY PERIOD chart (Table 31).

Warranty Period

The WARRANTY PERIOD begins on the date the engine is delivered to the first retail purchaser or put in use prior to sale at retail, whichever date occurs first, and ends at the time or hour limits shown in the WARRANTY PERIOD chart (Table 31).

This Warranty Does Not Cover:

Repairs Due to Accidents, Misuse, Storage Damage, Negligence or Certain Modifications

Repairs due to an accident, misuse, misapplication, storage damage, negligence or modification exceeding DDC specifications are not covered by this warranty.

Engine Removal and Reinstallation

Labor costs for Engine removal and reinstallation, when necessary to make a warranty repair, are not covered by this warranty.

Non-DDC Supplied/Manufactured Components

DDC is not responsible for repair of components and/or assemblies which are manufactured or supplied by another manufacturer, such as intake and exhaust systems. Such items are covered by warranties issued by the manufacturer or supplier.

Maintenance

DDC is not responsible for the cost of maintenance or repairs due to lack of performance of required maintenance services as recommended by DDC, or the failure to use fuel, oil, lubricants and coolant meeting DDC-recommended specifications. Performance of the required maintenance and use of proper fuel, oil, lubricants and coolant are the responsibility of the owner. Refer to the MAINTENANCE section in this guide for details.

All information subject to change without notice. (Rev. 01/ 04)
6SE550 0401 Copyright © 2004 DETROIT DIESEL CORPORATION

www.HEAVY EQUIPMENTS.ORG
https://truckmanualshub.com/

Incidental or Consequential Damage

This warranty does not cover any economic loss, including without limitation, communication expenses, meals, lodging, loss of use of the Engine or equipment ("downtime"), loss of time, inconvenience, cargo loss or damage, overtime, towing or any other cost or expense resulting from a defect covered by this warranty.

Other Limitations

The performance of REPAIRS is the exclusive Owner's remedy under this warranty. DDC does not authorize any person to assume or create for it any other obligation or liability in connection with the Engine or the Accessories.

THIS LIMITED WARRANTY IS THE ONLY WARRANTY APPLICABLE TO THE ENGINE AND ACCESSORIES AS USED IN AGRICULTURAL MACHINERY APPLICATIONS. DETROIT DIESEL CORPORATION MAKES NO OTHER WARRANTIES EXPRESS OR IMPLIED, INCLUDING ANY IMPLIED WARRANTY OF MERCHANTABILITY OR FITNESS FOR A PARTICULAR PURPOSE. DETROIT DIESEL CORPORATION SHALL NOT BE LIABLE FOR ANY INCIDENTAL OR CONSEQUENTIAL DAMAGES AS DESCRIBED ABOVE.

Some states do not allow the limitation of how long this warranty may last or the limitation or exclusion of incidental or consequential damages, so the above may not apply to you. This warranty gives you specific legal rights, and you may also have other rights which may vary from state to state.

 Copyright © 2004 DETROIT DIESEL CORPORATION

www.HEAVY EQUIPMENTS.ORG
https://truckmanualshub.com/

LIMITED WARRANTY ON ENGINES USED IN PRIME POWER GENERATOR SETS

Terms Of Coverage: Prime Power Generator Set Engine Applications

Uses

This warranty applies to the first retail purchaser and subsequent owners during the WARRANTY PERIOD of new Detroit Diesel Series 50® Engines (referred to as Engine) manufactured by Detroit Diesel Corporation and/or supplied by Detroit Diesel Corporation, Detroit Diesel of Canada Limited, or Detroit Diesel Overseas Distribution Corporation (all which are collectively referred to as DDC) which are used in prime power generators delivered in the U.S. or Canada.

Defects

This warranty covers Engine REPAIRS to correct any malfunction occurring during the WARRANTY PERIOD resulting from defects in material or workmanship.

Repairs

To obtain warranty repairs, you must request the needed repairs within the WARRANTY PERIOD from an authorized DDC service outlet. Only new genuine parts or remanufactured parts or components supplied or approved by DDC will be used. DDC may, at its discretion, replace rather than repair components. A reasonable time must be allowed to perform the warranty repair after taking the engine to the authorized service outlet. Repairs will be performed during normal business hours.

Warranty Period

The WARRANTY PERIOD begins on the date the engine is delivered to the first retail purchaser or put in use prior to sale at retail, whichever date occurs first, and ends at the time or hour limits shown in the WARRANTY PERIOD chart listed in Table 32.

Like Replacement Engine

Engine(s) supplied by DDC as a replacement for an Engine still under warranty will assume the identity of the Engine being replaced and be entitled to the remaining warranty coverage.

All information subject to change without notice. (Rev. 01/ 04)
6SE550 0401 Copyright © 2004 DETROIT DIESEL CORPORATION

www.HEAVY EQUIPMENTS.ORG
https://truckmanualshub.com/

Warranty Period				
Item	Warranty Limitations (Whichever Occurs First)		Repair Charges to Be Paid by Owner	
	Month	Engine Hours	Parts	Labor
Engine	0 – 12	Unlimited	No Charge	No Charge
Upon expiration of the 12 month warranty coverage, but within 12,000 hours of use, the warranty continues to apply as follows:				
Block, Crankshaft, and Connecting Rods (assemblies)	13 – 36	0 – 12,000	No Charge	100% of Service Outlet's Normal Charge

Table 32 Warranty Period Chart – Prime Power Generator Set

Service Supplies

The cost of service supplies such as coolant, oil and filters which are not reusable due to warranted repairs is covered by this warranty.

Mechanic's Travel Expenses

DDC will pay reasonable travel expenses for the repairing mechanic to travel to and from the repair site.

This Warranty Does Not Cover:

Repairs Due to Accidents, Misuse, Storage Damage, Negligence or Certain Modifications

Repairs due to an accident, misuse, misapplication, storage damage, negligence or modification exceeding DDC specifications are not covered by this warranty.

Engine Removal and Reinstallation

Reasonable labor costs for Engine removal and reinstallation, when necessary to make a warranty repair, are covered by this warranty.

 Copyright © 2004 DETROIT DIESEL CORPORATION

www.HEAVY EQUIPMENTS.ORG
https://truckmanualshub.com/

Non-DDC Supplied/Manufactured Components

DDC is not responsible for repair of components and/or assemblies which are manufactured or supplied by another manufacturer, such as intake and exhaust systems. Such items may be covered by the equipment manufacturer.

Maintenance

DDC is not responsible for the cost of maintenance or repairs due to lack of performance of required maintenance services as recommended by DDC, or the failure to use fuel, oil, lubricants, coolant, cooling air and ventilation meeting DDC-recommended specifications. Performance of the required maintenance and use of proper fuel, oil, lubricants and coolant are the responsibility of the owner. Refer to the MAINTENANCE section in this guide for details.

Incidental or Consequential Damage

This warranty does not cover any economic loss, including without limitation, communication expenses, meals, lodging, loss of use of the Engine, loss of time, inconvenience, overtime, transportation of the Engine or any other cost or expense resulting from a defect covered by this warranty.

Other Limitations

THIS LIMITED WARRANTY IS THE ONLY WARRANTY APPLICABLE TO THE ENGINE AND ACCESSORIES AS USED IN PRIME POWER GENERATORS. DETROIT DIESEL CORPORATION MAKES NO OTHER WARRANTIES EXPRESS OR IMPLIED, INCLUDING ANY IMPLIED WARRANTY OF MERCHANTABILITY OR FITNESS FOR A PARTICULAR PURPOSE. DETROIT DIESEL CORPORATION SHALL NOT BE LIABLE FOR ANY INCIDENTAL OR CONSEQUENTIAL DAMAGES AS DESCRIBED ABOVE.

Some states do not allow the limitation of how long this warranty may last or the limitation or exclusion of incidental or consequential damages, so the above may not apply to you. This warranty gives you specific legal rights, and you may also have other rights which may vary from state to state.

All information subject to change without notice. (Rev. 01/ 04)
6SE550 0401 Copyright © 2004 DETROIT DIESEL CORPORATION

www.HEAVY EQUIPMENTS.ORG
https://truckmanualshub.com/

LIMITED WARRANTY ON ENGINES USED IN STAND-BY GENERATOR SETS

Terms Of Coverage: Stand-By Generator Set Engine Applications

Uses

This warranty applies to the first retail purchaser and subsequent owners during the WARRANTY PERIOD of new Detroit Diesel Series 50® Engines (referred to as Engine) manufactured by Detroit Diesel Corporation and/or supplied by Detroit Diesel Corporation, Detroit Diesel of Canada Limited, or Detroit Diesel Overseas Distribution Corporation (all which are collectively referred to as DDC) which are used in stand-by generators delivered in the U.S. or Canada.

Defects

This warranty covers Engine REPAIRS to correct any malfunction occurring during the WARRANTY PERIOD resulting from defects in material or workmanship.

Repairs

To obtain warranty repairs, you must request the needed repairs within the WARRANTY PERIOD from an authorized DDC service outlet. Only new genuine parts or remanufactured parts or components supplied or approved by DDC will be used. DDC may, at its discretion, replace rather than repair components. A reasonable time must be allowed to perform the warranty repair after taking the engine to the authorized service outlet. Repairs will be performed during normal business hours.

Warranty Period				
Item	Warranty Limitations (Whichever Occurs First)		Repair Charges to Be Paid by Owner	
	Months	Engine Hours	Parts	Labor
Engine	Up to 24	0 – 800	No Charge	No Charge

Table 33 Warranty Period Chart – Stand-By Generator Set

 Copyright © 2004 DETROIT DIESEL CORPORATION

www.HEAVY EQUIPMENTS.ORG
https://truckmanualshub.com/

Warranty Period

The WARRANTY PERIOD begins on the date the engine is delivered to the first retail purchaser or put in use prior to sale at retail, whichever date occurs first, and ends at the time limits shown in the WARRANTY PERIOD chart listed in Table 33.

Like Replacement Engine

Engine(s) supplied by DDC as a replacement for an Engine still under warranty will assume the identity of the Engine being replaced and be entitled to the remaining warranty coverage.

Service Supplies

The cost of service supplies such as coolant, oil and filters which are not reusable due to warranted repairs is covered by this warranty.

Mechanic's Travel Expenses

DDC will pay reasonable travel expenses for the repairing mechanic to travel to and from the repair site.

This Warranty Does Not Cover:

Repairs Due to Accidents, Misuse, Storage Damage, Negligence or Certain Modifications

Repairs due to an accident, misuse, misapplication, storage damage, negligence or modification exceeding DDC specifications are not covered by this warranty.

Engine Removal and Reinstallation

Reasonable labor costs for Engine removal and reinstallation, when necessary to make a warranty repair, are covered by this warranty.

Non-DDC Supplied/Manufactured Components

DDC is not responsible for repair of components and/or assemblies which are manufactured or supplied by another manufacturer, such as intake and exhaust systems and fuel storage tanks. Such items may be covered by warranties issued by the manufacturer or supplier.

All information subject to change without notice. (Rev. 01/ 04)
6SE550 0401 Copyright © 2004 DETROIT DIESEL CORPORATION

www.HEAVY EQUIPMENTS.ORG
https://truckmanualshub.com/

Maintenance

DDC is not responsible for the cost of maintenance or repairs due to lack of performance of required maintenance services as recommended by DDC, or the failure to use fuel, oil, lubricants, coolant, cooling air and ventilation meeting DDC-recommended specifications. Performance of the required maintenance and use of proper fuel, oil, lubricants and coolant are the responsibility of the owner. Refer to the MAINTENANCE section in this guide for details.

Incidental or Consequential Damage

This warranty does not cover any economic loss, including without limitation, communication expenses, meals, lodging, loss of use of the Engine, loss of time, inconvenience, overtime, transportation of the Engine or any other cost or expense resulting from a defect covered by this warranty.

Other Limitations

THIS LIMITED WARRANTY IS THE ONLY WARRANTY APPLICABLE TO THE ENGINE AS USED IN STAND-BY GENERATORS. DETROIT DIESEL CORPORATION MAKES NO OTHER WARRANTIES EXPRESS OR IMPLIED, INCLUDING ANY IMPLIED WARRANTY OF MERCHANTABILITY OR FITNESS FOR A PARTICULAR PURPOSE. DETROIT DIESEL CORPORATION SHALL NOT BE LIABLE FOR ANY INCIDENTAL OR CONSEQUENTIAL DAMAGES AS DESCRIBED ABOVE.

Some states do not allow the limitation of how long this warranty may last or the limitation or exclusion of incidental or consequential damages, so the above may not apply to you. This warranty gives you specific legal rights, and you may also have other rights which may vary from state to state.

 Copyright © 2004 DETROIT DIESEL CORPORATION

www.HEAVY EQUIPMENTS.ORG
https://truckmanualshub.com/

SPECIFICATIONS

This section lists the fuel and lubrication oil filters needed for the Series 50 engine. Also listed as the various *Power* Cool®engine products

Fuel and Lubricating Oil Filters

The fuel filters and their part numbers are listed in Table 34. The lubricating oil filters and their part numbers are listed in Table 35.

Filter Type	Detroit Diesel Part No.
Primary — Spin-On	23530706
Primary Fuel/Water Separator — Spin-On†	23512317†
Secondary — Spin-On	22530707
Primary — Fuel Pro 380/382 Element	23521528 or 23529168#

Elemax™ extended service element (optional).
† Optional. May be used in place of, but not together with, the primary filter.

Table 34 Fuel Filters — Series 50 Regualr Service

Filter Type	Detroit Diesel Part No.
Full Flow	23530573
Full Flow (High Capacity)	DELF3998

Table 35 Lubricating Oil Filters

Oil Pan

All Series 50 truck oil pans (front sump and rear sump) require the same amount of engine oil.

Oil Pan Capacity — 19 quarts to the LOW mark without oil filters. 22 quarts to the FULL mark without oil filters.

Total Oil Capacity Of The Engine — 29 quarts to the FULL mark with oil filters installed and filters and oil galleries charged.

All information subject to change without notice. (Rev. 01/ 04)
6SE550 0401 Copyright © 2004 DETROIT DIESEL CORPORATION

www.HEAVY EQUIPMENTS.ORG
https://truckmanualshub.com/

Power Cool® ENGINE PRODUCTS

Maintenance of the cooling system requires the chemical make-up of the system to be balanced

Power Cool Fully Formulated IEG Coolant

The part numbers and sizes of concentrated Power Cool and pre-blended 50:50 Power Cool are listed in Table 36.

Coolant Type	Part Number	Description
Concentrated	23512138	1 Gallon Jug – 6 Per Case
	23512139	55 Gallon Drum
	23529295	330 Gallon Tote
	23512140	Bulk Delivery – 1,000 Gallon Min.
Pre-Blended 50:50	23528203	1 Gallon Jug – 6 Per Case
	23518918	55 Gallon Drum
	23528544	330 Gallon Tote
	23513503	Bulk Delivery – 1,000 Gallon Min.

Table 36 *Power Cool* Fully Formulated IEG Coolant

Power Cool Latin American Coolant

Coolant Type	Part Number	Description
Pre-Blended 67:33	23524923	55 Gallon Drum
	23524924	Bulk Delivery – 1,000 Gallon Minimum

Table 37 *Power Cool* Latin American Coolant Products

 Copyright © 2004 DETROIT DIESEL CORPORATION

www.HEAVY EQUIPMENTS.ORG
https://truckmanualshub.com/

Power Cool 2000 Supplemental Coolant Additive

Coolant Type	Part Number	Description
For *Power Cool* IEG Coolant	23507858	Pint Bottle – 12 Per case
	23507859	One-Half Gallon Jug – 6 Per Case
	23507860	5 Gallon Pail
	23507861	55 Gallon Drum

Table 38 *Power Cool* 2000 Supplemental Coolant Additive

Power Cool 3000 Supplemental Coolant Additive

Coolant Type	Part Number	Description
For *Power Cool* IEG Coolant	23507854	Pint Bottle – 12 Per Case
	23507855	One-Half Gallon Jug – 6 Per Case
	23507856	5 Gallon Pail
	23507857	55 Gallon Drum

Table 39 *Power Cool* 3000 Supplemental Coolant Additive

All information subject to change without notice. (Rev. 01/ 04)
6SE550 0401 Copyright © 2004 DETROIT DIESEL CORPORATION

www.HEAVY EQUIPMENTS.ORG
https://truckmanualshub.com/

Power Cool 3000 Supplemental Additive Coolant Filters

Coolant Type	Part Number	Description
For *Power Cool* IEG Coolant	23507545	4 Ounce (1 Pint Equivalent)
	23508425	8 Ounce (2 Pint Equivalent)
	23508426	12 Ounce (3 Pint Equivalent)
	23507189	16 Ounce (4 Pint Equivalent)
	23508427	32 Ounce (8 Pint Equivalent)
	23508428	53 Ounce (13 Pint Equivalent)

Table 40 *Power Cool* 3000 Supplemental Additive Coolant Filters

Power Cool Supplemental Additive Need-Release Filters

Coolant Type	Part Number	Description
For *Power Cool* IEG Coolant	23516488	For 0 – 8 Gallon Systems
	23516489	For 8 – 20 Gallon Systems

Table 41 *Power Cool* SUPPLEMENTAL ADDITIVE NEED-RELEASE COOLANT FILTERS

 Copyright © 2004 DETROIT DIESEL CORPORATION

www.HEAVY EQUIPMENTS.ORG
https://truckmanualshub.com/

Power Cool Plus Extended Life Oat Coolant

Coolant Type	Part Number	Description
Concentrated	23519397	1 Gallon Jug – 6 Per Case
	23519394	55 Gallon Drum
	23519395	Bulk Delivery – 1,000 Gallon Min.
Pre-Blended 50:50	23519396	1 Gallon Jug – 6 Per Case
	23519398	55 Gallon Drum
	23519399	Bulk Delivery – 1,000 Gallon Min.

Table 42 *Power Cool* Plus Extended Life OAT Coolant

Power Cool Plus Extender For Use With *Power Cool* Plus OAT Coolant

Coolant Type	Part Number	Description
For *Power Cool* Plus	23519400	Quart Bottle – 6 Per Case

Table 43 *Power Cool* Plus Extender for Use with *Power Cool* Plus OAT Coolant

All information subject to change without notice. (Rev. 01/ 04)
6SE550 0401 Copyright © 2004 DETROIT DIESEL CORPORATION

www.HEAVY EQUIPMENTS.ORG
https://truckmanualshub.com/

Power Cool Plus 6000 OAT Inhibitor For Water-Only Systems

Coolant Type	Part Number	Description
Water Only	23522127	1 Gallon Jug – 6 Per Case
	23522128	5 Gallon Pail

Table 44 *Power Cool* Plus 6000 OAT Inhibitor for Water-Only Systems

Power Cool Cooling System Cleaners

Coolant Type	Part Number	Description
On-Line Cleaner	200164	On-Half Gallon Jug – 6 Per Case
	200105	5 Gallon Pail
	200155	55 Gallon Drum
Twin Pack	201549	Twin Pack – 2 Per Case

Table 45 *Power Cool* Cooling System Cleaners

 Copyright © 2004 DETROIT DIESEL CORPORATION

www.HEAVY EQUIPMENTS.ORG
https://truckmanualshub.com/

Power Trac® Coolant Testing And Analysis Products

Application	Part Number	Description
Indicates Nitrite, Molybdate & Glycol Levels	23519401	3-Way Coolant Test Strips (Single Foil Packs)
Indicates Nitrite, Molybdate & Glycol Levels	23519402	3-Way Coolant Test Strips (Bottle of 50)
Indicates Nitrite, Molybdate & Glycol Levels	23522774	3-Way Coolant Test Strips (Bottle of 10)
Complete IEG/IPG Coolant Analysis	23516921	Coolant Analysis Bottle (Carton of 6)
Organic Coolant Analysis	23523398	Laboratory Coolant Analysis Bottle (Carton of 6)

Table 46 Power Trac Coolant Testing and Analysis Products

All information subject to change without notice. (Rev. 01/ 04)
6SE550 0401 Copyright © 2004 DETROIT DIESEL CORPORATION