https://truckmanualshub.com/

TYM

OPERATOR'S MANUAL

FOR

TRACTORS

T254NH

DaeYong B/D, 7, Eonju-ro 133-gil, Gangnam-gu, Seoul, Korea ■ TEL: 82-2-3014-2800, FAX:82-2-3014-2852 ■ www.tym.co.kr

https://truckmanualshub.com/

YANMAR WARRANTIES

YANMAR LIMITED WARRANTY

What is Covered by this Warranty?

YANMAR warrants to the original retail purchaser that a new YANMAR TNV common rail series industrial engine will be free from defects in material and/or workmanship for the duration of the warranty period.

Note: YANMAR engines may be equipped with external components including, but not limited to: wiring harnesses, electrical devices, control panels, radiator, air filters, fuel/or exhaust systems that are supplied and/or installed by manufacturers other than YANMAR. For warranty information on such external components, please contact the machine or component manufacturer directly or see your authorized YANMAR dealer or distributor.

This warranty is provided in lieu of all other warranties, express or implied. YANMAR specifically disclaims any implied warranties of merchantability or fitness for a particular purpose, except where such disclaimer is prohibited by law. If such disclaimer is prohibited by law, then implied warranties shall be limited in duration to the life of the express warranty.

How Long is the Warranty Period?

The YANMAR standard limited warranty period runs for a period of **twenty-four (24) months or Two-thousand(2000) engine operation hours,** whichever occurs first. An extended limited warranty of thirty-six(36) months or three thousand(3000) engine operating hours, whichever occurs first, is provided for these specific parts only: the cylinder block, cylinder head, crankshaft forging, connecting rods, flywheel, flywheel housing, camshaft, timing gear, and gear case. The warranty period for both the Standard limited warranty and the extended limited warranty (by duration or operation hours) begins on the date of delivery to the original retail purchaser and is valid only until the applicable warranted duration has passed or the operation hours are exceeded, whichever comes first.

https://truckmanualshub.com/

YANMAR limited warranty- continued

What the Engine Owner must Do:

If you believe your YANMAR engine has experienced a failure due to a defect in material and/or workmanship, your must contact an authorized YANMAR industrial engine dealer or distributor within thirty (30) Days of discovering the failure, You must provide proof of ownership of the engine, proof of the date of the engine purchase and delivery, and documentation of the engine operation hours. Acceptable forms of proof of delivery date include, but are not limited to: the original warranty registration of sales receipts or other documents maintained in the ordinary course of business by YANMAR dealers and/or distributors, indicating the date of delivery of the YANMAR product to the original retail purchaser, This information is necessary to establish whether the YANMAR product is still within the warranty period. Thus, YANMAR strongly recommends you register your engine as soon as possible after purchase in order to facilitate any future warranty matters.

You are responsible for the transportation of the engine to and from the repair location as designated by YANMAR.

To Locate an Authorized YANMAR Industrial Engine Dealer or Distributor:

You can locate your nearest authorized YANMAR industrial engine dealer or distributor by visiting the YANMAR Co,. Ltd. Website at:

http://www.yanmar.co.jp (The Japanese language page will be displayed.) For English language “click” on “English Page.”)

● “click” on “Network” in the website heading to vies the “YANMAR Worldwide Network.”
● Choose and “Click” on the desired product group.
● “Click” on the Icon closest to your region.
● “Click” on the desired country or associate company to locate your nearest authorized YANMAR Industrial engine dealer or distributor.

You may also contact YANMAR by clicking on “Inquiry” in the website heading and typing in your question or comment.

What YANMAR will DO:
YANMAR warrants to the original retail purchaser of a new YANMAR engine that YANMAR will make such repairs and/or replacements at YANMAR’s option, of any part(s) of the YANMAR product covered by this warranty found to be defective in material and/or workmanship. Such repairs and/or replacements will be made at a location designated by YANMAR at no cost to the purchaser for parts or labor.

https://truckmanualshub.com/

YANMAR limited warranty- continued

What is no Covered by this Warranty?

This warranty does not cover parts affected by or damaged by ant reason other than defective materials or workmanship, including, bur not limited to, accident, misuse, abuse, “Acts of God,” neglect, improper installation, improper maintenance, improper storage, the use of unsuitable attachments or parts, the use of contaminated fuels, the use of fuels, oils, lubricants, or fluids other than those recommended in your YANMAR Operation Manual, unauthorized alterations or modifications, ordinary wear and tear, and rust or corrosion. This warranty does not cover the cost of parts and/or labor required to perform normal/scheduled maintenance on your YANMAR engine. This warranty does not cover consumable parts such as, but not limited to, filters, belts, hoses, fuel injector, lubricants and cleaning fluids. This warranty does not cover the cost of shipping the product to or form the warranty repair facility.

Warranty Limitations:

The foregoing is YANMAR’s only obligation to you and your exclusive remedy for breach of Warranty. Failure to follow the requirements for submitting a claim under this warranty may result in a waiver of all claims for damages and other relief. **In no event shall YANMAR or any authorized Industrial engine dealer or distributor be liable for incidental, special or consequential damages.** Such consequential damages may include, but not be limited to, loss of revenue, loan payments, cost of rental of substitute equipment, insurance coverage, storage, lodging, transportation, fuel mileage, and telephone costs. The limitations in this warranty apply regardless of whether your claims are based on breach of contract, tort(including negligence and strict liability) or any other theory. Any action arising hereunder must be brought within one (1) year after the cause of action accrues or it shall be barred. Some states and countries do not allow certain limitations on warranties or for breach of warranties. **This warranty gives you specific legal rights, and you may also have other rights which vary form state to state and country to country.** Limitations set forth in this paragraph shall not apply to the extent that they are prohibited by law.

Warranty Modifications:

Except as modified in writing and signed by the parties, this warranty is and shall remain the complete and exclusive agreement between the parties with respect to warranties, superseding all prior agreements, written and oral, and all other communications between the parties relating to warranties. **No person or entity is authorized to give any other warranty or to assume any other obligation on behalf of YANMAR, either orally or in writing.**

Questions:

If you have any questions or concerns regarding this warranty, please call or write to the nearest authorized YANMAR industrial engine dealer or distributor or other authorized facility.

EMISSION SYSTEM WARRANTY

https://truckmanualshub.com/

YANMAR CO., LTD. LIMITED EMISSION CONTROL SYSTEM WARRANTY – USA ONLY

Your Warranty Rights and Obligations:

■ **California**

The California Air Resources Board (CARB), the Environmental Protection Agency (EPA) and YANMAR Co,. Ltd. hereafter referred to as YANMAR, are pleased to explain the **emission control system warranty** on your industrial compression-ignition engine. In California, model year 2000 or later off-road compression-ignition engines must be designed, built and equipped to meet the state's stringent anti-smog standards. In all states, 1998 and later non-road compression-ignition engines must be designed, built and equipped to meet the United States EPA emissions standards. YANMAR warrants the emission control system on your engine for the periods of time listed below provided there has been no abuse, neglect or improper maintenance of your engine.

Your emission control system may include parts such as the fuel injection system, the air induction system, the electronic control system, EGR(Exhaust Gas Recirculation) system and Diesel Particulate Filter. Also included may be hoses, belts, connectors and other emission-related assemblies.

Where a warrantable condition exists, YANMAR will repair your non-rod compression-ignition engine at no charge to you including diagnosis, parts and labor.

Manufacturer's Warranty Period:
The model year 1998 or later certified and labeled non-road compression-ignition engines are warranted for the periods listed below. If any emission-related part on your engine is found to be defective during the applicable warranty period, the part will be replaced by YANMAR.

If your engine is certified as	And its maximum Power is	And its rated speed is	Then its warranty period is
Variable speed or Constant speed	kW<19	Any speed	1,500 hours or two (2) years whichever comes first. In the absence of a device to measure the hours of use, The engine has a warranty period of two(2) years.
Constant speed	19 ≤ kW < 37	3,000rpm or higher	1,500 hours or two (2) years whichever comes first. In the absence of a device to measure the hours of use, The engine has a warranty period of two(2) years/
Constant speed	19 ≤ kW <37	Less than 3,000rpm	3,00hours of five (5) years whichever comes first. In the absence of a device to measure the hours of use, the Engine has a warranty period of five(5) years.
Variable speed	19 ≤ kW <37	Any speed	3,000 hours or five (5) years whichever comes first. In the absence of a device to measure the hours of use, the engine has a warranty period of five (5) years.
Variable speed or Constant speed	kW ≥ 37	Any speed	3,000 hours or (5) years whichever comes first. In the absence of a device to measure the hours of use, The engine has a warranty period of five (5) years.

https://truckmanualshub.com/

Warranty Coverage:

This warranty is transferable to each subsequent purchaser for the duration of the warranty period. Repair or replacement of any warranted part will be performed at an authorized YANMAR industrial engine dealer or distributor.

Warranted parts not scheduled for replacement as required maintenance in the operation manual shall be warranted for the warranty period. Warranted parts scheduled for replacement as required maintenance in the operation manual are warranted for the period of time prior to the first scheduled replacement. Any part repaired or replaced under warranty shall be warranted for the remaining warranty period.

During the warranty period, YANMAR is liable for damages to other engine components caused by the failure of any warranted part during the warranty period.

Any replacement part which is functionally identical to the original equipment part in all respects may be used in the maintenance or repair of your engine, and shall not reduce YANMAR's warranty obligations. Add-on or modified parts that are not exempted may not be used, The use of any non-exempted add-on or modified parts shall be grounds for disallowing a warranty.

Warranted Parts:

This warranty covers engine components that are a part of the emission control system of the engine as Delivered by YANMAR to the original retail purchaser, Such components may include the following:

- Fuel injection system
- Electronic control system
- Cold start enrichment system
- Intake manifold
- Turbocharger systems
- Exhaust manifold
- EGR system
- Positive crankcase ventilation system
- Hoses, belts, connectors and assemblies associated with emission control systems
- Exhaust gas after treatment (Diesel Particulate Filter (DPF)

Since emissions-related parts may vary slightly between models, certain models may not contain all of These parts and other models may contain the functional equivalents.

https://truckmanualshub.com/

Exclusions:
Failures other than those arising from defects in material and/or workmanship are not covered by this warranty. The warranty does not extend to the following: malfunctions caused by abuse, misuse, improper Adjustment, modification, alteration, tampering, disconnection, improper or inadequate maintenance or use Of non-recommended fuels and lubricating oils; accident-caused damage, and replacement of expendable Items made in connection with scheduled maintenance. YANMAR disclaims any responsibility for Incidental or consequential damages such as loss of time, inconvenience, loss of use of equipment/engine Or commercial loss.

Owner's Warranty Responsibilities:

As the engine owner, you are responsible for the performance of the required maintenance listed in Your owner's manual. YANMAR recommends that you retain all documentation, including receipts, covering maintenance on your non-road compression-ignition engine, but YANMAR cannot deny Warranty solely for the lack of receipts, or for your failure to ensure the performance of all scheduled maintenance.

YANMAR may deny your warranty coverage of your non-road compression-ignition engine if a part has Failed due to abuse, neglect, improper maintenance or unapproved modifications.
Your engine is designed to operate on diesel fuel only. Use of any other fuel may result in your engine no Longer operating in compliance with applicable emissions requirements.

You are responsible for initiating the warranty process. You must present your engine to a YANMAR dealer As soon as a problem exists. The warranty repairs should be completed by the dealer as expeditiously as Possible. If you have any questions regarding your warranty rights and responsibilities, or would like Information on the nearest YANMAR dealer or authorized service center, you should contact YANMAR America Corporation.

Website: (www.yanmar.com)
E-mail: CS support@yanmar.com
Toll free telephone number: 1-800-872-2867, 1-855-416-7091

https://truckmanualshub.com/

FOREWORD

Thank you very much for purchasing our tractor, which, we feel sure, will give you many years of Trouble free service.

The introduction in this manual sets out the correct manner of operating, maintaining and checking the tractor to ensure long-term durability.

Please ensure the correct operation of the tractor as incorrect operation can cause substantial mechanical damage as well as accidents with associated injuries.

Please note that in some cases, differences can exist between this manual and your tractor due to the manufacture's policy of constant product improvement.

In the event that you encounter a problem not covered by this manual please contact your nearest dealer who will assist you in resolving it.

WARNING

CALIFORNIA Proposition 65 Warning

The Engine Exhaust from this product contains chemicals known to the state of California to cause cancer,birth defects or other reproductive harm

WARNING SIGNS IN THIS MANUAL

The following warning signs in this manual draw additional attention to items of importance for the safe and correct operation of the tractor.

SIGN	MEANING OF THE SIGN
Danger	Serious hazard with a very high level of risk of either serious injury or death
Warning	Hazard or unsafe practice that can lead to severe injury or death.
Caution	Hazard or unsafe practice that can lead to injury or death.
Important	Instructions for the correct operation of the machine which, if followed, will ensure that it performs at sits best

All information, illustrations and specifications in this manual are based on the latest information available at the time of publication. The right is reserved to make changes at any time without notice.

https://truckmanualshub.com/

CONTENTS

Sr. No.	Description	Page No.
1.	Tractor Identification	9
2.	About this Manual	10
3.	Introduction & Description	11~12
4.	Owner Assistance	13
5.	ROPS (Roll over protection structures)	14~16
6.	Safety Instructions, Do's & Don'ts	17~29
7.	Safety Signs	30~32
8.	Universal Symbols	33
	Section A	
9.	Controls, Instruments & Operations	34~52
	Section B	
10.	Lubrication & Maintenance	53~72
	Section C	
11.	Specifications	73~76
12.	Fuel saving Tips	77~78
13.	Fault tracing	79~82
14.	Wiring Diagram	83
15.	Tractor History Card	84
16.	Service Record	85
17.	Daily Operating Log	86
18.	Part Replacement Record	87

All information, illustrations and specifications in this manual are based on the latest information available at the time of publication. The right is reserved to make changes at any time without notice.

https://truckmanualshub.com/

TRACTOR IDENTIFICATION

The engine number is stamped on the left hand side of the engine block.

The chassis number is shown on the left hand side of the tractor as shown in the drawing.

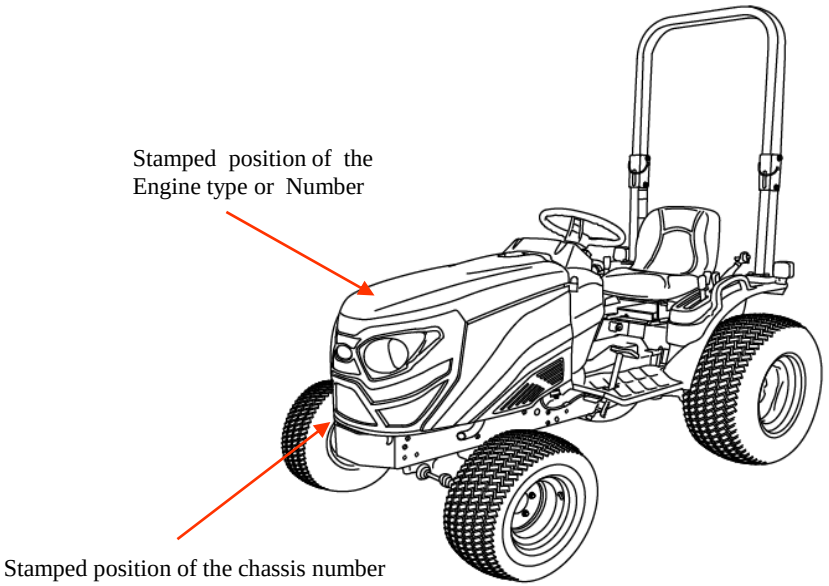

Illustration A

WARRANTY OF THE PRODUCT.

The manufacturer warrants this product and full details of the warranty are provided on a separate warranty schedule.

SERVICE.

Service is available from any TYM dealer in the country.

PARTS.

To obtain spare parts please contact your nearest dealer and give him the details listed below.

Tractor model

Tractor serial number

Tractor engine number

Part number and description

Quantity required.

https://truckmanualshub.com/

ABOUT THIS MANUAL

This manual has been prepared to assist you in following/adopting the correct procedure for running the operation and maintenance of your new Tong Yang Moolsan CO.,LTD (Here in after refer to TYM) Tractor.

Your tractor has been designed and built to give maximum performance, with good fuel economy and ease of operation under a wide variety of operating conditions.

Prior to delivery, The tractor was carefully inspected, both at the factory and by your TYM dealer/distributor, to ensure that it reaches you in optimum condition.

To maintain this condition and ensure trouble free performance, it is important that the routine services, as specified in this manual, are carried out at the recommended intervals.

Read this manual carefully and keep it in a convenient place for future reference.

If at any time you require advice concerning your tractor, do not hesitate to contact your authorized TYM dealer/distributor.

He or She has trained personnel, genuine parts and the necessary equipment to undertake all your service requirements.

TYM policy is one of continuous improvement, and the right to change prices, specifications or equipment at any time without notice is reserved.

All data given in this book is subject to production variations.

Dimensions & weight are approximate only and the illustrations do not necessarily show tractors in standard condition.

For exact information about any particular tractor, please consult your TYM dealer/distributor.

https://truckmanualshub.com/

► TRACTOR AN INTRODUCTION

The word, "Tractor" was been derived from "Traction" which means pulling.
A tractor is required to pull or haul equipment, an implement or trolley which are coupled to the tractor body through suitable linkage.
A tractor can also be used as a prime mover as it has a power outlet source, called the Power Take or PTO shaft.

In this book, the operating, maintenance and storage instructions for all models of TYM Diesel tractors have been complied.
This material has been prepared in detail to help you in the better understanding of the maintenance and efficient operation of the machine.

If you need any information not given in this manual, or require the services of a trained mechanic, please get in touch with the TYM dealer/distributor in your locality.
Dealer/distributors are kept informed of the latest methods of servicing tractors. They stock genuine spare parts and are backed by the Company's full support.

Through this manual, the use of the terms LEFT, RIGHT, FRONT and REAR must be understood, to avoid any confusion when following the introductions.
The LEFT and RIGHT means the left and right sides of the tractor when facing forward in the driver's Seat.
Reference to the FRONT indicates the radiator end of the tractor, while the REAR, indicates the drawbar end (illustration B).

When spare parts are required, always specify the tractor and engine serial number when ordering these part. (See illustration A).
This will facilitate a faster delivery and help ensure that the correct parts for your particular tractor are received.
The tractor serial number is punched on a plate attached to the left hand side of the engine body (illust. A).
For easy reference, we suggest that you write the number in the space provided in the owner's personal data.

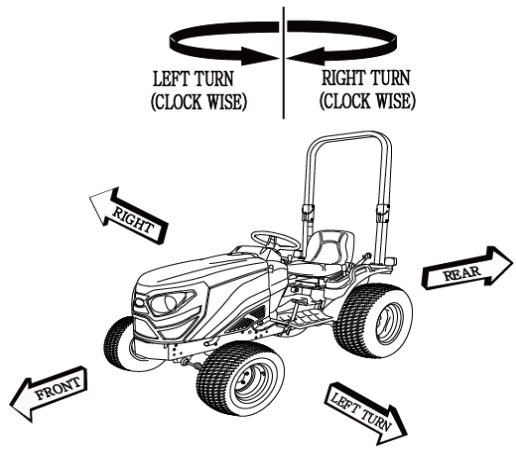

illustration A

(Front, Rear, Left, Right Portion)

https://truckmanualshub.com/

► DESCRIPTION

■ General Construction

The transmission case, engine and front axle support are bolted together to form a rigid unit.

■ Front Axle & Wheels

The 4WD front axle is a center-pivot, reverse Eliot type.

The front wheel drive mechanism is incorporated as a part of the axle.

The front wheel drive power is taken from the rear transmission and transmitted to the differential in the front axle where the power is divided into right and left and to the respective final cases.

In the final cases, the transmitted revolution is reduced by the level gears to drive the front wheel.

The 4WD mechanism with level gears provides wider steering and greater durability.

■ Engine

The tractors are fitted with fuel efficient engines with 3 cylinders manufactured by Yanmar.

■ Transmission with HST (Hydrostatic Transmission)

The Tractor is fitted with a 2 Range HST.

Speed range by a HIGH-LOW selector lever.

The tractor has two pedals for forward/reverse control.

Tractors with Independent Power Take Off are fitted with an electro-hydraulic Clutch Assy.

The Rear PTO and Mid PTO can be operated together or separately by a lever.

■ Brakes

TYM tractors are provided with disc brakes operated by foot pedal.

A parking brake lever is fitted for parking.

■ Rear axle & Wheels

This is mounted on ball bearings and is enclosed in removable housing which are bolted to the transmission case.

The rim & Disc fitted with Rear tires are bolted to the outer flange of the rear axle.

■ Hydraulic System & Linkages.

TYM Tractors are fitted with Live (i.e. system is in operation) independent, Systems.

Three point Linkages can be used for category 1(N) type of implements.

■ Steering

Steering consists of a Hydrostatic Power Steering system, which has a hydraulic cylinder and single type hydraulic pump

■ Electrical System

A 12 Volt Battery is used to activate the engine through the starter motor and the electrical system comprising the horn, head lamp, turn signal lamp, tacho-meter, hour meter, brake lamp, gauge lamp, hazard lamp and general or alternator, fuse box which also from part of the electrical system.

https://truckmanualshub.com/

OWNER ASSISTANCE

We at Tong Yang Moolsan CO.,LTD and your TYM dealer/distributor wants you to be completely satisfied with

your investment.

Normally any problems with your equipment will be handled by your dealer/distributor's service departments, however, misunderstanding can occur.

If you feel that your problem has not been handled to your satisfaction, we suggest the following.

Contact the owner or General Manager of the dealership, explain the problem, and request assistance.

When additional assistance is needed, your dealer/distributor has direct access to our office.

If you cannot obtain satisfaction by doing this, contact the Tong Yang Moolsan CO.,LTD. office and provide them with;

- Your name, address and telephone number
- Model and tractor serial number
- Dealer/Distributor Name & Address
- Machine purchase date and hours used
- Nature of problem

Before the contacting Tong Yang Moolsan CO./LTD office, be aware that your problem will likely resolved at the dealership using the dealer's/distributor's facilities, equipment and personnel.

So it is important that your initial contact be with the dealer/distributor.

(ROPS) Roll Over Protective Structures

► ROLL OVER PROTECTIVE STRUCTURES (ROPS)

TYM Tractors are equipped with a frame for the protection of operators.
In the case of cab tractors the frame is incorporated in the cab structure.
The objective of the frame or cab structure is to protect the operator in the event of a roll over and they are designed to support the entire weight of the tractor in that event.
Each TYM ROPS frame or cab structure is designed and has been tested to meet industry and or government standards.
Included in these tests were all mounting bases and bolts or other fasteners.

DANGER

For ROPS frames to be effective and protect the operator, the seat belt provided must be worn in order to keep operators within the ROPS protected area in the event of a roll over. Failure to use the seat belt can still cause serious injury or death.

On some models the ROPS frame has a fold down feature, which can be used to enter low buildings etc.
Take care when lowering the upper section of the ROPS frame and take extreme care while driving the tractor with the ROPS frame lowered.
Do not wear the seat belt with the ROPS lowered and please remember that the fold down facility is for special circumstances only and must not be lowered for general use.

Use of the tractor with the ROPS lowered can cause fatal injuries.

As the ROPS frame or cab together with the seat belt was designed to meet certain standards, they must be maintained in good order and condition.
To achieve this objective, both the structure and the seat belt should be inspected on a regular basis (every time the tractor is serviced).

In the event that the seat belt is damaged or frayed, it should be replaced and in the event that the ROPS frame or any part of the mounting structure is damaged or cracked, the faulty component must be replaced with a new unit.
Such a unit must meet all of the test criteria of the original unit.
Fitment of an inferior item or items affects the certification of the entire ROPS structure and the effectiveness of the structure in the event of an accident.
Drilling or welding the ROPS structure is forbidden.

https://truckmanualshub.com/

► DAMAGE OF THE ROPS

If the tractor has rolled over or the ROPS has been damaged (such as striking an overhead object during transport), it must be replaced to provide the original protection.

After an accident, check for damages to the 1. ROPS. 2. Seat 3. Seat belt & seat mountings.

Before you operate a tractor, replace all damaged parts.

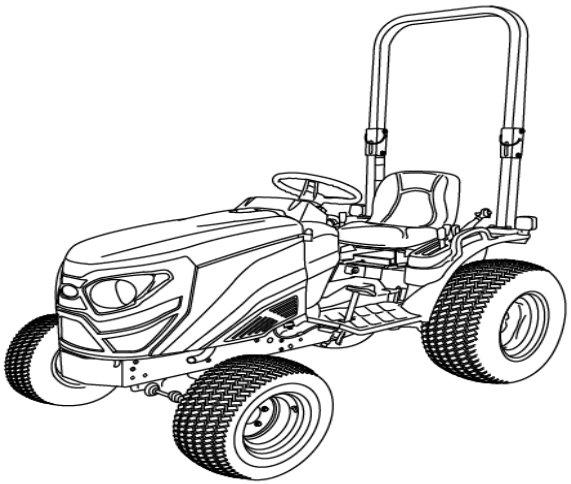

► DO NOT WELD, DRILL OR STRAIGHTEN THE ROPS

Warning	Never attach chains or ropes to the ROPS for pulling purposes; this will cause the tractor to tip backwards. Always pull from the Tractor drawbar. Be careful when driving through door openings or under low overhead objects. Make sure there is sufficient overhead clearance for the ROPS to avoid fatal injuries.

Warning	If the ROPS is removed or replaced, make certain that the proper hardware is used to replace the ROPS and the recommended torque values are applied to the attaching bolts.

Warning	Always wear your seat belt if the tractor is equipped with ROPS.

https://truckmanualshub.com/

How to adjust the Seat

*** Sliding type**

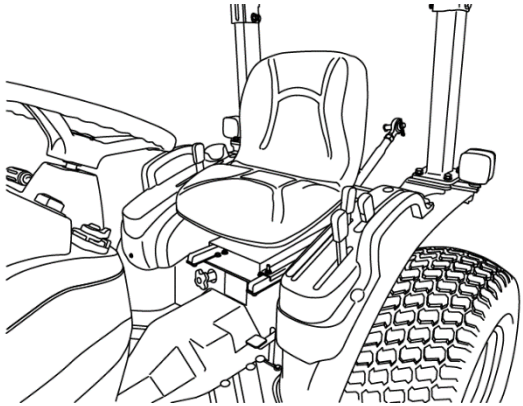

NOTE: Do not use solvents to clean the seat.

Use warm water with a little detergent added.

Before operating a tractor it is important to adjust the seat to the most comfortable position & check whether it is properly locked in its position.

Figure 1 identifies the seat fitted to your tractor.

► FOR SLIDING SEAT

■ Sliding Seat type

Slide the seat to the position you want. Release the lever.

Make sure the seat is locked in position.

Danger	Check whether the seat is properly locked in its position before driving the tractor.

Danger	Always use the seat belt when the ROPS is installed. Do not use the seat belt if a foldable ROPS is down or there is no ROPS. Check the seat belt regularly and replace if it is frayed or damaged.

https://truckmanualshub.com/

SAFETY INSTRUCTIONS

RECOGNIZE SAFETY INFORMATION

This symbol means **ATTENTION! YOUR SAFETY IS INVOLVED.** The message that follows the symbol contains important information about safety. Carefully read the message.

SIGNAL WORDS.

A signal word—DANGER, WARNING OR CAUTION—is used with a safety alert symbol. DANGER identifies the most serious hazards. Safety signs with the signal words —DANGER OR WARNING—are typically near specific hazards. General precautions are listed on CAUTION safety signs**.**

DANGER

WARNING

CAUTION

READ SAFETY INSTRUCTIONS

Carefully read all safety instructions given in this manual for your safety. Tampering with any of the safety devices can cause serious injuries or death. Keep all safety signs in good condition. Replace missing or damaged safety signs.

Keep your tractor in proper condition and do not allow any unauthorized modifications to be carried out on the tractor, which may impair the function/safety and affect tractor life.

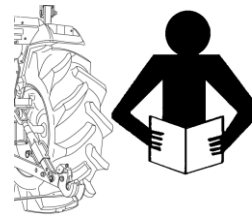

CHILD PROTECTION

Keep children and others away from the tractor while operating.

BEFORE YOU REVERSE

- Look behind the tractor for children.
- Do not let children ride on the tractor or any implement.

https://truckmanualshub.com/

USE OF ROPS AND SEAT BELT

The Roll Over Protective Structure(ROPS) has been certified to industry and/or government standards. Any damage or alternation to the ROPS, mounting hard-ware, or seat belt voids the certification and will reduce or eliminate protection for the operator in the event of a roll-over. The ROPS, mounting hardware, and seat belt should be checked after the first 100 hours of tractor use and every 500 hours thereafter for any evidence of damage, wear or cracks. In the event of damage or alteration, the ROPS must be replaced prior to further operation of the tractor.

The seat belt must be worn during machine operation when the machine is equipped with a certified ROPS.

Failure to do so will reduce or eliminate protection for the operator in the event of a roll over.

PRECAUTION TO AVOID TIPPING

Do not drive where the tractor could slip or tip.

Stay alert for holes and rocks in the terrain, and other hidden hazards.

Slow down before you make a sharp turn.

Driving forward out of a ditch or mired condition could cause the tractor to tip over backward. Back out of these situations if possible.

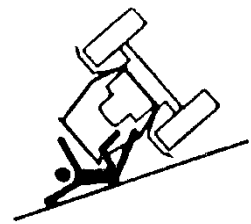

PARK TRACTOR SAFELY

Before working on the tractor ;

Lower all equipment to the ground.

Stop the engine and remove the key.

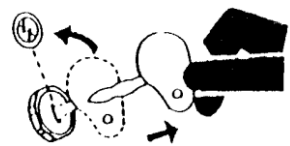

KEEP RIDERS OFF TRACTOR

Do not allow riders on the tractor.

Riders on the tractor are subject to injuries such as being stuck by foreign objects or being thrown off of the tractor.

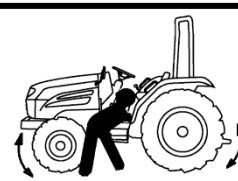

https://truckmanualshub.com/

HANDLE FUEL SAFELY-AVOID FIRES

Handle fuel with care; it is highly flammable. Do not refuel the tractor while smoking or near open flame or sparks.

Always stop the engine before refueling tractors.

Always keep your tractor clean of accumulated grease, and debris. Always clean up spilled fuel.

STAY CLEAR OF ROTATING SHAFTS

Entanglement in rotating shaft can cause serious injury or death.

Keep the PTO shield in place at all times.

Wear close fitting clothing. Stop the engine and be sure the PTO drive is stopped before making adjustments, connections, or cleaning out PTO driven equipment.

ALWAYS USE SAFETY LIGHTS AND DEVICES

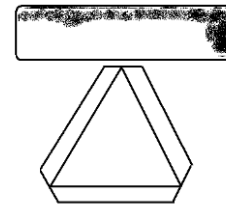

The use of hazard warning lights and turn signals is recommended when towing equipment on public roads unless prohibited by state or local regulations.

Use the slow moving vehicle (SMV) signs when driving on public roads during both day & night time, unless prohibited by law.

PRACTICE SAFE MAINTENANCE

Understand the service procedure before doing work.

Keep the surrounding area of the tractor clean and dry.

Do not attempt to service the tractor when it is in motion.

Keep body parts and clothing away from rotating shafts.

Always lower equipment to the ground. Stop the engine.

Remove the key. Allow the tractor to cool before any work repair work is done.

Securely support any tractor elements that must be raised for service work.

Keep all parts in good condition and properly installed.

Replace worn or broken parts. Replace damage/missing decals.

Remove any buildup of grease or oil from the tractor.

Disconnect the battery ground cable(–) before making adjustments on electrical systems or welding on the tractor

https://truckmanualshub.com/

AVOID HIGH-PRESSURE FLUIDS

Escaping fluid under pressure can penetrate the skin causing serious injury. Keep hands and body away from pinholes and nozzles, which eject fluids under high pressure. If ANY fluid is injected into the skin, consult your doctor immediately.

PREVENT BATTERY EXPLOSIONS

Keep sparks, lighted matches, and open flame away from the top of the battery. Battery gas can explode.

Never check the battery charge by placing a metal object across the poles.

PREVENT ACID BURNS

Sulfuric acid in battery electrolyte is poisonous. It is strong enough to burn skin, cause holes in clothing and blindness if made contact with eyes.

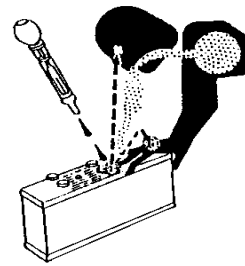

For adequate safety always;

1.Fill batteries in a well-ventilated area.

2.Wear eye protection and acid proof hand gloves.

3. Avoid breathing direct fumes when electrolyte is added.

4. Do not add water to electrolyte as it may splash up causing severe burns.

If you spill acid on yourself;

1.Flush your skin with water.

2.Flush your eyes with water for 10-15 minutes.

Get medical attention immediately.

SERVICE TRACTOR SAFELY

Do not wear a necktie, scarf or loose clothing when you work near movin parts. If these items were to get caught, severe injury could result.

Remove rings and other jewelry to prevent electrical shorts and entanglemen in moving parts.

https://truckmanualshub.com/

WORK IN VENTILATED AREA

Do not start the tractor in an enclosed building unless the doors & windows are open for proper ventilation, as tractor fumes can cause sickness or death. If it is necessary to run an engine in an enclosed area, remove the exhaust fumes by connecting an exhaust pipe extension.

TRACTOR RUNAWAY

1. The tractor can start even if the transmission is engaged, thus causing the tractor to runaway and serious injury to the people standing nearby the tractor.
2. For additional safety, keep the transmission in neutral, foot brake engaged and the PTO lever disengaged while attending to Safety Starter Switch or any other work on the tractor.

SAFETY STARTER SWITCH

1. A clutch operated safety switch is provided on all tractors which allows the starting system to become operational only when the clutch pedal is fully pressed.
2. Do not by-pass this safety starter switch or work on it. Only authorized dealers are recommended to work on the safety starter switch.
3. On some models a safety starter switch is provided on the transmission high-low shifter lever and on PTO shifter lever. The tractor can only be started only if the high-low shifter lever is in neutral.

Caution

The safety Starter Switch is to be replaced after every 2000 hours/4 years, whichever is earlier.

https://truckmanualshub.com/

SAFE OPERATION OF YOUR TRACTOR

The manufacturer of your tractor has made every effort to make it as safe as is humanly possible.

Beyond this point it is the responsibility of the operator to avoid accidents and we ask that you read and implement our suggestions for your safety.

Ensure that only trained and competent operators use this tractor and ensure that they are fully conversant with the machine and aware of all it's control and safety features.

Operators should not operate the tractor or associated machinery while tired or untrained.

To avoid accidents please ensure that the operator wears clothing which will not get entangled in the moving parts of the tractor or machine as well as protect him or her from the elements.

When spraying or using chemicals, please ensure that clothing and protective equipment is worn which prevents respiratory or skin problems.

For full details consult the manufacturer of the chemicals.

To avoid lengthy exposure to noise ensure that ear protection is worn.

If adjustments to the tractor or machinery needs to be made, ensure the tractor or machine is turned off beforehand.

The use of a certified Roll Over Protection Structure (ROPS) is a must while operating a tractor.

The use of a seat belt is a must while operating a tractor.

In summary, ensure at all times that the safety of the operator and any other worker is paramount**.**

SAFETY TIPS DURING MAINTENANCE

1. At least on a daily basis check all oil levels, water level in the radiator and electrolyte level in the battery, perform services according to the service schedule.
2. Ensure tire pressures are even and the correct pressure for the job being done is maintained.
3. Check to ensure that all the controls and preventative mechanisms of the tractor and implement work correctly and effectively.
4. Ensure that an adequate set of the correct tools is available for maintenance and minor repairs.
5. Ensure that all service work and repairs are carried out on a flat area with a concrete or similar floor.

   Do not carry out service work on a tractor until it is switched off, the parking brake applied and wheels chocked.

   Where a tractor is started in a confined area, ensure that the area is well ventilated as exhaust gases are very harmful, and can cause death.
6. Do not work under raised implements.
7. When changing wheels or tires ensure that a suitable wheel stand is placed under the axle prior to removing the wheel and the wheels are chocked.
8. Where guards or shields need to be removed to perform a service or repair, ensure that the guard or shield is correctly reinstalled before starting the tractor.
9. Never refuel near an open flame or with an overheated engine. Make sure to turn off the engine before refueling.
10. The cooling system operates under pressure; take care when removing the radiator cap on a hot engine to prevent being scalded by steam or hot water.

    Do not add water to the radiator when the engine is hot.

    Add water to the radiator only after the engine cools down completely.
11. To prevent fires keep the tractor, including the engine, clean and free from flammable material and well away from fuels and other flammable material.

https://truckmanualshub.com/

► MOUNTING AND DEMOUNTING IMPLEMENTS

(1)Ensure that all mounting and removal of implements is done on safe flat ground. Ensure no one is between the tractor and implement to avoid accidental injuries, do not get under the implement.
(2) After mounting the implement, ensure that all sway chains are correctly adjusted and, where PTO shafts are used, that the shaft is fitted and secured correctly.
(3) Where heavy implements are used, ensure that the combination is well balanced or use proper ballast to achieve balance.
(4) Before leaving the tractor at any time, lower the implement, stop the PTO shaft where applicable, set the parking brake and switch off the engine.
(5) While operating the implements with the PTO keep all bystanders away from any moving parts and do not attempt to make adjustments while the machine is running.
(6) Only the driver should ride on the tractor with the ROPS frame fitted and with the seat belt properly fastened.
(7) Where young children are present, particular care should be taken and the tractor should not be moved until the whereabouts of all children is known.
(8) Only trained operators should operate the tractor and so taking care to ensure that other workers are not injured. In particular they should take care during dusty operations, which will reduce visibility substantially.
(9) Never start the tractor unless the transmission is out of gear, the operator is in the seat and all around safety has been checked.
(10) Only operate the tractor seated in the drivers seat and never turn or brake suddenly at high speed as this can cause a roll-over and serious injury or death.
(11) When traveling on a public road ensure that the tractor and driver both meet all laws relating to safety and licensing.
When traveling with wide implements use red flags on the extremities and observe all laws including escort requirements**.**
(12) When operating under adverse conditions, hilly terrain or on bad ground, adjust the speed of the tractor to suit the conditions, safety comes first.
Never drive down hill at high speed or with the transmission in neutral.
Use the braking capacity of the engine as well as the service brakes.
Do not try to change gear going up or down a steep slope, select the correct gear before starting.
(13) Take care when traveling uphill with a heavy implement to ensure that it does not overbalance and tip up the front end.
(14) Never remove or modify the seat belt.
(15) Never remove, modify or repair the ROPS frame.

PLEASE REMEMBER THAT A LITTLE BIT OF EXTRA CARE CAN PREVENT SERIOUS INJURY OR DEATH AND AVOID DAMAGE TO YOUR TRACTOR.

https://truckmanualshub.com/

► THE FOLLOWING PRECAUTIONS ARE SUGGESTED TO HELP PREVENT ACCIDENTS.

A careful operator is the best operator.

Most accidents can be avoided by observing certain precautions .

Read and take the following precautions before operating the tractor to prevent accidents.

Tractors should be operated only by those who are responsible and properly trained to do so.

■ The Tractor

1. Read the operator's manual carefully before using the tractor.
   Lack of operating knowledge can lead to accidents.
2. Use an approved rollover bar and seat belt for safe operation.
   The overturning of a tractor without a rollover bar can result in death or injury.
3. **Do not remove the ROPS (Roll Over Protective Structure).** Always use the seat belt.
4. A fiberglass canopy does not give any protection.
5. To prevent falls, keep and platform clear of mud and oil.
6. Do not permit anyone but the operator to ride on the tractor.
   There is no safe place for extra riders.
7. Replace all missing, illegible or damaged safety signs.
8. **Keep safety signs clean of dirt and grease**.

■ Servicing the tractor

1.Keep the tractor in good operating condition for your safety.
   An improperly maintained tractor can be hazardous.
2. Stop the engine before performing any service on the tractor.
3. The cooling system operates under pressure, which is controlled by the radiator cap**.**
   It is dangerous to remove the cap while the system is hot.
   First turn the cap slowly to stop and allow the pressure to escape before removing the cap entirely.
4. **Do not smoke while the refueling the tractor. Keep away any type of open flame**.
5. The fuel in the injection system is under high pressure and can penetrate the skin. Unqualified persons should not remove or attempt to adjust a pump, injector, nozzle or any part of the fuel injection system.
   Failure to follow these instructions can result in serious injury.
6. **Keep open flame or cold weather starting aids away from the battery to prevent fire or explosions.**
7. **Do not modify or permit anyone else to modify this tractor or any of its components or tractor functions.**

https://truckmanualshub.com/

■ **Operating the tractor**

1. Before starting the tractor apply the parking brake, place the PTO (Power Take Off) switch in the "OFF" position, the hydraulic control levers in the neutral position, the remote control valve levers in the neutral position(if fitted) and the transmission in neutral.
2. Do not start the engine or controls while standing beside the tractor.
   Always sit in the tractor seat when the engine is running or when operating controls.
3. Safety starter switch.
   In order to prevent the accidental starting of the tractor, a safety switch has been provided.
   The starting system of the tractor is connected through this switch, which becomes operative only when the brake pedal is depressed.
   On some models, the shuttle shifter lever and PTO button should also be in neutral position for completing the starting circuit.
   Do not bypass the safety starter switch.
   Consult your TYM Tractor dealer/distributor if the safety- starting switch malfunctions.
4. Avoid accidental contact with the gear shifter lever while the engine is running.
   Unexpected tractor movement can result from such contact.
5. Do not get off or climb around the tractor while it is in motion.
6. Shut off the engine, remove the key and apply the parking brake before getting off the tractor.
7. Do not operate the tractor in an enclosed building without adequate ventilation.
   Exhaust fumes can cause death.
8. Do not park the tractor on a steep slope.
9. **If power steering or the engine ceases to operate, stop the tractor immediately**.
10. Pull only from the swinging draw bar or the lower link drawbar in the down position.
    Use only a drawbar pin that locks in place.
    Pulling from the tractor rear axle carriers or any point above the rear axle may cause the tractor's front end to lift.
11. If the front end of the tractor tends to rise when heavy implements are attached to the three-point linkage, install front end or front wheel weights.
    Do not operate the tractor with a light front end.
12. Always use the hydraulic position control lever when attaching equipment/implements and when transporting equipment.
    Be sure that the hydraulic couplers are properly mounted and will disconnect safely in case an implement accidentally detaches.
13. Do not leave equipment/implements in the raised position.
14. Use the flasher/ Turn signal lights and Slow Moving Vehicle (SMV) signs when driving on public roads during both day and night time, unless prohibited by law.
15. Dim tractor lights when meeting oncoming vehicles at night.
    Be sure the lights are adjusted to prevent blinding oncoming vehicle operators.
16 .Emergency stopping instruction; If the tractor fails to stop even after the application of brakes. turn off the ignition switch. (or turn off the key).

https://truckmanualshub.com/

■ Driving the tractor

1. Watch where you are going especially at row ends, on roads, around trees and low hanging obstacles.
2. To avoid upsets, drive the tractor with care and at speeds compatible with safety, especially when operating over rough ground, crossing ditches or slopes, and when turning at corners.
3. Lock the tractor brake pedals together when transporting on roads to provide proper wheel braking.
4. Keep the tractor in the same gear when going downhill as is used when going uphill. Do not coast or free wheel down hills.
5. Any towed vehicle and/or trailer whose total weight exceeds that of the towing tractor, must be equipped with its own brakes for safe operation.
6. When the tractor is stuck or tires are frozen to the ground, back out to prevent upset.
7. Always check the overhead clearance, especially when transporting the tractor.

■ Operating the PTO (Power Take Off)

1. When operating PTO driven equipment, shut off the engine and wait until the PTO stops before getting off the tractor and disconnecting the equipment.
2. Do not wear loose clothing when operating the power take-off or near rotating equipment.
3. When operating stationery PTO driven equipment, always apply the tractor parking brake and block the rear wheels from the front and rear side.
4. To avoid injury, always move down the flip part of the PTO. Do not clean, adjust or service PTO driven equipment when the tractor engine is running.
5. Make sure the PTO master shield is installed at all times and always replace the PTO shield cap when the PTO is not in use.

■ Diesel fuel

1. Keep the equipment clean and properly maintained.
2. Under no circumstances should gasoline, alcohol or blended fuels be added to diesel fuel. In a closed container, such as a fuel tank, such blends are more explosive than pure gasoline. DO NOT USE THESE BLENDS.
3. Never remove the fuel cap or refuel the tractor with the engine running.
4. Do not smoke while refueling or when standing near fuel.
5. Maintain control of the fuel filler pipe when filling the tank.
6. Do not fill the fuel tank to capacity. Allow room for expansion.
7. Wipe up spilled fuel immediately.
8. Always tighten the fuel cap securely.
9. If the original fuel tank cap is lost, replace it with a genuine cap. A non approved cap may not be safe.
10. Do not drive equipment near open fire.
11. Never use fuel for cleaning purposes.
12. Arrange fuel purchases so that winter grade fuel is not held over and used in the spring.

N.B: It is suggested that after repairs, if any of the Safety Decal/signs are peeled/defaced, the same may be replaced immediately in the interest of your safety.

https://truckmanualshub.com/

DO'S AND DON'T'S

► DO'S-For Better performance

DO-Ensure that safety shields are in place and in good condition.

DO-Read all operating instructions before commencing to operate the tractor.

DO-Carry out all maintenance tasks without fail.

DO-Keep the air cleaner clean.

DO -Ensure that the correct grade of lubricating oils are used and that they are replenished and changed at the recommended intervals.

DO-Fit new sealing rings when the filter elements are changed.

DO-Watch the oil pressure gauge or warning light and investigate any abnormality immediately.

DO-Keep the radiator filled with clean water and in cold weather use an anti-freeze mixture. Drain the system only in an emergency and fill it before starting the engine.

DO-Ensure that the transmission is in neutral before starting the engine.

DO-Keep all fuel in clean storage and use a filter when filling the tank.

DO-Attend to minor adjustments and repairs as soon as necessity is apparent.

DO-Allow the engine to cool before removing the radiator filler cap and adding water, remove the radiator cap slowly.

DO-Shift into low gear when driving down steep hills.

DO-Latch the brake pedals together when driving on a highway.

DO-Keep the draft control lever fully down when not in use.

Don'ts-For safe operation

DON'T-Run the engine with the air cleaner disconnected.

DON'T-Start the tractor in an enclosed building unless the doors and windows are open for proper ventilation.

DON'T-Operate the tractor or engine while lubricating or cleaning.

DON'T-Allow the tractor to run out of diesel fuel otherwise it will be necessary to vent the system.

DON'T-Tamper with the fuel injection pump, If the seal is broken the warranty becomes void.

DON'T-Allow the engine to run idle for a long period.

DON'T-Run the engine if it is not firing on all cylinders.

DON'T-Ride the brake or clutch pedal. This will result in the excessive wear of the brake lining, clutch driven member and clutch release bearing.

https://truckmanualshub.com/

DON'T-Use the independent brakes for making turns on the highway or at high speeds.

DON'T-Refuel the tractor with the engine running.

DON'T-Mount or dismount from the right side of the tractor.

DON'T-Tamper the hydraulic control levers' upper limit stops.

DON'T-Use the draft control lever for the lifting of implements.

DON'T-Start the engine with the PTO engaged.

DON'T-Use the governor Control Lever (Hand throttle) while driving on roads.

https://truckmanualshub.com/

SAFETY SIGNS

► GENERAL SAFETY INFORMATION

IMPORTANT: This **"General safety Information"** should be kept with the machine at all times as reference data.

⚠	This symbol means **ATTENTION! YOUR SAFETY IS INVOLVED**. The message that follows the symbol contains important information about safety. Follow the recommended precautions and safe operating practice.

DECALS ON THE DASH COVER

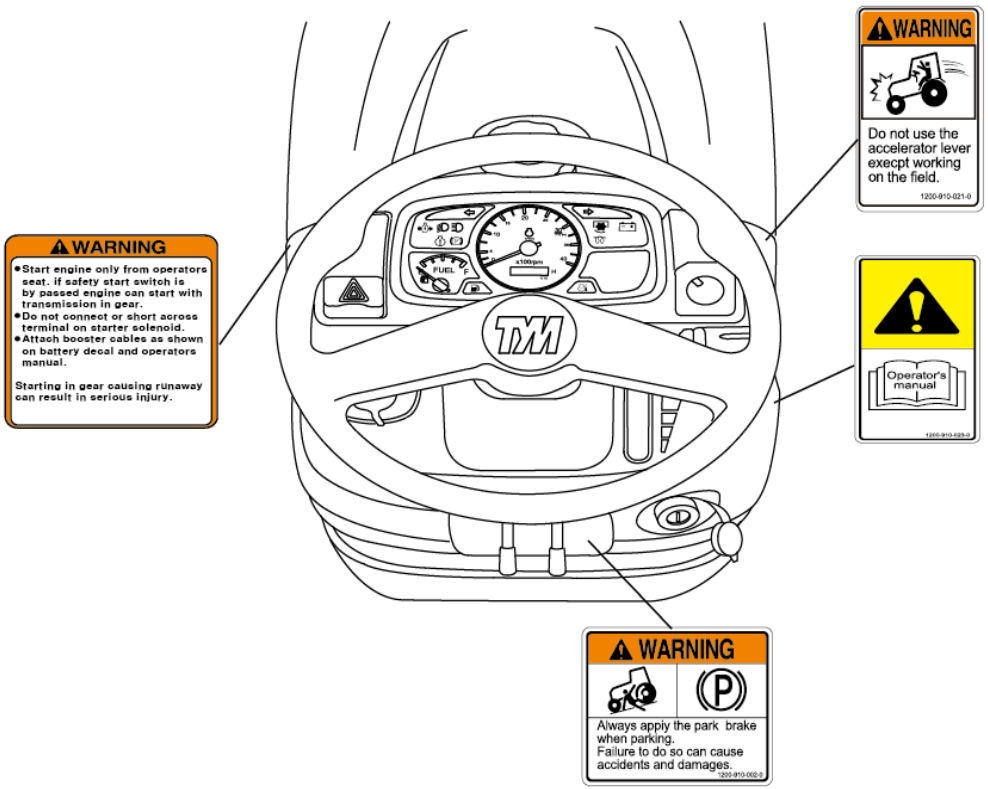

https://truckmanualshub.com/

DECALS ON THE CHASSIS

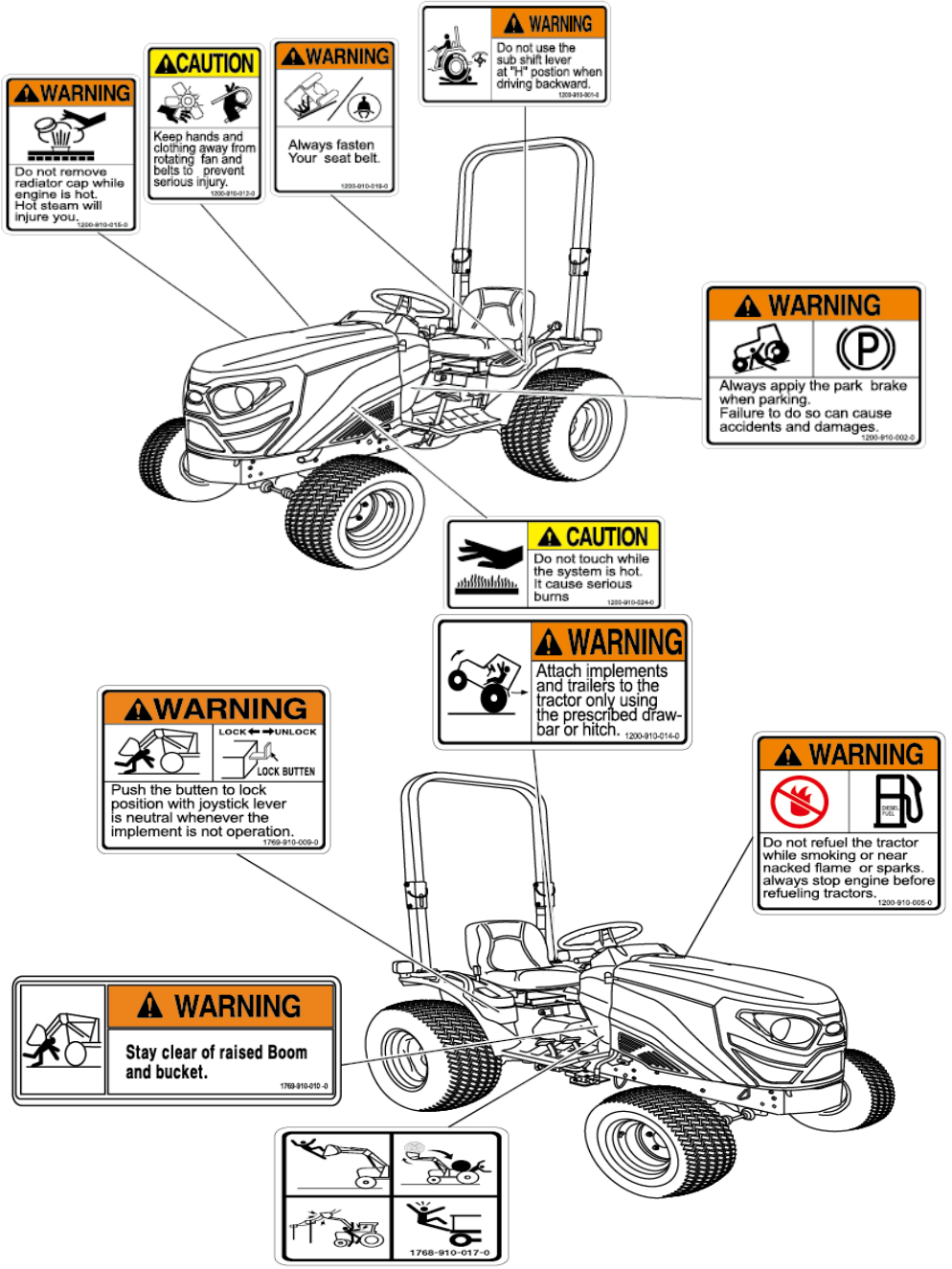

https://truckmanualshub.com/

DECALS AROUND THE SEAT

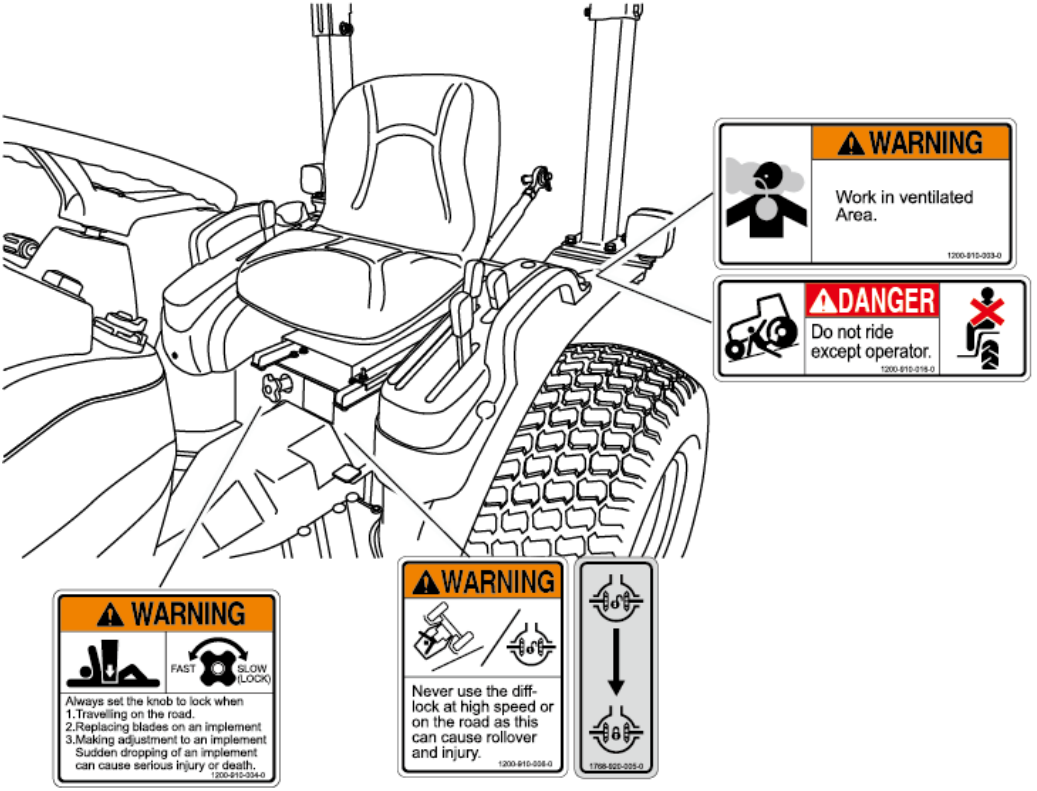

https://truckmanualshub.com/

UNIVERSAL SYMBOLS

Some of the universal symbols have been shown below with an indication of their meaning

Engine Speed rev/min x 100)	**Pressured-open slowly**	**Corrosive Substance**
Hours, recorded	**Continuous Variable**	**”Tortoise” Slow or Minimum Setting**
Engine Coolant temperature	**Warning**	**”Hare” Fast or Maximum Setting**
Fuel Level	**Hazard warning**	**Transmission oil pressure**
Engine Stop control	**N** **Neutral**	**Turn signal**
Lights	**Fan**	**Transmission oil temperature**
Horn	**Power take off engaged**	**P** **Parking brake**
Engine oil pressure	**Power take off disengaged**	**Work lamps**
Air filter	**Lift arm raise**	**Differential lock**
Battery charge	**Lift arm lower**	**See operator’s manual**

https://truckmanualshub.com/

Section - A

Controls, Instruments and Operations

The following pages in this section detail the location and function of various instruments, switches and controls on your tractor.
Even if you operate other tractors, you should read through this section of the manual and ensure that you are thoroughly familiar with the location and function of all the features of your new tractor.

Do not start the engine or attempt to drive or operate the tractor until you are fully accustomed to all the controls.
It is too late to learn once the tractor, is moving. If in doubt about any aspect of the operation of the tractor consult your TYM tractor dealer/distributor.

Particular attention should be paid to the recommendations for running the tractor to ensure that your tractor will give the long life and dependable service for which it was intended.

https://truckmanualshub.com/

► INSTRUMENTS AND SWITCHES

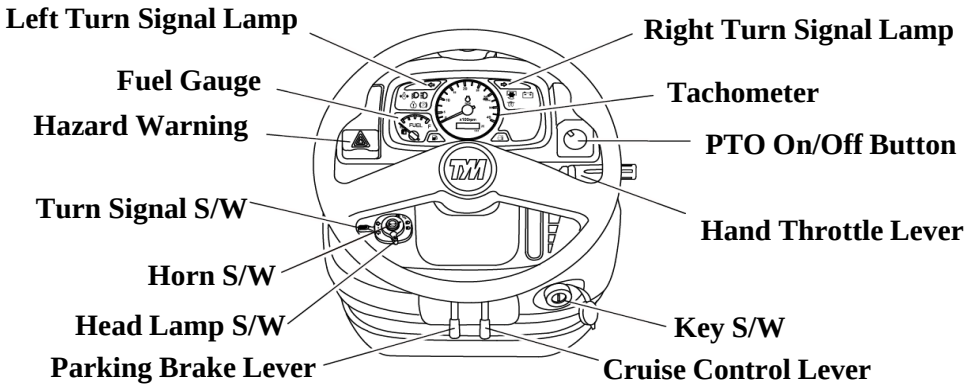

► MAIN SWITCH (KEY SWITCH)

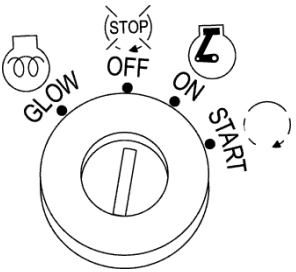

[OFF] - The key can be inserted or removed

[ON] - The electric circuit is on.

[GLOW] - Glow plugs preheat the combustion chamber

[START] - The starter motor is engaged.

When the key is released it will return to the ON position

► HEAD LAMP, TURN SIGNAL SWITCH AND HORN

■ HEAD LAMP SWITCH

High and low beams are operated on the main switch

Position ①. Low beam

Position ②. High beam

■ TURN SIGNAL SWITCH

Pull the turn signal lever down to signal a left turn.

Push the turn signal lever up to signal a right turn.

■ HORN

Push the Red button.

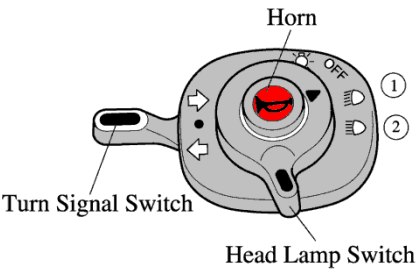

https://truckmanualshub.com/

► HOUR METER

The hour meter consists of digits with the last digit indicating 1/10th of an hour.

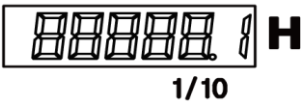

► TACHOMETER

This meter shows the revolutions of the engine and the PTO shafts as well as the travel speed in top gear.

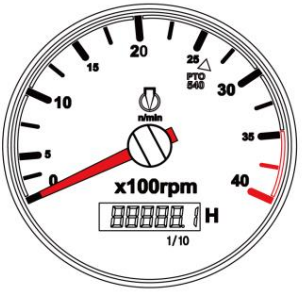

► FUEL GAUGE

Shows the amount of fuel in the tank when the ignition switch is **ON.**

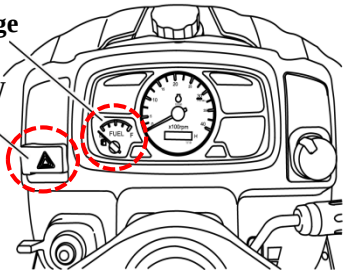

► HAZARD WARNING SIGNAL SWITCH

Push the hazard warning signal once to operate the hazard warning lights. (Left and right turn indicators flash).

Push the hazard warning light switch again to switch off the hazard warning lights.

► CRUISE CONTROL LEVER

■ Engaging Cruise Control

DO NOT engage cruise control when reversing.

Engage the cruise control as follows:

– Depress the forward speed control pedal until the required speed is achieved.

– push up the cruise control lever to engage cruise control.

– Release the forward speed control pedal.

■ Disengaging Cruise Control

To disengage the cruise control you can either depress forward speed control pedal or the master brake pedal.

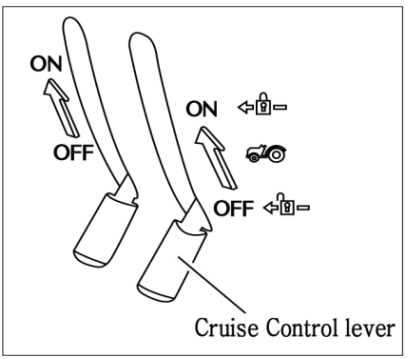

https://truckmanualshub.com/

►WARNING LIGHTS

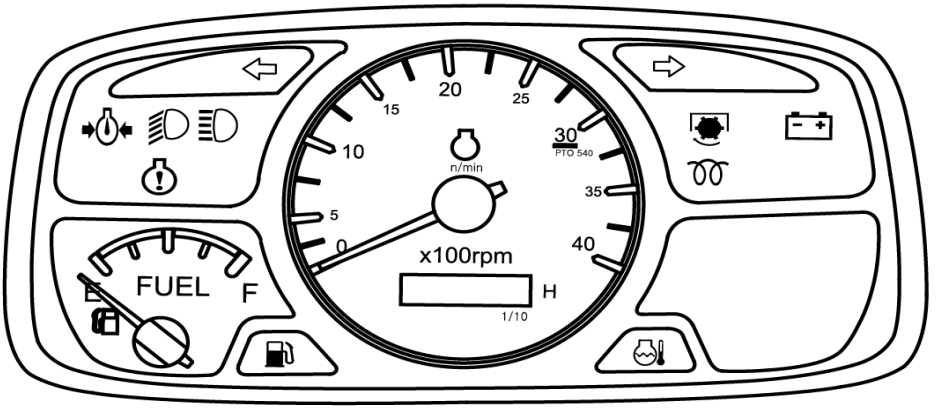

Charge Lamp

This light will go off as soon as the engine starts to run to indicate that the alternator is charging. (Please note, as a broken fan belt can cause the light to come on, please stop the engine as overheating can occur if not rectified immediately)

Oil Pressure Lamp

Will go out as soon as the engine starts if the oil pressure is correct.

If it comes on while the engine is running, stop the engine and get expert advice**.**

PTO Monitor Lamp
Shows the revolution of the PTO.
Refer to Monitor Lamp on page 38.

Fuel Level : If it comes on while the engine is running, fill the tank with fuel.

High Beam Lamp is operated on the combination switch.

Low Beam Lamp is operated on the combination switch.

Glow Signal Lamp indicates preheating.

https://truckmanualshub.com/

■ **THE PTO MONITOR LAMP**

On the dash panel indicates the state of the PTO shaft.

1. If the monitor glows: The PTO is rotating.
2. If the monitor is off: The PTO is off.

PTO monitor Lamp

■ **PTO ON/OFF Switch**

PTO ON/OFF switch is situated on the right hand side on the instrument panel and can be identified easily with its built in yellow colored indicator.

When the switch is pushed down to start the PTO indicator glows to indicate that the switch and the PTO are in ON position.

If the switch is pushed down and turn counter clock wise the indicator goes off signaling that the PTO is OFF.

The PTO shaft will not rotate if switch is in OFF position.

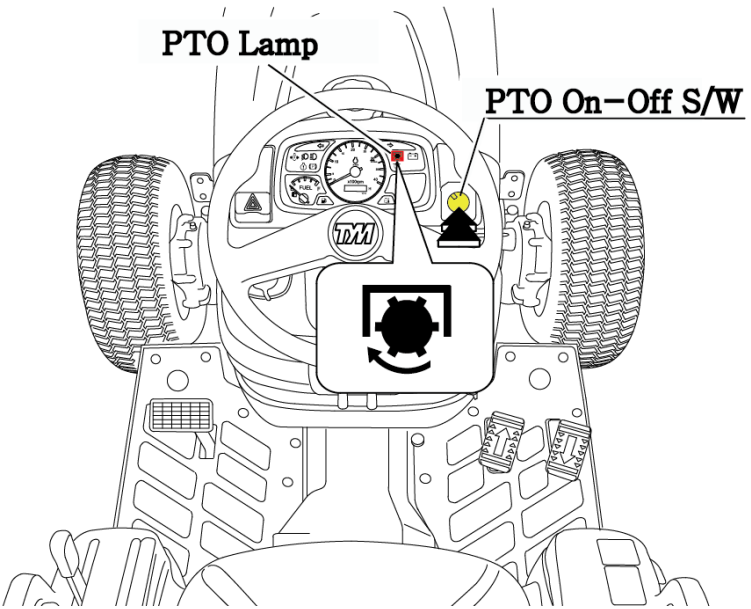

https://truckmanualshub.com/

► TRACTOR CONTROLS

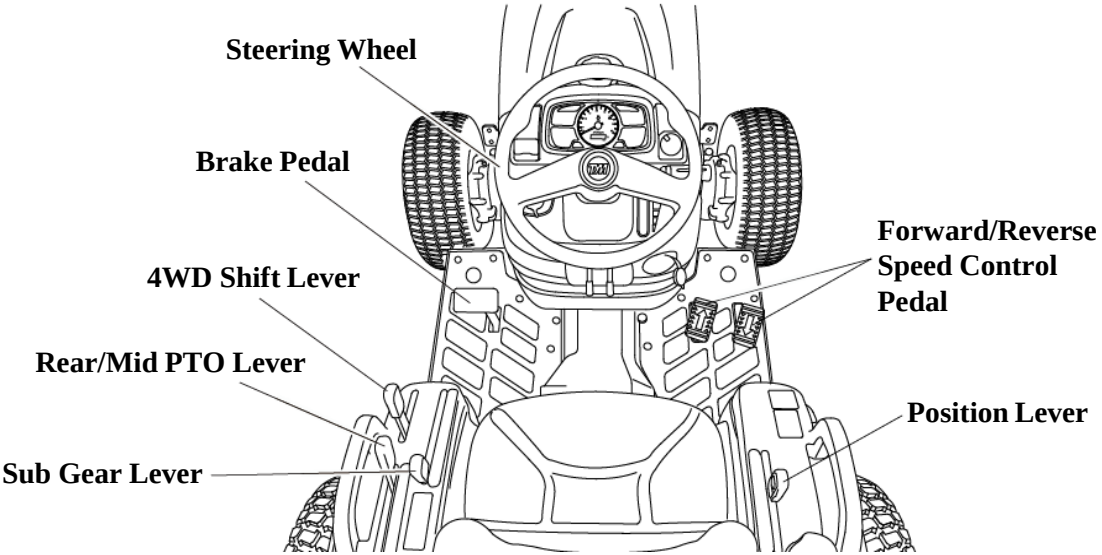

► THROTTLE LEVER (HAND THROTTLE)

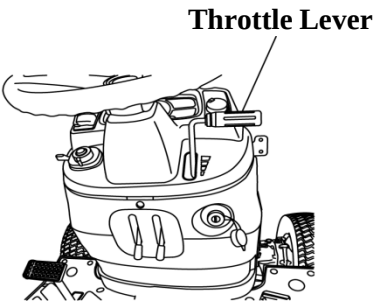

The hand operated throttle lever is located on the RHS of the dash cover.

To increase the engine speed, pull the lever downward.

To decrease the engine speed, push the lever upward.

The Lever can be left in any position between idle and maximum as required.

► SPEED CONTROL PEDAL

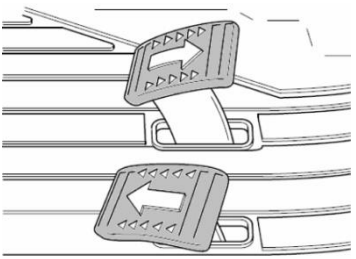

The Speed Control Pedal is located in the RHS of the Operator floor.

Depress the forward speed control pedal to move forward.

Depress the reverse speed control pedal to move backward.

The speed control pedal will return to neutral position and the tractor will stop when the speed control pedal is released.

https://truckmanualshub.com/

Important	Do not change from forward to backward or backward to forward suddenly in high range. Sudden change may result in damage to mechanism and place the operator at risk of injury.

► BRAKE PEDAL

The brake pedal is located on the LHS of the operator.

It is used for two functions.

- To stop the tractor
- To release cruise control

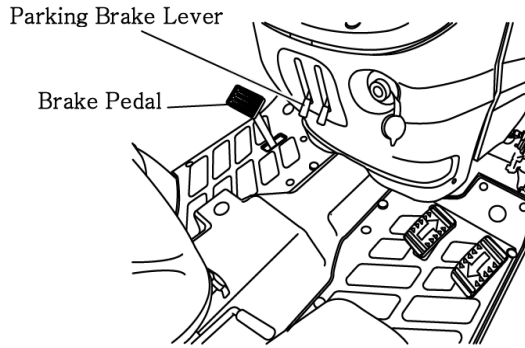

► PARKING BRAKE LEVER

Push the brake pedal down while pulling the parking brake up to engage. Press the parking brake pedal and push the brake pedal to release.

Caution	Perform tight turns only at a slow safe speeds. Doing so at a high speed can cause rollovers and very serious injury or death.

https://truckmanualshub.com/

Important	Traveling with the parking brake on will damage the brakes.

► SUB GEAR LEVER (RANGE SHIFT LEVER)

The Sub Gear Lever is located on the LHS of the operator.

Operate the sub gear lever to select the appropriate speed for different applications.

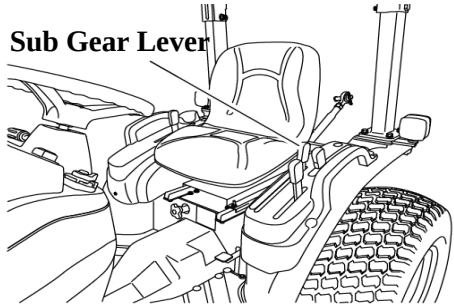

SUB GEAR LEVER

(RANGE SHIFT LEVER)

► DIFFRENTIAL LOCK PEDAL

The Differential Lock Pedal is located below the LHS of the Seat.

In case of wheel slippage use the diff-lock by pushing down on the diff lock pedal.

To release it, remove the foot from the pedal.

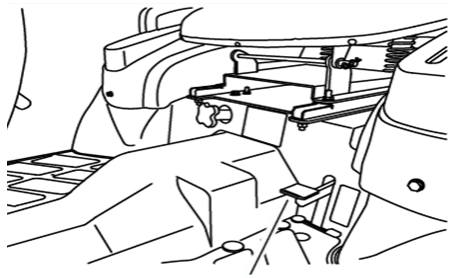

Differential Lock Pedal

Danger	Tractor will be difficult to turn if the Diff-lock is engaged, ensure the lock is disengaged before turning the steering wheel.

Danger	Tractor will be difficult to turn if the Diff-lock is engaged, ensure the lock is disengaged before turning the steering wheel.

Important	Do not use high speed when engaging Diff lock. If the diff lock does not release after removing the foot from the diff lock pedal, alternatively brake with the left and right brake until it gets released.

https://manualshub.com/

► FRONT WHEEL DRIVE LEVER (4WD)

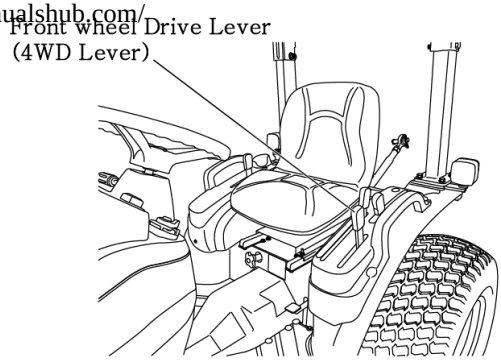

Front wheel drive lever is located below the LHS of the Operator.

In the ON position the front wheels are engaged and in the OFF position they are disengaged.

Engage & disengage the front wheel drive with the front wheels in the straight position and at low speed.

Important	Do not use front wheel drive at high speed or on the road as premature wear of components will result.

The use of front wheel drive improves traction performance.

► DRIVER'S SEAT

To adjust the seat backwards and forwards, lift the lever at the front of the seat and set it to the desired position (Please refer to page 16 of how to adjust the seat)

■ Operating the Safety Switch

If you do not sit the your seat in when you operate the Tractor, The engine will turn off.

■ Seat Belt

-Release the Seat Belt

Press button **C** and Pull the Male Fitting **A** from the Buckle **B**.

-Adjusting the Seat Belt

Make Sure the belt is across your hip and not over your stomach.

To adjust the male fitting **A**:

1. Pull toggle **D** down the strap by the required distance.
 a. To make the strap longer, pull end **E** as far as it will go.
 b. To make the strap shorter, pull end **F** as far as it will go.

https://truckmanualshub.com/

PTO

Both of the rear and mid PTO are provided for variable utility. They can be engaged simultaneously or separately at same time.

The engine will not start if PTO switch is ON position.

The engine will shutoff if the operator leaves the seat with parking brake released and PTO engaged

Caution	To avoid damage of transmission and implement, do not engage PTO with the engine running at high speed.

REAR PTO

The tractor has one speed PTO(540rpm). Use the PTO lever to engage.

The PTO switch must be OFF before PTO is engaged.

1. Decrease engine speed to near idle.
2. Make sure that PTO switch is OFF.
3. Engage rear PTO using the PTO lever.
4. Turn on the PTO switch.
5. Increase engine speed to desired speed.

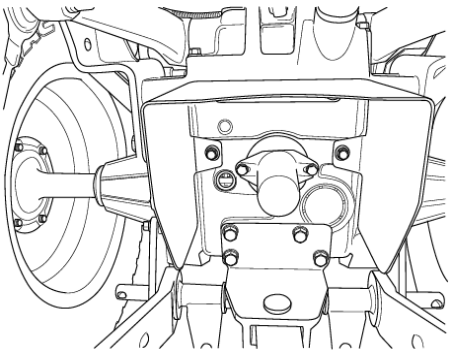

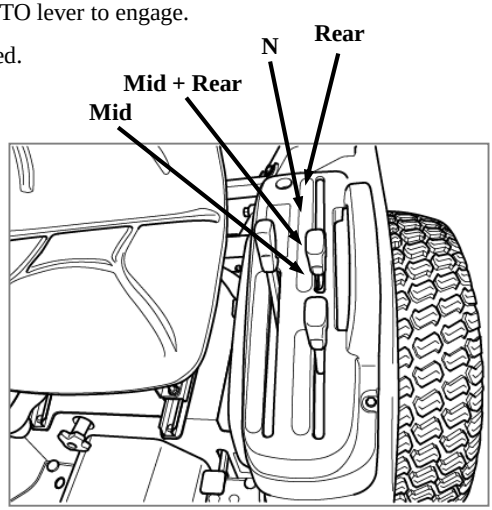

Engine RPM	REAR PTO speed
2893	540RPM
3000	560RPM

MID PTO https://truckmanualshub.com/

The speed of mid PTO is 2,000rpm. Use the PTO lever to engage.

The PTO switch must be OFF before PTO is engaged.

1. Decrease engine speed to near idle.
2. Make sure that PTO switch is OFF.
3. Engage mid PTO using the PTO lever.
4. If rear PTO is needed to engage, shift the PTO lever to correct position.
5. Turn on the PTO switch.
6. Increase engine speed to desired speed.

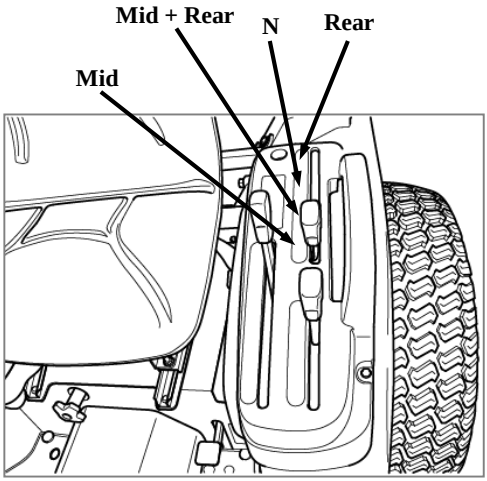

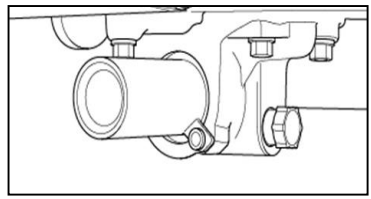

EG RPM	MID PTO Speed
2875	2000 RPM
3000	2087 RPM

Important	If operator turns off PTO switch, rear PTO and mid PTO are off at once.

Caution	Do not operate any implement at a high speed than is specified for it. When making adjustments to the implement stop the engine to avoid serious injury. When leaving the tractor stop the engine, and remove the key. Set the parking brake**.**

https://truckmanualshub.com/

► OPERATING THE HYDRAULICS

The hydraulics are powered with an engine driven hydraulic pump and controlled with a position control lever mounted beside the driver.

► HYDRAULIC POSITION CONTROL LEVER

The Hydraulic Position Control Lever is located on the RHS of the operator.

Implements can be raised and lowered with the hydraulic position control lever and can be stopped at any position by stopping the lever.

To raise the implement : Pull the lever backward.

To lower the implement : Push the lever forward.

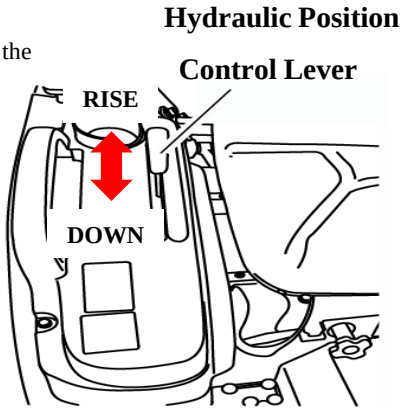

Warning	After finishing the work, always lower the implement to the ground and switch off the engine, set the parking brake to avoid injuries and accidents.

► LOWERING SPEED CONTROL KNOB FOR THE 3 POINT HITCH

This knob controls the downward speed of the Hydraulic's three point linkage and is located below the seat.

To slow the downward speed, turn the knob clockwise.

To increase the downward speed, turn the knob counterclockwise.

To lock, turn the knob clockwise;

Do not over tighten the knob.

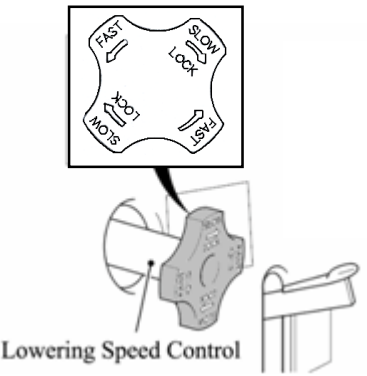

https://truckmanualshub.com/

Caution	Always set the knob to lock when 1.Traveling on the road 2. Replacing tires or blades on an implement. 3. Making adjustments to an implement. The sudden dropping of an implement due to hydraulic problems can cause serious injury or death.

► OPERATING THE 3 POINT LINKAGE (TPL)

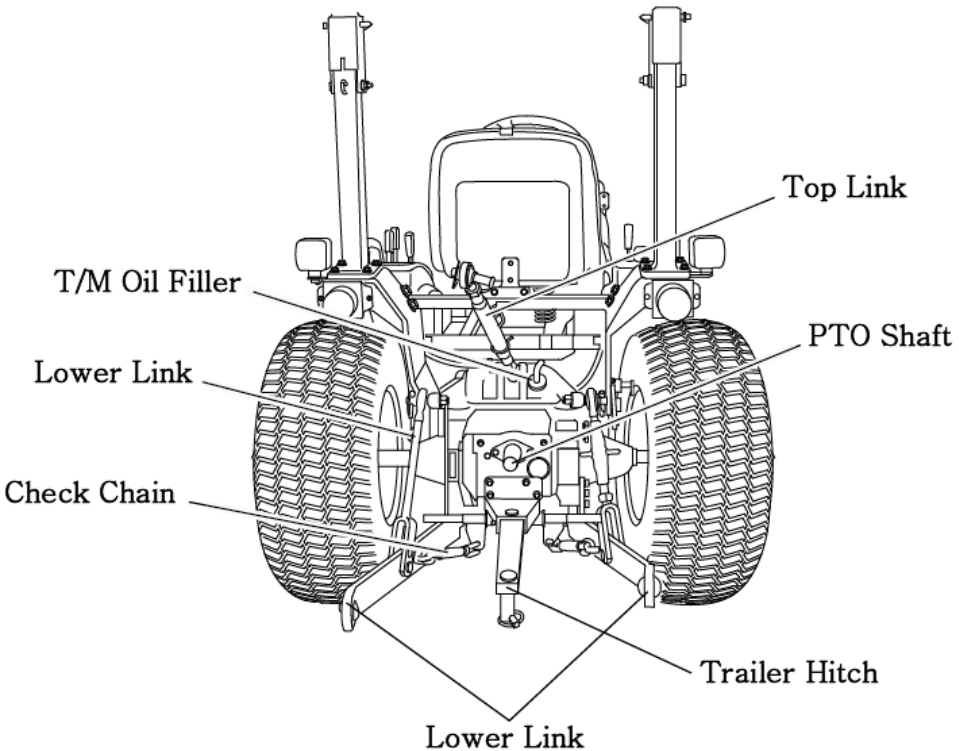

https://truckmanualshub.com/

► ADJUSTMENT OF THE CHECK CHAIN

To adjust the check chain turn the turnbuckle to lengthen or shorten the chain and tighten the lock nut when the correct adjustment is achieved.

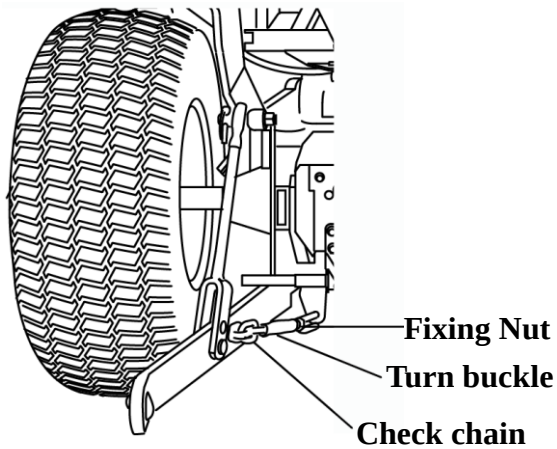

► ADJUSTMENT OF THE LIFT ROD

Adjust the length of the lift rod by screwing the Adjusting Handle (Turnbuckle) in or Adjust the length of the lift rod as necessary to set the implement in its working position parallel to the ground.

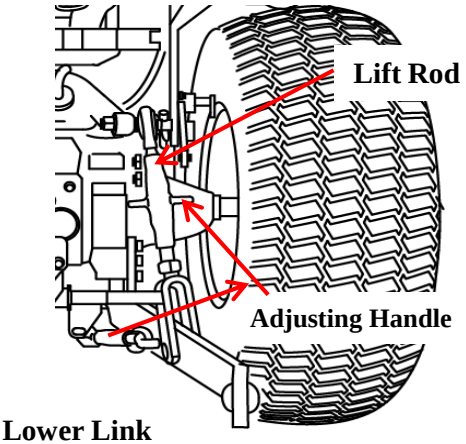

https://truckmanualshub.com/

► ADJUSTMENT OF THE YOKE ROD ON THE LOWER LINK

For different applications change the position of the Yoke rod on the lower link holes as shown and insert the pin in the direction of the arrow.

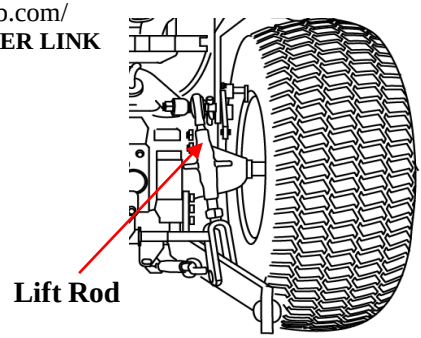

Danger	Only use drawbar to tow and keep the 3 point linkage in the raised position when towing with the drawbar. Position can create unbalance causing the tractor to roll-over & result in the death or serious injury.

► MOUNTING IMPLEMENT

If the PTO is used, remove the safety cover from the PTO shaft.

Adjust the yoke rod on the lower links to suit the implement in use.

Attach the left lower link, then attach the right lower link using the adjusting handle on the leveling box if required.

Attach the top link.

Attach the PTO shaft to the tractor if used, making sure that it is locked in place.

Adjust the check chains to suit the implement and tighten the locknuts. To remove an implement reverse the procedure.

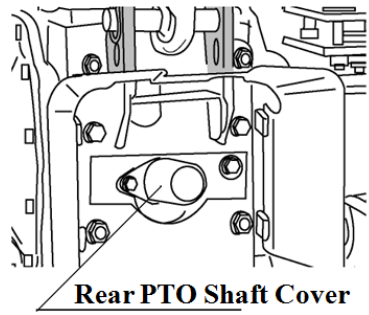

Caution	Do not attach a PTO shaft with the engine running and ensure all safety shields are in place.

https://truckmanualshub.com/

► STARTING THE ENGINE

Before starting the engine carry out the pre-operational checks as set out on page 26.

(1) Sit on the driver seat.
(2) Apply the footbrake.
(3) Put the hydraulic lever in the neutral position.
(4) Push down the clutch to activate the safety-starting switch.
(5) Put the main gear lever in neutral.
(6) Insert the ignition key and turn it on.
(7) Ensure that the warning lights are working.
(8) Always turn the ignition key to left for a moment & release it.
The automatic heater will start working as will be indicated by a light on the instrument panel .
As the lamp goes off, turn the key to the start position to start the engine.
(9) Ensure that all the warning lights are off with the engine running.

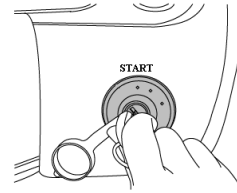

Important	Never turn the key to the start position while the engine is running as this can cause serious damage to the starter and engine flywheel. Only engage the starter for a period of not more than 10 seconds. If the engine does not start, rest the starter for about 20 seconds and try again for a maximum of 10 seconds. If the engine does not start after repeated attempts,refer to the fault tracing guide.

Important	Especially in cold weather, always allow the tractor to idle for a while to warm up & build up sufficient oil pressure to ensure normal operating temperature for a longer engine life.

► STOPPING THE ENGINE

-After light work, let the engine idle for a while and than turn the key off.

Important	After long or heavy work allow the engine to idle for 5- 10 minutes and than turn the key off.

https://truckmanualshub.com/

► WARMING UP

When starting the engine, allow it to warm up to operating temperature by allowing it to idle 5-10 minutes to ensure full lubrication and operating temperature.

Failure to do so can shorten engine life substantially.

► WARMING UP IN COLD WEATHER

Cold weather will change the viscosity of the oil, resulting in a reduced oil pumping capacity, which can cause damage to the engine if it is not warmed up correctly.

It also causes problems with the hydraulic system and the synchromesh in the transmission.

Correct times for warming up are:

Temperature	Time for warming up
Above 50°F	5~10 min.
50°F~ 32°F	10~20 min.
32°F~14°F	20~30 min.
14°F~-4°F	30~40 min.
Below –4°F	Over 40 min.

Important	Ensure the handbrake (Foot brake) is on during the warming period. **Failure to warm up correctly can result in problems.**

When the engine is warm push down the clutch and engage the main and auxiliary gear levers to the required position.

Push down on the brake pedals and release the handbrake.

Increase the engine revolutions and let out the clutch smoothly.

Only change gears with the main gear lever while moving and ensure that this is done with the full use of the clutch.

► STORING ENGINE IN OPERABLE CONDITIONS FOR 3 MONTHS OR MORE

When the engine is not operated during storage periods of three months or more, internal engine parts can rust and lose oil film. As a result, the engine can seize when it is started after storage.

To prevent such a rust, the engine must be operated periodically during storage.

https://truckmanualshub.com/

► NORMAL BRAKING AND PARKING

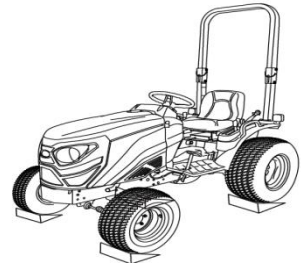

Illustration

Let the engine come back to idle and at the same time push in the clutch and brake simultaneously.
When the tractor has come to a halt, lower any implement to the ground, and put the main gear in neutral.
Apply the parking brake, stop the engine, and remove the key.

Caution	Always apply the parking brake when parking. Failure to do so can cause accidents and damage. As an extra precaution when parking on a slope, chock the rear wheels.

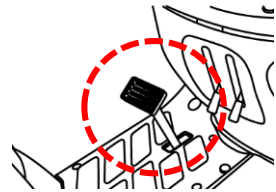

► DRIVING DOWNHILL

Use the engine's ability to brake when traveling downhill.

Never rely on the brakes only and never travel downhill with the gears in neutral.

Warning	When operating in hilly terrain the risk of rollover is increased substantially, please drive with extra care. When towing trailers in hilly terrain, ensure that they are equipped with brakes, use a lower gear to get maximum engine braking and do not change gears on a down hill run.

► OPERATION OF THE DIFF LOCK

While the diff lock is a very useful feature, care should be taken in its use as misuse can lead to dangerous situations.

The diff lock should only be used in situations where traction is lost on one of the rear wheels.

Warning	Use low engine revolutions when using the diff lock. Do not try to engage or use the diff lock on tight turns as serious damage can result.

https://truckmanualshub.com/

► CHECK DURING DRIVING

Constantly monitor the warning lights on the dash and if any come on, stop the tractor to determine the cause.
If the oil pressure light comes on, check the oil level first of all.
If the oil level is OK, ask a qualified dealer to check the reason for the light coming on.

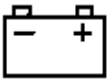

If the alternator warning light comes on, check all connections and ensure that the fan belt is not broken.
If all connections and the fan belt are intact consult your dealer to determine the cause of the problem.

► FUEL GAUGE

To avoid excessive condensation in the fuel tank , refill it the end of each day's work and ensure during the day that it does not drop to a low enough level where the fuel system will require bleeding to expel air in the system after refilling the tank.

► ENGINE COOLING WATER

If the gauge indicates that the engine is running hot, stop the tractor and check the coolant in the radiator.

Danger	Allow the engine to cool down before the opening radiator as serious burns may result due to hot steam & boiling water.

Also, check to ensure that the fins in the radiator core are not clogged or that the tractor has a broken or stretched fan belt.

Caution	When traveling on public or farm roads connect both brake pedals and allow for the weight of any mounted implement to ensure that the unit is not unbalanced. Also allow for the width when passing other road users. Where fitted use the hazard lights provided. Strictly follow the local traffic regulations.

Caution	When operating near others with an implement attached take particular care to allow for the width of the implement and avoid accidents.

https://truckmanualshub.com/

Lubrication

&

Maintenance

This section gives the full details of the service procedures necessary to maintain your tractor at peak efficiency while the lubrication and maintenance chart provides a ready reference to these requirements.

https://truckmanualshub.com/

► PRE-START CHECKS

To avoid problems it is recommended that a range of checks be carried out daily before starting the tractor.

For full details of the items and frequency please refer to the tables on page 57, 59.

► ENGINE COOLANT

Remove the radiator cap and ensure that the coolant is up to the filler neck and that it is clean with the correct anti-freeze or anti corrosion inhibitor in it.

If the coolant is a rusty color, drain the system completely and refill with the correct mixture of water and anti-freeze or corrosion inhibitor.

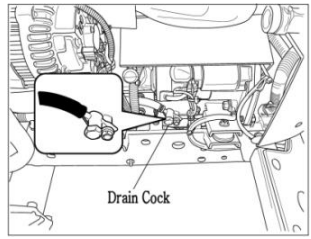

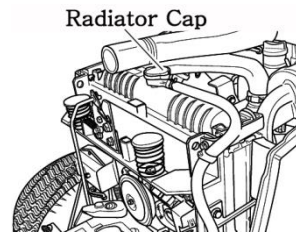

► ENGINE OIL

Pull out the stick, wipe it and dip it in the oil sump.
Ensure that the oil level is between the upper and lower marks near the upper mark.
If it's too low add oil, but never after the 100hrs service interval.

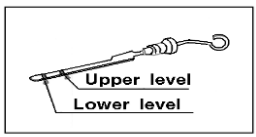

Engine oil gauge

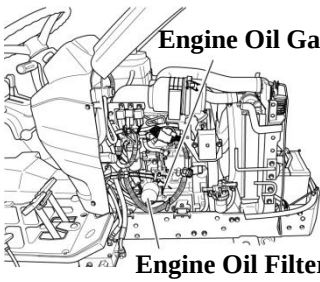

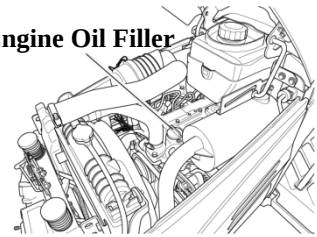

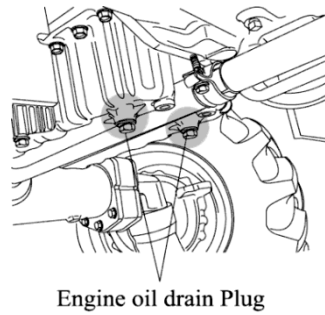

Important	Do not overfill the crankcase with oil.

https://truckmanualshub.com/

▶ TRANSMISSION OIL

Check the level with level gauge on rear of the transmission.

If the level is low add oil through the filler hole.

Caution	Always ensure that you use the correct oil for topping off or oil changes

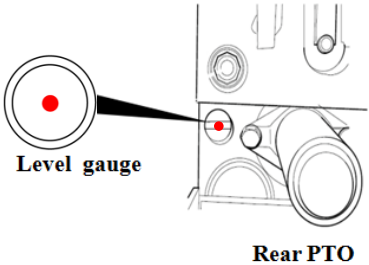

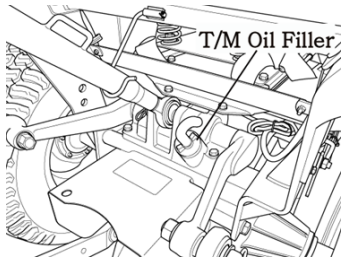

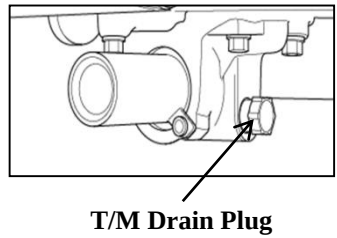

▶ FUEL

The Fuel Filler is located on the back side of bonnet.

Use the fuel gauge to check the fuel level and top off if too low.

It is a good practice to refill the tank immediately after use to avoid condensation

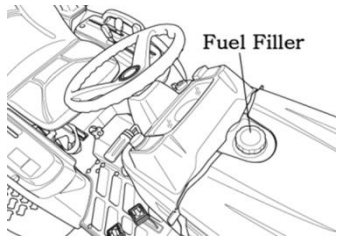

▶ TIRE PRESSURE

The air pressure used in the tires has a direct bearing on the life of the tire and its performance in the field.

Ensure that the tire pressures are correct and in accordance with the table on page 70.

To make a visual judgment see the drawing on the right.

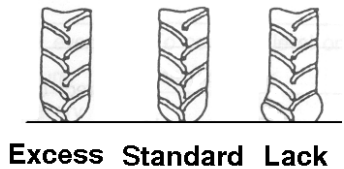

Important	It is strongly recommended that tire pressures are checked with a proper gauge only & visual inspections are relied upon.

Danger	Excess tire pressure can cause accidents!

https://truckmanualshub.com/

► STEERING

Ensure that the steering wheel does not have excessive free play.

► BRAKE

Ensure that the left and right brake rods adjusted correctly so they operate simultaneously.

The correct free play on the brake is 1.18-1.57 in (30~40 mm).

► ELECTRICAL

Check the operation of all gauges, switches, horn, lights and indicators.

► INSTALLING LOADER

1.Connect the P port of the loader control valve to the line on the tractor marked P(from the PTO valve)

2.Connect the T port on the loader control valve to the line on the tractor marked T.

3.Connect the remaining line from the control valve to the line on the tractor marked P1.

(to the transmission housing)

► DETACHING THE LOADER (LOADER VALVE OR LOADER CONNECTING PORT)

1.Detach the hydraulic hoses of the loader.

2.Assemble the cap (PF3/8) with pipe comp (PF3/8).

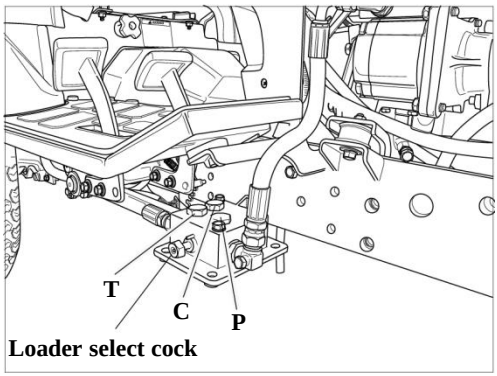

Loader select cock

When is loader installed, the turn clock-wise valve cock. Also when loader is not installed, turn counter clock-wise valve cock

https://tractormanuals.org/

PERIODICAL CHECK AND SERVICE TABLE

Caution	These intervals are for operation under normal conditions and need to be reviewed under severe conditions to a greater frequency

○ Check, Top-up or adjust ● Replacement
△ Clean or wash ★ First Replacement

Division	Item	Daily	Service interval(hour meter,mark)														
			50	100	150	200	250	300	350	400	450	500	550	600	1 Year	2 Year	Comment
Engine	Engine oil & Cartridge	○	★					●					●		●		Every 250 hours or 12 months after 1st 50 hours
	Air cleaner						○					●					
	Radiator coolant	○														●	
	Fuel	○															Fill tank
	Fuel filter	○										●					
	Fan belt	○															
	Battery			○													
	Loose nuts and bolts	○															Tighten
	Radiator hose clamp	○															Tighten if required
Chassis	Transmission oil & HST Oil Filter		★					○					●		●		Every 500 hours or 12 months after 1st 50 hours
	Oil of the 4WD front axle		★					○					●		●		
	Strainer		△						△								
	State of both brake pedals	○															

https://truckmanualshub.com/

Division	Item	Daily	Service interval(hour meter,mark)														
			50	100	150	200	250	300	350	400	450	500	550	600	1 year	2 year	Comment
Chassis	Operation of each lever	○															Smooth operation
	Free play of steering wheel	○															About 50mm(1.97in) of wheel circumference
	Toe-in							○						○			
	Grease in front wheel hub							○									
	Check the steering wheel joint							○						○			
	Wheel nut fastening torque	○															
	Loose bolts and nuts	○															Tighten to proper torque
	Operation of the instrument	○															
	Grease each nipple		○	○	○	○	○	○	○	○	○	○	○	○			
	Check the electric wiring	○															Without loose or broken terminals. Or missing wiring. Correctly clamped
	Hydraulic hoses&pipes							○									

► FILLING DIAGRAM & CAPACITY TABLE

https://tractormanualshub.com/

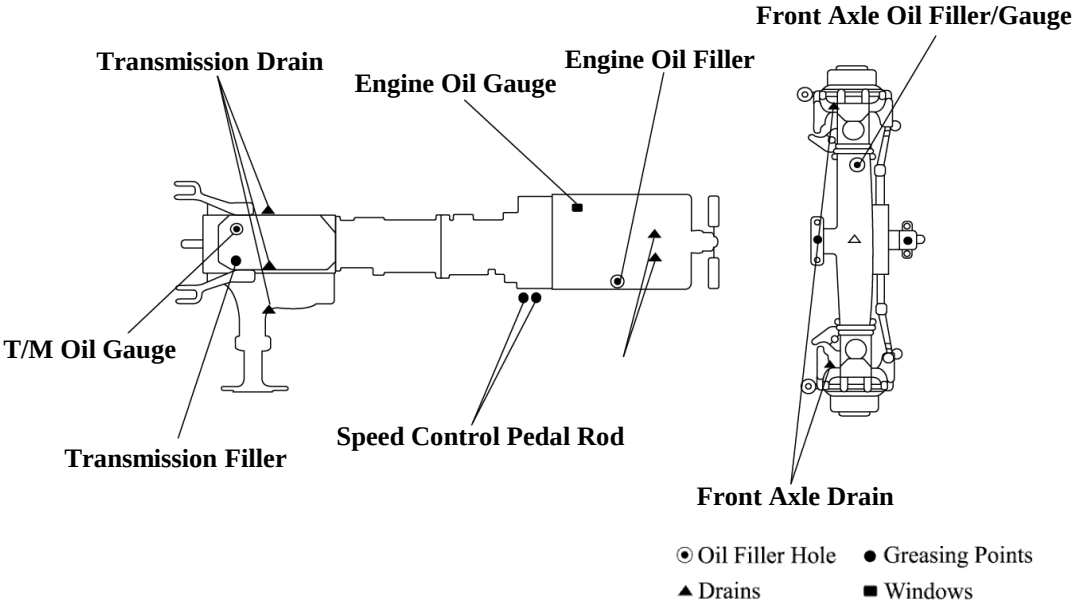

No.	Filling point	Fillings	Quantity Liter (gal.)
1	RADIATOR	Fresh clean water(L.L.C) with an antifreeze, mixed in ratio of minimum 50%	3.6ℓ(0.96US gal)
2	ENGINE	API : CD/CE grades Above:25°C(77°F)…SAE30 or 10W-30 0°C to 25°C(32°F to 77°F)…SAE20 or 10W30 Below 0°C(32°F)…SAE 10W or 10W-30	2.7 ℓ (0.71 US gal)
3	TRANSMISSION	(API GL-4 Grade, Gear Oil 80W)	14.5ℓ(3.83 US gal)
4	FRONT AXLE	(API GL-4 Grades)Gear oil #80 or #90	3.2ℓ (0.85 US gal)
5	FRONT AXLE PIVOT PIN	Grease	As required
6	FUEL TANK	Diesel fuel	22ℓ(5.81 US gal)

https://truckmanualshub.com/

► RECOMMENDED TRANSMISSION OIL

① TYM UNIVERSAL TRACTOR FLUID

► OPENING METHOD OF EACH COVER

► OPENING METHOD OF FAN COVER

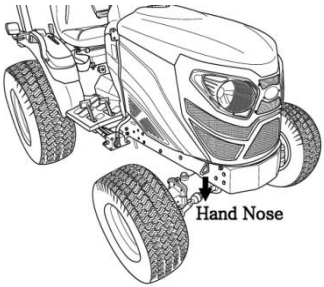

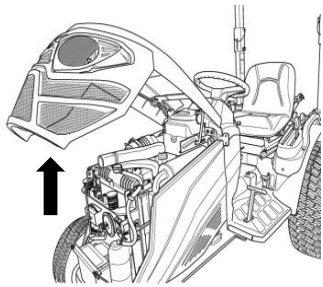

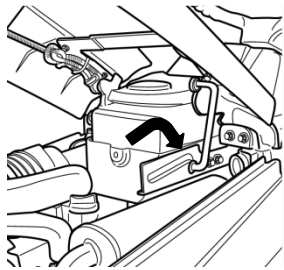

Pull the lower center lever of the front grille counter clock wise, pull the lower edges of hood panel upward, and pull the whole panel forward until the guide hook lock is hooked to the groove.

► Opening the Side cover

To open, grasp the side cover, pull the forward panel upward to separate from guide the support pin (1).

And pull the side panel forward again,

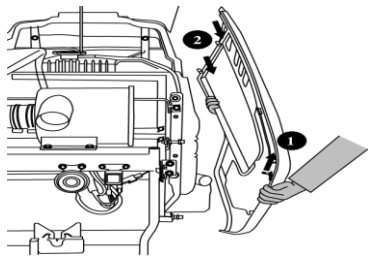

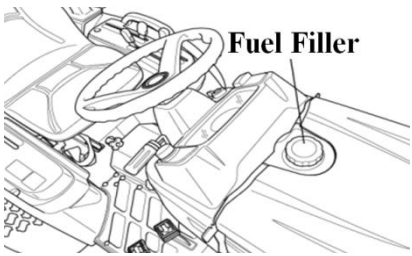

► FUEL

Use clean diesel fuel only .

Important	As diesel fuel equipment is susceptible to contamination by dust or water, ensure that all dust and water is kept well away from the fuel tank.

https://truckmanualshub.com/

■ BLEEDING THE FUEL SYSTEM

1.Fuel filter cock 「ON」

2.Open the cock on the fuel injection pump

3.Fill the tank with fuel and turn the ignition key to on.

4.Start the engine and allow it to run for a while

5.Close the fuel injection pump cock.

6.The bleeding of the system is now finished.

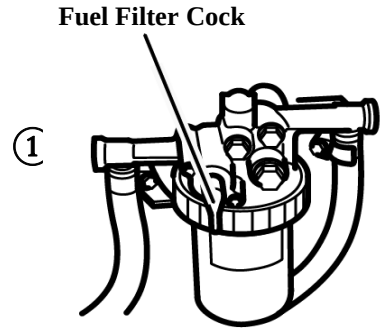

■ CLEANING THE FUEL FILTER

1. Close the fuel cock.

2. Remove the fuel filter element.

3. Wash the fuel filter element in clean diesel fuel.
If necessary, replace it.

4. Fit a cleaned or new fuel filter element.

5. Open the fuel cock.

6. Bleed the fuel system

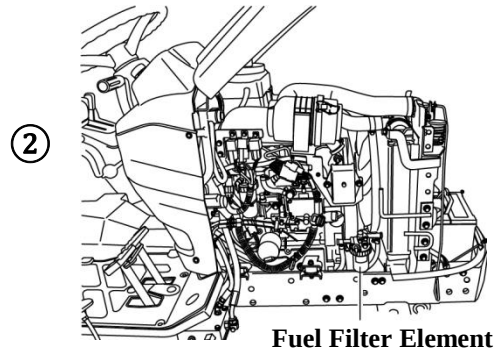

■ CLEANING OIL WATER SEPARATOR

If any foreign material or water is seen through the sight glass, remove it by performing the following steps

1. Prepare a container to collect fuel from the oil water separator.
2. Open the drain plug.
3. After a sufficient amount of fuel is drained, tighten the drain plug with a hand.
4. Do not use any tool.

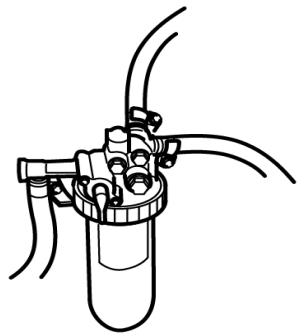

Important	Never use petrol, thinners or any other similar flammable material to clean the fuel filter.

https://truckmanualshub.com/

► CHANGING THE OILS IN THE TRACTOR

Always use quality oils for engine or transmission oil.

Refer to the table on pages 57, 58 for the change frequency.

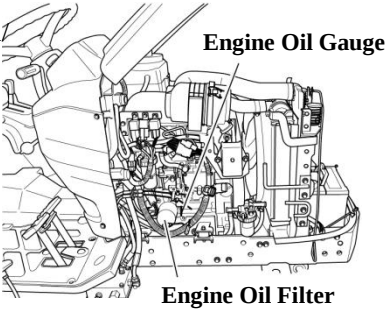

► CHANGING ENGINE OIL

Park tractor on a level surface, shut-off the engine and Remove the sump plug & drain oil. Replace and check the sump plug and refill the engine with oil to the correct level on the dipstick (approx. 2.7ℓ(0.71 US gal)).

The grade of oil to be used will depend on the ambient temperature. See page 63, 64

The tractor is shipped from the factory with 10W-30.

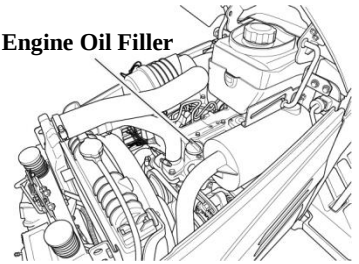

Important	When changing the oil always change the filter. Always use the same oil, as using different oils or specifications can cause damage. Dispose of the old oil as per local regulations.

► CHANGING THE TRANSMISSION OIL

1. Allow the transmission oil to cool.

2. Remove the drain plug from bottom of the transmission and drain the oil.

3. Replace and check the drain plug.

4. Refill the transmission to the correct level on the dipstick with new oil: Qty 14.5ℓ (3.83 US gal)

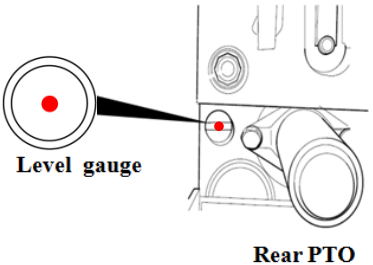

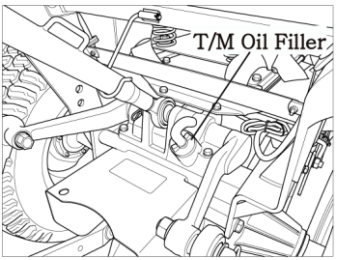

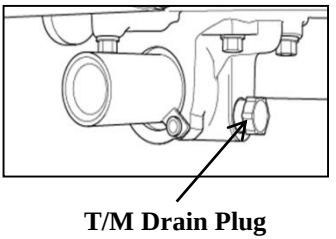

Important	Always use the same grade and specified oil as Replacements. Dispose off the old oil as per local regulations.

https://truckmanualshub.com/

► CHANGING OIL IN THE FRONT AXLE

1. Drain the oil from the center diff plug and the drain plug in each drive.

2. Replace and tighten all drain plugs.

3. Remove the Fill/Lever plugs from each final drive to vent air from the final drives.

4. Remove the dip stick from the filter hole and fill with front axle oil capacity to 3.2ℓ (0.85 US gal) and allow time for the oil to drain into the final drives.

5. Check the oil level with the dipstick and replace the Fill/Lever plugs on both final drives and tighten

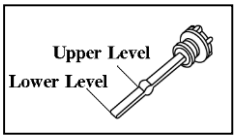

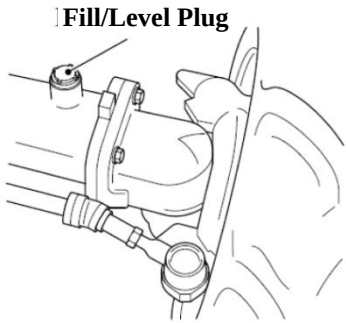

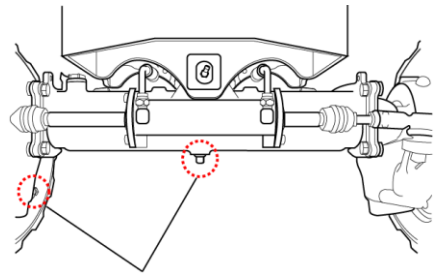

Important	Some operators have found that when they fill up with the correct amount of oil ,the level on the dipstick is too high due to the fact that it takes a while for the oil to run into the final drives. Opening the Vent plugs helps to speed this up.

► CLEANING AND CHANGING FILTERS

► ENGINE OIL FILTER

Using a filter wrench turn the filter counterclockwise to remove it.

Lightly smear the rubber seal on the new filter with oil to ensure, turn it clockwise until the seal contacts the base and then turn it another 2/3 turn to tighten it.

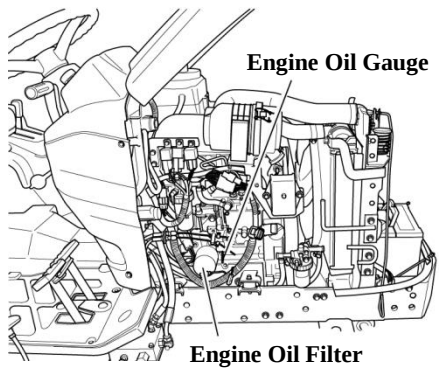

https://truckmanualshub.com/

► ENGINE OIL FILTER CARTRIDGE

Remove the filter with a filter wrench.

To replace, apply oil or grease on the seal, fit by hand until the seal contacts, then turn it a 2/3rd turn further to tighten it; check for leaks.

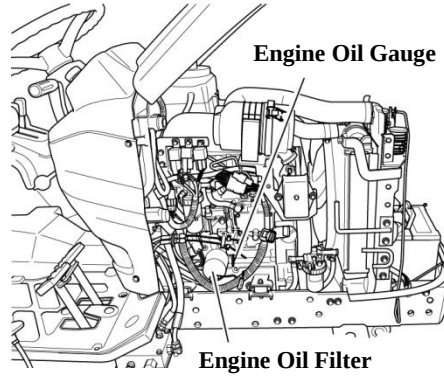

► CHANGING THE COOLANT

(1) Open to drain cock.

(2) Open the radiator at the same time.

(3) To give a thorough clean, run a hose into the radiator and flush it out.

(4) Close the tap and refill the radiator with a coolant mixture of water and corrosion inhibitor or anti freeze.

(5) Start the engine and allow it to run for approx 5 minutes, check the water level again and top off if required.

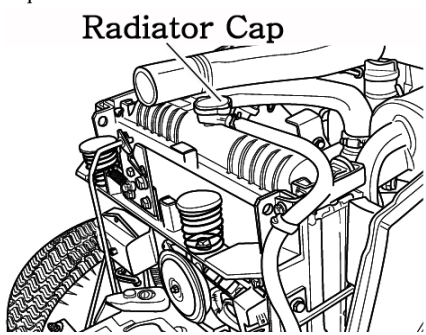

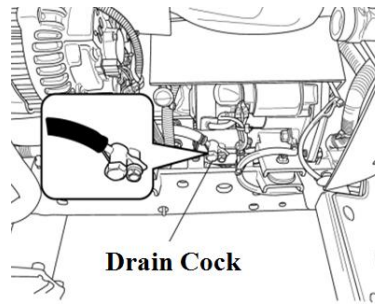

Caution	Do not remove the radiator cap on a hot engine. Allow the engine to cool down and then turn the cap slowly to ensure, that there is no excessive pressure in the radiator.

Caution	Serious burns can result from the contents of pressurized, hot radiators. Allow the engine to cool down completely before opening the radiator.

https://truckmanualshub.com/

► ANTI FREEZE

Frozen cooling water can damage the engine.

Before replacing the anti freeze solution flush the radiator.

Mix the anti freeze solution in accordance with the instructions applicable to the brand of anti freeze and the local climate.

Replace the solution in the radiator.

In the case of the loss of solution due to evaporation or overflow, replace with the original mixture ratio.

Important	Water or air under high pressure can distort the cooling fins on the radiator and reduce their efficiency**.**

► GREASING THE TRACTOR

Grease the tractor according to the service schedule (page 58)

Ensure that grease nipples are cleaned well before any attempt is made to grease them.

*** Front Axle Pivot Pin**

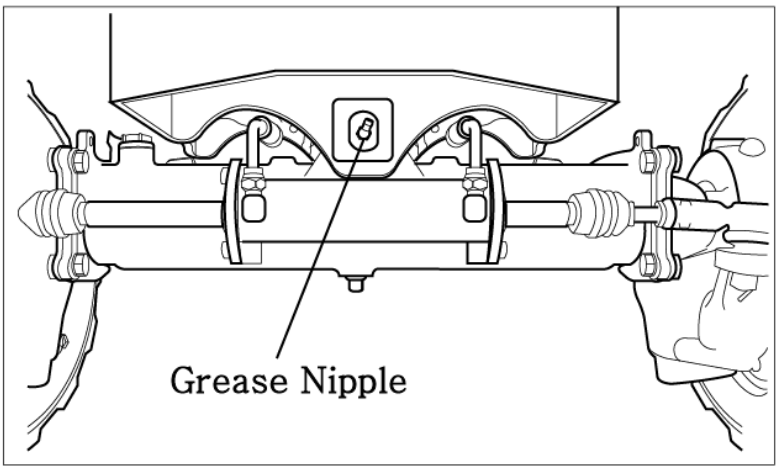

https://truckmanualshub.com/

► GAP ADJUSTMENT

► ADJUSTING THE BRAKES

As is the case with the clutch, use of the brakes will change the pedal free play and the balance between the right and left pedal.

The correct pedal free play is 30~40mm(1.18~ 1.57 in.)

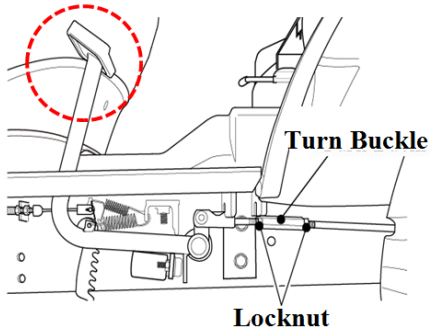

■ Adjusting Method

Loosen the locknuts to adjust the brake.

Turn the turnbuckle counterclockwise to increase the free play, or turn the turnbuckle clockwise to decrease.

Tighten the locknut and confirm, to fix the nuts.

Check that the free play is correct and the same on both pedals to ensure even braking.

Caution	An uneven adjustment of the left and right pedal will result in one sided braking when the pedals are connected and can cause serious accidents, especially at high speeds. Double check to ensure that free play is the same on both pedals.

► ADJUSTING THE THROTTLE LEVER

If this level is either loose or difficult to move please consult your dealer for rectification of the problem.

► ADJUSTING TOE-IN

If the toe-in adjustment is incorrect, it can cause the severe shaking of both the steering wheel and the entire tractor. The correct toe in is 2~6 mm (0.08~0.24in.)

We recommend that this adjustment is made by the dealer.

https://truckmanualshub.com/

► CHECKING THE BATTERY

Check the Indicator

Green color – Good condition.

Black color – Replace battery

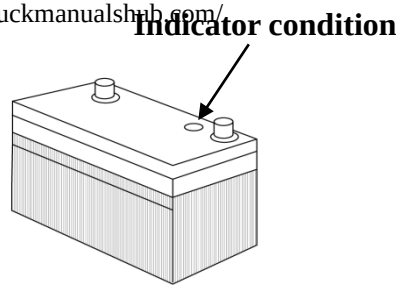

Important	Low electrolyte levels can cause premature battery failure and corrosion.

Caution	Electrolyte contains acid and can cause serious burns. Any spillage on the skin should be washed off by running water immediately.

► BATTERY MAINTENANCE

Low temperatures will affect the performance of batteries so take particular care of it in winter.

For the long-term storage of the tractor remove the battery and keep it in a cool dry room.

If it is on the tractor while stored, disconnect the negative terminal.

Batteries will self discharge if left for a period of time without use.

To keep them in good condition, charge them once a month in summer and every second month in winter.

When replacing the original battery, ensure that the replacement battery is the same size.

Failure to do so can cause problems with the electrical circuit.

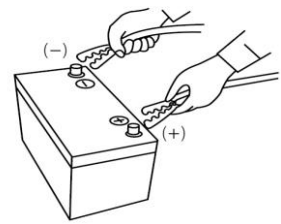

► BATTERY CHARGING

-A boost charge is only for emergencies. It will partially charge the battery at a high rate and in a short time.

-When using a boost-charged battery, it is necessary to recharge the battery as early as possible.

Failure to do this will shorten the battery's service life.

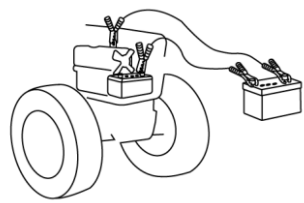

https://truckmanualshub.com/

Caution	Always disconnect the negative terminal first when removing the battery and always connect the positive terminal first when fitting the battery. When connecting the battery leads make sure not to reverse the polarity. Quick charging will reduce battery life. Disconnect the terminals prior to charging the battery to avoid damage to the circuit and electrical instruments.

► FAN BELT ADJUSTMENT

1.Loosen the alternator pivot bolt.

2.Move the alternator in order to increase or decrease the belt tension. Tighten the alternator pivot bolt and the link bolt to 22 N.m (16 lb ft).

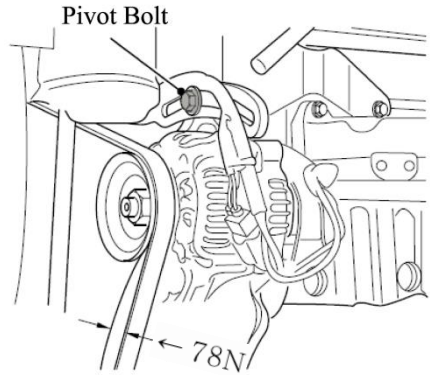

► SERVICING THE AIR CLEANER

■ Cleaning the Air Cleaner Dust Valve

Check that the dust valve is not blocked.

Inspect the rubber flaps for cuts and nicks and check that the rubber is not perished. Renew if necessary.

To remove dust from the dust valve, squeeze it between thumb and fingers. Wipe around the dust valve to remove dust collected on the outside.

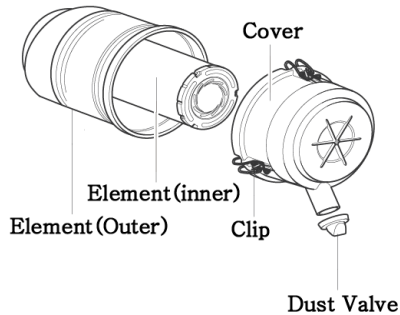

■ Cleaning/Changing the Element

Release the two clips on the air cleaner end cover and remove the element.

Remove dust by blowing compressed air through the element.

Check the element for damage, if necessary, change the elements.

Check all hoses for condition and tightness.

Important	Never beat the element on a stone or concrete floor/wall to clean it. Check all connections and hoses especially on the clean side of the air cleaner to ensure no dusty air can enter the engine. Check the element for flaws by putting a light inside the element. When reassembling, make sure all surfaces seal correctly to keep dust out. When working in dusty conditions, increase the service frequency.

► Replace the element after cleaning it 5 times or if it is damaged.

https://truckmanualshub.com/

► CHECKING HOSES AND LINES

The fuel lines, radiator hoses, hydraulic and rubber hoses are consumables, which deteriorate by age and use.

Check them regularly and replace if faulty.

Caution	Damaged fuel lines leak and cause fires. Damaged radiator hoses can cause hot water burns and in severe cases seize the engine.

► CHECKING THE WIRING HARNESS AND FUSES

Loose wires make inferior connections and damaged wires can cause short circuits, fires burnt wiring or reduce the efficiency of the components.

Replace or repair any faulty wiring or insulation.

If a fuse burns out again after it has been replaced, do not replace it with wire or a high capacity fuse, find the cause and rectify it or get an auto electrician to do so.

Where insulation is chafed or peeled off, recover the area with a good quality insulation tape. Where wiring comes out of it's fitting, replace it correctly with the standard fitting.

Important	Incorrect wiring or fuses can cause fires to both the tractor and surrounding area so get the dealer to check it annually. Likewise fuel pipes and wiring age with use. Ask your dealer to check it at least once every 2 years and replace as required.

► REPLACING FUSES

The circuit has 8 blade type fuses in its wiring circuit

(See diagram on page 82)

When a fuse has blown, replace it with one of the same value.

Using a large capacity fuse or wire burns out the wiring system.

Use fuse tongs to replace fuses.

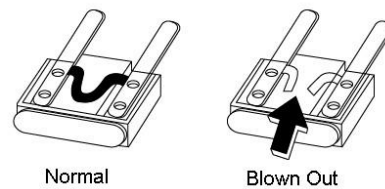

► MAIN FUSES

The wiring harness is equipped with 3 main fuses whose function is to preserve the wiring.

However when a main fuse blows the entire circuit is dead.

Always check the reason & rectify before replacing with a fuse of the same value.

To indicate that the fuse is blown it will be discolored.

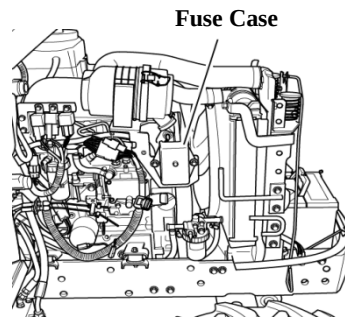

https://truckmanualshub.com/

Important	Always check the reason for a blown fuse otherwise the new fuse is also likely to blow. **NEVER EVER USE WIRE** in place of a correct grade fuse.

► SERVICE PRIOR TO DAILY AND SHORT TERM STORAGE.

Wash the tractor and keep it clean.

Fill the tank to avoid condensation and rust.

Lower any attached implement to the ground before parking the tractor.

For long-term storage consult your dealer.

https://truckmanualshub.com/

For daily or short term storage

Clean the tractor and remove all dirt from field work.

Fill the fuel tank to avoid condensation and rust.

Lower the implement to the ground.

Keep it in a machinery shed or, if not available cover the unit if left outside.

In very cold conditions it is advisable to remove the battery and keep it inside in a warm environment. This will ensure effective starting when the tractor is required.

When the outside temperature is below 32°F, replace the Antifreeze completely or drain the coolant to protect the engine from damage from frozen coolant.

Important	When washing the tractor ensure that the water does not get near electrical components or the oil filter points. To prevent short circuits remove the ignition key. Do not wash the tractor when the engine is running.

Long-term storage

When the tractor will not be used for a long time carry out the cleaning as for short term storage.

Drain the oil and replace it with new oil.

Run the engine for approx. 5 min. to ensure that it has new oil throughout the engine.

Drain the coolant from the radiator and remove the ignition key.

Attach a tag to both the key and the steering wheel saying” No coolant”.

Lubricate all grease and oil points on the tractor.

Check the pressures and add a small amount of extra pressure.

Lower any implement to the ground or store in a shady dry place.

Disconnect the clutch by using the clutch disconnecting arm.

Place a piece of wood under each tire to preserve the tire.

Important	After refilling the engine with coolant run the engine for approx. 5-10 min. at 1500-2000rpm every month as a corrosion prevention measure. Either remove the battery or the negative terminal as mouse damage to wiring can cause short circuits and fires. Remove the ignition key and store in a safe place.

Re-use after long term storage.

Carry out a full check of all oils and coolant.

Refit the battery and run the engine at idle for 30 min. to ensure optimum engine life.

Section - C

Specifications

The specifications on the following pages are given for your information and guidance.
For further information concerning your tractor and equipment, consult your authorized TYM dealer/distributor.

TYM policy is one of continuous improvement and the right to change prices, specifications or equipment at any time without notice is reserved.
All date given in this book is subject to production variations.
Dimensions and weights are approximate only and the illustrations do not necessary show tractors in standard condition.
For exact information about any particular tractor, please consult your TYM authorized dealer/distributor.

https://truckmanualshub.com/

▶ MAIN SPECIFICATIONS

MODEL		T254NH
Engine	Maker	Yanmar
	Model	3TNV80F-SDKTF
	Type	Water cooled, 4-cycle Diesel
	Rated Output	17.8 kW(24.2 PS) / 3,000 rpm
	Number of Cylinder	3
	Displacement (cc)	1,267 cc
	Bore and Stroke	80mm x 84mm (3.15 in. x 3.31 in.)
	Rated Speed (rpm)	3000
	High idle (rpm)	3,235 ±50
	Low idle (rpm)	1,350 ±50
	Accelerator	Hand Accelerator
	Compression ratio	23.1 : 1
	Firing order	1-3-2-1
	Injection pump	Indirect
	Lubrication type	Forced feed
	Cooling system	Water cooled, Forced circulation
	Coolant capacity	3.6 ℓ (0.95 US gal)
	Air cleaner	Single element
	Muffler	Horizontal
	Fuel	Diesel fuel (Use ultra low)
	Fuel Tank capacity	22 ℓ (5.8 US gal)
Electrical	Battery	12V 50AH
	Starting system	Starter motor with pre-heater
	Starter Capacity	1.2 kW
	Alternator	12V 40A

https://truckmanualshub.com/

MODEL			T254NH
Drive Train	Transmission		Hydraulic + Mechanical H/L with constant-mesh
	MFWD (4WD)		Standard
	Differential lock		Bevel gears with diff-Lock
Brake	Wet Disc, Foot operated, independent with provision of inter lock for simultaneous operation.		
	Inner dia.		3.03 in. (77 mm)
	Outer dia.		4.90in (124.5mm)
	Number of lining		2 each side
	brake thickness		0.27mm(0.13 in.)
PTO	Type		Independent PTO)
	Rear	Shaft	6 Splines, 35 mm(1⅜ in.)
		Speed	540 rpm @ 2,893 rpm
	Mid	Shaft	15 Splines , 25.4 mm(1 in.)
		Speed	2,000 rpm @ 2,875 rpm
Hydraulic	Steering		Hydrostatic
	Pump capacity		26.3 lpm (6.95 US gpm)
	Main Relief pressure		15.2 Mpa (2205 psi)
	Steering Relief Pressure		10.8 Mpa (1566 psi)
Hitch	3point linkage Category		Cat. 1(N)
	Lift capacity		600 kg (1323 lb) @ hitch
Dimensions (Turf Tire)	Overall length		100.5 in. (2553 mm)
	Overall width		45.8 in. (1164 mm)
	Overall Height		91.3 in.(2320 mm)
	Wheel base		57.5 in. (1460 mm)
	Min. Ground Clearance		9.4 in. (240 mm)
	Weight		730 kg (1610 lb)

MODEL			T254NH
Tire	Ag Tires	Front	6-12
		Rear	9.5-16
	Turf Tires	Front	20 x 8-10
		Rear	29 x 12.5-15
	Industrial Tires	Front	20 x 8-10
		Rear	27 x 12.5-15

*** SPEED CHART (km/h) (Engine Rated Speed)**

	Ag Tires	Turf Tires	Industrial Tires
L	6.8	5.9	5.6
H	16.9	14.7	14.1

FUEL SAVING TIPS

To save fuel & oil in your tractor, the following things should always be kept in mind.

A) Air Cleaning System

1) Clean the air cleaner regularly so that dust does not settle down.
2) For every 50 hours & everyday in sandy/

(a) Clean the air cleaner filter element with compressed air.
(b) If the rubber ring is cut or expanded then change it with an appropriate one.
Fix the rubber at the proper location & check for leakages if any.
(c) If air is leaking through the hose connection, check & rectify other leakages, too.

Note: If the air cleaning system is not properly maintained, it will lead to the early wear of piston rings & sleeves.
This will lead to problems like the loss of engine power, excessive oil and/or consumption fuel consumption.

B) Engine

1) Put the engine oil on load after the engine is heated & the water temperature gauge indicates the needle to be in the green zone.
2) If excessive black smoke is visible, then the paper element of the air cleaner, fuel injection pump or nozzles should be checked.
3) Do not run the engine without load for more than 2 minutes.
It is better to stop the engine rather than run it idle.
This will help in save fuel.

C) Brakes.

1) Do not over ride the clutch or brake pedals.
2) While coming down from a slope, reduce the engine throttle & use low gear.
Do not depend only on the brakes for stoppage.

D) Fuel system

1) Always use filtered diesel for the fuel system
2) At the end of the day's working, it is preferable to fill the diesel tank so that it may prevent condensation.
3) Change the filter if the system gets choked.
Do not change both the filters at the same time.
If the above directives are not adhered to, the fuel injection pump & injection nozzle will lose their life early.
Also, it will lead to excessive black smoke & excessive diesel consumption.

https://truckmanualshub.com/

E) Engine system

1) Always use the recommended grade of oil. (API CD:CE)

2) Every day before starting the engine, check the oil level with a dipstick & refill between the minimum & maximum levels.

3) Change the engine oil, replace the filter & “O” ring, as & when required.

F) Cooling system

1) Check the fan belt tension regularly and if required.

2) Check the coolant level in the radiator fins; always clean.

3)Replace the radiator cap with a genuine cap, only if required.

4) Do not remove the thermostat, but replace it with a new one if required.

5) Do not change the radiator water often.

Note:

1) Always stop any fuel or oil leakages.

2) Carry out the regular maintenance failure to do so might increase the fuel consumption by 25%.

3) Carry out the torque of cylinder head bolt & adjustment of valve clearance regularly. Consult your dealer for this.

4) Check the tire pressure & inflate, as recommended.

5) Always buy genuine spares from the authorized dealer/distributor.

6) Always carry out the service of the tractor by your authorized dealer/distributor.

For any other information, contact your nearest Authorized dealer/distributor.

https://truckmanualshub.com/

FAULT TRACKING

	SYMPTOM	CAUSE	REMEDY
Engine	Turning the main switch will not operate the starter	Clutch not pushed in Battery flat Switch faulty	Push the clutch in Charge or replace the battery Dealer to repair or replace Contact dealer to repair or replace
	Starter operates but not enough to turn the engine	Low battery Bad earth Thick oil	Charge the battery Clean the earth lead and tighten Drain and replace with correct oil
	Starter operates OK but does not start the engine	Air in fuel system Clogged fuel filter No fuel being supplied Glow plug disconnected or not working	Bleed the system Clean or replace both filters Fill tank or turn tap on Contact dealer for repair.
	Engine revolutions are irregular	Air in the fuel system Faulty injector Fuel pipe leak	Bleed the system Contact dealer for repair.
	The engine stops at low revolution	Poor fuel injection Faulty injection pump Wrong valve clearance Wrong idle setting Faulty injector	Contact dealer for repair Contact dealer for repair Contact dealer for repair Contact dealer for repair Contact dealer for repair
	The engine stops suddenly	Lack of fuel Faulty injectors Seized engine due to lack of oil, the wrong oil or lack of coolant	Fill the tank and bleed the fuel system Contact dealer for repair
	The engine overheats	Lack of coolant Broken or misadjusted fan belt Clogged air filter element Clogged radiator Low oil	Refill with coolant Adjust or replace Clean or replace air filter Clean the core Replace the oil to correct grade

https://truckmanualshub.com/

SYMPTOM		CAUSE	REMEDY
Engine	White smoke from the exhaust	Oil level too high Shortage of or faulty fuel	Reduce to correct quantity Contact dealer for repair
	Reduced performance of the engine	The injectors are clogged, carbon coated and sticking Low compression Leaking valve seat Incorrect valve gap Faulty timing Fuel shortage Clogged air cleaner	Contact dealer for repair Contact dealer for repair Contact dealer for repair Contact dealer for repair Contact dealer for repair Fill the tank and check fuel quality Clean the element
	Oil warning light comes on with the engine running	Low oil level Wrong oil Faulty light or switch Clogged oil filter	Fill to correct level Change to correct oil Replace faulty part Contact dealer for repair
	Alternator light comes on with the engine running	Wiring fault Faulty alternator Low water level or faulty battery Broken or loose fan belt	Contact dealer for repair Contact dealer for repair Top off or replace Replace or adjust

https://truckmanualshub.com/

SYMPTOM		CAUSE	REMEDY
Clutch	The clutch slips	Incorrect adjustment	Adjust to correct free play
		Worn or burnt lining	Contact dealer for repair
	The clutch does not disengage	Incorrect adjustment Rusty clutch lining	Adjust to correct free play Contact dealer for repair
Brake	Brake not working	Incorrect free play worn or burnt lining left and right gap different	Adjust to correct free play Contact dealer for repair Equalize
	Brake pedal not returning	Faulty return spring Lack of grease on the joints	Replace spring Remove rust and lubricate with grease
Hydraulic system	Hydraulics are not lifting	Engine revs. too low Lack of transmission Oil Air leaking in from a pipe Clogged suction filter Faulty pump Faulty hydraulic valve Faulty cylinder	Increase engine revs. Top off the oil to the correct level Repair or replace pipe or replace O ring on joint and tighten Clean and change oil Contact dealer for repair Contact dealer for repair Contact dealer for repair
	Oil leak from pipe	Loose pipe joint Cracked pipe	Tighten joint Replace or repair pipe
	When lifting the relief valve whistles	The stopper has slipped down	Adjust the stopper
For any other hydraulic problems please consult your dealer who has the correct equipment to diagnose and repair the system			

https://truckmanualshub.com/

	SYMPTOM	CAUSE	REMEDY
Steering wheel	Steering wheel shaking	Wrong toe-in Unequal tire pressure Loose component	Adjust toe-in Inflate both to correct pressure Tighten or replace if worn
	Excessive play in the steering	Worn steering shaft Worn components	Contact dealer for repair Contact dealer for repair
Electric instruments	Flat battery	Faulty wiring Faulty alternator Faulty regulator Broken or loose fan belt	Repair,reconnect or tighten as needed Contact dealer for repair Contact dealer for repair Replace or adjust
	Before anything else, check the electrolyte level of the battery and the connections. Top off if required and clean and retighten the terminal.		
	Dim head lights	Low battery Faulty wiring	Charge or replace Repair or replace as needed
	Headlights not working	Blown bulb Blown fuse Faulty contact	Replace bulb Replace fuse Repair or replace and check the earth
	Horn not working	Faulty horn button Faulty wiring Faulty horn	Replace button Repair or replace Replace
	Indicator not working	Blown bulb Faulty flasher unit Faulty wiring	Replace bulb Replace unit Repair or replace

https://truckmanualshub.com/

► Drawing for fixing position of the fuse

► Wiring diagram of the electric instrument

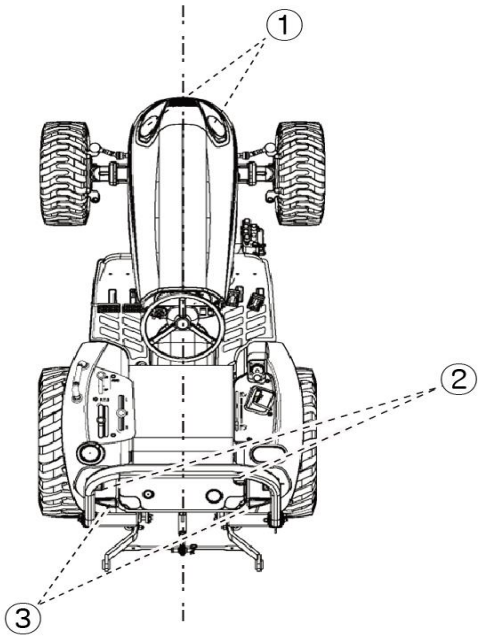

①	Head Lamp	12V/ 55W
②	Combination Lamp	12V/ 21W/ 5W
③	Stop Lamp	12V/ 21W/ 5W

* Main Fuse

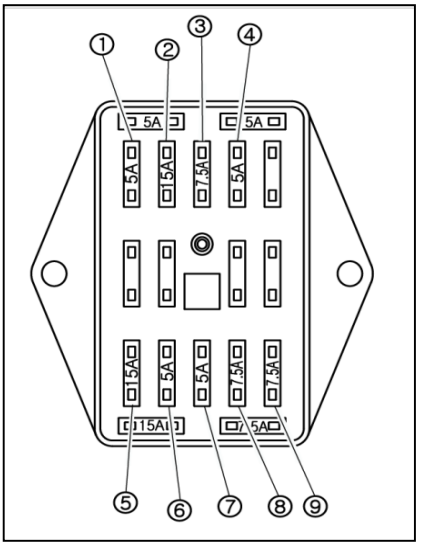

1	HAZARD	5A
2	COUPLER	15A
3	EG STOP, PTO	7.5A
4	GLOW TIMER	5A
5	LIGHT, HORN	15A
6	PANEL	5A
7	TURN SIGNAL	5A
8	WORKING LIGHT	7.5A
9	STOP LAMP , CRUISE	7.5A
10		
11		
12		
13		

https://truckmanualshub.com/

TRACTOR HISTORY CARD

DATE	JOB CARD NO.	NATURE OF DEFECT	PARTS REPLACEMENT	W/CLAIM NO. AND DATE	REMARKS

https://truckmanualshub.com/

SERVICE RECORD

DATE	TRACTOR HOURS	NATURE/TYPE OF REPAIR/SERVICE CARRIED OUT

https://truckmanualshub.com/

DAILY OPERATION LOG

DATE	JOB DONE	MACHINE HOURS		FUEL CONSUMPTION	ENGINE OIL TOPPED UP	REMARKS
		START	END			

https://truckmanualshub.com/

PART REPLACEMENT RECORD

DATE	PART DESCRIPTION	Q'TY	COST	DATE	PART DESCRIPTION	Q'TY	COST

https://truckmanualshub.com/

T254NH

Operator's Manual for Tractors

Code No.

1111-912-002-0

Printed in April 2016

1st Edition