https://truckmanualshub.com/

Kubota

U.S.A. : **KUBOTA TRACTOR CORPORATION**
3401 Del Amo Blvd., Torrance, CA 90503, U.S.A.
Telephone : (310)370-3370
Western Division : 1175 S. Guild Ave., Lodi, CA 95240
Telephone : (209)334-9910
Central Division : 14855 FAA Blvd., Fort Worth, TX 76155
Telephone : (817)571-0900
Northern Division : 6300 at One Kubota Way, Groveport, OH 43125
Telephone : (614)835-1100
Southeast Division : 1025 Northbrook Parkway, Suwanee, GA 30024
Telephone : (770)995-8855
Canada : **KUBOTA CANADA LTD.**
5900 14th Avenue, Markham, Ontario, L3S 4K4, Canada
Telephone : (905)294-7477
France : **KUBOTA EUROPE S.A.S**
19-25, Rue Jules Vercruysse, Z.I. BP88, 95101 Argenteuil Cedex, France
Telephone : (33)1-3426-3434
Italy : **KUBOTA EUROPE S.A.S Italy Branch**
Via Grandi, 29 20068 Peschiera Borrome (MI) Italy
Telephone : (39)02-51650377
Germany : **KUBOTA (DEUTSCHLAND) GmbH**
Senefelder Str. 3-5 63110 Rodgau /Nieder-Roden, Germany
Telephone : (49)6106-873-0
U.K. : **KUBOTA (U.K.) LTD.**
Dormer Road, Thame, Oxfordshire, OX9 3UN, U.K.
Telephone : (44)1844-214500
Spain : **KUBOTA ESPAÑA S.A.**
Avenida Recomba No.5, Poligno Industrial la Laguna, Leganes, 28914 (Madrid) Spain
Telephone : (34)91-508-6442
Australia : **KUBOTA TRACTOR AUSTRALIA PTY LTD.**
25-29 Permas Way, Truganina, VIC 3029, Australia
Telephone : (61)-3-9394-4400
Malaysia : **SIME KUBOTA SDN. BHD.**
No.3 Jalan Sepadu 25/123 Taman Perindustrian Axis,
Seksyen 25, 40400 Shah Alam, Selangor Darul Ehsan Malaysia
Telephone : (60)3-736-1388
Philippines : **KUBOTA PHILIPPINES, INC.**
155 Panay Avenue, South Triangle Homes, 1103 Quezon City, Philippines
Telephone : (63)2-9201071
Taiwan : **SHIN TAIWAN AGRICULTURAL MACHINERY CO., LTD.**
16, Fengping 2nd Rd, Taliao Shiang Kaohsiung 83107, Taiwan R.O.C.
Telephone : (886)7-702-2333
Indonesia : **P.T. KUBOTA INDONESIA**
Jalan Setyabudi 279, Semarang, Indonesia
Telephone : (62)-24-7472849
Thailand : **SIAM KUBOTA CORPORATION CO., LTD.**
101/19-24 Moo 20, Navanakorn Industrial Estate, Tambon Khlongnueng, Amphur Khlongluang,
Pathumthani 12120, THAILAND
Telephone : (662)-909-0300
Korea : **KUBOTA KOREA CO., LTD.**
106-24 Mongsan-Ri, Mankyung-Up, Kimje-City, Chonrapuk-Do, KOREA
Telephone : (82)-63-544-5822
India : **KUBOTA AGRICULTURAL MACHINERY INDIA PVT. LTD.**
Regus, Level 2 Altius, Olympia Tech Park, No.1 SIDCO Industrial Estate, Guindy, Chennai 600032, TN, India
Telephone : (91)-44-4299-4237
Vietnam : **KUBOTA VIETNAM CO., LTD.**
Lot B-3A2-CN, My Phuoc 3 Industrial Park, Ben Cat District, Binh Duong Province, Vietnam
Telephone : (84)-650-3577-507

KUBOTA Corporation

English (Australia)
Code No. 3C043-9971-2

M6040-M7040-M8540-M9540

OPERATOR'S MANUAL

KUBOTA TRACTOR

MODELS **M6040**
M7040
M8540
M9540

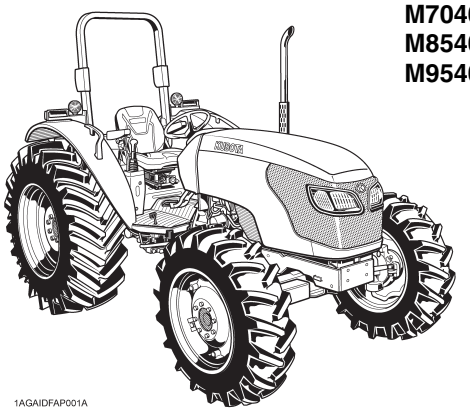

1AGAIDFAP001A

READ AND SAVE THIS MANUAL

PRINTED IN JAPAN

© KUBOTA Corporation 2006

Kubota

Downloaded from www.Manualslib.com manuals search engine

https://truckmanualshub.com/

FOREWORD

Thank you very much for choosing the ROPS model of the M series tractor.
This operator's Manual covers the operation, inspection and preventive maintenance instructions that is specific to the oceania models. For other information and instructions, refer to the separately issued operator's manual for the sister models. (M6040, M7040, M8540, M9540)
Please read both manuals carefully, to operate the machine properly and safety.
Proper daily inspection, servicing and lubrication keeps your machine in good condition.

SAFETY FIRST

This symbol, the industry's "Safety Alert Symbol", is used throughout this manual and on labels on the machine itself to warn of the possibility of personal injury. Read these instructions carefully. It is essential that you read the instructions and safety regulations before you attempt to assemble or use this unit.

DANGER :	Indicates an imminently hazardous situation which, if not avoided, will result in death or serious injury.
WARNING :	Indicates a potentially hazardous situation which, if not avoided, could result in death or serious injury.
CAUTION :	Indicates a potentially hazardous situation which, if not avoided, may result in minor or moderate injury.
IMPORTANT :	Indicates that equipment or property damage could result if instructions are not followed.
NOTE :	Gives helpful information.

KUBOTA Corporation is ···

Since its inception in 1890, KUBOTA Corporation has grown to rank as one of the major firms in Japan.

To achieve this status, the company has through the years diversified the range of its products and services to a remarkable extent, until today, 19 plants and 16,000 employees produce over 1,000 different items, large and small.

All these products and all the services which accompany them, however, are unified by one central commitment. KUBOTA makes products which, taken on a national scale, are basic necessities. Products which are indispensable, products intended to help individuals and nations fulfill the potential inherent in their environment. For KUBOTA is the Basic Necessities Giant.

This potential includes water supply, food from the soil and from the sea, industrial development, architecture and construction, and transportation.

Thousands of people depend on KUBOTA's know-how, technology, experience and customer service. You too can depend on KUBOTA.

M6040/M7040/M8540/M9540 (Australia)
AR . A . 8 - 8 . 1 . AK

Downloaded from www.Manualslib.com manuals search engine

https://truckmanualshub.com/

CONTENTS

⚠SAFE OPERATION ..... ⚠-1

SPECIFICATIONS 1
SPECIFICATION TABLE 1
TRAVELING SPEEDS 3

INSTRUMENT PANEL AND CONTROLS 4

OPERATING THE TRACTOR 8
STARTING 8
Turn Signal / Hazard Light Switch 8
Horn Button 8
PTO RPM / TRAVEL SPEED MONITOR 9
PTO Speed Display Mode Switching 9
OPERATING TECHNIQUES 10
Trailer Electrical Outlet 10

PTO 11
PTO OPERATION 11
PTO Gear Shift Lever 11
PTO Clutch Control Lever 11
LCD Monitor Message 12

THREE-POINT HITCH & DRAWBAR 13
DRAWBAR 13
Adjusting Drawbar Length 13
Swing Drawbar 13

HYDRAULIC UNIT 14
REMOTE HYDRAULIC CONTROL SYSTEM 14
Remote Control Valve 14
Remote Control Valve Lever 14
Remote Control Valve Coupler Connecting and Disconnecting 15

TIRES, WHEELS AND BALLAST 16
TIRES 16
Inflation Pressure 16
Dual Tires 16
WHEEL ADJUSTMENT 17
Front Wheels (with four wheel drive) 17
Rear Wheels 18

MAINTENANCE 19
SERVICE INTERVALS 19

PERIODIC SERVICE 21
SERVICE AS REQUIRED 21
Replacing Fuse 21
Replacing Light Bulb 22

OPTIONS 23

Downloaded from www.Manualslib.com manuals search engine

https://truckmanualshub.com/

Downloaded from www.Manualslib.com manuals search engine

https://truckmanualshub.com/

SAFE OPERATION

Careful operation is your best insurance against an accident.

Read and understand this manual carefully before operating the tractor.

All operators, no matter how much experience they may have, should read this and other related manuals before operating the tractor or any implement attached to it. It is the owner's obligation to instruct all operators in safe operation.

1. BEFORE OPERATING THE TRACTOR

1. Know your equipment and its limitations. Read this entire manual before attempting to start and operate the tractor.
2. Pay special attention to the danger, warning and caution labels on the tractor.
3. KUBOTA recommends the use of a CAB or Roll Over Protective Structures (ROPS) and seat belt in almost all applications. This combination will reduce the risk of serious injury or death, should the tractor be upset.
   If the CAB or ROPS is loosened or removed for any reason, make sure that all parts are reinstalled correctly before operating the tractor.
   Never modify or repair a CAB or ROPS because welding, bending, drilling, grinding, or cutting may weaken the structure.
   A damaged CAB or ROPS structure must be replaced, not repaired or revised. If any structural member of the CAB or ROPS is damaged, replace the entire structure at your local KUBOTA Dealer.

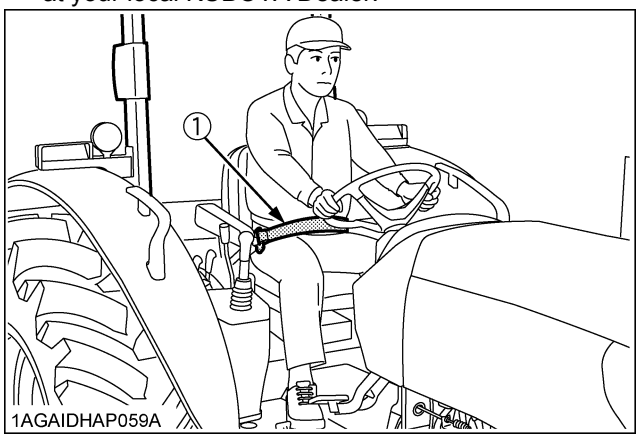

(1) Seat belt

4. Always use the seat belt if the tractor has a CAB or ROPS. Do not use the seat belt if there is no CAB or ROPS. Check the seat belt regularly and replace if frayed or damaged.
5. Do not operate tractor or any implement attached to it while under the influence of alcohol, medication, controlled substances or while fatigued.
6. Carefully check the vicinity before operating tractor or any implement attached to it. Check for overhead clearance which may interfere with a CAB or ROPS. Do not allow any bystanders around or near tractor during operation.
7. Before allowing other people to use your tractor, explain how to operate and have them read this manual before operation.
8. Never wear loose, torn, or bulky clothing around tractor. It may catch on moving parts or controls, leading to the risk of an accident. Use additional safety items, e.g. hard hat, safety boots or shoes, eye and hearing protection, gloves, etc., as appropriate or required.
9. Do not allow passengers to ride on any part of the tractor at anytime. The operator must remain in the tractor seat during operation.
10. Check brakes, clutch, linkage pins and other mechanical parts for improper adjustment and wear. Replace worn or damaged parts promptly. Check the tightness of all nuts and bolts regularly. (For further details, see "MAINTENANCE" section.)
11. Keep your tractor clean. Dirt, grease, and trash build up may contribute to fires and lead to personal injury.
12. Use only implements meeting the specifications listed under "IMPLEMENT LIMITATIONS" in this manual or implements approved by KUBOTA.
13. Use proper weights on the front or rear of the tractor to reduce the risk of upsets. When using the front loader, put an implement or ballast on the 3-point hitch to improve stability. Follow the safe operating procedures specified in the implement or attachment manual.

Downloaded from www.Manualslib.com manuals search engine

https://truckmanualshub.com/

14. The narrower the tread, the greater the risk of a tractor upset. For maximum stability, adjust the wheels to the widest practical tread width for your application. (See "TIRES, WHEELS AND BALLAST" section.)

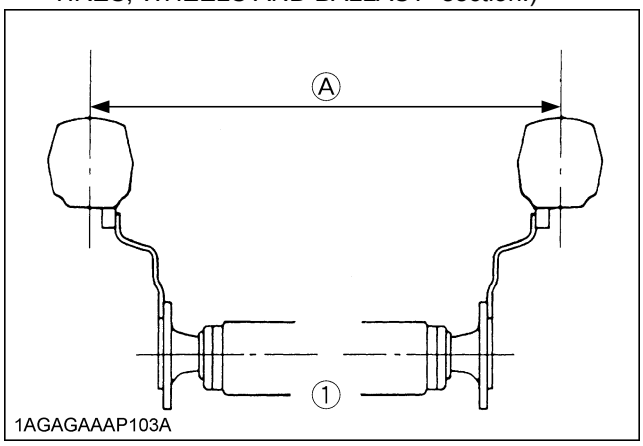

(1) Rear wheels *(A) Tread Width*

15. Do not modify the tractor. Unauthorized modification may affect the function of the tractor, which may result in personal injury.

2. OPERATING THE TRACTOR

Operator safety is a priority. Safe operation, specifically with respect to overturning hazards, entails understanding the equipment and environmental conditions at the time of use. Some prohibited uses which can affect overturning hazards include traveling and turning with implements and loads carried too high etc. This manual sets forth some of the obvious risks, but the list is not, and cannot be, exhaustive. It is the operator's responsibility to be alert for any equipment or environmental condition that could compromise safe operation.

◆ Starting

1. Always sit in the operator's seat when starting engine or operating levers or controls. Adjust seat per instructions in the operating the tractor section. Never start engine while standing on the ground.
2. Before starting the engine, make sure that all levers (including auxiliary control levers) are in their neutral positions, that the parking brake is engaged, and that both the clutch and the Power Take-Off (PTO) are disengaged or "OFF".
   Fasten the seat belt if the tractor has a CAB, a fixed ROPS or a foldable ROPS in the upright and locked position.
3. Do not start engine by shorting across starter terminals or bypassing the safety start switch. Machine may start in gear and move if normal starting circuitry is bypassed.
4. Do not operate or idle engine in a non-ventilated area. Carbon monoxide gas is colorless, odorless, and deadly.
5. Check before each use that operator presence controls are functioning correctly. Test safety systems. (See "Checking Engine Start System" in "EVERY 50 HOURS" in "PERIODIC SERVICE" section.)
   Do not operate unless they are functioning correctly.

◆ Working

1. Pull only from the drawbar. Never hitch to axle housing or any other point except drawbar; such arrangements will increase the risk of serious personal injury or death due to a tractor upset.

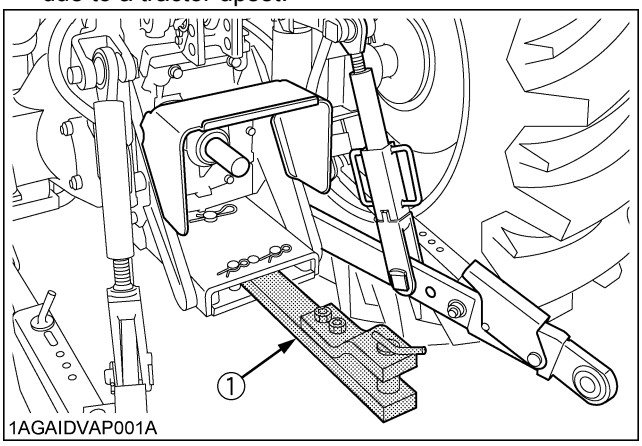

(1) Drawbar

2. Keep all shields and guards in place. Replace any that are missing or damaged.
3. Avoid sudden starts. To avoid upsets, slow down when turning, on uneven ground, and before stopping.
4. The tractor cannot turn with the rear wheel or 4-wheel differential locked and attempting to do so could be dangerous.
5. Do not operate near ditches, holes, embankments, or other ground surface features which may collapse under the tractor's weight. The risk of tractor upset is even higher when the ground is loose or wet. Tall grass can hide obstacles, walk the area first to be sure.
6. Watch where you are going at all times. Watch for and avoid obstacles. Be alert at row ends, near trees, and other obstructions.
7. When working in groups, always let the others know what you are going to do before you do it.
8. Never try to get on or off a moving tractor.
9. Do not stand between tractor and implement or trailed vehicle unless parking brake is applied.

◆ Safety for children

Tragedy can occur if the operator is not alert to the presence of children. Children generally are attracted to machines and the work they do.

1. Never assume that children will remain where you last saw them.
2. Keep children out of the work area and under the watchful eye of another responsible adult.
3. Be alert and shut your machine down if children enter the work area.

Downloaded from www.Manualslib.com manuals search engine

https://truckmanualshub.com/

4. Never carry children on your machine. There is no safe place for them to ride. They may fall off and be run over or interfere with your control of the machine.
5. Never allow children to operate the machine even under adult supervision.
6. Never allow children to play on the machine or on the implement.
7. Use extra caution when backing up. Look behind and down to make sure area is clear before moving.
8. When parking your machine if at all possible park on a firm, flat and level surface; if not, park across a slope. Set the parking brake(s), lower the implements to the ground, remove the key from the ignition and lock the cab door (if equipped) and chock the wheels.

◆ Operating on slopes

Slopes are a major factor related to loss-of-control and tip-over accidents, which can result in severe injury or death. All slopes require extra caution.

1. To avoid upsets, always back up steep slopes. If you cannot back up the slope or if you feel uneasy on it, do not operate on it. Stay off slopes too steep for safe operation.
2. Driving forward out of a ditch, mired condition or up a steep slope increases the risk of a tractor to be upset backward. Always back out of these situations. Extra caution is required with four-wheel drive models because their increased traction can give the operator false confidence in the tractor's ability to climb slopes.
3. Keep all movement on slopes slow and gradual. Do not make sudden changes in speed, direction or apply brake and make sudden motions of the steering wheel.
4. Avoid disengaging the clutch or changing gears speed when climbing or going down a slope. If on a slope disengaging the clutch or changing gears to neutral could cause loss of control.
5. Special attention should be made to the weight and location of implements and loads as such will affect the stability of the tractor.
6. To improve stability on slope, set widest wheel tread as shown in "TIRES, WHEELS AND BALLAST" section.
   Follow recommendations for proper ballasting.

◆ Driving the tractor on the road

1. Lock the two brake pedals together to help assure straight-line stops. Uneven braking at road speeds could cause the tractor to tip over

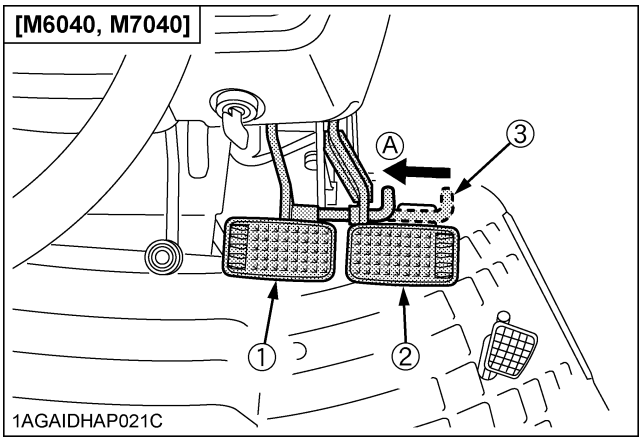

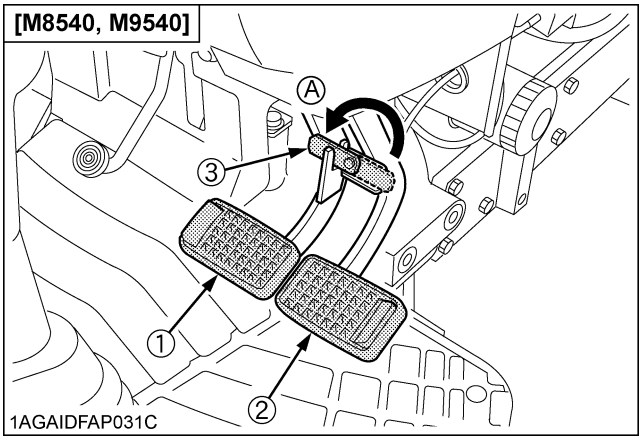

(1) Brake Pedal (LH)
(2) Brake Pedal (RH)
(3) Brake Pedal Lock
(A) Whenever travelling on the road

2. Check the front wheel engagement. The braking characteristics are different between two and four wheel drive. Be aware of the difference and use carefully.
3. Always slow the tractor down before turning. Turning at high speed may tip the tractor over.
4. Turn the headlights on. Dim them when meeting another vehicle.
5. Drive at speeds that allow you to maintain control at all times.
6. Do not apply the differential lock while traveling at road speeds. The tractor may run out of control.
7. Avoid sudden motions of the steering wheel as they can lead to a dangerous loss of stability. The risk is especially great when the tractor is traveling at road speeds.
8. Keep the ROPS in the "UP" position and wear the seat belt when driving the tractor on the road.
   Otherwise, you will not be protected in the event of a tractor roll-over.

Downloaded from www.Manualslib.com manuals search engine

https://truckmanualshub.com/

9. Do not operate an implement while the tractor is on the road. Lock the 3-point hitch in the raised position.
10. Do not ride or stand on the step during operation. Riding or standing there could result in being crushed under the rear tire due to slippage or the step fracturing or displacing due to unintended loading.

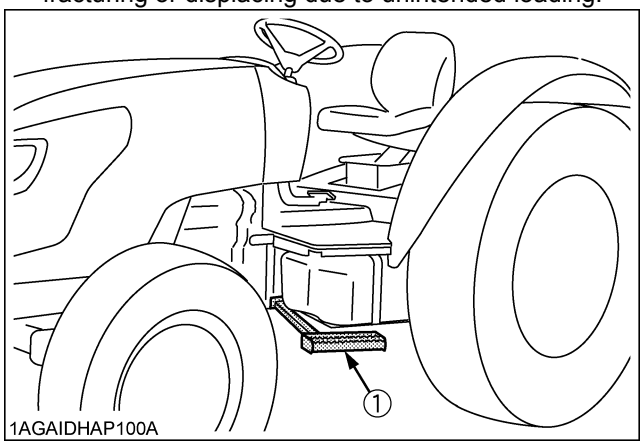

(1) Step

3. PARKING THE TRACTOR

1. Disengage the PTO, lower all implements to the ground, place all control levers in their neutral positions, set the parking brake, stop the engine, and remove the key.
2. Make sure that the tractor has come to a complete stop before dismounting.
3. Avoid parking on steep slopes, if at all possible park on a firm and level surface; if not, park across a slope with chock the wheels.
   Failure to comply with this warning may allow the tractor to move and could cause injury or death.

4. OPERATING THE PTO

1. Wait until all moving components have completely stopped before getting off the tractor, connecting, disconnecting, adjusting, cleaning, or servicing any PTO driven equipment.
2. Keep the PTO shaft cover in place at all times. Replace the PTO shaft cap when the shaft is not in use.

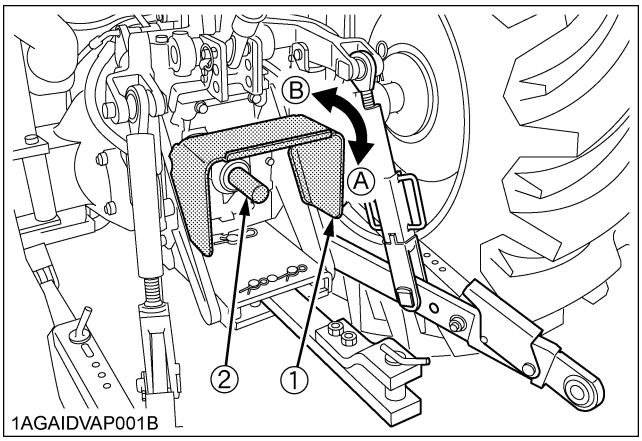

(1) PTO Shaft cover *(A) "NORMAL POSITION"*
(2) PTO Shaft cap *(B) "RAISED POSITION"*

3. Before installing or using PTO driven equipment, read the manufacturer's manual and review the safety labels attached to the equipment.
   To prevent PTO driven equipment from improper or unsafe use, select the lower speed (540rpm) unless the higher one is specifically recommended as safe by the equipment manufacture.
4. When operating stationary PTO driven equipment, always apply the tractor parking brake and place chocks behind and in front of the rear wheels. Stay clear of all rotating parts. Never step over rotating parts.

Downloaded from www.Manualslib.com manuals search engine

https://truckmanualshub.com/

5. USING 3-POINT HITCH

1. Use the 3-point hitch only with equipment designed for 3-point hitch usage.
2. When using a 3-point hitch mounted implement, be sure to install the proper counterbalance weight on the front of the tractor.
3. When transporting on the road, set the implement lowering speed knob in the "LOCK" position to hold the implement in the raised position.

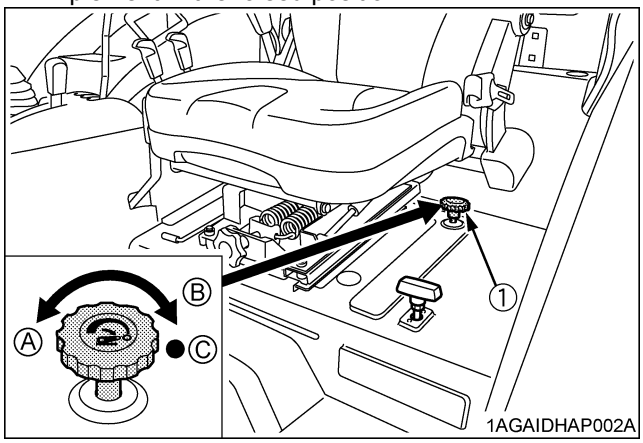

(1) 3-point hitch lowering speed knob

(A) "FAST"
(B) "SLOW"
(C) "LOCK"

6. SERVICING THE TRACTOR

Before servicing the tractor, park it on a firm, flat and level surface, set the parking brake, lower all implements to the ground, place the gear shift lever in neutral, stop the engine and remove the key.

1. Allow the tractor time to cool off before working on or near the engine, muffler, radiator, etc.
2. Do not remove radiator cap while coolant is hot. When cool, slowly rotate cap to the first stop and allow sufficient time for excess pressure to escape before removing the cap completely. If the tractor has a coolant recovery tank, add coolant or water to the tank, not the radiator. (See "Checking Coolant Level" in "DAILY CHECK" in "PERIODIC SERVICE" section.)
3. Always stop the engine before refueling. Avoid spills and overfilling.
4. Do not smoke when working around battery or when refueling. Keep all sparks and flames away from battery and fuel tank. The battery presents an explosive hazard, because it gives off hydrogen and oxygen especially when recharging.
5. Before "jump starting" a dead battery, read and follow all of the instructions. (See "JUMP STARTING" in "OPERATING THE ENGINE" section.)
6. Keep first aid kit and fire extinguisher handy at all times.
7. Disconnect the battery's ground cable before working on or near electric components.
8. To avoid the possibility of battery explosion, do not use or charge the refillable type battery if the fluid level is below the LOWER (lower limit level) mark. Check the fluid level regularly and add distilled water as required so that the fluid level is between the UPPER and LOWER levels.
9. To avoid sparks from an accidental short circuit, always disconnect the battery's ground cable (-) first and reconnect it last.

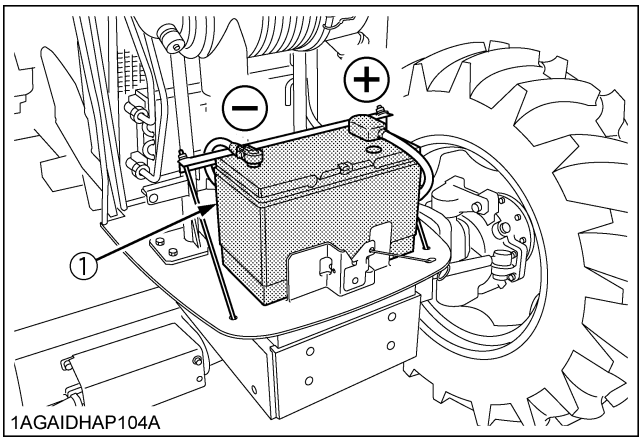

(1) Battery

10. Do not attempt to mount a tire on a rim. This should be done by a qualified person with the proper equipment.
11. Always maintain the correct tire pressure. Do not inflate tires above the recommended pressure shown in the operator's manual.

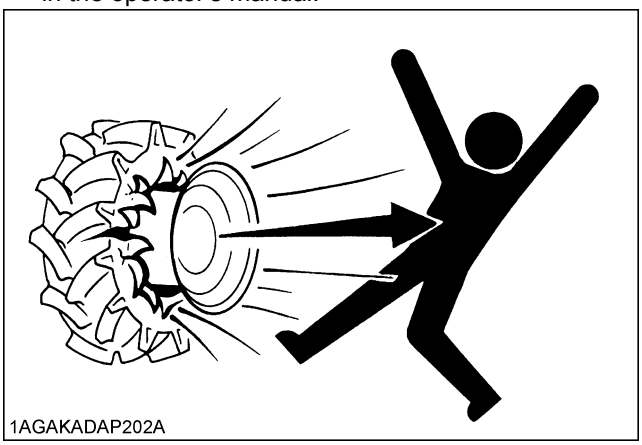

12. Securely support the tractor when either changing wheels or adjusting the wheel tread width.
13. Make sure that wheel bolts have been tightened to the specified torque.
14. Do not work under any hydraulically supported devices. They can settle, suddenly leak down, or be accidentally lowered. If it is necessary to work under tractor or any machine elements for servicing or adjustment, securely support them with stands or suitable blocking beforehand.

Downloaded from www.Manualslib.com manuals search engine

https://truckmanualshub.com/

15. Escaping hydraulic fluid under pressure has sufficient force to penetrate skin, causing serious personal injury. Before disconnecting hydraulic lines, be sure to release all residual pressure. Before applying pressure to the hydraulic system, make sure that all connections are tight and that all lines, pipes, and hoses are free of damage.

1BAACAAAP010B

16. Fluid escaping from pinholes may be invisible. Do not use hands to search for suspected leaks; use a piece of cardboard or wood. Use of safety goggles or other eye protection is also highly recommended. If injured by escaping fluid, see a medical doctor at once. This fluid will produce gangrene or severe allergic reaction.

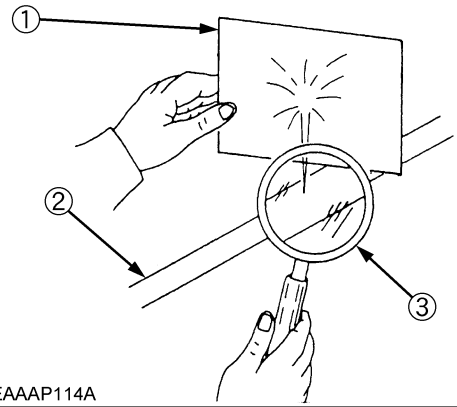

1AGAEAAAP114A

(1) Cardboard
(2) Hydraulic line
(3) Magnifying glass

Downloaded from www.Manualslib.com manuals search engine

https://truckmanualshub.com/

7. DANGER, WARNING AND CAUTION LABELS

(1) Part No. 6C090-4958-2
Do not get your hands close to engine fan and fan belt.

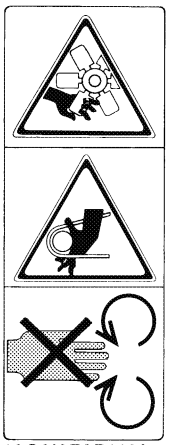

1AGAIAZAP110A

(2) Part No. 32310-4958-1
Do not touch hot surface like muffler, etc.

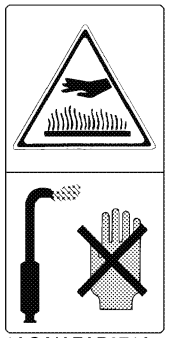

1AGAIAZAP071A

(3) Part No. 3F240-9857-1 [Hydraulic shuttle model]

⚠ WARNING

To avoid free wheeling when shifting the shuttle lever while on a slope : Stop completely by using the brake and by depressing the clutch pedal. Start off after selecting shuttle direction by releasing the clutch pedal.

1AGAIBDAP039A

(4) Part No. TA040-4965-2

⚠ DANGER

TO AVOID POSSIBLE INJURY OR DEATH FROM A MACHINE RUNAWAY.

1. Do not start engine by shorting across starter terminals or bypassing the safety start switch. Machine may start in gear and move if normal starting circuitry is bypassed.
2. Start engine only from operator's seat with transmission and PTO OFF.
   Never start engine while standing on the ground.

1AGAIAZAP009A

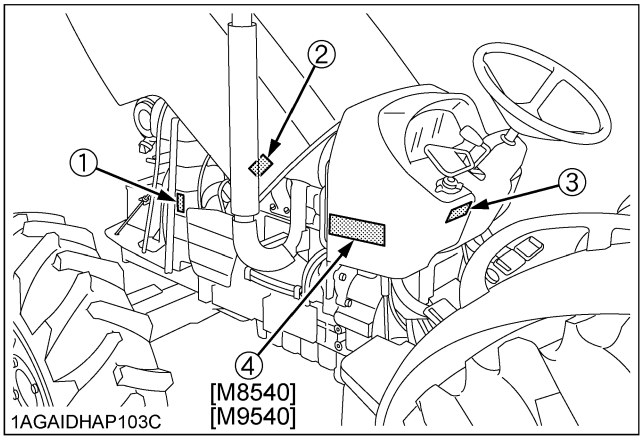

1AGAIDHAP103C

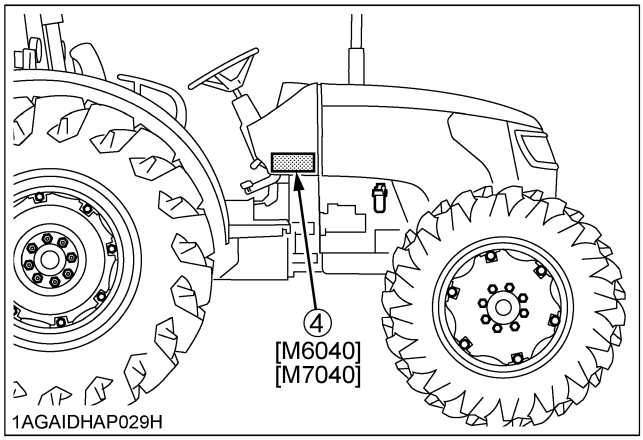

1AGAIDHAP029H

1AGAIDUAP002A

Downloaded from www.Manualslib.com manuals search engine

https://truckmanualshub.com/

(1) Part No. 6C040-4742-2

⚠ CAUTION

TO AVOID PERSONAL INJURY:

1. Read and understand the operator's manual before operation.
2. Before starting the engine, make sure that everyone is at a safe distance from the tractor and that the PTO is OFF.
3. Do not allow passengers on the tractor at any time.
4. Before allowing other people to use the tractor, have them read the operator's manual.
5. Check the tightness of all nuts and bolts regularly.
6. Keep all shields in place and stay away from all moving parts.
7. Lock the two brake pedals together before driving on the road.
8. Slow down for turns, or rough roads, or when applying individual brakes.
9. On public roads use SMV emblem and hazard lights, if required by local traffic and safety regulations.
10. Pull only from the drawbar.
11. Before dismounting, lower the implement to the ground, set the parking brake, stop the engine and remove the key.
12. Securely support tractor and implements before working underneath.

1AGAIAZAP109A

(2) Part No. 3A111-9848-2

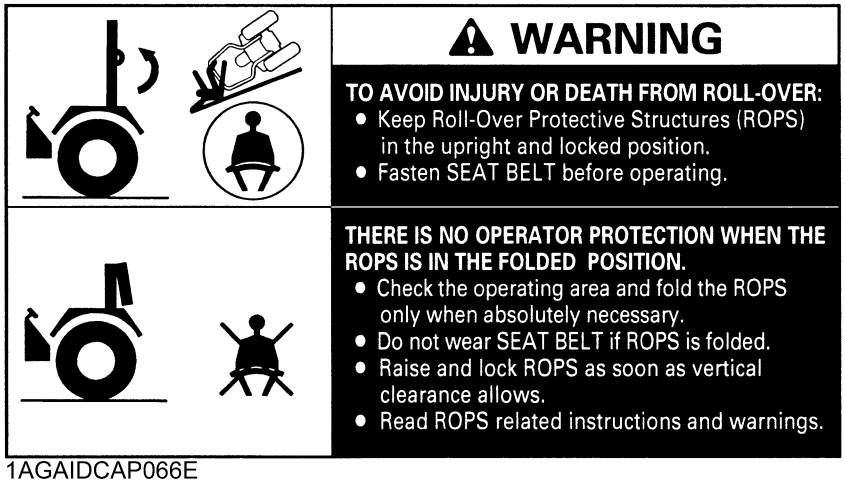

1AGAIDCAP066E

(3) Part No. TA040-4956-2

Diesel fuel only | No fire

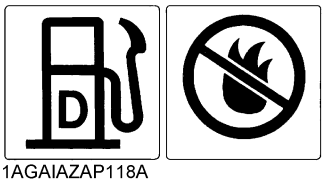

1AGAIAZAP118A

(4) Part No. 3P305-9856-1

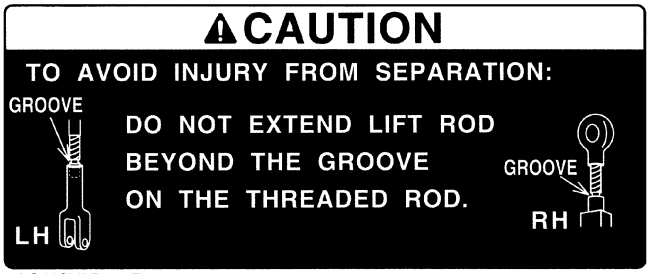

1AGAICVAP046E

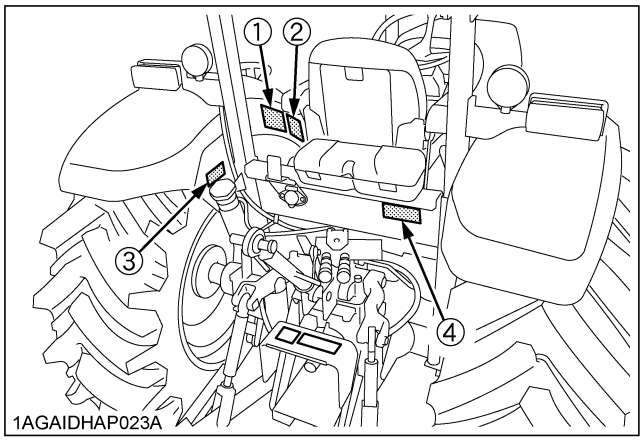

1AGAIDHAP023A

1AGAIDHAP064A

Downloaded from www.Manualslib.com manuals search engine

https://truckmanualshub.com/

(1) Part No. 6C090-4958-2

Do not get your hands close to engine fan and fan belt.

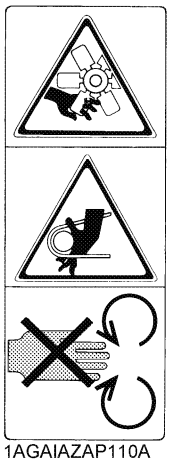

1AGAIAZAP110A

(2) Part No. 3Y205-9892-1

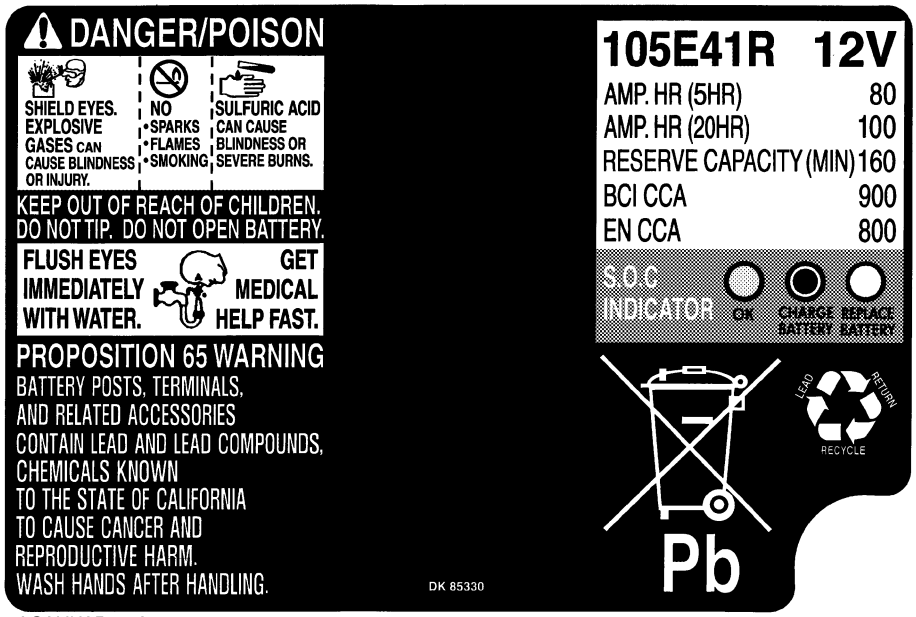

1AGAIJHAP083A

(3) Part No. 3A111-9554-1

⚠ WARNING

Never modify or repair a ROPS because welding, grinding, drilling or cutting any portion may weaken the structure.

⚠ CAUTION

TO AVOID INJURY WHEN RAISING OR FOLDING ROPS:

- Set parking brake and stop engine.
- Remove any obstruction that may prevent raising or folding of the ROPS.
- Do not allow any bystanders.
- Always perform function from a stable position at the rear of the tractor.
- Hold the top of the ROPS securely when raising or folding.
- Make sure all pins are installed and locked.

1AGAIAZAP076A

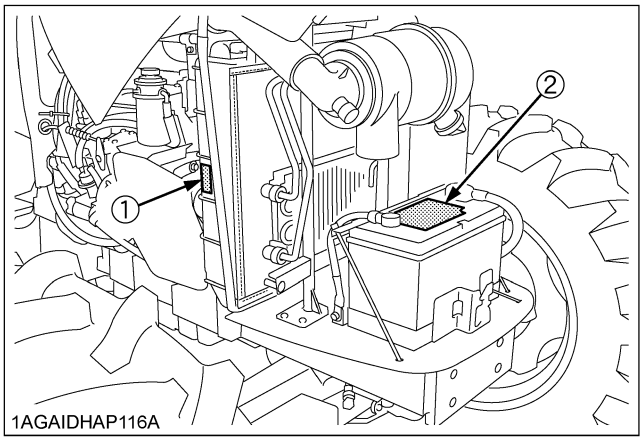

1AGAIDHAP116A

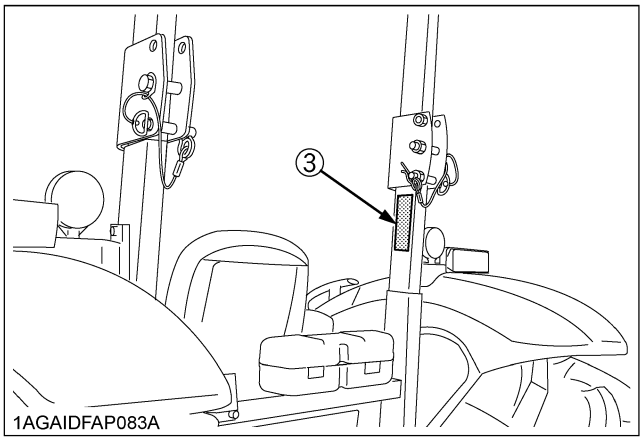

1AGAIDFAP083A

1AGAIDHAP066A

Downloaded from www.Manualslib.com manuals search engine

https://truckmanualshub.com/

(1) Part No. 6C150-4743-1 [Hydraulic shuttle model]

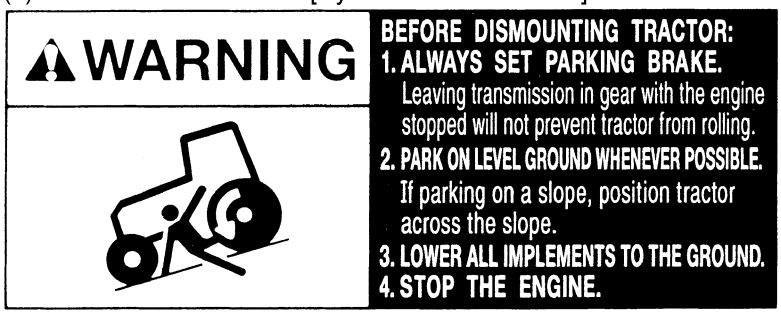

1AGAIBDAP040E

(2) Part No. TA040-4935-1

1AGAIAZAP056A

(3) Part No. TA040-4959-3

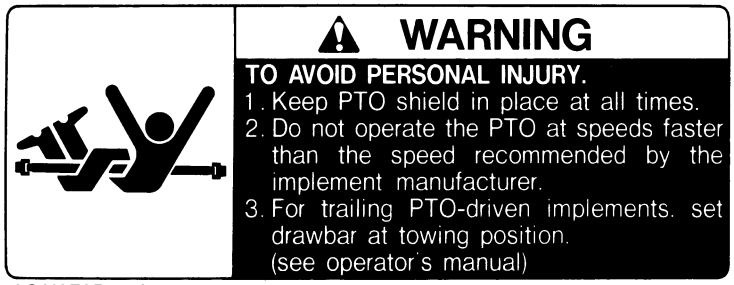

1AGAIAZAP116A

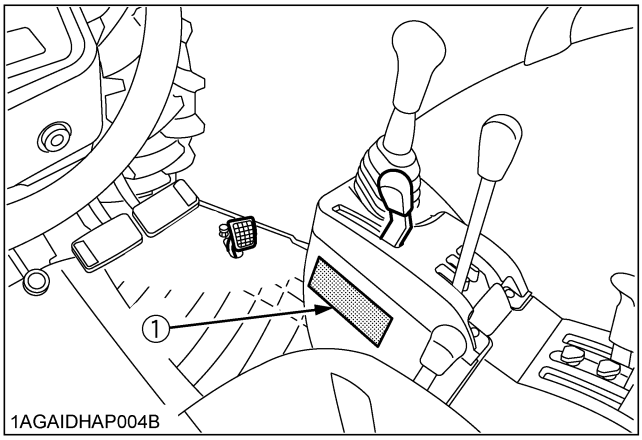

1AGAIDHAP004B

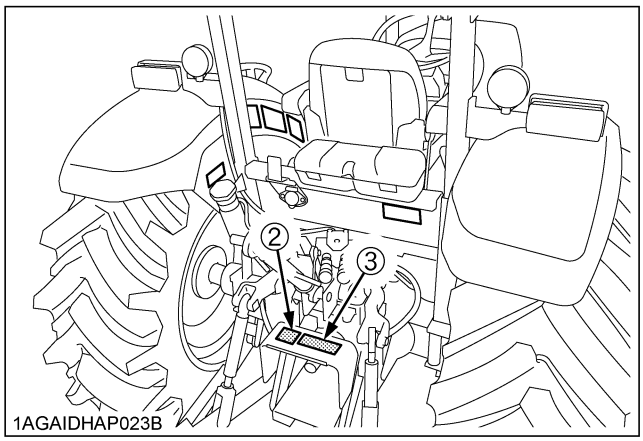

1AGAIDHAP023B

1AGAIDHAP065C

8. CARE OF DANGER, WARNING AND CAUTION LABELS

1. Keep danger, warning and caution labels clean and free from obstructing material.
2. Clean danger, warning and caution labels with soap and water, dry with a soft cloth.
3. Replace damaged or missing danger, warning and caution labels with new labels from your local KUBOTA Dealer.
4. If a component with danger, warning and caution label(s) affixed is replaced with new part, make sure new label(s) is (are) attached in the same location(s) as the replaced component.
5. Mount new danger, warning and caution labels by applying on a clean dry surface and pressing any bubbles to outside edge.

Downloaded from www.Manualslib.com manuals search engine

https://truckmanualshub.com/

SPECIFICATIONS

SPECIFICATION TABLE

Model				M6040	M7040	M8540	M9540
				4WD	4WD	4WD	4WD
Engine	Model			V3307-DI		V3800-DI-T	
	Type			Direct Injection, liquid cooled 4 cylinder diesel			
	Number of cylinders			4			
	Total displacement		cm^3	3331		3769	
	Bore and stroke		mm	94 x 120		100 x 120	
	Rated speed		rpm	2600			
	Net power *1		kW	46.2	50.7	62.6	70.8
	PTO power *1 (factory observed)		kW	41.0	46.2	56.0	62.7
	Maximum torque		N-m / rpm	213 / 1300 to 1500	232 / 1300 to 1500	283 / 1400 to 1600	316 / 1400 to 1600
	Battery capacity			12V, RC: 160 min, CCA 900A			
	Fuel			Diesel fuel No.1 (below-10℃), Diesel fuel No.2 (above-10℃)			
	Fuel tank capacity		L	70		90	
	Engine oil capacity		L	11		10.7	
	Coolant capacity		L	8		9.0	
Dimensions	Overall length		mm	3445		3760	
	Overall width (minimum tread)		mm	1860		2010	
	Overall height		mm	2460	2470	2530 (Muffler)	2535 (Muffler)
	Wheel base		mm	2050		2250	
	Tread	Front	mm	1420, 1520		1520, 1620	
		Rear	mm	1420 to 1720		1520 to 1920	
	Minimum ground clearance		mm	390 (Fuel tank stay)	415 (Fuel tank stay)	450 (Drawbar bracket)	
Weight			kg	2170	2180	2500	
Traveling system	Standard tire size	Front tires		9.5-24	9.5-24	12.4-24	
		Rear tires		16.9-28	16.9-30 *2	18.4-30	
	Clutch			Dry single plate / Multiple wet disks			
	Steering			Hydraulic Power Steering			
	Braking system			Multiple wet disks mechanical		Hydraulic wet disks	
	Differential			Bevel gears with diff. lock (Rear)			

Downloaded from www.Manualslib.com manuals search engine

https://truckmanualshub.com/

Model				M6040	M7040	M8540	M9540
				4WD	4WD	4WD	4WD
Hydraulic unit	Hydraulic control system			Position, draft (top link sensing) & mix control			
	Pump capacity		L / min	41.6		64.3	
	Three point hitch			Category 1 and 2		Category 2	
	Max. lifting force	At lifting points *3	kg	1900 At lower link end with links horizontal		2500, 3900 W / hydraulic High Capacity Lift Cylinders	
		24 in. behind lifting point *3	kg	1500		2100, 3300 W / hydraulic High Capacity Lift Cylinders	
	Remote hydraulic control			Two remote valve with detent and self-cancelling, and single / double acting			
	System pressure		MPa (kgf/cm^2)	19.1 (195)		19.6 (200)	
	Traction system			Swinging drawbar, adjustable in direction			
PTO	Live PTO (Indepen-dent)	Direction of turning		Clockwise, viewed from tractor rear			
		PTO/ Engine speed	rpm	540 / 2160 540E / 1825		540 / 2035 540E / 1519	

The company reserves the right to change the specifications without notice.

NOTE: *1 Manufacturer's estimate
*2 Cast iron disks available for wheels.
*3 At lower link end with links horizontal.

Downloaded from www.Manualslib.com manuals search engine

https://truckmanualshub.com/

TRAVELING SPEEDS

(At rated engine rpm)

Model			M6040	M7040	M8540 / M9540
Tire size (Rear)			16.9-28	16.9-30	18.4-30
Shuttle shift lever	Range gear shift lever	Main gear shift lever	km/h	km/h	km/h
Forward	CREEP	1	0.34	0.35	0.42
		2	0.48	0.50	0.54
		3	0.64	0.67	0.71
		4	1.0	1.1	0.91
		5	---	---	1.12
		6	---	---	1.35
	L	1	2.4	2.5	2.6
		2	3.4	3.5	3.4
		3	4.5	4.7	4.5
		4	7.4	7.7	5.7
		5	---	---	7.1
		6	---	---	8.5
	H	1	9.3	9.6	10.4
		2	13.1	13.6	13.4
		3	17.6	18.2	17.7
		4	28.6	29.7	22.6
		5	---	---	28.0
		6	---	---	33.7
Reverse	CREEP	1	0.34	0.36	0.42
		2	0.49	0.51	0.53
		3	0.65	0.68	0.70
		4	1.1	1.1	0.90
		5	---	---	1.11
		6	---	---	1.34
	L	1	2.4	2.5	2.6
		2	3.4	3.6	3.4
		3	4.6	4.8	4.4
		4	7.5	7.8	5.7
		5	---	---	7.0
		6	---	---	8.5
	H	1	9.4	9.7	10.4
		2	13.3	13.8	13.3
		3	17.8	18.5	17.5
		4	29.0	30.1	22.5
		5	---	---	27.8
		6	---	---	33.4

The company reserves the right to change the specifications without notice

Downloaded from www.Manualslib.com manuals search engine

https://truckmanualshub.com/

INSTRUMENT PANEL AND CONTROLS

■ Instrument Panel, Switches and Hand Controls

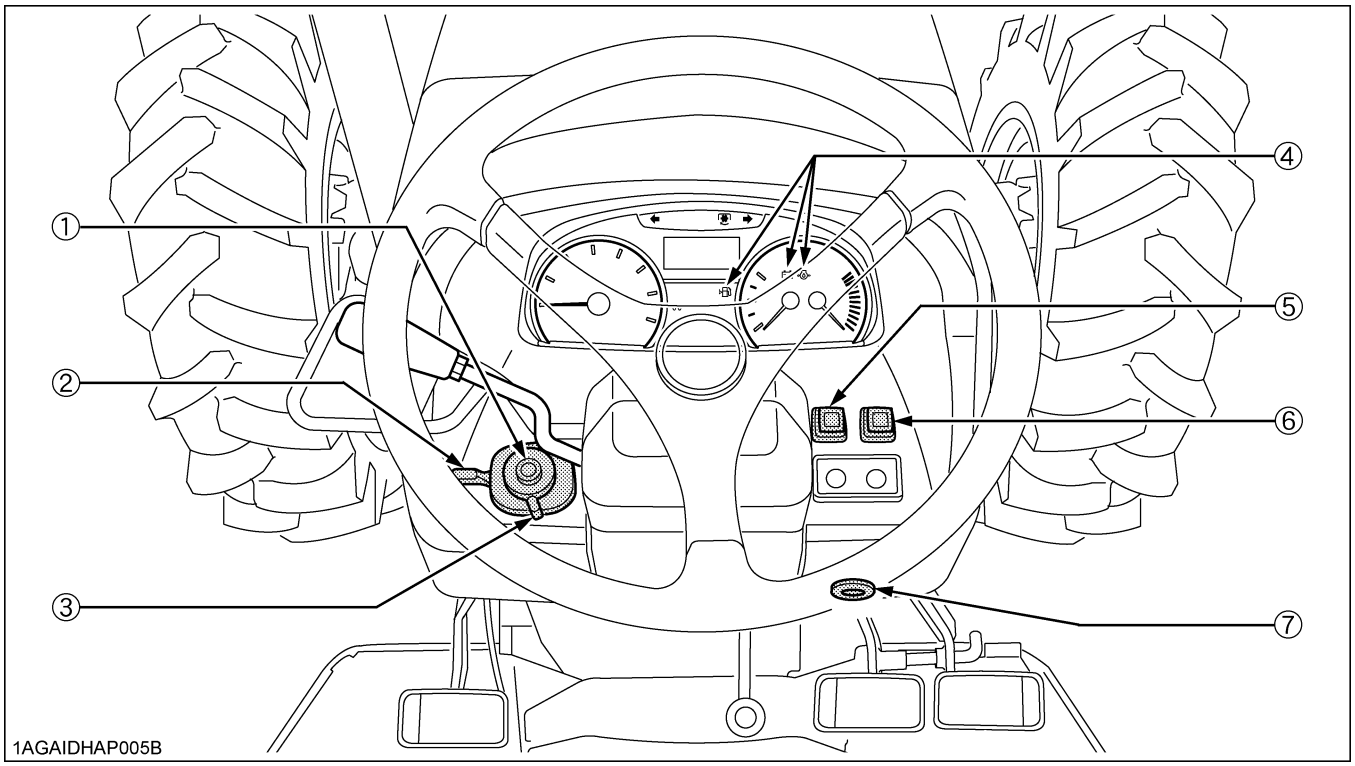

ILLUSTRATED CONTENTS

(1) Horn button *8*
(2) Turn signal light switch ..... ∗
(3) Head light switch ..... ∗
(4) Easy checker(TM) ..... ∗
(5) Front work light switch ..... ∗
(6) Hazard light switch ..... ∗
(7) Key switch ..... -

∗ See operator's manual issued separately for the sister model. [M6040, M7040, M8540, M9540]

Downloaded from www.Manualslib.com manuals search engine

https://truckmanualshub.com/

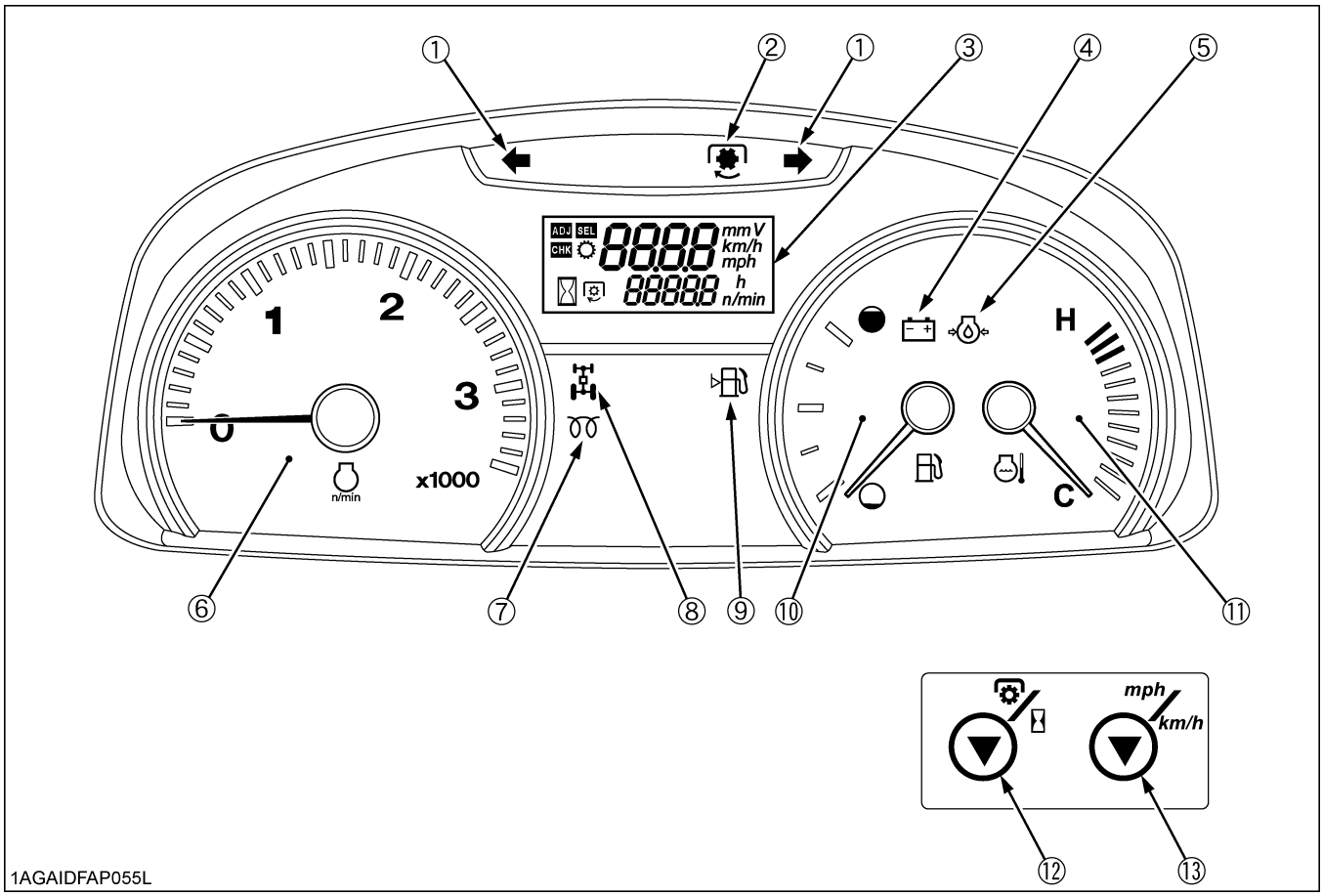

ILLUSTRATED CONTENTS

(1) Hazard / Turn signal indicator 8
(2) PTO clutch indicator 11
(3) Liquid crystal display..... ∗
(4) Electrical charge indicator ..... ∗
(5) Engine oil pressure indicator ..... ∗
(6) Tachometer ..... ∗
(7) Glow plug indicator ..... ∗

ILLUSTRATED CONTENTS

(8) 4WD indicator ..... ∗
(9) Fuel level indicator..... ∗
(10) Fuel gauge..... ∗
(11) Coolant temperature gauge ..... ∗
(12) PTO / Hour meter select switch ..... ∗
(13) Travel speed select switch..... ∗

Downloaded from www.Manualslib.com manuals search engine

https://truckmanualshub.com/

■ Foot and Hand Controls

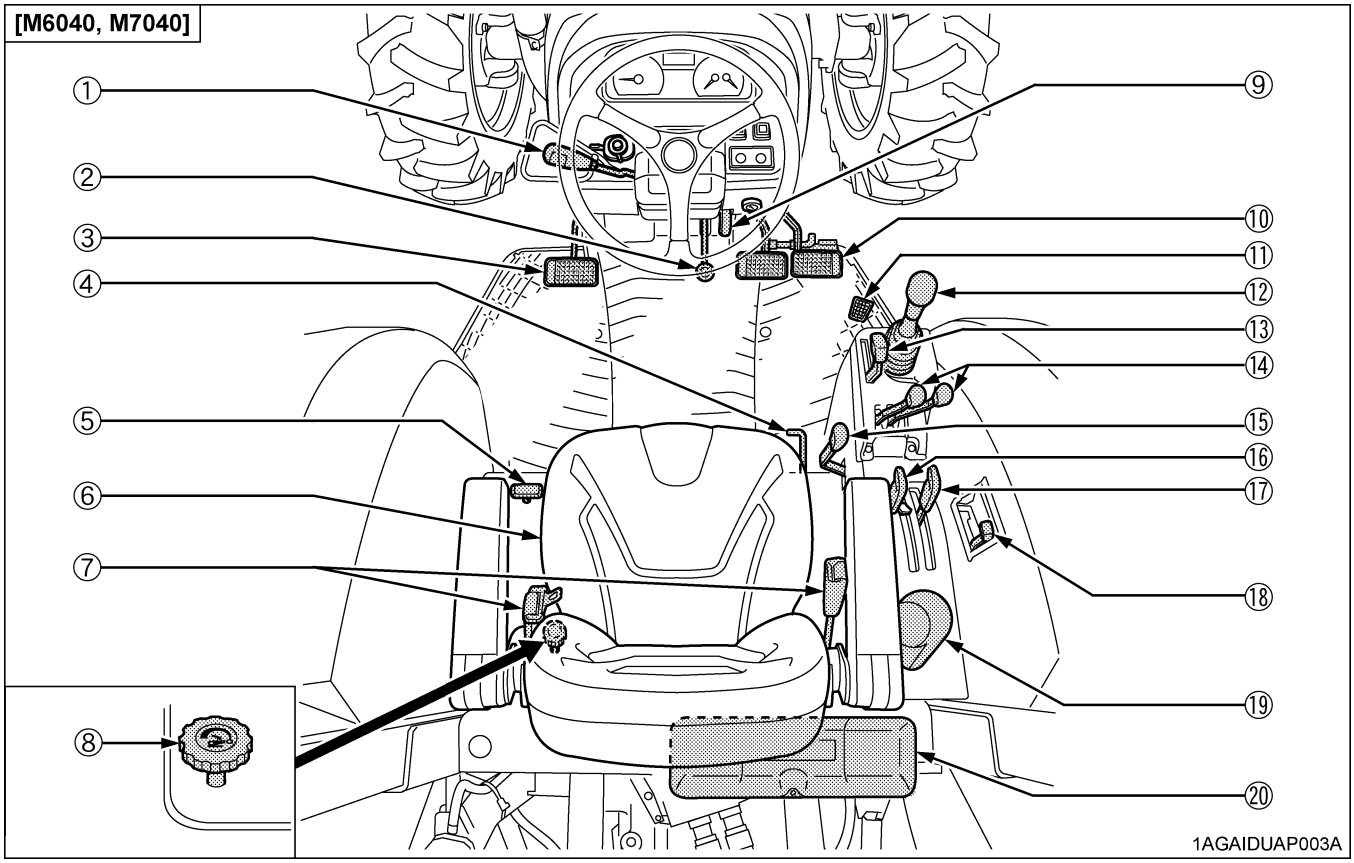

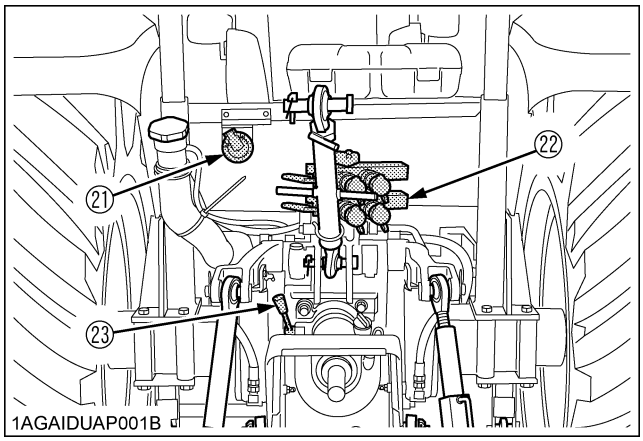

ILLUSTRATED CONTENTS

(1) Hydraulic-shuttle shift lever	*
(2) Tilt pedal	*
(3) Clutch pedal	*
(4) Differential lock pedal	*
(5) Front wheel drive lever	*
(6) Operator's seat	*
(7) Seat belt	*
(8) 3-Point hitch lowering speed knob	*
(9) Parking brake lever	*
(10) Brake pedal	*
(11) Foot throttle	*
(12) Main gear shift lever	*
(13) Hand throttle lever	*
(14) Remote control valve lever	14
(15) Range gear shift lever	*
(16) Draft control lever	*
(17) Position control lever	*
(18) PTO clutch control lever	11
(19) Cup holder	-
(20) Tool box	-
(21) Trailer electrical outlet	10
(22) Remote control valve coupler	15
(23) PTO gear shift lever	11

Downloaded from www.Manualslib.com manuals search engine

https://truckmanualshub.com/

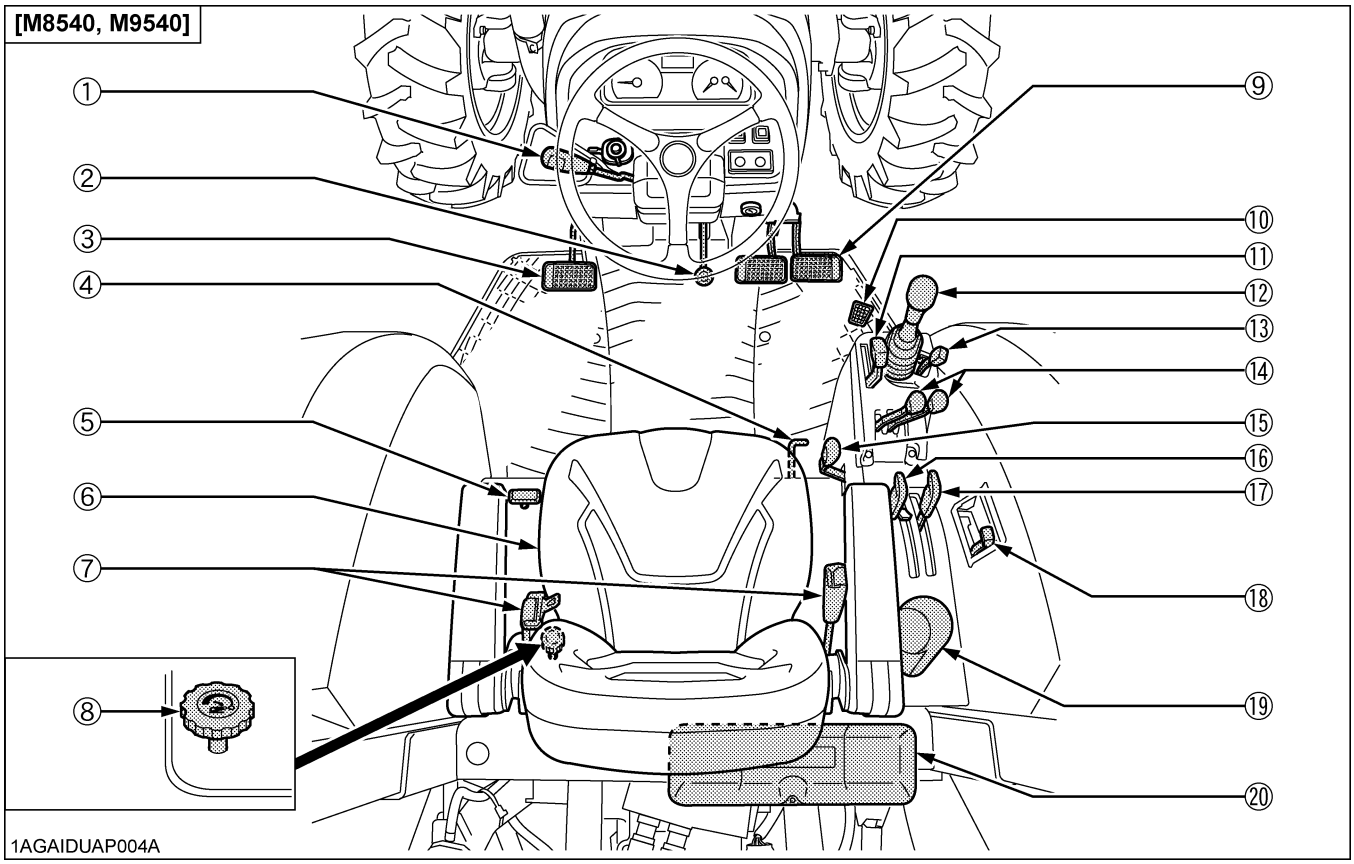

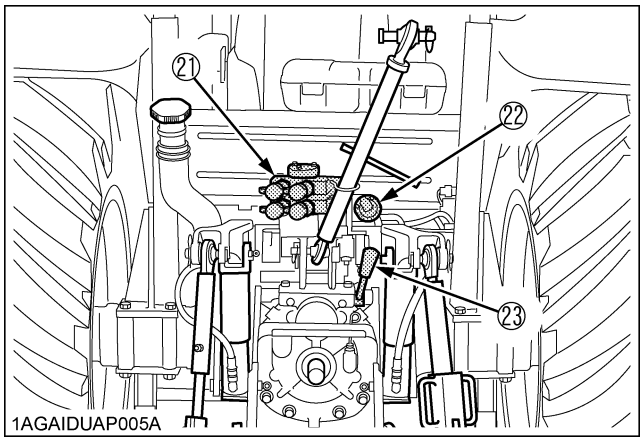

ILLUSTRATED CONTENTS

(1) Hydraulic-shuttle shift lever	*
(2) Tilt pedal	*
(3) Clutch pedal	*
(4) Differential lock pedal	*
(5) Front wheel drive lever	*
(6) Operator's seat	*
(7) Seat belt	*
(8) 3-Point hitch lowering speed knob	*
(9) Brake pedal	*
(10) Foot throttle	*
(11) Hand throttle lever	*
(12) Main gear shift lever	*
(13) Parking brake lever	*
(14) Remote control valve lever	*14*
(15) Range gear shift lever	*
(16) Draft control lever	*
(17) Position control lever	*
(18) PTO clutch control lever	*11*
(19) Cup holder	-
(20) Tool box	-
(21) Remote control valve coupler	*15*
(22) Trailer electrical outlet	*10*
(23) PTO gear shift lever	*11*

Downloaded from www.Manualslib.com manuals search engine

https://truckmanualshub.com/

OPERATING THE TRACTOR

STARTING

■Turn Signal / Hazard Light Switch

◆ Turn Signal Light Switch

To indicate a right turn, turn the turn signal light switch clockwise. To indicate a left turn, turn the turn signal light switch counter-clockwise. The corresponding right and left turn signal lights and indicator on the instrument panel will flash. Turn signal is active when key switch is in the "ON" position.

NOTE :

- Be sure to return switch to center position after turning.

◆ Hazard Light Switch

When hazard light switch is pushed, the hazard lights flash along with the indicator on the instrument panel. Press the hazard light switch again to turn off the light.

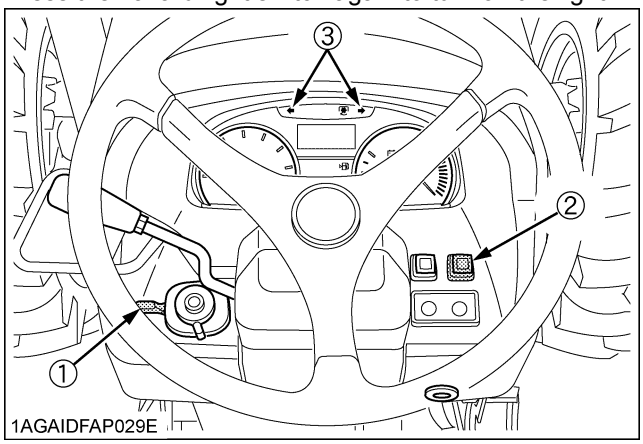

(1) Turn signal light switch
(2) Hazard light switch
(3) Hazard / Turn signal indicator

■Horn Button

The horn will sound when the key switch is in the "ON" position and the horn button pressed.

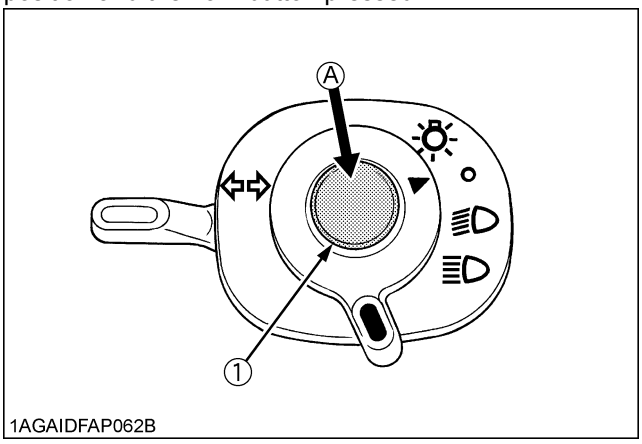

(1) Horn button *(A) "PUSH"*

Downloaded from www.Manualslib.com manuals search engine

https://truckmanualshub.com/

PTO RPM / TRAVEL SPEED MONITOR

■PTO Speed Display Mode Switching

The PTO speed display mode has been factory-set as table below. Do not attempt to change the code. Otherwise the correct PTO speed will not be displayed in the LCD monitor.
(NOTE: The current code can be checked in the following procedure.)

◆ Switching procedure

① While pressing the PTO/Hour meter select switch, turn the key switch to "ON" position.

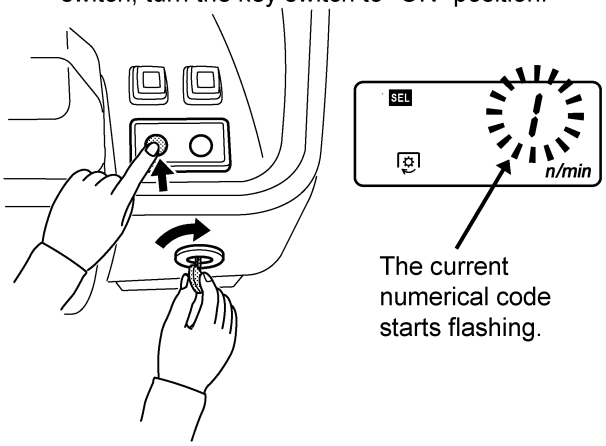

② Each time the PTO/Hour meter select switch is pressed, the code changes in the order of [1]→[2]→[1], [1]→[2]→[3]→[4]→[5]→[1]. Select the appropriate code according to the table

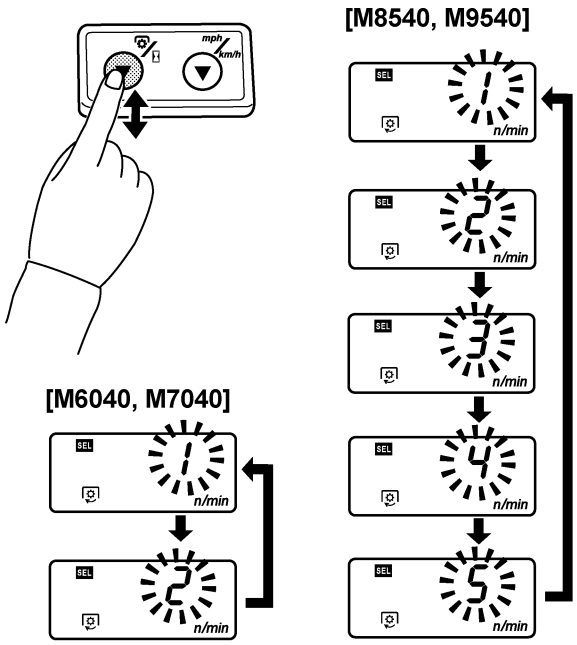

1AGAIDUAP006A

③ Press and hold the PTO/Hour meter select switch longer than 2 seconds. The setting is put in memory, and the LCD monitor goes back to the PTO speed display mode.

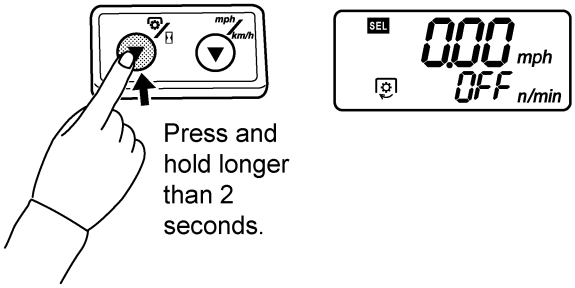

NOTE:
- The setting will be cancelled if the key switch is turned OFF halfway in the procedure.

Model	Numerical code	PTO speed (rpm)
M6040 M7040	1	540 / 540E (Oceania models)
M8540 M9540	4	

- It is the ban selection except the above mentioned code number.

Downloaded from www.Manualslib.com manuals search engine

https://truckmanualshub.com/

OPERATING TECHNIQUES

■Trailer Electrical Outlet

A trailer electrical outlet is supplied for use with trailer or implement.

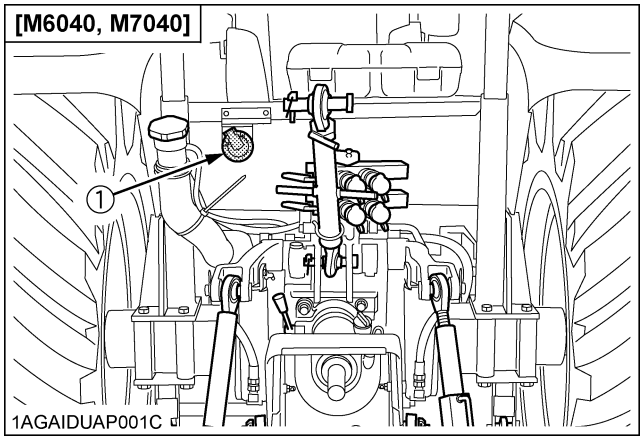

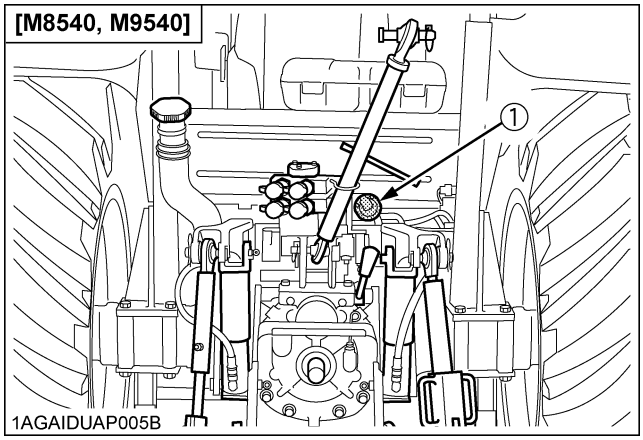

(1) Trailer electrical outlet

◆ **Function of each terminals in trailer electrical outlet**

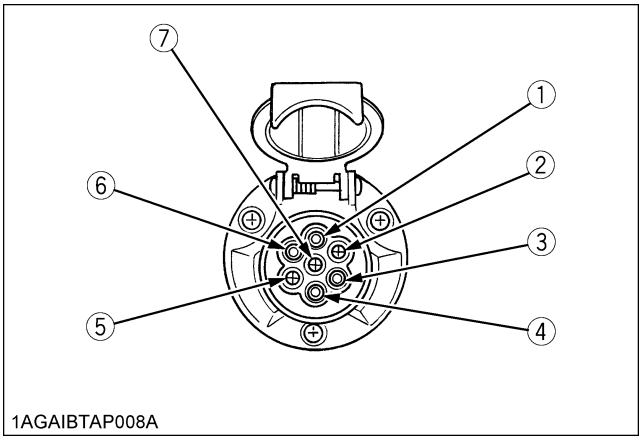

Terminal	Function
(1)	Turn signal light (LH)
(2)	---
(3)	Ground
(4)	Turn signal light (RH)
(5)	Tail light Sidemarker light Parking light
(6)	Brake stop light
(7)	Registration plate light

Downloaded from www.Manualslib.com manuals search engine

https://truckmanualshub.com/

PTO

PTO OPERATION

CAUTION

To avoid personal injury:

- **Disengage PTO, stop engine, and allow all rotating components to come to a complete stop before connecting, disconnecting, adjusting, or cleaning any PTO driven equipment.**

■PTO Gear Shift Lever

WARNING

To avoid personal injury:

- **Be sure to observe the PTO shaft speed prescribed for the individual implements. It is extremely dangerous to run an implement at high speed that is meant to be operated at low speed. Use only when this higher rpm is specifically recommended by the implement manufacturer.**

The PTO gear shift lever can be set to either 540 rpm or 540E rpm positions.

Move this lever to either position with the PTO clutch control switch or lever set to "OFF".

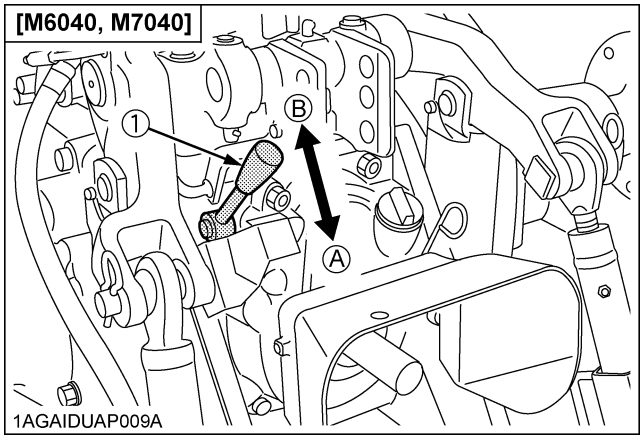

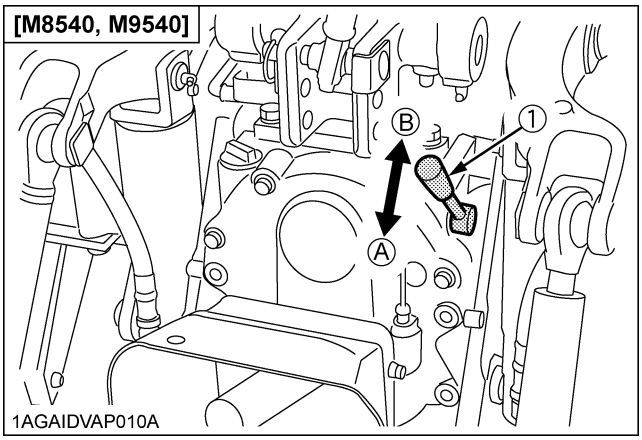

(1) PTO gear shift lever *(A) 540 rpm*
(B) 540E rpm

NOTE :

- When light load, select the "540E" position for economical operation.

■PTO Clutch Control Lever

The PTO clutch control lever engages or disengages the PTO clutch which gives the PTO independent control. Shift the lever to "ON" to engage the PTO clutch. Shift the lever to "OFF" to disengage the PTO clutch.

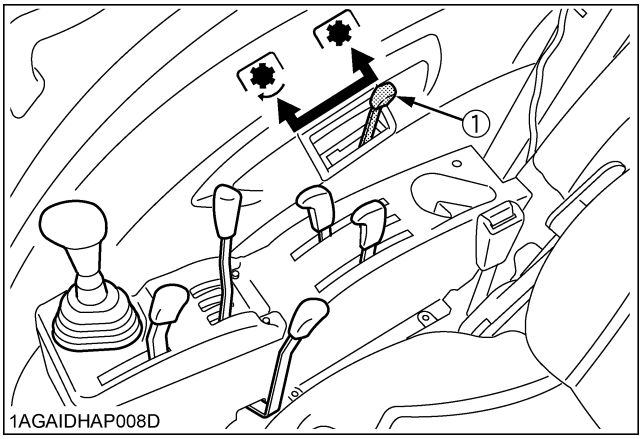

(1) PTO clutch control lever *"ON" (Engaged)*
"OFF" (Disengaged)

IMPORTANT :

- To avoid shock loads to the PTO, reduce engine speed when engaging the PTO, then open the throttle to the recommended speed.
- To avoid damage of PTO clutch and implement, shift the PTO clutch control lever slowly, when engaging the PTO clutch. Do not keep the PTO clutch control lever half way.

Downloaded from www.Manualslib.com manuals search engine

https://truckmanualshub.com/

Tractor model	(A) 540	(B) 540E
	PTO / Engine speed rpm	
M6040 M7040	540 / 2160	540 / 1825
M8540 M9540	540 / 2035	540 / 1519

NOTE :
- Tractor engine will not start if PTO clutch control lever is in the engaged "ON" position.
- If the PTO system is engaged and you stand up from the seat, the warning buzzer will whistle for about 10 seconds after standing up.
  This is because the tractor is equipped with "Operator Presence Control System".

◆ PTO Clutch Indicator

The PTO clutch indicator turns on while PTO clutch control lever is in "ON" (Engage) position.

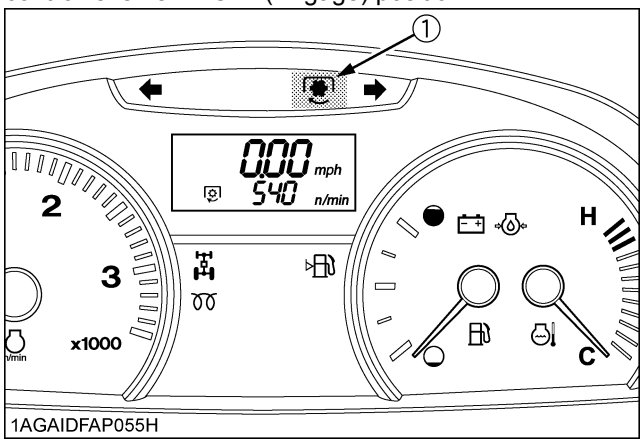

(1) PTO clutch indicator

■LCD Monitor Message

1. The PTO rpm can be checked in the LCD monitor. (See "PTO RPM / TRAVEL SPEED MONITOR" in "OPERATING THE TRACTOR" section.)
2. When the PTO system gets engaged (ON), the indicator lights up.

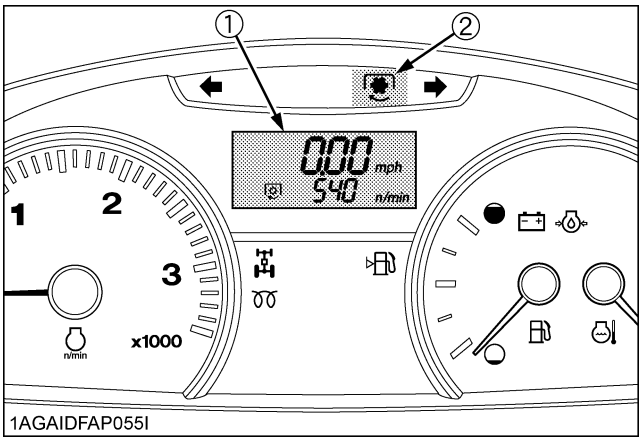

(1) LCD monitor
(2) PTO clutch indicator

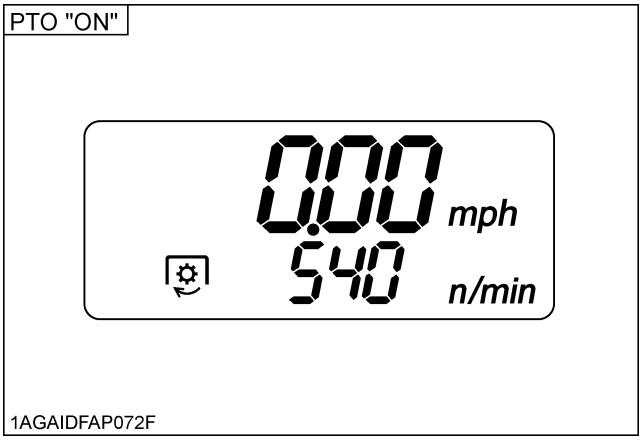

Downloaded from www.Manualslib.com manuals search engine

https://truckmanualshub.com/

THREE-POINT HITCH & DRAWBAR

DRAWBAR

WARNING

To avoid personal injury:

- **Never pull from the top link, the rear axle or any point above the drawbar. Doing so could cause the tractor to tip over rearward causing personal injury or death.**

■Adjusting Drawbar Length

When towing an implement, it is recommended that the (A) hole in drawbar be utilized.

The drawbar load is specified in the "IMPLEMENT LIMITATIONS" section.

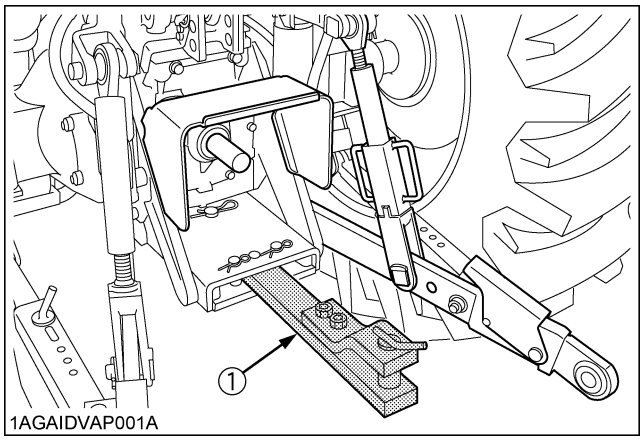

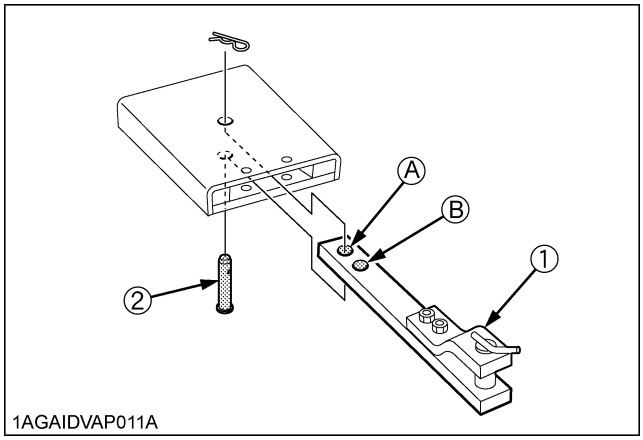

(1) Drawbar *Holes: (A), (B)*
(2) Drawbar pin

■Swing Drawbar

The drawbar can be used in three different ways as illustrated below. Assemble it correctly with drawbar pins.

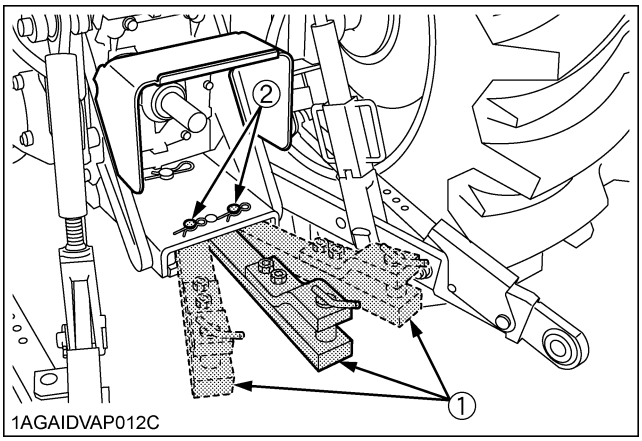

(1) Drawbar
(2) Drawbar pin

Downloaded from www.Manualslib.com manuals search engine

https://truckmanualshub.com/

HYDRAULIC UNIT

REMOTE HYDRAULIC CONTROL SYSTEM

The hydraulic auxiliary control valves can be installed up to triple segments.
It is not possible to use triple segments with flow control valve.

■Remote Control Valve

There are three types of remote valves available for these models.

- Double acting valve with detents and self cancelling:
  This valve may be placed in the detent mode. The lever will stay in this position until the pressure reaches a predetermined level or a cylinder reaches the end of its stroke. Then it will automatically return to neutral.
- Double acting valve with float position:
  This valve may be placed in the float mode with the control lever all the way forward. The cylinder is free to extend or retract, letting an implement such as a loader bucket follow the ground.
- Single/double acting valve:
  This valve can be utilized as single or double acting valve by adjusting the auxiliary control valve selector knob located on the valve.
  1) Turn the auxiliary control valve selector knob clockwise all the way to utilize as single acting valve.
  2) Turn the auxiliary control valve selector knob anticlockwise all the way to utilize as double acting valve.

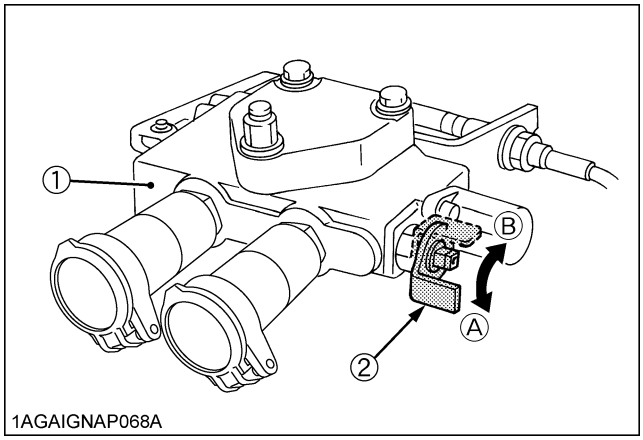

(1) Single / double acting valve
(2) Auxiliary control valve selector knob
(A) Double acting
(B) Single acting

■Remote Control Valve Lever

The remote control valve lever directs pressurized oil flow to the implement hydraulic system.

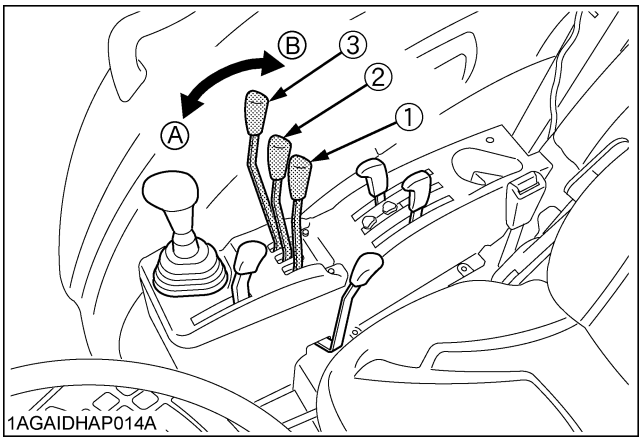

(1) Remote control valve lever 1
(2) Remote control valve lever 2
(3) Remote control valve lever 3
(A) "PUSH"
(B) "PULL"

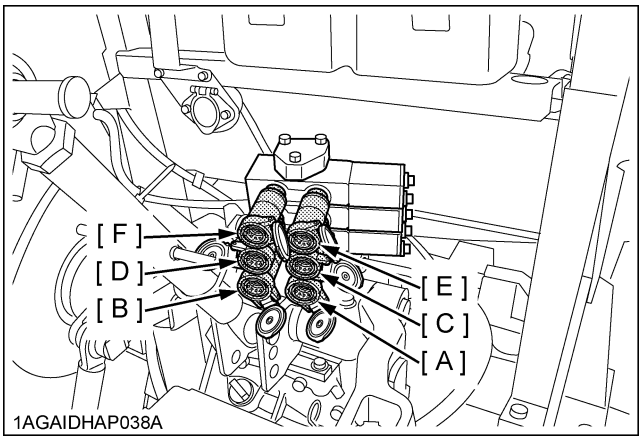

Downloaded from www.Manualslib.com manuals search engine

https://truckmanualshub.com/

Pressure ⟶
Returning ⟵

Lever (1)		Push	Pull
Port	[A]	Out ⟶	In ⟵
	[B]	In ⟵	Out ⟶

		Double-acting		Single-acting	
Lever (2)		Push	Pull	Push	Pull
Port	[C]	Out ⟶	In ⟵	-	-
	[D]	In ⟵	Out ⟶	In ⟵	Out ⟶

Lever (3)		Push	Pull
Port	[E]	Out ⟶	In ⟵
	[F]	In ⟵	Out ⟶

IMPORTANT :
- Do not hold the lever in the "pull" or "push" position once the remote cylinder has reached the end of the stroke, as this will cause oil to flow through the relief valve. Forcing oil through the relief valve for extended periods will overheat the oil.
- When using the tractor hydraulic system to power front loader, do not operate boom and bucket cylinders simultaneously.

NOTE :
- Connect the pressure of load side of implement cylinders to ports [B], [D] or [F] which have built in load check valve to prevent leak down.
- To use the single-acting cylinder with the float valve, connect this cylinder to the [B], [D] or [F] port.
  To extend a single-acting cylinder, pull the remote control valve lever rearward. To retract a cylinder, push it fully forward to the "FLOAT" position. Do not hold it in the down position, the transmission fluid may be overheat.

■Remote Control Valve Coupler Connecting and Disconnecting

CAUTION

To avoid personal injury:
- **Stop the engine and relieve pressure before connecting or disconnecting lines.**
- **Do not use your hand to check for leaks.**

◆ Connecting
1. Clean both couplers.
2. Remove dust plugs.
3. Insert the implement coupler to the tractor hydraulic coupler.
4. Pull the implement coupler slightly to make sure couplers are firmly connected.

◆ Disconnecting
1. Lower the implement first to the ground to release hydraulic pressure in the hoses.
2. Clean the couplers.
3. Relieve pressure by moving hydraulic control levers with engine shut off. Pull the hose straight from the hydraulic coupler to release it.
4. Clean oil and dust from the coupler, then replace the dust plugs.

NOTE :
- Your local KUBOTA Dealer can supply parts to adapt couplers to hydraulic hoses.

Downloaded from www.Manualslib.com manuals search engine

https://truckmanualshub.com/

TIRES, WHEELS AND BALLAST

TIRES

WARNING

To avoid personal injury:

- **Do not attempt to mount a tire on a rim. This should be done by a qualified person with the proper equipment.**
- **Always maintain the correct tire pressure. Do not inflate tires above the recommended pressure shown in the operator's manual.**

IMPORTANT :

- Do not use tires other than those approved by KUBOTA.

NOTE :

- When optional different-diameter tires are fitted on the machine, the travel speed display mode must be changed. Otherwise the travel speed will not get correctly displayed. Such mode switching is also needed when the original tires are back on the machine.
  (See "PTO RPM / TRAVEL SPEED MONITOR" in "OPERATING THE TRACTOR" section.)

■Inflation Pressure

Though the tire pressure is factory-set to the prescribed level, it naturally drops slowly in the course of time. Thus, check it everyday and inflate as necessary.

	Tire sizes	Inflation Pressure
Front	6.50-16, 6PR	320 kPa (3.2 kgf/cm^2)
	7.50-16, 6PR	280 kPa (2.8 kgf/cm^2)
	9.5L-15, 6PR	220 kPa (2.2 kgf/cm^2)
	9.5-20, 6PR	200 kPa (2.0 kgf/cm^2)
	9.5-22, 6PR	200 kPa (2.0 kgf/cm^2)
	9.5-24, 6PR	180 kPa (1.8 kgf/cm^2)
	12.4-24, 6PR	140 kPa (1.4 kgf/cm^2)
Rear	14.9-28, 6PR	140 kPa (1.4 kgf/cm^2)
	16.9-28, 6PR	120 kPa (1.2 kgf/cm^2)
	16.9-30, 6PR	120 kPa (1.2 kgf/cm^2)
	18.4-30, 6PR	120 kPa (1.2 kgf/cm^2)
	16.9-34, 6PR	120 kPa (1.2 kgf/cm^2)

NOTE :

- Maintain the maximum pressure in front tires, if using a front loader or when equipped with a full load of front weights.

■Dual Tires

Dual tires are not approved.

Downloaded from www.Manualslib.com manuals search engine

https://truckmanualshub.com/

WHEEL ADJUSTMENT

CAUTION

To avoid personal injury:

- **When working on slopes or when working with trailer, set the wheel tread as wide as practical for maximum stability.**
- **Support tractor securely on stands before removing a wheel.**
- **Do not work under any hydraulically supported devices. They can settle, suddenly leak down, or be accidentally lowered. If necessary to work under tractor or any machine elements for servicing or adjustment, securely support them with stands or suitable blocking beforehand.**
- **Never operate tractor with a loose rim, wheel, or axle.**

■Front Wheels (with four wheel drive)

Front tread width can be adjusted as shown with the standard equipped tires.

To change the tread width

1. Remove the wheel rim and disk mounting bolts.
2. Change the position of the rim and disk (right and left) to the desired position, and tighten the bolts.
3. Adjust the toe-in: [2 to 8mm]
   See "Adjusting Toe-in" in "EVERY 200 HOURS" in "PERIODIC SERVICE" section.

IMPORTANT :

- Always attach wheels as shown in the drawing.
- If not attached as illustrated, transmission parts may be damaged.
- When re-fitting or adjusting a wheel, tighten the bolts to the following torques then recheck after driving the tractor 200m (200 yards) and thereafter according to service interval. (See "MAINTENANCE" section.)

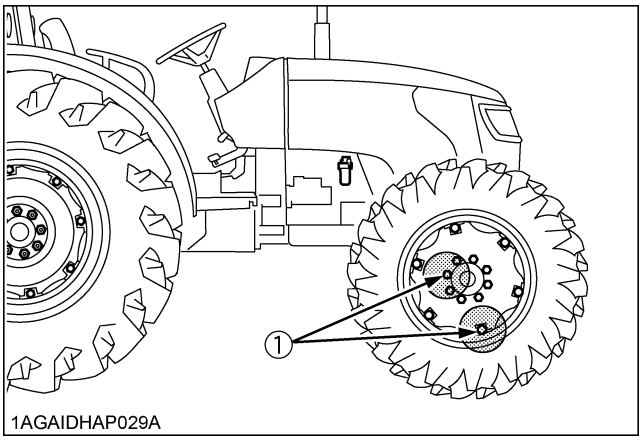

(1) 260 to 304 N-m (26.5 to 31 kgf-m)

NOTE :

- Wheels with beveled or tapered holes: Use the tapered side of lug nut.

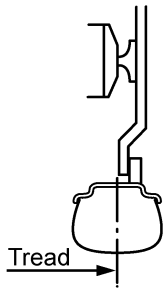			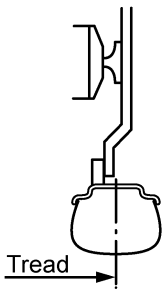	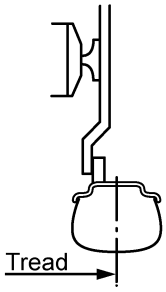
M6040 M7040	9.5 -24	1440mm	1420 mm	1520 mm
	9.5 -22	---	1510 mm	---
M8540 M9540	12.4 -24	1540mm	1560 mm	1660 mm

Downloaded from www.Manualslib.com manuals search engine

https://truckmanualshub.com/

■Rear Wheels

Rear tread width can be adjusted as shown with the standard equipped tires.

To change the tread width

1. Remove the wheel rim and / or disk mounting bolts.
2. Change the position of the rim and / or disk (right and left) to the desired position, and tighten the bolts.

IMPORTANT :

- Always attach wheels as shown in the drawing.
- If not attached as illustrated, transmission parts may be damaged.
- When re-fitting or adjusting a wheel, tighten the bolts to the following torques then recheck after driving the tractor 200m (200 yards) and thereafter according to service interval.
  (See "MAINTENANCE" section.)

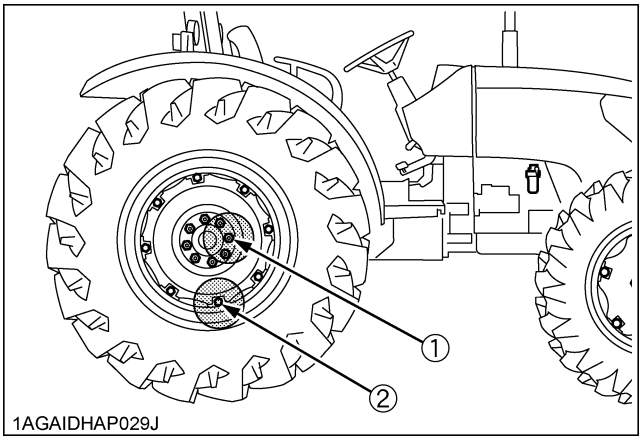

N-m (kgf-m)

	(1)	(2)
M6040, M7040	260 to 304 (26.5 to 31.0)	260 to 304 (26.5 to 31.0)
M8540, M9540	343 to 402 (35.0 to 41.0)	

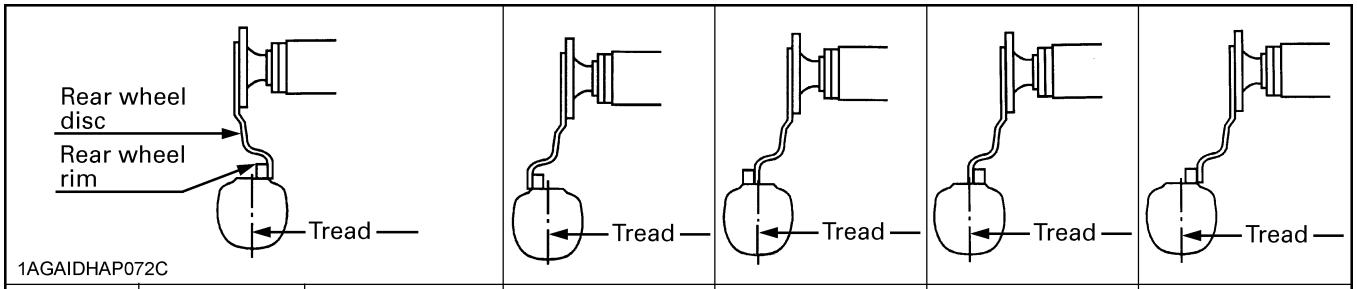

M6040	16.9–28 (steel disc)	–	1420 mm	1520 mm	1620 mm	1720 mm
M7040	16.9–30 (steel disc)					
M8540 M9540	18.4–30 (steel disc)	1540 mm	1620 mm	1740 mm	1820 mm	1940 mm
	16.9–34 (cast iron disc)	1500 mm	1650 mm	1780 mm	1850 mm	1980 mm

Downloaded from www.Manualslib.com manuals search engine

https://truckmanualshub.com/

MAINTENANCE

SERVICE INTERVALS

No.	Items			Indication on hour meter														Interval	Ref. page	
				50	100	150	200	250	300	350	400	450	500	550	600	650	700			
[M6040, M7040]																				
1	Alternator belt		Adjust		○		○		○		○		○		○		○	every 100 Hr	*	
[M8540, M9540]																				
1	Parking brake cable		Check		○		○		○		○		○		○		○	every 100 Hr	*	
			Replace															every 2 years	*	*3
2	Intake air heater		Check															every 3000 Hr	*	*3
3	Master cylinder filter		Clean															every 2 years	*	*3
4	Master cylinder kit		Replace															every 2 years	*	*3
5	Equalizer kit		Replace															every 2 years	*	*3
6	Brake seal 1 and 2		Replace															every 2 years	*	*3
7	Brake system		Bleed															Service as required	*	*3
[COMMON ITEMS]																				
1	Engine start system		Check	○	○	○	○	○	○	○	○	○	○	○	○	○	○	every 50 Hr	*	
2	Wheel bolt torque		Check	○	○	○	○	○	○	○	○	○	○	○	○	○	○	every 50 Hr	*	
3	Battery condition		Check		○		○		○		○		○		○		○	every 100 Hr	*	*4
4	Greasing		---		○		○		○		○		○		○		○	every 100 Hr	*	
5	Fan belt		Adjust		○		○		○		○		○		○		○	every 100 Hr	*	
6	Brake pedal		Adjust		○		○		○		○		○		○		○	every 100 Hr	*	
7	Air cleaner element	Primary element	Clean		○		○		○		○		○		○		○	every 100 Hr	*	*1
			Replace															every 1 year	*	*2
		Secondary element	Replace															every 1 year	*	
8	Fuel line		Check		○		○		○		○		○		○		○	every 100 Hr	*	
			Replace															every 2 years	*	*3
9	Toe-in		Adjust				○				○				○			every 200 Hr	*	

Downloaded from www.Manualslib.com manuals search engine

https://truckmanualshub.com/

No.	Items		Indication on hour meter														Interval	Ref. page	
			50	100	150	200	250	300	350	400	450	500	550	600	650	700			
10	Fuel tank water	Drain				○				○				○			every 200 Hr	*	
11	Power steering oil line	Check				○				○				○			every 200 Hr	*	
		Replace															every 2 years	*	*3
12	Radiator hose and clamp	Check				○				○				○			every 200 Hr	*	
		Replace															every 2 years	*	
13	Engine oil	Change	◎					○						○			every 300 Hr	*	
14	Hydraulic oil filter	Replace	◎					○						○			every 300 Hr	*	
15	Water separator	Clean								○							every 400 Hr	*	
16	Fuel filter	Replace								○							every 400 Hr	*	
17	Engine oil filter	Replace	◎											○			every 600 Hr	*	
18	Transmission fluid	Change	◎											○			every 600 Hr	*	
19	Front differential case oil	Change	◎											○			every 600 Hr	*	
20	Front axle gear case oil	Change	◎											○			every 600 Hr	*	
21	Front axle pivot	Adjust												○			every 600 Hr	*	
22	Engine valve clearance	Adjust															every 800 Hr	*	*3
23	Cooling system	Flush															every 2 years	*	
24	Coolant	Change															every 2 years	*	
25	Lift cylinder hose	Replace															every 2 years	*	*3
26	Fuel system	Bleed															Service as required	*	
27	Clutch housing water	Drain															Service as required	*	
28	Fuse	Replace															Service as required	21	
29	Light bulb	Replace															Service as required	22	

* : See operator's manual issued separately for the sister model. [M6040, M7040, M8540, M9540]

IMPORTANT :

- The jobs indicated by ◎ must be done after the first 50 hours of operation.

*1 Air cleaner should be cleaned more often in dusty conditions than in normal conditions.

*2 Every year or every 6 times of cleaning.

*3 Consult your local KUBOTA Dealer for this service.

*4 When the battery is used for less than 100 hours per year, check the battery condition by reading the indicator annually.

Downloaded from www.Manualslib.com manuals search engine

https://truckmanualshub.com/

PERIODIC SERVICE

SERVICE AS REQUIRED

■Replacing Fuse

The tractor electrical system is protected from potential damage by fuses.
A blown fuse indicates that there is an overload or short somewhere in the electrical system.
If any of the fuses should blow, replace with a new one of the same capacity.

IMPORTANT :

- Before replacing a blown fuse, determine why the fuse blew and make any necessary repairs. Failure to follow this procedure may result in serious damage to the tractor electrical system. Refer to the "TROUBLESHOOTING" section of this manual or your local KUBOTA Dealer for specific information dealing with electrical problems.

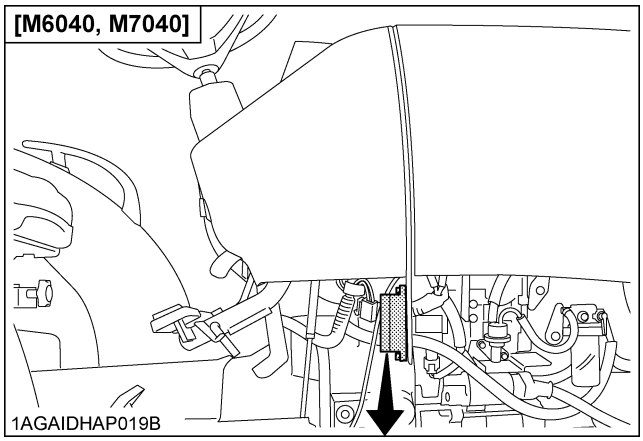

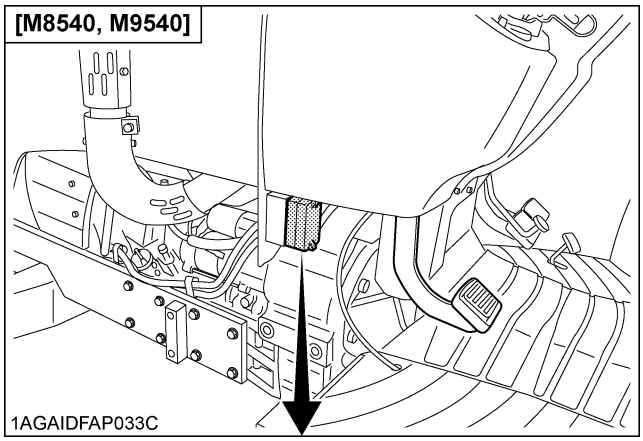

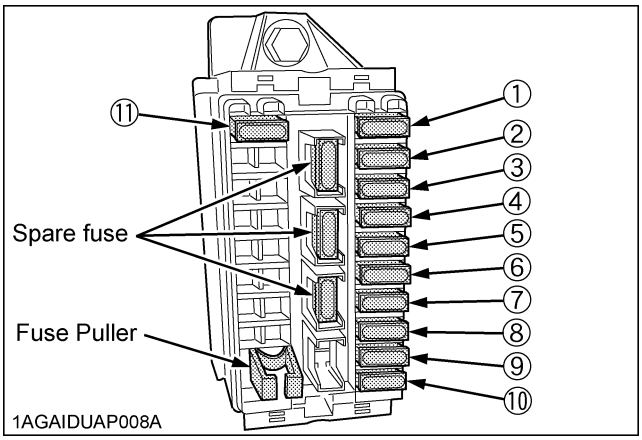

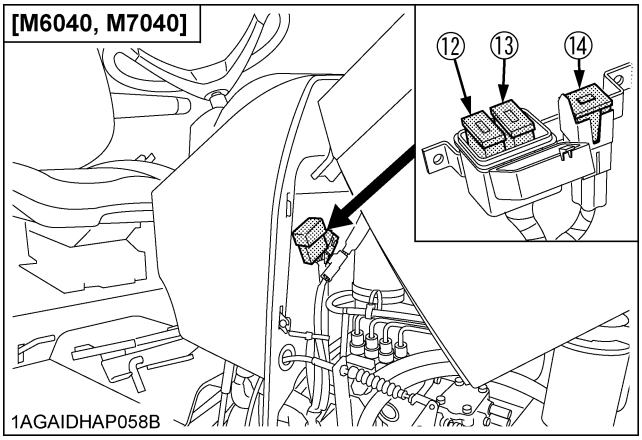

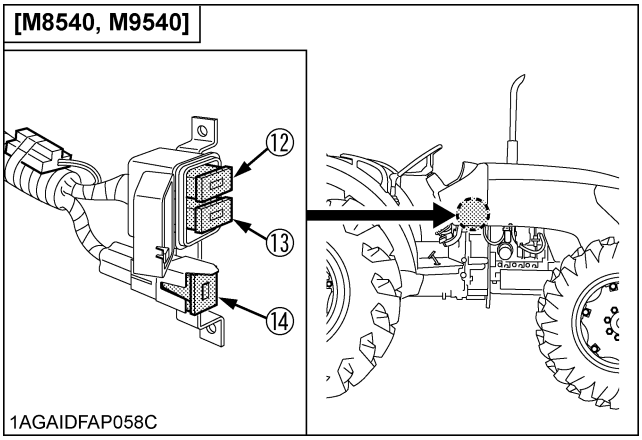

Downloaded from www.Manualslib.com manuals search engine

https://truckmanualshub.com/

FUSE No.	CAPACITY (A)	Protected circuit
(1)	15	Work Light (R)
(2)	15	Work Light (L)
(3)	5	Alternator, Engine, Glow Plug
(4)	5	Meter Panel, OPC
(5)	10	Turn Signal
(6)	15	Auxiliary Power
(7)	5	Meter (Back Up)
(8)	20	Head Light, Tail Lamp
(9)	15	Flasher (Hazard)
(10)	5	Starter Relay
(11)	10	Horn
(12)	40	Key switch, Head Light, Hazard
(13)	30	Fuel Cut Solenoid, Work Light
(14)	50	Charge, Glow Plug

■Replacing Light Bulb

Light	Capacity
Head lights	12 V, 55 / 60 W (H4)
Turn signal / Hazard lights	12 V, 21 W
Brake stop light / Tail light	12 V, 5 W
Work light (for outer roof)	12 V, 55 W
Front work light	12 V, 21 W
Dome light (Room lamp)	12 V, 5 W

Downloaded from www.Manualslib.com manuals search engine

https://truckmanualshub.com/

OPTIONS

Consult your local KUBOTA Dealer for further details.

- Double Acting Remote Hydraulic Control Valve with Detents and Self-Cancelling
- Flow Control Valve Kit
- Double Acting Remote Hydraulic Control Valve with Detents and Self-Cancelling for Flow Control Valve
- Double Acting Remote Hydraulic Control Valve with Float Position
- Front end weights
  For front ballast
- Rear Wheel Weights
  For rear ballast

Downloaded from www.Manualslib.com manuals search engine