https://truckmanualshub.com/

U.S.A. : **KUBOTA TRACTOR CORPORATION**
3401 Del Amo Blvd., Torrance, CA 90503, U.S.A.
Telephone : (310)370-3370
Western Division : 1175 S. Guild Avc., Lodi, CA 95240
Telephone : (209)334-9910
Central Division : 14855 FAA Blvd., Fort Worth, TX 76155
Telephone : (817)571-0900
Northern Division : 6300 at One Kubota Way, Groveport, OH 43125
Telephone : (614)835-1100
Southeast Division : 1025 Northbrook Parkway, Suwanee, GA 30024
Telephone : (770)995-8855

Canada : **KUBOTA CANADA LTD.**
5900 14th Avenue, Markham, Ontario, L3S 4K4, Canada
Telephone : (905)294-7477

France : **KUBOTA EUROPE S.A.S**
19-25, Rue Jules Vercruysse, Z.I. BP88, 95101 Argenteuil Cedex, France
Telephone : (33)1-3426-3434

Italy : **KUBOTA EUROPE S.A.S Italy Branch**
Via Grandi, 29 20068 Peschiera Borrome (MI) Italy
Telephone : (39)02-51650377

Germany : **KUBOTA (DEUTSCHLAND) GmbH**
Senefelder Str. 3-5 63110 Rodgau /Nieder-Roden, Germany
Telephone : (49)6106-873-0

U.K. : **KUBOTA (U.K.) LTD.**
Dormer Road, Thame, Oxfordshire, OX9 3UN, U.K.
Telephone : (44)1844-214500

Spain : **KUBOTA ESPAÑA S.A.**
Avenida Recomba No.5, Poligno Industrial la Laguna, Leganes, 28914 (Madrid) Spain
Telephone : (34)91-508-6442

Australia : **KUBOTA TRACTOR AUSTRALIA PTY LTD.**
25-29 Permas Way, Truganina, VIC 3029, Australia
Telephone : (61)-3-9394-4400

Malaysia : **SIME KUBOTA SDN. BHD.**
No.3 Jalan Sepadu 25/123 Taman Perindustrian Axis,
Seksyen 25, 40400 Shah Alam, Selangor Darul Ehsan Malaysia
Telephone : (60)3-736-1388

Philippines : **KUBOTA PHILIPPINES, INC.**
232 Quirino Highway, Baesa, Quezon City 1106, Philippines
Telephone : (63)2-422-3500

Taiwan : **SHIN TAIWAN AGRICULTURAL MACHINERY CO., LTD.**
16, Fengping 2nd Rd, Taliao Shiang Kaohsiung 83107, Taiwan R.O.C.
Telephone : (886)7-702-2333

Indonesia : **PT KUBOTA MACHINERY INDONESIA**
Tower A at EightyEight@Kasablanka Lantai 16
Jalan Raya Casablanka Kav. 88, Jakarta 12870 Indonesia
Telephone : (62)-21-29568-720

Thailand : **SIAM KUBOTA CORPORATION CO., LTD.**
101/19-24 Moo 20, Navanakorn Industrial Estate, Tambon Khlongnueng, Amphur Khlongluang,
Pathumthani 12120, THAILAND
Telephone : (66)2-909-0300

Korea : **KUBOTA KOREA CO., LTD.**
41-27, Jayumuyeok-gil, Baeksan-myeon, Gimje-si, Jeollabuk-do, Korea
Telephone : (82)-63-544-5822

India : **KUBOTA AGRICULTURAL MACHINERY INDIA PVT. LTD.**
No.15, Medavakkam Road, Sholinganallur, Chennai-600119, T.N., India
Telephone : (91)44-6104-1500

Vietnam : **KUBOTA VIETNAM CO., LTD.**
Lot B-3A2-CN, My Phuoc 3 Industrial Park, Ben Cat District, Binh Duong Province, Vietnam
Telephone : (84)-650-3577-507

KUBOTA Corporation

English (U.S.A.)
Code No. 32821-1957-1

L47TL.M62TL

OPERATOR'S MANUAL

KUBOTA TRACTOR

MODELS L47TL
M62TL

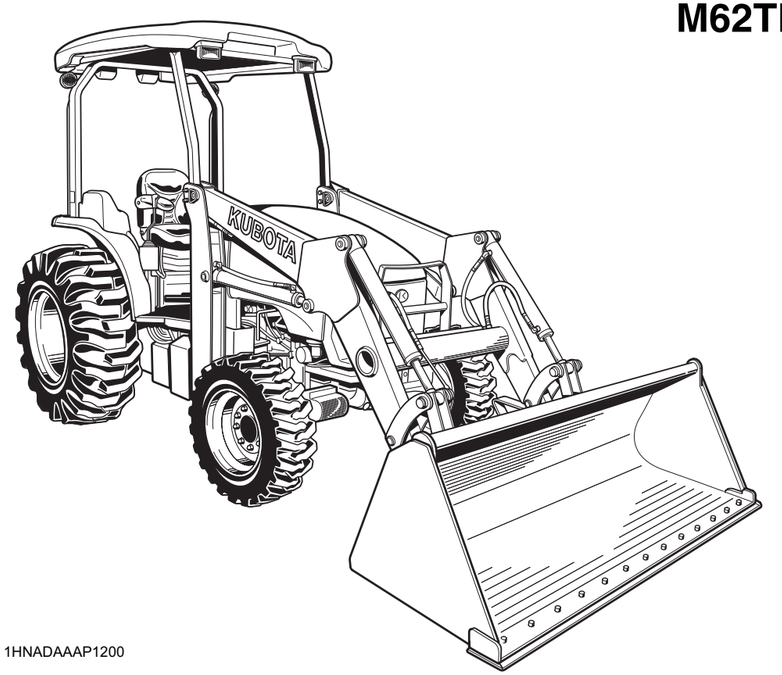

1HNADAAAP1200

READ AND SAVE THIS MANUAL

PRINTED IN JAPAN

© KUBOTA Corporation 2015

https://truckmanualshub.com/

ABBREVIATION LIST

Abbreviations	Definitions
2WD	2 Wheel Drive
4WD	4 Wheel Drive
API	American Petroleum Institute
ASABE	American Society of Agricultural and Biological Engineers, USA
ASTM	American Society for Testing and Materials, USA
DIN	Deutsches Institut für Normung, GERMANY
DT	Dual Traction [4WD]
fpm	Feet Per Minute
GST	Glide Shift Transmission
Hi-Lo	High Speed-Low Speed
HST	Hydrostatic Transmission
m/s	Meters Per Second
PTO	Power Take Off
RH/LH	Right-hand and left-hand sides are determined by facing in the direction of forward travel
ROPS	Roll-Over Protective Structures
rpm	Revolutions Per Minute
r/s	Revolutions Per Second
SAE	Society of Automotive Engineers, USA
SMV	Slow Moving Vehicle

California Proposition 65

⚠ WARNING ⚠

Engine exhaust, some of its constituents, certain vehicle components and fluids, contain or emit chemicals known to the State of California to cause cancer and birth defects or other reproductive harm.

KUBOTA Corporation is ···

Since its inception in 1890, KUBOTA Corporation has grown to rank as one of the major firms in Japan.

To achieve this status, the company has through the years diversified the range of its products and services to a remarkable extent. 30 plants and 35,000 employees produce over 1,000 different items, large and small.

All these products and all the services which accompany them, however, are unified by one central commitment. KUBOTA makes products which, taken on a national scale, are basic necessities. Products which are indispensable. Products which are intended to help individuals and nations fulfill the potential inherent in their environment. KUBOTA is the Basic Necessities Giant.

This potential includes water supply, food from the soil and from the sea, industrial development, architecture and construction, and transportation.

Thousands of people depend on KUBOTA's know-how, technology, experience and customer service. You too can depend on KUBOTA.

https://truckmanualshub.com/

UNIVERSAL SYMBOLS

As a guide to the operation of your tractor, various universal symbols have been utilized on the instruments and controls. The symbols are shown below with an indication of their meaning.

- Safety Alert Symbol
- Diesel Fuel
- Fuel-Level
- Engine-Rotational Speed
- Hourmeter/Elapsed Operating Hours
- Engine Coolant-Temperature
- Diesel Preheat/Glow Plugs (Low Temperature Start Aid)
- Parking Brake
- Engine Intake/Combustion Air-Filter
- Battery Charging Condition
- Engine Oil-Pressure
- Turn Signal
- Engine-Stop
- Engine-Run
- Starter Control
- Engine Shut-Off Control
- Power Take-Off Clutch Control-Off Position
- Power Take-Off Clutch Control-On Position
- Differential Lock
- Position Control-Raised Position
- Position Control-Lowered Position
- Draft Control-Shallow Position
- Draft Control-Deep Position
- 3-Point Lowering Speed Control
- Engine Warning
- Emission Control
- Brake System
- Remote Cylinder-Retract
- Remote Cylinder-Extend
- Steering Wheel-Tilt Control
- Hazard Warning Lights
- Master Lighting Switch
- Position Lamps
- Headlight-Low Beam
- Headlight-High Beam
- Audible Warning Device
- 4-Wheel Drive-On
- 4-Wheel Drive-Off
- Fast
- Slow
- Creep
- Read Operator's Manual
- Tractor-Forward Movement-Overhead View of Machine
- Tractor-Rearward Movement-Overhead View of Machine
- Engine Speed Control
- Regeneration
- DPF INHIBIT (Switch)
- Regeneration (Switch)
- Parked Regeneration
- Engine RPM Increase

https://truckmanualshub.com/

FOREWORD

You are now the proud owner of a KUBOTA Tractor. This tractor is a product of KUBOTA quality engineering and manufacturing. It is made of fine materials and under a rigid quality control system. It will give you long, satisfactory service. To obtain the best use of your tractor, please read this manual carefully. It will help you become familiar with the operation of the tractor and contains many helpful hints about tractor maintenance. It is KUBOTA's policy to utilize as quickly as possible every advance in our research. The immediate use of new techniques in the manufacture of products may cause some small parts of this manual to be outdated. KUBOTA distributors and dealers will have the most up-to-date information. Please do not hesitate to consult with them.

SAFETY FIRST

This symbol, the industry's "Safety Alert Symbol", is used throughout this manual and on labels on the machine itself to warn of the possibility of personal injury. Read these instructions carefully. It is essential that you read the instructions and safety regulations before you attempt to assemble or use this unit.

DANGER : Indicates an imminently hazardous situation which, if not avoided, will result in death or serious injury.

WARNING : Indicates a potentially hazardous situation which, if not avoided, could result in death or serious injury.

CAUTION : Indicates a potentially hazardous situation which, if not avoided, could result in minor or moderate injury.

IMPORTANT : Indicates that equipment or property damage could result if instructions are not followed.

NOTE : Gives helpful information.

https://truckmanualshub.com/

CONTENTS

⚠SAFE OPERATION ..... ⚠-1
TRACTOR 1
LOADER 7

SERVICING 1

SPECIFICATIONS OF THE TRACTOR 3
SPECIFICATION TABLE 3
DIMENSIONS 4
TRAVELING SPEEDS 5

SPECIFICATIONS OF THE LOADER 6
LOADER SPECIFICATIONS 6
BUCKET SPECIFICATIONS 6
DIMENSIONAL SPECIFICATIONS 6
OPERATIONAL SPECIFICATIONS 7
LOADER TERMINOLOGY 8

IMPLEMENT LIMITATIONS 9

INSTRUMENT PANEL AND CONTROLS 11

PRE-OPERATION CHECK OF THE TRACTOR 14
DAILY CHECK 14

PRE-OPERATION CHECK OF THE LOADER 15
PRE-OPERATION CHECKS 15
REAR BALLAST 15
Liquid Ballast in Rear Tires 15

OPERATING THE ENGINE 16
EXHAUST AFTERTREATMENT DEVICES 16
Diesel Particulate Filter (DPF) Muffler 16
Handling Points 17
DPF Regeneration Process 17
Regeneration Operating Procedure 18
PM Warning Level and Required Procedures 19
Regeneration Operating Procedure 20
PM Warning Level and Required Procedures 21
Tips on Diesel Particulate Filter (DPF) Regeneration 23
STARTING THE ENGINE 23
Check Easy Checker(TM) Lamps: 25
IntelliPanel(TM) Message 26
IntelliPanel(TM) Message 27
COLD WEATHER STARTING 27
Antifrost Heater for Oil Separator (if equipped) 28
Block Heater (if equipped) 28
STOPPING THE ENGINE 28
WARMING UP 28
Warm-up Transmission Oil at Low Temperature Range 28

https://truckmanualshub.com/

JUMP STARTING 29

OPERATING THE TRACTOR 30
OPERATING NEW TRACTOR 30
Do not Operate the Tractor at Full Speed for the First 50 Hours 30
Changing Lubricating Oil for New Tractors 30
BOARDING AND LEAVING THE TRACTOR 30
STARTING 30
Operator's Seat 31
Glove Box 31
Seat Belt 32
Tilt Steering Adjustment 32
Light switch 32
Turn Signal / Hazard Light Switch 33
Rear Work Light Switch 33
Horn Button 34
Tractor Lights 34
Brake Pedals (Right and Left) 35
HST Response Control 37
H-DS (Hydro Dual Speed) Lever 38
HST Mode 39
Throttle-Up Switch 41
Range Gear Shift Lever (L-M-H) 42
Front Wheel Drive Lever 43
Throttle Lever 43
Parking Brake 43
Speed Control Pedal 44
ATA (Auto Throttle Advance) Switch 45
Crawl Control Lever 45
STOPPING 45
Stopping 45
INTELLIPANEL(TM) 46
Changing Display Mode 46
Resetting the Trip Meter and Setting the Clock 47
SERVICE INSPECT mode displaying/resetting procedure 48
CHECK DURING DRIVING 49
IntelliPanel(TM) Message 49
Immediately Stop the Engine if: 49
Easy Checker(TM) 50
Fuel Gauge 51
Coolant Temperature Gauge 51
Tachometer 51
PARKING 52
Parking 52
OPERATING TECHNIQUES 52
Differential Lock 52
Operating the Tractor on a Road 53
Operating on Slopes and Rough Terrain 53
Transport the Tractor Safely 53
Directions for Use of Power Steering 53
REVERSING THE SEAT 54

https://truckmanualshub.com/

OPERATING THE LOADER 55
CONTROL LEVER 55
OPERATING THE LOADER 55
FILLING THE BUCKET 55
LIFTING THE LOAD 56
CARRYING THE LOAD 56
DUMPING THE BUCKET 57
LOWERING THE BUCKET 57
OPERATING WITH FLOAT CONTROL 57
LOADING FROM A BANK 57
PEELING AND SCRAPING 58
LOADING LOW TRUCKS OR SPREADERS FROM A PILE 59
BACKFILLING 59
HANDLING LARGE HEAVY OBJECTS 60
VALVE LOCK 60
BOOM LOCK 60
BUCKET LEVEL INDICATOR 61
SELF LEVELING 61
ATTACHING ATTACHMENTS 65
DETACHING ATTACHMENTS 67
Hydraulic Quick Attach Coupler Switch (if equipped) 67

PTO 68
PTO OPERATION 68
PTO Clutch Control Switch 68
Stationary PTO 69
IntelliPanel(TM) Message 69
PTO shaft Cover and Shaft Cap 70

3-POINT HITCH & DRAWBAR 71
3-POINT HITCH (if equipped) 72
Selecting Category 72
Selecting the Top Link Mounting Holes 72
Drawbar (if equipped) 72
Lifting Rod (Right) 73
Top Link 73
Check Chains 74
Lower Link Holder 74
DRAWBAR (if equipped) 74
Adjusting Drawbar Length 74
REINSTALLING THE 3-POINT HITCH 75
Lower Link 75
Top Link and Lifting Rod 75
STORING THE 3-POINT HITCH (if equipped) 76
Lower Link 76
Top Link and Lifting Rod 77
Installing the Lower Link 77

HYDRAULIC UNIT 78
3-POINT HITCH CONTROL SYSTEM 78
Position Control 78
Float Control 79

https://truckmanualshub.com/

3-point Hitch Lowering Speed....79
Directional Valve Lever and Swing Lever....79
REAR REMOTE HYDRAULIC CONTROL SYSTEM (if equipped).... 80
Remote Control Valve Coupler Connecting and Disconnecting....80
Remote Control Valve Lever....80
Remote Control Valve....81
FRONT REMOTE HYDRAULIC CONTROL SYSTEM (if equipped).... 81
Install the Coupler....81
Control Switch....82
Remote Control Coupler Connecting and Disconnecting....82
MULTI-COUPLER SYSTEM (if equipped)....83
Hydraulic Control Unit Use Reference Chart....86

TIRES, WHEELS AND BALLAST.... 87
TIRES.... 87
Inflation Pressure....87
Treads....87
BALLAST.... 89
Front Ballast....89
Rear Ballast....89

MAINTENANCE OF THE TRACTOR.... 91
SERVICE INTERVALS.... 91
LUBRICANTS, FUEL AND COOLANT.... 94

PERIODIC SERVICE OF THE TRACTOR.... 96
HOW TO OPEN THE HOOD.... 96
Hood....96
Side Cover....96
Front Cover....97
Floor Seat Cover....97
DAILY CHECK.... 97
Walk Around Inspection....97
Checking and Refueling....98
Checking Water Separator....98
Checking Engine Oil Level....99
Checking Transmission Fluid Level....99
Checking Coolant Level....100
Cleaning Grill, Radiator Screen and Oil Cooler....100
Checking Dust Indicator....101
Checking DPF Muffler....101
Checking Brake Pedal....101
Checking Gauges, Meter and Easy Checker(TM)....101
Checking Head Light, Hazard Light etc.....101
Checking Seat Belt, ROPS and FOPS....101
Checking Movable Parts....101
EVERY 50 HOURS.... 102
Lubricating Grease Fittings....102
Checking Engine Start System....103
Checking Operator Presence Control....104
Checking Wheel Nut Torque....104
EVERY 100 HOURS.... 105
Cleaning Air Cleaner Primary Element....105

Adjusting Fan Belt Tension 106
Adjusting Brake Pedal 106
Adjusting Rear Parking Brake Lever 107
Checking Battery Condition 107
EVERY 200 HOURS 109
Replacing Transmission Oil Filter [HST] 109
Adjusting Toe-in 110
EVERY 400 HOURS 111
Cleaning Water Separator 111
Replacing Engine Oil Filter 111
Changing Engine Oil 112
Changing Transmission Fluid / Replacing Hydraulic Oil Filter 113
Replacing Fuel Filter 114
Changing Front Axle Case Oil 114
EVERY 600 HOURS 115
Adjusting Front Axle Pivot 115
EVERY 800 HOURS 115
Adjusting Engine Valve Clearance 115
EVERY 1000 HOURS or 1 YEAR 115
Replacing Air Cleaner Primary Element and Secondary Element 115
EVERY 1500 HOURS 115
Checking Fuel Injection Nozzle Injection Pressure 115
Replacing Oil Separator Element 115
Checking PCV (Positive Crankcase Ventilation) Valve 115
Checking and Cleaning EGR Cooler 116
EVERY 2000 HOURS or 2 YEARS 116
Flush Cooling System and Changing Coolant 116
Anti-Freeze 116
EVERY 3000 HOURS 117
Checking Turbocharger [M62] 117
Checking Supply Pump 117
Checking and Cleaning EGR System 117
Cleaning DPF Muffler 117
EVERY 1 YEAR 118
Checking Fuel Line 118
Checking Radiator Hose and Clamp 118
Checking Intake Air Line 119
Checking Oil Separator Hose 120
Checking Antifrost Heater for Oil Separator 120
Checking Oil Cooler Line / Checking Power Steering Line 120
Checking Exhaust Manifold 120
Checking DPF Differential Pressure Sensor Pipe 120
Checking EGR Pipe 120
EVERY 2 YEARS 121
Replacing Rear Parking Brake Cable 121
EVERY 4 YEARS 121
Replacing Radiator Hose (Water pipes) 121
Replacing Power Steering Hose 121
Replacing Oil Cooler Line 121
Replacing Fuel Hose 121
Replacing Intake Air Line 121
Replacing Oil Separator Hose 121

https://truckmanualshub.com/

Replacing DPF Differential Pressure Sensor Hose 121
SERVICE AS REQUIRED 121
Bleeding Fuel System 121
Draining Clutch Housing Water 122
Replacing Fuse 122
Replacing Light Bulb 123

MAINTENANCE OF THE LOADER 124
DAILY CHECKS 124
LUBRICATION 125
GENERAL TORQUE SPECIFICATION 126

STORAGE OF THE TRACTOR 127
TRACTOR STORAGE 127
REMOVING THE TRACTOR FROM STORAGE 127

TROUBLESHOOTING 128
ENGINE TROUBLESHOOTING 128
TROUBLESHOOTING 129

OPTIONS 131

APPENDICES 132
INDEX 132

https://truckmanualshub.com/

SAFE OPERATION

TRACTOR

Careful operation is your best insurance against an accident.

Read and understand this manual carefully before operating the tractor.

All operators, no matter how much experience they may have, should read this and other related manuals before operating the tractor or any implement attached to it. It is the owner's obligation to instruct all operators in safe operation.

1. BEFORE OPERATING THE TRACTOR

1. Know your equipment and its limitations. Read this entire manual before attempting to start and operate the tractor.
2. Pay special attention to the danger, warning and caution labels on the tractor.
3. Do not operate the tractor or any implement attached to it while under the influence of alcohol, medication, controlled substances or while fatigued.
4. Carefully check the vicinity before operating tractor or any implement attached to it. Do not allow any bystanders around or near tractor during operation.
5. Before allowing other people to use your tractor, explain how to operate and have them read this manual before operation.
6. Never wear loose, torn, or bulky clothing around tractor. It may catch on moving parts or controls, leading to the risk of an accident. Use additional safety items, e.g. hard hat, safety boots or shoes, eye and hearing protection, gloves, etc., as appropriate or required.
7. Do not allow passengers to ride on any part of the tractor at anytime. The operator must remain in the tractor seat during operation.
8. Check brakes, clutch, linkage pins and other mechanical parts for improper adjustment and wear. Replace worn or damaged parts promptly. Check the tightness of all nuts and bolts regularly. (For further details, see "MAINTENANCE" section.)
9. Keep your tractor clean. Dirt, grease, and trash build up may contribute to fires and lead to personal injury.
10. Use only implements meeting the specifications listed under "IMPLEMENT LIMITATIONS" in this manual or implements approved by KUBOTA.
11. Use proper weights on the front or rear of the tractor to reduce the risk of upsets. When using the front loader, put an implement or ballast on the 3-point hitch to improve stability. Follow the safe operating procedures specified in the implement or attachment manual.
12. The narrower the tread, the greater the risk of a tractor upset. For maximum stability, adjust the wheels to the widest practical tread width for your application. (See "TIRES, WHEELS AND BALLAST" section.)

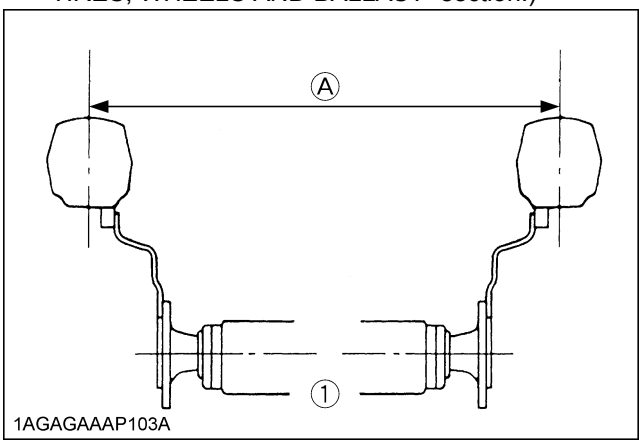

(1) Rear wheels *(A) Tread Width*

13. Do not modify the tractor. Unauthorized modification may affect the function of the tractor, which may result in personal injury.

◆ **CAB, ROPS**

1. KUBOTA recommends the use of a CAB or Roll Over Protective Structures (ROPS) and seat belt in almost all applications. This combination will reduce the risk of serious injury or death, should the tractor be upset. Check for overhead clearance which may interfere with a CAB or ROPS.
2. If the CAB or ROPS is loosened or removed for any reason, make sure that all parts are reinstalled correctly before operating the tractor.
3. Never modify or repair any structural member of a CAB or ROPS because welding, bending, drilling, grinding, or cutting may weaken the structure.
4. A damaged CAB or ROPS structure must be replaced, not repaired or revised.
5. If any structural member of the CAB or ROPS is damaged, replace the entire structure at your local KUBOTA Dealer.
6. Always use the seat belt if the tractor has a CAB or ROPS. Do not use the seat belt if there is no CAB or ROPS. Check the seat belt regularly and replace if frayed or damaged.

https://truckmanualshub.com/

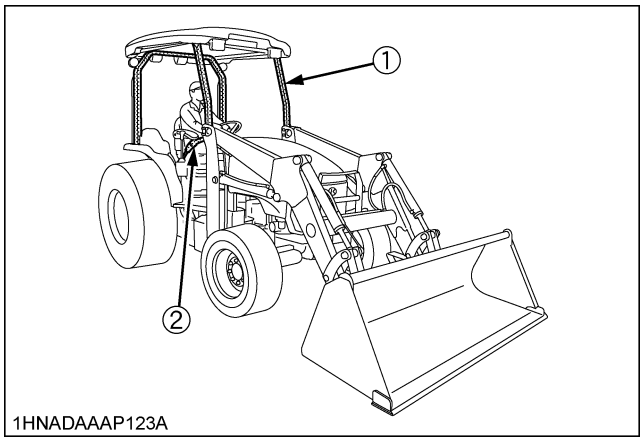

(1) ROPS
(2) Seat belt

2. OPERATING THE TRACTOR

Operator safety is a priority. Safe operation, specifically with respect to overturning hazards, entails understanding the equipment and environmental conditions at the time of use. Some prohibited uses which can affect overturning hazards include traveling and turning with implements and loads carried too high etc. This manual sets forth some of the obvious risks, but the list is not, and cannot be, exhaustive. It is the operator's responsibility to be alert for any equipment or environmental condition that could compromise safe operation.

◆ **Starting**

1. Always sit in the operator's seat when starting engine or operating levers or controls. Never start engine while standing on the ground.
2. Before starting the engine, make sure that all levers (including auxiliary control levers) are in their neutral positions, that the parking brake is engaged, and that both the clutch and the Power Take-Off (PTO) are disengaged or "OFF".
   Fasten the seat belt if the tractor has a CAB, a fixed ROPS or a foldable ROPS in the upright and locked position.
3. Do not start engine by shorting across starter terminals or bypassing the safety start switch. Machine may start in gear and move if normal starting circuitry is bypassed.
4. Do not operate or idle engine in a non-ventilated area. Carbon monoxide gas is colorless, odorless, and deadly.
5. Check before each use that operator presence controls are functioning correctly. Test safety systems. (See "Checking Engine Start System" in "EVERY 50 HOURS" in "PERIODIC SERVICE" section.)
   Do not operate unless they are functioning correctly.

◆ **Working**

1. Pull only from the drawbar. Never hitch to axle housing or any other point except drawbar; such arrangements will increase the risk of serious personal injury or death due to a tractor upset.

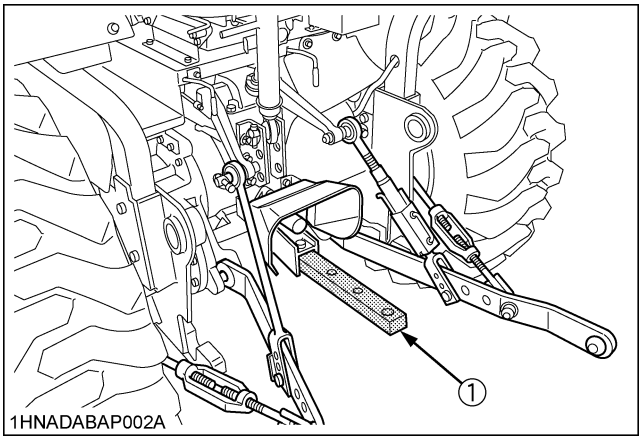

(1) Drawbar (option)

2. For trailing PTO-driven implements, set the drawbar to the towing position.
3. Attach pulled or towed loads to the drawbar only.
4. Keep all shields and guards in place. Replace any that are missing or damaged.
5. Avoid sudden starts. To avoid upsets, slow down when turning, on uneven ground, and before stopping.
6. The tractor cannot turn with the differential locked and attempting to do so could be dangerous.
7. Do not operate near ditches, holes, embankments, or other ground surface features which may collapse under the tractor's weight. The risk of tractor upset is even higher when the ground is loose or wet. Tall grass can hide obstacles, walk the area first to be sure.
8. Watch where you are going at all times. Watch for and avoid obstacles. Be alert at row ends, near trees, and other obstructions.
9. When working in groups, always let the others know what you are going to do before you do it.
10. Never try to get on or off a moving tractor.
11. Always sit in the operator's seat when operating levers or controls.
12. Do not stand between tractor and implement or trailed vehicle unless parking brake is applied.

https://truckmanualshub.com/

◆ Safety for children

Tragedy can occur if the operator is not alert to the presence of children. Children generally are attracted to machines and the work they do.

1. Never assume that children will remain where you last saw them.
2. Keep children out of the work area and under the watchful eye of another responsible adult.
3. Be alert and shut your machine down if children enter the work area.
4. Never carry children on your machine. There is no safe place for them to ride. They may fall off and be run over or interfere with your control of the machine.
5. Never allow children to operate the machine even under adult supervision.
6. Never allow children to play on the machine or on the implement.
7. Use extra caution when backing up. Look behind and down to make sure area is clear before moving.

◆ Operating on slopes

Slopes are a major factor related to loss-of-control and tip-over accidents, which can result in severe injury or death. All slopes require extra caution.

1. To avoid upsets, always back up steep slopes. If you cannot back up the slope or if you feel uneasy on it, do not operate on it. Stay off slopes too steep for safe operation.
2. Driving forward out of a ditch, mired condition or up a steep slope increases the risk of a tractor to be upset backward. Always back out of these situations. Extra caution is required with 4-wheel drive models because their increased traction can give the operator false confidence in the tractor's ability to climb slopes.
3. Keep all movement on slopes slow and gradual. Do not make sudden changes in speed, direction or apply brake and make sudden motions of the steering wheel.
4. Avoid changing gears speed when climbing or going down a slope. If on a slope changing gears to neutral could cause loss of control.
5. Special attention should be made to the weight and location of implements and loads as such will affect the stability of the tractor.
6. To improve stability on slope, set widest wheel tread as shown in "TIRES, WHEELS AND BALLAST" section.
   Follow recommendations for proper ballasting.

◆ Driving the tractor on the road

1. Lock the 2 brake pedals together to help assure straight-line stops. Uneven braking at road speeds could cause the tractor to tip over.

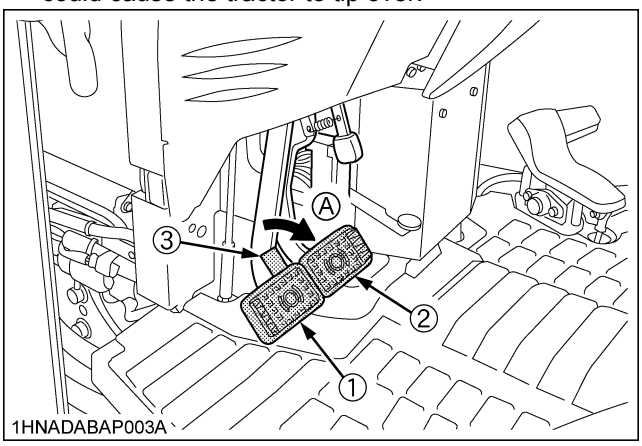

(1) Brake Pedal (LH)
(2) Brake Pedal (RH)
(3) Brake Pedal Lock
(A) Whenever travelling on the road

2. Check the front wheel engagement. The braking characteristics are different between 2 and 4-wheel drive. Be aware of the difference and use carefully.
3. Always slow the tractor down before turning. Turning at high speed may tip the tractor over.
4. Make sure that the Slow Moving Vehicle (SMV) sign is clean and visible. Use hazard lights and turn signals as required.

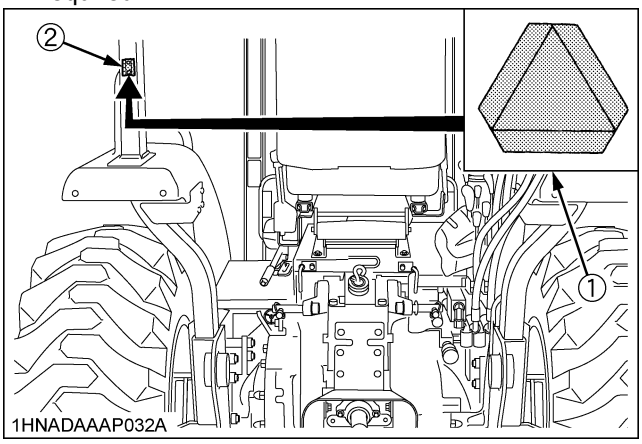

(1) SMV emblem
(2) Bracket

5. On public roads use the SMV emblem and hazard lights, if required by local traffic and safety regulations.
6. Observe all local traffic and safety regulations.
7. Turn the headlights on. Dim them when meeting another vehicle.
8. Drive at speeds that allow you to maintain control at all times.
9. Do not apply the differential lock while traveling at road speeds. The tractor may run out of control.

https://truckmanualshub.com/

10. Avoid sudden motions of the steering wheel as they can lead to a dangerous loss of stability. The risk is especially great when the tractor is traveling at road speeds.
11. Do not operate an implement while the tractor is on the road. Lock the 3-point hitch in the raised position.
12. When towing other equipment, use a safety chain and place an SMV emblem on it as well.

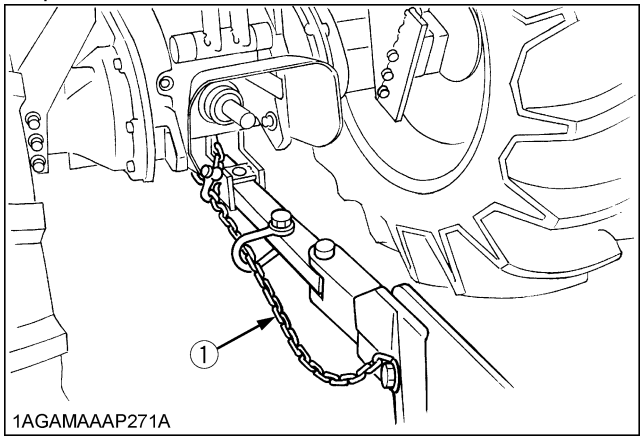

(1) Safety chain

13. Set the implement lowering speed knob in the "LOCK" position to hold the implement in the raised position.

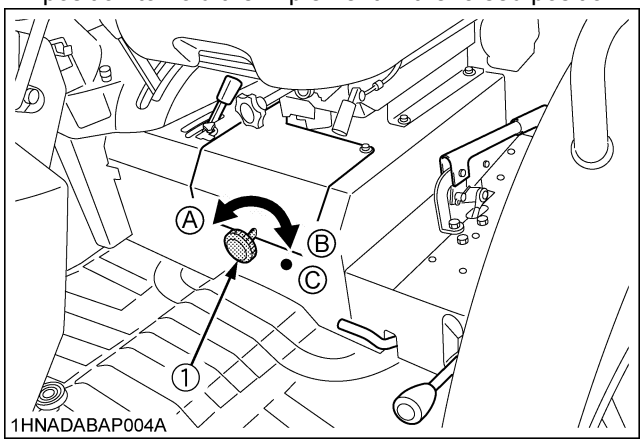

(1) 3-point hitch lowering speed knob
(A) "FAST"
(B) "SLOW"
(C) "LOCK"

3. PARKING THE TRACTOR

1. Disengage the PTO, lower all implements to the ground, place all control levers in their neutral positions, set the parking brake, stop the engine, and remove the key from the ignition and lock the cab door (if equipped). Leaving transmission in gear with the engine stopped will not prevent tractor from rolling.
2. Make sure that the tractor has come to a complete stop before dismounting.
3. Avoid parking on steep slopes, if at all possible park on a firm and level surface; if not, park across a slope with chock the wheels.
   Failure to comply with this warning may allow the tractor to move and could cause injury or death.

4. OPERATING THE PTO

1. Wait until all moving components have completely stopped before getting off the tractor, connecting, disconnecting, adjusting, cleaning, or servicing any PTO driven equipment.
2. Keep the PTO shaft cover in place at all times. Replace the PTO shaft cap when the shaft is not in use.

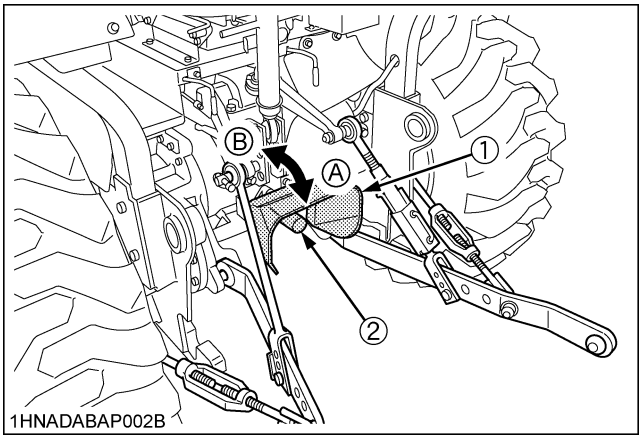

(1) PTO Shaft cover
(2) PTO Shaft cap
(A) "NORMAL POSITION"
(B) "RAISED POSITION"

3. Before installing or using PTO driven equipment, read the manufacturer's manual and review the safety labels attached to the equipment.
4. When operating stationary PTO driven equipment, always apply the tractor parking brake and place chocks behind and in front of the rear wheels. Stay clear of all rotating parts. Never step over rotating parts.

https://truckmanualshub.com/

5. USING 3-POINT HITCH

1. Use the 3-point hitch only with equipment designed for 3-point hitch usage.
2. When using a 3-point hitch mounted implement, be sure to install the proper counterbalance weight on the tractor.
3. To avoid injury from separation (M62 only):
   Do not extend lift rod beyond the groove on the threaded rod.

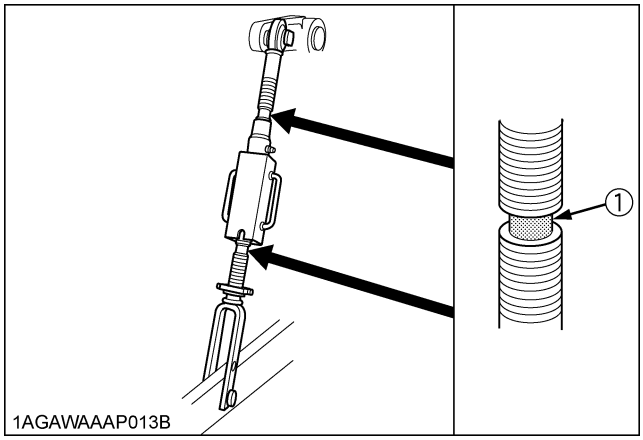

(1) Groove

6. SERVICING THE TRACTOR

Before servicing the tractor, park it on a firm, flat and level surface, set the parking brake, lower all implements to the ground, place the gear shift lever in neutral, stop the engine and remove the key.

1. Allow the tractor time to cool off before working on or near the engine, muffler, radiator, etc.
2. Do not remove radiator cap while coolant is hot. When cool, slowly rotate cap to the first stop and allow sufficient time for excess pressure to escape before removing the cap completely. If the tractor has a coolant recovery tank, add coolant or water to the tank, not the radiator. (See "Checking Coolant Level" in "DAILY CHECK" in "PERIODIC SERVICE" section.)
3. Always stop the engine before refueling. Avoid spills and overfilling.
4. Do not smoke when working around battery or when refueling. Keep all sparks and flames away from battery and fuel tank. The battery presents an explosive hazard, because it gives off hydrogen and oxygen especially when recharging.
5. Before "jump starting" a dead battery, read and follow all of the instructions. (See "JUMP STARTING" in "OPERATING THE ENGINE" section.)
6. Keep first aid kit and fire extinguisher handy at all times.
7. Disconnect the battery's ground cable before working on or near electric components.
8. To avoid the possibility of battery explosion, do not use or charge the refillable type battery if the fluid level is below the LOWER (lower limit level) mark. Check the fluid level regularly and add distilled water as required so that the fluid level is between the UPPER and LOWER levels.
9. To avoid sparks from an accidental short circuit, always disconnect the battery's ground cable (-) first and reconnect it last.

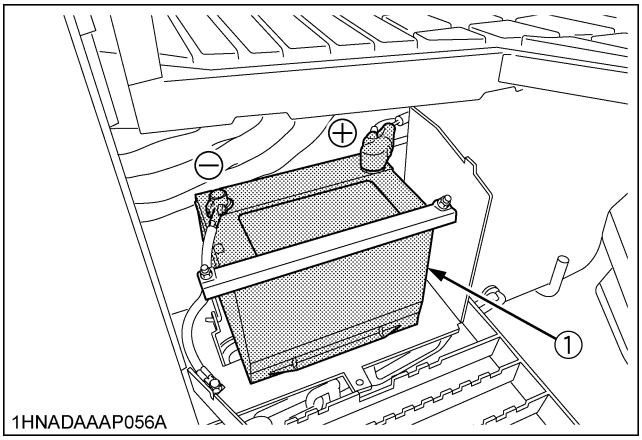

(1) Battery

10. Do not attempt to mount a tire on a rim. This should be done by a qualified person with the proper equipment.
11. Always maintain the correct tire pressure. Do not inflate tires above the recommended pressure shown in the operator's manual.

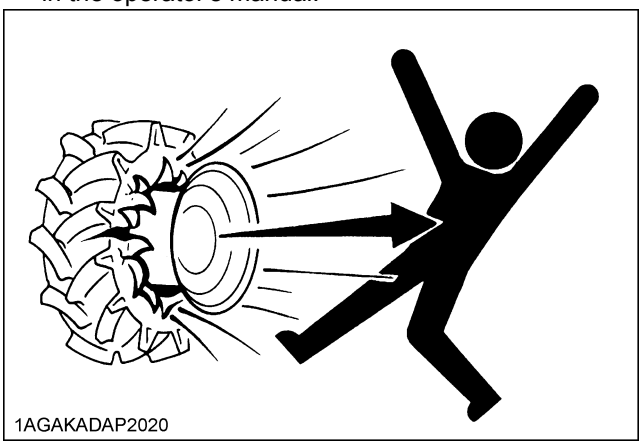

12. Securely support the tractor when either changing wheels or adjusting the wheel tread width.
13. Make sure that wheel bolts have been tightened to the specified torque.
14. Do not work under any hydraulically supported devices. They can settle, suddenly leak down, or be accidentally lowered. If it is necessary to work under tractor or any machine elements for servicing or adjustment, securely support them with stands or suitable blocking beforehand.

https://truckmanualshub.com/

15. Escaping hydraulic fluid under pressure has sufficient force to penetrate skin, causing serious personal injury. Before disconnecting hydraulic lines, be sure to release all residual pressure. Before applying pressure to the hydraulic system, make sure that all connections are tight and that all lines, pipes, and hoses are free of damage.

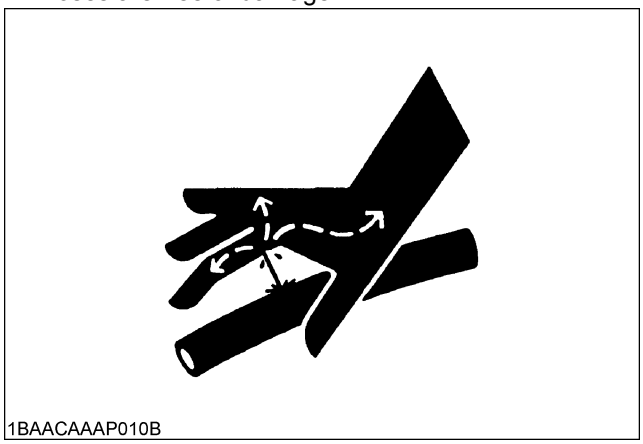

16. Fluid escaping from pinholes may be invisible. Do not use hands to search for suspected leaks; use a piece of cardboard or wood. Use of safety goggles or other eye protection is also highly recommended. If injured by escaping fluid, see a medical doctor at once. This fluid will produce gangrene or severe allergic reaction.

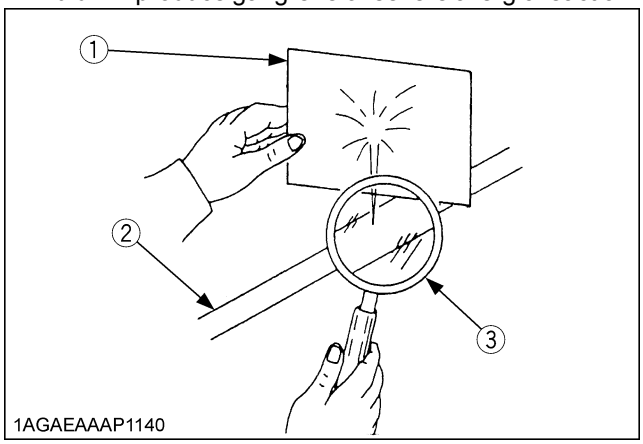

(1) Cardboard
(2) Hydraulic line
(3) Magnifying glass

17. Do not open high-pressure fuel system.
High-pressure fluid remaining in fuel lines can cause serious injury. Do not disconnect nor attempt to repair fuel lines, sensors, or any other components between the high-pressure fuel pump and injectors on engines with high pressure common rail fuel system.
18. To avoid hazardous high voltage, turn the key switch to the OFF position if it is necessary to check to repair the computer, harness or connectors.
19. During Diesel Particulate Filter (hereinafter called DPF) regenerating operations, exhaust gases and exhaust filter components reach temperatures hot enough to burn people, or ignite or melt common materials.
20. Keep the tractor away from people, animals or structures which may be susceptible to harm or damage from hot exhaust gases.
21. To prevent fires, keep the DPF muffler and its surroundings clear of anything flammable and keep clean at all times.
22. During regeneration, white exhaust gas may be visible. Do not allow regeneration in a non-ventilated space.
23. During regeneration, do not leave the tractor.

https://truckmanualshub.com/

LOADER

Most loader equipment accidents can be avoided by following simple safety precautions.
These safety precautions, if followed at all times, will help you operate your loader safely.

1. BEFORE OPERATING THE LOADER

1. Read and understand all instructions and precautions found in both the tractor and the loader operator's manuals before using the loader.
   Lack of knowledge can lead to accidents.
2. It is the owner's responsibility to ensure that anyone who will operate the loader reads this manual first and becomes familiar with the safe operation of the loader.
3. For your safety, a ROPS with a seat belt is strongly recommended by KUBOTA in almost all applications. If the tractor is not equipped with ROPS, it should not be operated in a situation where ROPS is recommended. If you have any questions, consult your local KUBOTA Dealer.
   Always use the seat belt when the tractor is equipped with a ROPS. Never use the seat belt when the tractor is not equipped with a ROPS.
4. Visually check for hydraulic leaks and broken, missing, or malfunctioning parts.
   Make necessary repairs before operating.
5. Replace damaged or illegible safety labels. See following pages for required labels.
6. Enter and exit the operator's seat only from left side of the tractor.
7. Engage the loader control valve lock to prevent accidental actuation when the implement is not in use or during transport. Do not utilize the valve lock for machine maintenance or repair.
8. Follow the precautions below when attaching implements.

- Make sure both handles (LH, RH) contact the ear plates at the points (A) and are all the way down.
- Make sure both lock pins (LH, RH) protrude through the pin slots.
- Kubota recommends the use of Kubota attachments on Kubota loaders. Non-Kubota attachments, if used, must comply with ISO 24410, first edition 2005-04-15.
- Use of a non-Kubota attachment that does not comply with ISO 24410 or the improper positioning of handle(s) or non-protrusion of pin(s) may result in detachment of the attachment or deformation, causing loss of performance, personal injury or death.

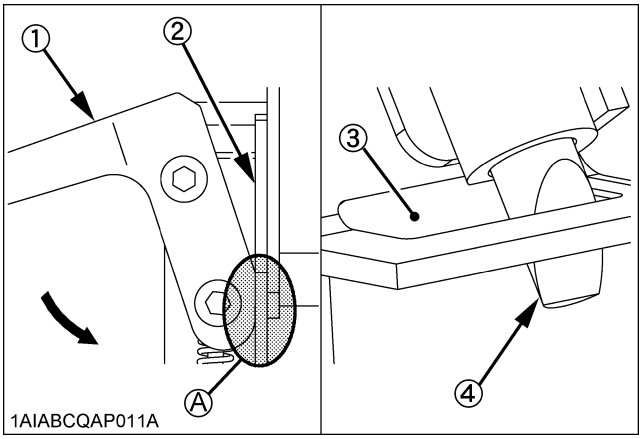

(1) Handle
(2) Ear plate
(3) Pin slot
(4) Lock pin
(A) The handle contacts the ear plate at the points.

https://truckmanualshub.com/

2. OPERATING THE LOADER

1. Operate the loader only when properly seated at the controls. Do not operate from the ground.
2. Move and turn the tractor at low speeds.
3. Never allow anyone to get under the loader bucket or reach through the boom when the bucket is raised.
4. Keep children, others and livestock away when operating loader and tractor.
5. Do not walk or work under a raised loader bucket or attachment unless it is securely blocked and held in position.
6. For tractor stability and operator safety, rear ballast must be added to the 3-point hitch and to the rear wheels when using loader.
7. Exercise extra caution when operating the loader with a raised bucket or attachment.
8. Do not lift or carry any person on the loader, in the bucket, or other attachment.
9. Avoid loose fill, rocks and holes. They can be dangerous for loader operation or movement.
10. Avoid overhead wires and obstacles when the loader is raised. Contacting electric lines can cause electrocution.
11. Gradually stop the loader boom when lowering or lifting.
12. Use caution when handling loose or shiftable loads.
13. Using loaders for handling large, heavy, or shiftable objects is not recommended without proper handling attachments.
14. Handling large heavy objects can be extremely dangerous due to :
    - Danger of rolling the tractor over.
    - Danger of upending the tractor.
    - Danger of the object rolling or sliding down the loader boom onto the operator.
15. If you must perform this sort of work (item 14), protect yourself by :
    - Never lift the load higher than necessary to clear the ground.
    - Add rear ballast to the tractor to compensate for the load or use rear implement.
    - Never lift large objects with equipment that may permit them to roll back onto the operator.
    - Move slowly and carefully, avoiding rough terrain.
16. Never lift or pull a load from any point on the loader with a chain, rope, or cable. Doing so could cause a rollover or serious damage to the loader.
17. Be extra careful when operating the tractor on a slope, always operate up and down, never across the slope. Do not operate on steep slopes or unstable surfaces.
18. Carry loader boom at a low position during transport. (You should be able to see over the bucket.)
19. Allow for the loader length when making turns.

3. AFTER OPERATING THE LOADER

1. When loader work is complete and parking or storing, choose flat and hard ground. Lower the loader boom to the ground, stop the engine, set the brakes and remove the key before leaving the tractor seat.

4. SERVICING THE LOADER

1. Always wear safety goggles when servicing or repairing the machine.
2. Do not modify the loader. Unauthorized modification may affect the function of the loader, which may result in personal injury.
3. Do not use the loader as a work platform or a jack to support the tractor for servicing or maintenance.
   Securely support the tractor or any machine elements with stands or suitable blocking before working underneath.
   For your safety, do not work under any hydraulically supported devices. They can settle or suddenly leak down or be accidentally lowered.
4. Escaping hydraulic oil under pressure can have sufficient force to penetrate the skin, causing serious personal injury. Do not use hands to search for suspected leaks. If injured by escaping fluid, obtain medical treatment immediately.
5. Do not tamper with the relief valve setting. The relief valve is pre-set at the factory. Changing the setting can cause overloading of the loader and tractor which may result in serious personal injury.
6. When servicing or replacing pins in cylinder ends, bucket, etc., always use a brass drift and hammer. Failure to do so could result in injury from flying metal fragments.

https://truckmanualshub.com/

DANGER, WARNING AND CAUTION LABELS OF THE TRACTOR

(1) Part No. TA040-4965-2

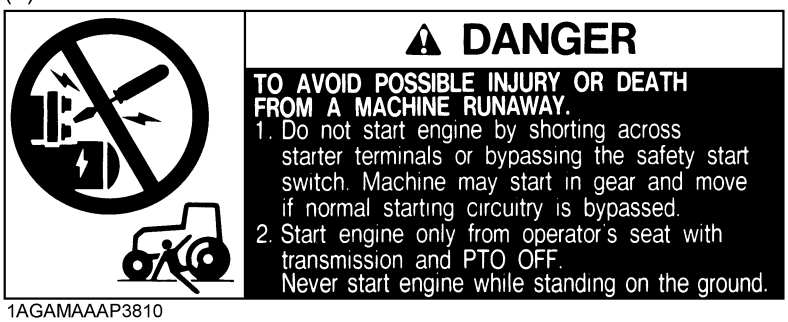

1AGAMAAAP3810

(2) Part No. 32771-4925-1

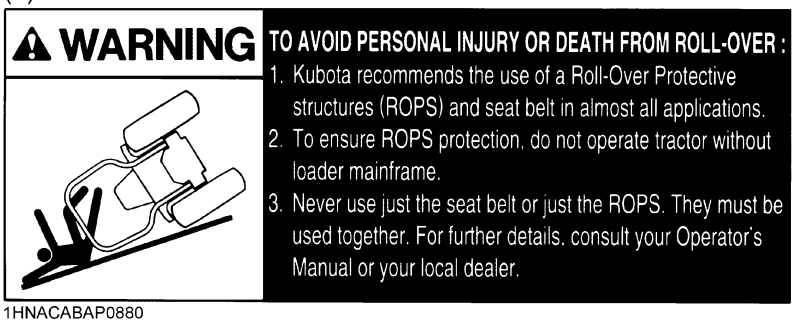

1HNACABAP0880

(3) Part No. TA040-4959-3

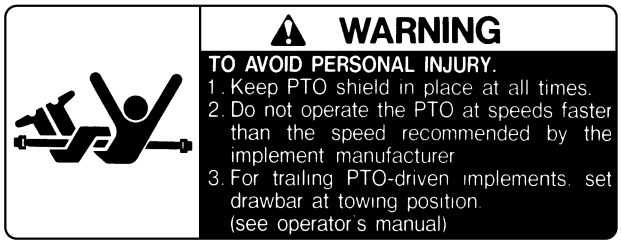

1AGAMAAAP3830

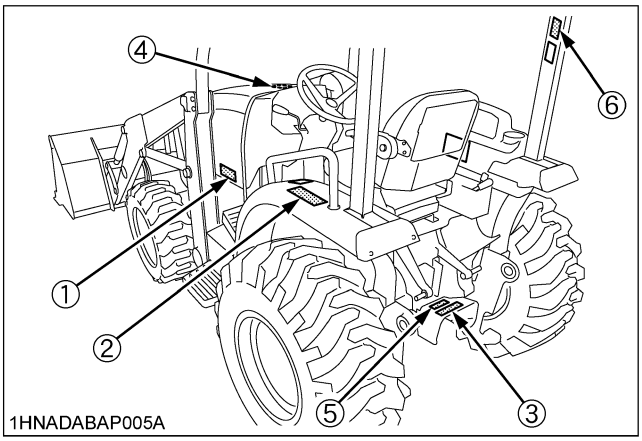

1HNADABAP009A

(4) Part No. TC420-4956-1

Diesel fuel only. No fire

1AGAIDHAP154E

(5) Part No. TC660-4935-1

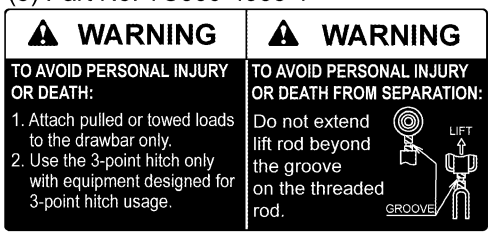

1AGAHAKAP052A

(6) Part No. 6C140-4746-1

1AGAMAAAP3870

https://truckmanualshub.com/

(1) Part No.TA240-4933-2

⚠ WARNING

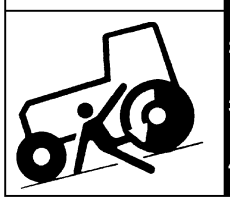

BEFORE DISMOUNTING TRACTOR:

1. **ALWAYS SET PARKING BRAKE.**
   Leaving transmission in gear with the engine stopped will not prevent tractor from rolling.
2. **PARK ON LEVEL GROUND WHENEVER POSSIBLE.**
   If parking on a slope, position tractor across the slope.
3. **LOWER ALL IMPLEMENTS TO THE GROUND.**
   Failure to comply to this warning may allow the wheels to slip, and could cause injury or death.
4. **STOP THE ENGINE.**

1AGAMAAAP3720

(2) Part No.TC660-9861-1

⚠ WARNING

TO AVOID PERSONAL INJURY OR DEATH:

When the Diesel Particulate Filter (DPF) is in the regenerating mode, the exhaust gas and the DPF muffler become hot. During regeneration, take into account that the muffler will be very hot and keep the machine away from other people, animals, plants, and flammable material. Also keep the area near the DPF muffler clean and away from flammable material.

1AGAHAKAP051A

(3) Part No.6C540-4742-1

⚠ W A R N I N G

TO AVOID PERSONAL INJURY OR DEATH:

1. Read and understand the operator's manual before operation.
2. Before starting the engine, make sure that everyone is at a safe distance from the tractor and that the PTO is OFF.
3. Do not allow passengers on the tractor at any time.
4. Before allowing other people to use the tractor, have them read the operator's manual.
5. Check the tightness of all nuts and bolts regularly.
6. Keep all shields in place and stay away from all moving parts.
7. Lock the two brake pedals together before driving on the road.
8. Slow down for turns, or rough roads, or when applying individual brakes.
9. On public roads use SMV emblem and hazard lights, if required by local traffic and safety regulations.
10. Pull only from the drawbar.
11. Before dismounting, lower the implement to the ground, set the parking brake, stop the engine and remove the key.
12. Securely support tractor and implements before working underneath.

1AGAEEIAP035A

(4) Part No.32751-4921-2

⚠ WARNING

TO AVOID SERIOUS PERSONAL INJURY OR DEATH:

1. Keep tractor seat in forward position except when operating backhoe.
2. Using seat in reversed position while operating attachments other than backhoe may result in entanglement with PTO shaft or 3-point hitch.

1HNACABAP0770

1HNADABAP010A

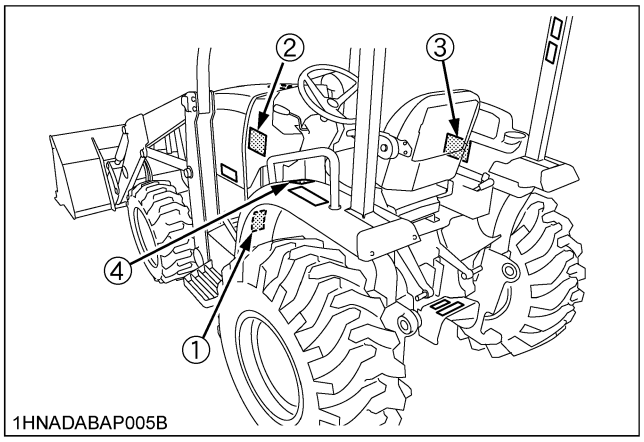

1HNADABAP005B

https://truckmanualshub.com/

[L47]

(1) Part No. 32781-3015-1

1HNACABAP0740

(2) Part No. 6C090-4958-2 (Both sides)
Do not get your hands close to engine fan and fan belt.

1AGAMAAAP3980

(3) Part No. TC030-4958-1
Do not touch hot surface like muffler, etc.

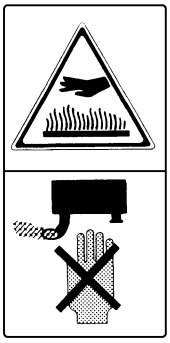

1AGAMAAAP3760

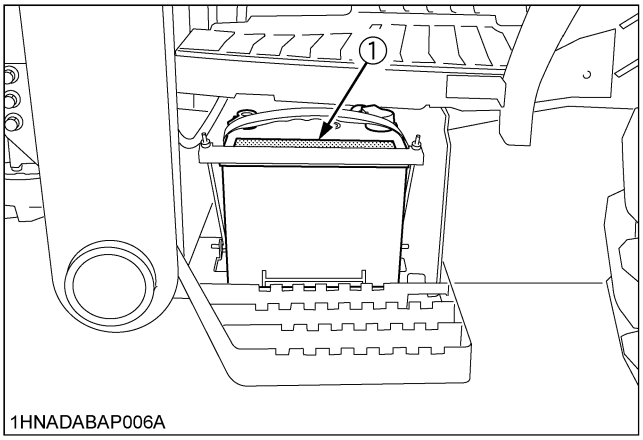

1HNADABAP006A

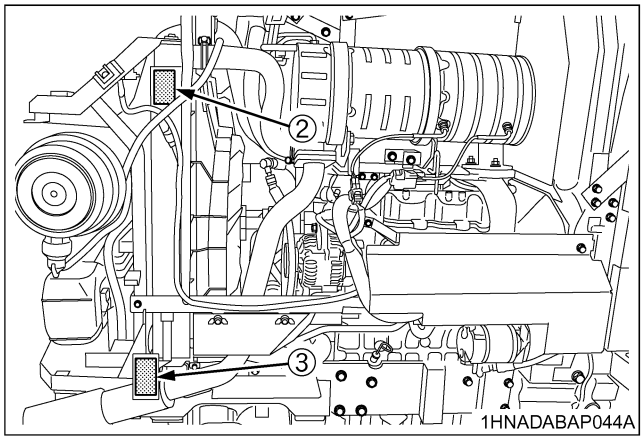

1HNADABAP044A

1HNADABAP011A

https://truckmanualshub.com/

[M62]

(1) Part No. 32791-3015-1

1HNADAAAP1090

(2) Part No. 6C090-4958-2 (Both sides)
Do not get your hands close to engine fan and fan belt.

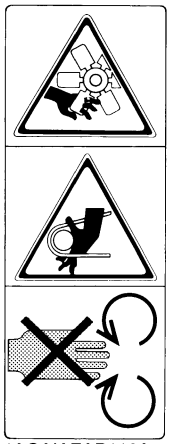

1AGAIAZAP110A

(3) Part No. TC030-4958-1
Do not touch hot surface like muffler, etc.

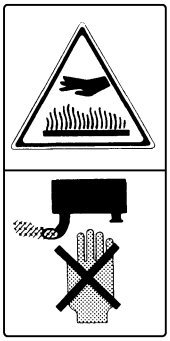

1AGAMAAAP3760

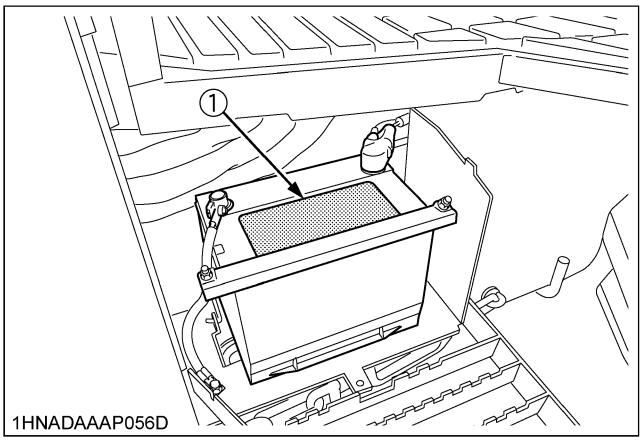

1HNADAAAP056D

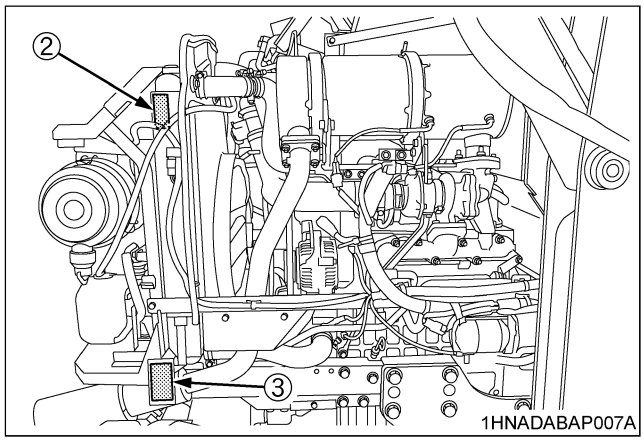

1HNADABAP007A

1HNADABAP012A

https://truckmanualshub.com/

DANGER, WARNING AND CAUTION LABELS OF THE LOADER

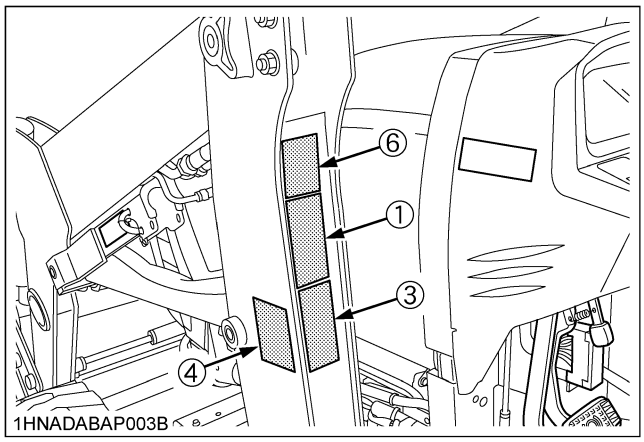

1HNADABAP003B

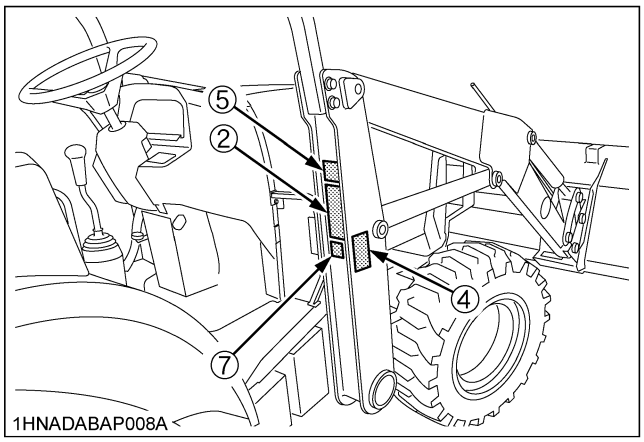

1HNADABAP008A

(1) Part No. 7J246-5643-1

⚠ DANGER

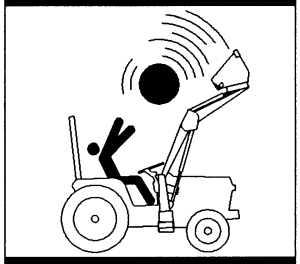

TO AVOID SERIOUS INJURY OR DEATH CAUSED BY FALLING LOADS :

1. Load on raised bucket or fork can fall or roll back onto operator causing serious injury or death.
2. Use approved clamping and / or guard attachments for handling large, loose or shiftable loads such as bales, posts, sheets of plywood etc.
3. Carry loads as low as possible.

1AIABAHAP016A

(2) Part No. 7J246-5641-1

⚠ DANGER

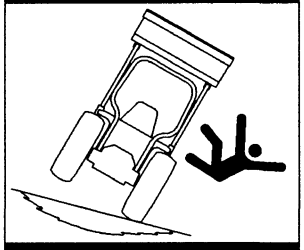

TO AVOID SERIOUS INJURY OR DEATH CAUSED BY ROLLOVERS :

1. ROPS and a fastened seat belt are strongly recommended in almost all applications. Foldable ROPS should be in upright and locked position if equipped.
2. Adjust rear wheels to the widest setting that is suitable for the work.
3. Add recommended wheel ballast and rear weight for stability.
4. DO NOT drive on steep slopes or unstable surfaces.
5. Carry loader arms at low position during transport. Move and turn tractor at slow speeds.

1AIABAHAP017A

(3) Part No. 7J061-5645-1

⚠ WARNING

TO AVOID PERSONAL INJURY :

1. Observe safety precautions in loader and tractor Operator's Manual.
2. Operate the loader from tractor seat only.
3. Keep children, others and livestock away when operating loader and tractor.
4. Avoid holes, loose ground, and rocks which may cause tractor / loader to tip.
5. Make sure approved bucket is attached before removing loader from tractor.
6. When parking or storing, choose flat and hard ground. Lower the bucket to the ground, set brakes and remove key before leaving tractor.
7. Before disconnecting hydraulic lines, relieve all hydraulic pressure.

1AIABAHAP019G

(4) Part No. 7J246-5644-2 (Both sides)

⚠ WARNING

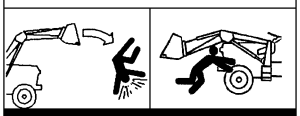

TO AVOID INJURY FROM FALLS OR BEING CRUSHED :

1. DO NOT stand or work under raised loader or bucket.
2. DO NOT use loader as jack for servicing.
3. DO NOT use loader as a work platform.
4. NEVER connect chain, cable or rope to loader bucket while operating loader.

1AIABAHAP020A

(5) Part No. 7J061-5649-1

⚠ WARNING

TO AVOID INJURY FROM CRUSHING :

1. Do not utilize the valve lock for machine maintenance or repair.
2. The valve lock is to prevent accidental actuation when implement is not in use or during transport.

1AIABACAP077G

(6) Part No. 7J246-5642-1

⚠ DANGER

TO AVOID SERIOUS INJURY OR DEATH CAUSED BY CONTACT WITH ELECTRIC LINES:

- Check overhead clearance.

1AIABAHAP018A

(7) Part No. 7J437-7778-1

⚠ WARNING

TO AVOID PERSONAL INJURY :

Always be aware of the loader attachment angle. Self-leveling function may vary depending on the loader lever stroke.

4FAAAAAAP002G

1HNADABAP013A

https://truckmanualshub.com/

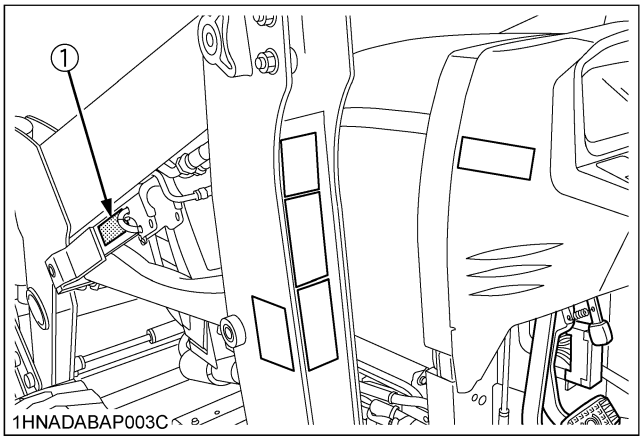

1HNADABAP003C

[TL1800, TL1800V, TL1300, TL1300V]

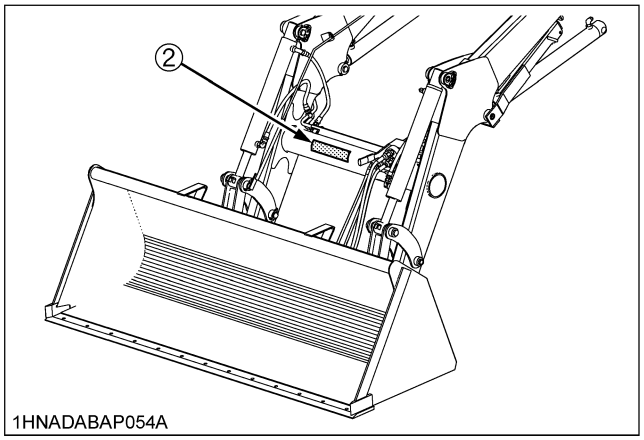

1HNADABAP054A

(1) Part No. 7J802-5848-3

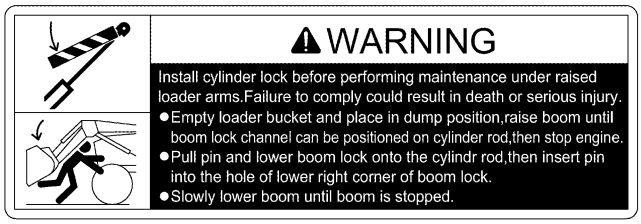

1HNADAAAP127A

[TL1810, TL1310]

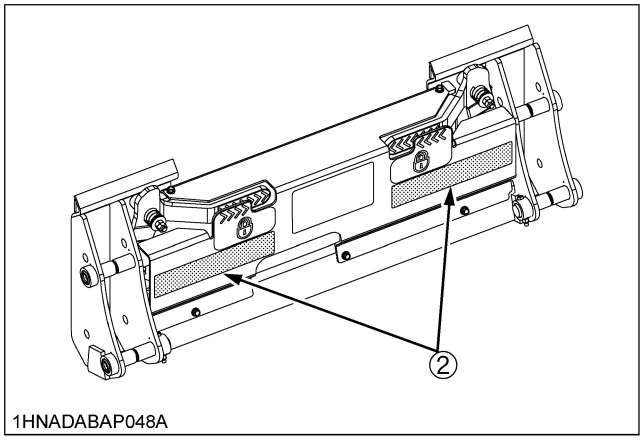

1HNADABAP048A

(2) Part No. 7J802-3648-5

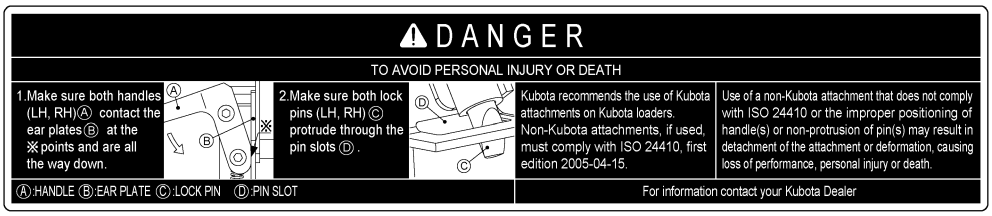

1AIABAAAP119A

1HNADABAP014A

https://truckmanualshub.com/

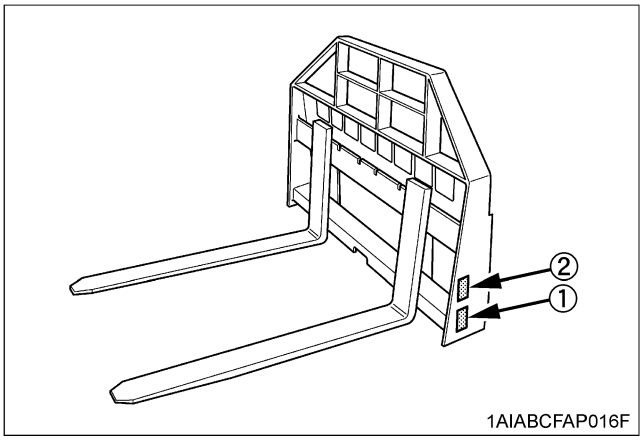

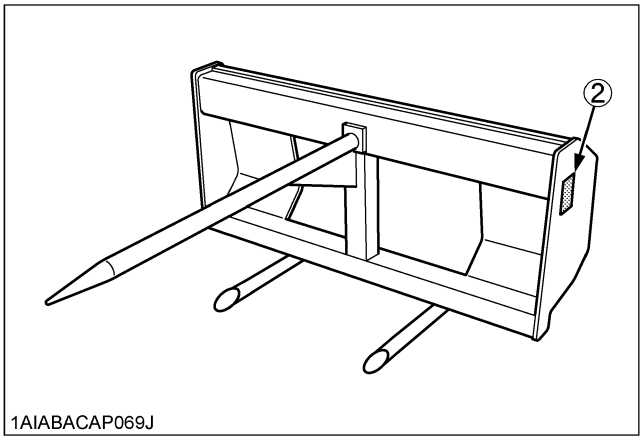

1HNADABAP060A

(1) Part No. 7J417-3923-5

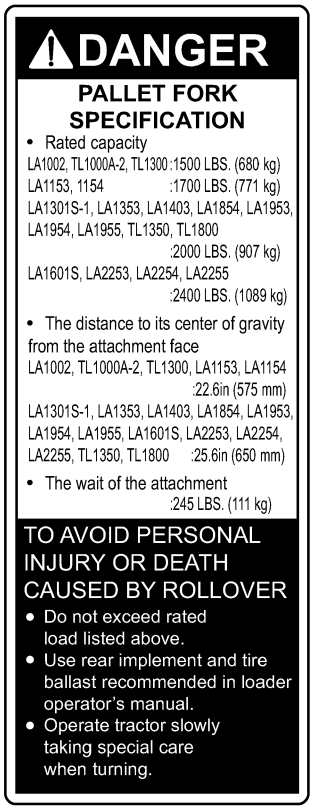

1HNADABAP061A

(2) Part No. 7J246-5643-1

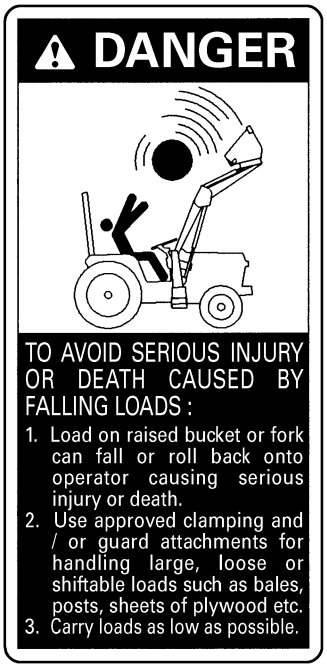

1AIABACAP075A

CARE OF DANGER,WARNING AND CAUTION LABELS

1. Keep danger, warning and caution labels clean and free from obstructing material.
2. Clean danger, warning and caution labels with soap and water, dry with a soft cloth.
3. Replace damaged or missing danger, warning and caution labels with new labels from your local KUBOTA dealer.
4. If a component with danger, warning and caution label (s) affixed is replaced with new part, make sure new label (s) is (are) attached in the same location (s) as the replaced component.
5. Mount new danger, warning and caution labels by applying on a clean dry surface and pressing any bubbles to outside edge.

https://truckmanualshub.com/

https://truckmanualshub.com/

SERVICING

Your dealer is interested in your new tractor and has the desire to help you get the most value from it. After reading this manual thoroughly, you will find that you can do some of the regular maintenance yourself.
However, when in need of parts or major service, be sure to see your KUBOTA Dealer.
For service, contact the KUBOTA Dealership from which you purchased your tractor or your local KUBOTA Dealer.
When in need of parts, be prepared to give your dealer the tractor, loader and engine serial numbers.
Locate the serial numbers now and record them in the space provided.

	Type	Serial No.
Tractor		
Engine		
Loader		
Date of Purchase		
Name of Dealer		
(To be filled in by purchaser)		

◆ **Warranty**
This tractor is warranted under the KUBOTA Limited Express Warranty, a copy of which may be obtained from your selling dealer. No warranty shall, however, apply if the tractor has not been handled according to the instruction given in the Operator's Manual even it is within the warranty period.

◆ **Scrapping the tractor and its procedure**
To put the tractor out of service, correctly follow the local rules and regulations of the country or territory where you scrap it. If you have questions, consult your local KUBOTA Dealer.

[M62]

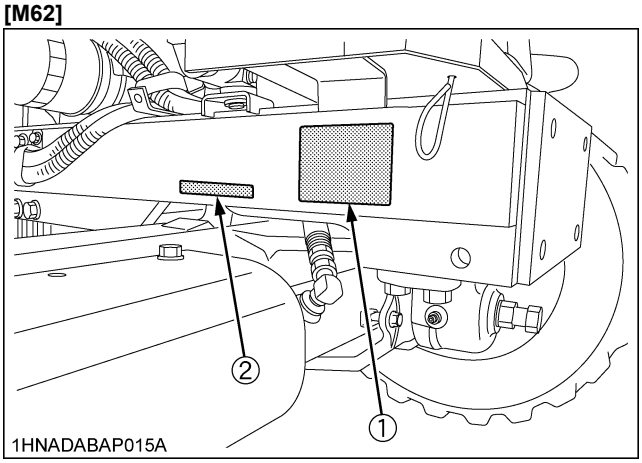

[L47]

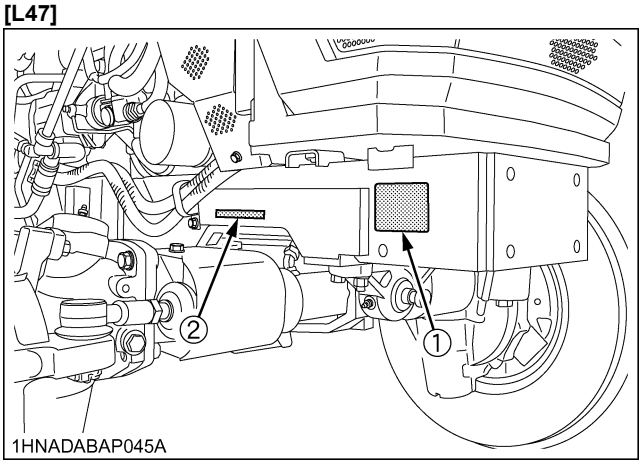

(1) Tractor identification plate
(2) Tractor serial number

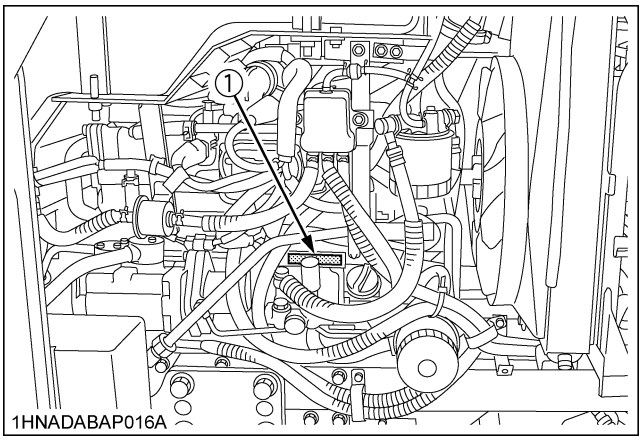

(1) Engine serial number

https://truckmanualshub.com/

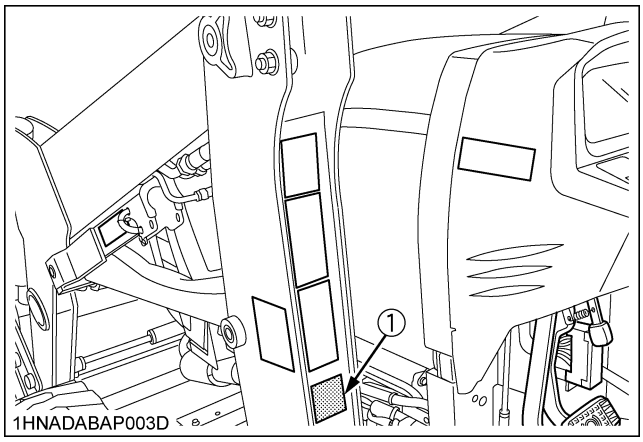

(1) Loader serial number

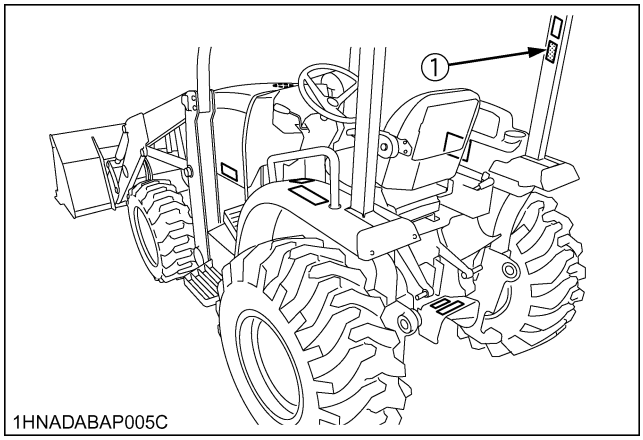

(1) ROPS identification plate (ROPS Serial No.)

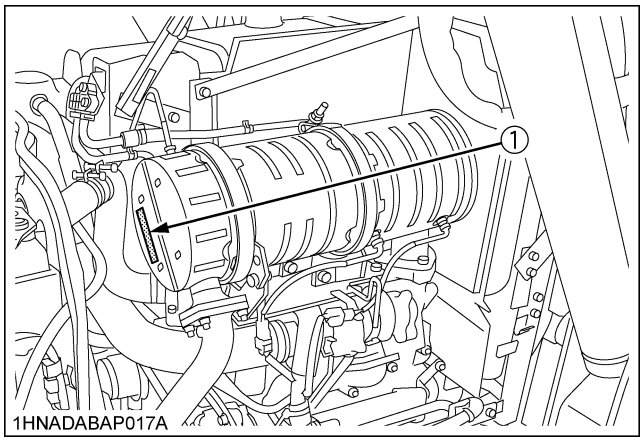

(1) Diesel Particulate Filter (DPF) serial number

https://truckmanualshub.com/

SPECIFICATIONS OF THE TRACTOR

SPECIFICATION TABLE

Model				L47	M62
Engine	Model			V2403-CR-E4-TLB1	V2403-CR-TE4-TLB1
	Type			Direct injection vertical, water-cooled, 4-cycle diesel	
	No. of cylinders			4	
	Bore and stroke		mm (in.)	87 x 102.4 (3.4 x 4.0)	
	PTO power (factory observed)		kW (HP)	24.6 (33)	34.3 (46)
	Net power (without fan)		kW (HP)	34.6 (46.4)	46.3 (62.1) *
	Total displacement		L (cu. in.)	2.434 (148.5)	
	Rated revolution		rpm	2700	
	Low idling revolution		rpm	950 to 1000	
	Battery			12V, RC: 90 min, CCA: 550 A	12V, RC: 115 min, CCA: 650 A
Capacities	Fuel tank		L (U.S.gals.)	67 (17.7)	
	Engine crankcase (with filter)		L (U.S.qts.)	8.2 (8.7)	9.4 (9.9)
	Engine coolant		L (U.S.qts.)	8.2 (8.7)	
	Transmission case		L (U.S.gals.)	46 (12.2)	
	Front axle case		L (U.S.qts.)	7.0 (7.4)	12.5 (13.2)
Tires		Front		27 x 10.5-15 R4	10-16.5 R4
		Rear		15-19.5 R4	17.5L-24 R4
Dimensions	Min. ground clearance		mm (in.)	365 (14.4) at transmission case	350 (13.8) at transmission case
	Tread	Front	mm (in.)	1165 (45.9)	1440 (56.7)
		Rear	mm (in.)	1426 (56.1)	1462 (57.6)
Weight (with ROPS & FOPS, main frame)			kg (lbs.)	1988 (4383)	2264 (4991)
PTO shaft				Transmission case rear	
Rear PTO				SAE 1-3/8, 6 Spline	
Steering				Hydraulic power	
Transmission				Hydrostatic transmission (3 speeds)	
Min. turning radius			m (feet)	2.8 (9.2)**	3.3 (10.8) **
Brake				Multiple wet disks operated by two foot pedals which can be locked together.	
Differential				Bevel gear	

NOTE : * Manufacturer's estimate
** with brake

The company reserves the right to change the specifications without notice.

https://truckmanualshub.com/

DIMENSIONS

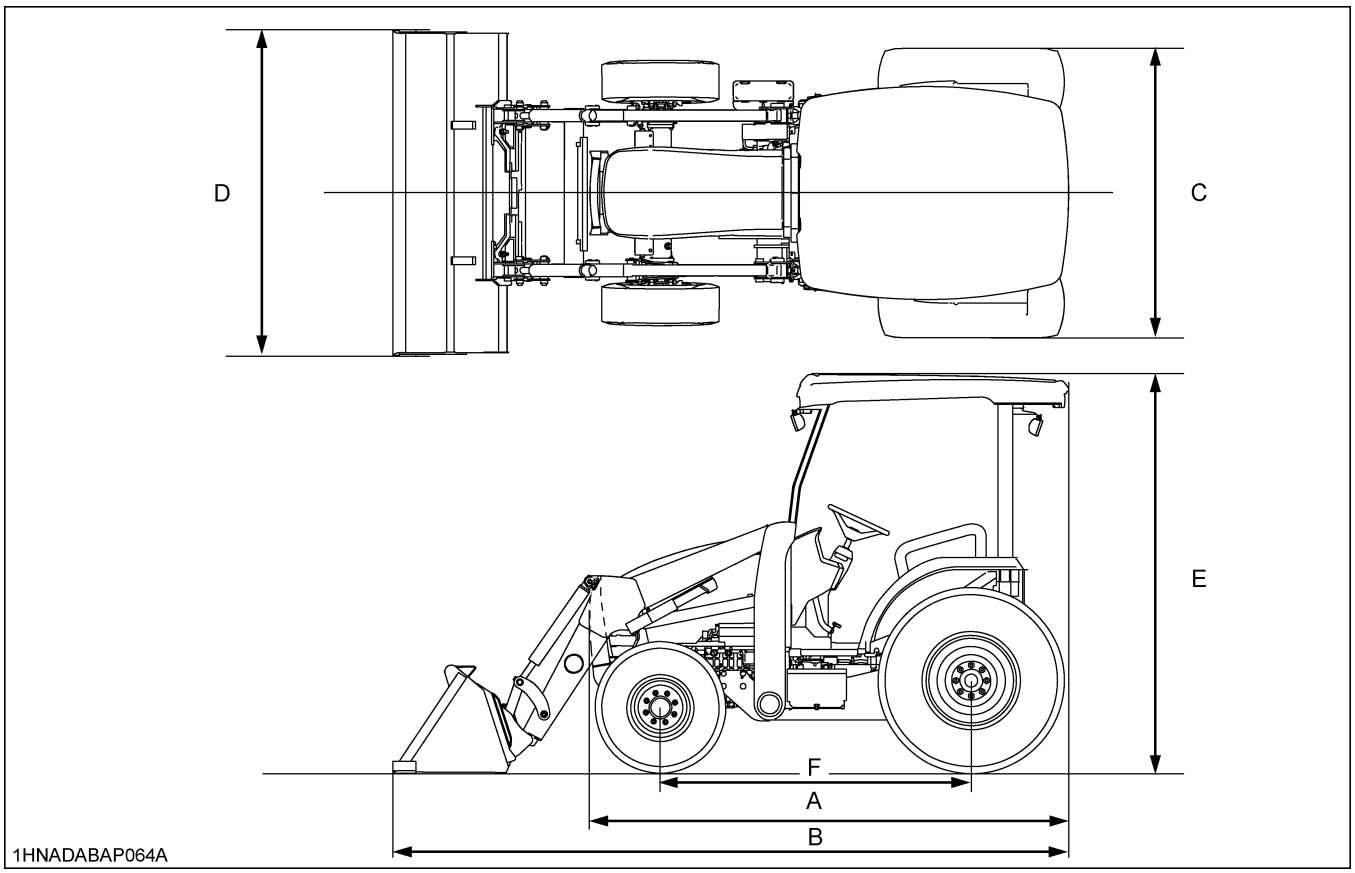

	Model		L47	M62
A	Overall length (without 3P & loader & backhoe, with front guard)	mm (in.)	3075 (121.1)	3159 (124.4)
B	Overall length (without 3P & backhoe, with front guard & loader)	mm (in.)	4213 (165.9)	4536 (178.6)
C	Overall width (without loader)	mm (in.)	1809 (71.2)	1905 (75)
D	Overall width (with loader)	mm (in.)	1842 (72.5)	2154 (84.8)
E	Overall height (with ROPS & FOPS)	mm (in.)	2415 (95.1)	2594 (102.1)
F	Wheel base	mm (in.)	1841 (72.5)	2050 (80.7)

NOTE :
- Above dimensions are based on the machine with KUBOTA standard bucket.
- The company reserves the right to change the specifications without notice.

https://truckmanualshub.com/

TRAVELING SPEEDS

(At rated engine rpm)

Model			L47	M62
Tire size (Rear)			15-19.5 R4	17.5L-24 R4
Speed control pedal	H-DS lever	Range gear shift lever	km/h (mph)	
Forward	L	L	3.3 (2.1)	3.6 (2.3)
		M	6.6 (4.1)	7.3 (4.6)
		H	13.7 (8.6)	15.3 (9.6)
	H	L	5.3 (3.3)	6.0 (3.8)
		M	10.7 (6.7)	12.1 (7.6)
		H	22.5 (14.1)	25.1 (15.7)
Reverse	L	L	3.3 (2.1)	3.4 (2.1)
		M	6.7 (4.2)	7.2 (4.5)
		H	13.9 (8.7)	15.2 (9.5)
	H	L	5.4 (3.4)	5.9 (3.7)
		M	10.9 (6.8)	12.1 (7.6)
		H	22.7 (14.2)	24.7 (15.4)

The company reserves the right to change the specifications without notice.

https://truckmanualshub.com/

SPECIFICATIONS OF THE LOADER

LOADER SPECIFICATIONS

LOADER MODEL		TL1300/TL1300V	TL1800/TL1800V
BOOM CYLINDER	BORE mm (in.)	55 (2.17)	65 (2.56)
	STROKE mm (in.)	550 (21.65)	637.5 (25.1)
BUCKET CYLINDER	BORE mm (in.)	60 (2.36)	70 (2.76)
	STROKE mm (in.)	365 (14.37)	464 (18.27)
CONTROL VALVE		One Detent Float Position, Power Beyond Circuit, Hydraulic Dual Self-leveling Valve	
RATED FLOW	L/m (GPM)	43.4 (11.5)	60.5 (16)
MAXIMUM PRESSURE	MPa (kg/cm^2, psi)	19.6 (200, 2845)	19.6 (200, 2845)
NET WEIGHT (APPROXIMATE)	kg (lbs.)	435 (960)	530 (1169)

BUCKET SPECIFICATIONS

LOADER MODEL		TL1300/TL1300V	TL1800/TL1800V
MODEL		Round 72	Round 84
WIDTH	mm (in.)	1830 (72.0)	2135 (84.0)
DEPTH (L)	mm (in.)	470 (18.5)	695 (27.4)
HEIGHT (M)	mm (in.)	660 (26.0)	673 (26.5)
LENGTH (N)	mm (in.)	610 (24.0)	892 (35.1)
CAPACITY	STRUCK m^3 (CU.FT.)	0.36 (12.7)	0.54 (19.1)
	HEAPED m^3 (CU.FT.)	0.44 (15.5)	0.66 (23.3)
WEIGHT	kg (lbs.)	190 (420)	244 (538)

DIMENSIONAL SPECIFICATIONS

	LOADER MODEL		TL1300/TL1300V	TL1800/TL1800V
A	MAX. LIFT HEIGHT (TO BUCKET PIVOT PIN)	mm (in.)	2893 (113.9)	3203 (126.1)
B	MAX. LIFT HEIGHT UNDER LEVEL BUCKET	mm (in.)	2694 (106.1)	2977 (117.2)
C	CLEARANCE WITH BUCKET DUMPED	mm (in.)	2287 (90.0)	2412 (95)
D	REACH AT MAX. LIFT HEIGHT (DUMPING REACH)	mm (in.)	422 (16.6)	612 (24.1)
E	MAX. DUMP ANGLE	deg.	44	43
F	REACH WITH BUCKET ON GROUND	mm (in.)	1739 (68.5)	1821 (71.7)
G	BUCKET ROLL-BACK ANGLE	deg.	48	45
H	DIGGING DEPTH	mm (in.)	89 (3.5)	69 (2.7)
J	OVERALL HEIGHT IN CARRYING POSITION	mm (in.)	1402 (55.2)	1600 (63)

https://truckmanualshub.com/

OPERATIONAL SPECIFICATIONS

LOADER MODEL				TL1300/TL1300V	TL1800/TL1800V
U	LIFT CAPACITY (BUCKET PIVOT PIN, MAX. HEIGHT)		kg (lbs.)	1292 (2848)	1796 (3960)
V	LIFT CAPACITY	(500 mm (20 in.) FORWARD, MAX. HEIGHT)	kg (lbs.)	936 (2063)	-
		(800 mm (31.5 in.) FORWARD, MAX. HEIGHT)	kg (lbs.)	-	1120 (2469)
W	IIFT CAPACITY (BUCKET PIVOT PIN, 1500 mm (59 in.) HEIGHT)		kg (lbs.)	1535 (3384)	2129 (4694)
X	LIFT CAPACITY	(500 mm (20 in.), FORWARD, 1500 mm (59 in.) HEIGHT)	kg (lbs.)	1232 (2716)	-
		(800 mm (31.5 in.), FORWARD, 1500 mm (59 in.) HEIGHT)	kg (lbs.)	-	1548 (3413)
Y	BREAKOUT FORCE (BUCKET PIVOT PIN)		N (lbf)	20153 (4531)	26654 (5992)
Z	BREAKOUT FORCE	(500 mm (20 in.) FORWARD)	N (lbf)	15563 (3499)	-
		(800 mm (31.5 in.) FORWARD)	N (lbf)	-	18064 (4061)
VV	BUCKET ROLL-BACK FORCE AT MAX. HEIGHT		N (lbf)	11650 (2619)	11768 (2646)
XX	BUCKET ROLL-BACK FORCE AT 1.5M (5.9 in.)		N (lbf)	20613 (4634)	22496 (5057)
ZZ	BUCKET ROLL-BACK FORCE AT GROUND LEVEL		N (lbf)	23556 (5296)	23487 (5280)
RAISING TIME			sec.	3.2 (3.6)	3.9 (4.2)
LOWERING TIME		Self level valve OFF (ON)	sec.	2.9 (5.8)	3.1 (4.3)
BUCKET DUMPING TIME			sec.	2.2	2.4
BUCKET ROLLBACK TIME			sec.	1.9	2.4

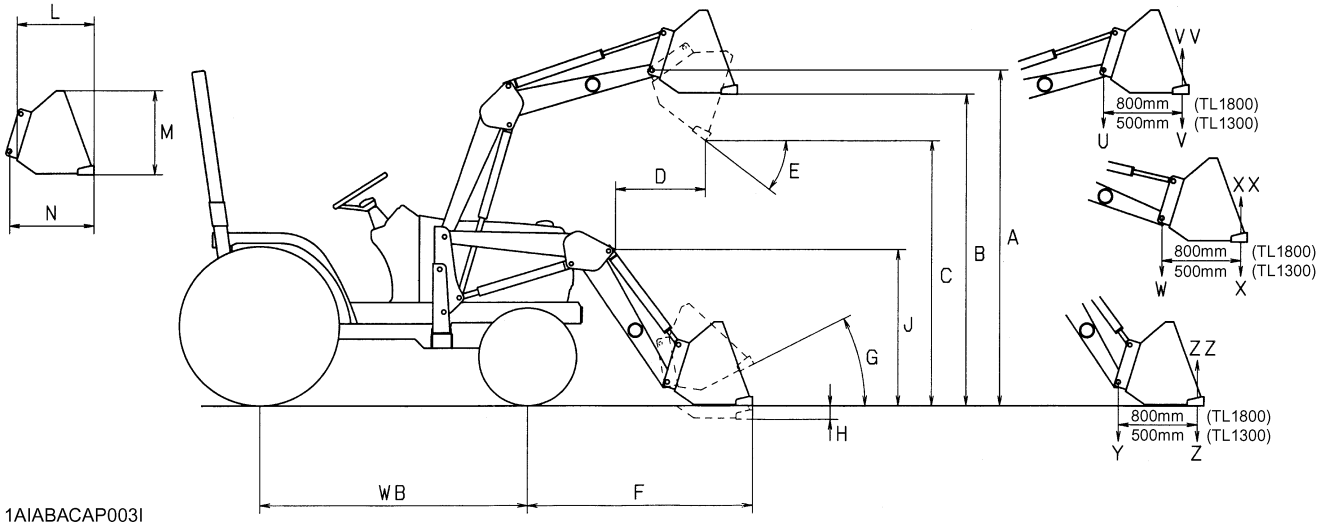

1AIABACAP003I

TL1300/TL1300V

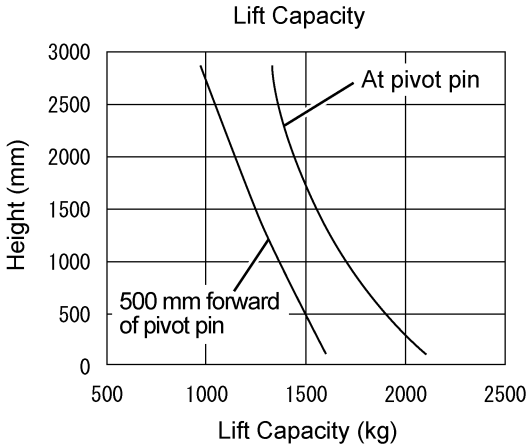

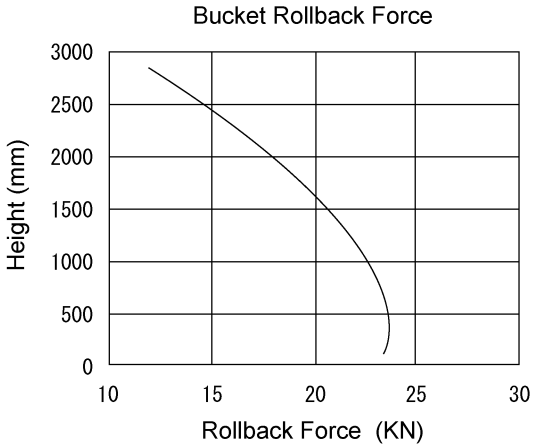

1HNADABAP018A

https://truckmanualshub.com/

TL1800/TL1800V

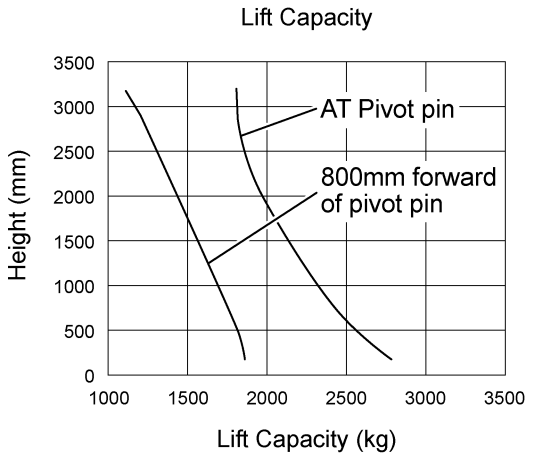

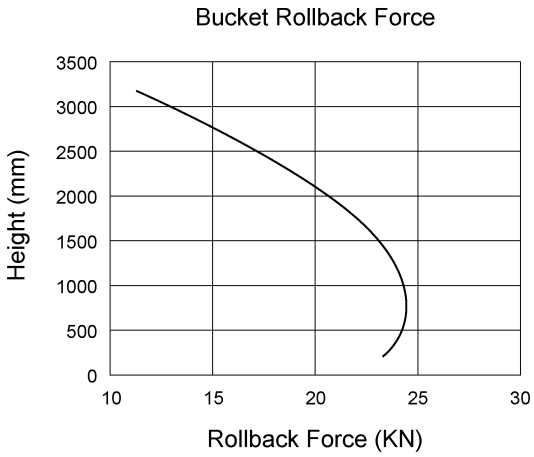

1HNADABAP019A

LOADER TERMINOLOGY

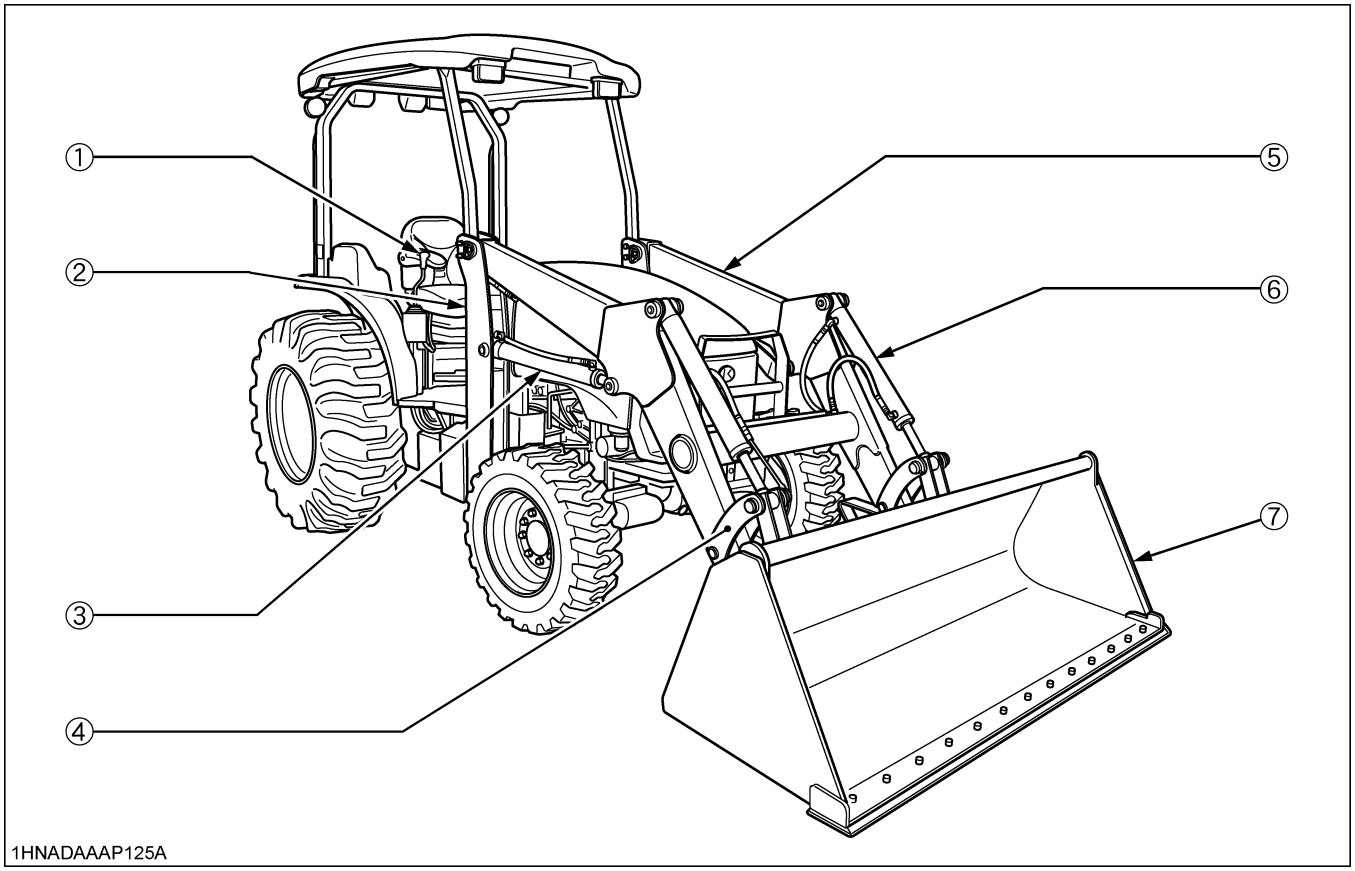

(1) Hydraulic control lever
(2) Main frame
(3) Boom cylinder
(4) Bucket linkage
(5) Boom
(6) Bucket cylinder
(7) Bucket

https://truckmanualshub.com/

IMPLEMENT LIMITATIONS

The KUBOTA Tractor has been thoroughly tested for proper performance with implements sold or approved by KUBOTA. Use with implements which are not sold or approved by KUBOTA and which exceed the maximum specifications listed below, or which are otherwise unfit for use with the KUBOTA Tractor may result in malfunctions or failures of the tractor, damage to other property and injury to the operator or others. [Any malfunctions or failures of the tractor resulting from use with improper implements are not covered by the warranty.]

Tread (max. width) with industry tires			Lower link end max. lifting capacity W_0
Front		Rear	
4WD			
L47	1165 mm (45.9 in.)	1426 mm (56.1 in)	1750 kg (3860 lbs.)
M62	1440 mm (56.7 in.)	1462 mm (57.6 in.)	1750 kg (3860 lbs.)

Actual figures			
Implement weight W_1 and / or size		Max. Drawbar Load W_2	Trailer loading weight W_3 Max. capacity
L47	As in the following list (Shown on the next page)	650 kg (1430 lbs.)	3000 kg (6600 lbs.)
M62		650 kg (1430 lbs.)	3000 kg (6600 lbs.)

Lower link end max, hydraulic lifting capacity.....W_0
Implement weight.....The implement's weight which can be put on the lower link: W_1
Max. drawbar load.....W_2
Trailer loading weight.....The max. loading weight for trailer (without trailer's weight): W_3

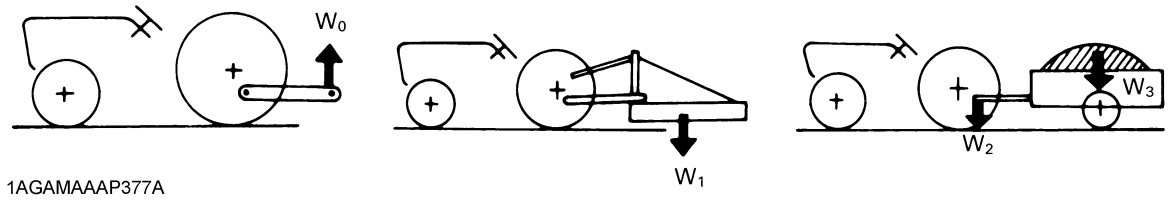

NOTE :

- Implement size may vary depending on soil operating conditions.
- Strictly follow the instructions outlined in the operator's manual of the mounted or trailed machinery or trailer, and do not operate the combination tractor - machine or tractor - trailer unless all instructions have been followed.
- Forestry Application
  Following hazards exist;
  (a) toppling trees, primarily in case a rear-mounted tree grab-crane is mounted at the rear of the tractor;
  (b) penetrating objects in the operator's enclosure, primarily in case a winch is mounted at the rear of the tractor.
  Optional equipment such as OPS (Operator Protective Structure), FOPS (Falling Object Protective Structure), etc. to deal with these hazards and other related hazards are not available for this tractor. Without such optional equipment use is limited to tractor specific applications like transport and stationary work.

https://truckmanualshub.com/

No.	Implement		Remarks		L47	M62
1	Trailer		Max. Load Capacity	kg (lbs.)	3000 (6600)	3000 (6600)
			Max. Drawbar Load	kg (lbs.)	650 (1430)	650 (1430)
2	Mower	Rotary-Cutter	Max. Cutting Width	mm (in.)	1829 (72)	1829 (72)
			Max. Weight	kg (lbs.)	420 (926)	420 (926)
		Flail Mower	Max. Cutting Width	mm (in.)	1524 (60)	1524 (60)
			Max. Weight	kg (lbs.)	400 (880)	400 (880)
		Sickle Bar	Max. Cutting Width	mm (in.)	2134 (84)	2134 (84)
			Max. Weight	kg (lbs.)	500 (1100)	500 (1100)
3	Sprayer	Rear mounted	Max. tank capacity	L (gal.)	400 (106)	400 (106)
		Pull type	Max. tank capacity	L (gal.)	1200 (317)	1200 (317)
4	Rotary Tiller		Max. Tilling Width	mm (in.)	1524 (60)	1524 (60)
5	Backhoe *		Max. Digging Depth	mm (ft)	3073 (10)	3652 (12)
			Max. Weight	kg (lbs.)	753 (1660) w/o Bucket	886 (1956) w/o Bucket
6	Disc-harrow (Pull type)		Max. Harrowing Width	mm (in.)	1981 (78)	1981 (78)
			Max. Weight	kg (lbs.)	400 (880)	400 (880)
7	Chisel Plow		Max. Cutting Width	mm (in.)	1829 (72)	1829 (72)
			Max. Weight	kg (lbs.)	350 (770)	350 (770)
8	Broad Caster		Max. Tank Capacity	L (gals.)	300 (80)	300 (80)
			Max. Weight	kg (lbs.)	100 (220)	100 (220)
9	Manure Spreader		Max. Capacity	kg (lbs.)	2000 (4400)	2000 (4400)
10	Cultivator		Max. Width	mm (in.)	2134 (84)	2134 (84)
			Number of rows		2	2
			Max. Weight	kg (lbs.)	400 (880)	400 (880)
11	Rear Blade		Max. Cutting Width	mm (in.)	1829 (72)	1829 (72)
			Max. Oil Pressure	kgf/cm^2 (psi)	175 (2490)	175 (2490)
12	Front-end Loader **		Max. Lifting Capacity	kg (lbs.)	1000 (2200)	1350 (2976)
			Max. Oil Pressure	kgf/cm^2 (psi)	195 (2770)	200 (2857)
13	Box Blade		Max. Cutting Width	mm (in.)	1829 (72)	2134 (84)
			Max. Weight	kg (lbs.)	470 (1040)	550 (1200)
14	Snow Blade		Max. width	mm (in.)	1829 (72)	2134 (84)
			Max. weight	kg (lbs.)	350 (770)	550 (1200)

NOTE :

- Implement size may vary depending on soil operating conditions.

* KUBOTA provides BT1000B Backhoe for L47 and BT1400 Backhoe for M62.
No other Backhoe installed by 3-point hitch is permitted for L47, M62.

** KUBOTA provides TL1300/TL1300V Front-end Loader for L47 and TL1800/TL1800V Front-end Loader for M62.

https://truckmanualshub.com/

INSTRUMENT PANEL AND CONTROLS

■ Instrument Panel, Switches and Hand Controls

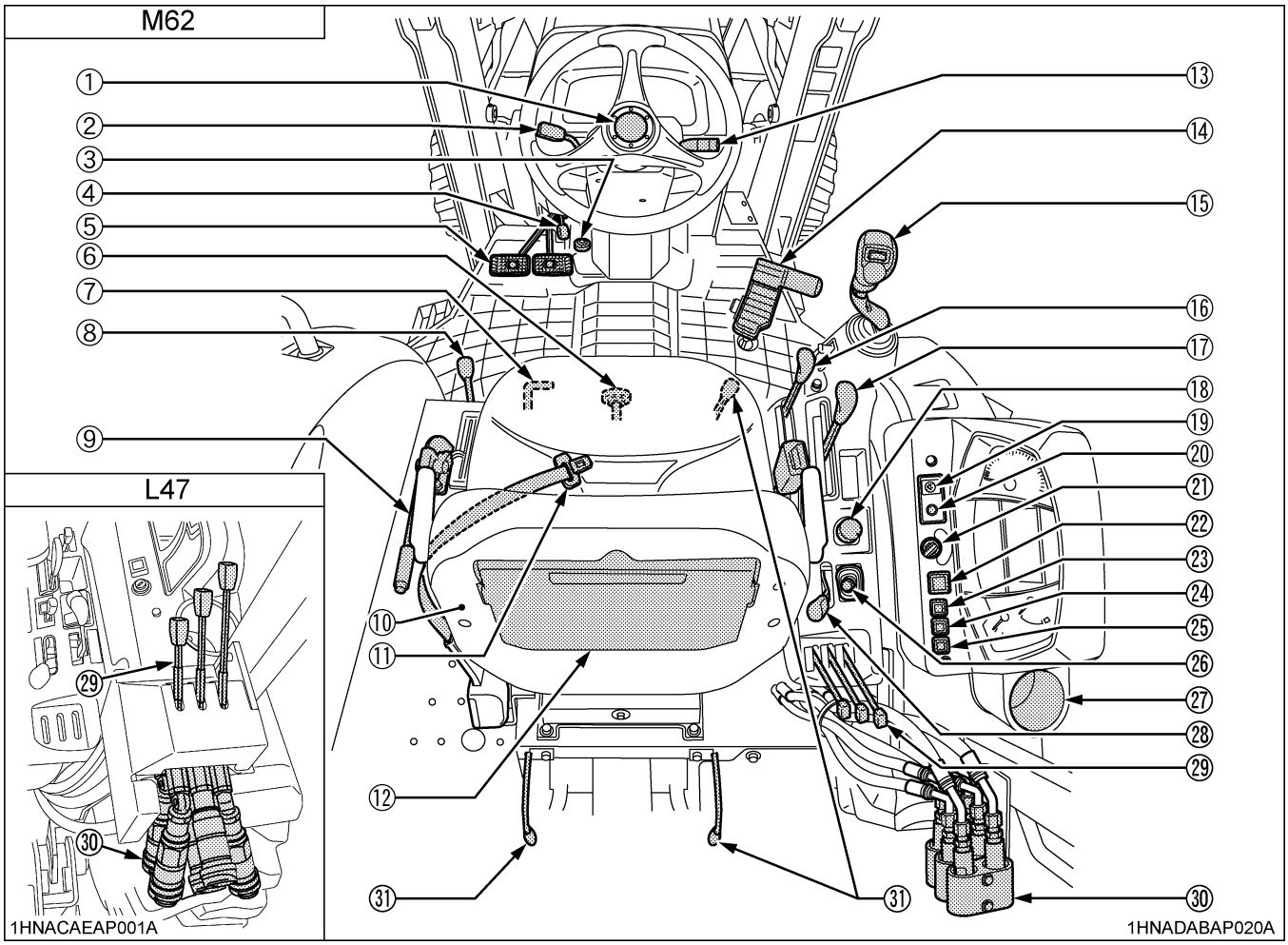

ILLUSTRATED CONTENTS

(1) Horn button 34
(2) H-DS lever 38
(3) Tilt pedal 32
(4) Parking brake lever 23
(5) Brake pedal 35
(6) 3-Point hitch lowering speed knob 79
(7) Differential lock pedal 52
(8) Front wheel drive lever 43
(9) Rear parking brake lever 43
(10) Operator's seat..... 31
(11) Seat belt 32
(12) Glove box 31
(13) Turn signal / Head light switch 33
(14) Speed control pedal 44
(15) Loader / Remote control valve lever 41, 82
(16) Position control lever..... 78

ILLUSTRATED CONTENTS

(17) Range gear shift lever (L-M-H) 42
(18) PTO clutch control switch 68
(19) Display mode button 37, 39
(20) ATA switch 45
(21) Key switch 23
(22) Rear work light switch 33
(23) DPF INHIBIT switch 20
(24) Parked regeneration switch 20
(25) Hazard light switch 33
(26) Crawl control lever 45
(27) Cup holder ..... ---
(28) Throttle lever 43
(29) Rear remote control valve lever (if equipped).. 80
(30) Remote control valve coupler (if equipped) ... 80
(31) Directional valve lever 79

https://truckmanualshub.com/

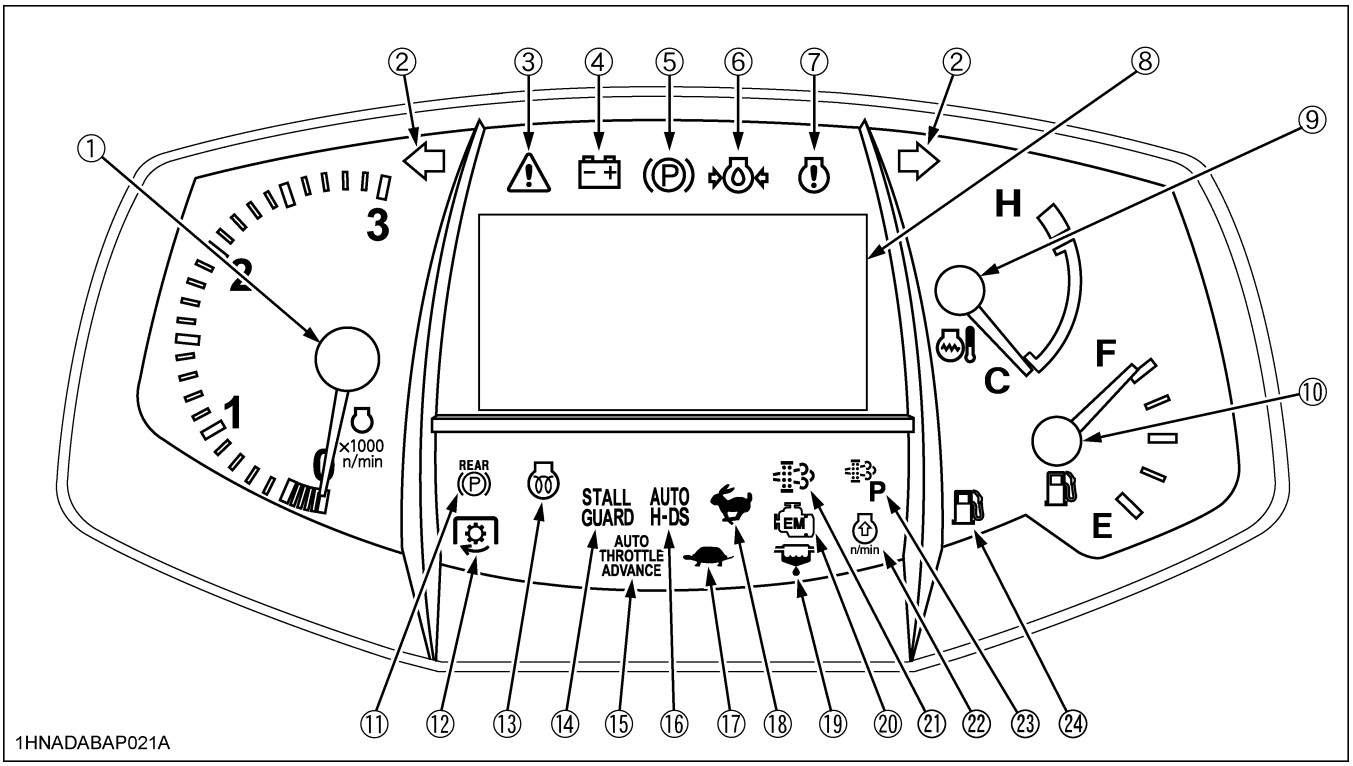

ILLUSTRATED CONTENTS

(1) Tachometer 51
(2) Turn signal / hazard indicator 33
(3) Master system warning indicator 50
(4) Electrical charge warning indicator 50
(5) Parking brake warning indicator 50
(6) Engine oil pressure warning indicator 50
(7) Engine warning indicator 50
(8) IntelliPanel(TM) display 49
(9) Coolant temperature gauge 51
(10) Fuel gauge 51
(11) Rear parking brake indicator 43
(12) PTO indicator 43

ILLUSTRATED CONTENTS

(13) Glow plug indicator 25, 27
(14) Stall guard indicator [HST Type] 39
(15) ATA indicator [HST Type] 45
(16) Auto H-DS indicator [HST Type] 39
(17) H-DS Low speed range indicator [HST Type] .. 39
(18) H-DS High speed range indicator [HST Type] . 39
(19) Water separator indicator 50
(20) Emission indicator 50
(21) Regeneration indicator 18
(22) Engine RPM increase indicator 18
(23) Parked regeneration indicator 20
(24) Fuel level indicator 50

https://truckmanualshub.com/

◆ **IntelliPanel(TM) Display**

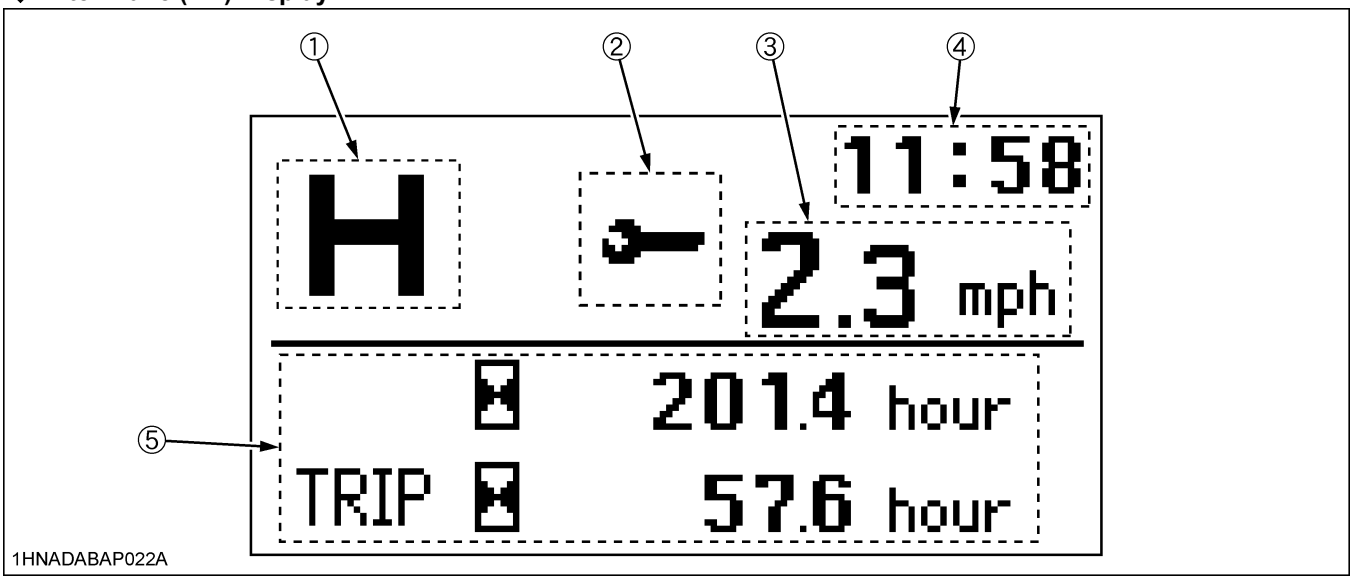

No.	Message	Description	Reference page
(1)	"L", "H", "M" or "N"	Display the position of the range gear shift that was selected with the Range gear shift lever.	42
(2)	1AGAXAAAP096A	Appears when the time for an engine oil change has come. Change the engine oil with fresh one.	48, 49 112
	1AGAXAAAP097A	Stays displayed for 3 seconds or so after the engine has got started. Buckle up the seat belt.	32
	1AGAXAAAP098A	Stays displayed while the cooling water temperature is too low and the glow plug is being activated. Wait until this symbol disappears and get the engine started.	27
	1AGAXAAAP099A	Appears when the fuel has become less than 12 L (3.1 U.S.gals.) or so. Refuel as soon as possible. If the fuel tank becomes empty, air will enter the fuel system, thereby requiring a bleeding.	51
(3)	0.1 to 34	Displays the travel speed. (The actual speed is different from the displayed one if the tires slip in towing or other jobs.)	---
(4)	0:00 to 11:59	Displays the clock. When (— — : — —) is displayed, make the time setting. Nothing is displayed if this is disabled.	47
(5)	Lower IntelliPanel(TM) display	The hour meter, trip meter, mileage, PTO rpm, HST setting, PM volume status, time elapsed since the previous engine oil change and other data can be displayed.	48

https://truckmanualshub.com/

PRE-OPERATION CHECK OF THE TRACTOR

DAILY CHECK

To prevent trouble from occurring, it is important to know the condition of the tractor well. Check it before starting.

WARNING

To avoid personal injury or death:

- **Be sure to check and service the tractor on a level surface with the engine shut off and the parking brake "ON" and implement lowered to the ground.**

Check item

- Walk around inspection
- Check engine oil level
- Check transmission oil level
- Check coolant level
- Check water separator
- Clean grill, radiator screen and oil cooler
- Clean oil cooler
- Clean fuel cooler
- Check DPF muffler
- Check air cleaner dust indicator
  (When used in a dusty place)
- Check brake pedal
- Check indicators, gauges and meter
- Check lights
- Check seat belt and ROPS & FOPS
- Check movable parts
- Refuel
  (See "DAILY CHECK" in "PERIODIC SERVICE OF THE TRACTOR" section)
- Care of danger, warning and caution labels
  (See "DANGER, WARNING AND CAUTION LABELS" in "SAFE OPERATION" section)

https://truckmanualshub.com/

PRE-OPERATION CHECK OF THE LOADER

PRE-OPERATION CHECKS

Prior to starting the engine, make pre-operation checks according to "MAINTENANCE OF THE TRACTOR" section.

WARNING

To avoid personal injury or death:

- **Read and understand "Safe Operation" section in the front of this manual.**
- **Read and understand the danger, warning and caution labels located on the loader.**

REAR BALLAST

WARNING

To avoid serious injury or death:

- **For tractor stability and operator's safety, rear ballast should be added to the rear of the tractor in the form of 3-point counter weight and rear wheel ballast. The amount of rear ballast will depend on the application.**

Implement as Counter Weight	
6' Box Scraper	Approx. 470 kg (1040 lbs.)
Backhoe (BT1000B)	Approx. 753 kg (1660 lbs.)
Backhoe (BT1400)	Approx. 980 kg (2161 lbs.)

■Liquid Ballast in Rear Tires

Water and calcium chloride solution provides a safe and economical ballast. Used properly, it will not damage tires, tubes or rims. The addition of calcium chloride is recommended to prevent the water from freezing. Use of this method of weighting the wheels has full approval of the tire manufacturers. See your tire dealer for this service.

Liquid weight per tire (75 Percent filled)

Tire sizes	L47	M62
	15-19.5R4	17.5L-24R4
Slush free at -10℃ (14℉) Solid at -30℃ (-22℉) [Approx. 1 kg (2 lbs.) $CaCl_2$ per 4 L (1 gal.) of water]	142 kg (314 lbs.)	235 kg (515 lbs.)
Slush free at -24℃ (-11℉) Solid at -47℃ (-52℉) [Approx. 1.5 kg (3.5 lbs.) $CaCl_2$ per 4 L (1 gal.) of water]	149 kg (329 lbs.)	250 kg (550 lbs.)
Slush free at -47℃ (-52℉) Solid at -52℃ (-62℉) [Approx. 2.25 kg (5 lbs.) $CaCl_2$ per 4 L (1 gal.) of water]	159 kg (350 lbs.)	265 kg (585 lbs.)

IMPORTANT :

- Do not fill tires with water or solution more than 75% of full capacity (to the valve stem level at 12 o'clock position).

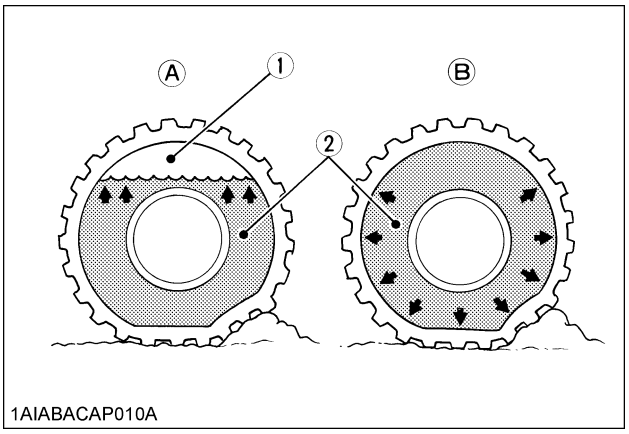

(1) Air
(2) Water

(A) Correct: 75% Full
Air compresses like a cushion
(B) Incorrect: 100% Full
Water can not be compressed

NOTE :

- When mounting a heavy rear implement, liquid in the tires may not be required.

IMPORTANT :

- Do not add liquid ballast or any other weights to the front tires.

https://truckmanualshub.com/

OPERATING THE ENGINE

WARNING

To avoid personal injury or death:

- **Read and understand "Safe Operation" in the front of this manual.**
- **Read and understand the danger, warning and caution labels located on the tractor.**
- **To avoid the danger of exhaust fume poisoning, do not operate the engine in a closed building without proper ventilation.**
- **Never start engine while standing on ground. Start engine only from operator's seat.**
- **Make it a rule to set all shift levers to the "NEUTRAL" positions and to place PTO clutch control switch in "OFF" position before starting the engine.**

IMPORTANT :

- Do not use starting fluid or ether.
- To protect the battery and the starter, make sure that the starter is not continuously turned for more than 10 seconds.

EXHAUST AFTERTREATMENT DEVICES

WARNING

To avoid personal injury or death:

- **During Diesel Particulate Filter (DPF) regenerating operations, exhaust gases and exhaust filter components reach temperatures hot enough to burn people, or ignite or melt common materials.**
- **Keep tractor away from people, animals or structures which may be susceptible to harm or damage from hot exhaust gases.**
- **During regeneration, white exhaust gases may be visible. Do not allow regeneration in a non ventilated garage or confined area.**
- **During regeneration, do not leave the tractor.**

■Diesel Particulate Filter (DPF) Muffler

This tractor is equipped with an engine with a DPF (Diesel Particulate Filter) muffler which serves to reduce hydrocarbons, carbon monoxide and other gases, all of which are contained in diesel engine emissions, to harmless carbon dioxide and water. The DPF also traps PM (particulate matter).

Please handle exhaust aftertreatment devices correctly and in an environmentally responsible manner.

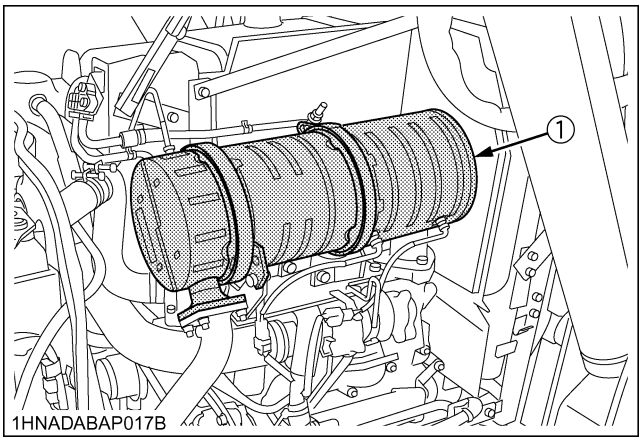

(1) Diesel Particulate Filter (DPF)

https://truckmanualshub.com/

■Handling Points

When a specific amount of PM (particulate matter) has accumulated in the DPF muffler, it is necessary to refresh the DPF muffler by burning the PM inside it. This burning off work is called "Regeneration".
To extend operating time to reach this regeneration, and to avoid DPF muffler trouble, make sure to observe the following handling matters.

◆ Fuel

Be sure to use Ultra Low Sulfur Fuel (S15).

IMPORTANT :

- Use of diesel fuel other than Ultra Low Sulfur Fuel may adversely affect the engine and DPF performance.
  Use of fuels other than Ultra Low Sulfur Fuel (S15) may not meet regulations for your region.

◆ Engine oil

Use DPF-compatible oil (CJ-4) for the engine.

IMPORTANT :

- If any engine oil other than CJ-4 is used, the DPF may become clogged earlier than expected and the fuel economy may drop.

◆ Prohibition of unnecessary idling operation

Generally, the lower the engine speed, the lower the exhaust gas temperature is, so the PM contained in exhaust gas will not be burnt, and begins to accumulate. Therefore, don't idle unnecessarily.

◆ Regeneration

When there is "Regeneration" instruction sign by lamp or buzzer, immediately perform the required procedure for regeneration.

IMPORTANT :

- Interrupting the regeneration cycle or continued operation by ignoring the warning signs may cause DPF and engine damage.

■DPF Regeneration Process

DPF regeneration process can be performed by choosing from "Auto Regeneration" or "Regeneration inhibit" mode according to your job conditions. For jobs not affected by hot gases emitted during regeneration, the "Auto Regeneration" is advisable.

◆ Auto Regeneration Mode;

When starting the engine (switch operation is unnecessary), the "Auto Regeneration" mode is automatically activated.
With the auto regeneration mode on, when a specific amount of PM has accumulated, and the regeneration conditions are satisfied (See the "Tips on Diesel Particulate Filter [DPF] Regeneration"), the DPF will be automatically regenerated whether the tractor is in motion or parked.
By this way, work efficiency is improved. For details of auto regeneration, refer to "Operating Procedure for Auto Regeneration Mode" section.

◆ Regeneration Inhibit Mode;

After starting the engine, if the "DPF INHIBIT switch" is pressed to turn on the switch lamp, the "Regeneration inhibit" mode will be activated.
With "Regeneration Inhibit" mode on, the PM which has accumulated inside the DPF will not be burnt, unless the operator performs the regeneration work manually.
The "Regeneration Inhibit" mode is effective for work in poorly ventilated work spaces.
For details of regeneration prohibition, refer to "Operating Procedure for Regeneration Inhibit Mode" section.

NOTE :

- If stop the engine once, the "Auto Regeneration" mode will be activated.

https://truckmanualshub.com/

Operating Procedure for Auto Regeneration Mode

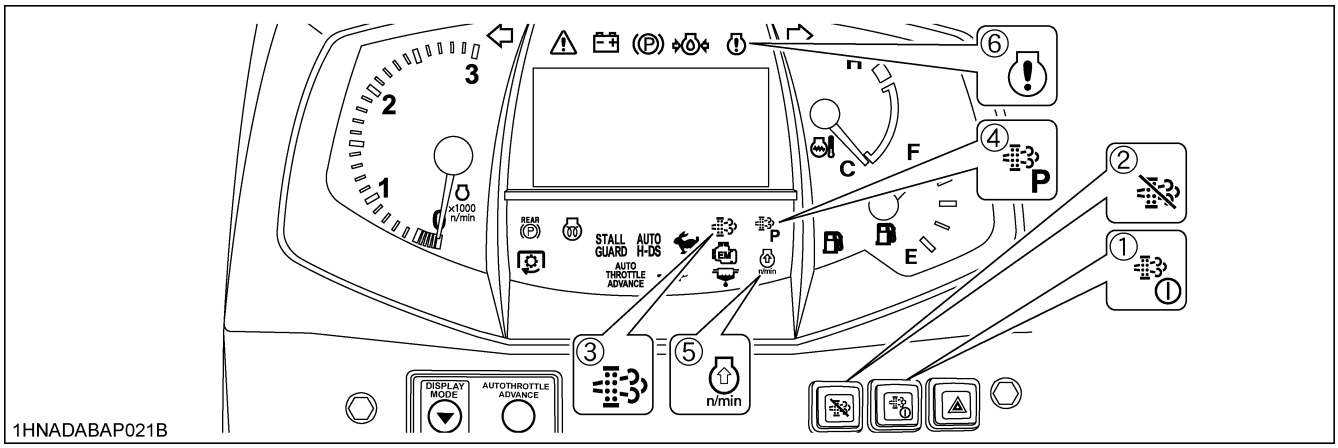

(1) Parked regeneration switch
(2) DPF INHIBIT switch
(3) Regeneration indicator
(4) Parked regeneration indicator
(5) Engine RPM increase indicator
(6) Engine warning indicator

■Regeneration Operating Procedure

1. Start the engine.
(Make sure that the DPF INHIBIT switch lamp is "OFF".)

Switch lamp OFF: Auto Regeneration Mode activated.
Switch lamp ON: Regeneration Inhibit Mode activated.

NOTE :
- When the engine is started, the "Auto Regeneration" mode is automatically activated.
- "Regeneration Inhibit" mode is activated, when the DPF INHIBIT switch is pushed after the engine is started.

2. When the regeneration indicator starts flashing:

A specific amount of PM has built up in the DPF.
Continue to operate the tractor, and the regeneration process will begin automatically, make sure the working place is in a safe area as DPF and exhaust temperature will rise.

3. When the engine rpm increase indicator starts flashing:

Keep on working and increase the engine rpm until the indicator turns "OFF".

NOTE :
- Even if the Auto Regeneration Mode is selected, DPF regeneration may not begin because system requirements have not been satisfied.
- The engine rpm increase indicator is used as a guide to satisfy the regeneration conditions. If the engine load is too heavy, the engine rpm increase indicator may continue to flash, even though regeneration system conditions are satisfied and regeneration may begin automatically. (See the "Tips on Diesel Particulate Filter [DPF] Regeneration")

https://truckmanualshub.com/

■PM Warning Level and Required Procedures

During Auto Regeneration Mode when the PM level has built up in the DPF, the regeneration cycle will begin automatically. If the regeneration cycle is interrupted or the regeneration conditions are not satisfied, the buzzer starts sounding and the indicator display changes in response to the PM level in order to prompt the operator to perform the required procedure listed below.

IMPORTANT :

- Once the regeneration level has been reached, immediately perform the required procedure for regeneration. Interrupting the regeneration cycle or continued operation by ignoring the warning signs may cause DPF and engine damage.

Auto Mode		
DPF system status		Required procedure
PM warning level: **1** Buzzer: Not sounding	The regeneration indicator starts flashing.	A specific amount of PM has accumulated in the DPF muffler. Continue to work the tractor to raise the DPF temperature.
	The RPM increase indicator starts flashing.	Continue the work and increase the engine rpm until the indicator turns "OFF".
	The regeneration indicator will stop flashing and remain "ON" constantly.	The regeneration cycle begins and continues until cycle is complete then the indicator will turn "OFF".
PM warning level: **2-1** Buzzer: Sounding every 5 seconds	If the regeneration cycle was interrupted or conditions are not satisfied for regeneration then DPF system is now in Level 2.	
	The regeneration indicator starts flashing.	Start the regeneration, referring to PM warning level: 1 above. Now the parked regeneration indicator starts flashing, and the parked regeneration can also be started. If the regeneration conditions are not met, perform the parked regeneration. ● For the procedure, refer to "Operating Procedure for Parked Regeneration".
PM warning level: **2-2** Buzzer: Sounding every 3 seconds	The RPM increase indicator starts flashing.	
	The parked regeneration indicator starts flashing.	
PM warning level: **3** Buzzer: Sounding every 1 second Engine output: 50%	If the regeneration fails in the warning level 2:	
	The engine warning indicator starts flashing.	Immediately discontinue working the tractor and begin the parked regeneration cycle process. ● For the procedure, refer to "Operating Procedure for Parked Regeneration". At this PM warning level, the Auto Regeneration Mode does not function. If the tractor is operated further, the regeneration cycle will be disabled.
	The parked regeneration indicator starts flashing.	
PM warning level: **4** Buzzer: Sounding every 1 second Engine output: 50%	If the parked regeneration is interrupted or the tractor is continuously operated in the warning level 3:	
	The engine warning indicator remains constantly "ON".	Immediately move the tractor to a safe place and park it there and turn the engine "OFF". Contact your local KUBOTA Dealer. ● At this level, never continue to operate the tractor otherwise damage will result to the DPF and engine.

https://truckmanualshub.com/

Operating Procedure for Regeneration Inhibit Mode

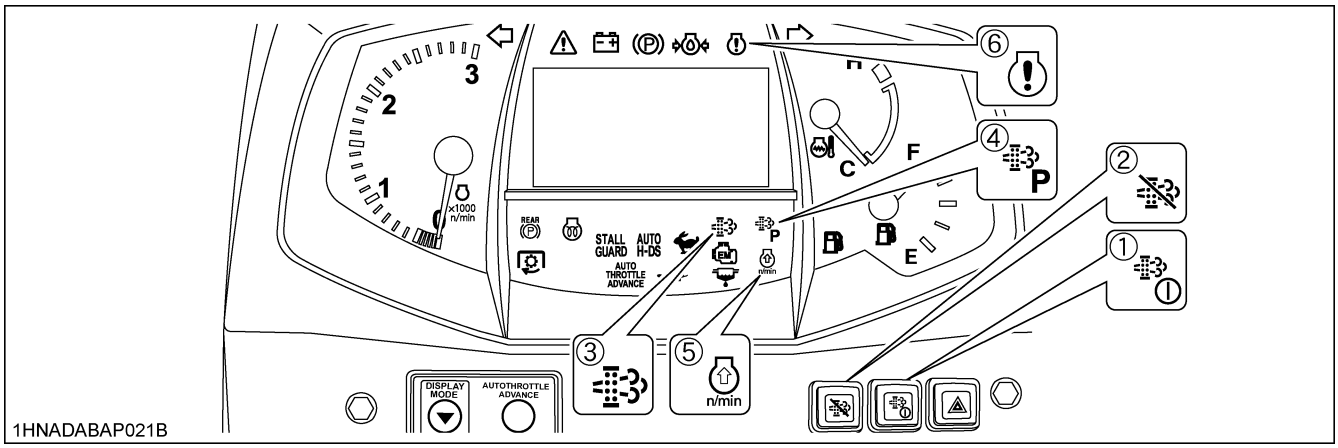

(1) Parked regeneration switch
(2) DPF INHIBIT switch
(3) Regeneration indicator
(4) Parked regeneration indicator
(5) Engine RPM increase indicator
(6) Engine warning indicator

■Regeneration Operating Procedure

1. Start the engine.

2. Press the DPF INHIBIT switch , and the switch lamp illuminates.

Switch lamp ON: Regeneration Inhibit Mode selected.
Switch lamp OFF: Auto Regeneration Mode selected.

3. When the parked regeneration indicator starts flashing:

A specific amount of PM has accumulated in the DPF muffler.
Move the tractor to a safe place and activates the DPF muffler. Follow the "Operating Procedure for Parked Regeneration" procedure.

https://truckmanualshub.com/

■PM Warning Level and Required Procedures

In the Regeneration Inhibit Mode, the buzzer starts sounding and the indicator display changes in response to the PM level in order to prompt the operator to perform the required procedure listed below.

IMPORTANT :

- Once the regeneration level has been reached, immediately perform the required procedure for regeneration. Interrupting the regeneration cycle or continued operation by ignoring the warning signs may cause DPF and engine damage.

Regeneration Inhibit Mode		
DPF system status		Required procedure
PM warning level: **1** Buzzer: Not sounding	The regeneration indicator starts flashing.	A specific level of PM has built up in the DPF muffler. Continue with the operation as it is.
	At PM warning levels range from 1 to 2-2, it is also possible to change DPF INHIBIT switch to auto regeneration mode then perform regeneration.	
PM warning level: **2-1** Buzzer: Sounding every 5 seconds	The regeneration indicator starts flashing.	Move the tractor to a safe area, then follow the "Operating Procedure for Parked Regeneration".
PM warning level: **2-2** Buzzer: Sounding every 3 seconds	The Parked regeneration indicator starts flashing.	
PM warning level: **3** Buzzer: Sounding every 1 second Engine output: 50%	If the parked regeneration cycle is interrupted or the tractor is continuously operated in the PM warning level 2:	
	The engine warning indicator starts flashing. The parked regeneration indicator starts flashing	Immediately stop working the tractor, move the tractor to a safe area, then follow the "Operating Procedure for Parked Regeneration". If the tractor is operated further and the operator ignores the warning signs, then regeneration will be disabled.
PM warning level: **4** Buzzer: Sounding every 1 second Engine output: 50%	If the regeneration cycle is interrupted or the tractor is continuously operated ignoring the warning signs, in the PM warning level 3:	
	The engine warning indicator remains constantly "ON".	Immediately move the tractor to a safe place and place in park, turn "OFF" engine. Contact your local KUBOTA Dealer. ● At this level never continue to operate the tractor, otherwise damage may result to the DPF and engine.

https://truckmanualshub.com/

Operating Procedure for Parked Regeneration

1. Park the tractor in a safe area away from buildings, people, and animals.

2. Apply the parking brake.

3. Set the speed control pedal to the neutral position.

4. Turn "OFF" the PTO clutch control switch or lever.

5. Return the engine rpm to the idle speed.

6. Lower the implement to the ground.
Turn steering wheel so front wheels are in the straight ahead position.

7. Press the DPF INHIBIT switch , and the switch lamp turns "OFF".

8. When the regeneration conditions are satisfied (2 to 5 and 7 mentioned above),
the parked regeneration switch lamp start flashing.

9. Press the parked regeneration switch to start the regeneration cycle.
(The switch lamp will stop flashing and remain "ON" constantly during the cycle.)

10. The engine rpm will automatically rise, and the regeneration process will begin.

11. Both indicators stay "ON" while regenerating the DPF.
They turn "OFF" when the cycle is complete.

12. After the lamp turns "OFF", normal tractor work may resume.
When driving in "Regeneration Inhibit" mode, press the DPF INHIBIT switch to turn on the switch lamp.

NOTE :
- During the regeneration cycle, do not touch the above levers, pedal and switches (in steps 2, 3, 4), nor change the engine rpm other than an emergency stop. Otherwise, the regeneration will be interrupted.
- Never leave the tractor when parked regeneration process is activated.
- If the parked regeneration cycle is interrupted, the engine rpm is fixed at the idling level for about 30 seconds. For this period, keep the hand throttle lever and foot throttle pedal at the idle position. Do not move them. They will function again in 30 seconds.

https://truckmanualshub.com/

■Tips on Diesel Particulate Filter (DPF) Regeneration

- **Operation**
  The higher in speed or load the engine operates, the higher the exhaust temperature rises. As a result, particulate matter (PM) inside the DPF is consumed, therefore the regeneration process is required less frequently over time.
  The lower in speed or load the engine operates, the lower the exhaust temperature. Accordingly, less particulate matter (PM) inside the DPF is consumed, therefore more accumulation of PM will occur, which requires frequent regeneration, therefore avoid prolonged idling if possible.

- **Necessary conditions for "Regeneration"**
  When conditions below are all satisfied, regeneration will start. However, if even one condition is deviated during the process, the regeneration will be interrupted.
  (1) The engine coolant temperature.
  (2) The DPF temperature.
  (3) The engine speed is 1200 rpm or higher.

- Usually it takes 15-20 minutes to complete the regeneration cycle.
  Actual regeneration time may depend on ambient temperature, exhaust temperature and engine speed.

- It is recommended to do the regenerating while the engine is warm.

- Do not unnecessarily start and interrupt the regeneration process. Otherwise, a small amount of fuel becomes mixed with the engine oil, which degrades the oil quality.

- While the DPF is being regenerated, the engine air flow rate is automatically limited to keep up the exhaust temperature. Because of this the engine may sound differently, this is normal for this engine.

- Just after the regeneration has ended, the DPF muffler remains hot. It is advisable to keep the engine running for about 5 minutes to allow cooling of the exhaust components.

STARTING THE ENGINE

Tractor Driving Position

1. Make sure the parking brake is set.

1. To set the parking brake;
   (1) Interlock the brake pedals.
   (2) Depress the brake pedals.
   (3) Latch the brake pedals with the parking brake lever.
2. To release the parking brake, depress the brake pedals again.

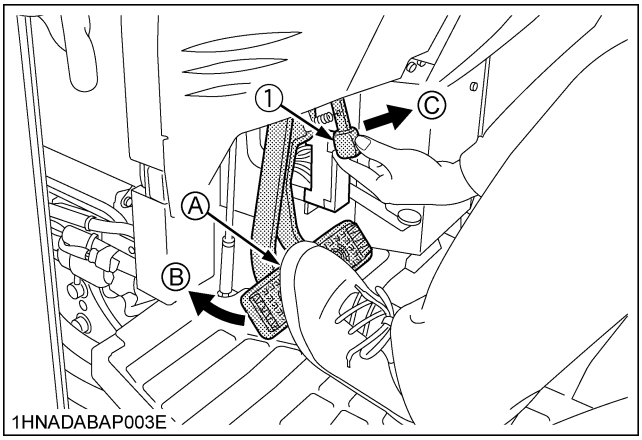

(1) Parking brake lever
(A) Interlock the brake pedals
(B) "DEPRESS"
(C) "PULL"

IMPORTANT :
- To prevent damage to the parking brake lever, make sure that brake pedals are fully depressed before pulling the parking brake lever up.

NOTE :
- The Parking brake indicator comes on while parking brake is applied and goes off when it is released.

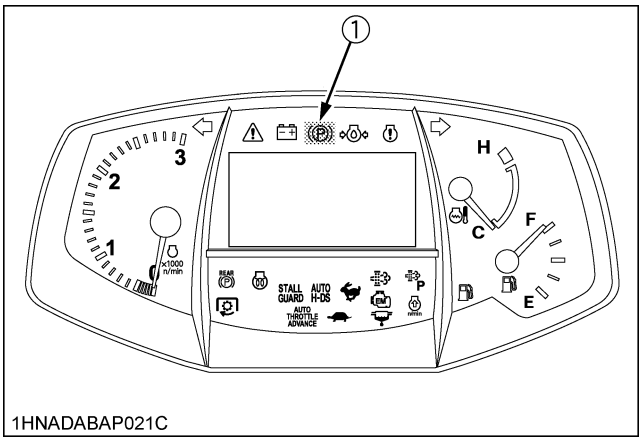

(1) Parking brake indicator

https://truckmanualshub.com/

2. Make sure the fuel shutoff-valve is in the open position.

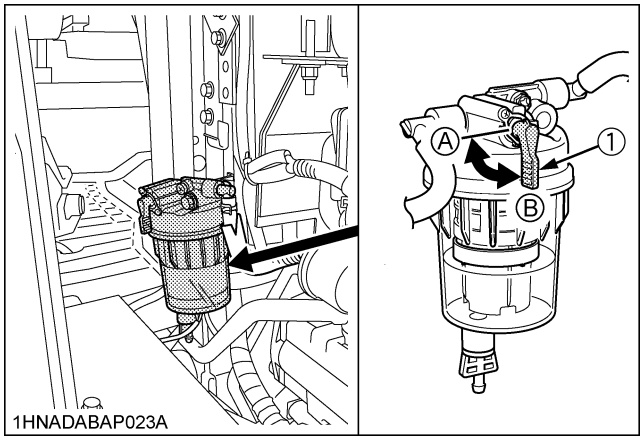

(1) Fuel shutoff-valve *(A) "CLOSE"* *(B) "OPEN"*

3. Place the Speed control Pedal in "NEUTRAL" position.
Place the range gear shift lever (L-M-H) in "NEUTRAL" position.

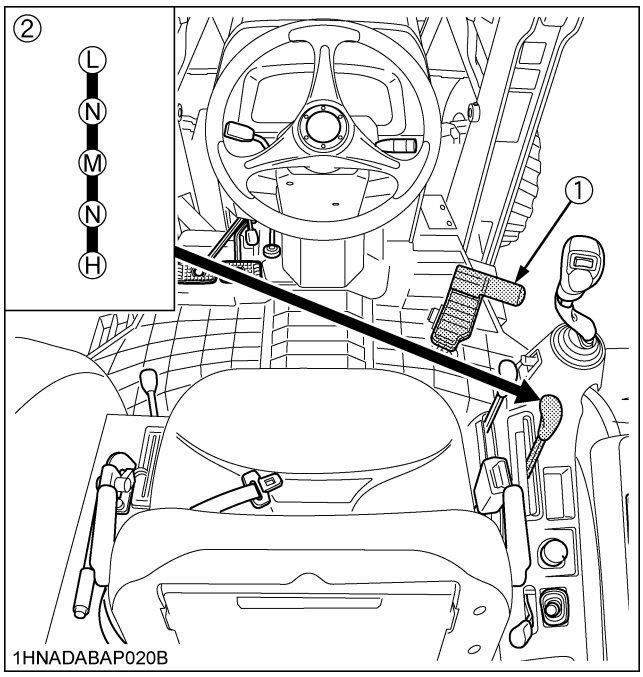

(1) Speed control pedal *(N) "NEUTRAL POSITION"*
(2) Range gear shift lever (L-M-H)

NOTE :
- Step out the foot from speed control pedal, doing so the pedal automatically returns to the neutral position.

4. Place the PTO clutch control switch in "OFF" position.

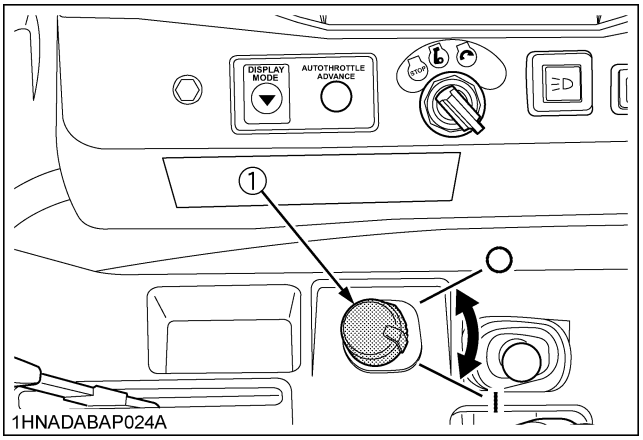

(1) PTO clutch control switch *| "ON"* *○ "OFF"*

5. Place the position control lever in "LOWEST" position.

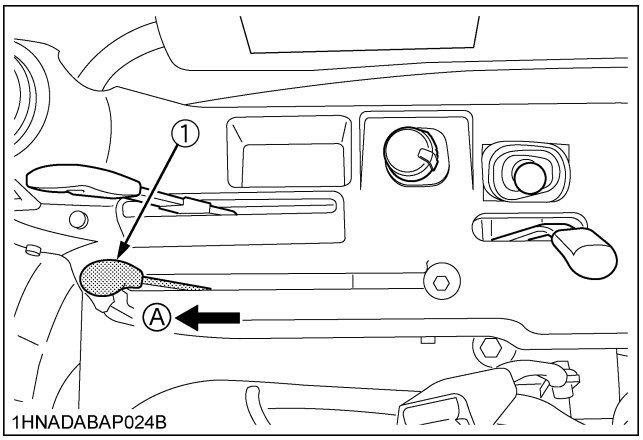

(1) Position control lever *(A) "DOWN"*

https://truckmanualshub.com/

6. Set the throttle lever to about 1/2 way.

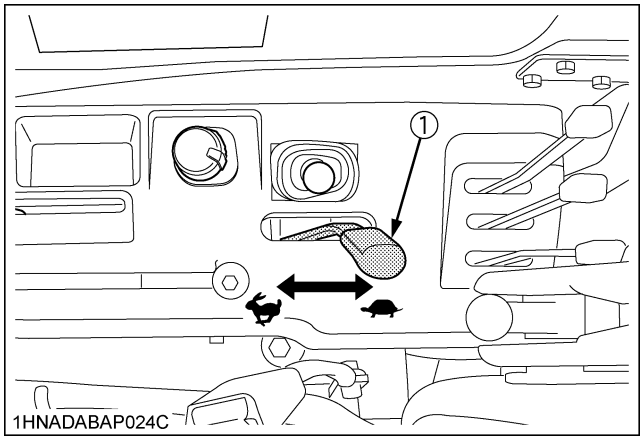

(1) Throttle lever *"INCREASE"* *"DECREASE"*

7. Insert the key into the key switch and turn it "ON".

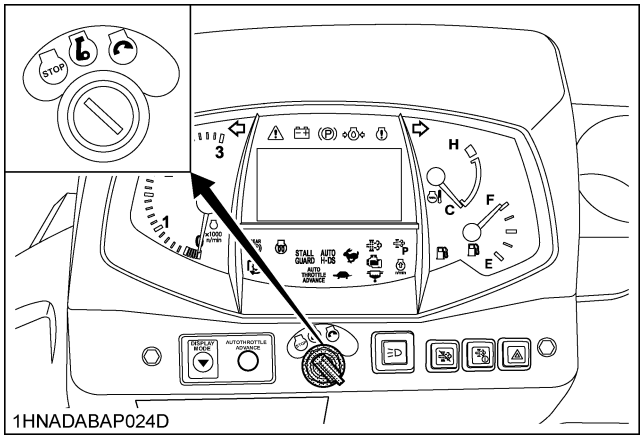

"OFF" *"ON"* *"START"*

■Check Easy Checker(TM) Lamps:

Turn the key to "ON" position and make sure the following indicators light up or stay off.

◆ **Indicators that light up:**

1. When the key is turned "ON", indicators(1)(3) should come on. If trouble should occur at any location while the engine is running, the indicator corresponding to that location comes on.
2. Suppose that the engine coolant temperature is not high enough yet. Glow plug indicator(5) also comes on when the key is turned "ON" to preheat the engine and goes off automatically when preheat is completed. Illumination time of indicator varies according to the temperature of coolant.
3. The parking brake indicator(2) comes on while parking brake is applied and goes off when it is released.

◆ **Indicators that stay off:**

If the PTO indicator(4) stays on, disengage (OFF) the PTO.

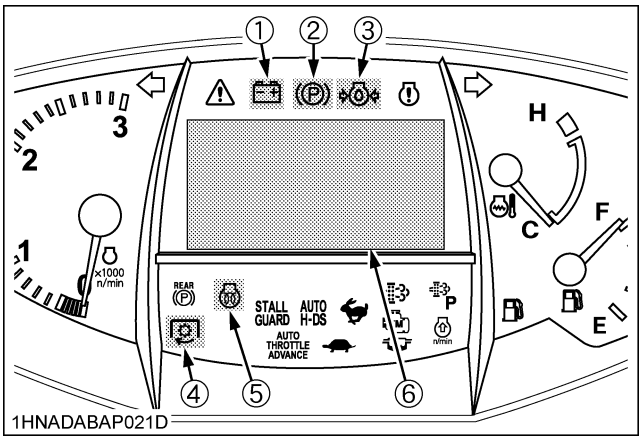

(1) Electrical charge indicator *(4) PTO indicator*
(2) Parking brake indicator *(5) Glow plug indicator*
(3) Engine oil pressure indicator *(6) IntelliPanel(TM) display*

IMPORTANT :

- Daily checks with the Easy Checker(TM) only, are not sufficient. Never fail to conduct daily checks carefully by referring to Daily Check. (See "DAILY CHECK" in "PERIODIC SERVICE" section)

NOTE :

- Some of the Easy Checker(TM) lamps may light up depending on the positions of the levers and switches.
- Turn on the key, and some of the indicators stay on about 1 second.

https://truckmanualshub.com/

8. Turn the key to "START" position and release when the engine starts.

■IntelliPanel(TM) Message

If you try to start the engine but the following messages appear alternately in the display, the engine fails to start. Follow the instructions shown on the display.

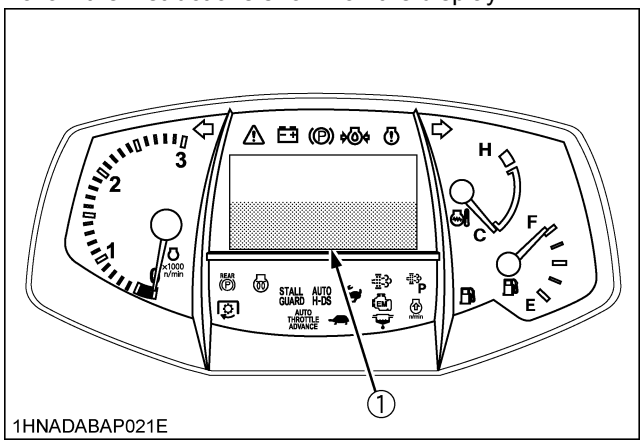

(1) Display

Disengage PTO **Set HST Pedal to Neutral**	Turn the PTO clutch control switch to "OFF" and foot off of the speed control pedal.
Disengage PTO	Turn the PTO clutch control switch to "OFF".
Set HST Pedal to Neutral	Foot off of the speed control pedal.

9. Check to see that all the lamps on the Easy Checker(TM) are "OFF".

If the lamp is still on, immediately stop the engine and determine the cause.

Backhoe Operating Position

1. Make sure the rear parking brake is set.

1. To set the rear parking brake, pull up the rear parking brake lever.
2. To release the rear parking brake, push the release button and push down the rear parking brake lever.

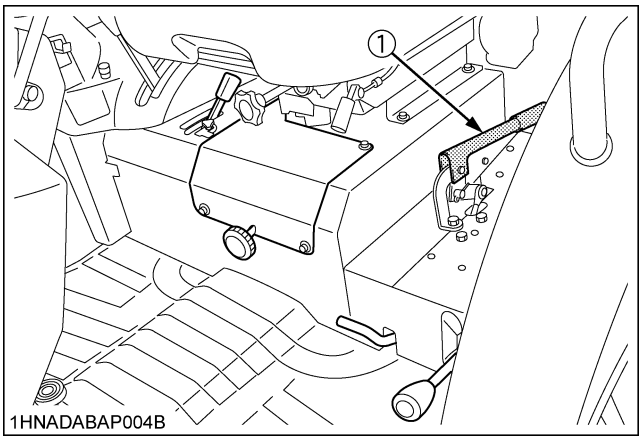

(1) Rear parking brake lever

NOTE :
- The rear parking brake indicator comes on while rear parking brake is applied and goes off when it is released.

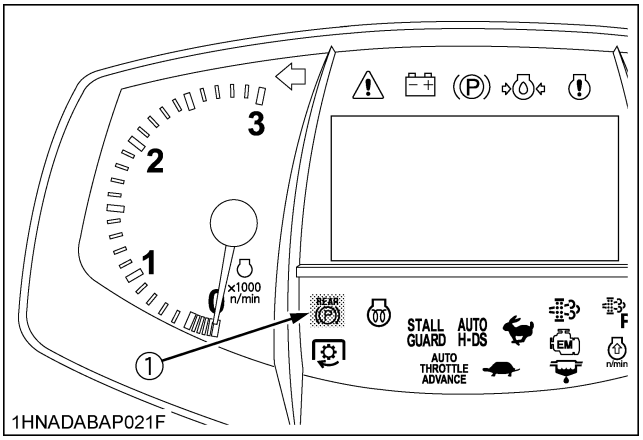

(1) Rear parking brake indicator

2. Make sure the fuel shut off-valve is in the open position.

3. Place the PTO clutch control switch in "OFF" position.

4. Set the throttle lever to about 1/2 way.

https://truckmanualshub.com/

5. **Insert the key into the key switch and turn it "ON".**

6. **Turn the key "START" position and release when the engine starts.**

■IntelliPanel(TM) Message

If you try to start the engine but the following messages appear alternately in the display, the engine fails to start. Follow the instructions shown on the display.

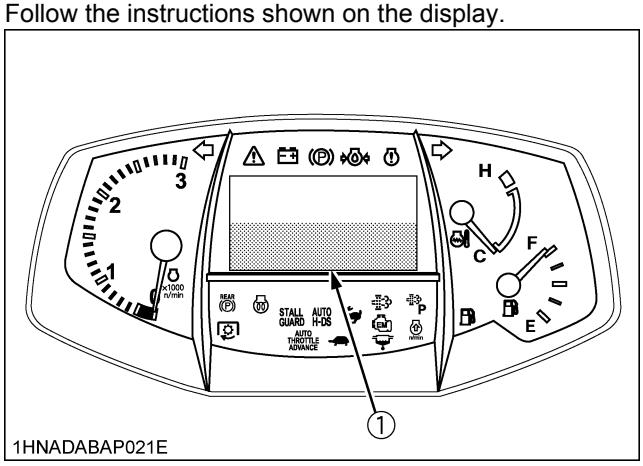

(1) Display

Disengage PTO **Set HST Pedal to Neutral**	Turn the PTO clutch control switch to "OFF" and foot off of the speed control pedal.
Disengage PTO	Turn the PTO clutch control switch to "OFF".
Set HST Pedal to Neutral	Foot off of the speed control pedal.

7. **Check to see that all the lamps on the Easy Checker(TM) are "OFF" (See "Tractor driving position" in "STARTING THE ENGINE")**

COLD WEATHER STARTING

If the ambient temperature is below -5℃(23℉) and the engine is very cold, start it in the following manner:
In the case of Tractor Driving Position, take steps 1 through 8 in the procedure of Tractor Driving Position.
In the case of Backhoe Operating Position, take steps 1 through 5 in the procedure of Backhoe Operating Position. Then, take the following steps.

1. **Turn the key to "ON" (glow plug) and keep it there until glow plug indicator goes off.**

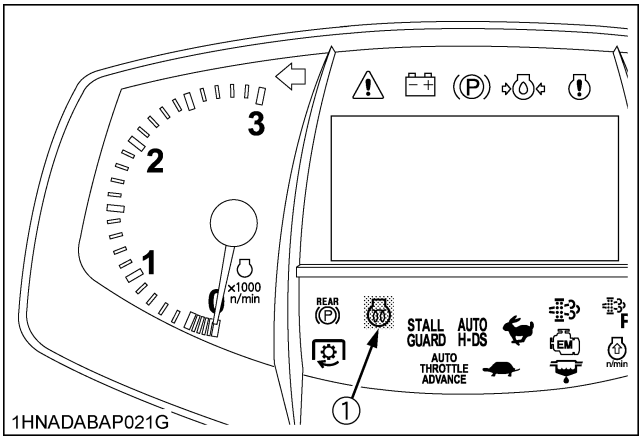

(1) Glow plug indicator

2. **Turn the key to the start position and the engine should start.**

(If the engine fails to start after 10 seconds, turn off the key for 30 seconds. Then repeat steps 1 and 2. To protect the battery and the starter, make sure that the starter is not continuously turned for more than 10 seconds.)

https://truckmanualshub.com/

■Antifrost Heater for Oil Separator (if equipped)

The heater element operates continuously when the key switch is in run position.
Due to high electrical draw, extended idle time or operations will drain the battery and stop the tractor.

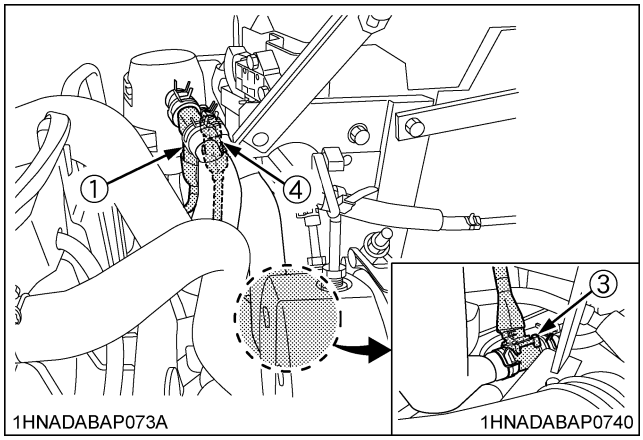

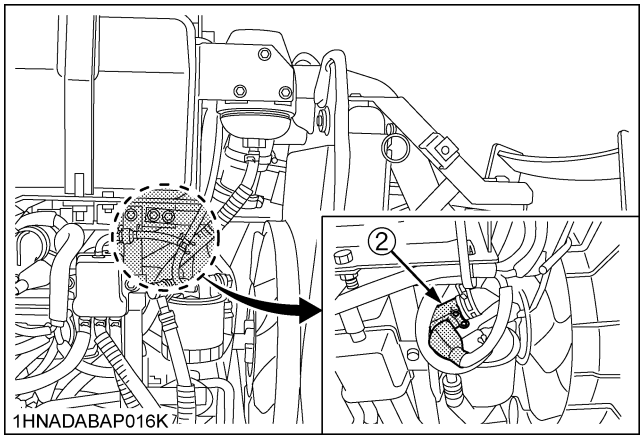

(1) Heater (Oil separator, OUT 1)
(2) Heater (Oil separator, OUT 2)
(3) Heater (Oil separator, IN 1)
(4) Heater (Oil separator, IN 2)

■Block Heater (if equipped)

A block heater is available as an option from your dealer. It will assist you in starting your tractor when the ambient temperature is below -20 ℃ (-4 ℉).

STOPPING THE ENGINE

1. **After slowing the engine to idle, wait 3 to 5 minutes for turbo to slow down then turn the key to "OFF".**
2. **Remove the key.**

NOTE :
- If key does not stop the engine, consult your local KUBOTA Dealer.

WARMING UP

WARNING

To avoid personal injury or death:
- **Be sure to set the parking brake during warm-up.**
- **Be sure to set all shift levers to the "NEUTRAL" positions and to place PTO lever in "OFF" position during warm-up.**

For 5 minutes after engine start-up, allow engine to warm up without applying any load, this is to allow oil to reach every engine part. If load should be applied to the engine without this warm-up period, trouble such as seizure, breakage or premature wear may develop.

■Warm-up Transmission Oil at Low Temperature Range

Hydraulic oil serves as transmission fluid. In cold weather, the oil may be cold with increased viscosity. This can cause delayed oil circulation or abnormally low hydraulic pressure for some time after engine start-up. This in turn can result in trouble in the hydraulic system. To prevent the above, observe the following instructions:
Warm up the engine at about 50% of rated rpm according to the table below:

Ambient temperature	Warm-up time requirement
Higher than -10 ℃ (14 ℉)	Approx. 5 minutes
-15 to -10 ℃ (5 to 14 ℉)	5 to 10 minutes
-20 to -15 ℃ (-4 to 5 ℉)	10 to 20 minutes
Below -20 ℃ (-4 ℉)	More than 20 minutes

IMPORTANT :
- Do not operate the tractor under full load condition until it is sufficiently warmed up.

https://truckmanualshub.com/

JUMP STARTING

WARNING

To avoid personal injury or death:

- **Battery gases can explode. Keep cigarettes, sparks, and flames away from battery.**
- **If tractor battery is frozen, do not jump start engine.**
- **Do not connect the other end of the negative (-) jumper cable to the negative (-) terminal of the tractor battery.**

When jump starting the engine, follow the instructions below to safely start the engine.

1. Bring the helper vehicle with a battery of the same voltage as disabled tractor within easy cable reach. "THE VEHICLES MUST NOT TOUCH".
2. Engage the parking brakes of both vehicles and put the shift levers in neutral. Shut both engines off.
3. Wear eye protection and rubber gloves.
4. Attach the red clamp to the positive (red, (+) or pos.) terminal of the dead battery and clamp the other end of the same cable to the positive (red, (+) or pos.) terminal of the helper battery.
5. Clamp the other cable to the negative (black, (-) or neg.) terminal of the helper battery.
6. Clamp the other end to the engine block or frame of the disabled tractor as far from the dead battery as possible.
7. Start the helper vehicle and let its engine run for a few moments. Start the disabled tractor.
8. Disconnect the jumper cables in the exact reverse order of attachment. (Steps 6, 5 and 4).

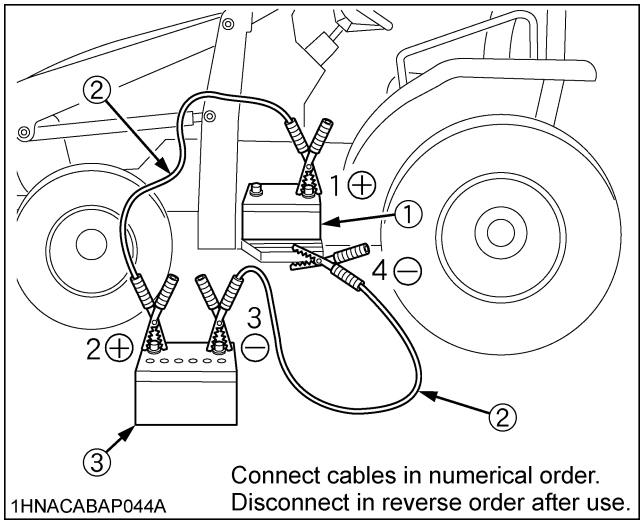

(1) Dead battery
(2) Jumper cables
(3) Helper battery

IMPORTANT :

- This machine has a 12 volt negative (-) ground starting system.
- Use only same voltage for jump starting.
- Use of a higher voltage source on tractor's electrical system could result in severe damage to tractor's electrical system.
  Use only matching voltage source when "Jump starting" a low or dead battery condition.
- Do not operate the tractor with the battery cable disconnected from the battery.
- Do not operate the tractor without the battery mounted.
- Do not operate the tractor with the battery dead. Charge the battery fully enough before operating the tractor.
  Otherwise the tractor might malfunction.

https://truckmanualshub.com/

OPERATING THE TRACTOR

OPERATING NEW TRACTOR

How a new tractor is handled and maintained determines the life of the tractor.

A new tractor just off the factory production line has been, of course, tested, but the various parts are not accustomed to each other, so care should be taken to operate the tractor for the first 50 hours at a slower speed and avoid excessive work or operation until the various parts become "broken-in." The manner in which the tractor is handled during the "breaking-in." period greatly affects the life of your tractor. Therefore, to obtain the maximum performance and the longest life of the tractor, it is very important to properly break-in your tractor. In handling a new tractor, the following precautions should be observed.

■Do not Operate the Tractor at Full Speed for the First 50 Hours

- Do not start quickly nor apply the brakes suddenly.
- In winter, operate the tractor after fully warming up the engine.
- Do not run the engine at speeds faster than necessary.
- On rough roads, slow down to suitable speeds.
  Do not operate the tractor at fast speed.

The above precautions are not limited only to new tractors, but to all tractors. But it should be especially observed in the case of new tractors.

■Changing Lubricating Oil for New Tractors

The lubricating oil is especially important in the case of a new tractor. The various parts are not "broken-in" and are not accustomed to each other; small metal grit may develop during the operation of the tractor; and this may wear out or damage the parts. Therefore, care should be taken to change the lubricating oil a little earlier than would ordinarily be required.

For further details of change interval hours.

(See "MAINTENANCE OF THE TRACTOR" section)

BOARDING AND LEAVING THE TRACTOR

1. Never try to get on or off a moving tractor or jump off the tractor to exit.
2. Face the tractor when getting into or out of the tractor. Do not use the controls as hand holds to prevent inadvertent machine movements.
3. Always keep steps and floor clean to avoid slippery conditions.

STARTING

1. Adjusting the driving position.

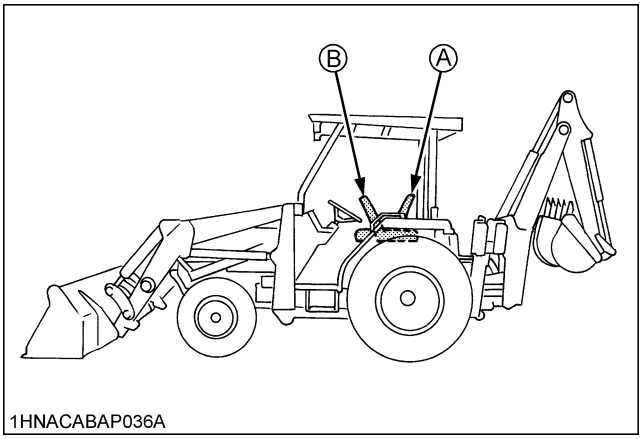

(A) "TRACTOR DRIVING POSITION"
(B) "BACKHOE POSITION"

NOTE :

- The seat and suspension should be adjusted to ensure that the controls are comfortably at hand for the operator, ensuring that the operator maintains a good posture and minimizes risks from whole body vibration.

https://truckmanualshub.com/

■Operator's Seat

WARNING

To avoid personal injury or death:

- **Make adjustments to the seat only while the tractor is stopped.**
- **Make sure that the seat is completely secured after each adjustment.**
- **Do not allow any person other than the operator to ride on the tractor.**

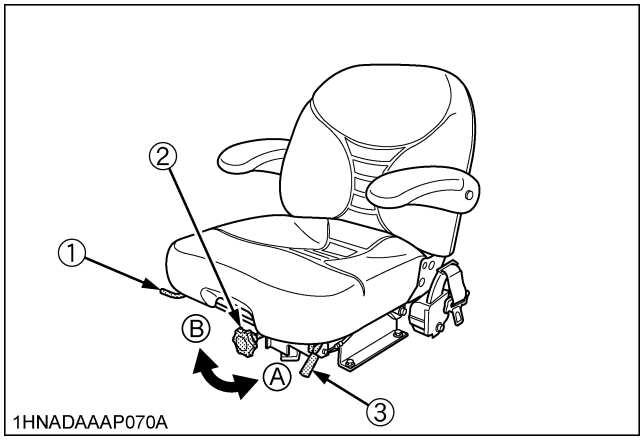

(1) Travel adjust lever
(2) Suspension adjust knob
(3) Seat lock lever
(A) To decrease tension
(B) To increase tension

◆ Travel adjustment

Pull the travel adjust lever and slide the seat backward or forward, as required. The seat will lock in position when the lever is released.

NOTE :

- The operator's seat base has a slope. When lifting the lever, be careful not to allow the seat to slide down forward.

◆ Suspension adjustment knob

Turn the suspension adjust knob to achieve the optimum suspension setting.

◆ Seat lock lever

Unlock the seat lock lever and twist the seat right as required.

NOTE :

Using the swivel seat

- Swivel the seat to the right to position yourself comfortably for jobs in which you need to look rearwards.

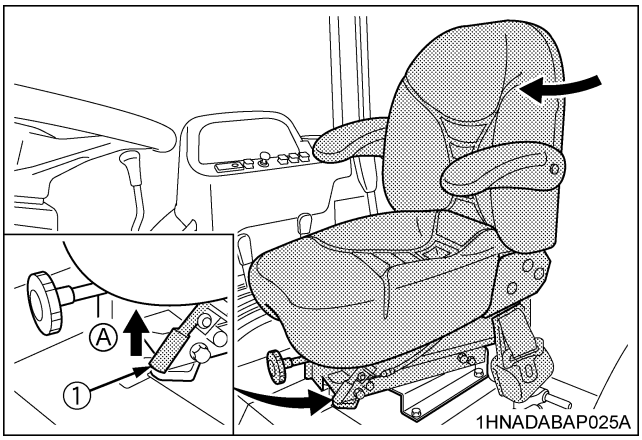

(1) Seat lock lever
(A) "UNLOCK"

IMPORTANT :

- After adjusting the operator's seat, be sure to check to see that the seat is properly locked.
- See "REVERSING THE SEAT" in this section when using seat in backhoe position.

■Glove Box

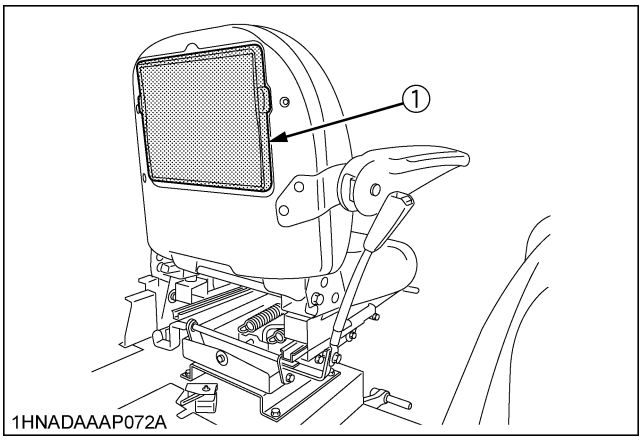

(1) Glove box

https://truckmanualshub.com/

■Seat Belt

WARNING

To avoid personal injury or death:

- **Always use the seat belt while driving tractors, when the ROPS is installed.**
- **Do not use the seat belt if the tractor is not equipped with ROPS.**

Adjust the seat belt for proper fit and connect the buckle. This seat belt is auto-locking retractable type.

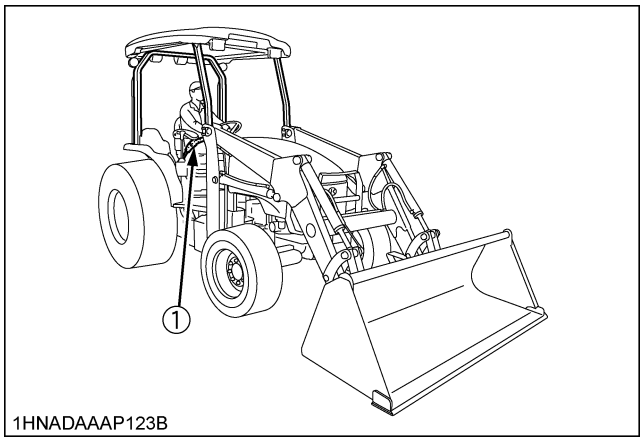

(1) Seat belt

■Tilt Steering Adjustment

CAUTION

To avoid personal injury:

- **Do not adjust the steering wheel while the tractor is in motion.**

Press down the steering wheel tilt pedal, to release the lock so the steering wheel can be adjusted to one of six desired positions.

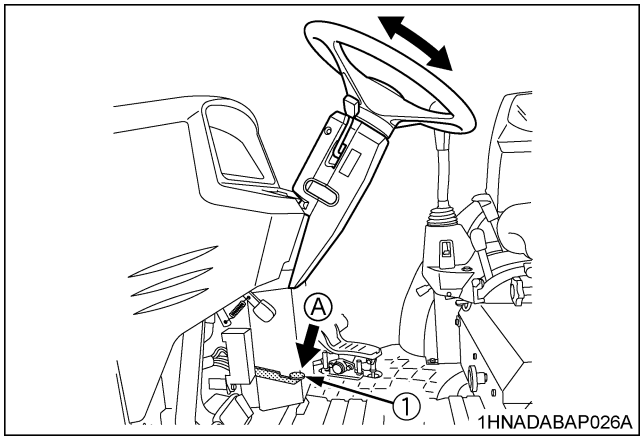

(1) Steering wheel tilt pedal *(A) "PRESS DOWN"*

2. Selecting light switch positions.

■Light switch

Turn the light switch clockwise, and the following lights are activated on the switch position.

OFF.....	Head lights OFF.
.....	Head lights and front work lights on (if equipped)
.....	Head lights and front work lights on (if equipped)

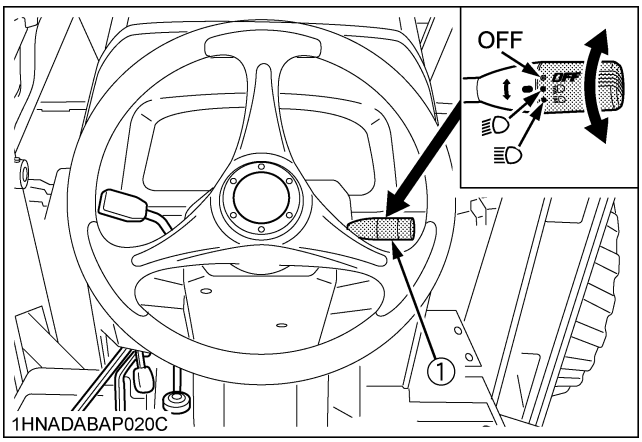

(1) Head light switch

IMPORTANT :

- When the two head lights and the six work lights (including four option lights) are lit at the same time, run the engine above 2200 rpm.

https://truckmanualshub.com/

■Turn Signal / Hazard Light Switch

◆ Hazard Light

1. When the hazard light switch is pushed, the hazard lights flash, along with the L/H and R/H indicators on the instrument panel.
2. Push the hazard light switch again to turn off the hazard lights.

◆ Turn Signal with Hazard Light

1. To indicate a right turn with the hazard lights already flashing, turn the switch clockwise.
2. To indicate a left turn with the hazard lights already flashing, turn the switch counterclockwise.
3. When the left or right turn signal is activated in combination with the hazard lights, the indicated turning light will flash and the other will stay on.

◆ Turn Signal without Hazard Light

1. To indicate a right turn without hazard lights, turn the switch clockwise.
2. To indicate a left turn without hazard lights, turn the switch counterclockwise.
3. When the left or right turn signal is activated without the hazard lights, the indicated turning light will flash and the other will stay on.

NOTE :

- The hazard light switch is operative when the key switch is in either the "ON" or "OFF" position.
- The turn signal light switch is only operative when the key switch is in the "ON" position.
- Be sure to return the turn signal switch to center position after turning.

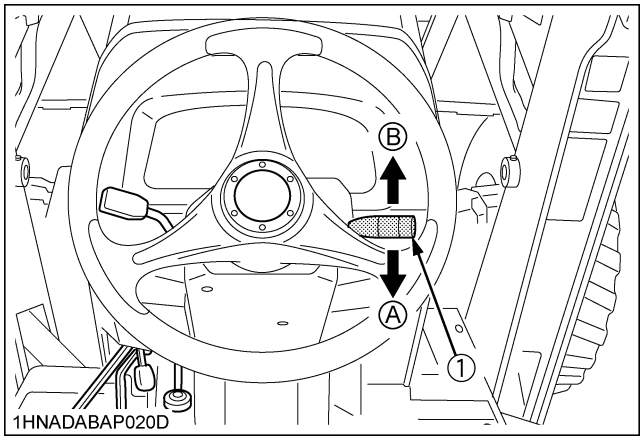

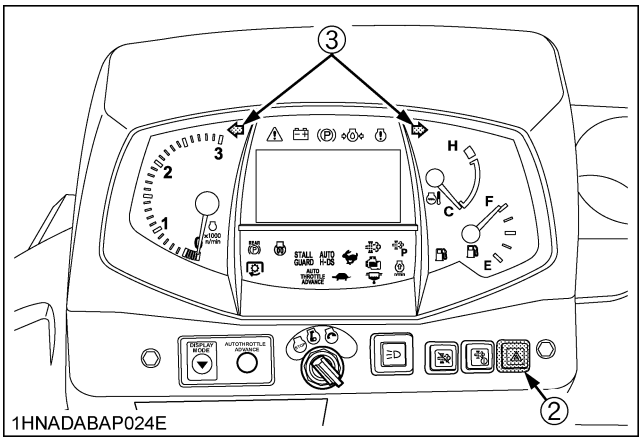

(1) Turn signal light switch
(2) Hazard light switch
(3) Hazard / Turn signal indicator
(A) "RIGHT TURN"
(B) "LEFT TURN"

■Rear Work Light Switch

When rear work light switch is pushed, the rear work lights should come on along with the rear work light switch. Press the rear work light switch again to turn off the light.

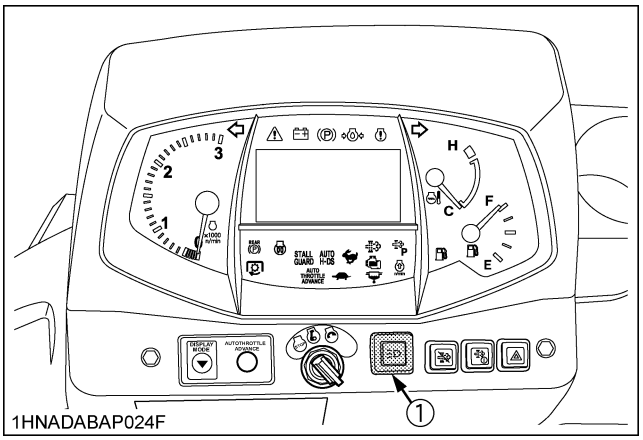

(1) Rear work light switch

IMPORTANT :

- When the two head lights and the six work lights (including four option lights) are lit at the same time, run the engine above 2200 rpm.

https://truckmanualshub.com/

■Horn Button

The horn will sound when the key switch is in the "ON" position and the horn button pressed.

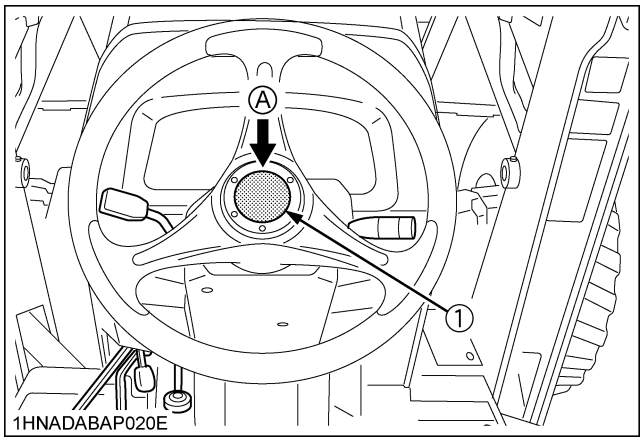

(1) Horn button *(A) "PUSH"*

■Tractor Lights

(1) Head light
(2) Side turn signal / Hazard light
(3) Tail light
(4) Rear turn signal / Hazard light
(5) Rear work light

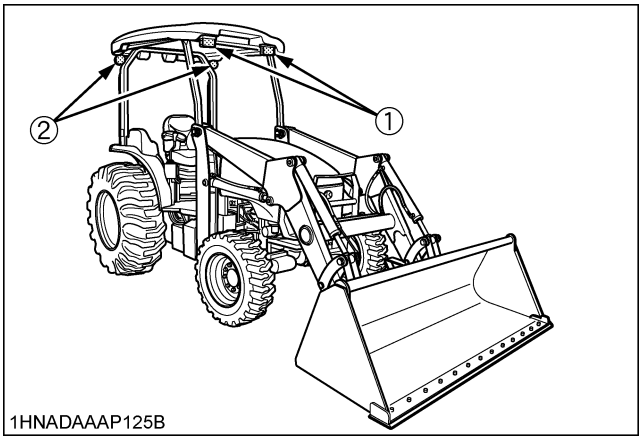

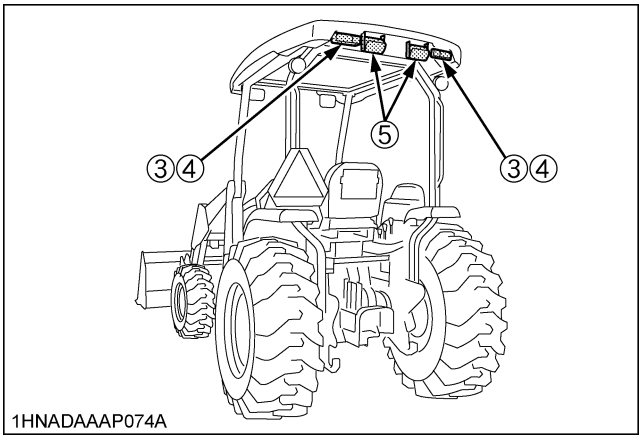

https://truckmanualshub.com/

3. Checking the brake pedal.

■Brake Pedals (Right and Left)

WARNING

To avoid personal injury or death:

- **Be sure to interlock the right and left pedals. Applying only one rear wheel brake at high speeds could cause the tractor to swerve or roll-over.**
- **Be sure brake pedals have equal adjustment when using locked together. Incorrect or unequal brake pedal adjustment can cause the tractor to swerve or roll-over.**

WARNING

To avoid personal injury or death:

- **Do not make brake suddenly. An accident may occur as a result of a heavy towed load shifting forward or loss of control.**
- **To avoid skidding and loss of steering control when driving on icy, wet, or loose surfaces, make sure the tractor is correctly ballasted, operated at reduced speed, operated with front wheel drive engaged (if equipped).**
- **The braking characteristics are different between 2 and 4-wheel drive. Be aware of the difference and use carefully.**

1. Before operating the tractor on the road or before applying the parking brake, be sure to interlock the right and left pedals as illustrated below.
2. Use individual brakes to assist in making sharp turns at slow speeds (Field Operation Only). Disengage the brake pedal lock and depress only one brake pedal.
3. Be sure brake pedals have equal adjustment when using locked together.

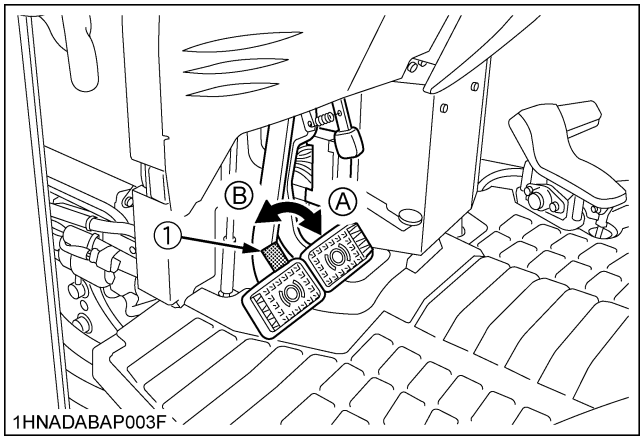

(1) Brake pedal lock *(A) "LOCK"* *(B) "RELEASE"*

4. Raise the implement. (See "HYDRAULIC UNIT" section)

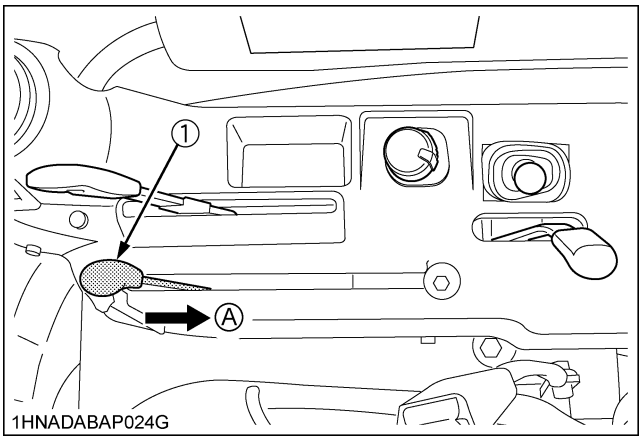

(1) Position control lever *(A) "UP"*

IMPORTANT :

- Do not raise the position control lever when BACKHOE is installed.

https://truckmanualshub.com/

5. Selecting the Travel Speed.

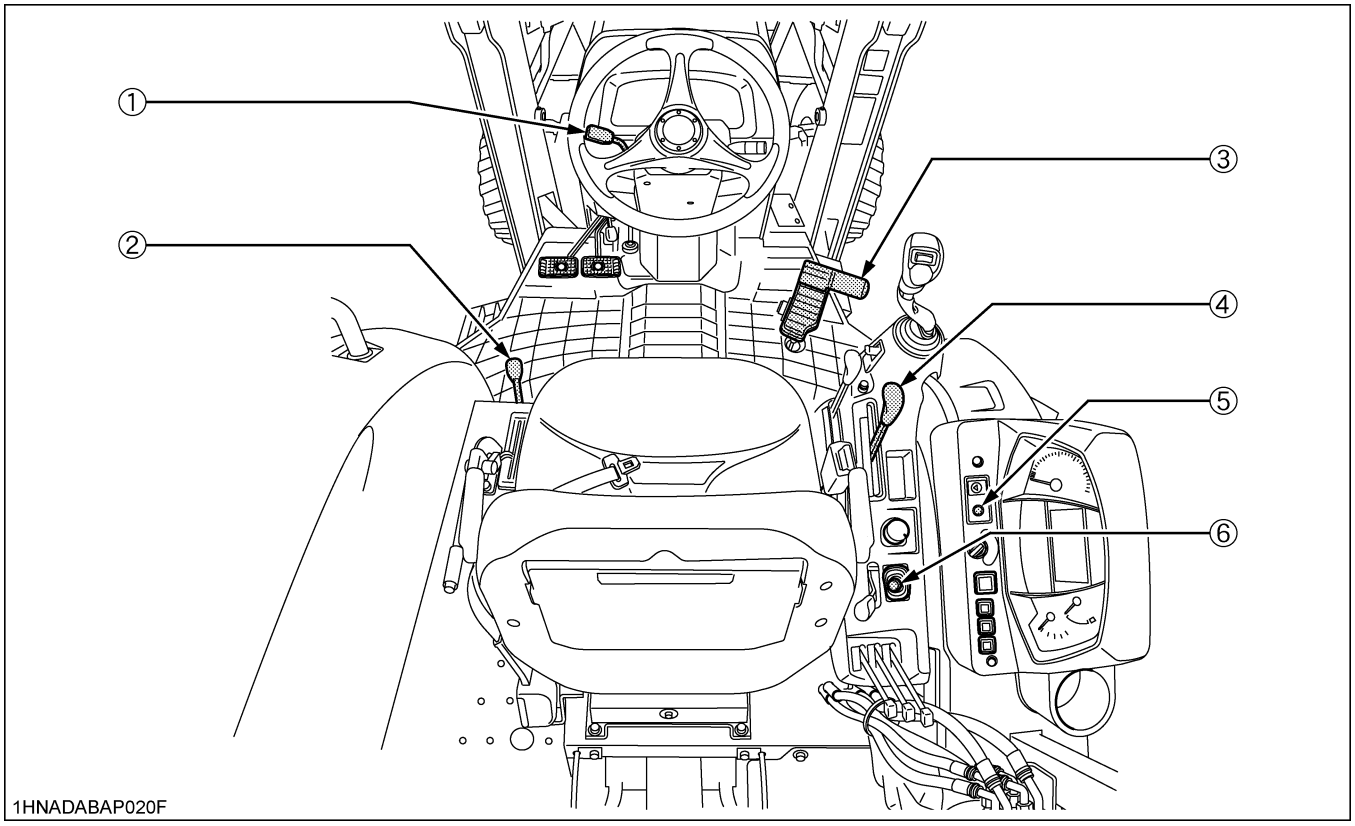

(1) H-DS lever
(2) Front wheel drive lever
(3) Speed control pedal
(4) Range gear shift lever
(5) ATA switch
(6) Crawl control lever

https://truckmanualshub.com/

■HST Response Control

HST response control is used to set the start-up response when you step on the speed control pedal and the engine brake effect when you release the pedal.
Set the HST response control toward "FAST", and the response level gets quicker. Set it toward "SLOW" to have a slower response level.
When you move the tractor forward and backward repeatedly, during loader operations, for example, set the HST response control toward "FAST". It helps improve the working efficiency.
When using "STALL GUARD" with PTO powered implements, the tractor automatically adjust for optimum response.

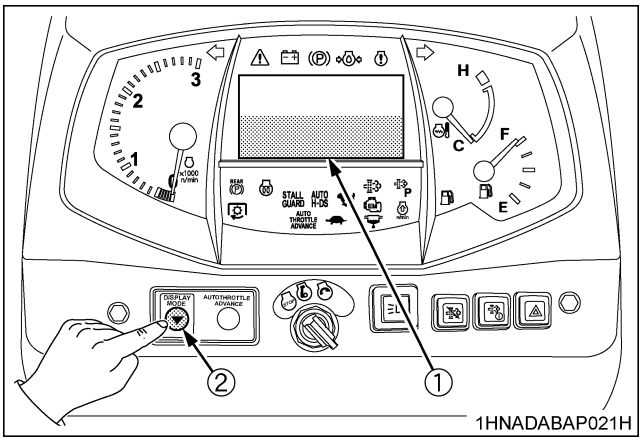

(1) IntelliPanel(TM) display
(2) Display mode button

◆ **Setting procedure**

1. Press the Display mode button to select the display (A).

(A)

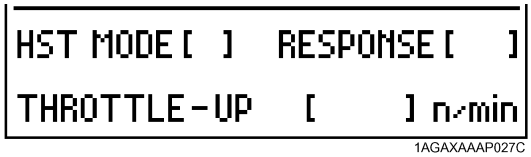

1AGAXAAAP027C

2. Hold down the Display mode button to highlight "HST MODE [ ]".

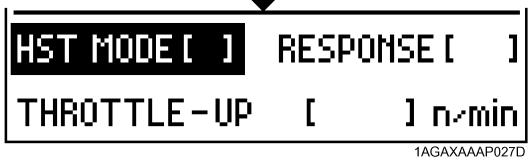

1AGAXAAAP027D

3. Press the Display mode button to highlight "RESPONSE [ ]".

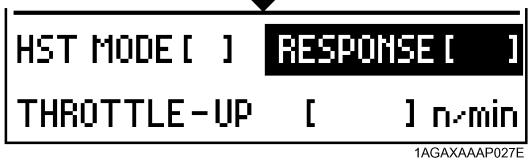

1AGAXAAAP027E

4. Hold down the Display mode button to switch to the display (B).
5. Press the Display mode button to move on to the next liquid crystal cell (black) toward "FAST" or "SLOW" up to a desired position.
6. Hold down the Display mode button, and the setting is made and the display (A) is resumed.

(B)

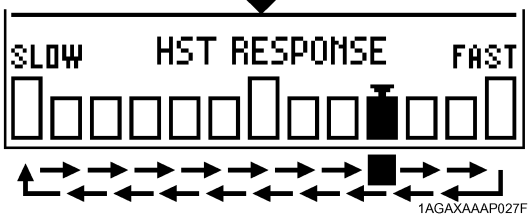

1AGAXAAAP027F

https://truckmanualshub.com/

■H-DS (Hydro Dual Speed) Lever

This lever changes the tractor speed in 2 stages whether the tractor is moving or not.

Pull up the lever to increase the speed, and push it down to decrease the speed. The selected speed can be checked with the indicator on the meter panel.

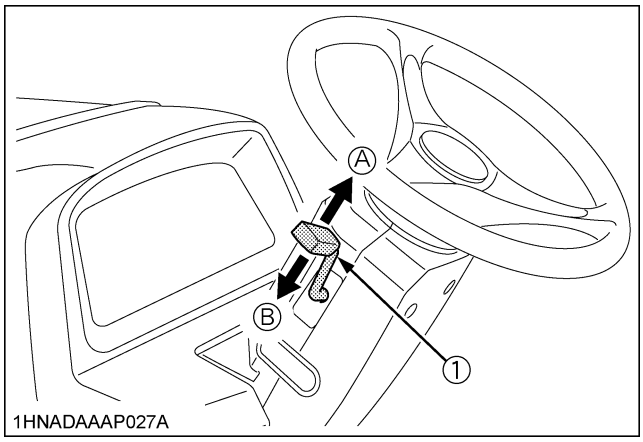

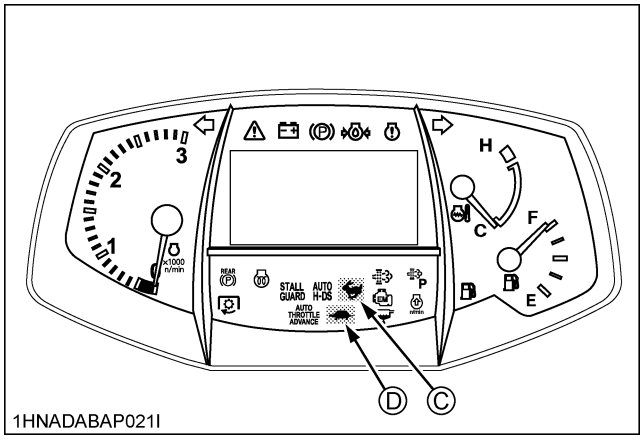

(1) H-DS lever

(A) "UP" (Hi)
(B) "DOWN" (Lo)
(C) " " (Hi)
(D) " " (Lo)

https://truckmanualshub.com/

■HST Mode

"MANUAL", "STALL GUARD" or "AUTO H-DS/STALL GUARD" can be selected.
Choose the best mode according to the type of job or your operating style. The selected mode is displayed on the indicator on the meter panel.

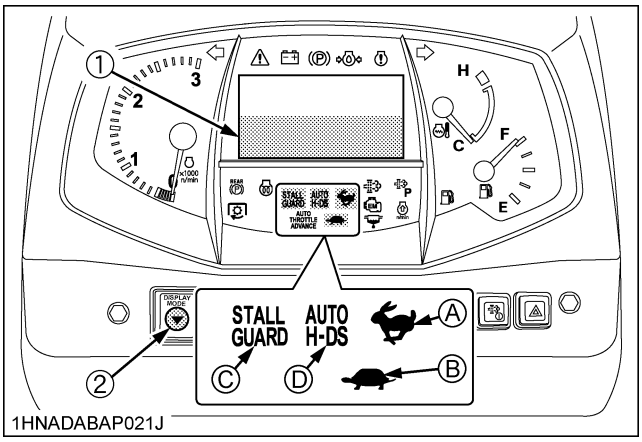

(1) IntelliPanel(TM) display
(2) Display mode button
(A) " " (Hi)
(B) " " (Lo)
(C) "STALL GUARD"
(D) "AUTO H-DS"

◆ Setting procedure

1. Press the Display mode button to select the display (A).

(A)

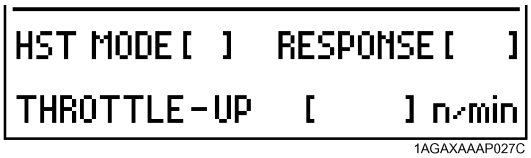

1AGAXAAAP027C

2. Hold down the Display mode button to highlight "HST MODE [ ]".

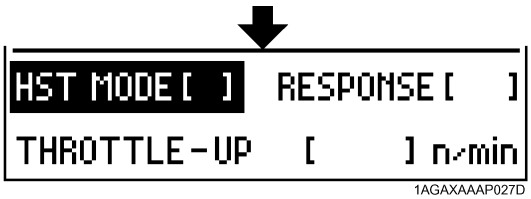

1AGAXAAAP027D

3. Hold down the Display mode button to switch to the display (B).
4. Each time the Display mode button is pressed, the STALL GUARD and AUTO H-DS modes are configured differently. Choose your desired combination.
5. Hold down the Display mode button, and the setting is made and the display (A) is resumed.

(B)

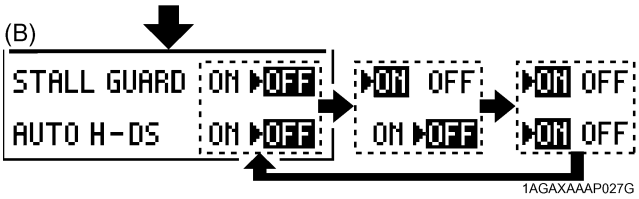

1AGAXAAAP027G

https://truckmanualshub.com/

◆ STALL GUARD

1. The "STALL GUARD" indicator lights up on the meter panel, when:
2. The tractor gets overloaded and the engine rpm drops, the tractor automatically slows down in response to the load, which prevents an engine stall.
3. Using PTO driven implements and the tractor is in "STALL GUARD" mode, the tractor speed will automatically adjust with the loads on the engine.

◆ AUTO H-DS/STALL GUARD

1. The "STALL GUARD" and "AUTO H-DS" indicators light up on the meter panel, when:
2. Setting the H-DS lever to the "UP" (Hi) position. Make sure the " " (Hi) lamp lights up on the meter panel.
3. Using PTO driven implements and the tractor is in "STALL GUARD" mode, the tractor speed will automatically adjust with the loads on the engine.
4. The tractor gets overloaded and the engine rpm drops, the tractor automatically slows down to the (Lo) low speed range.
   In this case, the " " (Hi) lamp goes out and the " " (Lo) lamp lights up instead.
5. The engine rpm has come up again, the tractor automatically speeds up from the (Lo) low speed range to the (Hi) high speed range. (The tractor speed increases to match the speed control pedal.) If the load is rather heavy and the engine rpm drops further, "STALL GUARD" will still prevent engine stall.

NOTE :

- When the H-DS lever is set at the "Lo" position, the "AUTO H-DS" system does not work. (If the " " (Lo) lamp stays on and the "AUTO H-DS" lamp is flashing, set the H-DS lever to the "Hi" position.)
- Even in the "AUTO H-DS/STALL GUARD" mode, the Hi-Lo speed change can be made with this lever. Return the lever to the "Hi" position when there is no more need to slow down.
- When "STALL GUARD" is on and the PTO is engaged, "STALL GUARD" switches to "STALL GUARD PLUS" mode.
  "STALL GUARD PLUS" maintains engine speed at a higher rate.

◆ MANUAL

When the "STALL GUARD" and "AUTO H-DS" indicators go out on the meter panel, the unit is in manual mode.

In this mode, automatic control in response to the load does not activate.

https://truckmanualshub.com/

■Throttle-Up Switch

The Throttle-Up switch allows the operator to easy raise engine speed temporarily, on demand, to increase hydraulic pump output. When this switch is hold down, front attachment can operate faster.
The Throttle-Up engine speed can be set through the Intellpanel(TM) display (see setting procedure). Release the switch to return engine speed to the throttle lever setting.
Although the Throttle-Up switch increases engine speed, the traveling speed of the tractor does not change.

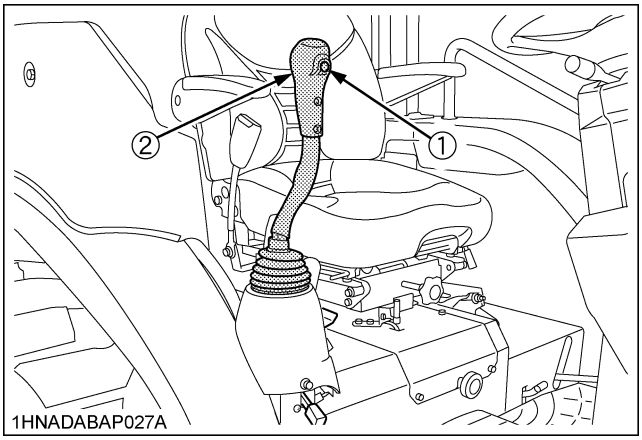

(1) Throttle-Up switch
(2) Loader / Remote control valve lever

◆ Setting procedure

1. Press the Display mode button to select the display (A).

(A)

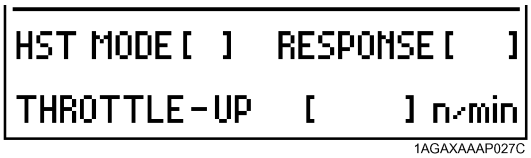

1AGAXAAAP027C

2. Hold down the Display mode button to highlight "HST MODE [ ]".

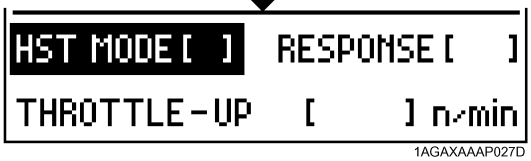

1AGAXAAAP027D

3. Press the Display mode button to highlight "THROTTLE-UP [ ] n/min".

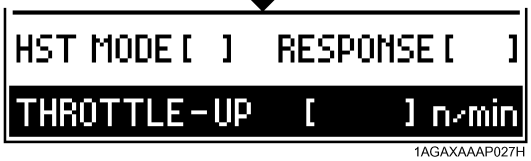

1AGAXAAAP027H

4. Hold down the Display mode button to switch to the display (B).
5. Press the Display mode button to move on to the next liquid crystal cell (black) to achieve a desired engine rpm.
6. Hold down the Display mode button, and the setting is made and the display (A) is resumed.

(B)

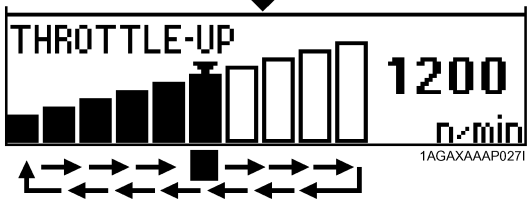

1AGAXAAAP027I

https://truckmanualshub.com/

■Range Gear Shift Lever (L-M-H)

The range gear shift can only be shifted when the tractor is completely stopped and the speed control pedal is in the neutral position.

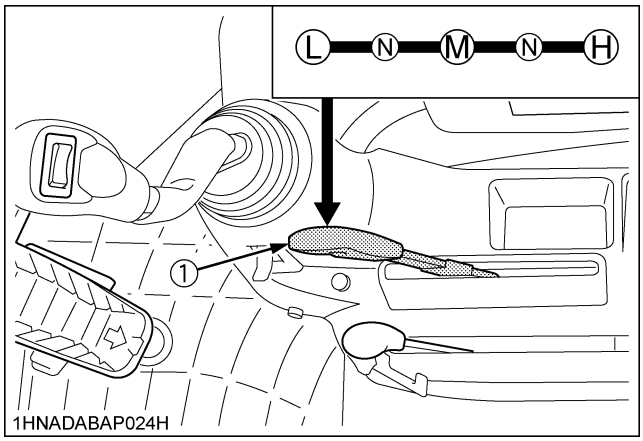

(1) Range gear shift lever (L-M-H) *(H) "HIGH"*
(M) "MIDDLE"
(L) "LOW"
(N) "NEUTRAL POSITION"

IMPORTANT:

To avoid transmission and shift linkage damage when shifting:

- Completely stop the tractor using the brake pedals.
- Do not force the range gear shift lever.
- If it is difficult to shift the lever into L, M, or H from neutral position:
  On slopes be sure to set the parking brake before starting the procedure.
  (1) Slightly depress the speed control pedal to rotate the gears inside of the transmission.
  (2) Release the speed control pedal to the neutral position.
  (3) Wait for a moment and then shift the lever.

NOTE :

- The range gear shift number being selected appears on the display.

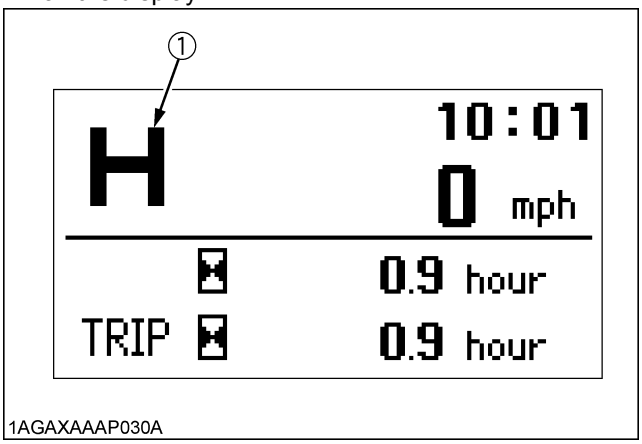

(1) Range gear shift number (H-M-L) *N: "NEUTRAL"*

https://truckmanualshub.com/

■Front Wheel Drive Lever

WARNING

To avoid personal injury or death:

- **Do not engage the front wheel drive when traveling at road speed.**
- **When driving on icy, wet or loose surfaces, make sure the tractor is correctly ballasted to avoid skidding and loss of steering control. Operate at reduced speed and engage front wheel drive.**
- **An accident may occur if the tractor is suddenly braked, such as by heavy towed loads shifting forward or loss of control.**
- **The braking characteristics are different between 2 and 4-wheel drive. Be aware of the difference and use carefully.**

Use the lever to engage the front wheels with the tractor stopped. Shift the lever to "ON" to engage the front wheel drive.

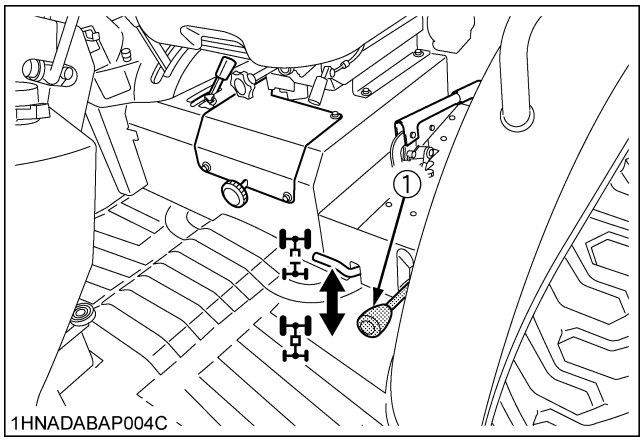

(1) Front wheel drive lever *"ON"* *"OFF"*

IMPORTANT :

- Depress the clutch pedal before engaging the front wheel drive lever.
- If the front wheel drive lever is difficult to set to OFF, stop the tractor, turn the steering wheel and move the lever.
- Tires will wear quickly if front wheel drive is engaged on paved roads.

◆ **Front wheel drive is effective for the following jobs:**

1. When greater pulling force is needed, such as working in a wet field, when pulling a trailer, or when working with a front-end loader.
2. When working in sandy soil.
3. When working on a hard soil where a rotary tiller might push the tractor forward.
4. For increased braking at reduced speed.

6. Accelerate the engine.

■Throttle Lever

Moving the throttle lever rearward decreases engine speed, and pulling it forward increases engine speed.

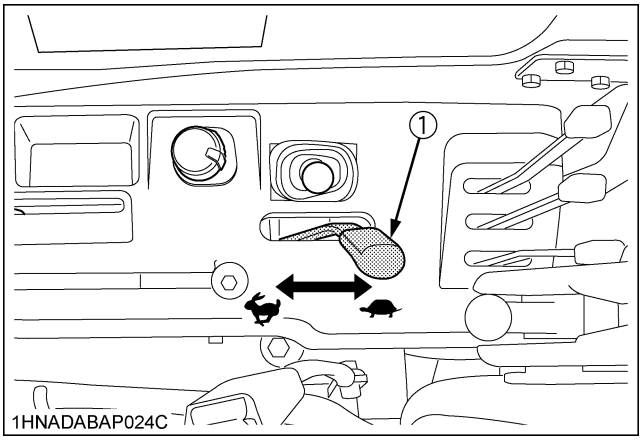

(1) Throttle lever *"INCREASE"* *"DECREASE"*

7. Unlock the parking brake.

■Parking Brake

To release the parking brake, depress the brake pedals again. When the parking brake is released, parking brake indicator in the Easy Checker(TM) goes off.

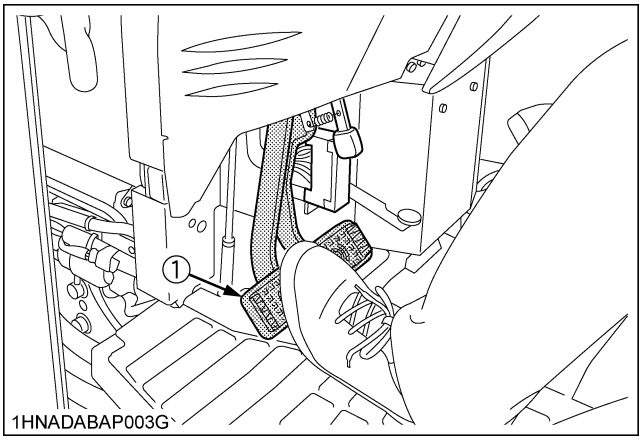

(1) Brake pedals

https://truckmanualshub.com/

NOTE :
- If the rear parking brake indicator comes on, release the rear parking brake.

To release the rear parking brake, push the release button and push down the rear parking brake lever.

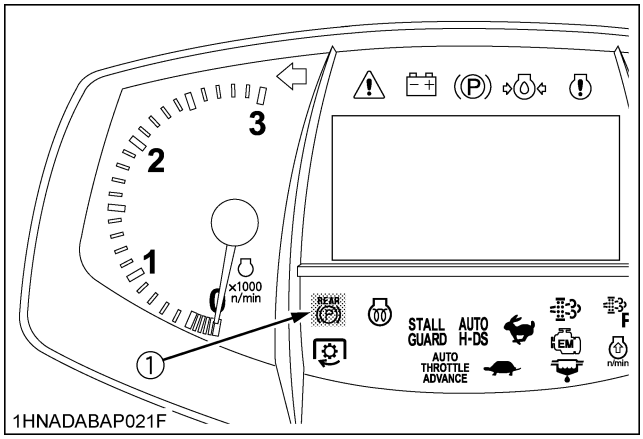

(1) Rear parking brake indicator

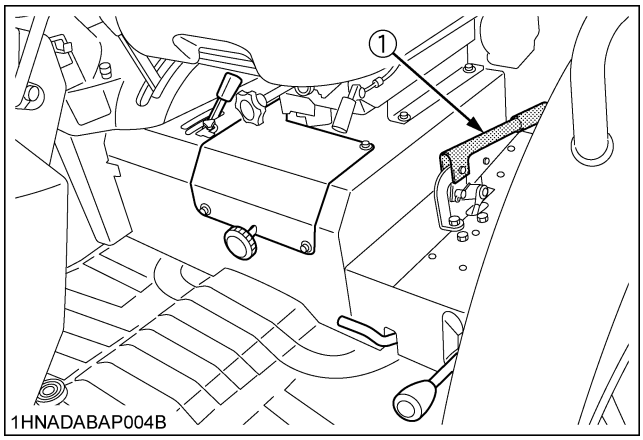

(1) Rear parking brake lever

8. Depress the Speed Control Pedal.

■Speed Control Pedal

WARNING

To avoid personal injury or death:
- **Do not operate if tractor moves on level ground with foot off of Speed Control Pedal.**
- **Consult your local KUBOTA Dealer.**

Forward Pedal

Depress the speed control pedal with the toe of your right foot to move forward.

Reverse Pedal

Depress the speed control pedal with the heel or toe of your right foot to move backward.

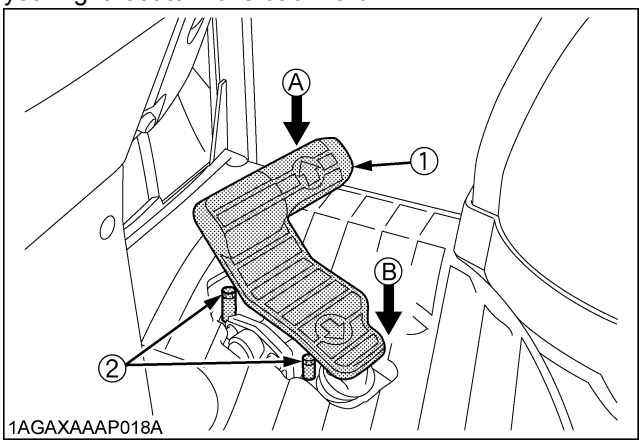

(1) Speed control Pedal *(A) "FORWARD"*
(2) Stopper bolt *(B) "REVERSE"*

IMPORTANT :
- To prevent serious damage to the HST, do not adjust the stopper bolts.

NOTE :
- When you stand up from the seat with the speed control pedal stepped, the engine will stop regardless of whether the tractor is moving or not. This is because the tractor is equipped with Operator Presence Control system (OPC).
- The buzzer sounds when moving backward.

https://truckmanualshub.com/

■ATA (Auto Throttle Advance) Switch

When this switch is pushed, ATA indicator will come on, and the tractor speed and the engine rpm can be controlled with the speed control pedal. It assists when pulling a trailer or the like more easily.
Before pushing this switch, be sure to return the speed control pedal to "NEUTRAL" position.
Press the switch again to disable the ATA function. The ATA indicator will turn off.

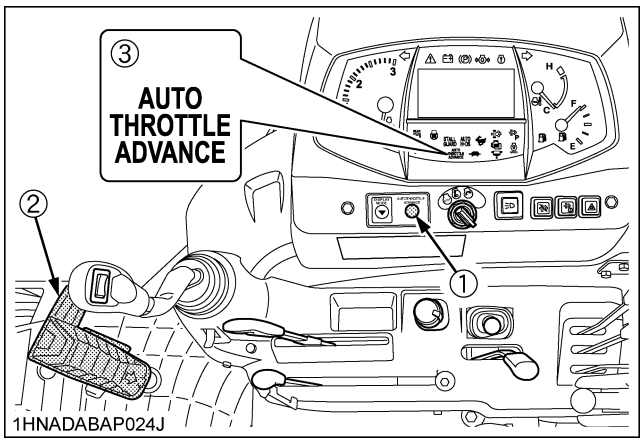

(1) ATA switch
(2) Speed control pedal
(3) ATA indicator

■Crawl Control Lever

This lever enables the tractor to move at the "CREEP" speed.

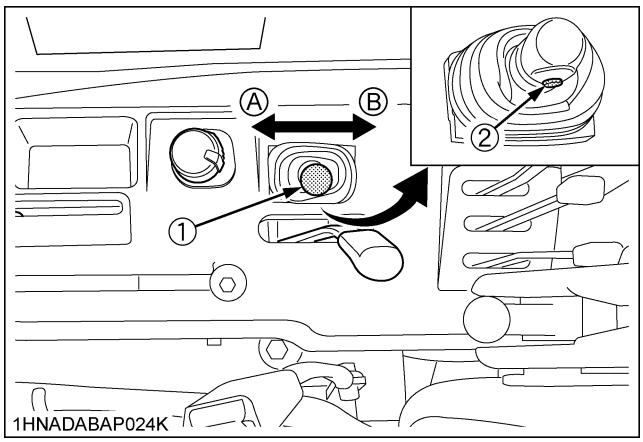

(1) Crawl control lever *(A) "FORWARD"*
(2) Safety switch *(B) "REVERSE"*

If the following messages appear in the display, follow the appearing instructions.

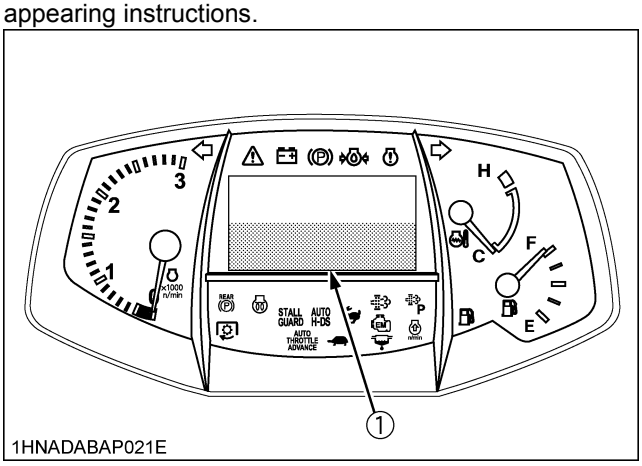

(1) Display

First: Safety Switch
Second: Crawl Control Lever

STOPPING

■Stopping

1. Slow down the engine.
2. Step on the brake pedal.
3. After the tractor has stopped, disengage the PTO, lower the implement to the ground, shift the transmission to neutral, release the clutch pedal, and set the parking brake.

https://truckmanualshub.com/

INTELLIPANEL(TM)

■Changing Display Mode

1. Pressing the Display mode button cycles the IntelliPanel(TM) through 6 different display.
2. When the key switch is set to "ON", the IntelliPanel(TM) will return to the last display mode used.

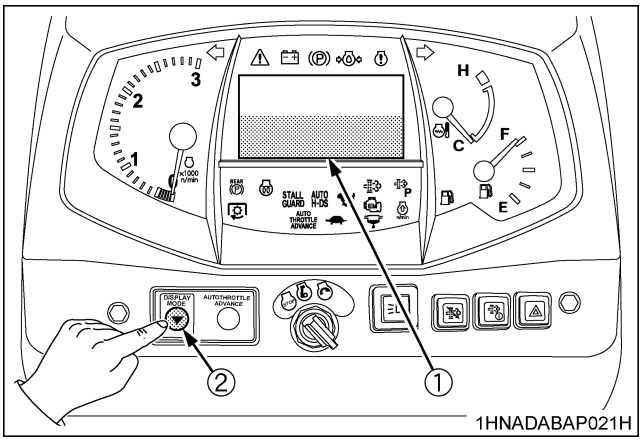

(1) IntelliPanel(TM) display
(2) Display mode button

Display 1: Hour meter / Trip meter mode	38.9 hour TRIP 25.7 hour 1AGAXAAAP032A	● [HOUR meter] Total operating hours are displayed. ● [TRIP meter] Total operating hours, counted from the previous resetting, is displayed. ● The hour meter indicates in 6 digits the hours the tractor has been used; the last digit indicates 1/10 of an hour.	Reference page 47
Display 2: Fuel consumption mode	Av. 5.6 gal/hr 301 gallon 1AGAXAAAP032B	● Average fuel consumption is measured per hour from the previous resetting. ● Total fuel consumption is measured from the previous resetting. ● Hold down the Display mode button, and the setting is reset to "0".	---
Display 3: PTO speed mode	Rear PTO 540 n/min 1AGAXAAAP032C	● The PTO speed is displayed when the PTO clutch control switch is in "ON" position. ● When the PTO clutch control switch is in "OFF" position, "OFF" is displayed.	69
Display 4: HST mode	HST MODE [2] RESPONSE [0] THROTTLE-UP [2600] n/min 1AGAXAAAP032D	● The HST mode, Response and Throttle-UP settings get displayed.	37 39 41
Display 5: PM buildup mode	PM 78% 1AGAXAAAP032E	● Displays the PM buildup inside the DPF muffler. ● Regeneration is needed when the 100% level has been reached. ● The more the bar is extended to the right, the more PM builds up.	16
Display 6: Service inspect mode	Engine oil was changed 39 hour 1AGAXAAAP032F	● The time elapsed since the previous engine oil change gets displayed.	48 49 99

NOTE :
- In cold weather the LCD meter response will normally be slower and the visibility be less, than in warmer weather.

https://truckmanualshub.com/

■Resetting the Trip Meter and Setting the Clock

◆ **Trip meter resetting procedure**

1. Press the Display mode button to select the display (A).

(A)

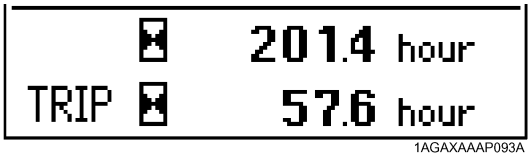

1AGAXAAAP093A

2. Hold down the Display mode button to switch to the display (B).
3. Press the Display mode button to highlight "Clear".

(B)

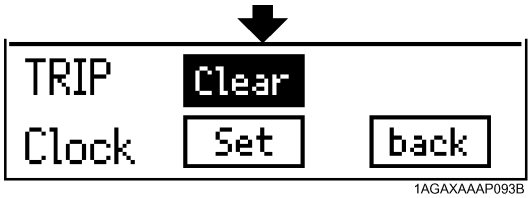

1AGAXAAAP093B

4. Hold down the Display mode button, the display (A) is resumed and the trip meter reads "0.0".

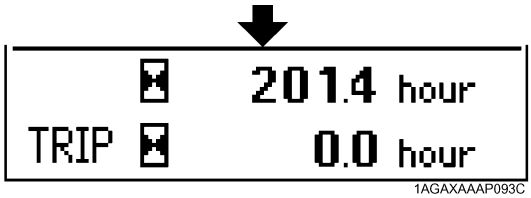

1AGAXAAAP093C

◆ **Clock setting/displaying procedure**

1. Press the Display mode button to select the display (A).

(A)

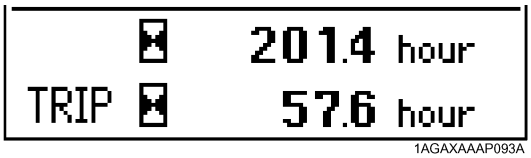

1AGAXAAAP093A

2. Hold down the Display mode button to switch to the display (B).

(B)

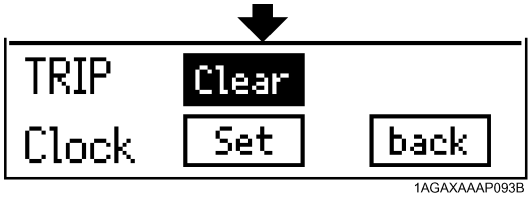

1AGAXAAAP093B

3. Press the Display mode button to highlight "Set"

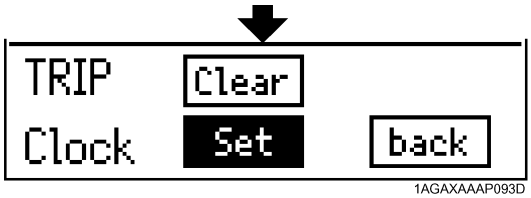

1AGAXAAAP093D

4. Hold down the Display mode button to switch to the display (C).
5. Press the Display mode button to select "Adjust".

(C)

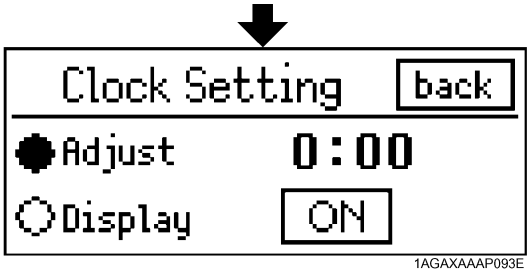

1AGAXAAAP093E

https://truckmanualshub.com/

6. Hold down the Display mode button to highlight the "hour" digits of the clock. Press the Display mode button to enter a specified "hour".
   Hold down the Display mode button to highlight the "minute" digits of the clock.
   Press the Display mode button to enter a specified "minute". Hold down the Display mode button, and the display (C) is resumed.

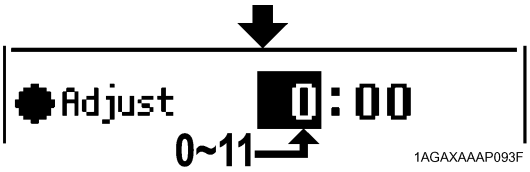

1AGAXAAAP093F

7. Press the Display mode button to select "Display". Hold down the Display mode button to highlight the "ON" indication.
   Each time the Display mode button is pressed, the "ON" and "OFF" indications are alternately switched. With "OFF" selected, the clock display disappears from the IntelliPanel(TM).

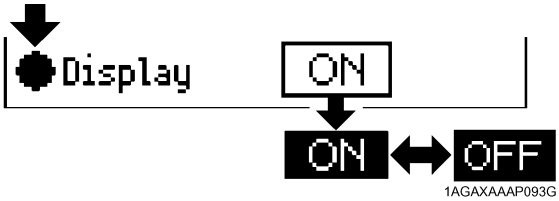

1AGAXAAAP093G

8. Hold down the Display mode button to get back to the display (C).
   Press the Display mode button to highlight "back" and hold down the Display mode button to get back to the display (B).
   Press the Display mode button to highlight "back" and hold down the Display mode button to get back to the display (A).

■SERVICE INSPECT mode displaying/ resetting procedure

1. Press the Display mode button to select the display (A).

(A)
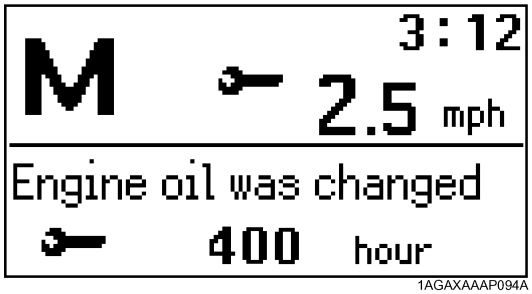

1AGAXAAAP094A

2. Hold down the Display mode button to switch to the display (B).
3. Pressing the Display mode button cycles through the list of maintenance items selected.
   Maintenance items that have reached their maintenance intervals are also highlighted.

(B)
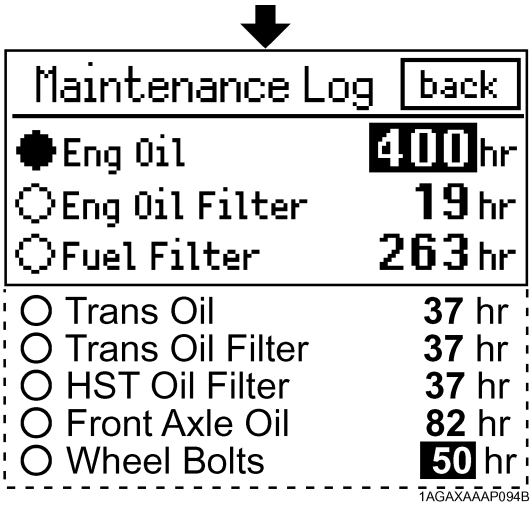

1AGAXAAAP094B

https://truckmanualshub.com/

4. With such item selected, hold down the Display mode button, and the hours are reset to zero.

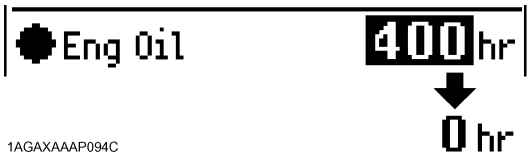

1AGAXAAAP094C

5. Press the Display mode button to highlight "back" and hold down the Display mode button to get back to the display (A).

CHECK DURING DRIVING

■IntelliPanel(TM) Message

If any of the following messages appear during operation, immediately stop the machine and follow the message's instructions. If the cause of trouble has not been pinpointed, consult your local KUBOTA Dealer.

◆ Engine over heat

If the engine gets overheated, the following message appears.

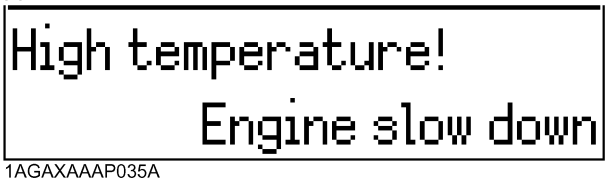

1AGAXAAAP035A

1. Stop operation and set the engine to the idling speed.
2. When the coolant temperature has dropped, the following message appears instead.

1AGAXAAAP036A

3. Stop the engine, wait for 30 minutes until the machine cools down, and check the following points.
   (1) Check the reserve tank and radiator for cooling water shortage or leak.
   (2) Check the insect screening and radiator for chaff and dust deposits.
   (3) Check the fan belt for slack.

IMPORTANT :
- If steam gushes out of the reserve tank's overflow pipe, take the measure discussed above.

◆ SERVICE INSPECT

1. The service inspect indicator shows up when the time for an engine oil change has come. Change the engine oil with fresh one.
   (See "Changing Engine Oil" in "EVERY 400 HOURS" in "PERIODIC SERVICE" section.)
2. After an engine oil change, reset the engine oil hour display to zero on the Maintenance Log screen in service inspect mode. The service inspect indicator goes out.
   (See "SERVICE INSPECT mode displaying/resetting procedure" in "INTELLIPANEL(TM)" in "OPERATING THE TRACTOR" section.)

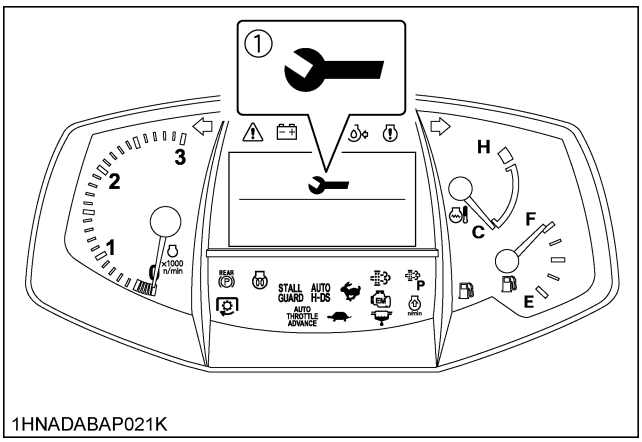

1HNADABAP021K

(1) Service inspect indicator

■Immediately Stop the Engine if:

- The engine suddenly slows down or accelerates.
- Unusual noises are suddenly heard.
- Exhaust fumes suddenly become very dark.

https://truckmanualshub.com/

■Easy Checker(TM)

If the indicators in the Easy Checker(TM) come on during operation, immediately stop the engine, and find the cause as shown below.
Never operate the tractor while Easy Checker(TM) lamp is on.

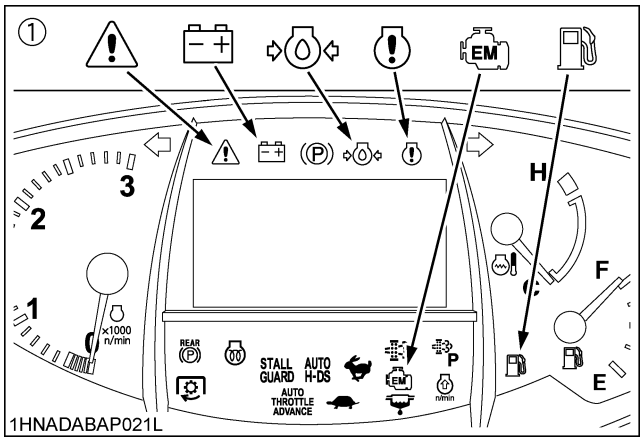

(1) Easy checker(TM)

Engine oil pressure

If the oil pressure in the engine goes below the prescribed level, the warning lamp in the Easy Checker(TM) will come on.
If this should happen during operation, and it does not go off when the engine is accelerated to more than 1000 rpm, check level of engine oil.
(See "Checking Engine Oil Level" in "DAILY CHECK" in "PERIODIC SERVICE" section.)

Electrical charge

If the alternator is not charging the battery, the Easy Checker(TM) will come on.
If this should happen during operation, check the electrical charging system or consult your local KUBOTA Dealer.

Fuel level

If the fuel in the tank goes below the prescribed level, the warning lamp in the Easy Checker(TM) will come on. (less than 12 L.)
If this should happen during operation, refuel as soon as possible.
(See "Checking and Refueling" in "DAILY CHECK" in "PERIODIC SERVICE" section.)

This indicator serves the following two functions. If the indicator lights up, pinpoint the cause and take a proper measure.

1. Error with the engine control system
   If during operation the water temperature gauge reads an acceptable level but the warning lamp in the Easy Checker(TM) comes on, stop the engine and get it restarted. If the error happens again, consult your local KUBOTA Dealer.

IMPORTANT :
- If the warning indicator lights up, the following phenomena may appear depending on the engine's trouble spot.
  - The engine stops unexpectedly.
  - The engine fails to start or gets interrupted just after start.
  - The engine output is not enough.
  - The engine output is enough, but the warning indicator stays on.

  If the engine output is not enough, immediately interrupt the operation and move the tractor to a safe place and stop the engine.

2. Engine overheat
   If the water temperature gauge reads an unusual level and the warning lamp in the Easy Checker(TM) comes on, the engine may have got overheated. Check the tractor by referring to "TROUBLESHOOTING" section.

Water separator

If water or impurities collect in the water separator, the indicator in the Easy Checker(TM) will light up.
If this should happen during operation, drain the water from the water separator as soon as possible.
(See "Checking Water Separator" in "DAILY CHECK" in "PERIODIC SERVICE" section.)

Emission indicator

If this indicator lights up, take the steps to lower the water temperature. This helps keep the emission clean.

Master system warning

If trouble should occur at the engine, transmission or other control parts, the indicator flashes as a warning.
If the trouble is not corrected by restarting the tractor, consult your local KUBOTA Dealer.

https://truckmanualshub.com/

■Fuel Gauge

A needle indicates the amount of fuel left regardless of the key position.

Be careful not to empty the fuel tank. Otherwise air may enter the fuel system.

Should this happen, the system should be bled. (See "Bleeding Fuel System" in "SERVICE AS REQUIRED" in "PERIODIC SERVICE" section.)

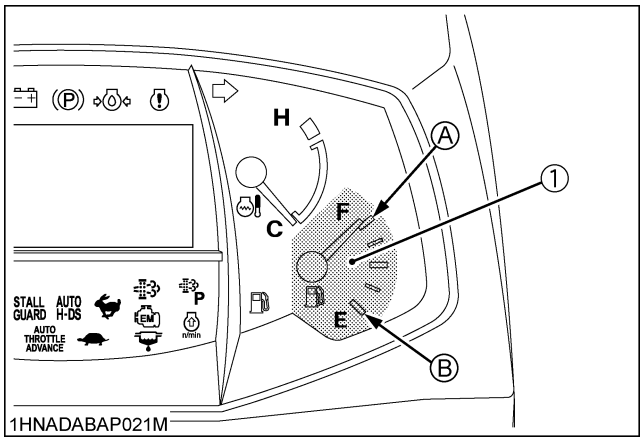

(1) Fuel gauge *(A) "FULL"* *(B) "EMPTY"*

NOTE :

- When the fuel has got shorter than 12 L (3.1 U.S.gals.) or so, the Fuel level indicator and the message appears on the IntelliPanel(TM).
  If this should happen during operation, refuel as soon as possible. (See "Checking and Refueling" in "DAILY CHECK" in "PERIODIC SERVICE" section.)

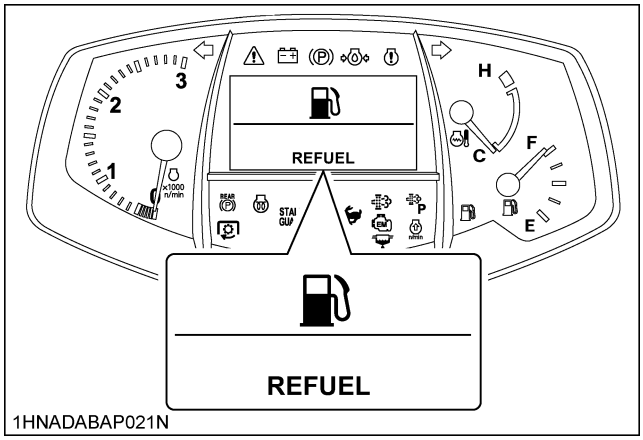

■Coolant Temperature Gauge

WARNING

To avoid personal injury or death:

- **Do not remove radiator cap until coolant temperature is well below its boiling point. Then loosen cap slightly to the stop to relieve any pressure before removing cap completely.**

1. With the key switch at "ON", this gauge indicates the temperature of the coolant. "C" for "cold" and "H" for "hot".
2. If the indicator reaches the red zone position, engine coolant is overheated. Check the tractor by referring to "TROUBLESHOOTING" section.

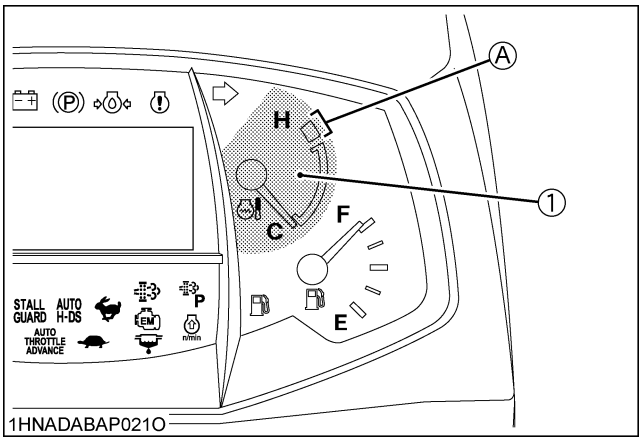

(1) Coolant temperature gauge *(A) "RED ZONE"*

■Tachometer

The tachometer indicates the engine speed.

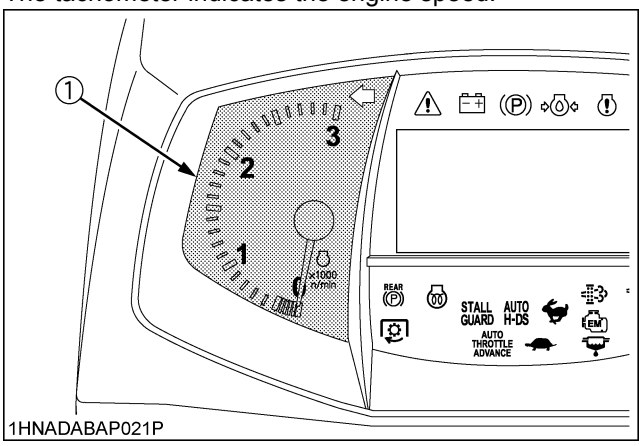

(1)Engine revolution

https://truckmanualshub.com/

PARKING

■Parking

WARNING

To avoid personal injury or death:
BEFORE DISMOUNTING TRACTOR

- **ALWAYS SET PARKING BRAKE AND LOWER ALL IMPLEMENTS TO THE GROUND.**
  Leaving transmission in gear with the engine stopped will not prevent tractor with HST transmission from rolling.
- **STOP THE ENGINE AND REMOVE THE KEY.**

1. When parking, be sure to set the parking brake.
   To set the parking brake;
   (1) Interlock the brake pedals.
   (2) Depress the brake pedals.
   (3) Latch the brake pedals with the parking brake lever.

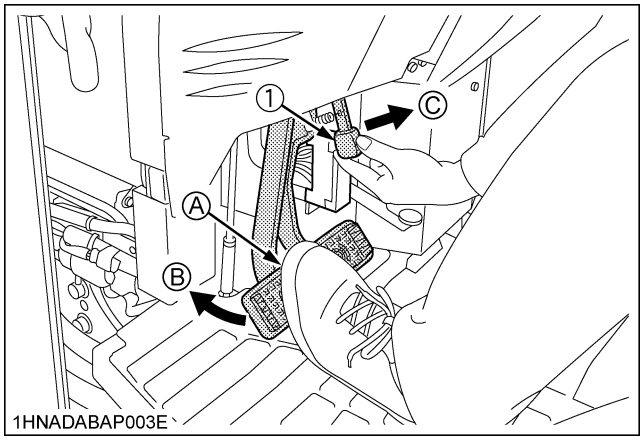

(1) Parking brake lever
(A) Interlock the brake pedals
(B) "DEPRESS"
(C) "PULL"

IMPORTANT :

- To prevent damage to the parking brake lever, make sure that brake pedals are fully depressed before pulling the parking brake lever up.

2. Before getting off the tractor, disengage the PTO, lower all implements to the ground, place all control levers in their neutral positions, set the parking brake, stop the engine and remove the key.
3. If it is necessary to park on an incline, be sure to chock the wheels to prevent accidental rolling of the machine.

OPERATING TECHNIQUES

■Differential Lock

WARNING

To avoid personal injury or death due to loss of steering control:

- **Do not operate the tractor at high speed with differential lock engaged.**
- **Do not attempt to turn with the differential lock engaged.**
- **Be sure to release the differential lock before making a turn in field conditions.**

If one of the rear wheels should slip, step on the differential lock pedal. Both wheels will turn together, then reduce slippage.
Differential lock is engaged only while the pedal is depressed.

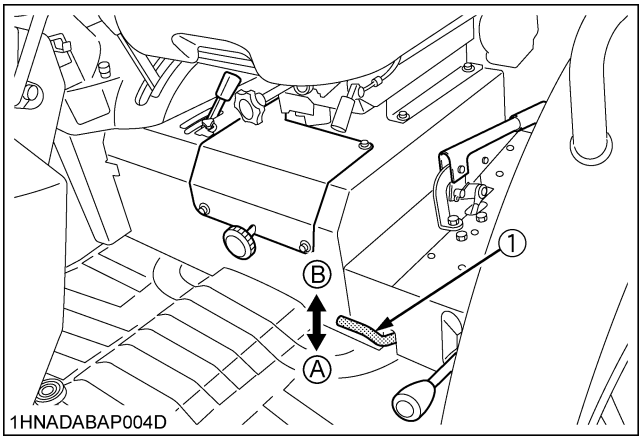

(1) Differential lock pedal
(A) Press to "ENGAGE"
(B) Release to "DISENGAGE"

IMPORTANT :

- When using the differential lock, always slow the engine down.
- To prevent damage to power train, do not engage differential lock when one wheel is spinning and the other is completely stopped.
- If the differential lock cannot be released, step lightly on the brake pedals alternately.

https://truckmanualshub.com/

■Operating the Tractor on a Road

WARNING

To avoid personal injury or death:

- **To help assure straight line stops when driving at transport speeds, lock the brake pedals together. Uneven braking at road speeds could cause the tractor to roll-over.**
- **When traveling on road with 3-point hitch mounted implement attached, be sure to have sufficient front weight on the tractor to maintain steering ability.**

Be sure SMV emblem and warning lamps are clean and visible. If towed or rear-mounted equipment obstructs these safety devices, install SMV emblem and warning lamps on equipment.
Consult your local KUBOTA Dealer for further details.

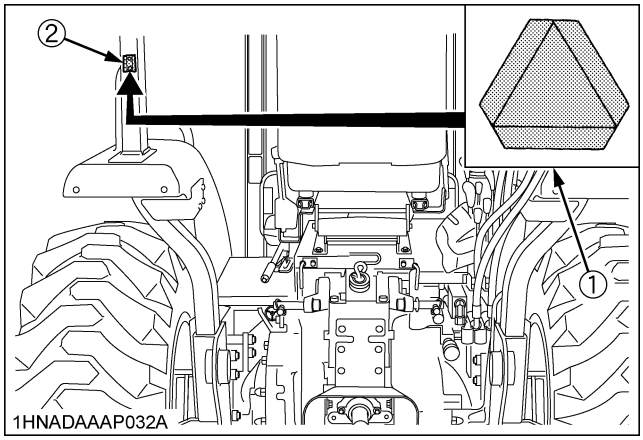

(1) SMV emblem
(2) Bracket

■Operating on Slopes and Rough Terrain

WARNING

To avoid personal injury or death:

- **Always back up when going up a steep slope. Driving forward could cause the tractor to tip over backward. Stay off hills and slopes too steep for safe operation.**
- **Avoid changing gears when climbing or descending a slope.**
- **If operating on a slope, never disengage the clutch or shift levers to neutral. Doing so could cause loss of control.**
- **Do not drive the tractor close to the edges of ditches or banks which may collapse under the weight of the tractor. Especially when the ground is loose or wet.**

1. Be sure wheel tread is adjusted to provide maximum stability.
   (See "Treads" in "TIRES, WHEELS AND BALLAST" section)
2. Slow down for slopes, rough ground, or sharp turns, especially when transporting heavy, rear mounted equipment.
3. Before descending a slope, shift to a gear low enough to control speed without using brakes.

■Transport the Tractor Safely

1. The tractor, if damaged, must be carried on a truck. Secure the tractor tightly with ropes.
2. Follow the instruction below when towing the tractor: Otherwise, the tractor's powertrain may get damaged.
   - Set the all shift levers to "NEUTRAL" position.
   - If possible, start engine and select 2WD, if creep speed is fitted ensure that it is disengaged.
   - Tow the tractor using its front hitch or drawbar.
   - Never tow faster than "10 km/h (6.2 mph)".

■Directions for Use of Power Steering

1. Power steering is activated only while the engine is running. Slow engine speeds make the steering a little heavier. While the engine is stopped, the tractor functions in the same manner as tractors without power steering.
2. When the steering wheel is turned all the way to the stop, the relief valve is activated. Do not hold the steering wheel in this position for a long period of time.
3. Avoid turning the steering wheel while the tractor is stopped, or tires may wear out sooner.
4. The power steering mechanism makes the steering easier. Be careful when driving on a road at high speeds.

https://truckmanualshub.com/

REVERSING THE SEAT

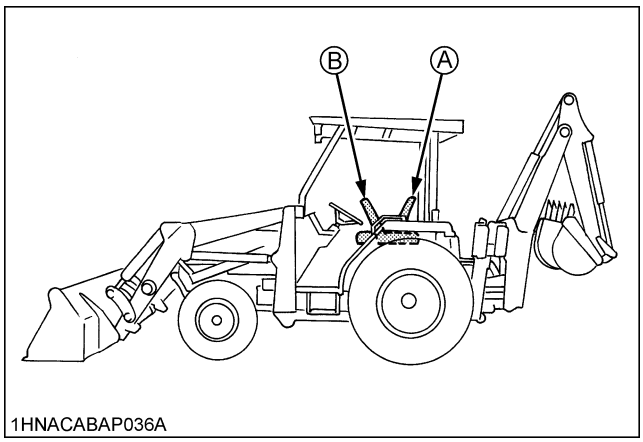

(A) "TRACTOR DRIVING POSITION"
(B) "BACKHOE POSITION"

The seat is reversible for backhoe operation. Follow the procedure below to turn the seat around.

1. Unlock the seat lock lever.

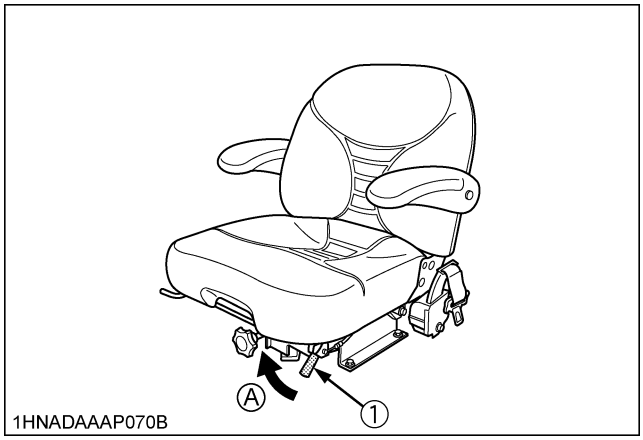

(1) Seat lock lever *(A) "UNLOCK"*

2. Turn the seat to counterclockwise for backhoe operation.
   The seat is automatically locked at the backhoe position.

IMPORTANT :
- When rotating seat, do not hit any controls or levers.

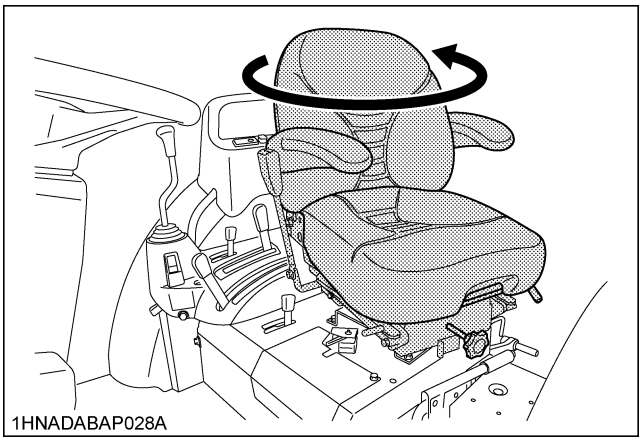

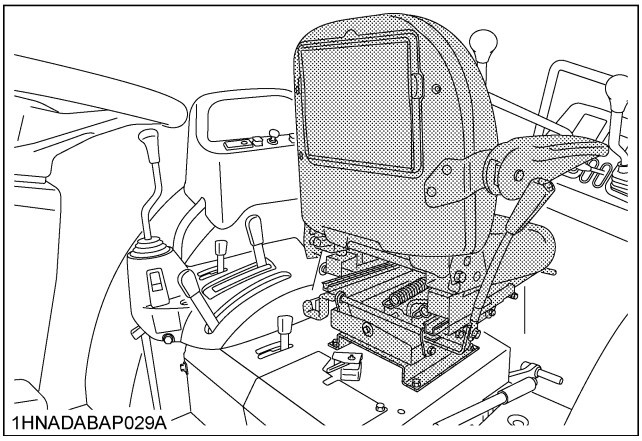

3. For tractor driving position, unlock the seat lock lever and turn the seat clockwise.

IMPORTANT :
- See "Operator's Seat" in "STARTING" when using seat in driving position.
- To prevent damage to the lock lever or to release the seat lock properly, do not attempt to pull up the lock lever with extreme force while sitting on the seat. First lift yourself from the seat, and then pull up the lock lever.

https://truckmanualshub.com/

OPERATING THE LOADER

CONTROL LEVER

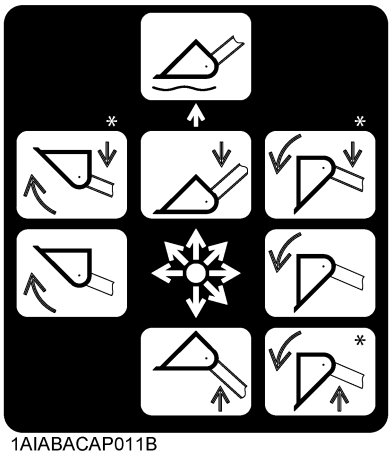

1AIABACAP011B

NOTE :
- When the lever is at each corner position marked by asterisk (*), boom and bucket cylinders work at the same time. However, the blank position (Raise & Roll back) is not recommended for scooping because of insufficient lift force.

To begin a test operation, slightly move the control lever from the "N" position. Slowly raise the loader boom just enough for the bucket to clear the ground when fully dumped. Slowly work through the dump and roll back cycles.

IMPORTANT :
- If the boom or bucket does not work in the directions indicated on the label, lower the bucket to the ground, stop the engine, and relieve all hydraulic pressure. Recheck and correct all hydraulic connections.

OPERATING THE LOADER

The loader should be operated with the tractor engine speed depending on the application and the operator's level of experience. Excessive speeds are dangerous, and may cause bucket spillage and unnecessary strain on the tractor and loader.

When operating in temperatures below -1℃ (30℉), run the tractor engine below 1200 rpm until the oil temperature exceeds -1℃ (30℉).

The following text and illustrations offer suggested loader and tractor operating techniques.

FILLING THE BUCKET

Approach and enter the pile with a level bucket.

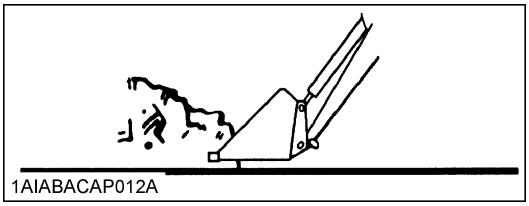
1AIABACAP012A

Ease control lever toward you and then left to rollback and lift the bucket.

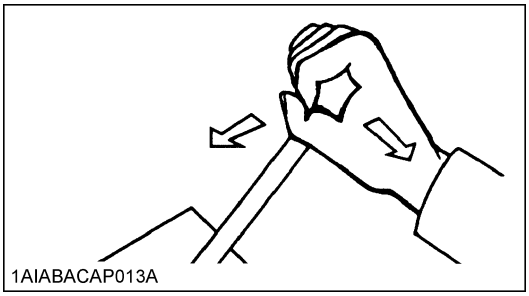
1AIABACAP013A

The rollback and lifting of the bucket will increase efficiency because a level bucket throughout the lifting cycle resists bucket lift and increases breakaway effort.

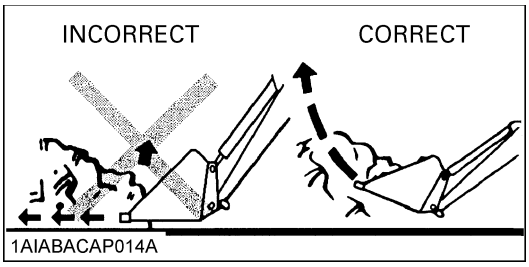

1AIABACAP014A

https://truckmanualshub.com/

NOTE :
- Do not be concerned if the bucket is not completely filled during each pass. Maximum productivity is determined by the amount of material loaded in a given period of time. Time is lost if 2 or more attempts are made to fill the bucket on each pass.

LIFTING THE LOAD

When lifting the load, keep the bucket positioned to avoid spillage.

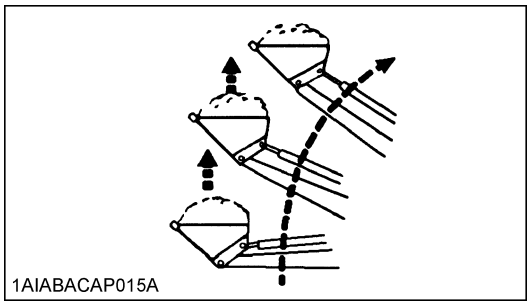
1AIABACAP015A

WARNING

To avoid personal injury or death:
- **Do not attempt to lift bucket loads in excess of the loader capacity.**
- **Before raising the bucket to full height, make sure the tractor is on level ground. If not, it may tip over, even if the tractor is not moving.**

CARRYING THE LOAD

Position the bucket just below the level of the tractor hood for maximum stability and visibility, whether the bucket is loaded or empty.

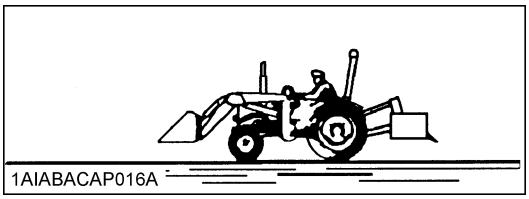
1AIABACAP016A

Use extreme care when operating the loader on a slope. Keep the bucket as low as possible. This keeps the bucket and tractor center of gravity low and will provide maximum tractor stability.

WARNING

To avoid personal injury or death:
- **Be extra careful when working on inclines.**
- **When operating on a slope, always operate up and down the slope, never across the slope.**

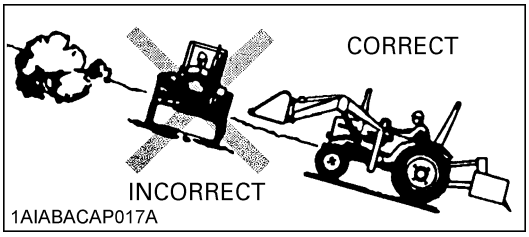

1AIABACAP017A

When transporting a load, keep the bucket as low as possible to avoid tipping, in case a wheel drops in a rut.

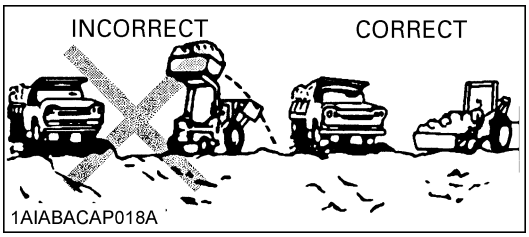

1AIABACAP018A

https://truckmanualshub.com/

DUMPING THE BUCKET

Lift the bucket just high enough to clear the side of the vehicle. Move the tractor in as close to the side of the vehicle as possible, then dump the bucket.

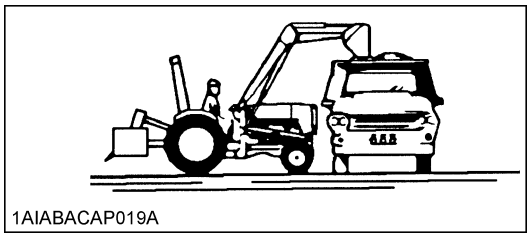

LOWERING THE BUCKET

After the bucket is dumped, back away from the vehicle while lowering and rolling back the bucket.

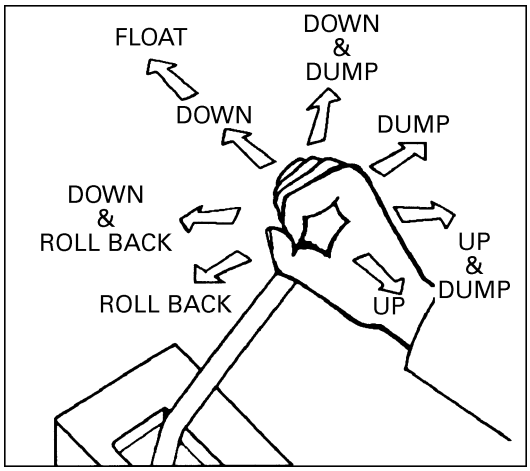

OPERATING WITH FLOAT CONTROL

During operation on hard surfaces, keep the bucket level and put the lift control in the float position to permit the bucket to float on the working surface.

If hydraulic down pressure is exerted on the bucket it will wear faster than normal.

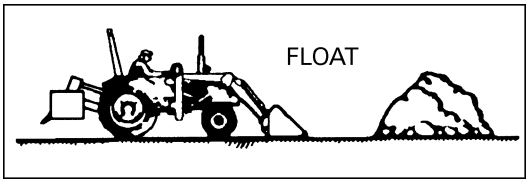

The float position will also avoid mixing of surface material with stockpile material. The float position will reduce the chance of surface gouging while removing snow or other material, or when working with a blade.

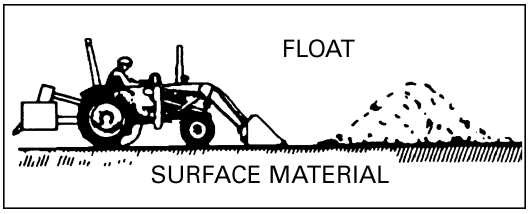

LOADING FROM A BANK

Choose a forward gear that provides a safe ground speed and power for loading.

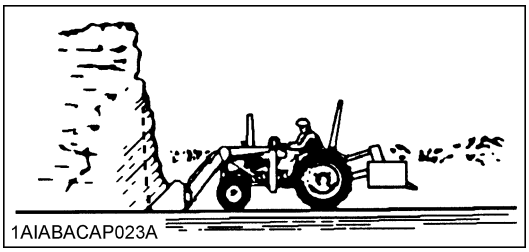

WARNING

To avoid personal injury or death:

- **Be extra careful when working on inclines.**
- **When operating on a slope, always operate up and down the slope, never across the slope.**

NOTE :

- Loader lift and break-away capacity diminish as loading height is increased.

Side cutting is a good technique for cutting down a big pile. Wheel width should not exceed the bucket width for this procedure.

https://truckmanualshub.com/

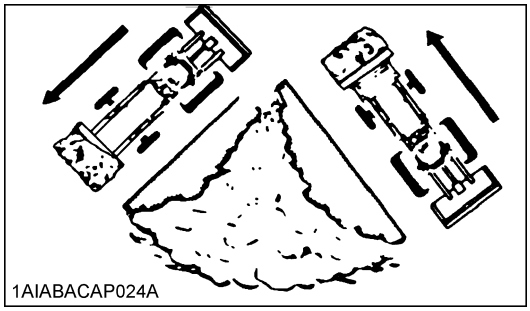
1AIABACAP024A

If the pile sides are too high and liable to cause cave-in, use the loader to break down the sides until a slot can be cut over the top.

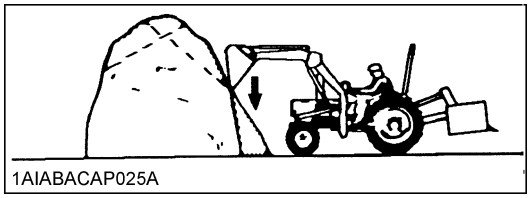
1AIABACAP025A

Another method for large dirt piles is to build a ramp to approach the pile.

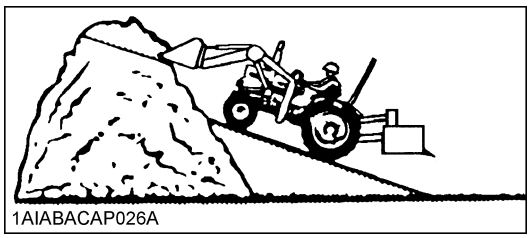
1AIABACAP026A

It is important to keep the bucket level when approaching a bank or pile. This will help avoid gouging the work area.

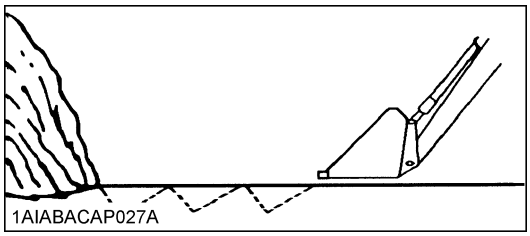
1AIABACAP027A

PEELING AND SCRAPING

Use a slight bucket down angle, travel forward, and hold the lift control forward to start the cut. Make a short cut and break-out cleanly.

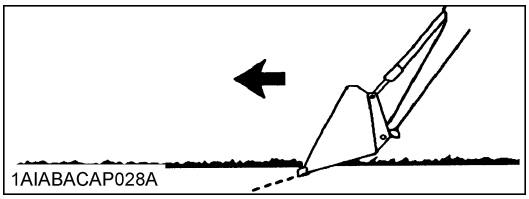
1AIABACAP028A

With the bucket level, start a cut at the notch approximately 2 in. deep. Hold the depth by feathering the bucket control to adjust the cutting edge up or down. When the front tires enter the notch, adjust the boom cylinder to maintain proper depth.

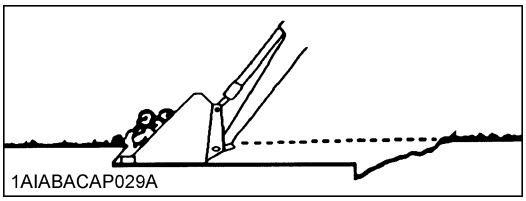
1AIABACAP029A

Make additional passes until the desired depth is reached. During each pass, use only the bucket control while at working depth. This will allow you to concentrate on controlling the bucket angle to maintain a precise cut.

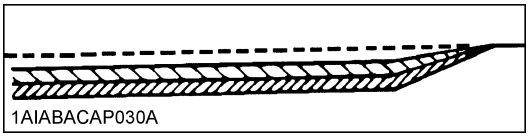
1AIABACAP030A

https://truckmanualshub.com/

LOADING LOW TRUCKS OR SPREADERS FROM A PILE

For faster loading, minimize the angle of turn and length of run between pile and spreader.

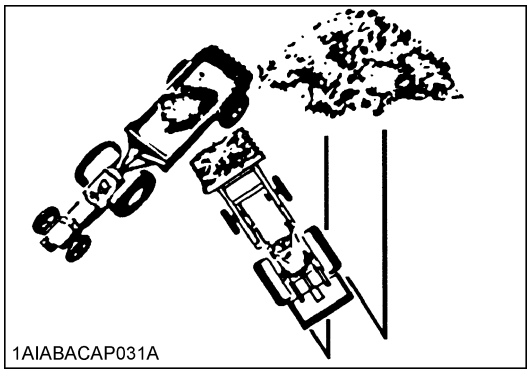
1AIABACAP031A

Backgrade occasionally with a loaded bucket to keep the work surface free of ruts and holes. Also, hold the lift control forward so the full weight of the bucket is scraping the ground. Use the heel of the bucket

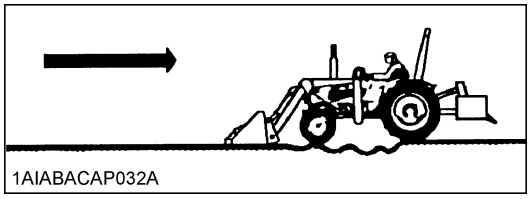
1AIABACAP032A

BACKFILLING

Approach the pile with the bucket flat.

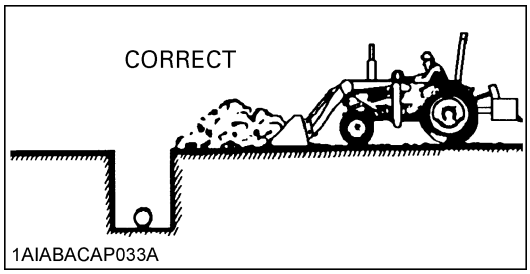

1AIABACAP033A

Poor operating methods will move less dirt and make it more difficult to hold a level grade.

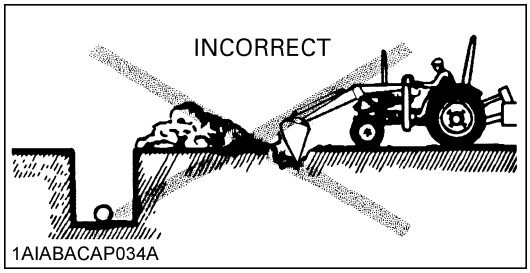

1AIABACAP034A

IMPORTANT :

- Do not use the bucket in the dumped position for bulldozing. As shown above, this method will impose severe shock loads on the dump-linkage, the bucket cylinders, and the tractor.

Leave dirt in the bucket because dumping on each pass wastes time.

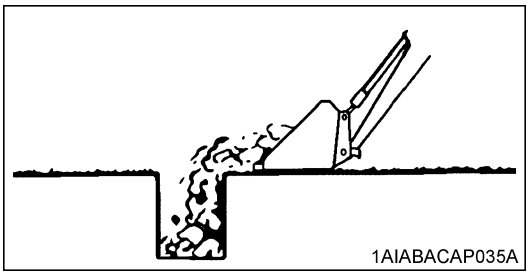
1AIABACAP035A

Operate at right angles to the ditch. Taking as big a bite as the tractor can handle.

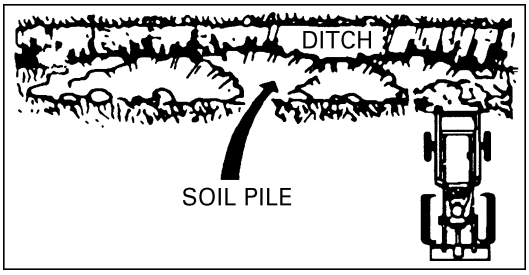

Leave dirt which drifts over the side of the bucket for final cleanup.

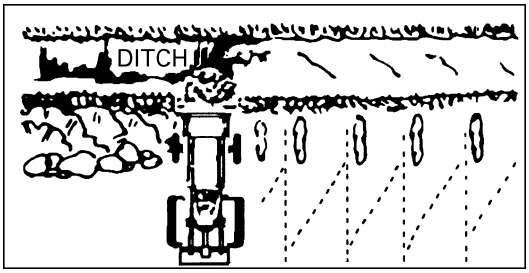

Pile dirt on the high side for easier backfilling on a slope.

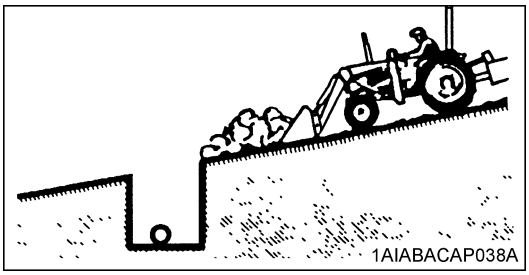
1AIABACAP038A

https://truckmanualshub.com/

HANDLING LARGE HEAVY OBJECTS

DANGER

To avoid personal injury or death:

- **Handling large, heavy objects can be dangerous due to:**
  (A)Danger of rolling the tractor over.
  (B)Danger of upending the tractor.
  (C)Danger of the object rolling or sliding down the loader boom onto the operator.
- **If you must perform the above work, protect yourself by:**
  (A)Not lifting the load higher than necessary to clear the ground when moving.
  (B)Adding rear ballast to the tractor to compensate for the load.
  (C)Not lifting large objects with equipment that does not have an anti-rollback device.
  (D)Moving slowly and carefully.
  (E)Avoiding rough terrain.
  (F)Keeping transport distance as short as possible and carry the load as low as possible during transport.
  (G)Confirm loader/bucket are at proper height and have stopped moving before transport.

VALVE LOCK

WARNING

To avoid personal injury or death from crushing:

- **Do not utilize the valve lock for machine maintenance or repair.**
- **The valve lock is to prevent accidental actuation when implement is not in use or during transport.**

The control valve is equipped with a valve lock feature. The control valve is locked in the neutral position.

The lock is not intended and will not prevent a leak down of the implement during the period of storage.

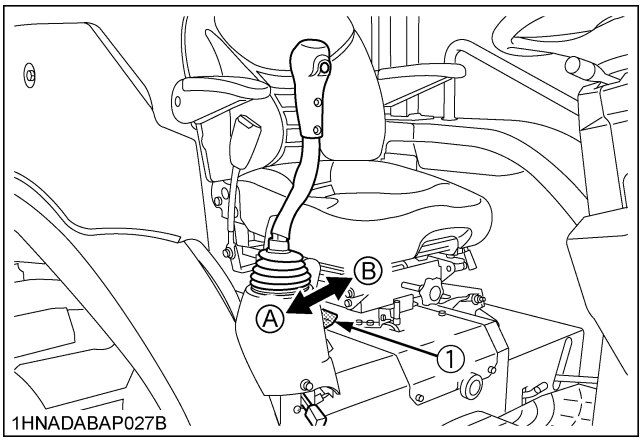

(1) Lock lever

(A) "LOCK"
(B) "UNLOCK"

BOOM LOCK

WARNING

To avoid personal injury or death:

- **Before setting the boom lock**
  -empty the loader bucket and place in dump position,
  -park on a firm, flat and level surface,
  -set the parking brake,
  -stop the engine and remove the key,
  -set the valve lock.

The boom lock is used to prevent the loader lift arms from falling when servicing the machine, set as follows.

1. Empty the loader bucket and place in dump position.
2. Raise the boom until the boom lock can be positioned on cylinder.
3. Stop the engine and remove the key.
4. Pull the lock pin and the boom lock onto the cylinder rod.
5. Insert the lock pin into the hole of lower right corner of the boom lock.
6. Slowly lower the boom is stopped and set the valve lock lever is lock position.

https://truckmanualshub.com/

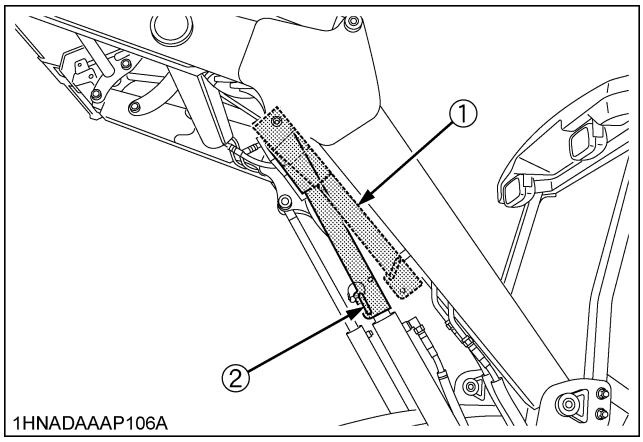

(1) Boom lock
(2) Lock pin

BUCKET LEVEL INDICATOR

Depending on the front attachment, loosen the indicator rod lock bolt and readjust the indicator rod length.

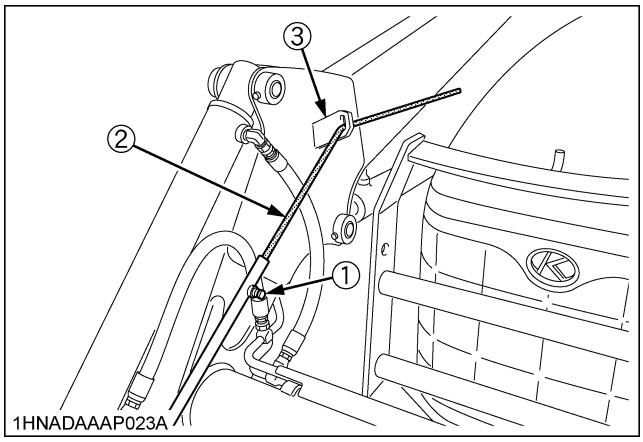

(1) Bolt
(2) Indicator rod
(3) Guide, Indicator rod

SELF LEVELING

WARNING

To avoid personal injury or death:

- **Always be aware of the loader attachment angle. Self-leveling function may vary depending on the loader lever stroke.**

IMPORTANT :

- Self-leveling feature is primarily designed for pallet fork application. Therefore, variance may occur with other loader attachments.
- Recommended folk: K9058 42" Pallet Fork
- Recommended engine revolution: above 1200 rpm
- Warm up the tractor according to its instructions before moving the loader in cold regions. This is needed to prevent a valve malfunction.

NOTE :

In the self leveling mode

- Boom lowering speed will be slower.
- Boom cannot be lowered in the maximum roll back position.
- Boom cannot be raised in the maximum dump position.

How to use Self Leveling

Use the lever located on the loader control tower to select the self leveling mode.

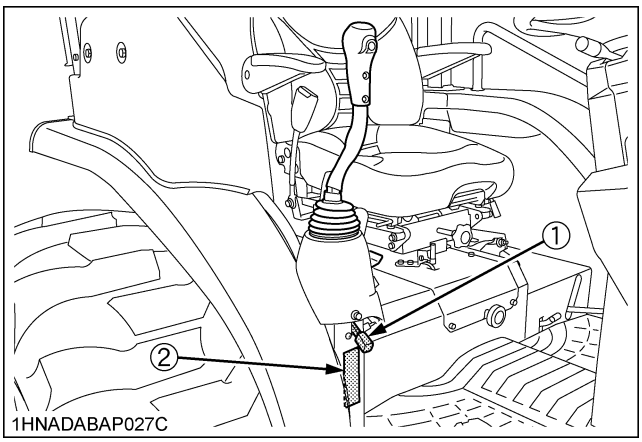

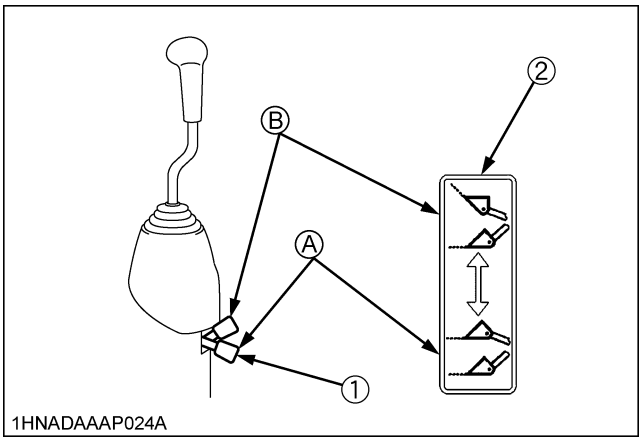

(1) Lever of self leveling select
(2) Label of self leveling select
(A) Self leveling "ON"
(B) Self leveling "OFF"

https://truckmanualshub.com/

Recommendations

1. Self Leveling is "ON".
   a) For pallet fork operation
   The pallet fork can be raised up and lowered horizontally.

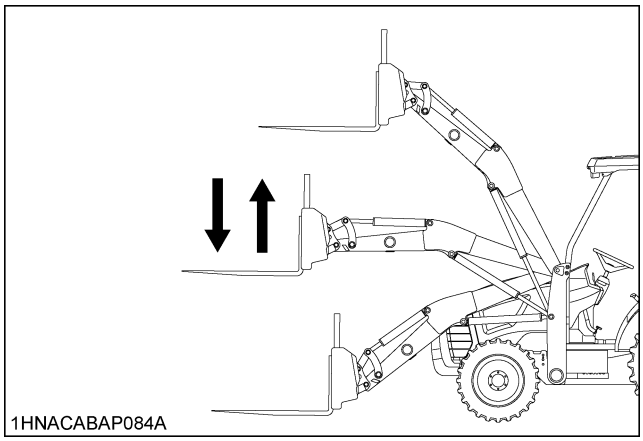

   b) For bucket operation
   The bucket position can be controlled like Spill Guard.

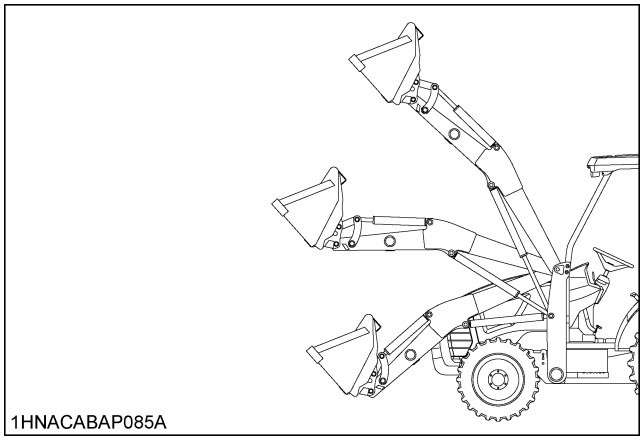

2. Self Leveling is "OFF".
   Motion is same as the regular loader.
   a) For pallet fork operation

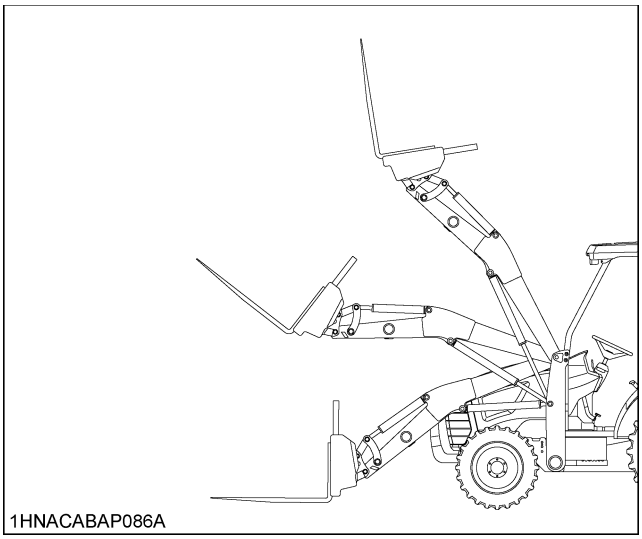

   b) For bucket operation

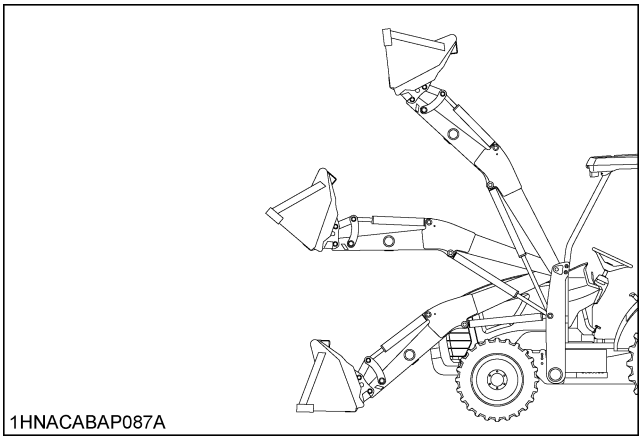

https://truckmanualshub.com/

How to adjust Self Leveling

IMPORTANT :

- When checking, park the tractor on flat and hard ground, set the range shift lever in neutral, apply parking brake, stay clear of operating area while setting self-leveling.

1. Raise Leveling Adjustment
   1) Set the jig on the right side of the loader pallet fork as shown in the illustration.

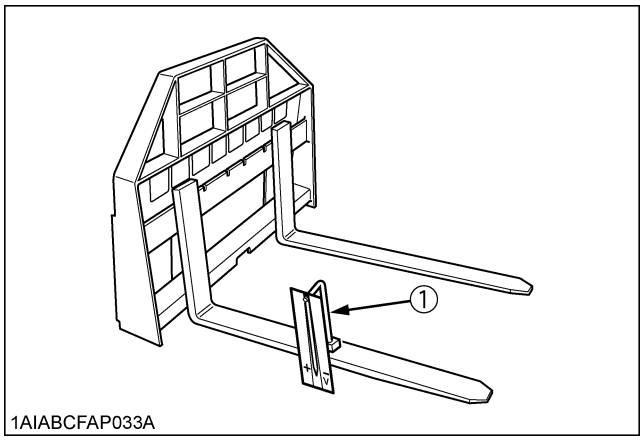

(1) Jig (Not included in this kit)

2) Start the engine and set at 2000rpm.
3) Set the pallet fork flat on the ground.

NOTE :

- When the pendulum indicates the vertical line of the jig (marked "V"), the pallet fork is flat.

4) Raise the boom to the maximum height.

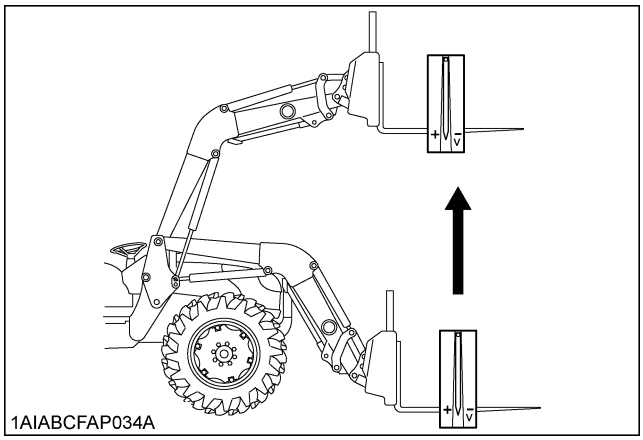

5) If the pallet fork angle is not within the angle shown in the illustration, readjust the self-leveling.

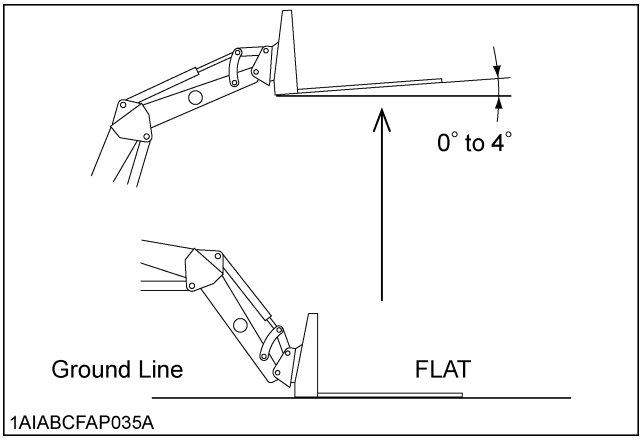

NOTE :

- When the pendulum indicates the white range of the jig, the pallet fork angle is proper.

6) If the pallet fork angle is not within the angle shown in the illustration, lower the boom and loosen the lock nut then adjust by setscrew as follows.
*Pallet fork forward tilt: Screw "IN"
*Pallet fork back tilt: Screw "Out"
(Typically 1/2 turn is a good increment of change)
7) Tighten the lock nut

*Tightening torque: 5.4 to 7.8 N-m
4.0 to 5.7 ft-lbs

https://truckmanualshub.com/

8) Repeat the procedures mentioned above (from 3 to 7) until the raise self-leveling adjustment is within specification.

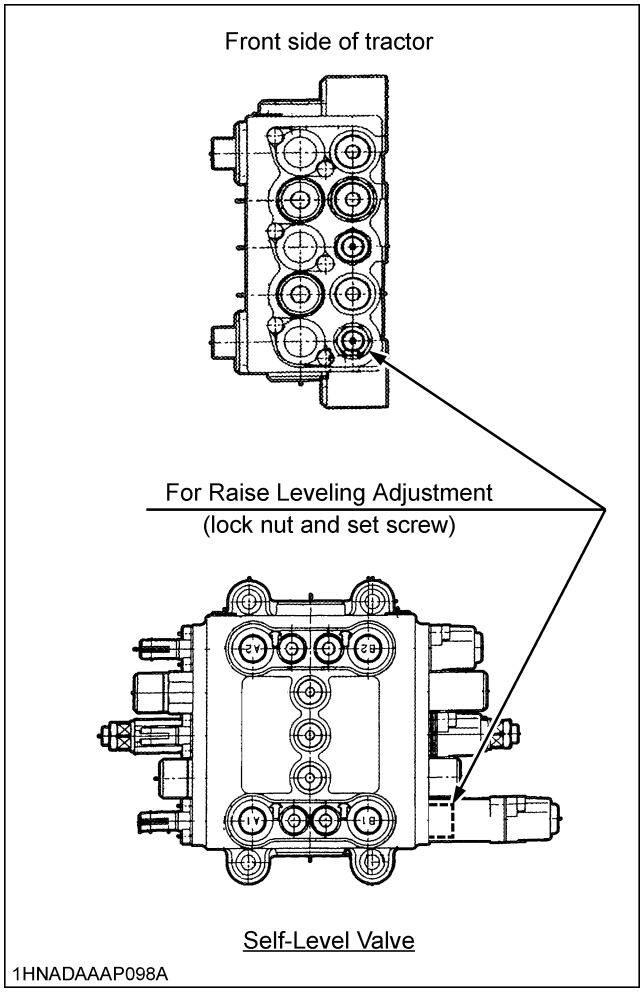

IMPORTANT :
- The torque for the lock nut is very important. If the nut is over tightened the adjusting screw may break.

2. Lower Leveling Adjustment

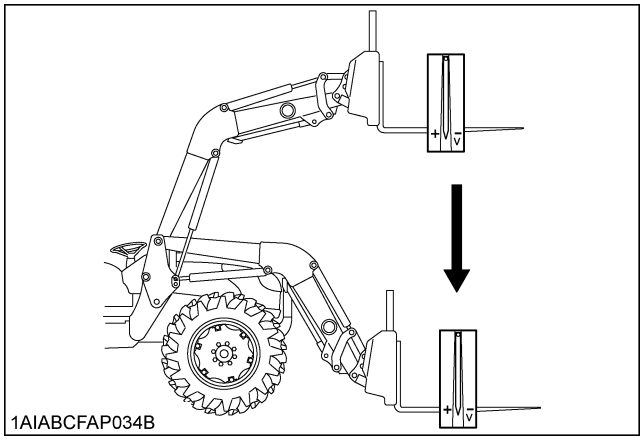

1) Set the boom in the maximum raised position and the bucket (or pallet fork) flat.

NOTE :
- When the pendulum indicates the vertical line of the jig (marked "V"), the bucket (or pallet fork) is flat.

2) Lower the boom until the bucket (or pallet fork) slightly contact to the ground.
3) If the bucket (or pallet fork) angle is not within the angle shown in the illustration, readjust the self-leveling.

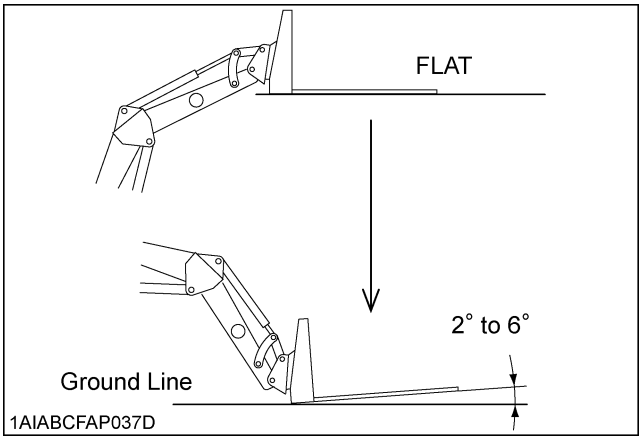

NOTE :
- When the pendulum indicates the white range of the jig, the bucket (or pallet fork) angle is proper.

4) If the bucket (or pallet fork) angle is not within the angle shown in the illustration, loosen the lock nut then adjust by setscrew as follows.
*Pallet fork forward tilt: Screw "OUT"
*Pallet fork back tilt: Screw "IN"
(Typically 1/2 turn is a good increment of change)
*The cap, lock nut and set screw for lower leveling adjustment is shown below.
5) Tighten the lock nut.

*Tightening torque: 5.4 to 7.8 N-m
4.0 to 5.7 ft-lbs

6) Repeat the procedures mentioned above (from 1 to 5) until the lower self-leveling adjustment is within specification.

https://truckmanualshub.com/

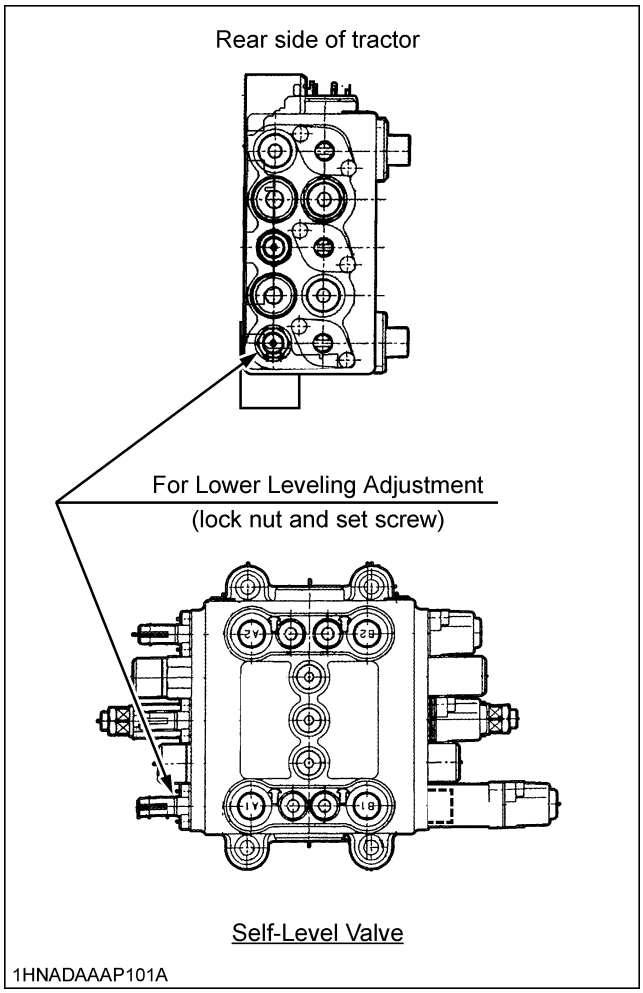

IMPORTANT :
- The torque for the lock nut is very important. If the nut is over tightened the adjusting screw may break.

ATTACHING ATTACHMENTS

This quick attach coupler is designed to be used with Kubota attachments. Non-Kubota attachments, if used, must comply with ISO 24410, first edition 2005-04-15. This quick attach coupler allows the operator to change easily without the use of tools.

DANGER

To avoid personal injury or death:
- **Use of a non-Kubota attachment that does not comply with ISO24410 or the improper positioning of handle(s) or non-protrusion of pin(s) may result in detachment of the attachment or deformation, causing loss of performance, personal injury or death.**

NOTE :
- Attachments should be located on a flat, firm surface when attaching and detaching them from the quick attach coupler.

1. To mount an attachment, pull the handles of the quick attach coupler latching pins to the unlatched position. The quick attach coupler handles must be all the way up to ensure that the latching pins are fully retracted.
2. Position the tractor squarely in front of the attachment and tilt the quick attach coupler forward with the bucket cylinders.

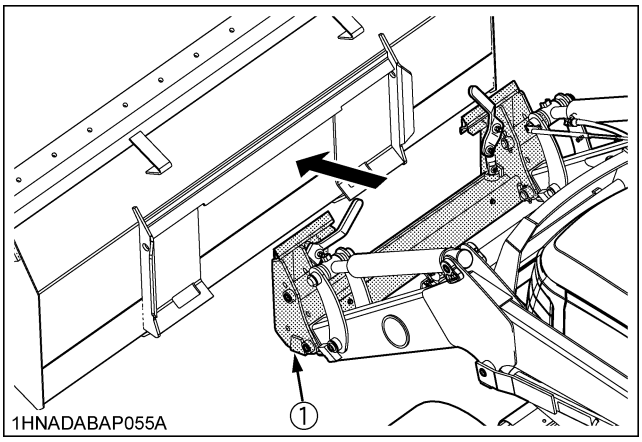

(1) Quick attach coupler

3. Ease the quick attach coupler mounting plate into the saddle of the attachment.
4. Roll the quick attach coupler back using the bucket cylinders and raise the boom slightly. The back of the attachment should rest against the front of the quick attach coupler mounting plate and the weight of the attachment should be supported by the loader.

https://truckmanualshub.com/

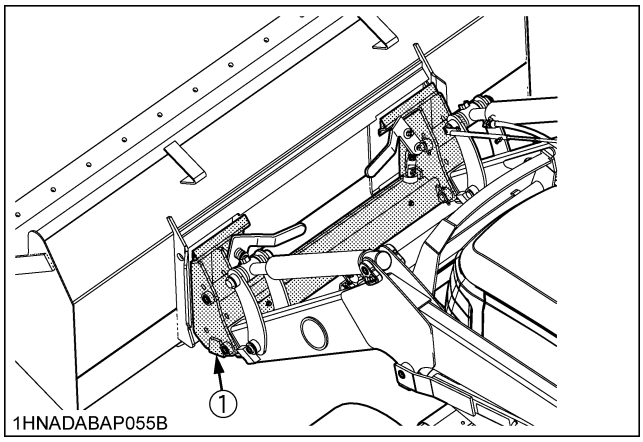

(1) Quick attach coupler

5. When the attachment is properly seated in the saddle and against the front of the quick attach coupler mounting plate, turn off the engine and set the parking brake. Push the quick attach coupler handles to the fully latched position. Verify both latching pins are completely engaged in the base of the attachment.

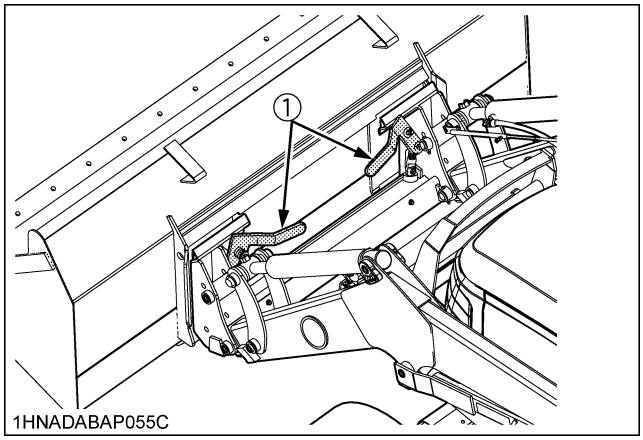

(1) Quick attach coupler handle

DANGER

To avoid personal injury or death:

- **The following engagement points are critical.**
  1) **The lock pins of the quick attach coupler have to protrude into and through the pin slots of the attachment on both sides. It is critical that the pins are in good condition and without visible signs of wear or damage and that the operator align the loader quick attach coupler with the attachment to allow the pins to go through the pin slots.**
  2) **Both handles have to be pushed down until the handles contact the ear plates near the points where the pin bolt goes through the handle (A).**
  3) **Do not operate the tractor or attachment unless all of the above conditions are met.**

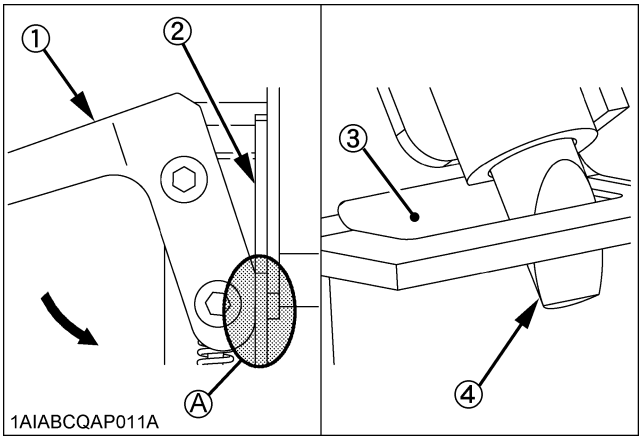

(1) Handle
(2) Ear plate
(3) Lock pin
(4) Pin slot
(A) The handle contacts the ear plate at the points.

6. Visually verify when pushing the quick attach coupler handles into locked position that the latch pins rotate completely and are located underneath the stop of the quick attach coupler.

https://truckmanualshub.com/

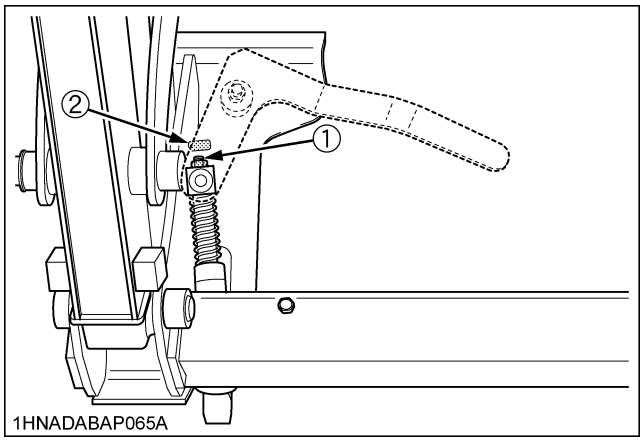

(1) Latch pins
(2) Quick attach coupler stopper

7. When attaching different attachments visually inspect for broken or damaged pins. If broken or damaged pins are found, replace before using. Use of broken pins may result in attachment detachment or deformation, causing loss of performance, personal injury or death.
8. You are now ready to use the attached attachment. All compatible attachments attach and detach using the same method.

WARNING

To avoid personal injury, death or machine damage:

- **Never operate or transport attachments which are not attached completely.**
- **Always replace damaged hardware immediately.**

DETACHING ATTACHMENTS

1. Detaching attachments is done in the reverse of attaching attachments. The procedure is below.
2. Lower the attachment to ground level with the attachment slightly in the rolled back position. Stop the engine and set the parking brake.
3. Pull the quick attach coupler handles to the unlatched position to release the latching pins.
4. While sitting in the tractor operator's seat, start the engine and slowly move the loader control lever to the "DUMP" position until the attachment is pushed away slightly from the quick attach coupler.
5. Lower the loader boom so that the quick attach coupler mounting plate clears the attachment saddle.
6. Back away from the attachment slowly.
7. If an attachment is not going to be attached to the quick attach coupler immediately, push the handles of the quick attach coupler to the locked position to prevent damage to the handle assembly.

■Hydraulic Quick Attach Coupler Switch (if equipped)

The switch is used to attach and detach an attachment by activating the hydraulic quick attach coupler.

After pressing the selector switch to the "ON" position, move the switch to the "🔒" (LOCK) mark to get the quick attach coupler locked. After pressing the selector switch to the "ON" position, move it to the "🔓" (UNLOCK) marked position to unlock the quick attach coupler and detach the bucket, for example. After cylinder is moved to locked position, always check to be sure both pins are engaged to the attachment.

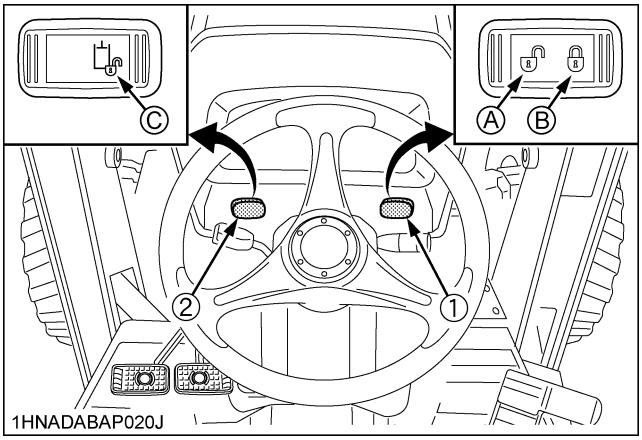

(1) Hydraulic quick attach coupler switch
(2) Selector switch
(A) "UNLOCK" position
(B) "LOCK" position
(C) "ON" position

https://truckmanualshub.com/

PTO

PTO OPERATION

WARNING

To avoid personal injury or death:

- **Disengage PTO, stop engine, and allow all rotating components to come to a complete stop before connecting, disconnecting, adjusting, or cleaning any PTO driven equipment.**

■PTO Clutch Control Switch

1. The tractor has a 540 rpm speed position and 6-spline shaft.
2. The PTO clutch control switch engages or disengages the PTO clutch which gives the PTO independent control.

Turn the switch to "ON" to engage the PTO clutch. Turn the switch to "OFF" to disengage the PTO clutch.

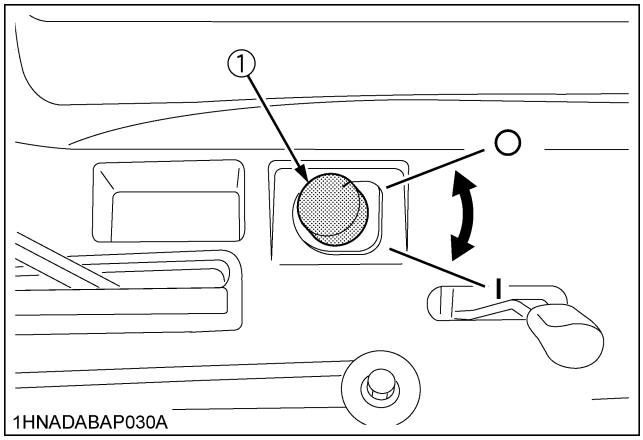

(1) PTO clutch control switch *| "ON"* *○ "OFF"*

◆ **PTO Clutch Control Switch**

To turn ON

While pushing the switch, turn clockwise to the " | " position and release your hand. (In the ON position, switch slightly rises itself.)

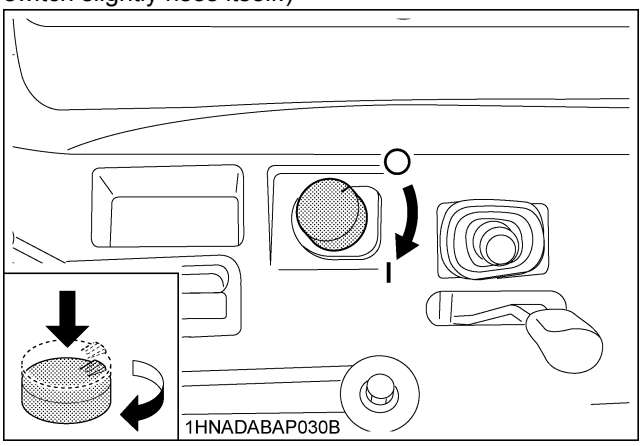

To Turn OFF

Tap on top of the switch, and the switch will return to the OFF position.

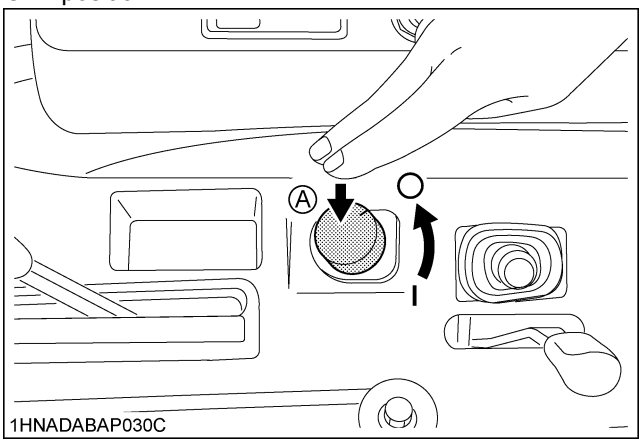

(A) "PUSH"

IMPORTANT :

- To avoid shock loads to the PTO, reduce engine speed when engaging the PTO, then open the throttle to the recommended speed.
- To avoid damage of PTO clutch and implement, proper warm up is strongly recommended in cold weather.
  Do not continuously turn the PTO clutch control switch.

https://truckmanualshub.com/

Engine Speed rpm	Shaft	PTO Speed rpm
2700	6-Spline	540

NOTE :
- Tractor engine will not start if the PTO clutch control switch is in the engaged "ON" position.

■Stationary PTO

To park the tractor and use the PTO system (for chipper or pump, for example), start the PTO system in the following steps.

1. Apply the parking brakes and place blocks at the tires.
2. Make sure the shift levers are at NEUTRAL, and start the engine.
3. Set the PTO clutch control switch to engage "ON".
4. Set the engine speed to provide recommended rear PTO speed.
5. Unlock the seat lock lever.
6. Turn the seat counterclockwise. (for backhoe operation)
7. Dismount the seat.

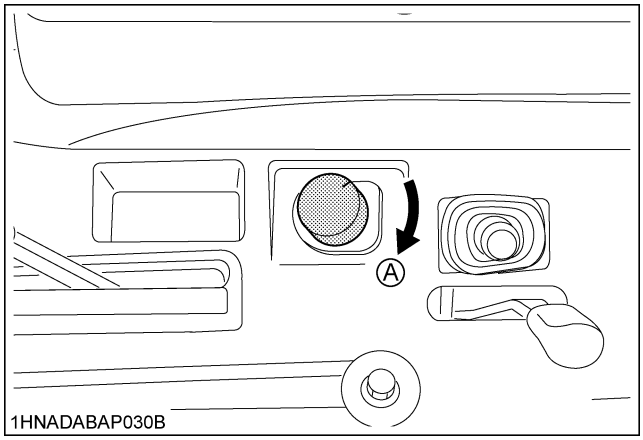

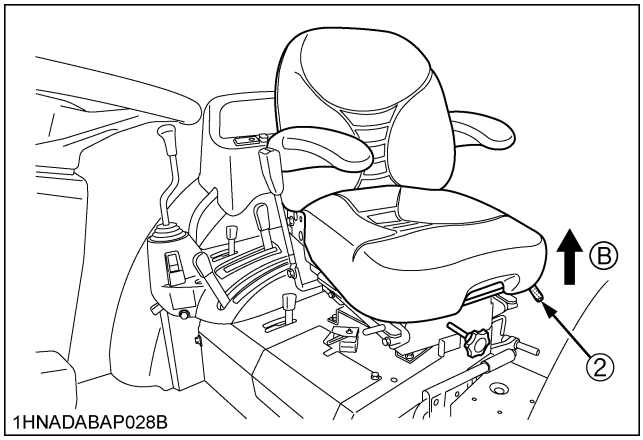

(1) PTO clutch control switch *(A) "ON"*
(2) Seat lock lever *(B) "UNLOCK"*

NOTE :
- If the PTO system is engaged and you stand up from the seat before you turn the seat counterclockwise, the engine stops automatically after standing up.

■IntelliPanel(TM) Message

1. The PTO rpm can be checked in the display. (See "INTELLIPANEL(TM)" in "OPERATING THE TRACTOR" section.)
2. When the PTO system gets engaged (ON), the indicator lights up.

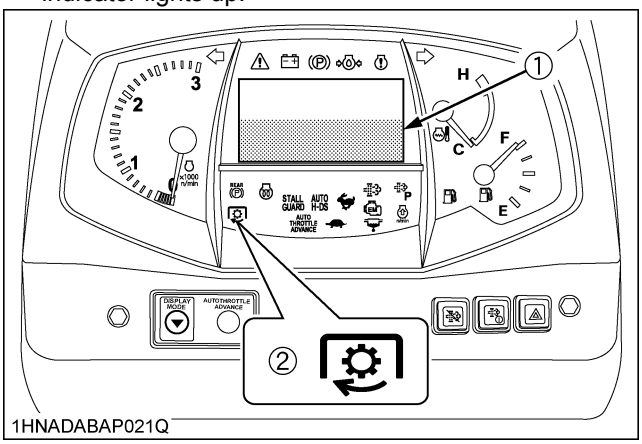

(1) Display
(2) PTO indicator

NOTE :
- Rear PTO "ON"

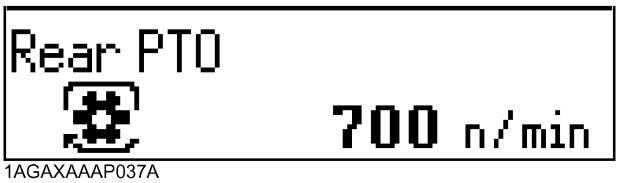

1AGAXAAAP037A

https://truckmanualshub.com/

■PTO shaft Cover and Shaft Cap

Keep the PTO shaft cover in place at all times.
Replacing the PTO shaft cap when the shaft is not in use.
When connecting or disconnecting the joint to PTO shaft, raise up the PTO shaft cover.

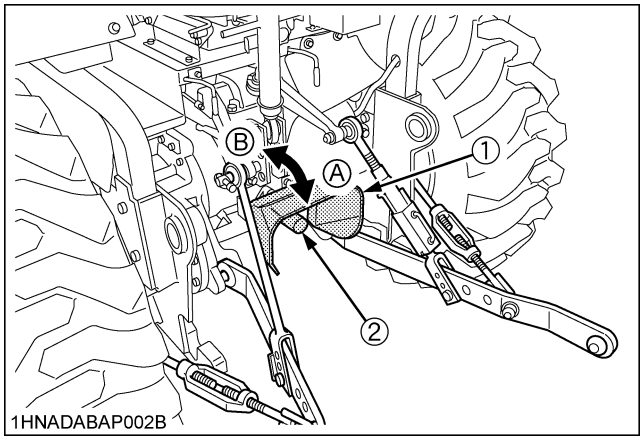

(1) PTO shaft cover *(A) "NORMAL POSITION"*
(2) PTO shaft cap *(B) "RAISED POSITION"*

IMPORTANT :

- The universal joint of the PTO drive shaft is technically limited in its moving angle. Refer to the PTO Drive Shaft Instructions for proper use.

https://truckmanualshub.com/

3-POINT HITCH & DRAWBAR

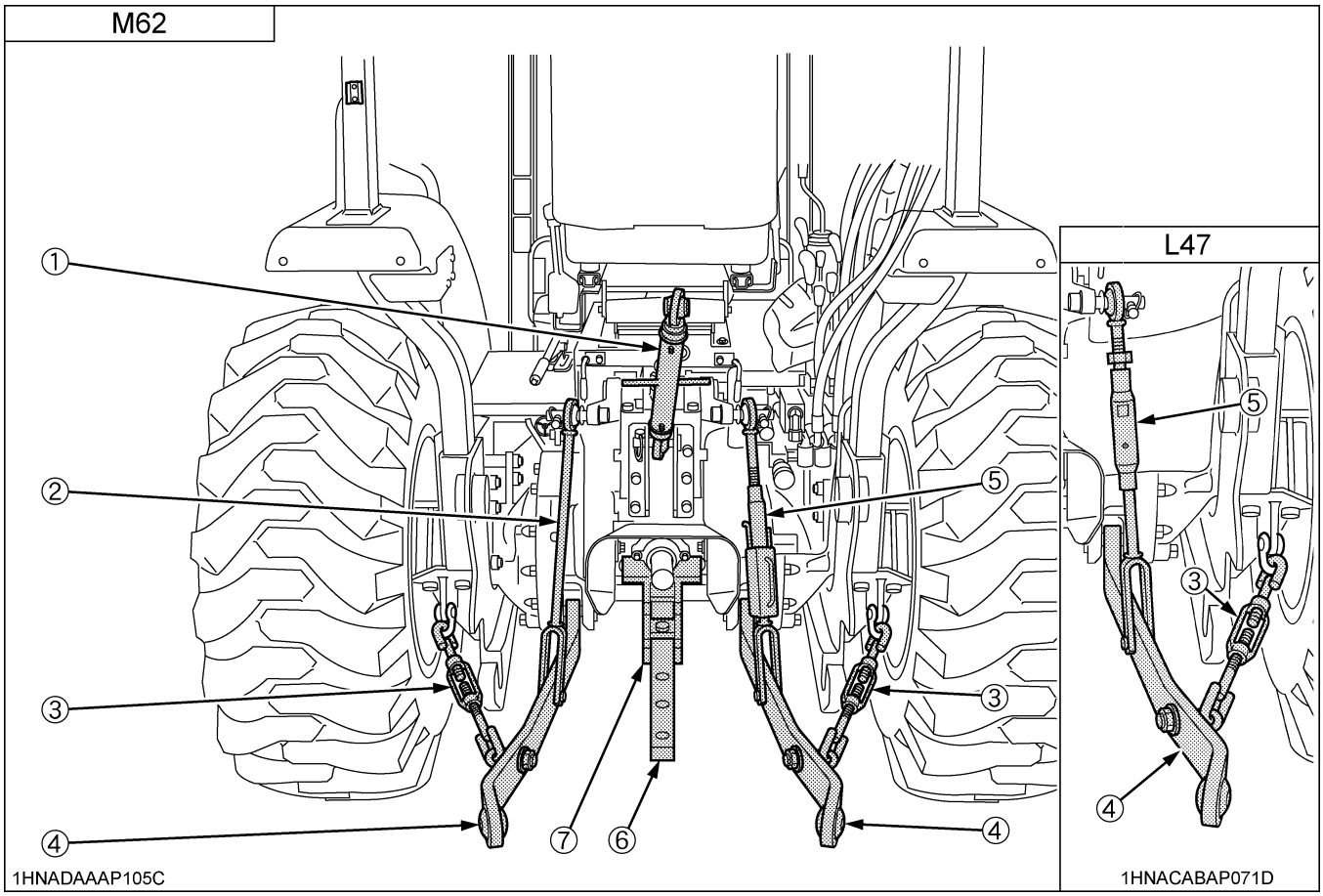

(1) Top link [if equipped]
(2) Lifting rod (Left) [if equipped]
(3) Check chains [if equipped]
(4) Lower link [if equipped]
(5) Lifting rod (Right) [if equipped]
(6) Drawbar [if equipped]
(7) Fixed drawbar frame [if equipped]

https://truckmanualshub.com/

3-POINT HITCH (if equipped)

1. Make preparations for attaching implement.

■Selecting Category

[L47]
L47 has category 1 only.

[M62]
M62 has category 1 & 2.

This three-point hitch can be used for both category 1 and 2 implements.

[Category 1 type]

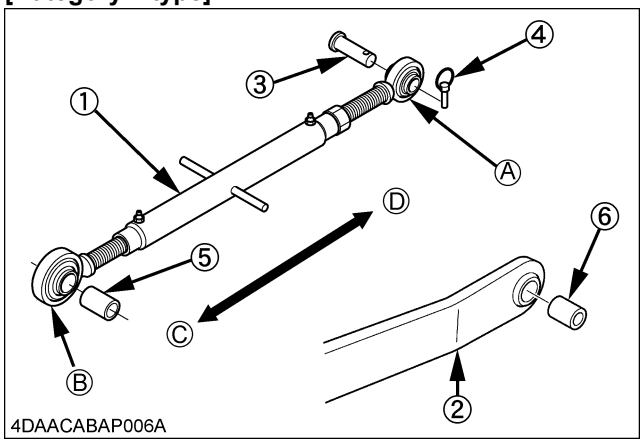

4DAACABAP006A

[Category 2 type]

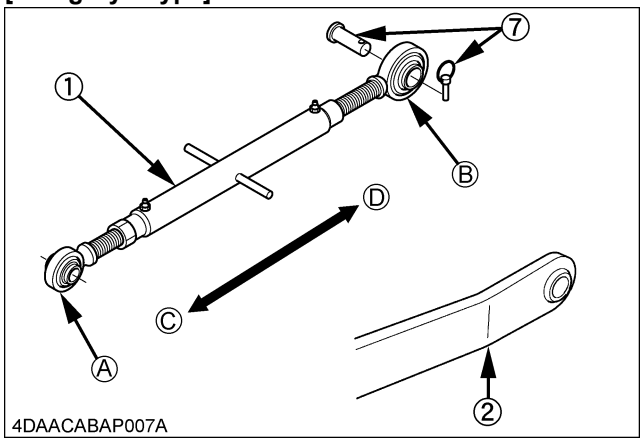

4DAACABAP007A

(1) Top link
(2) Lower link
(3) Top link rear pin
(4) Lynch pin
(5) Top link collar
(6) Lower link collar
(7) Top link rear pin assy

(A) ϕ19.3 mm I.D.
(B) ϕ25.7 mm I.D.
(C) Tractor side
(D) Implement side

■Selecting the Top Link Mounting Holes

Select the proper set of holes by referring to the "Hydraulic Control Unit Use Reference Chart" in "HYDRAULIC UNIT" section.

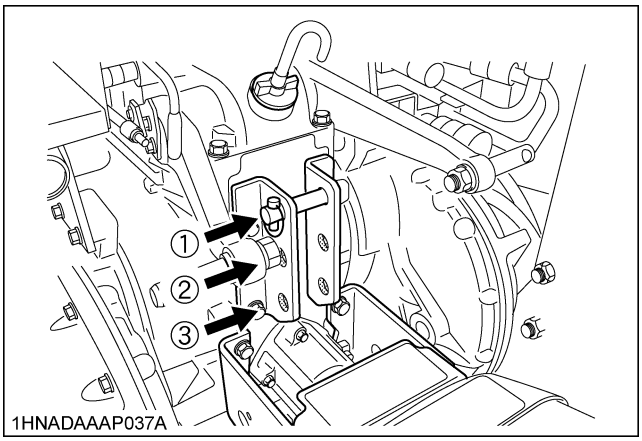

1HNADAAAP037A

■Drawbar (if equipped)

Remove the drawbar if close mounted implement is being attached.

NOTE :
- When installing the drawbar frame, be sure to remove the plate first.

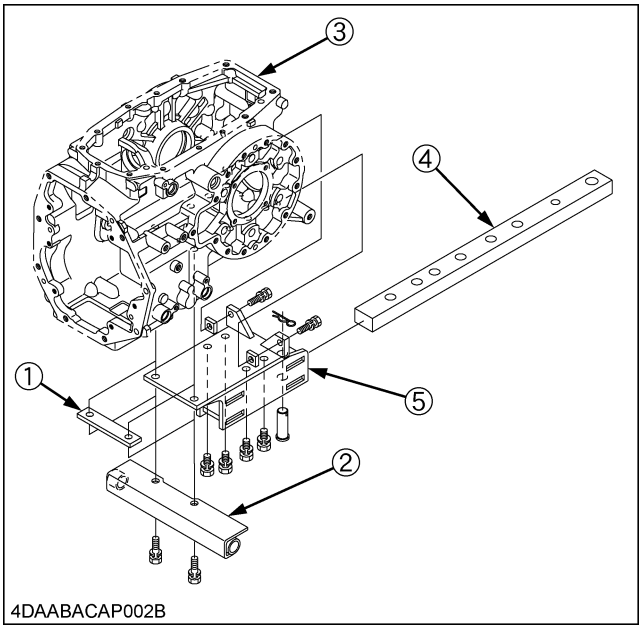

4DAABACAP002B

(1) Plate (Do not use)
(2) Brake support
(3) Transmission case
(4) Drawbar
(5) Drawbar frame

https://truckmanualshub.com/

2. Attaching and detaching implements

WARNING

To avoid personal injury or death:

- **Be sure to stop the engine.**
- **Do not stand between tractor and implement unless parking brake is applied.**
- **Before attaching or detaching implement, locate the tractor and implement on a firm level surface.**
- **Whenever an implement or other attachment is connected to the tractor 3-point hitch, check full range of operation for interference, binding or PTO separation.**

■Lifting Rod (Right)

WARNING

To avoid personal injury or death:

- **Do not extend lifting rod beyond the groove on the thread rod.**

[L47]

Level a 3-point mounted implement from side to side by turning the adjusting handle to shorten or lengthen the adjustable lifting rod with the implement on the ground.
After adjustment, lock the adjusting handle with the handle stopper.

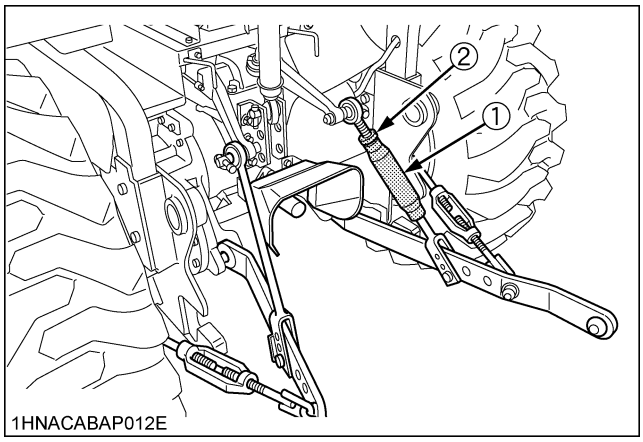

(1) Lifting rod (right)
(2) Lock nut

[M62]

1. To adjust the length of the lifting rod, lift the adjusting handle and turn to desired length.
2. After adjusting, lower the lifting rod adjusting handle to the lock position.
3. When extending the rod using adjusting handle, do not exceed the groove on the rod thread.

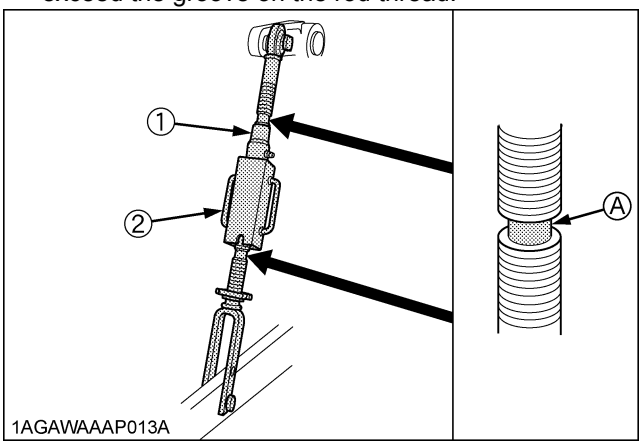

(1) Lifting rod
(2) Adjusting handle
(A) "GROOVE"

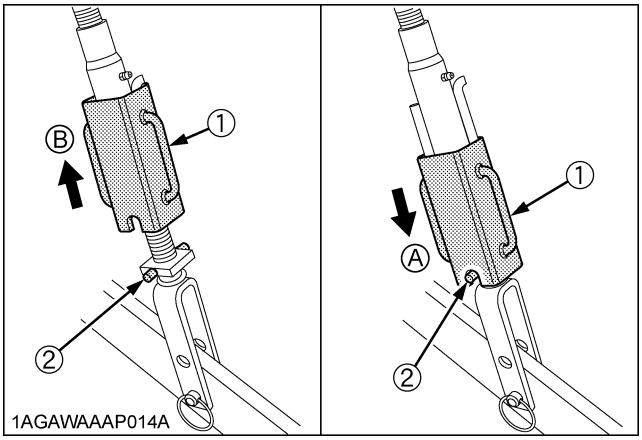

(1) Adjusting handle
(2) Lock pin
(A) "LOCK POSITION"
(B) "UNLOCK POSITION"

■Top Link

1. Adjust the angle of the implement to the desired position by shortening or lengthening the top link.
2. The proper length of the top link varies according to the type of implement being used.

https://truckmanualshub.com/

■Check Chains

Remove the snap pin and adjust the turnbuckle to control horizontal sway of the implement.
After adjustment, re-set snap pin.

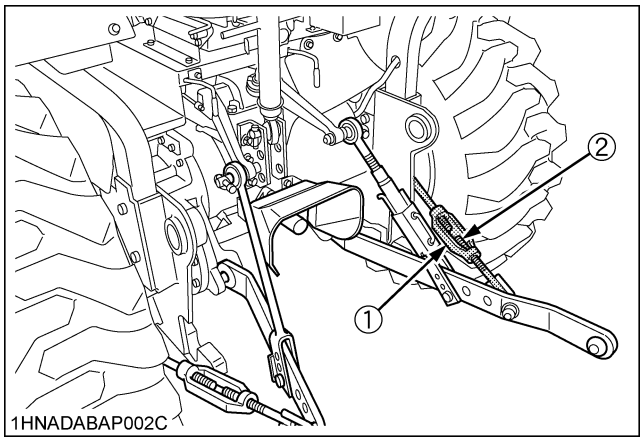

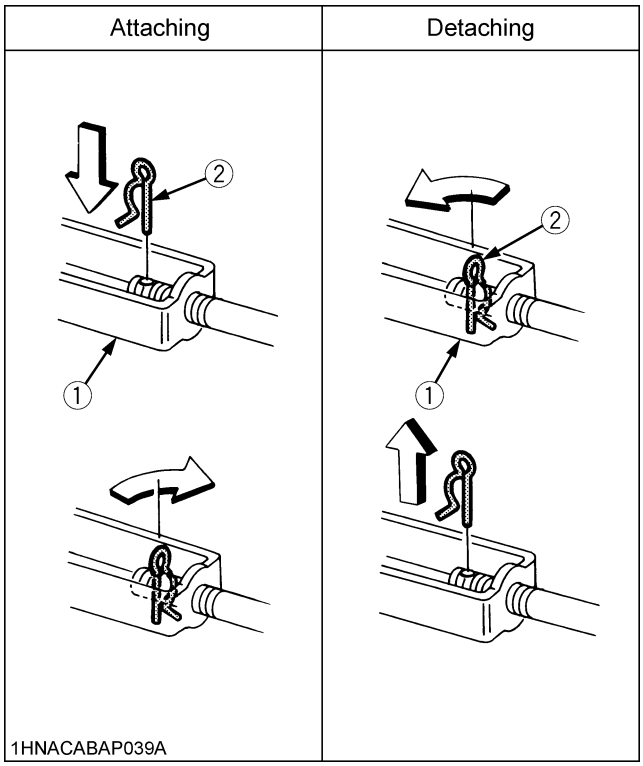

(1) Turnbuckle
(2) Snap pin

■Lower Link Holder

When operating the tractor without a 3-point hitch implement, it is necessary to lock the lower links to prevent them from hitting the tractor rear wheels.

DRAWBAR (if equipped)

WARNING

To avoid personal injury or death:

- **Never pull from the top link, the rear axle or any point above the drawbar. Doing so could cause the tractor to tip over rearward causing personal injury or death.**

■Adjusting Drawbar Length

When towing an implement, recommend use of (A) holes in drawbar.
The drawbar load is referred to "IMPLEMENT LIMITATIONS" section.

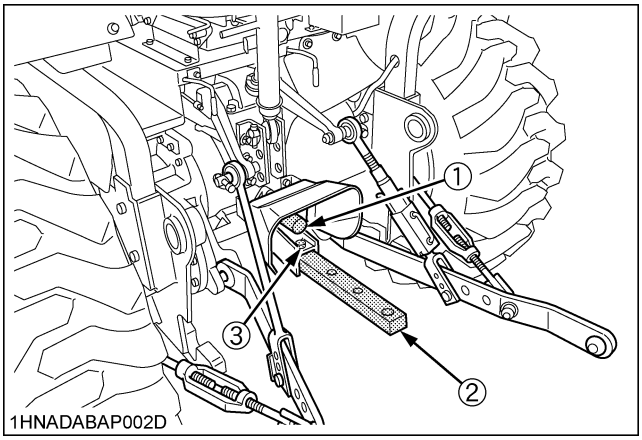

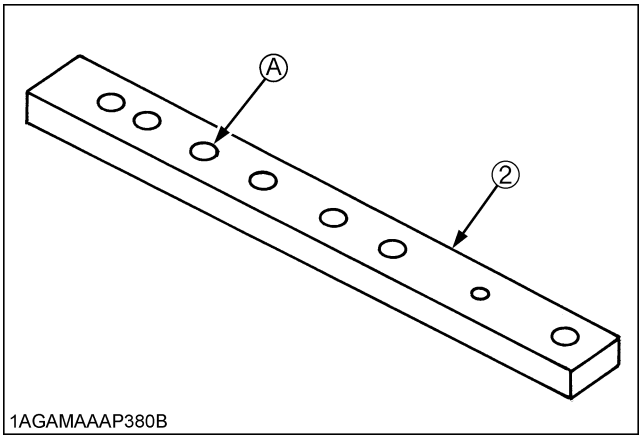

(1) PTO shaft *Holes: (A)*
(2) Drawbar
(3) Drawbar pin

https://truckmanualshub.com/

REINSTALLING THE 3-POINT HITCH

■Lower Link

[L47 and M62]

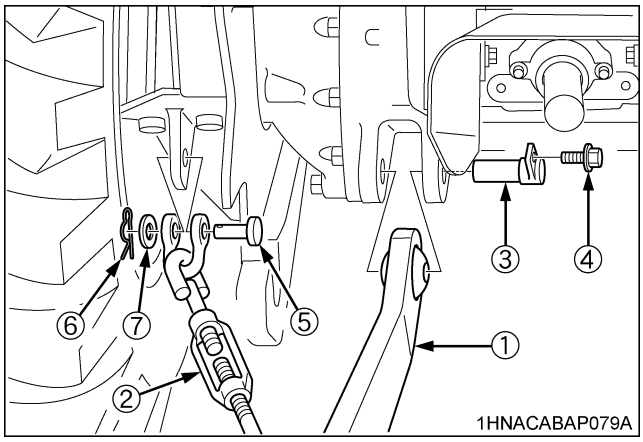

(1) Lower link
(2) Check chains
(3) Pin
(4) Bolt
(5) Clevis pin
(6) Hair pin cotter
(7) Plain washer

■Top Link and Lifting Rod

[L47]

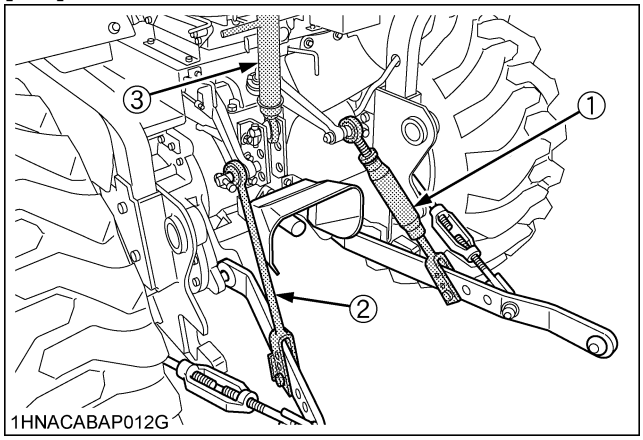

(1) Lifting rod (right)
(2) Lifting rod (left)
(3) Top link

[M62]

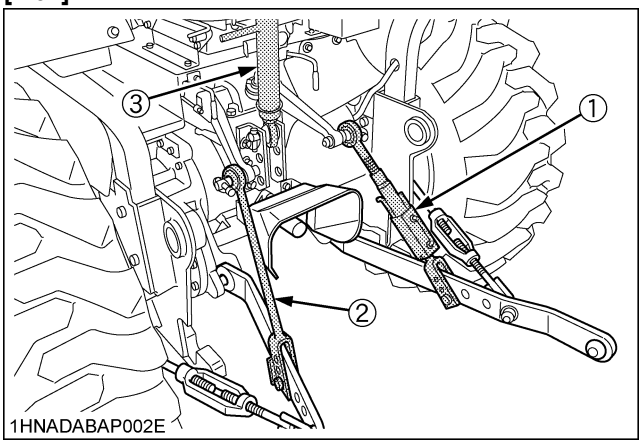

(1) Lifting rod (right)
(2) Lifting rod (left)
(3) Top link

https://truckmanualshub.com/

STORING THE 3-POINT HITCH (if equipped)

The 3P storage holder is an option.

[L47]

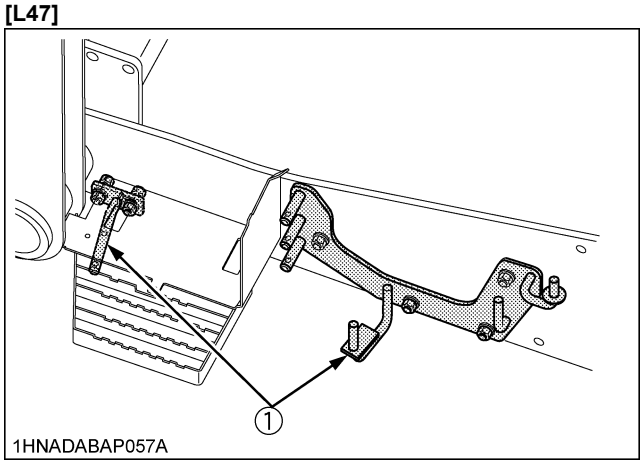

[M62]

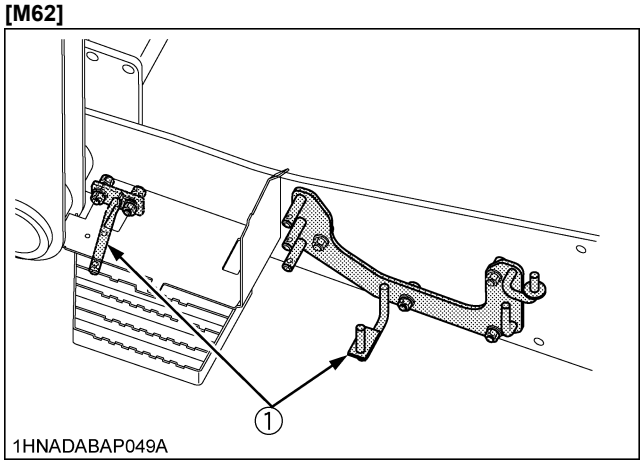

(1) 3P storage holder

When installing the backhoe, remove the 3-point hitch and store it in the location indicated below.

■Lower Link

[L47]

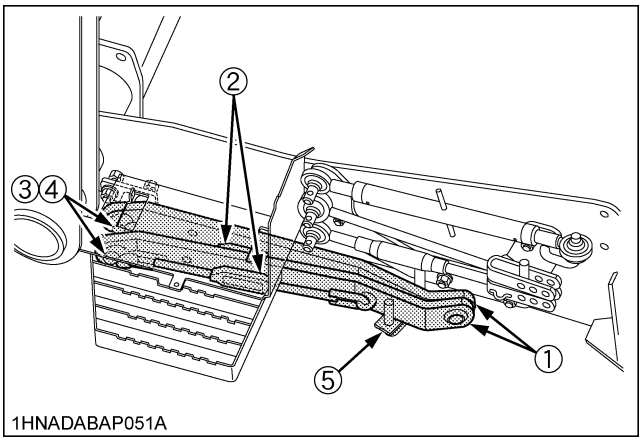

[M62]

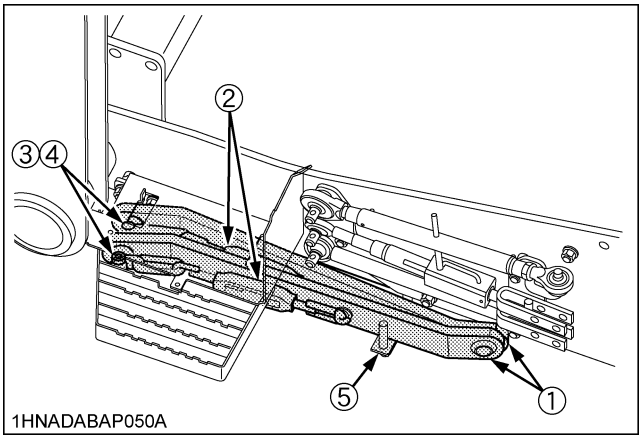

(1) Lower link
(2) Check chains
(3) Hair pin cotter
(4) Clevis pin
(5) 3P storage holder

https://truckmanualshub.com/

■Top Link and Lifting Rod

[L47]

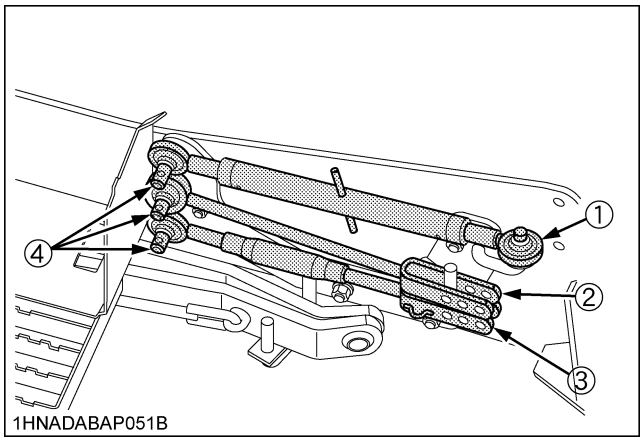

[M62]

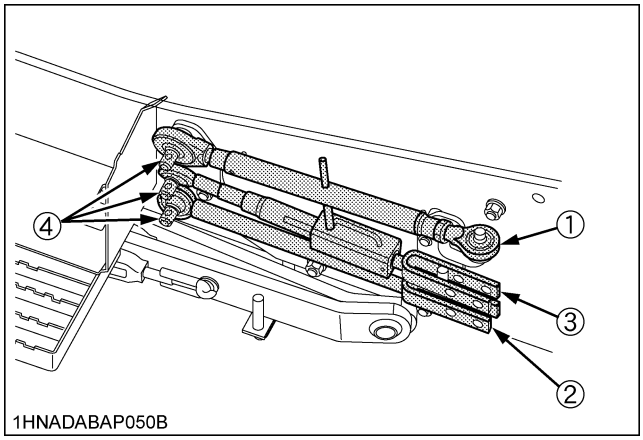

(1) Top link
(2) Lifting rod (LH)
(3) Lifting rod (RH)
(4) Lynch pin

◆ **Top Link Pin**
[L47 and M62]

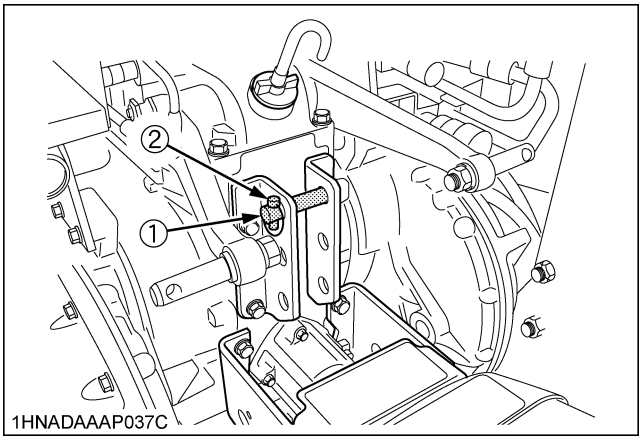

(1) Top link pin
(2) Lynch pin

■Installing the Lower Link

[L47 and M62]

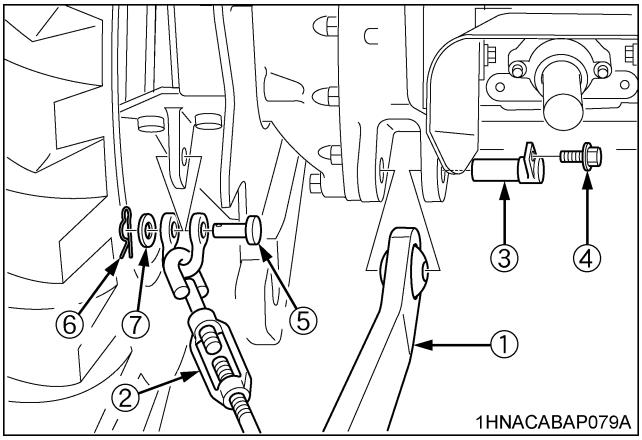

(1) Lower link
(2) Check chains
(3) Pin
(4) Bolt
(5) Clevis pin
(6) Hair pin cotter
(7) Plain washer

https://truckmanualshub.com/

HYDRAULIC UNIT

IMPORTANT :
- Do not operate until the engine is warmed up. If operation is attempted when the engine is still cold, the hydraulic system may be damaged.
- If noises are heard when implement is lifting after the hydraulic control lever has been activated, the hydraulic mechanism is not adjusted properly. Unless corrected, the unit will be damaged. Contact your KUBOTA Dealer for adjustment.

3-POINT HITCH CONTROL SYSTEM

WARNING

To avoid personal injury or death:
- **Before using the 3-point hitch controls, ensure that no person or object is in the area of the implement or 3-point hitch. Do not stand on or near the implement or between the implement and tractor when operating the 3-point hitch controls.**

■Position Control

This will control the working depth of 3-point implements regardless of the amount of pull required.

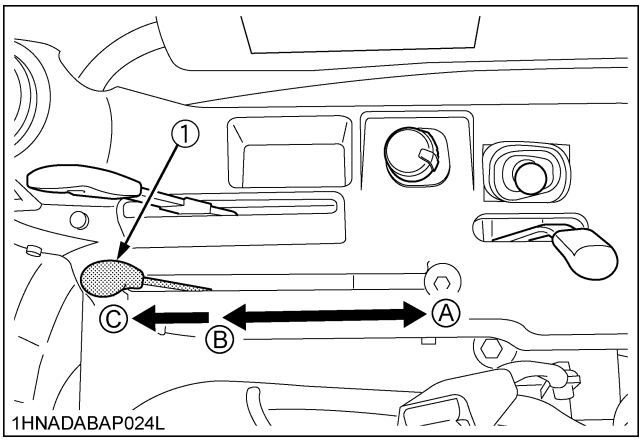

(1) Position control lever
(A) "UP"
(B) "DOWN"
(C) "FLOAT"

◆ **Restricting Plate**

When installing the backhoe, lower the position control lever and place the lift arms in lowest position.
Lock the position control lever in lowest position with restricting plate.

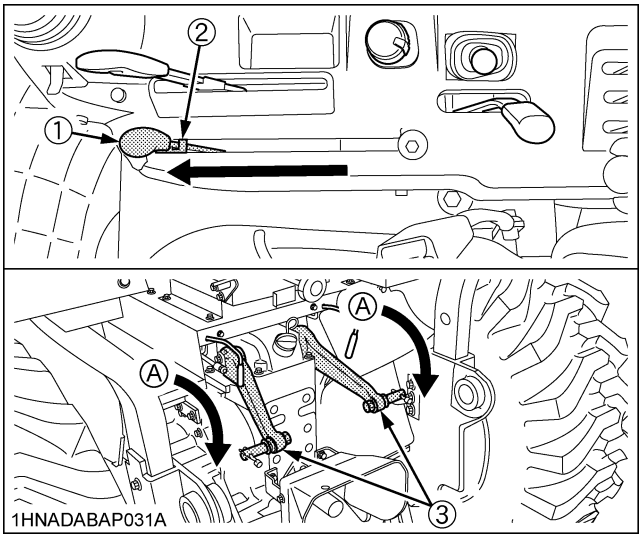

(1) Position control lever
(2) Restricting plate
(3) Lift arm
(A) "DOWN"

https://truckmanualshub.com/

■Float Control

Place the float position to make the lower links move freely along with the ground conditions.

■3-point Hitch Lowering Speed

CAUTION

To avoid personal injury:

- **Fast lowering speed may cause damage or injury. Lowering speed of implement should be adjusted to 2 or more seconds.**

The lowering speed of the 3-point hitch can be controlled by adjusting the 3-point hitch lowering speed knob.

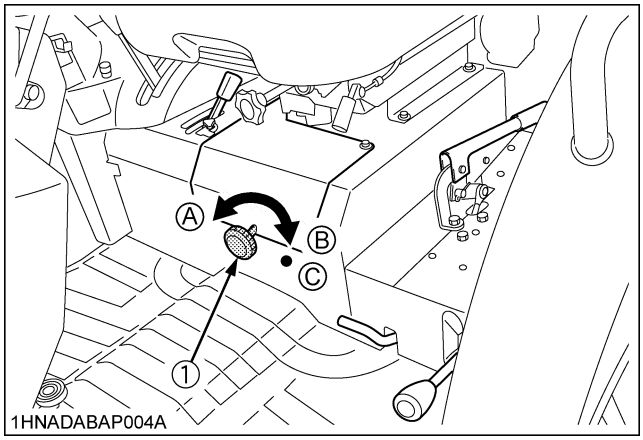

(1) 3-Point hitch lowering speed knob
(A) "FAST"
(B) "SLOW"
(C) "LOCK"

■Directional Valve Lever and Swing Lever

Select the proper lever position as follows:

◆ **When using 3-point hitch**

Switch the 2 directional valve levers to THREE POINT HITCH position by pulling the lever fully backward.

◆ **When using backhoe**

Switch the 2 directional valve levers to BACKHOE position by pushing the lever fully forward.

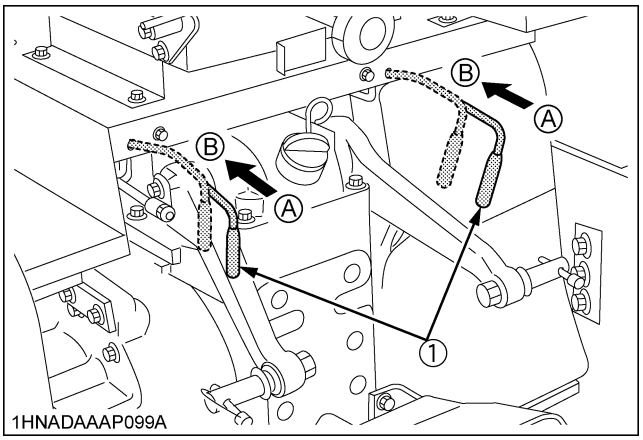

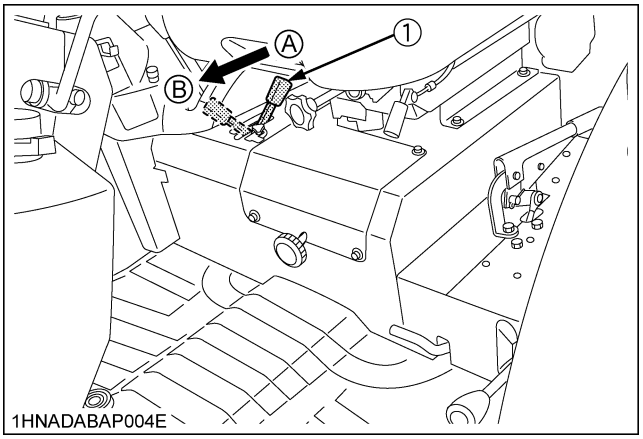

(1) Directional valve lever
(A) Three point hitch position
(B) Backhoe position

https://truckmanualshub.com/

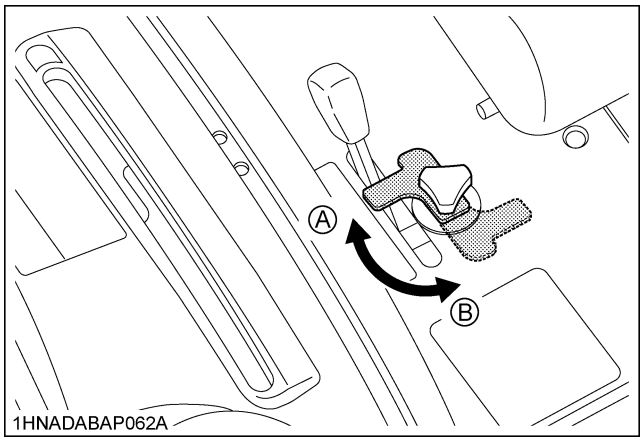

(A) Lock
(B) Unlock

IMPORTANT :
- After dismounting the backhoe, set the directional valve levers in "THREE-POINT HITCH POSITION (A)". If not, the tractor will not start.
- Do not forget to change the 2 directional valve levers, otherwise the hydraulic system may be damaged.

NOTE :
- When the hydraulic couplers at the right of the tractor are utilized as a hydraulic outlet, swing lever is switched to "with backhoe" position.

REAR REMOTE HYDRAULIC CONTROL SYSTEM (if equipped)

■Remote Control Valve Coupler Connecting and Disconnecting

WARNING

To avoid personal injury or death
- **Stop the engine and relieve pressure before connecting or disconnecting lines.**
- **Do not use your hand to check for leaks.**

◆ **Connecting**
1. Clean both couplers.
2. Remove dust plugs.
3. Insert the implement coupler to the tractor hydraulic coupler.
4. Pull the implement coupler slightly to make sure couplers are firmly connected.

◆ **Disconnecting**
1. Lower the implement first to the ground to release hydraulic pressure in the hoses.
2. Clean the couplers.
3. Relieve pressure by moving hydraulic control levers with engine shut off. Pull the hose straight from the hydraulic coupler to release it.
4. Clean oil and dust from the coupler, then replace the dust plugs.

NOTE :
- Your local KUBOTA Dealer can supply parts to adapt couplers to hydraulic hoses.

■Remote Control Valve Lever

Move the lever up or down and hold. This will raise or lower the implement. Lever will return to neutral when released.

IMPORTANT :
- Do not hold the lever in the "pull" or "push" position once the remote cylinder has reached the end of the stroke, as this will cause oil to flow through the relief valve. Forcing oil through the relief valve for extended periods will overheat the oil.
- When using the tractor hydraulic system to power front loader, do not operate boom and bucket cylinders simultaneously.

https://truckmanualshub.com/

[L47]

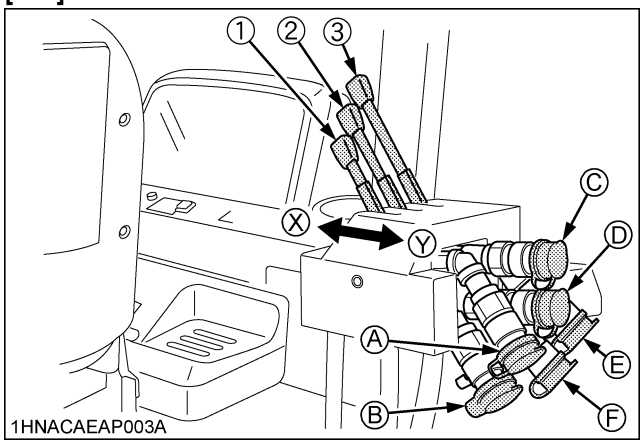

(1)(2)(3) Remote control valve lever *(X) "PUSH"*
(Y) "PULL"

[M62]

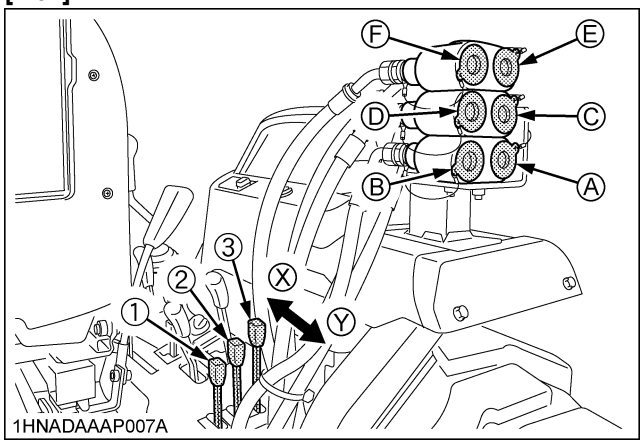

(1)(2)(3) Remote control valve lever *(X) "PUSH"*
(Y) "PULL"

Pressure →
Returning ←

Lever (1)		Push		Pull	
Port	(A)	In	←	Out	→
	(B)	Out	→	In	←
Lever (2)		Push		Pull	
Port	(C)	In	←	Out	→
	(D)	Out	→	In	←
Lever (3)		Push		Pull	
Port	(E)	In	←	Out	→
	(F)	Out	→	In	←

■Remote Control Valve

There is 1 type of remote valve available for this model.

- Double acting valve

FRONT REMOTE HYDRAULIC CONTROL SYSTEM (if equipped)

This system can be used for a front mounted hydraulic implement, as it provides hydraulic oil to the front outlet directly.

■Install the Coupler

1. Remove the cap from the front hydraulic outlet.
2. Install the hydraulic quick coupler as required.

[L47]

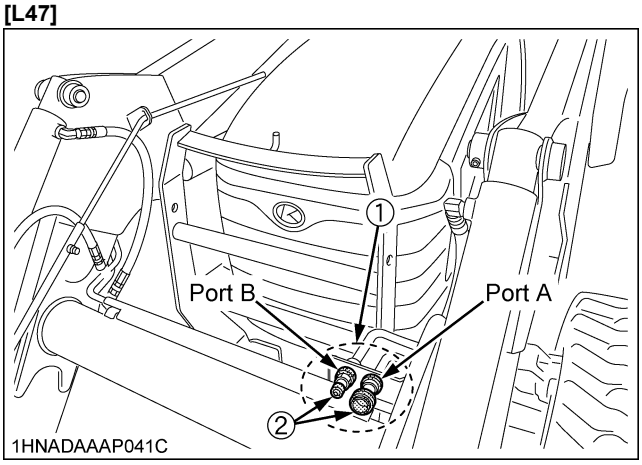

[M62]

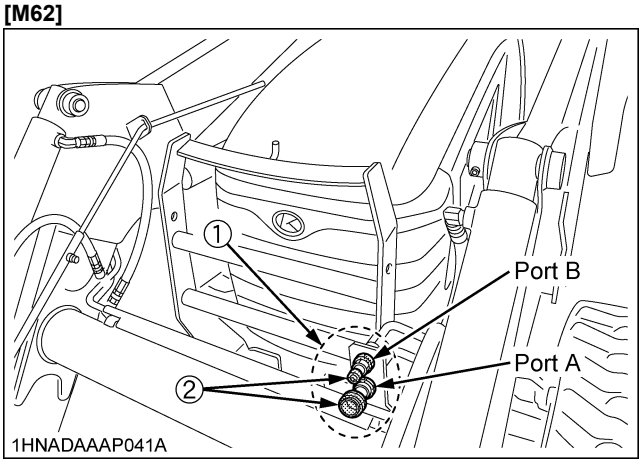

(1) Front hydraulic outlet
(2) Hydraulic quick coupler

https://truckmanualshub.com/

■Control Switch

1. Front hydraulic valve main switch
   Push the front hydraulic valve main switch (1) to engage the front hydraulic valve.
   A light on the switch will illuminate to indicate that the front hydraulic valve is on, and to enable the activation switch (2).
2. Activation switch
   (1) When pressing the "A" button, hydraulic oil will come out of the port A and return through the port B as long as the switch is pressed.
   (2) When pressing the "B" button hydraulic oil will come out of the port B and return through the port A as long as the switch is pressed.
3. Push the front hydraulic valve main switch again to disengage the front hydraulic valve, and the light of the front hydraulic valve main switch will turn off.

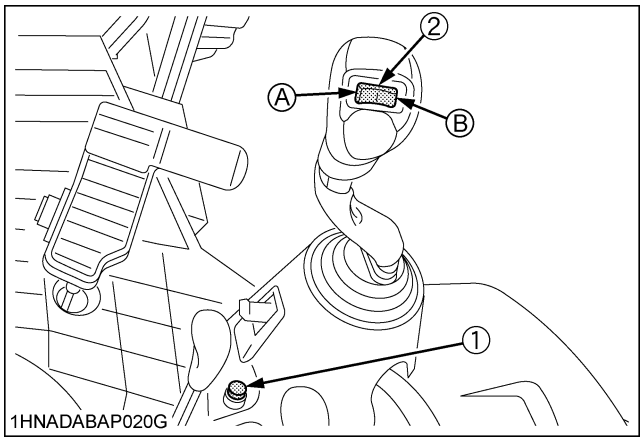

(1) Front hydraulic valve main switch
(2) Activation switch

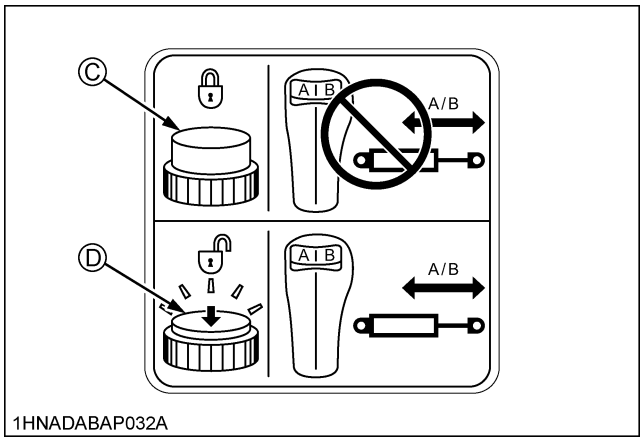

(C) Front hydraulic valve main switch "OFF"
(D) Front hydraulic valve main switch "ON"

CAUTION

To avoid personal injury:

- **Valve lock does not lock out switch operated third-function hydraulics, which are active when the key switch and the front hydraulic valve main switch are ON.**

■Remote Control Coupler Connecting and Disconnecting

WARNING

To avoid personal injury or death:

- **Stop the engine and relieve pressure before connecting or disconnecting lines.**
- **Do not use your hand to check for leaks.**

◆ Relieve Hydraulic Pressure

1. Move the key switch to the "RUN" position.

NOTE :

- Don't start the engine.

2. Push the front hydraulic valve main switch "ON".
3. Press the activation switch A and B several times.
4. Push the front hydraulic valve main switch "OFF".
5. Turn the key switch to the "OFF" position.

◆ **Connecting**

1. Clean both couplers.
2. Remove dust plugs.
3. Insert the implement coupler to the tractor hydraulic coupler.
4. Pull the implement coupler slightly to make sure couplers are firmly connected.

◆ **Disconnecting**

1. Lower the implement first to the ground to release hydraulic pressure in the hoses.
2. Clean the couplers.
3. Relieve hydraulic pressure.
   Pull the hose straight from the hydraulic coupler to release it.
4. Clean oil and dust from the coupler, and then replace the dust plugs.

NOTE :

- Your local KUBOTA Dealer can supply parts to adapt couplers to hydraulic hoses.

https://truckmanualshub.com/

■MULTI-COUPLER SYSTEM (if equipped)

This system is designed to easily connect and disconnect the 2 hydraulic hoses simultaneously without oil leak when attaching and detaching the loader.

■ How to use 2P-Multi-Coupler

◆ **Connecting**

1. Open the dust cover of the fixed part.
2. Push the safety lock button and rotate the lever until it stops.

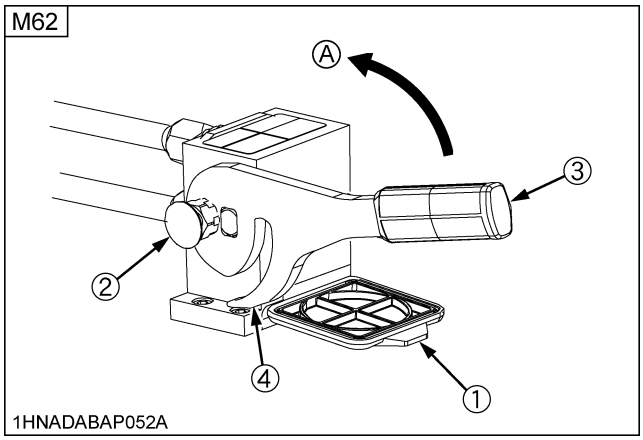

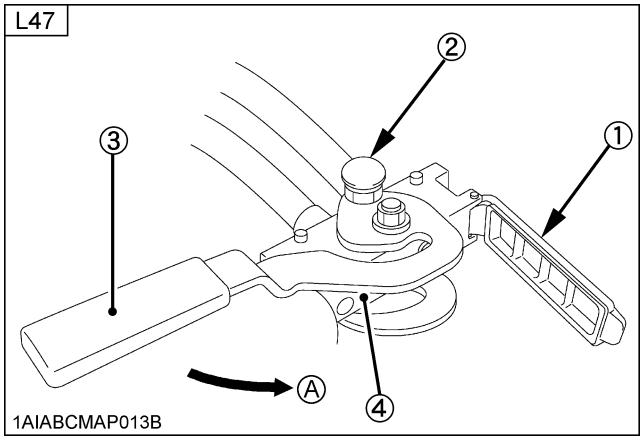

(1) Dust Cover
(2) Safety Lock Button
(3) Lever
(4) Fixed part
(A) "UNLOCK"

3. Put the mobile part on the fixed part and engage the reference pins in the proper holes.

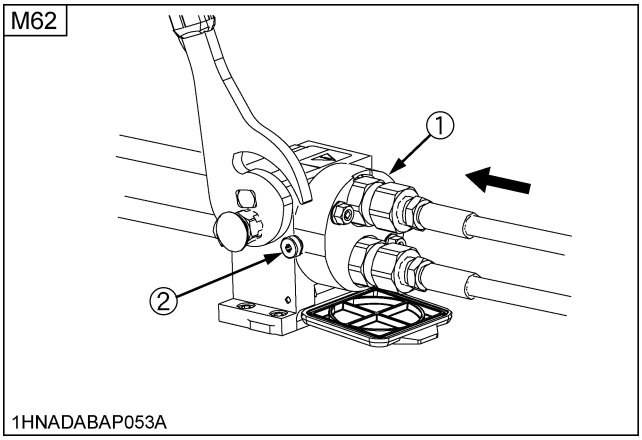

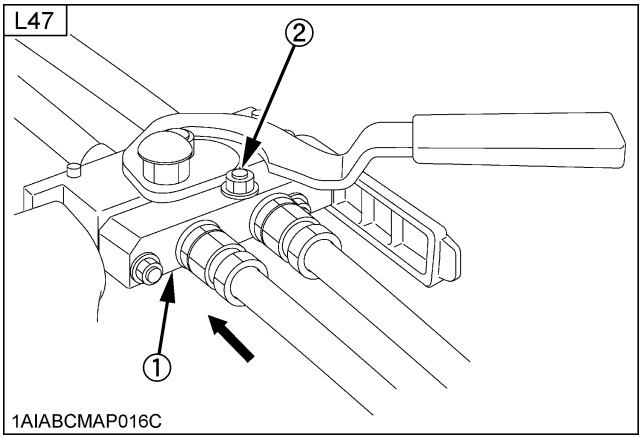

(1) Mobile part
(2) Reference pins

https://truckmanualshub.com/

4. Rotate the lever until it stops.

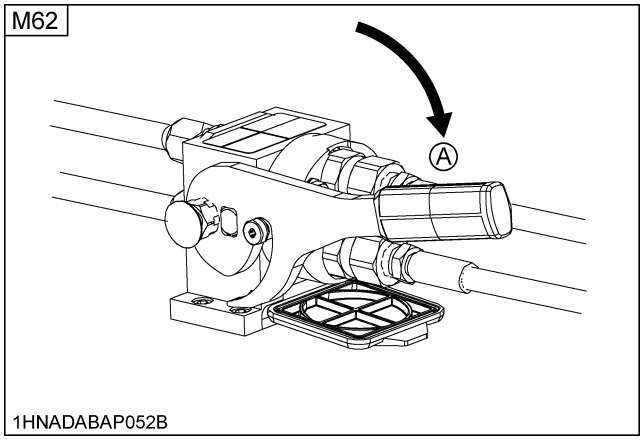

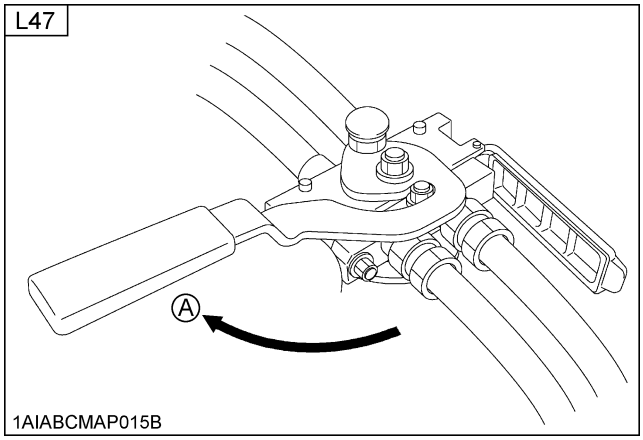

(A) "LOCK"

◆ **Disconnecting**

1. Push the safety lock button and rotate the Lever until it stops.

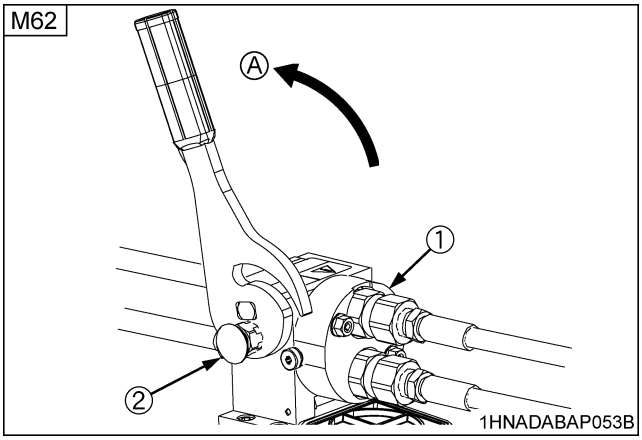

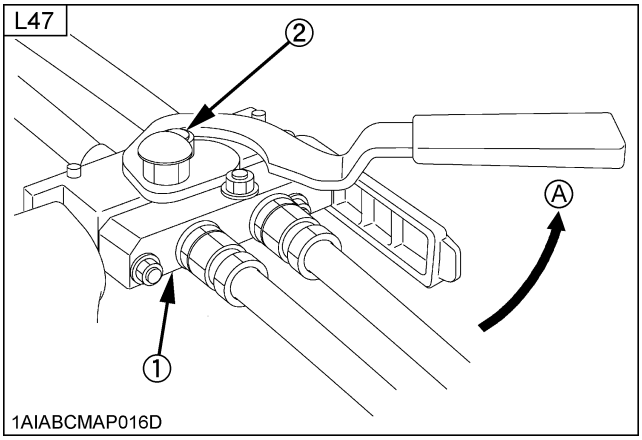

(1) Mobile part *(A) "UNLOCK"*
(2) Safety lock button

https://truckmanualshub.com/

2. Remove the mobile part from the fixed part.

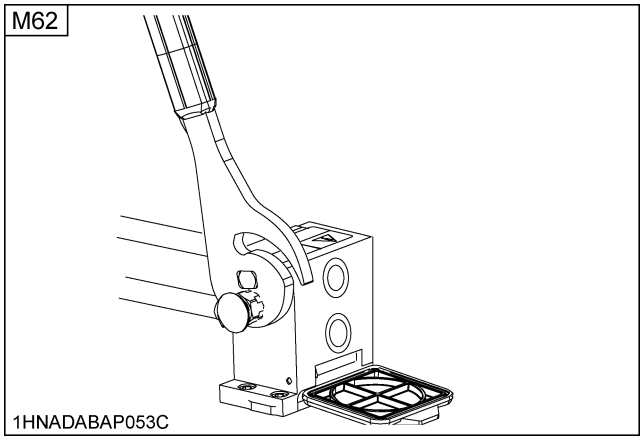

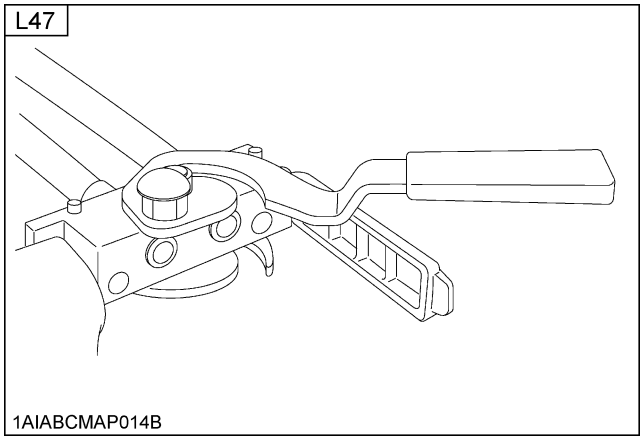

3. Rotate the lever until it stops and close the dust cover.

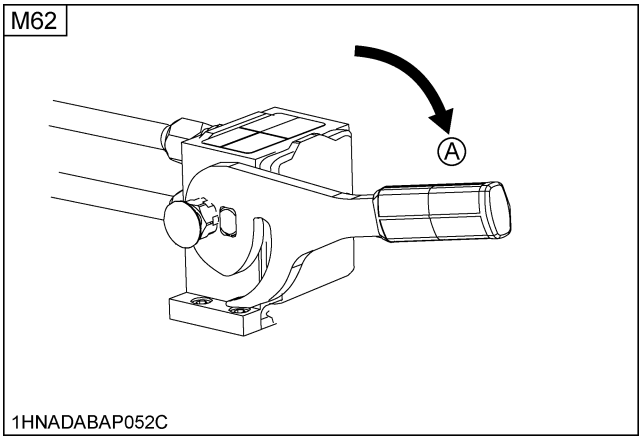

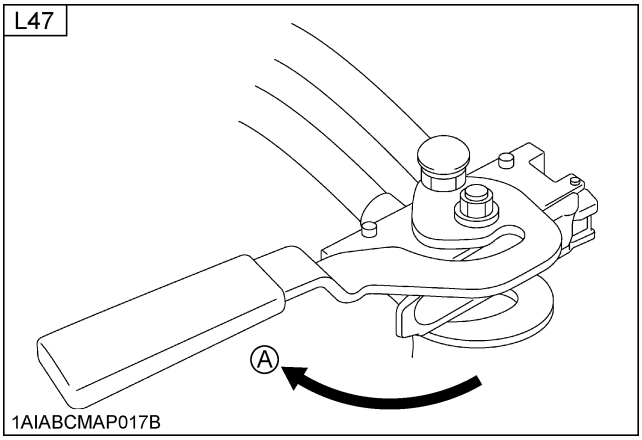

(A) "LOCK"

IMPORTANT :

- Before connecting each, ensure to carefully clean the mating surfaces of the fixed part, of the mobile part and the reference pins.
- Lubricate periodically all the moving components.
- Once the mobile part is disconnected, please close the dust cover to keep the flat surface of the fixed part clean.
- Whenever the loader is being used, always put the lever in the locked position.

https://truckmanualshub.com/

■Hydraulic Control Unit Use Reference Chart

In order to handle the hydraulics properly, the operator must be familiar with the following. Though this information may not be applicable to all types of implements and soil conditions, it is useful for general conditions.

Implement	1AGAMAAAP314A Soil condition	with Position control 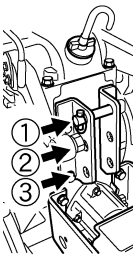 1HNADAAAP037D Top link mounting holes	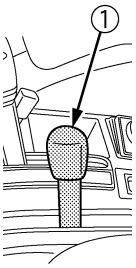 1HNADAAAP079A (1) Position control lever	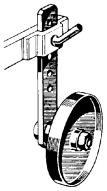 1AGAMAAAP316A Gauge wheel	Remarks
Moldboard plow	Light soil Medium soil Heavy soil	1 or 2 2 or 3 3	Position control	YES/NO	Insert the set-pin through the slot on the outer tube that align with one of the holes on the inner bar. For implements with gauge wheels, lower the position control lever all way.
Disc plow	---	2 or 3			
Harrow (spike, springtooth, disc type)	---	2 or 3			
Sub-soiler.....					
Weeder, ridger.....	---	3		YES	Telescopic stabilizer should be tight enough to prevent excessive implement movement when implement is in raised position.
Earthmover, digger, scraper, manure fork, rear carrier.....				YES/NO	
Mower (mid-and rear-mount type)				NO	

https://truckmanualshub.com/

TIRES, WHEELS AND BALLAST

TIRES

WARNING

To avoid personal injury or death:

- **Do not attempt to mount a tire on a rim. This should be done by a qualified person with the proper equipment.**
- **Always maintain the correct tire pressure. Do not inflate tires above the recommended pressure shown in the operator's manual.**

IMPORTANT :

- Do not use tires larger than specified.
- When you intend to mount different size of tires from equipped ones, consult your dealer about front drive gear ratio for detail.
  Excessive wear of tires may occur due to improper gear ratio.

■Inflation Pressure

Though the tire pressure is factory-set to the prescribed level, it naturally drops slowly in the course of time. Thus, check it everyday and inflate as necessary.

Models (Tire sizes)		Inflation Pressure
Front	**L47** 27 x 10.5-15R4	275 kPa (2.8 kgf/cm^2, 40 psi)
	M62 10-16.5R4	275 kPa (2.8 kgf/cm^2, 40 psi)
Rear	**L47** 15-19.5R4	207 kPa (2.1 kgf/cm^2, 30 psi)
	M62 17.5L-24R4	207 kPa (2.1 kgf/cm^2, 30 psi)

■Treads

[L47]

Front	Rear
27 x 10.5 - 15	15 - 19.5

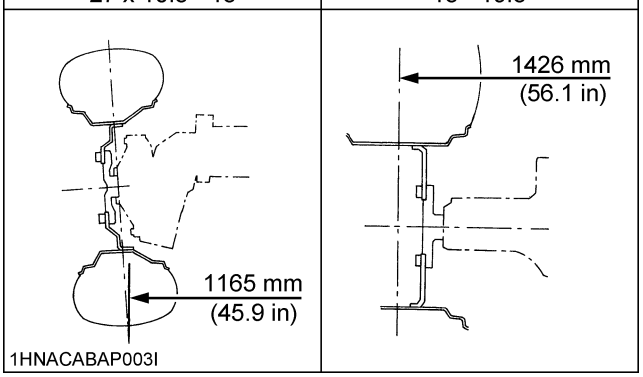

- Front wheel and Rear wheel

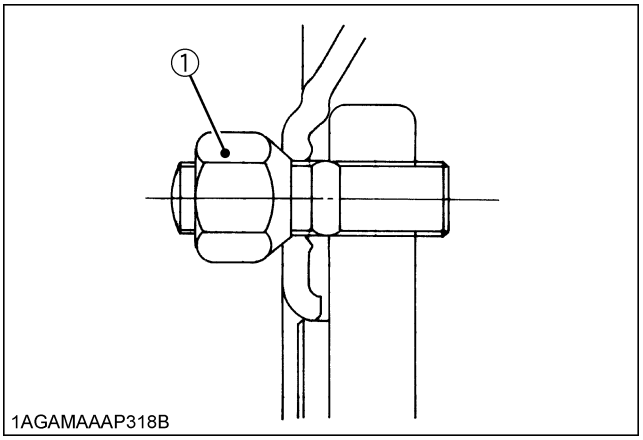

(1) Nut
Front (185 N-m, 136 ft-lbs)
Rear (260 N-m, 192 ft-lbs)

https://truckmanualshub.com/

[M62]

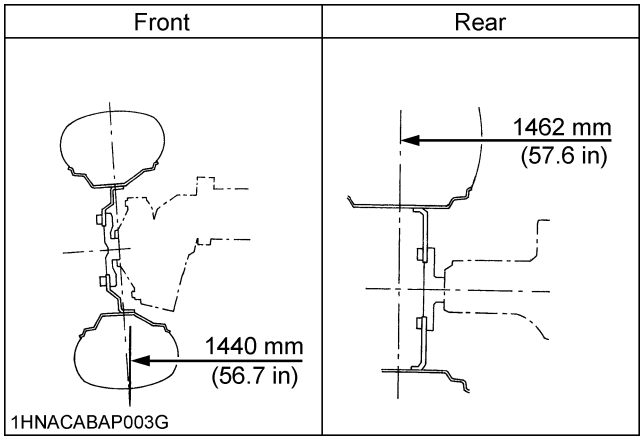

- Front wheel

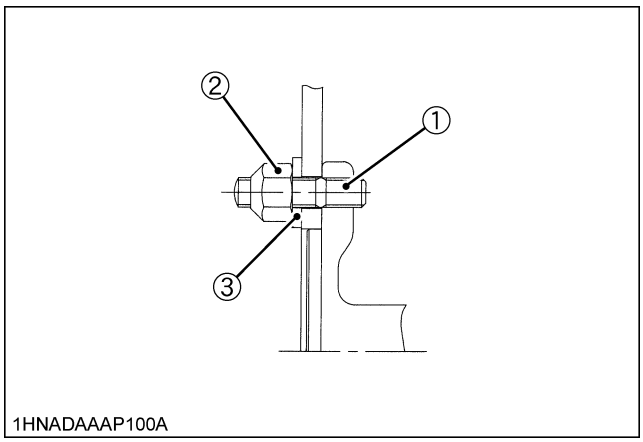

(1) Stud (73.6 N-m, 54.3 ft-lbs)
(2) Nut (M14) (196.0 N-m, 145.0 ft-lbs)
(3) Spring plate (for stud (M14))

- Rear wheel

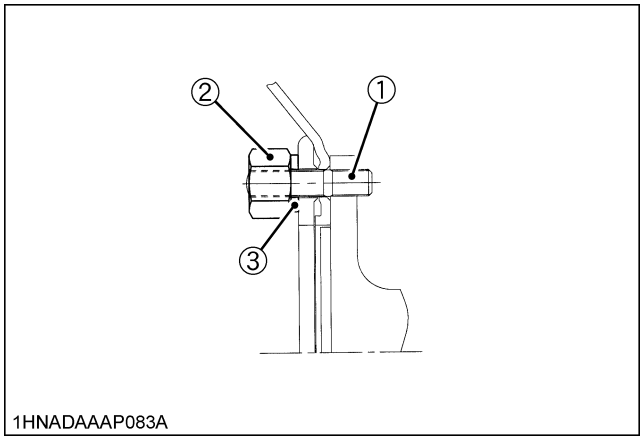

(1) Stud (112.8 N-m, 83.3 ft-lbs)
(2) Nut (M16) (260.0 N-m, 192.0 ft-lbs)
(3) Spring plate (for stud (M16))

NOTE :
- Front wheels with beveled or tapered holes:
  Use the tapered side of lug nut. (Except for rear wheels)

IMPORTANT :
- Always attach tires as shown in the above illustration.
- If not attached as illustrated, transmission parts may be damaged.
- Do not use tires larger than specified.
- When re-fitting or adjusting a wheel, tighten the bolts to the following torques and then recheck after driving the tractor 200 m (200 yards) and thereafter according to service interval.
  (See "MAINTENANCE OF THE TRACTOR" section.)

https://truckmanualshub.com/

WARNING

To avoid personal injury or death:

- **Before jacking up the tractor, park it on a firm and level ground and chock the rear wheels.**
- **Fix the front axle to keep it from pivoting.**
- **Select jacks that withstand the machine weight and set them up as shown below.**

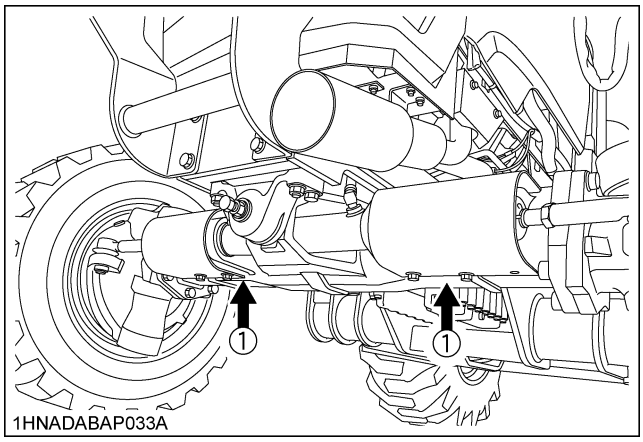

(1) Jack points

WARNING

To avoid personal injury or death:

- **Before jacking up the tractor, park it on a firm and level ground and chock the front wheels.**
- **Fix the front axle to keep it from swinging.**
- **Select a jack that withstands the machine weight and set it up as shown below.**

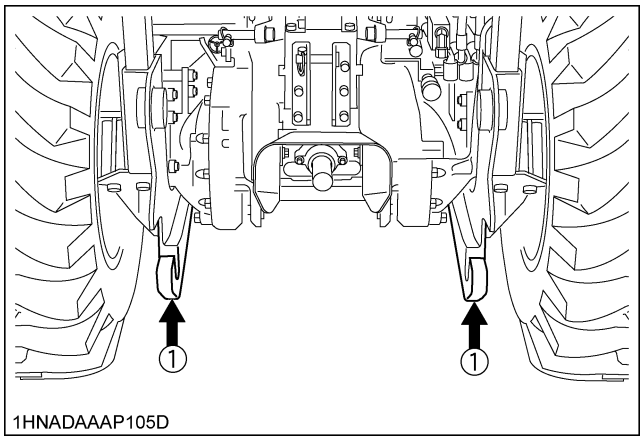

(1) Jack point

BALLAST

WARNING

To avoid personal injury or death:

- **Additional ballast will be needed for transporting heavy implements. When the implement is raised, drive slowly over rough ground, regardless of how much ballast is used.**
- **Do not fill the front wheels with liquid to maintain steering control.**

■Front Ballast

Heavy pulling and heavy rear mounted implements tend to lift front wheels. Therefore do not remove the loader from the tractor at all times to maintain steering control and prevent tip over.

■Rear Ballast

Add weight to rear wheels if needed to improve traction or for stability. The amount of rear ballast should be matched to job and the ballast should be removed when it is not needed.

The weight should be added to the tractor in the form of liquid ballast.

- When the BT1000B (L47) or BT1400 (M62) backhoe is installed to the tractor, rear ballast should be removed.

◆ Liquid Ballast in Rear Tires

Water and calcium chloride solution provides safe economical ballast. Used properly, it will not damage tires, tubes or rims. The addition of calcium chloride is recommended to prevent the water from freezing.

Use of this method of weighting the wheels has the full approval of the tire companies. See your tire dealer for this service.

https://truckmanualshub.com/

Liquid weight per tire (75 Percent filled)

Tire sizes	L47	M62
	15L - 19.5R4	17.5L - 24R4
Slush free at -10 ℃ (14 ℉) Solid at -30 ℃ (-22 ℉) [Approx. 1 kg (2 lbs.) $CaCl_2$ per 4 L (1 gal) of water]	142 kg (314 lbs.)	235 kg (515 lbs.)
Slush free at -24 ℃ (-11 ℉) Solid at -47 ℃ (-52 ℉) [Approx. 1.5 kg (3.5 lbs.) $CaCl_2$ per 4 L (1 gal) of water]	149 kg (329 lbs.)	280 kg (610 lbs.)
Slush free at -47 ℃ (-52 ℉) Solid at -52 ℃ (-62 ℉) [Approx. 2.25 kg (5 lbs.) $CaCl_2$ per 4 L (1 gal) of water]	159 kg (350 lbs.)	265 kg (585 lbs.)

IMPORTANT :

- Do not fill tires with water or solution more than 75% of full capacity (to the valve stem level).

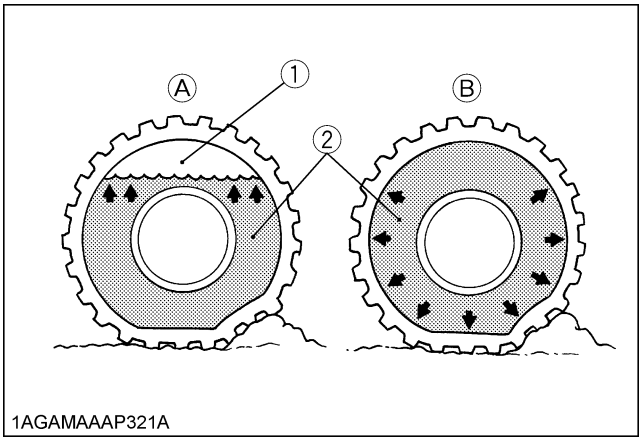

1AGAMAAAP321A

(1) Air
(2) Water
(A) Correct-75% Air compresses like a cushion
(B) Incorrect-100% Full Water can not be compressed

https://truckmanualshub.com/

MAINTENANCE OF THE TRACTOR

SERVICE INTERVALS

No.	Items			Indication on hour meter														Interval	Ref. page		
				50	100	150	200	250	300	350	400	450	500	550	600	650	700				
1	Greasing		-	○	○	○	○	○	○	○	○	○	○	○	○	○	○	every 50 Hr	102		
2	Engine start system		Check	○	○	○	○	○	○	○	○	○	○	○	○	○	○	every 50 Hr	103		
3	Wheel nut torque		Check	○	○	○	○	○	○	○	○	○	○	○	○	○	○	every 50 Hr	104		
4	Battery condition		Check		○		○		○		○		○		○		○	every 100 Hr	107	*3	
5	Air cleaner element [Double type]	Primary element	Clean		○		○		○		○		○		○		○	every 100 Hr	105	*1	@
			Replace															every 1000 Hr or 1 year	115	*4	
		Secondary element	Replace																115	*4	
6	Fan belt		Adjust		○		○		○		○		○		○		○	every 100 Hr	106		
7	Brake		Adjust		○		○		○		○		○		○		○	every 100 Hr	106		
8	Rear parking brake (cable)		Adjust		○		○		○		○		○		○		○	every 100 Hr	107		
			Replace															every 2 years	121		
9	Toe-in		Adjust				○				○				○			every 200 Hr	110		
10	Transmission oil filter [HST]		Replace	◎			○				○				○			every 200 Hr	109		
11	Water Separator		Clean								○							every 400 Hr	111		
12	Engine oil		Change	◎							○							every 400 Hr	112		
13	Engine oil filter		Replace	◎							○							every 400 Hr	111		
14	Hydraulic oil filter		Replace	◎							○							every 400 Hr	113		
15	Transmission fluid		Change								○							every 400 Hr	113		
16	Fuel filter		Replace								○							every 400 Hr	114		@
17	Front axle case oil		Change								○							every 400 Hr	114		
18	Front axle pivot		Adjust												○			every 600 Hr	115		
19	Engine valve clearance		Adjust															every 800 Hr	115	*2	
20	Fuel injection nozzle Injection pressure		Check															every 1500 Hr	115	*2	@
21	Oil separator element		Replace															every 1500 Hr	115		@

https://truckmanualshub.com/

No.	Items		Indication on hour meter														Interval	Ref. page		
			50	100	150	200	250	300	350	400	450	500	550	600	650	700				
22	PCV (Positive Crankcase Ventilation) valve (Oil separator)	Check															every 1500 Hr	115	*2	@
23	EGR cooler	Check Clean															every 1500 Hr	116	*2	@
24	Cooling system	Flush															every 2000 Hr or 2 years	116	*5	
25	Coolant	Change																116	*5	
26	EGR system	Check Clean															every 3000 Hr	117	*2	@
27	Supply pump	Check															every 3000 Hr	117	*2	
28	DPF muffler	Clean															every 3000 Hr	117	*2	@
29	Turbo charger **[M62]**	Check															every 3000 Hr	117	*2	@
30	Radiator hose and clamp	Check															every 1 year	118	*6	
		Replace															every 4 years	121		
31	Oil cooler line / Power steering oil line	Check															every 1 year	120	*6	
		Replace															every 4 years	121, 121	*2	
32	Fuel line	Check															every 1 year	118	*6	@
		Replace															every 4 years	121	*2	
33	Intake air line	Check															every 1 year	119	*6	@
		Replace															every 4 years	121	*2	
34	Oil separator hose	Check															every 1 year	120	*6	
		Replace															every 4 years	121	*2	
35	Exhaust manifold	Check															every 1 year	120	*2	
36	DPF differential pressure sensor pipe	Check															every 1 year	120	*2	
37	EGR pipe	Check															every 1 year	120	*2	
38	Antifrost heater for Oil Separator (if equipped)	Check															every 1 year	120	*2	
39	DPF differential pressure sensor hose	Check															every 1 year	120	*6	
		Replace															every 4 years	121	*2	
40	Fuel system	Bleed															Service as required	121		
41	Clutch housing water	Drain																122		
42	Fuse	Replace																122		
43	Light bulb	Replace																123		

https://truckmanualshub.com/

IMPORTANT :

- The jobs indicated by ◎ must be done after the first 50 hours of operation.

*1 Air cleaner should be cleaned more often in dusty conditions than in normal conditions.

*2 Consult your local KUBOTA Dealer for this service.

*3 When the battery is used for less than 100 hours per year, check the battery condition by reading the indicator annually.

*4 Every in 1000 hours or every 1 year, whichever comes first.

*5 Every in 2000 hours or every 2 years, whichever comes first.

*6 Inspect every year; replace if any deterioration (crack, hardening, scar, or deformation) or damage occurred.
However, must be replaced every 4 years regardless of the condition.

- The items listed above (@ marked) are registered as emission related critical parts by KUBOTA in the U.S.EPA non-road emission regulation. As the engine owner, you are responsible for the performance of the required maintenance on the engine according to the above instruction.
  Please see Warranty Statement in detail.

https://truckmanualshub.com/

LUBRICANTS, FUEL AND COOLANT

No.	Locations	Capacities		Lubricants	
		L47	M62		
1	Fuel	67 L (17.7 U.S.gals.)		No. 2-D S15 diesel fuel No. 1-D S15 diesel fuel if temperature is below -10 ℃ (14 ℉)	
2	Coolant	8.2 L (8.7 U.S.qts.) Recovery tank 1.0 L (1.1 U.S.qts.)		Fresh clean soft water with anti-freeze	
3	Engine crankcase (with filter)	8.2 L (8.7 U.S.qts.)	9.4 L (9.9 U.S.qts.)	● Engine oil: Refer to next page	
				Above 25 ℃ (77 ℉)	SAE30, SAE10W-30 or 15W-40
				-10 to 25 ℃ (14 to 77 ℉)	SAE20, SAE10W-30 or 15W-40
				Below -10 ℃ (14 ℉)	SAE10W-30
4	Transmission case	46 L (12.2 U.S.gals.)		● KUBOTA SUPER UDT-2 fluid	
5	Front axle case [4WD]	7.0 L (7.4 U.S.qts.)	12.5 L (13.2 U.S.qts.)	● KUBOTA SUPER UDT-2 fluid or SAE 80-SAE90 gear oil	
6	Greasing	No. of greasing points		Capacity	Type of grease
	Front axle support	2		Until grease overflows.	Multipurpose Grease NLGI-2 OR NLGI-1 (GC-LB)
	Top link	2			
	Lift rod	1			
	Battery terminal	2		Moderate amount	
	Suspension adjuster	---			
	Lock plate	---			
	Spring hook	---			
	Reversible seat	---			

NOTE :

The product name of KUBOTA genuine UDT fluid may be different from that in the Operator's Manual depending on countries or territories. Consult your local KUBOTA Dealer for further details.

https://truckmanualshub.com/

NOTE :

◆ **Engine Oil:**

- Oil used in the engine should have an American Petroleum Institute (API) service classification and Proper SAE Engine Oil according to the ambient temperatures as shown above:

- Refer to the following table for the suitable API classification engine oil according to the engine type (with DPF (Diesel Particulate Filter) type engines) and the fuel.

Fuel used	Engine oil classification (API classification)
	Oil class for engines with DPF
Ultra Low Sulfur Fuel [<0.0015% (15 ppm)]	**CJ-4**

◆ **Fuel:**

- Use the ultra low sulfur diesel fuel only [below 0.0015% (15 ppm)] for these engines.
- Cetane number of 45 minimum. Cetane number greater than 50 is preferred, especially for temperatures below -20℃ (-4℉) or elevations above 1500 m (5000 ft).
- Diesel fuels specified to EN 590 or ASTM D975 are recommended.
- No.2-D is a distillate fuel of lower volatility for engines in industrial and heavy mobile service. (SAE J313 JUN87)

◆ **Transmission Oil:**

*KUBOTA Super UDT-2: For an enhanced ownership experience, we highly recommend Super UDT-2 to be used instead of standard hydraulic/transmission fluid.
Super UDT-2 is a proprietary KUBOTA formulation that delivers superior performance and protection in all operating conditions.
Regular UDT is also permitted for use in this machine.

- Indicated capacities of water and oil are manufacturer's estimate.

https://truckmanualshub.com/

PERIODIC SERVICE OF THE TRACTOR

WARNING

To avoid personal injury or death:

- **Do not work under any hydraulically supported devices. They can settle, suddenly leak down, or be accidentally lowered. If necessary to work under tractor or any machine elements for servicing or adjustment, securely support them with stands or suitable blocking beforehand.**

HOW TO OPEN THE HOOD

WARNING

To avoid personal injury or death from contact with moving parts:

- **Never open the hood while the engine is running.**
- **Do not touch muffler or exhaust pipes while they are hot. Severe burns could result.**
- **Support hood with other hand while unlocking support link.**

■Hood

To open the hood, pull the lever to release the latch and open the hood.

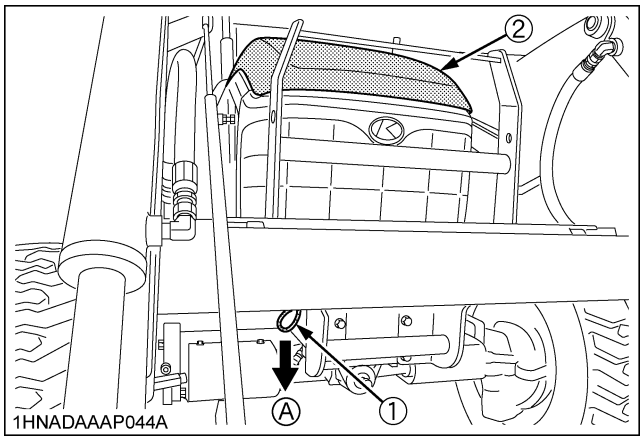

(1) Lever *(A) "OPEN"*
(2) Hood

NOTE :

- To close the hood, hold the hood and release the support link.

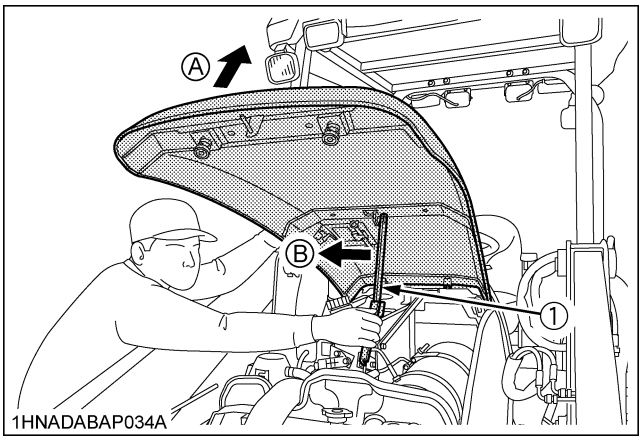

(1) Support link *(A) "HOLD"*
(B) "PULL"

■Side Cover

To remove the side cover, turn the 2 lock screws counterclockwise by 90°, and then raise and take away the side cover.

[Both side]

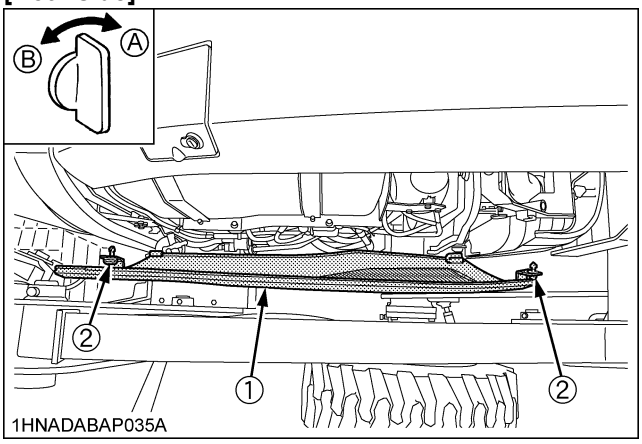

(1) Side cover *(A) "LOCK POSITION"*
(2) Lock screw *(B) "UNLOCK POSITION"*

https://truckmanualshub.com/

■Front Cover

1. Detach the knob bolts at both sides completely and detach the front cover.

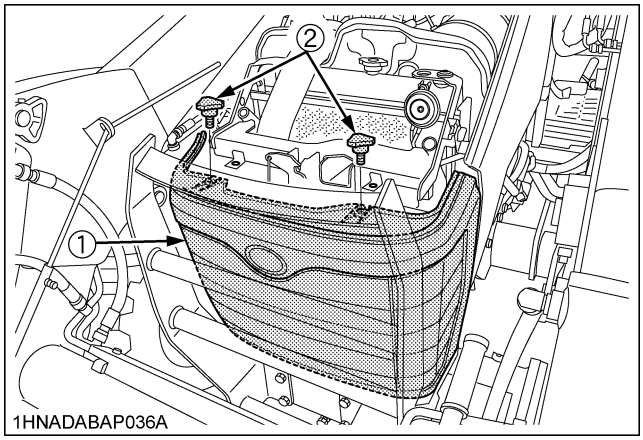

(1) Front cover
(2) Knob bolt

■Floor Seat Cover

1. Remove the bolts on the floor cover.
2. Remove the cover.

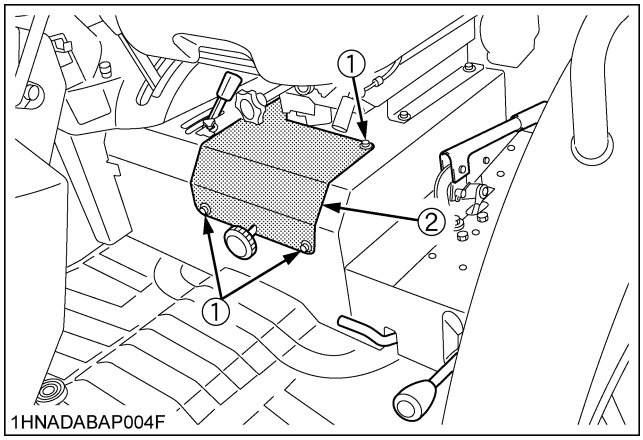

(1) Bolt
(2) Floor seat cover

DAILY CHECK

For your own safety and maximum service life of the machine, make a thorough daily inspection before operating the machine to start the engine.

WARNING

To avoid personal injury or death:
Take the following precautions when checking the tractor.

- **Park the machine on firm and level ground.**
- **Set the parking brake.**
- **Lower the implement to the ground.**
- **All residual pressure of the hydraulic system released.**
- **Stop the engine and remove the key.**

■Walk Around Inspection

Look around and under the tractor for such items as loose bolts, trash build-up, oil or coolant leaks, broken or worn parts.

https://truckmanualshub.com/

■Checking and Refueling

WARNING

To avoid personal injury or death:
- **Do not smoke while refueling.**
- **Be sure to stop the engine before refueling.**

1. Turn the key switch to "ON", check the amount of fuel by fuel gauge.
2. Fill fuel tank when fuel gauge shows 1/4 or less fuel in tank.
3. Lock the cover with the key after filling the fuel tank.

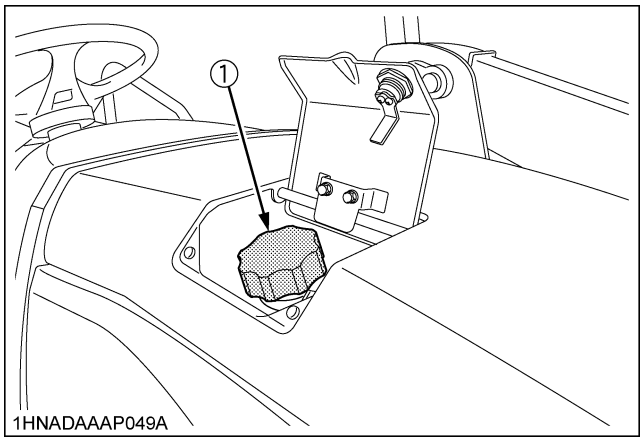

(1) Fuel tank cap

Fuel tank capacity	67 L (17.8 U.S.gals.)

IMPORTANT :
- Be sure to use Ultra Low Sulfur Fuel (S15).
- Do not permit dirt or trash to get into the fuel system.
- Be careful not to let the fuel tank become empty, otherwise air will enter the fuel system, necessitating bleeding before next engine start.
- If the engine runs out of fuel and stalls, the engine components may be damaged.
- Be careful not to spill during refueling. If a spill should occur, wipe it off at once, or it may cause a fire.
- To prevent condensation (water) accumulation in the fuel tank, fill the tank before parking overnight.

■Checking Water Separator

1. When the water has collected upper limit in the water separator, the water separator indicator on the instrument panel lights up and warning buzzer sounding.

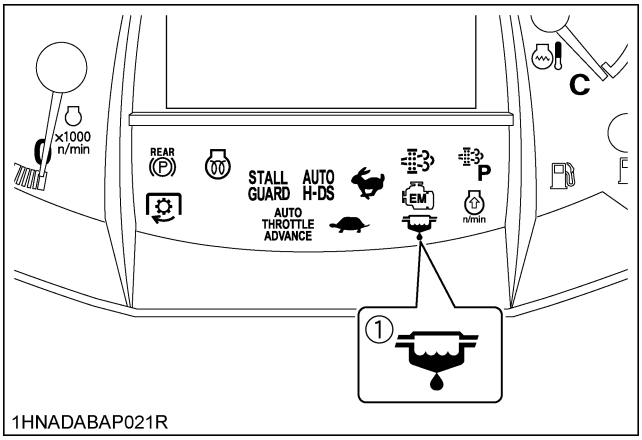

(1) Water separator indicator

2. In such case, close the fuel shutoff-valve and loosen the air plug and drain plug by several turns.
3. Allow water to drain. When no more water comes out and fuel starts to flow out, retighten the air plug and drain plug.
4. Bleed the fuel system.
   (See "SERVICE AS REQUIRED" in "PERIODIC SERVICE" section.)

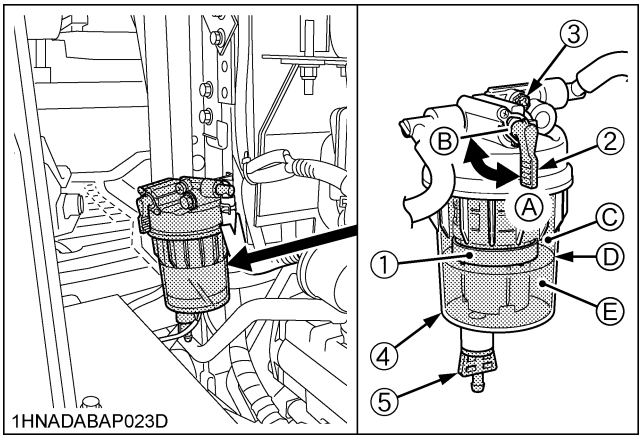

(1) Red float	*(A) "ON"*
(2) Fuel shutoff-valve	*(B) "OFF"*
(3) Air plug	*(C) "FUEL"*
(4) Cup	*(D) "UPPER LIMIT"*
(5) Drain plug	*(E) "WATER"*

NOTE :
- The red float is raised, when the red float has reached the upper limit, start from step 2 in the above procedure to drain water in the water separator.

IMPORTANT :
- If water is drawn through to the fuel pump, extensive damage will occur.

https://truckmanualshub.com/

■Checking Engine Oil Level

WARNING

To avoid personal injury or death:

- **Be sure to stop the engine before checking the oil level.**

1. Park the machine on a flat surface.
2. Check engine oil before starting the engine or 5 minutes or more after the engine has stopped.
3. To check the oil level, draw out the dipstick, wipe it clean, replace it, and draw it out again. Check to see that the oil level lies between the two notches.
   If the level is too low, add new oil to the prescribed level at the oil inlet.
   (See "LUBRICANTS" in "MAINTENANCE OF THE TRACTOR" section.)

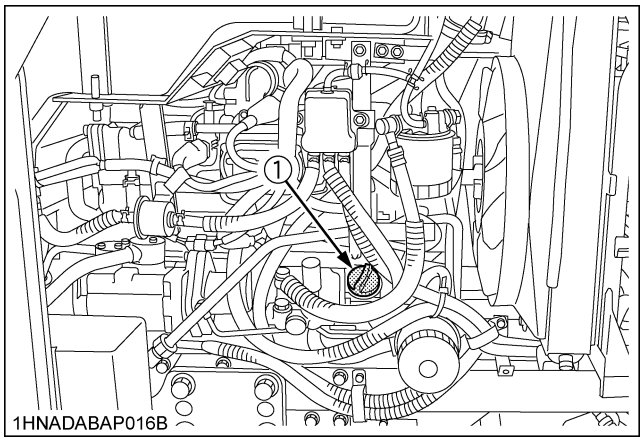

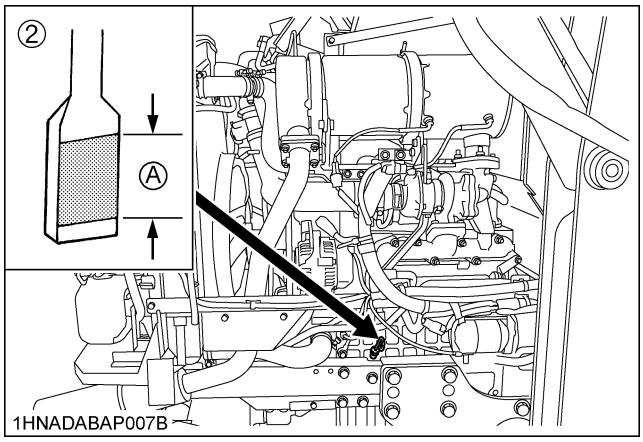

(1) Oil inlet *(A) Oil level is acceptable within this range.*
(2) Dipstick

IMPORTANT :

- When using an oil of different maker or viscosity from the previous one, remove all of the old oil.
  Never mix two different types of oil.
- If oil level is low, do not run engine.

NOTE :

- At times a small amount of fuel, which is used to regenerate the DPF, may get mixed with the engine oil and the engine oil may increase in volume.

■Checking Transmission Fluid Level

1. Park the machine on a flat surface, lower the implement and shut off engine.
2. To check the oil level, draw out the dipstick, wipe it clean, replace it, and draw it out again. Check to see that the oil level lies between the two notches.
   If the level is too low, add new oil to the prescribed level at the oil inlet.
   (See "LUBRICANTS" in "MAINTENANCE OF THE TRACTOR" section.)

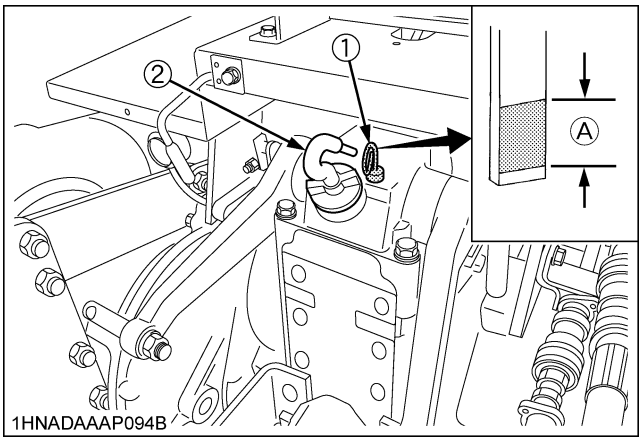

(1) Dipstick *(A) Oil level is acceptable within this range.*
(2) Oil inlet

IMPORTANT :

- If oil level is low, do not run the engine.
- When using BT1000B or BT1400 Backhoe and checking oil level, locate the tractor/loader/backhoe on a flat and set the loader/backhoe as illustrated below.

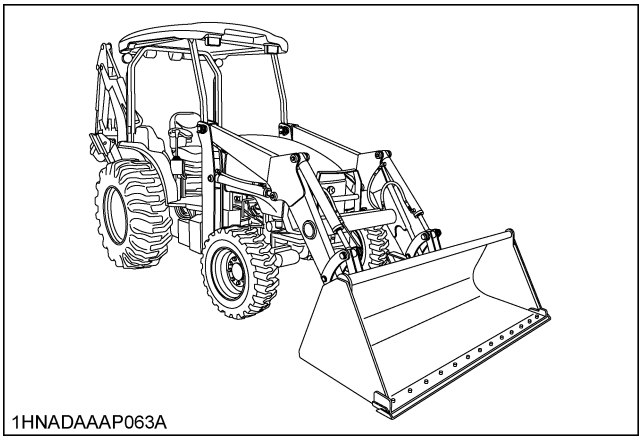

https://truckmanualshub.com/

■Checking Coolant Level

WARNING

To avoid personal injury or death:

- **Do not remove radiator cap while coolant is hot. When cool, slowly rotate cap to the first stop and allow sufficient time for excess pressure to escape before removing the cap completely.**

1. Check to see that the coolant level is between the "FULL" and "LOW" marks of recovery tank.
2. When the coolant level drops due to evaporation, add soft water only up to the full level.
   In case of leakage, add anti-freeze and soft water in the specified mixing ratio up to the full level.
   (See "Flushing Cooling System and Changing Coolant" in "EVERY 2000 HOURS or 2 YEARS" in "PERIODIC SERVICE" section.)

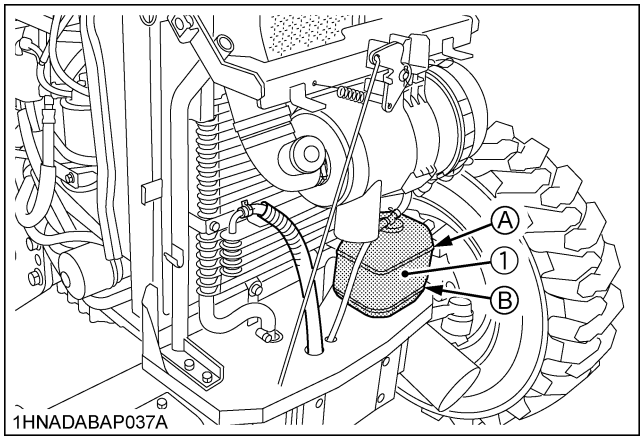

(1) Recovery tank *(A) "FULL"* *(B) "LOW"*

IMPORTANT :

- If the radiator cap has to be removed, follow the caution above and securely retighten the cap.
- Use clean, fresh soft water and anti-freeze to fill the recovery tank.
- If water should leak, consult your local KUBOTA Dealer.

■Cleaning Grill, Radiator Screen and Oil Cooler

WARNING

To avoid personal injury or death:

- **Be sure to stop the engine before removing the screen.**

1. Check front grill and side screens to be sure they are clean of debris.
2. Detach the screen and remove all foreign materials.

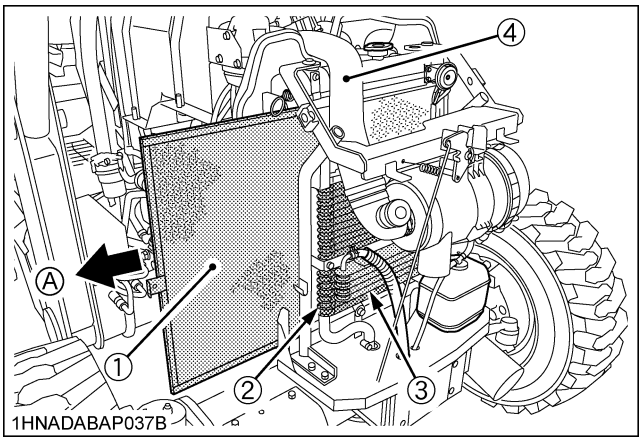

(1) Radiator screen *(A) "PULL"*
(2) Oil cooler
(3) Fuel cooler
(4) Inlet pipe

IMPORTANT :

- Grill and screen must be clean from debris to prevent engine from overheating and to allow good air intake for the air cleaner.

https://truckmanualshub.com/

■Checking Dust Indicator

There is a dust indicator on the air cleaner body. If the red signal on the dust indicator is visible, clean the element immediately. (See "Cleaning Air Cleaner Primary Element" in "EVERY 100 HOURS" maintenance) Reset the red signal by pushing a "RESET" button after cleaning.

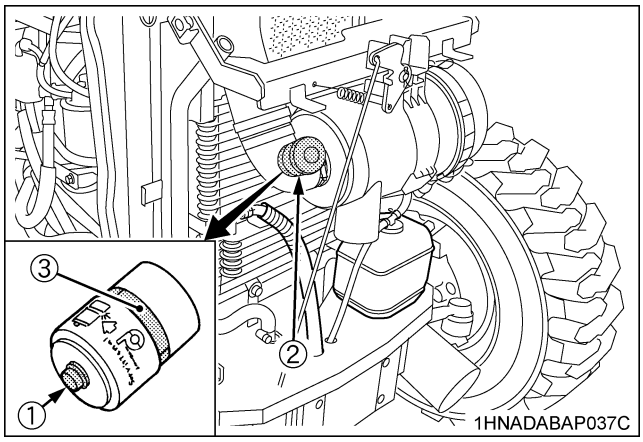

(1) "RESET" button
(2) Dust indicator
(3) Red signal

■Checking DPF Muffler

WARNING

To avoid personal injury or death:

- **Before checking or cleaning the DPF muffler, stop the engine and wait long enough until it is cooled down.**

Check the DPF muffler and its surroundings for build-up of anything flammable. Otherwise a fire may result.

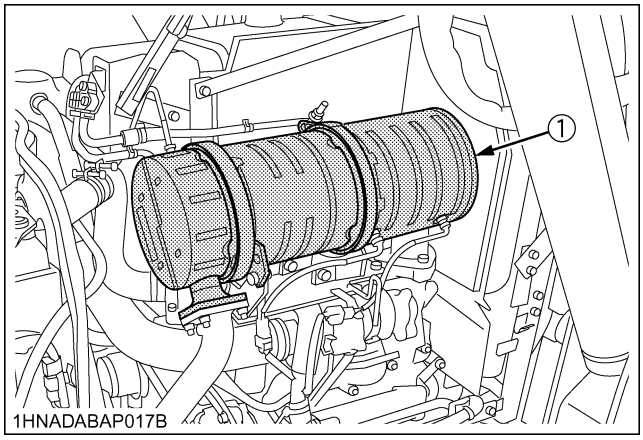

(1) DPF muffler

■Checking Brake Pedal

WARNING

To avoid personal injury or death:

- **Be sure brake pedals have equal adjustment when using locked together. Incorrect or unequal brake pedal adjustment can cause the tractor to swerve or roll-over.**

1. Inspect the brake pedals for free travel, and smooth operation.
2. Adjust if incorrect measurement is found:
   (See "Adjusting Brake Pedal" in "EVERY 100 HOURS" in "PERIODIC SERVICE" section.)

■Checking Gauges, Meter and Easy Checker(TM)

1. Inspect the instrument panel for broken gauge(s), meter(s) and Easy Checker(TM) lamps.
2. Replace if broken.

■Checking Head Light, Hazard Light etc.

1. Inspect the lights for broken bulbs and lenses,
2. Replace if broken.

■Checking Seat Belt, ROPS and FOPS

1. Always check condition of seat belt, ROPS and FOPS attaching hardware before operating tractor.
2. Replace if damaged.

■Checking Movable Parts

If any of the movable parts, such as levers and pedals, is not smoothly moved because of rust or sticky material, do not attempt to force it into motion.
In the above case, remove the rust or the sticky material, and apply oil or grease on the relevant spot.
Otherwise, the machine may get damaged.

https://truckmanualshub.com/

EVERY 50 HOURS

■Lubricating Grease Fittings

Apply a small amount of multipurpose grease to the following points every 50 hours:
If you operated the machine in extremely wet and muddy conditions, lubricate grease fittings more often.

When applying grease to forward front axle support, remove the breather plug and apply grease until grease overflows from breather plug port.
After greasing reinstall the breather plug.

[L47]

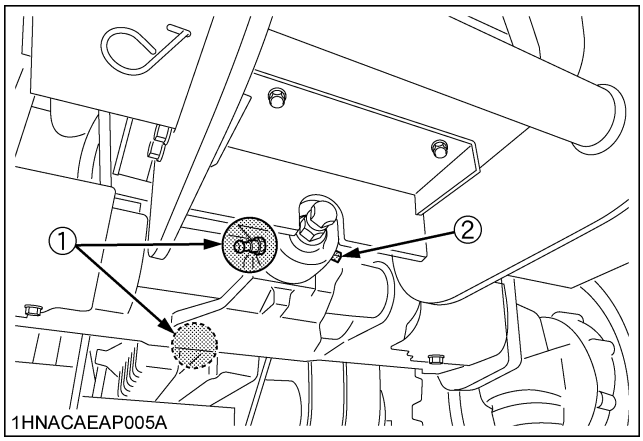

(1) Grease fitting (Front axle support)
(2) Breather plug

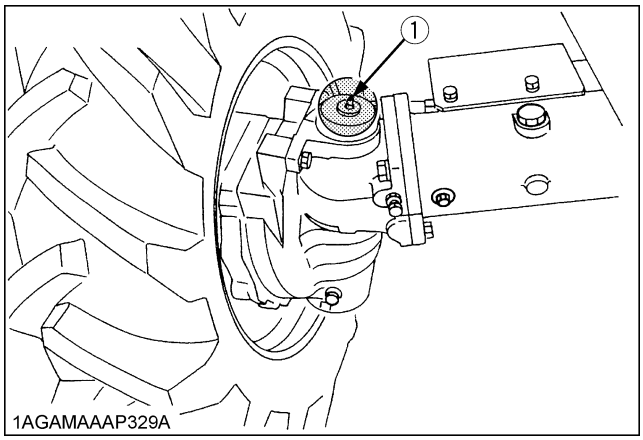

(1) Grease fitting (Front axle gear case support) [RH, LH]

[M62]

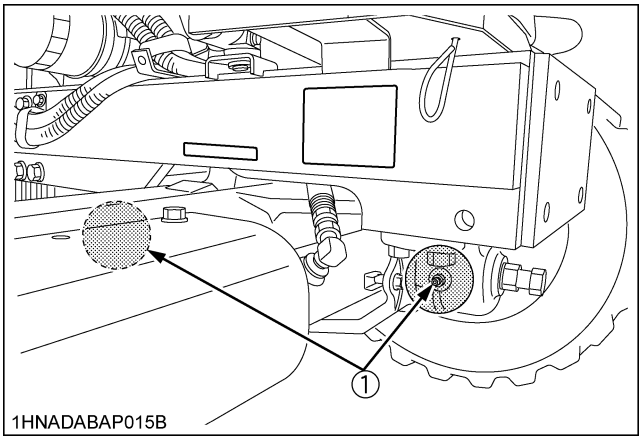

(1) Grease fitting (Front axle support)

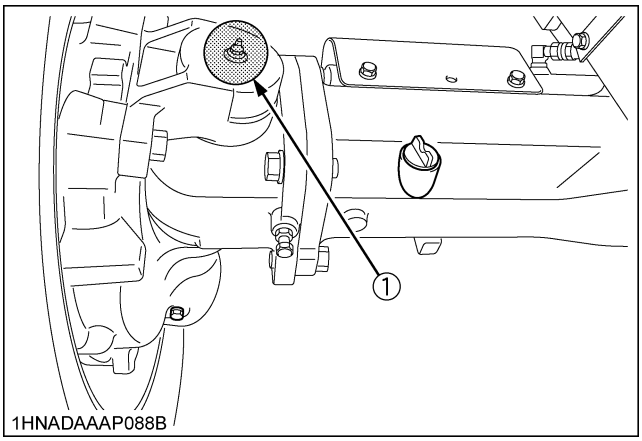

(1) Grease fitting (Front axle gear case support) [RH, LH]

[L47 and M62]

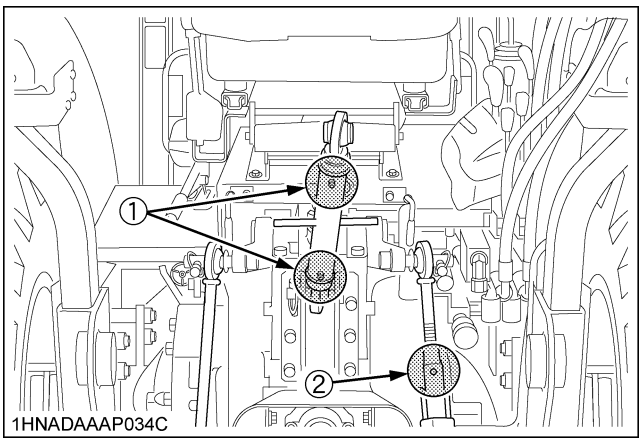

(1) Grease fitting (Top link) [if equipped]
(2) Grease fitting (Lifting rod • RH) [if equipped]

https://truckmanualshub.com/

[L47 and M62]

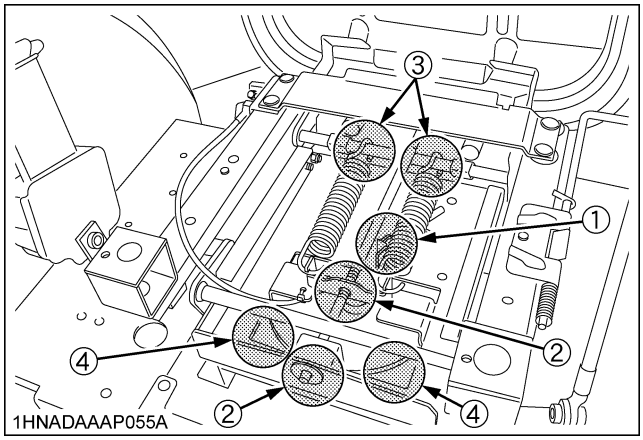

(1) Lock plate
(2) Suspension adjuster
(3) Spring hook
(4) Reversible seat

[L47 and M62]

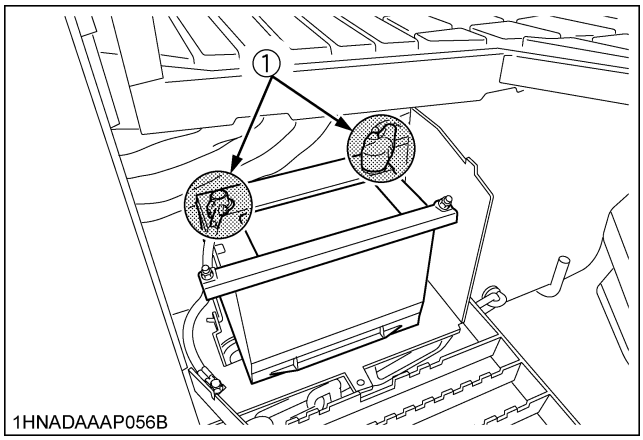

(1) Battery terminals

■Checking Engine Start System

WARNING

To avoid personal injury or death:

- **Do not allow anyone near the tractor while testing.**
- **If the tractor does not pass the test, do not operate the tractor.**

◆ **Preparation before testing.**

1. Place all control levers in the "NEUTRAL" position.
2. Set the parking brake and stop the engine.

◆ **Test: Switch for the speed control pedal.**

1. Sit on the operator's seat.
2. Depress the speed control pedal to the desired direction.
3. Disengage the PTO clutch control switch or lever.
4. Turn the key to "START" position.
5. The engine must not crank.
6. If it cranks, consult your local KUBOTA Dealer for this service.

◆ **Test: Switch for the PTO clutch control switch or lever.**

1. Sit on the operator's seat.
2. Engage the PTO clutch control switch or lever.
3. Place the speed control pedal in neutral position.
4. Turn the key to "START" position.
5. The engine must not crank.
6. If it cranks, consult your local KUBOTA Dealer for this service.

◆ **Test : Switch for the rear parking brake.**

1. Sit on the operator's seat. (rear side)
2. Disengage the rear parking brake lever.
3. Turn the key to "START" position.
4. The engine must not crank.

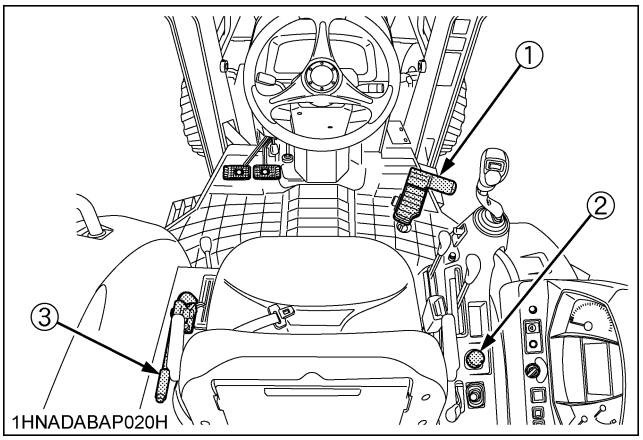

(1) Speed control pedal
(2) PTO clutch control switch
(3) Hand brake lever

https://truckmanualshub.com/

■Checking Operator Presence Control

WARNING

To avoid personal injury or death:

- **Do not allow anyone near the tractor while testing.**
- **If the tractor does not pass the test, do not operate the tractor.**

◆ **Preparation before testing.**

1. Place all control levers in the "NEUTRAL" position.
2. Set the parking brake and stop the engine.

◆ **Test: Switch for the operator's seat**

1. Sit on the operator's seat.
2. Start the engine.
3. Engage the PTO clutch control switch or lever.
4. Stand up. (Do not get off the machine.)
5. The engine must shut off after approximately 1 second.
6. If it does not stop, consult your local KUBOTA Dealer for this service.

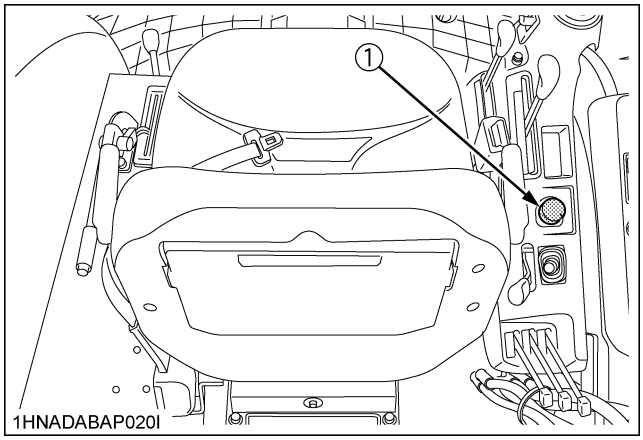

(1) PTO clutch control switch

■Checking Wheel Nut Torque

WARNING

To avoid personal injury or death:

- **Never operate tractor with a loose rim, wheel, or axle.**
- **Any time bolts and nuts are loosened, retighten to specified torque.**
- **Check all bolts and nuts frequently and keep them tight.**

Check wheel bolts and nuts regularly especially when new. If they are loose, tighten them as follows.

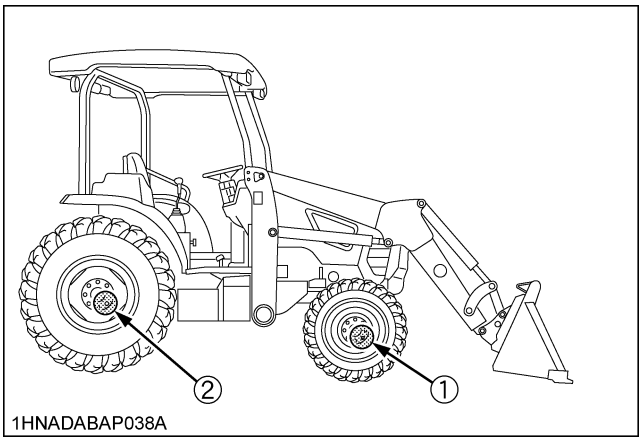

[L47]
(1) 185 N-m (19 kgf-m, 136 ft-lbs)
(2) 260 N-m (27 kgf-m, 192 ft-lbs)
[M62]
(1) 196 N-m (20 kgf-m, 145 ft-lbs)
(2) 260 N-m (27 kgf-m, 192 ft-lbs)

https://truckmanualshub.com/

EVERY 100 HOURS

■Cleaning Air Cleaner Primary Element

1. Open the hood and remove the air cleaner cover and the primary element.
2. Clean the primary element:
   (1) When dry dust adheres to the element, blow compressed air from the inside, turning the element. Pressure of compressed air must be under 205 kPa (2.1 kgf/cm^2, 30 psi).
   (2) When carbon or oil adheres to the element, soak the element in detergent for 15 minutes then wash it several times in water, rinse with clean water and dry it naturally. After element is fully dried, inspect inside of the element with a light and check if it is damaged or not.
3. Replace air cleaner primary element:
   Every 1000 hours or once yearly cleaning, whichever comes first.

NOTE :
- Check to see if the evacuator valve is blocked with dust.

[L47]

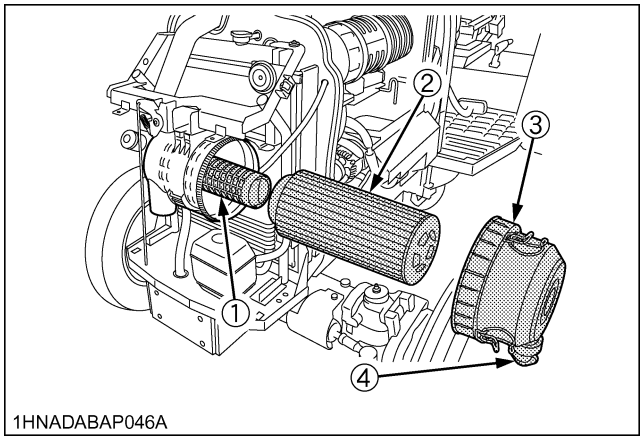

[M62]

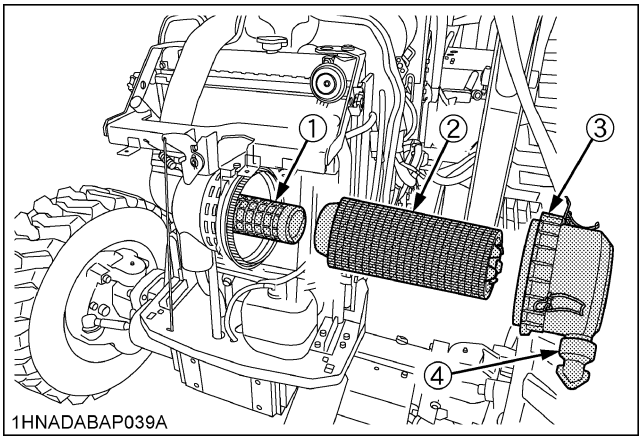

(1) Secondary (safety) element
(2) Primary element
(3) Cover
(4) Evacuator valve

IMPORTANT :
- The air cleaner uses a dry element, never apply oil.
- Do not run the engine with filter element removed.
- Be sure to refit the cover with the arrow ⬆ (on the rear of cover) upright. If the cover is improperly fitted, evacuator valve will not function and dust will adhere to the element.
- Do not touch the secondary element except in cases where replacing is required.
  (See "Replacing Air Cleaner Secondary Element" in "EVERY 1000 HOURS or 1 YEAR" maintenance)

◆ Evacuator Valve

Open the evacuator valve once a week under ordinary conditions - or daily when used in a dusty place - to get rid of large particles of dust and dirt.

https://truckmanualshub.com/

■Adjusting Fan Belt Tension

WARNING

To avoid personal injury or death:

- **Be sure to stop the engine before checking belt tension.**

Proper fen belt tension	A deflection of between 7 to 9 mm (0.28 to 0.34 in.) when the belt is pressed in the middle of the span.

1. Stop the engine and remove the key.
2. Apply moderate thumb pressure to belt between pulleys.
3. If tension is incorrect, loosen the alternator mounting bolts and, using a lever placed between the alternator and the engine block, pull the alternator out until the deflection of the belt falls within acceptable limits.
4. Replace fan belt if it is damaged.

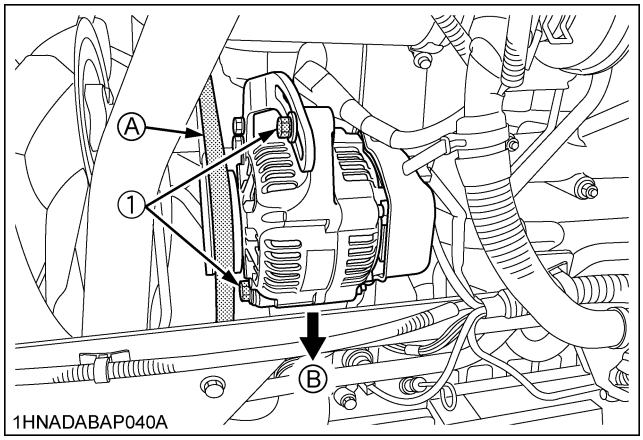

(1) Bolt
(A) Check the belt tension
(B) To tighten

■Adjusting Brake Pedal

WARNING

To avoid personal injury or death:

- **Stop the engine and chock the wheels before checking brake pedal.**

Proper brake pedal free travel	15 to 20 mm (0.6 to 0.8 in.) on the pedal.
	Keep the free travel in the right and left brake pedals equal.

1. Release the parking brake.
2. Slightly depress the brake pedals and measure free travel at top of pedal stroke.
3. If adjustment is needed, loosen the lock nut and turn the turnbuckle to adjust the rod length within acceptable limits.
4. Retighten the lock nut.

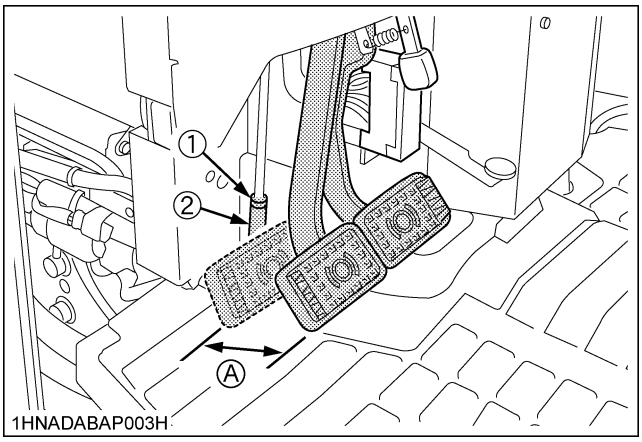

(1) Lock nut
(2) Turnbuckle
(A) Free travel

https://truckmanualshub.com/

■Adjusting Rear Parking Brake Lever

WARNING

To avoid personal injury or death:

- **Stop the engine and chock the wheels before checking parking brake.**

Parking position	from 1 notch

1. Make sure that the rear parking brake works by pulling the lever one notch.
2. If adjustment is needed, loosen the lock nut and adjust the parking brake cable length with in acceptable limit.
3. Retighten the lock nut.

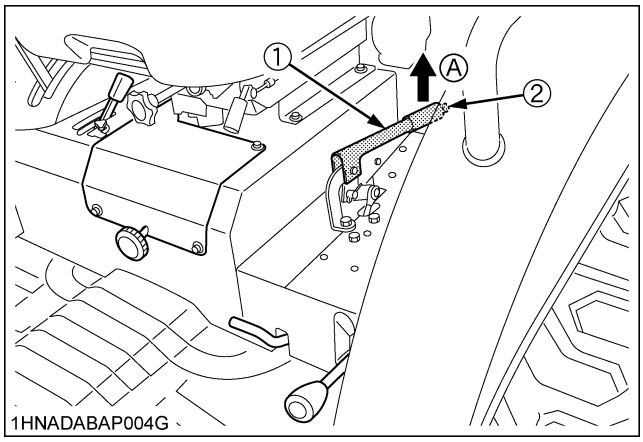

(1) Rear parking brake lever *(A) "PULL"*
(2) Release button

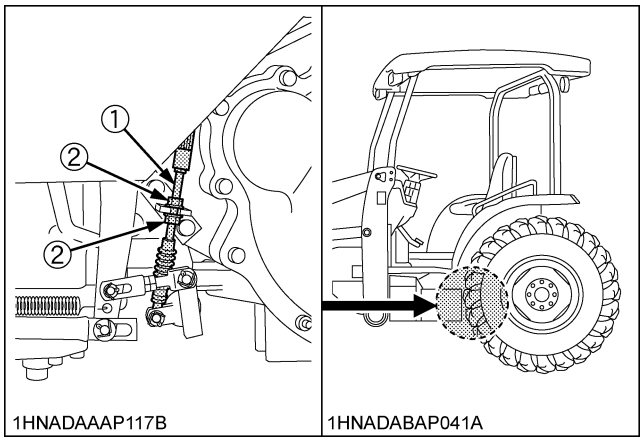

(1) Parking brake cable *(A) "PULL"*
(2) Lock nut

■Checking Battery Condition

DANGER

To avoid the possibility of battery explosion:
For the refillable type battery, follow the instructions below.

- **Do not use or charge the refillable type battery if the fluid level is below the LOWER (lower limit level) mark. Otherwise, the battery component parts may prematurely deteriorate, which may shorten the battery's service life or cause an explosion. Check the fluid level regularly and add distilled water as required so that the fluid level is between the UPPER and LOWER levels.**

WARNING

To avoid personal injury or death:

- **Never remove the vent caps while the engine is running.**
- **Keep electrolyte away from eyes, hands and clothes. If you are spattered with it, wash it away completely with water immediately and get medical attention.**
- **Wear eye protection and rubber gloves when working around the battery.**

The factory-installed battery is of non-refillable type. If the battery is weak, do not charge the battery but replace it with new one.

Mishandling the battery shortens the service life and adds to maintenance costs.
The original battery is maintenance free, but needs some servicing.
If the battery is weak, the engine will be difficult to start and the lights will be dim. It is important to check the battery periodically.

◆ How to read the indicator (if equipped)
Check the battery condition by reading the indicator.

State of indicator display	
Green	Specific gravity of electrolyte and quality of electrolyte are both in good condition.
Black	Needs charging battery.
White	Needs changing battery.

https://truckmanualshub.com/

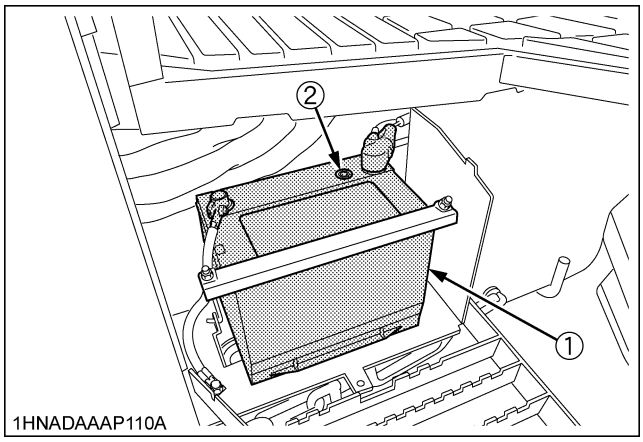

(1) Battery
(2) Indicator

◆ **Battery Charging**

WARNING

To avoid personal injury or death:

- **When the battery is being activated, hydrogen and oxygen gases in the battery are extremely explosive. Keep open sparks and flames away from the battery at all times, especially when charging the battery.**
- **When charging the battery, ensure the vent caps are securely in place (if equipped).**
- **When disconnecting the cable from the battery, start with the negative terminal first.**
  When connecting the cable to the battery, start with the positive terminal first.
- **Never check battery charge by placing a metal object across the posts.**
  Use a voltmeter or hydrometer.

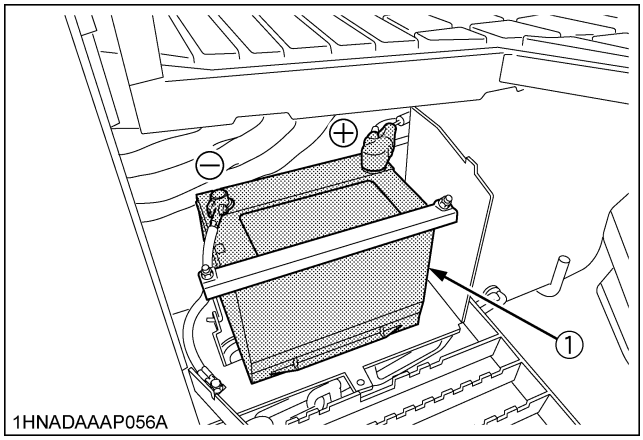

(1) Battery

1. To slow charge the battery, connect the battery positive terminal to the charger positive terminal and the negative to the negative, then recharge in the standard fashion.
2. A boost charge is only for emergencies. It will partially charge the battery at a high rate and in a short time. When using a boost-charged battery, it is necessary to recharge the battery as early as possible.
   Failure to do this will shorten the battery's service life.
3. The battery is charged if the indicator display turns green from black.
4. When exchanging an old battery for a new one, use battery of equal specification shown in **table 1**.

Table 1

Tractor model	Battery TYPE (BCI)	Volts (V)
L47	24	12
M62	24	12

Tractor model	Reserve Capacity (min)	Cold Cranking Amps
L47	90	550
M62	115	650

◆ **Direction for Storage**

1. When storing the tractor for a long period, remove the battery from tractor, adjust the electrolyte to the proper level and store in a dry place out of direct sunlight.
2. The battery self-discharges while it is stored.
   Recharge it once every 3 months in hot seasons and once every 6 months in cold seasons.

https://truckmanualshub.com/

EVERY 200 HOURS

■Replacing Transmission Oil Filter [HST]

WARNING

To avoid personal injury or death:

- **Be sure to stop the engine before changing the oil filter cartridge.**
- **Allow engine to cool down sufficiently, oil can be hot and can burn.**

1. Remove the drain plugs at the bottom of the transmission case and drain the oil completely into the oil pan.
2. After draining reinstall the drain plugs.

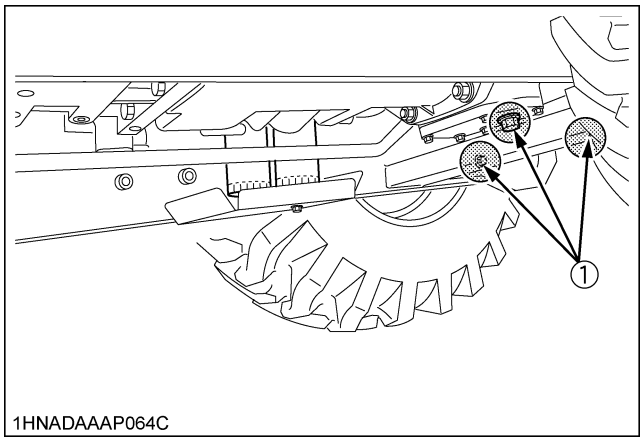

1HNADAAAP064C

(1) Drain plugs

3. Remove the oil filter.

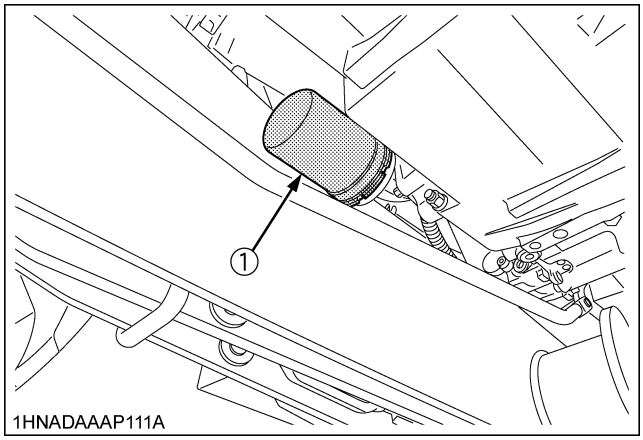

1HNADAAAP111A

(1) Transmission oil filter (HST)

4. Put a film of clean transmission oil on the rubber seal of the new filter.
5. Quickly tighten the filter until it contacts the mounting surface, then tighten it by hand an additional 1/2 turn only.
6. After the new filters have been replaced, fill the transmission oil up to the upper notch on the dipstick.

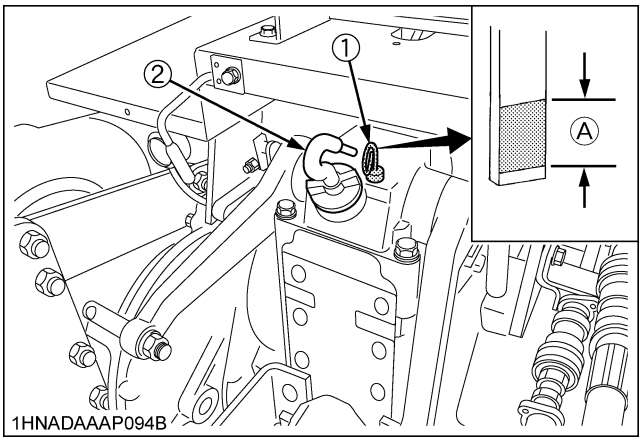

1HNADAAAP094B

(1) Dipstick (A) Oil level is acceptable within this range.
(2) Oil inlet

7. After running the engine for a few minutes, stop the engine and check the oil level again, add oil to the prescribed level.
8. Make sure that the transmission fluid doesn't leak past the seal on the filter.

IMPORTANT :

- To prevent serious damage to the hydraulic system, use only a KUBOTA genuine filter.
- Do not operate the tractor immediately after changing the transmission fluid.
  Run the engine at medium speed for a few minutes to prevent damage to the transmission.

https://truckmanualshub.com/

■Adjusting Toe-in

1. Park tractor on a flat place.
2. Turn steering wheel so front wheels are in the straight ahead position.
3. Lower the implement, lock the park brake and stop the engine.
4. Measure distance between tire beads at front of tire, hub height.
5. Measure distance between tire beads at rear of tire, hub height.
6. Front distance should be 2 to 8mm (1/16 to 5/16 in.) less than rear distance. If not, adjust tie rod length.

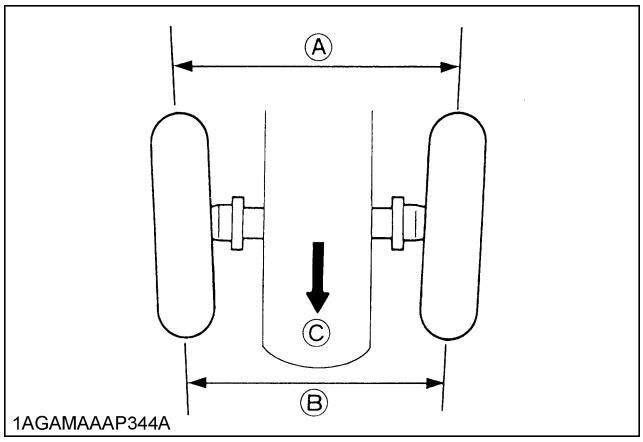

(A) Wheel - to - wheel distance at rear
(B) Wheel - to - wheel distance at front
(C) "FRONT"

◆ **Adjusting procedures**

1. Detach the snap ring.
2. Loosen the tie-rod nut.
3. Turn the tie-rod joint to adjust the rod length until the proper toe-in measurement is obtained.
4. Retighten the tie-rod nut.
5. Attach the snap ring of the tie-rod joint.

[L47]

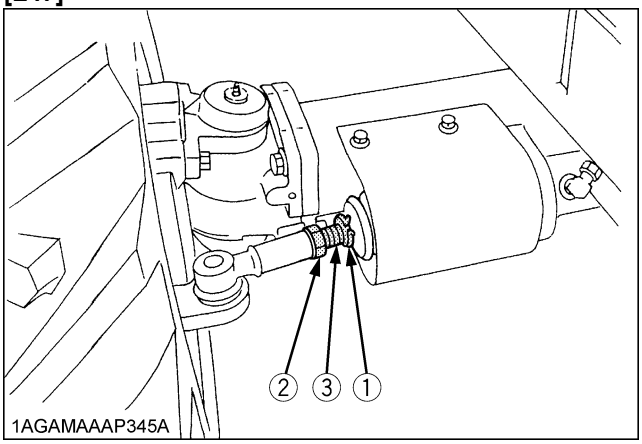

(1) Snap ring
(2) Tie-rod nut
(3) Tie-rod joint

[M62]

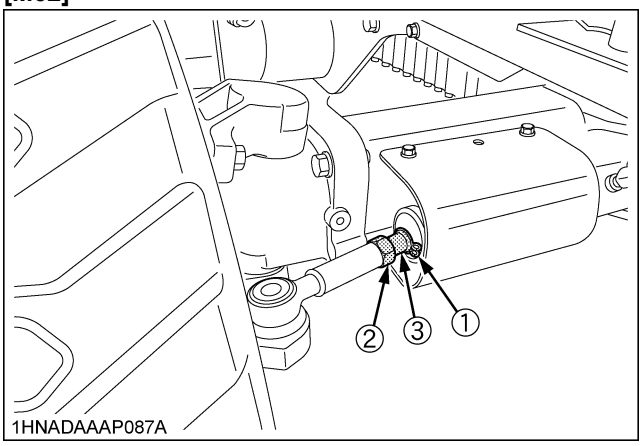

(1) Snap ring
(2) Tie-rod nut
(3) Tie-rod joint

https://truckmanualshub.com/

EVERY 400 HOURS

■Cleaning Water Separator

This job should not be done in the field, but in a clean place.

1. Disconnect the connector of water sensor.
2. Close the fuel shutoff-valve.
3. Unscrew the cup and remove it, then rinse the inside with kerosene.
4. Take out the element and dip it in the kerosene to rinse.
5. After cleaning, reassemble the water separator, keeping out dust and dirt.
6. Connect the connector of water sensor.
7. Bleed the fuel system.
   (See "SERVICE AS REQUIRED" in "PERIODIC SERVICE" section.)

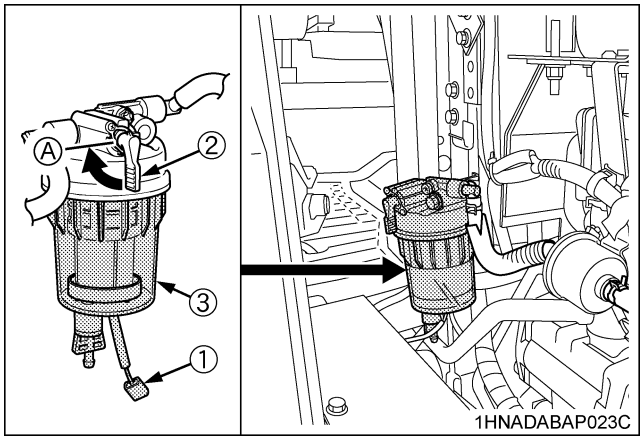

(1) Water sensor connector (A) "CLOSE"
(2) Fuel shutoff-valve
(3) Cup

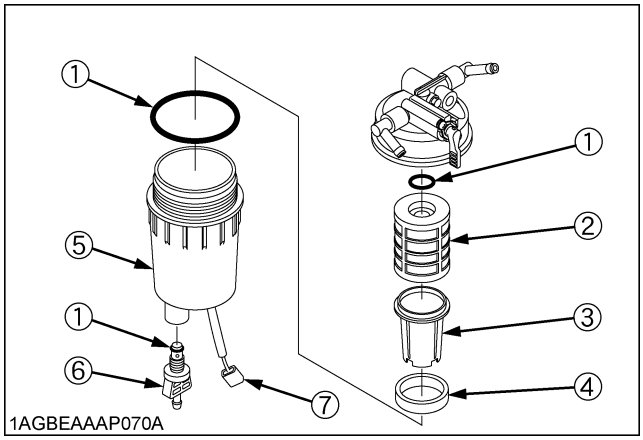

(1) O ring
(2) Element
(3) Element cup
(4) Red float
(5) Cup
(6) Drain plug
(7) Water sensor connector

IMPORTANT :

- If the water separator and/or fuel filter is not well maintained, the supply pump and injector may be damaged earlier than expected.

■Replacing Engine Oil Filter

WARNING

To avoid personal injury or death:

- **Be sure to stop the engine before changing the oil filter cartridge.**
- **Allow engine to cool down sufficiently, oil can be hot and can burn.**

1. Remove the oil filter.
2. Put a film of clean engine oil on the rubber seal of the new filter.
3. Tighten the filter quickly until it contacts the mounting surface.
   Tighten filter by hand an additional 1/2 turn only.
4. After the new filter has been replaced, the engine oil normally decreases a little. Make sure that the engine oil does not leak through the seal and be sure to check the oil level on the dipstick. Then, replenish the engine oil up to the prescribed level.

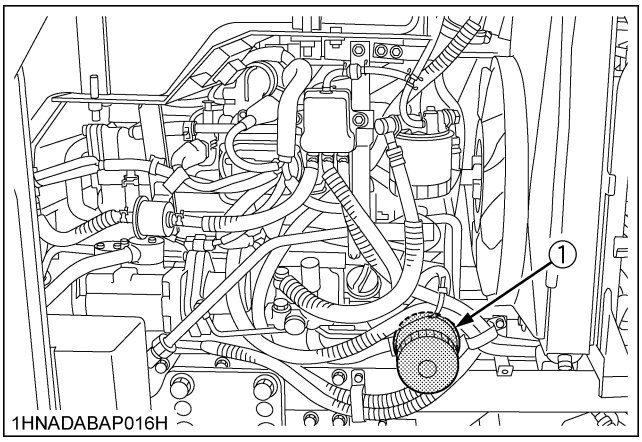

(1) Engine oil filter

IMPORTANT :

- To prevent serious damage to the engine, use only a KUBOTA genuine filter.

https://truckmanualshub.com/

■Changing Engine Oil

WARNING

To avoid personal injury or death:

- **Be sure to stop the engine before changing the oil.**
- **Allow engine to cool down sufficiently, oil can be hot and can burn.**

1. To drain the used oil, remove the drain plug at the bottom of the engine and drain the oil completely into the oil pan.
   All the used oil can be drained out easily when the engine is still warm.
2. After draining reinstall the drain plug.
3. Fill with the new oil up to the upper notch on the dipstick.
   (See "LUBRICANTS" in "MAINTENANCE" section)

Oil capacity with filter	L47	8.2 L (8.7 U.S.qts.)
	M62	9.4 L (9.9 U.S.qts.)

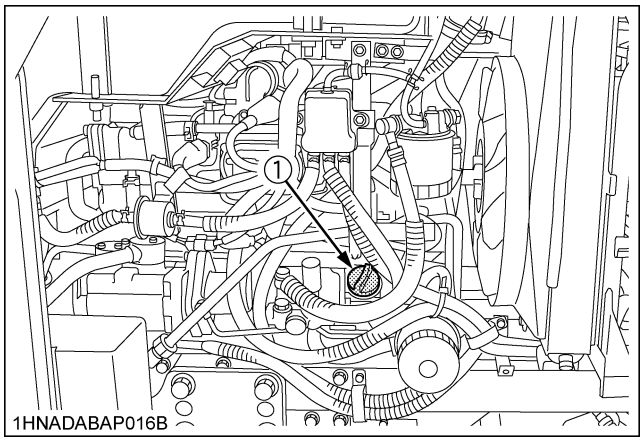

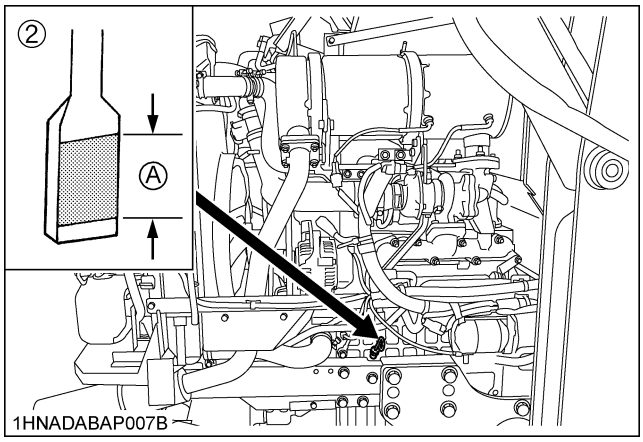

(1) Oil inlet *(A) Oil level is acceptable within this range*
(2) Dipstick

[L47]

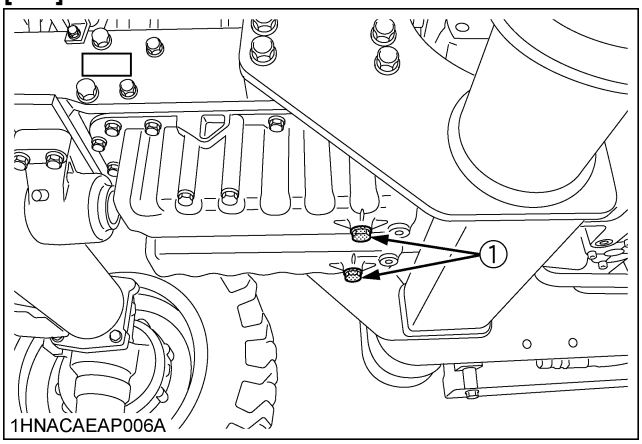

(1) Drain plug

[M62]

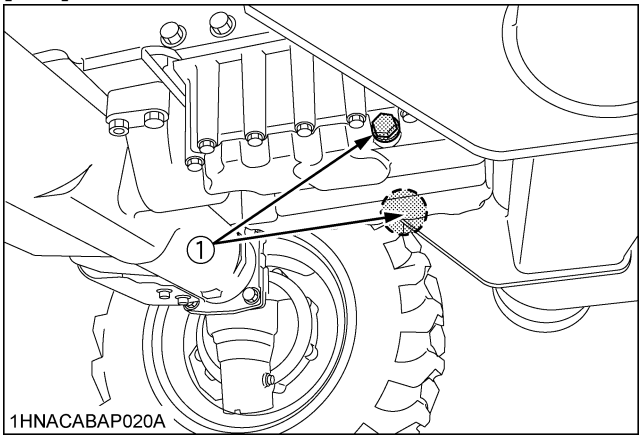

(1) Drain plug

https://truckmanualshub.com/

■Changing Transmission Fluid / Replacing Hydraulic Oil Filter

WARNING

To avoid personal injury or death:

- **Be sure to stop the engine before changing the oil filter cartridge.**
- **Allow engine to cool down sufficiently, oil can be hot and can burn.**

1. Remove the drain plugs at the bottom of the transmission case and drain the oil completely into the oil pan.
2. After draining reinstall the drain plugs.

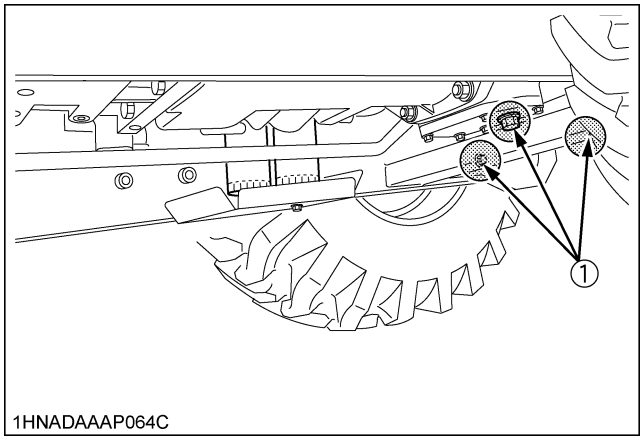

(1) Drain plugs

3. Remove the oil filter.

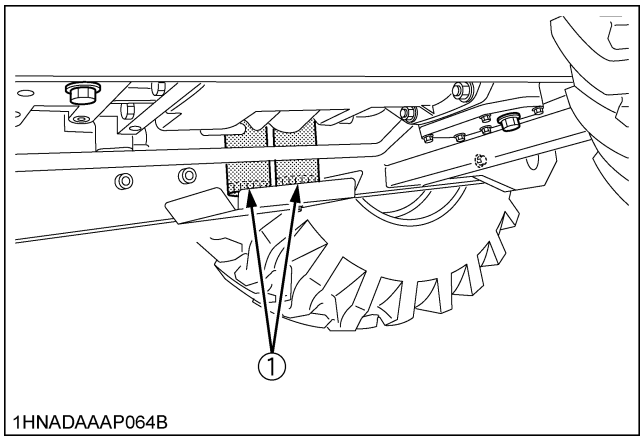

(1) Hydraulic oil filter

4. Put a film of clean transmission oil on the rubber seal of the new filter.
5. Quickly tighten the filter until it contacts the mounting surface, then tighten it by hand an additional 1/2 turn only.
6. Fill with the new KUBOTA SUPER UDT fluid up to the upper notch on the dipstick.
   (See "LUBRICANTS" in "MAINTENANCE" section.)

Oil Capacity	46 L (12.2 U.S.gals.)

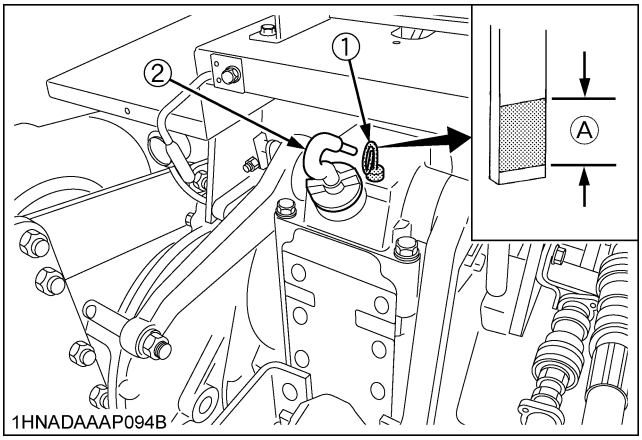

(1) Dipstick (A) Oil level is acceptable within this range
(2) Oil inlet

7. After running the engine for a few minutes, stop the engine and check the oil level again, add oil to the prescribed level.
8. Make sure that the transmission fluid doesn't leak past the seal on the filter.

IMPORTANT :

- To prevent serious damage to the hydraulic system, use only a KUBOTA genuine filter.
- Do not operate the tractor immediately after changing the transmission fluid.
  Run the engine at medium speed for a few minutes to prevent damage to the transmission.

https://truckmanualshub.com/

■Replacing Fuel Filter

1. Remove the fuel filter.
2. Put a film of clean fuel on rubber seal of new filter.
3. Tighten the filter quickly until it contacts the mounting surface.
   Tighten filter by hand an additional 1/2 turn only.
4. Bleed the fuel system.
   (See "Bleeding Fuel System" in "SERVICE AS REQUIRED" in "PERIODIC SERVICE" section.)

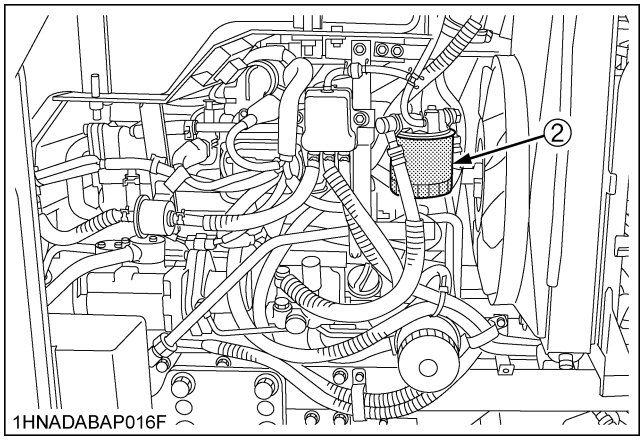

(1) Fuel filter

■Changing Front Axle Case Oil

[L47]

1. Park the tractor on a firm, flat and level surface.
2. To drain the used oil, remove the right and left drain plugs and filling plug at the front axle case and drain the oil completely into the oil pan.
3. After draining, reinstall the drain plugs.
4. Remove the oil level check plug.
5. Fill with new oil up to the check plug port.
   (See "LUBRICANTS" in "MAINTENANCE" section.)

IMPORTANT :

- After ten minutes, check the oil level again; add oil to prescribed level.

6. After filling, reinstall the filling plug and check plug.
7. Properly dispose of used oil.

Oil capacity	7.0 L (7.4 U.S.qts.)

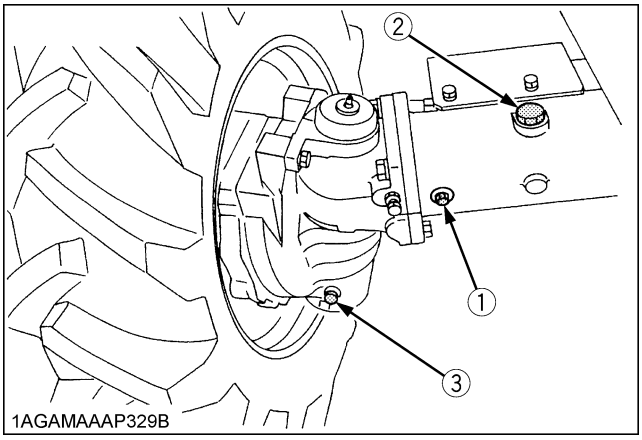

(1) Check plug
(2) Filling plug
(3) Drain plug

[M62]

1. Park the tractor on a firm, flat and level surface.
2. To drain the used oil, remove the right and left drain plugs and filling plug at the front axle case and drain the oil completely into the oil pan.
3. After draining, reinstall the drain plugs.
4. Fill with new oil up to the upper notch on the dipstick.
   (See "LUBRICANTS" in "MAINTENANCE" section.)

IMPORTANT :

- After ten minutes, check the oil level again; add oil to prescribed level.

5. After filling, reinstall the filling plug.
6. Properly dispose of used oil.

Oil capacity	12.5 L (13.2 U.S.qts.)

https://truckmanualshub.com/

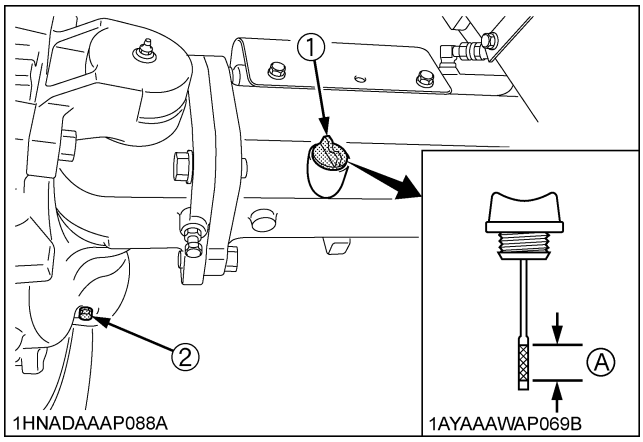

(1) Filling plug with dipstick
(2) Drain plug
(A) Oil level is acceptable within this range

EVERY 600 HOURS

■Adjusting Front Axle Pivot

If the front axle pivot pin adjustment is not correct, front wheel vibration can occur causing vibration in the steering wheel.

◆ **Adjusting procedure**

Loosen the lock nut, screw-in the adjusting screw until seated, then tighten the screw with an additional 1/6 turn. Re-tighten the lock nut.

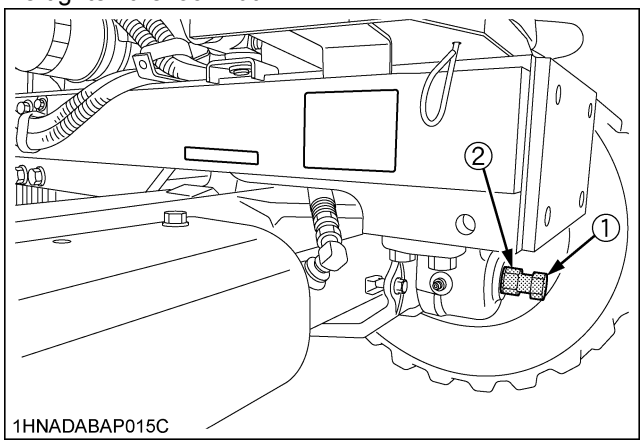

(1) Adjusting screw
(2) Lock nut

EVERY 800 HOURS

■Adjusting Engine Valve Clearance

Consult your local KUBOTA Dealer for this service.

EVERY 1000 HOURS or 1 YEAR

Be sure to do the following servicing once every 1000 hours or yearly, whichever comes first.

■Replacing Air Cleaner Primary Element and Secondary Element

(See "Cleaning Air Cleaner Primary Element" in "EVERY 100 HOURS" section.)

EVERY 1500 HOURS

■Checking Fuel Injection Nozzle Injection Pressure

Consult your local KUBOTA Dealer for this service.

■Replacing Oil Separator Element

WARNING

To avoid personal injury or death:

- **Be sure to stop the engine before replacing the oil separator element.**

1. Remove the cover and take out the element. Wipe off oil and the carbon in the case with a clean rag.
2. Fit a new oil separator element.
3. Tighten the cover.

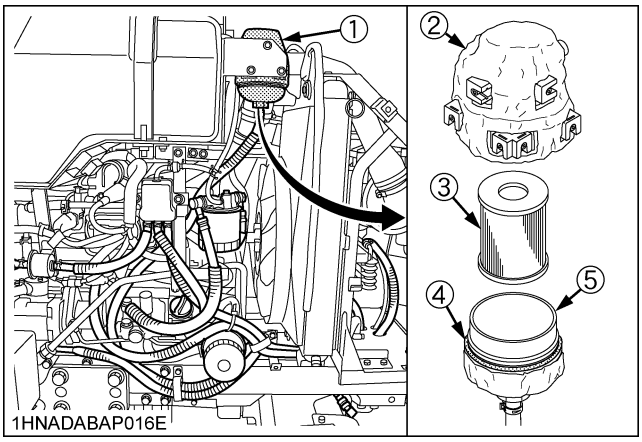

(1) Oil separator
(2) Body
(3) Oil separator element
(4) Gasket
(5) Cover

■Checking PCV (Positive Crankcase Ventilation) Valve

Consult your local KUBOTA Dealer for this service.

https://truckmanualshub.com/

■Checking and Cleaning EGR Cooler

Consult your local KUBOTA Dealer for this service.

EVERY 2000 HOURS or 2 YEARS

Be sure to do the following servicing once every 2000 hours or biennially, whichever comes first.

■Flush Cooling System and Changing Coolant

WARNING

To avoid personal injury or death:

- **Do not remove radiator cap while coolant is hot. When cool, slowly rotate cap to the first stop and allow sufficient time for excess pressure to escape before removing the cap completely.**

1. Stop the engine and let cool down.
2. To drain the coolant, open the radiator drain plug and remove radiator cap. The radiator cap must be removed to completely drain the coolant.
3. After all coolant is drained, close the drain plug.
4. Fill with clean soft water and cooling system cleaner.
5. Follow directions of the cleaner instruction.
6. After flushing, fill with clean soft water and anti-freeze until the coolant level is just below the radiator cap. Install the radiator cap securely.
7. Fill with fresh water up to the "FULL" mark on the reserve tank.
8. Start and operate the engine for few minutes.
9. Stop the engine and let cool.
10. Check coolant level of recovery tank and add coolant if necessary.

Coolant capacity	8.2 L (8.7 U.S.qts)

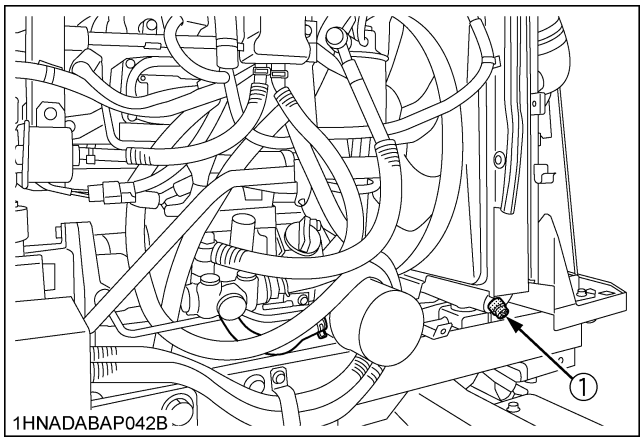

(1) Drain plug

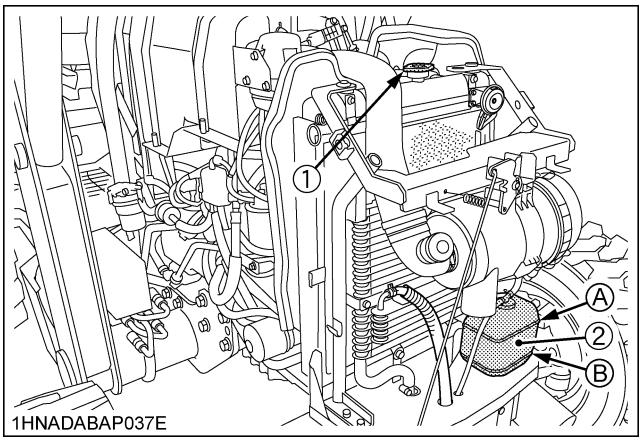

(1) Radiator cap *(A) "FULL"*
(2) Recovery tank *(B) "LOW"*

IMPORTANT :

- Do not start engine without coolant.
- Use clean, fresh soft water and anti-freeze to fill the radiator and recovery tank.
- When mixing the anti-freeze with water, the anti-freeze mixing ratio is 50%.
- Securely tighten radiator cap. If the cap is loose or improperly fitted, water may leak out and the engine could overheat.

■Anti-Freeze

WARNING

To avoid personal injury or death:

- **When using antifreeze, put on some protection such as rubber gloves. (Antifreeze contains poison.)**
- **If it is swallowed, seek immediate medical help. Do NOT make a person throw up unless told to do so by poison control or a health care professional. Use standard first aid and CPR for signs of shock or cardiac arrest. Call your local Poison Control Center or your local emergency number for further assistance.**
- **When antifreeze comes in contact with the skin or clothing, wash it off immediately.**
- **Do not mix different types of Antifreeze. The mixture can produce chemical reaction causing harmful substances.**
- **Antifreeze is extremely flammable and explosive under certain conditions. Keep fire and children away from antifreeze.**
- **When draining fluids from the engine, place some container underneath the engine body.**
- **Do not pour waste onto the ground, down a drain, or into any water source.**
- **Also, observe the relevant environmental protection regulations when disposing of antifreeze.**

https://truckmanualshub.com/

Always use a 50/50 mix of long-life coolant and clean soft water in KUBOTA engines.
Consult your local KUBOTA Dealer concerning coolant for extreme conditions.

1. Long-life coolant (hereafter LLC) comes in several types. Use ethylene glycol (EG) type for this engine.
2. Before employing LLC-mixed cooling water, fill the radiator with fresh water and empty it again.
   Repeat this procedure 2 or 3 times to clean up the inside.
3. Mixing the LLC
   Premix 50% LLC with 50% clean soft water. When mixing, stir it up well, and then fill into the radiator.
4. The procedure for the mixing of water and antifreeze differs according to the make of the antifreeze and the ambient temperature. Refer to SAE J1034 standard, more specifically also to SAE J814c.

Vol % Anti-freeze	Freezing Point		Boiling Point*	
	℃	℉	℃	℉
50	-37	-34	108	226

∗ At 1.013 x 10^5Pa (760mmHg) pressure (atmospheric). A higher boiling point is obtained by using a radiator pressure cap which permits the development of pressure within the cooling system.

5. Adding the LLC
   (1) Add only water if the mixture reduces in amount by evaporation.
   (2) If there is a mixture leak, add the LLC of the same manufacturer and type in the same mixture percentage.
   ∗ Never add any long-life coolant of different manufacturer. (Different brands may have different additive components, and the engine may fail to perform as specified.)
6. When the LLC is mixed, do not employ any radiator cleaning agent. The LLC contains anticorrosive agent. If mixed with the cleaning agent, sludge may build up, adversely affecting the engine parts.
7. Kubota's genuine long-life coolant has a service life of 2 years. Be sure to change the coolant every 2000 hours or every 2 years whichever comes faster.

NOTE :
- The above data represent industry standards that necessitate a minimum glycol content in the concentrated antifreeze.

EVERY 3000 HOURS

■Checking Turbocharger [M62]

Consult your local KUBOTA Dealer for this service.

■Checking Supply Pump

Consult your local KUBOTA Dealer for this service.

■Checking and Cleaning EGR System

Consult your local KUBOTA Dealer for this service.

■Cleaning DPF Muffler

◆ **Removal of ash**

The longer the DPF operates, the more ash (burnt residue) is collected in the filter. Too much ash build-up adversely affects the DPF performance. Consult your local KUBOTA Dealer to clean the filter.

IMPORTANT :
- The DPF needs cleaning with a specific cleaning device. Do not clean the DPF by disassembling, and attempt by yourself, consult your local KUBOTA Dealer.

https://truckmanualshub.com/

EVERY 1 YEAR

■Checking Fuel Line

1. Check to see that all lines and hose clamps are tight and not damaged.
2. If hoses and clamps are found worn or damaged, replace or repair them at once.

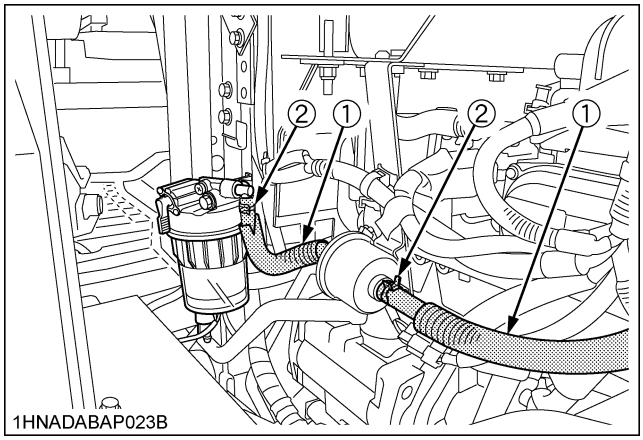

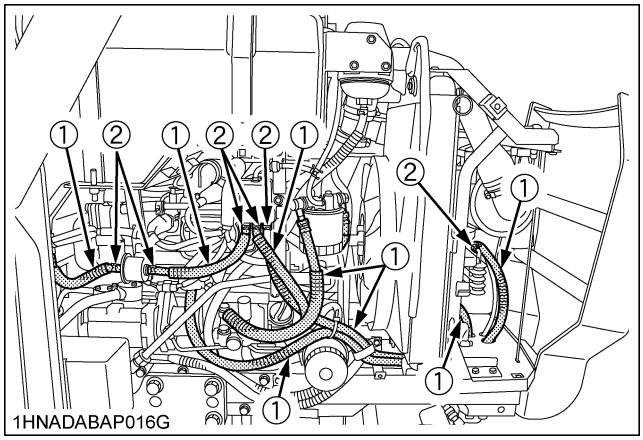

(1) Fuel lines
(2) Clamp bands

NOTE :

- If the fuel line is removed, be sure to properly bleed the fuel system.
  (See "Bleeding Fuel System" in "SERVICE AS REQUIRED" in "PERIODIC SERVICE OF THE TRACTOR" section.)

■Checking Radiator Hose and Clamp

Check to see if radiator hoses are properly fixed every 1 year of operation.

1. If hose clamps are loose or water leaks, tighten bands securely.
2. Replace hoses and tightly secure hose clamps every 4 years or earlier if checked and found that hoses are swollen, hardened or cracked.

[L47]

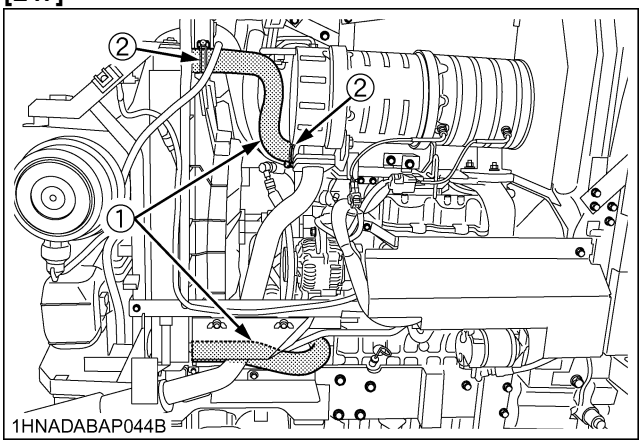

(1) Radiator hoses
(2) Clamp bands

[M62]

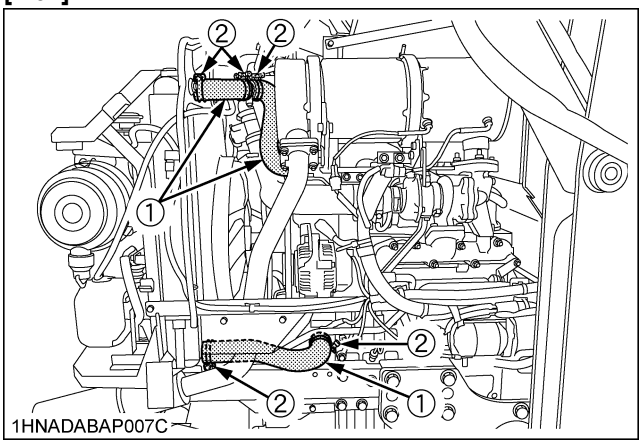

(1) Radiator hoses
(2) Clamp bands

https://truckmanualshub.com/

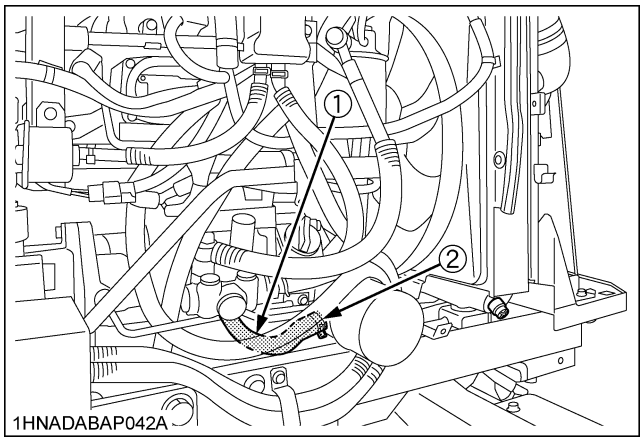

(1) Radiator hoses
(2) Clamp bands

◆ **Precaution at Overheating**

Take the following actions in the event the coolant temperature is nearly or more than the boiling point, what is called "Overheating"

1. Park the tractor in a safe place and keep the engine unloaded idling.
2. Don't stop the engine suddenly, but stop it after about 5 minutes of unloaded idling.
3. Keep yourself well away from the machine for further 10 minutes or while the steam blows out.
4. Check that there are no dangers such as burns. Get rid of the causes of overheating according to the manual, see "TROUBLESHOOTING" section, and then, start again the engine.

■Checking Intake Air Line

1. Check to see that hoses and hose clamps are tight and not damaged.
2. If hoses and clamps are found worn or damaged, replace or repair them at once.

[L47]

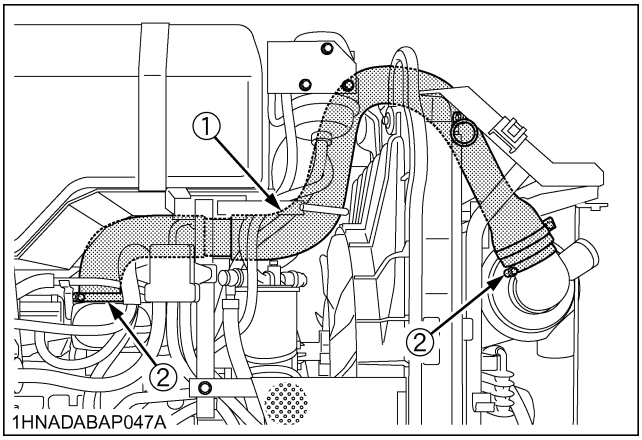

(1) Hose
(2) Hose clamps

[M62]

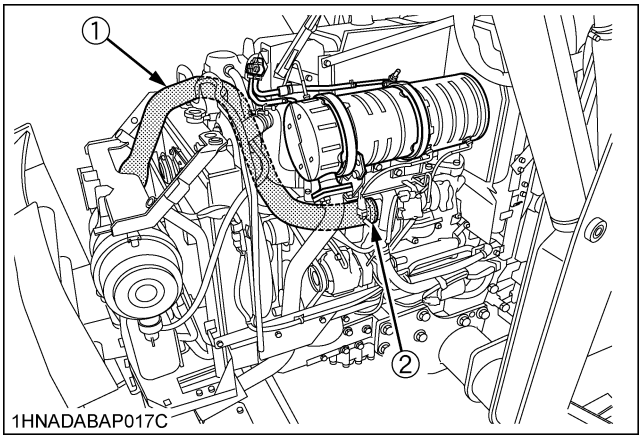

(1) Hose
(2) Hose clamps

https://truckmanualshub.com/

■Checking Oil Separator Hose

1. Check to see that all hoses and hose clamps are tight and not damaged.
2. If hoses and clamps are found worn or damaged, replace or repair them at once.

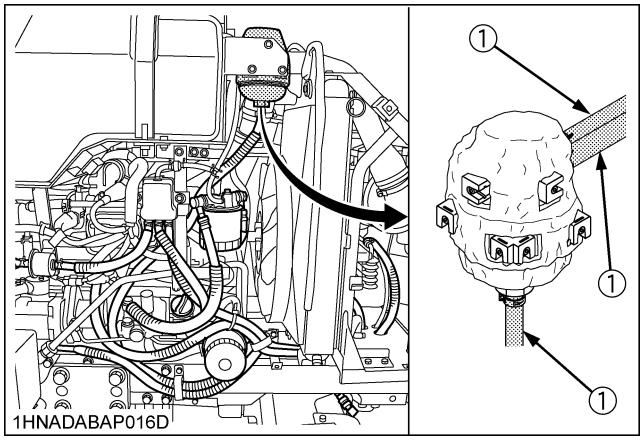

(1) Oil separator hoses

■Checking Antifrost Heater for Oil Separator

(if equipped)

Consult your local KUBOTA Dealer for this service.

■Checking Oil Cooler Line / Checking Power Steering Line

1. Check to see that all lines and hose clamps are tight and not damaged.
2. If hoses and clamps are found worn or damaged, replace or repair them at once.

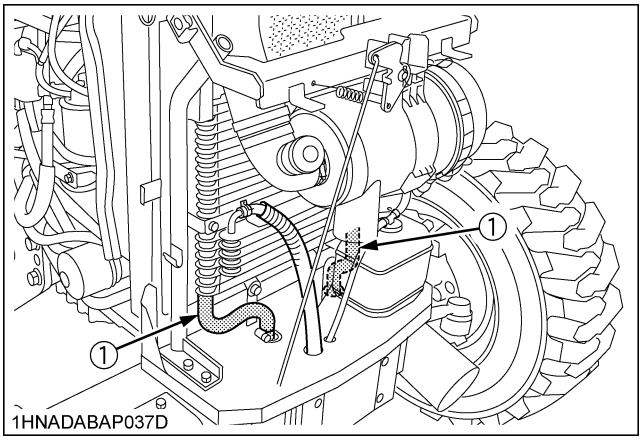

(1) Oil cooler line

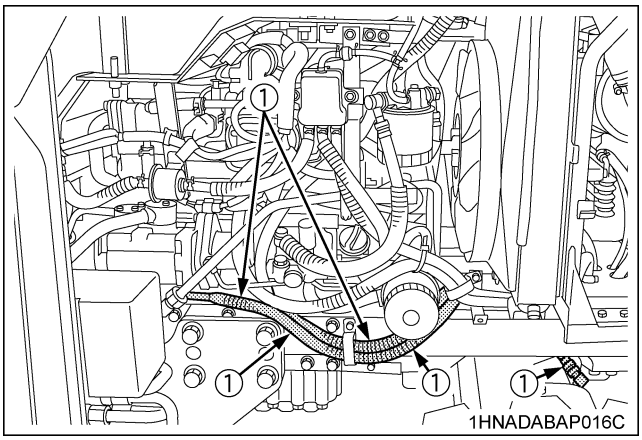

(1) Power steering pressure hoses

■Checking Exhaust Manifold

Consult your local KUBOTA Dealer for this service.

■Checking DPF Differential Pressure Sensor Pipe

Consult your local KUBOTA Dealer for this service.

■Checking EGR Pipe

Consult your local KUBOTA Dealer for this service.

https://truckmanualshub.com/

EVERY 2 YEARS

■Replacing Rear Parking Brake Cable

Replace the cable.
(See "Adjusting Rear Parking Brake Lever" in "EVERY 100 HOURS" in "PERIODIC SERVICE " section.)

EVERY 4 YEARS

■Replacing Radiator Hose (Water pipes)

Replace the hoses and clamps.
(See "Checking Radiator Hose and Clamp" in "EVERY 1 YEAR" in "PERIODIC SERVICE OF THE TRACTOR" section.)

■Replacing Power Steering Hose

Replace the hoses and clamps.
(See "Checking Power Steering line" in "EVERY 1 YEAR" maintenance)

■Replacing Oil Cooler Line

Replace the hoses and clamps.
(See "Checking Oil Cooler Line" in "EVERY 1 YEAR" maintenance)

■Replacing Fuel Hose

Replace the hoses and clamps.
(See "Checking Fuel line" in "EVERY 1 YEAR" maintenance)

■Replacing Intake Air Line

Consult your local KUBOTA Dealer for this service.

■Replacing Oil Separator Hose

Consult your local KUBOTA Dealer for this service.

■Replacing DPF Differential Pressure Sensor Hose

Consult your local KUBOTA Dealer for this service.

SERVICE AS REQUIRED

■Bleeding Fuel System

Air must be removed:
1. When the fuel filter or lines are removed.
2. When water is drained from water separator.
3. When tank is completely empty.
4. After the tractor has not been used for a long period of time.

◆ **Bleeding procedure is as follows:**
1. Fill the fuel tank with fuel, and open the fuel shutoff-valve.

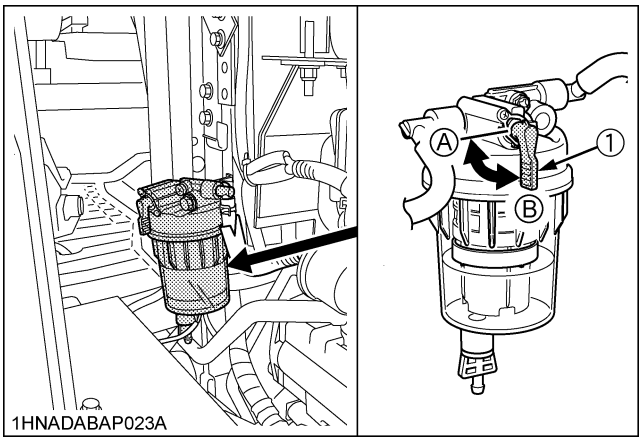

(1) Fuel shutoff-valve *(A) "CLOSE"* *(B) "OPEN"*

2. Loosen the air vent plug on the fuel filter 2 turns or so.

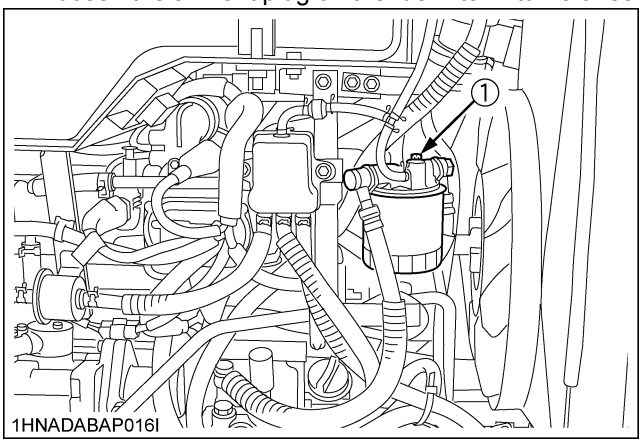

(1) Air vent plug

3. Turn on the key switch and wait for about 1 minute. Then tighten up the air vent plug.
4. Set the hand throttle lever at the minimum speed position and turn the key to "START" position.
   If the engine doesn't start, try it several times at 30 second intervals.

IMPORTANT :
- Do not hold key switch at engine start position for more than 10 seconds continuously. If more engine cranking is needed, try again after 30 seconds.

https://truckmanualshub.com/

5. Accelerate the engine to remove the small portion of air left in the fuel system.
6. If air still remains and the engine stops, repeat the above steps.

■Draining Clutch Housing Water

The tractor is equipped with split pin plug under the clutch housing.
After operating in rain, snow or tractor has been washed, water may get into the clutch housing. Check it by pushing in the split pin.
If water enters into the clutch housing, remove the plug and drain the water, then install the plug again.

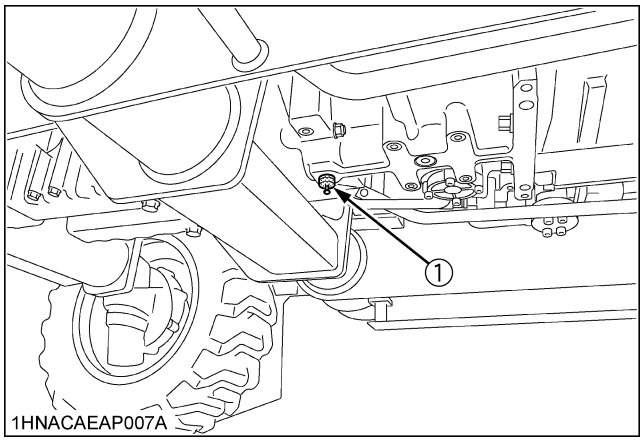

(1) Split pin plugs

■Replacing Fuse

The tractor electrical system is protected from potential damage by fuses.
A blown fuse indicates that there is an overload or short somewhere in the electrical system.
If any of the fuses should blow, replace with a new one of the same capacity.

IMPORTANT :

- Before replacing a blown fuse, determine why the fuse blew and make any necessary repairs. Failure to follow this procedure may result in serious damage to the tractor electrical system. Refer to the "TROUBLESHOOTING" section of this manual or your local KUBOTA Dealer for specific information dealing with electrical problems.

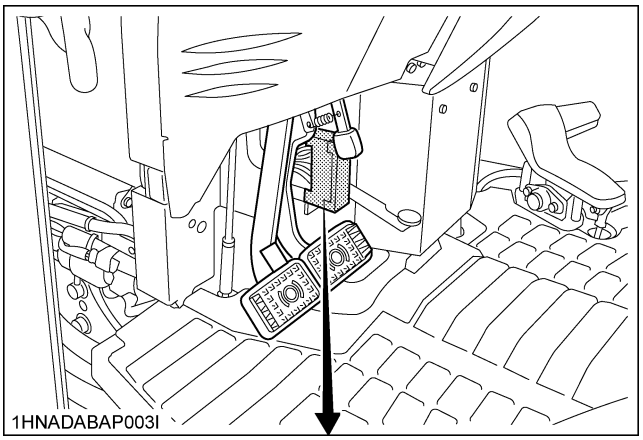

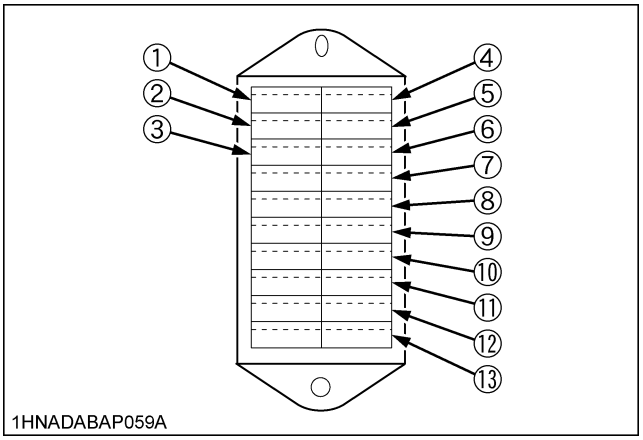

https://truckmanualshub.com/

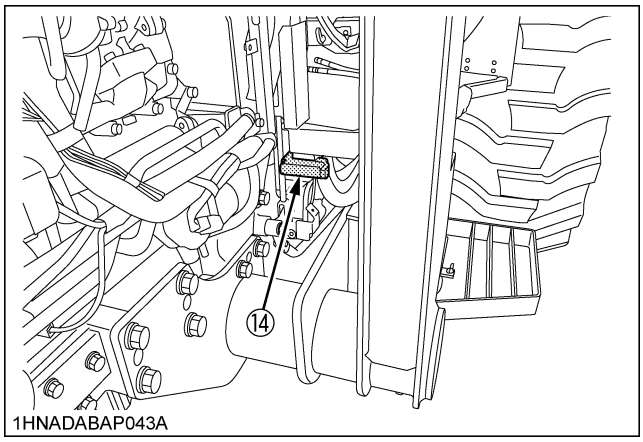

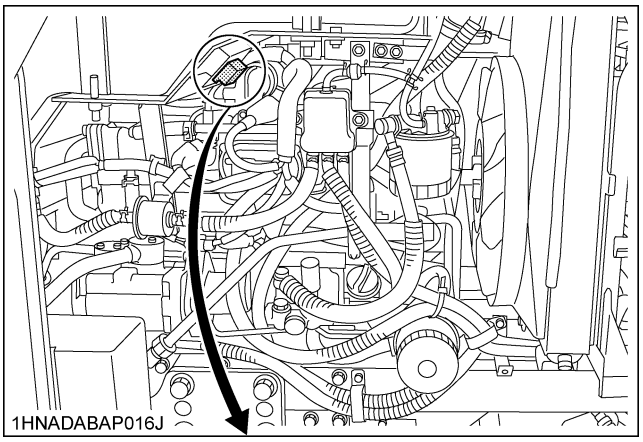

◆ **Protected circuit**

FUSE No.	CAPACITY (A)	Protected circuit
(1)	5	Meter (battery)
(2)	15	Flasher
(3)	5	Main ECU (battery)
(4)	15	ECU
(5)	10	Alternator
(6)	5	Work light switch
(7)	10	Combi switch
(8)	5	Engine ECU
(9)	10	Power outlet
(10)	30	Work light relay
(11)	30	Engine ECU relay
(12)	30	Head lamp relay
(13)	30	Starter relay
(14)	Slow blow fuse	Check circuit against wrong battery connection.

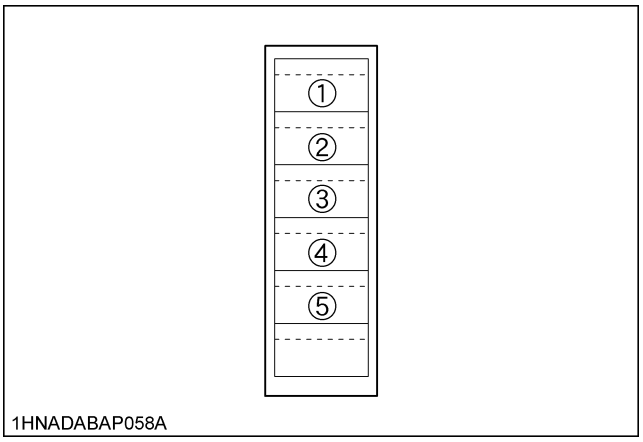

[Oil separator Fuse]

Fuse No.	Capacity (A)	Protected circuit
(1)	15	Heater
(2)	15	Heater
(3)	15	Heater
(4)	15	Heater
(5)	5	Relay

■Replacing Light Bulb

1. Head lights and rear combination lights:
   Take the bulb out of the light body and replace with a new one.
2. Other lights:
   Detach the lens and replace the bulb.

Light	Capacity
Head lights	55W
Tail light	5W
Hazard and Turn signal light	27W
Hazard and Turn signal light (rear)	21W
Instrument panel light	1.1W

https://truckmanualshub.com/

MAINTENANCE OF THE LOADER

WARNING

To avoid personal injury or death:

- **Escaping hydraulic fluid under pressure can have sufficient force to penetrate skin, causing serious personal injury. Before disconnecting lines, be sure to relieve all pressure.**
  Before applying pressure to system, be sure all connections are tight and that lines, tubes, and hoses are not damaged. Fluid escaping from a very small hole can be almost invisible. Use a piece of cardboard or wood, rather than your hands, to search for suspected leaks.

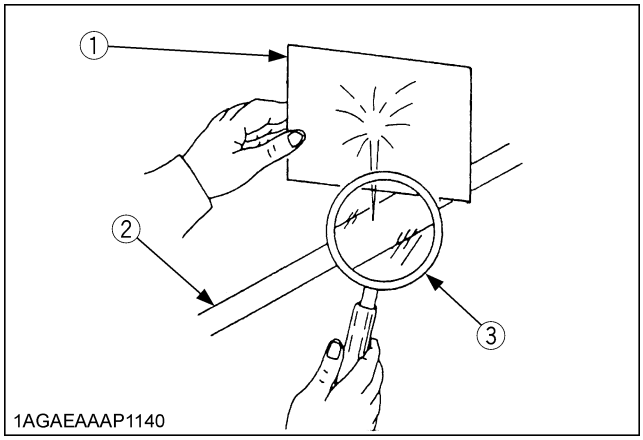

(1) Cardboard
(2) Hydraulic line
(3) Magnifying glass

  If injured by escaping fluid, see a doctor at once. Serious infection or allergic reaction will develop if proper medical treatment is not administered immediately.
- **When removing the engine side covers, be careful not to touch hot loader cylinders.**
  Allow all surfaces to cool before performing maintenance.
- **Before servicing the loader or the tractor, be sure to place the loader boom in contact with the ground. If the loader boom must be raised during service or maintenance, support the boom as shown in the figure.**

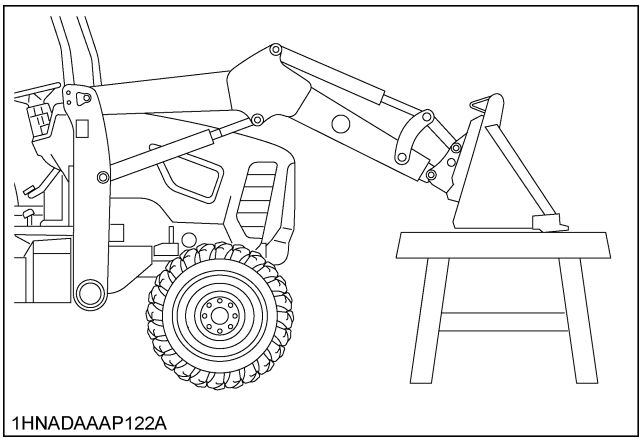

WARNING

To avoid personal injury or death:

- **Be sure to check and service the tractor on a flat place with the bucket on the ground, engine shut off, the key removed and the parking brake on.**

DAILY CHECKS

1. Check all hardware daily before operation.
   Tighten hardware to torque values as specified in the "Tightening Torque Chart".
2. With the engine off and the bucket on the ground, inspect all hoses for cuts or wear. Check for signs of leaks and make sure all fittings are tight.

https://truckmanualshub.com/

LUBRICATION

1. Lubricate all grease fittings every 10 hours of operation. Also, lubricate joints of control lever linkage every 10 hours. High quality grease designating "extreme pressure" and containing Molybdenum disulfide is recommended. This grease may specify "Moly EP" on its label.

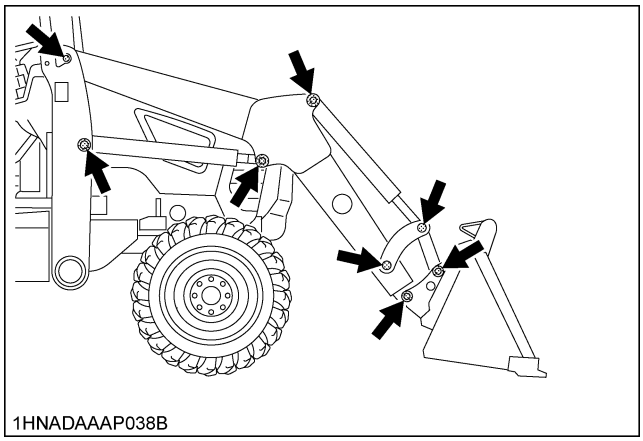
1HNADAAAP038B

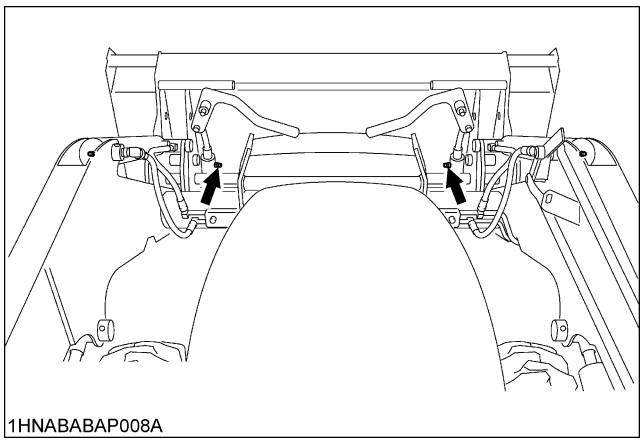
1HNABABAP008A

https://truckmanualshub.com/

GENERAL TORQUE SPECIFICATION

American standard screws, bolts and nuts with UNC or UNF threads				Metric cap screws 8.8		
SAE grade No.		SAE GR.5	SAE GR.8	property class		8.8 Approx. SAE GR 5
1/4	(N-m) (kgf-m) (ft-lbs)	11.7 to 15.8 1.19 to 1.61 8.6 to 11.6	16.3 to 19.8 1.66 to 2.02 12.0 to 14.6	M6	(N-m) (kgf-m) (ft-lbs)	9.8 to 11.2 1.0 to 1.1 7.2 to 8.3
5/16	(N-m) (kgf-m) (ft-lbs)	23.1 to 27.8 2.35 to 2.83 17.0 to 20.5	32.5 to 39.3 3.31 to 4.01 24.0 to 29.0	M8	(N-m) (kgf-m) (ft-lbs)	23.6 to 27.4 2.4 to 2.8 17.4 to 20.2
3/8	(N-m) (kgf-m) (ft-lbs)	47.5 to 57.0 4.84 to 5.81 35.0 to 42.0	61.0 to 73.2 6.22 to 7.46 45.0 to 54.0	M10	(N-m) (kgf-m) (ft-lbs)	48.1 to 55.8 4.9 to 5.7 35.5 to 41.2
1/2	(N-m) (kgf-m) (ft-lbs)	108.5 to 130.2 11.06 to 13.28 80.0 to 96.0	149.2 to 179.0 15.21 to 18.25 110.0 to 132.0	M12	(N-m) (kgf-m) (ft-lbs)	77.5 to 90.1 7.9 to 9.2 57.2 to 66.5
9/16	(N-m) (kgf-m) (ft-lbs)	149.2 to 179.0 15.21 to 18.25 110.0 to 132.0	217.0 to 260.4 22.13 to 26.55 160.0 to 192.0	M14	(N-m) (kgf-m) (ft-lbs)	124 to 147 12.6 to 15.0 91.5 to 108.4
5/8	(N-m) (kgf-m) (ft-lbs)	203.4 to 244.1 20.74 to 24.89 150.0 to 180.0	298.3 to 358.0 30.42 to 36.51 220.0 to 264.0	M16	(N-m) (kgf-m) (ft-lbs)	196 to 225 20.0 to 23.0 145 to 166

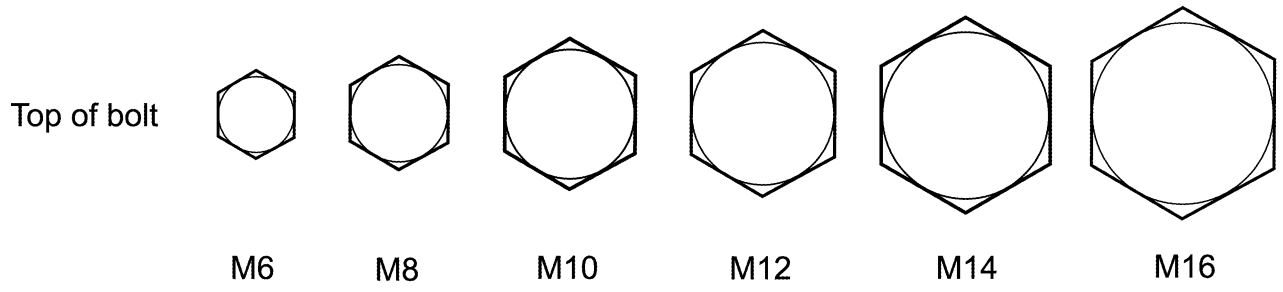

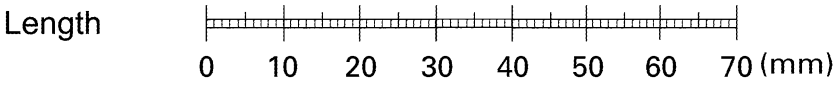

https://truckmanualshub.com/

STORAGE OF THE TRACTOR

WARNING

To avoid personal injury or death:

- **Do not clean the machine while the engine is running.**
- **To avoid the danger of exhaust fume poisoning, do not operate the engine in a closed building without proper ventilation.**
- **When storing, remove the key from the key switch to avoid unauthorized persons from operating the tractor and getting injured.**

TRACTOR STORAGE

If you intend to store your tractor for an extended period of time, follow the procedures outlined below.

These procedures will insure that the tractor is ready to operate with minimum preparation when it is removed from storage.

1. Check the bolts and nuts for looseness, and tighten if necessary.
2. Apply grease to tractor areas where bare metal will rust also to pivot areas.
3. Detach the weights from the tractor body.
4. Inflate the tires to a pressure a little higher than usual.
5. Change the engine oil and run the engine to circulate oil throughout the engine block and internal moving parts for about five minutes.
6. Pull the engine stop knob all the way out.
7. With all implements lowered to the ground, coat any exposed hydraulic cylinder piston rods with grease.
8. Remove the battery from the tractor. Store the battery following the battery storage procedures.
   (See "Battery condition" in "EVERY 100 HOURS" in "PERIODIC SERVICE" section)
9. Keep the tractor in a dry place where the tractor is sheltered from the elements. Cover the tractor.
10. Store the tractor indoors in a dry area that is protected from sunlight and excessive heat. If the tractor must be stored outdoors, cover it with a waterproof tarpaulin.
    Jack the tractor up and place blocks under the front and rear axles so that all four tires are off the ground.
    Keep the tires out of direct sunlight and extreme heat.

IMPORTANT :

- When washing the tractor, be sure to stop the engine. Allow sufficient time for the engine to cool before washing.
- Cover the tractor after the muffler and the engine have cooled down.

REMOVING THE TRACTOR FROM STORAGE

1. Check the tire air pressure and inflate the tires if they are low.
2. Jack the tractor up and remove the support blocks from under the front and rear axles.
3. Install the battery. Before installing the battery, be sure it is fully charged.
4. Check the fan belt tension.
5. Check all fluid levels (engine oil, transmission/ hydraulic oil, engine coolant and any attached implements).
6. Start the engine. Observe all gauges. If all gauges are functioning properly and reading normal, move the tractor outside. Once outside, park the tractor and let the engine idle for at least 5 minutes. Shut the engine off and walk around tractor and make a visual inspection looking for evidence of oil or water leaks.
7. With the engine fully warmed up, release the parking brake and test the brakes for proper adjustment as you move forward. Adjust the brakes as necessary.

https://truckmanualshub.com/

TROUBLESHOOTING

ENGINE TROUBLESHOOTING

If something is wrong with the engine, refer to the table below for the cause and its corrective measure.

Trouble		Cause	Countermeasure
Engine is difficult to start or won't start.		● No fuel flow.	● Check the fuel tank and the fuel filter. Replace filter if necessary.
		● Air or water is in the fuel system.	● Check to see if the fuel line coupler bolt and nut are tight. ● Bleed the fuel system (See "Bleeding Fuel System" in "SERVICE AS REQUIRED" in "PERIODIC SERVICE OF THE TRACTOR" section.)
		● In winter, oil viscosity increases, and engine revolution is slow.	● Use oils of different viscosities, depending on ambient temperatures. ● Use engine block heater (Optional)
		● Battery becomes weak and the engine does not turn over quick enough.	● Clean battery cables & terminals. ● Charge the battery. ● In cold weather, always remove the battery from the engine, charge and store it indoors. Install it on the tractor only when the tractor is going to be used.
Insufficient engine power.		● Insufficient or dirty fuel. ● The air cleaner is clogged.	● Check the fuel system. ● Clean or replace the element.
Engine stops suddenly.		● Insufficient fuel.	● Refuel. ● Bleed the fuel system if necessary.
Exhaust fumes are colored.	Black	● Fuel quality is poor. ● Too much oil. ● The air cleaner is clogged.	● Change the fuel and fuel filter. ● Check the proper amount of oil. ● Clean or replace the element.
	Blue white	● The inside of exhaust muffler is dumped with fuel. ● Injection nozzle trouble. ● Fuel quality is poor.	● Heat the muffler by applying load to the engine. ● Check the injection nozzle. ● Change the fuel and fuel filter.
Engine overheats		● Engine overloaded	● Shift to lower gear or reduce load.
		● Low coolant level	● Fill cooling system to the correct level; check radiator and hoses for loose connections or leaks.
		● Loose or defective fan belt	● Adjust or replace fan belt.
		● Dirty radiator core or grille screens	● Remove all trash.
		● Coolant flow route corroded	● Flush cooling system.

If you have any questions, consult your local KUBOTA Dealer.

https://truckmanualshub.com/

TROUBLESHOOTING

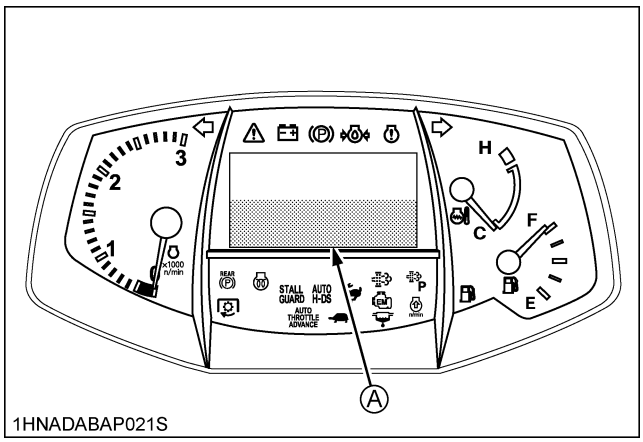

(A) Error message is displayed at here

Display on IntelliPanel(TM)	Trouble Item (Affected Model)	Operator's action
ERROR No. 20 **CAN NG**	Communication error between ECU and IntelliPanel(TM)	Contact your local KUBOTA Dealer.
ERROR No. 30 **ECU Memory DEVICE NG**	ECU's memory device is in trouble	
ERROR No. 40 **Input Voltage NG**	Input voltage of lever sensor from ECU is in trouble	
ERROR No. 80 **Range Shift SENSOR NG**	Sensor for range gear shift lever is in trouble	Contact your local KUBOTA Dealer. The speed range (H, M and L) is not displayed in the LCD screen. The range gear shift lever still works to select the H, M and L speeds. In selecting M or L, however, the feeling is somewhat different at a start, stop and other actions.
ERROR No. 81 **HST Pedal SENSOR NG**	Sensor for speed control pedal is in trouble	Contact your local KUBOTA Dealer. The speed control pedal cannot be used to run the tractor.
ERROR No. 82 **Swash Plate SENSOR NG**	Sensor for swash plate of HST is in trouble	Contact your local KUBOTA Dealer. The tractor can travel both forward and backward, but with a drop in maximum speed.
ERROR No. 84 **Throttle SENSOR NG**	Sensor for engine throttle is in trouble	Contact your local KUBOTA Dealer. With the STALL GUARD or AUTO H-DS/STALL GUARD mode being selected, the tractor automatically gets in the MANUAL mode.
ERROR No. 87 **Engine Speed SENSOR NG**	Sensor for engine revolution is in trouble	
ERROR No. 90 **HST-F SOLENOID NG**	Proportional valve for forward is in trouble	Contact your local KUBOTA Dealer. The tractor cannot travel forward (backward only).
ERROR No. 91 **HST-R SOLENOID NG**	Proportional valve for reverse is in trouble	Contact your local KUBOTA Dealer. The tractor cannot travel backward (forward only).
ERROR No. 92 **Hi-Lo SOLENOID NG**	Motor for Hi-Lo shift is in trouble	Contact your local KUBOTA Dealer. Using the H-DS lever, the Lo speed alone can be selected (Hi speed not selectable). In the HST mode, only the STALL GUARD and MANUAL modes can be selected.

https://truckmanualshub.com/

Display on IntelliPanel(TM)	Trouble Item (Affected Model)	Operator's action
ERROR No. 93 **Starter RELAY NG**	Relay for engine starter motor is in trouble	Contact your local KUBOTA Dealer. The engine cannot start.
ERROR No. 94 **OPC NG**	Relay for engine shut off is in trouble	Contact your local KUBOTA Dealer. The Operator Presence Control (OPC) system gets activated, and the engine stops itself.
ERROR No. 95 **PTO SOLENOID NG**	Solenoid (PTO) is in trouble	Contact your local KUBOTA Dealer. The PTO shaft cannot rotate.

https://truckmanualshub.com/

OPTIONS

Consult your local KUBOTA Dealer for further details.

- Engine Block Heater
  For extremely cold weather starting
- Work Light
  High visibility for night work
- Tool Box
- Double Acting Remote Hydraulic Control Valve
- 3-point Hitch Storage Holder
- 3-point Hitch
- Drawbar
- 3rd function valve
- Multi-Coupler System
- Hydraulic Quick Attach Coupler

https://truckmanualshub.com/

APPENDICES

INDEX

3-point Hitch Lowering Speed 79
Air Cleaner Primary Element.....105
Air Cleaner Primary Element and
Secondary Element.....115
Anti-Freeze.....116
Antifrost Heater for Oil Separator.....120
Antifrost Heater for Oil Separator
(if equipped) 28
ATA (Auto Throttle Advance) Switch.....45
Battery Condition.....107
Block Heater (if equipped).....28
Brake Pedal.....101
Brake Pedal.....106
Brake Pedals (Right and Left) 35
Check Chains.....74
Check Easy Checker(TM) Lamps: 25
Checking and Refueling 98
Clutch Housing Water 122
Control Switch 82
Coolant Level 100
Coolant Temperature Gauge.....51
Cooling System and Coolant.....116
Crawl Control Lever.....45
Diesel Particulate Filter (DPF) Muffler.....16
Differential Lock.....52
Directional Valve Lever and Swing Lever.....79
Display Mode.....46
Do not Operate the Tractor at Full Speed
for the First 50 Hours.....30
DPF Differential Pressure Sensor Hose.....121
DPF Differential Pressure Sensor Pipe.....120
DPF Muffler 101
DPF Muffler 117
DPF Regeneration Process.....17
Drawbar (if equipped).....72
Drawbar Length.....74
Dust Indicator 101
Easy Checker(TM) 50
EGR Cooler.....116
EGR Pipe 120
EGR System.....117
Engine Oil.....112
Engine Oil Filter.....111
Engine Oil Level 99
Engine Start System.....103
Engine Valve Clearance.....115
Exhaust Manifold.....120
Fan Belt Tension 106
Float Control 79
Floor Seat Cover 97
Front Axle Case Oil 114
Front Axle Pivot 115
Front Ballast 89
Front Cover..... 97
Front Wheel Drive Lever..... 43
Fuel Filter..... 114
Fuel Gauge..... 51
Fuel Hose 121
Fuel Injection Nozzle Injection Pressure 115
Fuel Line..... 118
Fuel System..... 121
Fuse..... 122
Gauges, Meter and Easy Checker(TM)..... 101
Glove Box 31
Grill, Radiator Screen and Oil Cooler 100
Handling Points 17
H-DS (Hydro Dual Speed) Lever 38
Head Light, Hazard Light etc. 101
Hood 96
Horn Button 34
HST Mode 39
HST Response Control..... 37
Hydraulic Control Unit Use Reference Chart. 86
Hydraulic Quick Attach Coupler Switch
(if equipped)..... 67
Immediately Stop the Engine if:..... 49
Inflation Pressure..... 87
Install the Coupler..... 81
Installing the Lower Link 77
Intake Air Line..... 119
Intake Air Line..... 121
IntelliPanel(TM) Message 26
IntelliPanel(TM) Message 27
IntelliPanel(TM) Message 49
IntelliPanel(TM) Message 69
Lifting Rod (Right)..... 73
Light Bulb..... 123
Light switch..... 32
Liquid Ballast in Rear Tires..... 15
Lower Link 75
Lower Link 76
Lower Link Holder..... 74
Lubricating Grease Fittings..... 102
Lubricating Oil for New Tractors 30
Movable Parts..... 101

https://truckmanualshub.com/

MULTI-COUPLER SYSTEM (if equipped) 83
Oil Cooler Line.....121
Oil Cooler Line / Power Steering Line 120
Oil Separator Element.....115
Oil Separator Hose.....120
Oil Separator Hose.....121
Operating on Slopes and Rough Terrain.....53
Operating the Tractor on a Road.....53
Operator Presence Control 104
Operator's Seat 31
Parking 52
Parking Brake.....43
PCV (Positive Crankcase Ventilation) Valve 115
PM Warning Level and Required Procedures 19
PM Warning Level and Required Procedures 21
Position Control.....78
Power Steering.....53
Power Steering Hose 121
PTO Clutch Control Switch.....68
PTO shaft Cover and Shaft Cap.....70
Radiator Hose (Water pipes).....121
Radiator Hose and Clamp 118
Range Gear Shift Lever (L-M-H) 42
Rear Ballast.....89
Rear Parking Brake Cable.....121
Rear Parking Brake Lever 107
Rear Work Light Switch.....33
Regeneration Operating Procedure 18
Regeneration Operating Procedure 20
Remote Control Coupler
Connecting and Disconnecting.....82
Remote Control Valve 81
Remote Control Valve Coupler
Connecting and Disconnecting.....80
Remote Control Valve Lever 80
Seat Belt.....32
Seat Belt, ROPS and FOPS.....101
Selecting Category.....72
SERVICE INSPECT mode
displaying/resetting procedure 48
Side Cover.....96
Speed Control Pedal 44
Stationary PTO.....69
Stopping 45
Supply Pump 117
Tachometer 51
Throttle Lever 43
Throttle-Up Switch.....41
Tilt Steering Adjustment 32
Tips on Diesel Particulate Filter (DPF)
Regeneration.....23
Toe-in 110
Top Link 73
Top Link and Lifting Rod..... 75
Top Link and Lifting Rod..... 77
Top Link Mounting Holes 72
Tractor Lights..... 34
Transmission Fluid / Hydraulic Oil Filter 113
Transmission Fluid Level 99
Transmission Oil Filter [HST]..... 109
Transport the Tractor Safely 53
Treads 87
Trip Meter and Clock 47
Turbocharger [M62] 117
Turn Signal / Hazard Light Switch 33
Walk Around Inspection..... 97
Warm-up Transmission Oil
at Low Temperature Range 28
Water Separator 98
Water Separator 111
Wheel Nut Torque 104