https://truckmanualshub.com/

DOOSAN Infracore

65.99893-8001C

# Installation Instructions

## MARINE DIESEL ENGINE

## MD SERIES

## L SERIES
## V SERIES

Downloaded from www.Manualslib.com manuals search engine

https://truckmanualshub.com/

# PREFACE

## • General information

This installation instruction is designed as a guide for the proper installation of DOOSAN (Doosan Infracore Ltd. hereafter DOOSAN) marine diesel engines and to create conditions for faultless operation of the entire system and to prevent installation related malfunctions and possible consequential damage to the engine.

## • Scope

This installation instruction applies to all DOOSAN engines for marine propulsion and marine generator.

## • Warranty

Warranty claims against DOOSAN Marine Engines will be accepted only if this installation instruction has been complied with.
If any modification to the engine installation intended by DOOSAN is planned, DOOSAN must be informed in writing, and a new inspection may necessary.
We reserve the right to make technical modifications in the course of further development.

## • Validity

DOOSAN reserves the right to make changes at any time, without notice, in specifications and models and also to discontinue models. The right is also reserved to change any specifications or parts at any time without noticing any obligation to equip same on models manufactured prior to date of such change.
The continuing accuracy of this manual cannot be guaranteed.
All illustrations used in this manual may not depict actual models or equipment and are intended as representative views for reference only.

Downloaded from www.Manualslib.com manuals search engine

https://truckmanualshub.com/

## • Marine engine Recommendation on applications

### ◎ The engine must be able to achieve rated engine speed when operated under fully loaded conditions;

Secondary drive loads must be considered engine horse power which could be available to drive the primary load. Therefore any such parasitic load requirements must be deducted when sizing an engine for the primary load.

### ◎ The engine must be used in accordance with the application guidelines for that particular rating;

It is important to choose the proper engine rating to provide the optimum performance in a given application. Ratings below show DOOSAN marine engine guidelines on applications.

**(1) Heavy duty**

- Operation hours : Unlimited per year
- Average load application : Up to 90%
- Percentages of time at full load : Up to 80%
- Typical gear box ratio : 2.5 ~ 6

(Application: Fishing trawler, Tug boat, Pushing vessel, Cago boat, Freighter, Ferry)

**(2) Medium duty**

- Operation hours : Up to 3,000hr per year
- Average load application : Up to 70%
- Percentages of time at full load : Up to 30%, 4hrs per 12 hour operation period
- Typical gear box ratio : 2 ~ 3.5

(Application: Fishing boat, Pilot boat, Escort boat, Passenger boat, Ferry, Cruising Vessel)

**(3) Light duty**

- Operation hours : Up to 1,000hr per year
- Average load application : Up to 50%
- Percentages of time at full load : Up to 20%, 2hrs per 12 hour operation period
- Typical gear box ratio : 1 ~ 2.5

(Application: Fishing boat, Pilot boat, Escort boat, Passenger boat, Ferry, Cruising Vessel)

Downloaded from www.Manualslib.com manuals search engine

https://truckmanualshub.com/

- **Other country regulation**

Other country may apply additional internal regulation. Please follow their appropriate advice.

| | |
|---|---|
| **Korea** | : KR = Korean Resister of Shipping |
| **Sweden** | : Navigation Office |
| **Finland** | : Navigation Office |
| **Norway** | : DNV = Det Norske Veritas |
| **USA** | : ABS = American Bureau of shipping |
| **Indonesia** | : BKI = Biro Klasifikasi Indonesia |
| **USA** | : NMMA = National Marine Manufacturers Association |
| **England** | : LR = Lloyds Register of Shipping |
| **France** | : BV = Bureau Veritas |
| **Germany** | : GL = Germanisher Lloyd |
| **Italy** | : RINA = Regislro Italiano Navale |
| **Bulgaria** | : BKP = Bulgarian Register of Shipping |
| **China** | : CCS = China Classification Society |
| **China Rep.(Taiwan)** | : CR = China Corporation Register of Shipping |
| **Spain** | : FN = Fidenavis |
| **Croatia** | : CRS = Croatian Register of shipping |
| **India** | : IRS = Indian Register of Shipping |
| **Japan** | : NK = Nippon Kaiji Kyokai |
| **Poland** | : PRS = Polski Register Statkow |
| **Portugal** | : RP = Rinave Portuguesa |
| **Rumania** | : RNR = Registrul Naval Roman |
| **Russia** | : MRS = Russian Maritime Register of Sipping |
| **Turkey** | : TL = Turk Loydu Vakfi |

Downloaded from www.Manualslib.com manuals search engine

https://truckmanualshub.com/

# CONTENTS

**CHAPTER 1 Engine Room** ..... 1

1.1. Engine Room Ventilation
1.2. Engine Foundation
1.3. Max. Permissible Engine Inclination
1.4. Power Rating
1.5. Inclinations

**CHAPTER 2 Engine Mounting** ..... 6

2.1. Flexible Mounting
2.2. Solid Mounting
2.3. Arrangement of Engine and Reduction Gear

**CHAPTER 3 Front Power Take off** ..... 13

3.1. Marine Installation Requirements
3.2. Front Power Take-off Clutches
3.3. Belt Drives

**CHAPTER 4 Exhaust System** ..... 18

4.1. Marine Installation Requirements
4.2. Dry Exhaust Systems(without sea water injection)
4.3. Wet Exhaust System(with sea water injection)
4.4. Direction of Exhaust Outlet
4.5. Permissible Back Pressure
4.6. Designing the Exhaust System
4.7. Measuring the Pressure Drop

**CHAPTER 5 Intake System** ..... 30

5.1. Air Intake
5.2. Engine Room Ventilation
5.3. Radiant Heat to be Removed
5.4. General Note on Air Guidance
5.5. Clear Cross Section

**CHAPTER 6 Cooling System** ..... 35

6.1. Marine Installation Requirements
6.2. Selection of Piping Materials
6.3. Cooling Circuit
6.4. Engine Cooling System
6.5. Engine Coolant
6.6. Sea Water Lines
6.7. Keel Cooler

**CHAPTER 7 Lubricating System** ..... 55

7.1. Marine Installation Requirements
7.2. Engine Blow- by Gas Vent
7.3. Lube Oil Drain Pump
7.4. Oil Dipstick Level Gauge

**CHAPTER 8 Fuel System** ..... 57

8.1. Fuel Circuit
8.2. Fuel Tank

Downloaded from www.Manualslib.com manuals search engine

https://truckmanualshub.com/

**CHAPTER 9 Propulsion System** ..... 64

9.1. Marine Gear Ratio Selection
9.2. How to Select the Right Propeller System
9.3. Propeller selection
9.4. Power Drive with Fixed Pitch Propeller
9.5. Designing of the Propeller
9.6. Propeller Tip Clearance
9.7. Propeller Rotation in Twin Engine Applications

**CHAPTER 10 Electrical System** ..... 75

10.1. Electric Circuit
10.2. Electric Components

- **Appendix** ..... 81
- **Part & After service center**
- **Applications for DOOSAN Engine**

Downloaded from www.Manualslib.com manuals search engine

# CHAPTER 1 ENGINE ROOM

When installing the engine, ensure that there is sufficient space for regular maintenance work and possible engine overhaul after prolonged periods of operation. It must be possible to carry out the following jobs on engine and gearbox without obstruction;

- Removing heat exchanger and inter-cooler for cleaning
- Exchanging starter, alternator and water pump
- Filling up with fuel, oil and coolant
- Checking oil and coolant level
- Changing fuel, oil and air filter
- Setting valves, re-tightening cylinder head bolts
- Draining oil and coolant
- Re-tightening and exchanging V - belts
- Maintenance and exchange of battery
- Exchanging injection nozzles
- Changing the sea water pump impeller
- Changing the reduction gear

## 1.1. Engine Room Ventilation

Calculation of the air requirements for the dissipation of convection and radiation heat can be simplified the following formula:

$$\dot{m} = \frac{\dot{Q} \times 1000}{C_p \times \Delta t}$$

where

$\dot{m}$ Air mass flow rate in kg/h

$\dot{Q}$ Convection and radiation in MJ/h

$C_p$ Specific heat capacity of air = 1 kJ/(kg x degree)

$\Delta t$ Difference in temperature between heated waste air and cold intake air in degrees Celsius

In order to obtain the air volume flow ($m^3$/h) the air mass flow (kg/h) must be divided by the air density, which depends on the temperature.

Air density as a function of the temperature at the air pressure of 0.98kg/$cm^2$ (1000 mbar).

| Temperature in °C | Density in kg/$m^3$ |
|---|---|
| 0 | 1.28 |
| 10 | 1.23 |
| 20 | 1.19 |
| 30 | 1.15 |
| 40 | 1.11 |
| 50 | 1.08 |



Downloaded from www.Manualslib.com manuals search engine

The before-mentioned formula is based on the assumption that the engine room is a heat-tight system, i.e. for the sake of simplicity it is assumed that no thermal energy whatever is dissipated through the hull to the ambient air or water.
In practice, however, such heat losses are likely to occur and depend on the following factors:

- Size and surface area of the engine room
- Difference in temperature between the engine room and the ambient air
- Hull material (thermal conductivity) and hull thickness
- Heat dissipation via pipes (e.g. exhaust pipes)

This heat transfer is therefore hard to estimate qualitatively.

**Note :** The difference of engine room and ambient air temperature ($\Delta t$) would be better below than 15˚C, but should not exceed maximum 20˚C.
$\Delta t$ = (Air temperature of engine room) - (Ambient temperature)

**<Conversion table of physical units >**

- Temperature

| | |
|---|---|
| t(degree Celsius) | = T(Kelvin) - 273 |
| T(Kelvin) | = t (degree Celsius ) +273 |
| t (degree Fahrenheit) | = 1.8 x t (degree Celsius) + 32 |

- Pressure

| | |
|---|---|
| 1 kilo-Pascal (kPa) | = 10 millibar (mbar) |
| 1 hecto-Pascal (hPa) | = 1 millibar (mbar) |

- Energy flow

$$\text{Mega - Joule/hour (MJ/h)} \times \frac{1000}{4.187} = \text{Kilocalories/hour (kcal/h)}$$

$$\text{Mega - Joule/hour (MJ/h)} \times \frac{1}{3.6} = \text{Kilowatt (kW)}$$



Downloaded from www.Manualslib.com manuals search engine

https://truckmanualshub.com/

## 1.2. Engine Foundation

Requirements for the engine foundation are as following;

- The foundation in the vessel should be able to take up propeller thrust in both directions (ahead & astern) and transmit it on to the hull.
- The weight of the drive system as well as all dynamic forces that occur in rough seas must be safely taken up.
- The torsion of the hull owing to rough seas and the load status must not be transferred to the engine. The engine foundation is to be connected to the hull on an area as large as possible
- Transverse cross bracing on the engine bed and stringers should be used to prevent lateral engine movement on solid mounted systems.

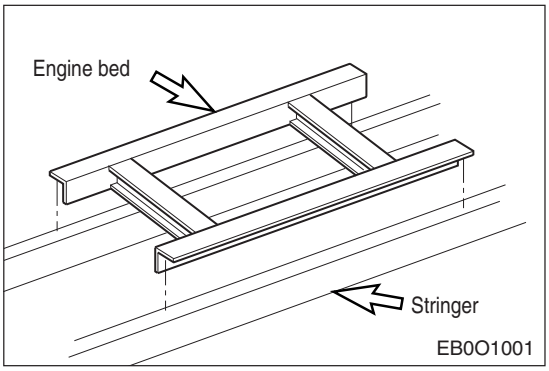


- In order to properly support the weight of the engine and marine gear, a six-point mounting system is recommended on all DOOSAN marine engines.
  When using a six-point mounting system, the engine should be aligned using the mounts at the front and at the marine gear at first. Once the alignment is complete, the next flywheel housing mounts should be added.

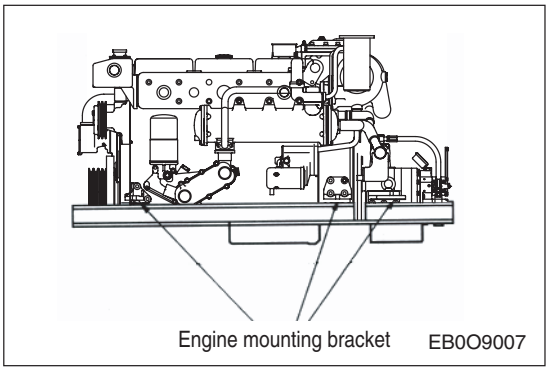




Downloaded from www.Manualslib.com manuals search engine

https://truckmanualshub.com/

## 1.3. Max. Permissible Engine Inclination

The installation angle of the engine is an important factor in the construction of the sub-frame. When the engine is to be installed in longitudinal direction, The maximum permissible inclination must not be exceeded. The maximum permissible inclination is defined as the largest angle that occurs in driving operation, ie, installation inclination plus the ship's maximum trim angle.
The maximum installation angle of the engine is the maximum permissible inclination angle ($\alpha$) of the boat less the angle of the maximum trim($\gamma$) while the vessel is in motion. ie, the maximum installation angle of the engine is($\alpha$-$\gamma$).

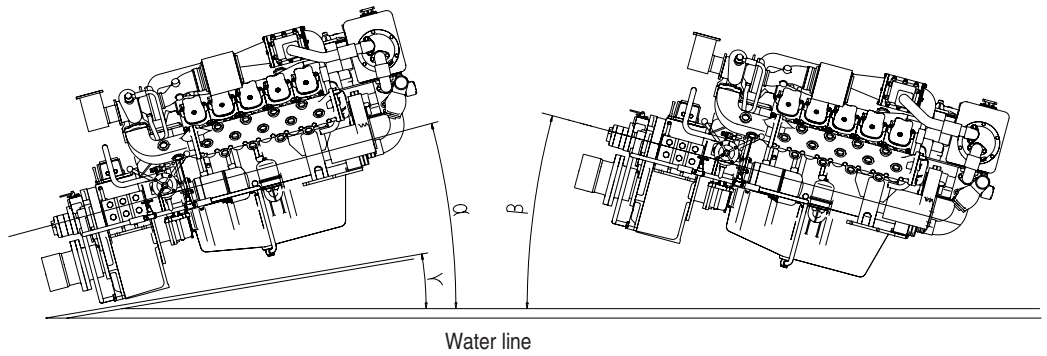


EB0O1003

$\alpha$ = max. permissible vessel inclination angle ; angle towards the flywheel end
$\beta$ = angle towards the non flywheel end
$\gamma$ = trim of the vessel

**<The maximum angles of inclination for the various engine are shown in below table>**

| Engine model | Max. oil pan permissible angle of inclination to the rear : ($\alpha$) | Max. angle of engine installation inclination : ($\alpha$-$\beta$) |
|---|---|---|
| L034 / L034TI | 20° | 5° |
| L066TI | 30° | 5° |
| L136 / L136T | 17° | 5° |
| L136TI / L086TI | 17° | 5° |
| L196T / L196TI / L126TI | 17° | 5° |
| V158TI | 17° | 5° |
| V180TI | 25° | 5° |
| V222TI | 25° | 5° |

**Note : angle $\beta$**
The angle of 5° toward the non-flywheel and must occur only while the vessel is in motion.



Downloaded from www.Manualslib.com manuals search engine

If the installation angle of the engine is greater than that listed upper, the engine may occur any engine damage. That is, connecting rods begin to dip into the oil in oil pan. So, this may also cause high oil consumption, low power and the breather gas increasing and more smokes. We recommend the engine installation angle to install below 6 degree for DOOSAN marine engines.

## 1.4 Power Rating

Diesel engines are to be so designed that when running at rated speed their rated power can be delivered as a continuous power. Continuous power means the net brake power which an engine is capable of delivering continusously between the maintenance intervals stated by the engine manufacturer.

To determine the power of all engines used on board ships with an unlimited range of service, the following ambient conditions are to be used:

| Classification societies | Barometric pressure | Temperatures | | Relative humidity |
|---|---|---|---|---|
| | | Intake air | Seawater/ charge air coolant | |
| DNV | According to ISO3046/1 | | | |
| BV | 1,000 mbar | 45˚C | 32˚C | 60% |
| GL | 1,000 mbar | 45˚C | 32˚C | 60% |
| LR | 1,000 mbar | 45˚C | 32˚C | 60% |
| RINA Propuision | 1,000 mbar | 15˚C | 15˚C | - |
| RINA Aux. service | 1,000 mbar | 45˚C | 30˚C | - |
| KR | 1,000 mbar | 45˚C | 32˚C | 60% |

Engine driving generators are to be capable of developing 10% for a short period.(15minutes)

## 1.5 Inclinations

All components and systems shall be capable to operate in the following trim and pitch positions.

| | Angle of inclination[1)] | | | | | | | | | | | | | |
|---|---|---|---|---|---|---|---|---|---|---|---|---|---|---|
| Installation | ABS | | BV | | DNV | | GL | | LR | | RINA | | KR | |
| | Stat. | Dyn. | Stat. | Dyn. | Stat. | Dyn. | Stat. | Dyn. | Stat. | Dyn. | Sta. | Dyn. | Sta. | Dyn. |
| Main and AUX athwartships | 15 | 22.5 | 15 | 22.5 | 15 | 22.5 | 15 | 22.5 | 15 | 22.5 | 15 | 22.5 | 15 | 22.5 |
| For - and - aft | 5 | 7.5 | 5 | 7.5 | 5 | 7.5 | 5 | 7.5 | 5[2)] | 7.5 | 5 | 7.5 | 5 | 7.5 |
| Emergency athwartships[3)] | 22.5 | 22.5 | 22.5 | 22.5 | 22.5 | 22.5 | 22.5 | 22.5 | 22.5 | 22.5 | 22.5 | 22.5 | 22.5 | 22.5 |
| For - and - aft | 10 | 10 | 10 | 10 | 10 | 10 | 10 | 10 | 10 | 10 | 10 | 10 | 10 | 10 |

1) Athwartships and for - and - aft inclinations may occur simultaneously.

2) Where the length of the ship exceeds 100m, the fore - and - aft static angle of inclination may be taken as : (500)˚/L where L = length of ship(m).

3) In ships for the carrige of liquefied gases and of chemicals the emergency power supply must also remain operable with the ship flooded to a final athwartships inclination up to maximum 30˚.



Downloaded from www.Manualslib.com manuals search engine

https://truckmanualshub.com/

# CHAPTER 2 ENGINE MOUNTING

## 2.1. Flexible Mounting

Flexible mounting will generally be chosen for yachts and small boats because it reduces vibration and noise levels.

Flexible engine mounts use the rubber isolators to absorb engine vibration before it is transmitted to the hull. This will reduce noise and vibration in the boat. There are wide variety of flexible mounts available on the market. Any mounts selected must hold the engine in alignment and provide for acceptable mounting life. The isolator manufacturer should be consulted for further recommendations.

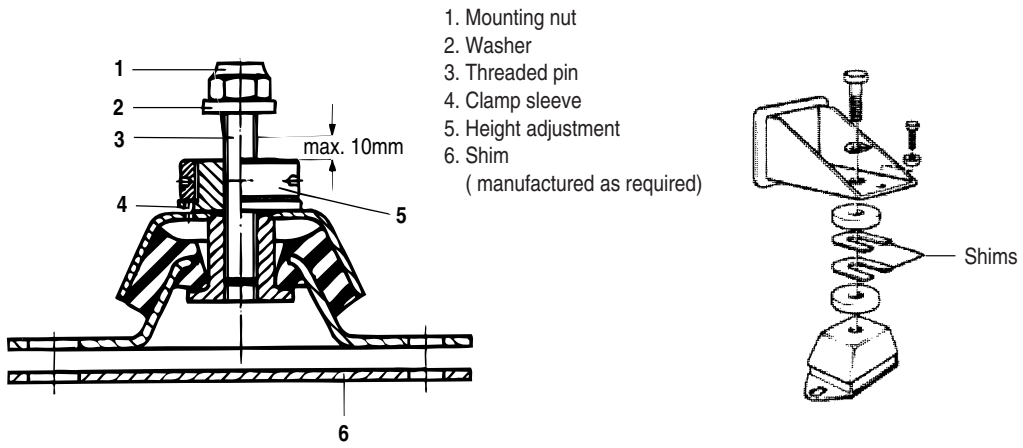


EHO9001S

The engine should be installed with sufficient clearance on all sides so that the allowable engine movement will not cause structural or component damage.

**Note :** If the reduction gear must be mounted prior to installation in the hull, the engine and reduction gear should be mounted on base rails and the whole system installed together.



Downloaded from www.Manualslib.com manuals search engine

## 2.2. Solid Mounting

The solid mounting engine is usually done by using brass or steel shims, pourable choking compound and pads. The use of pourable choking compounds is the simplest and preferred ways to solid mount the engine.

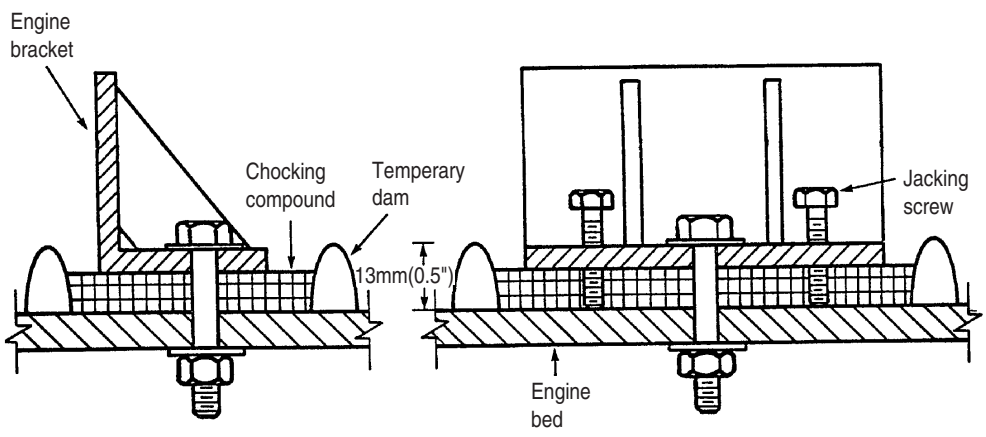


When using a choking compound, the alignment of the reduction gear and propeller shaft is accomplished using jacking screws between the support brackets and the engine bed. The mounting bolts can be loosely put into place at this point or a hole can be drilled through the choking compound later. The jacking screws, mounting bolts and bottom of the engine bracket should be coated with a grease or anti-bonding substance to allow them to be removed later. Temporary dams are put on the engine bed and should extend approximately 13mm (0.5”) above the bottom of the engine beds. The choking compound is poured in to fill the space between the bracket and engine bed. Once the compound has solidified, the jacking screws can be removed or left in place and the final mounting bolts are torqued down.
When using jacking screws on wood or fiberglass engine beds, steel plates should be used under the jacking screws to prevent damage to the engine bed.
The choking compound manufacturer should be consulted for further recommendations.



Downloaded from www.Manualslib.com manuals search engine

https://truckmanualshub.com/

Fabreeka type washers and pads consist of layers of rubber impregnated canvas and will provide a small amount of flexibility for minor misalignment and a degree of protection from shock loading. A steel plate is required between the nut and Fabreeka pad to protect the pad from wear and should be the same size as the pad. It is still necessary to use brass or steel shims to align the engine and gear with the shafting.

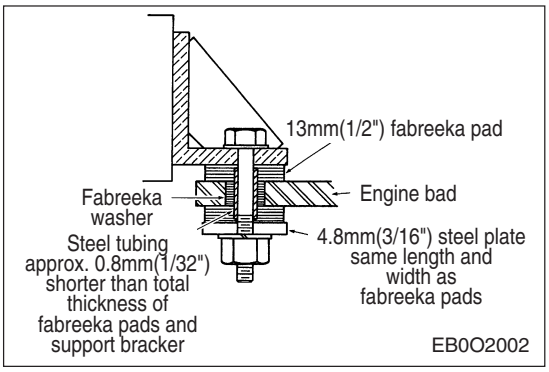


If a front power take-off clutch is used, it is a good practice to support the clutch. The clutch available from DOOSAN marine Vee Series Models must be supported to avoid over stressing the nose of the crankshaft due to the overhung weight.

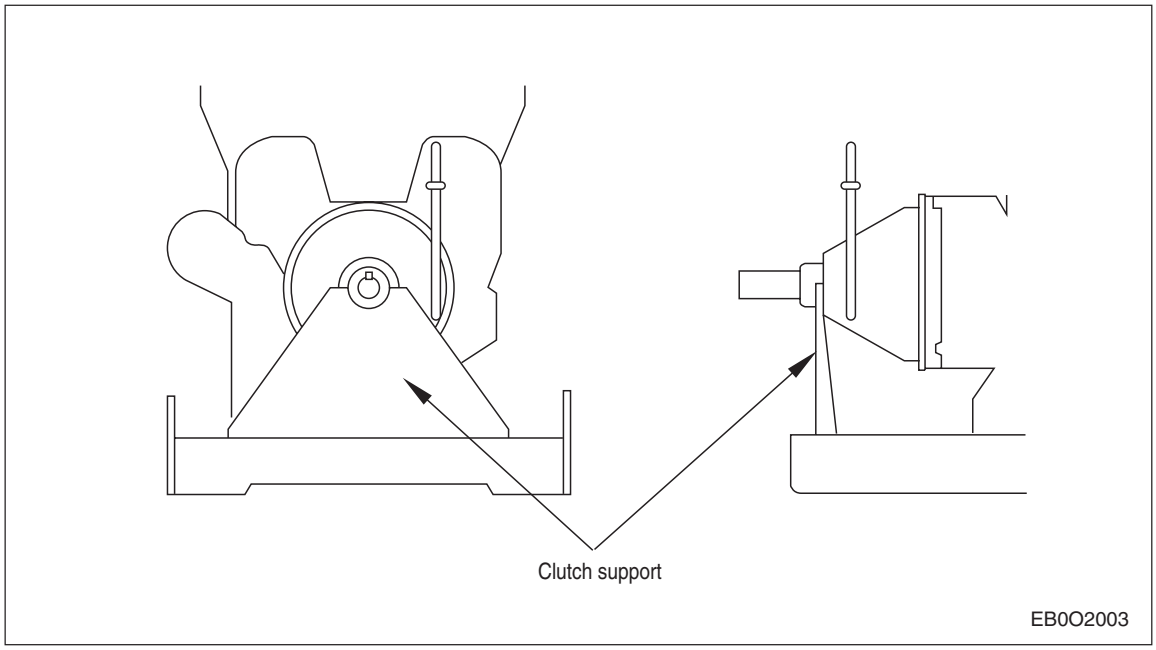




Downloaded from www.Manualslib.com manuals search engine

https://truckmanualshub.com/

## 2.3. Arrangement of Engine and Reduction Gear

### 2.3.1. Engine and flanged-on reversing reduction gear

Engine and reduction gear can be constitute a unit. Propeller thrust is taken up by a reduction gear thrust bearing.

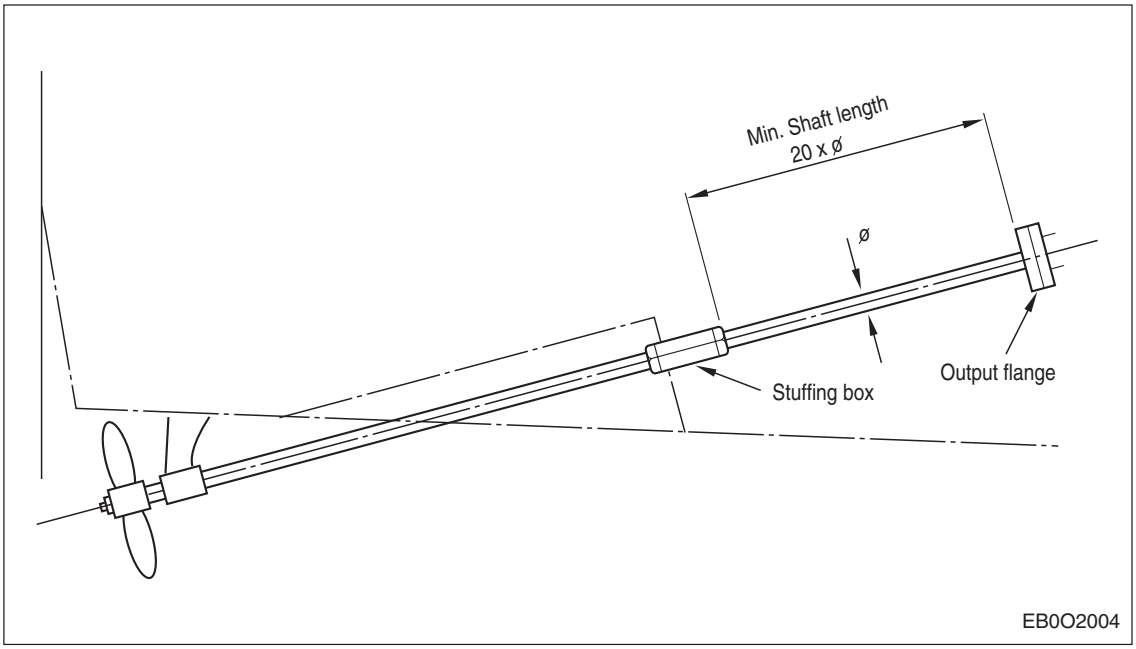


In order to isolate engine vibration and prevent it from being transferred to the hull through the propeller shaft, DOOSAN recommends that the distance from the reduction gear output flange to a fixed stuffing box or first fixed bearing should be a minimum of 20 times the shaft diameter. If the distance is less than this, a flexible coupling may be necessary to isolate the engine vibration.

### 2.3.2. Engine and detached reduction gear

The reduction gear is installed separately from the engine, taking up propeller thrust via a thrust bearing. A constant velocity joint, or a pair of universal joints, and sliding shaft must be used to allow for the relative motion between the flexible mounted engine and the fixed reduction gear.

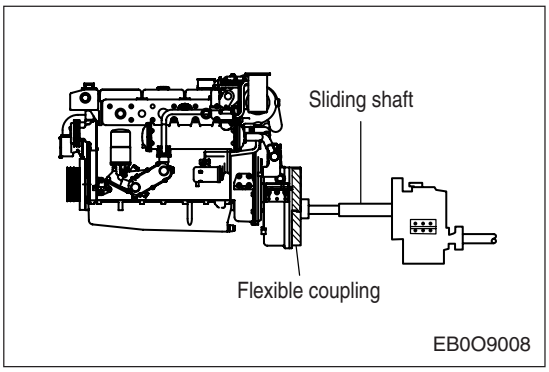




Downloaded from www.Manualslib.com manuals search engine

https://truckmanualshub.com/

### 2.3.3. V - type drive

Engine and reduction gear is installed separately and connected via an elastic coupling and a universal joint. If universal joints are to be used, it is important to remember that it is necessary to have the exact same angle at each joint under all operating conditions in order for the system to work properly.

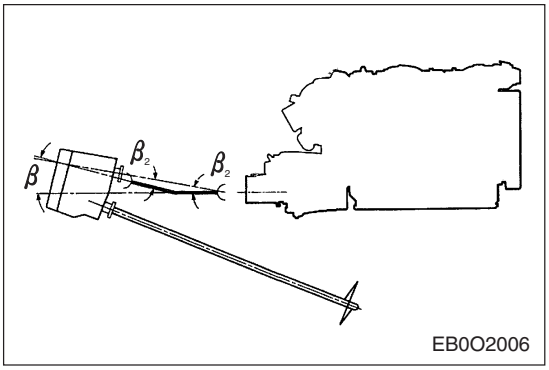


### 2.3.4. Jet type drive

More and more civilian and military boats, such as rescue boats, pilot boats, transport boats, taxi boats, police boats and patrol boats, are using waterjets for propulsion. The waterjet offers many benefits, which include giving the boat greater availability and maneuverability. The waterjet also minimizes the draught of the boat and enables it to operate in shallow water, as well as reducing the risk of personal injury during rescue and diving operations.
To obtain good economy from a waterjet installation, the jet unit and the engine should be correctly matched to the full load service speed of the boat. The differences between a good and a poor match are enormous with regard to fuel efficiency and overall performance of the boat. A correctly sized and installed waterjet gives very small torque variations and creates no engine overload, regardless of the boats loading conditions and speed. The jet is always rotating in one direction, but the reversing of the boat is done by changing the jet stream direction with a reverse deflector, which further reduces the load variations on the engine.

Waterjet has excellent characteristics when it comes to general maneuverability and comfort. Superior control of the boat is achieved across the complete speed range, with small turning radius and quick stops. The boat can rotate within its own length and with two jets the bot can also move sideways. The lack of need of underwater rudder can make the vessel less course stable, it is therefore important that the hull and the maneuvering control system is correctly designed for the use of waterjets.
A waterjet installation has no underwater appendages which reduces the drag of the hull and increases the overall efficiency in speeds above 20 - 30 knots depending on type of waterjets. In comparison with conventional propeller system the inboard noise, vibration and the hydro-acoustic noise is reduced as well.
Jet-type drives work according to the principle of jet propulsion. A jet of water is generated whose thrust sets the vessel in motion.



Downloaded from www.Manualslib.com manuals search engine

https://truckmanualshub.com/

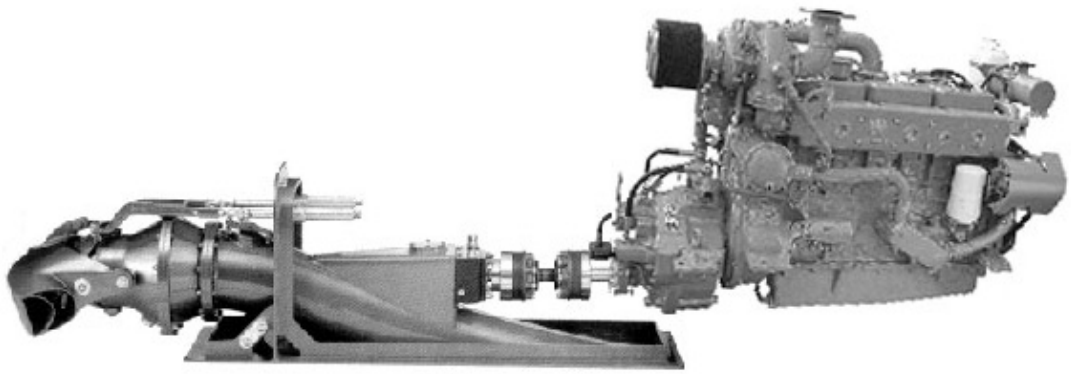

EB0O2009

The drive-line component manufacturer should always be consulted for more details on the installation of their product.

### 2.3.5. The alignment of propeller

The alignment of the engine and marine transmission with the propeller shafting is essential to minimize vibration, noise, power loss and stress in the driveline components.
While aligning the engine and gear, check both the propeller shaft flange bore and face. The shaft and gear flanges should fit together without deflecting either the engine or the shaft from its operating position. This will allow the propeller shaft flange and reduction gear output flange to mate properly without over stressing the driveline components.
The shaft should then be rotated 180° and checked again. The propeller shaft flange bore and face alignment should not be done before the vessel is in the water and, on a solid mounted engine, should be rechecked after the vessel has been in the water and loaded to its normal operating condition.
Engine, gearbox and propeller shaft must be aligned in such a way that radial and angular offset of all components remain within the pre-set tolerances.

**(1) Radial offset check**

The feeler of the dial indicator runs on the peripheral surface of the fixed flange. The shaft end with the dial indicator placed on it must be turned. The reading must not vary by more than 2 x 0.5 mm = 1.0 mm.



Downloaded from www.Manualslib.com manuals search engine

https://truckmanualshub.com/

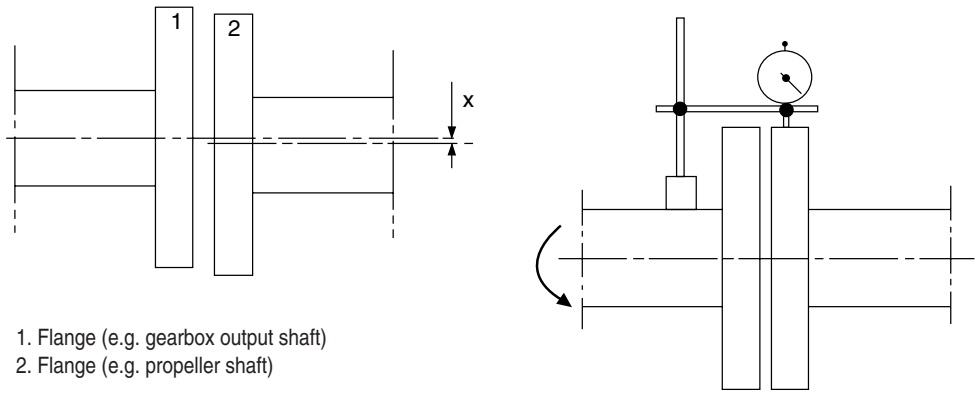


1. Flange (e.g. gearbox output shaft)
2. Flange (e.g. propeller shaft)

EB0O9009

**(2) Angular offset check**

The feeler of the dial indicator runs on the front side of the fixed flange. The shaft end with the dial indicator placed on it is to be turned.

The feeler must contact the mating surface. A 360˚ turn is required for each check. The max. Permissible angular offset must not be exceeded at any measuring point.

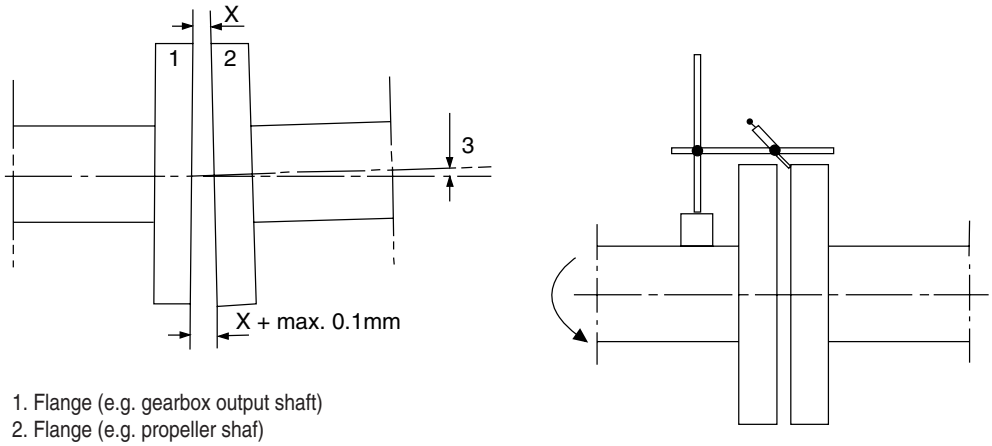


1. Flange (e.g. gearbox output shaft)
2. Flange (e.g. propeller shaf)

**Radial offset : x = max. 0.1 mm** relative to a 200 mm flange diameter
**or : x = max. 0.05 mm** relative to a 100 mm flange diameter

EB0O9010



Downloaded from www.Manualslib.com manuals search engine

https://truckmanualshub.com/

# CHAPTER 3 FRONT POWER-TAKE-OFF

## 3.1. Marine Installation Requirements

- Belt-driven accessories must be mounted on the engine when a flexible mounting system is used.
- Brackets used to mount accessories must provide adequate strength to hold the static and dynamic load of the accessory and avoid resonant vibration within the normal operating range of the engine.
- Variance in accessory loads must be considered when selecting accessory drive location and capacity. Design service factors given in the installation recommendations should be used when determining accessory loads.
- Belt-driven equipment must be held in alignment to a tolerance of 1 mm in 200 mm (1/16 inch in 12 inches).
- The total power taken off at the front of the crankshaft cannot exceed the maximum capacity of the FPTO clutch and the total power absorbed from the engine may not exceed the specified value of each model.
- All exposed rotating components must have a protective guard.

## 3.2. Front Power Take-off Clutches

More power may be taken from a direct drive at the front of the crankshaft than any other accessory drive location. Many DOOSAN marine engines can be fitted with FPTO clutch for driving accessories such as a winch, fire pump, hydraulic pumps or generator.

All direct driven equipment will have some effect on torsional vibration. Excessive torsional vibration in a system can result in excessive noise, gear failure, main bearing wear or, in the most severe cases, crankshaft failures.

The total power taken off at the front of the crankshaft cannot exceed the capacity of the FPTO clutch and the total required power from the engine may not exceed the values in the list below.
This is the maximum amount of power that can be transmitted through the particular clutch.

### 3.2.1. For maximum FPTO power

For front power take-off in engine, install a flexible coupling to the engine front crank shaft pulley and connect drive shaft and V-pulley by supporting them with two pillow blocks as shown in Fig. It is a standard procedure to support driveshaft and V-pulley with two pillow blocks by using flexible coupling for connection to engine. DOOSAN recommends you this type to use front power take-off. (FPTO).

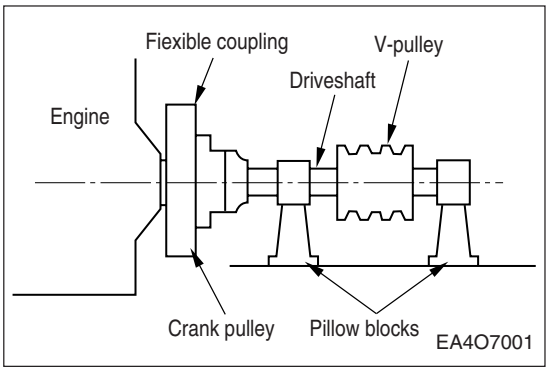




Downloaded from www.Manualslib.com manuals search engine

https://truckmanualshub.com/

When the front PTO is installed, be sure to take deflection reading. Radial run-out should be no more than 0.02 mm.

Be sure to limit the front PTO output within the maximum allowable horsepower as specified for each model in figure below.

| Model | Load(kW) | rpm |
|---|---|---|
| L034 | 15 | 2,200 |
| L034TI | 31 | 2,600 |
| L066TI | 65 | 1,500 |
| L136 | 60 | 1,800 |
| L136T | 72 | 1,400 |
| L136TI | 88 | 1,200 |
| L086TI | 120 | 1,600 |

| Model | Load(kW) | rpm |
|---|---|---|
| MD196T | 115 | 1,600 |
| MD196TI | 122 | 1,400 |
| L126TI | 132 | 1,600 |
| V158TI | 176 | 1,400 |
| V180TI | 220 | 1,600 |
| V222TI | 265 | 1,600 |
| | | |

(Load represents when there is no propeller load)

**Note :** Upper listed loads represent allowable maximum torque.

### 3.2.2. For small cross drive power

(No supporting bearing on front side of PTO pulley)

DOOSAN does not recommend this type arrangement, which is not standard procedure. However, If the FPTO as in figure have to apply the drive arrangement, the distance between the coupling end face of engine pulley and the centerline through pulley groove is not greater than 60 mm. The distance is indicated as “L” in the figure.

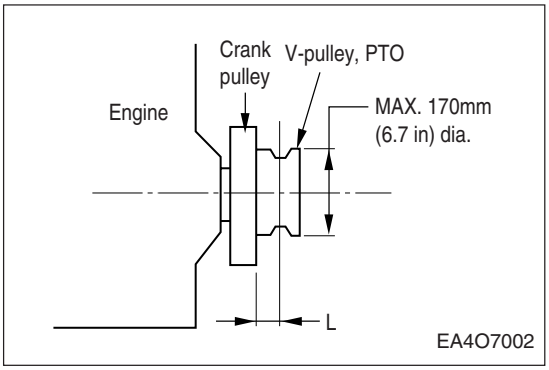




Downloaded from www.Manualslib.com manuals search engine

https://truckmanualshub.com/

**<Driven loads by V-belt>**

(L = Max. 60mm)

| Model | Load(kW) | rpm |
|---|---|---|
| L034 | 12 | 2,200 |
| L034TI | 20 | 2,600 |
| L066TI | 38 | 1,800 |
| L136 | 35 | 1,800 |
| L136T | 40 | 1,400 |
| L136TI | 50 | 1,200 |
| L086TI | 70 | 2,000 |

| Model | Load(kW) | rpm |
|---|---|---|
| MD196T | 68 | 1,600 |
| MD196TI | 74 | 1,400 |
| L126TI | 80 | 1,600 |
| V158TI | 95 | 1,400 |
| V180TI | 115 | 1,600 |
| V222TI | 125 | 1,600 |
| | | |

(Load represents when the propeller is running with engine)

**Note :** Upper listed loads represent allowable maximum torque.

Additionally, the total power(Load) required by the propeller and FPTO cannot exceed curve #1 on the power curve at any given rpm. If the propeller is engaged, this means that the max. power available at the front is equal to the distance between curves #1 and #2.

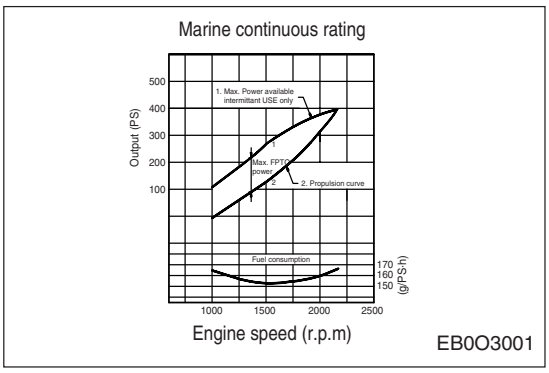


## 3.3. Belt Drives

DOOSAN marine engines usually have belt drives for an alternator, sea water pump and at least one or two free(grooves of) drive pulleys for other accessories. Many engines also have crankshaft pulleys available for driving accessories. All of DOOSAN marine engine drives are available with either A or B type V-belts that are designed to ISO 3046 standards.

If two power take-offs are at the same time, make sure that the resultant radial forces are as small as possible.

The combination of companion flange and V-belt pulley can be used for such a multi power take-off, as shown in below figure. It is advisable to shield V-belts and flanges properly, to avoid accidents.



Downloaded from www.Manualslib.com manuals search engine

https://truckmanualshub.com/

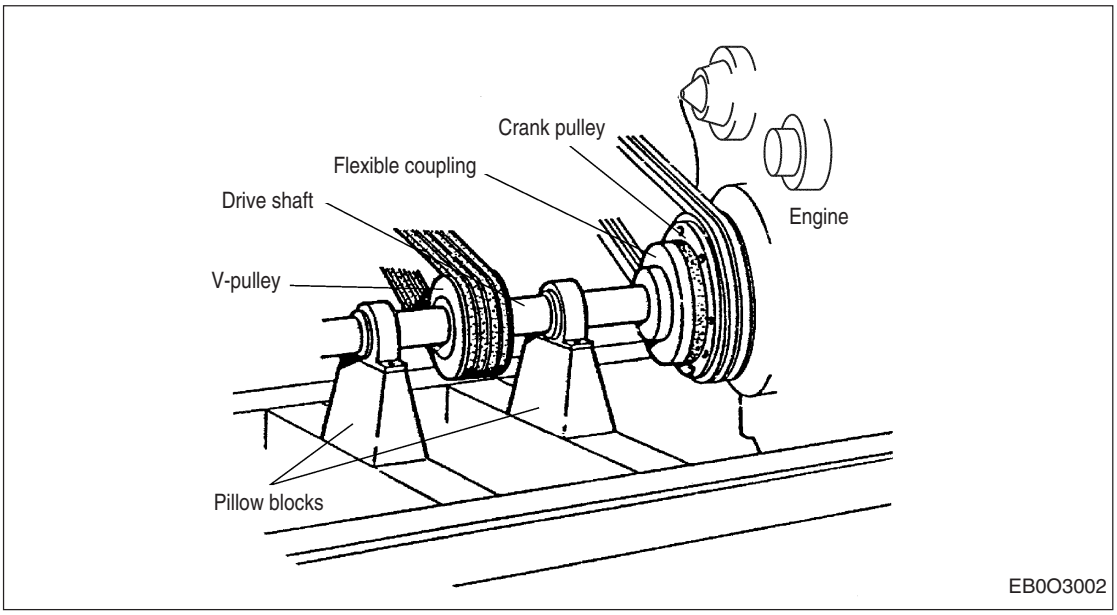


**Note :** New belts require a run-in period of 10 ~ 15 minutes under tension and should then be retensioned. This allows for the initial stretch of the belt and will help prevent it from jumping the pulley.
Brackets used to mount accessories must provide adequate strength to hold the static and dynamic load of the accessory and avoid resonant vibration within the normal operating range of the engine.

If a bracket has a natural frequency within the operating range of the engine, operation at that speed will result in resonant vibration and failure of the bracket. So DOOSAN has no control over the design or material of the component, they are not responsible for any damage resulting from the failure of a non-DOOSAN supplied part.
When accessories are mounted on the engine, the mounting bracket should be attached to a basic part of the engine such as the cylinder block or cylinder head whenever possible.
Accessories should not be mounted where they must be removed for normal engine maintenance or where they are supported through a gasketed joint.

**Note :** Variance in accessory loads must be considered when selecting accessory drive location and capacity. Design service factors given in the installation recommendations should be used when determining accessory loads.

Since engine-driven accessories will have experience fluctuations in the load during normal operation, the rated load of the accessories should be multiplied by a design service factor when determining the load imposed on the engine by the accessory.
The direction as well as the load is important when considering belt driven accessories. The load capacity of crankshaft pulleys and other drive locations will vary at different angles due to the loading capability of the bearings.



Downloaded from www.Manualslib.com manuals search engine

https://truckmanualshub.com/

If two or more accessories are being driven from a single multigroove pulley, the accessories should be arranged to have opposing belt pulls so that the resulting force on the drive shaft is kept to a minimum.

Additional pulley grooves or increasing the belt size may exceed the safe loading of the crankshaft or drive location. Therefore the overloading should not be allowed to prevent any malfunction.

Any device rigidly attached to the front of the crank, other than an approved option, must be analyzed for the effects on crank bending, side-pull loading, mean and vibratory torques, and the capability of the crank bolted joint capacity.

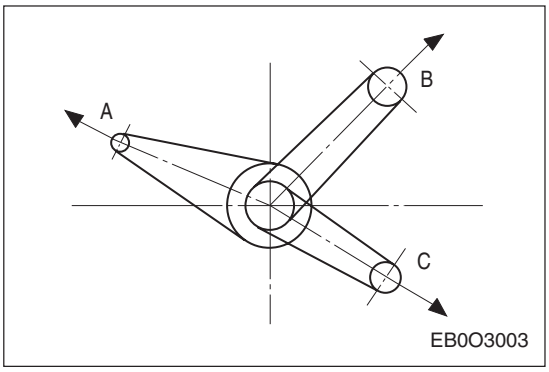


**Note :** Belt driven equipment must be held in alignment to a tolerance of 1 mm in 200 mm (1/16 inch in 12 inches).

Misalignment between the belt-driven equipment and the engine will result in bending forces on the shafts involved, wearing of the belt, belt jumping and can result in bearing or belt failure. This can usually be checked with a straight edge.

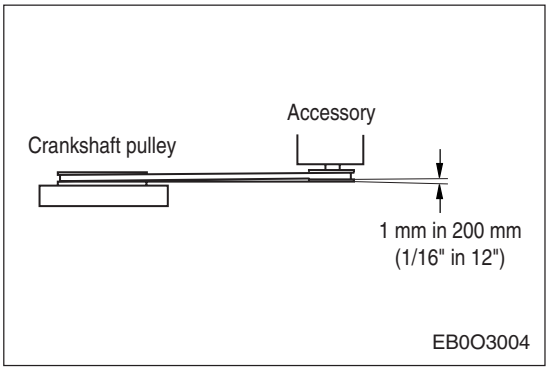




Downloaded from www.Manualslib.com manuals search engine

https://truckmanualshub.com/

# CHAPTER 4 EXHAUST SYSTEM

The purpose of the exhaust system is to carry the exhaust gas from the engine to the atmosphere with minimal flow restriction. Marine applications have two types of exhaust systems, wet and dry.

## 4.1. Marine Installation Requirements

- Thermal insulation or guards must be installed on dry exhaust systems.
- Dry exhaust piping must not be installed near combustible material.
- The exhaust system components must not impose excessive stresses on the exhaust manifold or turbocharger due to weight, inertia, relative motion of the components or dimensional change due to thermal growth.
- The exhaust system must automatically prevent the entrance of water into the engine or turbocharger whether it is from spray, rain, washing or any other source.
- The exhaust gas must be dispersed so that it does not detrimentally affect the air cleaner function, the engine ambient environment or the crew or passengers.

## 4.2. Dry Exhaust Systems (without sea water injection)

Depending on the temperature, the standard value for longitudinal expansion of steel pipes is **1 mm per meter and 100˚C**.

It is not permissible to channel exhaust gases of several engines into one system. Multi-engine systems are required to have a separate exhaust system for each and every engine to prevent exhaust gases from penetrating from one running engine into another one.
For V-type engines it is recommended that the exhaust gases of both cylinder rows be combined via an Y-pipe type.
Owing to high exhaust temperatures of several hundred degrees Celsius, exhaust pipes heat up. For reasons of safety the pipes must be fitted with suitable anti-heat protection.
In order to prevent the engine room from heating up too much, a fireproof fuel and lubricating-oil-repellent insulation is recommended.
To minimize exhaust gas back pressure, avoid sharp turns and manifolds.

Design pipe bends with large radius only (R/d ≥ 1.5). If silencers are installed, ensure that the max. permissible exhaust gas back pressure is not exceeded.
Any bends in the exhaust system should be made as smooth as possible. Sharp bends can drastically increase the exhaust back pressure.

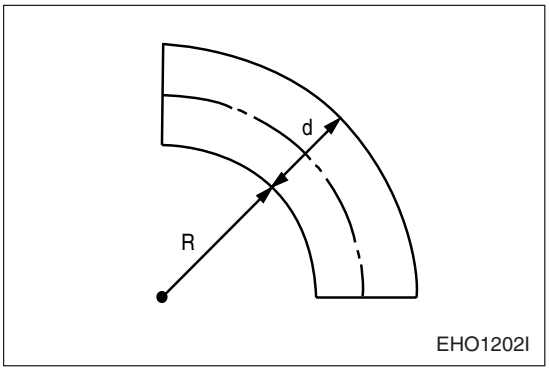




Downloaded from www.Manualslib.com manuals search engine

Dry exhaust systems use steel or iron pipe for the exhaust piping, stainless steel flexible sections, and steel for the mufflers. Due to the high exhaust temperatures and the thermal conductivity of the metal components they can be very dangerous unless certain precautions are taken.
One more flexible exhaust connection must under initial tension be installed between the engine and the exhaust system.
A flexible exhaust connection must be installed in the exhaust piping within 1.2 m (4 feet) of the engine exhaust outlet.

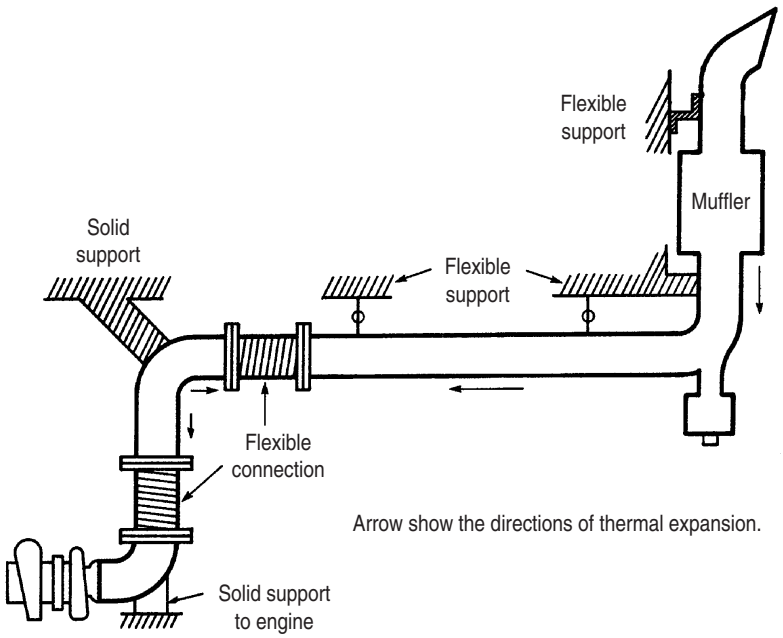


If the exhaust system has both long vertical and horizontal sections, separate flexible exhaust sections must be used to absorb the thermal growth in each direction. The horizontal flexible sections should be installed as far away from the vertical piping as possible to avoid collecting soot and condensation in the bellows.

If water enters the turbocharger or engine it will damage the turbocharger and, if it enters the exhaust manifold, may cause a hydraulic lock and engine failure upon start-up.
Condensation water collects in the exhaust system and under any circumstances water (rain, spray) must not penetrate into the exhaust system of the engine.



Downloaded from www.Manualslib.com manuals search engine

For this reason the water collector with a drainage device must be installed near the engine if long exhaust pipes are laid at an ascending angle.
This can usually be accomplished in a dry exhaust system by using a 45 degrees or greater bend at the top of the piping. The pipe should also have a slight overhang to make the entrance of water more difficult.
The exhaust outlet should face the stern of the boat so that any water that comes over the bow will not enter the exhaust system.

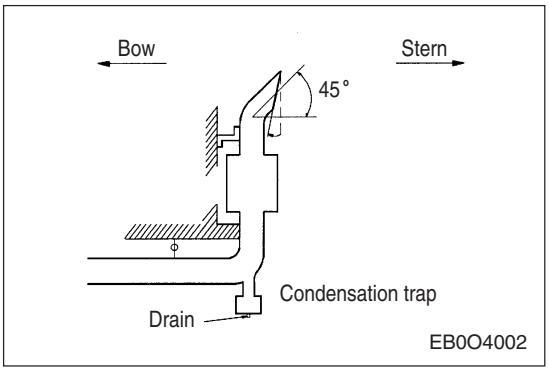


The actual exhaust piping size may vary depending upon the complexity of the routing and the silencer used in the system.
The below table is showed the MINIMUM dry exhaust outlet pipe diameters for various engine models and ratings when total exhaust piping length is below 5m. Add the diameter additional 5mm every 5m increasing. The actual exhaust piping size may vary depending upon the complexity of the routing and the silencer used in the system.

| Engine model | Minimum dry exhaust inner diameter(mm) | Engine model | Minimum dry exhaust inner diameter(mm) |
|---|---|---|---|
| L034 | 76 | MD196T / TI | 115 |
| L034TI | 76 | L126TI | 115 |
| L066TI | 76 | V158TI | 145 |
| L136 / T / TI | 76 | V180TI | 145 |
| L086TI | 115 | V222TI | 145 |

## 4.3. Wet Exhaust System (with sea water injection)

In a wet exhaust, sea water is sprayed into the exhaust pipe. Heat is transferred from the exhaust gases to the sea water and the exhaust gas temperature drops low enough.

A pipe bend (swan neck) is required in the exhaust pipe system followed by a downward sloping exhaust pipe to prevent water from penetrating into the engine. The pipe bend must be mounted immediately downstream of the engine. Following picture shows an example of a swan neck for sea water injection into the exhaust pipe. **The diameter of the exhaust pipe behind the sea water inlet must be 25% larger than that of the pipe bend.** Any bends in the exhaust system should be made as smooth as possible. Sharp bends can greatly increase the back pressure and should be avoided.



Downloaded from www.Manualslib.com manuals search engine

https://truckmanualshub.com/

**<Schematic diagram for sea water injection>**

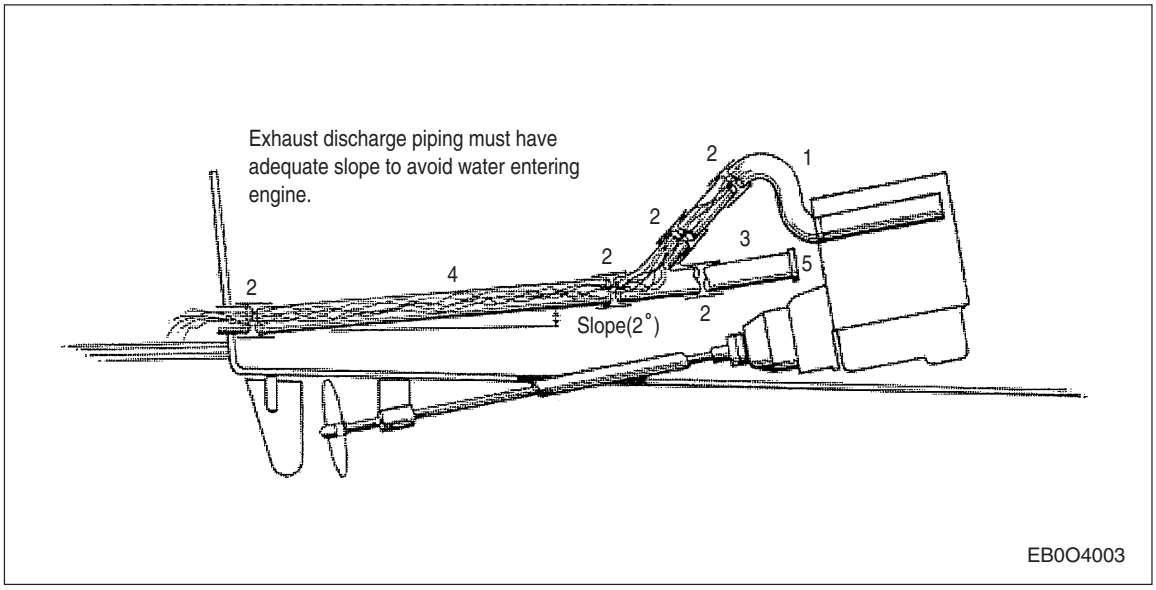


**Wet exhaust system**

(Engine should be mounted above water line)

1. The water cooling exhaust elbow : sea water cools elbow, then discharges through peripheral slot at discharge end of elbow into exhaust pipe.
2. The rubber exhaust hose flexible connection : must be oil and heat resistant.
3. Backwater surge chamber : prevents sea water surging into engine exhaust when vessel at rest with stern exposed to oncoming waves.
4. Exhaust pipe : should have slight downward gradient toward discharge end.
5. End cover plate : available for inspection and cleanup purposes

### 4.3.1. Design of water injection

In a wet exhaust system, sea water is sprayed into the exhaust pipe at some point downstream of the turbocharger.

If a water injection elbow is used, the elbow should be directed downward at a minimum of 15 degrees to prevent the water being injected from getting back into the turbocharger and should have a pipe tap (1/8”) for exhaust restriction measurements. Heat is transferred from the exhaust gases to the sea water and the exhaust gas temperature drops low enough to allow the use of hard rubber hose, fiberglass tube or other corrosion resistant materials downstream of the water injection.

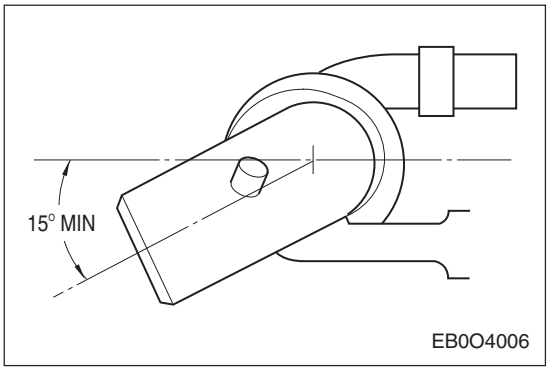




Downloaded from www.Manualslib.com manuals search engine

https://truckmanualshub.com/

Wherever water is injected in the exhaust system, it is important that an even spray pattern is achieved. If the spray pattern is uneven, parts of the exhaust piping may not be sufficiently cooled. This can result in failure of the exhaust piping system due to overheating and a possible safety hazard from high surface temperatures.

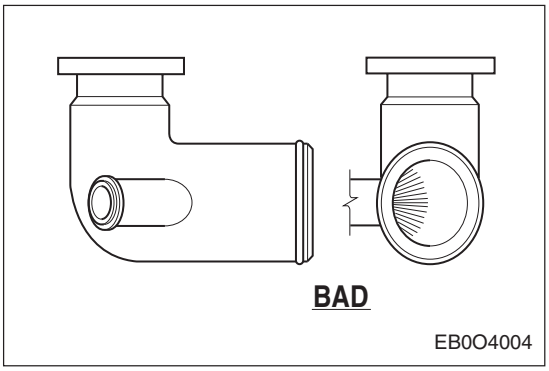


**Note :** The surface temperature of the exhaust piping should not exceed 93˚C (200˚F) under any operating conditions.

DOOSAN recommends using evenly distributed holes with an 8 mm (0.31 in) diameter with the number of holes being dependent upon the sea water flow. The following equation can be used to determine the number of holes:

$$\text{No. of holes} = \frac{\text{Lit./min(sea water flow)}}{10}$$

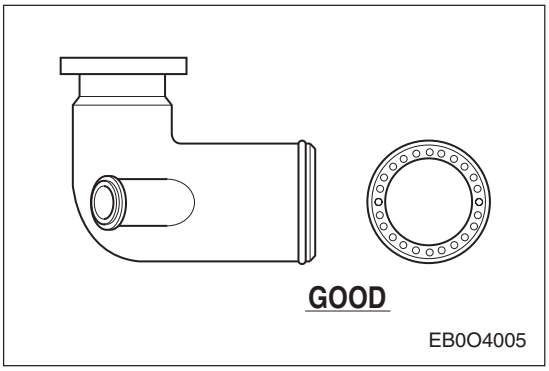


### 4.3.2. Location of water injection

If the engine is installed at a deep position and the exhaust gas outlet at the system is located just above or even below the water line, a pipe bend (swan neck) must be integrated into the pipe. This prevents water from flowing into the engine when the ship reverses or the water is rough.
Therefore, all exhaust outlets should be located above the loaded water line.
A flapper valve may also be installed at the exhaust outlet to help prevent water from entering the exhaust system while the boat is at rest.

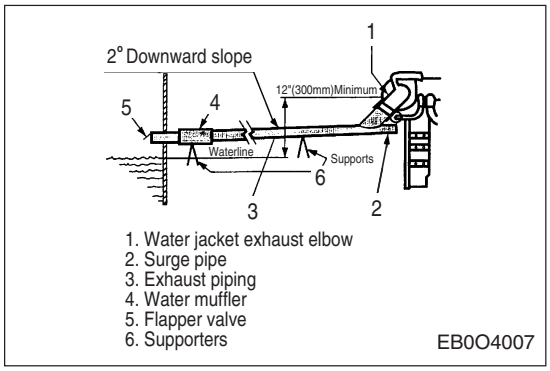




Downloaded from www.Manualslib.com manuals search engine

The location of the water injection should be at least 300mm(12 inches) from any sharp bends to prevent a water buil-up that would result in high back pressure and the pipe bends should be made as smooth as possible in the exhaust system.

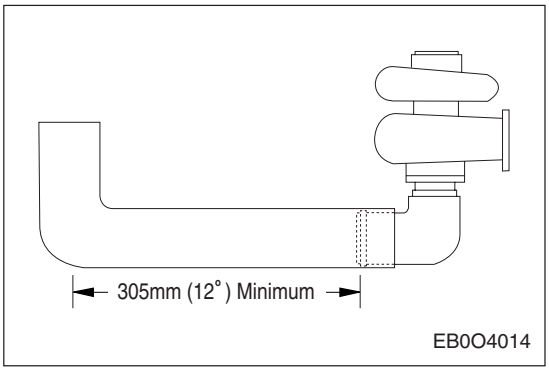


The diameter of the exhaust piping will have a large effect on the exhaust back pressure in the system. Below table is showed the minimum wet exhaust diameter for DOOSAN marine engines when total exhaust piping length is below 5m. Add the diameter additional 5mm every 5m increasing. The actual exhaust piping size may vary depending upon the complexity of the routing and the silencer used in the system.

| Engine model | Minimum wet exhaust inner diameter(mm) | Engine model | Minimum wet exhaust inner diameter(mm) |
|---|---|---|---|
| L034 | 76 | MD196T | 115 |
| L034TI | 80 | MD196TI | 125 |
| L066TI / L136 | 90 | L126TI | 145 |
| L136T | 95 | V158TI | 165 |
| L136TI | 100 | V180TI | 172 |
| L086TI | 110 | V222TI | 182 |

## 4.4. Direction of Exhaust Outlet

All exhaust outlets should be located aft and above all air Intake locations so as to prevent exhaust gases from re-entering the engine room.
The exhaust outlet should be high enough above the deck or far enough aft so that the exhaust gases are dispersed into the atmosphere without adversely affecting the passengers or crew.

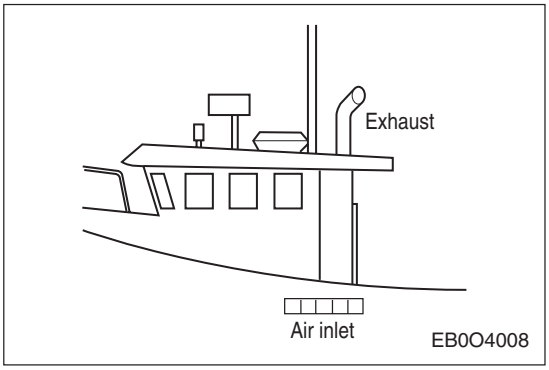


The exhaust outlet should also be angled out to the side of the vessel to allow the exhaust gas to disperse and not be drawn back onto the deck.

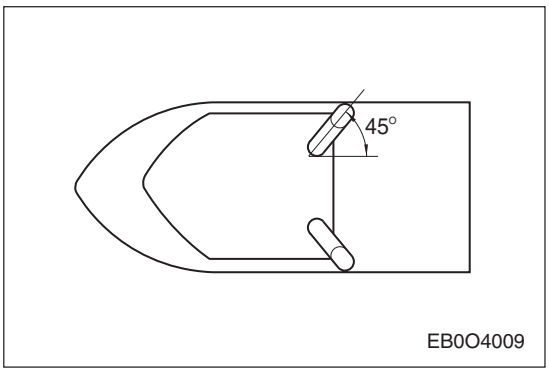




Downloaded from www.Manualslib.com manuals search engine

**Note :** The exhaust gas must be dispersed so that it does not detrimentally affect the air cleaner function, the engine ambient environment or the crew or passengers.

All exhaust outlets should be a sufficient distance from all intake and exhaust ventilation areas so as to prevent exhaust gases from re-entering the engine room.

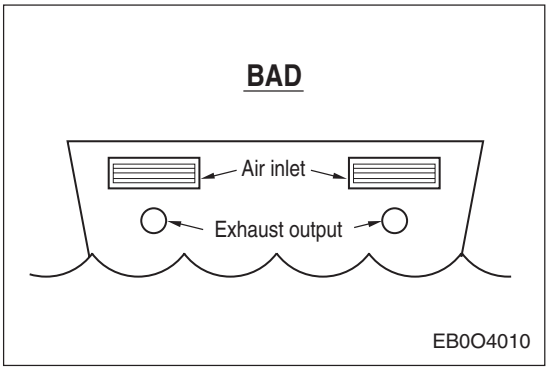


The exhaust outlets should not be angled directly into the water as this will result in higher noise levels and the sudden quenching of the exhaust gases may result in a visible film of carbon deposits on the water

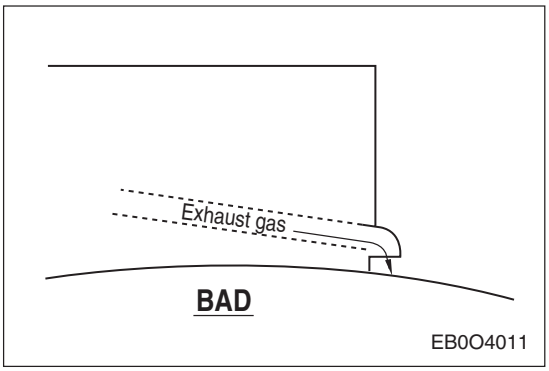


Whenever possible, it is recommended that the exhaust outlets be situated on the side of the vessel. As the air flows around the vessel, a slight vacuum will be created at the stern side. If the exhaust outlets are located on the transom, the exhaust gas may be drawn back onto the deck of the boat. Locating the outlets on the side will help prevent this from occurring.

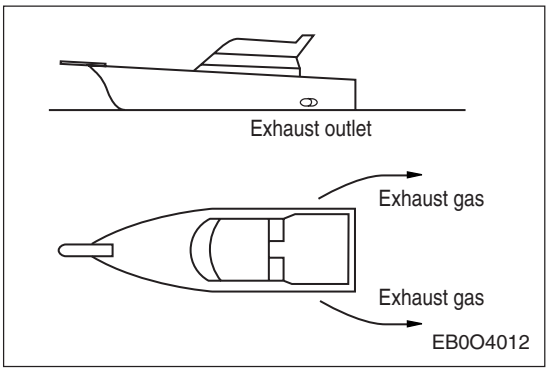


## 4.5. Permissible Back Pressure

The permissible exhaust back pressure measured immediately downstream of the collecting pipe is :

- Natural aspirated engines : max. 0.11 kg/cm$^2$ (110 mbar, 1100 mm Ws)
- Turbocharger engines : 0.01 ~ 0.08 kg/cm$^2$ (10 ~ 80 mbar, 100 ~ 800 mm Ws)

To exceed these values results in impermissible exhaust temperatures and thermal stress as



Downloaded from www.Manualslib.com manuals search engine

well as unsatisfactory engine power and excessive smoke development.
For this reason it is indispensable that the exhaust back pressure be measured when the engine is commissioned and, if necessary, the exhaust system is re-dimensioned.
A vacuum at the exhaust gas outlet (e.g. caused by the flow behavior in an underwater exhaust) leads to an increase in ignition pressures in turbocharged engines and is therefore to be avoided.

## 4.6. Designing the Exhaust System

We recommend that, if possible, the maximum permissible back pressure value (= pressure drop) be not fully exploited when the exhaust system is designed. The exhaust pipe diameter, the number of manifolds, the silencers and the pipe routing are to be selected so that 75% of the maximum value is not exceeded when the engine is new.

The total back pressure (total pressure drop) Δp in the exhaust system is calculated as follows:

$$\Delta p = \Delta p_R \times L + \Delta p_K \times n_K + \Delta p_S$$

Explanation of the formula:

$\Delta p_R$ = Back pressure (pressure drop) per 1 m of pipe
$L$ = Length of pipe in m
$\Delta p_K$ = Back pressure (pressure drop) per 90” manifold
$n_K$ = Number of manifolds
$\Delta p_S$ = Back pressure (pressure drop) in silencer

### 4.6.1. Example of a dry exhaust system calculation

A dry exhaust system with a pipe length of 5 m, two 90˚ manifolds and a silencer is planned for a vessel. The clear diameter is to be 120 mm.
Is this system adequately designed for a turbocharger diesel engine with an exhaust gas mass flow of 1,300 kg/h?
The following values can be found in the tables:

Back pressure per 1 m of pipe = 0.3 kPa
Back pressure per 90˚ manifold = 0.51 kPa
For back pressure data in manifold, contact manufacturer.
A value of 5 hPa is assumed.

The total back pressure Δp is calculated as follows : (1 kg/cm² = 98 kPa = 980hPa)

$$\Delta p = \Delta p_R \times L + \Delta p_K \times n_K + \Delta p_S$$
$$\Delta p = 3.0\text{hPa} \times 5 + 5.1\text{hPa} \times 2 + 5\text{hPa} = 30.2\text{hPa}$$

The calculated value is within the permissible area(10~80 hPa).

### 4.6.2. Example of a wet exhaust system calculation



Downloaded from www.Manualslib.com manuals search engine

A wet exhaust system with a pipe length of 7 m and four 90° manifolds is planned. The clearance diameter is 100 mm.
Is this system adequately designed for a diesel engine with an exhaust gas mass flow of 1,300 kg/h?
The following values can be found in the tables:

Back pressure per 1 m of pipe = 8 hPa

Back pressure per 90° manifold = 10.6 hPa

As the exhaust gas noises are well silenced by the water injection, no silencer is installed.

The total back pressure Δp is calculated as follows:

Δp = 8.0hPa x 7 + 10.6hPa x 4 = 98.4hPa

The calculated value is above the maximum permissible back pressure of 80 hPa (mbar). For this reason an exhaust system with a larger diameter is required.

Checking the same system but with a clear diameter of 120 mm:

The back pressures per 1 m of pipe and a 90° manifold can be gathered from the following tables.

The total back pressure Δp is calculated as follows:

Δp = 3.0hPa x 7 + 5.1 hPa x 4 = 41.4 hPa(mbar)

The calculated value is in the permissible area. Downstream of the sea water inlet into the exhaust pipe the diameter is to be enlarged by 25% . From there onwards it must be 150 mm.

The calculation method is an aid to designing the exhaust system. However, when an engine is commissioned an exhaust back pressure check is necessary in any event.

## 4.7. Measuring the Pressure Drop

### 4.7.1. Unit of measurement

1 hPa = 1 mbar = 10 mm water column

### 4.7.2. Measuring instrument

The simplest measuring instrument is a U-pipe manometer filled with water. If the U-pipe manometer is filled with mercury, the reading of the liquid's difference in height given in mm is to be multiplied by 13.6 to obtain the result in mm head of water.

1 mm Hg = 13.6 mm head of water = 1,333 mbar

### 4.7.3. Measuring arrangement



Downloaded from www.Manualslib.com manuals search engine

https://truckmanualshub.com/

The quantity to be measured is the static pressure, i.e. the measuring connection must fit on the inside flush with the pipe wall.
Select a straight part of the pipe or the neutral fiber of the pipe bend for the measurement. This can be nothing more than a piece of clear plastic tubing of any diameter greater than 1/4", fixed in a U-shaped loop to a board about 4 feet long. The board is marked off in inches as below figure. Set up the board on end and half fill the tubing with water.
If the overall pressure drop of the exhaust system is to be measured, a point immediately downstream of the engine's exhaust gas collecting pipe or the turbocharger is to be selected

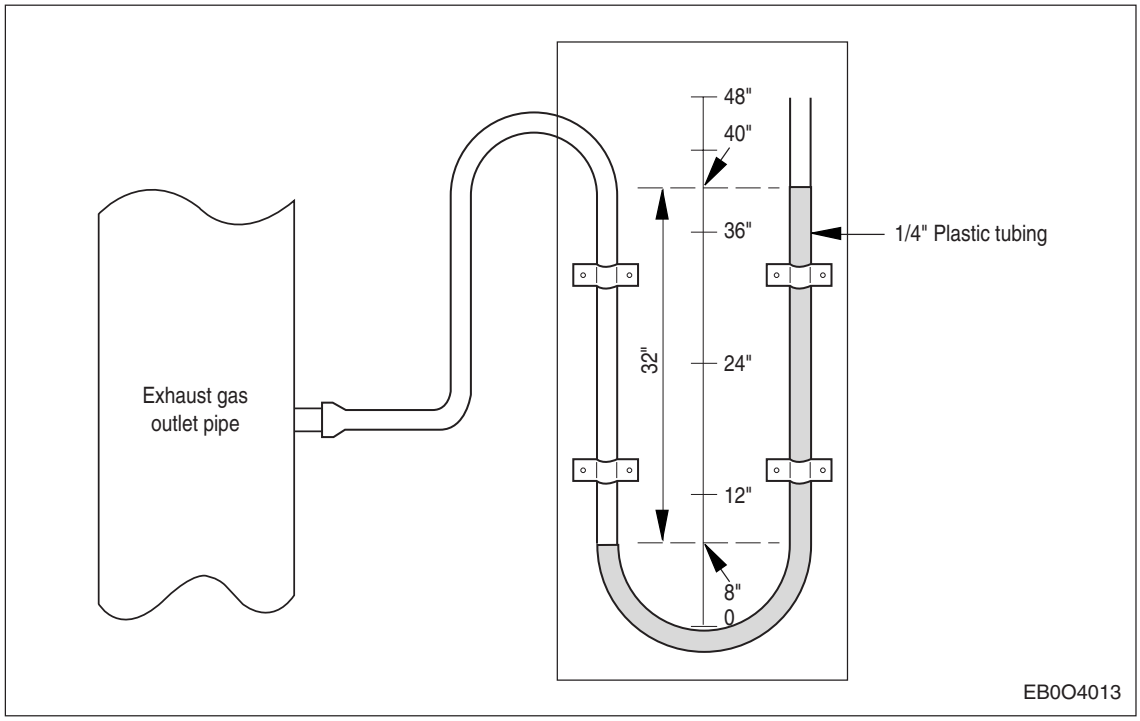


for the measurement.

**Note :** During the measuring operation the engine must run at continuous maximum power and speed.

Note the level of the water in the tube with the engine at rest. Then crank the engine and the exhaust back pressure will push the water down one side of the tubing and up the other. The difference between two levels, measured in inches, is the back pressure in inches of water column.



Downloaded from www.Manualslib.com manuals search engine

Average back pressure(pressure drop) in kPa per 1 m exhaust pipe, depending on the Fexhaust gas mass flow in kg/h and the clear diameter in mm ( 1 kPa = 10 mbar)

**< Average back pressure (pressure drop) >**

Table 1) in kPa per 1 m of exhaust pipe (1 kPa =10 hPa = 10 mbar)

| Exhaust gas mass flow * (kg/h) | Diameter in mm | | | | | | |
|---|---|---|---|---|---|---|---|
| | 80 | 100 | 120 | 140 | 160 | 180 | 200 |
| 200 | 0.06 | 0.02 | 0.01 | - | - | - | - |
| 300 | 0.14 | 0.04 | 0.02 | 0.01 | - | - | - |
| 400 | 0.25 | 0.08 | 0.03 | 0.01 | 0.01 | - | - |
| 500 | 0.39 | 0.12 | 0.05 | 0.02 | 0.01 | - | - |
| 600 | 0.56 | 0.17 | 0.06 | 0.03 | 0.01 | 0.01 | - |
| 700 | 0.76 | 0.23 | 0.09 | 0.04 | 0.02 | 0.01 | 0.01 |
| 800 | 0.99 | 0.30 | 0.12 | 0.05 | 0.03 | 0.01 | 0.01 |
| 900 | 1.26 | 0.38 | 0.15 | 0.06 | 0.03 | 0.02 | 0.01 |
| 1000 | 1.55 | 0.47 | 0.18 | 0.08 | 0.04 | 0.02 | 0.01 |
| 1100 | 1.88 | 0.57 | 0.22 | 0.10 | 0.05 | 0.03 | 0.02 |
| 1200 | 2.23 | 0.68 | 0.26 | 0.11 | 0.06 | 0.03 | 0.02 |
| 1300 | - | 0.80 | 0.30 | 0.13 | 0.07 | 0.04 | 0.02 |
| 1400 | - | 0.93 | 0.35 | 0.16 | 0.08 | 0.04 | 0.02 |
| 1500 | - | 1.07 | 0.40 | 0.18 | 0.09 | 0.05 | 0.03 |
| 1600 | - | 1.21 | 0.46 | 0.20 | 0.10 | 0.05 | 0.03 |
| 1700 | - | 1.37 | 0.52 | 0.23 | 0.11 | 0.06 | 0.04 |
| 1800 | - | 1.53 | 0.58 | 0.26 | 0.13 | 0.07 | 0.04 |
| 1900 | - | 1.71 | 0.65 | 0.29 | 0.14 | 0.08 | 0.04 |
| 2000 | - | 1.89 | 0.72 | 0.32 | 0.16 | 0.08 | 0.05 |
| 2100 | - | 2.01 | 0.79 | 0.35 | 0.17 | 0.09 | 0.05 |
| 2200 | - | 2.29 | 0.87 | 0.38 | 0.19 | 0.10 | 0.06 |
| 2300 | - | - | 0.95 | 0.42 | 0.21 | 0.11 | 0.06 |
| 2400 | - | - | 1.04 | 0.46 | 0.22 | 0.12 | 0.07 |
| 2500 | - | - | 1.12 | 0.50 | 0.25 | 0.13 | 0.08 |
| 2600 | - | - | 1.22 | 0.54 | 0.26 | 0.14 | 0.08 |
| 2700 | - | - | 1.31 | 0.58 | 0.29 | 0.15 | 0.09 |
| 2800 | - | - | 1.41 | 0.62 | 0.31 | 0.16 | 0.09 |
| 2900 | - | - | 1.51 | 0.67 | 0.33 | 0.18 | 0.10 |
| 3000 | - | - | 1.62 | 0.71 | 0.35 | 0.19 | 0.11 |
| 3100 | - | - | 1.73 | 0.76 | 0.38 | 0.20 | 0.11 |
| 3200 | - | - | 1.84 | 0.81 | 0.40 | 0.21 | 0.12 |
| 3300 | - | - | 1.96 | 0.86 | 0.42 | 0.23 | 0.13 |
| 3400 | - | - | 2.08 | 0.92 | 0.45 | 0.24 | 0.14 |
| 3500 | - | - | 2.20 | 0.97 | 0.48 | 0.26 | 0.15 |
| 3600 | - | - | - | 1.03 | 0.50 | 0.27 | 0.15 |
| 3700 | - | - | - | 1.08 | 0.53 | 0.29 | 0.16 |
| 3800 | - | - | - | 1.14 | 0.56 | 0.30 | 0.17 |
| 3900 | - | - | - | 1.20 | 0.59 | 0.32 | 0.18 |
| 4000 | - | - | - | 1.27 | 0.62 | 0.33 | 0.19 |
| 4100 | - | - | - | 1.33 | 0.65 | 0.34 | 0.20 |
| 4200 | - | - | - | 1.40 | 0.68 | 0.36 | 0.21 |

⁎ For mass flow values, see each engine technical data of the appendix page in this manual.



Downloaded from www.Manualslib.com manuals search engine

https://truckmanualshub.com/

**< Average back pressure (pressure drop) >**

in kPa per 90° bend (R/d = 1.5) :1 kPa =10 hPa = 10 mbar

Table 2)

| Exhaust gas mass flow * (kg/h) | Diameter in mm | | | | | | |
|---|---|---|---|---|---|---|---|
| | 80 | 100 | 120 | 140 | 160 | 180 | 200 |
| 200 | 0.06 | 0.03 | 0.01 | 0.01 | - | - | - |
| 300 | 0.14 | 0.06 | 0.03 | 0.02 | 0.01 | - | - |
| 400 | 0.24 | 0.10 | 0.05 | 0.03 | 0.02 | 0.01 | - |
| 500 | 0.38 | 0.16 | 0.08 | 0.04 | 0.03 | 0.02 | 0.01 |
| 600 | 0.55 | 0.23 | 0.10 | 0.06 | 0.04 | 0.02 | 0.02 |
| 700 | 0.75 | 0.31 | 0.15 | 0.08 | 0.05 | 0.03 | 0.02 |
| 800 | 0.98 | 0.40 | 0.19 | 0.11 | 0.06 | 0.04 | 0.03 |
| 900 | 1.23 | 0.51 | 0.25 | 0.13 | 0.08 | 0.05 | 0.03 |
| 1000 | 1.52 | 0.62 | 0.30 | 0.16 | 0.10 | 0.06 | 0.04 |
| 1100 | 1.84 | 0.76 | 0.36 | 0.20 | 0.12 | 0.07 | 0.05 |
| 1200 | 2.19 | 0.89 | 0.43 | 0.23 | 0.14 | 0.09 | 0.06 |
| 1300 | - | 1.06 | 0.51 | 0.28 | 0.16 | 0.10 | 0.07 |
| 1400 | - | 1.22 | 0.59 | 0.32 | 0.19 | 0.12 | 0.08 |
| 1500 | - | 1.41 | 0.68 | 0.37 | 0.22 | 0.13 | 0.09 |
| 1600 | - | 1.60 | 0.77 | 0.42 | 0.24 | 0.15 | 0.10 |
| 1700 | - | 1.80 | 0.87 | 0.47 | 0.28 | 0.07 | 0.11 |
| 1800 | - | 2.02 | 0.98 | 0.53 | 0.31 | 0.19 | 0.13 |
| 1900 | - | - | 1.09 | 0.59 | 0.34 | 0.22 | 0.14 |
| 2000 | - | - | 1.20 | 0.65 | 0.38 | 0.24 | 0.16 |
| 2100 | - | - | 1.33 | 0.72 | 0.42 | 0.26 | 0.17 |
| 2200 | - | - | 1.46 | 0.79 | 0.46 | 0.29 | 0.19 |
| 2300 | - | - | 1.59 | 0.86 | 0.50 | 0.31 | 0.21 |
| 2400 | - | - | 1.73 | 0.94 | 0.55 | 0.34 | 0.23 |
| 2500 | - | - | 1.88 | 1.02 | 0.06 | 0.37 | 0.24 |
| 2600 | - | - | 2.04 | 1.10 | 0.65 | 0.40 | 0.26 |
| 2700 | - | - | - | 1.18 | 0.69 | 0.43 | 0.28 |
| 2800 | - | - | - | 1.27 | 0.75 | 0.47 | 0.31 |
| 2900 | - | - | - | 1.37 | 0.80 | 0.50 | 0.33 |
| 3000 | - | - | - | 1.46 | 0.86 | 0.54 | 0.35 |
| 3100 | - | - | - | 1.56 | 0.91 | 0.57 | 0.37 |
| 3200 | - | - | - | 1.66 | 0.97 | 0.61 | 0.40 |
| 3300 | - | - | - | 1.77 | 1.04 | 0.65 | 0.42 |
| 3400 | - | - | - | 1.88 | 1.10 | 0.69 | 0.45 |
| 3500 | - | - | - | 1.99 | 1.17 | 0.73 | 0.48 |
| 3600 | - | - | - | 2.10 | 1.23 | 0.77 | 0.50 |
| 3700 | - | - | - | 2.22 | 1.30 | 0.81 | 0.53 |
| 3800 | - | - | - | - | 1.37 | 0.86 | 0.56 |
| 3900 | - | - | - | - | 1.45 | 0.90 | 0.59 |
| 4000 | - | - | - | - | 1.52 | 0.95 | 0.62 |
| 4100 | - | - | - | - | 1.59 | 0.34 | 0.65 |
| 4200 | - | - | - | - | 1.66 | 1.00 | 0.68 |

⁎ For mass flow values, see each engine technical data of the appendix page in this manual.



Downloaded from www.Manualslib.com manuals search engine

https://truckmanualshub.com/

# CHAPTER 5 INTAKE SYSTEM

## 5.1. Air Intake

If it is not possible to install sufficient ventilation ports to maintain the required engine room temperature, blowers and exhaust fans can be used to circulate fresh air through the engine room. The inlet blowers must have a capacity of two times the engine's rated air consumption listed on the engine technical data of the last sheet in this manual. Exhaust fans should be from one-half to one times the rated air consumption of the engines to carry away the excess heat.

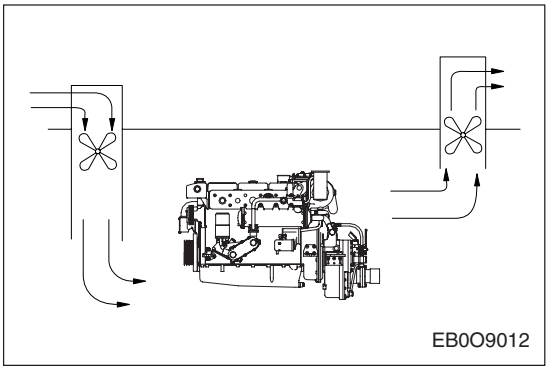


With both engine mounted and remote mounted air cleaners, there should be enough ventilation to keep the engine room temperature below 60 ˚C (140 ˚F). Temperatures above this may cause a deterioration in the hoses and / or wiring on the engine.
Maintaining reasonable engine room temperatures can be aided by insulating as many hot surfaces as possible (i.e. exhaust piping, turbocharger, muffler, heating system).
Any breaks or leaks in the air system after the air cleaner will allow dirt to enter the engine and decrease engine life.
Relative movement between the engine air cleaner and air inlet requires flexibility in the pipe components and flexible connections. Any deflections must occur in the rubber components and not in the rigid piping.

On turbocharger engines a flexible connection must be provided between the compressor casing and the first piping support. The first support should be less than 1.5 meters (5 feet) from the turbocharger.

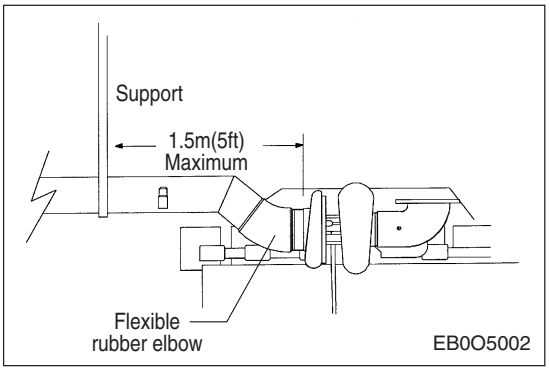


DOOSAN marine engines have air filter with urethane rubber type as below figure.
After the installation of the engine if a work that produces dust is carried out on the interior ship fittings, the air filter must be cleaned before the engine is commissioned.



Downloaded from www.Manualslib.com manuals search engine

https://truckmanualshub.com/

(1) For air filters only:

In the event of heavy dust generation remove air filter and rinse it out in fuel or washing oil. To dry it, shake it out thoroughly.

Apply an even and thin coat of engine oil to the filter element surface.

If do this coat you can confirm better filtering effect.

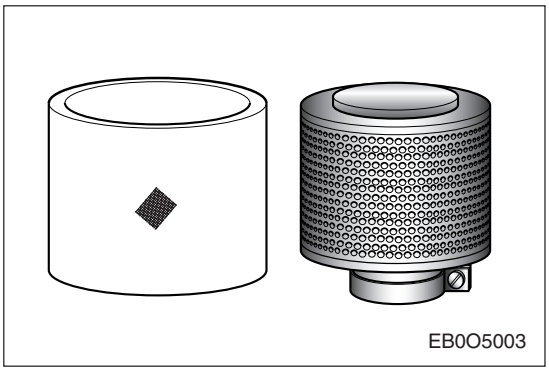


(2) Vacuum after air filler

The maximum permissible partial vacuum at maximum power and rated engine speed is:

- **when filter is new** : 0.08 kg/cm² (80hPa[mbar], 800 mm water column)
- **when filter is contaminated** : 0.12 kg/cm² (120hPa[mbar], 1200 mm water column)

If this value is exceeded, the filter element must be cleaned or the filter element must be replaced new one.

## 5.2. Engine Room Ventilation

During engine operation the component surfaces become hot and dissipate radiant heat, which must be removed by means of an effective ventilation system.
An indication for sufficient engine room ventilation is:

**Engine room temperature = ambient temperature + 15 ˚C (max. 20˚C)**

Even in the worst conditions an engine room temperature of 60 ˚C (140 ˚F) must never be exceeded to ensure that temperature - sensitive components, e.g. hoses and wires may cause a deterioration.
To avoid power drops, especially attention to the intake air and fuel temperature heating up.
In classified systems the regulations of the classification associations concerning the maximum permissible engine room temperature must be heeded.

## 5.3. Radiant Heat to be Removed

Depending on the engine model, the amount of heat to be removed is up to 5% of the heat input supplied with the fuel. If silencers or long exhaust pipes are also located in the engine room, the heat dissipation of these components must be taken into consideration too.
High air inlet temperatures will lead to high thermal stresses, high exhaust temperatures, poor engine performance, worse fuel economy and shorter engine life. Inlet air temperatures above 27 ˚C (81 ˚F) will reduce engine power by approximately 1% for every additional 5.6 ˚C (10 ˚F) temperature rise.



Downloaded from www.Manualslib.com manuals search engine

https://truckmanualshub.com/

## 5.4. General Note on Air Guidance

High air inlet restriction will lead to decreased airflow through the engine for combustion. This in turn will lead to a decrease in power, performance and engine life as well as an increase in smoke.

**The air inlet location, air piping and engine room ventilation must be designed so that the air inlet temperature measured at the inlet connection to the manifold or turbocharger is not more than 17 ˚C (30 ˚F) above the outside ambient temperature at rated speed and load.**

### 5.4.1. Guidance of the air filter for engine room outside installation

The air cleaner should be mounted in an area that is free of dirt, dust, fish scales or other debris that may clog the filter during regular operation, net handling or deck operations.

If the exhaust and air Intake are both above the vessel, the exhaust should be located higher and aft of the intake. If the exhaust gas is drawn back into the intake, the air cleaner can quickly become clogged.

If the air cleaner is to be remote mounted, the inlet location should be outside the engine room. The inlet should be located so that a supply of fresh air or near the ambient temperature is always available. Locations with high inlet air temperature should be avoided. Areas to consider as heat sources are exhaust components, mufflers, air conditioner and refrigeration condensers, boilers and heating system components and auxiliary engines. Air inlets should be louvered or pointed forward to increase air circulation through the engine room.

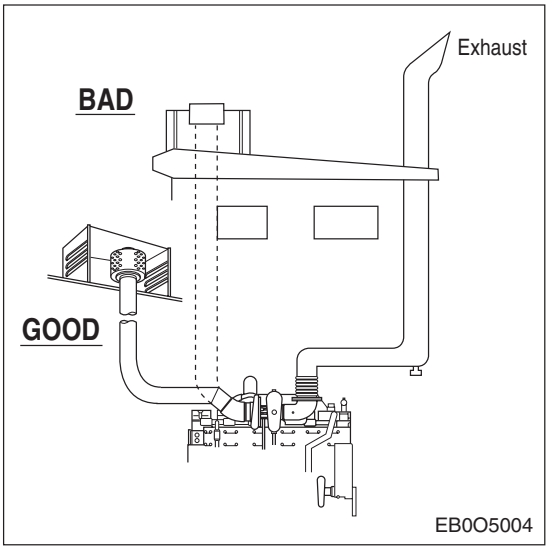


### 5.4.2. Intake & exhaust ventilation ports of the engine room

**Marine engines with engine mounted air cleaners may draw air from the engine room. Engine rooms with natural draft ventilation must have vent openings of adequate size and location to insure an ample supply of air at a reasonable temperature to the engine, and carry away heat from the machinery in the engine room.**

A water or condensation trap should be located prior to the air cleaner on remote mounted systems. The air cleaner should be easily serviced without removing other parts of the air system and should be checked at air cleaner service intervals or if the air inlet restriction increases unexpectedly.

Good circulation in the engine room is a key factor in keeping down the engine room temperature at a low level.



Downloaded from www.Manualslib.com manuals search engine

https://truckmanualshub.com/

The inlet vents should be ducted to the bottom of the engine room to promote bottom up circulation of the fresh air and to clear fumes and moisture from the bilge. The exhaust vents should be located near the top of the engine room to carry away the hot air in the engine room.

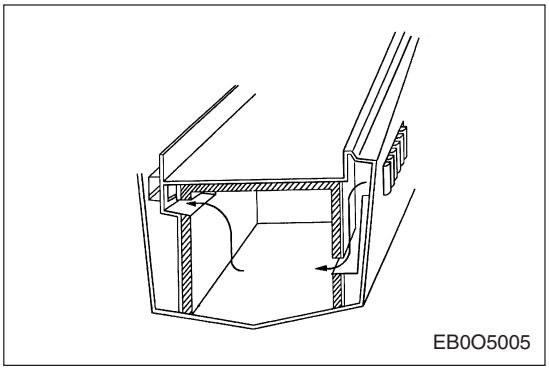


**Note :** In planning the ventilation ports, two-thirds of the area should be used for intake air and one third of the area should be for exhaust ventilation.

## 5.5. Clear Cross Section

The clear cross section A of the air inlet orifice refers to the narrowest point in the entire air-guiding system.
The table on shows the guideline values for the clear cross section A of the air inlet orifice. They are based on an assumed flow rate of 1.5 m/s.
The ventilation cross sections can be further reduced by means of electric fans switched on above a certain engine room temperature by electrical temperature switches.

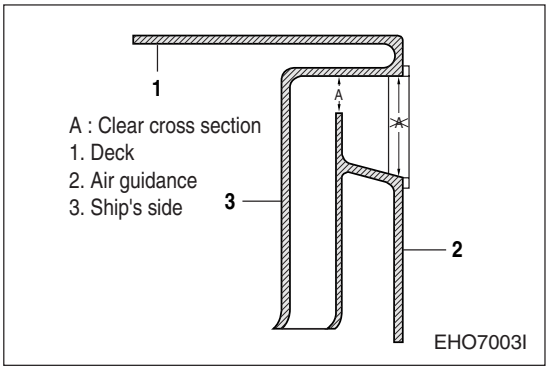


**<Clear cross sections>**

| Engine model | Rated output(kW/ps) | Clear cross section A ($m^2$) | Engine model | Rated output(kW/ps) | Clear cross section A ($m^2$) |
|---|---|---|---|---|---|
| L034 | 51 / 70 | 0.07 | MD196TI | 235 / 320 | 0.29 |
| L034TIH | 88 / 120 | 0.11 | L126TIH | 265 / 360 | 0.30 |
| L034TIM | 107 / 145 | 0.12 | L126TIM | 294 / 400 | 0.32 |
| L066TIH | 132 / 180 | 0.15 | V158TIH | 353 / 480 | 0.38 |
| L136 | 118 / 160 | 0.12 | V158TIM | 397 / 540 | 0.44 |
| L136T | 147 / 200 | 0.16 | V158TIL | 500 / 680 | 0.52 |
| L136TL | 177 / 240 | 0.17 | V180TIH | 441 / 600 | 0.47 |
| L136TI | 169 / 230 | 0.18 | V180TIM | 478 / 650 | 0.50 |
| L086TIH | 210 / 285 | 0.22 | V180TIL | 603 / 820 | 0.62 |
| L086TIM | 232 / 315 | 0.27 | V222TIH | 530 / 720 | 0.55 |
| L086TIL | 265 / 360 | 0.32 | V222TIM | 588 / 800 | 0.60 |
| MD196T | 206 / 280 | 0.20 | V222TIL | 736 / 1000 | 0.72 |

In fast vessels ventilators switched on via a thermo-switch once the critical engine room temperature has been reached may be additionally necessary for ventilation with the back pressure from the headwind.



Downloaded from www.Manualslib.com manuals search engine

# CHAPTER 6 COOLING SYSTEM

## 6.1. Marine Installation Requirements

- Remote mounted expansion tanks must be mounted above the highest point in the cooling system.
- The cooling system must be designed and installed so that the maximum jacket water temperature does not exceed 96 ˚C (205 ˚F) under any operating conditions.
- The engine cooling system must be properly treated with an ethylene or propylene glycol / water solution and / or DCA-4.
- The pressure at the water pump inlet must be greater than atmospheric when the engine is run at rated speed with a coolant temperature of 76 ˚C to 90 ˚C (169 ˚F to 194 ˚F), and the system filler cap removed.
- The engine must have a closed cooling system that will maintain the system pressure between 1.0 and 1.4 kg/cm$^2$ (15 psi and 20 psi).
- The expansion tank volume must provide for a minimum excess coolant volume that is equal to 20% of the engine coolant capacity listed on the "Engine technical data" of the last sheet in this manual and 5% of the total coolant in keel cooler system volume.
- The system must vent during initial fill to allow filling of the total cooling system volume to 95% of its full capacity.
- The pressure drop from the coolant outlet to the coolant inlet must not exceed 0.35 kg/cm$^2$ (5 psi).
- Cooling system vent lines must not be fed together.
- The cooling system must remove entrained air at engine start-up, and must continuously remove air traps entering the cooling system during normal operation.

## 6.2. Selection of Piping Materials

Dissimilar metals must not be combined randomly. If a precious metal is combined with base metal, the base metal is destroyed by galvanic corrosion. Moist or even salty atmosphere accelerates this process.
The baser a metal, the more negative is its electrical potential. Two different metals have a galvanic difference in potential which strives to be cancelled out if a connection is established between the metals (direct contact or conductive water). The metals listed below are arranged according to their difference in potential, starting off with the most precious metal (platinum) down to the basest metal (magnesium).

The farther apart two metals appear in this list the greater are the problems to be expected owing to galvanic corrosion.



Downloaded from www.Manualslib.com manuals search engine

| GRADE | METAL |
|---|---|
| **Precious** | Platinum |
| | Titanium |
| | Silver |
| | Nickel |
| | Cupro-nickel |
| | Lead |
| | Stainless steel |
| | Tin bronze |
| | Copper |
| | Tin |
| | Brass alloys |
| | Nickel cast-iron |
| | Low-alloy steels |
| | Shipbuilding steel |
| | Aluminum alloys |
| | Zinc |
| **Base** | Magnesium |

## 6.3. Cooling Circuit

All DOOSAN marine engines have indirect cooling circuit cooled the engine coolant in the heat exchanger by sea water.
The temperature of engine coolant is ususlly normal between 76˚C and 90˚C.
And the sea water entry temperature is designed up to 32˚C(305 K).
River/sea water is sucked in by the sea water pump and fed through the heat exchanger, where it absorbs the heat conducted away by the engine coolant.
After that, the sea water flows to the outside of the boat through inter-cooler and reduction gear oil cooler. In case of most inter-cooled engines, sea water flows to inter-cooler at first and heat exchanger and then gear box oil cooler, finally flow out the vessel outside.

## 6.4. Engine Cooling System

### 6.4.1. Expansion tank

Cooling water expands owing to the heat caused by engine operation. The engine coolant will expand approximately 5% between its high and low temperatures. In order to compensate this expansion, an expansion tank must be installed.

**The expansion tank volume must have enough capacity to accommodate this plus additional capacity for any evaporation or minor leaks. That is equal to 20% of the engine coolant capacity listed on the “Engine technical data" of the appendix page in this manual” and 5% of the total coolant in keel cooler system volume.**



Downloaded from www.Manualslib.com manuals search engine

https://truckmanualshub.com/

The following formula is used to calculate the minimum required deaeration expansion tank size:

$$V = \frac{T}{18} + \frac{E}{4.5}$$

Where : V = Minimum Expansion Tank Volume (Lit.)
T = Total System Coolant Volume including engine (Lit.)
E = Engine Coolant Volume (Lit.)

For the heat exchanger cooled engines, the expansion tank system has been properly sized for DOOSAN supplied heat exchanger. If a customer is using a different heat exchanger or wishes to build their own expansion tank, the equation shown above should be used.

### 6.4.2. Air vents system(Keel cooler type)

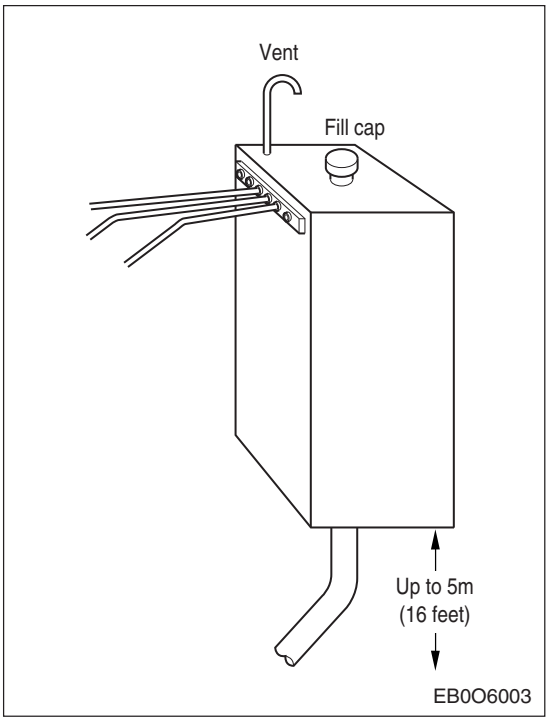


All DOOSAN engines have venting provisions at the thermostat housing and water outlet connection. 0ther vent locations on a particular engine are shown on some engine installation drawings. These include the turbocharger(water cooled), exhaust manifold, inter-cooler and any other locations requiring vents.
Additional vents are also required to allow air to escape from the top of the keel cooler during initial engine coolant filling.
Expansion tanks more than 5 meters (16 feet) above the engine crankshaft are not recommended.
Expansion tanks that do not require a pressure cap must have a vent tube from the top of the tank to allow air and gases to escape from the cooling system and a fill cap. The vent must have a gooseneck to prevent dust and debris from contaminating the cooling system.
The engine vent system provides a continuous flow of water through the expansion tank as a method of removing air and gases from the engine coolant. The highest points in the engine coolant circuit are the best vent locations,
Since air will always travel to the highest point in the cooling system, it is necessary to have the bottom of a remote mounted expansion tank above any other point in the cooling system.
The bottom of the tank must be above all vent locations on the engine at any vessel trim and operating angle and all vent lines must have a continuous upward run to prevent air traps from forming.



Downloaded from www.Manualslib.com manuals search engine

https://truckmanualshub.com/

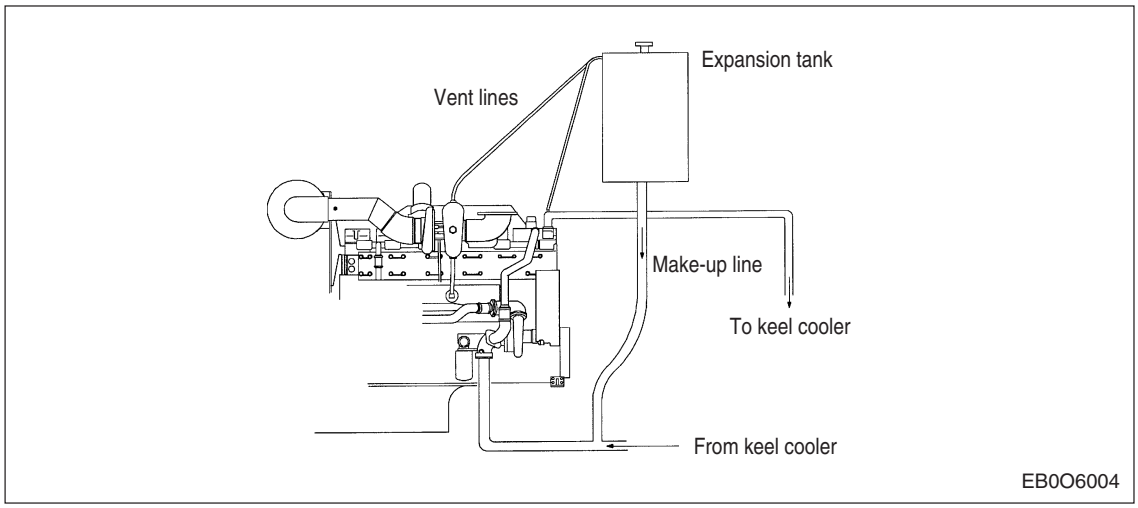


If air becomes trapped in the engine cooling system it can lead to isolated hot spots in the engine and water pump cavitation. This will decrease engine life and may cause engine or component failures. A deaeration system consists of a properly designed expansion tank, vents and make-up line.

All vent lines must be installed with a continuous upward run from the engine or keel cooler to the expansion tank at all vessel operating angles.

Engine power levels must be reduced if high ambient temperatures raise the engine coolant temperature above 93 ˚C (199 ˚F).

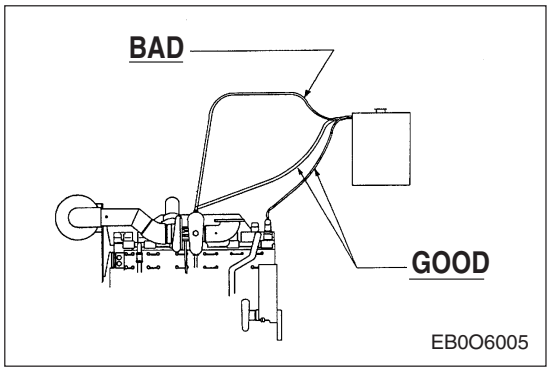


**Cooling system vent lines must not be fed together.**

Since vent lines run from points of different pressures, teeing the vent lines together may result in reduced vent water flow and inadequate venting of the system.

Each vent line must be connected to the expansion tank without using Tee's or other fittings that would join the vent line together in a common vent. Joining the vents into a common line will reduce the total vent water flow and may result in aerated water flowing back into the engine.

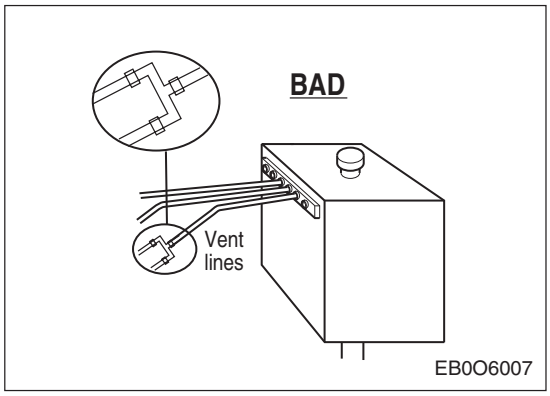




Downloaded from www.Manualslib.com manuals search engine

https://truckmanualshub.com/

**The engine must have a closed cooling system.**

Dirt or debris must not be allowed to enter the engine cooling system. All cooling systems on DOOSAN marine engines should have a 0.9 kg/cm² (13 psi) pressure cap unless the expansion tank is more than 1.5 meters (5 feet) above the engine. This will maintain the proper pressure in the cooling system which will in turn raise the boiling point of the coolant and help prevent overheating and cavitation. The recommended combinations of pressure caps and expansion tank height are as follows:

| **Expansion Tank height** | |
|---|---|
| Above Engine Meter(feet) | Minimum Pressure Cap Kg/cm² (psi) |
| 0 to 1.5 (0 to 5) | 0.9 (13) |
| 1.5 to 4 (5 to 13) | 0.5 (7) |
| 3 to 7 (10 to 23) | 0.3 (4) |
| 6 to 9 (20 to 30) | Fill Cap & Vent |

### 6.4.3. Make-up lines

The deaerated water return, or make-up line, connection is located in the bottom of the expansion tank. The purpose of the make-up line is to provide a means for filling the engine water line and to feed the water from the vent lines back to the engine after it has been deaerated during operation.

The make-up line is plumbed from the bottom of the expansion tank to the engine water inlet line. The make-up line should not be plumbed to the water pump housing or body.

When the make-up water enters the engine water inlet line, the turbulence created in the flow may cavitate the water pump. Therefore, the line should be plumbed at least 450 mm (18 inches) from the engine water pump inlet connection and at least 150 mm (6 inches) from any bends or elbows in the piping. This will reduce the chances of pump cavitation .

The size of the make-up line is also important. The line must be large enough to allow proper coolant fill and to provide adequate return flow from the expansion tank without allowing air back into the system. The size of the make-up will depend on the number and size of the vent lines. In general, the cross-sectional area of the make- up line should be 3 ~ 4 times the sum of the vent line areas.

**Cooling system vent lines must not be fed together.**



Downloaded from www.Manualslib.com manuals search engine

https://truckmanualshub.com/

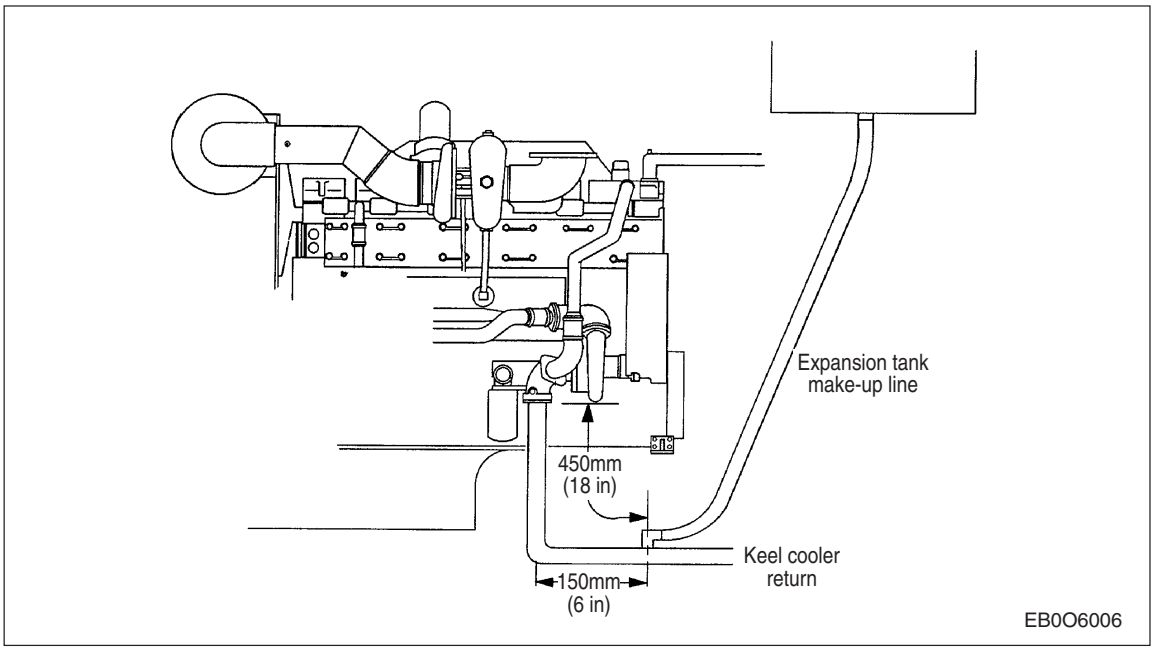


## 6.5. Engine Coolant

Correctly prepared coolant is of particular importance for trouble-free engine operation. Coolants that are unsuitable or inadequately or wrongly prepared may cause failure of coolant circuit units and components as a result of cavitation and / or corrosion damage.

### 6.5.1. Antifreeze agent

DOOSAN recommends to use a coolant that is 50% water and 50% ethylene or propylene glycol antifreeze. This mixture raises the boiling point of the coolant and prevents vapor pockets from forming in the engine as well as lowers the freezing temperature. The antifreeze will also provide additional protection from cavitation and liner erosion.

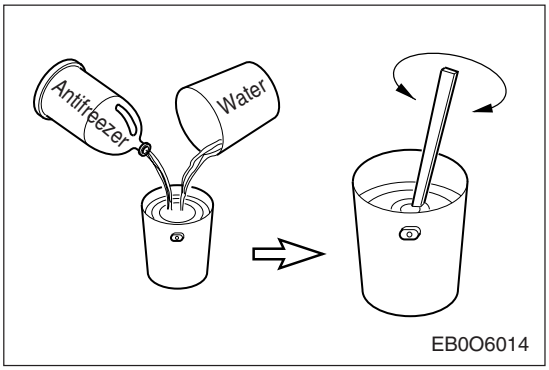


**The engine cooling system must be treated with an ethylene or propylene glycol/water solution and/or DCA-4.**

The antifreeze concentration may be increased to 60 % ethylene / propylene glycol for operation below -37 ˚C (-34 ˚F).

DOOSAN recommends to use the pre-charge DCA elements for cooling system. Since keel-cooling systems have a much larger coolant volume, an additional DCA charge must be added at initial fill. The following table lists the additional amounts of DCA4 required for various sized systems. Spin-on cartridges are available with 2 to 23 units of DCA. Larger coolant volumes are treated with DCA liquid or powder.



Downloaded from www.Manualslib.com manuals search engine

**DCA Concentration with 50% water / 50% anti-freeze mix.**

| Cooling System Size | | Required Liquid or Units of DCA4 | |
|---|---|---|---|
| Liters | US Gallons | Pints or US Gallons | Units |
| 19 ~ 25 | 5 ~ 7 | 2 pints | 10 |
| 26 ~ 40 | 8 ~ 11 | 3 pints | 15 |
| 41 ~ 55 | 12 ~ 15 | 4 pints | 20 |
| 56 ~ 75 | 16 ~ 20 | 5 pints | 25 |
| 76 ~ 115 | 21 ~ 30 | 1.00 | 40 |
| 116 ~ 190 | 31 ~ 50 | 1.50 | 60 |
| 191 ~ 285 | 51 ~ 75 | 2.25 | 90 |
| 286 ~ 380 | 76 ~ 100 | 3.00 | 120 |
| 381 ~ 570 | 101 ~ 150 | 4.50 | 180 |
| 571 ~ 760 | 151 ~ 200 | 6.00 | 240 |
| 761 ~ 950 | 201 ~ 250 | 7.50 | 300 |
| 951 ~ 1140 | 251 ~ 300 | 9.00 | 360 |
| 1141 ~ 1330 | 301 ~ 350 | 10.50 | 420 |
| 1131 ~ 1515 | 351 ~ 400 | 12.00 | 480 |

### 6.5.2. Anti-corrosion agent

At this moment only the “Fleetguard DCA 4 Fluid” agent is cleared in accordance with this standard. Notwithstanding the manufacturer’s data the following instructions must be adhered to :

- Keeping a concentration of 0.8 to 1.5 DCA 4 units per 4 liters of water; this corresponds to 240 ~ 450 ml fluid per 10 liters of water (2.4 to 4.5 % by volume).
- Change of the entire coolant after one year or after 1500 operating hours, depending on which limit has been reached earlier.
- A mixture of antifreeze and DCA 4 is not permissible. When changing from antifreeze to Fleetguard DCA 4 Fluid or vice versa, the entire coolant must be drained. Flushing is not necessary.

The Fleetguard DCA 4 Fluid concentration must be checked with the Fleetguard test kit, DOOSAN part no. 60.99901-0038, after every 300 operating hours:



Downloaded from www.Manualslib.com manuals search engine

https://truckmanualshub.com/

### 6.5.3. Test kit instructions

1) Collect coolant sample from the drain device of heat exchanger or cylinder block. Do not collect from the coolant recovery or overflow system. Coolant must be between 10˚C and 55˚C when tested. Room temperature is preferred.

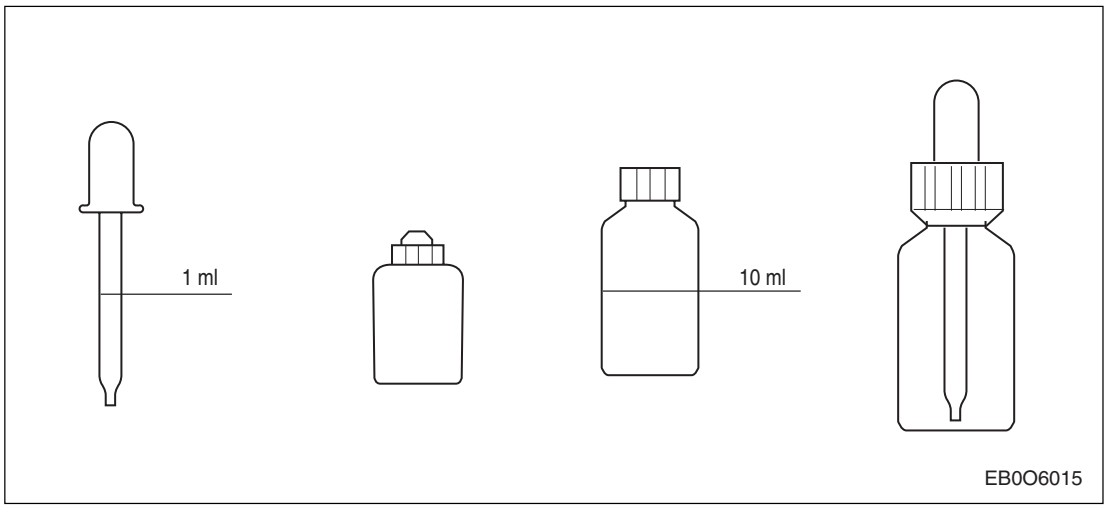


2) Remove on strip from bottle and replace cap immediately. Do not touch the pads on the end of the strip. Discard kit if unused strips have turned brown for the nitrite test pad.
3) Dip strip in coolant sample for one second, remove, and shake strip briskly to remove excess liquid.
4) 45 seconds after dipping strip compare and record results in the following order.

a) Compare FREEZEPOINT (end pad) to color chart and record result.
b) Next compare MOLYDATE (middle pad) to color chart and record result.
c) Finally compare NITRITE test to color chart and record result.



Downloaded from www.Manualslib.com manuals search engine

https://truckmanualshub.com/

5) All three readings must be completed **no later than 75 seconds** after dipping strip.
6) It is okay to estimate a value between color blocks, but if uncertain about the color match, pick the lower numbered block. (example: if nitrite color is not F, use column E)
7) Determine where the MOLYDATE level intersects the NITRITE level on the chart. The amount of SCA units per liter in the cooling system is given where the MOLYBDATE row intersects the NITRITE column.
8) For best results follow test times carefully. Use a stopwatch or clock with a sweep second hand. Comparing the test strip to the color chart too soon before, or too late after, the required test time will result in incorrect readings and improper treatment and could result in liner pitting and engine damage.
9) All readings should be recorded on the truck maintenance record for future reference.

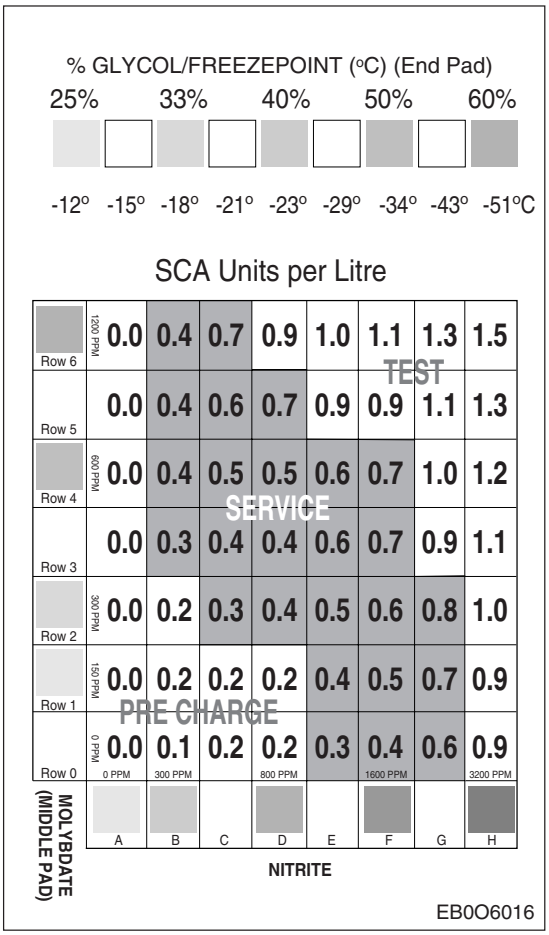


### 6.5.4. Treatment instructions (Not for ES coolant)

- Below 0.3 units per liter
  Replace service filter and add the specified amount of DCA4 liquid as stated in service chart. Follow precharge instructions.
- 0.3 to 0.8 units per liter
  Continue to replace service coolant filter and add specified amount of DCA4 liquid as stated in service chart.
- Above 0.8 units per liter
  Do not replace service filter or add DCA4 liquid until the concentration falls below 0.8 units per liter. Test at every subsequent oil drain interval.



Downloaded from www.Manualslib.com manuals search engine

https://truckmanualshub.com/

### 6.5.5. Maintenance and repair

**Any coolant loss must be replenished with a mixture of antifreeze and water with the same concentration required for summer and/or winter operation.**
Every other year coolant must be replaced. It is essential that during this period of time the antifreeze concentration does not sink below 35~40% by coolant volume.

### 6.5.6. Engine coolant treatment

Treat undiluted anti-corrosion agent and or antifreeze as dangerous waste.
When disposing of spent coolant comply with the regulations of the relevant local authorities.

## 6.6. Sea Water Lines

### 6.6.1. Sea water pump

DOOSAN marine engines have two kinds of sea water pump impeller used in each model:

- Rubber impeller type : L034 / L034TI / L066TI / L136 / L136T / L136TI / L086TI
  MD196T / MD196TI / L126TI - - - - - - In line type
- Bronze centrifugal type : V158TI / V180TI / V222TI - - - - - - V series type

**Note :** Sea water pump of bronze type have to install a sea water strainer to prevent small debris from clogging bronze impeller side gap. Also we recommend to install the sea water strainer for our all engines.

The sea water pumps have a limited suction lift capability with straight pipe that is listed in the table below.

| Engine model | Maximum Sea Water Pump Suction Lift |
|---|---|
| L034 / L034TI / L066TI | 3m (10 ft) |
| L136 / L136T / L136TI / L086TI | 4m (13 ft) |
| MD196T / MD196TI / L126TI | 4.5 m (15 ft) |
| V158TI / V180TI / V222TI | 4 m (13 ft) |



Downloaded from www.Manualslib.com manuals search engine

https://truckmanualshub.com/

### 6.6.2. Sea water entry

In most cases sea water enters the vessel through a scoop whose entrance port must be minimum two times the cross section of the suction pipe. The entrance port must be located so far below the water line that the sea water pump does not suck in air under any circumstances.

An indication of sufficient sea water supply in high speed planing boats is the reduction in partial volume in the suction line as the boat gains speed, ideally, until overpressure is reached. If the partial volume increases while the vessel is in motion, the sea water supply is inadequate.

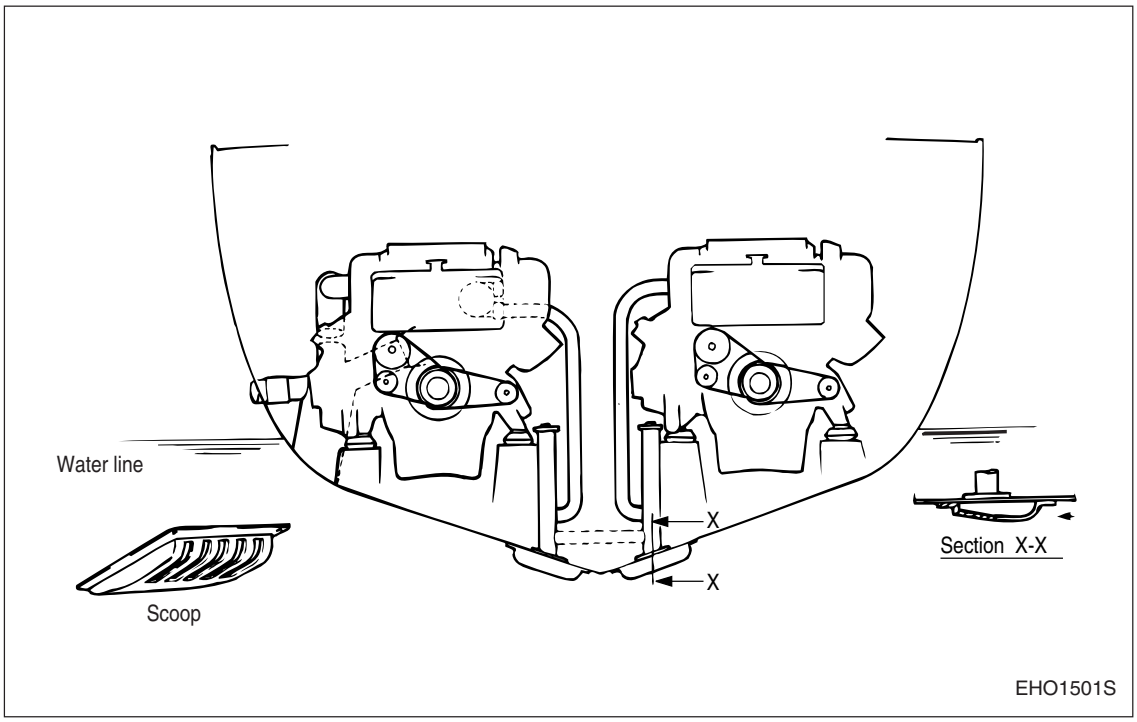


Guideline values for the maximum permissible partial volumes are:

- **while the vessel is stationary** : 0.3 kg/cm² (0.3 bar) at set nominal speed
- **at maximum speed** : 0.05 kg/cm² (0.05 bar)

The sea water inlet must be in a location that provides a solid water flow to the sea water pump at all times and in all operating conditions. If air is ingested in the sea water system it can cause failure of the sea water pump and result in overheating the engine.

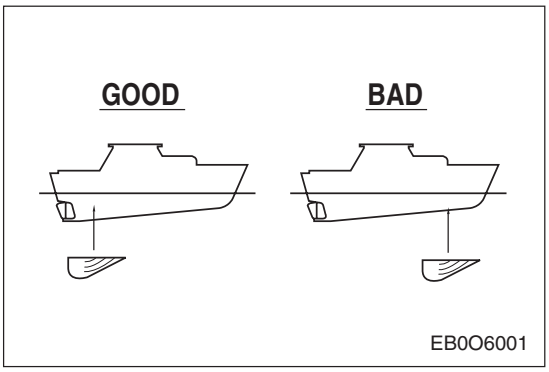




Downloaded from www.Manualslib.com manuals search engine

https://truckmanualshub.com/

If a scoop is used on the bottom of the hull at the sea water inlet it should be positioned as shown in the right figure.

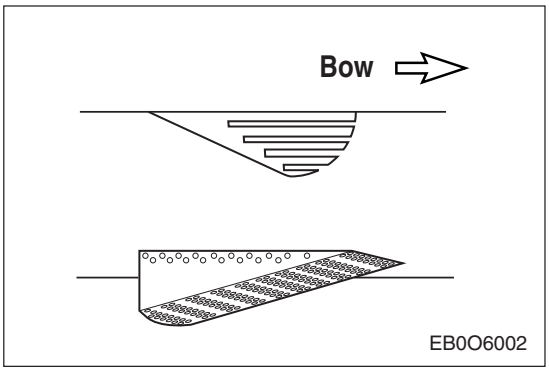


**Note :** The cooling system must remove entrained air at engine start-up, and must continuously remove air that enters to the cooling system during normal operation.

### 6.6.3. Sea water filter

In many places (harbors, rivers, coastal waters) water contains sand and suspended matter. To prevent that matter from clogging the heat exchanger and the intercooler and to prolong the service life of the sea water pump, a sea water filter must be Installed between shut-off valve and sea water pump.

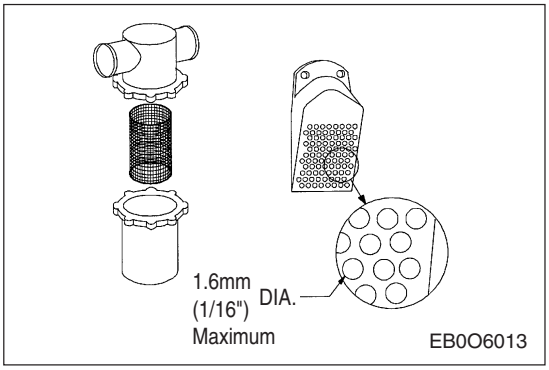


Debris in the sea water system can lead to sea water pump damage or clogging of the heat-exchanger. This will in turn result in overheating and possible failure of the engine.

DOOSAN recommends selecting a filter whose pressure drop in the new condition is not above 0.1 kg/cm$^2$ (100 mbar) and using of strainer in the sea water system prior to the sea water pump in addition to a scoop on the bottom of the hull. This strainer can be checked for clogging and must be serviced more easily.

If a scoop is used on the bottom of the hull it must be able to handle the volume of sea water flow listed on the “Engine technical data" of the appendix page in this manual.

### 6.6.4. Piping of sea water line

All components of DOOSAN marine engines carrying sea water are made of copper & bronze and hoses. In order to prevent galvanic corrosion, material for the sea water pipes along the hull must be selected accordingly

The minimum sea water piping sizes are listed below. The line size may have to be larger if the piping is especially long or has several bends that would increase the intake restriction.



Downloaded from www.Manualslib.com manuals search engine

https://truckmanualshub.com/

| Engine model | Max. Inlet Restriction (mmHg) | Min. Sea Water Piping Line Size (diameter mm) |
|---|---|---|
| L034 / L034TI / L066TI | 85 | 35 |
| L136 / L136T / L136TI / L086TI | 127 | 50 |
| MD196T / MD196TI / L126TI | 135 | 60 |
| V158TI / V180TI / V222TI | 160 | 75 |

**Note :** Although a boat has two engines, each engine should have its own sea water inlet or outlet individually. This will prevent all engines from overheating in the vessel if a sea water inlet should become plugged.

**<Suction side>**

The piping from the sea water inlet on the bottom of the hull to the sea water pump should be short and as free of sharp bends as possible. Any sharp bends will cause an increase in the inlet restriction.

Immediately downstream of the sea water entrance port in the hull a shut off valve must be fitted to allow repairs or the replacement of components of the sea water pipe line below its water line.

The clear cross sections of both the sea water suction lines and the shut off valve must not be smaller than the inlet cross section at the sea water pump inlet.

The through keel fittings and shut-off valve connections should be at least as large as the sea water piping and any scoop used on the bottom of the hull should be sized for the sea water flow of the engine.

The suction line from the sea water inlet to the sea water pump must be absolutely tight and stable, i.e. it must not contract under the low suction pressure of the sea water pump. The line is to be kept as short as possible.

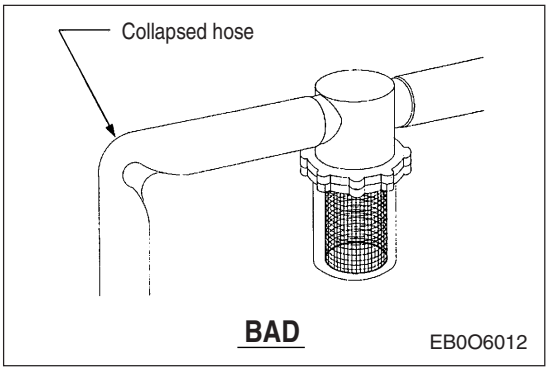


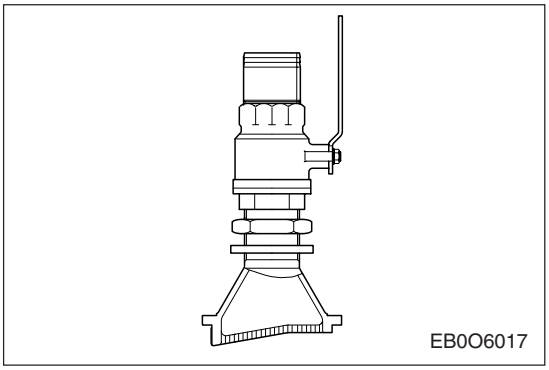


**<Deliver side>**

DOOSAN marine engines (except L034 / L034TI / L066TI / L136 / L136T / L136TI / L086TI marine engine) must install two kinds of the sea water outlet pipes, that is, for heat exchanger (or inter cooler) and for marine gear oil cooler respectively

The heated sea water can be pumped out through outlets in the hull after cooling the coolant in heat exchanger or the hot air in inter-cooler and the oil in marine gear oil cooler.



Downloaded from www.Manualslib.com manuals search engine

https://truckmanualshub.com/

## 6.7. Keel Cooler

Keel cooling is a cooling system that uses a group of tubes, or channels in direct contact with the surrounding water to transfer heat from the coolant to the water. Keel cooling is widely used in river pushing boats and fishing boats, especially in areas of heavy silt, ice or other debris which may clog fresh water inlets or erode heat exchanger tubes.

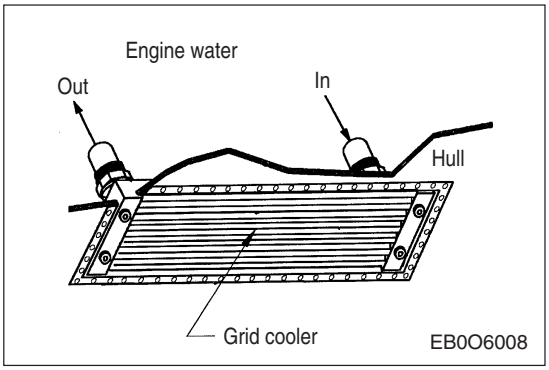


An alternative to keel cooling is the use of keel pipe cooling, with the cooling containers being replaced by pipes fixed to the outboard side of the hull. These pipes can run either parallel to the keel or be designed similar to bilge keels.

As in keel cooling systems, avoid sharp edges and turns as well as reductions in pipe cross sections to minimize pressure drops in the system.

A drawback of keel cooling is its proneness to destroy when hitting the sea- or riverbed and the ship's increased resistance coefficient. As all pipes are located on the outer side of the keel, the system must be checked for leaks before the ship is launched.

Keel coolers may be manufactured units or fabricated. The manufactured type of keel cooler, or grid cooler, is generally much more compact and efficient than a fabricated unit. They are made of a "grid" of tubes that is attached to the bottom of the hull with an Inlet and outlet connection for the engine fresh water. The manufacturer of the unit should be consulted for proper siting and installation.

### 6.7.1. Kinds of keel cooler

**<Fabricated Keel Cooler>**

Fabricated keel coolers will generally be a series of pipes or channels that are welded to tile bottom of the keel. This is used instead of a heat exchanger. The engine coolant pump feeds engine coolant through the keel cooling sells where it gives off heat to the surrounding river or sea water. These types tend to be less efficient and therefore, larger than a manufactured unit.

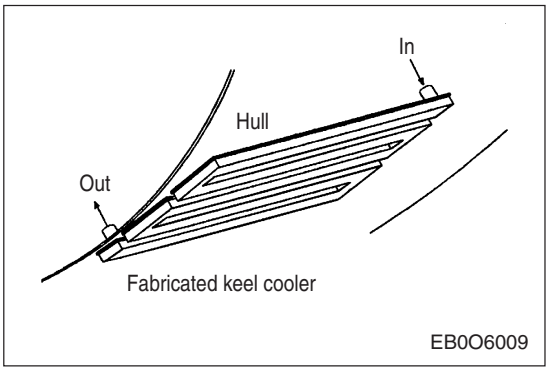




Downloaded from www.Manualslib.com manuals search engine

https://truckmanualshub.com/

**<Box Type Keel Cooler>**

The other type of keel cooler that is used is a box cooler. This type uses a box or sea chest that sits inside the keel with openings to allow sea water to flow through it. The tube bundle sits inside the box and carries the engine water. These units are useful since they can be checked or serviced without pulling the boat out of the water and the cooler is protected from any impact with foreign objects.

The manufacturer of the box cooler should be consulted for proper sizing and installation of the unit.

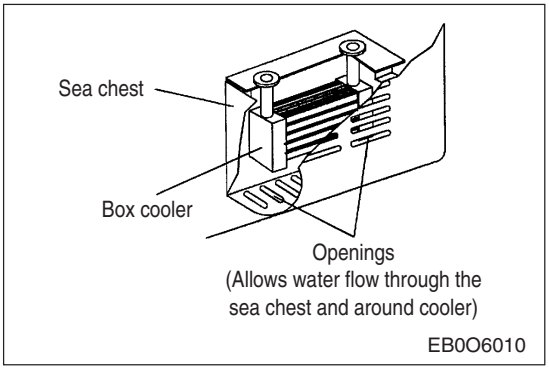


### 6.7.2. Keel cooler location

The keel cooler should be installed below the waterline far enough to avoid the aerated water close to the surface. Good keel cooler performance requires a constant water flow over the cooler. Locations that are in the water flow and flush on the keel are preferred over side locations and recessed installations. Recessed and shielded installations must allow for unobstructed sea water flow over the keel cooler tubes.

Slow moving boats should have the keel coolers installed close to the propeller to benefit from movement of water through the propeller. Dredges and other vessels that will be operated with little movement through the water should have the keel coolers installed on an incline or vertically to promote water circulation by convection.

Keel coolers should not be located in areas that at exposed to pounding seas, keel flexing or excessive vibration. The bow of a ship is subjected to tremendous water forces and is generally a poor location for a keel cooler. The area of the ships bottom adjacent to the keel is the strongest section and is the best keel cooler location.

### 6.7.3. Design of keel cooler system

The keel cooling area must be of a certain size to ensure that coolant heat is conducted away under all operating conditions.

This cooling area depends, among other things, on the planned top speed of the vessel which, for a given engine rating, results from the propeller system installed and the size and design of the hull.

Guideline values for the design of the keel cooling area as a function of the amounts of coolant heat to be dissipated and the speed of the ship can be found in tables on the following pages.

The amounts of heat to be dissipated at maximum power output can be obtained from the “Technical data “ sheet in the appendix page of this manual.



Downloaded from www.Manualslib.com manuals search engine

https://truckmanualshub.com/

**Guideline values for cooling areas in keel cooling systems in m² for the engine coolant circuit. (River or sea water temperature = 32 ˚C)**

| **Amount of heat to be dissipated from the engine coolant circuit in MJ/h*** | **Cooling area in m² for ships at a top speed of :** | | | |
|---|---|---|---|---|
| | 0 | 8 | 15 | ≥ 20 (knots) |
| | 0 | 15 | 28 | 37 (km/h) |
| 200 | 5.5 | 1.0 | 0.9 | 0.8 |
| 400 | 11.0 | 1.9 | 1.75 | 1.6 |
| 600 | 16.5 | 2.8 | 2.6 | 2.3 |
| 800 | 22.0 | 3.75 | 3.5 | 3.1 |
| 1000 | 27.4 | 4.75 | 4.3 | 4.0 |
| 1200 | - | 5.6 | 5.25 | 4.7 |
| 1400 | - | 6.5 | 6.0 | 5.5 |
| 1600 | - | 7.5 | 7.0 | 6.25 |
| 1800 | - | 8.5 | 7.75 | 7.0 |
| 2000 | - | 9.5 | 8.75 | 8.0 |
| 2200 | - | 10.3 | 9.1 | 8.7 |
| 2400 | - | 11.2 | 9.9 | 9.5 |
| 2600 | - | 12.2 | 10.7 | 10.3 |

* see Engine technical data of the appendix page in this manual.

Design data : a) River or sea water temperature: 32 ˚C
b) Cooling cell height: 20 mm
c) Cooling flow rate in cooling system: 1 ~ 2 m/s
d) Keel made of steel with thermal conductivity: 50 W/K x m
e) For safety reasons (influence of paint layers, encrustation of keel with foreign matter, deposits in cooling system) only 60 % of the cooling areas were utilized.



Downloaded from www.Manualslib.com manuals search engine

**Guideline values for cooling areas in keel cooling systems in m² for the engine coolant circuit. (River or sea water temperature = 20 ˚C)**

| Amount of heat to be dissipated from the engine coolant circuit in MJ/h* | Cooling area in m² for ships at a top speed of : | | | |
|---|---|---|---|---|
| | 0 | 8 | 15 | ≥ 20 (knots) |
| | 0 | 15 | 28 | 37 (km/h) |
| 200 | 4.5 | 0.8 | 0.7 | 0.65 |
| 400 | 9.0 | 1.6 | 1.4 | 1.3 |
| 600 | 13.4 | 2.4 | 2.1 | 2.0 |
| 800 | 17.9 | 3.2 | 2.8 | 2.6 |
| 1000 | 22.3 | 4.0 | 3.5 | 3.3 |
| 1200 | - | 4.8 | 4.2 | 4.0 |
| 1400 | - | 5.6 | 4.9 | 4.7 |
| 1600 | - | 6.5 | 5.6 | 5.3 |
| 1800 | - | 7.25 | 6.3 | 6.0 |
| 2000 | - | 8.0 | 7.0 | 6.7 |
| 2200 | - | 8.8 | 7.7 | 7.25 |
| 2400 | - | 9.6 | 8.4 | 8.0 |
| 2600 | - | 10.4 | 9.1 | 8.7 |

* see Engine technical data of the appendix page in this manual.

Design data : a) River or sea water temperature: 20 ˚C
b) Cooling cell height: 20 mm
c) Cooling flow rate in cooling system: 1 ~ 2 m/s
d) Keel made of steel with thermal conductivity: 50W/K x m
e) For safety reasons (influence of paint layers, encrustation of keel with foreign matter, deposits in cooling system) only 60 % of the cooling areas were utilized.

**<Design of keel cooler>**

Keel coolant cell heights of over 20 mm are to be avoided, as the heat transfer occurs only within a small boundary layer. In addition, great heights result in large cross sections and, consequently, in flow rates that are too low, which leads to a deterioration of the heat transfer. Not any small value for the free cross section of the cooling system can be chosen, as otherwise the pressure drop will be too high. Flow resistance in the cooling system can be effectively reduced by the use of deflectors at the turns. The coolant is usually circulated by engine water pump.



Downloaded from www.Manualslib.com manuals search engine

https://truckmanualshub.com/

**<Example: Schematic diagram of a keel cooling system>**

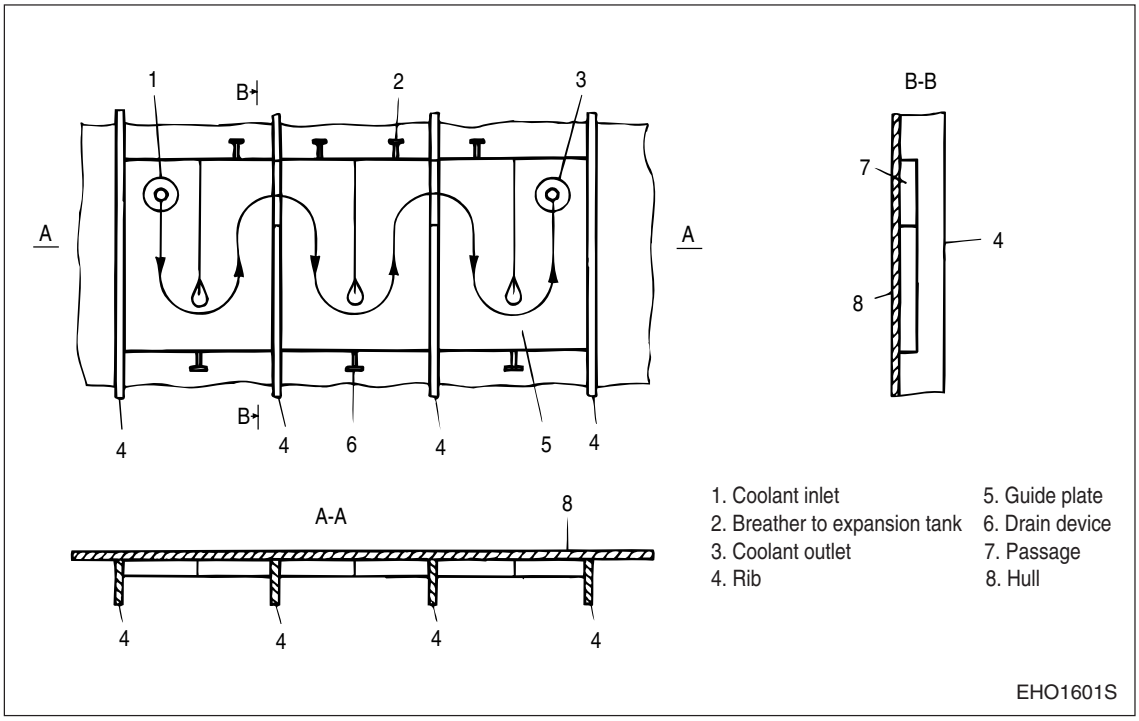


**Note :** Good bleeding of each and every cell section to the expansion tank is decisive for system's reliability.

### 6.7.4. Commissioning the keel cooling system

Before commissioning, remove any kind of dirt from the cooling system (forging scales, welding beads etc.) and check for leaks.

Ensure that the system is thoroughly bled when filling it up.



Downloaded from www.Manualslib.com manuals search engine

https://truckmanualshub.com/

### 6.7.5. Engines with inter-cooler

A second cooling system with a separate pump must be installed for the keel-cooler.
The circulating pump may be procured by the shipyard itself but must meet the following minimum delivery requirements:

**Note :** Refer to "engine technical data" of the appendix page in this manual for "Amounted of heat to be dissipated from Intercooler" each model.

Alternatively, the sea water pump only can be used for inter cooler cooling separately.
The below figure shows the cooling circuits of the keel cooled engine (Example 1) & (Example 2). Owing to the tremendous amounts of heat to be dissipated in the inter-cooler, the most powerful engines require very large cooling surfaces which in practice are hardly feasible. A 25% reduction of the cooling surfaces is possible by increasing the flow rate from 1 m/s to 2 m/s (which can be achieved by installing a higher capacity pump),
The air bent lines for the keel cooler circuit must be routed to each expansion tank for the engine coolant circuit.

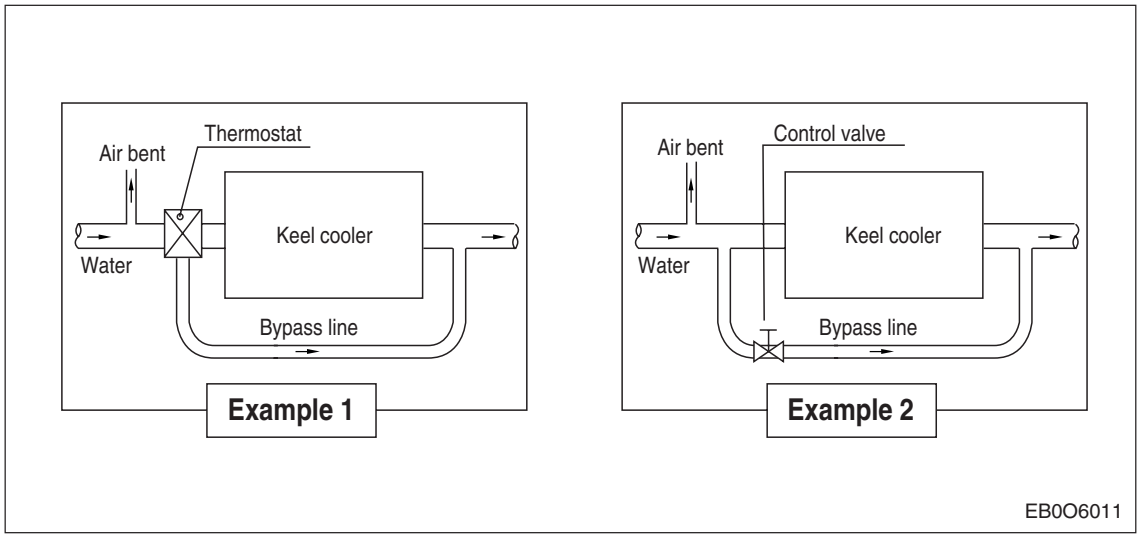




Downloaded from www.Manualslib.com manuals search engine

**Guideline values for cooling areas in keel cooling systems in m² for the inter-cooling agent circuit. (River or sea water temperature = 20 ˚C)**

| Amount of heat to be dissipated from intercooler circuit in MJ/h* | Cooling area in m² for ships at a top speed of : | | | |
|---|---|---|---|---|
| | 0 | 8 | 15 | ≥ 20 (knots) |
| | 0 | 15 | 28 | 37 (km/h) |
| 50 | 5.7 | 1.3 | 1.2 | 1.1 |
| 100 | 11.4 | 2.5 | 2.25 | 2.15 |
| 150 | 17.0 | 3.8 | 3.4 | 3.2 |
| 200 | 22.7 | 5.0 | 4.5 | 4.3 |
| 250 | 28.5 | 6.3 | 5.6 | 5.4 |
| 300 | - | 7.6 | 6.7 | 6.5 |
| 350 | - | 8.8 | 7.8 | 7.5 |
| 400 | - | 10.1 | 9.0 | 8.6 |
| 450 | - | 11.3 | 10.1 | 9.7 |
| 500 | - | 12.6 | 11.2 | 10.7 |
| 550 | - | 13.9 | 12.3 | 11.8 |
| 600 | - | 15.1 | 13.4 | 12.9 |
| 650 | - | 16.4 | 14.6 | 14.0 |

* see Engine data of the appendix page in this manual.

Design data : a) River or sea water temperature: 20 ˚C
b) Cooling cell height: 20 mm
c) Cooling flow rate in cooling system: 1 ~ 2 m/s
d) Keel made of steel with thermal conductivity: 50 W/K x m
e) For safety reasons (influence of paint layers, encrustation of keel with foreign matter, deposits in cooling system) only 60 % of the cooling areas were utilized.



Downloaded from www.Manualslib.com manuals search engine

https://truckmanualshub.com/

**<Calculation formula of rated power at inter-cooler system>**

The maximum permissible inlet temperature of the inter-cooling agent into the inter-cooler is 32 ˚C. If this requirement cannot be met, proceed as follows:

The output must be reduced as per the formula below:

$$P = -\frac{1}{3} \times t_{a3} + 110$$

Key : P = Power in % of rated power

$t_{a3}$ = Inlet temperature of the coolant into the inter-cooler in ˚C

Example : One engine with a maximum output of 300 kW at 2,000 rpm

The coolant inlet temperature into the inter-cooler is 60 ˚C.

$$P = -\frac{1}{3} \times 60 + 110 = 90$$

The engine can now be operated with only 90% of its max. output, i.e. 0.9 x 300 = 270 kW.

The above formula does not apply to these engine models. If an inter-cooling agent entry temperature of 32 ˚C cannot be achieved, a heat exchanger cooling system must be installed greater



Downloaded from www.Manualslib.com manuals search engine

https://truckmanualshub.com/

# CHAPTER 7 LUBRICATING SYSTEM

## 7.1. Marine Installation Requirements

- When oil filter is changed, DOOSAN genuine parts are to be used.
- The oil dipstick must be marked with the high and low oil level when the boat is in the water and at its normal trim if the engine installation angle is over 6 degree.
- The lubricating oil used in the engine must meet the specifications listed in “engine technical data” of the appendix page in this manual.

All DOOSAN marine engines have full flow lubricating oil filter type. Engine oil filter should not be modified from engine.

## 7.2. Engine Blow- By Gas Vent

During normal operation a small amount of combustion gas escapes past the piston compression rings into the crankcase. This blow-by gas is vented out through the engine breathers. Most of the oil mist and vapor is removed by the breathers and drains back into the engine.

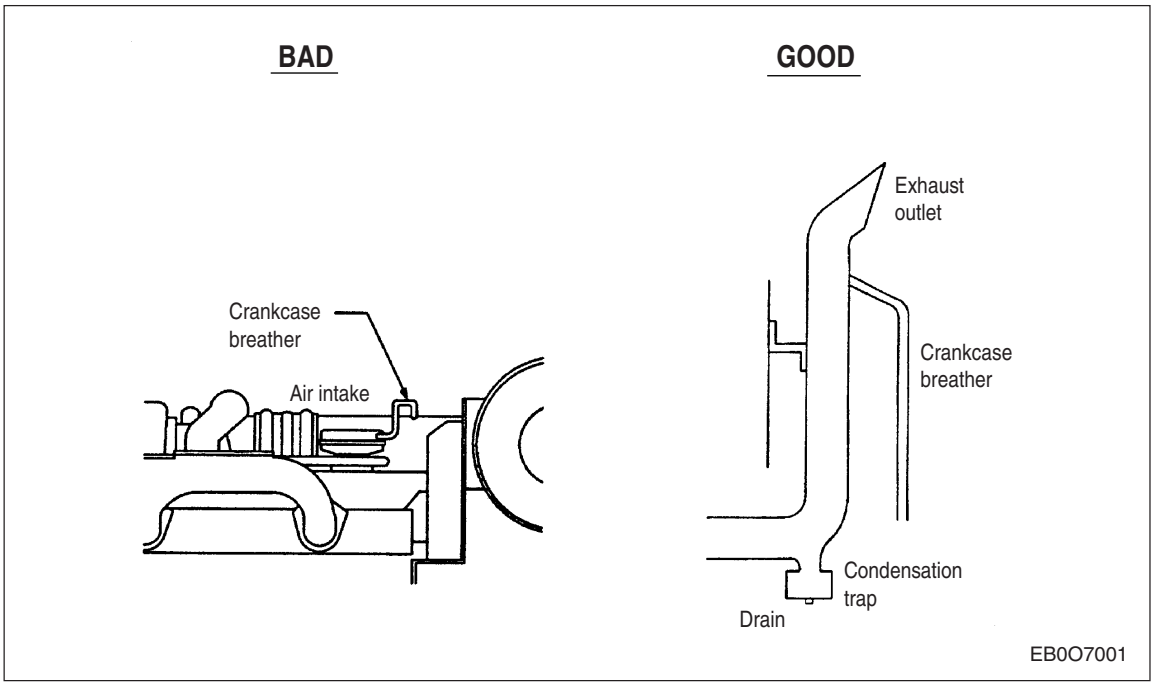


However, some oil vapor is carried through the breathers by the blow-by gases. Engines that operate in an open area just allow the gases and oil vapor to escape at the breather.
On boats the gases and oil vapor should be piped out of the engine room. Vessels with dry exhaust systems can vent the blow-by into the exhaust flow. The blow-by should be vented into the exhaust at the outlet of the exhaust piping. Routing the blow-by too close to the turbocharger outlet will pressurize the crankcase and result in excessive blow-by gas.



Downloaded from www.Manualslib.com manuals search engine

Crankcase vent plumbing should have a continuous upward slope to prevent oil build-up in the vent lines. Drain fittings are required at the bottom of long vertical runs to remove accumulated oil. Blow-by gases should not be vented to the atmosphere near the engine all intake or directly into air cleaners or turbochargers. The oil build-up that occurs will plug the air cleaner element and may cause turbocharger failures, loss of power and decrease the effectiveness of the inter-cooler air fins.

## 7.3. Lube Oil Drain Pump

The engine oil pan is normally not accessible in a marine application of boat. Lube oil drain pump is mounted on all DOOSAN marine engines to a standard part because the drain plugs of oil pan and marine gear are difficult to access in the boat.

## 7.4. Oil Dipstick Level Gauge

**The lubricating oil dipstick must be marked with the high and low oil level when the vessel is in the water and at its normal trim if the engine installation angle is over 6 degree.**

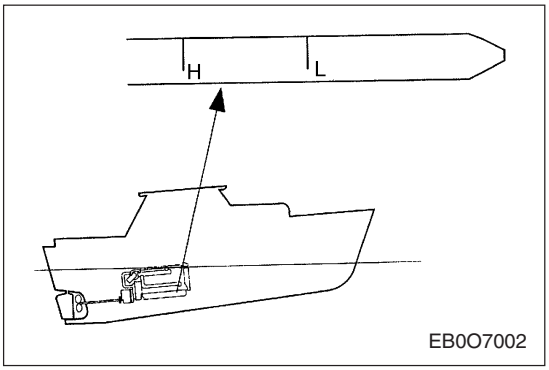


Since the installation angle of a marine engine may vary greatly among vessels, the high and low oil levels on the dipstick will also vary as the engine angle changes. The capacity of lube oil can be referred to "Engine technical data" of the appendix page in this manual.

Dipstick should be re-marked by engraving on the lube oil capacity of each engine. Be sure to check and mark the oil levels between Max. and Min. when the boat is commissioning at first. Please note that stamping or notching will weaken the dipstick and the tip of the dipstick may break off in the oil pan.

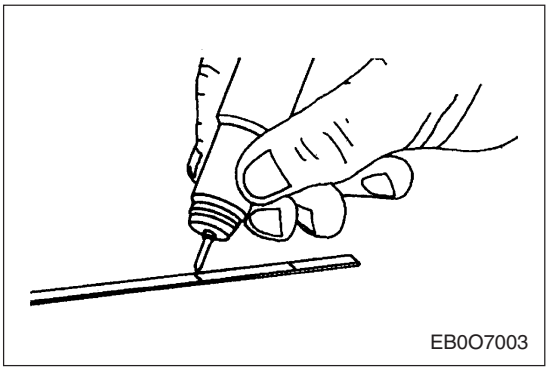


**<Oil capacity and Difference between maximum and minimum oil level>**

| Engine model | Oil Capacity (Liter) | | Difference (mm) |
|---|---|---|---|
| | Maximum | minimum | Max.-Min |
| L034 / L034TI | 6.5 | 5.5 | 18 |
| L066TI | 19 | 14 | 33 |
| L136 / L136T / L136TI / L086TI | 23 | 17 | 28 |
| MD196T / MD196TI / L126TI | 24 | 19 | 31 |
| V158TI | 31 | 25 | 30 |
| V180TI | 35 | 28 | 46 |
| V222TI | 40 | 33 | 63 |



Downloaded from www.Manualslib.com manuals search engine

https://truckmanualshub.com/

# CHAPTER 8 FUEL SYSTEM

## 8.1. Fuel Circuit

Fuel is sucked from the tank by the supply pump and fed to the inlet chamber of the injection pump via the fuel water separator filter.
The fuel supply pump supplies more fuel than is actually needed for the combustion.
The delivered surplus fuel flows back to the tank via a fuel return line.

### 8.1.1 Fuel lines

Should prevent the fuel against heating up. Heated fuel is expanded and especially lighter. As a result, less fuel mass is injected, which causes the power to drop. For this reason fuel line from the tank to the engine must not be laid near or attached to hot engine parts.
The inner line cross sections must not be smaller than that of the injection pump inlet pipe and should select the flame-resistant material for this fuel lines.
Prior to commissioning the fuel system (tank and pipe-work) the entire system must be flushed out with diesel fuel.
If the fuel return restriction is too high, excess fuel will be put in the cylinder. This will cause high cylinder pressures, high temperatures, increased smoke, poor performance and a decrease in the engine life.

**Note :** The fuel return line size required for an engine will depend on the engine return flow rate, the length of the line, the number of bends and the number and type of fittings.

The following table lists the minimum line sizes which will NORMALLY meet the maximum allowable return line restriction limit. However, larger line sizes may be required when several bends, valves or fittings are used in the fuel plumbing. Whatever line size is used, the fuel return line restriction must not exceed the 102 mm Hg (0.14 kg/cm$^2$).

| Engine model | Supply Line O.D. | Return Line O.D. |
|---|---|---|
| L034 / L034TI / L066TI | ϕ10mm | ϕ10mm |
| L136 / L136T / L136TI / L086TI<br>MD196T / MD196TI / L126TI | ϕ10mm | ϕ10mm |
| V158TI / V180TI / V222TI | ϕ12mm | ϕ10mm |

The fuel system must deliver adequate clean fuel that is free of air and water to the engine. Fuel is sucked from the fuel tanks through a fuel water separator, into the fuel pump. The suction vacuum at the suction connection of the pump should not exceed 0.2 bar (0.204 kg/cm$^2$) at maximum engine speed.
The fuel is also used to lubricate the Injection nozzles and fuel pump as well as cool down some combustion heat from the Injection nozzle tips.



Downloaded from www.Manualslib.com manuals search engine

https://truckmanualshub.com/

**Note :** A fuel/water separator is required before the fuel pump

All of the fuel pumps used on the engines in this manual are fuel lubricated. Water in the fuel will decrease the lubrication in the pump and possibly cause a failure of the pump. Injection nozzles are also lubricated by fuel and can also fail as a result of water in the fuel. Therefore, it is necessary to remove any water from the fuel before it reaches the fuel pump by using a fuel water separator.

Fuel water separators that are available from DOOSAN are recommended. If another fuel water separator is to be used, it must be sized for the engine's fuel supply flow rate

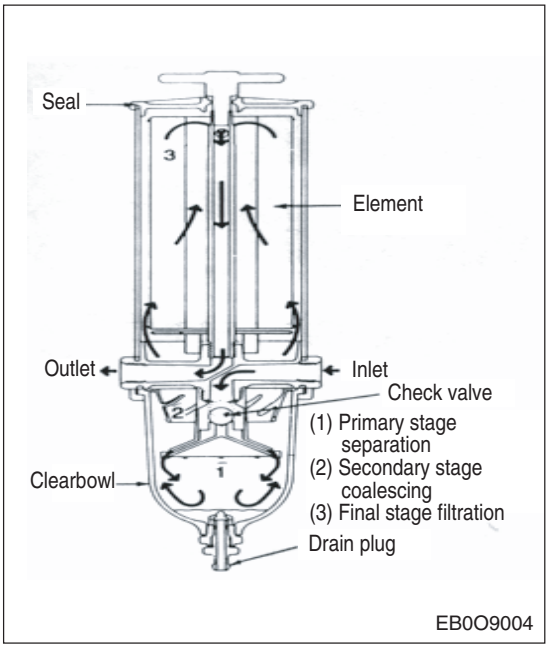


### 8.1.2. Valves

Valves installed in the fuel supply should have low flow resistance and not be a source for the entry of air into the fuel system. These requirements are best met with a plug type valve. Globe valve and other types of packed valves may be used, but they require periodic repacking to maintenance an air tight seal. Some valves are not designed to seal in a suction line, and therefore, cannot be used in the fuel supply line.

When a manual shut-down valve is used, the linkage should completely open and close the valve under all conditions.

Selector valve ports should be at least as large as the fuel supply line's inner diameter.

All values used in the fuel system should be clearly marked as to their function and position (open / close).

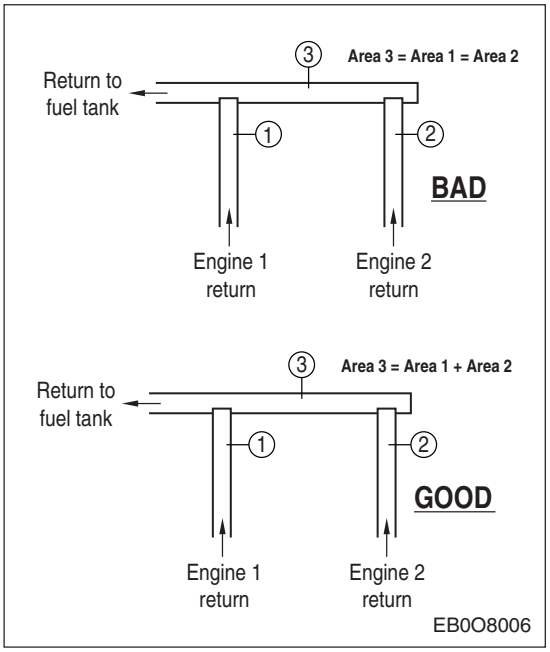




Downloaded from www.Manualslib.com manuals search engine

https://truckmanualshub.com/

The fuel supply and return line must be routed without loops. Any loops in the fuel plumbing will cause pressure surges in the line and result in engine speed instability.
Whenever multiple engines are used, each engine should have separate fuel supply and return lines. Running two or more engines with common fuel lines can result in idle surge and speed stability problems.

Pressure pulses in the return line of one engine may affect the operation of other engines that share the common return line. This can be overcome by using a common return line whose cross-sectional area is equal to the sum of the area of each of the individual return lines.

### 8.1.3. Arrangement of the fuel tank system on the vessel

The tank should be located at roughly the height of the engine. If this is impossible owing to the design of the ship, the following points must be heeded:
The maximum suction height of the fuel supply pump below is less than 1 m from injection pump inlet The suction height is reduced if an additional filter is installed in the suction line or a longer pipe is required for reasons of space.

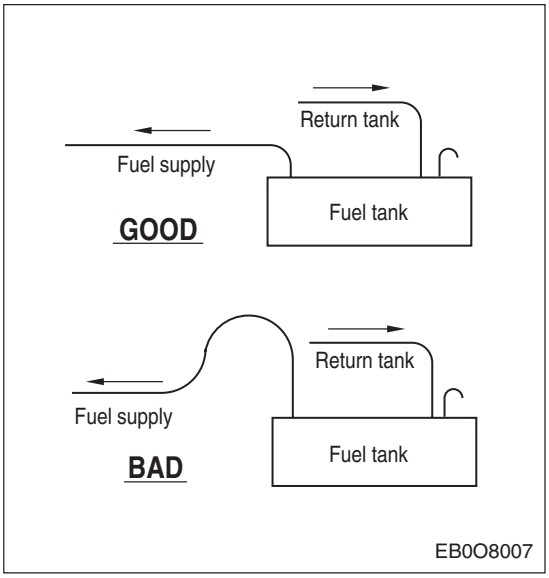


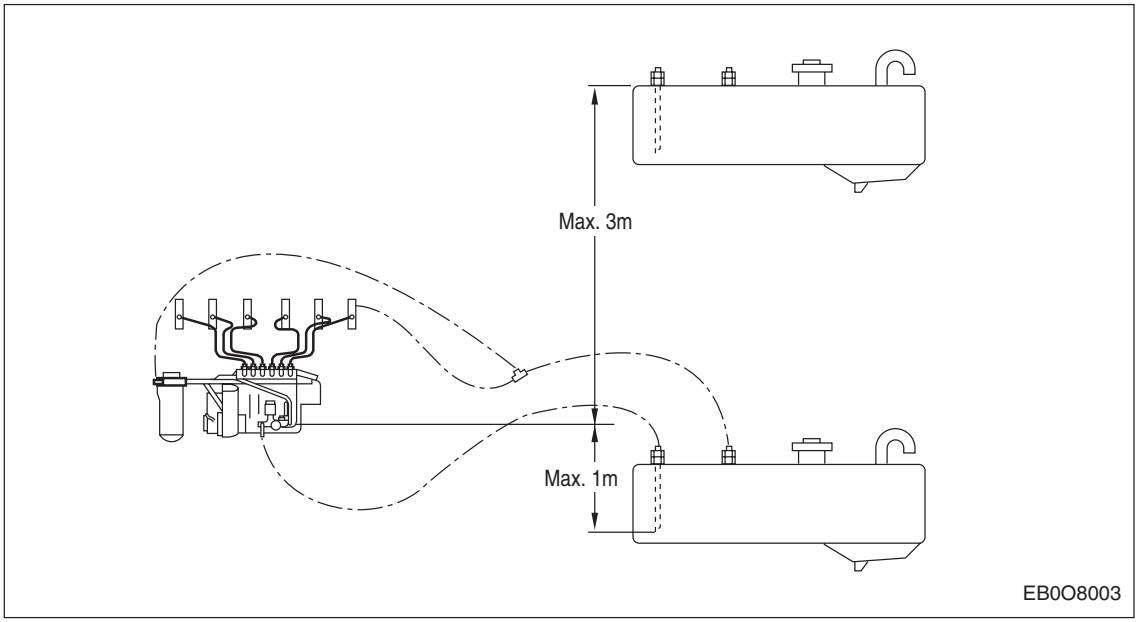




Downloaded from www.Manualslib.com manuals search engine

https://truckmanualshub.com/

The fuel return system must have at least one return line that cannot be shut off. This prevents accidental closure of all return lines. Since the fuel system will return up to 2~3 times the amount of fuel that is burned, this will result in excessive fuel consumption, high cylinder pressures and temperatures, increased smoke and failure of the fuel pump, injector or engine.

### <1> Fuel tanks located under the engine

The fuel pump used on the engines in this manual has a maximum lift capability of 1 meter (3.3 feet). Therefore, any fuel system where the bottom of the main fuel supply tank is more than 1 meter (3.3 feet) below the fuel feed pump requires a fuel transfer pump to deliver fuel to the engine.

A float tank should use a continuously running transfer pump to deliver fuel to the auxiliary tank at a regulated pressure of 0.6 kg/cm$^2$ (8 psi) maximum.

All auxiliary tanks must have vent and overflow piping. The overflow piping returns fuel to the main fuel supply tank if the float valve or switch should malfunction and overfill the auxiliary tank.

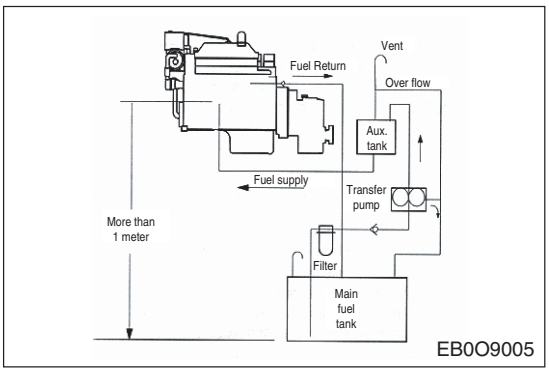


### <2> Fuel tank located above the engine

If the fuel tank is 2~8 meters (6.6~26.2 feet) above the fuel feed pump, the return line should be run to the auxiliary tank.

In this case a shut-off valve must be installed in the fuel supply and return lines to prevent fuel from running out during maintenance work.

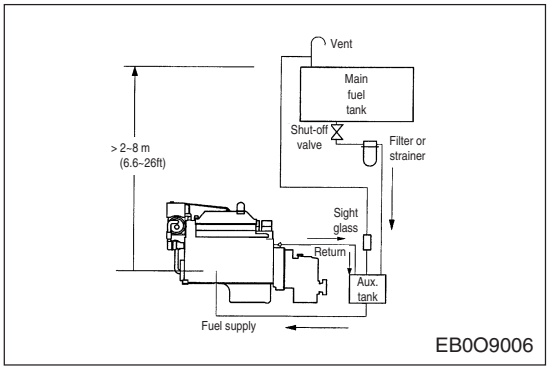




Downloaded from www.Manualslib.com manuals search engine

https://truckmanualshub.com/

**<Air Vent Line>**

The vent line should terminate above the deck in a protected location. A gooseneck at the top is recommended to keep dirt and water from entering the fuel tank through the vent line.
Fuel tanks can be made of terneplate or phosphate coated steel, aluminum or fiberglass. Galvanized or zinc plated steel tanks or piping should never be used in a diesel fuel system.
All auxiliary tanks should have vents routed to a point that is above the highest possible fuel level in the main tanks. This will prevent accidental flooding of the bilge if the float tank (No. 1) is overfilled.

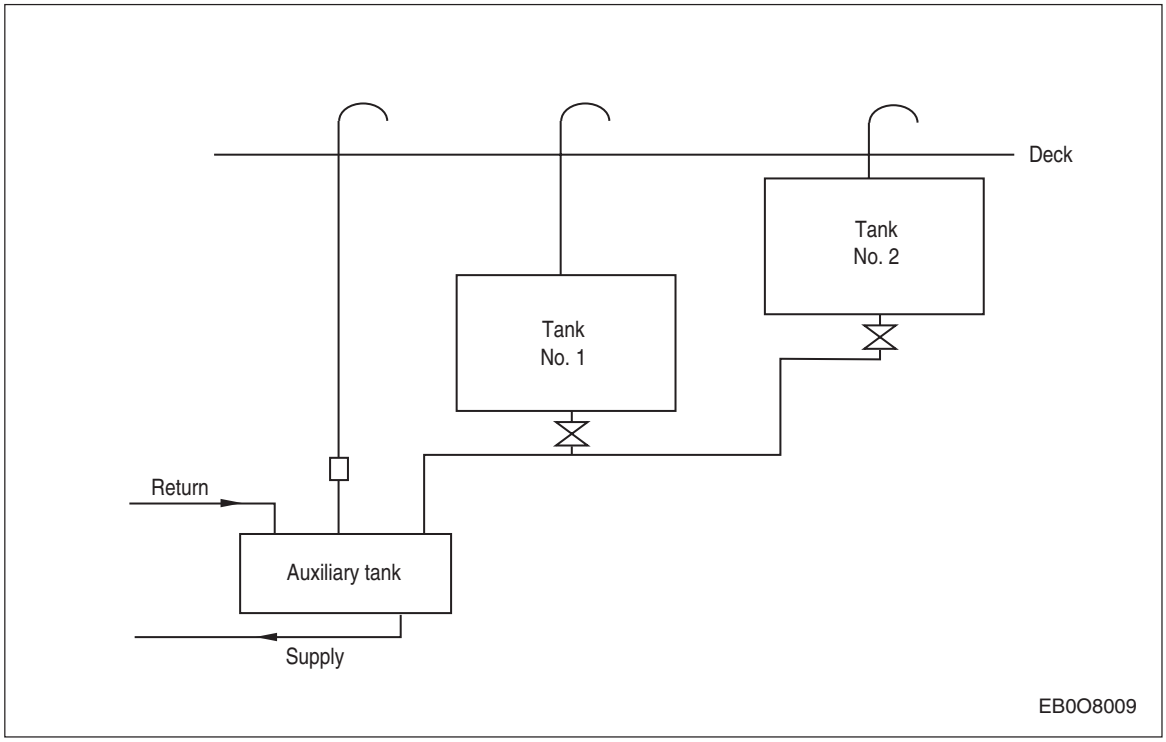




Downloaded from www.Manualslib.com manuals search engine

https://truckmanualshub.com/

## 8.2. Fuel Tank

### 8.2.1. Tank capacity

The required fuel tank capacity is determined by the engine power, the fuel consumption and the required radius of action. The following equation can be used for a rough-and-ready estimate. In addition, a sufficiently large amount of reserved fuel must be taken into consideration too.

$$V = \frac{P \times b_e \times t}{830}$$

where : V = Tank capacity in liter (lit.)

P = Engine power in kilowatt at cruising speed (kW)

t = Operating period in hours (hr)

$b_e$ = Specific fuel consumption at full load in gram per kilowatt and hour.(g/kW.h)

A guideline value of 220 g/kWh is sufficiently precise for the estimate.

### 8.2.2. Tank manufacturing

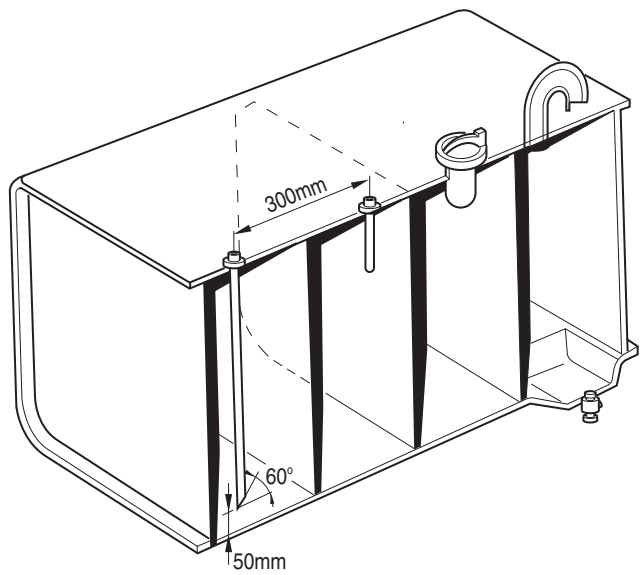


EB0O8001

The tank must be made of fuel- and corrosion-resistant material. We recommend special sheet steel as tank material. Under no circumstances must galvanized sheet metal be used. The tank must be made stable. We recommend the use of baffles to prevent fuel from sloshing when the ship is pitching through rough waters and air from being sucked in. The tank bottom must have a depression with a drainage device where dirt and condensation water can collect.

Condensation water in the fuel tank provides the basis for the growth of micro-organisms in



Downloaded from www.Manualslib.com manuals search engine

https://truckmanualshub.com/

diesel fuel. These micro-organisms cause premature filter blockages and corrosion damage, which is why condensation water collected in the tank and in the filter must be drained regularly.
The suction line inlet to the engine should be approx.50 mm above the tank bottom.
We recommend that the fuel return line from the engine to the tank be located as far away from the suction line as possible and extend as far into the tank as the suction line.
The filling line must have an adequate cross section, lead to the tank without sharp turns and close securely.
In addition, the tank must be equipped with a bleeding line to the deck. Ensure that even in adverse conditions no water (spray, rain) can penetrate.
Having completed the tank assembly, remove all dirt, forging scales and welding beads from the tank and check it for leaks.

### 8.2.3. Fuel requirements

Fuel quality is an important factor in obtaining satisfactory engine performance, long engine life, and acceptable exhaust emission levels. DOOSAN engines are designed to operate on most diesel fuels marketed today. In general, fuels meeting the properties of ASTM Designation D975 (grades 1-D and 2-D) have provided satisfactory performance.

DOOSAN recommends to use Number 2-D diesel fuel for maximum fuel economy whenever possible. When temperatures are below -7 ˚C (20 ˚F), use Number 1-D fuel. If Number 1-D fuel is not available, the mixture of one kerosene to two gallons of Number 2-D fuel can be used. Once kerosene has been added, the engine should be run for several minutes to mix the fuel.



Downloaded from www.Manualslib.com manuals search engine

https://truckmanualshub.com/

# CHAPTER 9 PROPULSION SYSTEM

## 9.1. Marine Gear Ratio Selection

- Marine gear ratio selection is important and will affect both engine life and vessel performance. Propeller speed must be properly balanced with the power applied to it like vessel speed, propeller size, and propeller pitch and the secondary loads.
- Another important part of proper engine application is to choose the proper marine gear ratio and propeller size. Therefore, the marine gear ratio and propeller size must be chosen to allow the engine to achieve rated speed under fully loaded conditions.

**Note :** DOOSAN recommends to install the gearbox ratio as next application.

- Heavy Duty : 2.5 ~ 6, Medium duty : 2 ~ 3.5, Light Duty : 1 ~ 2.5
- Engine movement must be restrained sufficiently to prevent damage from physical contact between the engine components and adjoining structures; and the movement must not exceed the flexural limits of connecting systems.
- The propeller shaft flange bore and face alignment must be within the marine gear manufacturer's limits.

## 9.2. How to Select the Right Propeller System

If you want to get the best performance out of your boat, you need to select the propeller and the gear ratio that will suit your particular boat, engine and speed range.

Below you will find a brief description of how propeller systems are designed. It is not just the engine capacity which determines the speed of the boat ; it depends just as much on the efficiency of the reverse gear and the propeller system.
Using the right propeller system will not only give you good fuel economy and higher speed ; you will also experience greater comfort, with less noise and vibration.

### 9.2.1. Planing boats

In planing boats over 20 knots, the size of the propeller depends on the engine power. To transfer the power from the engine to the water, you need approximately 7 ~ 8 $cm^2$ propeller blade surface per kW shaft power. If the shaft is at an angle in relation to the flow of the water, this requirement may be considerably greater : 8 ~ 15 $cm^2$/kW is reasonable, depending on the angle of the shaft and the water flow.
At a shaft power of 400kW, therefore, the propeller blade surface may need to be 400 kW x 9 $cm^2$/kW = 3600 $cm^2$.
This surface may be divided over three, four or five blades.
This efficiency of a propeller blade diminishes when it becomes far too wide in relation to its length. This means that if the propeller diameter is limited in size (as is often the case), it is better to select several narrower blades (four of five) rather than three wide ones, for example.
The angle of the propeller shaft should be as small as possible. Shaft angles of less than 12°



Downloaded from www.Manualslib.com manuals search engine

do not usually cause any major problems, but shaft angles of more than 14 ~ 15° should be avoided. The distance between the bottom of the boat and the propeller blades should be at least 12 ~ 13% of the diameter of the propeller. When you have selected the diameter of the propeller, you are ready to go on to select the pitch. Propeller blades should no travel faster than 60 ~ 70 knots through the water at 70% of the maximum propeller diameter.
This means that the speed of the propeller revolutions must be reduced when the engine capacity is greater, which requires a larger blade surface and therefore a greater diameter.
The relations between pitch and diameter should be :

$$\text{Pitch} = \frac{\text{pitch ratio}}{\text{diameter}}$$

0.9 ~ 1.15 at 20 knots
1.0 ~ 1.3 at 30 knots
1.05 ~ 1.35 at 35 knots

Generally, a larger propeller with narrow blades and low revolutions is more efficient than a small, high - speed revolving propeller. When the boat's speed goes above 24 ~ 28 knots, the resistance of the shafts, rudders and propeller supports starts to become so great that the greater efficiency of the propeller is not beneficial.
The resistance on the propeller system can be reduced by reducing the shaft diameter, selecting stronger materials and reducing the rudders and surfaces of the propeller supports. Lower gear ratios also mean thinner shafts. It is necessary to find a balance between propeller efficiency, water resistance of the shaft, etc.

### 9.2.2. Displacement and semi-planing boats

Boats of less than 15 knots need propellers which are as large as possible.
For example, in a trawler it is possible to save 20 ~ 30% fuel or to gain 20% greater thrust when trawling by increasing the propeller diameter by 50% and reducing the propeller speed by 40%.
The blade surface of the propeller is designed according to the minimum of 0.17m$^2$ perton of thrust.

As described above, a large, slow - moving propeller is preferable. At a speed of 12 knots, for example, a three - blade propeller with a 50% blade area will achieve an efficiency rate of approximately 57% if the propeller blade cuts through the water at 50 knots with 70% of its diameter. At a blade speed of 70 knots, approximately only 47% efficiency is achieved.

The formula :

$$\text{T Newton} = \frac{\text{propeller efficiency x shaft output in kW x 1944}}{\text{speed of boat}}$$

Can be used to calculate the thrust and, therefore, the blade surface.



Downloaded from www.Manualslib.com manuals search engine

https://truckmanualshub.com/

Three - blade propellers are often more efficient for large, solw - moving propellers than four - blade or five - blade propellers.
However, four - blade propellers usually produce less vibration, which is often preferable.
In general, there is a tendency towards four - blade propellers.
A suitable pitch ratio at 10 knots is 0.7 ~ 0.9 and at 15 knots 0.8 ~ 1.05.
As the best pitch ratio varies according to the speed of the boat, it is necessary to decide whether the propeller should be at its best when trawling, e.g. with a pitch ratio of 0.7, or whether it should be better when not trawling with a slightly higher pitch ratio.

Adjustable propellers are an excellent solution for trawlers, tugs and freighters.

As a very rough estimate, the bollard pull thrust can be calculated using the formula

Adjustable propeller (kp)' 13 ~ 14 x hp
Fixed propeller (kp)' 11 ~ 12 x hp

An adjustable propeller fitted to " the right boat" (up to 10 knots) can therefore save a lot of fuel.

### 9.2.3. Speed range between 15 and 20 knots

Within this speed range, a large slow propeller is preferable to a small, fast one.
The blade surface is designed as a compromise between $kW/cm^2$ and $m^2$/ton of tractive force.

The above description is very general and describes only superficially how propellers are designed.

### 9.2.4. Controllable pitch propellers

If controllable pitch propellers are to be used, the maximum pitch on the propeller should be determined under fully loaded conditions. The vessel should be taken out fully loaded and the pitch slowly increased until the engines are operating at rated speed at full throttle. This is the maximum amount of pitch that should be used under any operating conditions.



Downloaded from www.Manualslib.com manuals search engine

https://truckmanualshub.com/

## 9.3. Propeller Selection

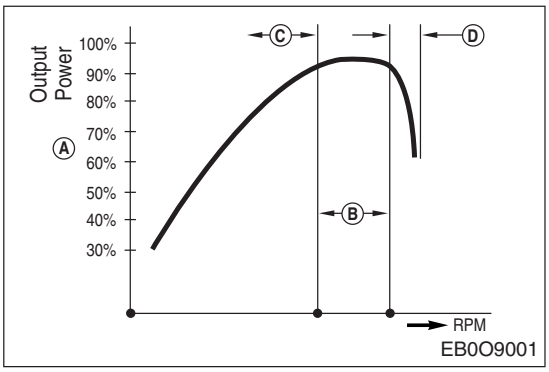


Your dealer has chosen a propeller designed to deliver top performance and economy under most conditions. To obtain the maximum percentage of available horsepower (A), the engine rpm at full throttle should be in the specified full throttle operating rage (B).

Refer to specifications in Performance Curve.

If the engine's full throttle RPM with a normal load is below the specified on the low side of the range(C), use a propeller with less pitch to increase the RPM. Should the engine's full throttle RPM want to exceed the specified range(D), the engine RPM is limited by the governor. Use a propeller of higher pitch to stop the limiting by the governor.

**Note :** Engine damage can result from incorrect propeller selection which;

- (C) Prevents engine RPM from attaining the specified "Full Throttle Operating Range". When the engine is laboring, install lower pitch propeller.
- (D) Allows engine RPM above the specified "Full Throttle Operating Range". Engine RPM can be limited by the governor, install a higher pitch propeller.

## 9.4. Power Drive with Fixed Pitch Propeller

The power of a marine diesel engine varies as shown by the power curve approx. in proportion to the engine speed.

The power take-up of a propeller, however, varies according to the propeller law

$$P_1 : P_2 = n_1^3 : n_2^3$$

with the third power of the engine speed, i.e. if the propeller speed and, consequently, the ship speed(P) is to be doubled, the power input(n) has to be increased eightfold ($2^3 = 8$).

The diagram and the table on the next page give in percent the power ratings and the engine speeds which belong together according the propeller law. These figures are theoretical values which allow only rough-and-ready estimates and apply to ships with displacement hulls without trawling device (trawl nets for fishing, barges) in calm, deep shipping channels.

This means that a ship's curve of resistance depends on the overall tractive resistance of the ship, the propeller design and the individual water conditions.

**<Example>**

According to the model plate the power of an engine is 185 kW at 1,800 rpm.

What is the power that can be transmitted by the propeller if the engine speed is reduced by 200 rpm to 1,600 rpm?



Downloaded from www.Manualslib.com manuals search engine

**<Solution>**

The rated engine speed of 1,800 rpm is 100%. Consequently, the engine speed of 1,600 rpm is 89% of the rated speed. Both the diagram and the table on the next page show that with 89% of the rated engine speed 70% of the power i.e. 10% of 185 kW, which equals 130 kW, can still be transmitted by the propeller.

- **Engine power as a function of engine speed with propeller drive (theoretical propeller curve)**

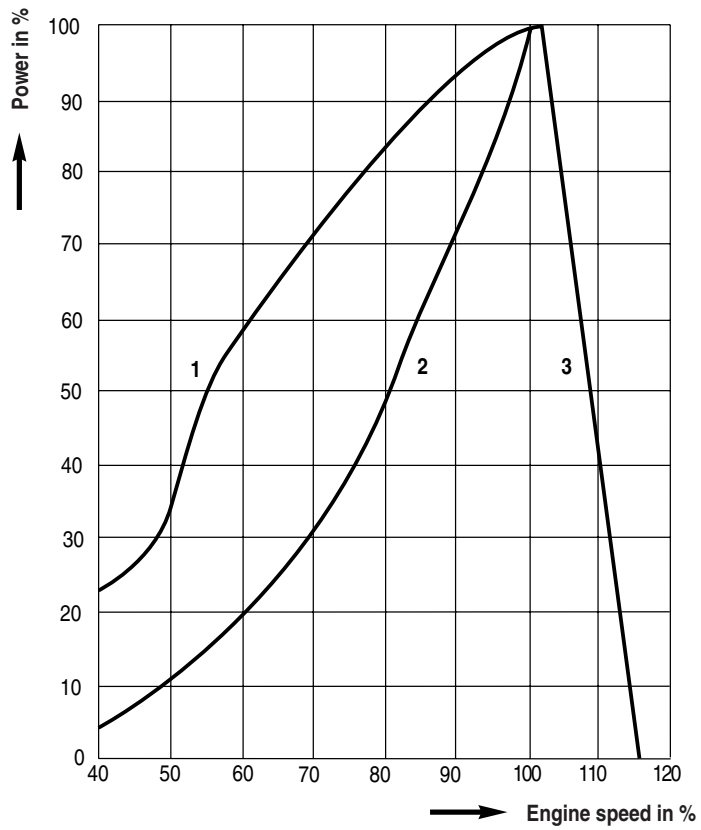


1. Engine power curve
2. Power take - up of propeller
3. Breakaway curve

| Power P (%) | Engine Speed N (%) | Power P (%) | Engine Speed N (%) | Power P (%) | Engine Speed N (%) |
|---|---|---|---|---|---|
| 15 | 53 | 45 | 77 | 75 | 91 |
| 20 | 58 | 50 | 79 | 80 | 93 |
| 25 | 63 | 55 | 82 | 85 | 95 |
| 30 | 66 | 60 | 84 | 90 | 97 |
| 35 | 71 | 65 | 87 | 95 | 98 |
| 40 | 73 | 70 | 89 | 100 | 100 |



Downloaded from www.Manualslib.com manuals search engine

https://truckmanualshub.com/

In practice there can be considerable differences between the theoretical power take-up of the propeller and the actual tractive resistance.

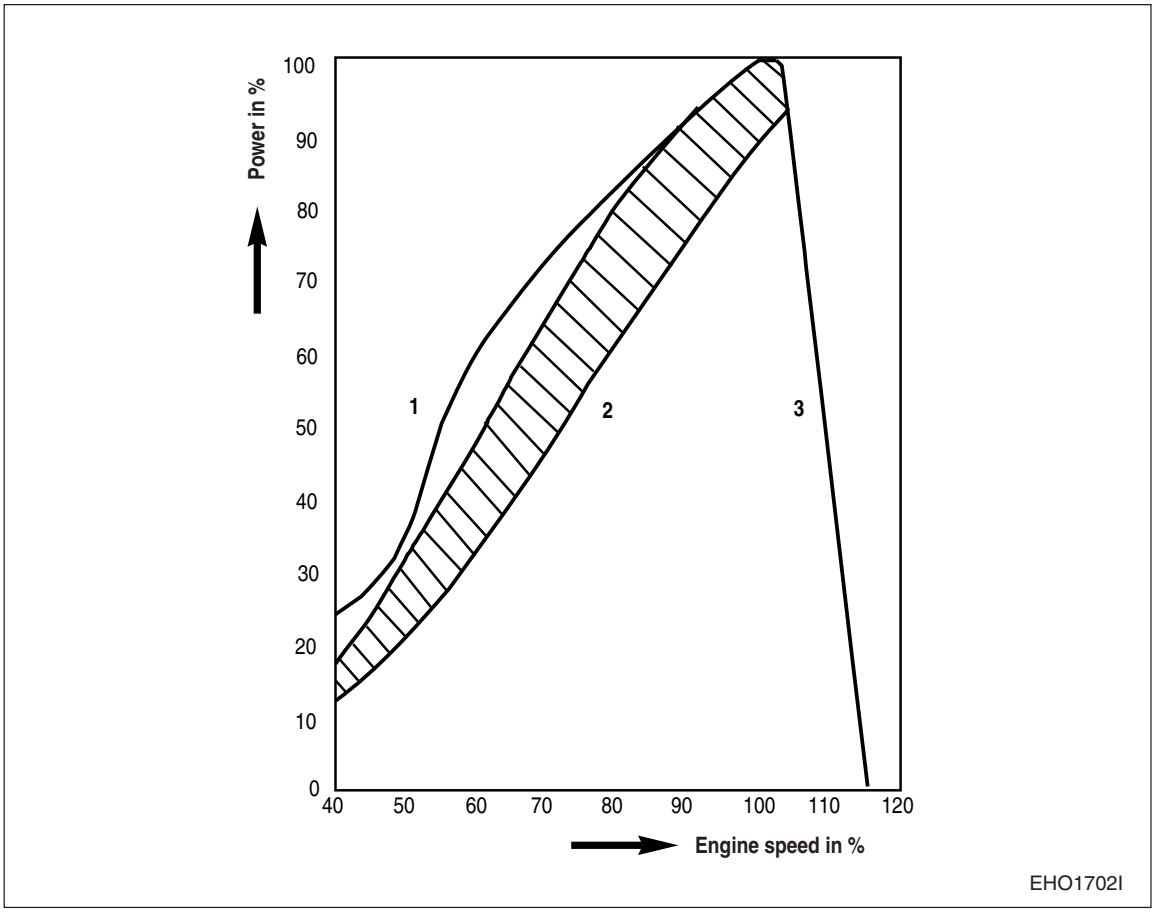


1. Engine power curve
2. Tractive resistance range of some high speed planing boats
3. Breakaway curve

The actual resistance curves show that, in contrast to the theoretical power requirement of the propeller, a relative large amount of power is already transmitted in the lower engine speed range, which in the case of light boats can produce high speeds even at idling speed.
This could render maneuvers in narrow harbors or travelling in canals at crawling speed difficult.

There are several possibilities of reducing propeller speed independently of the engine speed, thus improving the slow travelling properties of fast boats:



Downloaded from www.Manualslib.com manuals search engine

https://truckmanualshub.com/

- **Reduction gear with trolling device :**

  Propeller speed is reduced by the clutch discs slip. The clutch oil pressure (for pressing the clutch discs against one another) is lowered during the trolling operation while at the same time an increased amount of oil for lubrication and removing friction heat is pumped through the clutch discs.

  Trolling device can be only supplied to all models optionally by gear box maker.

  These models as follows : L034 / L034TI / L066TI / L136 / L136T / L136TI / L086TI / MD196T / MD196TI / L126TI / V158TI / V180TI / V222TI.

## 9.5. Designing of the Propeller

The propeller design is of paramount importance for achieving the highest ship speed or thrust possible at a given power output. It depends on the type of ship (displacement, planing or semi-planing), the shape of the hull and the operating conditions (non-towing ship or tug).

More detail design of the propeller can be made by the propeller maker.

The propeller should be planned for 90% of the rated power and must be designed in such a way that in a trial run with the new, fully equipped ship in laden condition the engine speed is 100 rpm above the rated speed.
This guarantees that rated engine speed is achieved if the tractive resistance (encrustation) increases any further.

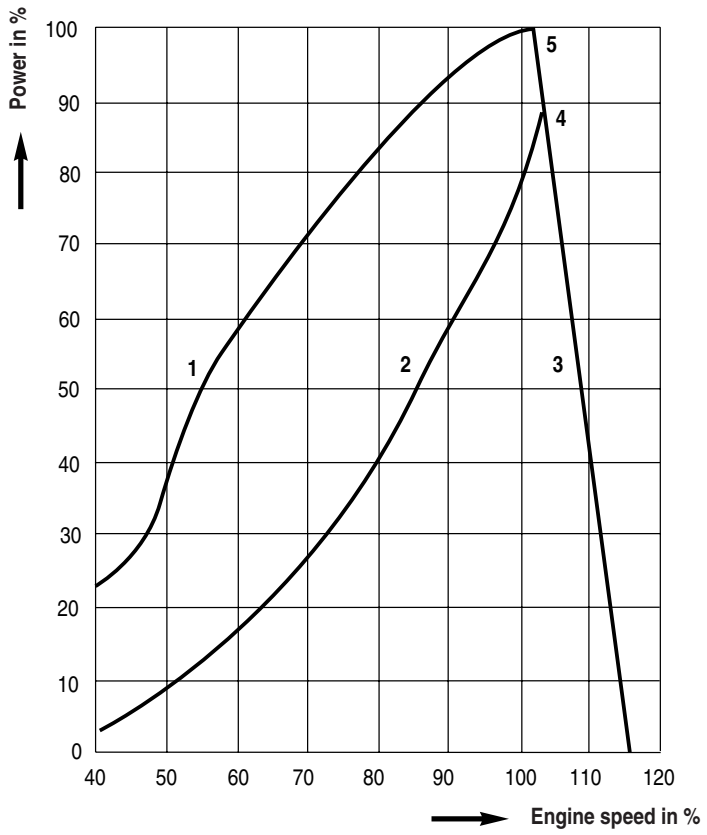


EHO1703I



Downloaded from www.Manualslib.com manuals search engine

https://truckmanualshub.com/

1. Engine power curve
2. Tractive resistance curve
3. Breakaway curve
4. Operating point, new condition (inspection, trial run)
5. Operating point, with further increase in tractive resistance

### 9.5.1. Propeller too small

Incorrect propeller design results in the following operating conditions:

The propeller cannot take up and transmit the engine power available. Thrust and ship speed may be too low.
Owing to the engine load being lower than the rated power at rated speed, the operating point is on the breakaway curve. The engine speed is markedly higher than the rated speed as per model plate.
There is no danger of the engine getting damaged.

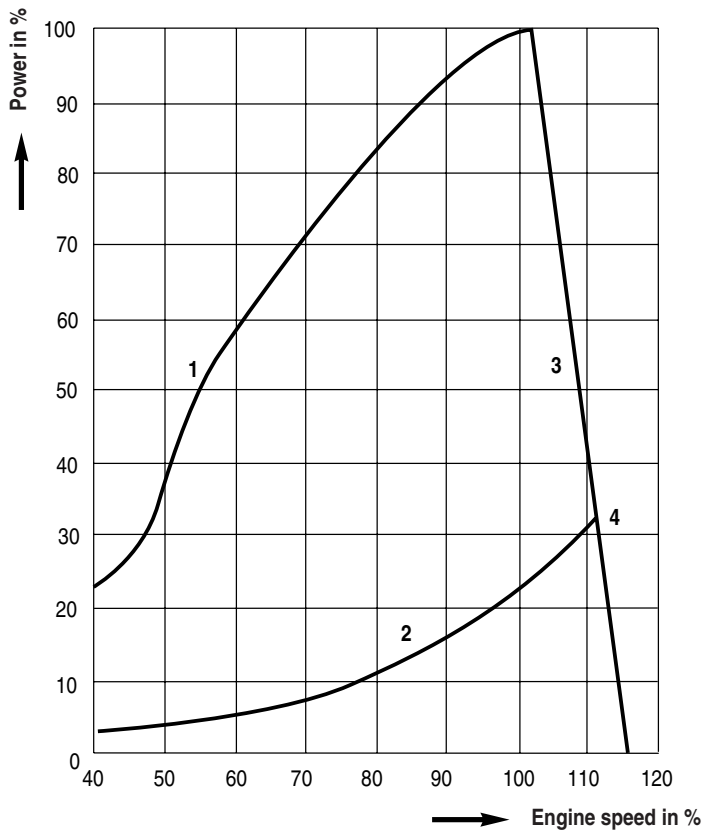


1. Engine power curve
2. Tractive resistance curve
3. Breakaway curve
4. Operating point if the propeller is too small



Downloaded from www.Manualslib.com manuals search engine

https://truckmanualshub.com/

### 9.5.2. Propeller too large

The power take-up of the propeller is higher than the engine power. Consequently, the engine cannot achieve its rated speed and is therefore overloaded.
Overloading may result in the development of black smoke, which in the long run is likely to cause damage to the engine and excessive wear.

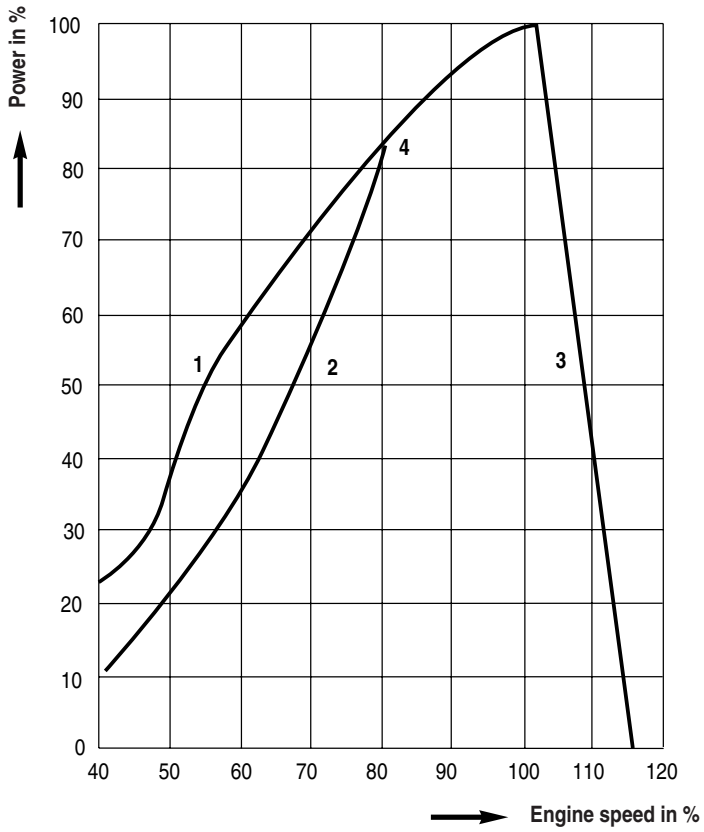


1. Engine power curve
2. Tractive resistance curve
3. Breakaway curve
4. Operating point if the propeller is too big



Downloaded from www.Manualslib.com manuals search engine

https://truckmanualshub.com/

## 9.6. Propeller Tip Clearance

Sufficient propeller tip clearance is necessary to prevent water hammering against the bottom of the hull. Inadequate tip clearance will result in noise vibration, and cavitation throughout the vessel. Most boats typically require tip clearance between 10 to 15% of propeller diameter.

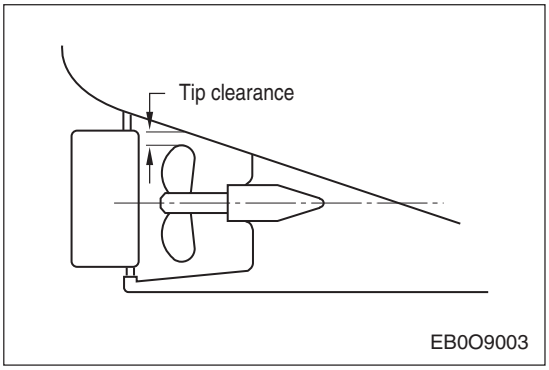


- **Typical Propeller Diameters**

units : mm (Inch)

| Max. Propeller Swing without Tip Clearance | Maximum Allowable Propeller Diameter | |
|---|---|---|
| | 10 % Tip Clearance | 15 % Tip Clearance |
| 381 (15) | 279 (11) | 305 (12) |
| 406 (16) | 305 (12) | 330 (13) |
| 432 (17) | 330 (13) | 356 (14) |
| 457 (18) | 356 (14) | 381 (15) |
| 483 (19) | 356 (14) | 406 (16) |
| 508 (20) | 381 (15) | 406 (16) |
| 533 (21) | 406 (16) | 432 (17) |
| 559 (22) | 432 (17) | 457 (18) |
| 584 (23) | 432 (17) | 483 (19) |
| 610 (24) | 457 (18) | 508 (20) |
| 635 (25) | 483 (19) | 533 (21) |
| 660 (26) | 508 (20) | 533 (21) |
| 686 (27) | 533 (21) | 559 (22) |
| 711 (28) | 533 (21) | 584 (23) |
| 737 (29) | 559 (22) | 610 (24) |
| 762 (30) | 584 (23) | 635 (25) |

- Max allowable propeller diameter = $\dfrac{\text{Max. Propeller swing without tip clearance}}{1 + [2\ (\text{Tip clearance percentage}/\ 100)\ ]}$



Downloaded from www.Manualslib.com manuals search engine

https://truckmanualshub.com/

## 9.7. Propeller Rotation in Twin Engine Applications

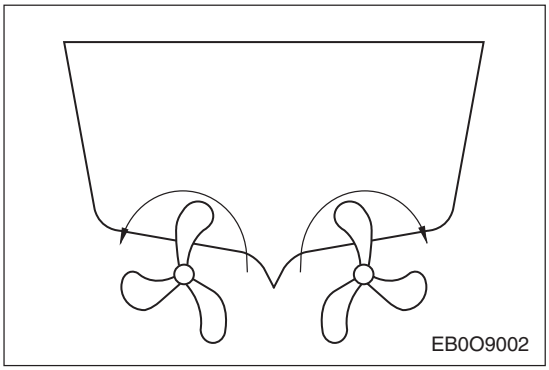


Engine rotation is viewed from the front of the engine, looking at the engine crank pulley side. Propeller rotation is viewed from behind the boat, looking forward at the propeller. Therefore, a right hand rotation engine and a left hand rotation propeller are turning in the same direction.

DOOSAN marine engines are available in standard right hand rotation only. Twin engine installations should have the propellers turning in opposite directions.

The normal recreational boat arrangement has the right hand (clockwise) turning propeller on the starboard (right) side of the boat and the left hand (counterclockwise) turning propeller on the port (left) side of the boat.

The propeller rotation is determined by the marine gear. Some gears allow for full power in either direction of rotation. The rotation in forward is set at the marine gear. Marine gears that are designed for a specific direction of rotation must be installed on the proper side of the boat.

DOOSAN marine gears have the strength fully that they can be used for long periods of time in reverse position of the gear shift lever under full load at rated rpm because of designing both forward gear/shaft and reverse gear/shaft equally.

So all marine gears supplied by DOOSAN can be used for the port propeller.



Downloaded from www.Manualslib.com manuals search engine

https://truckmanualshub.com/

# CHAPTER 10 ELECTRICAL SYSTEM

## 10.1. Electric Circuit

The circuit diagrams depend on the engine models and the extent of delivery and are tailor-made for orders and dispatched together with the usual documents such as wiring diagram etc. while the order is processed but on some available models.

- The installed battery capacity must not be less than that specified for that particular engine.
- The maximum resistance in the starting circuit must not exceed 0.002 Ohms.
- If the alternator is not supplied with the engine, the installer must assume responsibility for adequate mounting.
- A functioning hour meter must be maintained on the engine.

**Note :** When you work like any repairing jobs in the engine room you should pay attention to not occurring any electric circuit shortage (spark).

### 10.1.1. Electrical wiring

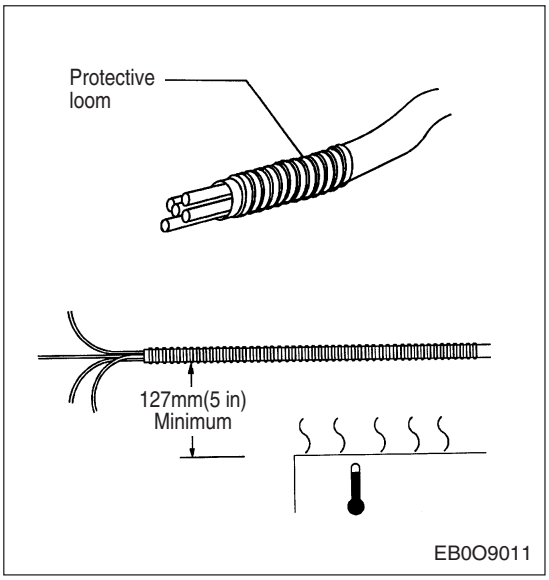


Overcharging or undercharging reduces battery life.

Because of operating and environmental conditions, wiring on marine applications needs special precaution. Connections should be made with corrosion resistant hardware and be shielded as much as possible. All wiring should be in protective looms, conduit or tape and be routed away from heat sources, such as the exhaust piping, and above bilge water level.

Proper routing arid clipping of electrical wiring is extremely important. Leads should be routed away over 127 mm from heat sources such as the exhaust piping and should be above the bilge water level.

Listed below are basic guidenlines which should be followed when designing or installing wiring systems.

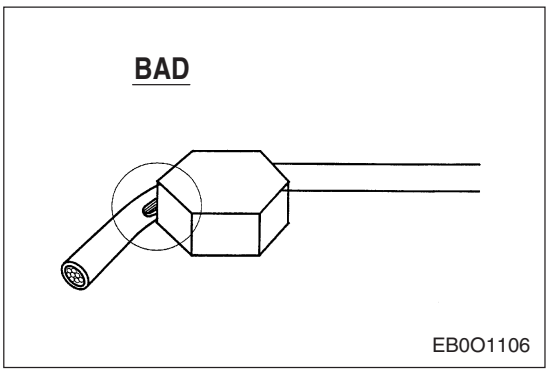


- On any surface likely to see movement from vibration or normal deflections, such as the frame or stringer to engine, wires must not rub against surrounding parts or each other. If they must rub a surface, they should be banded or clipped to it.
- Under no circumstances should the wire contact sharp edges, screw, bolts or nuts.



Downloaded from www.Manualslib.com manuals search engine

https://truckmanualshub.com/

### 10.1.2. Cause of electrolytic corrosion

One of the most important causes of corrosion of metal parts in salt water is interference current from the ship's electrical system. These currents may be very weak and are often hard to detect. However, if they are active over prolonged periods of time, they may cause heavy corrosion.
Electrolytic corrosion may be prevented by a suitable electrical wiring.
Marine engine installations require special grounding of electrical system components to minimize electrolytic corrosion from stray currents and to minimize radio interference.
On metallic the boats the hull may serve as the common bonding conductor and a separate bonding system may not be required.

## 10.2. Electric Components

### 10.2.1. Gauge panel

All DOOSAN marine engines covered in this manual are available with remote mounted instrument panels and some kinds of different gauge panels on each model that is standard, deluxe, dual type also one pole(earth return), two pole(insulated return) type engine electric wires optionally.

**Note :** Instrument panels should not be mounted on the engine due to engine vibration.

### 10.2.2. Battery

The starting and electrical system must be designed so that the engine will start readily under the most severe ambient conditions ordinarily encountered. In order to achieve this objective, the installer must exercise good judgment in the selection and application of the electrical system components. These recommendations are offered as a guide to obtain a reliable system.

**Note :** The installed battery capacity must not be less than that specified for that particular engine.

On any engine there must be enough power available to the starter to ensure quick, reliable starts under any operating condition. The temperature of the environment in which the vessel operators will greatly affect the power required for starting, so the worst case condition for the vessel should be used and considered.

**Note :** The battery capacity must meet the cold cracking ampere limits.

Battery voltage or current capacity can be increased by connecting batteries in different combinations of series and parallel arrangements.



Downloaded from www.Manualslib.com manuals search engine

### 1) The batteries in parallel

If the batteries are connected in parallel, the system current will be equal to the sum of the current for the two batteries and trip system voltage will be the same as the individual voltages of the batteries. (Refer to the figure.)

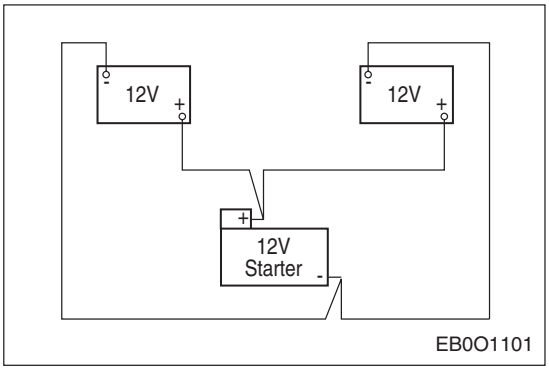


**Parallel circuit**

V = V1 = V2, I = I1 + I2

### 2) The batteries in series

Connecting the batteries in series will increase the system voltage, but not the current. The voltage will be equal to the sum of the two battery voltages and the current will be equal to the current of either individual battery.

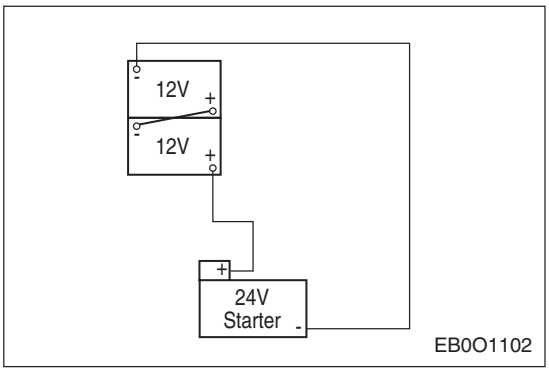


**Series circuit**

V = V1 + V2, I = I1 = I2

### 3) The batteries in series and parallel

If the batteries are connected in series and parallel, then both the system voltage and current will increase.

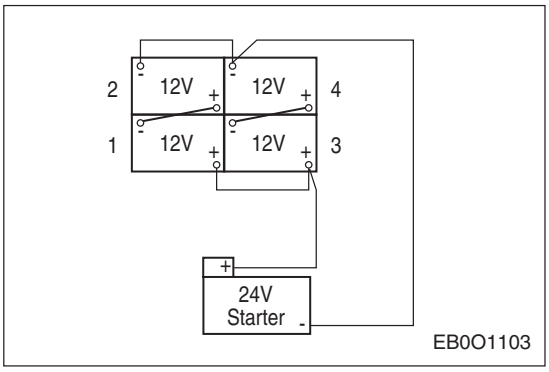


**Series - Parallel circuit**

V = V1 + V2 = V3 + V4, I = I1 + I3 = I2 + I4

**Note :** The maximum resistance in the starting circuit must not exceed 0.002 Ohms.

If the circuit resistance is too high, the starting motor will not receive an adequate supply of electrical energy and will not provide reliable cranking over the range of conditions



Downloaded from www.Manualslib.com manuals search engine

encountered in service. The maximum starting circuit resistance for the engines covered in this manual is 0.002 Ohms. The table below lists the maximum length of typical cables in the cranking circuit necessary to meet this requirement.

**<Battery to Cranking motor Cable Sizes>**

| Battery to Cranking motor Cable Sizes | | | |
|---|---|---|---|
| Maximum Circuit Resistance | Maximum Length Cable in Cranking Circuit | | Remarks |
| | #00 | #000 | |
| 0.002 Ohm | 6.1 m (20 feet) | 8.23 m (27 feet) | Single Cranking Motor |
| 0.002 Ohm | 6.1 m (20 feet) | 8.23 m (27 feet) | Dual Cranking Motor W/ Single Battery Bank |

This table lists the cable diameter and cross - sectional area for the sizes listed above.

| Cable size (AWG) | Cable diameter | | Cable area ($mm^2$) |
|---|---|---|---|
| | mm | in | |
| #0 | 7.8 | (.3065) | 47.8 |
| #00 | 8.4 | (.3310) | 55.4 |
| #000 | 9.2 | (.3625) | 66.5 |
| #0000 | 10.0 | (.3938) | 78.5 |

Starting motor circuit resistance will be affected by cable size and length, the number of connections in the system and the possible presence of additional contactors in the wiring arrangement.

### 10.2.3. Starter circuit wiring

The starter cable terminals should have soldered connections. Rosin flux should be used for soldering electrical connections. Acid flux solders will cause deterioration of the electrical connection.

Connecting two strands of cable, such as two #00 or two #000 should be carefully done in order to assure that both wires have a good connection with the battery. Next figure shows one method used to connect two cables to a battery. Tinning the stainless steel washers and cable connectors with solder will reduce the chances of problems due to corrosion. The use of a non-conductive grease at the connection will also help prevent corrosion.

The cable to battery connections should use the maximum available contact area of the battery post. Clamps must be positioned squarely on the battery post or stud with clean surface and securely fastened. Stacked terminal connections which have only point or line contact will not be satisfactory

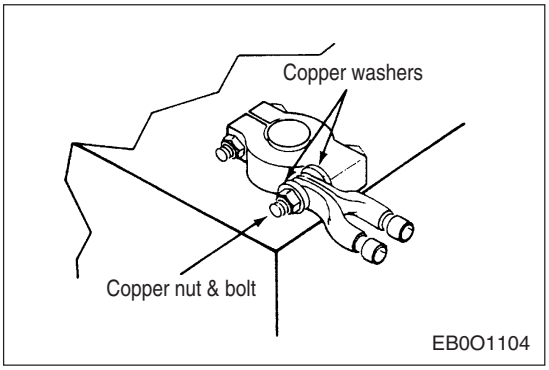




Downloaded from www.Manualslib.com manuals search engine

https://truckmanualshub.com/

**Note :** If the alternator is not supplied with the engine, the installer must assume responsibility for adequate mounting.

Since the integrity of customer supplied alternator mounting cannot be assured, DOOSAN is not responsible for any problems associated with an improperly mounted alternator that was not supplied with the engine. If the customer wishes to supply and mount their own alternator, they should contact the local DOOSAN distributor for assistance.

### 10.2.4. Alternator wiring

Unless special protective devices are used, an alternator system can be damaged by the connection of a charged battery to the alternator in reverse polarity. If a reverse connection is made while attempting to start an engine that has a dead battery or when connecting a newly changed battery, the low resistance path through the rectifier will burn up the diodes. It is recommended that one battery lead be shorter than the other so that once the battery is properly set in place it is impossible to misconnect it.

Most alternators include heavy duty voltage regulators. Generally, the range will be as follows:

| System voltage | Low | Normal | High |
|---|---|---|---|
| 12 Volt | 13.1V | 13.7V | 14.3V |
| 24 Volt | 26.2V | 27.4V | 28.6V |
| 32 Volt | 34.2V | 36.5V | 38.5V |

### 10.2.5. Explanations on the subsequent wiring diagram

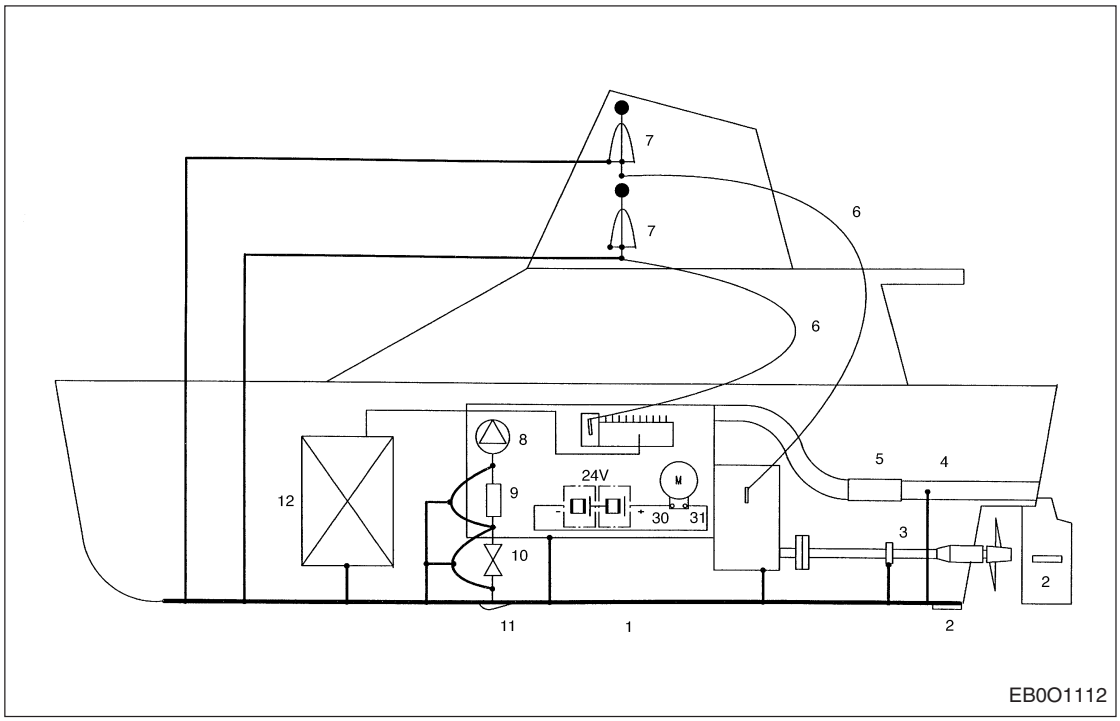




Downloaded from www.Manualslib.com manuals search engine

The following wiring diagram depicts the wiring of the engine and its most important components to prevent electrolytic corrosion. The earthing cables in the diagram are indicated in bold print.
A copper band connected to the hull (1) runs in longitudinal direction along the hull and is connected with zinc anodes (2). More anodes are located e.g. on the rudder blade.
The propeller shaft is connected with the hull via a slip ring (3).
Control cables (6) are laid from the adjusting lever of the Injection pump and from the reversing lever of the gearbox to the deck control instruments (7) that are also to be connected to the hull.
If a sea water injection system is fitted, that part of the exhaust gas pipe (4) that contains sea water is in most cases connected with a hose connection (5) and must therefore also be connected to the hull.
The pipe connections between the sea water pump (8), sea water filter (9), shut-off valve (10) and scoop (11) must also be “earthed”.
For safety reasons (sparking owing to electrostatic charging) the steel tank (12) is also connected to the hull.

**In addition, the following is to be heeded for commissioning engines:**

Only authorized specialist personnel must inspect the installation and commission the engine.

- Never operate the engine while it is dry, i.e. without lubricant or coolant.
- Do not use any additional starting aids (e.g. start pilot) for starting the engine.
- Only use operating materials (engine oil, antifreeze and anti-corrosion agents) approved by DOOSAN. Ensure cleanliness. Diesel fuel must be free of water
- Do not immediately switch off hot engine but let it idle for about 5 minutes without load so that a temperature equalization can be brought about.
- Never fill overheated engine with cold coolant
- Do not fill up with engine oil above the max. level on the dipstick. Do not exceed the engine’s maximum permissible operating inclination(12degree).
- Non-compliance with these instructions may cause severe engine damage.
- Always ensure that control and monitoring devices (charging, control, oil pressure, coolant temperature) work faultlessly.
- Never operate the sea water pump while it is dry in danger of frost empty sea water pump when the engine is shut down.



Downloaded from www.Manualslib.com manuals search engine

https://truckmanualshub.com/

# APPENDIX

- **Conversion Tables (1/2)**

| Units | To convert | Into | Multiply by | Reference |
|---|---|---|---|---|
| Length | mm | inch | 0.03937 | I ft = 12 in. |
| | cm | foot | 0.03281 | I yd = 3 ft. |
| | m | yard | 1.09361 | = 36 in. |
| | km | mile | 0.62137 | |
| | inch | mm | 25.4 | |
| | foot | cm | 30.48 | |
| | yard | m | 0.5144 | |
| | mile | km | 1.6093 | |
| Area | $cm^2$ | $in^2$ | 0.155 | 1 $ft^2$ = 144 $in.^2$ |
| | $m^2$ | $ft^2$ | 10.76 | 1 $yd^2$ = 9 $ft^2$ |
| | $km^2$ | $mile^2$ | 0.3861 | = 1296 $in.^2$ |
| | are | acre | 0.0247 | |
| | $In^2$ | $cm^2$ | 6.4516 | |
| | $ft^2$ | $m^2$ | 0.0929 | |
| | $mile^2$ | $km^2$ | 2.59 | |
| | acre | are | 40.4686 | |
| Volume | $cm^3$ | $in.^3$ | 0.06102 | • Great Britain (UK) |
| | $dm^3$(liter) | $in.^3$ | 61.0236 | 1 fl oz = 0.028413 $dm^3$ |
| | $dm^3$(liter) | $ft^3$ | 0.03531 | 1 pt = 4 gills |
| | $m^3$ | $ft^3$ | 35.315 | = 0.56826 $dm^3$ |
| | $m^3$ | $yd^3$ | 1.30795 | 1 qt = 2 pt |
| | $in.^3$ | $cm^3$ | 16.3871 | = 1.13652 $dm^3$ |
| | $in.^3$ | $dm^3$ (liter) | 0.01639 | 1 gal = 34 qt |
| | $ft^3$ | $m^3$ | 0.02832 | = 4.5461 $dm^3$ |
| | $yd^3$ | $m^3$ | 0.76456 | |
| | | | | • United States (US) |
| | | | | 1 ft oz = 0.029574 $dm^3$ |
| | | | | 1 liq = 4 gills |
| | | | | = 0.47318 $dm^3$ |
| | | | | 1 liq qt = 2 liq pl |
| | | | | = 0.94635 $dm^3$ |
| | | | | 1 gal = 231 $in.^3$ |
| | | | | = 4 liq qt |
| | | | | = 3.7854 $dm^3$ |
| Weight (Units of mass) | g | oz | 0.03527 | |
| | kg | lb | 2.2046 | 1lb =16 oz |
| | oz | g | 28.3495 | = 453.592 g |
| | lb | kg | 0.45359 | = 0.45359 kg |
| Force | $g_f$ | N (newton) | 0.009807 | 1 pd ℓ (poundal) |
| | $kg_f$ | N | 9.80665 | = 0.138255N |
| | $1b_f$ | N | 4.44822 | = force which |
| | N | $g_f$ | 101.972 | accelerates a mass |
| | N | $kg_f$ | 0.101972 | of lb by 1 $ft/s^2$ |
| | N | $1b_f$ | 0.224809 | |



Downloaded from www.Manualslib.com manuals search engine

- **Conversion Tables (2/2)**

| Units | To convert | Into | Multiply by | Reference |
|---|---|---|---|---|
| Pressure and stress | $kg_f/cm^2$ | bar | 0.98066 | 1 at = 1 $kg_f/cm^2$ |
| | $kg_f/cm^2$ | $N/m^2$ (pa) | 98066.5 | 1 Pa = 1 $N/m^2$ |
| | $kg_f/cm^2$ | $lb_f/in.^2$ | 14.2233 | 10m $H_2O$ = 1 $kg_f/cm^2$ |
| | $lb_f/in.^2$ | bar | 0.0689 | 1 mmHg = 1 Torr |
| | $1b_f/in^2$ | $N/m^2$ (pa) | 6894.76 | 1 $kg/cm^2$=98 kPa=980 hPa |
| | Bar | $kg_f/cm^2$ | 1.01972 | 760mmHg =1,013mbar |
| | $N/m^2$ (Pa) | $kg_f/cm^2$ | $1.0197 \times 10^{-5}$ | =1,013 hPa |
| | $lbf/in^2$ | $kg_f/cm^2$ | 0.07031 | 1bar = 1,000hPa |
| | Bar | $1b_f/in.^2$ | 14.5037 | |
| | $N/m^2$ (Pa) | $1b_f/in^2$ | $1.4504 \times 10^{-4}$ | |
| Energy | J | kcal | $238.8 \times 10^{-6}$ | |
| | J | kWh | $277.8 \times 10^{-9}$ | |
| | J | BTU | $947.8 \times 10^{-6}$ | |
| | kcal | BTU | 3.9683 | |
| | BTU | kcal | 0.252 | |
| Work | $kg_f \cdot m$ | N·m | 9.80665 | |
| | $lb_f \cdot ft$ | Nm | 1.356 | |
| | $kg_f \cdot m$ | $lb_f \cdot ft$ | 7.233 | |
| | $lb_f \cdot ft$ | $kg_f \cdot m$ | 0.138 | |
| | N·m | $kg_f \cdot m$ | 0.102 | |
| | Nm | $lb_f \cdot ft$ | 0.738 | |
| Power | kW | P.S | 1.3596 | 1 PS = 75 kg-m/sec |
| | kW | HP | 1.3410 | 1 HP = 550 lb.ft/se |
| | PS | kW | 0.7355 | |
| | HP | kW | 0.7457 | |
| | PS | HP | 0.98632 | |
| | HP | PS | 1.01387 | |
| Velocity | m/sec | ft/min | 196.86 | |
| | ft/min | m/sec | 0.0051 | |
| | km/h | mile/h | 0.62137 | |
| | mile/h | km/h | 1.09361 | |
| Acceleration | $m/sec^2$ | $ft/sec^2$ | 3.281 | |
| | $ft/sec^2$ | $m/sec^2$ | 0.3048 | |
| Fuel consumption | g/PS-h | g/kW-h | 1.3596 | |
| | g/HP-h | g/kW-h | 1.3410 | |
| | lb/PS-h | g/kW-h | 599.96 | |
| | lb/HP-h | g/kW-h | 608.277 | |
| | g/kW-h | g/PS-h | 0.7355 | |
| | g/kW-h | g/HP-h | 0.7457 | |
| | g/kW-h | lb/PS-h | 0.00167 | |
| | g/kW-h | lb/HP-h | 0.00164 | |
| Temperature | ˚C | ˚F | ˚C = 5/9 (˚F-32) | |
| | ˚C | K (kelvin) | ˚C = K - 273.15 | |
| | | | ˚F = 1.8 X ˚C+32 | |
| | ˚F | ˚C | ˚F = ˚R - 459.67 | |
| | ˚F | ˚R(Ranfine) | ˚F = ˚R - 459.67 | |
| | K | ˚C | K = ˚C + 273.15 | |
| | ˚R | ˚F | ˚R = ˚F + 459.67 | |



Downloaded from www.Manualslib.com manuals search engine

- **DOOSAN Marine Engine Technical Data (1/3)**

| Engine Models | Units | L034 | L034 TIH | L034 TIM | L066 TIH | L136 | L136 T | L136 TL |
|---|---|---|---|---|---|---|---|---|
| Continuous Rating (B.H.P) | PS | 70 | 120 | 145 | 180 | 160 | 200 | 240 |
| | kW | 51 | 88 | 107 | 132 | 118 | 147 | 177 |
| Engine Speed | rpm | 3000 | 3000 | 3300 | 2200 | 2200 | 2200 | 2500 |
| Combustion air | $m^3/h$ | 220 | 410 | 480 | 700 | 450 | 770 | 1005 |
| Fuel Inj. Timing (BTDC) | deg | 18 | 18 | 18 | 15 | 18 | 18 | 18 |
| Fuel Consumption | g/ps.h | 180 | 162 | 162 | 159 | 163 | 161 | 173 |
| | Lit./h | 15 | 23 | 28 | 34.5 | 31 | 39 | 50 |
| Coolant Capacity (Max/Min) | Lit. | 17/15 | 17/15 | 17/15 | 25/20 | 25/23 | 25/23 | 25/23 |
| Oil Pan Capacity( Max/ Min) | Lit. | 6.5/5.5 | 6.5/5.5 | 6.5/5.5 | 19/14 | 23/17 | 23/17 | 23/17 |
| Coolant Circulation | Lit/min | 130 | 130 | 140 | 150 | 250 | 250 | 290 |
| Amounted of heat to be dissipated from cooling circuit | MJ/h | 120 | 135 | 148 | 325 | 276 | 312 | 338 |
| Amounted of heat to be dissipated from inter cooler | MJ/h | None | 23 | 29 | 33 | None | None | None |
| Max. pressure loss in cooling system | bar | 0.6 | 0.6 | 0.6 | 0.7 | 0.7 | 0.7 | 0.7 |
| Delivery rate, Sea water pump | Lit/min | 142 | 142 | 140 | 140 | 180 | 180 | 195 |
| Exhaust gas temperature | ℃ | 460 | 480 | 490 | 400 | 520 | 450 | 470 |
| Exhaust gas mass flow | kg/h | 280 | 520 | 600 | 870 | 560 | 960 | 1260 |
| Exhaust gas volume flow | $m^3/h$ | 340 | 630 | 730 | 1050 | 680 | 1170 | 1520 |
| Radiation, convection | MJ/h | 42 | 62 | 70 | 78 | 68 | 76 | 92 |
| Engine dry weight (with marine gear) | kg | 450 | 545 | 545 | 717 | 928 | 938 | 938 |
| Engine dry weight (without marine gear) | kg | 372 | 402 | | 535 | 743 | 748 | |



Downloaded from www.Manualslib.com manuals search engine

- **DOOSAN Marine Engine Technical Data (2/3)**

| Engine Models | Units | L136 TI | L086 TIH | L086 TIM | L086 TIL | MD196 T | MD196 TI | L126 TIH | L126 TIM |
|---|---|---|---|---|---|---|---|---|---|
| Continuous Rating (B.H.P) | PS | 230 | 285 | 315 | 360 | 260 | 320 | 360 | 400 |
| | kW | 169 | 210 | 232 | 265 | 206 | 235 | 265 | 294 |
| Engine Speed | rpm | 2200 | 2100 | 2300 | 2500 | 2000 | 2000 | 2000 | 2100 |
| Combustion air | $m^3/h$ | 850 | 1050 | 1130 | 1470 | 865 | 1310 | 1344 | 1445 |
| Fuel Inj. Timing (BTDC) | deg | 14 | 15 | 15 | 13 | 14 | 16 | 14 | 14 |
| Fuel Consumption | g/ps.h | 166 | 150 | 153 | 167 | 157 | 153 | 153 | 157 |
| | Lit./h | 46 | 52 | 58 | 72 | 49 | 59 | 66 | 76 |
| Coolant Capacity (Max/Min) | Lit. | 25/23 | 26/24 | 26/24 | 26/24 | 24/19 | 24/19 | 24/19 | 24/19 |
| Oil Pan Capacity( Max/ Min) | Lit. | 23/17 | 23/17 | 23/17 | 23/17 | 25/19 | 25/19 | 25/19 | 25/19 |
| Coolant Circulation | Lit/min | 250 | 250 | 260 | 270 | 342 | 342 | 342 | 342 |
| Amounted of heat to be dissipated from cooling circuit | MJ/h | 356 | 387 | 450 | 540 | 430 | 510 | 580 | 610 |
| Amounted of heat to be dissipated from inter cooler | MJ/h | 47 | 54 | 64 | 77 | None | 66 | 73 | 82 |
| Max. pressure loss in cooling system | bar | 0.7 | 0.7 | 0.7 | 0.7 | 0.8 | 0.8 | 0.8 | 0.8 |
| Delivery rate, Sea water pump | Lit/min | 180 | 180 | 190 | 200 | 260 | 260 | 260 | 260 |
| Exhaust gas temperature | ℃ | 410 | 450 | 500 | 500 | 510 | 470 | 370 | 415 |
| Exhaust gas mass flow | kg/h | 1060 | 1310 | 1410 | 1840 | 1090 | 1300 | 1620 | 1751 |
| Exhaust gas volume flow | $m^3/h$ | 1280 | 1580 | 1710 | 2200 | 1325 | 1575 | 3025 | 3269 |
| Radiation, convection | MJ/h | 86 | 98 | 106 | 120 | 100 | 107 | 112 | 133 |
| Engine dry weight (with marine gear) | kg | 773 | 790 | 790 | 790 | 975 | 1009 | 1410 | 1410 |
| Engine dry weight (without marine gear) | kg | 994 | 1015 | 1015 | 1015 | 1225 | 1329 | 1060 | 1060 |



Downloaded from www.Manualslib.com manuals search engine

- **DOOSAN Marine Engine Technical Data (3/3)**

| Engine Models | Units | V158 TIH | V158 TIM | V158 TIL | V180 TIH | V180 TIM | V180 TIL | V222 TIH | V222 TIM | V222 TIL |
|---|---|---|---|---|---|---|---|---|---|---|
| Continuous Rating (B.H.P) | PS | 480 | 540 | 680 | 600 | 650 | 820 | 720 | 800 | 1000 |
| | kW | 353 | 397 | 500 | 441 | 478 | 603 | 530 | 588 | 736 |
| Engine Speed | rpm | 1800 | 2100 | 2300 | 1800 | 2100 | 2300 | 1800 | 2100 | 2300 |
| Combustion air | $m^3/h$ | 2350 | 2780 | 3970 | 2890 | 3190 | 4785 | 3450 | 4040 | 5995 |
| Fuel Inj. Timing (BTDC) | deg | 24 | 24 | 24 | 24 | 24 | 24 | 24 | 24 | 24 |
| Fuel Consumption | g/ps.h | 155 | 163 | 185 | 153 | 156 | 185 | 152 | 160 | 190 |
| | Lit./h | 90 | 106 | 152 | 111 | 122 | 183 | 132 | 154 | 229 |
| Coolant Capacity (Max/Min) | Lit. | 85/78 | 85/78 | 85/78 | 90/81 | 90/81 | 90/81 | 95/87 | 95/87 | 95/87 |
| Oil Pan Capacity( Max/ Min) | Lit. | 31/25 | 31/25 | 31/25 | 35/28 | 35/28 | 35/28 | 40/33 | 40/33 | 40/33 |
| Coolant Circulation | Lit/min | 495 | 585 | 640 | 495 | 585 | 640 | 495 | 585 | 640 |
| Amounted of heat to be dissipated from cooling circuit | MJ/h | 890 | 1060 | 1405 | 1130 | 1320 | 1690 | 1340 | 1570 | 2070 |
| Amounted of heat to be dissipated from inter cooler | MJ/h | 111 | 134 | 169 | 141 | 159 | 209 | 167 | 209 | 271 |
| Max. pressure loss in cooling system | bar | 1.0 | 1.0 | 1.0 | 1.0 | 1.0 | 1.0 | 1.0 | 1.0 | 1.0 |
| Delivery rate, Sea water pump | Lit/min | 375 | 460 | 510 | 445 | 530 | 580 | 445 | 530 | 580 |
| Exhaust gas temperature | ℃ | 320 | 320 | 390 | 340 | 330 | 350 | 330 | 320 | 400 |
| Exhaust gas mass flow | kg/h | 1842 | 2168 | 2821 | 2347 | 2643 | 3383 | 2786 | 3214 | 4153 |
| Exhaust gas volume flow | $m^3/h$ | 3610 | 4250 | 5530 | 4600 | 5180 | 6630 | 5460 | 6300 | 8140 |
| Radiation, convection | MJ/h | 139 | 171 | 225 | 182 | 204 | 256 | 215 | 242 | 328 |
| Engine dry weight (with marine gear) | kg | 1710 | 1710 | 1710 | 2065 | 2065 | 2065 | 2460 | 2460 | 2460 |
| Engine dry weight (without marine gear) | kg | 1300 | 1300 | 1300 | 1550 | 1550 | 1550 | 1750 | 1750 | 1750 |



Downloaded from www.Manualslib.com manuals search engine