https://truckmanualshub.com/

U.S.A. : **KUBOTA TRACTOR CORPORATION**
3401 Del Amo Blvd., Torrance, CA 90503, U.S.A.
Telephone : (310)370-3370
Western Division : 1175 S. Guild Avc., Lodi, CA 95240
Telephone : (209)334-9910
Central Division : 14855 FAA Blvd., Fort Worth, TX 76155
Telephone : (817)571-0900
Northern Division : 6300 at One Kubota Way, Groveport, OH 43125
Telephone : (614)835-1100
Southeast Division : 1025 Northbrook Parkway, Suwanee, GA 30024
Telephone : (770)995-8855

Canada : **KUBOTA CANADA LTD.**
5900 14th Avenue, Markham, Ontario, L3S 4K4, Canada
Telephone : (905)294-7477

France : **KUBOTA EUROPE S.A.S**
19-25, Rue Jules Vercruysse, Z.I. BP88, 95101 Argenteuil Cedex, France
Telephone : (33)1-3426-3434

Italy : **KUBOTA EUROPE S.A.S Italy Branch**
Via Grandi, 29 20068 Peschiera Borrome (MI) Italy
Telephone : (39)02-51650377

Germany : **KUBOTA BAUMASCHINEN GmbH**
Steinhauser str, 100, 66482 Zweibrucken Rheinlandpfalz Germany
Telephone : (49)6332-4870100

U.K. : **KUBOTA (U.K.) LTD.**
Dormer Road, Thame, Oxfordshire, OX9 3UN, U.K.
Telephone : (44)1844-214500

Australia : **KUBOTA TRACTOR AUSTRALIA PTY LTD.**
25-29 Permas Way, Truganina, VIC 3029, Australia
Telephone : (61)-3-9394-4400

Malaysia : **SIME KUBOTA SDN. BHD.**
No.3 Jalan Sepadu 25/123 Taman Perindustrian Axis,
Seksyen 25, 40400 Shah Alam, Selangor Darul Ehsan Malaysia
Telephone : (60)3-736-1388

Philippines : **KUBOTA PHILIPPINES, INC.**
232 Quirino Highway, Baesa, Quezon City 1106, Philippines
Telephone : (63)2-422-3500

Taiwan : **SHIN TAIWAN AGRICULTURAL MACHINERY CO., LTD.**
16, Fengping 2nd Rd, Taliao Shiang Kaohsiung 83107, Taiwan R.O.C.
Telephone : (886)7-702-2333

Thailand : **SIAM KUBOTA CORPORATION CO., LTD.**
101/19-24 Moo 20, Navanakorn Industrial Estate, Tambon Khlongnueng, Amphur Khlongluang,
Pathumthani 12120, THAILAND
Telephone : (66)2-909-0300

Japan : **KUBOTA Corporation**
Farm & Industrial Machinery International Operations Headquarters
2-47, Shikitsuhigashi 1-chome, Naniwa-ku, Osaka, Japan 556-8601

English (U.S.A.)
Code No. RA238-8150-7

U
17

OPERATOR'S MANUAL

KUBOTA EXCAVATOR

MODEL U17

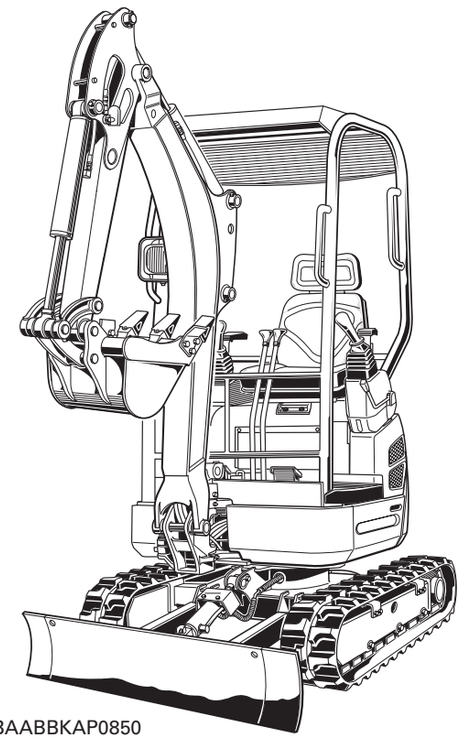

1BAABBKAP0850

PRINTED IN JAPAN

© KUBOTA Corporation 2008

READ AND SAVE THIS MANUAL

https://truckmanualshub.com/

LIST OF ABBREVIATION

Abbreviations	Description
API	American Petroleum Institute
ASTM	American Society for Testing and Materials, USA
CECE	Commitee for European Construction Machinery
DIN	German Institute for Standards, Federal Republic of Germany
EN	European Standard
Front	“Front” means the front view towards the boom and dozer
Hi	High speed
ISO	International Organization for Standardization
JIS	Japanese Industrial Standard
L	Volume (Liter)
Lo	Low speed
L/min	Liter per minute
MIL	Military Standards
OPG (Top Guard Level I)	Operator Protective Guards of Top Guard Level I
ROPS	Roll-over Protective Structures
rpm	Revolutions Per minute
SAE	Society of Automotive Engineering
TPSS	Two Pattern Selection System

California Proposition 65

⚠ WARNING ⚠

Engine exhaust, some of its constituents, certain vehicle components and fluids, contain or emit chemicals known to the State of California to cause cancer and birth defects or other reproductive harm.

IMPORTANT

The engine in this machine is not equipped by the manufacturer with a standard spark arrester.
It is a violation of California Public Resource Code Section 4442 to use or operate this engine on or near any forest-covered, brush-covered land, or grass- covered land unless the exhaust system is equipped with a working spark arrester meeting state laws. Other states or federal areas may have similar laws.

https://truckmanualshub.com/

GENERAL SYMBOLS

The instruments and operation elements have been marked with a series of symbols in order to simplify the operation of your excavator. These symbols are listed below with the respective descriptions.

- Safety alert Symbol
- Warning lamp “Fuel level too low”
- System lamp
- Warning lamp “Engine Oil pressure”
- Warning lamp “Battery charge”
- Warning lamp “Auto Idle (AI) Lamp”
- Indicator lamp “Glow”
- Working light switch
- Horn
- Wiper/Washer switch
- Diesel
- Hydraulic fluid
- Gear oil
- Grease
- Fast
- Slow
- Excavator - Overhead movement toward the front
- Excavator - Overhead movement toward the rear
- Boom up
- Boom down
- Arm up
- Arm crowd
- Bucket crowd
- Bucket dump
- Boom swing (left)
- Boom swing (Right)
- Dozer raise
- Dozer lower
- Operation direction of control lever
- Operation direction of control lever
- Read operator’s manual
- Engine stop control lamp
- Lock
- Unlock
- Reducing / Increasing track width

https://truckmanualshub.com/

FOREWORD

You are now the proud owner of a KUBOTA excavator. This excavator is a product of KUBOTA quality engineering and manufacturing. It is made of the fine materials and under rigid quality control systems. It will give you long, satisfactory service. To obtain the best use of your excavator, please read this manual carefully. It will help you become familiar with the operation of the excavator and contains many helpful hints about excavator maintenance. It is KUBOTA's policy to utilize as quick as possible every advance in our research. The immediate use of new techniques in the manufacture of products may cause some small parts of this manual to be outdated. KUBOTA distributors and dealers will have the most up-to-date information. Please do not hesitate to consult with them.

https://truckmanualshub.com/

SAFETY FIRST

This symbol, the industry's "Safety Alert Symbol", is used throughout this manual and on labels on the machine itself to warn of the possibility of personal injury. Read these instructions carefully. It is essential that you read the instructions and safety regulations before you attempt to assemble or use this unit.

DANGER : Indicates an imminently hazardous situation which, if not avoided, will result in death or serious injury.

WARNING : Indicates a potentially hazardous situation which, if not avoided, could result in death or serious injury.

CAUTION : Indicates a potentially hazardous situation which, if not avoided, may result in minor or moderate injury.

IMPORTANT : Indicates that equipment or property damage could result if instructions are not followed.

NOTE : Gives helpful information.

https://truckmanualshub.com/

https://truckmanualshub.com/

CONTENTS

⚠ SAFE OPERATION 1

DEALER SERVICE 13

TECHNICAL DATA 14

Operating Instructions

DESCRIPTION OF MACHINE PARTS 15

INSTRUMENT PANEL AND CONTROL ELEMENTS.....16

BEFORE START 19
- DAILY CHECKS.....19
- Tilting The Seat 19
- OPENING AND CLOSING OF PARTS 19
- HANDLING THE SAFETY DEVICES 22

OPERATION OF THE ENGINE.....23
- STARTING THE ENGINE 23
- STARTING THE ENGINE UNDER COLD CONDITIONS ...31
- STOPPING THE ENGINE.....31
- STARTING WITH AN AUXILIARY BATTERY.....32

EXCAVATOR OPERATION 33
- CONTROL OBSERVATIONS DURING OPERATION 33
- RUNNING-IN OF THE NEW EXCAVATOR 33
- STARTING 33
- TWO PATTERN SELECTION SYSTEM (TPSS).....35
- OPERATION OF THE BOOM.....36
- OPERATION OF THE ARM 36
- OPERATION OF BUCKET 37
- SWIVEL (UNIT SWING) OPERATION 37
- BOOM SWING OPERATION 38
- BOOM SWING PEDAL.....38
- OPERATION OF TRACK WIDTH CHANGE AND DOZER 39
- SERVICE PORT OPERATION 41
- DRIVING 41
- TURNS 43
- UP AND DOWNHILL TRAVELLING 45
- PARKING ON A SLOPE.....45
- IMPORTANT INFORMATION ON EXCAVATOR OPERATION 46

TRANSPORTING THE EXCAVATOR ON A TRUCK.....47

LIFTING OF THE EXCAVATOR.....49

Care and Maintenance

MAINTENANCE.....51
- MAINTENANCE INTERVALS.....51
- DAILY CHECKS.....53

REGULAR CHECKS AND MAINTENANCE WORK.....58
- EVERY 50 SERVICE HOURS 58
- EVERY 200 SERVICE HOURS 60
- EVERY 250 SERVICE HOURS.....60

https://truckmanualshub.com/

EVERY 500 SERVICE HOURS.....61
EVERY 1000 SERVICE HOURS...66
EVERY 1000 SERVICE HOURS OR ONCE A YEAR 67
EVERY 2000 SERVICE HOURS 67
ANNUAL SERVICING 68
BIENNIAL SERVICING 68
OTHER SERVICING.....69

OTHER ADJUSTMENTS AND REPLACEMENTS.....70
PURGING OF THE FUEL SYSTEM 70
ADJUSTMENT OF TRACKS.....70
EXCHANGE OF BUCKET TEETH AND SIDE CUTTERS [JPN BUCKET VERSION].....72
FUSES 74

TROUBLESHOOTING.....75

OPERATION UNDER COLD WEATHER CONDITIONS 82
PREPARATION FOR OPERATION IN COLD WEATHER 82
PROCEDURE AFTER DONE WORK 82

LONG STORAGE 83

RECOMMENDED OILS 85

MAIN DIMENSIONS 87

LIFTING CAPACITY 88

https://truckmanualshub.com/

SAFE OPERATION

The best insurance against accidents is to abide by the safety regulations.
Read and understand this section carefully, before operating the excavator.
Every user, however experienced, should carefully read and understand this section and those of the attachments and accessories before taking the excavator into operation. The owner is obliged to inform the operators of these instruction in detail.
Keep this manual in the storage place. (See "Keeping the Operator's Manual" in the BEFORE START section.)

1. BEFORE OPERATION

1. Make yourself acquainted with the excavator and be aware of its limits. Read this operator's manual carefully before starting the excavator.
2. Obey the danger, warning and caution labels on the machine.
3. For your safety, a ROPS/OPG (Top Guard Level I) with a seat belt is installed by KUBOTA.
   - ROPS: Roll-Over Protective Structure
   - OPG (Top Guard Level I): Operator Protective Guards of Top Guard Level I

   OPG (Top Guard Level I) in accordance with ISO10262 is equivalent in definition to FOPS (Falling Object Protective Structure).
   Always use the seat belt when the machine is equipped with a ROPS/OPG (Top Guard Level I) as this combination will reduce the risk of serious injury or death, should the excavator be upset or falling objects occur.
   Do not modify any structural members of the ROPS/OPG (Top Guard Level I) by welding, drilling, bending, grinding or cutting, as this may weaken the structure.
   If any component is damaged, replace it. Do not attempt repairs. If the ROPS/OPG (Top Guard Level I) is loosened or removed for any reason, make sure all parts are reinstalled correctly. Tighten mounting bolts to proper torque.
4. ROPS meets requirements of ISO 3471.
   OPG (Top Guard Level I) meets requirements of OSHA 1926·1003/ISO 10262.
5. The seat belt must be inspected regularly and replaced if frayed or damaged.

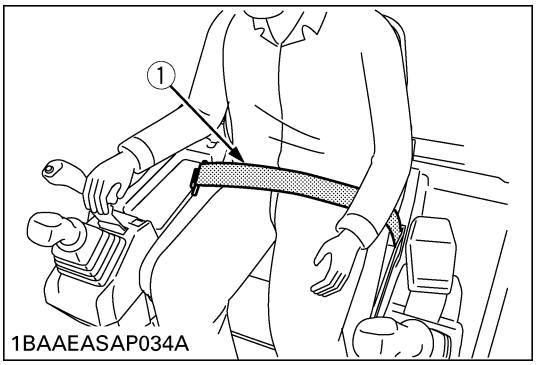

(1) Seat belt

https://truckmanualshub.com/

6. Track can be set at the narrow width 39in. (990mm) and the standard width 49in. (1240mm).
   (for details see "OPERATION OF TRACK WIDTH CHANGE AND DOZER")
   Do not operate in narrow track width 39in. (990mm), it makes risk of the excavator tipping over, operate always in standard track width 49in. (1240mm), except to pass through narrow space on a even ground.

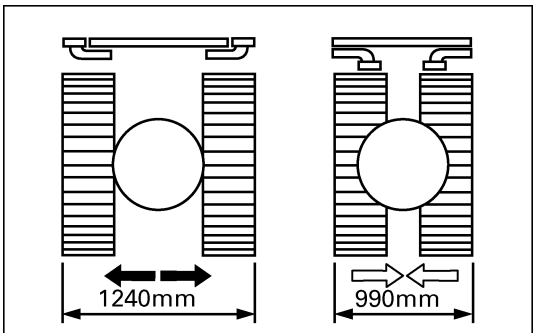

1BAAEASAP035A

7. Do not use the excavator under the influence of alcohol, medication as well as other substances. Fatigue is also dangerous.
8. Check the surroundings carefully before using the excavator or when attachments are being attached.

- Pay attention to the overhead clearance with electric wires.

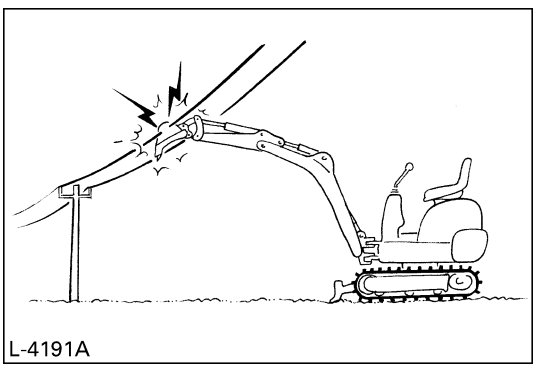
L-4191A

- Check for pipes and buried cables.
- Check for hidden holes, hindrances, soft underground and overhangs.

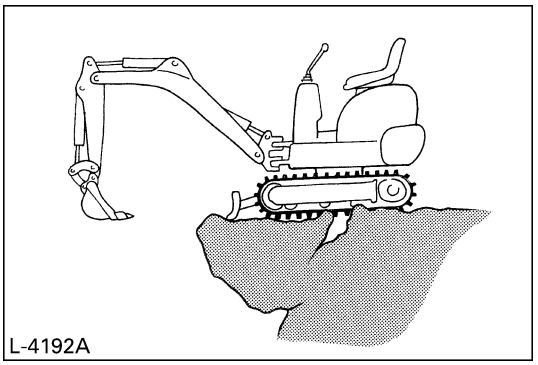
L-4192A

- During excavator use do not allow any persons within the working range.

9. Do not allow other persons to use the machine before having informed him on the exact operation and work instructions, and be assured that the operator's manual has been read and understood.
10. Do not wear baggy, torn or too large clothing when working with the excavator. Clothing can get caught in rotating parts or control elements which can cause accidents or injuries. Wear adequate safety clothing, e.g. safety helmet, safety shoes, eye protection, ear protection, working gloves, etc., as necessary and as prescribed by law or statutes.

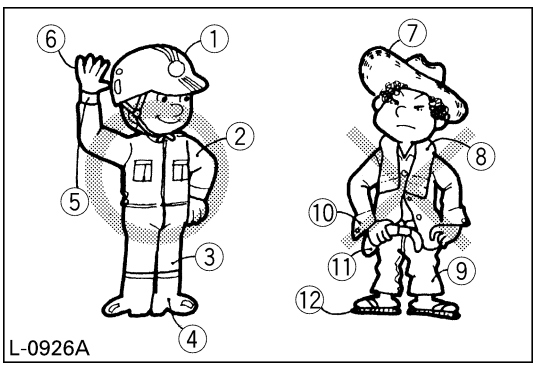

L-0926A

(1) Helmet
(2) Clothing fit for work
(3) Tight seams
(4) Good grip shoewear
(5) Well fitting cuffs
(6) Working gloves
(7) Straw hat
(8) Towel
(9) Baggy trousers
(10) Loose cuffs of the shirt
(11) Baggy shirt
(12) Rubber sandals

https://truckmanualshub.com/

11. Do not allow passengers to get on any part of the excavator seat throughout operation.
12. Check mechanical parts for correct adjustments and wear. Exchange worn or damaged parts immediately.
13. Keep your excavator clean. Heavy soiling, grease, dust and grass can inflame and cause accidents or injuries.
14. Use only KUBOTA authorized attachments.
15. Before starting the excavator, be absolutely sure that the excavator has been filled with fuel, lubricated, greased and undergone other maintenance work.
16. Do not modify the excavator, otherwise it could lead to unforeseen safety problems.
17. Make sure attachments, particulary those utilizing quick attach systems, are securely mounted.

2. STARTING OF THE EXCAVATOR

1. Get into and out of the machine safely. Always face the machine. Always use handrails and available steps and keep yourself well balanced. Do not hold any of the control levers and switches. Do not jump on or off the machine, whether stationary or in motion.
2. Start and control the excavator only from the operator's seat. The driver should not lean out of his seat when the engine is running.
3. Before starting the engine, make sure that all control levers (including auxiliary control levers) are in their neutral positions.
   Before starting the engine, make sure that the control levers, travel lever, pedals and other control elements are not stuck and can be moved smoothly.
   If stuck, for example, a lever may fail to return, possibly putting you in danger.
   If anything wrong is found, immediately pinpoint the cause and correct it.
4. Do not start the engine by jumping the starter connections. Do not try to circumvent using the starter switch, otherwise the engine could start suddenly and the excavator could move.

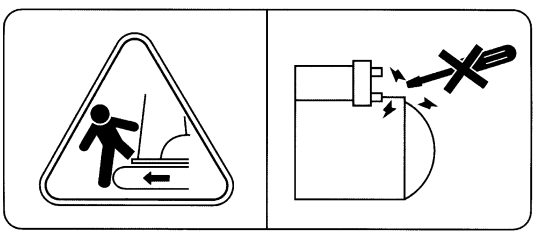

https://truckmanualshub.com/

5. Make sure that the dozer is on the front side. (The dozer must be raised.) If the levers are activated with the dozer on the rear end, the driving direction is in the opposite direction of the drive levers.

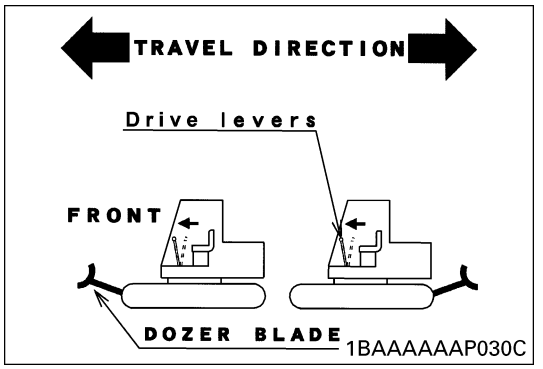

6. Do not run the engine in closed or badly ventilated rooms. Carbon monoxide is colourless, odourless and deadly.

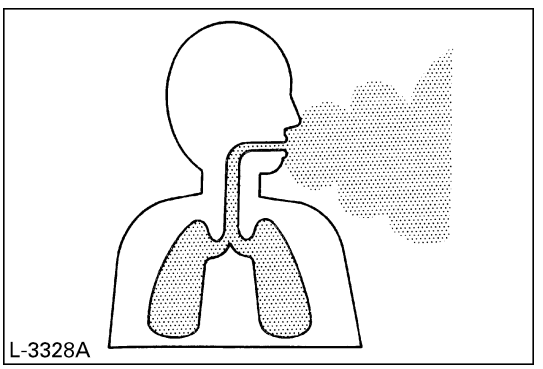

7. Keep all safety equipment and covers in place. Replace damaged or missing safety device.
8. Precautions against tipping over. In order to secure safe operation, keep away from steep slopes and embankments. Do not swing the bucket downwards. Lower the dozer during digging. Keep the bucket as low as possible while driving upwards. Turn slowly on slopes (do not fast). Do not keep the excavator near the edges of trenches and banks, as the earth can give away due to the weight of the excavator.
9. Watch out at all times where the excavator is being moved to. Keep an eye out for hindrances.
10. Keep enough distance from trench and bank edges.

◆ Safety for children

Tragedy can occur if the operator is not alert to the presence of children. Children generally are attached to machines and the work they do.

1. Never assume that children will remain where you last saw them.
2. Keep children out of the work area and under the watchful eye of another responsible adult.
3. Be alert and shut your machine down if children enter the work area.
4. Never carry children on your machine. There is no safe place for them to ride. They may fall off and be run over or interfere with your control of the machine.
5. Never allow children to operate the machine even under adult supervision.
6. Never allow children to play on the machine or on the attachments.
7. Use extra caution when backing up. Look behind and down to make sure the area clear before moving.
8. When parking your machine, if at all possible, park on a firm, flat and level surface; if not, park across a slope. Lower the bucket and dozer to the ground, remove the key place the control lock levers in the locked position from the ignition before you leave.

https://truckmanualshub.com/

3. AFTER OPERATION

Before leaving the machine,

- Bring the excavater on a firm, flat and level surface.
- Lower the attachments and the dozer blade on the ground.
- Stop the engine.
- Lock all control levers.
- Remove the key.

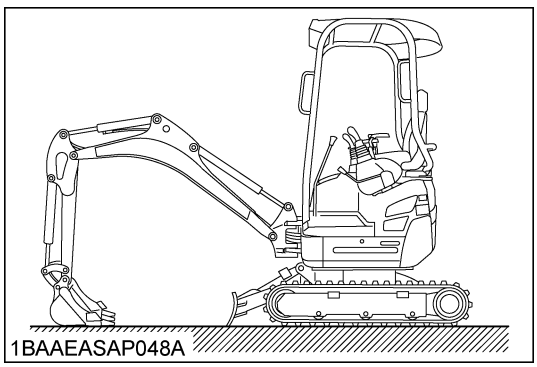

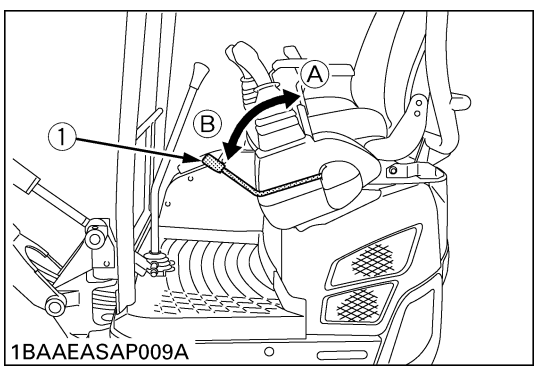

(1) lock lever for control lever (Left side) *(A) "Lock"* *(B) "Unlock"*

4. SAFE LOADING AND TRANSPORT OF THE EXCAVATOR

1. Observe all regulations concerning the transport of excavators on public roads.
2. Use adequately long and robust ramps when loading on a truck. (for details see "TRANSPORTING THE EXCAVATOR ON A TRUCK")
3. Do not change the running direction and to avoid a tipping over, do not try to swing the attachment crosswise to the loading ramps.
4. After loading of the excavator on a truck, engage the swing lock pin.
   Lower the attachment on the loading plane and release the pressure from the hydraulic system.
   Block the tracks with blocks and wire down the excavator. After loading the excavator on a truck, tie down the undercarriage of the excavator with a strong steel wire on the truck.

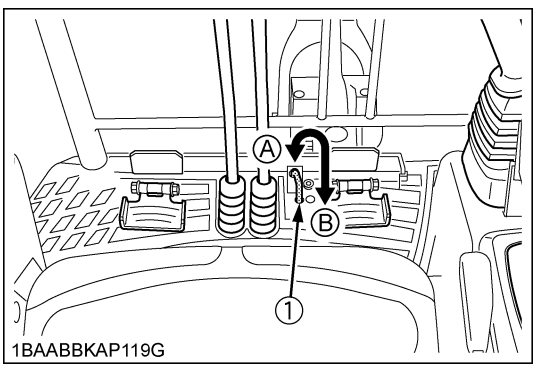

(1) Swing lock pin *(A)"Unlock"* *(B)"Lock"*

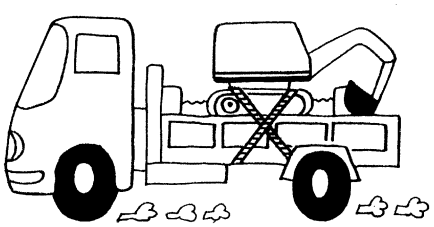

L-4200A

https://truckmanualshub.com/

5. Do not brake abruptly with the excavator loaded. Mortal accidents could happen.
6. If the excavator is used to tow another machine, the load must be smaller than the strength of the hook.
7. Do not use hooks on the roof of canopy for lifting the excavator.

Max. drawbar pull at coupling hook	32.3 kN
Max. vertical load at coupling hook	2.7 kN

5. MAINTENANCE

Before doing maintenance work on the excavator, place the machine on a firm, flat and level surface, lower the attachments on the ground, stop the engine then remove the key and release the cylinder pressure by actuating the levers. When dismantling hydraulic parts, make sure that the hydraulic oil has cooled down sufficiently to avoid burns.

Start maintenance work carefully, e.g. loosen screws slowly so that oil will not squirt out.

1. Before doing work on the engine, the exhaust system, the radiator and the hydraulics, let the excavator cool down sufficiently.
2. Turn off the engine at all times when filling with fuel. Avoid spilling and over-filling of fuel.
3. Smoking is prohibited while tanking and handling the battery! Keep sparks and fire away from the fuel tank and battery. Flammable gases escape from the battery, especially during charging.
4. Do not use or charge the refillable type battery if the fluid level is below the LOWER (lower limit level) mark. Otherwise, the battery component parts may prematurely deteriorate, which may shorten the battery's service life or cause an explosion. Check the fluid level regularly and add distilled water as required so that the fluid level is between the UPPER and LOWER levels.
5. Read and follow “STARTING WITH AN AUXILIARY BATTERY” in “OPERATION OF THE ENGINE”, when starting with an auxiliary battery.
6. To avoid short-circuiting the battery, always remove the earth cable first and attach the plus cable first.
7. Keep a first-aid box and a fire extinguisher at hand at all times.
8. Do not open the radiator cap before the radiator has cooled down sufficiently.
   First loosen the cap to the first stop and allow the system enough time to release the remaining pressure. Then loosen the cap completely.
9. Leaking hydraulic fluid has enough pressure to penetrate the skin and cause serious injuries. Leakages from pin holes can be totally invisible. Do not use the bare hand for checking on possible leakages. Always use a piece of wood or cardboard. It is strongly recommended to use a face mask or eye protection.
   Should injuries occur with leaking hydraulic fluid, contact a doctor immediately. This fluid can cause gangrene or serious allergic reactions.

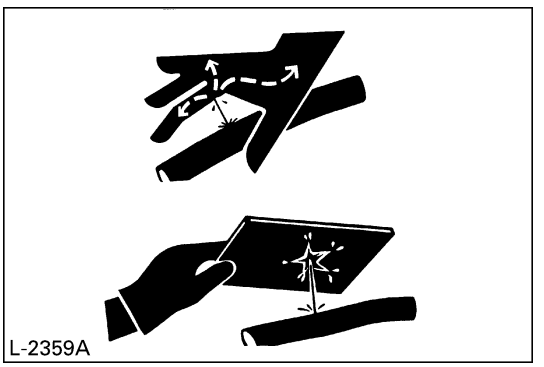

10. To avoid leakage of battery acid which contains heavy metals, do not throw the battery away.
11. Observe all laws and regulations concerning the disposal of used oil, coolants, solvents, hydraulic fluids, battery acids and batteries.
12. To avoid fire, do not heat the hydraulic components (tanks, pipes, hoses, cylinders) before they are drained and washed.

https://truckmanualshub.com/

13. Use a face mask or eye protection to protect the eyes and respiratory system against dust and other foreign particles.

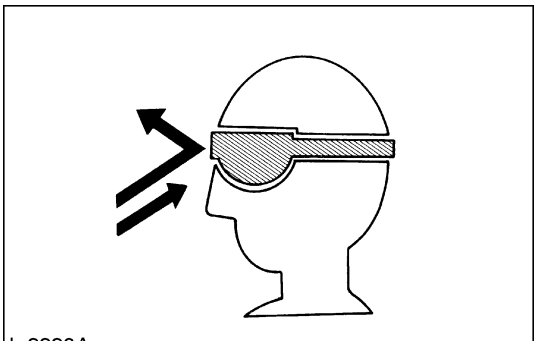

14. Securely support excavator with stands or suitable blocking before working underneath. For your safety, do not work under any hydraulically supported devices. They can settle, suddenly leak down, or be accidentally lowered.
15. Do not crawl under the excavator if the excavator is only supported by the boom and arm or the dozer. The excavator can tip over or lower itself due to hydraulic pressure loss. Always use safety struts or other appropriate supports.
16. KUBOTA uses no parts which are lined with asbestos. Do not use these kind of parts even if they can be installed.
17. Fire prevention
    Excavator and some attachments have components that are at high temperatures under normal operating conditions. The primary source of high temperatures is the engine and exhaust system. The electrical system, if damaged or incorrectly maintained, can be a source of arcing or sparks.
    The following fire prevention guidelines will help to keep your equipment up and running efficiently and keep the risk of fire to a minimum.

- Blow off all accumulated debris near hot engine exhaust components such as turbocharger and exhaust manifold as well as exhaust pipes and muffler more frequently when working in severe conditions.
- Clean out all accumulated flammable debris such as leaves, straw, pine needles, branches, bark, small wood chips and any other combustible materials from inside the machine belly pans or lower unit structures as well as from area in proximity to the engine.
- Inspect all fuel lines and hydraulic hoses for wear or for deterioration. Replace them immediately if they begin to leak.
- Examine electrical wiring and connectors frequently for damage. Repair any wires that are loose or frayed before operating the machine. Clean all electrical connections and tighten all electrical connections as necessary.
- Inspect the exhaust system daily for any signs of leakage. Check for broken pipes and muffler and also for loose or missing bolts, nuts and clamps. If any exhaust leaks or fractured parts are found, repairs must be completed prior to operation.
- Always keep a multipurpose fire extinguisher on or near the machine. Be familiar with the operation of the fire extinguisher.

https://truckmanualshub.com/

6. DANGER, WARNING AND CAUTION LABELS

(1) Code No. RA238-5747-1

⚠ WARNING

TO AVOID PERSONAL INJURY OR DEATH:

- Do not move raised load over people.
- It is forbidden to lift loads greater than those values mentioned in the lifting capacity tables.
- The values mentioned in the table are valid only on even, hard grounds. When lifting on soft ground, the machine can tilt over due to the fact that the load is concentrated only on one side of the machine.
- The table values are calculated at the end of the arm without the bucket. In order to find the allowable loads for machines with bucket, the bucket weight must be subtracted from the values in the table.
- Operate always in standard track width 1240mm (48.8in), except to pass through narrow space. Do not operate in narrow track width 990mm (39.0 in), it makes risk of the excavator tipping over.

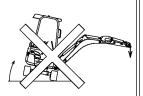

1. The lifting capacities are based on ISO 10567 and do not exceed 75 % of the static tilt load of the machine or 87 % of the hydraulic lifting capacity of the machine.
2. The strokes are as follows.
   1) The load point corresponds to the front bolt part of the arm
   2) The machine positions are (i) over-front (Blade down), (ii) over-front (Blade up), and (iii) over-side.
   3) The operating cylinder is the boom cylinder.
3. The bucket of the excavator, the hook, the sling and other lifting accessories are taken into consideration for the loads.

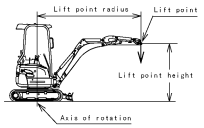

LIFT POINT HEIGHT (ft)	LIFTING CAPACITY OVER-FRONT BLADE DOWN Unit=1000 lbs.				LIFTING CAPACITY OVER-FRONT BLADE UP Unit=1000 lbs.				LIFTING CAPACITY OVER-SIDE TRACK WIDTH 1240mm Unit=1000 lbs.				ONLY REFERENCE LIFTING CAPACITY OVER-SIDE TRACK WIDTH 990mm Unit=1000 lbs.			
	LIFT POINT RADIUS (ft)				LIFT POINT RADIUS (ft)				LIFT POINT RADIUS (ft)				LIFT POINT RADIUS (ft)			
	4	6	8	10	4	6	8	10	4	6	8	10	4	6	8	10
8			0.67				0.57				0.54				0.36	
6		0.62	0.70			0.62	0.57			0.62	0.53			0.56	0.36	
4		1.17	0.85	0.69		0.85	0.55	0.39		0.78	0.51	0.36		0.52	0.34	0.24
GL 2		1.50	0.96	0.70		0.78	0.52	0.38		0.72	0.49	0.35		0.46	0.32	0.23
0		1.40	0.94	0.67		0.76	0.50	0.37		0.70	0.47	0.34		0.44	0.30	0.22
−2	1.64	1.19	0.82		1.53	0.76	0.50		1.37	0.70	0.46		0.81	0.44	0.29	
−4	1.58	0.94	0.63		1.55	0.77	0.50		1.38	0.71	0.47		0.83	0.45	0.30	

Machine with ROPS canopy and rubber crawler, without bucket

1BAAEAZAP0030

(2) Code No. RA228-5733-1

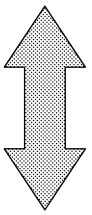

⚠ CAUTION

TO AVOID PERSONAL INJURY:

1. Study control lever pattern A and pattern B. Then choose the one which is most familiar.
2. Position the pattern selector lever in either the left side position of the machine (pattern A) or the right side position (pattern B).
3. Familiarize yourself with the pattern selected by operating slowly.

1BAAEADAP014A

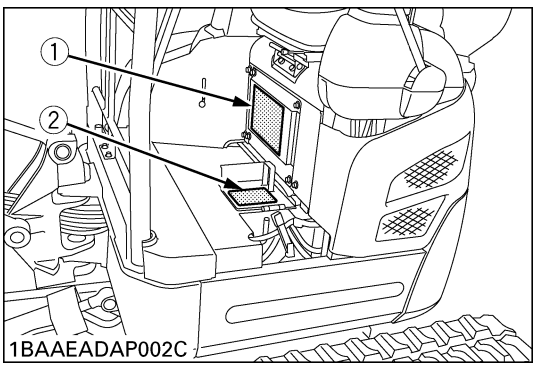

1BAAEADAP002C

https://truckmanualshub.com/

(1) Code No. RC418-5753-1

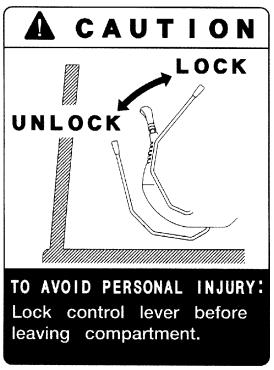

1BAAAARAP0450

(2) Code No. RA228-5762-1

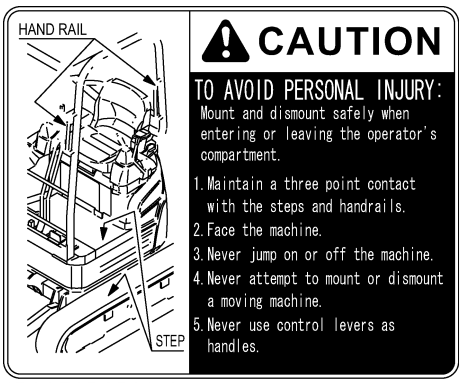

1BAAEADAP015A

(3) Code No. RD517-5795-2
[Both sides]

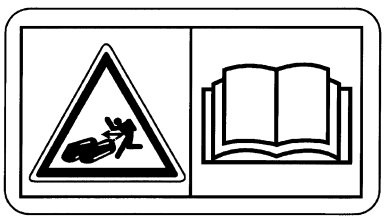

1BAABAMAP0010

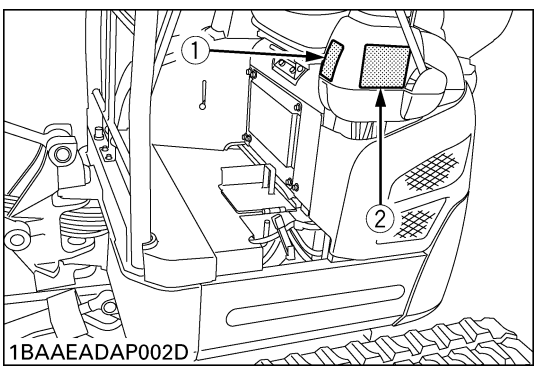

1BAAEADAP002D

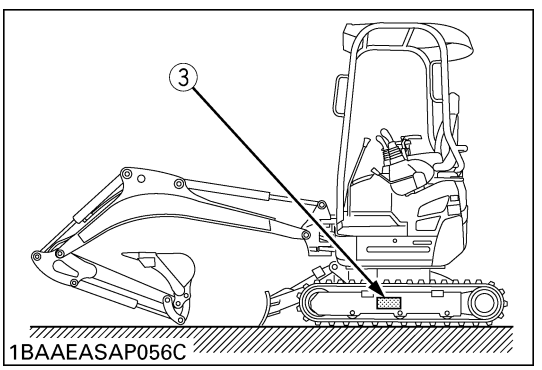

1BAAEASAP056C

https://truckmanualshub.com/

(1) Code No. RC418-5728-4

⚠CAUTION

TO AVOID PERSONAL INJURY:

1. Read and understand operator's manual before attempting to start or operate the excavator.
2. Before starting engine, make sure all control levers are in neutral and the operating area is clear of all bystanders.
3. Never allow passengers on any part of the excavator while operating.
4. Know your work area before starting operation.
   - ●Check underground lines and cables.
   - ●Check overhead clearance with electric wires.
   - ●Stay off slopes too steep for safe operation.
   - ●Check for hidden holes, obstacles or drop-offs and overhangs.
5. Make sure all shields are in place and securely fastened.
6. Before dismounting from the machine, lower all attachment to the ground, stop the engine and remove the key.
7. Damaged ROPS must be replaced. not repaird or revised.

IMPORTANT Never use boom, dipper, or bucket to hammer or beat sideways. Excavator is not intended for these usages.

1BAAAAQAP0780

(2) Code No. RC418-5727-4

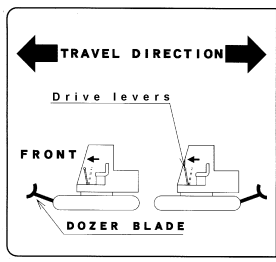

⚠WARNING

TO AVOID PERSONAL INJURY OR DEATH:
Before moving the excavator,
KNOW THE LOCATION OF THE DOZER BLADE.
The excavator will travel
in the direction of the dozer blade
when drive levers are moved away
from the operator.

DO NOT OPERATE WITHOUT ROPS.

YOU COULD BE CRUSHED.

USE SEAT BELT

1BAAAAQAP0790

(3) Code No. RC418-5733-5

⚠DANGER

TO AVOID SERIOUS INJURY OR DEATH:
Check overhead clearance with electric wires.

1BAAAAQAP0800

(4) Code No. RD809-5738-2

⚠WARNING

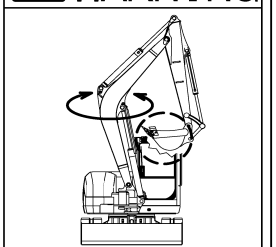

ATTACHMENT IMPACT HAZARD
KEEP ATTACHMENT AWAY
FROM CAB AND MACHINE.
FAILURE TO DO SO MAY
RESULT IN SEVERE INJURIES
OR DEATH OR DAMAGE TO THE
BOOMCYLINDER, HYDRAULIC
HOSES OR THE CAB.

1BAAAARAP1000

(6) Code No. 6C300-4744-1

⚠WARNING

Operation of this equipment may create sparks that can start fires around dry vegetation.
A spark arrester may be required.
The operator should contact local fire agencies for laws or regulations relating to fire prevention requirements.

1AGAIHFAP069A

(5) Code No. RA228-5751-2

DANGER EXPLOSIVE GASES
Cigarettes, flames or sparks could cause battery to explode. Always shield eyes and face from battery. Do not charge or use booster cables or adjust post connections without proper instruction and training.
KEEP VENT CAPS TIGHT AND LEVEL
POISON CAUSES SEVERE BURNS
Contains sulfuric acid. Avoid contact with skin, eyes or clothing. In event of accident flush with water and call a physician immediately.
KEEP OUT OF REACH OF CHILDREN

1BAAAAQAP0960

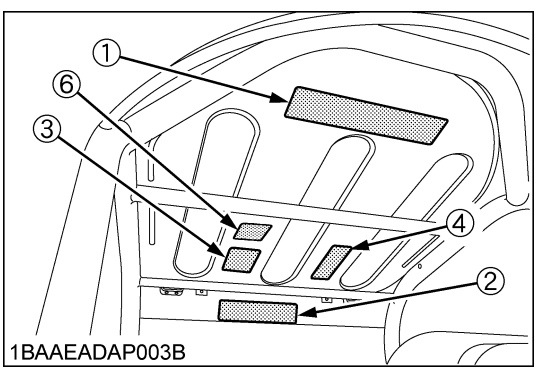

1BAAEADAP003B

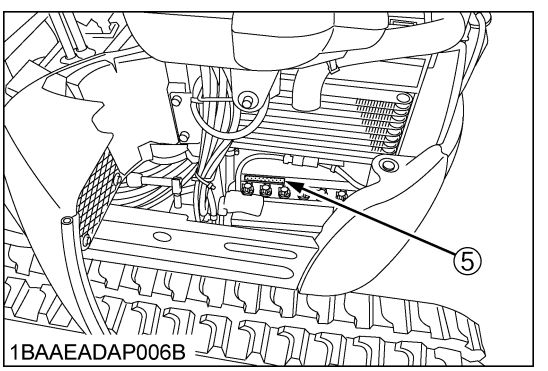

1BAAEADAP006B

https://truckmanualshub.com/

(1) Code No. RC108-5718-1

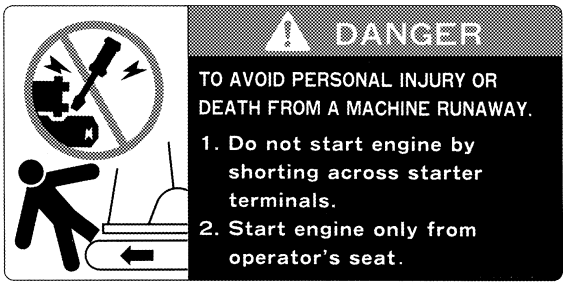

1BAAAAQAP0910

(2) Code No. RA228-5728-2
[Both sides]

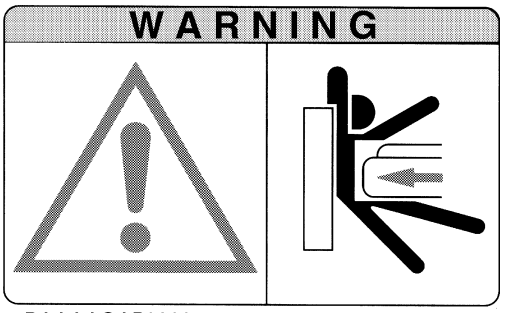

1BAAAAQAP0900

(3) Code No. RD358-5736-1
Diesel fuel only No fire

1BAAGAAAP1810

(4) Code No. RA228-5776-1

1BAAEADAP016A

(6) Code No. RC108-5796-1
[Both sides]

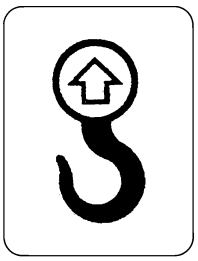

1BAAAAQAP0940

(5) Code No. 68328-5735-1 [Both sides]

1BAAAAQAP0930

(7) Code No. RB419-5796-2
[Both sides]

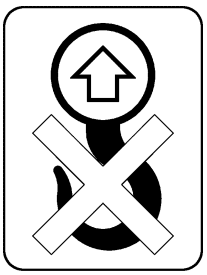

1BAABAUAP2720

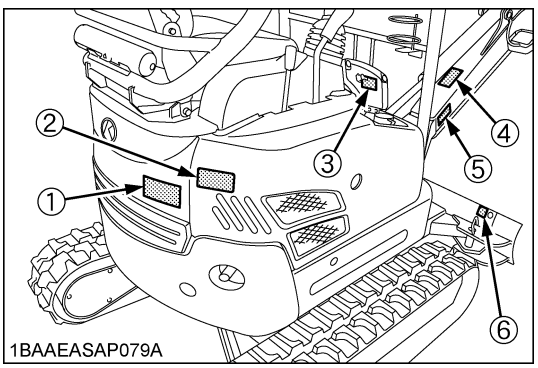

1BAAEASAP079A

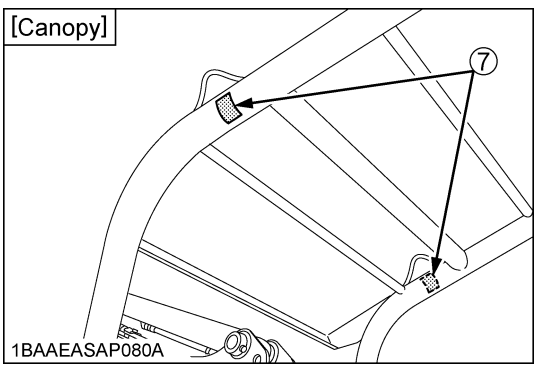

1BAAEASAP080A

https://truckmanualshub.com/

(1) Code No. RB238-5737-1

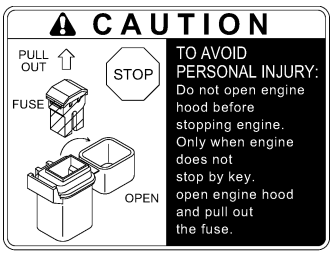

1BAAEADAP013A

(2) Code No. RC418-5737-2

1BAAAAQAP0880

(3) Code No. TC030-4958-1

1BAAAAQAP0860

(4) Code No. RC108-5754-1

1BAAAAQAP0890

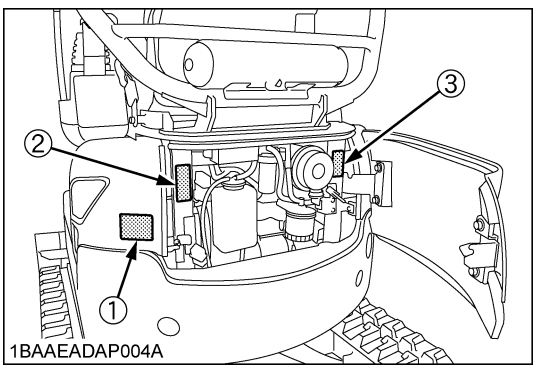

1BAAEADAP004A

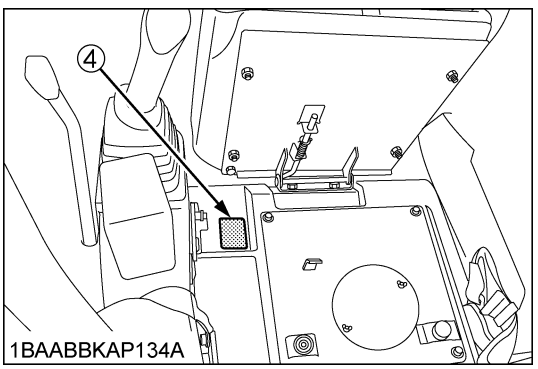

1BAABBKAP134A

7. CARE OF DANGER, WARNING AND CAUTION LABELS

(1) Keep danger, warning and caution labels, clean and free from obstructing material.
(2) Clean danger, warning and caution labels with soap and water, dry with a soft cloth.
(3) Replace damaged or missing danger, warning and caution labels with new labels from your KUBOTA dealer.
(4) If a component with danger, warning and caution label (s) affixed is replaced with new part, make sure new label (s) is (are) attached in the same location (s) as the replaced component.
(5) Mount new danger, warning and caution labels by applying on a clean dry surface and pressing any bubbles to outside edge.

https://truckmanualshub.com/

DEALER SERVICE

Your KUBOTA dealer is always ready to help so that your excavator offers the best performance. After having carefully read this manual, you will realize that much of the routine maintenance can be done by yourself. Your KUBOTA dealer is responsible for servicing and the delivery of spare parts. When ordering spare parts from your KUBOTA dealer, always mention the serial number of the excavator and the engine.
Note these numbers right away in the supplied lines.

	Model	Serial No.
Excavator	_____	_____
Engine	_____	_____

Dealer's name
(To be filled in through the owner)

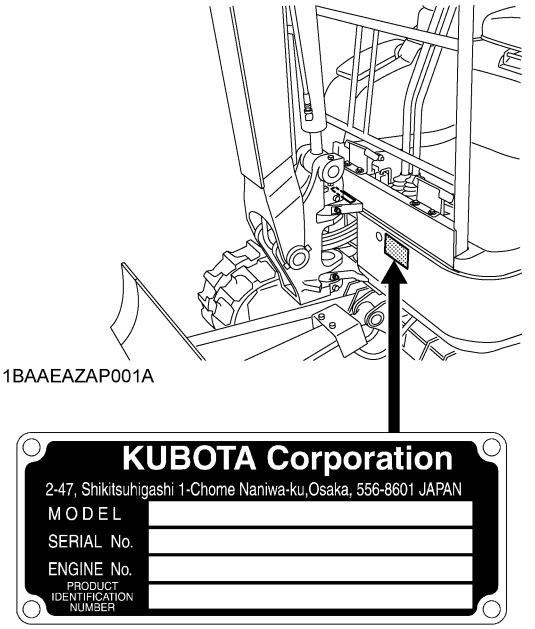

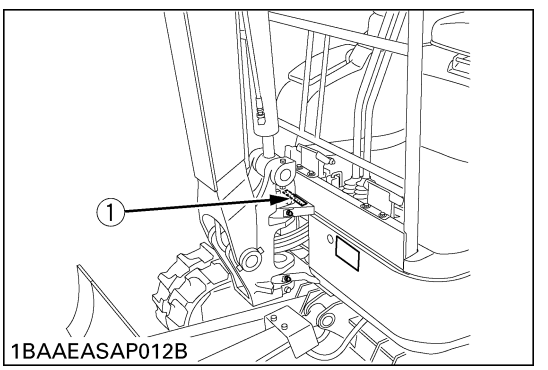

(1) Serial No.

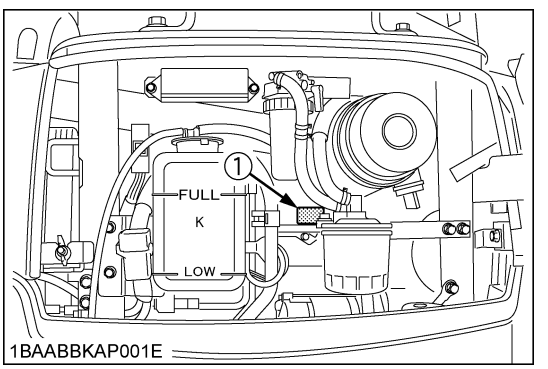

(1) Engine serial No.

https://truckmanualshub.com/

TECHNICAL DATA

			KUBOTA EXCAVATOR
Model name			U17
Type			Canopy
Operating weight (including operator's)		lbs.(kg)	3704 (1680)
Engine	Type		Water cooled 4 cycle diesel engine with 3 cylinder
	Model name		KUBOTA D902
	Total displacement cc (cu.in)		898 (54.8)
	Engine power	SAE gross kW(HP)	12.0 (16.1)
		SAE NET kW(HP)	11.3 (15.1)
	Rated speed	rpm	2300
	Low idle speed	rpm	1300 ~ 1400
Performance	Unit swing speed	rpm	9.1
	Travel speed	Fast mph (km/h)	2.6 (4.1)
		Slow mph (km/h)	1.4 (2.1)
	Ground pressure (With operator)	psi (kPa) [kgf/cm^2]	3.7 26 [0.26]
	Climbing angle	%(deg)	58 (30)
Dozer	Width X Height	in.(mm)	39.0/48.8 X 10.2 (990/1240 X 260)
Boom swing angle		Left deg (rad)	65 (1.13)
		Right deg (rad)	58 (1.01)
Pressure connection for attachments	Max. displacement (Theoretical)	US gal (L)/min	7.32 (27.7)
	Max. pressure	psi (MPa) [kgf/cm^2]	2702 (18.6) [190]
Fuel tank capacity		US gal (L)	5.0 (19)

NOTE:

- Above dimensions are based on the machine with rubber trucks and JPN bucket.
  JPN = made in Japan
- Specifications subject to change without notice.

∗ With unloaded digging bucket.
∗ Firm compacted soil.
∗ Operators must exercise extra caution and follow instructions in the operator's manual.
∗ Worse condition or heavier attachment to the above will decrease climbing angle.

https://truckmanualshub.com/

DESCRIPTION OF MACHINE PARTS

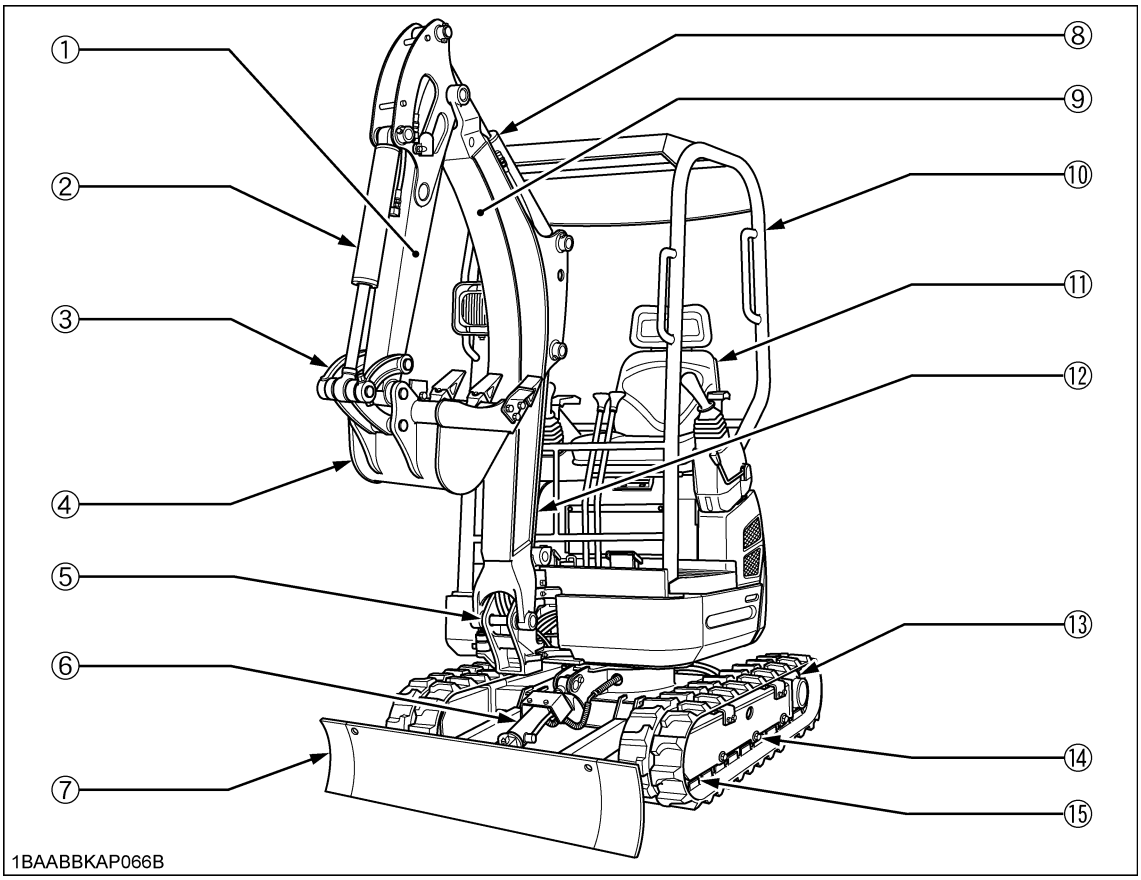

DEPICTED CONTENTS

(1) Arm
(2) Bucket cylinder
(3) Bucket link
(4) Bucket
(5) Swing bracket
(6) Dozer cylinder
(7) Dozer
(8) Arm cylinder
(9) Boom
(10) Canopy (Rops / OPG (Top Guard Level I))
(11) Operator's seat
(12) Boom cylinder
(13) Drive sprocket
(14) Track roller
(15) Front idler

https://truckmanualshub.com/

INSTRUMENT PANEL AND CONTROL ELEMENTS

■ Instrument Panel, Switches

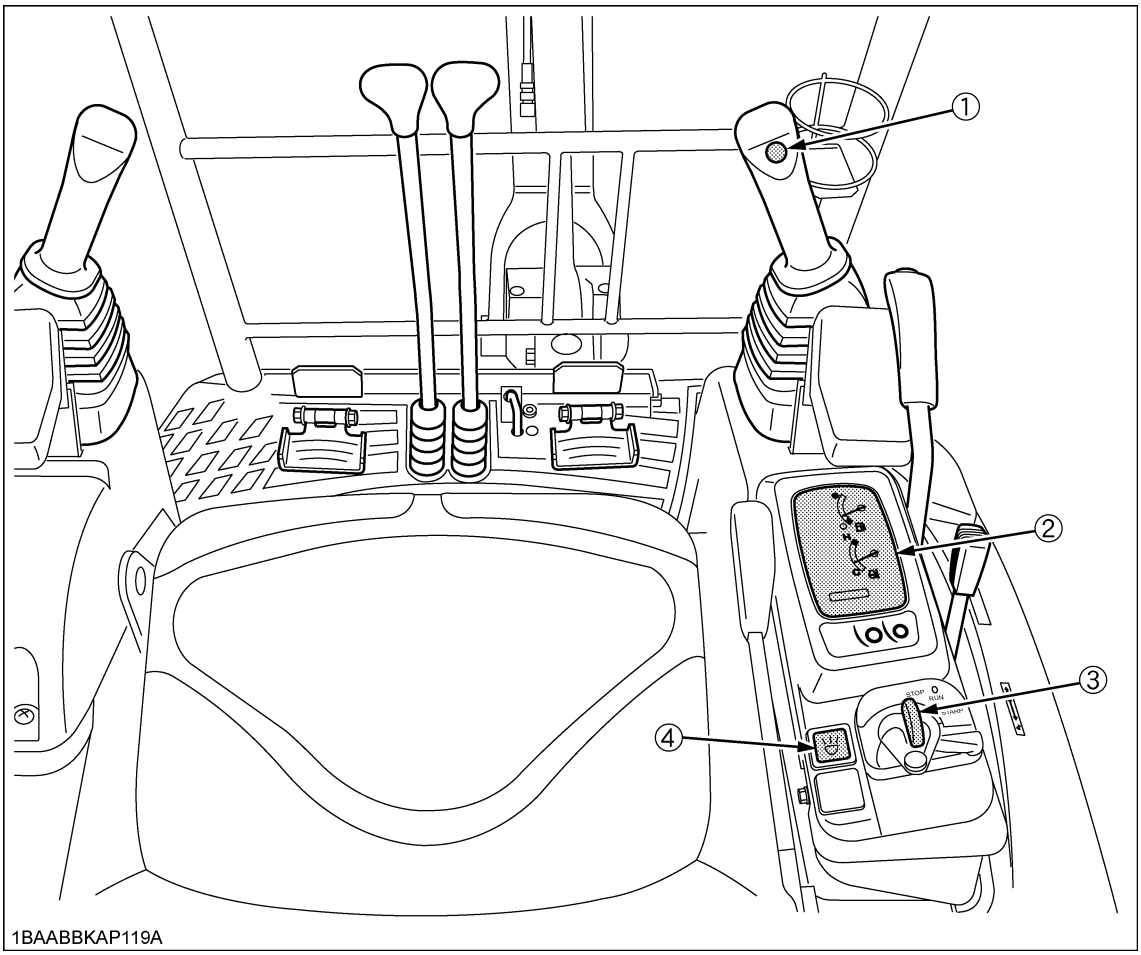

DEPICTED CONTENTS

(1) Horn switch
(2) LCD display
(3) Starter switch
(4) Working light switch
(5) Working light
(6) Working light (Option)

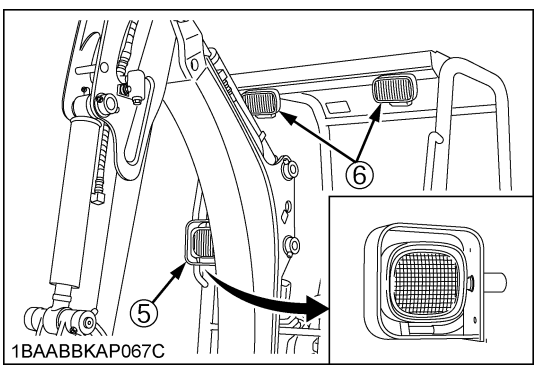

https://truckmanualshub.com/

■ Instrument Panel

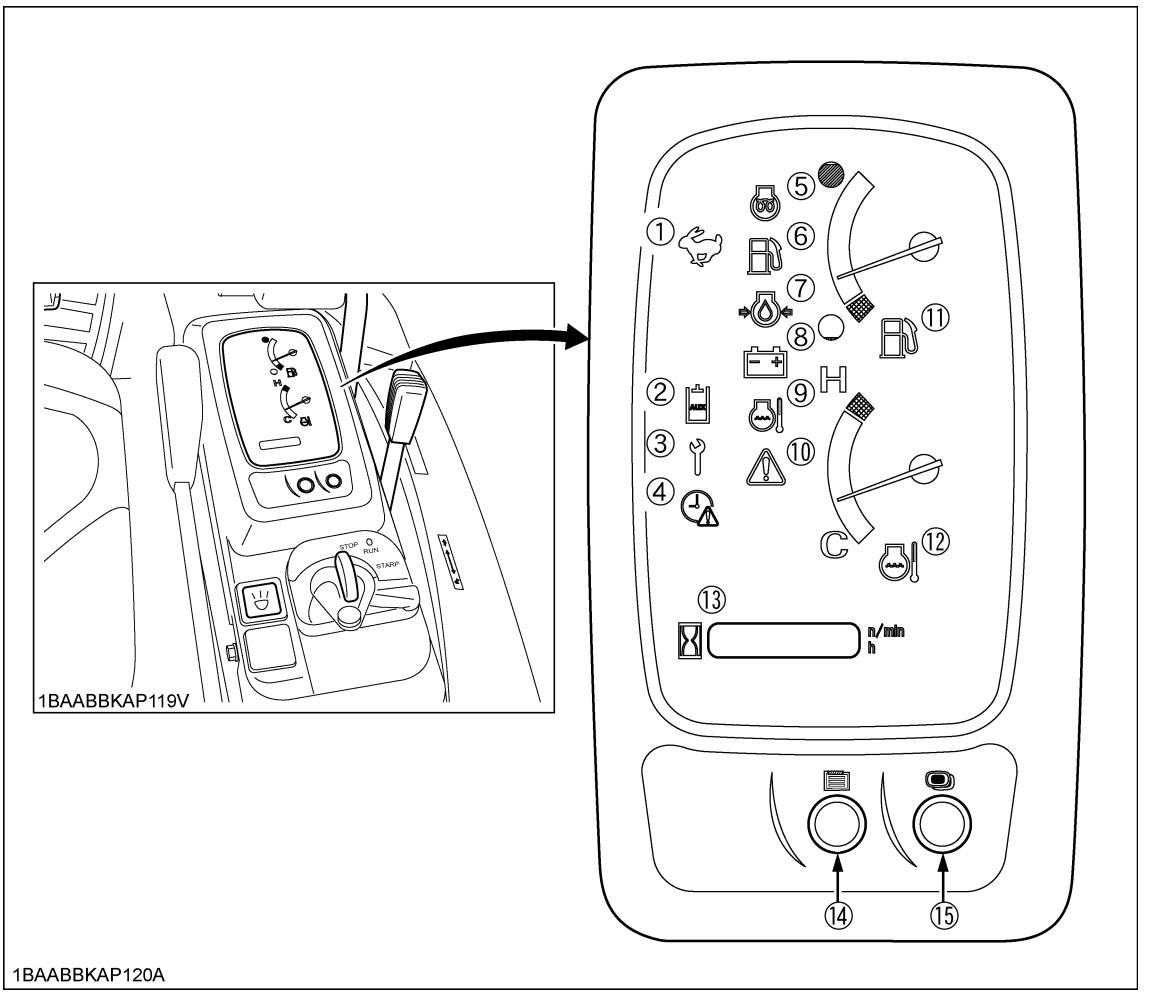

DEPICTED CONTENTS

(1) Speed indicator lamp
(2) AUX operation lamp
(3) Periodic check lamp
(4) Clock setting request lamp
(5) Glow lamp
(6) Remaining fuel warning lamp
(7) Engine oil pressure warning lamp
(8) Battery charge lamp
(9) Coolant temperature warning lamp
(10) Warning lamp
(11) Fuel gauge
(12) Coolant temperature gauge
(13) LCD display
(14) User setting switch (switch 2)
(15) Display selector switch (switch 3)

https://truckmanualshub.com/

■ Control Pedals and Levers

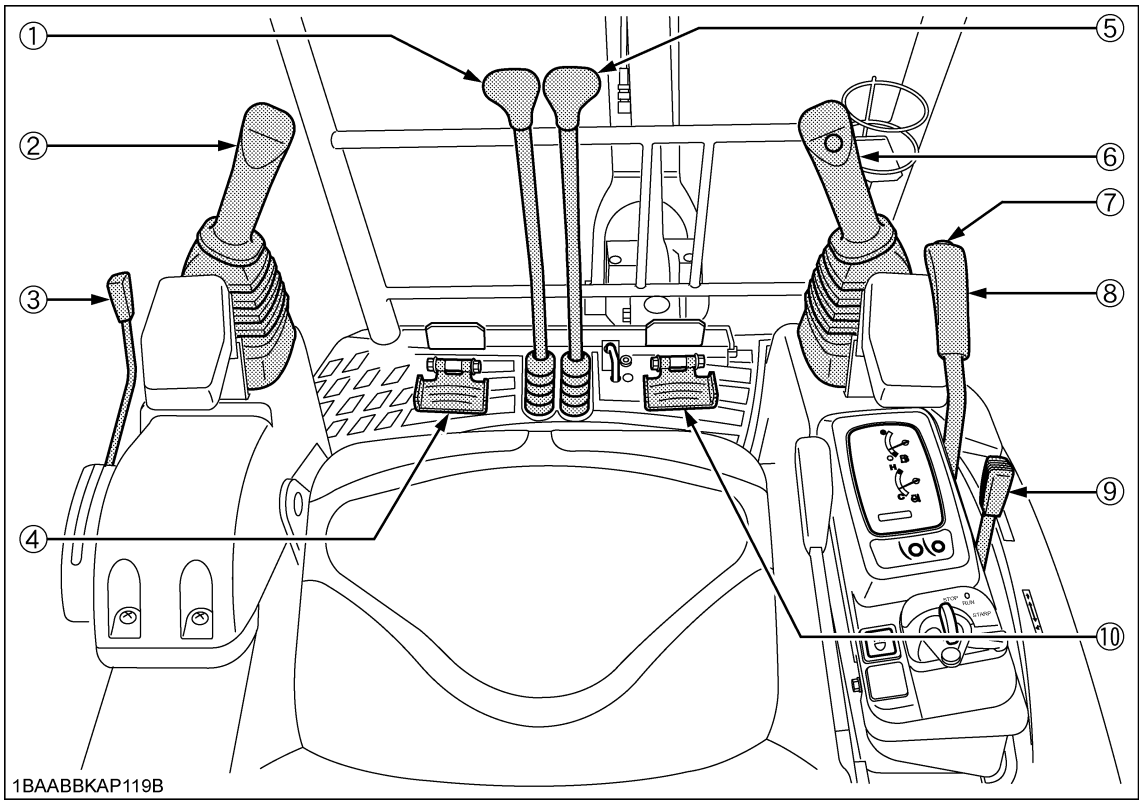

DEPICTED CONTENTS

(1) Drive lever (left)
(2) Control lever for front attachments (left)
(3) Lock lever for attachment control
(4) Service port pedal
(5) Drive lever (right)
(6) Control lever for front attachments (right)
(7) Two travel speed switch
(8) Control lever for dozer or track width
(9) Throttle lever
(10) Boom swing pedal
(11) Track width change / dozer select lever

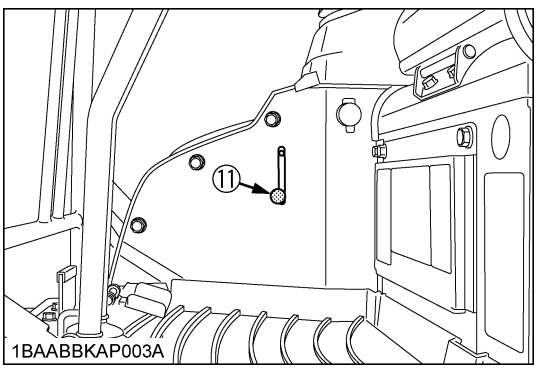

https://truckmanualshub.com/

BEFORE START

DAILY CHECKS

In order to avoid damage, it is important to check the condition of the excavator before starting.

CAUTION
To avoid personal injury:
- **Do maintenance work on the excavator only on even ground with the engine off and the safety devices in the "Lock" position.**

Checks

Walk around the excavator and check for visual damage and wear.
Check coolant level. (See regular checkpoints in "MAINTENANCE".)
Check fuel level.
Check engine oil level.
Check hydraulic fluid level.
Check air filter for clogging.
Check all control lamps, indicators, engine rpm's counter and hour meter.
Check the light system.
Check the seat belt and the Rops/OPG (Top Guard Level I) safety device.
Check the condition of the danger, warning and caution labels. (See "DANGER, WARNING AND CAUTION LABELS" in "SAFE OPERATION" .)

TILTING THE SEAT

CAUTION
To avoid personal injury:
- **Lock the lever for attachment control when tilting the seat.**

To tilt the seat forward, pull the seat tilting lock lever and tilt the seat forward.

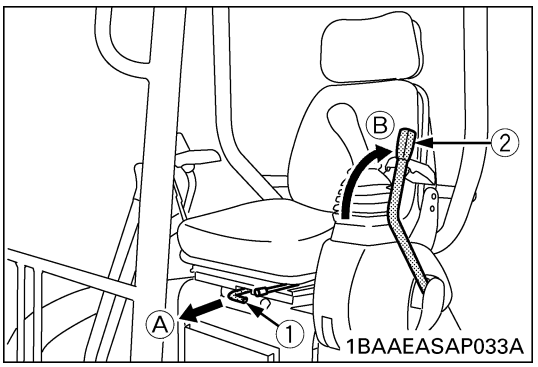

(1) Seat tilting lock lever
(2) Lock lever for attachment control
(A) "Tilting forward"
(B) "Lock"

OPENING AND CLOSING OF PARTS

■ Opening / Closing the Rear Bonnet

CAUTION
To avoid personal injury:
- **Do not touch the exhaust muffler or the exhaust pipe; serious burns can occur.**

1. Put the starter key in the key slot and turn it clockwise to the vertical position. The rear bonnet will be unlocked. Press the button, and the rear bonnet can be opened sideways.
   When the rear bonnet is opened, the rear bonnet will be locked with the lock lever.

https://truckmanualshub.com/

2. To close the rear bonnet, make sure the left bonnet is locked, unlock the lock lever and push the rear bonnet until it clicks into position. To lock the bonnet, turn the starter key counterclockwise to the horizontal position.

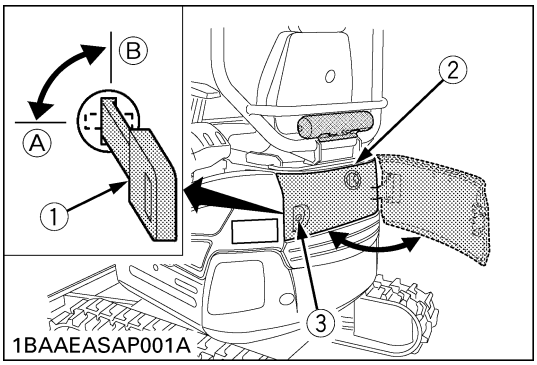

(1) Key
(2) Rear bonnet
(3) Button
(A) "Lock"
(B) "Unlock"

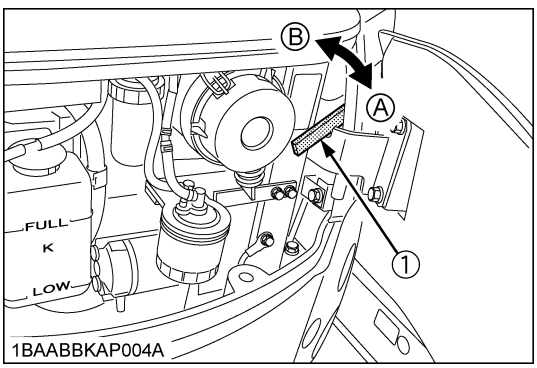

(1) Lock lever
(A) "Lock"
(B) "Unlock"

IMPORTANT:

- Do not run the machine with the bonnet open. The bonnet may get damaged.

◆ **Opening/closing the left bonnet**

1. Remove the rubber mat off the left bonnet side. Then undo the step fixture.

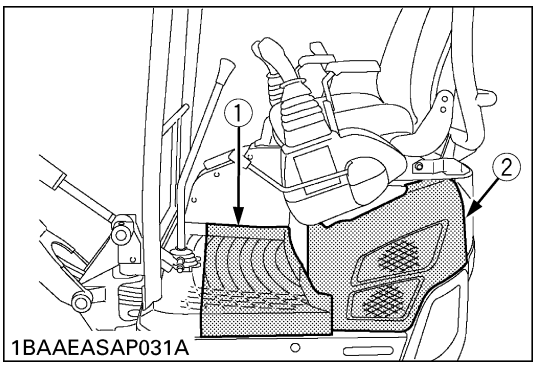

(1) Rubber mat
(2) Left bonnet

2. To open the left bonnet, do this: open the rear bonnet first and then turn the wing nut, located as shown below, to unlock the left bonnet.

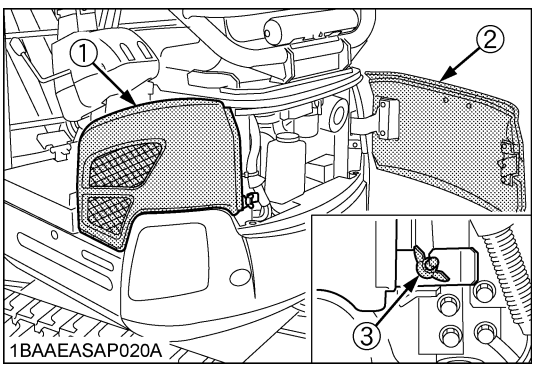

(1) Left bonnet
(2) Rear bonnet
(3) Wing nut

3. To close the left bonnet, do this: push it back into position, apply the lock fixture in place and hand-tighten the wing nut.
4. Spread the rubber mat back in its original place.

https://truckmanualshub.com/

■ Opening and Closing of the Fuel Tank Cover

To open the tank cover, first insert the key into the key slot and turn it counterclockwise to unlock, then open the tank cover upward. For closing, return the tank cover to original position and turn the key clockwise to lock, then remove the key.

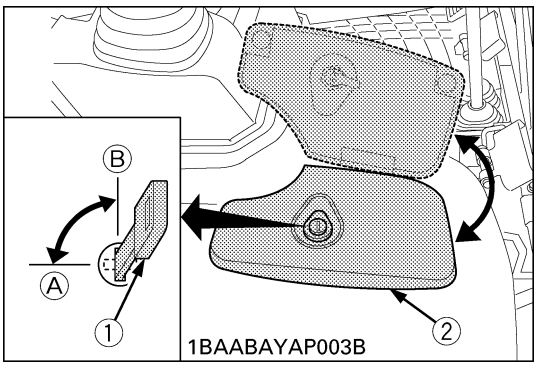

(1) Key
(2) Tank cover
(A) "Unlock"
(B) "Lock"

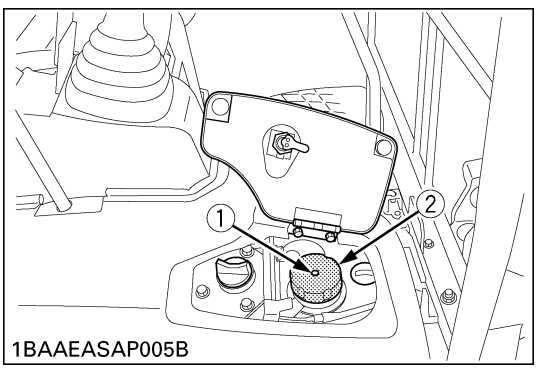

(1) Air vent
(2) Fuel tank cap

■ Keeping the Tools

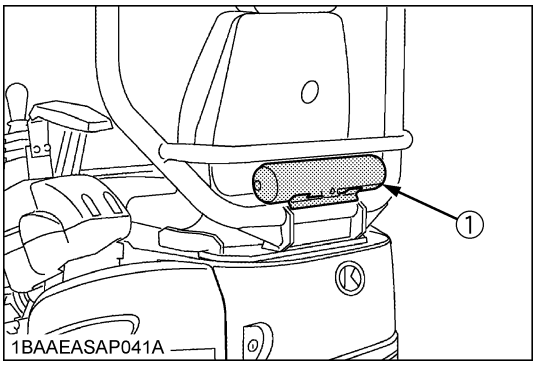

(1) Tool Box

■ Operator's Manual Storage

Keeping the operator's manual in the tool box.

https://truckmanualshub.com/

HANDLING THE SAFETY DEVICES

■ Control lever lock

CAUTION

- **When the excavator is not used or left unattended, be sure to place the lock lever in "Lock" position .**

The attachment control lever lock is located on the left side.

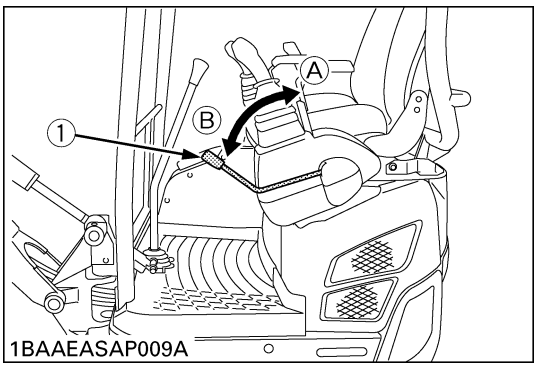

(1) Lock lever for attachment control
(A) "Lock"
(B) "Unlock"

■ Swing lock pin

This pin is used to lock the swing frame. Set the lock pin to the "Lock" position and the swing frame gets locked to the track frame.

IMPORTANT:

- Before locking the lock pin, be sure to place the swing frame and the track frame in parallel with each other.

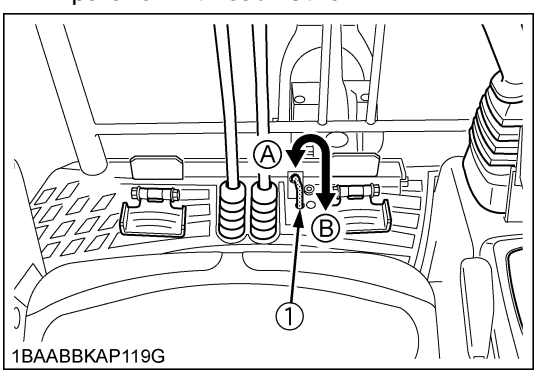

(1) Swing lock pin
(A) "Unlock"
(B) "Lock"

https://truckmanualshub.com/

OPERATION OF THE ENGINE

CAUTION
To avoid personal injury:
- **Read "SAFE OPERATION" at the beginning of this operator's manual.**
- **Obey the danger, warning and caution labels on the excavator.**
- **Exhaust gases are poisonous. Do not let the engine run in closed quarters without sufficient and adequate ventilation.**
- **Always start the engine from the operator's seat. Do not start the engine while standing next to the excavator. Before starting the engine, sound the horn to get the attention of persons standing nearby.**

IMPORTANT:
- Do not use start help spray or similar fluids.
- In order not to overload the battery and starter, avoid start-ups of more than 10 sec.
- When the engine does not start in 10 sec., please set the interval of 20 sec. or more, and restart.

■ Horn Switch

When the key in "RUN" position, the horn sounds by pushing the switch.

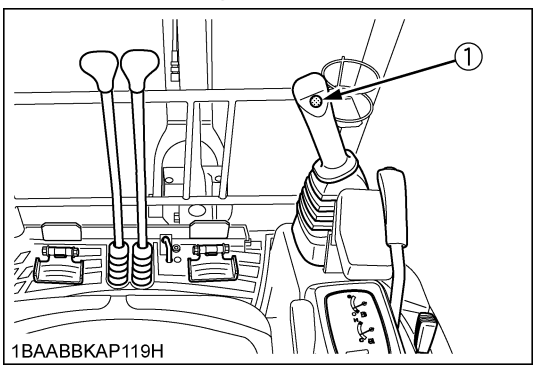

(1) Horn switch

STARTING THE ENGINE

CAUTION
To avoid personal injury:
- **The operator should not depend solely on the alarm lamps, but should always conduct the routine checks (see "MAINTENANCE").**

Start the engine in the following manner:

1. Make sure that the fuel shutoff-valve is in the "Open" position.

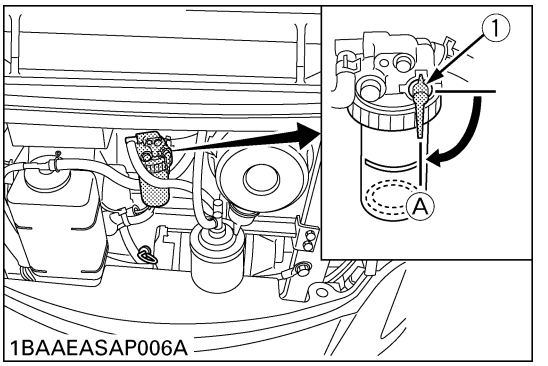

(1) Fuel shutoff-valve (A)"Open"

2. Before starting the engine, make sure that all control levers are in the neutral positions.

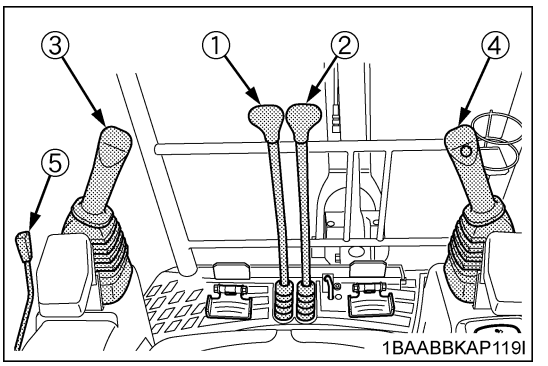

(1) Drive lever (left)
(2) Drive lever (right)
(3) Attachment control lever (left)
(4) Attachment control lever (right)
(5) Lock lever

https://truckmanualshub.com/

3. Pull the lock lever all the way back. (lock position).
4. Insert the key into the starter switch and turn it to the "RUN" position.

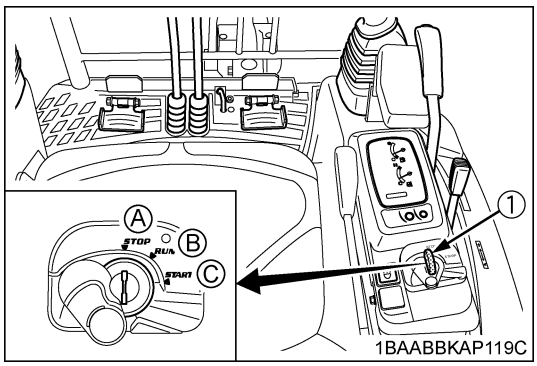

(1) Starter Switch

(A) "STOP"
(B) "RUN"
(C) "START"

5. Turn the key to "START" position and release after the engine has started; it will automatically return to the "RUN" position.
6. Check if all warning lamps have gone out. Should a warning lamp still be lit up, stop the engine then remove the key and check for the cause.

NOTE:
- When the lock levers are in "UNLOCK" position, the engine dose not start.

■ Display Selector Switch

Press the display selector switch while the engine is running. The electronic meter's LCD display will change from one indication mode to the other.
Change the three-mode display according to your jobs.

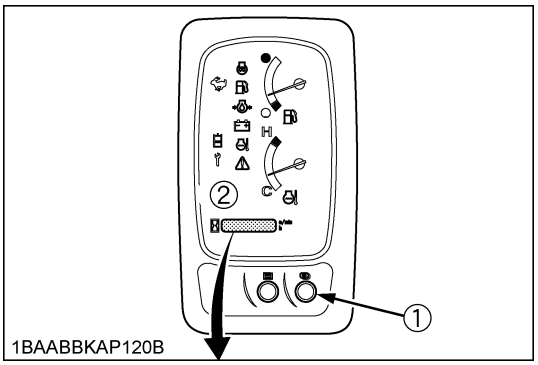

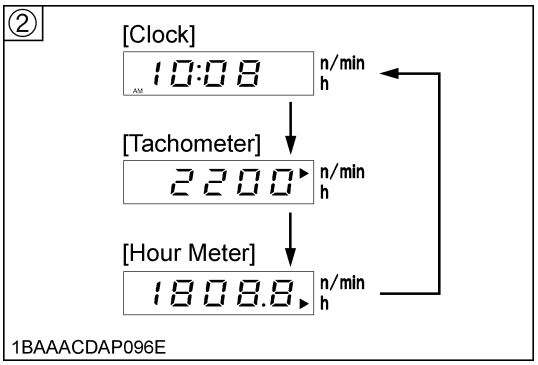

(1) Display selector switch
(2) LCD display

NOTE:
- With the starter key at the "STOP" position, press the electronic meter's display selector switch, and the LCD display shows the hour meter for 10 seconds.

https://truckmanualshub.com/

◆ **Setting the clock**

[Selecting the clock setting mode]

1. Insert the key into the starter switch and turn it to the "RUN" position.

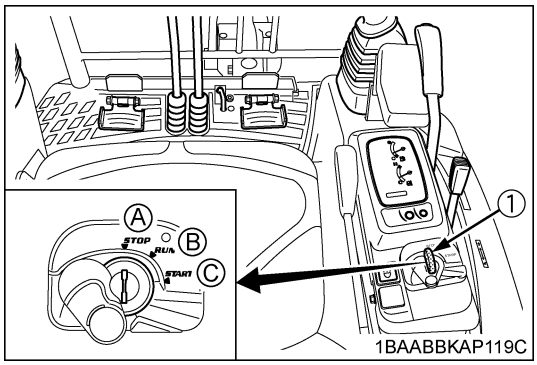

(1) Starter Switch
(A) "STOP"
(B) "RUN"
(C) "START"

2. Press the user setting switch (switch 2 (1)).
3. Select the clock setting mode by pressing the display selector switch (switch 3 (2)) and the clock setting request lamp "⏲" on the instrument panel lights up.

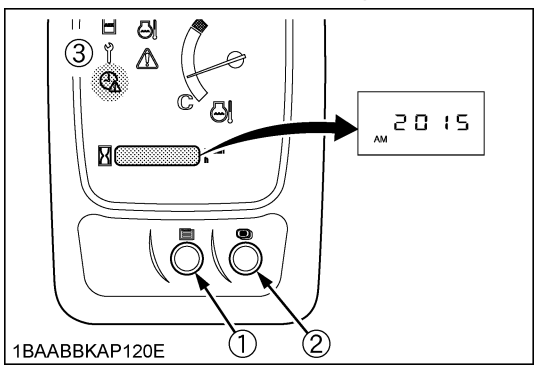

(1) User setting switch (switch 2)
(2) Display selector switch (switch 3)
(3) Clock setting request lamp

NOTE:
- Press switch 3 (2) for a long time and the year, month, day, hour and minute will be selected in this order.

[Setting the year]

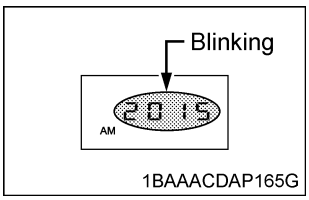

Press switch 2 (1) and the numeric setting will be smaller.
Press switch 3 (2) and the numeric setting will be larger.

Switch 2	Switch 3
2015	2017
⬇	⬆
2014	2016
⬇	⬆
2013	2015

NOTE:
- While setting the clock, the clock setting request lamp on the instrument panel is blinking.

[Setting the month]

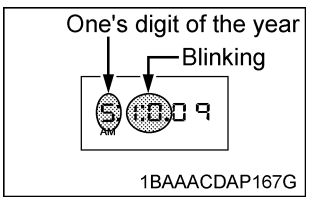

Press switch 2 and the numeric setting will be smaller.
Press switch 3 and the numeric setting will be larger.

Switch 2	Switch 3
10	12
⬇	⬆
9	11
⬇	⬆
8	10

https://truckmanualshub.com/

[Setting the day]

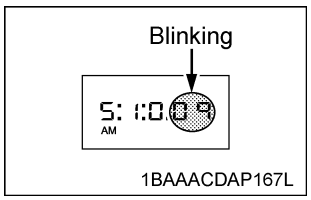

Press switch 2 and the numeric setting will be smaller.
Press switch 3 and the numeric setting will be larger.

Switch 2	Switch 3
09	11
↓	↑
08	10
↓	↑
07	09

[Changing the AM/PM system to the 24-hour system]
Select the AM/PM system or 24-hour system by pressing switch 3.

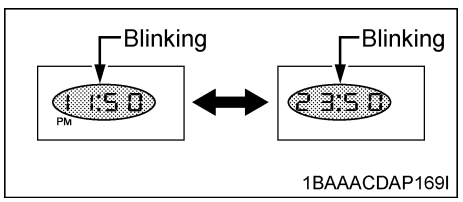

[Setting the hour]

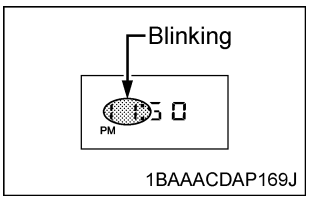

Press switch 2 and the numeric setting will be smaller.
Press switch 3 and the numeric setting will be larger.

Switch 2	Switch 3
11	13 (or 01)
↓	↑
10	12
↓	↑
9	11

[Setting the minute]

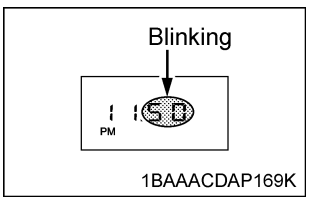

Press switch 2 and the numeric setting will be smaller.
Press switch 3 and the numeric setting will be larger.

Switch 2	Switch 3
50	52
↓	↑
49	51
↓	↑
48	50

If switch 3 is pressed for a long time, the new settings will be made.

NOTE:
- If the battery is disconnected, the clock setting request lamp "⏲" (yellow) will blink for requesting the setting the clock.

https://truckmanualshub.com/

■ LCD Display for Normal Operation

◆ Fuel gauge

CAUTION
To avoid personal injury:
- **Before adding fuel, be sure to stop the engine.**
- **Be sure to keep open flame away from the machine. Otherwise a fire may result.**

If the fuel in the tank goes below the prescribed level, the warning lamp will flash.
If this should happen during operation, refuel as soon as possible.

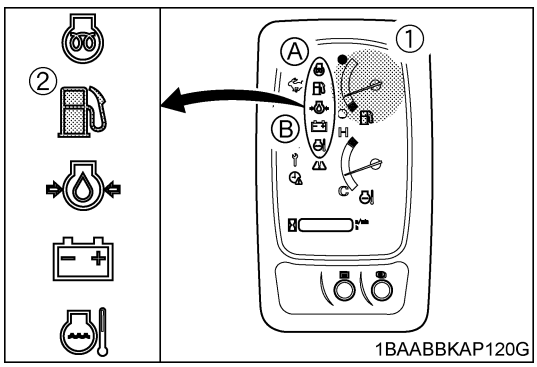

(1) Fuel gauge *(A) "FULL"*
(2) Remaining fuel warning lamp *(B) "EMPTY"*

IMPORTANT:
- If the fuel gauge indicator is near the "○", add fuel as soon as possible. If the indicator is near "○" and the machine operates on a slope, the engine may run out of fuel.

NOTE:
- To open the fuel cap, keep the starter key inserted.

◆ Coolant Temperature Gauge

CAUTION
To avoid personal injury:
- **Do not open the radiator cap during or just after operation. Hot coolant may gush out and scald you. Wait for the coolant to cool down before opening the cap.**

With the starter key at the **"RUN"** position, the cooling water temperature is indicated.

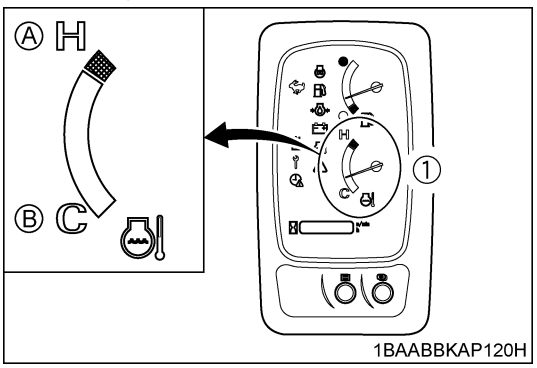

(1) Coolant temperature gauge *(A) "HOT"*
(B) "COOL"

◆ Hour-meter

Indicates the total operating hours of the machine.

How the indicator works
- The meter advances one hour after an hour of operation regardless of the engine rpm.

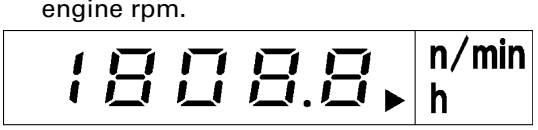

1BAAACDAP097A

◆ Engine tachometer

Indicates the current rpm of the engine.

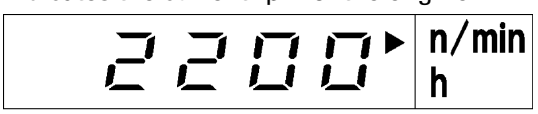

1BAAACDAP098A

NOTE:
- The LCD display may be illegible when viewed from a certain angle. This is not a display failure.

https://truckmanualshub.com/

■ LCD Display for Warning

◆ Engine oil pressure warning lamp

The engine oil pressure warning lamp lights up due to failure of the lubricating system with the engine running.
When the starter key is turned to "RUN" position with the engine off, this engine oil pressure lamp lights up, warning lamp blinks and when the engine starts, the lamps go out.
If the lamp stays on with the engine running, stop the engine and check the engine oil level.

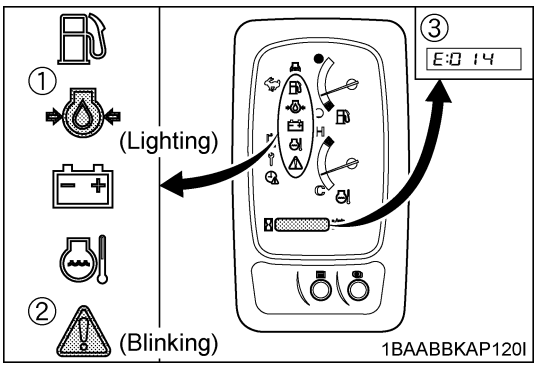

(1) Engine oil pressure lamp
(2) Warning lamp (red)
(3) Error code

◆ Battery charge lamp

This battery charge lamp lights up if the charging system fails with the engine running.
When the starter key is turned to "RUN" position with the engine off, the battery charge lamp lights up, warning lamp blinks and when the engine starts, the lamps go out.
If the lamp stays on with the engine running, stop the engine and check the V-belt.

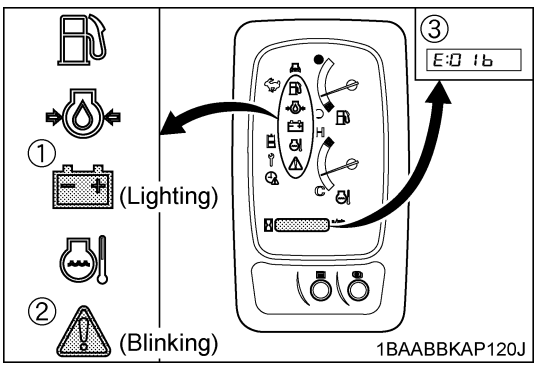

(1) Battery charge lamp
(2) Warning lamp (red)
(3) Error code

■ Warning Lamp

The warning lamp is used to indicate broken wire, short-circuit, fuel shortage and other problems.

IMPORTANT:
- Do not just look at the meter, but also carry out the inspection and correction accordingly.

NOTE:
- The warning lamp starts flashing in red if a serious problem occurs. If the system gets in warning signal, the warning lamp starts flashing in yellow.
- Warnings and errors are displayed and an alarm buzzer beeps.
- Let your KUBOTA dealer inform you of details concerning care and maintenance.

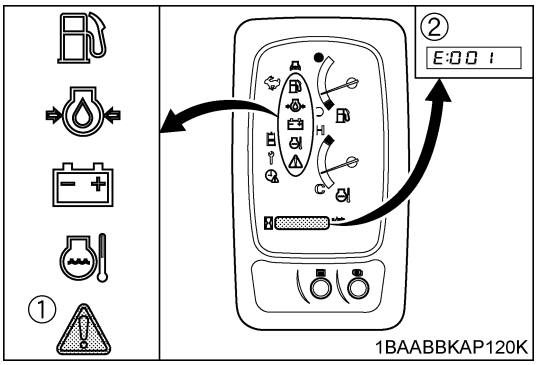

(1) Warning lamp
(2) Error code

◆ Overheat warning

If the water temperature has risen too high, the water temperature warning lamp lights up and the following error code (E:015) gets displayed.

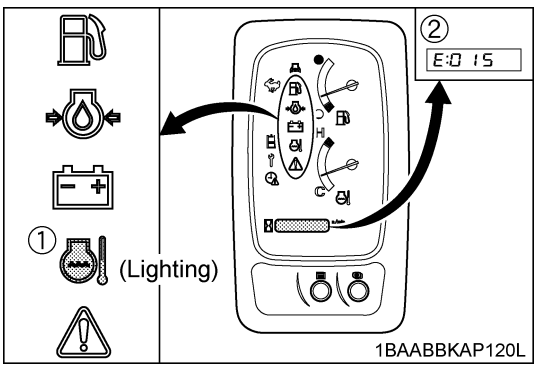

(1) Water temperature warning lamp
(2) Error code

https://truckmanualshub.com/

With the error code displayed, take the procedure below.

1. Bring the machine to a stop on a safe place. (Get the engine unloaded.)
2. Do not yet stop the engine, but allow it to run idle unloaded for 5 minutes or so. Then stop the engine.
3. Keep yourself away enough from the machine for another 10 minutes or while the engine is emitting steam.
4. Make sure there is no risk of getting burned.
   Then remove the cause of overheat, referring to "TROUBLESHOOTING". Finally get the engine restarted.

■ Checkpoints after Starting the Engine

After starting the engine, but before starting operation, check the following points:

1. Put the throttle lever down and let the engine idle for approx. five minutes. This allows the engine lubricant to warm up and penetrate every part of the engine.
2. Once the engine has warmed up, check:
   - the warning lamp "Engine oil pressure" has gone out.
   - the warning lamp "Battery charge" goes out when engine speed is increased.
   - the color of the exhaust is normal and no abnormal noises or vibrations are heard or felt.
   - no fluid is leaking from pipes or hoses.

◆ **Should any following conditions occur, stop the engine immediately.**

- The engine rpm's increases or decreases suddenly.
- Sudden abnormal noises are heard.
- Exhaust is black.
- Warning lamp for engine oil lights up during operation.

IMPORTANT:

- In these cases, the excavator must be checked and serviced by your local the KUBOTA dealer.

■ Glow Lamp

With the starter key at the "RUN" position, the engine's preheat status is indicated.

NOTE:

- When the starter switch is turned to the "RUN" position, the engine will be preheated for a given period of time and the indicator will turn on.
- The above indication appears momentarily when the engine is started, but it does not indicate trouble. (This is because the oil charge sensor output fluctuates when the engine is started.)
- The following symbol appears momentarily as the engine starts. This is not an error.

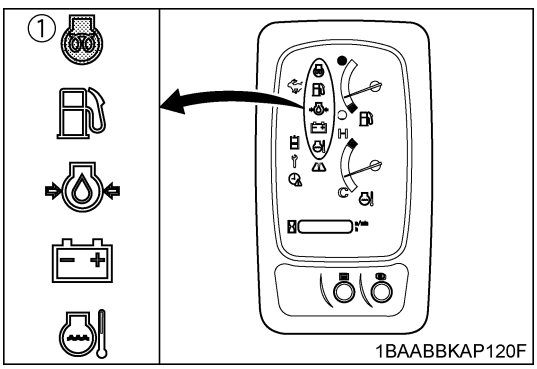

(1) Glow lamp

■ Battery Charge Lamp

This warning lamp lights up if the charging system fails while the engine is running. When the starter switch is turned "ON" with the engine off, the lamp lights up, and when the engine gets started, the lamp goes out.

NOTE:

- If there is disconnection or failure in the charging system when the key is turned to "RUN", the following symbol will appear.

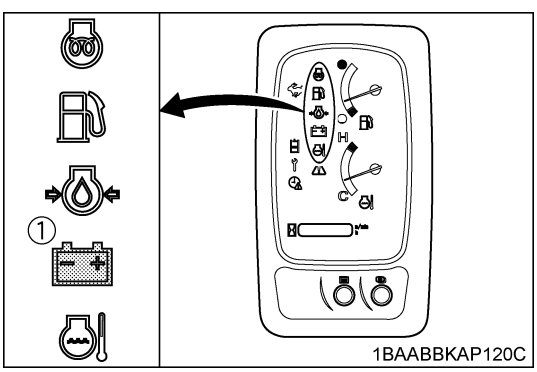

(1) Battery charge lamp

https://truckmanualshub.com/

■ Engine Oil Pressure Warning Lamp

The engine oil pressure warning lamp lights up due to failure of the lubricating system with the engine running. When the starter switch is turned ”ON” with the engine off, this lamp lights up, and when the engine starts, the lamp goes out. If the lamp stays on with the engine running, stop the engine and check the engine oil level.

NOTE:

- If there is disconnection, failure or breakdown in the lubricating system when the key is turned to ”RUN”, the following symbol will appear.

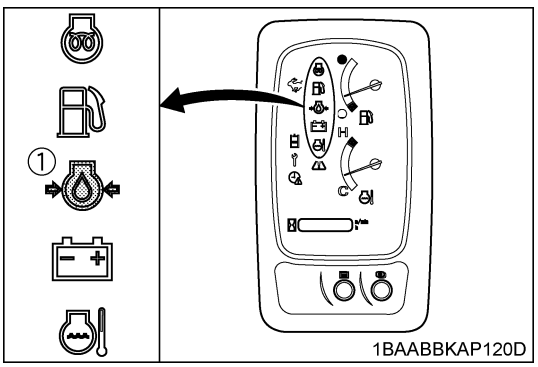

(1) Engine oil pressure warning lamp

■ Checkpoints after Starting the Engine

After starting the engine, but before starting operation, check two following points:

1. Put the throttle lever in "LOW" position and let the engine idle for approx. 5 minutes. This allows the engine lubricant to warm up and penetrate every part of the engine.
   Note:
   - This idling is usually called "Warm-up".
2. Once the engine has warmed up, check:
   - the warning lamp "Engine oil pressure" has gone out.
   - the warning lamp "Battery charge" goes out when engine speed is increased.
   - the colour of the exhaust is normal and no abnormal noises or vibrations are heard or felt.
   - no fluid is leaking from pipes or hoses.

◆ **Should any following conditions occur, stop the engine immediately.**

- The engine rpm's increases or decreases suddenly.
- Sudden abnormal noises are heard.
- Exhaust is black.
- Alarm lamp for engine oil lights up during operation.

IMPORTANT:

- In these cases, the excavator must be checked and serviced by your local KUBOTA dealer.

■ Precautions in case of overheat

CAUTION

- **Do not open the radiator cap during and just after operation. Hot water may gush out and get you burned. Wait long enough until the radiator cools down.**

If by any chance cooling water gets heated up to the boiling point or over (overheated), the whistle at the reserve tank drain hose end blows. In such case, take the following steps.

1. Stop operation in a safe condition. (Disconnect the engine’s load.)
2. Do not stop the engine suddenly. Keep the engine idling under no load for about 5 minutes and turn it off.
3. Keep yourself enough away from the machine for another 10 minutes or while steam is given off.
4. Make sure there is no hazard of getting burned. Pinpoint and remove the cause of overheat, referring to “TROUBLESHOOTING”. Then get the engine restarted.

https://truckmanualshub.com/

STARTING THE ENGINE UNDER COLD CONDITIONS

CAUTION
To avoid personal injury:
- **Make sure that the lock lever is in the lock position during warm up.**

Start the engine in the following manner;
1. Pull the lock levers all the way back (lock position).
2. Turn the starter switch to the "RUN" position (glow position) and keep until the indicator lamp has gone out.
3. Move the starter switch to the "START" position; to crank and start the engine.
4. Release the starter switch after the engine has started; it will automatically return to the "RUN" position.

IMPORTANT:
- Let the engine warm up after start-up for approx. 10 minutes under no load conditions. If the hydraulic fluid temperature is too low, the operations will be affected.
  Do not operate the excavator under full load before the engine has warmed up enough.

STOPPING THE ENGINE

WARNING
To avoid personal injury or death:
- **Do not keep the bucket or dozer in the lifted position, as a person could accidently touch the levers and cause serious accidents.**

1. After slowing the engine to idle, turn the key to "STOP".
2. Remove the key.

■ Emergency Engine Stop Fuse

CAUTION
To avoid personal injury:
- **Do not open engine hood before stopping engine. Only when engine does not stop by key, open engine hood and pull out the fuse.**

The engine will stop when the cap is removed and the fuse inside is pulled out. The engine can be restarted when the fuse is pushed back into its original position.

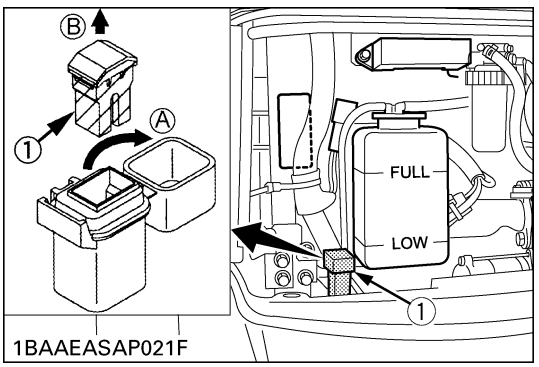

(1) Emergency engine stop fuse *(A) "OPEN"* *(B) "PULL OUT"*

NOTE:
- If the engine does not stop with the key, contact your KUBOTA dealer.

https://truckmanualshub.com/

STARTING WITH AN AUXILIARY BATTERY

CAUTION
To avoid personal injury:
- **Battery gases can explode. Do not smoke and keep sparks and flames away.**
- **Do not start the engine with an auxiliary battery if excavator battery is frozen.**
- **Do not connect the black jumper cable to the negative (—) terminal of the excavator battery.**

■ Observe Following Guidelines when Starting with an Auxiliary Battery

1. Bring the helping machine with the same battery voltage as near as possible to the machine.
   THE MACHINES MUST NOT COME IN CONTACT WITH EACH OTHER.
2. Bring the levers and pedal of both machines in the neutral position.
3. Wear eye protection and rubber gloves.
4. Remove the battery caps from both batteries. (If present)
5. Connect the terminal of the red jumper cable with the plus (+) terminal of the low battery and connect the other end of the cable to the plus (+) terminal of the auxiliary battery.
6. Connect the black negative cable to the minus (—) terminal of the auxiliary battery.
7. Connect the other end of the black cable (coming from the auxiliary battery) to the machine frame as far away as possible from the low battery.
8. Start the engine of the helping machine and let it run for a while. Start the machine with the low battery.
9. Disconnect the jumper cables in the reverse sequence.

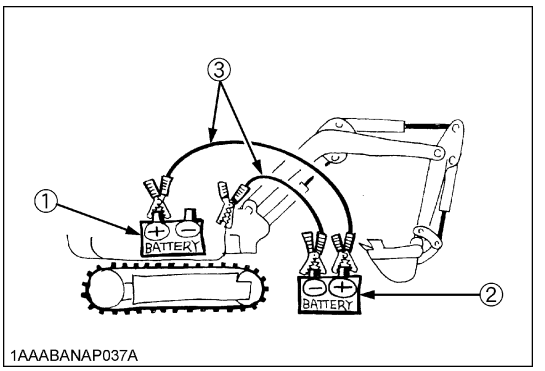

(1) Low battery
(2) Auxiliary battery
(3) Jumper cables

IMPORTANT:
- This excavator has a negative (—) earthed 12 Volt starting system.
- Only use the same voltage when using an auxiliary battery.
- Using a higher voltage will cause serious damage to the electrical system. When using an auxiliary battery, only the compatible (same) voltage is permissible.

https://truckmanualshub.com/

EXCAVATOR OPERATION

CONTROL OBSERVATIONS DURING OPERATION

■ Stop the Engine immediately if:

- Sudden increase or decrease in engine rpm's occurs.
- Sudden abnormal noises occur.
- Exhaust gases turn suddenly very dark.

Make following control observations during operation to be sure that everything functions normally.

RUNNING-IN OF THE NEW EXCAVATOR

The operation and care of the new excavator influences its life span. Your new excavator has been carefully checked and tested before leaving the factory. In spite of this, all movable components must run-in during the first 50 work hours. Do not work with full engine rpm's and full loads during this period. It is most important to run-in your excavator properly in order to achieve its full performance and longevity. During the running-in, the following points should be adhered to in all cases.

■ Do not Work with Full Engine Rpm's or Full Loads during the First 50 Working Hours

- Let the engine warm up sufficiently in the cold season.
- Do not let the engine rev-up more than necessary.

■ Oil Change in the Run-in Stage

The lubrication oil plays a specific and important role during the run-in phase of the excavator. The numerous movable parts are not yet run-in, so many fine metal particles are generated and cause damage and shorten the lifetime of many components. Pay attention to the oil-change intervals and complete them sooner than later. See the subject "REGULAR CHECKS AND MAINTENANCE WORK" for more details on the oil-change intervals.

■ Seat Belt

WARNING
To avoid personal injury or death:

- **Always use the seat belt with a ROPS/OPG (Top Guard Level I) protection structure. Adjust the seat to the optimal position and buckle up.**

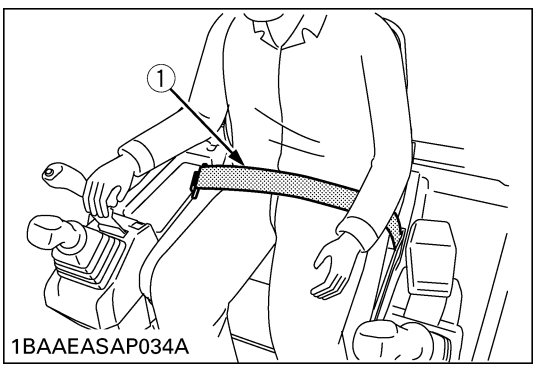

(1) Seat belt

STARTING

CAUTION
To avoid personal injury:

- **No persons, other than those familiar with the excavator, are allowed to use the excavator.**
- **Do not allow any person other than the operator to ride on the excavator.**

https://truckmanualshub.com/

1. Adjusting the Operator's Seat

■ Operator's Seat

CAUTION
To avoid personal injury:
- **Make sure that the seat is completely secured after each adjustment.**
- **Do not allow any person other than the driver to ride on the excavator.**

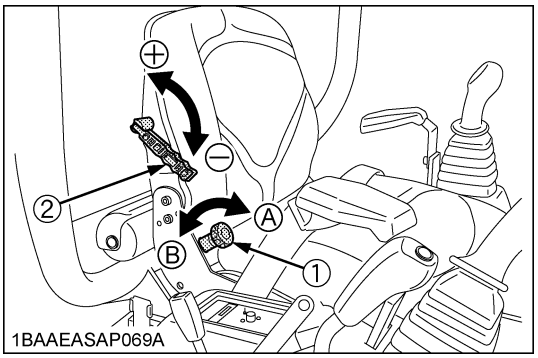

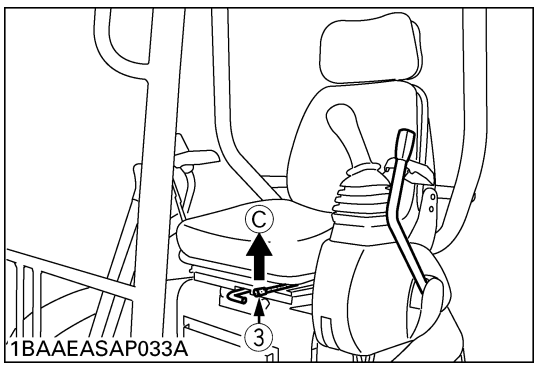

(1) Knob for tilt
(2) Suspension adjustment lever
(3) Travel adjust lever
(A) "FORWARD"
(B) "BACK"
(C) "UNLOCK"

◆ Backrest angle adjust knob : (1)
Pull up and unlock the backrest angle adjust knob (1). Reposition the backrest in Direction A or B to an optimum angle.

◆ Driver's weight adjustment : (2)
Sit on the seat and swing the weight adjust lever (2) 90° in Direction (c).
Move up or down the lever (2) several times until the arrow mark comes to the center of the weight indicator (3).
Move up the lever (2) toward G from the center (free state), and the spring force gets stronger. Move it down toward F, and the spring force gets weaker.

◆ Travel adjustment (Horizontal) : (4)
Pull up and unlock the travel adjust lever (horizontal) (4). Slide the seat back and forth to an optimum position.
Make sure the seat has got locked in the desired position.

◆ Armrest angle adjustment : (5)
Turn up or down the armrest angle adjust knob (5) to position the armrests to an appropriate angle.
Turn up the knob (5) toward (d) to tilt up the armrests toward E. Turn it down toward (e) to tilt them down toward D.

2. Bring the lock lever into the "Unlock" position.

CAUTION
To avoid personal injury:
- **Check safety features all around the excavator.**

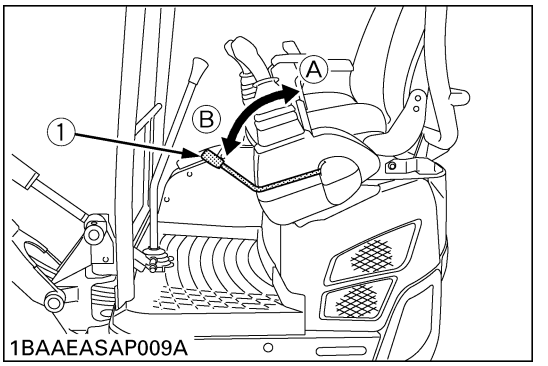

(1) Lock lever for attachment control
(A) "Lock"
(B) "Unlock"

https://truckmanualshub.com/

■ Working Light Switch

If the key in "RUN" position, the lights can be switched on by pressing the switch.

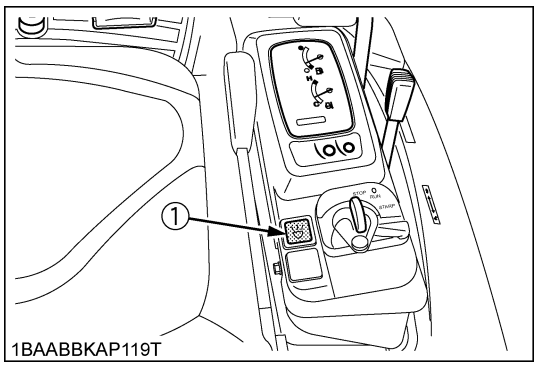

(1) Working light switch

◆ Night operation

CAUTION

To avoid personal injority:

- **Visibility is reduced in darkness, so that the working light alone is not enough. Prepare additional lighting, observe safety rules as well as special regulations for night work.**

■ Travel Buzzer (OPTION)

When you handle the drive levers, the buzzer sounds at the same time or before the excavator starts to run.

TWO PATTERN SELECTION SYSTEM (TPSS)

CAUTION

To avoid personal injury:

- **Study control lever pattern A and pattern B.**
  Then choose the one which is most familiar
- **Position the pattern selector lever in either the left side position of the machine (pattern A) or the right side position (pattern B).**
- **Familiarize yourself with the pattern selected by operating slowly.**

■ Pattern Change

Position the pattern selector lever to the desired position.

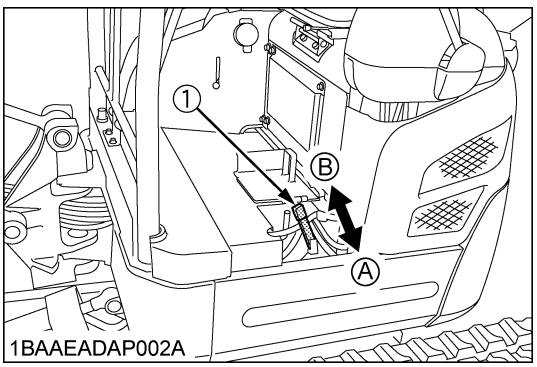

(1) Pattern selector lever (Two Pattern Selection System: TPSS)
(A) Pattern A
(B) Pattern B

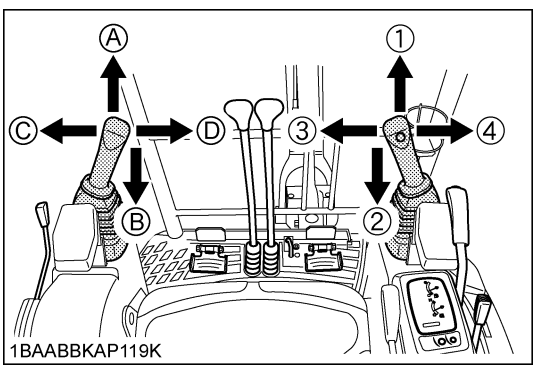

https://truckmanualshub.com/

Lever Position		Pattern A	Pattern B
Attachment Control Lever (Left)	A	Boom down	Arm up
	B	Boom up	Arm crowd
	C	Swing left	Swing left
	D	Swing right	Swing right
Attachment Control Lever (Right)	1	Arm up	Boom down
	2	Arm crowd	Boom up
	3	Bucket crowd	Bucket crowd
	4	Bucket dump	Bucket dump

OPERATION OF THE BOOM

To raise the boom, pull the attachment control lever back.

The boom is equipped with a cushion cylinder which helps prevents excavated material in the bucket from falling out. Low hydraulic oil temperature, (e.g. after starting the engine in cold weather) the cushioning function will be effected for a short period of time (approx. 3 to 5 seconds). This condition results from the viscosity of the hydraulic oil and is not a sign of malfunction.

The cushion cylinder will operate normally as the oil warms up.

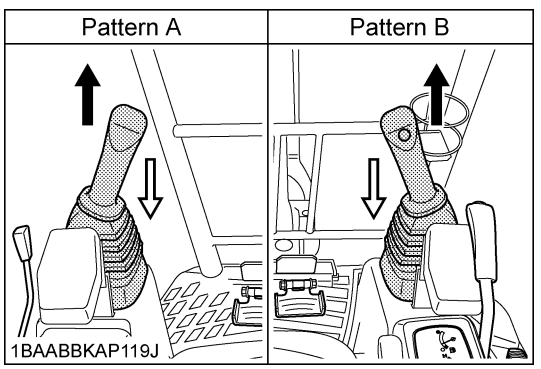

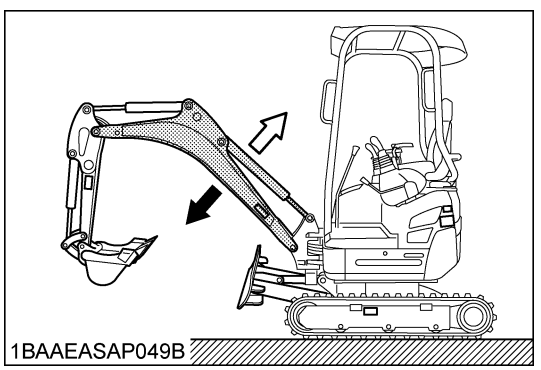

IMPORTANT:

- When lowering the boom, make sure that it does not hit the dozer and that the bucket teeth do not touch the dozer.

OPERATION OF THE ARM

Pull back the attachment control lever and the arm will be pulled in. To move the arm out, push the control lever towards the front.

NOTE:

- When pulling in the arm, the movement may stop for a short moment when the arm is in its vertical position. This is caused by the combined load of the arm and bucket moving the cylinder piston away from the hydraulic flow causing a short delay in the cylinder action, until the flow catches up with cylinder piston. This is a characteristic of the hydraulic system and is no sign of a malfunction.

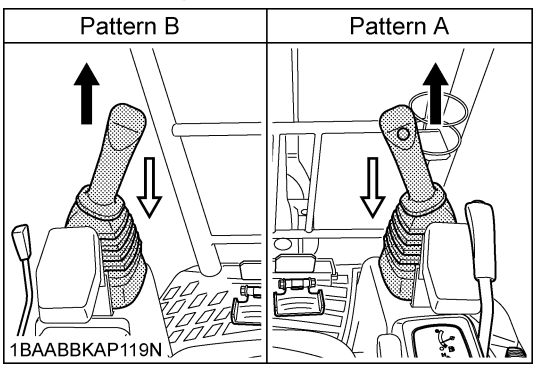

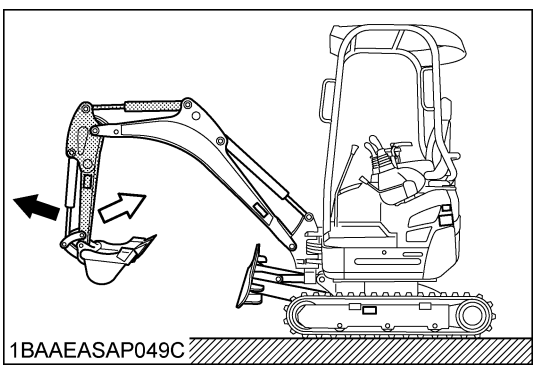

https://truckmanualshub.com/

OPERATION OF BUCKET

To dig using the bucket, move the right attachment control lever from the neutral position left. Moving the control lever right, moves the bucket outwards and dumps its contents.

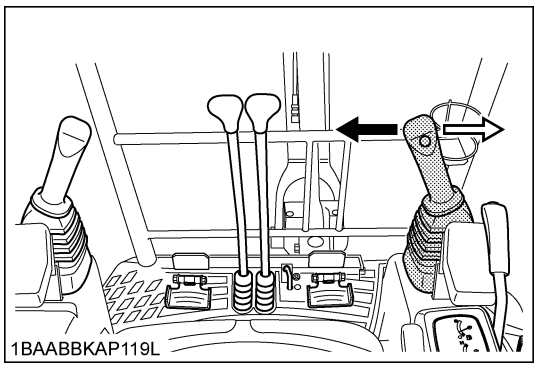

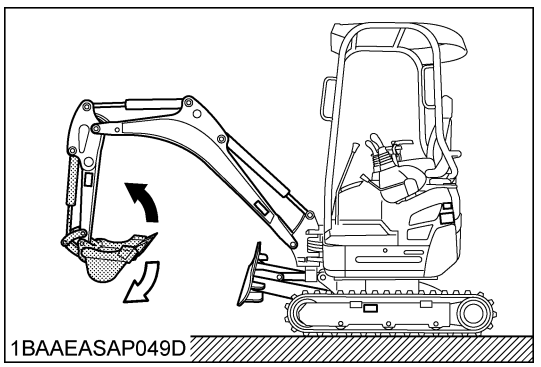

SWIVEL (UNIT SWING) OPERATION

CAUTION

To avoid personal injury:

- **When working in groups, always let the others know what you are going to do before you do it.**
- **Keep away from the working area.**

IMPORTANT:

- Do not operate the left attachment control lever abruptly from right to left (or vice versa). Because of the law of inertia, this causes an impact load on the swing gear and the swing motor. Additionally, the life of the excavator will be shortened.
- Unlock the swing lock pin before doing swivel operations.

1. Move the control lever to the left and the upper structure will turn to the left.
2. Move the control lever to the right and the upper structure will turn to the right.

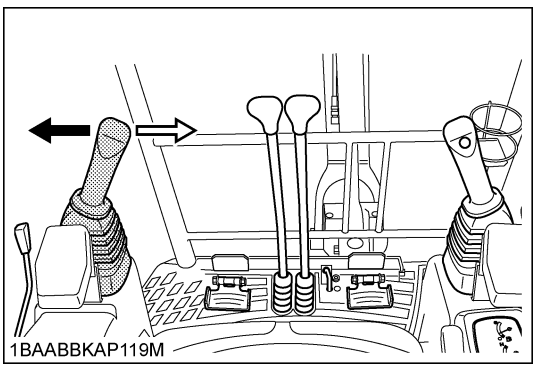

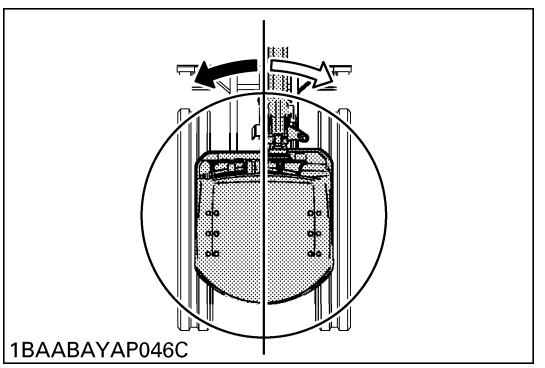

https://truckmanualshub.com/

BOOM SWING OPERATION

1. Step on the left side of the pedal to swing the boom to the left.
2. Step on the right side of the pedal to swing the boom to the right.

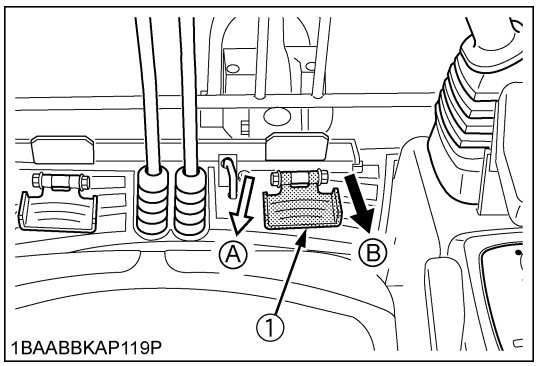

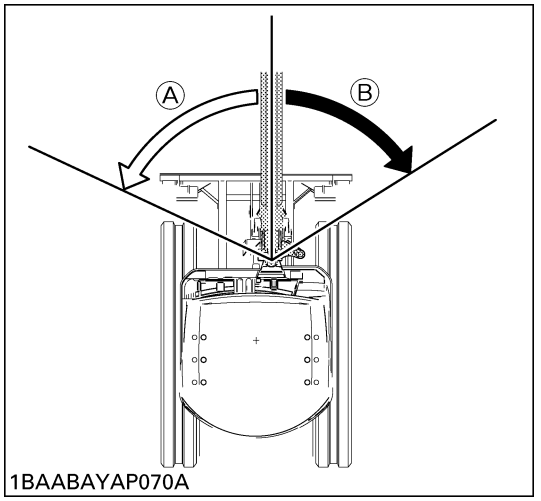

(1) Boom swing pedal *(A) Swing to left*
(B) Swing to right

BOOM SWING PEDAL

WARNING
To avoid personal injury or death:
- **Always keep your toes within the edge of foot step; otherwise there is a possibility that your toes will be caught between swing frame and boom or boom cylinder.**

CAUTION
To avoid personal injury:
- **When boom swing operation is not in use, fold the boom swing pedal forward to fix the pedal from unexpected move.**

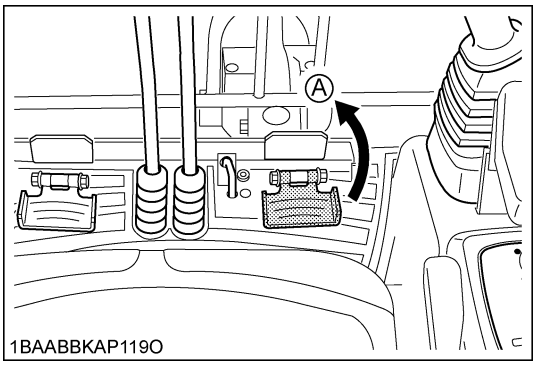

(A) "Fix"

https://truckmanualshub.com/

OPERATION OF TRACK WIDTH CHANGE AND DOZER

CAUTION
To avoid personal injury:

- **Do not operate in narrow track width [39in. (990mm)], it makes risk of the excavator tipping over, operate always in standard track width [49in. (1240mm)], except to pass through narrow space on a even ground.**
- **For changing the track width or using the dozer, set the track width change/ dozer select lever fully. If not, the excavator may unintentionaly move.**

■ Operation of the Track Width

1. Set the track width change/dozer select lever to the "Track width change" position (B).

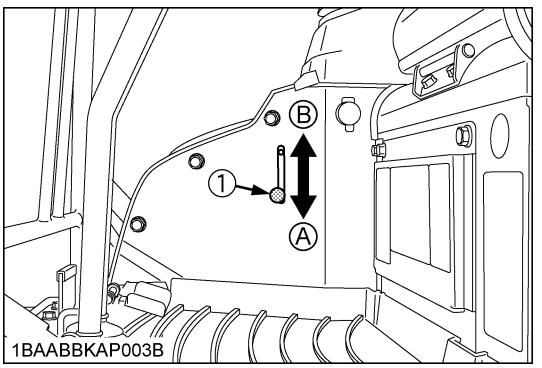

(1) Track width change / dozer select lever *(A) "Dozer"* *(B) "Track width change"*

2. Push the control lever forward.
   ... The track width increases [from 39in. to 49in. (990 mm to 1240 mm)].
   Pull the control lever backward.
   ... The track width reduces [from 49in. to 39in. (1240 mm to 990 mm)].

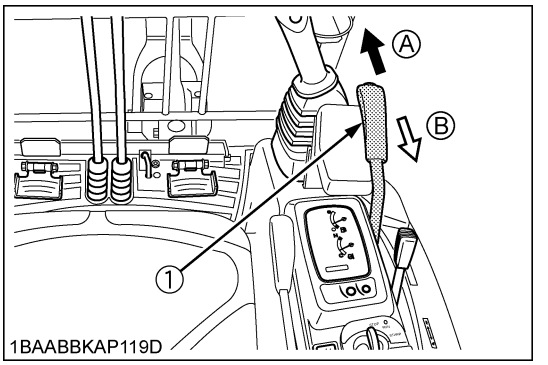

(1) Control lever *(A) "Increase"* *(B) "Reduce"*

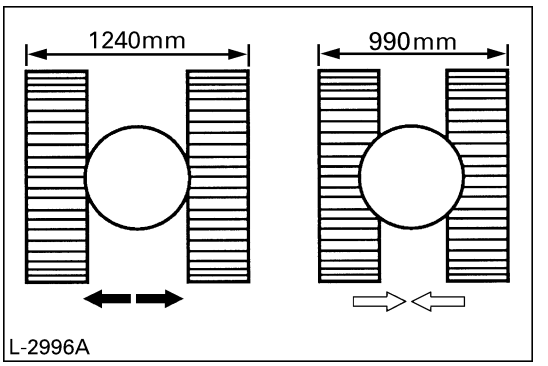

3. After track width change, be sure to set the track width change/dozer select lever to the "Dozer" position (A).

https://truckmanualshub.com/

■ Adjustment of the Dozer Width

For changing from standard width to narrow width:

1. Pull out the fixing pin (2) and remove the extension dozer (1).
2. Set as under illustration the extension dozer (1), insert fixing pin (2).
3. It is the same operations for opposite side (left or right), and also for changing from standard width to wide width.

Dozer width 49in. (1240mm) (standard)

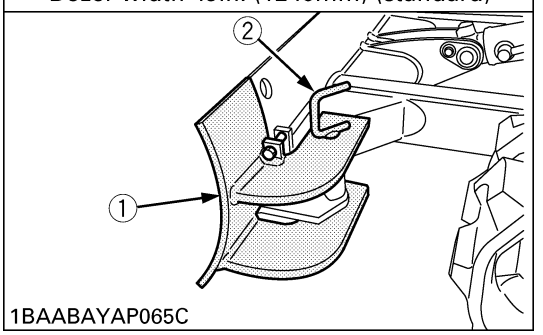

Dozer width 39in. (990mm) (narrow)

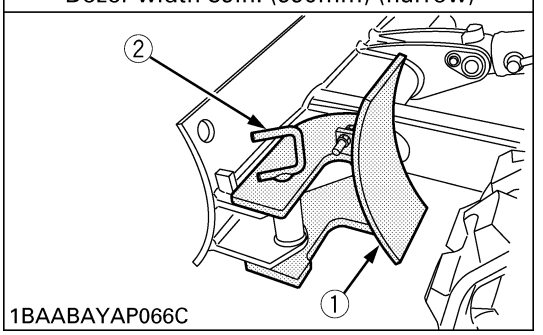

(1) Extension dozer
(2) Fixing pin

■ Operation of the Dozer

NOTE:

- While operating the dozer, the track width change / dozer select lever must be set position (A).

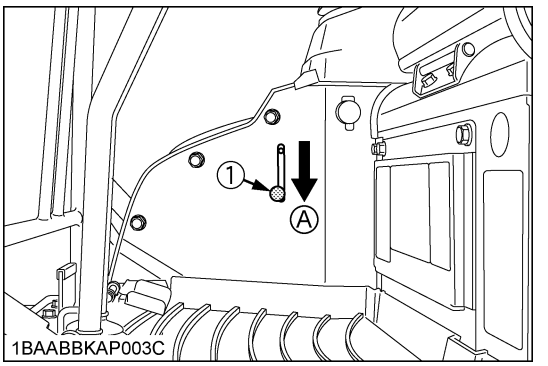

(1) Track width change / dozer select lever *(A) "Dozer"*

1. To raise the dozer, pull back the control lever. Pushing the control lever forwards, lowers the dozer.

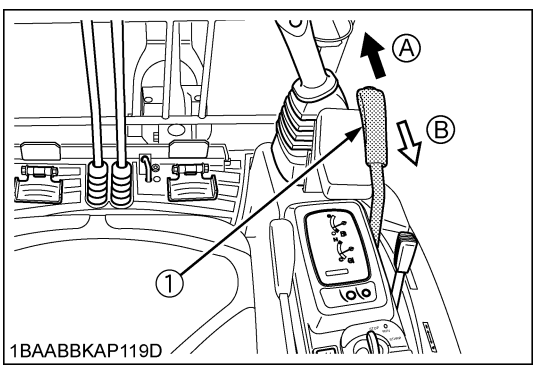

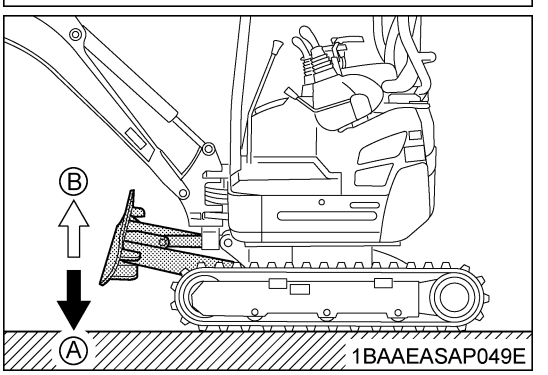

(1) Control lever *(A) "Lower"*
(B) "Raise"

2. While undertaking earth moving work, control both drive levers with the left hand and the control lever with the right hand.

https://truckmanualshub.com/

SERVICE PORT OPERATION

This pedal is used to operate attachments such as breakers.

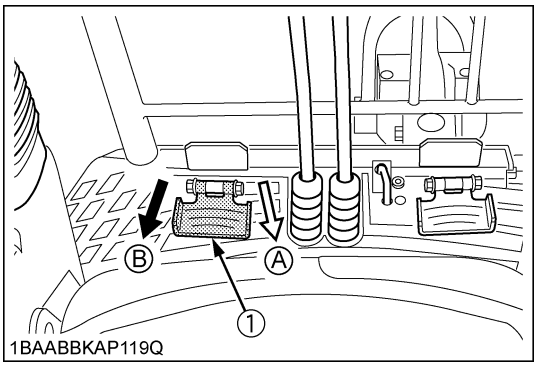

(1) Service port pedal
(A) Sends oil to the port (A)
(B) Sends oil to the port (B)

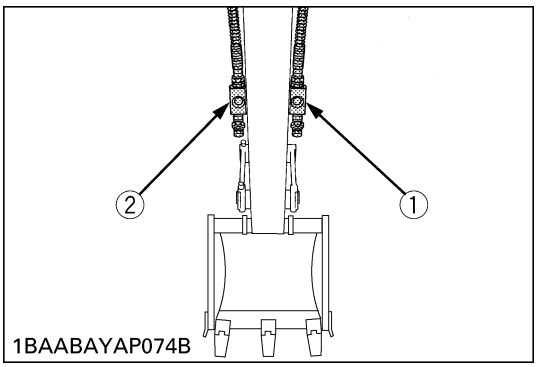

(1) Port (A)
(2) Port (B)

- Push the right of the pedal (⇩) to send oil to the port (A).
- Push the left of the pedal (⬇) to send oil to the port (B).

Max. Flow Volume Theoretical US gal (L)/min.	7.32 (27.7)
Max. Pressure psi [MPa (kgf/cm²)]	2697 [18.6 (190)]

IMPORTANT:

- When the service port is not used for a long period, dirt particles can settle in the lower part of the service port lines.
  When the plugs on the service port lines are removed to connect attachments, drain approx. 100 cc of oil per side.
  For breaker choices, contact your dealer.

NOTE:

- When the service port is not in use, fold the service port pedal forward. The pedal gets fixed and can be used as footrest.

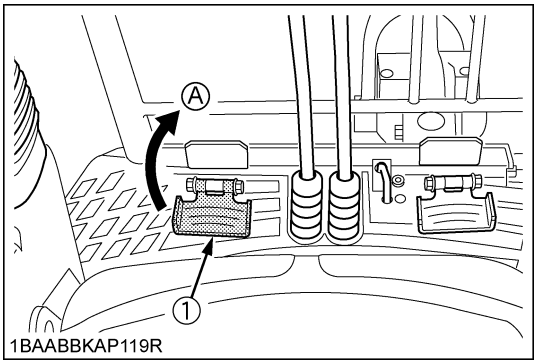

(1) Service port pedal
(A) "Fix"

DRIVING

WARNING
To avoid personal injury or death:

- **Before starting the engine, make sure that no one is near the excavator.**
- **Before operating the excavator, check the track direction. (Idler and dozer to the front of the excavator).**

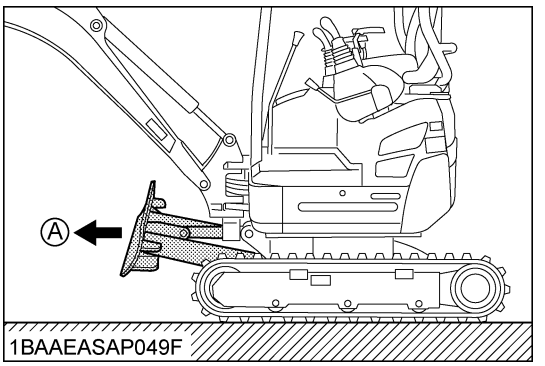

(A) "Front"

- **Avoid travelling across a slope or working sideways on a slope.**

https://truckmanualshub.com/

1. To lock the swing frame with the track frame, engage the swing lock pin.
2. Adjust the engine speed from idling to an intermediate speed.
3. Unlock the lock lever for attachment control.
4. Raise the dozer and hold the bucket about 8 to 16 in. (20 to 40 cm) over the ground.

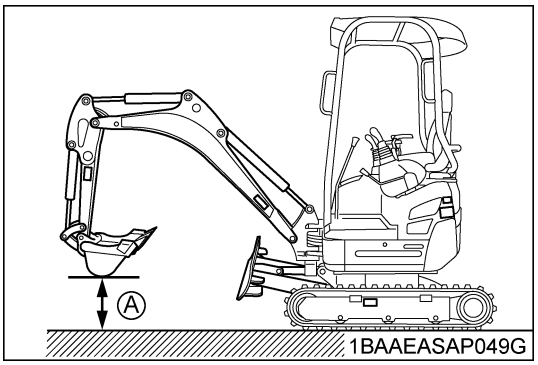

(A) 8 to 16 in. (20 to 40 cm)

■ Throttle Lever

At the operator's seat,

1. Move the throttle lever to the "FAST" position, and the engine speed increases.
2. To stop the engine, push the throttle lever fully to the "SLOW" position and turn the starter switch to the "STOP" position.

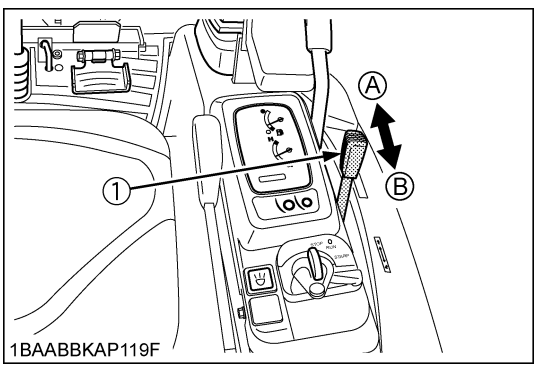

(1)Throttle lever *(A) "FAST"*
(B) "SLOW"

■ Drive Levers (Right, Left)

WARNING

To avoid personal injury or death:

- **If the swing frame has been turned 180°, i.e. the dozer is, seen from the operator, "behind", then the travel direction is opposite to the drive direction of the levers (when activating the drive lever forwards, the excavator, seen from the operator, will move backwards).**

Pushing the drive lever forward, moves the excavator forward, and vice-versa. The front of the excavator is the direction where the dozer is present.

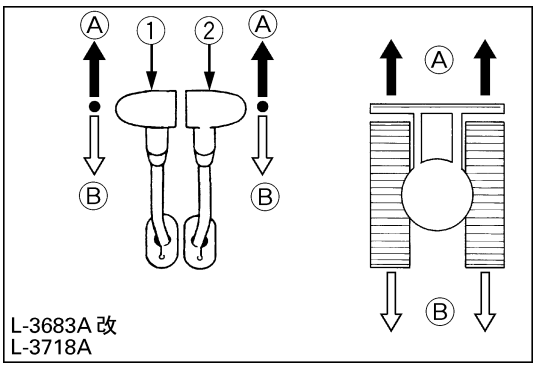

(1) Drive lever (left) *(A) "Forward"*
(2) Drive lever (right) *(B) "Backward"*

IMPORTANT:

- If the track are clogged with sand or gravel while working on soft ground, lift up one track with the help of the boom, arm and bucket and let the track rotate to shake off the sand and gravel.

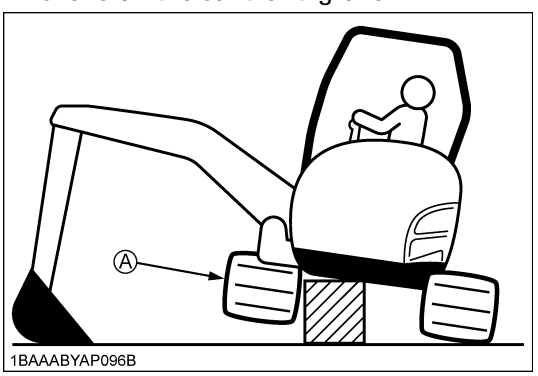

(A) "Rotate to shake off sand and gravel"

https://truckmanualshub.com/

■ Travel Speed Switch

CAUTION
To avoid personal injury:
- **When activating the travel speed switch, it must be pushed down completely.**

Travel speed will increase when the switch is pushed down.
1. Press the travel speed switch. The travel speed changes from first speed to second. The symbol lights up.
2. Press the travel speed switch again, and the travel speed changes from second to first. The symbol light goes out.

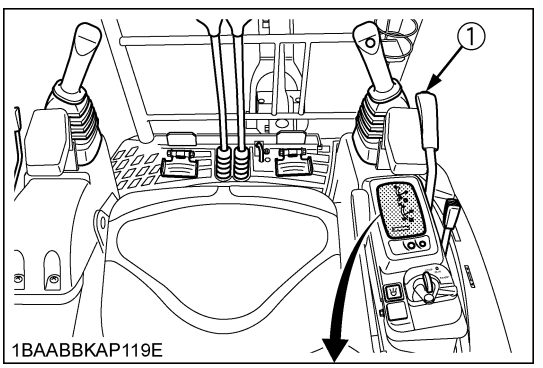

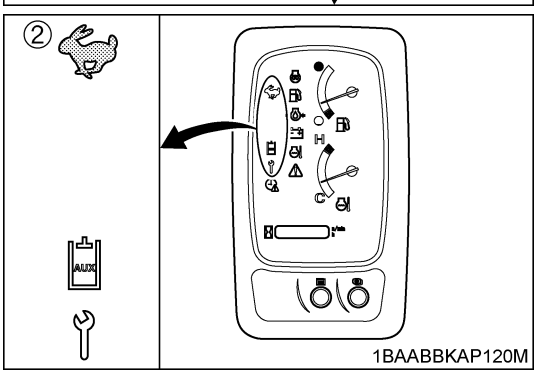

(1) Travel speed switch
(2) symbol

NOTE:
- Each time the travel speed switch is pressed, the travel speed is switched between first and second.

IMPORTANT:
- Do not activate the travel speed switch when there is increased drive resistance (e. g. driving on inclines or on uneven grounds).

TURNS

CAUTION
To avoid personal injury:
- **Do not change direction on steep slopes, or the excavator could tip over.**
- **Before changing direction, beware of people in the working area.**

■ Pivot Turn

NOTE:
- Movement as illustrated shows the turning directions with the dozer in the front.

When the dozer is in the back, the steering direction is reversed.
(For example, push the left drive lever forward and the excavator turns right; the left track, seen from the operator, will move backward from the operator.)

◆ Change of Direction while Stationary

1. Push the left drive lever forward; the excavator will turn to the right.

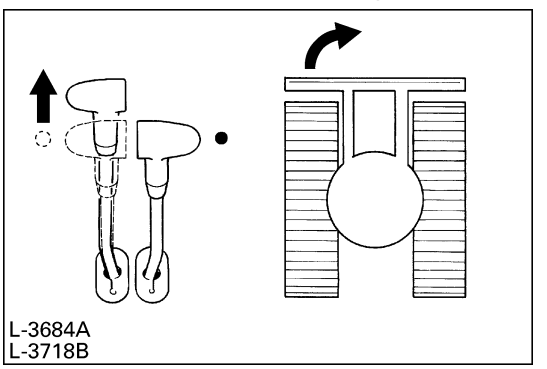

2. Pull the left drive lever backward; the excavator will turn to the left.

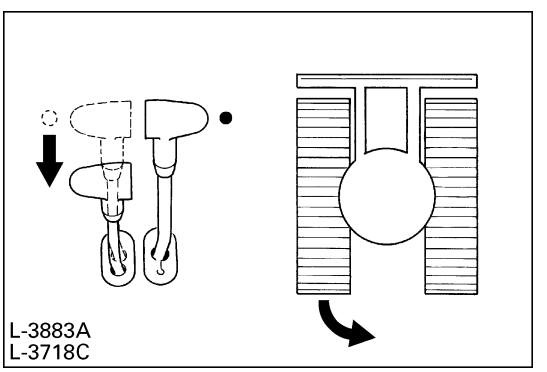

https://truckmanualshub.com/

◆ **Change of Direction while Travelling**

1. While travelling forwards, bring the left (right) drive lever in the neutral position; the excavator will turn to the left (right).

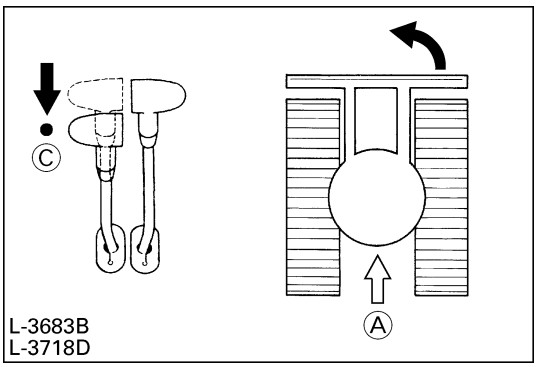

(A) "Travelling forward"
(C) "Neutral position"

2. While travelling backwords, bring the left (right) drive lever in the neutral position; the excavator will turn to the right (left).

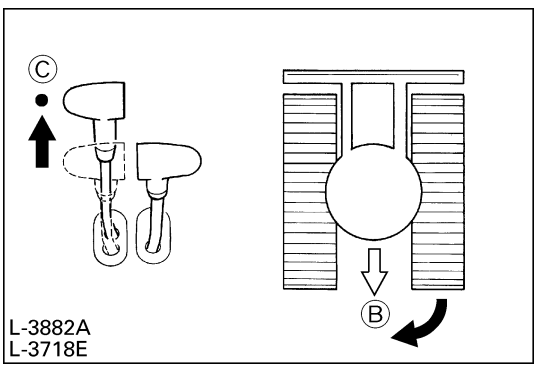

(B) "Travelling backward"
(C) "Neutral position"

■ Spin Turn

When both drive levers are activated in the opposite directions, both track will rotate with the same speed but in opposite directions. Center of rotation is the center of the excavator.

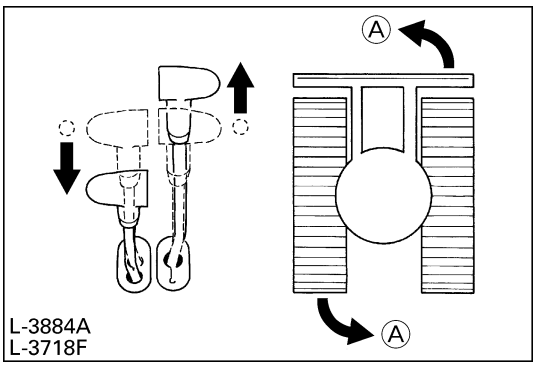

(A) "Left spin turn"

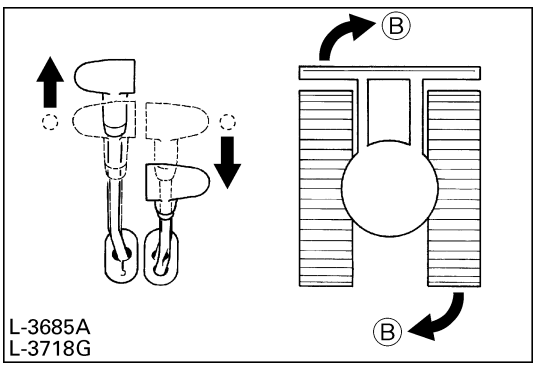

(B) "Right spin turn"

https://truckmanualshub.com/

UP AND DOWNHILL TRAVELLING

CAUTION
To avoid personal injury:
- **Before travelling up and downhill, be sure to be in standard track width [49in. (1240mm)].**
- **When travelling up or down a slope for long periods of time, be sure to engage the swing lock pin. Also engage the swing lock pin when standing on a slope for a long time or the excavator is being transported.**

While travelling uphill, keep the lower edge of the bucket approx. 8 to 16in. (20 to 40cm) above the ground. Although the KUBOTA excavator will not slip easily because of the tracks, it is safer to let the bucket slide over the ground while travelling downhill. Always choose slow speed for uphill and downhill travelling.

[UPHILL TRAVELLING]

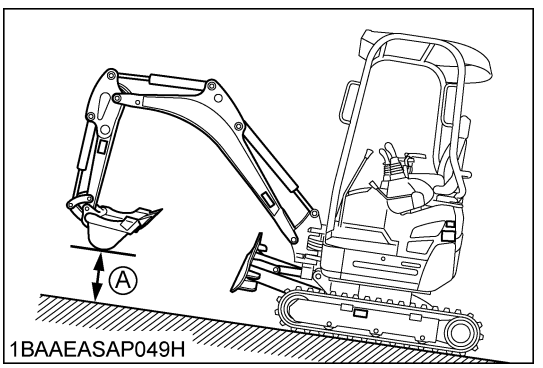

(A) 8 to 16 in. (20 to 40 cm)

[DOWNHILL TRAVELLING]

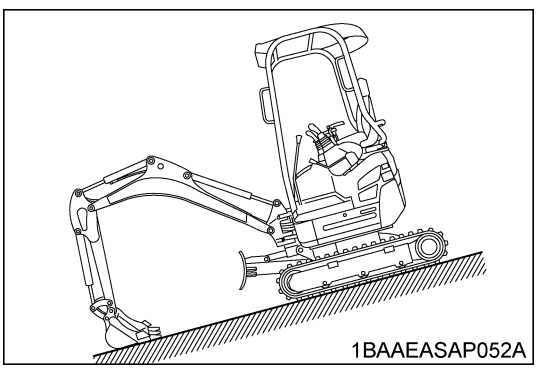

PARKING ON A SLOPE

WARNING
To avoid personal injury or death:
- **When the excavator is parked or left unattended on a slope, be sure to put the bucket on the ground and place all control levers in neutral position, then brace the tracks with drags.**

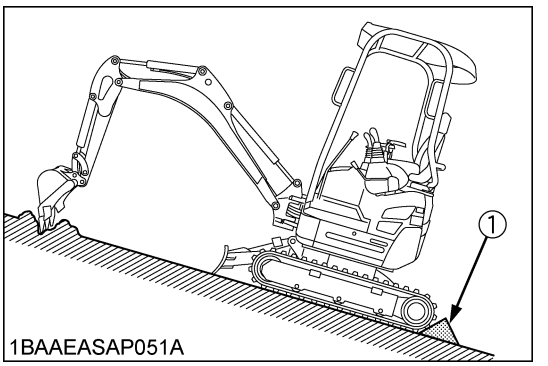

(1) Drag

https://truckmanualshub.com/

IMPORTANT INFORMATION ON EXCAVATOR OPERATION

- Do not try to crush concrete or boulders using side swings with the bucket. Also avoid using side sweeps of the bucket to move earth piles.
- Under all circumstances avoid the following operations:
  - Excavation using the gravitational impact of the machine.
  - Compacting of gravel or soil using the dropping action of the bucket.
  - Excavation using the travelling power of the machine.
- Do not try to drop or shake off soil adhering to the bucket in the manner given in the points below. This can cause damage to the machine.
  Adhered soil can be shaken off when the bucket is being emptied by moving the bucket out to the maximum stroke of the cylinder. Should this not suffice, swing out the arm as far as possible and operate the bucket back and forth.
- Do not hit the dozer with the boom cylinder!
  Make sure that the boom cylinder does not hit the dozer when doing deep excavation. If necessary swing around so that the dozer is in the back of the machine.
- Pay attention when pulling in the bucket!
  When pulling in the bucket (for driving or transportation) avoid hitting the dozer.
- Avoid collisions!
  When moving the excavator, pay attention that the dozer does not collide with obstructions such as boulders etc..
  Such collisions shorten the life of the dozer and the cylinder substantially.
- Support the machine correctly!
  When stabilizing the machine with the dozer, lower the dozer to engage the full width on the ground.
- If the water or mud level reaches higher than the top of the tracks, the swivel bearing, swivel motor gear and ring gear may be exposed to mud, water and other foreign objects.
  The excavator must be properly pressure washed after each use.
  - Thoroughly clean the area around the swivel bearing, swivel motor gear and ring gear to remove foreign objects.
  - Inspect the swivel motor oil sump (if equipped) for water contamination. If water is present, refer to operator's manual for lubricant replacement procedure.
  - Refer to operator's manual for proper swivel bearing, swivel motor gear and ring gear lubrication procedures.
  - Reinstall any protective covering if removed earier.

https://truckmanualshub.com/

TRANSPORTING THE EXCAVATOR ON A TRUCK

DANGER
To avoid personal injury or death:

- **No directional changes should be made when the excavator is on the ramp. Should a change of direction be necessary, drive off the ramp completely and make the turn.**
- **When driving forwards or backwards onto the truck, or when swinging the upper body, make sure that neither the cabin or the gates of the truck will be damaged.**

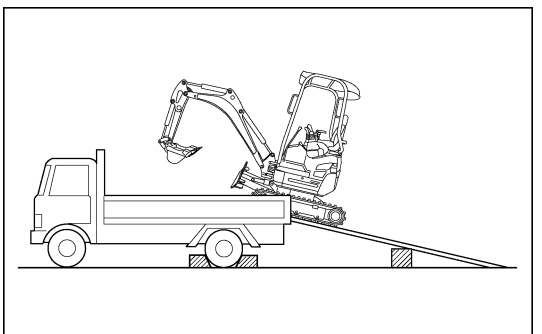

1BAAEASAP054A

- **When the excavator reaches the point between the ramps and the truck bed, halt and then move very slowly until the excavator reaches the horizontal position.**
- **Move the excavator onto the truck only with the arm completely pulled in. Otherwise the truck cabin could be damaged when swinging around the upper body.**
- **Do not jack up the machine using its boom to load or unload the excavator from the truck. Dangerous situation could arise.**

■ Transporting on a Truck

WARNING
To avoid personal injury or death:

- **After loading the machine on the truck, lower the bucket and dozer onto the truck bed. Lock the swing frame with the swing lock pin.**

Prepare a platform to load or unload the excavator. Take following steps when using ramps.

1. Apply the parking brakes of the truck, and block the drive wheels from both sides.

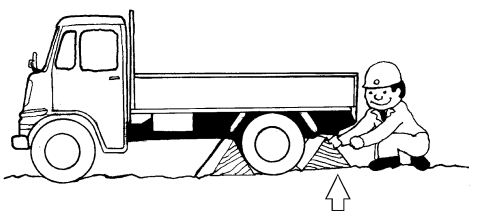

L-0039A

2. Use mounting brackets to secure the ramp properly. Connect the ramps directly to the truck bed.

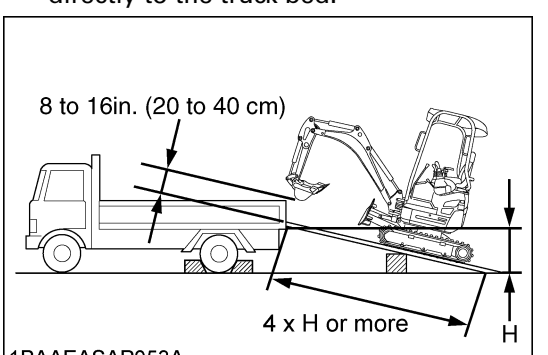

1BAAEASAP053A

https://truckmanualshub.com/

3. For additional safety, use blocks or supports under the ramps and the truck bed.

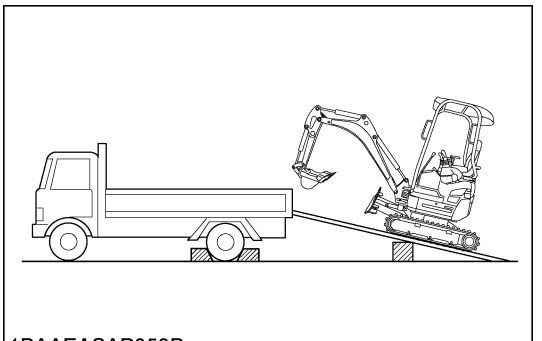

1BAAEASAP053B

4. Align the ramps and the tracks and then drive the excavator slowly up the ramps. After ensuring that the tracks are completely on the truck bed, swivel the upper body around to the back of the truck.
5. Block the tracks and wire down the excavator.

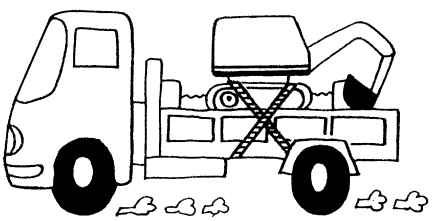

L-4200A

6. Before unloading, remove the swing lock pin and then raise the dozer and bucket from the truck bed.

https://truckmanualshub.com/

LIFTING OF THE EXCAVATOR

DANGER

To avoid personal injury or death:

- **The correct instructions for safe handling are described here. Read these instructions carefully before moving the machine. Make sure that the operating personnel read the operator's manual carefully.**

■ Basics when Lifting with Cables or Straps

1. The lifting and crane operation is to be undertaken according to the guidelines described.
2. The equipment for lifting mentioned in these instructions are only given as reference, the standards concerning strength, control and other details are based on the respective applicable guidelines.

■ Safety Aspects when Lifting with Cables or Straps

Abide by following steps when lifting:

1. Do not lift loads that exceed the maximum load capacity of the crane.
2. Choose correct equipment suitable to the weight, size and form of the load.
3. First assess the center of gravity of the load, position the hook directly over the load and lift the load so that the center of gravity of the load is as low as possible.
4. The steel cables or straps must be fixed in the middle of the hook.
5. The load must be lifted vertically from the ground.
6. Do not enter the working area under suspended loads and do not move the load over people. The load must only be moved in an area where the balance can be easily maintained.

https://truckmanualshub.com/

■ Lifting Procedure for the Excavator

WARNING
To avoid personal injury or death.
- **Do not use the hooks on the roof of canopy and cabin for lifting the excavator.**

◆ General guidelines for lifting

1. Lifting position. (see illustration)
   1) Pull in the boom towards rear.
   2) Pull in the arm completely.
   3) Pull in the bucket completely.
   4) Adjust the swing angle to the right end.
   5) Swing frame so that dozer blade is to the rear and frame is parallel with tracks.
   6) Raise the dozer blade fully.
   7) Insert the swing lock pin.
2. Attaching the steel wires.
   1) Always hook the excavator at three points. (one on the boom and right and left of the dozer)
   2) Always use a shackle on each lifting hole when attaching the cables or straps.
   3) Using protective material at all places where the cables or straps contact the machine.
   4) Keep the angle between the front and rear cables or straps within. 30° (0.52 rad.).
3. Tackle
   Choose components having enough strength.
4. Lifting
   1) Lift slowly and safely
   2) Do not enter the excavator area when lifting.
   3) Lift the excavator horizontally. (Modify wire connections according to needs)

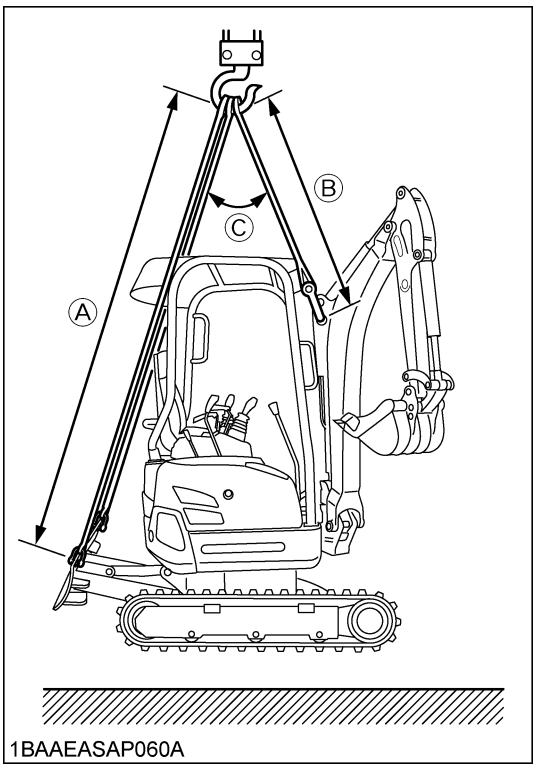

(A) Approx. 157 in. (4000 mm)
(B) Approx. 98 in. (2500 mm)
(C) Approx. 30° (0.52 rad.)

https://truckmanualshub.com/

MAINTENANCE

MAINTENANCE INTERVALS

No.	Checkpoints	Measures	Hour meter indicator														Interval	Ref. page	
			50	100	150	200	250	300	350	400	450	500	550	600	1000	2000			
1	Fuel	check	Daily check															49	
2	Engine oil	check	Daily check															50	
		change										○			○	○	every 500 hrs	57	
3	Hydraulic oil**	check	Daily check															51	
		change													○		every 1000 hrs	63	
4	Coolant	check	Daily check															49	
		change															every 2 years	64	
5	Lubrication points	check	Daily check															52	
6	Radiator	check	Daily check															53	
7	Battery condition	check	○	○	○	○	○	○	○	○	○	○	○	○	○	○	every 50 hrs	54	
8	Electrical lines	check	Daily check, Annual servicing															53	
9	Greasing of swing bearing teeth	—	○	○	○	○	○	○	○	○	○	○	○	○	○	○	every 50 hrs	54	
10	Drive unit oil	change		◉										○			every 500 hrs	59	
11	Fan belt tension	adjust				○				○				○	○	○	every 200 hrs	56	
12	Radiator hoses and clamps	check				○				○				○	○	○	every 200 hrs	57	
		change															every 2 years	64	
13	Air filter element*	clean				○				○				○	○	○	every 200 hrs	55	@
		change													○	○	every 1000 hrs	63	
14	Greasing of swing ball bearings					○				○				○	○	○	every 200 hrs	56	
15	Fuel pipes and hoses	check				○				○				○	○	○	every 200 hrs	—	
		change															every 2 years	59	
16	Engine oil filter	change										○			○	○	every 500 hrs	58	
17	Fuel filter	check	○	○	○	○	○	○	○	○	○	○	○	○	○	○	every 50 hrs	—	
		change										○			○	○	every 500 hrs	59	@
18	Hydraulic return filter element	change													○	○	every 1000 hrs	60	
19	Hydraulic suction filter element	change													○	○	every 1000 hrs	62	
20	Front idler and track roller oil	change														○	every 2000 hrs	63	
21	Dynamo and starter motor	check														○	every 2000 hrs	63	
22	Radiator system	rinse															every 2 years	64	
23	Fuel injection nozzle (Injection pressure)	check															every 1500 hrs	59	@
24	Injection pump	check															every 3000 hrs	60	@

https://truckmanualshub.com/

IMPORTANT:

⦿ First operation

- * Clean the air filter more frequently if used in dusty conditions. With heavy soiling, replace the filter.

  ** When using a hydraulic breaker, change hydraulic oil and return filter according to the table on "Hydraulic Oil Change(Including Exchange of the Suction Filter in the Hydraulic Tank)" under "EVERY 1000 SERVICE HOURS" in "REGULAR CHECKS AND MAINTENANCE WORK".

- The items listed above (@ marked) are registered as emission related critical parts by KUBOTA in the U.S.EPA nonroad emission regulation. As the engine owner, you are responsible for the performance of the required maintenance on the engine according to the above instruction. Please see the Warranty Statement in detail.

https://truckmanualshub.com/

DAILY CHECKS

For your own safety and to assure the long life of your machine, a careful check should be made before each operation.

■ Coolant Check

CAUTION
To avoid personal injury:
- **Move the excavator to even ground.**
- **Make sure that the engine is turned off.**
- **Do not open the radiator cap right after the engine has been stopped; Serious burns can occur from contact with escaping hot coolant fluid.**
- **Check the coolant level in the reserve tank only after the engine has cooled down.**
- **Remove the radiator cap only if absolutely necessary.**

The radiator has a reserve tank. Should the coolant level in the radiator sink, the water will be automatically be transfered to the radiator.
Check the coolant level in the reserve tank and fill up if necessary. The coolant level should be between the marks “FULL” and “LOW”.

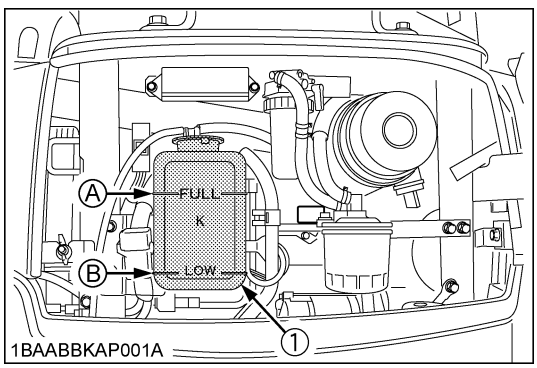

(1) Reserve tank *(A) “FULL”*
(B) “LOW”

IMPORTANT:
- Do not fill the reserve tank over the “FULL” marking.
- Do not fill with dirty or salty water.

NOTE:
- Before delivery coolant were filled with 50 % water and 50 % antifreeze.

■ Check Fuel Level

CAUTION
To avoid personal injury:
- **Stop the engine and remove the key before fuelling.**
- **Do not smoke while fuelling.**

IMPORTANT:
- Temperatures over –5°C, use No.2-D diesel fuel, temperatures are under –5°C, use No.1-D diesel fuel.
- Make sure that the fuel tank is not empty. Air will enter into the fuel system, and must be purged before restarting.
- Always fill up fuel after a day's work.
- See “PURGING OF THE FUEL SYSTEM” in “OTHER ADJUSTMENTS AND REPLACEMENTS”.

If the fuel in the tank goes below the prescribed level, the warning lamp will flash.
If this should happen during operation, refuel as soon as possible.

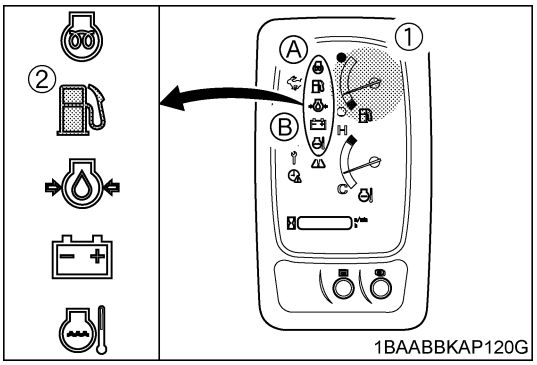

(1) Fuel gauge *(A) “FULL”*
(2) Remaining fuel warning lamp *(B) “EMPTY”*

https://truckmanualshub.com/

If necessary, open the tank cap with the starter key, and add fuel.

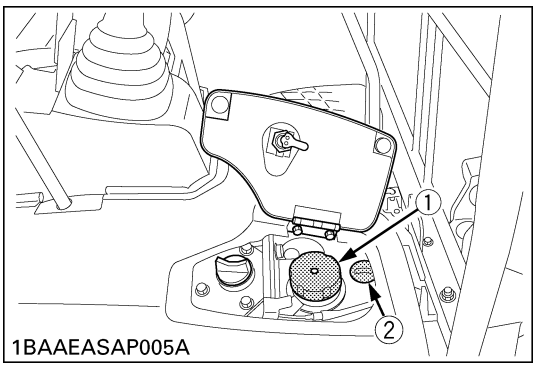

(1) Tank cap
(2) Gauge

Fuel tank capacity	5.02 US gal (19 L)

NOTE:
- The gauge is located next to the oil filling port. When the fuel tank gets nearly full (about 2 liters more to full), the gauge needle starts moving up to "F" (Full). Use this gauge to avoid an overflow.

IMPORTANT:
- Fuel tank cap has an air breather. Make sure to clean the air breather when filling up fuel.

If the air breather is clogged with mud, the fuel tank gets under-pressurized.

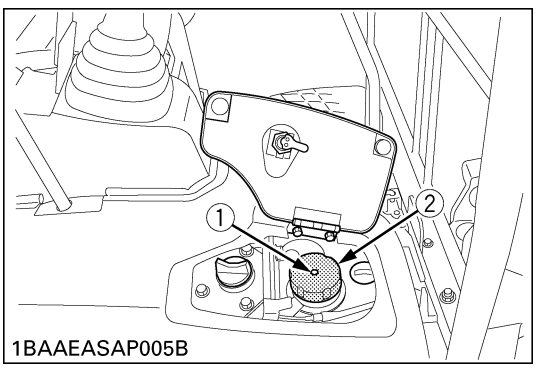

(1) Air breather
(2) Tank cap

■ Check Engine Oil Level

CAUTION
To avoid personal injury:
- **Stop the engine and remove the key before checking the oil level.**

Insert the engine oil dipstick fully into the prepared opening, remove again and check the oil level; if necessary fill with oil. The machine must be on level ground when checking the oil level.

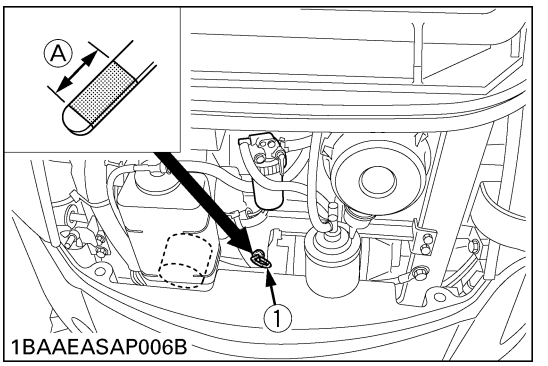

(1) Engine oil dipstick *(A) Required level*

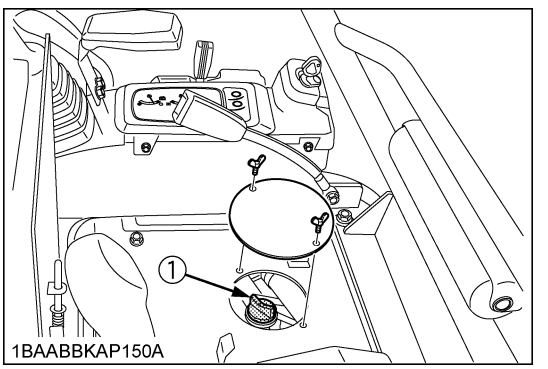

(1) Oil filling port

IMPORTANT:
- Use engine oil with the correct viscosity. (according the outside temperature)
- After stopping the engine and removing the key, wait five minutes, then check oil level. (Excavator must be on level ground.)

https://truckmanualshub.com/

■ Check Hydraulic Oil Level

CAUTION
To avoid personal injury:
- **First lower all attachments on the ground then stop the engine and remove the key.**

IMPORTANT:
- Before filling oil, wipe away all sand and dust from around the oil port. Make sure you use an identical type of hydraulic fluid.
- The excavator has been filled with hydraulic fluid before delivery. See "RECOMMENDED OILS". (Do not mix different oils!)

1. Park the excavator on a firm, flat and level surface.
   Adjust the swing angle to the center.
   Pull in the arm completely.
   Pull in the bucket completely.
   Lower the attachments and dozer blade to the ground and stop the engine.
   Track width increases [16 in. (1240 mm)].

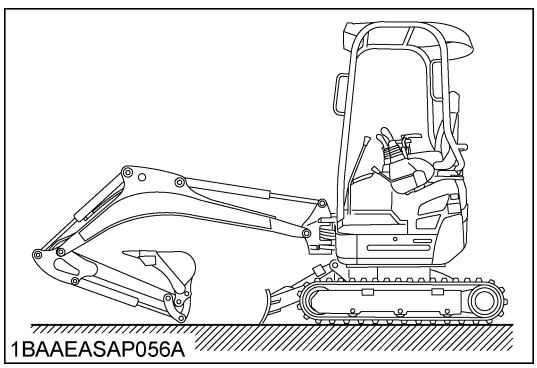

2. Check the oil level as to whether it lies on the center of the gauge at normal temperature (10 to 30°C).
3. Enough oil is present if the oil level lies between the markings.
4. Should the oil level be too low, fill oil through the oil port before starting the engine. This step is important for the protection of the hydraulic system.

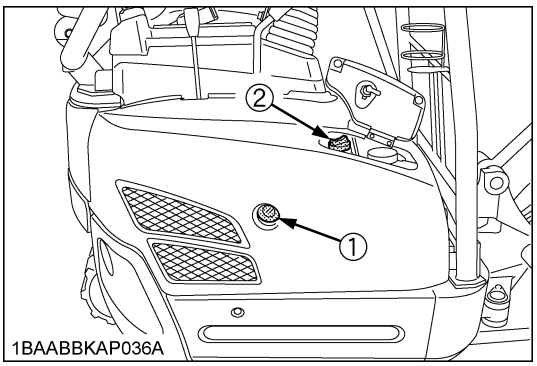

(1) Specified oil level
(2) Tank cap

■ Checking water separator

1. Open the engine bonnet.
2. When the separated water is being drained, the red float moves upward.
   When the red float has reached the indication line, close the shutoff-valve so that no fuel can run out. Now loosen the ring nut, remove the cup, empty the cup and clean the cup.
3. Place the cup back into position. Bleed the fuel system.
4. Finally, do not forget to open the shutoff-valve.

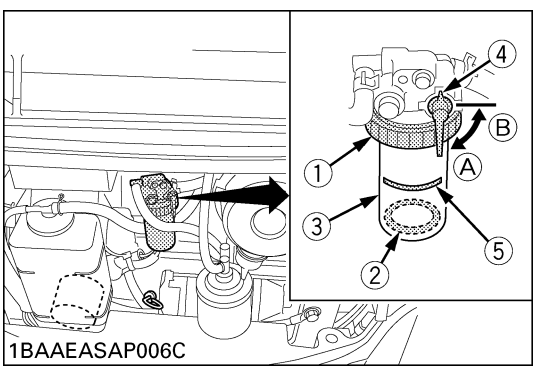

(1) Ring nut
(2) Float
(3) Cup
(4) shutoff-valve
(5) Indication line
(A) "Open"
(B) "Closed"

https://truckmanualshub.com/

■ Lubrication Points

CAUTION
To avoid personal injury:
- **First lower all attachments on the ground then stop the engine and remove the key.**
- **While greasing, take care not to step on the bucket teeth.**
- **When doing excavation work in water, generously grease the following points. After ending work, grease again.**

Grease the marked grease fittings shown by arrows in the illustration below.

1. Boom bottom linkage ..... 1 place
2. Arm bottom linkage ..... 1 place
3. Boom cylinder boss ..... 2 places
4. Arm cylinder boss ..... 2 places
5. Bucket cylinder boss ..... 1 place
6. Bucket link pin ..... 3 places
7. Arm cylinder pin..... 1 place
8. Boom swing fulcrum ..... 2 places
9. Swing cylinder boss..... 2 places
10. Dozer cylinder boss..... 2 places
11. Dozer linkage boss ..... 2 places

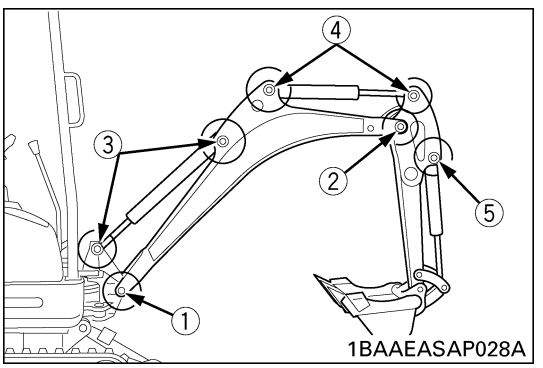

1BAAEASAP028A

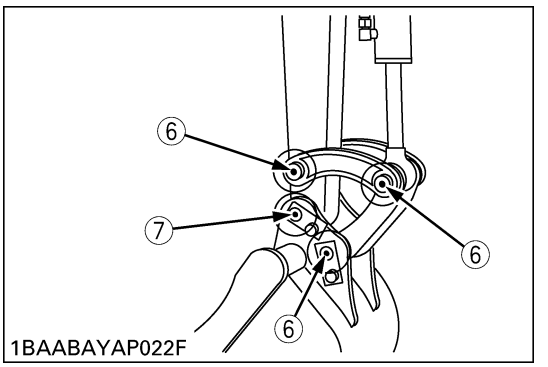

1BAABAYAP022F

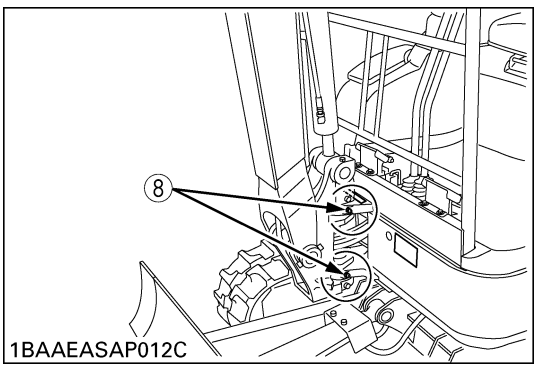

1BAAEASAP012C

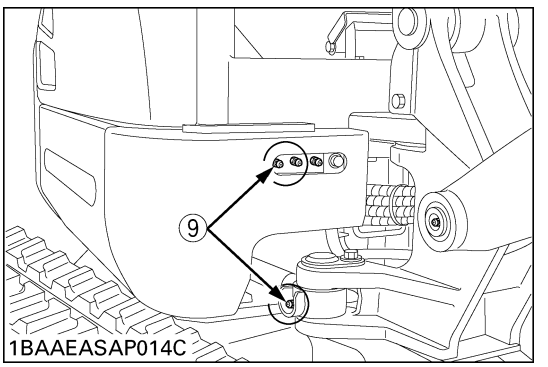

1BAAEASAP014C

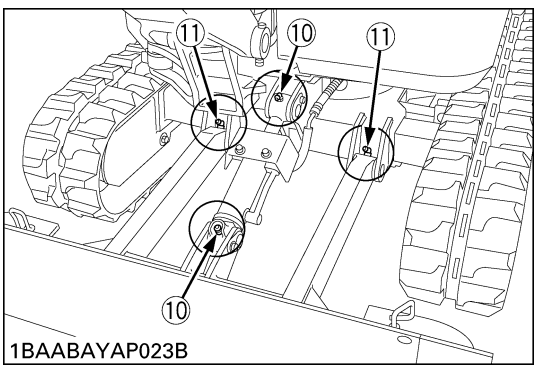

1BAABAYAP023B

https://truckmanualshub.com/

■ Check Radiator and Oil Cooler

CAUTION
To avoid personal injury:
- **Always stop the engine and remove the key before checking the radiator and the oil cooler.**
- **Wear eye protection when cleaning with compressed air.**

1. Check if the fins and ribs are clogged. If so clean with compressed air or steam.
2. Check the rubber hoses for damage and replace if cracked or old. Check if the hose clamps are tight enough.

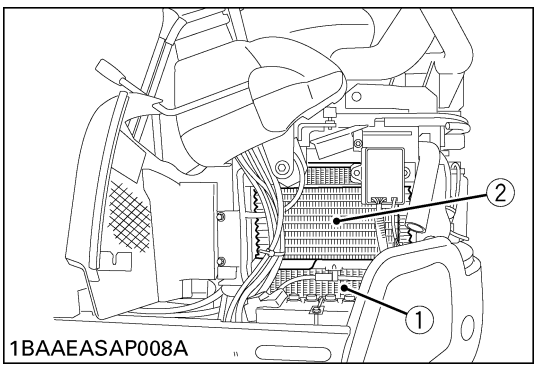

(1) Radiator
(2) Oil cooler

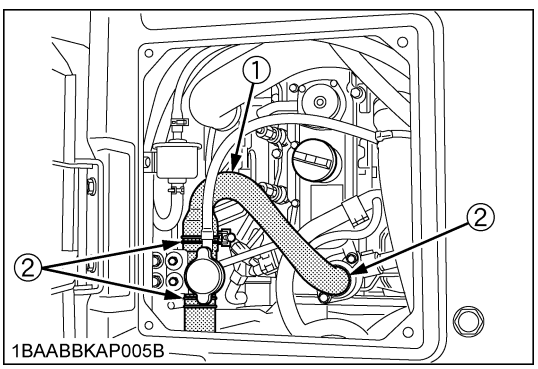

(1) Rubber hoses
(2) Clamps

IMPORTANT:
- Radiator and oil cooler fins and ribs must be clean in order not to overheat the engine and allow free flow of air through the cooling elements.

■ Cleaning of Engine and Electrical Wiring

CAUTION
To avoid personal injury:
- **Always stop the engine and remove the key before cleaning the wiring, cables and engine.**

Before starting, check whether flammable substances have gathered on the battery, the cables and wiring, the muffler or on the engine. If so, remove thoroughly.

■ Checking the Electrical Circuit

Check the electrical circuitry for disconnections, shorts or loose terminals.

■ Washing the Whole Machine

IMPORTANT:
- Do not wash the excavator with the engine running. Water could enter the air filter and damage the engine.
  Make sure that the air filter is kept dry.

https://truckmanualshub.com/

REGULAR CHECKS AND MAINTENANCE WORK

EVERY 50 SERVICE HOURS

■ Battery Charging

CAUTION
To avoid personal injury:

- **When the battery is being activated, hydrogen and oxygen gases in the battery are extremely explosive. Keep open sparks and flames away from the battery at all times, especially when charging the battery.**
- **When charging battery, remove battery vent plugs.**
- **When disconnecting the cable from the battery, start with the negative terminal first. When connecting the cable to the battery, start with the positive terminal first.**
- **Do not check battery charge by placing a metal object across the terminals. Use a voltmeter or hydrometer.**

1. Make sure each electrolyte level is to the bottom of vent wells, if necessary add distilled water in a well-ventilated area.
2. The water in the electrolyte evaporates during recharging. Liquid shortage damages the battery. Excessive liquid spills over and damages the excavator body.
3. To slow charge the battery, connect the battery positive terminal to the charge positive terminal and the negative to the negative, then recharge in the standard fashion.
4. A boost charge is only for emergencies. It will partially charge the battery at a high rate and in a short time.
   When using a boost-charged battery, it is necessary to recharge the battery as early as possible.
   Failure to do this will shorten the battery's service life.
5. When the specific gravity of electrolyte falls between 1.27 and 1.29 charge has completed.
6. When exchanging an old battery for a new one, use a battery of equal specification.

■ Greasing of Swing Bearing Teeth

1. Pump greace with the grease gun through the grease fitting.
2. Grease at each 90° (1.58 rad.) position of the swing frame.
3. Fill with approx. 50g of grease (approx. 20 pumps with the grease gun). Distribute the grease over the teeth.

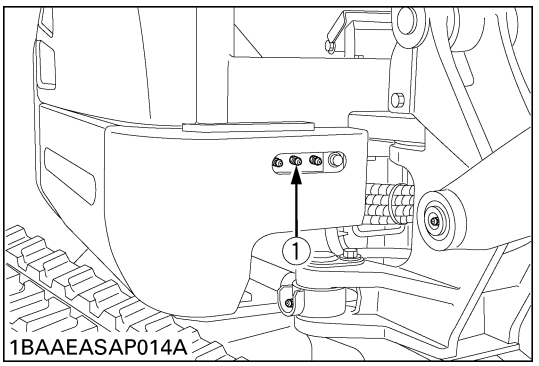

(1) Grease fitting (for Bearing teeth)

https://truckmanualshub.com/

■ Inspection and Cleaning of the Air Filter Element

Open the engine bonnet and remove the dust-cover. Take out only outer element, clean the element, case interior and reassemble. During reassembly, take care to install the dust-cover so that its TOP mark (arrow) faces up-wards. Do not remove the inner element.

IMPORTANT :

- Should the machine be used in extremely dusty areas, the air filter element must be inspected and cleaned more frequently than in the specified maintenance periods.
- The air filter has a dry element, keep free from oil.
- Do not run the engine without the air filter.

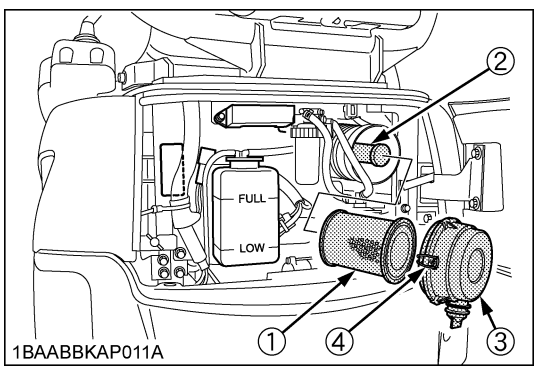

(1) Outer element
(2) Inner element
(3) Dust-cover
(4) Clamps

■ Air Filter Maintenance

CAUTION
To avoid personal injury:
- **Wear eye protection.**

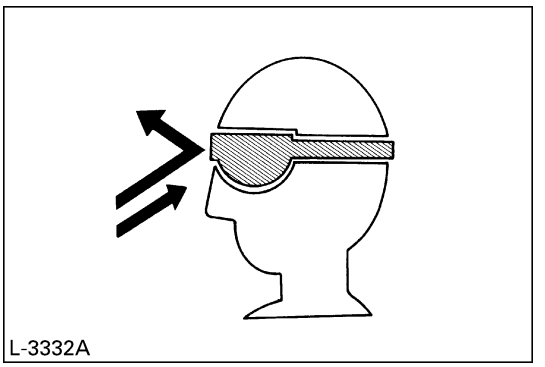

◆ Cleaning with compressed air

Pressure of compressed air must be under 30 psi (205 kPa, 2.1 kgf/cm^2) and the cartridge should be blown clean from the inside to the outside until the dust deposits are remarkably reduced.

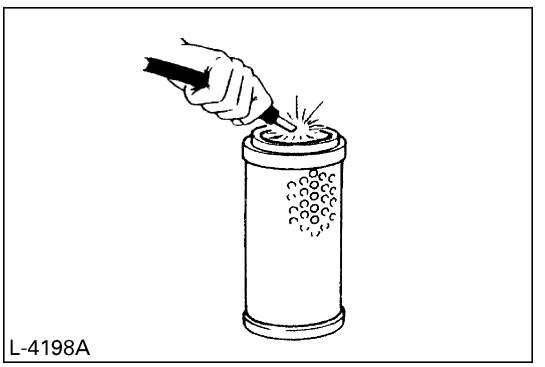

IMPORTANT:

- If the air suction is still inadequate, or the colour of the exhaust gases is abnormal even after the cleaning, the air filter element must be replaced.

https://truckmanualshub.com/

EVERY 200 SERVICE HOURS

Do all 50 and 100 hour servicing at the same time.

■ Greasing of the Swing Bearing

1. Grease through the respective grease fitting.
2. Grease at each 90° (1.58 rad.) position of the swing frame.
   Using the grease gun, apply 5 shots at every position.

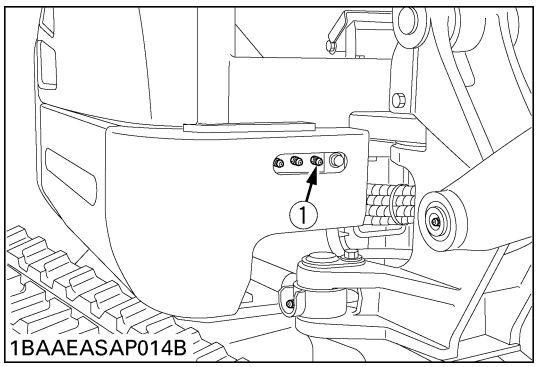

(1) Grease fitting

EVERY 250 SERVICE HOURS

Do all 50 hour servicing at the same time.

■ Checking the Fan Belt Tension

◆ **Check and adjustment of the fan belt tension**

CAUTION
To avoid personal injury:
- **First stop the engine and remove the key.**
- **After servicing, make sure to replace the belt cover in its original position.**

1. Press the fan belt down in the middle, with a force of approx. 98N (10kgf). The belt tension is correct if it deflects about 0.3in. (8mm). If otherwise, loosen bolt (1) and (2) and shift the dynamo in the direction shown by the arrow.
2. Replace the fan belt if worn out, cracked or torn.

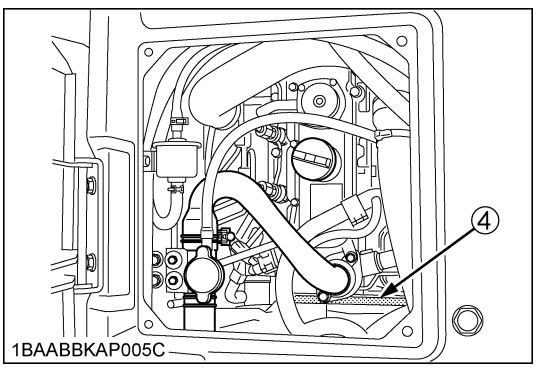

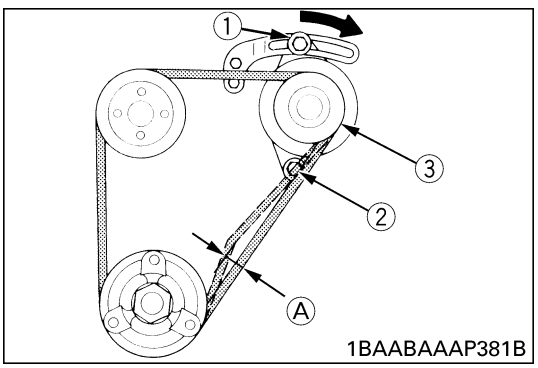

(1) Bolt
(2) Bolt
(3) Dynamo
(4) Fan belt
(A) about 0.28in. (7 mm)

https://truckmanualshub.com/

IMPORTANT:
- If the engine is run with a loose fan belt, the belt could slip and cause overheating of the engine or insufficient battery charging. Check fan belt tension regularly.
- Should the fan belt break or jump out, the indicator light for battery charge will light up. Stop the engine and remove the key immediately.

■ Checking the Radiator Hoses

CAUTION
To avoid personal injury:
- **Wait long enough for the radiator coolant to cool down.**

Check the water hoses for proper fixation. This check should be carried out every 250 hours or every 6 months, whichever comes first.
1. Should the hose clamps become loose or water leaks, tighten the hose clamps properly.
2. Should the radiator hoses become swollen, aged or cracked, they must be replaced and the hose clamps tightened again properly.

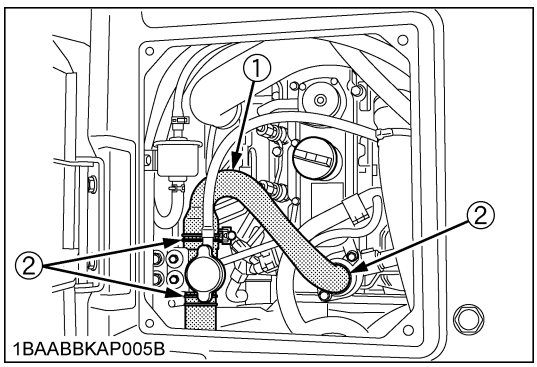

(1) Radiator hoses
(2) Hose clamps

EVERY 500 SERVICE HOURS

Do all 50, 100 and 250 hour servicing at the same time.

■ Engine Oil Change

CAUTION
To avoid personal injury:
- **First stop the engine then remove the key and wait long enough for the oil to cool down.**

1. Remove the drain plug on the underside of the engine and drain all oil.
2. Re-tighten the drain plug.

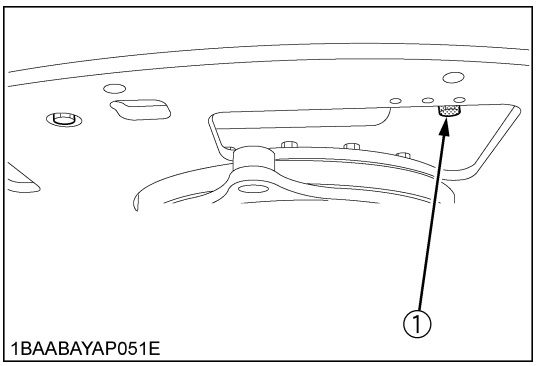

(1) Drain plug

3. Fill with new oil up to the required level.

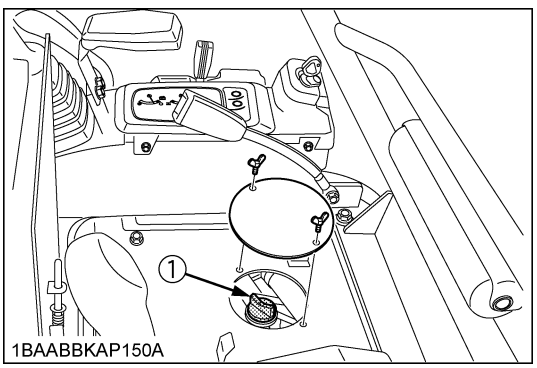

(1) Oil filling port

https://truckmanualshub.com/

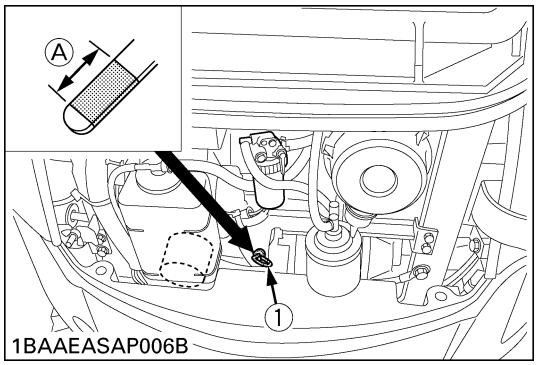

(1) Engine oil dipstick *(A) Required level*

4. Let the engine idle for approx. 5 min. Check the engine oil level. To check the engine oil level, insert the engine oil dipstick completely into the respective port opening and pull out again. If the oil level lies between both markings, no oil must be added.

IMPORTANT:

- Regardless of the service hours, an engine oil change is due every six months.

Engine oil volumes	approx. 0.95 US gal (3.6 L) (with replacing engine oil filter)

■ Replacing Engine Oil Filter

1. Replace the oil filter cartridge at the same time as doing engine oil change.
2. Remove the cartridge with the supplied filter wrench.

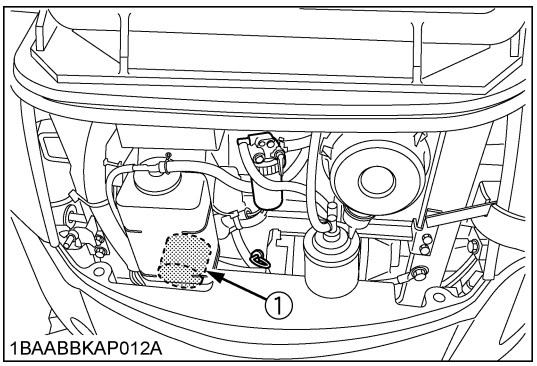

(1) Oil filter cartridge

3. Oil the O-ring of the new oil filter cartridge lightly. Then tighten the oil filter cartridge by hand.
4. Fill engine oil to the specified level.
5. Let the engine run for approx. 5 min. and make sure that the engine oil indicator light does not light up. Then stop the engine and remove the key.
6. The engine oil level will sink parallel to the oil filter capacity after the engine is started. It is necessary to add oil.

IMPORTANT:

- Always check the oil level when replacing the filter.

https://truckmanualshub.com/

■ Drive unit Oil Change (First Oil Change at 100 hours)

CAUTION
To avoid personal injury:
- **Lower attachments to the ground, stop the engine and remove the key before undertaking the oil change.**

1. Rotate the track so that the drain plug of the drive unit is in the bottom position.
2. Remove the drain plug to let the oil run out. Screw in and tighten the drain plug again and fill with gear oil through the oil check port.
3. Fill oil until it overflows out of the oil check port.

Gear oil volumes	approx. 0.07 US gal (0.25 L)

Oil change
- first oil change after 100 hrs
- then every 500 hrs
- or at least once a year

4. Use prescribed gear oil SAE 90.

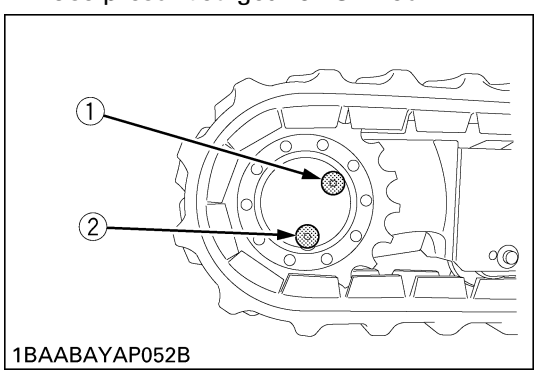

(1) Oil check port (also serves as oil filling port)
(2) Drain plug

■ Replacing of Fuel Filter

CAUTION
To avoid personal injury:
- **Keep fire away.**

1. Close the shutoff-valve of the water separator. Remove the filter with the supplied fifter wrench.
2. Add fuel to the new filter before installing.
3. Apply a light film of fuel to the seal of the new filter and turn in tightly by hand.

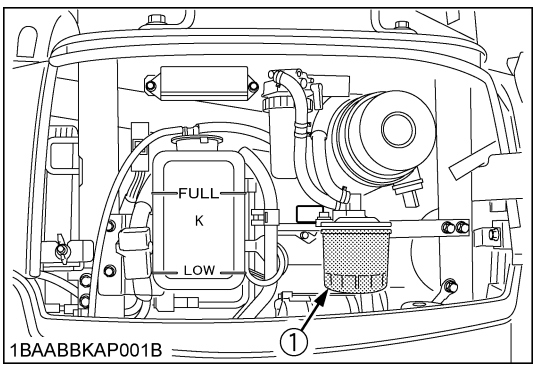

(1) Fuel filter

IMPORTANT:
- After exchange of the filter, the fuel system must purged.

https://truckmanualshub.com/

■ Replacing Hydraulic Return Filter Element (first replacement after 250 service hours)

CAUTION
To avoid personal injury:
- **Remove the oil filter only after the oil in the hydraulic tank has cooled down.**

Contact your KUBOTA dealer for details.

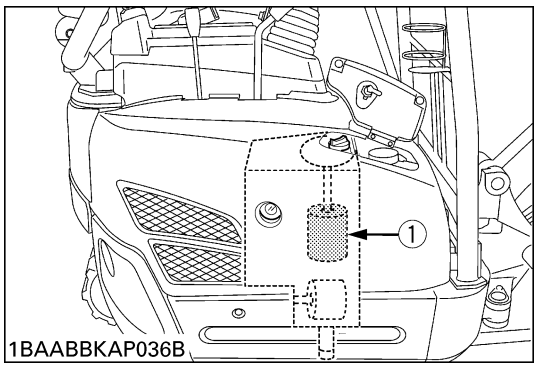

(1) Return filter

IMPORTANT:
- Always check the oil level when replacing the filter.

■ Battery Service

DANGER
To avoid the possibility of a battery explosion: For refillable type battery, follow the instructions below.
- **Do not use or charge the refillable type battery if the fluid level is below the LOWER (lower limit level) mark. Otherwise, the battery component parts may prematurely deteriorate, which may shorten the battery's service life or cause an explosion. Check the fluid level regularly and add distilled water as required so that the fluid level is between the UPPER and LOWER levels.**

CAUTION
To avoid personal injury:
- **Batteries contain sulphuric acid which can cause severe burns. Avoid all contact with skin, eyes or clothing. Antidote - External: Rinse with plenty of water. Internal: Drink large quantities of water or milk. Follow with milk of magnesia, beaten egg or vegetable oil. Call a physician immediately. Eyes: Rinse with plenty of water for 15 minutes and get prompt medical attention. Keep batteries out of the reach of children.**
- **Before inspection or dismounting the battery, be sure to turn of the engine and turn the starter switch to the "OFF" position.**
- **When removing the battery, always disconnect the negative ground cable first. The reverse when installing a battery, always connect the ground cable last. This prevents a possible explosion caused by sparks.**
- **Always wear eye protection when working with the battery.**

https://truckmanualshub.com/

1. Check the battery fluid level and add distilled water if necessary.
2. Clean the battery caps (ventilation holes).

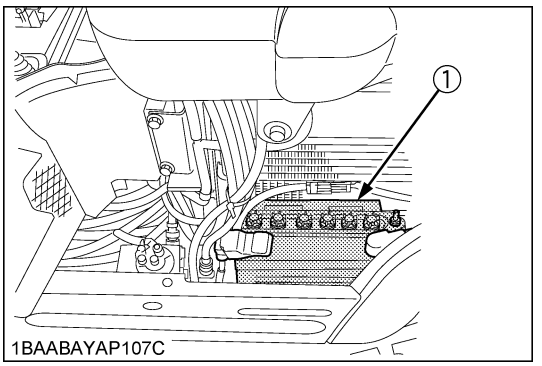

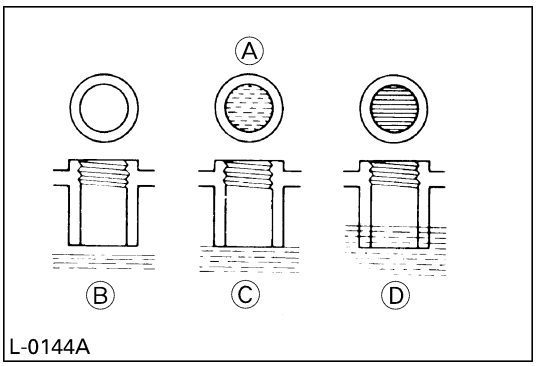

(1) Battery

(A) Battery fluid level
(B) "Too low"
(C) "Correct"
(D) "Too high"

■ Draining water of the Fuel Tank

CAUTION
To avoid personal injury:
- **Before draining water of the fuel tank, be sure to stop the engine and remove the key.**
- **Do not smoke during inspection.**

1. Remove the drain plug on the underside of the body and drain water.
2. Re-tighten the dran plug.

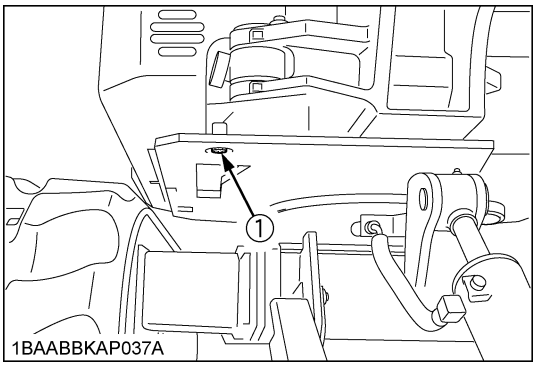

(1) Drain plug

https://truckmanualshub.com/

EVERY 1000 SERVICE HOURS

Do all 50, 100, 200, 250 and 500 hour servicing at the same time.

■ Cleaning of the Pipe filter of the Hydraulic Pilot System

Dust and dirt collect on the concave side of the filter.
Clean the filter by letting hydraulic oil flow through from the convex side.

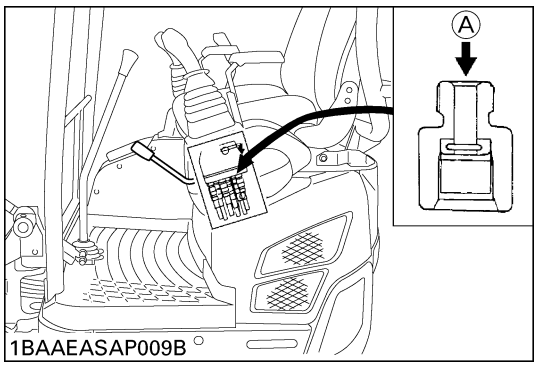

(A) Oil

■ Hydraulic Oil Change (Including Replacing of the Suction Filter in the Hydraulic Tank)

CAUTION
To avoid personal injury:
- **Wait long enough for the hydraulic fluid to cool down. Then begin with the change of the hydraulic fluid.**

1. Move the excavator to a level ground and stop the engine. Extend the piston rods of the cylinders halfway out and lower the bucket on the ground.

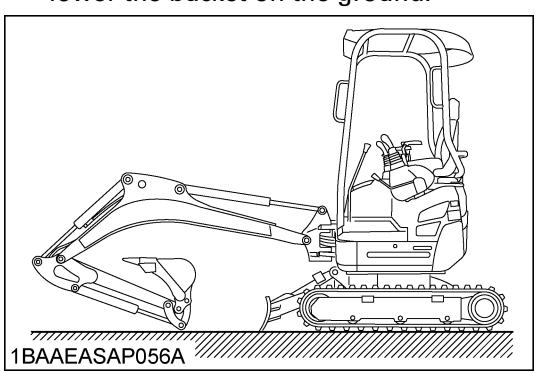

2. Remove the drain plug on the underside of the hydraulic tank and drain the oil.

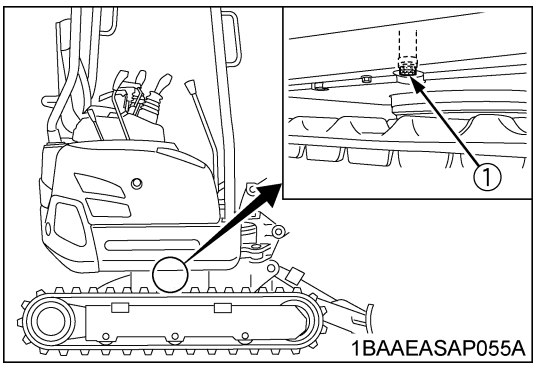

(1) Drain plug

3. Remove the cover of the hydraulic tank.
4. With a fork wrench or similar, remove and exchange the suction filter.

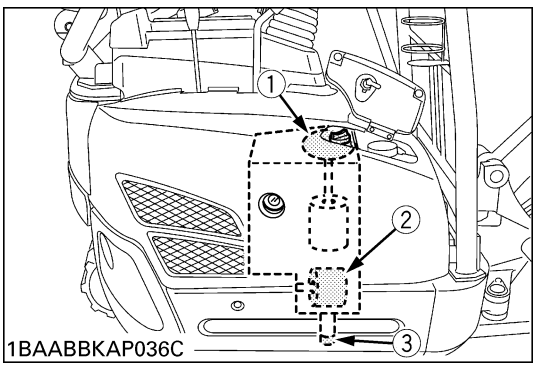

(1) Cover
(2) Suction filter
(3) Drain plug

5. Retighten the drain plug.
6. Fill oil through the oil filling opening on the top side of the tank.
7. Let the engine run for approx. 5 min. and check the oil level again.

Hydraulic oil volumes	Hydraulic tank	3.44 US gal (13 L)
	Whole oil volumes	5.55 US gal (21 L)

https://truckmanualshub.com/

■ Hydraulic Oil Check with Hydraulic Breakers

The hydraulic oil change after 1000 operating hours in the operator's manual is based on normal excavator work. Following inspection measures are valid when hydraulic breakers are used:

1. Changing and filling up of hydraulic oil
   1) The hydraulic oil must be changed more often when breakers are used because the machine is subject to harder conditions than at normal excavating work.
   2) Use only the recommended oils mentioned in the operator's manual when changing or fill oil.
   3) When filling up oil, do not mix oils of different makes.
2. Changing the return filter and oil
   1) The filter must be changed more often because of contamination resulting from the frequent assembly and disassembly of the hoses.
   2) Use the correct replacement filter.
   3) Oil change according to operating hours.

		Hydraulic oil	Return Filter
Normal excavator work		every 1000 Hrs.	every 500 Hrs. (250Hrs. after first operation)
Breaker work portion	20%	every 800 Hrs.	every 200 Hrs.
	40%	every 400 Hrs.	
	60%	every 300 Hrs.	every 100 Hrs.
	more	every 200 Hrs.	

EVERY 1000 SERVICE HOURS OR ONCE A YEAR

■ Replacing Air Filter Element

Open the engine bonnet and remove the dust-cover.
Remove and replace the outer element and inner element with new elements.
When reassembling, install the dust-cover so that its TOP mark (arrow) faces up-wards.

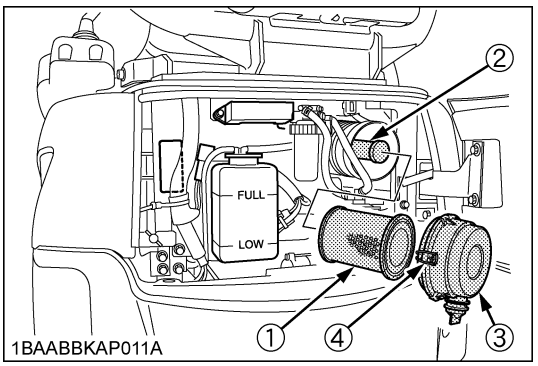

(1) Outer element
(2) Inner element
(3) Dust-cover
(4) Clamps

IMPORTANT:
- Shorten the replacement period if the machine is used in dusty or sandy areas.

EVERY 2000 SERVICE HOURS

Do all 50, 200, 250, 500 and 1000 hour servicing at the same time.

■ Chang Front Idler and Track Roller Oil

NOTE:
Contact your KUBOTA dealer for details.

■ Check the Dynamo and Starter Motor

NOTE:
Contact your KUBOTA dealer for details.

https://truckmanualshub.com/

ANNUAL SERVICING

■ Electrical Wiring and Fuses

Check the terminals periodically for proper connections. Loose wiring or damaged cables can cause improper functioning or short circuiting of the electrical system. Check wiring and replace damaged components immediately. If a fuse blows out soon after having been replaced, contact your nearest KUBOTA dealer. Never use a fuse other than specified.

BIENNIAL SERVICING

CAUTION
To avoid personal injury:

- **Do not loosen the radiator cap before the radiator has cooled down sufficiently. Then only loosen the cap and allow enough time for the pressure in the system to be released. Now remove the cap completely.**

■ Replacement of Radiator Hoses

Replace radiator hoses and hose clamps ever two years. If the hoses are swollen, hard or cracked, they must be replaced earlier.

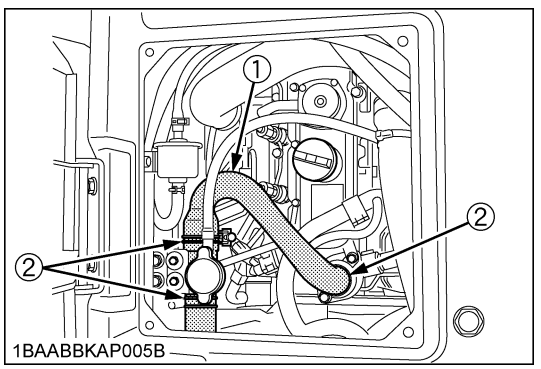

(1) Radiator hoses
(2) Hose clamps

■ Changing Radiator Coolant

(In case of long-life coolant fluid)

Stop the engine then remove the key and wait until it has cooled down completely.

1. Open the drain plug on the bottom of the radiator and drain coolant completely.
2. To clean, rinse the radiator with water.
3. Close the drain plug and fill the radiator and the reserve tank with coolant fluid. Let the engine idle for about 5 min., stop the engine and remove the key then check the coolant level.
4. The machine has been shipped filled with 50% anti-freeze solution.

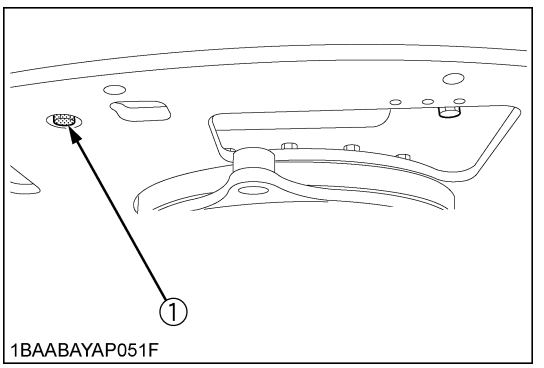

(1) Drain plug

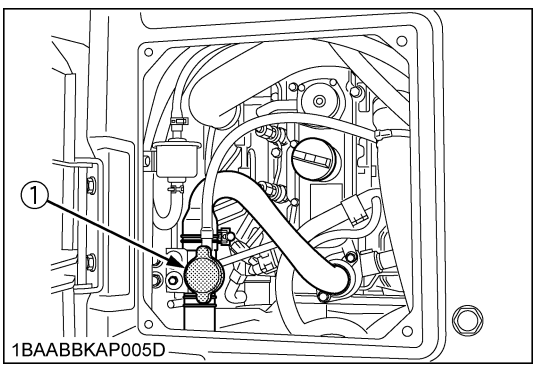

(1) Radiator cap

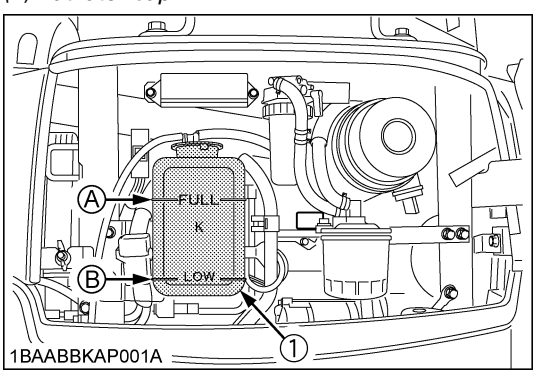

(1) Reserve tank *(A) "FULL"*
(B) "LOW"

https://truckmanualshub.com/

Coolant volumes	approx. 0.71 US gal (2.7 L) (Reserve tank: approx. 0.16 US gal (0.6 L)

IMPORTANT:
- Do not operate the engine without coolant.
- To fill the radiator system use fresh water and anti-freeze fluid.
- When the anti-freeze is mixed with water, the anti-freeze mixing ratio must be less than 50%.
- Tighten the radiator cap properly. If the cap is loosely or not properly fitted, overheating of the engine can result due to coolant fluid loss.

OTHER SERVICING

■ Cleaning the Track Frame Slide Pipes

When the slide pipes of the track frame are clogged or adhered with soil or sand, clean the slide pipes in the following manner according to need.

WARNING
To avoid the personal injury or death:
- **Place the machine on even ground when cleaning the track frame slide pipes.**

1. First lift the machine off the ground using the dozer blade and boom functions.
2. Switch the track width change / dozer select lever to the “Track width change” position.
3. Push the control lever forward, and expand the track width to 49 in. (1240 mm).
4. Remove soil and sand adhered to the slide pipes, then put grease evenly around the pipes. Make sure all 4 slide pipes are greased.
5. Retract and expand the track width repeatedly for a few times by moving the control lever, so that the grease is spread adequately.
6. Switch the track width change / dozer select lever to the “Dozer” position.
7. Place the machine down on the ground carefully by moving the dozer blade and the boom.

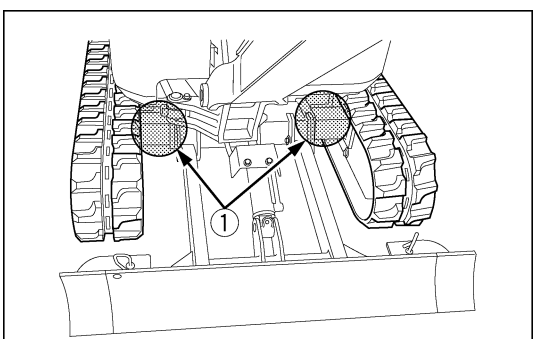

1BAABAYAP007C

(1) Track frame slide pipes

https://truckmanualshub.com/

OTHER ADJUSTMENTS AND REPLACEMENTS

PURGING OF THE FUEL SYSTEM

1. Fill up the excavator with fuel.
2. Turn the starter key to the "RUN" position.
3. The air in the fuel system will automatically be purged within one minute.

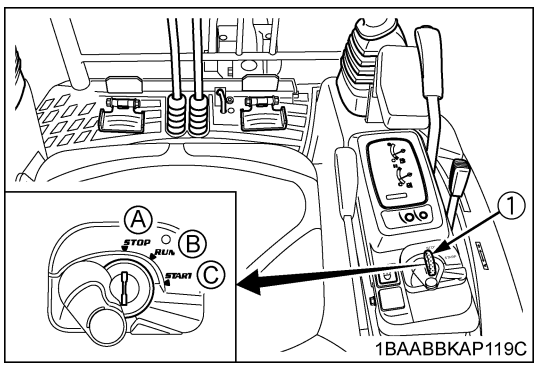

(1) Starter key

(A) "STOP"
(B) "RUN"
(C) "START"

IMPORTANT:
- If the purging was insufficient, the engine dies right after starting. In this case repeat steps 2 to 3 again.

ADJUSTMENT OF TRACKS

◆ **To loosen the tracks, follow the following procedure:**

CAUTION
To avoid personal injury:
- **Do not loosen the grease fitting completely or too quickly. Otherwise grease under high pressure in the tension cylinder could squirt out.**
- **Do not crawl under the excavator.**

1. Using a socket wrench, loosen the grease fitting a few turns.
2. When grease oozes out from the thread, rotate the track and loosen the track in the lifted position (see illustration).

After adjustment is completed:
Using the socket wrench, tighten the grease fitting.
Tightening torque must be between 72 to 80 ft·lbs (98 to 108 N·m, 10 to 11 kgf·m).

IMPORTANT:
- If the tracks are too tight, wear is increased.
- If the tracks are too loose, the track pads may collide with the sprocket, wear is increased.
  The track may dislocate or come off.
- Clean the track after every use.
- Should the track tension be high due to sticking mud, lift the track with the help of the boom, arm and bucket, idle the engine and remove mud from the track by rotating it.

https://truckmanualshub.com/

◆**Tension the tracks as specified:**

1. Apply grease to the grease fitting (1).

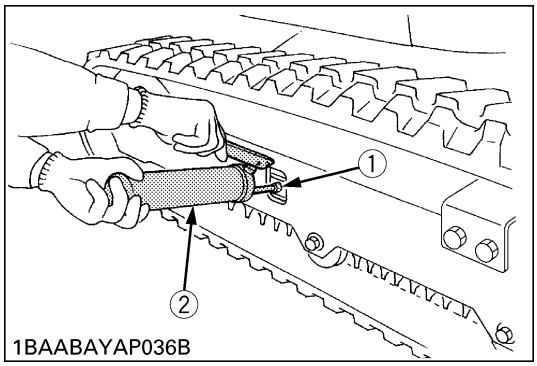

(1) Grease fitting
(2) Grease gun

2. Tension the track in the lifted position, so that the distance "A" (clearance between the track roller and the inside surface of the track) is 0.4 to 0.6in. (10 to 15mm) (see illustration). In this case, the track seam is positioned on the top center between the idler and the sprocket.

DANGER
To avoid serious injury or death:
- **Do not work under the machine in this condition.**
- **For your safety do not rely on hydraulically supported devices, they may leak down and suddenly drop or be accidentally lowered.**

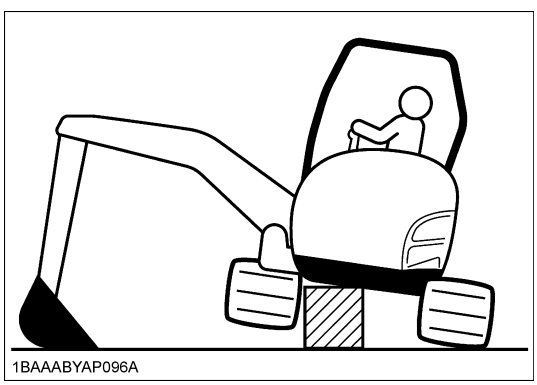

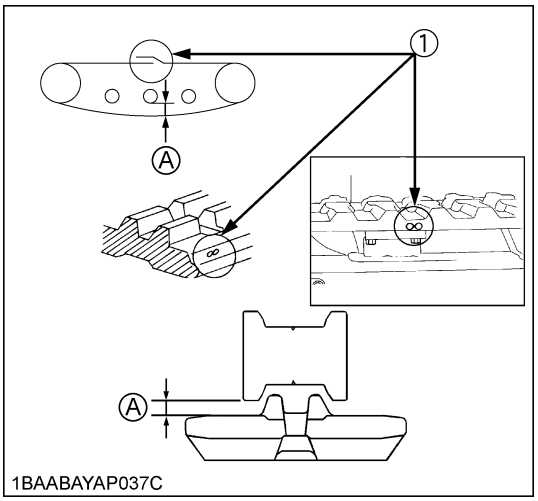

(1) Seam (Mark "∞") (A) 0.4 to 0.6 in. (10 to 15 mm)

IMPORTANT:
- Make sure that no obstacles, such as stones are caught in the track. Remove such obstacles before adjusting the track tension.
- Track seam
  The ends of the rubber track are joined with a seam. When adjusting the tracks, the seam must be positioned on the top center between the idler and the sprocket.

  If the seam is positioned incorrectly, the tracks will be tensioned to loosely, and a further readjustment will be necessary.

- Rotate the track after adjustment one to two times to check the tension.
- Additionally following points are to be observed when adjusting rubber tracks.
  1) If the track slackens more than 0.98 in. (25mm), readjust them.
  2) Check track tension 30 hours after initial use and readjust if necessary. Check and adjust thereafter every 50 service hours.

https://truckmanualshub.com/

■ Special Information when Using Rubber Tracks

1. When turning, make a slow swing turn. Avoid spin turns to lessen lug wear and entry of dirt.
2. The relief valve may be activated if too much dirt and sand clog the tracks. In this case move the machine for a short distance straight backwards to let the earth and sand fall off, then a turn can be made.
3. Avoid using rubber track on riverbeds, stony underground, ferro-concrete and on iron plates. The rubber can damage as well as increase wear on the tracks.

EXCHANGE OF BUCKET TEETH AND SIDE CUTTERS [JPN BUCKET VERSION]

■ Bucket Tooth Replacement

CAUTION
To avoid personal injury:
- **Wear eye protection when changing the tooth points.**

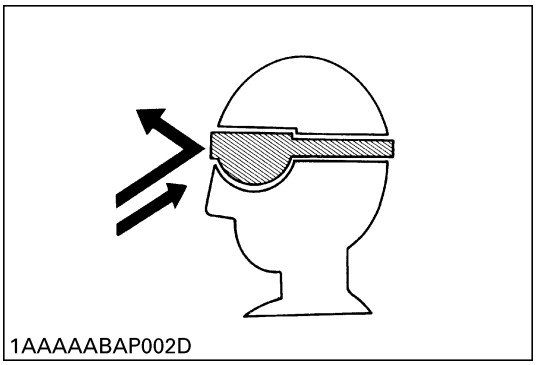
1AAAAABAP002D

1. Position a screw driver or similar tool above the lock pin and knock out the pin and rubber plug with a hammer.
2. Remove the worn point from the adapter by hitting it with a hammer.
3. Clean the adapter.

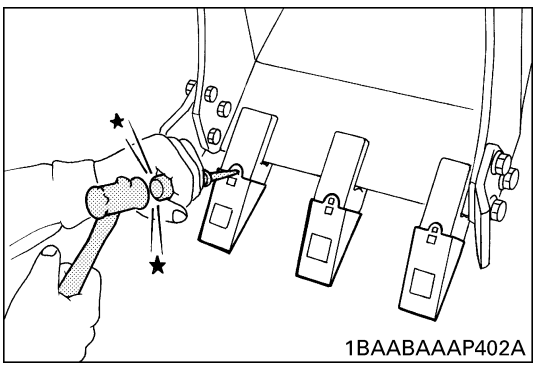
1BAABAAAP402A

https://truckmanualshub.com/

4. Mount a new point on the adapter.

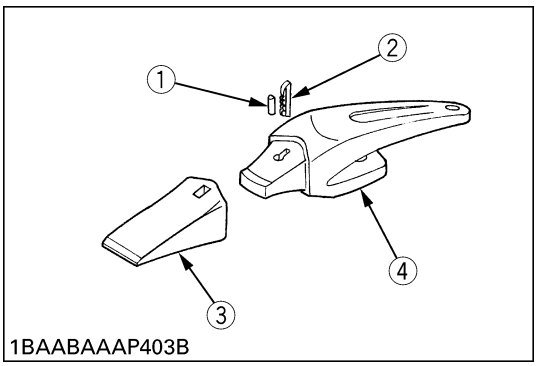

1BAABAAAP403B

(1) Rubber plug
(2) Lock pin
(3) Point
(4) Tooth adapter

5. Align the holes of the point and adapter and knock in the rubber plug together with the lock pin until the top surface of the pin is flush with the top surface of the adapter. (It is recommended to replace the rubber plug and lock pin when replacing the point.)

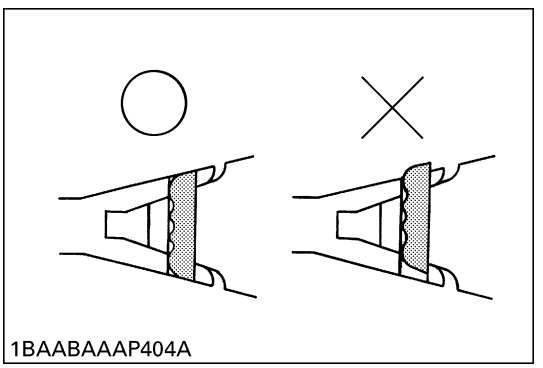
1BAABAAAP404A

■ Replacing the Bucket

CAUTION
To avoid personal injury:
- **The bucket can tilt over and cause accidents if in an unstable position.**
  Therefore:
  1) **Only change the bucket if no other persons are in the area.**
  2) **Lower the bucket on an even ground and make sure that it will not tilt when touched.**

https://truckmanualshub.com/

FUSES

■ Replacing Fuses

1. Remove the cover of the fuse box.
2. Replace the burnt out fuse with a fuse having the same capacity.

■ Fuse Capacities and Circuits

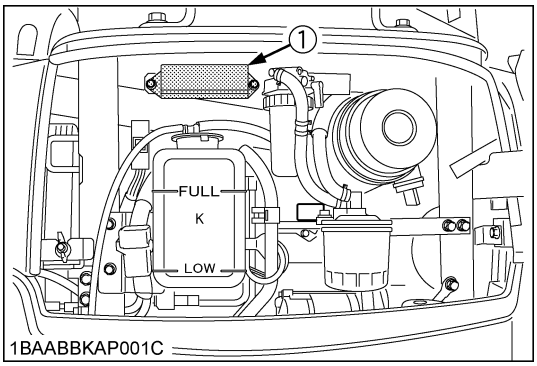

(1) Fuse box

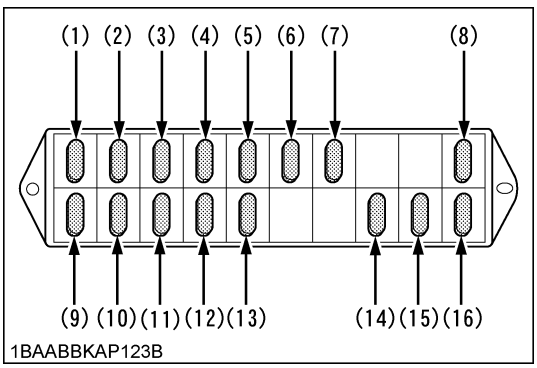

No.	Capacity	Circuit
(1)	5A	HORN SW
(2)	30A	ENGINE STOP
(3)	5A	METER (+B)
(4)	15A	WORK LAMP
(5)	10A	HORN
(6)	5A	AUXILIARY (+B)
(7)	5A	ECU (+B)
(8)	5A	STARTER
(9)	5A	RELAY
(10)	10A	ECU (AC)
(11)	5A	FUEL PUMP
(12)	5A	LEVER LOCK
(13)	10A	ALTERNATOR
(14)	15A	P. SOURCE/BEACON
(15)	15A	AUXILIARY 2
(16)	15A	AUXILIARY 1

■ Slow Blow Fuse

Slow blow fuse is provided to protect the electrical circuits. If the fusible link is blown, check the electrical circuits for trouble and then replace with a new compatible slow blow fuse.

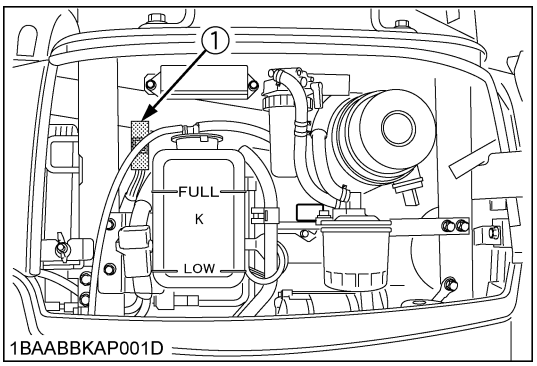

(1) Slow blow fuse

Capacity of the slow blow fuse : 50 A
(2 pieces)

■ Auxiliary Electric

Max power is less than 110 W including the equipped light 55 W.

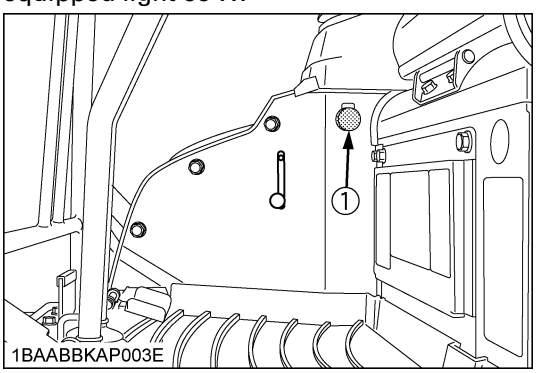

(1) Auxiliary electric A

https://truckmanualshub.com/

TROUBLESHOOTING

If the excavator does not show the desired performance, or when trouble arises, refer to the table below and undertake appropriate measures.

Trouble		Cause	Countermeasure
Engine	Starting difficulties	Fuel is too viscous	* Check fuel tank and filter * Remove impurities and water * If necessary, replace filter
		Air or water in the fuel system	* Remove water from the fuel tank * Check fuel pipe joint bolts and nuts for looseness * Purging of the fuel system (for fuel filter and injection pump, see "PURGING OF THE FUEL SYSTEM" in "OTHER ADJUSTMENTS AND REPLACEMENTS".)
		Oil viscosity is too high the engine runs sluggishly in winter	* Pour hot water over the radiator * Use oils of different viscosities depending on the ambient temprature. (Use SAE10W, SAE10W-30 or SAE10W-40)
		Battery is almost dead; insufficient compression	* Recharge battery
	Insufficient engine power	Low fuel level	* Check fuel and add if necessary
		Clogged air cleaner	* Clean the air filter element
	Engine suddenly stops	Low fuel level	* Check fuel and add if necessary * Purge the fuel system
	Abnormal exhaust gas colour	Poor fuel	* Use high quality fuel
		Too much engine oil	* Drain engine oil to prescribed oil level
	Water temperature in red zone (Overheating)	Defective seal of the water pump	* Replace
		Worn or torn fan belt	* Adjust or replace
		Thermostat is defect	* Replace
		Coolant level too low	* Fill to prescribed level
		Radiator grill or fins are clogged	* Clean
		Coolant is contaminated with rust from the cylinder head or crank case	* Replace coolant fluid and add anti-rust
		Defective radiator cap (Evaporation)	* Replace
		Corroded coolant pipes	* Clean
		Continuous operation under full load	* Reduce load
		Cylinder head gasket is damaged (Coolant loss)	* Replace
		Engine oil level too low	* Fill to prescribed level
		Maladjustment of fuel injection	* Readjust ignition timing
		Use of poor fuel	* Use prescribed fuel

https://truckmanualshub.com/

Trouble		Cause	Countermeasure
Hydraulic System	Boom, arm, bucket, drive, swing and dozer power is too low	Hydraulic oil level too low	* Add oil
		Leakages of hoses and / or joints	* Replace hose or joint
	Non-function of swing motor	Swing lock pin is in lock position	* Remove swing lock pin in unlock position
Drive System	Deviation of drive direction	Blocked through stones	* Remove
		Track too loose or too tight	* Adjust accordingly

https://truckmanualshub.com/

KUBOTA I.C.S. NAVIGATION LIST OF ERROR CODE

If an error occurs with the machine, one of the following error codes appears in the LCD display. In case of a trouble, immediately contact your local dealer for inspection and repair.

	LCD display	LED	Problem / Error	Solution #1	Solution #2
1	CAN system error E: 001		The Controller Area Network (CAN) has developed a fault. Measured values may be incorrect and switches may not function.	The machine can be started and driven. Do not perform any work with the machine.	Inform your KUBOTA dealer immediately.
2	Feed fuel No display item		This message appears when the fuel level is low and prompts the operator to refuel.	-	Refuel the excavator.
3	Periodic check soon (notice) No display item		This message appears 10 hours before the periodic check interval. This message means that the regular service is due shortly.	Operate the machine as usual.	Ask your KUBOTA dealer about the relevant parts. Run the maintenance procedure.
4	Periodic check passed (warning) No display item		This message means that the regular service is due.	The machine can be operated but service must be carried out urgently.	Ask your KUBOTA dealer about the relevant parts. Run the maintenance procedure.
5	Warning temperature rising E: 005		The temperature of the coolant is higher than normal.	Operate the machine only with reduced loads until the temperature is normal again.	-
6	-	-	-	-	-
7	-	-	-	-	-
8	-	-	-	-	-

https://truckmanualshub.com/

	LED Display	LED	Problem / Error	Solution #1	Solution #2
9	Clock setting request No display item		Power was interrupted and the clock now has to be set again.	In order to set the clock, press the user setting switch.	-
10	-	-	-	-	-
11	Raise the control lever lock No display item	(yellow)	This message indicates a step in a procedure.	Raise the lock lever (unload lever); the indicator goes out.	-
12	Pull out the key No display item		The key must be pulled out.	Pull out the key.	-
13	Lower the control lever lock No display item	(yellow)	This message indicates a step in a procedure.	Lower the lock lever (unload lever); the indicator goes out.	-
14	Oil pressure too low E: 014	(red) +	The engine oil pressure is too low.	Stop the engine immediately. The engine may have developed a fault.	Inform your KUBOTA dealer immediately.
15	Overheat E: 015		The machine is overheated and must cool off by idling.	Allow the machine to cool off by idling. Do not switch the engine off as the coolant could then boil over.	Clean the radiator and check the coolant. Refill the radiator with coolant by its boiled-over amount. Unclog the radiator and other components before use again. Check also the hydraulic system for oil leak and other troubles. If an oil leak is found, immediately contact your local dealer for repair.
16	Charging system error E: 016	(red) +	The charging system has developed a fault.	Check the V-belt. When the V-belt is OK, let the engine run until the indicator goes out.	If the indicator does not go out, inform your KUBOTA dealer immediately.

https://truckmanualshub.com/

	LCD Display	LED	Problem / Error	Solution #1	Solution #2
17	Fuel sensor error E: 017	(red)	The fuel sensor has developed a fault; the fuel gauge does not appear in the display.	Press the display selector switch to return to the default display.	Inform your KUBOTA dealer immediately.
18	Water temperature sensor error E: 018	(red)	The coolant temperature sensor has developed a fault; the coolant temperature gauge does not appear in the display.	Press the display selector switch to return to the default display. The functions of the machine are stable but overheating cannot be excluded.	Inform your KUBOTA dealer immediately.
19	-	-	-	-	-
20	Lever lock system error E: 020	(red)	The electrical system in the lock lever (unload lever) has developed a fault.	The engine can be started but the machine cannot be set in motion.	Inform your KUBOTA dealer immediately.
21	Travel 2 speed system error E: 021	(red)	The electrical system in the travel speed has developed a fault.	The machine can only be set in motion at low speed.	Inform your KUBOTA dealer immediately.
22	-	-	-	-	-
23	-	-	-	-	-
24	-	-	-	-	-

https://truckmanualshub.com/

	LCD Display	LED	Problem / Error	Solution #1	Solution #2
25	Overvoltage E: 025	(red)	This is a warning that a higher voltage (from a 24-V battery, for example) is being applied to the electric circuit, or that there is a problem with the alternator.	Switch the engine off immediately and check the battery and the alternator. Restart the engine.	If the indicator lights up again after restarting, inform your KUBOTA dealer immediately.
26	-	-	-	-	-
27	External 5-V system error E: 027	(red)	The 5-V sensor supply line has developed a system fault. The main functions are not available.	The machine can be started and driven. Do not perform any work with the machine.	Inform your KUBOTA dealer immediately.
28	External 12-V system error E: 028	(red)	The 12-V sensor supply line has developed a system fault. The main functions are not available.	The machine can be started and driven. Do not perform any work with the machine.	Inform your KUBOTA dealer immediately.
29	Starting the engine E: 029	(yellow)	This error code indicates a step in a procedure.	Start the engine; the indicator goes out.	-

https://truckmanualshub.com/

◆ **Service hour meter**

When the hour meter has counted up to the hours circled in the maintenance list below, the message appears. The message shows up as follows.

No.	Check points		Intervals	Hour meter indicator										Consequently
				50	100	250	300	500	550	600	750	800	1000	
1	Engine oil		change					○					○	every 500 hrs or every 1 year
2	Hydraulic oil												○	every 1000 hrs
3	Air filter element	Outer element	replace										○	every 1000 hrs
		Inner element											○	every 1000 hrs
4	Drive unit oil		change		○					○				every 500 hrs
5	Engine oil filter		replace					○					○	every 500 hrs or every 1 year
6	Hydraulic return filter element					○					○			every 500 hrs
7	Hydraulic breather filter element												○	every 1000 hrs
8	Hydraulic suction filter element												○	every 1000 hrs

The message appears. The message shows up as follows.

(The message reappears on the hour meter designated next.)

NOTE:

- The maintenance message disappears automatically in about 10 seconds.
- When the key is turned from OFF to RUN, the maintenance message reappears and disappears again automatically in about 10 seconds.
- When the key is turned from OFF to RUN repeatedly 10 times, the message disappears.

◆ In case the service hour meter replaced due to any trouble with it, the meter is set to "0". Contact your KUBOTA dealer for details.

https://truckmanualshub.com/

OPERATION UNDER COLD WEATHER CONDITIONS

PREPARATION FOR OPERATION IN COLD WEATHER

1. Replace engine oil and hydraulic oil with those of viscosities suitable for cold weather.
2. In cold weather, battery power drops, and the battery fluid may freeze if the battery is not sufficiently charged. To prevent the battery fluid from freezing, be sure to keep the battery charged at least 75% or more of its capacity after operation. To ease next starting, it is recommended to keep the battery stored in closed or heated rooms. If the battery fluid level is too low, do not add after operation, but add with the engine running before the next operation.
3. Add anti-freeze to coolant in the radiator and reserve tank, if the ambient temperature is expected to drop below 0°C. Mixing ratio of water and anti-freeze depends on the expected ambient temperature.

- Mixing ratio between water and anti-freeze

Ambient Temperature °C	–5	–10	–15	–20	–25	–30	–35
Antifreeze %	30	30	30	35	40	45	50
Water %	70	70	70	65	60	55	50

IMPORTANT:
- Use permanent anti-freeze or longlife coolant.
- Drain the coolant completely and clean inside of the radiator then fill with the water and anti-freeze mixture.
- The anti-freeze acts as an anti-corrosive, it is not necessary to add an additive to the water and anti-freeze mixture.
- See “Coolant check” under “DAILY CHECKS” in “MAINTENANCE” for radiator fill volumes.

PROCEDURE AFTER DONE WORK

Clean the excavator thoroughly after work and wipe dry. Otherwise mud and earth on the tracks could freeze if the temperature drops below the 0°C mark. Operation of the excavator is then not possible. Store the excavator in a dry place; if not possible, store on wooden planks or on mats. If the excavator is kept on damp or muddy ground, the tracks could freeze overnight. Operation of the excavator is then not possible. Furthermore the reduction gear may be damaged.
Additionally, the piston rods of the hydraulic cylinders must be rubbed dry. Otherwise severe damage could occur if dirty water seeps through the seals.

https://truckmanualshub.com/

LONG STORAGE

CAUTION
To avoid personal injury:
- **Do not clean the excavator with the engine running.**
- **To avoid the danger of exhaust fume poisoning, do not operate the engine in a closed building without proper ventilation.**
- **When storing, remove the key from the starter switch to avoid unauthorized persons from operating the excavator and getting injured.**

■ Should the Excavator be Stored for a Longer Period of Time, Observe Following Procedures:

1. The whole excavator should be cleaned thoroughly and in all cases stored indoors. If the excavator has to be kept outdoors, lay out wooden planks on even ground, place the excavator on the planks and cover completely.
2. Do an oil change and grease the excavator.
3. Heavily grease the visible sections of the cylinder rods.
4. Remove the battery and store indoors.
5. If it is expected that the temperature will sink below the 0°C mark, add anti-freeze or drain coolant completely.

IMPORTANT :
- Wash the excavator after stopping the engine.
  If you wash the excavator while running the engine, splashing water get into the air cleaner through its intake and cause engine trouble.
  Carefully, wash and do not splash water over the air cleaner.

■ Observe Following Procedures when the Machine is to be Operated after Long Storage

1. Wipe off the grease from the hydraulic cylinder rods.
2. Turn on the engine and operate the attachments and the drive mechanisms under no load in order to circulate the hydraulic oil . (If the machine is stored for longer than one month, Do steps (1) and (2) once every month)

https://truckmanualshub.com/

Periodic replacement of important component parts

To ensure safety in operation, you are strongly requested to inspect and service the machine at regular intervals. For added safety, ask your KUBOTA dealer to replace the following important component parts.

These parts are prone to degradation in material or subject to wear and tear with time. It is difficult to judge how much they have been affected at regular inspection. It is therefore necessary to replace them with new ones, whether wear is visible or not after a specified time of use.

If any of them is found to be worn before the specified use. They must be repaired or replaced the same as other parts.

If any of the hose clamps are found deformed or cracked, the hose slamps must also be replaced.

For the hydraulic hoses other than the ones to be replaced periodically, inspect them for the following points. If found loose or very worn, tighten and/or replace the hose.

When replacing the hydraulic hoses, change their O rings and sealing components with new ones.

For replacement of the important parts, contact your KUBOTA dealer.

- At the following periodic inspections, check the fuel hoses and hydraulic hoses as well.

Inspection Interval	Check points
Daily Checks	Oil leak at fuel and hydraulic hose connections and points
Every month	Oil leak at fuel and hydraulic hose connections and points Damages at fuel and hydraulic hose (cracks, chafing)
Every year	Oil leak at fuel and hydraulic hose connections and points Interference, deformation, degradation, twist and other damages (cracks, chafing) of fuel and hydraulic hoses

List of important component parts

No.	Component parts	Q'ty	Period
1	Fuel hose (Fuel tank-Fuel filter)	2	Every 2 years or 4000 hours
2	Fuel hose (Fuel filter-Fuel pump)	2	
3	Fuel hose (Fuel pump-Fuel nozzle)	2	
4	Fuel hose (Fuel nozzle-Fuel tank)	1	
5	Fuel hose (Fuel tank-Fuel drain)	1	
6	Hydraulic hose (Main pump suction)	1	
7	Hydraulic hose (Main pump delivery)	4	
8	Hydraulic hose (Boom cylinder)	2	
9	Hydraulic hose (Arm cylinder)	2	
10	Hydraulic hose (Bucket cylinder)	2	
11	Hydraulic hose (Swing cylinder)	2	
12	Hydraulic hose (Dozer cylinder)	2	
13	Hydraulic hose (Service port)	4	

To prevent serious damage to the hydraulic system, use only a KUBOTA genuine hydraulic hose.

https://truckmanualshub.com/

RECOMMENDED OILS

IMPORTANT

1. Before delivery, the hydraulic oil used was Shell Tellus S2M46.
2. Use engine oil API service classification CF/CF-4 or better and SAE 10W-30.
3. Use SAE 90 (API, GL-4/GL-5) as drive unit oil for all seasons.

	Application	Viscosity	KTC recommends	Shell	ExxonMobil
Gear oil	All-weather gear oil	SAE 90	Excavator Gear Oil 90 Part Number 70000-68700 (1 Quart)	Shell Spirax HD80W-90	Mobilube HD Plus 80W-90
Hydraulic oil	In winter or by low temperatures	ISO 32	Excavator Hydraulic Fluid 32 Part Number 70000-68720 (5 Gal Pail) Part Number 70000-68740 (55 Gal Drum)	Shell Tellus S2M32	
	In summer or by high ambient temperatures	ISO 46	Excavator Hydraulic Fluid 46 Part Number 70000-68760 (5 Gal Pail) Part Number 70000-68780 (55 Gal Drum)	Shell Tellus S2M46	
Grease				Shell Alvania EP2	Mobilux EP2
Fuel				Diesel Fuel No.2-D S15	
Fuel under –5℃ (23˚F)				Diesel Fuel No.1-D S15	

https://truckmanualshub.com/

For north american market

NOTE:

◆ **Engine Oil:**

- Oil used in the engine should have an American Petroleum Institute (API) service classification and Proper SAE Engine Oil according to the ambient temperatures.

Above 25°C (77°F)	SAE30 or SAE 10W-30 SAE 15W-40
0°C to 25°C (32°F to 77°F)	SAE20 or SAE 10W-30 SAE 15W-40
Below 0°C (32°F)	SAE10W or SAE 10W-30 SAE 15W-40

- Refer to the following table for the suitable API classification engine oil according to the engine type (with internal EGR, external EGR or non-EGR) and the fuel.

Fuel used	Engine oil classification (API classification)	
	Oil class of engines except external EGR	Oil class of engines with external EGR
Ultra Low Sulfur Fuel [<0.0015% (15 ppm)]	**CF, CF-4, CG-4, CH-4** or **CI-4**	**CF** or **CI-4** (Class CF-4, CG-4 and CH-4 engine oils cannot be used on EGR type engines)

EGR: Exhaust Gas Re-circulation

- The CJ-4 engine oil is intended for DPF (Diesel Particulate Filter) type engines, and cannot be used on this machine.

	except external EGR	with external EGR
Model	U17	---

◆ **Fuel:**

- Cetane number of 45 minimum. Cetane number greater than 50 is preferred, especially for temperatures below -20°C (-4°F) or elevations above 1500 m (5000 ft).
- Diesel fuels specified to EN 590 or ASTM D975 are recommended.
- No.2-D is a distillate fuel of lower volatility for engines in industrial and heavy mobile service. (SAE J313 JUN87)

https://truckmanualshub.com/

MAIN DIMENSIONS

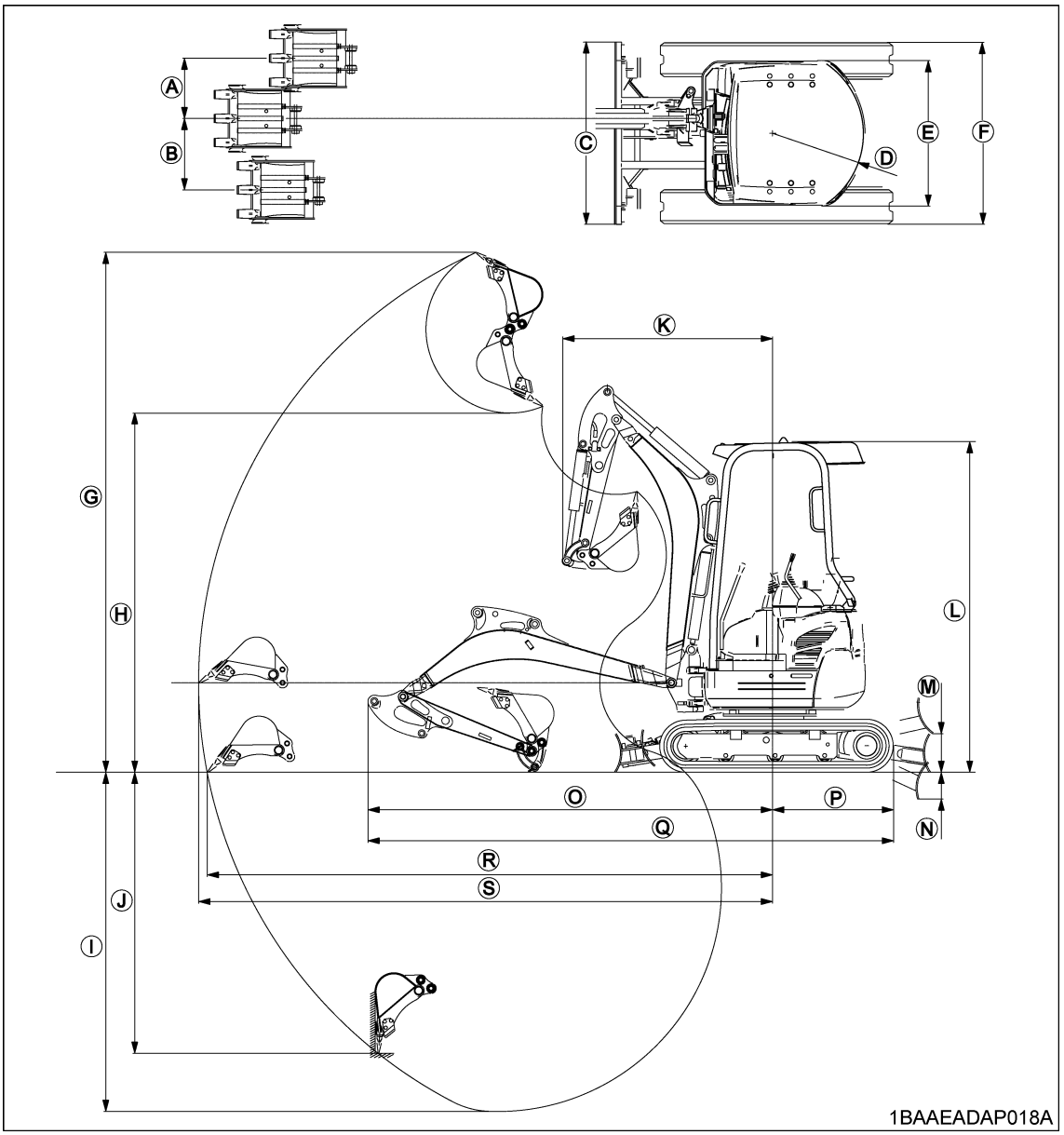

in. (mm)

Ⓐ	Ⓑ	Ⓒ	Ⓓ	Ⓔ	Ⓕ	Ⓖ	Ⓗ	Ⓘ	Ⓙ	Ⓚ	Ⓛ	Ⓜ	Ⓝ	Ⓞ	Ⓟ	Ⓠ	Ⓡ	Ⓢ
20.08 (510)	15.2 (385)	39/ 48.8 (990/ 1240)	24.4 (620)	39.0 (990)	39/ 48.8 (990/ 1240)	139.0 (3540)	96.1 (2440)	90.9 (2310)	75.2 (1910)	56.7 (1440)	92.1 (2340)	11.0 (280)	7.5 (190)	108.3 (2750)	31.3 (795)	139.6 (3545)	151.2 (3840)	153.5 (3900)

https://truckmanualshub.com/

LIFTING CAPACITY

1. The lifting capacities are based on ISO 10567 and do not exceed 75% of the static tilt load of the machine or 87% of the hydraulic lifting capacity of the machine.
2. The strokes are as follows.
   1) The load point corresponds to the front bolt part of the arm.
   2) The machine positions are (i) over – front (Blade up), (ii) over – front (Blade down), and (iii) over – side.
   3) The operating cylinder is the boom cylinder.
3. The bucket of the excavator, the hook, the sling and other lifting accessories are taken into consideration for the loads.

Machine conditions:
No bucket, all others according to the standard regulations.

WARNING
To avoid personal injury or death:
- **It is forbidden to lift loads greater than those values mentioned in the lifting capacity tables.**
- **The values mentioned in the table are valid only on even, hard grounds. When lifting on soft ground, the machine 'can tilt over due to the fact that the load is concentrated only on one side of the machine.**
- **The table values are calculated at the end of the arm without the bucket. In order to find the allowable loads for machines with bucket, the bucket weight must be subtracted from the values in the table.**

WARNING
To avoid personal injury or death:
- **In this manual, the machine's lifting capacity is discussed, but it does not mean that it is recommended to use the machine for lifting jobs.**
- **It is specified in item 3.4 of ISO 10567:1992 that the following devices must be additionally installed if a hydraulic excavator with the rated lift load of over 2,205 lbs (1,000 kg) at its minimum lifting radius or the tilting moment of over 29,504 ft-lbs (40,000 N-m) is used for lifting loads.**

(1)Lifting hook
(2)Acoustic alarm or warning lamp for the operator when the rated load or the corresponding tilting moment has been exceeded.
(3)Boom decending control device comforming to ISO 8643:1997

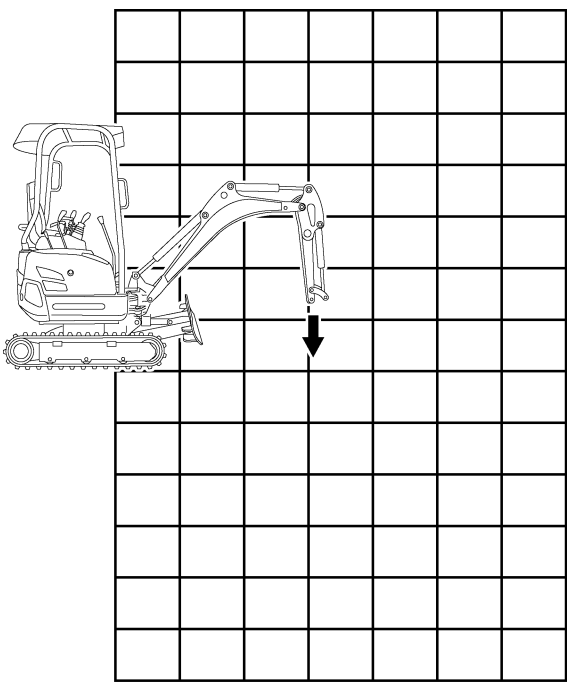

1BAAEASAP059A

https://truckmanualshub.com/

U17 ROPS CANOPY
RUBBER TRACK

LIFTING CAPACITY OVER-FRONT BLADE DOWN

Unit=1000 lbs.

LIFT POINT HEIGHT (ft)		LIFT POINT RADIUS (ft)			
		4	6	8	10
GL	8			0.67	
	6		0.62	0.70	
	4		1.17	0.85	0.69
	2		1.50	0.96	0.70
	0		1.40	0.94	0.67
	-2	1.64	1.19	0.82	
	-4	1.58	0.94	0.63	

LIFTING CAPACITY OVER-FRONT BLADE UP

Unit=1000 lbs.

LIFT POINT HEIGHT (ft)		LIFT POINT RADIUS (ft)			
		4	6	8	10
GL	8			0.57	
	6		0.62	0.57	
	4		0.85	0.55	0.39
	2		0.78	0.52	0.38
	0		0.76	0.50	0.37
	-2	1.53	0.76	0.50	
	-4	1.55	0.77	0.50	

LIFTING CAPACITY OVER-SIDE TRACK WIDTH 49.0 in

Unit=1000 lbs.

LIFT POINT HEIGHT (ft)		LIFT POINT RADIUS (ft)			
		4	6	8	10
GL	8			0.54	
	6		0.62	0.53	
	4		0.78	0.51	0.36
	2		0.72	0.49	0.35
	0		0.70	0.47	0.34
	-2	1.37	0.70	0.46	
	-4	1.38	0.71	0.47	

WARNING

To avoid personal injury or death:

- **Operate always in standard track width 49.0 in(1240mm), except to pass through narrow space.**
- **Do not operate in narrow track width 39.0 in(990mm), it makes risk of the excavator tipping over.**

LIFTING CAPACITY OVER-SIDE TRACK WIDTH 39.0 in
ONLY REFERENCE

Unit=1000 lbs.

LIFT POINT HEIGHT (ft)		LIFT POINT RADIUS (ft)			
		4	6	8	10
GL	8			0.36	
	6		0.56	0.36	
	4		0.52	0.34	0.24
	2		0.46	0.32	0.23
	0		0.44	0.30	0.22
	-2	0.81	0.44	0.29	
	-4	0.83	0.45	0.30	