T 158-8P6R44.261 8×8.2

https://truckmanualshub.com/

COMMERCIAL

8×8 ONE-WAY TIPPER

The TATRA PHOENIX Euro 6 combines the unique TATRA chassis with a spacious and comfortable cab, modern PACCAR MX Euro 6 engines and ZF transmissions. With this combination TATRA can take you further - to the locations inaccessible to other trucks. Moreover, thanks to very efficient operation and productivity with the TATRA PHOENIX model you will even achieve higher profits.

The outstanding productivity of this truck results from high payload and high off-road transport speed. With TATRA trucks you can therefore carry more freight faster.

Powerful PACCAR MX Euro 6 engines offer reasonable operating costs, even in difficult terrain. On paved roads or highways you can disconnect the front wheel drive to achieve better operating results. Compared to competing vehicles with rigid axles, TATRA PHOENIX achieves higher speeds and favourable fuel consumption. TATRA PHOENIX is also more comfortable thanks to a unique combination of the TATRA chassis concept with the air suspension on all axles.

TATRA PHOENIX vehicles use ZF transmissions, both manual and automated, or fully automatic Allison transmissions. The automated 16-speed AS Tronic version offers the driver perfect driving comfort, both in "standard auto" shift mode, or "offroad auto" mode, or in the manual mode. In addition, AS Tronic transmissions reduce fuel consumption through shifting at the optimum speed, and protect the drive train from driver error, such as overspeeding or burning the clutch. The automated AS Tronic transmission is also equipped with a handy "Hill Holder" system. The vehicle is equipped with the powerful MX Engine Brake as standard.

A VS-Mont's body, model VSPN/S1G, features the capacity of 18 m^3 and is made of high-strength HARDOX steel, featuring also a hydraulically operated tailgate and conical shape for faster dumping. The vibration plate inbuilt into the body bottom also helps fast emptying.

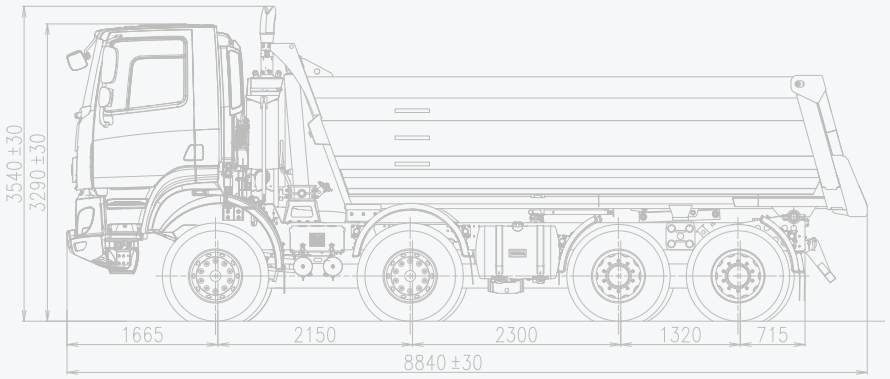

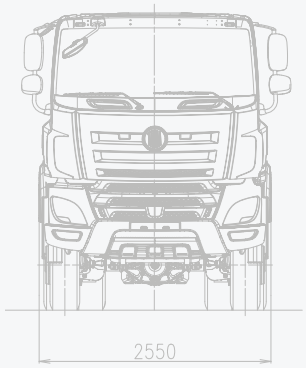

TATRA TAKES YOU FURTHER

tatratrucks.com

TATRA PHOENIX Euro 6

T 158-8P6R44.261 8×8.2

https://truckmanualshub.com/

8×8 ONE-WAY TIPPER

TATRA PHOENIX EURO6

ENGINE

Type	PACCAR MX340 Euro 6
No. of cylinders	6
Swept volume	12,900 cm³
Net power	340 kW/1,450 rpm
Net torque	2,300 Nm/1,000-1,400 rpm

SCR, EGR, DPF exhaust gas treatment system
The decompression MX Engine Brake as standard
Optional:
- MX-11 engine, cylinder capacity 10,800 cm³, power 271, 291 kW/1,700 rpm
- MX-13 engine, cylinder capacity 12,900 cm³, power 300, 375 kW/1,450 rpm

TRANSMISSION

Manual, ZF type 16S2530 Ecosplit

Number of speeds	
- forward	16
- reverse	2

Hydraulically operated clutch, diam. 1x430 mm.
Optional: intarder, automated Astronic transmission

TRANSFER CASE

Two-speed TATRA 2.30 TR shiftable at standstill (ratios of 0.94 / 1.44)
Optional: one-speed TATRA 1.30 TR, ratios of 1.12/1.28/1.46

FRONT AXLE

Steered, driven with swinging half-axles, disengageable front drive, axle differential lock.
Air bellows and telescopic shock absorbers.
Optional: torsion stabilizer
Optional: 8×6 drive (driven 1st or 2nd axle)

REAR AXLES

Driven, with swinging half-axles, axle differential locks, inter-axle differential lock. Heavy combined TATRA suspension - air bellows with leaf springs.

STEERING

Left-hand sided, monoblock steering

BRAKES

Four independent brake systems: service, emergency, parking, relief.

TYRES, DISCS

	front	rear
Tyres	385/65 R22.5	315/80 R22.5
Discs	22.5×11.5	9.00×22.5

CAB

Over-engine, hydraulically folding, with engine-dependent water heating. Number of seats: 2
Optional: with A/C or independent heater, sleeper cab.

DIMENSIONS

Wheelbases	2,150 mm + 2,560 mm + 1,320 mm
Width	2,550 mm
Wheelbase	
- front	2,074 mm
- rear	1,780 mm
Length	8,550 mm
Height	3,600 mm
Tipper body volume	18 m³

FUEL TANK

Steel, 300 to 340 liters + 45-liter AdBlue.

WEIGHTS

Curb weight (w/o superstructure)	13,580 kg
Payload	30,420 kg
Total weight	44,000 kg
Maximum front axle load	2×9,000 kg
Maximum rear axle load	2×13,000 kg

ELECTRIC EQUIPMENT

Rated voltage	24 V
Batteries	2×12V, 180 Ah
Optional:	2×12V, 225 Ah
Alternator	24 V / 80 A

Preparation for the FMS connector

FEATURES

Climbing ability at the total vehicle weight of 44 tons	100 %
Max. speed (with speed limiter)	88 km/h
Turning radius (contour)	23.0±1.0 m

WINTER PACKAGE

Optional: cold start equipment down to -40 °C, fuel filter preheating with water separator, heated body

tatratrucks.com

TATRA TRUCKS a.s.
Areál Tatry 1450/1, 742 21 Kopřivnice, Czech Republic
tel.: +420 556 494 332, fax: +420 556 494 304, e-mail: ou@tatra.cz