https://truckmanualshub.com/

AR 480T

OPERATING WEIGHT	ENGINE OUTPUT	SHOVEL CAPACITY
6,000 - 6,500 kg	**55.4 kW (74.3 HP)**	**1.0 - 1.8 m³**

weycor
BY ATLAS WEYHAUSEN

https://truckmanualshub.com

WEYCOR TRADITION EST. 1971

FIRST IMPRESSIONS COUNT!

weycor wheel loaders are more than the sum of their parts. They reflect true passion, a fascination with technology and 'Made in Germany' quality. It's thanks to the innovative spirit of our people, their dedication to detail and their passion for powerful engine technology that this new generation of wheel loaders has been developed.

6,000(1) KG OPERATING WEIGHT

55.4(2) KW (74.3 HP) ENGINE OUTPUT

1.0 M^3 SHOVEL CAPACITY

Operating data

Shovel capacity(3)	**1.0 m^3**
Track width	**1,510 mm**
Tear out force	**4,300 daN**
Torque	**4,310 daN**
Tipping load, straight	**3,627 kg**
Tipping load, straight / extended	**2,049 kg**
Tipping load, articulated	**3,208 kg**
Tipping load, articulated / extended	**1,812 kg**
Lifting capacity at ground level	**3,600 daN**
Operating weight	**6,000 kg**

(3) When participating in public road traffic according to STVZO, only the loading shovel with the number 8059493 is permitted. (4) Loads must always be moved in the ground position. (5) According to ISO 8313 and EN 474-3. (6) According to 2000/14/EC and annexes. (7) According to ISO 6396. (8) According to ISO 8041.

Specifications

Differing data for use of pallet forks (4) (500 mm distance to center of gravity)	
Tipping load, straight	**3,119 kg**
Tipping load, straight / extended	**1,852 kg**
Tipping load, articulated	**2,759 kg**
Tipping load, articulated / extended	**1,638 kg**
Payload 80% even surface(5)	**2,207 kg**
Payload 80% extended boom(5)	**1,310 kg**
Payload 60% uneven surface(5)	**1,655 kg**
Payload 60% extended boom(5)	**983 kg**

Sound level	
Average sound power level L_WA(6)	**100.0 dB(A)**
Guaranteed sound power level L_WA(6)	**101.0 dB(A)**
Sound pressure level L_pA(7)	**77.0 dB(A)**
Vibration values hand/arm/whole body vibration(8)	**< 2.5/0.5 m/s^2**

Important Information on Shovel Size / Shovel Contents:

The details contained in this brochure relate solely to the weycor shovels referred to in the respective data sheet, with the associated technical parameters and configurations on which the respective CE approval for the device is based. The volume of the specific usable shovel depends on the material-specific bulk weights (t/m^3) of the shovel contents, which you can take as approximations from the data sheet's TABLE OF SPECIFIC WEIGHTS IN t/m^3. Regardless of this, neither the wheel loader's permissible working weight nor its permissible tipping loads may be exceeded. If the wheel loader is equipped with shovels that are not manufactured and licenced by Atlas Weyhausen GmbH, the buyer and / or the operator is solely responsible for compliance with the relevant statutory regulations and licensing requirements – particularly those relating to road-traffic and road-traffic-licensing law.

(1) Service weight may vary with different equipment.
(2) Power output ISO 14396, exhaust gas aftertreatment according to EU 2016/1628.
All technical data refer exclusively to the standard unit.

https://truckmanualshub.com/

DETAILS THAT MAKE AN IMPRESSION

It is demanding to meet the new legal requirements for exhaust emissions. The challenge is to create also tangible benefits for our customers. We are proud to have achieved both in the development of the current wheel loader generation: more power - less consumption, plus a number of others innovations that really make a difference on tough construction sites.

Comfortable cabin
In addition to the excellent circumferential visibility in the wheel loader, its clearly arranged controls and its ergonomic design.

Easy maintenance
Low-maintenance and quick, easy servicing is achieved by central, consolidated, easy-to-reach service points.

Powerful drive unit
weycor wheel loaders are equipped with state-of-the-art engines which combine high power reserves for challenging operations with up-to-date low emission values.

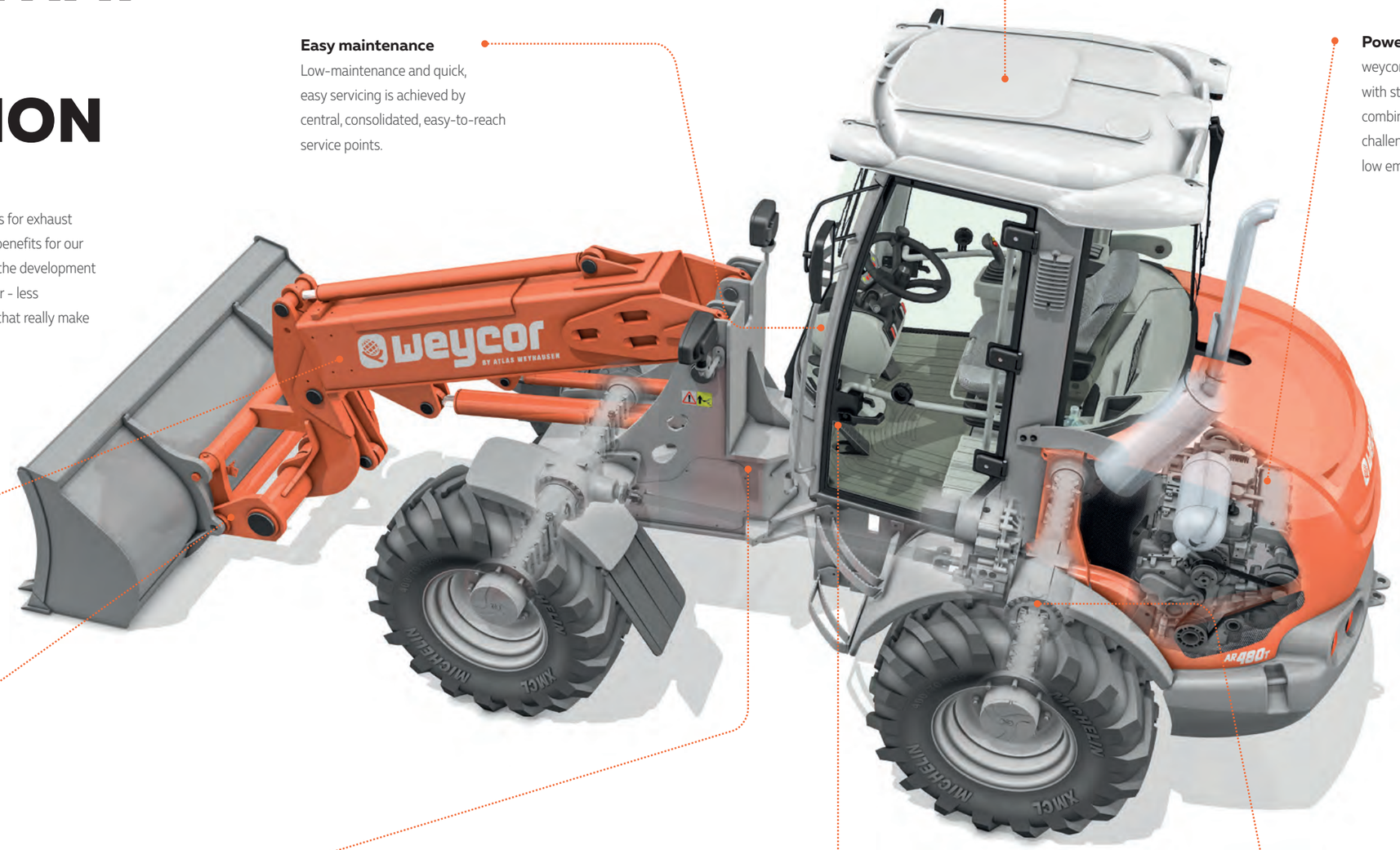

Latest kinematics technology
The proven and tested weycor kinematics with its exceptional tear-out force and excellent lifting heights. Telescopic cylinder with endposition cushioning.

Hydraulic quick-change attachment
By allowing you to change the wheel loader's attachments in a few seconds, it turns the vehicle into an all-rounder.

Articulated joint
The combination of pendulum joint and the rear oscillating axle provides for excellent maneuverability and cross-country mobility. Even on challenging terrain, the low center of gravity ensures exceptional stability.

Inching Pedal
As the only manufacturer, our wheel loaders have a separate inching pedal as standard. This prevents the possibility of moving against the operating brake, in contrast to the combination of a brake/inch pedal. A generously proportioned inching range facilitates precise distribution of shearing and lifting forces. The result: less wear and lower fuel consumption.

Spring-loaded brake
The spring-loaded or negative brake in weycor wheel loaders is a closed brake system (oil bath multiple-disc brake) which holds the wheel loader securely in position on a slope when the brake or inch function is activated and automatically locks all four wheels when the engine is at a standstill. The multiple-disc brake runs in the oil bath and is particularly low-maintenance and low-wearing as a result.

https://truckmanualshub.com/

INNOVATIVE ENGINE TECHNOLOGY

TD 2.9 L4 – intelligent efficient
We have been convinced of the quality of Deutz engines for over 40 years. Our cooperation with Deutz also offers numerous benefits for the AR 480T: such as the electronic engine control with intelligent connection to the drive management. This ensures the best engine performance with low fuel consumption.

Mighty performance
55.4 kW at a maximum of 2,200 rpm

Compliance with emission standards
EU Stage 5 - DOC + DPF from 2019

Deutz engine technology: TD 2.9 L4
Water-cooled 4-cylinder inline engine with cooled, external exhaust gas recirculation with turbocharging and with charge air cooling. The powerful Common Rail injection system and highly-efficient combustion process with cooled external exhaust gas recirculation ensure optimum engine performance at low fuel consumption and exhaust emissions.
Through the use of the diesel particulate filter, the engines comply with the EU Stage V emissions standard 2019. For ease of machine installation engine foot print and all major installation interfaces will stay unchanged for Stage V.

https://truckmanualshub.com/

TECHNICAL DATA

Engine	
Model	TD 2.9 L4
Design	water cooled
Output	55.4 kW (74.3 HP) at 2,200 rpm
Max. torque	260 Nm at 1,600 rpm
Cubic capacity	2,924 cm^3
Number of cylinders	4 in line

Electrical system	
Operating voltage	12 V
Battery	12 V / 100 Ah
Generator	14 V / 95 A
Starter	12 V / 2,6 kW

Drive

Output-regulated hydrostatic drive with pressure cut off and closed circuit acting on all 4 wheels.
Speed with standard tires:
Operating speed range 0–6.5 km/h
Road speed range 0–20 km/h
Optional high speed 0–40 km/h
1st and 2nd hydraulic gear can be engaged under load, forward/backward travel also. Forward/backward travel, speed ranges and off-position operational via weycor joystick. Drive operated by accelerator and separate inching pedal for best distribution of the hydraulic power for thrust and lifting forces.

Brakes

Standard brake: Multi-disc brake in oil bath acting on all 4 wheels. Supplementary brake functions via inching pedal and hydrostatic drive acting on all 4 wheels.
Parking brake: Parking brake as springloaded brake acting on all 4 wheels. In case of standstill of engine the spring-loaded brake is automatically reactivated.

Steering

Fully hydraulic center pivot steering and oscillating rear axle
Front and rear wheels follow the same track
Steering angle of 40° to each side, ±10° angular movement at rear of vehicle
Operating pressure of steering hydraulics 175 bar
Emergency steering function

Axles

Rigid axle front, pendulum rear axle with planetary reduction gears in wheel hubs, electrically connected 100%-differential lock in front and rear axle

Tires (Special tires upon request)

Standard: 16/70 R20 MPT 14 PR – Multi-purpose tires for earth moving machines, with good traction, self-cleaning and firm stability

Hydraulic system

Gear pump for loading and steering hydraulics
Priority valve favoring steering hydraulics
Lowering brake dependent of load
4th hydraulic section
Loading hydraulic hydraulically pre-activated by weycor joystick, including float position
Operating pressure 230 bar, Delivery of pump 66 l/min

Fuel/oil capacities	
Diesel	80 Liter
Hydraulic oil	78 Liter
Engine oil	8 Liter
Front axle	5.1 Liter
Rear axle	5.4 Liter
Gear oil	0.7 Liter
Cooling liquid	13 Liter

Loading equipment

Powerful and solid Z-kinematics
Telescopic range 1,200 mm
Telescopic cylinder with damping working cylinder
Hydraulic quick change device
Activation of all functions by weycor joystick
Parallel movement while using pallet forks
Locking device acc. to German StVZO for road travel

Lifting	**6.5 s**
Lowering	**6.0 s**
Tipping	**1.8 s**

Equipment – Series

Rear driving mirrors, foldable
Heatable rear screen
Comfortable access to cab from both sides
Joystick with integrated proportional steering for 3rd section or swing-action control
weycor diagnostic system
Control lights for speed range, forward/backward travel
Lights acc. to German StVZO for road travel
Individually adjustable driver's seat with adjustable right arm rest
Engine oil heating with heat exchange and 4-stage fan
Front windscreen ventilation, variable output
Sound absorbing ROPS cab
Windscreen wipe and wash unit in front and rear
Sun visor, coat hook, ceiling lamp, stow facility
Adjustable steering column
Heat protection glazing with largetinted screens
Control lights for engine oil pressure, overheating, hydraulic oil temperature, battery power, parking brake and air filter
Central dashboard with indicators for preheating, engine temperature, fuel, working hour meter
Cyclone dust separator with Air filter control

Equipment – Option

Stability damping system
High speed version 40 km/h
Air conditioning
Hand throttle unit
Load check valve
Trailer coupling
Main battery switch
Special paintings and oils
Corrosion prevention against salt
Warning beacon
Anti-theft-device with code stick
Heatable and air cushioned seats
Radio
Doors with sliding windows, left and right side
Diesel particulate filter

https://truckmanualshub.com/

TECHNICAL DATA

	AR 480T with standard shovel	AR 480T with pallet forks
A	5,804 mm	6,124 mm
B	2,796 mm	2,796 mm
C	4,838 mm	-
C1	4,080 mm	-
C2	-	4,650 mm
C3	-	1,530 mm
D	60 mm	60 mm
E	1,380 mm	-
E1	-	1,074 mm
E2	-	2,695 mm
F	492 mm	492 mm
G	2,200 mm	2,200 mm
H	1,950 mm	1,950 mm
I	2,150 mm	1,030 mm
R	2,105 mm	2,105 mm
R1	4,545 mm	4,.545 mm

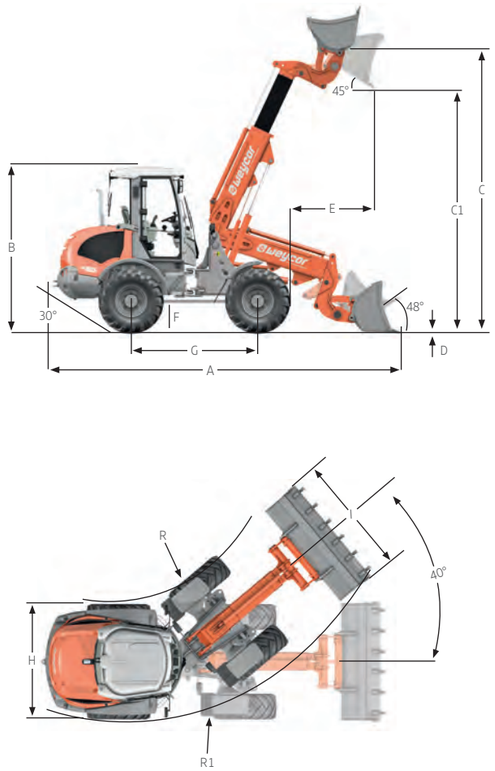

With standard shovel

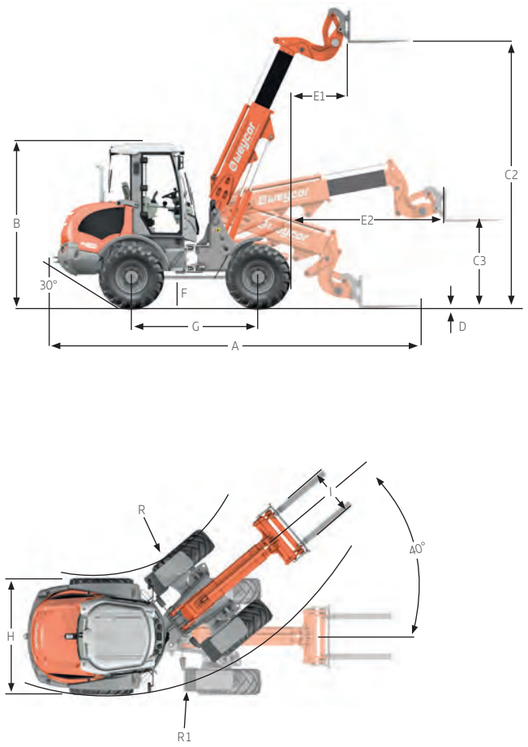

With pallet forks

Specific gravity for material handling weight (t/m³)							
Construction				**Industry**		**Landscaping, Agriculture**	
Concrete	1.9	Sand (watery)	2.1	Ember	0.7	Agricultural crop	0.7
Soil (dry)	1.5	Sandstone	2.4	Brown coal briquette	0.8	Grain	0.6
Soil (watery)	2.0	Shale	2.2	Ferrous product	7.8	Hay	0.3
Rock (fill)	2.4	Sediment	2.1	Iron ore	2.3	Potash	1.1
Granite	1.8	Crushed stone	1.5	Cullet	1.9	Compost	1.0
Limestone	1.6	De-icing salt	1.3	Gas coke	0.4	Flour	0.5
Gravel (dry)	1.9	Clay	1.6	Timber	0.8	Clay (watery)	2.3
Gravel (watery)	2.1	Cement	1.7	Mineral coal	1.2	Phosphate fertiliser	2.2
Loam	1.7	Clinker (stacked)	1.8	Paper	0.9	Turf (watery)	1.1
Plaster	2.2			Slag	1.0	Turf (dry)	0.4
Sand (dry)	1.9			Slag concrete	2.7	Mineral fertiliser	1.0

https://truckmanualshub.com/

en_01_2021_003

You can find our current product range and more exciting details at: **www.weycor.de**

Under our policy of continuous improvement, we reserve the right to change specifications and design without prior notice, errors expected. The technical data refer only to the standard version, illustrations do not necessarily show the standard version of the machine. Not all products are available in all markets.

weycor is a brand of ATLAS WEYHAUSEN GMBH.

ATLAS WEYHAUSEN GMBH · D – 27793 Wildeshausen
Phone +49 (0) 44 31 – 98 10 · info@weycor.de · **www.weycor.de**

weycor BY ATLAS WEYHAUSEN