https://truckmanualshub.com/

# SVETRUCK®

True Quality

**Forklifts**
**Container Handlers**
**Logstackers**

## Technical description

*Courtesy of Crane.Market*

https://truckmanualshub.com/

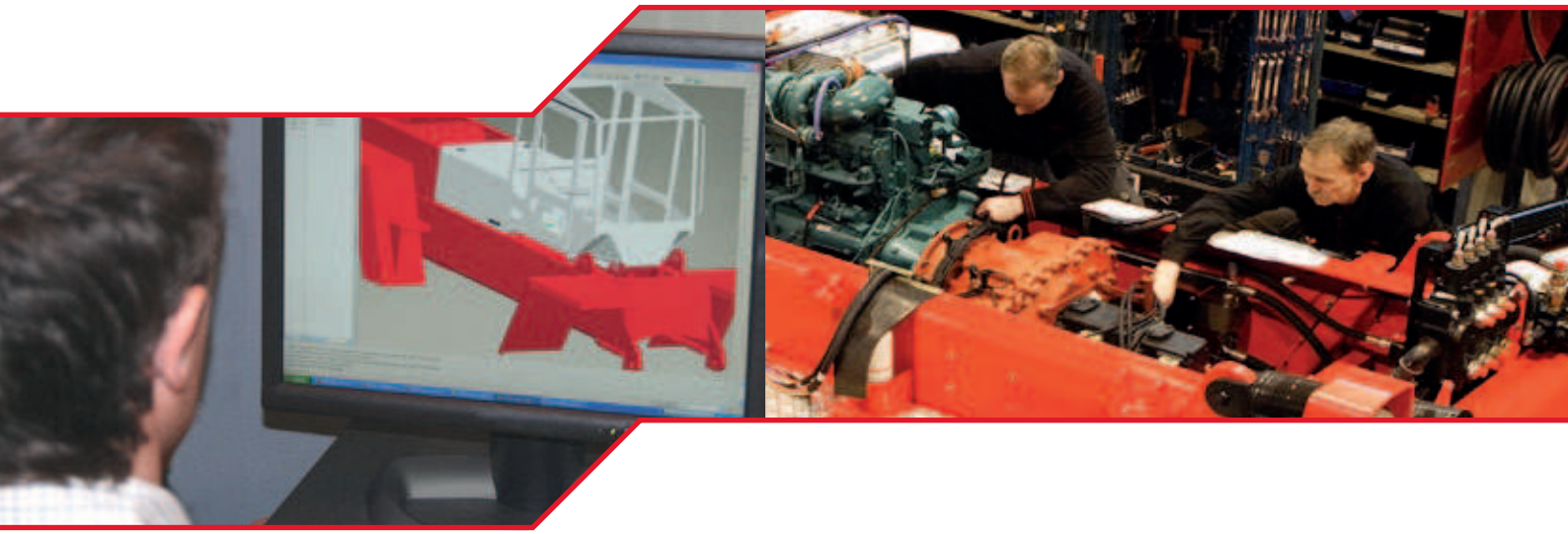

# A chain of Quality.

Since 1977, we have designed durable, service-friendly and reliable forklifts. We look to the future and want to safeguard our reputation for reliability, which has made us one of the world's leading forklift manufacturers. Our fundamental approach to quality combined with 30 years' solid experience gives us the opportunity to offer the market strong, reliable and durable solutions for efficient material handling.

Each Svetruck is built to suit the conditions under which it will operate. The starting point is to find a balance in the interaction between man, technology and machine. We build comfortable and safe workplaces that guarantee operators a good day at work. Smooth control of all functions, optimum visibility of the working area and a machine that can perform demanding tasks.

At our facility in Ljungby we manufacture forklifts, container handlers and logstackers. We are a global company that supplies machines to every corner of the world.



Courtesy of Crane.Market

https://truckmanualshub.com/

# CONTENTS


| | |
|---|---|
| SVETRUCK 10 - 14 tons | 4 |
| SVETRUCK 12 - 18 tons | 6 |
| SVETRUCK CS - ECS | 8 |
| SVETRUCK 18 - 30 tons | 10 |
| SVETRUCK 32 - 52 tons | 12 |
| SVETRUCK TMF | 14 |
| Liftmasts and fork carriages | 16 |
| Operator environment | 21 |
| Load diagrams and lifting heights | 22 |
| Dimensions | 24 |




*Courtesy of Crane.Market*

https://truckmanualshub.com/

# SVETRUCK 10 – 14

Svetruck 1260-30

Svetruck 1260-30

Svetruck 1460-33



*Courtesy of Crane.Market*

https://truckmanualshub.com/

SVETRUCK®

| | Model | | 1060-28* | 1060-30 | 1260-30 | 1260-32 | 1460-33 |
|---|---|---|---|---|---|---|---|
| | **Lifting capacity** | | | | | | |
| 1 | *Q Load* | *ton* | 10 | 10 | 12 | 12 | 14 |
| | **Load centre** | | | | | | |
| 2 | *c* | *mm* | 600 | 600 | 600 | 600 | 600 |
| | **Lifting height teleskopic mast** | | | | | | |
| 3 | *h3 Standard**** | *mm* | 4000 | 4000 | 4000 | 4000 | 4000 |
| | **Tilt** | | | | | | |
| 4 | *Forward α / backwards β* | ° | 10/10 | 10/10 | 10/10 | 10/10 | 10/10 |
| | **Fork length** | | | | | | |
| 5 | *L1*** | *mm* | 1500 | 1500 | 1500 | 1500 | 1500 |
| | **Fork arm width/thickness** | | | | | | |
| 6 | *b x s ** | *mm* | 200x65 | 200x65 | 200x70 | 200x70 | 200x75 |
| | **Distance between forks** | | | | | | |
| 7 | *b1 max-min* | *mm* | 2310-620 | 2310-620 | 2310-620 | 2310-620 | 2310-620 |
| | **Overall dimensions** | | | | | | |
| 8 | *L2 Length incl. forkshafts* | *mm* | 4375 | 4575 | 4580 | 4780 | 4885 |
| 9 | *B Width* | *mm* | 2485 | 2485 | 2485 | 2485 | 2485 |
| 10 | *h1 Closed height* | *mm* | 3475 | 3475 | 3475 | 3475 | 3475 |
| 11 | *h4 Extended height* | *mm* | 5475 | 5475 | 5475 | 5475 | 5475 |
| 12 | *h2 Height over cabin* | *mm* | 3100 | 3100 | 3100 | 3100 | 3100 |
| | **Turning radius** | | | | | | |
| 13 | *Wa* | *mm* | 4000 | 4200 | 4200 | 4400 | 4500 |
| | **Load arm** | | | | | | |
| 14 | *x from center of driveaxle* | *mm* | 1450 | 1450 | 1455 | 1455 | 1460 |
| | **90°-stacking aisle** | | | | | | |
| 15 | *Ast 4 with forklength acc. to pos 8* | *mm* | 6550 | 6750 | 6755 | 6955 | 8060 |
| | **Driving and lifting performance** | | | | | | |
| 16 | *Driving speed fwds/rev.* | *km/h* | 30/30 | 30/30 | 30/30 | 30/30 | 30/30 |
| 17 | *Lifting speed with/without load* | *m/sec* | 0.40/0.44 | 0.40/0.44 | 0.40/0.44 | 0.40/0.44 | 0.40/0.44 |
| 18 | *Lowering speed with/without load* | *m/sec* | 0.40/0.30 | 0.40/0.30 | 0.40/0.30 | 0.40/0.30 | 0.40/0.30 |
| | **Draw bar pull** | | | | | | |
| 19 | *In carriage loaded* | *kN* | 130 | 130 | 130 | 130 | 130 |
| | **Climbing performance** | | | | | | |
| 20 | *With/without load* | *%* | 59/59 | 59/59 | 49/49 | 49/49 | 45/45 |
| | **Total weight** | | | | | | |
| 21 | *Standard equipped**** | *kg* | 14500 | 14000 | 15300 | 15000 | 16100 |
| | **Axle load** | | | | | | |
| 22 | *Driveaxle with/without load* | *kg* | 23000/ 7800 | 22550/ 7750 | 25550/ 7750 | 25350/ 7900 | 27850/ 8050 |
| 23 | *Steeraxle with/without load* | *kg* | 1500/ 6700 | 1450/ 6250 | 1750/ 7550 | 1650/ 7100 | 1850/ 8050 |
| | **Tyres** | | | | | | |
| 24 | *Dimension/ drivewheels* | | 11.00x20" | 11.00x20" | 11.00x20" | 11.00x20" | 11.00x20" |
| 25 | *Dimension/ steerwheels* | | 11.00x20" | 11.00x20" | 11.00x20" | 11.00x20" | 11.00x20" |
| | **Wheelbase** | | | | | | |
| 26 | *y* | *mm* | 2800 | 3000 | 3000 | 3200 | 3300 |
| | **Track** | | | | | | |
| 27 | *Driveaxle/steeraxle* | *mm* | 1855/2010 | 1855/2010 | 1855/2010 | 1855/2010 | 1855/2010 |
| | **Ground clearance** | | | | | | |
| 28 | *m2 under liftmast* | *mm* | 225 | 225 | 225 | 225 | 225 |
| 29 | *m1 mid forklift* | *mm* | 290 | 290 | 290 | 290 | 290 |
| | **Brakes** | | | | | | |
| 30 | *Mainbrake* | | Wet disc brakes | Wet disc brakes | Wet disc brakes | Wet disc brakes | Wet disc brakes |
| 31 | *Parkingbrake* | | Spring brake | Spring brake | Spring brake | Spring brake | Spring brake |
| | **Engine** | | | | | | |
| 32 | *Manufacturer* | | Cummins | Cummins | Cummins | Cummins | Cummins |
| | **Alternator** | | | | | | |
| 33 | *AC* | *Watt* | 2240 | 2240 | 2240 | 2240 | 2240 |
| | **Battery** | | | | | | |
| 34 | *Voltage/capacity* | *V/Ah* | 24/110 | 24/110 | 24/110 | 24/110 | 24/110 |
| | **Transmission** | | | | | | |
| 35 | *Type* | | Converter | Converter | Converter | Converter | Converter |
| 36 | *Type of gearshift* | | Automatic | Automatic | Automatic | Automatic | Automatic |
| 37 | *Number of gears fwds/rev.* | | 4/3 | 4/3 | 4/3 | 4/3 | 4/3 |
| 38 | *Model* | | ZF Ergopower | ZF Ergopower | ZF Ergopower | ZF Ergopower | ZF Ergopower |
| 39 | **Operating pressure** | *kPa* | 14000 | 14000 | 16000 | 16000 | 17500 |
| | **Fueltank** | | | | | | |
| 40 | *Volume* | *Litre* | 145 | 180 | 180 | 215 | 235 |

**Engine alternatives**

Cummins or Volvo engines on request.

* *Compact machine with limited liftheight.*
** *Upon request.*
*** *Dependent on specification*



Courtesy of Crane.Market

https://truckmanualshub.com/

# SVETRUCK 12 – 18

Svetruck 16120-38

Svetruck 1560-33

Svetruck 16120-38

Svetruck 15120-35

Svetruck 13⁶120-35



*Courtesy of Crane.Market*

https://truckmanualshub.com/

SVETRUCK®

| | Model | | 1560-33 | 1660-35 | 12120-35 | 1590-35 | 13⁶120-35 | 15120-35 | 16120-38 | 1875-33 |
|---|---|---|---|---|---|---|---|---|---|---|
| | **Lifting capacity** | | | | | | | | | |
| 1 | *Q Load* | *ton* | 15 | 16 | 12 | 15 | 13,6 | 15 | 16 | 18 |
| | **Load centre** | | | | | | | | | |
| 2 | *c* | *mm* | 600 | 600 | 1200 | 900 | 1200 | 1200 | 1200 | 750 |
| | **Lifting height teleskopic mast** | | | | | | | | | |
| 3 | *h3 Standard*** | *mm* | 4000 | 4000 | 4000 | 4000 | 4000 | 4000 | 4000 | 4000 |
| | **Tilt** | | | | | | | | | |
| 4 | *Forward α / backwards β* | ° | 10/10 | 10/10 | 10/10 | 10/10 | 10/10 | 10/10 | 10/10 | 10/10 |
| | **Fork length** | | | | | | | | | |
| 5 | *L1** | *mm* | 1500 | 1500 | 2500 | 2500 | 2500 | 2500 | 2500 | 2500 |
| | **Fork arm width/thickness** | | | | | | | | | |
| 6 | *b x s ** | *mm* | 200x75 | 200x75 | 200x100 | 200x85 | 200x100 | 200x100 | 200x100 | 200x85 |
| | **Distance between forks** | | | | | | | | | |
| 7 | *b1 max-min* | *mm* | 2340-620 | 2340-620 | 2340-620 | 2340-620 | 2340-620 | 2340-620 | 2340-620 | 2340-620 |
| | **Overall dimensions** | | | | | | | | | |
| 8 | *L2 Length incl. forkshaft* | *mm* | 4910 | 5110 | 5135 | 5120 | 5135 | 5135 | 5435 | 4920 |
| 9 | *B Width* | *mm* | 2530 | 2530 | 2530 | 2530 | 2530 | 2530 | 2530 | 2530 |
| 10 | *h1 Closed height* | *mm* | 3650 | 3650 | 3650 | 3650 | 3650 | 3650 | 3650 | 3650 |
| 11 | *h4 Extended height* | *mm* | 5650 | 5650 | 5650 | 5650 | 5650 | 5650 | 5650 | 5650 |
| 12 | *h2 Height over cabin* | *mm* | 3130 | 3130 | 3130 | 3130 | 3130 | 3130 | 3130 | 3130 |
| | **Turning radius** | | | | | | | | | |
| 13 | *Wa* | *mm* | 4600 | 4800 | 4800 | 4800 | 4800 | 4800 | 5100 | 4600 |
| | **Load arm** | | | | | | | | | |
| 14 | *x from center of driveaxle* | *mm* | 1485 | 1485 | 2110 | 1795 | 2110 | 2110 | 2110 | 1645 |
| | **90°-stacking aisle** | | | | | | | | | |
| 15 | *Ast 4 with forklength acc. to pos 8* | *mm* | 7185 | 7385 | 8410 | 8395 | 8410 | 8410 | 8710 | 8195 |
| | **Driving and lifting performance** | | | | | | | | | |
| 16 | *Driving speed fwds/rev.* | *km/h* | 30/30 | 30/30 | 30/30 | 30/30 | 30/30 | 30/30 | 30/30 | 30/30 |
| 17 | *Lifting speed with/without load* | *m/sec* | 0.31/0.34 | 0.31/0.34 | 0.31/0.34 | 0.31/0.34 | 0.31/0.34 | 0.31/0.34 | 0.31/0.34 | 0.31/0.34 |
| 18 | *Lowering speed with/without load* | *m/sec* | 0.40/0.30 | 0.40/0.30 | 0.40/0.30 | 0.40/0.30 | 0.40/0.30 | 0.40/0.30 | 0.40/0.30 | 0.40/0.30 |
| | **Draw bar pull** | | | | | | | | | |
| 19 | *In carriage loaded* | *kN* | 125 | 125 | 125 | 125 | 125 | 125 | 125 | 125 |
| | **Climbing performance** | | | | | | | | | |
| 20 | *With/without load* | % | 37/37 | 36/36 | 41/41 | 36/36 | 36/36 | 33/33 | 32/32 | 31/31 |
| | **Total weight** | | | | | | | | | |
| 21 | *Standard equipped*** | *kg* | 18500 | 18500 | 19100 | 19700 | 20400 | 21500 | 21300 | 20300 |
| | **Axle load** | | | | | | | | | |
| 22 | *Driveaxle with/without load* | *kg* | 31500/9700 | 32500/9700 | 28900/9700 | 32400/9700 | 31550/9750 | 33750/9750 | 34650/9750 | 36500/9500 |
| 23 | *Steer axle with/without load* | *kg* | 2000/8800 | 2000/8800 | 2200/9400 | 2300/10000 | 2450/10650 | 2750/11750 | 2650/11550 | 1800/10800 |
| | **Tyres** | | | | | | | | | |
| 24 | *Dimension/ drivewheels* | | 12.00x20" | 12.00x20" | 12.00x20" | 12.00x20" | 12.00x20" | 12.00x20" | 12.00x20" | 12.00x20" |
| 25 | *Dimension/ steerwheels* | | 12.00x20" | 12.00x20" | 12.00x20" | 12.00x20" | 12.00x20" | 12.00x20" | 12.00x20" | 12.00x20" |
| | **Wheelbase** | | | | | | | | | |
| 26 | *y* | *mm* | 3300 | 3500 | 3500 | 3500 | 3500 | 3500 | 3800 | 3300 |
| | **Track** | | | | | | | | | |
| 27 | *Driveaxle/steeraxle* | *mm* | 1855/1990 | 1855/1990 | 1855/1990 | 1855/1990 | 1855/1990 | 1855/1990 | 1855/1990 | 1855/1990 |
| | **Ground clearance** | | | | | | | | | |
| 28 | *m2 under liftmast* | *mm* | 225 | 225 | 225 | 225 | 225 | 225 | 225 | 225 |
| 29 | *m1 mid forklift* | *mm* | 315 | 315 | 315 | 315 | 315 | 315 | 315 | 315 |
| | **Brakes** | | | | | | | | | |
| 30 | *Mainbrake* | | Wet disc brakes | Wet disc brakes | Wet disc brakes | Wet disc brakes | Wet disc brakes | Wet disc brakes | Wet disc brakes | Wet disc brakes |
| 31 | *Parkingbrake* | | Spring brake | Spring brake | Spring brake | Spring brake | Spring brake | Spring brake | Spring brake | Spring brake |
| | **Engine** | | | | | | | | | |
| 32 | *Manufacturer* | | Cummins | Cummins | Cummins | Cummins | Cummins | Cummins | Cummins | Cummins |
| | **Alternator** | | | | | | | | | |
| 33 | *AC* | *Watt* | 2240 | 2240 | 2240 | 2240 | 2240 | 2240 | 2240 | 2240 |
| | **Battery** | | | | | | | | | |
| 34 | *Voltage/capacity* | *V/Ah* | 24/110 | 24/110 | 24/110 | 24/110 | 24/110 | 24/110 | 24/110 | 24/110 |
| | **Transmission** | | | | | | | | | |
| 35 | *Type* | | Converter | Converter | Converter | Converter | Converter | Converter | Converter | Converter |
| 36 | *Type of gearshift* | | Automatic | Automatic | Automatic | Automatic | Automatic | Automatic | Automatic | Automatic |
| 37 | *Number of gears fwds/rev.* | | 4/3 | 4/3 | 4/3 | 4/3 | 4/3 | 4/3 | 4/3 | 4/3 |
| 38 | *Model* | | ZF Ergopower | ZF Ergopower | ZF Ergopower | ZF Ergopower | ZF Ergopower | ZF Ergopower | ZF Ergopower | ZF Ergopower |
| 39 | **Operating pressure** | *kPa* | 17000 | 17500 | 14000 | 17000 | 16000 | 17000 | 17500 | 18000 |
| | **Fueltank** | | | | | | | | | |
| 40 | *Volume* | *Litre* | 235 | 270 | 270 | 270 | 270 | 270 | 325 | 235 |

**Engine alternatives**

Cummins or Volvo engines on request.

** Upon request.*
*** Dependent on specification.*



Courtesy of Crane.Market

https://truckmanualshub.com/

# SVETRUCK CS – ECS

Svetruck 16CS 4H

Svetruck ECS 6H

Svetruck ECS 7H

Svetruck 16CS 5H

Svetruck ECS 6H



*Courtesy of Crane.Market*

https://truckmanualshub.com/

SVETRUCK®

| | Model | | 16CS 4H | 16CS 5H | ECS 5H | ECS 6H | ECS 7H |
|---|---|---|---|---|---|---|---|
| | **Lifting capacity** | | | | | | |
| 1 | *Q Load – Integrated container spreader* | *ton* | 8 | 8 | 9 | 9 | 9 |
| | **Load centre** | | | | | | |
| 3 | | *mm* | 1220 | 1220 | 1220 | 1220 | 1220 |
| | **Lifting height teleskopic mast** | | | | | | |
| 4 | *h3 Standard – Number 8'6"/9'6" containers ** | *mm* | 4/9000/10000 | 5/11600/12500 | 5/11600/12500 | 6/14000/15500 | 7/16400 |
| | **Tilt** | | | | | | |
| 5 | *Standard, Forward α / backwards β* | ° | 4/4 | 4/4 | 4/5 | 4/5 | 4/5 |
| | **Overall dimensions** | | | | | | |
| 9 | *L2 Length incl. container spreader* | *mm* | 5950 | 5950 | 6800 | 6800 | 6800 |
| 10 | *B Width* | *mm* | 3500 | 3500 | 4100 | 4100 | 4100 |
| 11 | *h1 Closed height – Number 8'6"/9'6" containers* | *mm* | 4/6370/6870 | 5/7670/8120 | 5/8075/8525 | 6/9275/10025 | 7/10475 |
| 12 | *h4 Extended height – Number 8'6"/9'6" containers* | *mm* | 4/10870/11870 | 5/13470/14370 | 5/13875/14775 | 6/16275/17775 | 7/18675 |
| 13 | *h2 Height over cabin (std. side mounted)***** | *mm* | 4155 | 4155 | 4215 | 4215 | 4215 |
| | **Turning radius** | | | | | | |
| 14 | *Wa* | *mm* | 5600 | 5600 | 6400 | 6400 | 6400 |
| | **Load arm** | | | | | | |
| 15 | *x from center of driveaxle* | *mm* | 1230 | 1230 | 1280 | 1280 | 1280 |
| | **90°-stacking aisle** | | | | | | |
| 16 | *Min. aisle width for 90° stacking 20' container* | *mm* | 9400 | 9400 | 10200 | 10200 | 10200 |
| | *Min. aisle width for 90° stacking 40' container* | *mm* | 13900 | 13900 | 14000 | 14000 | 14000 |
| | **Driving and lifting performance** | | | | | | |
| 17 | *Driving speed fwds/rev.* | *km/h* | 25/25 | 25/25 | 25/25 | 25/25 | 25/25 |
| 18 | *Lifting speed, Integrated container spreader with/without load* | *m/sec* | 0.40/0.45 | 0.40/0,45 | 0.47/0.50 | 0.47/0.50 | 0.47/0.50 |
| 19 | *Lowering speed, Integrated container spreader with/without load* | *m/sec* | 0.40/0.40 | 0.40/0.40 | 0.40/0.40 | 0.40/0.40 | 0.40/0.40 |
| | **Draw bar pull** | | | | | | |
| 20 | *Loaded* | *kN* | 158 | 158 | 148 | 148 | 148 |
| | **Climbing performance** | | | | | | |
| 21 | *With/without load* | % | 42/42 | 41/41 | 32/41 | 32/41 | 32/41 |
| | **Total weight** | | | | | | |
| 22 | *With fork carriage-standard equipped**** | *kg* | 26700 | 27800 | 35000 | 36400 | 37300 |
| | **Axle load** | | | | | | |
| 23 | *Driveaxle with/without load* | *kg* | 33200/14900 | 34300/16000 | 36000/22200 | 37400/23600 | 38300/24500 |
| 24 | *Steeraxle with/without load* | *kg* | 5000/11800 | 5000/11800 | 8000/12800 | 8000/12800 | 8000/12800 |
| | **Tyres** | | | | | | |
| 25 | *Dimension/driveaxle* | | 12.00x20" | 12.00x20" | 14.00x24" | 14.00x24" | 14.00x24" |
| 26 | *Dimension/ steerwheels* | | 12.00x20" | 12.00x20" | 14.00x24" | 14.00x24" | 14.00x24" |
| | **Wheelbase** | | | | | | |
| 27 | *y* | *mm* | 3800 | 3800 | 4500 | 4500 | 4500 |
| | **Track** | | | | | | |
| 28 | *Driveaxle/steeraxle* | *mm* | 2800/2210 | 2800/2210 | 3300/2185 | 3300/2185 | 3300/2185 |
| | **Ground clearance** | | | | | | |
| 29 | *m2 under liftmast* | *mm* | 225 | 225 | 260 | 260 | 260 |
| 30 | *m1 mid forklift* | *mm* | 315 | 315 | 350 | 350 | 350 |
| | **Brakes** | | | | | | |
| 31 | *Mainbrake* | | Wet disc brakes | Wet disc brakes | Wet disc brakes | Wet disc brakes | Wet disc brakes |
| 32 | *Parkingbrake* | | Spring brake | Spring brake | Spring brake | Spring brake | Spring brake |
| | **Engine** | | | | | | |
| 33 | *Manufacture* | | Cummins | Cummins | Cummins | Cummins | Cummins |
| | **Alternator** | | | | | | |
| 34 | *AC* | *Watt* | 2240 | 2240 | 2240 | 2240 | 2240 |
| | **Battery** | | | | | | |
| 35 | *Voltage/capacity* | *V/Ah* | 24/110 | 24/110 | 24/110 | 24/110 | 24/110 |
| | **Transmission** | | | | | | |
| 36 | *Type* | | Converter | Converter | Converter | Converter | Converter |
| 37 | *Type of gearshift* | | Automatic | Automatic | Automatic | Automatic | Automatic |
| 38 | *Numbers of gears fwds/rev.* | | 4/3 | 4/3 | 4/3 | 4/3 | 4/3 |
| 39 | *Model* | | ZF Ergopower | ZF Ergopower | ZF Ergopower | ZF Ergopower | ZF Ergopower |
| 40 | **Operating pressure** | *kPa* | 17500 | 17500 | 17500 | 17500 | 17500 |
| | **Fueltank** | | | | | | |
| 41 | *Volume* | *Litre* | 400 | 400 | 580 | 580 | 580 |

* *For height under twistlock add 2300 mm.*
** *Upon request.*
*** *Dependent on specification.*
**** *Front mounted upon request (h2 3630).*



Courtesy of Crane.Market

https://truckmanualshub.com/

# SVETRUCK 18 – 30

Svetruck 20120-42

Svetruck 20120-42

Svetruck 20120-42

Svetruck 25120-45

Svetruck 28120-46

Svetruck 25120-45



*Courtesy of Crane.Market*

https://truckmanualshub.com/

SVETRUCK®

| | Model | | 18120-36 | 20120-42 | 22120-42 | 23⁶120-42 | 25120-42 | 25120-45 | 28120-46 | 30120-46 |
|---|---|---|---|---|---|---|---|---|---|---|
| | **Lifting capacity** | | | | | | | | | |
| 1 | *Q Load* | *ton* | 18 | 20 | 22 | 23,6 | 25 | 25 | 28 | 30 |
| | **Load centre** | | | | | | | | | |
| 2 | *c* | *mm* | 1200 | 1200 | 1200 | 1200 | 1200 | 1200 | 1200 | 1200 |
| | **Lifting height teleskopic mast** | | | | | | | | | |
| 3 | *h3 Standard**** | *mm* | 4000 | 4000 | 4000 | 4000 | 4000 | 4000 | 4000 | 4000 |
| | **Tilt** | | | | | | | | | |
| 4 | *Forward α / backwards β* | ° | 10/10 | 10/10 | 10/10 | 10/10 | 10/10 | 10/10 | 10/10 | 10/10 |
| | **Fork length** | | | | | | | | | |
| 5 | *L1*** | *mm* | 2500 | 2500 | 2500 | 2500 | 2500 | 2500 | 2500 | 2500 |
| | **Fork arm width/thickness** | | | | | | | | | |
| 6 | *b x s ** | *mm* | 250x100 | 250x100 | 250x110 | 250x110 | 250x110 | 250x110 | 275x110 | 275x110 |
| | **Distance between forks** | | | | | | | | | |
| 7 | *b1 max-min* | *mm* | 2690-790 | 2690-790 | 2690-790 | 2690-790 | 2690-790 | 2690-790 | 2690-810 | 2690-810 |
| | **Overall dimensions** | | | | | | | | | |
| 8 | *L2 Length incl. forkshaft* | *mm* | 5560 | 6135 | 6145 | 6145 | 6145 | 6445 | 6650 | 6650 |
| 9 | *B Width* | *mm* | 3100 | 3100 | 3100 | 3100 | 3100 | 3100 | 3450 | 3450 |
| 10 | *h1 Closed height* | *mm* | 3820 | 3930 | 3930 | 3930 | 3930 | 3930 | 4080 | 4080 |
| 11 | *h4 Extended height* | *mm* | 5820 | 5930 | 5930 | 5930 | 5930 | 5930 | 6080 | 6080 |
| 12 | *h2 Height over cabin* | *mm* | 3350 | 3650* | 3650* | 3650* | 3650* | 3650* | 3715* | 3715* |
| | **Turning radius** | | | | | | | | | |
| 13 | *Wa* | *mm* | 5450 | 6000 | 6000 | 6000 | 6000 | 6300 | 6500 | 6500 |
| | **Load arm** | | | | | | | | | |
| 14 | *x from center of driveaxle* | *mm* | 2260 | 2285 | 2295 | 2295 | 2295 | 2295 | 2325 | 2325 |
| | **90°-stacking aisle** | | | | | | | | | |
| 15 | *Ast 4 with forklength acc. to pos 8* | *mm* | 9200 | 9785 | 9795 | 9795 | 9795 | 10095 | 10325 | 10325 |
| | **Driving and lifting performance** | | | | | | | | | |
| 16 | *Drive- and lift-performance* | *km/h* | 28/28 | 28/28 | 28/28 | 28/28 | 28/28 | 28/28 | 26/26 | 26/26 |
| 17 | *Lifting speed with/without load* | *m/sec* | 0.33/0.36 | 0.33/0.36 | 0.29/0.31 | 0.29/0.31 | 0.29/0.31 | 0.29/0.31 | 0.25/0.27 | 0.25/0.27 |
| 18 | *Lowering speed with/without load* | *m/sec* | 0.50/0.25 | 0.50/0.25 | 0.43/0.22 | 0.43/0.22 | 0.43/0.22 | 0.30/0.20 | 0.38/0.20 | 0.38 /0.20 |
| | **Draw bar pull** | | | | | | | | | |
| 19 | *In carriage loaded* | *kN* | 187 | 187 | 187 | 187 | 187 | 187 | 223 | 223 |
| | **Climbing performance** | | | | | | | | | |
| 20 | *With/without load* | % | 39/39 | 36/36 | 33/33 | 31/31 | 30/30 | 30/30 | 33/33 | 31/31 |
| | **Total weight** | | | | | | | | | |
| 21 | *Standard equipped**** | *kg* | 28900 | 31400 | 32900 | 34000 | 35000 | 33800 | 37200 | 38500 |
| | **Axle load** | | | | | | | | | |
| 22 | *Driveaxle with/without load* | *kg* | 43200/14100 | 48100/17200 | 51300/17300 | 53700/17200 | 55800/17200 | 54900/17200 | 60900/18800 | 64000/18800 |
| 23 | *Steer axle with/without load* | *kg* | 3700/14800 | 3300/14200 | 3600/15600 | 3900/16800 | 4200/17800 | 3900/16600 | 4300/18400 | 4500/19700 |
| | **Tyres** | | | | | | | | | |
| 24 | *Dimension drivewheels* | | 14.00x24" | 14.00x24" | 14.00x24" | 14.00x24" | 14.00x24" | 14.00x24" | 16.00x25" | 16.00x25" |
| 25 | *Dimension steerwheels* | | 14.00x24" | 14.00x24" | 14.00x24" | 14.00x24" | 14.00x24" | 14.00x24" | 16.00x25" | 16.00x25" |
| | **Wheelbase** | | | | | | | | | |
| 26 | *y* | *mm* | 3650 | 4200 | 4200 | 4200 | 4200 | 4500 | 4600 | 4600 |
| | **Track** | | | | | | | | | |
| 27 | *Driveaxle/steeraxle* | *mm* | 2260/2220 | 2260/2220 | 2260/2220 | 2260/2220 | 2260/2220 | 2260/2220 | 2475/2380 | 2475/2380 |
| | **Ground clearance** | | | | | | | | | |
| 28 | *m2 under liftmast* | *mm* | 300 | 300 | 300 | 300 | 300 | 300 | 300 | 300 |
| 29 | *m1 mid forklift* | *mm* | 400 | 400 | 400 | 400 | 400 | 400 | 465 | 465 |
| | **Brakes** | | | | | | | | | |
| 30 | *Mainbrake* | | Wet disc brakes | Wet disc brakes | Wet disc brakes | Wet disc brakes | Wet disc brakes | Wet disc brakes | Wet disc brakes | Wet disc brakes |
| 31 | *Parkingbrake* | | Spring brake | Spring brake | Spring brake | Spring brake | Spring brake | Spring brake | Spring brake | Spring brake |
| | **Engine** | | | | | | | | | |
| 32 | *Manufacturer* | | Cummins | Cummins | Cummins | Cummins | Cummins | Cummins | Cummins | Cummins |
| | **Alternator** | | | | | | | | | |
| 33 | *AC* | *Watt* | 2240 | 2240 | 2240 | 2240 | 2240 | 2240 | 2240 | 2240 |
| | **Battery** | | | | | | | | | |
| 34 | *Voltage/capacity* | *V/Ah* | 24/110 | 24/110 | 24/110 | 24/110 | 24/110 | 24/110 | 24/110 | 24/110 |
| | **Transmission** | | | | | | | | | |
| 35 | *Type* | | Converter | Converter | Converter | Converter | Converter | Converter | Converter | Converter |
| 36 | *Type of gearshift* | | Automatic | Automatic | Automatic | Automatic | Automatic | Automatic | Automatic | Automatic |
| 37 | *Number of gears fwds/rev.* | | 4/3 | 4/3 | 4/3 | 4/3 | 4/3 | 4/3 | 4/3 | 4/3 |
| 38 | *Model* | | ZF Ergopower | ZF Ergopower | ZF Ergopower | ZF Ergopower | ZF Ergopower | ZF Ergopower | ZF Ergopower | ZF Ergopower |
| 39 | **Operating pressure** | *kPa* | 15500 | 16500 | 15500 | 16500 | 17000 | 17000 | 16500 | 17500 |
| | **Fueltank** | | | | | | | | | |
| 40 | *Volume* | *Litre* | 275 | 410 | 410 | 410 | 410 | 480 | 480 | 480 |

**Engine alternatives**

Cummins or Volvo engines on request.

* *Elevated cab 300 mm standad.*
** *Upon request.*
*** *Dependent on specification.*



Courtesy of Crane.Market

https://truckmanualshub.com/

# SVETRUCK 32 – 52

Svetruck 52120-60

Svetruck 32120-48

Svetruck 45120-57



*Courtesy of Crane.Market*

https://truckmanualshub.com/

SVETRUCK®

| | Model | | 32120-48 | 37120-54 | 42120-54 | 42120-57 | 45120-57 | 50120-60 | 52120-60 |
|---|---|---|---|---|---|---|---|---|---|
| | **Lifting capacity** | | | | | | | | |
| 1 | *Q Load* | *ton* | 32 | 37 | 42 | 42 | 45 | 50 | 52 |
| | **Load centre** | | | | | | | | |
| 2 | *c* | *mm* | 1200 | 1200 | 1200 | 1200 | 1200 | 1200 | 1200 |
| | **Lifting height teleskopic mast** | | | | | | | | |
| 3 | *h3 Standard** | *mm* | 4000 | 4000 | 4000 | 4000 | 4000 | 4000 | 4000 |
| | **Tilt** | | | | | | | | |
| 4 | *Forward α / backwards β ** | ° | 10/10 | 5/10 | 5/10 | 5/10 | 5/10 | 5/10 | 5/10 |
| | **Fork length** | | | | | | | | |
| 5 | *L1*** | *mm* | 2500 | 2500 | 2500 | 2500 | 2500 | 2500 | 2500 |
| | **Fork arm width/thickness** | | | | | | | | |
| 6 | *b x s *** | *mm* | 300x110 | 300x135 | 300x135 | 300x135 | 300x135 | 300x135 | 300x140 |
| | **Distance between forks** | | | | | | | | |
| 7 | *b1 max-min* | *mm* | 2910-920 | 2980-930 | 2980-930 | 2980-930 | 2980-930 | 2980-930 | 2980-930 |
| | **Overall dimensions** | | | | | | | | |
| 8 | *L2 Length incl. forkshaft* | *mm* | 6880 | 7740 | 7740 | 8040 | 8040 | 8340 | 8340 |
| 9 | *B Width* | *mm* | 3450 | 3865 | 3865 | 4250 | 4250 | 4250 | 4250 |
| 10 | *h1 Closed height* | *mm* | 4390 | 4670 | 4670 | 4670 | 4670 | 4670 | 4670 |
| 11 | *h4 Extended height* | *mm* | 6390 | 6670 | 6670 | 6670 | 6670 | 6670 | 6670 |
| 12 | *h2 Height over cabin* | *mm* | 3715 | 4000 | 4000 | 4000 | 4000 | 4000 | 4000 |
| | **Turning radius** | | | | | | | | |
| 13 | *Wa* | *mm* | 6600 | 7750 | 7750 | 8100 | 8100 | 8400 | 8400 |
| | **Load arm** | | | | | | | | |
| 14 | *x from center of driveaxle* | *mm* | 2355 | 2565 | 2565 | 2565 | 2565 | 2565 | 2565 |
| | **90°-stacking aisle** | | | | | | | | |
| 15 | *Ast 4 with forklength acc. to pos 8* | *mm* | 10455 | 11815 | 11815 | 12165 | 12165 | 12465 | 12465 |
| | **Driving and lifting performance** | | | | | | | | |
| 16 | *Driving speed fwds/rev.* | *km/h* | 26/26 | 27/27 | 27/27 | 27/27 | 27/27 | 27/27 | 27/27 |
| 17 | *Lifting speed with/without load* | *m/sec* | 0.23/0.24 | 0.30/0.32 | 0.30/0.32 | 0.30/0.32 | 0.30/0.32 | 0.30/0.32 | 0.30/0.32 |
| 18 | *Lowering speed with/without load* | *m/sec* | 0.30/0.20 | 0.30/0.30 | 0.30/0.30 | 0.30/0.30 | 0.30/0.30 | 0.30/0.30 | 0.30/0.30 |
| | **Draw bar pull** | | | | | | | | |
| 19 | *In carriage loaded* | *kN* | 223 | 282 | 282 | 282 | 282 | 282 | 282 |
| | **Climbing performance** | | | | | | | | |
| 20 | *With/without load* | *%* | 30/30 | 30/30 | 27/30 | 27/30 | 26/30 | 24/30 | 23/30 |
| | **Total weight** | | | | | | | | |
| 21 | *Standard equipped**** | *kg* | 41400 | 53900 | 57000 | 55600 | 57400 | 58900 | 60100 |
| | **Axle load** | | | | | | | | |
| 22 | *Driveaxle with/without load* | *kg* | 68200/20500 | 85100/30500 | 92500/30500 | 91400/30500 | 95700/30500 | 101800/30500 | 104700/30500 |
| 23 | *Steer axle with/without load* | *kg* | 5200/20900 | 5800/23400 | 6500/26500 | 6200/25100 | 6700/26900 | 7100/28400 | 7400/29600 |
| | **Tyres** | | | | | | | | |
| 24 | *Dimension drivewheels* | | 16.00x25" | 18.00x25" | 18.00x25" | 18.00x25" | 18.00x25" | 18.00x25" | 18.00x25" |
| 25 | *Dimension steerwheels* | | 16.00x25" | 18.00x25" | 18.00x25" | 18.00x25" | 18.00x25" | 18.00x25" | 18.00x25" |
| | **Wheelbase** | | | | | | | | |
| 26 | *y* | *mm* | 4800 | 5400 | 5400 | 5700 | 5700 | 6000 | 6000 |
| | **Track** | | | | | | | | |
| 27 | *Driveaxle/steeraxle* | *mm* | 2475/2380 | 2600/2500 | 2600/2500 | 3100/2500 | 3100/2500 | 3100/2500 | 3100/2500 |
| | **Ground clearance** | | | | | | | | |
| 28 | *m2 under liftmast* | *mm* | 300 | 300 | 300 | 300 | 300 | 300 | 300 |
| 29 | *m1 mid forklift* | *mm* | 465 | 480 | 480 | 480 | 480 | 480 | 480 |
| | **Brakes** | | | | | | | | |
| 30 | *Mainbrake* | | Wet disc brakes | Wet disc brakes | Wet disc brakes | Wet disc brakes | Wet disc brakes | Wet disc brakes | Wet disc brakes |
| 31 | *Parkingbrake* | | Spring brake | Spring brake | Spring brake | Spring brake | Spring brake | Spring brake | Spring brake |
| | **Engine** | | | | | | | | |
| 32 | *Manufacturer* | | Cummins | Cummins | Cummins | Cummins | Cummins | Cummins | Cummins |
| | **Alternator** | | | | | | | | |
| 33 | *AC* | *Watt* | 2240 | 2240 | 2240 | 2240 | 2240 | 2240 | 2240 |
| | **Battery** | | | | | | | | |
| 34 | *Voltage/capacity* | *V/Ah* | 24/110 | 24/170 | 24/170 | 24/170 | 24/170 | 24/170 | 24/170 |
| | **Transmission** | | | | | | | | |
| 35 | *Type* | | Converter | Converter | Converter | Converter | Converter | Converter | Converter |
| 36 | *Type of gearshift* | | Automatic | Automatic | Automatic | Automatic | Automatic | Automatic | Automatic |
| 37 | *Number of gears fwds/rev.* | | 4/3 | 4/3 | 4/3 | 4/3 | 4/3 | 4/3 | 4/3 |
| 38 | *Model* | | ZF Ergopower | ZF Ergopower | ZF Ergopower | ZF Ergopower | ZF Ergopower | ZF Ergopower | ZF Ergopower |
| 39 | **Operating pressure** | *kPa* | 16500 | 16000 | 16500 | 16500 | 17500 | 18000 | 18000 |
| | **Fueltank** | | | | | | | | |
| 40 | *Volume* | *Litre* | 640 | 1000 | 1000 | 1000 | 1000 | 1000 | 1000 |

**Engine alternatives**

Volvo or Scania engines on request.

* *Only Svetruck 32120-48*
** *Upon request.*
*** *Dependent on specification.*



Courtesy of Crane.Market

https://truckmanualshub.com/

# SVETRUCK TMF

**The SVETRUCK TMF logstacker is a heavy duty logstacker with high performance and well-proven capabilities such as easy handling, excellent operator environment, high reliability, low maintenance cost and high capacity.**

The SVETRUCK TMF logstacker is built with well-known components. The purpose-designed grapple has geometry for easy handling of full loads as well as partial loads.

Svetruck TMF 28/21

Svetruck TMF 25/18

Svetruck TMF 33/22

*Courtesy of Crane.Market*

https://truckmanualshub.com/

SVETRUCK®

Svetruck TMF 12/9

Svetruck TMF 15/11

The SVETRUCK TMF is available in five models:

SVETRUCK TMF 12/9
SVETRUCK TMF 15/11
SVETRUCK TMF 25/18
SVETRUCK TMF 28/21
SVETRUCK TMF 32/22
Grapple sizes: 4.15-9.2 $m^2$

*Courtesy of Crane.Market*

https://truckmanualshub.com/

# Lift masts and fork carriages

## Svetruck clear-view mast for safe handling

**Clear-view masts for heavy forklifts is a design which was first invented in the 1970s by Svetruck engineers. Since then it became a standard for Svetruck forklifts.**

All our masts are manufactured in-house with well-dimensioned mast profiles and powerful mast yokes for optimum torsional stiffness and bending rigidity. All carefully tested before installation. Hardened cam and support rollers in substantial sizes with a large wheel base for the inner mast.

The masts are available as duplex, duplex freelift and triplex freelift.

The forklifts are designed to provide the best possible and safe load handling in all situations. All masts are of open design that ensures optimum all-around visibility. High grade steel is used in all masts, frames and carriages.

The forks are supplied in the required dimensions following approval by our technical department.



*Courtesy of Crane.Market*

https://truckmanualshub.com/

SVETRUCK®

# Lift masts

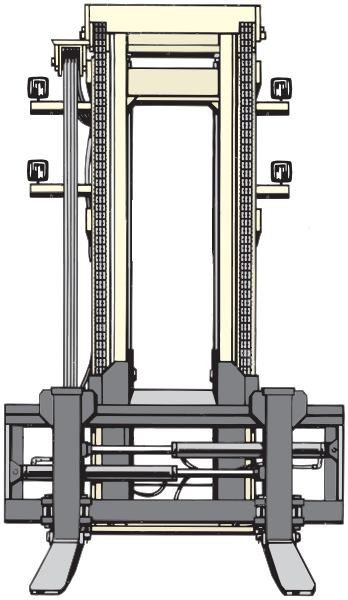

## 10-18

Mast with 6 mast rollers and 6 supporting rollers.

Good visibility due to the lifting cylinders being mounted behind the mast profiles.

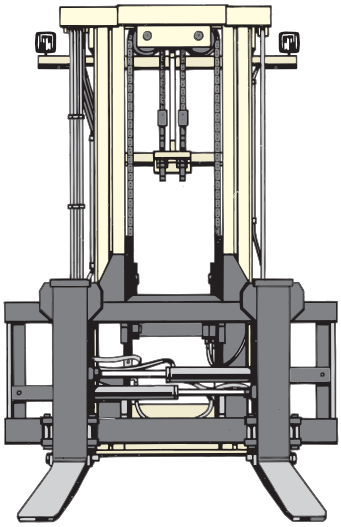

## 20-30

Mast with 4 mast rollers with dual bearings as well as 6 supporting rollers for the highest possible stability and low wear.

Good visibility due to the lifting cylinders being mounted behind the mast profiles.

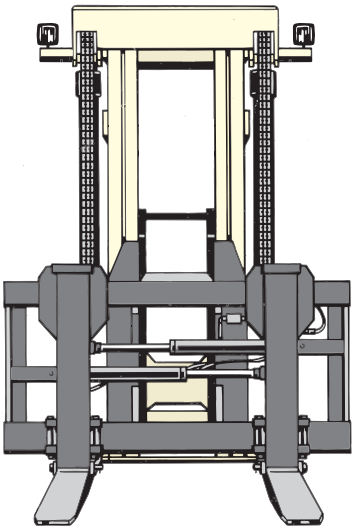

## 32-52

Mast with 4 mast rollers with dual bearings as well as 6 supporting rollers for the highest possible loading capacity.

High stability due to the large distances between the rollers.

Dual lifting cylinders and lifting chains. Hydraulic hoseguide mounted on the outer mast behind one of the lifting cylinders for good visibility.

# Lowbuilt lift masts

For work in low height areas, we can supply modern low built duplex- and triplex mast with full freelift, with or without lifting chains.

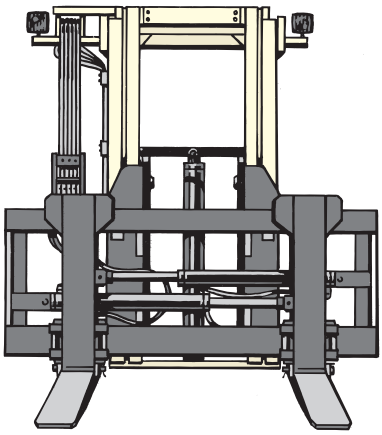

## 10-52

Duplex freelift.

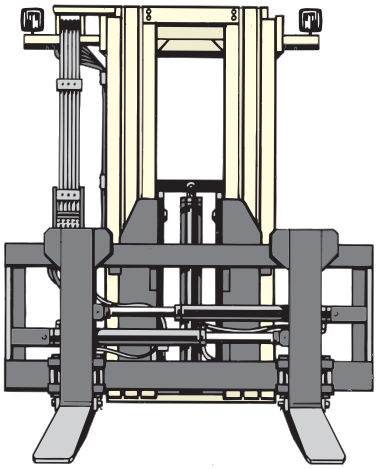

## 10-52

Triplex freelift.

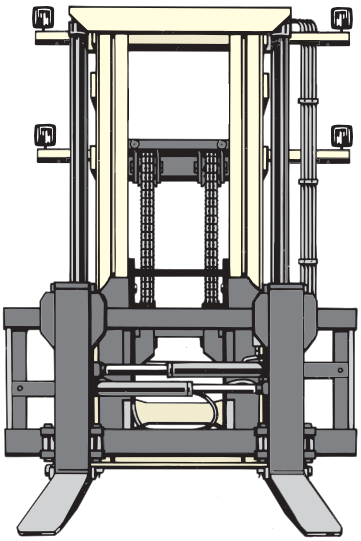

## 10-52

Duplex freelift with chains.



Courtesy of Crane.Market

https://truckmanualshub.com/

# Fork carriages

## 10-16

The following standardversions are available:

- Hydraulic sideshift.
- Hydraulic sideshift and fork positioning.
- Hydraulic sideshift and fork positioning with quick release forks.
- Hydraulic sideshift, fork positioning and fork levelling.
- Hydraulic sideshift, fork positioning and fork levelling with quick release forks.

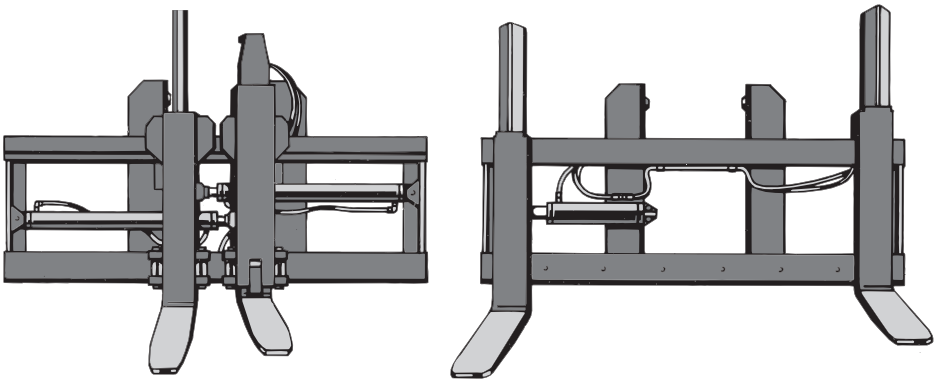

## 18-52

The following standard versions are available:

- Hydraulic sideshift and fork positioning.
- Hydraulic sideshift and fork positioning with quick release forks.

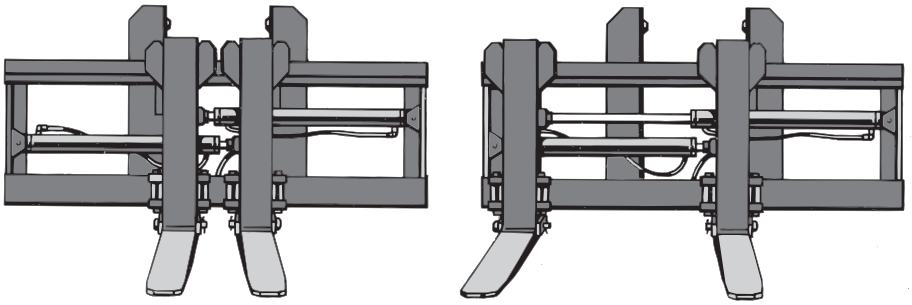

# Quick release forks

The quick release fork system for quick and simple change to alternative fork types, attachments and container lifting frames.

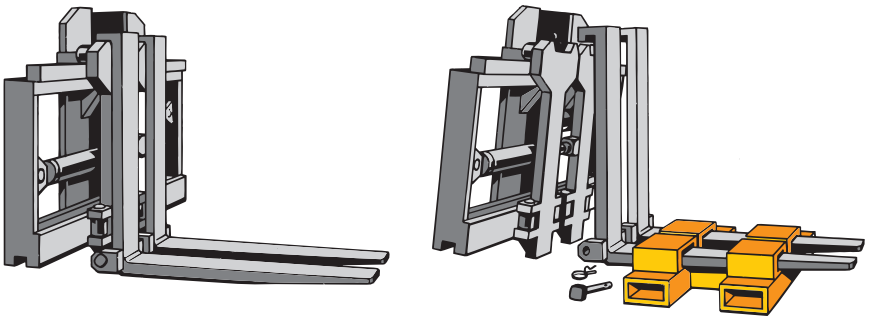

# Quick release inverted forks

For maximum use of the lifting height with attachment for container and Piggy-back (semitrailer), inverted forks are available for quick mounting onto the fork carriage.

Courtesy of Crane.Market

https://truckmanualshub.com/

SVETRUCK®

# Gantry

Forklifts 32-52 ton equipped with mast-integrated gantries for mounting of topspreaders and piggy-back attachments.

# Empty container spreaders

Telescopic side-lift spreaders for handling empty containers. The spreaders can be equipped with different lifting heads to suit the handling of containers in the most efficient way.

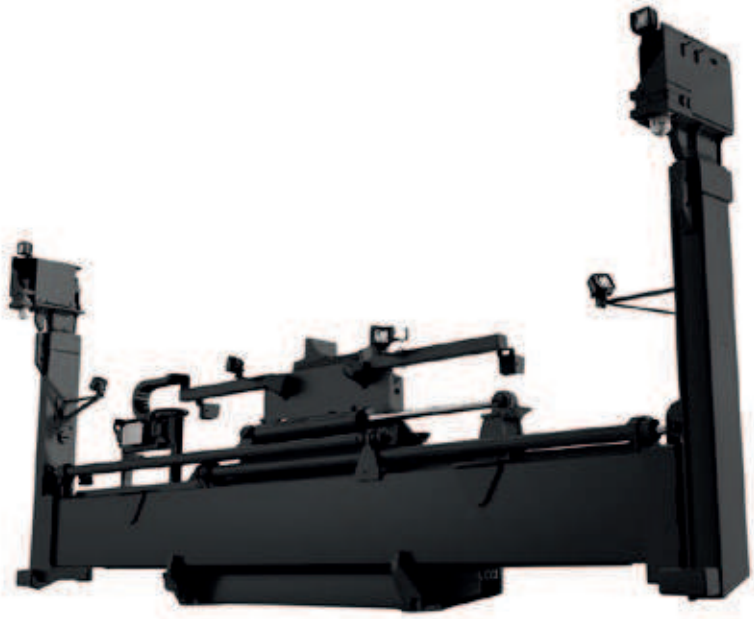

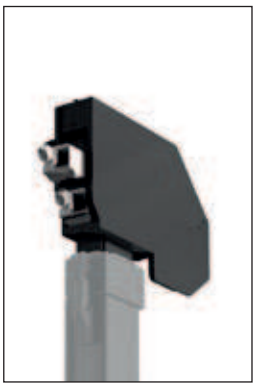

**Svetruck 592**
4 horizontal twistlocks for double handling

**Svetruck 594**
2 horizontal suspended lifting hooks and side clamps for double handling

**Svetruck 595**
2 horizontal suspended lifting hooks

**Svetruck 598**
2 vertical twistlocks

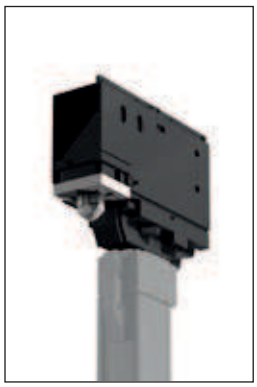

**Svetruck 599**
2 vertical twistlocks with hydraulic movement of twistlocks



Courtesy of Crane.Market

https://truckmanualshub.com/

# Attachments

Our delivery program includes bale clamps, paper-roll clamps, rotators, coilrams, reel clamps etc.

Quick and simple changes between forks and attachments are made possible by means of mounting onto the fork shaft holders of the quick release system.

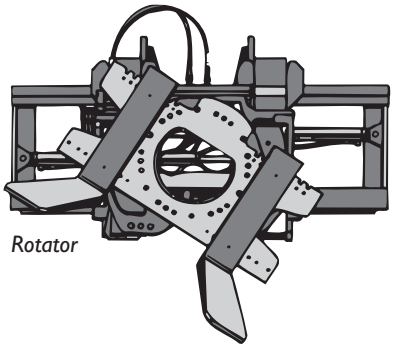

*Rotator*

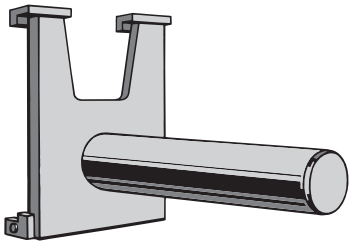

*Coilram*

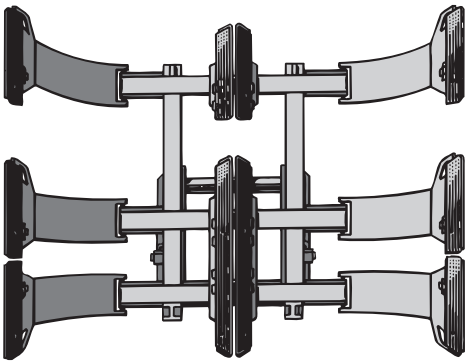

*Roll clamp*

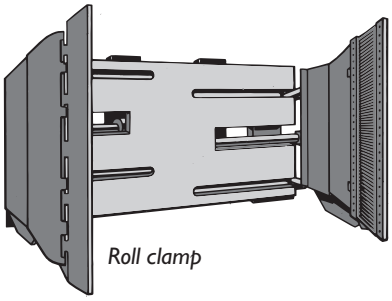

*Roll clamp*

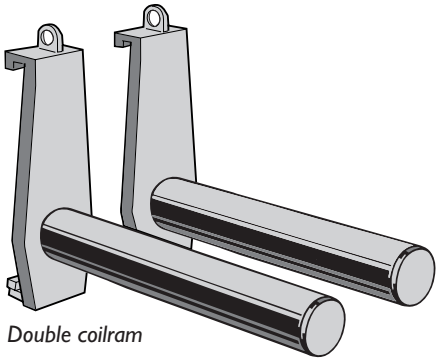

*Double coilram*

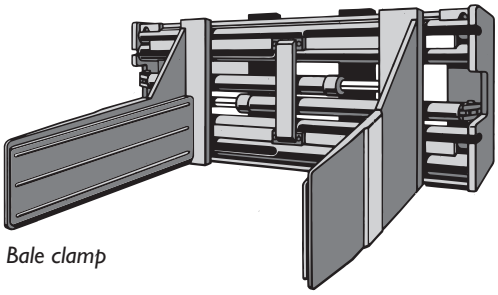

*Bale clamp*



Courtesy of Crane.Market

https://truckmanualshub.com/



# Operator environment

**We have designed our cabins with operators in mind. The difficulty is not building a multifunctional workplace, but adapting it to the person using the forklift. This task is always given top priority. Our cabin is a perfect workplace combining hi-tech features and ergonomics.**

The cabin is a comfortable and safe workplace that reduces stress and strain for the operator whilst at work. The largest possible window area ensures excellent visibility of the work area, forks, attachments, yoke and the load itself. Additional windows placed low down in the doors gives the operator an excellent view of the available working width.

All instruments, controls and warning lights are always visible. This guarantees precise and rapid working procedures which minimise the risk for accidents. A heater and air-conditioning function with recirculation helps maintaining the perfect cabin climate. The rear window is designed to protect against heat, cold and noise. The cabin can be tilted hydraulically for easy maintainance. We also offer a wide range of accessories.

Svetruck's operator cabin meets operators current and future requirements and demands.

Courtesy of Crane.Market

https://truckmanualshub.com/

# Load diagram and lifting heights

## Svetruck 1060 - 52120

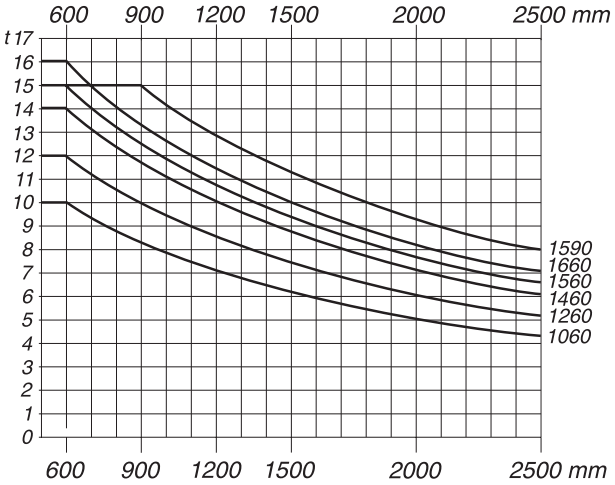


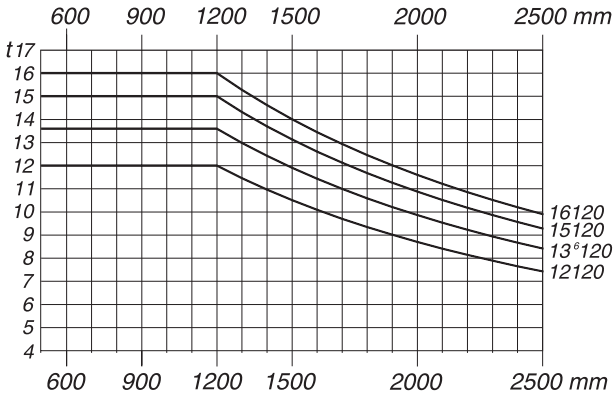


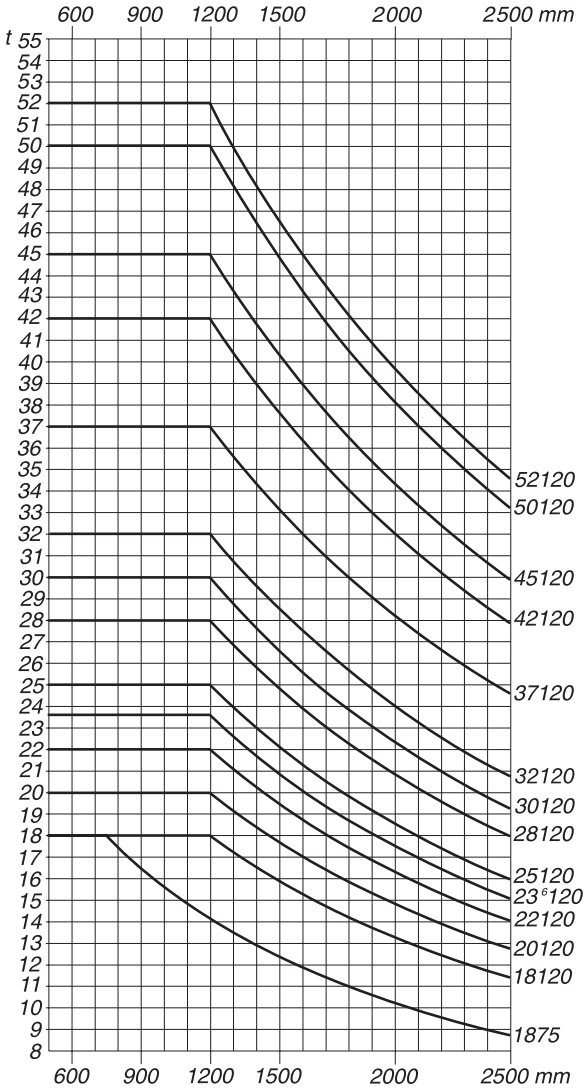




Courtesy of Crane.Market

https://truckmanualshub.com/

SVETRUCK®

## Svetruck 1060 – 1460

| Lift-height h3/mm | Closed height Duplex Standard h1/mm | Closed height Duplex Freelift h1/mm | Closed height Triplex Freelift h1/mm | Triplex Freelift h5/mm |
|---|---|---|---|---|
| 3000 | 2975 | 3005 | | |
| 3500 | 3225 | 3255 | | |
| **4000*** | **3475*** | **3505*** | | |
| 4100 | | | 2850 | 1210 |
| 4500 | 3725 | 3755 | 3010 | 1290 |
| **5000*** | **3975*** | **4005*** | 3210 | 1390 |
| **5500*** | **4225*** | **4255*** | 3410 | 1490 |
| **6000*** | 4475 | **4505*** | 3610 | 1590 |
| **6500*** | **4725*** | 4755 | 3810 | 1690 |
| 7000 | 4975 | 5005 | 4010 | 1790 |

## Svetruck 1560 – 16120, 1875

| Lift-height h3/mm | Closed height Duplex Standard h1/mm | Closed height Duplex Freelift h1/mm | Closed height Triplex Freelift h1/mm | Triplex Freelift h5/mm |
|---|---|---|---|---|
| 3000 | 3150 | 3180 | | |
| 3500 | 3400 | 3430 | | |
| **4000*** | **3650*** | **3680*** | 2910 | 1200 |
| 4500 | 3900 | 3930 | 3110 | 1300 |
| **5000*** | **4150*** | **4180*** | 3310 | 1400 |
| **5500*** | **4400*** | **4430*** | 3510 | 1500 |
| **6000*** | **4650*** | **4680*** | 3710 | 1600 |
| **6500*** | **4900*** | **4930*** | 3910 | 1700 |
| 7000 | 5150 | 5180 | 4110 | 1800 |

## Svetruck 18120

| Lift-height h3/mm | Closed height Duplex Standard h1/mm |
|---|---|
| 3000 | 3320 |
| 3500 | 3570 |
| **4000*** | **3820*** |
| 4500 | 4070 |
| 5000 | 4320 |
| 5500 | 4570 |
| **6000*** | **4820*** |
| **6500*** | **5070*** |
| 7000 | 5320 |

## Svetruck 20120 – 25120

| Lift-height h3/mm | Closed height Duplex Standard h1/mm | Closed height Duplex Freelift h1/mm | Closed height Triplex Freelift h1/mm | Triplex Freelift h5/mm |
|---|---|---|---|---|
| 3000 | 3430 | 3415 | | |
| 3500 | 3680 | 3665 | | |
| 3600 | 3730 | 3715 | 3100 | 1200 |
| **4000*** | **3930*** | **3915*** | 3260 | 1280 |
| **4500*** | **4180*** | 4165 | 3460 | 1380 |
| 5000 | 4430 | 4415 | 3660 | 1480 |
| 5500 | 4680 | 4665 | 3860 | 1580 |
| **6000*** | **4930*** | **4915*** | 4060 | 1680 |
| **6500*** | **5180*** | **5165*** | 4260 | 1780 |

## Svetruck 28120 – 30120

| Lift-height h3/mm | Closed height Duplex Standard h1/mm | Closed height Duplex Freelift h1/mm | Closed height Triplex Freelift h1/mm | Triplex Freelift h5/mm |
|---|---|---|---|---|
| 3000 | 3580 | 3585 | | |
| 3500 | 3830 | 3835 | | |
| **4000*** | **4080*** | **4085*** | 3400 | 1350 |
| 4500 | 4330 | 4335 | 3600 | 1450 |
| 5000 | 4580 | 4585 | 3800 | 1550 |
| 5500 | 4830 | 4835 | 4000 | 1650 |
| **6000*** | **5080*** | **5085*** | 4200 | 1750 |
| **6500*** | **5330*** | **5335*** | 4400 | 1850 |

## Svetruck 32120

| Lift-height h3/mm | Closed height Duplex Standard h1/mm | Closed height Duplex Freelift h1/mm | Closed height Triplex Freelift h1/mm | Triplex Freelift h5/mm |
|---|---|---|---|---|
| 3000 | 3890 | 3870 | | |
| 3500 | 4140 | 4120 | | |
| **4000*** | **4390*** | **4370*** | | |
| 4500 | 4640 | 4620 | | |
| 5000 | 4890 | 4870 | 4020 | 1630 |
| 5500 | 5140 | 5120 | 4220 | 1730 |
| 6000 | 5390 | 5370 | 4420 | 1830 |
| **6500*** | **5640*** | **5620*** | 4620 | 1930 |
| 7000 | 5890 | 5870 | 4820 | 2030 |

## Svetruck 37120 – 52120

| Lift-height h3/mm | Closed height Duplex Standard h1/mm | Closed height Duplex Freelift h1/mm | Closed height Triplex Freelift** h1/mm | Triplex Freelift** h5/mm |
|---|---|---|---|---|
| **4000*** | **4670*** | 4620 | | |
| 4500 | 4920 | 4870 | | |
| 5000 | 5170 | 5120 | 4000 | 1650 |
| 5500 | 5420 | 5370 | 4200 | 1750 |
| 6000 | 5670 | 5620 | 4400 | 1850 |
| **6500*** | **5920*** | **5870*** | **4600*** | 1950 |
| **7000*** | **6170*** | | | |
| **7500*** | **6420*** | | | |
| 8000 | 6670 | | | |
| 8500 | 6920 | | | |
| 9000 | 7170 | | | |
| **9500*** | **7420*** | | | |
| **10000*** | **7670*** | | | |
| **12500*** | **8920*** | | | |
| **13800*** | **9570*** | | | |

* Recommended standard lifting height.

** Only for 37120-42120.

Many other lift and closed heights available.

Duplex freelift half liftheight freelift.

Specifications subject to change without notice.



Courtesy of Crane.Market

https://truckmanualshub.com/

*Courtesy of Crane.Market*

https://truckmanualshub.com/



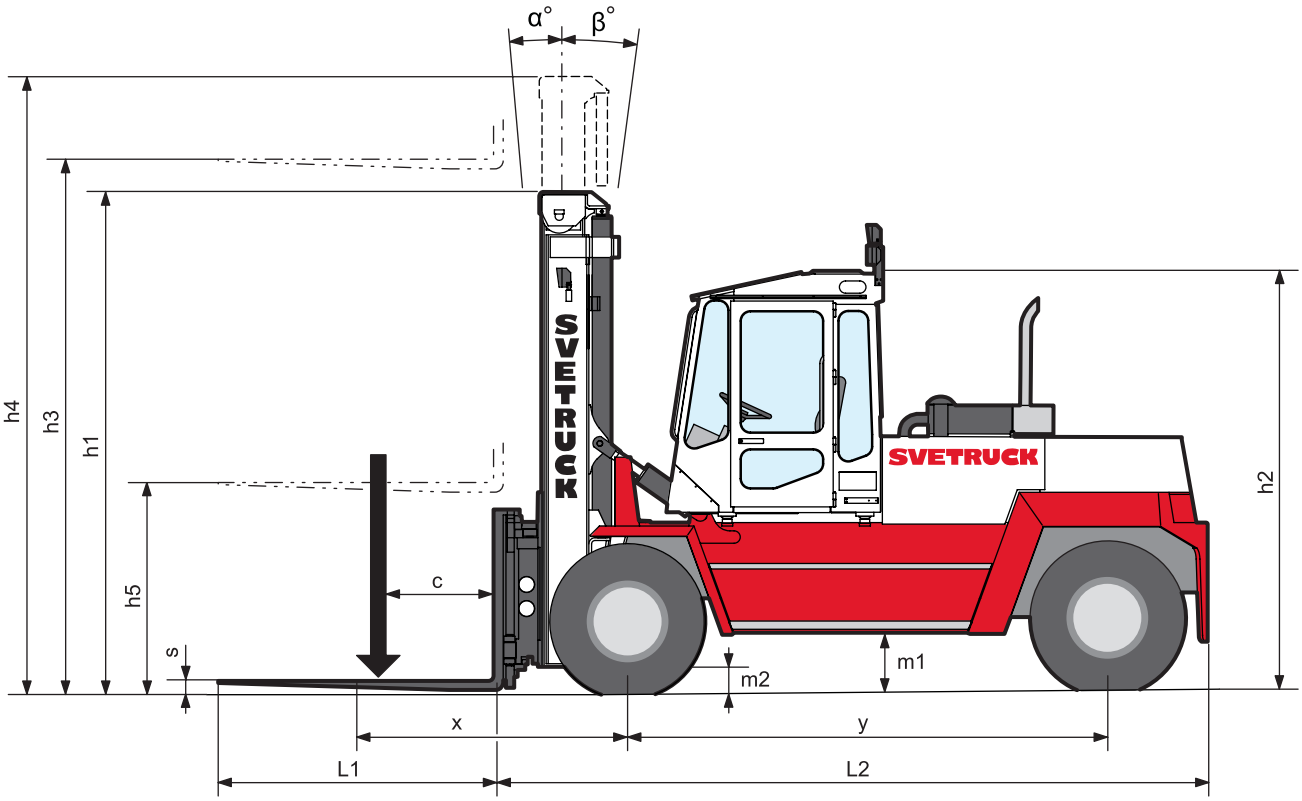


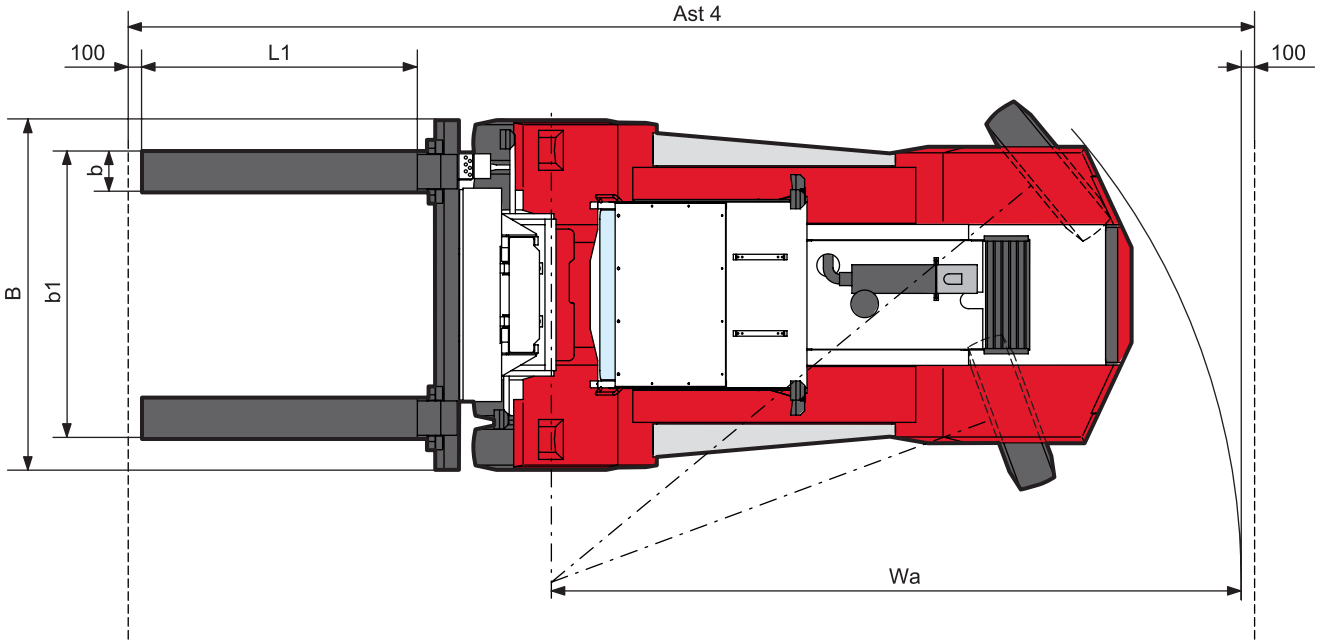




Courtesy of Crane.Market

https://truckmanualshub.com/

© Svetruck AB • 03/2015 • C-2065/10 • Print: Joma Grafisk Produktion

Trust. Strength. Performance. **True Quality.**

SVETRUCK®

**Telephone** +46 372 866 00 **Telefax** +46 372 824 50 **E-mail** info@svetruck.com
**Postal address** Box 321, SE-341 26 Ljungby, Sweden
**Visiting address** Långgatan 29, Ljungby, Sweden www.svetruck.com

*Courtesy of Crane.Market*