Trencher Parts

https://truckmanualshub.com/

DitchWitch®

Chains

Cutting Teeth

Sprockets

Bearings

Carbide Teeth

BALLANTINE

Trencher, Scrapers, and Horizontal Directional Drilling Parts Specialists

Anoka, Minnesota Atlanta, Georgia Santa Fe Springs, California

Centralized Customer Service: 800/328-2424

www.ballantineinc.com

https://truckmanualshub.com/

Faster Service
Better Quality
Lower Prices

Replacement Parts for
DitchWitch®

Effective 9/13

Replacement Parts for Ditch Witch® Trenchers
Ditch Witch® is a registered trademark of The Charles Machine Works, Perry, OK.

Ordering Instructions
All credit accounts must be approved by our Anoka, Minnesota office.
Please order by part number and give the make and model of your machine.

The enclosed parts and price list supersedes all others.
(Prices are subject to change without notice.)

You may order from the office which is most convenient for you.

Main Office
840 McKinley Street
Anoka, Minnesota 55303

Branch Office
675 Wesleyan Drive Southwest
Atlanta, Georgia 30336

Branch Office
9647 Santa Fe Springs Rd
Santa Fe Springs, California 90670

Toll Free Customer Service
Toll Free **800-328-2424**
FAX **763-427-2277**

https://truckmanualshub.com/

Trencher Chain, Base Plates and Cutters for the Ditch Witch® HT220 Track Machine Are Also Available From Ballantine, Inc.

Ballantine Provides Digging Systems Designed for Large Track Trenchers in All Ground Conditions Throughout the World.

Take Advantage of Ballantine's Superior Quality Products and Our 50 Years of Expertise in the Trenching Industry.

https://truckmanualshub.com/

Index

Page 1	Trencher Chain Identification Sheet
Page 2	Chain Assembly Guide
Page 3	Chain Assembly Configurations
Page 4	Smart Part Numbering System
Page 5	Chains for Walk Along Models
Page 6	Model(s): M, M422 Series. Drive Parts
Page 7	Model(s): M Series, 1410, 1420, 1500, 1810, 1620, 350SX, 400SX, 2020. Boom, Auger & Drive Parts
Page 8-9	Model(s): C-7, C-9, C77, C99, 350SX. Boom & Drive Parts
Page 10	Model(s): M Series, C Series, J-20, 1410, 1420, 1500, 1810. Teeth & Accessories
Page 11-12	Model(s): M Series, C Series, 350SX, 400SX, 1010, 1020, 1030, 1210, 1220, 1230, 1330, 1410, 1420, 1620, 1810, 1820, 2020, 2200. Chain, Teeth & Accessories
Page 13	Model(s): 1010, 1020, 1030, 1210, 1220, 1230, 1330, 1410, 1420, 1610, 1620, 1810, 1820, 2020. Roller Booms, Sprockets, Rollers & Bearings
Page 14	Model(s): 1030, 1210, 1220, 1230, 1330, 1410, 1420, 1610, 1620, 1810, 1820, 2020. Roller Booms, Sprockets & Roller
Page 15	Model(s): J20, 2200, 2300, 2310, 3610, RT36 & Attachments H311, H312. Boom Parts
Page 16-17	Model(s): 2200, RT36. Boom, Sprockets, Bearings & Belts
Page 18	Chains for Mid-Size Riding Trenchers
Page 19	Model(s): 2200, 2300, 2310, 3610, RT36 & Attachments H311, H312. Sprocket Style Booms, Sprockets & Bearings
Page 20	Model(s): 2300, 2310, 3500, 3610, 3700, 4500 & Attachments H300 Series, H313 & H314. Roller Booms, Sprockets & Roller
Page 21	Model(s): 2300, 2310, 3500, 3610, 3700, 4500 & Attachments H300 Series, H314, H514, H515, H552. Roller Booms, Sprockets & Roller
Page 22	Model(s): J20, 2200, 2300, 2310, 3500, 3610, 3700, RT36 & Attachments H300 Series, H500 Series. Teeth & Accessories
Page 23-24	Model(s): V30, R30, 3210. Booms, Sprockets, Bearings & Belts
Page 25-26	Model(s): V30, R30, 3210, 3500, 3610, 3700, 4500. Chain, Teeth & Accessories
Page 27-29	Model(s): 3610, RT36, R40, 4010 & Attachments H300 Series, H500 Series, A/H 400, A/H 500 using 2" Pitch Chain. Boom Sprockets, Bearings, Auger Shafts & Accessories
Page 30-31	Model(s): R40, 3210, 3500, 3700, 4010, 4500, RT36, RT40. Teeth & Accessories
Page 32-33	Model(s): J20, 2200, 2300, 2310, 3500, 3700, V30, R30, R40, 3210, 3610, 4010, 4500. Chain & Accessories

Continued on Page ii…

https://truckmanualshub.com/

Index

Page 34	Chains for Large Riding Trenchers
Page 35-36	Model(s): R30, R40, 3210, 4010 & Attachments H300, A/H400, A/H500. Boom Sprockets, Bearings, Augers & Accessories
Page 37	Model(s): A/H500, A615, 510A. Sprockets, Rollers, Bearings, Augers & Accessories for Alligator Boom
Page 38-39	Model(s): R40, 4010, R60, R65, 5010, RT55, 5110, 6510, 7510, RT75, 7610, 8020, RT95, RT115, & Attachments A/H400, A/H500, H700. Chain, Teeth & Accessories
Page 40	Model(s): R60, R65, 5010, 5110, RT55, 6510, 7510, RT75, 7610, 8020, RT95, RT115, A/H400, A/H500, H700. Anti-Back Flex Chain
Page 41	Model(s): R40, R60, R65, 4010, 5010, 6510, 7510, 7610, 8020, & Attachments A/H400, A/H500, H700. Boom Parts, Sprockets, Bearings & Accessories
Page 42	Model(s): R40, R60, R65, 4010, 5010, 6510, 7510, 8020, & Attachments A/H400, A/H500, H700. Auger Parts & Accessories
Page 43-44	Model(s): R40, R60, R65, 4010, 5010, 6510, 7510, 7610, 8020 & Attachments A/H400, A/H500, H700. Drive Sprocket Head Shaft & Components
Page 45-46	Chain & Accessories for Ultra Heavy-Duty Trench-ALL® 3110
Page 47	Model(s): R100 & AR12, RT115. Chain
Page 48	Model(s): R100, AR12. Chain, Teeth & Adapters
Page 49	Model(s): R100, AR12. Boom Sprocket, Auger Sprockets, Drive Sprockets & Accessories
Page 50-52	Chain & Accessories for Ultra Heavy-Duty Trench-ALL® 4086
Page 53	Rock & Frost Section
Page 54	Chain, Teeth & Adapters for Terminator®, Alligator, Rock & Frost Walk Along Trenchers
Page 55-56	Model(s): V30, R30, 2300, 2200, 2310, R40, J20, 3500, 3610, 3700, R40, 4500, 4010. Terminator®, Alligator, and Rock & Frost Chain, Teeth & Adapters
Page 57-58	Model(s): V30, R30, 2300, 2310, R40, 4010, 5010, 3500, 2200, 3610, 3700, 4500. Terminator®, Alligator and Rock & Frost Anti-Back Flex Chain, Teeth & Adapters
Page 59-60	Model(s): R60, R65, R6510, R40, 4010, 5010, 7510, 7610, 8020. Terminator®, Alligator and Rock & Frost Chain, Teeth & Adapters
Page 61	Model(s): R60, R65, R6510, R40, 4010, 5010, 7510, 7610, 8020 & Attachments A/H500, A/H700. Terminator®, Alligator and Rock & Frost Anti-Back Flex Chain, Teeth & Adapters
Page 62-63	Rock & Frost Chain, Teeth and Adapters for TA3110 Ultra Heavy-Duty Chain
Page 64	Rock & Frost Chain, Teeth and Adapters for R100, AR12, R150
Page 65-67	Rock & Frost TA4086 Chain, Teeth and Adapters for R100, AR12, R150
Page 68	Roller Chain Section

https://truckmanualshub.com/

BALLANTINE

Trencher, Scrapers, and Horizontal Directional Drilling Parts Specialists

Trencher Chain Identification Sheet

Make of Machine: _____ **Model:**_____

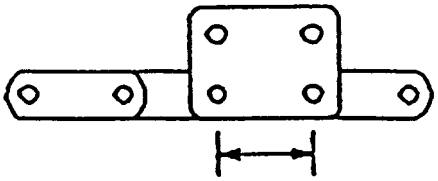

Measure Pitch Size (Center of Pin to Center of Next Pin)

1.654"	2.000"	2.043"	2.609"	2.648"	3.067"	3.075"	3.110"	3.125"	3.250"	4.000"	4.500"
☐	☐	☐	☐	☐	☐	☐	☐	☐	☐	☐	☐

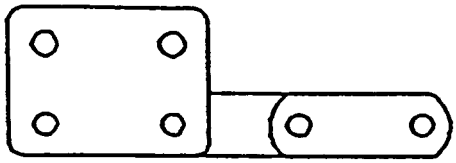

Every 4th Pitch

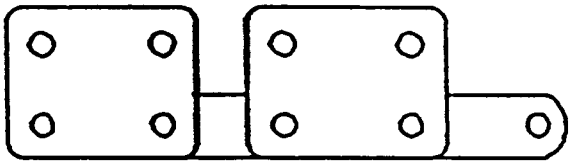

Every 2nd Pitch

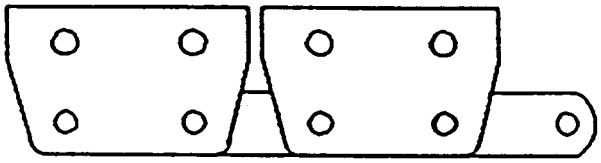

Anti-Backflex Chain

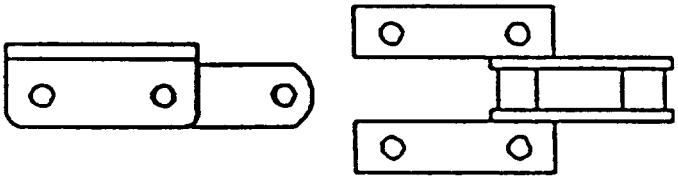

K-Style Chain

To determine the amount of pitches in a chain, count how many pins it has. The example below has 20 pins, meaning it is 20 pitches long.

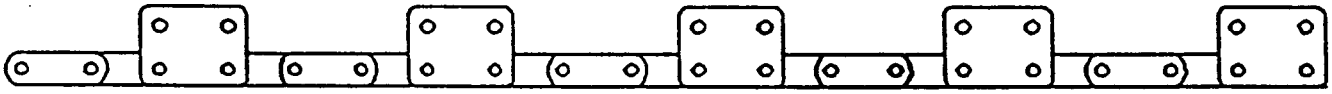

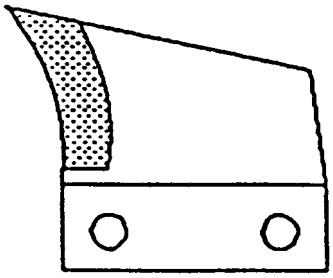

Left-hand cutter

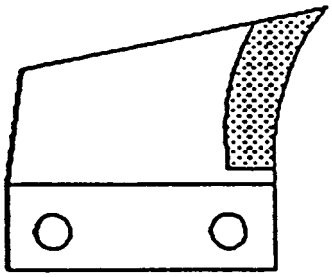

Right-hand Cutter

* Auburn Cutters are the Opposite

https://truckmanualshub.com/

Chain Assembly Guide

CHAIN ASSEMBLY OPTIONS	GROUND CONDITIONS/APPLICATION					
	Heavy/Wet	Sandy	Loose Dirt	Medium	Hard	Rocky
Cup Assembly/4 pitch	■	■	■	■	□	□
Cup Assembly/2 pitch	□	■	■	□	■	□
Combo/Terminator-Cup	□	□	□	■	■	□
Combo/Rock & Frost-Cup	□	□	■	■	■	□
Full Terminator (bolt-on)	□	□	□	□	■	□
Full Rock & Frost (bolt-on)	□	□	□	□	■	■
LP Welded Terminator	□	□	■	■	■	□
LP Welded Alligator	□	□	□	□	■	■
LP Welded H-Plate	□	□	□	□	■	■
Anti Back–Flex Chains	Recommended as an upgrade to any of the chain assemblies listed. ABF Chains are designed for more severe ground conditions.					

This chart shows the most popular styles of chain assemblies and recommended guidelines as to their usage. Only basic catagories of ground conditions are shown.

These are recommendations only. Please consult a Ballantine representative when matching chain assemblies with specific ground conditions or any special application requirements.

Key:
- □ Not Recommended
- ■ Recommended
- ■ Best

Parts for earlier models, not listed in this catalog are also available.

https://truckmanualshub.com/

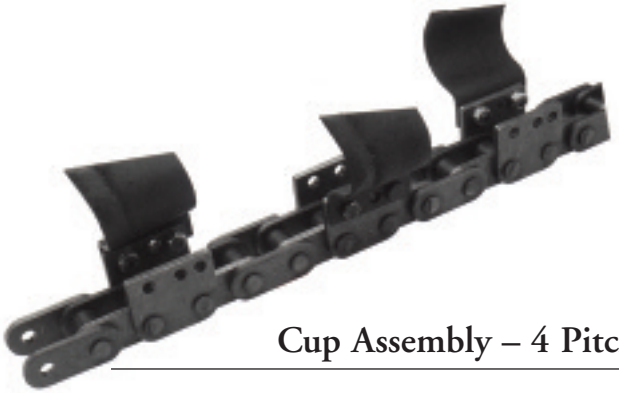

Cup Assembly – 4 Pitch

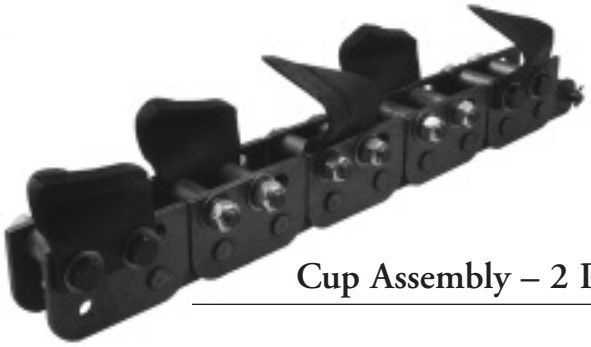

Cup Assembly – 2 Pitch

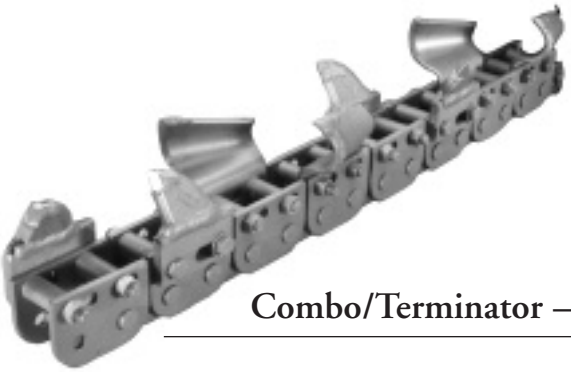

Combo/Terminator – Cup

Combo/Rock & Frost Cup

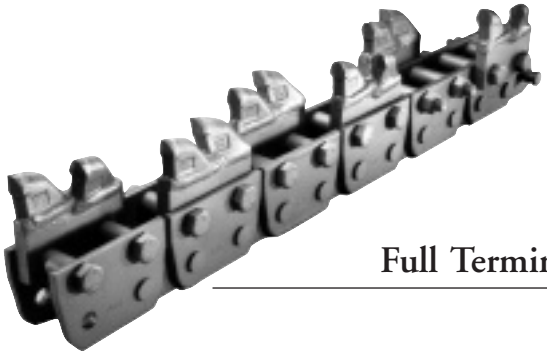

Full Terminator

Full Rock & Frost

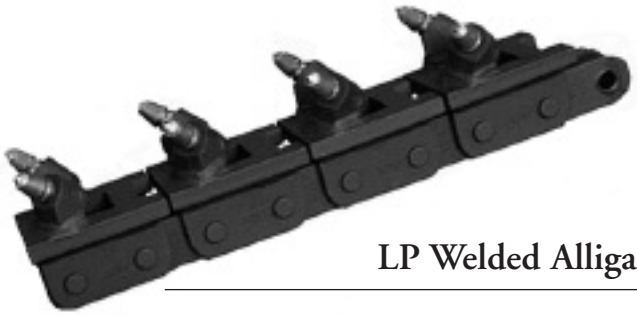

LP Welded Alligator

LP Welded H-Plate

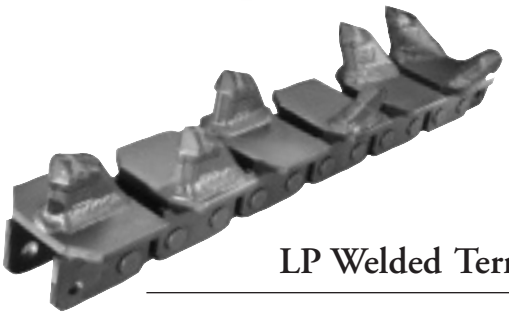

LP Welded Terminator

Anti Back-Flex Chains

https://truckmanualshub.com/

Ballantine, Inc.
Smart Part Numbering System
for Chain Assemblies

Ballantine's smart part numbering system has been developed to allow people to easily identify the various chain assemblies that are available and what suits specific applications. The diagram below explains what each section of the part number means.

B 20002 00 B 25

B = Ballantine
TA = Trench All®
AL = Alligator
SH = Terminator® Welded
D = Ditch Witch® teeth (1.654" only)
C = Case teeth® (1.654" only)
M = Melroe®/Bobcat®/Burkeen® teeth (1.654" only)
V = Vermeer® teeth (1.654" only)
T = Terminator® Bolt on the side

Chain Size
(see chart below)

Digging Width
in inches

Number of Stations
(Tooth attaching points)

Assembly Configuration
B = Bare Chain
C = Cup Assembly
R = Rock & Frost
M = Mixed (Rock & Frost and Cup Teeth)
H = H-Plate
V = Alligator (.735)
D = Alligator (.765)
G = Ground breaker mixed chain

Ditch Witch® Chain Size Chart		
TA1654-4	1.654" Pitch every 4th chain	(34,000 lb. T.S.)
TA1654-2	1.654" Pitch ABF chain	(34,000 lb. T.S.)
TA1654HD-2	1.654" Pitch Heavy Duty ABF chain	(38,000 lb. T.S.)
2-4	2.00" Pitch every 4th chain	(50,000 lb. T.S.)
2ABF-2	2.00" Pitch ABF chain	(50,000 lb. T.S.)
3067HD-2	3.067" Pitch Heavy Duty chain	(110,000 lb. T.S.)
3067LD-2	3.067" Pitch Light Duty chain	(70,000 lb. T.S.)
3067ABF-2	3.067" Pitch ABF chain	(110,000 lb. T.S.)
3067-4	3.067" Pitch every 4th chain	(110,000 lb. T.S.)
TA3110-2	3.110" Pitch Trench All chain	(165,000 lb. T.S.)
TA4086-2	4.086" Pitch Trench All chain	(225,000 lb. T.S.)
450-2	4.500" Pitch R100 style chain	(150,000 lb. T.S.)

https://truckmanualshub.com/

1

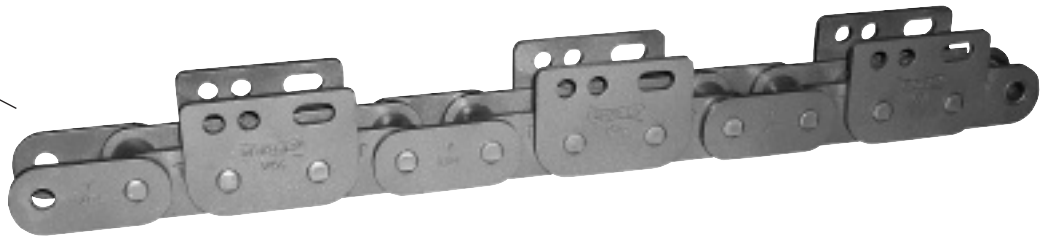

2

3

Ref No.	Part No.	Description	Weight (lbs)
1	TA1654-4	1.654" Pitch Chain every 4th	34,000 T.S.
2	TA1654-2	1.654" Pitch Chain ABF	34,000 T.S.
3	TA1654HD-2	1.654" Pitch Chain Heavy Duty ABF	38,000 T.S.

Note: The Trench-All® Chain lines are specifically engineered for today's higher horsepower trenchers and their roller style booms.

All Trench-All® Chains are ultra heavy duty anti back-flex chains with raised rivet design.

https://truckmanualshub.com/

Drive Parts for Models M & M422 Series Trenchers

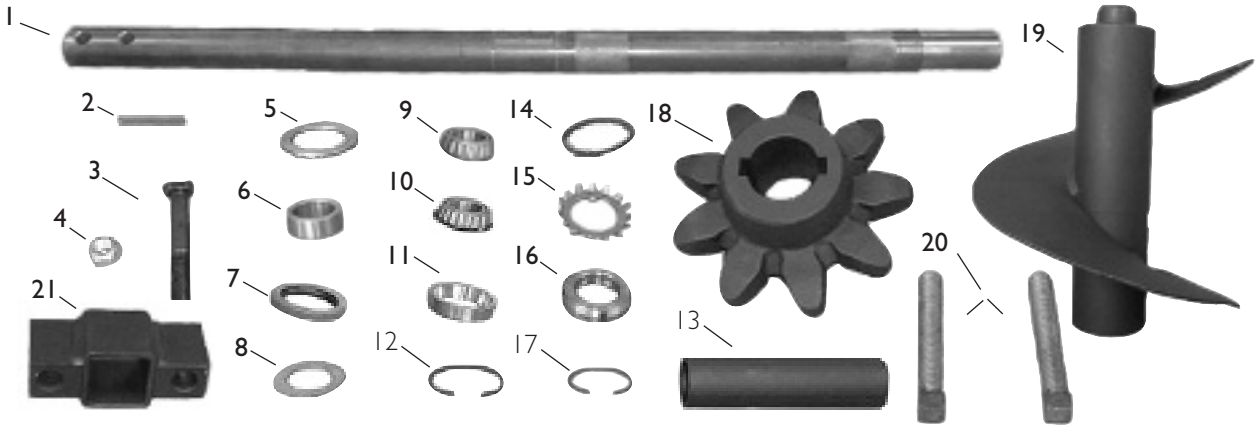

Ref No.	Part No.	Description	Weight (lbs)
1	B 165-415	Head Shaft, 8" Pivot - 31" Long	13
N/S	B 165-416	Head Shaft, 12" Pivot - 34½" Long	15
2	B 165-944	Key (¼" x 1¾")	.10
3	B 105-067	Bolt (½" N.C. x 2¾")	.06
4	B 105-065	Nut Lock ½" N.C.	.06
5	B 180-031	Dirt Shield	.1
6	B 180-037	Spacer Seal	.2
7	B 155-802	Seal	.0
8	B 110-003	Bearing Shield	.06
9	B 125-204	Cone Bearing	.19
10	B 125-203	Cone Bearing W/ Seal	.44
11	B 125-205	Bearing Cup	.19
12	B 115-454	Retaining Ring	.06
13	B 180-035	8" Pivot Spacer	1.5
N/S	B 180-036	12" Pivot Spacer	3.5
14	B 180-032	Spacer	.1
N/S	B 105-461	Tang Washer	.06
15	B 105-331	Lock Washer	.06
16	B 105-330	Adjusting Nut.	.2
17	B 115-465	Retaining Ring	.06
N/S	B 105-704	5/16" Set Screws	.06
18	B 140-702	Drive Sprocket, 1⅜" Bore	4
19	B 145-047	Auger	25
20	B 105-352	Adjusting Screw	.63
21	B 140-038	Adjusting Block	1.5

Adjusting Miscellaneous Parts (not shown) for Model M

Part No.	Description	Weight (lbs)
B 140-718*	Sprocket Head Shaft 1⅛" Bore (M3 - M389)	4.5
B 140-720*	Sprocket Head Shaft 1¼" Bore (M3 - 22 or M329)	2.5
B 125-010	Drive Shaft Bearing (M2, M3)	.7
B 155-814	Head Shaft Seal (M3, M389)	.05
B 155-815	Dust & Dirt Seal (M3 - M389)	.1
B 165-320	Head Shaft Drive - 8" Pivot (M3 or M389)	8.65
B 165-321	Head Shaft Drive - 12" Pivot (M3 or M329)	12
B 170-002	V Belt Set (3) (Model M3)	2.2
B 170-005	V Belt Set (3) (Model M)	3

*** Measure bore size.**

https://truckmanualshub.com/

Boom, Auger and Drive Parts for Ditch Witch® Models M Series, 1410, 1420, 1500, 1810, 1620, 350SX, 400SX & Model 2020 using Sprocket Boom

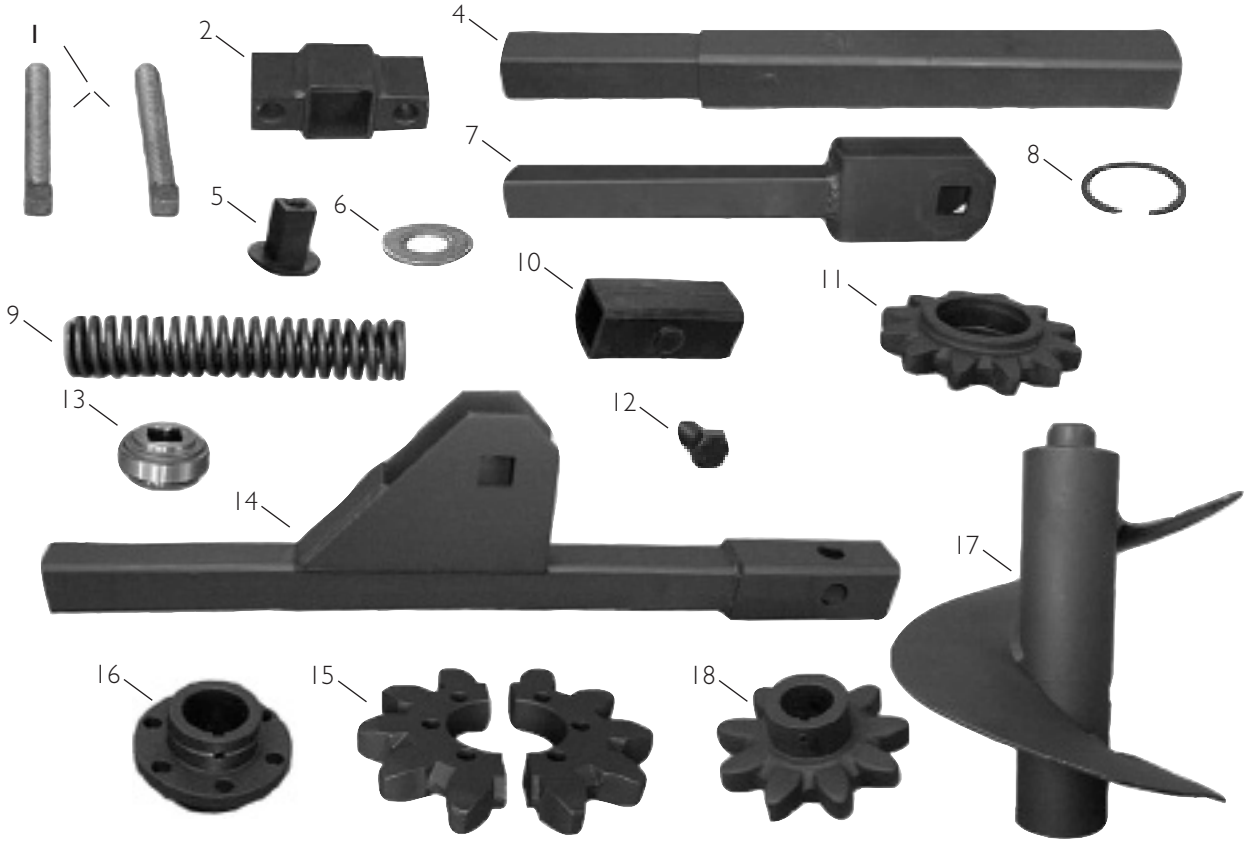

Ref No.	Part No.	Description	Weight (lbs)
1	B 105-352	Square Head Set Screw	.63
2	B 140-038	Boom Adj. Block	1.5
3	B 105-515	Cotter Pin (3⁄16" x 3")	.06
4	B 140-551	Boom Extension, 1'	11
N/S	B 140-552	Boom Extension, 2'	16
5	B 180-445	Sq. Idler Shaft	.2
6	B 140-775	Dirt Shield (2 Required)	.25
7	B 140-759	Boom End Slide & Stop, Less Sprocket	11.07
8	B 115-464	Retaining Ring	.06
9	B 115-554	Boom Spring	1.15
10	B 140-028	Sleeve, Boom	.39
11	B 140-712	Idler, Sprocket	6.5
N/S	B 140-653	Sprocket Assembly (includes ref. #'s 11, 8, 14, 6)	7.85
12	B 105-379	Bolt (¾" NC x 1¼")	.9
13	B 125-009	Idler Sprocket, Bearing	1.5
14	B 140-051	Boom without Sprocket Assembly	21.53
N/S	B 140-060	Boom Complete with Slide & Stop, 2 Sprockets	54
15	B 142-006	Split Sprocket (142-039)	6.18
16	B 181-361	Hub for 1410/1420	5
N/S	B 184-017	Hub for 1620	5
17	B 145-204	Auger – 1410 & 1420 Only	27.90
N/S	B 145-183	Auger – 1810 Only	
18	B 140-703	Drive Sprocket (1410, 1420, 1810 & 1500)	4.2
N/S	B 130-124	Drive Chain 1420 #50-92p (not shown)	3.36

https://truckmanualshub.com/

Boom and Drive Parts for Ditch Witch®
Models C-7, C-9, C77, C99 & 350SX

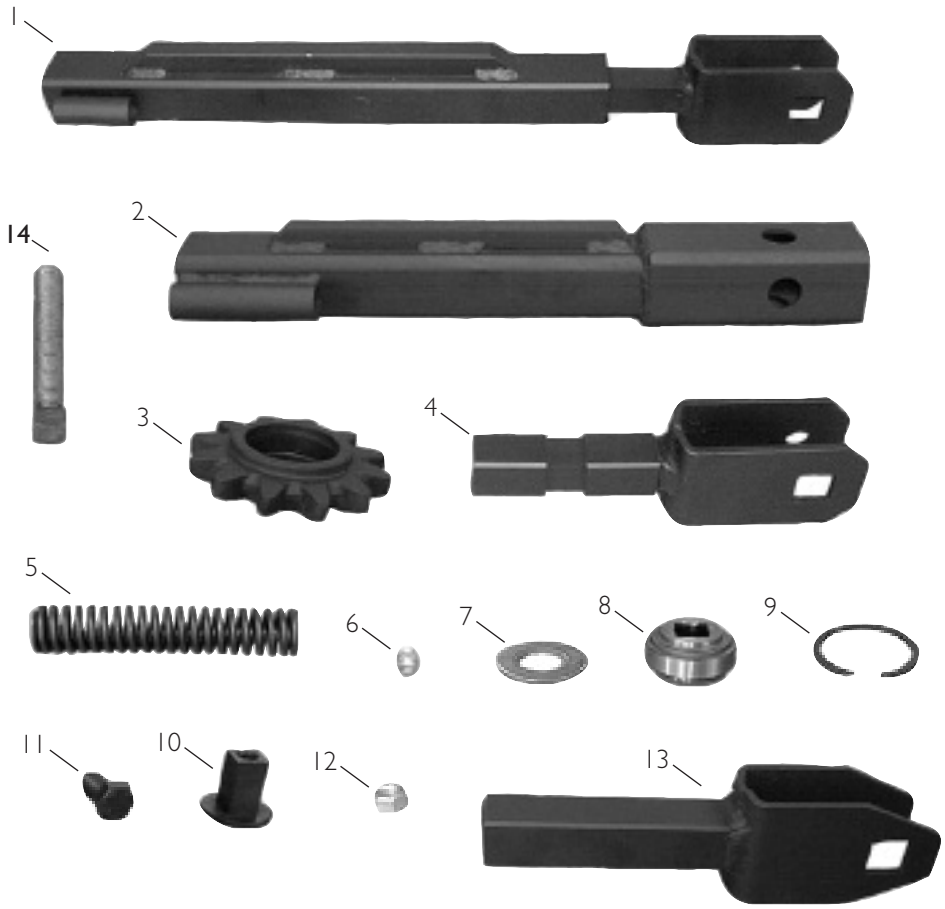

Ref No.	Part No.	Description	Weight (lbs)
1	B 140-088	Boom Assembly (Less Sprocket)	17
N/S	B 140-090	Boom Assembly (With Sprocket)	26
2	B 140-499	Boom Only	
N/S	B 140-498	Boom Assembly	
3	B 140-712	Sprocket	6.5
N/S	B 140-653	Sprocket Assembly (includes ref. #'s 2, 6, 7, 8)	7.5
4	B 140-770	Slide & Stop	6.5
5	B 115-553	Boom End Spring	.63
6	B 115-001	Zerk Fitting (⅛" NPT Str)	.06
7	B 140-775	Washer, Shield	.25
8	B 125-009	Bearing, Idler Sprocket	1.5
9	B 115-464	Snap Ring, Idler Sprocket	.06
10	B 180-445	Idler Shaft	1
11	B 105-379	Bolt (¾" x 1¼")	.19
12	B 105-372	Lock Nut (¾")	.10
13	B 140-794	Boom End	7.6
14	B 105-352	Square Head Set Screw	.63

https://truckmanualshub.com/

Boom and Drive Parts for Ditch Witch® Models C-7, C-9, C77, C99 & 350SX, continued

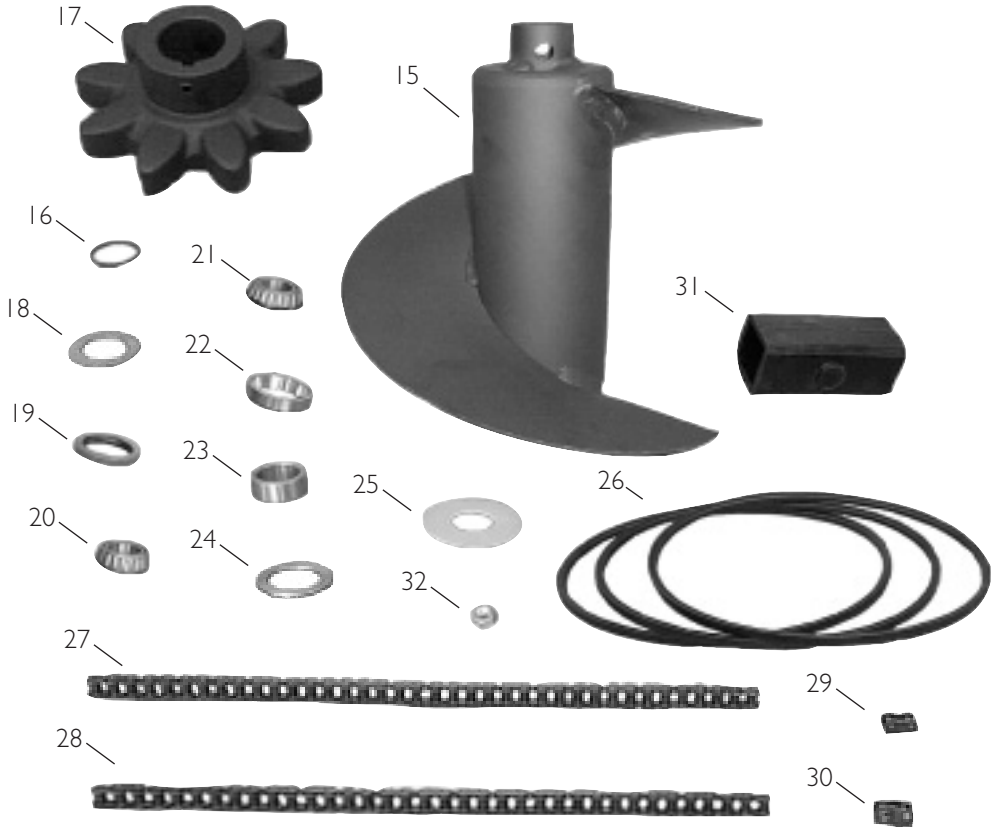

Ref No.	Part No.	Description	Weight (lbs)
15	B 145-099	Auger	15
16	B 115-465	Snap Ring	.06
17	B 140-703	Drive Sprocket 1⅜" Bore	4.2
18	B 110-003	Machinery Bushing	.10
19	B 155-802	Seal	.10
20	B 125-204	Bearing	.19
21	B 125-203	Bearing	.44
22	B 125-205	Race	.19
23	B 180-037	Seal Cover	.2
24	B 180-031	Dirt Shield	.1
25	B 115-657	Urethane Washer	.06
26	B 170-033	Belt Set (3 Belts)	2.75
27	B 130-006	Drive Chain (101 P) #40RC	1.75
28	B 130-008	Drive Chain (103 P) #40 RC	2
29	B 130-001	Connector Link	.09
30	B 130-002	Offset Link	.02
31	B 140-028	Boom Sleeve	.5
32	B 105-047	Locknut (⅜")	.06
NS	B 170-006	Belt Set, C49 - Steel Cable (2)	1.5
NS	B 170-001	Belt Set, (2) Models (C2, C3, C4, C49)	1
NS	B 105-146	Bolt (3⁄8" NC x 2¼")	.06

https://truckmanualshub.com/

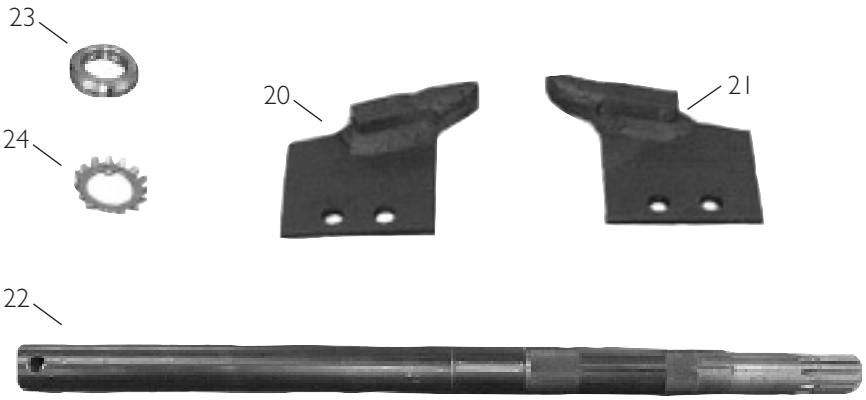

Replacement Drive Shaft for Ditch Witch® Models C7, C9, C77 & C99

Ref No.	Part No.	Description	Weight (lbs)
22	B 165-443	Head Shaft (Replaces # B 165-382)	11
23	B 105-330	Nut (1-3/8" NF) (Replaces # B 105-380)	.25
24	B 105-331	Lockwasher (1-3/8" NF) (Replaces # B 105-381)	.06
N/S	B 105-461	Tang Washer - Not Shown	.06

https://truckmanualshub.com/

(1.654" Pitch Chain with 1¾" Side Bar Hole Spacing)

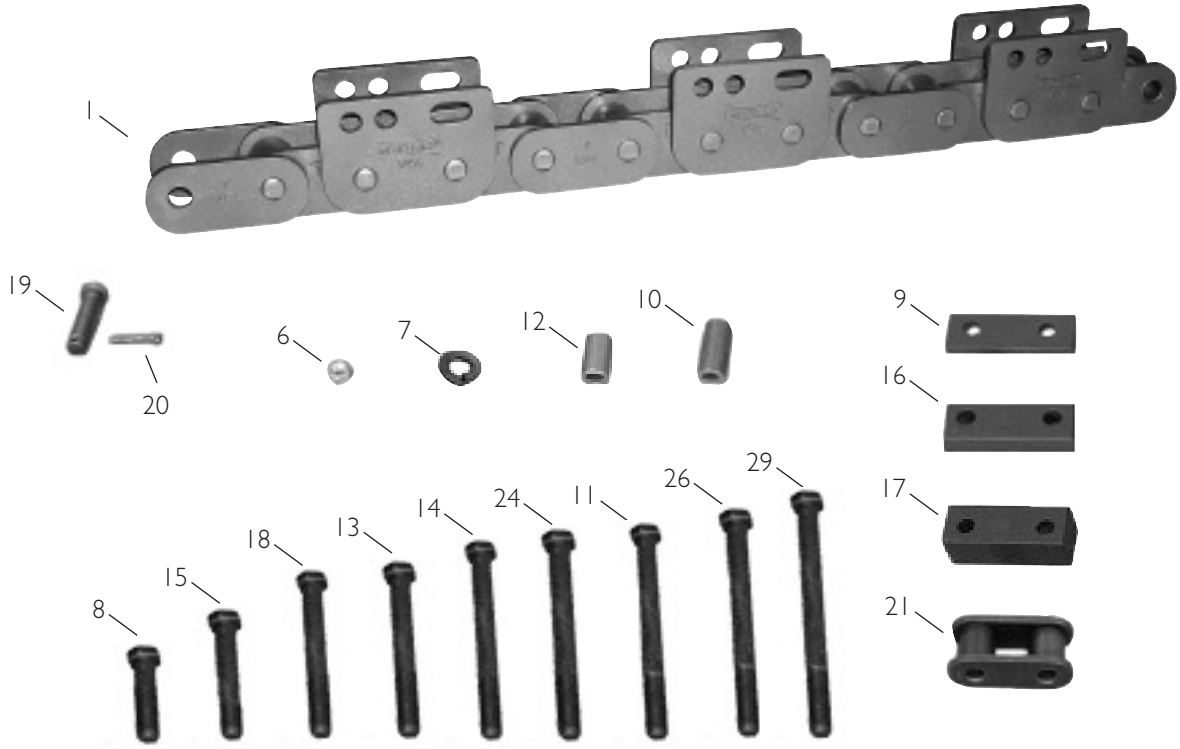

Ref No.	Part No.	Description	Weight (lbs)
1	TA1654-4	1.654" Pitch every 4th	34K T.S.
2	B 136-024	Tooth RH	.55
3	B 136-025	Tooth LH	.55
4	B 1010CCL	Tooth LH (MTO Only)	.55
5	B 1010CCR	Tooth RH (MTO Only)	.55
6	B 105-047	Locknut (⅜")	.02
7	38LW	Lockwasher (⅜")	.05
8	B 105-099	Bolt (⅜" x ⅞")	.06
9	B 136-028	Tooth Spacer (⅜" x 1")	.25
10	B 135-320	Tubular Spacer (outside) (181-650)	.1
11	B 105-098	Bolt (⅜" x 3")	.06
12	6576368	Tubular Spacer (cup-cutter, inside) (181-651)	.06
13	B 105-162	Bolt (⅜" x 2¼")	.06
14	B 105-183	Bolt (⅜" x 2½") (709-915)	.06
15	B 105-052	Bolt (⅜" x 1¼")	.06
16	B 136-027	5" Flat Spacer	
17	B 136-029	Tooth Spacer (1" sq)	.75
18	B 105-075	Bolt (⅜" x 2")	.06
19	B 137-001	Conn Pin	.10
20	B 137-007	Key	.01
21	B 137-003	Roller Link	.24

continued on next page

https://truckmanualshub.com/

(1.654" Pitch Chain with 1¾" Side Bar Hole Spacing)

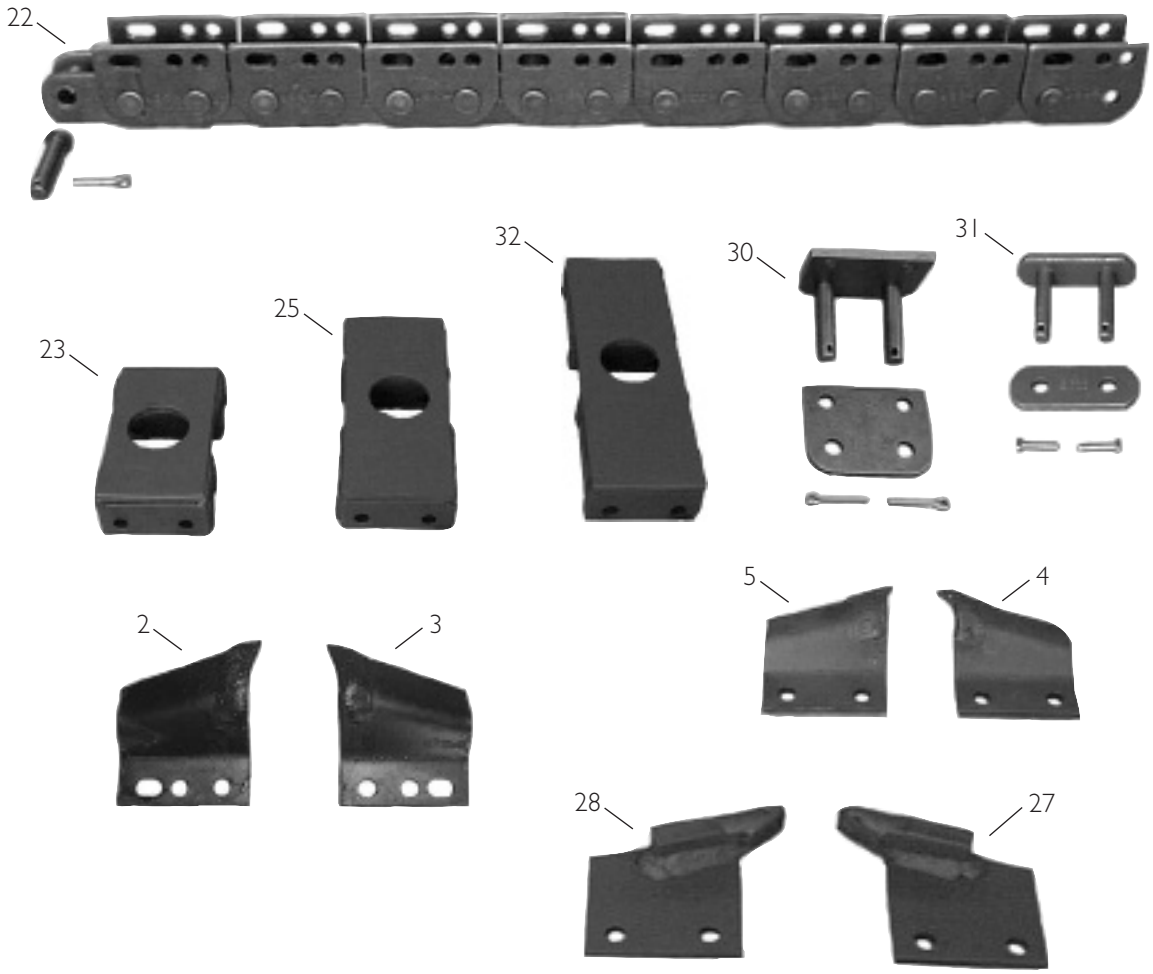

Ref No.	Part No.	Smart Pt. No.	Description	Weight (lbs)
22	B 137-015	B1370200B26	Chain (7' 2") 2 pitch spacing	11.52
	B 137-014	B1370200B08	Chain (2' 2") 2 pitch spacing	35.30
23	B 136-047		Adapter for 8" cut	2.35
24	B 500-003		Bolt (⅜" x 2¾") (for 8" adapter)	.06
25	B 136-048		Adapter 10" cut	3.05
26	B 105-258		Bolt (⅜" x 3¾") (for 10" adapter)	.06
27	1010GBL		Ground Breaker L.H.	.75
28	1010GBR		Ground Breaker R.H.	.75
29	B 105-022		Bolt (⅜" x 4")	.07
30	B 137-002H		Conn Link Double Standard	1.4
31	TA1654-4CL		Conn Link Single Standard	1.1
32	B 136-049		Adapter 12" cut	4.25

https://truckmanualshub.com/

Roller Booms, Sprockets, Rollers, and Bearings for Ditch Witch® Models 1010, 1020, 1030, 1210, 1220, 1230, 1330, 1410, 1420, 1610, 1620, 1810, 1820 & 2020

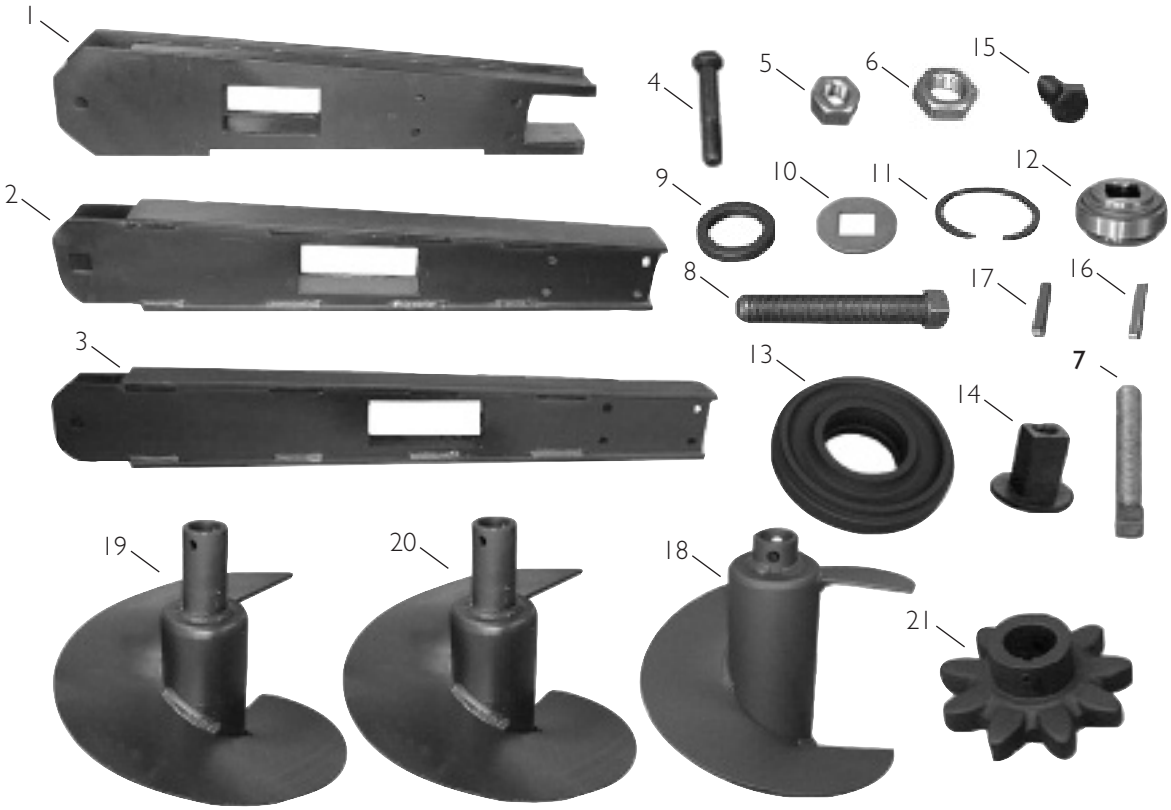

Ref No.	Part No.	Description	Weight (lbs)
1	B 140-488	24" Roller Boom Only (U-Bracket)	35
N/S	B 140-487	24" Boom Assembly with Roller (U-Bracket)	42.1
2	B 140-534	24" Roller Boom Only (Flat Back) (140-550)	30
N/S	B 140-533	24" Boom Assembly with roller (Flat Back)	42
3	B 143-096	30" Roller Boom Only	
N/S	B 143-093	30" Boom Assembly with Roller	
4	B 105-300	Bolt (½" X 3¼")	.21
5	B 105-310	¾" Jam Nut	.06
6	B 106-033	1" Jam Nut	.07
7	B 105-352	Set Screw (¾" X 5")	.10
8	B 106-034	Screw Set (1" x 6")	.2
9	B 110-054	Machinery Bushing	.06
10	B 184-037	Machinery Bushing (⅛" thick)	.1
11	B 115-464	Snap Ring	.06
12	B 125-009	Bearing	1.50
13	B 142-755	Roller Only	7.8
N/S	B 142-754	Roller Assembly with Bearing	12.65
14	B 183-469	Idler Shaft	.9
15	B 105-379	Bolt (¾" X 1¼")	.9
16	B 165-985	Key (¼" sq x 2¼" long)	.03
17	B 165-923	Key (¼" sq x 2" long)	.03
18	B 145-265	Auger	13.55
19	B 145-271	Auger (Long–4½" Collar)	
20	B 145-309	Outboard Bearing Auger (Not for model 1820)	
21	B 140-703	Drive Sprocket	4.2

https://truckmanualshub.com/

Roller Booms, Sprockets, and Roller for Ditch Witch® Models 1030, 1210, 1220, 1230, 1330, 1410, 1420, 1610, 1620, 1810, 1820, & 2020

Ref No.	Part No.	Description	Weight (lbs)
Pg.14	B 143-096	Roller Boom, 30" (Boom Only)	
N/S	B 143-093	Roller Boom Assembly , 30"	
1	B 140-519	Roller Boom 36" (Boom Only)	47
N/S	B 140-518	Roller Boom Assembly 36"	60.50
N/S	B 140-527	Roller Boom 48" (Boom Only)	
N/S	B 140-531	Roller Boom Assy 48"	80
2	B 142-755	Roller Only	7.8
N/S	B 142-754	Roller Assembly (brg. Snap Ring, Washer)	12.65
3	B 110-054	Machinery Bushing	.06
4	B 184-037	Machinery Bushing (⅛" thick)	.1
5	B 125-009	Bearing	1.5
6	B 115-464	Snap Ring	.06
7	B 180-445	Sq. Idler Shaft	.75
8	B 105-379	Bolt	.19
9	B 106-034	Adjusting Screw (1" X 6" n.c)	1.3
10	B 106-033	Nut (1" n.c.)	.15
11	B 142-006	Sprocket, Split (Not for model 1820)	6.18
N/S	B 142-039	Sprocket, Split	6.25
12	B181-361	Hub	
13	B 184-017	Sprocket Hub (184-205) (1620)	
14	B 140-703	Drive Sprocket	4.2
15	B 165-923	Key	.03
N/S	B 142-023	Hex Drive Sprocket (2020)	

https://truckmanualshub.com/

BALLANTINE

Trencher, Scrapers, and Horizontal Directional Drilling Parts Specialists

Boom Parts for Ditch Witch® Models J20, 2200, 2300, 2310, 3610, RT36 & Attachments H311, H312

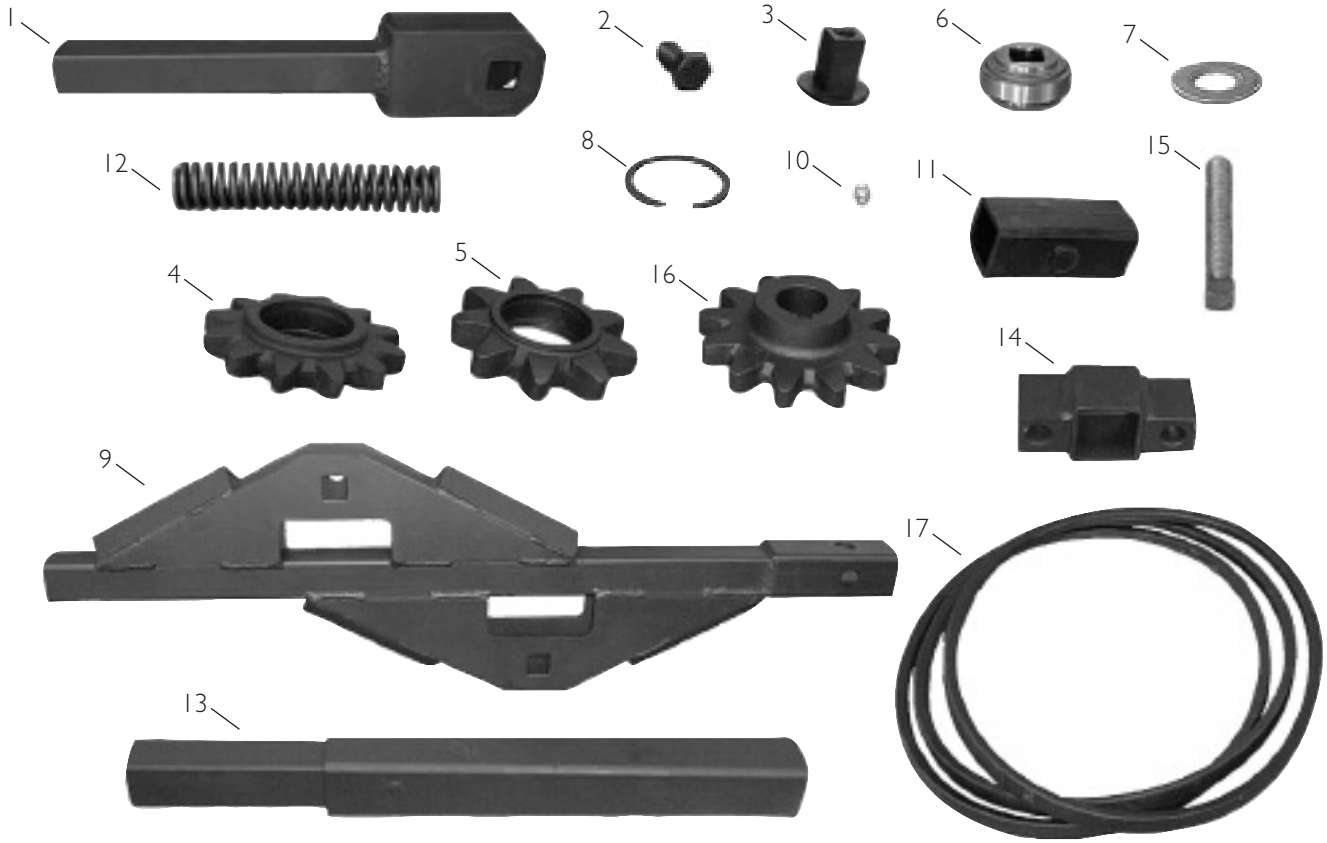

Ref No.	Part No.	Description	Weight (lbs)
1	B 140-759	Boom End Slide & Stop, Less Sprocket	12
2	B 105-379	Bolt (¾" x 1¼")	.3
3	B 180-445	Sq. Idler Shaft	1
4	B 140-712	Idler Sprocket, 12 Tooth - 1.654" Std. Chain	6.5
N/S	B 140-653	Std. Sprocket Assembly, 12 Tooth - 1.654" Std. Chain	8
5	B 140-711	Idler Sprocket, 9 Tooth - 2" H.D. Chain	7
N/S	B 140-652	H.D. Sprocket Assembly, 9 Tooth -2" H.D. Chain	9
6	B 125-009	Square Hole Bearing	1.5
7	B 140-775	Dirt Shield	1
8	B 115-464	Retaining Ring	.06
9	B 140-062	Digging Boom, Without Sprockets	34
N/S	B 140-061	Digging Boom Assy. with 3 Sprockets - Std. 1.654"	74
N/S	B 140-057	Digging Boom Assy. with 3 Sprockets - 2" H.D.	71
10	B 115-001	Straight Zerk ⅛" NPT	.01
11	B 140-028	Urethane Boom Sleeve	.4
12	B 115-554	Digging Boom Spring	1.2
13	B 140-551	1' Digging Boom Extension	11
N/S	B 140-552	2' Digging Boom Extension	16
14	B 140-038	Boom Adjusting Block	1
15	B 105-352	Set Screws Boom Adjustment	.63
16	B 140-701	Head Shaft Drive Sprocket - 1.654" Std.	5
N/S	B 140-721	Head Shaft Drive Sprocket - 2" H.D. Chain	5.5
N/S	B 170-020	V Belt Set	2
17	B 170-061	V Belt Set	2
N/S	B 140-007	Boom Gussets	7

https://truckmanualshub.com/

Boom, Sprockets, Bearings and Belts for Ditch Witch® Model 2200, RT36

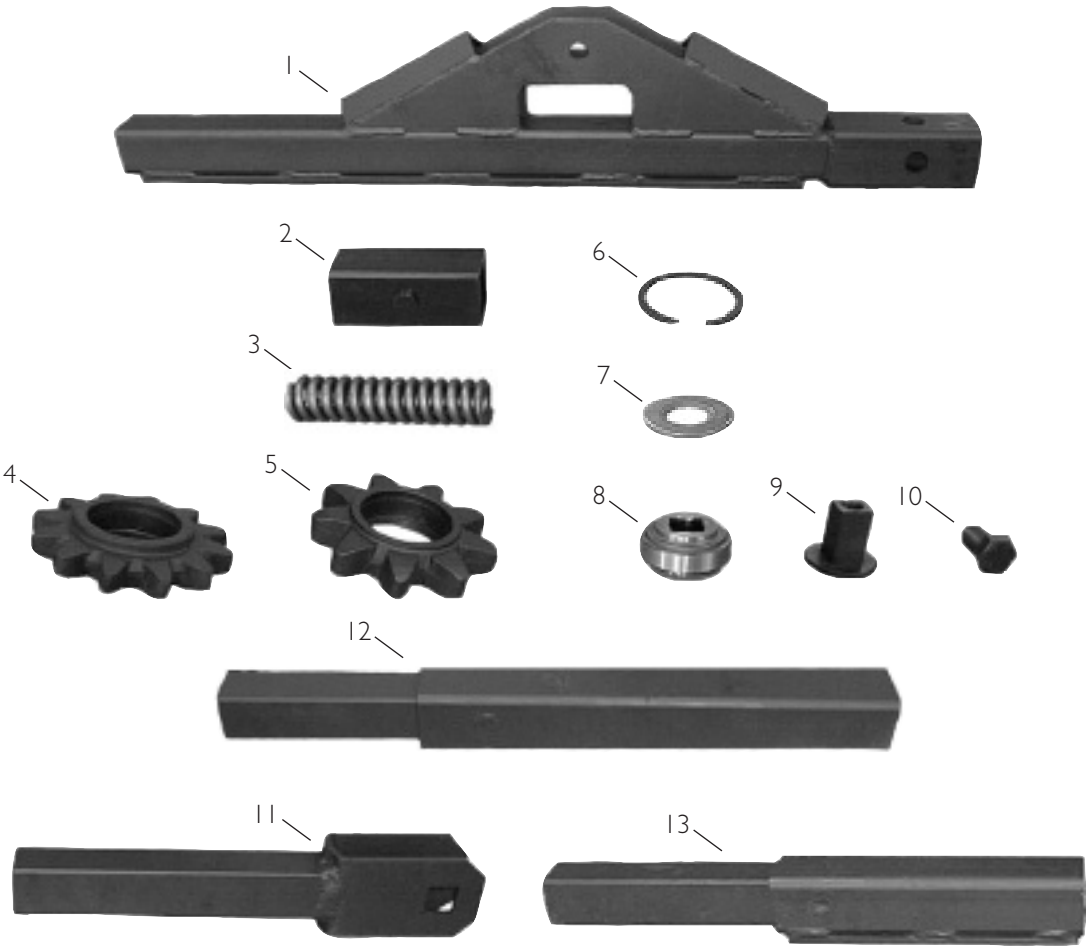

Ref No.	Part No.	Description	Weight (lbs)
1	B 140-242	Boom, Less Sprockets	44
N/S	B 140-240	Boom Assy. (1.654" Pitch Small Sprockets)	81
N/S	B 140-241	Boom Assembly (2" Pitch Large Sprockets)	86
2	B 140-013	Boom Sleeve	.5
3	B 115-557	Boom Spring	2.26
4	B 140-712	Sprocket (1.654" Pitch)	6.5
N/S	B 140-653	Sprocket Assembly (1.654" Pitch)	7.8
5	B 140-711	Sprocket (2" Pitch)	7
N/S	B 140-652	Sprocket Assembly (2" Pitch)	7.5
6	B 115-464	Snap Ring	.06
7	B 140-775	Dirt Shield	.25
8	B 125-009	Sq. Hole Bearing	1.5
9	B 180-445	Sq. Shaft	1
10	B 105-379	Bolts (¾" X 1¼")	.19
11	B 140-763	Boom End	16
12	B 140-583	Boom Ext. (1') With 1.654" Sprockets	24
13	B 140-588	Boom Ext. (1') With 2" Sprocket	23
N/S	B 140-585	Boom Ext. (2') Use With Both Sprockets	34

continued on next page

https://truckmanualshub.com/

Boom, Sprockets, Bearings and Belts for Ditch Witch® Model 2200 & RT36, continued

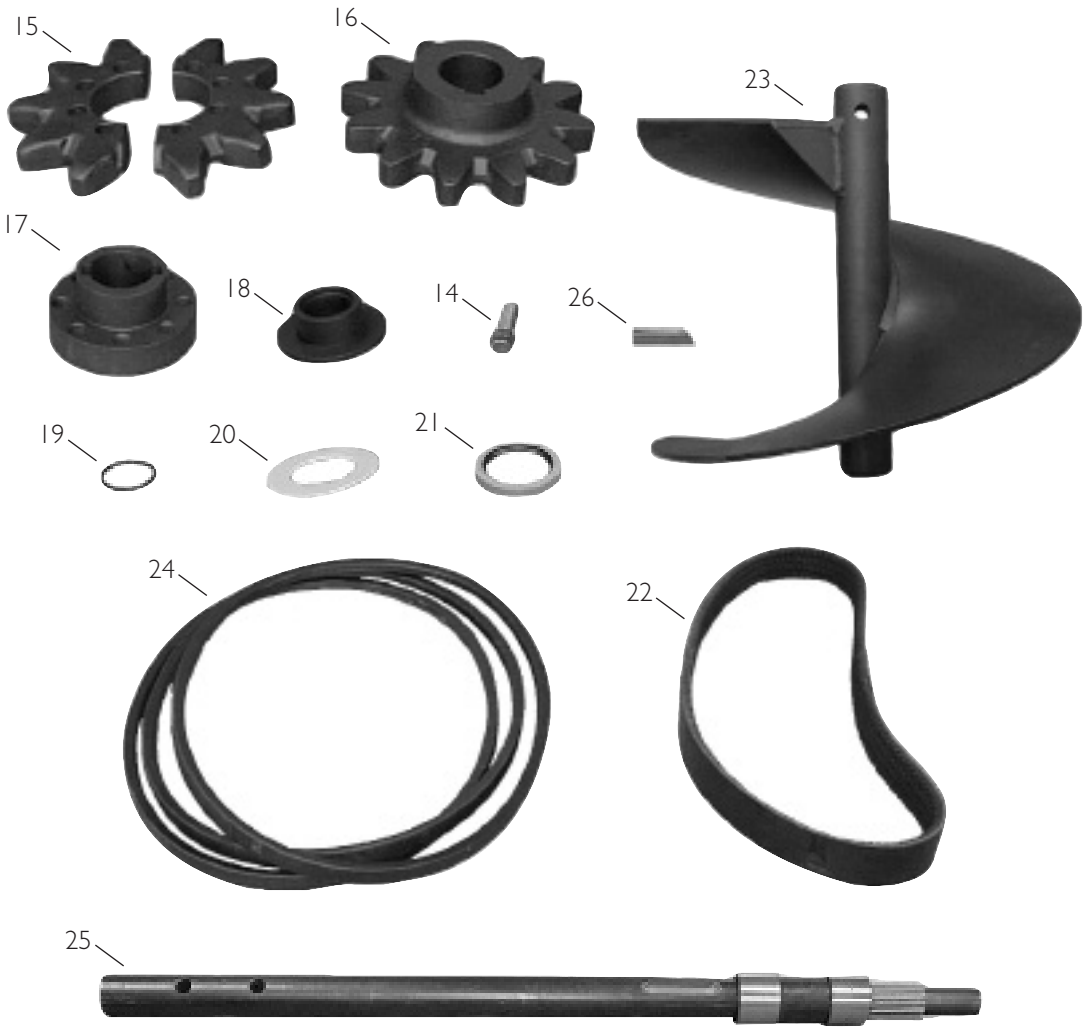

Ref No.	Part No.	Description	Weight (lbs)
14	B 105-265	Bolt (for Split Sprocket)	.13
15	B 142-005	Head Shaft Sprocket (Split 2" Pitch)	4.5)
16	B 140-701	Head Shaft Sprocket (1.654" Pitch)	7.65
17	B 181-267	Hub For Split Sprocket	3
18	B 180-028	Seal Spacer	1.45
19	B 155-704	O Ring	.01
20	B 180-026	Fiber Spacer	.01
21	B 155-801	Seal	.2
22	B 170-028	Belt Set	1.10
23	B 145-173	Auger	23.5
24	B 170-061	Belt Set (3)	1.78
25	B 167-003	Headshaft With Races & Sleeves	24.9
26	B 165-901	Key	.03

https://truckmanualshub.com/

Ref No.	Part No.	Smart Pt. No.	Description	Weight (lbs)
1	B 135-214	B2000400B18	Chain, 72P, 4 pitch spacing (bare)	90
1	B 135-212	B2000400B06	Chain, 24P, 4 pitch spacing (bare)	30
2	B 137-215	B2ABF00B36	Chain, 72P, 2 pitch spacing, anti back flex, (bare)	108
2	B 137-216	B2ABF00B12	Chain, 24P, 2 pitch spacing, anti back flex, (bare)	38

https://truckmanualshub.com/

Sprocket Style Booms, Sprockets and Bearings for Ditch Witch® Models 2200, 2300, 2310, 3610, RT36 & Attachments H311, H312

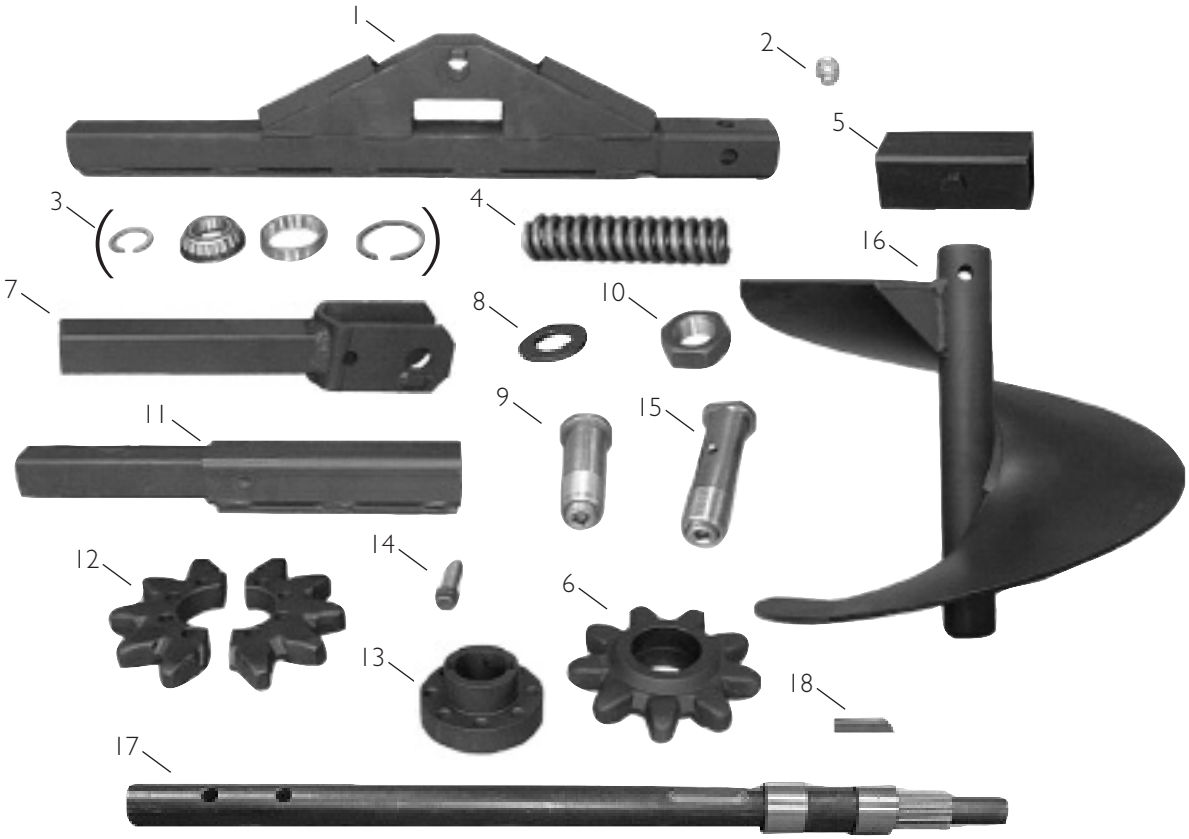

Ref No.	Part No.	Description	Weight (lbs)
1	B 140-248	Boom, Less Sprocket	43.7
N/S	B 140-241	Boom Assembly	80.3
2	B 115-009	Zerk	.06
3	B 125-209	Bearing Assembly	1.5
4	B 115-557	Boom Spring	2.26
5	B 140-013	Boom Sleeve	.55
6	B 140-707	Sprocket, Idler (Less Bearings)	5.7
N/S	B 140-654	Sprocket Assembly (includes Ref. #'s 6, 3, 8)	6.6
7	B 140-765	Slide & Stop	18.1
8	B 180-062	Dirt Shield	.19
9	B 180-448	Idler Bolt for Boom End	1.13
10	B 105-313	Idler Nut	.19
11	B 140-588	1' Boom Extension	20.4
N/S	B 140-585	2' Boom Extension	29.05
12	B 142-005	Headshaft Sprocket (Split)	5.7
13	B 181-267	Hub For Split Sprocket (1¾" Bore; ½"DBL Keyways)	3
14	B 105-265	Special Bolt (For Split Sprocket)	.13
N/S	B 125-002	Bearing (Not Shown)	2
N/S	B 125-247	Bearing (Not Shown)	.88
N/S	B 125-246	Bearing (Not Shown)	1
15	B 180-534	Idler Bolt, Long	1.55
16	B 145-173	Auger	25.3
17	B 167-003	Headshaft With Races & Sleeve	24.95
18	B 165-901	Key	.10
N/S	B 170-063	Belt Set (set of 4) (not shown)	2.49

https://truckmanualshub.com/

Roller Booms, Sprockets and Roller for Ditch Witch® Models 2300, 2310, 3500, 3610, 3700, 4500 & Attachments H300, H313, H314 continued

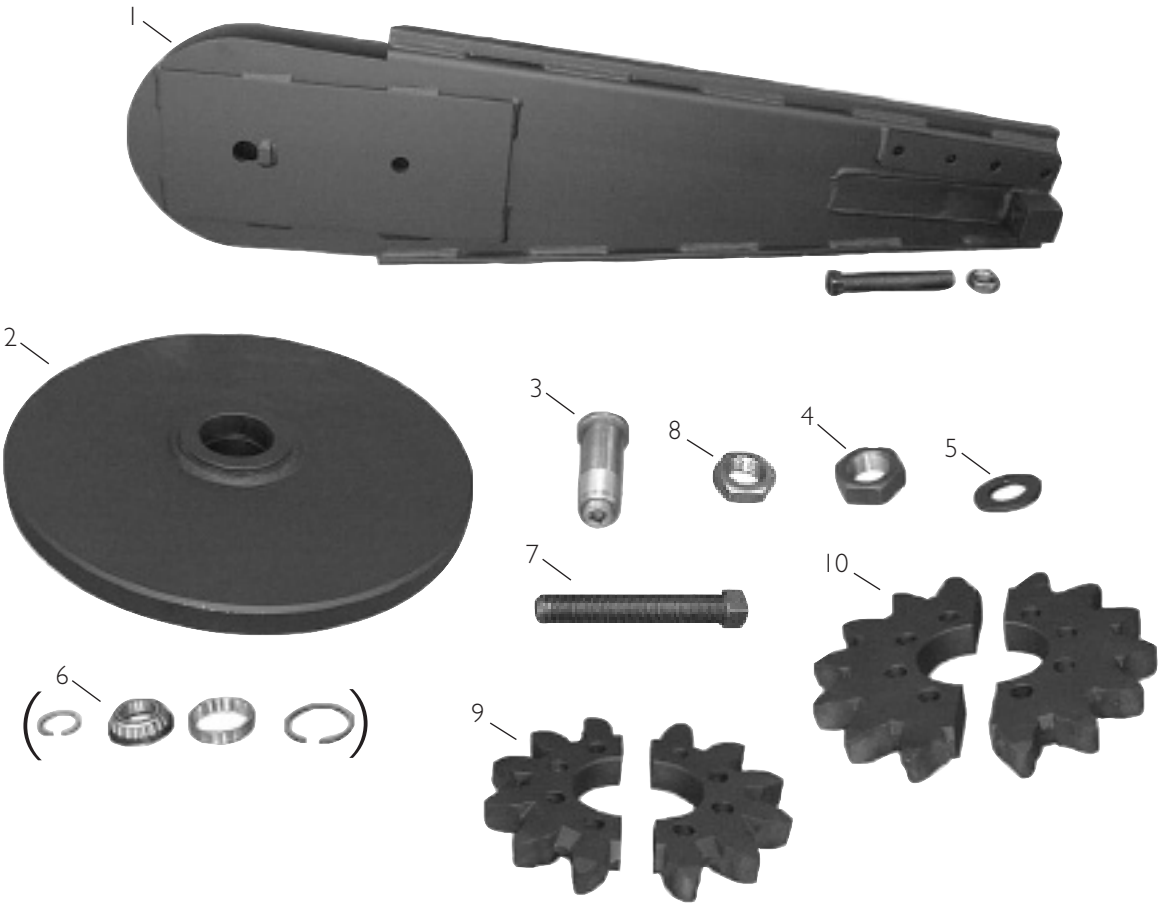

Ref No.	Part No.	Description	Weight (lbs)
1	B 140-503	Roller Boom Only (47.95") (3' Dig Depth (36T)	110
N/S	B 140-502	Roller Boom Assy (47.95")	170
N/S	B 140-509	Roller Boom Only (59.2") (4' Dig Depth (42T)	115
N/S	B 140-515	Roller Boom Assembly (59.2")	164
2	B 142-752	Roller Only	26.41
N/S	B 142-751	Roller Assembly	27
3	B 180-448	Idler Shaft	1.13
4	B 105-313	Nut.	.19
5	B 180-062	Shield	.12
6	B 125-209	Bearing Assembly (2)	1
7	B 106-034	Adjustment Screw 1 x 6"	1.3
8	B 106-033	Nut (1" NC)	.06
9	B 142-025	Drive Sprocket (12 Tooth) with 5⁄8" holes	9
N/S	B 142-127	Drive Sprocket (12 Tooth) Split for 2" pitch – Metric (12 tooth option for H313, H314)	9
N/S	B 142-029	Drive Sprocket (12 Tooth) with 1⁄2" holes	9
10	B 142-026	Drive Sprocket (14 Tooth) with 5⁄8" holes	13.8
N/S	B 142-030	Drive Sprocket (14 Tooth) with 1⁄2" holes	13.8

continued on next page

https://truckmanualshub.com/

Roller Booms, Sprockets and Roller for Ditch Witch® Models 2300, 2310, 3500, 3610, 3700, 4500 & Attachments H300 Series, H314, H514, H515, H552 continued

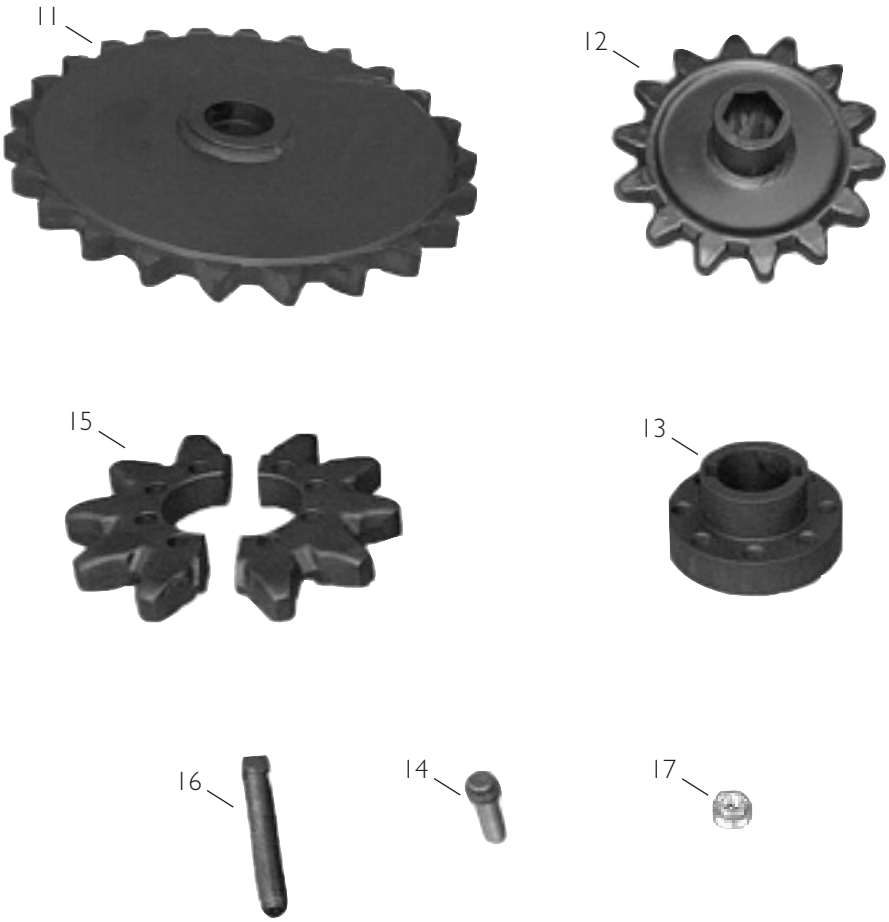

Note: H300 & H500 series can also use 3.067" Pitch Chain

Ref No.	Part No.	Description	Weight (lbs)
11	B 142-021	Boom End Sprocket	
	B 142-020	Boom End Sprocket Assembly with Bearings	
12	B 142-031	Hex Bore Auger Sprocket (H300 series)	
13	B 181-267	Sprocket Hub	3
14	B 105-265	Bolt for Split Sprocket	.13
15	B 142-005	Drive Sprocket (2300, 2310, 3610)	5.7
16	B 105-472	Bolt (½" NC x 5")	
17	B 105-833	Flange Locknut (½" NC)	.02

https://truckmanualshub.com/

BALLANTINE

Trencher, Scrapers, and Horizontal Directional Drilling Parts Specialists

2" Pitch Chain, Teeth & Accessories for Ditch Witch® Models J20, 2200, 2300, 2310, 3500, 3610 & 3700, RT36 & Attachments H300 Series, H500 Series

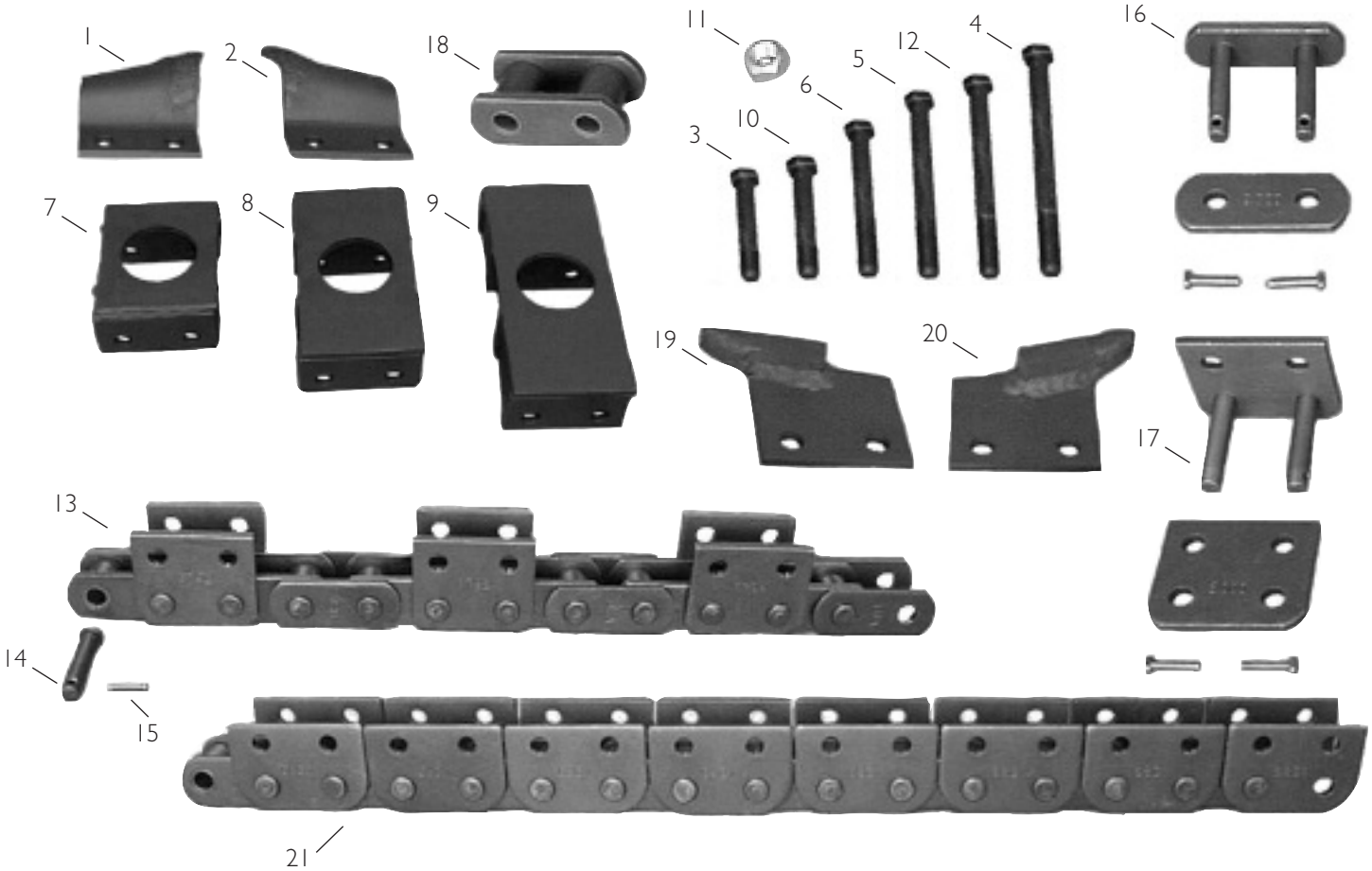

Ref No.	Part No.	Smart Pt. No.	Description	Weight (lbs)
1	B 135-924		Cutter, R.H.	.9
2	B 135-925		Cutter, L.H.	.9
3	B 105-043		Bolt (½" x 1")	.06
4	B 105-111		Bolt (½" x 4")	
5	B 105-067		Bolt (½" x 2¾")	
6	B 105-082		Bolt (½" x 2½")	
7	B 135-912		Adapter 8"	2.88
8	B 135-950		Adapter 10"	3.44
9	B 135-913		Adapter 12"	4.40
N/S	B 135-914		Adapter 14"	
N/S	B 135-915		Adapter 16"	
10	B 105-002		Bolt (½" x 2¼")	.06
11	B 105-065		Nut (½")	.06
12	B 105-076		Bolt (½" x 3")	.06
13	B 135-213	B2000400B17	Chain, Less Teeth 11'4"	85
13	B 135-210	B2000400B03	Chain, Less Teeth 2'	15
14	B 135-351		Chain Pin	.2
15	B 135-358		Cotter Key	.01
16	B 135-202		Conn. Link	1
17	B 135-202H		Conn. Link (2 pitch spacing)	.4
18	B 135-203		Roller Link	1
19	B 135-501		Ground Breaker, L.H.	1
20	B 135-502		Ground Breaker, R.H.	1
21	2ABF-2		Chain, 2" Pitch ABF	

https://truckmanualshub.com/

Booms, Sprockets, Bearings & Belts for Ditch Witch® Models V30, R30, & 3210

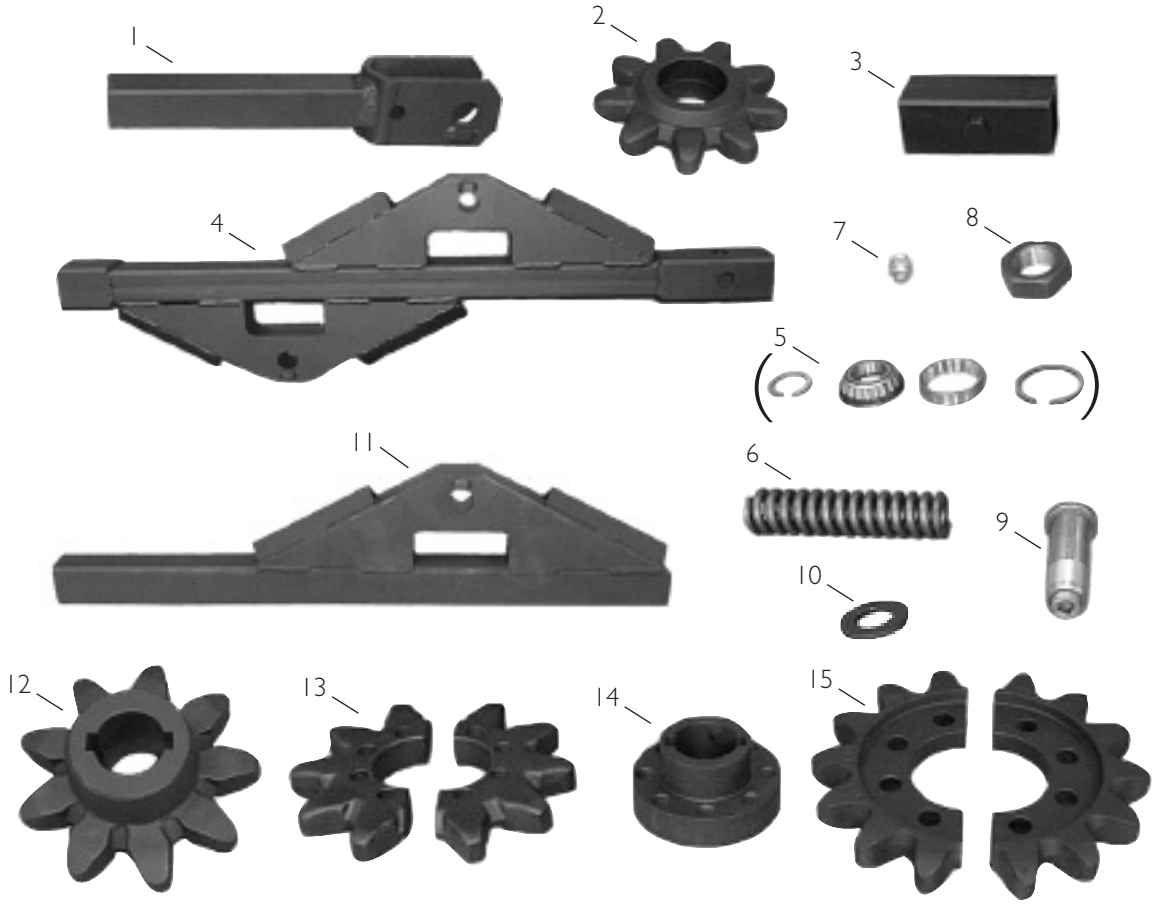

Ref No.	Part No.	Description	Weight (lbs)
1	B 140-765	Boom End	17.62
2	B 140-707	Idler Sprocket	6.50
N/S	B 140-654	Sprocket Assembly	7.54
3	B 140-013	Urethane Boom Sleeve	.5
4	B 140-006	Boom Only	47.50
N/S	B 140-059	Boom Assembly With 3 Sprockets	100
5	B 125-209	Idler Bearing Assembly	1.5
6	B 115-557	Boom Spring	2.26
7	B 115-009	Zerk (¼" Straight)	.06
8	B 105-313	Jam Nut (1¼")	.19
9	B 180-448	Idler Bolt. (Slide & Stop)	1.13
10	B 180-062	Dirt Shield	.19
11	B 140-553	2' Boom Extension With Gussets	38
N/S	B 140-565	2' Boom Extension Assy (incl. ref. no.'s #2, 5, 7, 8, 9 & 10)	45
N/S	B 140-554	3' Boom Extension (same style as ref. #11)	50
N/S	B 140-562	3' Boom Extension Assy (incl. ref. no.'s #2, 5, 7, 8, 9 & 10)	60
12	B 140-704	Sprocket Drive (V30) 1¾" Bore; 9 Tooth, ½" DBL Keyways	7.44
13	B 142-005	Drive Sprocket, Split (V30)	6.75
14	B 181-267	Sprocket Hub (V30)	3
15	B 140-732	Drive Sprocket, Split (R30, R40 & 3210) 14 Tooth	13.75

continued on next page

https://truckmanualshub.com/

Booms, Sprockets, Bearings & Belts for Ditch Witch® Models V30, R30, & 3210, continued

Ref No.	Part No.	Description	Weight (lbs)
17	B 181-048	Sprocket Hub (R30 & R40)	6.5
18	B 140-728	Auger Shaft & Sprocket (R30 & R40)	33
19	B 125-517	Pillow Block Bearing	10.38
20	B 165-410	Headshaft With Races & Sleeve 12" pivot	28
21	B 125-246	Race, Headshaft	1
22	B 180-029	Sleeve, Headshaft	.25
23	B 170-019	V Belts (4)	22
N/S	B 170-041	V Belt Set (not shown)	1.75
24	B 180-252	Spacer	.25
25	B 180-534	Idler Bolt, Long (for Boom Idler)	2.65
26	B 165-371	Headshaft (Fits Low Digging Attachment)	29
27	B 142-007	Auger Sprocket (2"P)	
28	B 142-010	Drive Sprocket (2"P, One Piece)	
29	B 140-664	Hex Auger Sprocket, 2" P	
30	B 140-730	Idler Sprocket (14 Tooth)	
N/S	B 140-731A	Idler Sprocket Assembly (B 140-659)	

https://truckmanualshub.com/

2" Pitch Chain, Teeth and Accessories for Ditch Witch® Models V30, R30, 3210, 3500, 3610, 3700, 4500

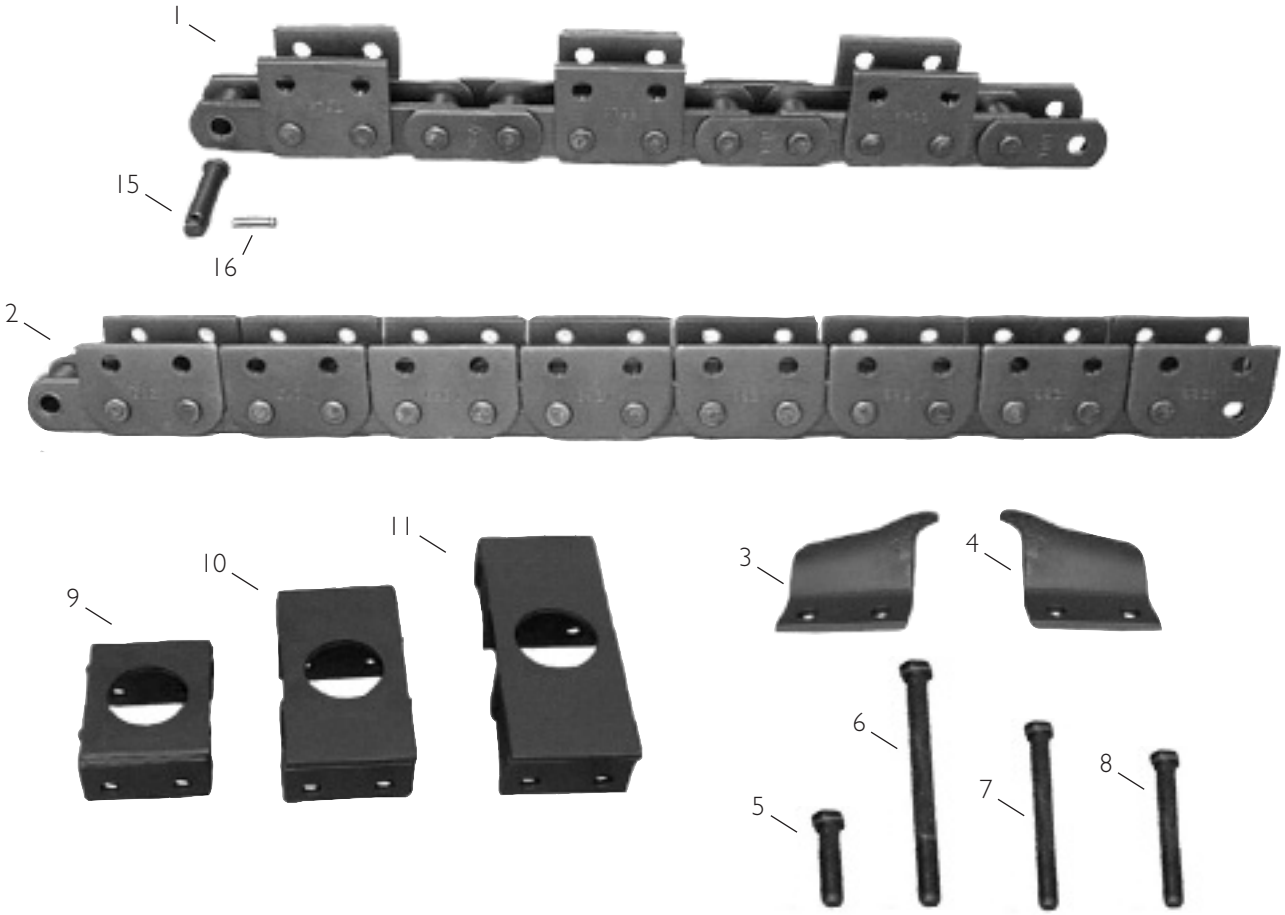

Ref No.	Part No.	Smart Pt. No.	Description	Weight (lbs)
1	B 135-214	B2000400B18	Chain, 12' (4 pitch spacing) Bare	90
1	B 135-212	B2000400B06	Chain, 4' Bare	30
1	B 135-210	B2000400B03	Chain, 2' Bare	15
2	2ABF-2		Chain, 2" Pitch ABF	
3	B 135-924		Cutter, R.H.	.9
N/S	B135924516		Cutter, R.H. (HD 5/16" Thick)	1.0
4	B 135-925		Cutter, L.H.	.9
N/S	B135925516		Cutter, L.H. (HD 5/16" Thick)	1.0
5	B 105-043		Bolts (½" x 1")	.06
6	B 105-111		Bolt (½" x 4")	
7	B 105-067		Bolt (½" x 2¾")	
8	B 105-082		Bolt (½" x 2½")	
9	B 135-912		Adapter, 8"	2.88
10	B 135-950		Adapter, 10"	3.44
11	B 135-913		Adapter, 12"	4.44
N/S	B 135-914		Adapter, 14"	
N/S	B 135-915		Adapter, 16"	

continued on next page

https://truckmanualshub.com/

2" Pitch Chain, Teeth and Accessories for Ditch Witch® Models V30, R30, 3210, 3500, 3610, 3700, 4500, continued

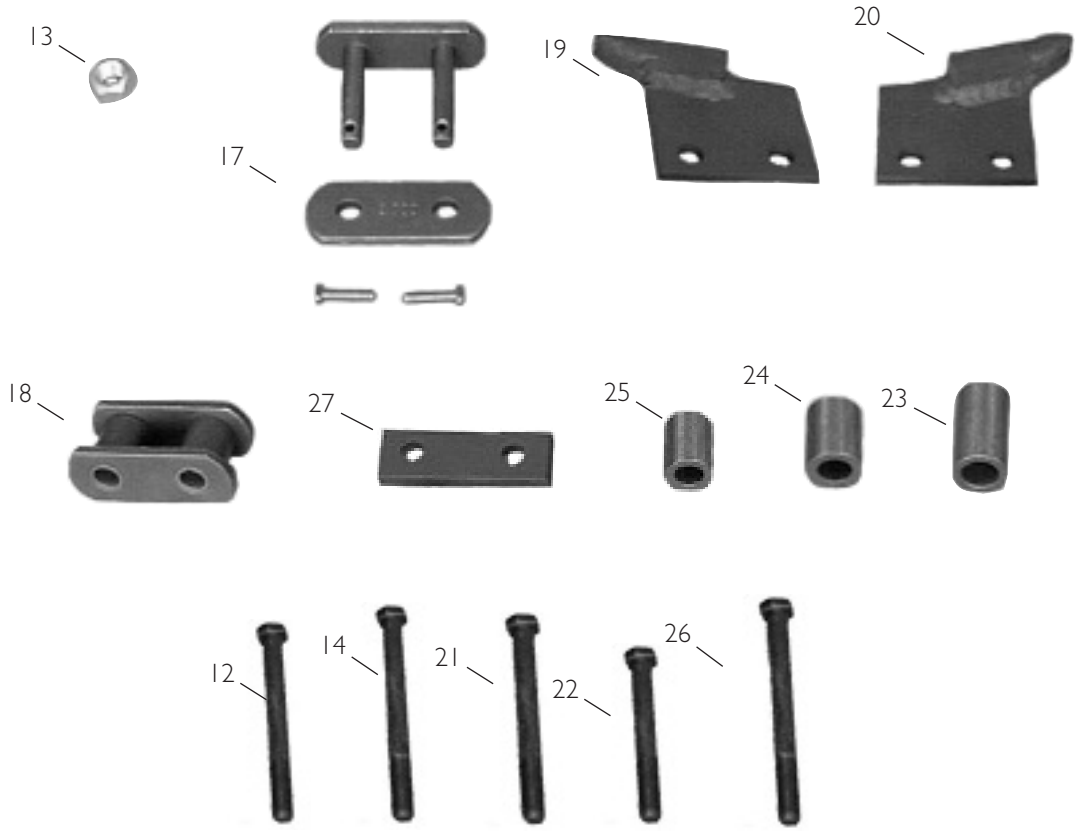

Ref No.	Part No.	Description	Weight (lbs)
12	B 105-002	Bolt (½" x 2¼")	.06
13	B 105-065	Nut (½" NC)	.06
14	B 105-076	Bolt (½" x 3")	.06
15	B 135-351	Chain Pin	.2
16	B 135-358	Cotter Key	.01
17	B 135-202	Conn. Link	1
18	B 135-203	Roller Link	.1
19	B 135-501	Ground Breaker L.H.	1
20	B 135-502	Ground Breaker R.H.	1
21	B 105-066	Bolt (½" x 2¾")	.06
22	B 105-121	Bolt (½" x 2")	.06
23	B 135-952	Chain Spacer (Outside) (1.810" Long)	.16
24	B 135-951	Chain Spacer (Inside) (1.590" Long)	.12
25	B 135-953	Chain Spacer (2 Inside) (1.300" Long)	.12
26	B 105-136	Bolt (½" x 3½")	.06
27	V30	Flat Spacer	

https://truckmanualshub.com/

Boom Sprockets, Bearings, Auger Shafts, and Accessories for Ditch Witch® Models 3610, RT36, R40, 4010 & Attachments H300 Series, H500 Series, A/H 400, A/H 500 using 2" Pitch Chain

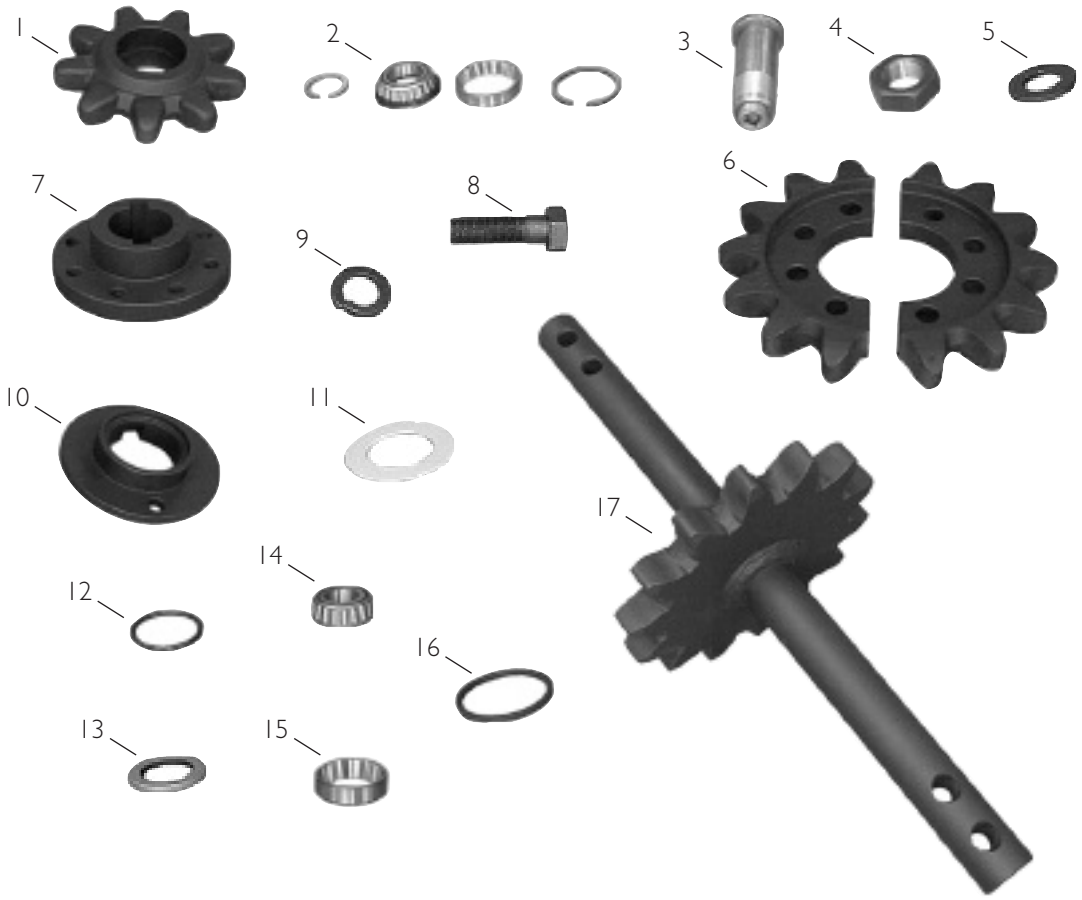

Ref No.	Part No.	Description	Weight (lbs)
1	B 140-707	Idler Sprocket	6.5
N/S	B 140-654	Idler Sprocket Assembly (Includes Ref. #'s: 1, 2, 5)	7.5
2	B 125-209	Bearing Assembly	1
3	B 180-448	Idler Shaft (slide and stop)	1.1
4	B 105-313	Idler Nuts	.19
5	B 180-062	Idler Shields	19
6	B 140-732	Drive Sprocket (Split)	14
7	B 181-048	Sprocket Hub	3.5
8	B 105-302	Bolts (⅝" x 2")	.25
9	B 105-385	Lock Washer (⅝")	.06
10	B 180-057	Seal Spacer	2.1
11	B 145-475	Washer, Pivot Tube	.03
12	B 155-703	O-Ring	.10
13	B 155-805	Seal	.10
14	B 125-259	Bearing	1.5
15	B 125-258	Race	.10
16	B 180-071	Backup Ring	.13
17	B 140-728	Auger Shaft & Sprocket	33

continued on next page

https://truckmanualshub.com/

Boom Sprockets, Bearings, Auger Shafts, and Accessories for Ditch Witch® Models 3610, RT36, R40, 4010 & Attachments H300 Series, H500 Series, A/H 400, A/H 500 using 2" Pitch Chain, continued

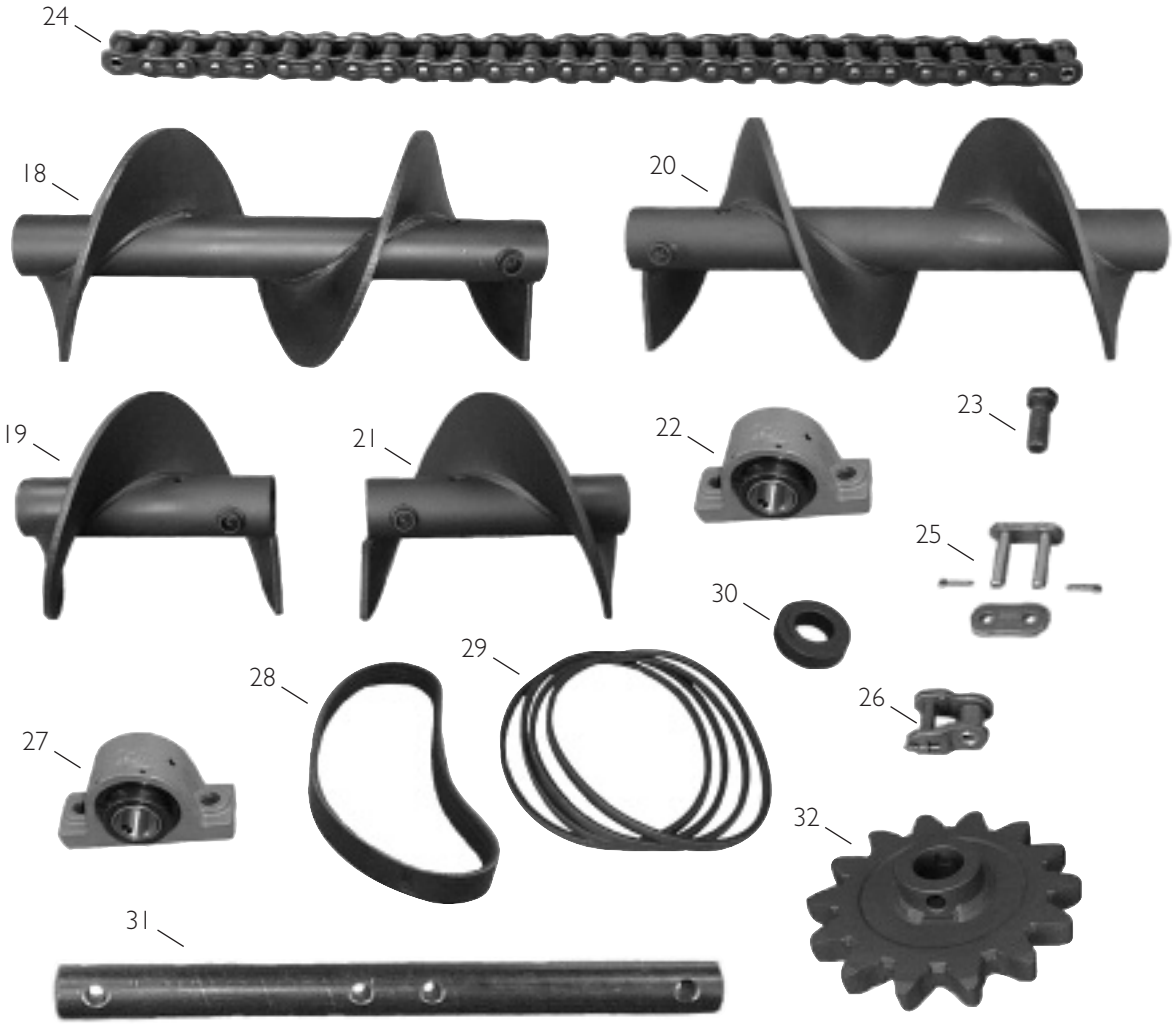

Ref No.	Part No.	Description	Weight (lbs)
18	B 145-071	Auger, L.H.	53
19	B 145-110	Auger, L.H. (Short)	
20	B 145-070	Auger, R.H.	53
21	B 145-109	Auger, R.H. (Short)	
22	B 125-517	Pillow Block Bearings 1¾" I.D.	10.5
23	B 105-320	Bolt (¾" x 2¼" NC)	.25
24	B 130-307	Drive Chain (80-80P)	11.5
25	B 130-304	Connector Link (#80)	.13
26	B 130-305	Offset Link (#80)	.17
27	B 125-502	1¼" P.B. Bearing	7.0
28	B 170-038	Power Band V Belts (2 Belts) – 4 grooves each	2.0
29	B 170-059	Power Band V Belts (4 Belts) – 2 grooves each	2.0
30	B 181-051	Shield (R40)	.06
31	B 165-368	Shaft	4.0
32	B 142-007	Auger Sprocket	19

continued on next page

https://truckmanualshub.com/

Boom Sprockets, Bearings, Auger Shafts, and Accessories for Ditch Witch® Models 3610, RT36, R40, 4010 & Attachments H300 Series, H500 Series, A/H 400, A/H 500 using 2" Pitch Chain, continued

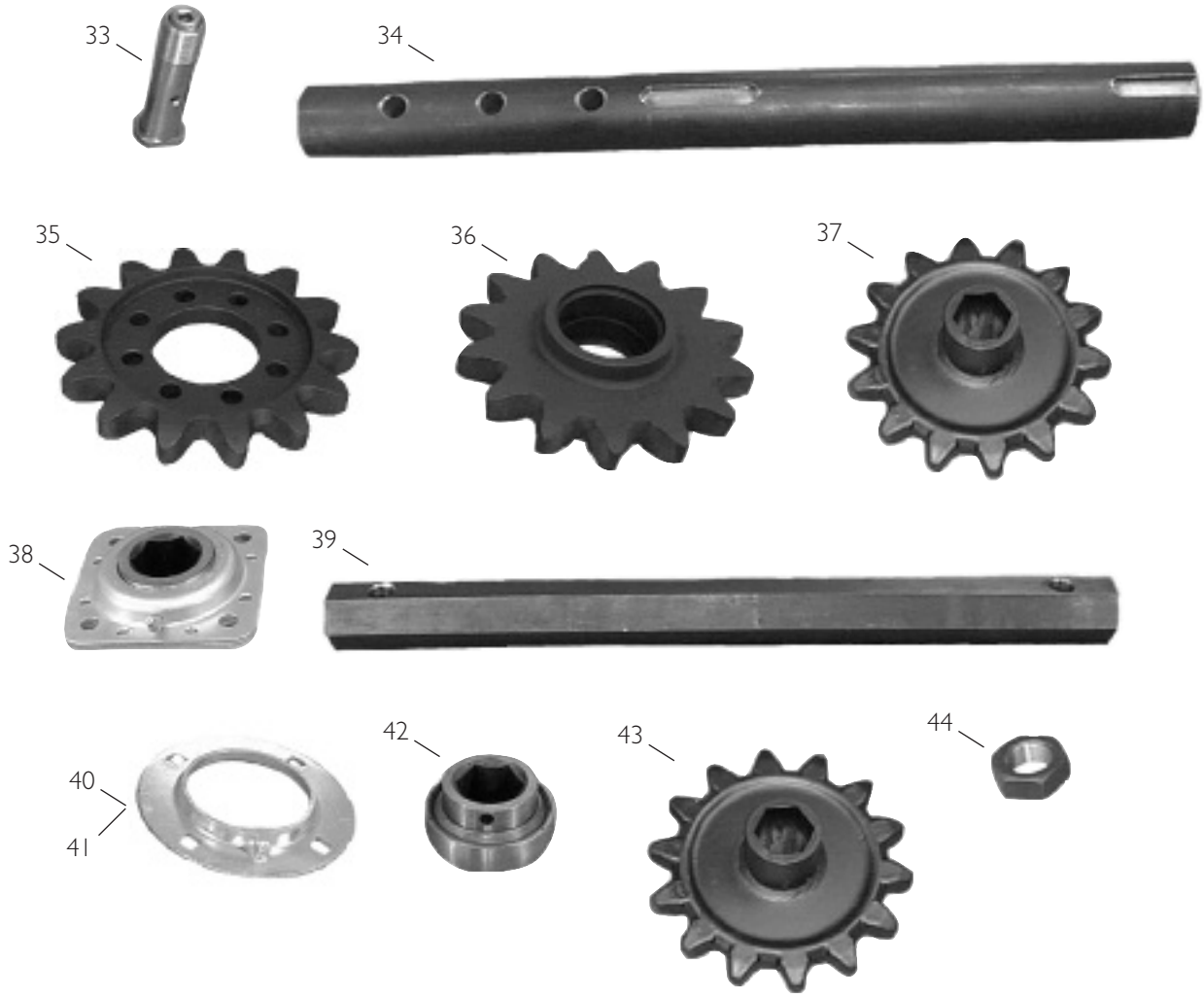

Ref No.	Part No.	Description	Weight (lbs)
33	B 180-534	Idler Shaft, Long	2.0
34	B 165-371	Headshaft (Fits Low Digging Attachments)	29
35	B 142-010	One piece Drive Sprocket, 14T	
36	B 140-730	Idler Sprocket (14 Tooth)	
N/S	B 140-731A	Idler Sprocket Assembly (B 140-659)	
37	B 140-664	Auger Sprocket, 2" P	
38	B 125-620	Hex Bearing Assembly	
39	B 145-244	Hex Auger Shaft	
40	B 110-363	Flange (LS)	
41	B 110-364	Flange (NLS)	
42	B 125-048	Hex Bearing	
43	B 142-031	Auger Sprocket (H312)	
44	B 105-313	Idler Nut	

https://truckmanualshub.com/

2" Pitch Chain, Teeth & Accessories for Ditch Witch® Models R40, 3210, 3500, 3700, 4010, 4500, RT36, RT40

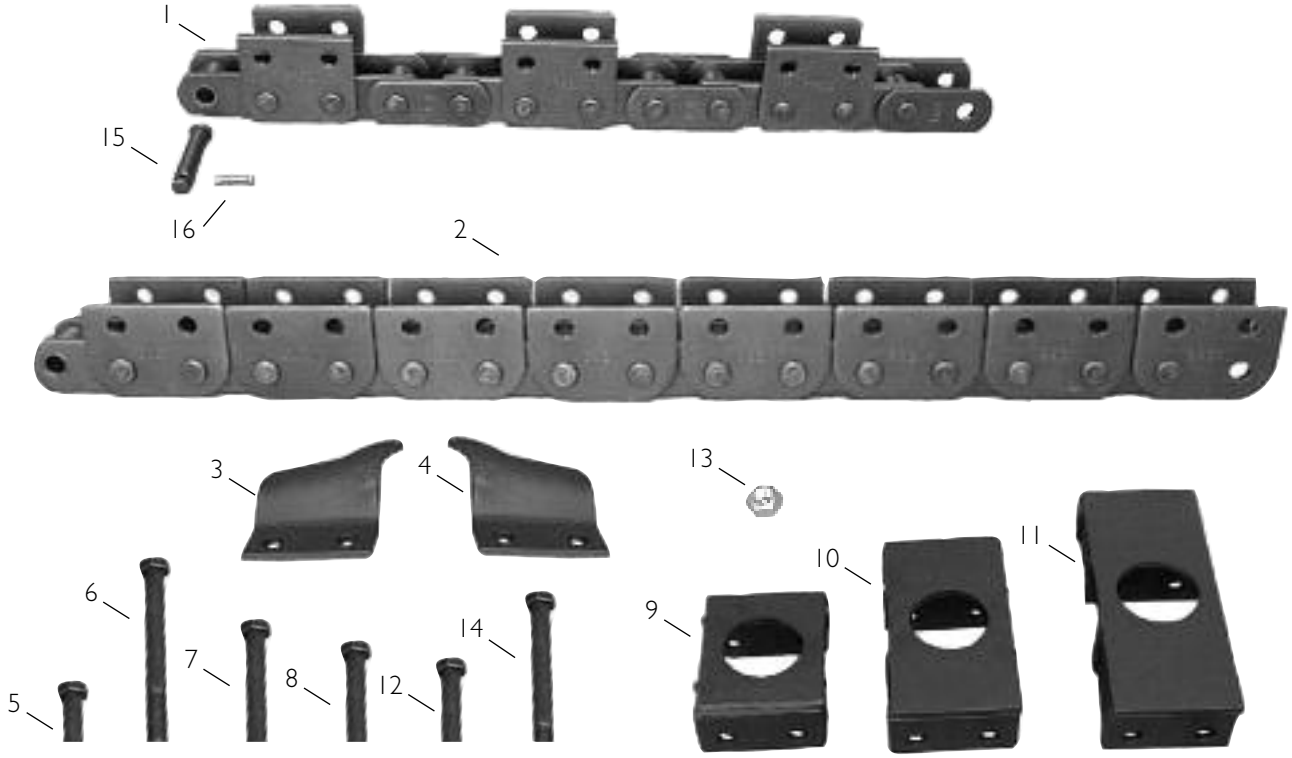

Ref No.	Part No.	Smart Pt. No.	Description	Weight (lbs)
1	B 135-214	B2000400B18	Chain 12' Less Teeth (4 Pitch Spacing)	90
1	B 135-212	B2000400B06	Chain 4' Less Teeth	30
1	B 135-211	B2000400B04	Chain 2' 8" Less Teeth	20
1	B 135-210	B2000400B03	Chain 2' Less Teeth	15
2	2ABF-2		Chain 2" Pitch ABF	
3	B 135-924		Cutter, R.H.	.9
N/S	B135924516		Cutter, R.H. (HD 5/16" Thick)	1.0
4	B 135-925		Cutter, L.H.	.9
N/S	B135925516		Cutter, L.H. (HD 5/16" Thick)	1.0
5	B 105-043		Bolts (½" x 1")	.06
6	B 105-111		Bolt (½" x 4")	
7	B 105-067		Bolt (½" x 2¾")	
8	B 105-082		Bolt (½" x 2½")	
9	B 135-912		Adapters, 8"	2.88
10	B 135-950		Adapters, 10"	3.44
11	B 135-913		Adapters, 12"	4.44
N/S	B 135-914		Adapter, 14"	
N/S	B 135-915		Adapter, 16"	
12	B 105-002		Bolt (½" x 2¼")	.06
13	B 105-065		Nut (½" N.C)	.06
14	B 105-076		Bolt (½" x 3")	.2
15	B 135-351		Chain Pin	.2
16	B 135-358		Cotter Key	.01

continued on next page

https://truckmanualshub.com/

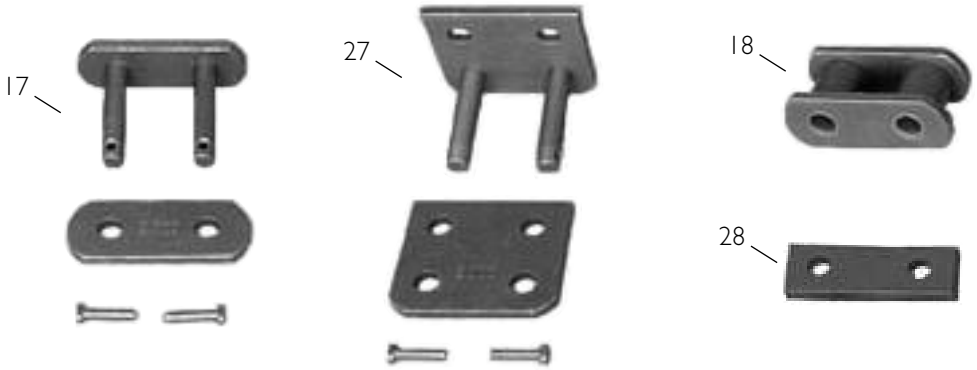

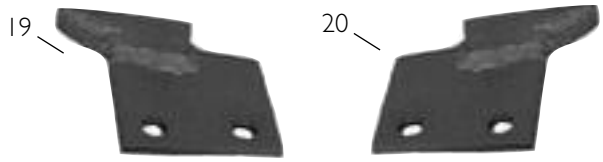

Ref No.	Part No.	Description	Weight (lbs)
17	B 135-202	Conn. Link	1
18	B 135-203	Roller Link	.117
19	B 135-501	Ground Breaker L.H	1
20	B 135-502	Ground Breaker R.H.	1
21	B 105-066	Bolt (1/2" x 13/4")	.06
22	B 105-121	Bolt (1/2" x 1")	.06
23	B 135-952	Chain Spacer (Outside) (1.810" Long)	.16
24	B 135-951	Chain Spacer (Inside) (1.590" Long)	.16
25	B 135-953	Chain Spacer (2 Inside) (1.300" Long)	.16
26	B 105-136	Bolt (1/2" x 31/2")	.06
27	B135-202H	Connecting Link (2 pitch chain)	1.75
28	V30	Flat Spacer	

https://truckmanualshub.com/

2" Pitch Anti-Back Flex Chain and Accessories for Ditch Witch® Models J20, 2200, 2300, 2310, 3500, 3700, V30, R30, R40, 3210, 3610, 4010, 4500

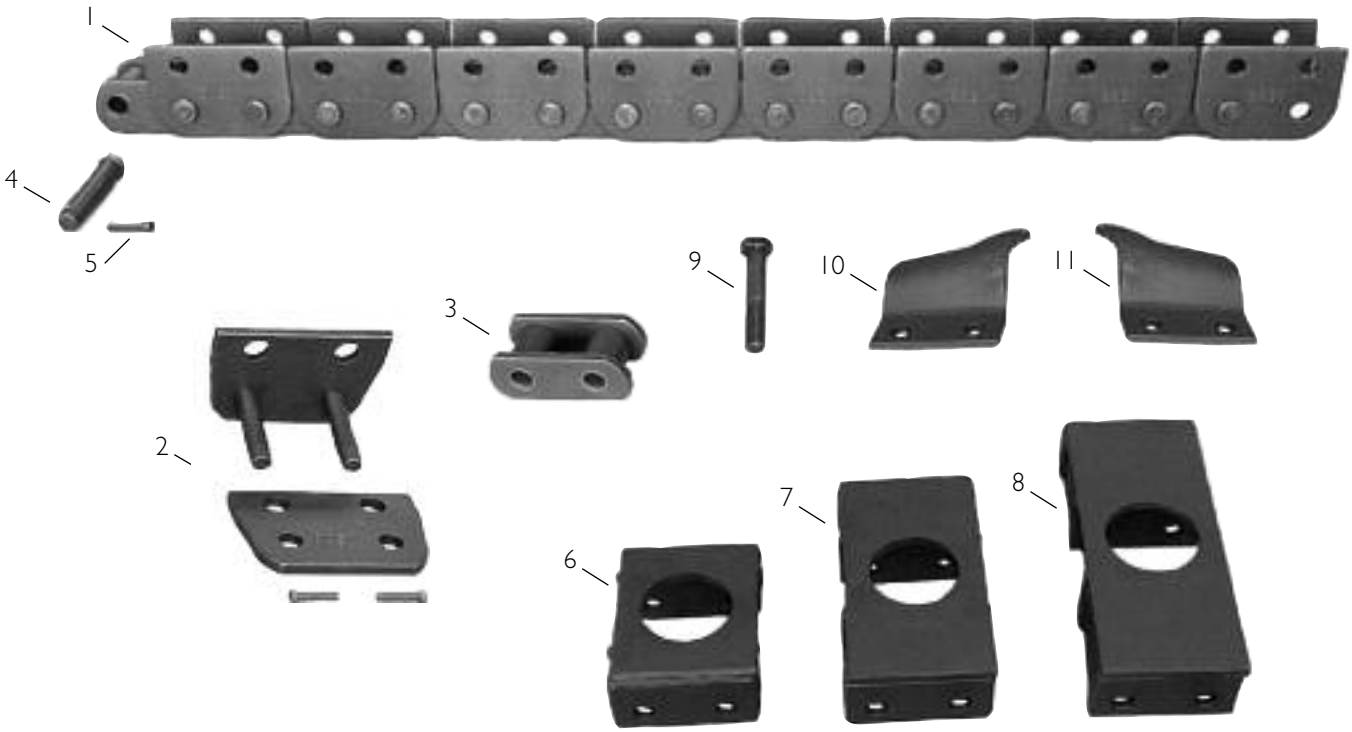

Ref No.	Part No.	Smart Pt. No.	Description	Weight (lbs)
1	B 137-218	B2ABF00B34	ABF Chain, 11' 4" Bare	100
1	B 137-215	B2ABF00B36	ABF Chain, 12' Bare	108
1	B 137-216	B2ABF00B12	ABF Chain, 4' Bare	36
1	B 137-217	B2ABF00B06	ABF Chain, 2' Bare	18
1	B 137-219	B2ABF00B08	ABF Chain, 2' 8" Bare	24
2	B 137-202		Connecting Link	1.75
3	B 137-203		Roller Link	1.2
4	B 137-351		Pin & Cotter	.21
5	B 137-207		Lock Key	.01
6	B 135-912		Adapters, 8"	2.88
7	B 135-950		Adapters, 10"	3.44
8	B 135-913		Adapters, 12"	4.44
N/S	B 135-914		Adapter, 14"	
N/S	B 135-915		Adapter, 16"	
9	B 105-002		Bolt (½" x 2¼")	.06
10	B 135-924		Cutter, R.H.	.9
N/S	B135924516		Cutter, R.H. (HD 5/16" Thick)	1.0
11	B 135-925		Cutter, L.H.	.9
N/S	B135925516		Cutter, L.H. (HD 5/16" Thick)	1.0

continued on next page

https://truckmanualshub.com/

2" Pitch Anti-Back Flex Chain and Accessories for Ditch Witch® Models J20, 2200, 2300, 2310, 3500, 3700, V30, R30, R40, 3210, 3610, 4010, 4500, continued

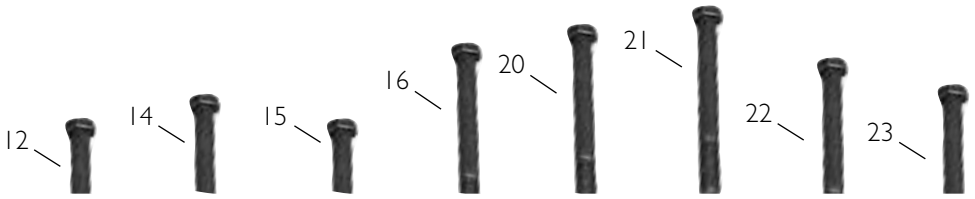

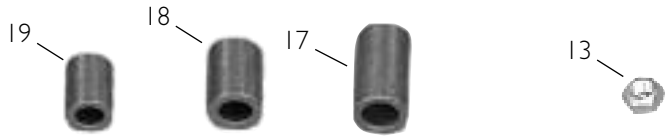

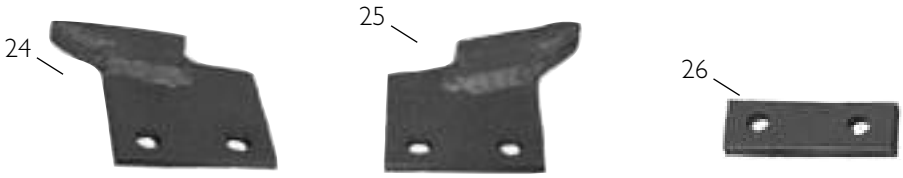

Ref No.	Part No.	Description	Weight (lbs)
12	B 105-043	Bolt (½" x 1¼")	.06
13	B 105-065	Locknut	.06
14	B 105-066	Bolt (½" x 1¾")	.06
15	B 105-121	Bolt (½" x 1")	.06
16	B 105-076	Bolt (½" x 3")	
17	B 135-952	Chain Spacer (Outside) (1.810" Long)	.16
18	B 135-951	Chain Spacer (Inside) (1.590" Long)	.16
19	B 135-953	Chain Spacer (2 Inside) (1.300" Long)	.16
20	B 105-136	Bolt (½" x 3½")	.06
21	B 105-111	Bolt (½" x 4")	
22	B 105-067	Bolt (½" x 2¾")	
23	B 105-082	Bolt (½" x 2½")	
24	B 135-501	Ground Breaker, L.H.	1
25	B 135-502	Ground Breaker, R.H.	1
26	V30	Flat Spacer	

https://truckmanualshub.com/

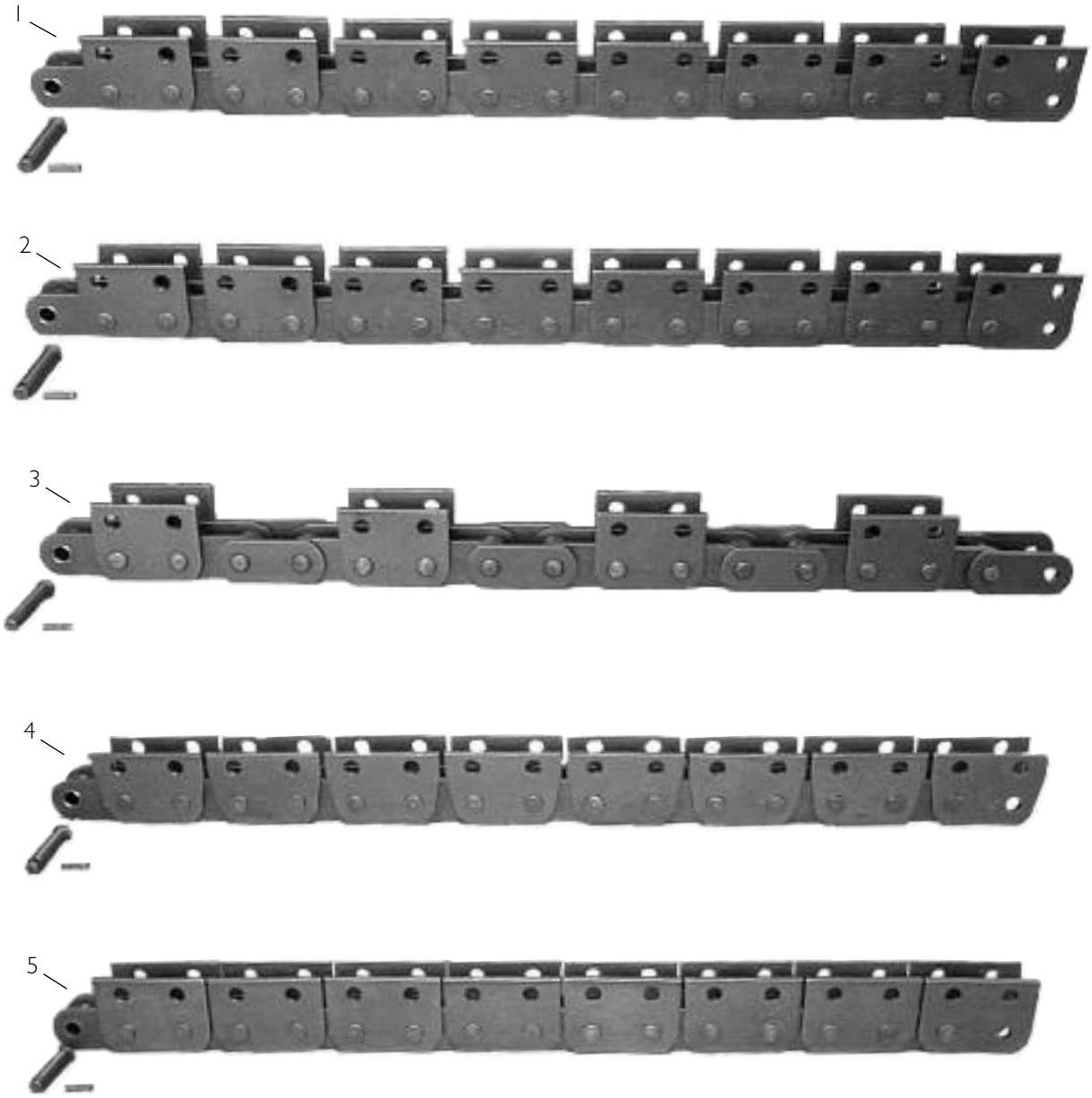

Ref No.	Part No.	Smart Pt. No.	Description	Weight (lbs)
1	B 135-704	B3067LD00B32	70,000 Lb. Chain, Bare, 64 pitches (2P)	256
2	B 135-411	B3067HD00B32	110,000 Lb. Chain, Bare, 64 pitches (2P)	288
3	B 135-411-4	B30670400B16	110,000 Lb. Chain, Bare, 64 pitches (4P)	210
4	B 137-411	B3067ABF00B32	110,000 Lb. Anti back-flex Chain, Bare, 64 pitches (2P)	298
5	N/A	TA311000B32	165,000 Lb. Trench-All® Chain, Bare, 64 pitches (2P)	300

Note: The Trench-All® Chain lines are specifically engineered for today's higher horsepower trenchers and their roller style booms.

All Trench-All® Chains are extra heavy duty anti back-flex chains with raised rivet design.

https://truckmanualshub.com/

Boom Sprockets, Bearings, Augers, and Accessories for Ditch Witch® Models R30, R40, 3210, 4010 & Attachments H300, A/H400, A/H500 using 3" Pitch Chain

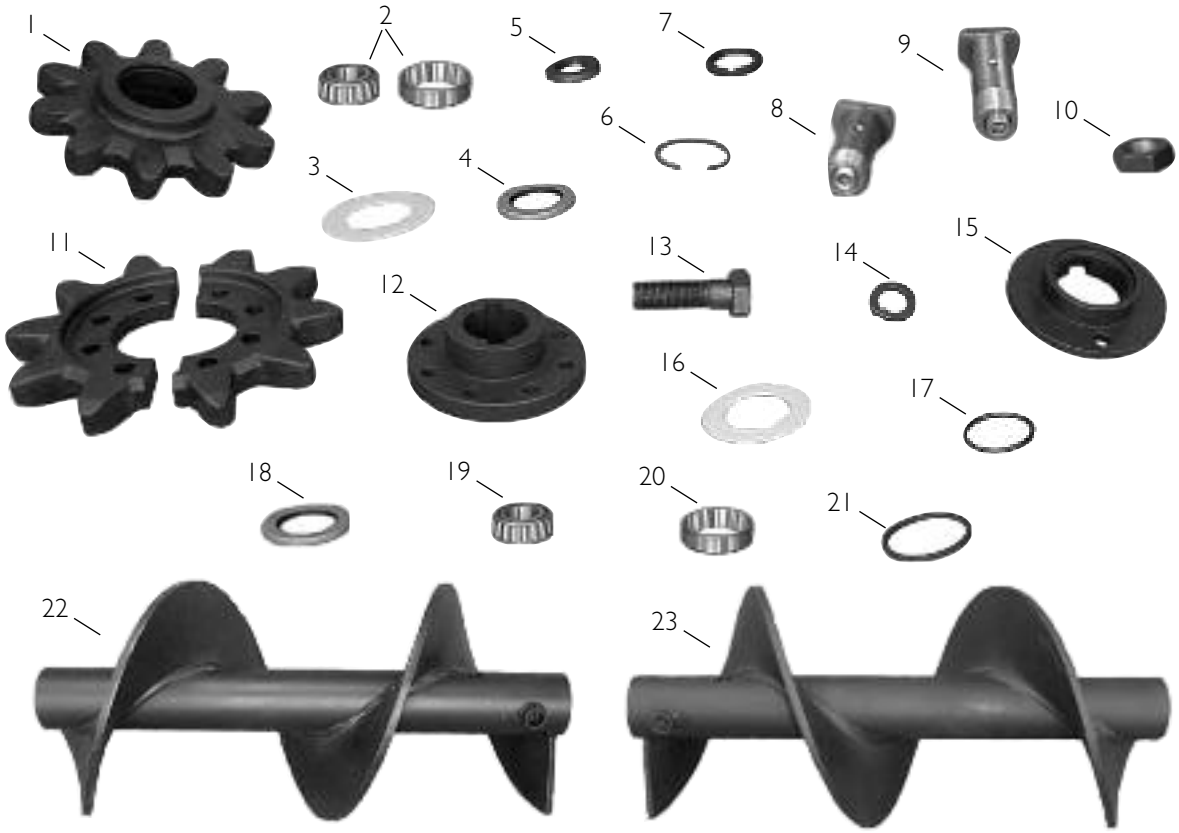

Ref No.	Part No.	Description	Weight (lbs)
1	B 140-723	Idler Sprocket	26.5
N/S	B 140-656	Idler Sprocket Assembly	25.0
2	B 125-263	Bearing, Idler Sprocket (Incl: Part #125-265 & 125-266)	1.5
3	B 180-026	Spacer	.1
4	B 155-843	Seal	.06
5	B 180-243	Bearing Spacer	.31
6	B 115-470	Retaining Ring	.01
7	B 180-244	Spacer	.10
8	B 180-440	Idler Shaft (Slide & Stop)	3
9	B 180-441	Idler Shaft (Boom)	3.0
10	B 105-377	Idler Shaft Nut	.5
11	B 140-717	Headshaft Sprocket (Split)	15.0
12	B 181-048	Sprocket Hub	7.0
13	B 105-302	Bolt (⅝" x 2")	.25
14	B 105-385	⅝" L.W.	.06
15	B 180-057	Seal Spacer	2.1
16	B 145-475	Washer, Pivot Tube	.03
17	B 155-703	O-Ring	.1
18	B 155-805	Seal	.25
19	B 125-259	Bearing	1.5
20	B 125-258	Race	1
21	B 180-071	Backup Ring	.13
22	B 145-071	Auger, L.H.	53
23	B 145-070	Auger, R.H.	53

continued on next page

https://truckmanualshub.com/

Boom Sprockets, Bearings, Augers, and Accessories for Ditch Witch® Models R30, R40, 3210, 4010 & Attachments H300, A/H400, A/H500 using 3" Pitch Chain, continued

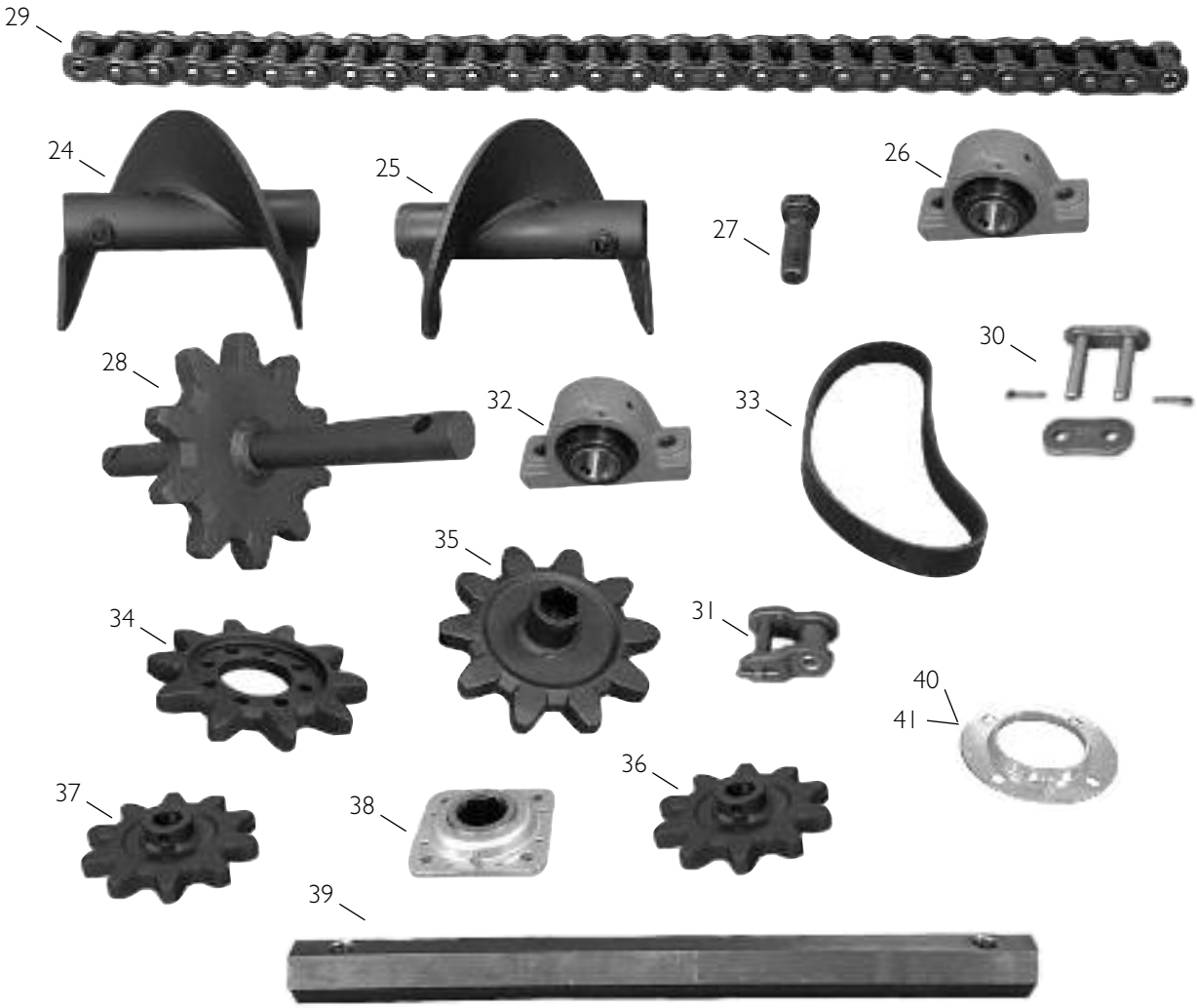

Ref No.	Part No.	Description	Weight (lbs)
24	B 145-109	Auger R.H., Short	
25	B 145-110	Auger L.H., Short	
26	B 125-517	Pillow Block Bearing	10.5
27	B 105-320	Bolt (¾" x 2¼")	.25
28	B 140-725	Auger Sprocket & Shaft	35.0
29	B 130-307	Drive Chain (#80-80P)	11.5
30	B 130-304	Connector Link (#80)	.13
31	B 135-305	Offset Link (#80)	.17
32	B 125-502	1¼" Pillow Block Bearing	6.88
33	B 170-038	Power Band V Belts	1.85
34	B 142-009	Headshaft Sprocket (One piece)	
35	B 140-665	Hex Auger Sprocket	
36	B 142-008	Auger Sprocket	
37	B 125-048	Hex Bearing	
38	B 125-620	Hex Bearing Assembly	
39	B 145-244	Hex Auger Shaft	
40	B 110-363	Flange (LS)	
41	B 110-364	Flange (NLS)	

https://truckmanualshub.com/

Sprockets, Rollers & Bearings for Ditch Witch® Alligator Boom Using 3.067 Pitch Chain for A/H500, A615, 510A

Ref No. 14 / Part No. B140-661
Bearing Kit for Item #13, Roller
(for individual breakdown of Bearing Kit Parts, see pg 41 Ref No.'s 7-13)

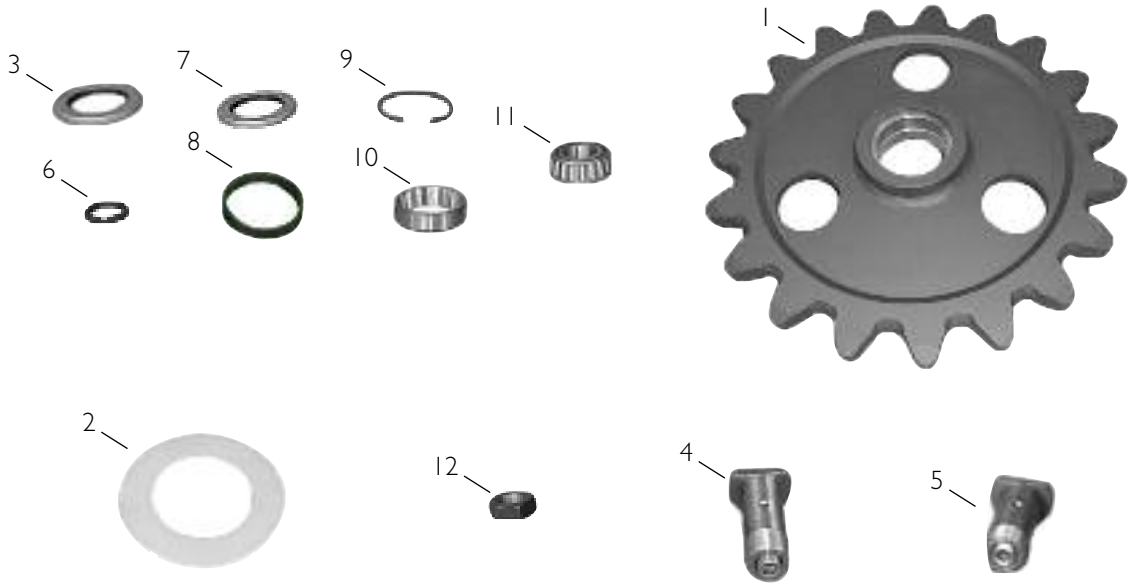

Ref No.	Part No.	Description	Weight (lbs)
1	B 142-012	Idler Sprocket, Less Bearings – 19 Tooth, 20" O.D.	52
	B 142-011	Idler Sprocket Assembly	54
2	B 145-589	Plastic Washer	.08
3	B 155-852	External Seal (for ref. #1, Sprocket)	.06
4	B 180-441	Shaft (4⅜" Long)	2.75
5	B 180-440	Shaft (4⅞" Long)	3
6	B 181-697	Bearing Spacer (for ref. #1, Sprocket)	.05
7	B 181-698	Seal Spacer (for ref. #1, Sprocket)	.3
8	B 181-699	Seal Sleeve (for ref. #1, Sprocket)	.3
9	B 115-470	Snap Rings (for ref. #1, Sprocket)	.06
10	B 125-216	Bearing Race (for ref. #1, Sprocket)	.63
11	B 125-265	Bearing (for ref. #1, Sprocket)	1
12	B 105-377	Nut	.50
13	B 142-756	Roller Only, 17"	
	B 142-756A	Roller Assembly, 17"	
14	B 140-661	Bearing Kit	

https://truckmanualshub.com/

Chain, Teeth & Accessories for Ditch Witch® Models R40, 4010, R60, R65, 5010, 5110, RT55, 6510, 7510, RT75, 7610, 8020, RT95, RT115 & Attachments A/H400, A/H500, H700 using 3" Pitch Chain

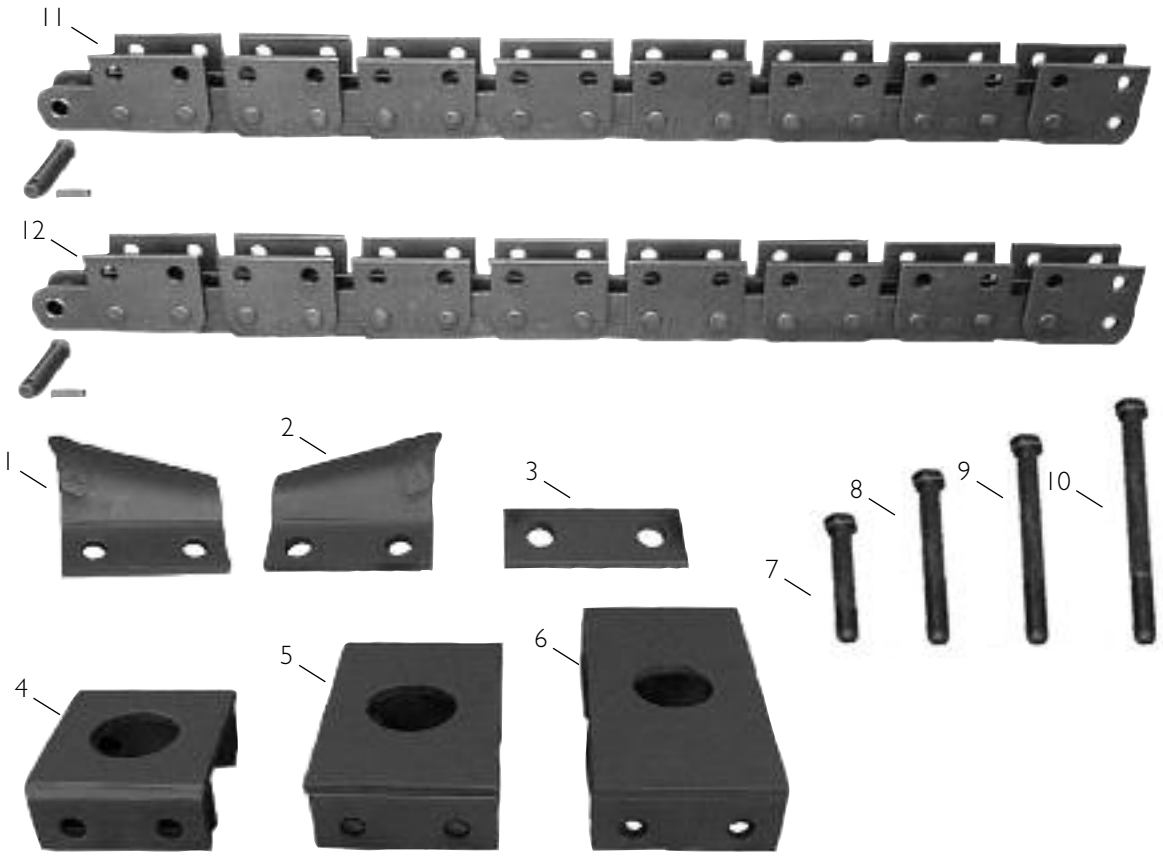

Ref No.	Part No.	Smart Pt. No.	Description	Weight (lbs)
1	B 135-911		Cutter, L.H.	2.25
2	B 135-910		Cutter, R.H.	2.25
3	B 135-921		Spacer, Tooth 8" (⅜")	.75
NS	B 135-960		Spacer, Tooth (⅛") (70,000#)	
4	B 135-901		Adapter 10" (136-071)	8.0
5	B 135-902		Adapter 12" (136-120)	9.5
6	B 135-903		Adapter 14" (136-088)	10.75
N/S	B 135-904		Adapter 16"	12
N/S	B 135-905		Adapter 18" (136-089)	13.47
N/S	B 135-906		Adapter 20"	14.84
7	B 105-319		Bolt (¾" x 1½")	.25
8	B 105-320		Bolt (¾" x 2¼")	.25
9	B 105-326		Bolt (¾" x 3")	.25
10	B 105-327		Bolt (¾" x 4")	.25
11	B 135-704	B3067LD00B32	Chain, 16' Less Teeth (70,000# Chain)	256
11	B 135-702	B3067LD00B08	Chain 4' Less Teeth (70,000# Chain)	60
11	B 135-701	B3067LD00B04	Chain 2' Less Teeth (70,000# Chain)	30
12	B 135-411	B3067HD00B32	Chain 16' Less Teeth (110,000# Chain)	288
12	B 135-410	B3067HD00B08	Chain 4' Less Teeth (110,000# Chain)	72
12	B 135-412	B3067HD00B04	Chain 2' Less Teeth (110,000# Chain)	34

continued on next page

https://truckmanualshub.com/

Chain, Teeth & Accessories for Ditch Witch® Models R40, 4010, R60, R65, 5010, 5110, RT55, 6510, 7510, RT75, 7610, 8020, RT95, RT115 & Attachments A/H400, A/H500, H700, continued

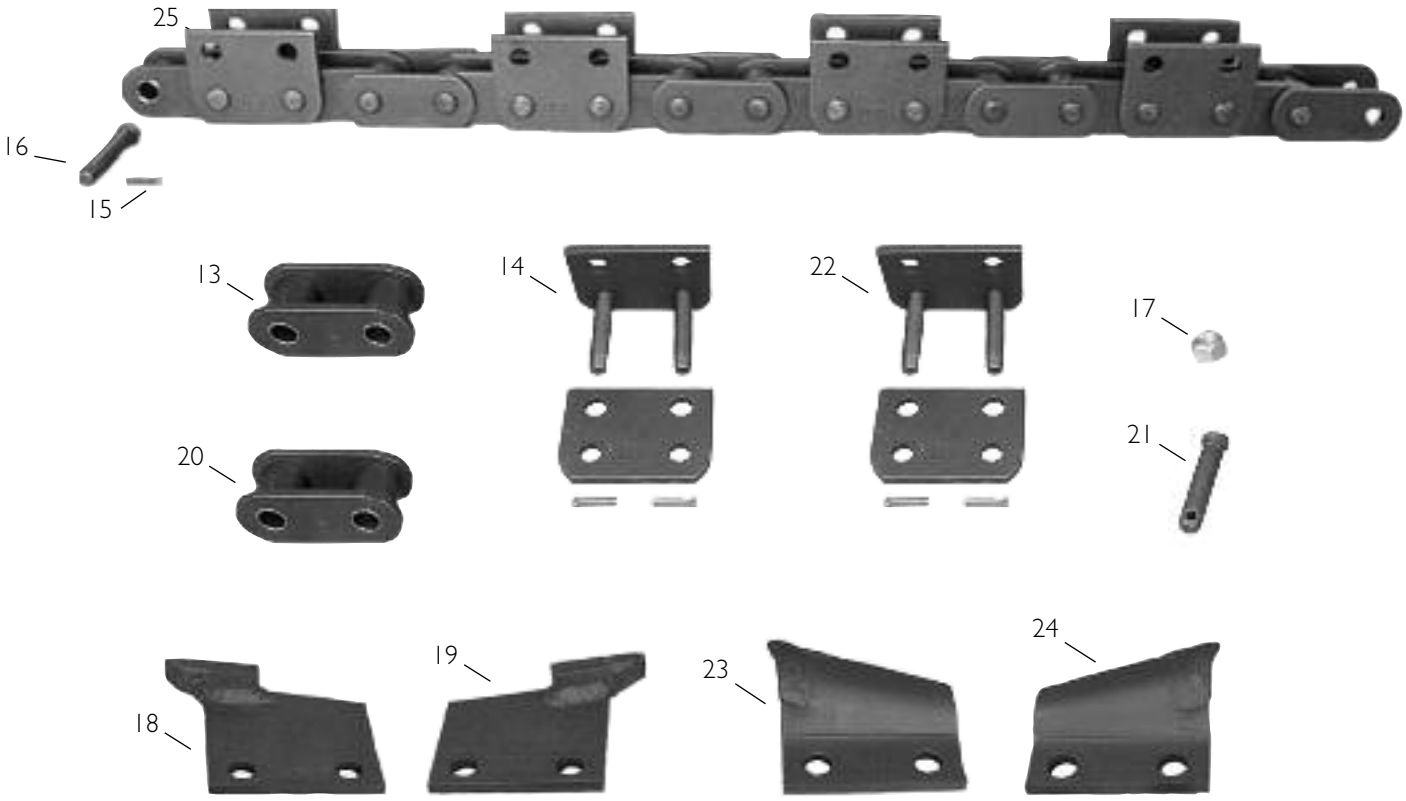

Ref No.	Part No.	Smart Pt. No.	Description	Weight (lbs)
13	B 135-503		Roller Link (70,000#)	2.85
14	B3067LDCL		Conn. Link (70,000#)	
15	B 135-402		Lock Key	.03
16	B 135-501 CP		Chain Pin (70,000#)	.4
17	B 105-372		Lock Nut (¾")	.10
18	B 501		Ground Breaker, L.H.	1.3
19	B 502		Ground Breaker, R.H.	1.3
20	B 135-404		Roller Link (110,000#)	3.40
21	B 135-401		Chain Pin (110,000#)	3.4
22	3067HDCL		Conn. Link (110,000#)	
23	B 2109-911		Super Tooth, L.H.	3.5
24	B 2108-910		Super Tooth, R.H.	3.5
25	B 135-411-4	B30670400B16	Chain 16' Every 4th Pitch (110,000# Chain)	

https://truckmanualshub.com/

3.067" Pitch Anti-Back Flex Chain for Ditch Witch® Models R60, R65, 5010, 5110, RT55, 6510, 7510, RT75, 7610, 8020, RT95, RT115, & Attachments A/H400, A/H500, H700

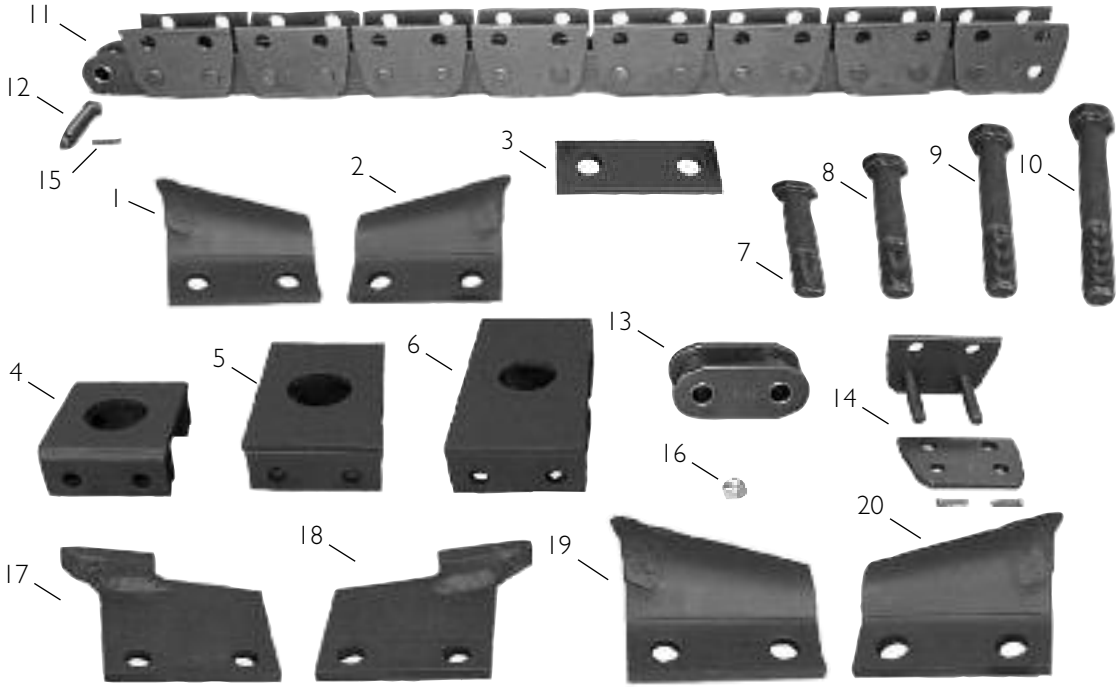

Ref No.	Part No.	Smart Pt. No.	Description	Weight (lbs)
1	B 135-911		Cutter, L.H.	2.14
2	B 135-910		Cutter, R.H.	2.14
3	B 135-921		Spacer, Tooth 8" (⅜")	.75
4	B 135-901		Adapter 10" (136-071)	8
5	B 135-902		Adapter 12" (136-120)	9.3
6	B 135-903		Adapter 14" (136-088)	10.75
N/S	B 135-904		Adapter 16"	12
N/S	B 135-905		Adapter 18" (136-089)	13.47
N/S	B 135-906		Adapter 20"	14.84
7	B 105-319		Bolt (¾" x 1½")	.25
8	B 105-320		Bolt (¾" x 2¼")	.25
9	B 105-326		Bolt (¾" x 3")	.45
10	B 105-327		Bolt (¾" x 4")	.6
11	B 137-411	B3067ABF00B32	ABF Chain 16' Less Teeth	269
11	B 137-410	B3067ABF00B08	ABF Chain 4' Less Teeth	67.2
11	B 137-412	B3067ABF00B04	ABF Chain 2' Less Teeth	33.6
12	B 137-401		Chain Pin	.5
13	B 137-404		Roller Link	4.25
14	B 137-405		Connecting Link	51
15	B 137-402		Key	.05
N/S	B 135-961		Chain Spacer – .8"	
N/S	B 135-962		Chain Spacer – 1.9"	
N/S	B 135-979		Chain Spacer – 2.16"	
N/S	B 135-977		Chain Spacer – 2.34"	
N/S	B 140-120		Boom Gussets	
16	B 105-372		Lock Nut (¾")	.10
17	B 501		Ground Breaker, L.H.	1.3
18	B 502		Ground Breaker, R.H.	1.3
19	B 2109-911		Super Tooth, L.H.	3.5
20	B 2108-910		Super Tooth, R.H.	3.5

https://truckmanualshub.com/

BALLANTINE

Trencher, Scrapers, and Horizontal Directional Drilling Parts Specialists

Boom Parts, Sprockets, Bearings, and Accessories for Ditch Witch® Models R40, R60, R65, 4010, 5010, 6510, 7510, 7610, 8020 & Attachments A/H400, A/H500, H700

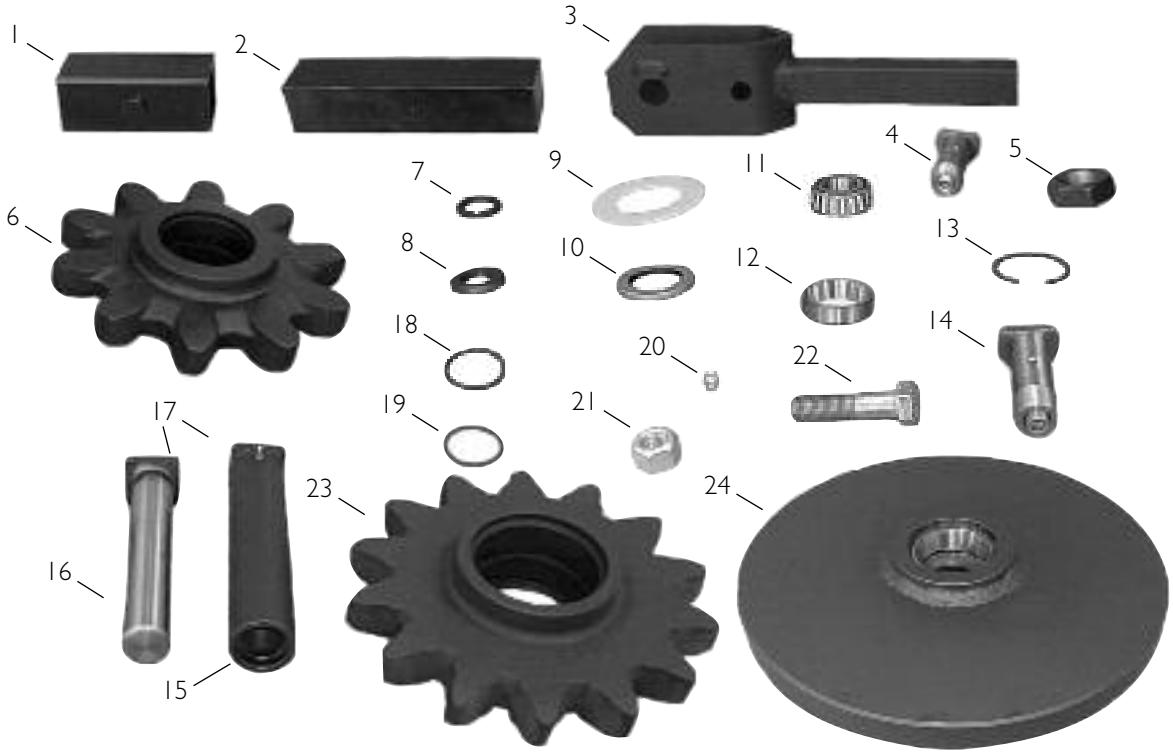

Ref No.	Part No.	Description	Weight (lbs)
1	B 140-013	Boom Sleeve	.5
2	B 140-021	Boom Spring	.80
3	B 140-758	Slide & Stop	25.60
4	B 180-440	Idler Shaft (Slide & Stop)	3
5	B 105-377	Nut	.50
6	B 140-723	Idler Sprocket (Bearing Kit for Idler Sprocket: see ✳ below)	26.50
	B 140-656	Idler Sprocket Assy, (Includes Sprocket & #'s 7-13)	24.75
7	B 180-244	Spacer Bearing	.10
8	B 180-243	Spacer Bearing	.31
9	B 180-026	Fiber Spacer	.10
10	B 155-843	Seal	.15
11	B 125-265	Bearing	1
12	B 125-266	Race	.6
13	B 115-470	Retaining Ring	.01
14	B 180-441	Idler Shaft (Boom – Idler)	2.75
15	B 150-191	Grease Cylinder Barrel	3.50
16	B 150-340	Grease Cylinder Rod	5.10
17	B 150-058	Grease Cylinder Assembly	11
18	B 155-711	O Ring	.03
19	B 155-712	Back-up Ring	.1
20	B 115-001	Zerk (⅛")	.06
21	B 105-367	Lock Nut (1" NC)	.25
22	B 105-419	Bolt (1" NC X 4")	1.13
23	B 140-730	Idler Sprocket (2" P)	
	B 140-731A	Idler Sprocket Assembly (14T) (140-659)	
24	B 142-756	17" End Roller	
	B 142-756A	17" End Roller Assembly	
✳	B 140-661	Bearing Kit (includes Reference #'s 7-13)	
N/S	B 140-120	Boom Gussets	

https://truckmanualshub.com/

Auger Parts & Accessories for Ditch Witch® Models R40, R60, R65, 4010, 5010, 6510, 7510, 8020 & Attachments A/H400, A/H500, H700 (3" P)

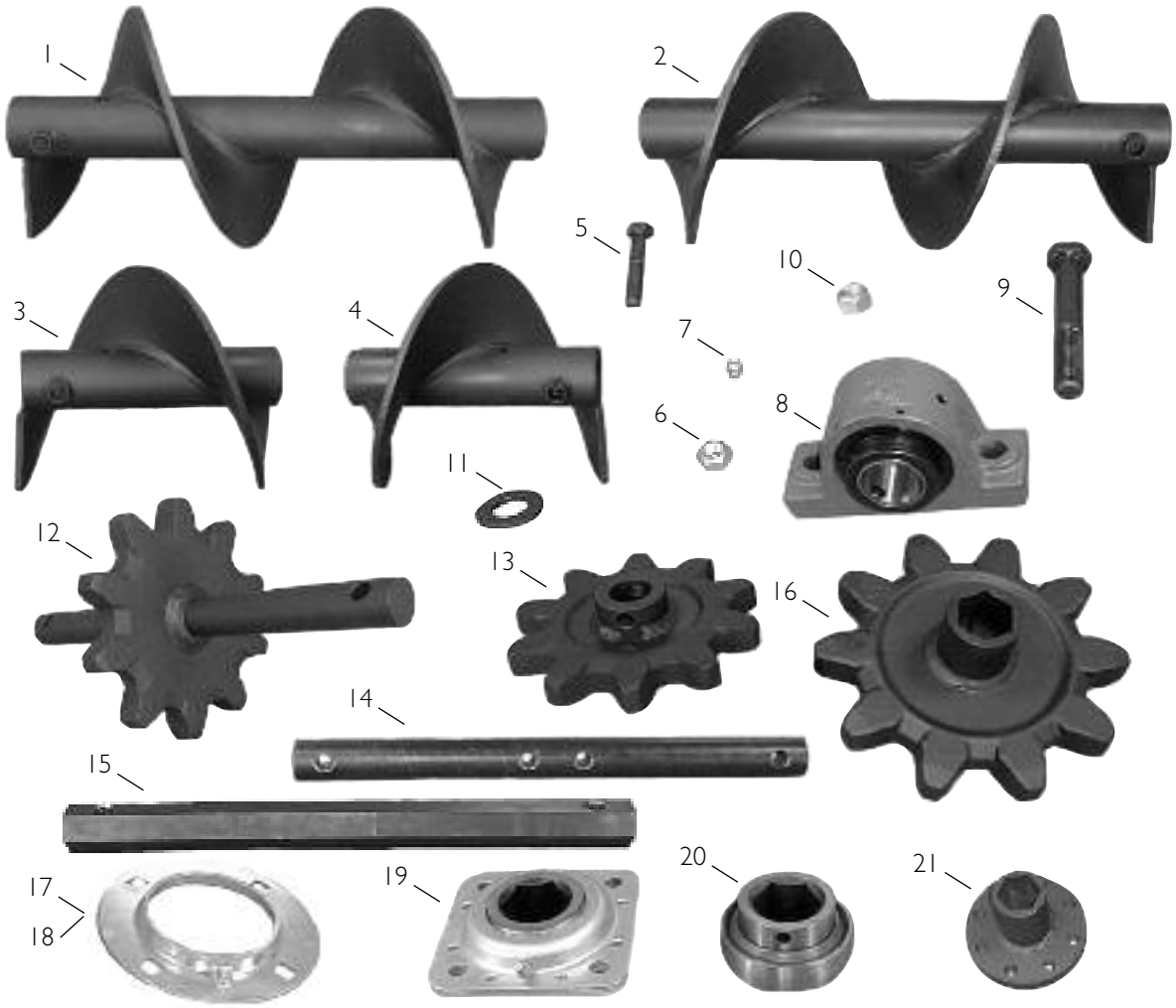

Ref No.	Part No.	Description	Weight (lbs)
1	B 145-070	Auger, R.H. (24")	53
2	B 145-071	Auger, L.H. (24")	53
3	B 145-109	Auger, R.H. (12")	28
4	B 145-110	Auger, L.H. (12")	28
5	B 105-407	Bolt, (⅝" x 4")	.50
6	B 105-357	Lock Nut (⅝")	.06
7	B 115-001	Zerk	.06
8	B 125-517	Pillow Block Bearing, 1¾" I.D.	10.5
9	B 105-466	Bolt (¾" x 2 1/2")	.5
10	B 105-372	Lock Nut (¾")	.06
11	B 105-384	Washer (¾")	.06
12	B 140-725	Auger Sprocket & Shaft	35.0
13	B 142-008	Auger Sprocket	23.9
14	B 165-368	Auger Shaft	15
15	B 145-244	Hex Auger Shaft	
16	B 140-665	Auger Sprocket, Hex	
17	B 110-363	Flange (LS)	
18	B 110-364	Flange (NLS)	
19	B 125-620	Hex Bearing Assembly	
20	B 125-048	Hex Bearing	
21	B 145-248	Hex Sprocket Hub	

https://truckmanualshub.com/

Drive Sprocket Head Shaft, Components for Ditch Witch® Models R40, R60, R65, 4010, 5010, 6510, 7510, 7610, 8020 & Attachments A/H400, A/H500, H700

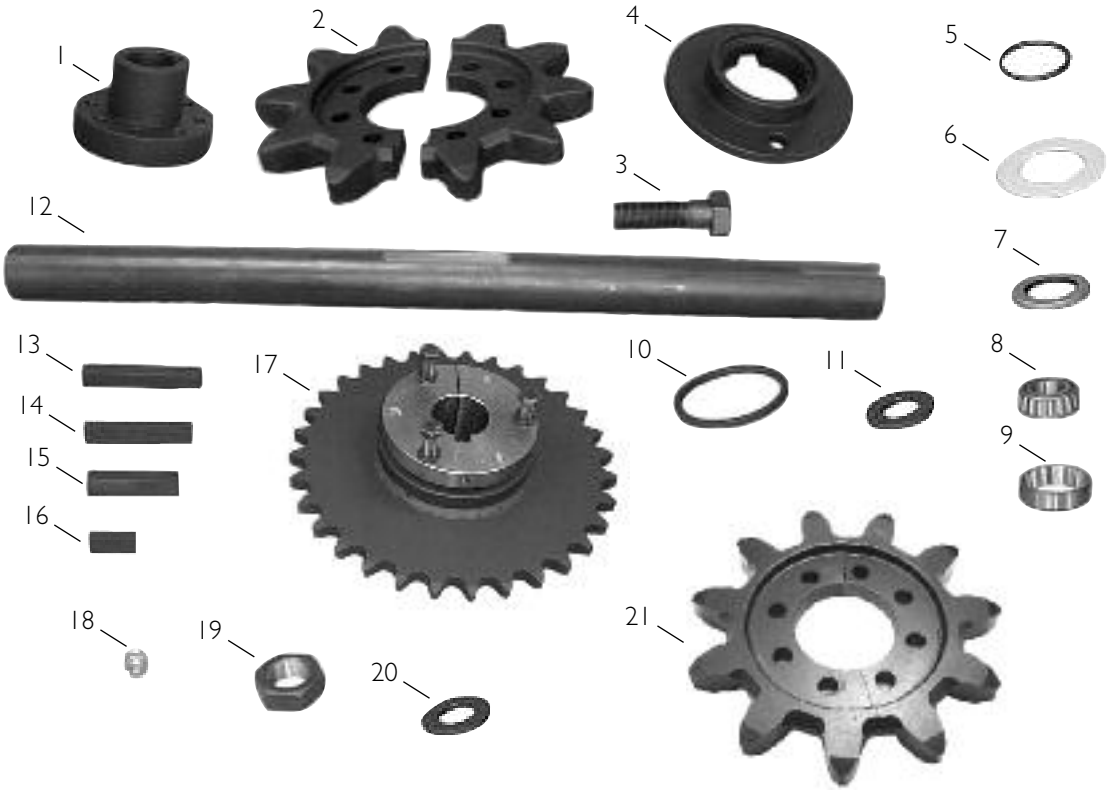

Ref No.	Part No.	Description	Weight (lbs)
1	B 180-055	Sprocket Hub	3.5
2	B 140-717	Split Sprocket	15
3	B 105-302	Bolt ⅝" x 2"	.25
4	B 180-057	Spacer Seal	2.0
5	B 155-703	O Ring	.06
6	B 145-475	Washer	.03
7	B 155-805	Seal	.25
8	B 125-259	Bearings	1.5
9	B 125-258	Race	1
10	B 180-071	Backup Ring	.13
N/S	B 145-476	Washer	.20
11	B 105-384	¾" Washer	.06
N/S	B 105-364	Bolt ¾" X 2"	.25
N/S	B 180-064	Washer 1 3/16" I.D. x 3" O.D. x ½"	.62
12	B 165-329	Drive Shaft	38
13	B 165-903	Key (⅝" Sq. x 4⅜" Lg.)	.25
14	B 165-904	Key (⅝" Sq. x 3⅞" Lg.)	.25
15	B 165-905	Key (¾" X ⅝" x 3¼")	.25
16	B 165-907	Key (⅝" R2 x ⅜")	.10
17	B 175-604	Sprocket (100 Q 32)	26.5
18	B 115-003	Zerk (¼ N.F. Str.)	.03
19	B 105-313	Nut	.19
20	B 180-062	Dirt Shield	.19
21	B 141-589	Sprocket Split Drive 11 Tooth	

continued on next page

https://truckmanualshub.com/

Drive Sprocket Head Shaft, Components for Ditch Witch® Models R40, R60, R65, 4010, 5010, 6510, 7510, 7610, 8020 & Attachments A/H400, A/H500, H700, continued

Ref No.	Part No.	Description	Weight (lbs)
21	B 125-209	Bearing Assembly	1
22	B 175-605	Sprocket (100-B14)	4.75
N/S	B 175-608	Sprocket Assembly	6
N/S	B 130-404	Chain (100-65 Pitches)	20
N/S	B 130-402	Offset Link	.35
N/S	B 130-401	Connector Link	.25
23	B 170-038	Power Band V Belts — 2 Belts	1.85
24	B 170-059	Power Band V Belts — 4 Belts	1.96
N/S	B 170-609	Sprocket #100 Q 34	28
25	B 142-009	Sprocket (1 Piece)	16
N/S	B 175-509	Idler Sprocket #80 – 16 Tooth	
26	B 165-379	Drive Shaft for offset machine	

https://truckmanualshub.com/

Ultra Heavy-Duty Trench-ALL® 3110 Digging Chain & Accessories (165,000# Test Chain) Replaces 3.067" Pitch Chain

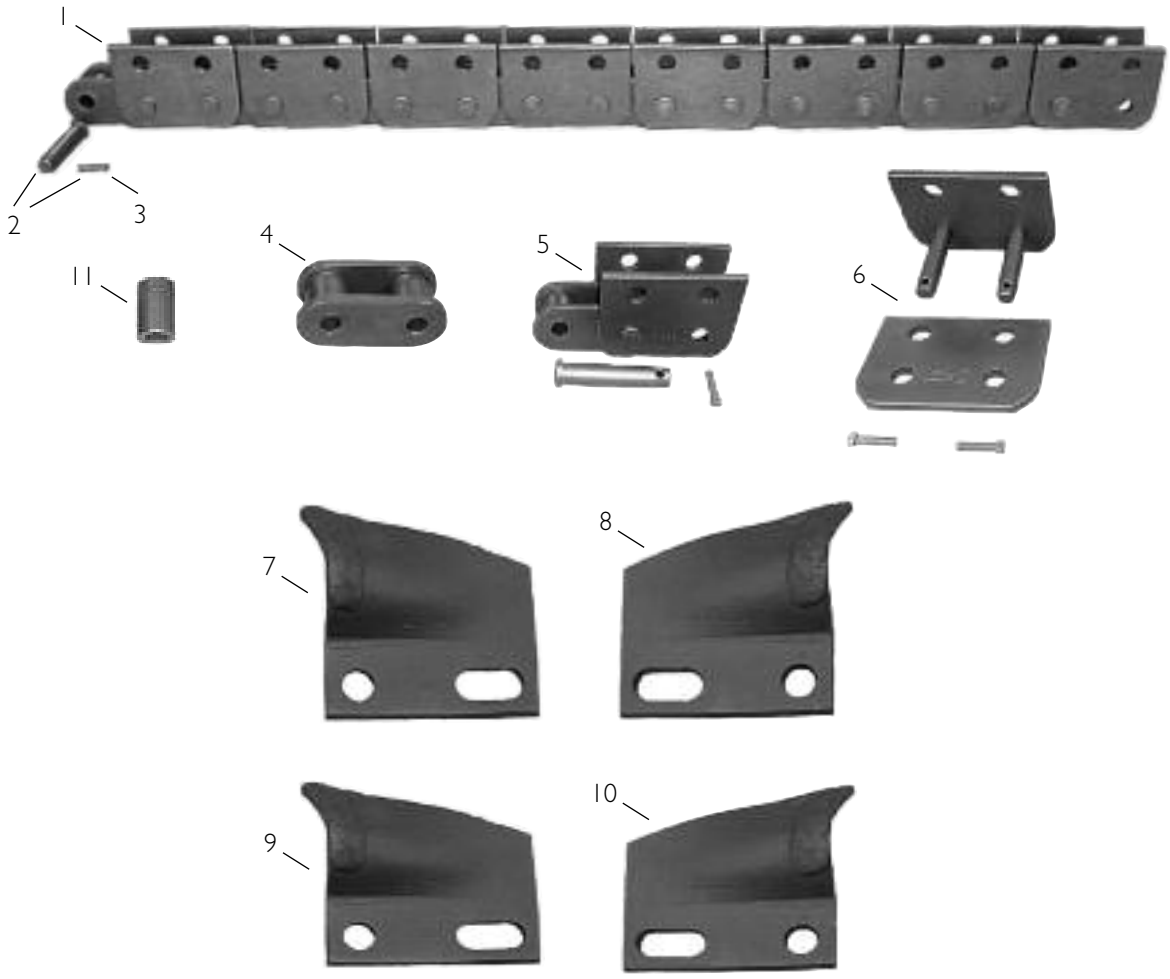

Ref No.	Part No.	Smart Pt. No.	Description	Weight (lbs)
1	TA 3110	TA311000B__	Bare Chain	
2	TA 3110 PC		Chain Pin w/Cotter	
3	TA 3110 CT		Cotter Only	
4	TA 3110 RL		Roller Link	
5	TA 3110 RPL		Repair Link	
6	TA 3110 CL		Conn. Link	
7	TA 4134 L		Cup Cutter, L.H.	
8	TA 4134 R		Cup Cutter, R.H.	
9	TA 4134 LPL		Cup Cutter L.H. (Low Profile)	
10	TA 4134 LPR		Cup Cutter R.H. (Low Profile)	
11	SP 200		2" Alloy Tube Spacer	

Note: No sprocket conversion required.

continued on next page

https://truckmanualshub.com/

Ultra Heavy-Duty Trench-ALL® 3110 Digging Chain & Accessories (165,000# Test Chain) Replaces 3.067" Pitch Chain, continued

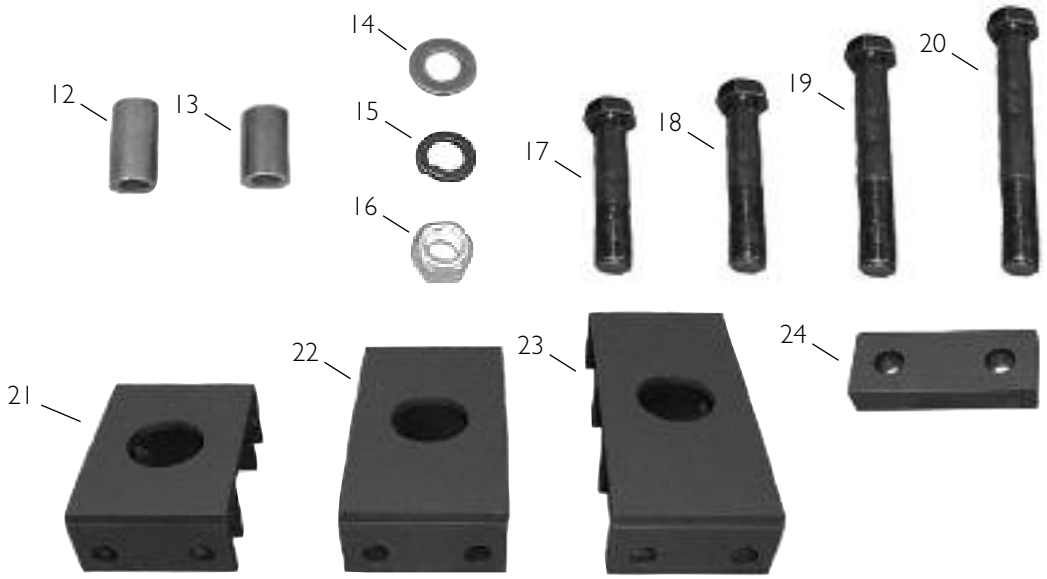

Ref No.	Part No.	Smart Pt. No.	Description	Weight (lbs)
12	SP 238		2⅜" Alloy Tube Spacer	
13	SP 218		2⅛" Alloy Tube Spacer	
14	34 FW		¾" Flat Washer	
15	34 LW		¾" Lock Washer	
16	34 LN		¾" Lock Nut	
17	34412-8		¾" x 4½" Gr. 8 Bolt	
18	34500-8		¾" x 5" Gr. 8 Bolt	
19	34512-8		¾" x 5½" Gr. 8 Bolt	
20	34600-8		¾" x 6" Gr. 8 Bolt	
21	PL 4134-12		12" Cup Cutter Expander	
22	PL 4134-14		14" Cup Cutter Expander	
23	PL 4134-16		16" Cup Cutter Expander	
24	BL 3110-10		Block Spacer – Space for 2" Additional Cut	

https://truckmanualshub.com/

Chains for Ditch Witch® Models R100, AR12, RT115 (Largest Riding Trenchers)

Ref No.	Part No.	Smart Pt. No.	Description	Weight (lbs)
1	B 135-812	B450000B24	150,000 Lb. Chain, Bare, 18', 48 pitches, (2P)	360
1	B 135-808	B450000B06	150,000 Lb. Chain, Bare, 4.5", 12 pitches, (2P)	90
2	N/A	TA408600B26	225,000 Lb. Chain, Bare, 18', 52 pitches, (2P)	
2	N/A	TA408600B07	225,000 Lb. Chain, Bare, 4.5', 14 pitches, (2P)	

Note: The Trench-All® Chain lines are specifically engineered for today's higher horsepower trenchers and their roller style booms.

All Trench-All® Chains are extra heavy duty anti back-flex chains with raised rivet design.

https://truckmanualshub.com/

Chain, Teeth & Adapters (4.5" Pitch, 150,000# Test Chain) for Ditch Witch® Model R100, AR12

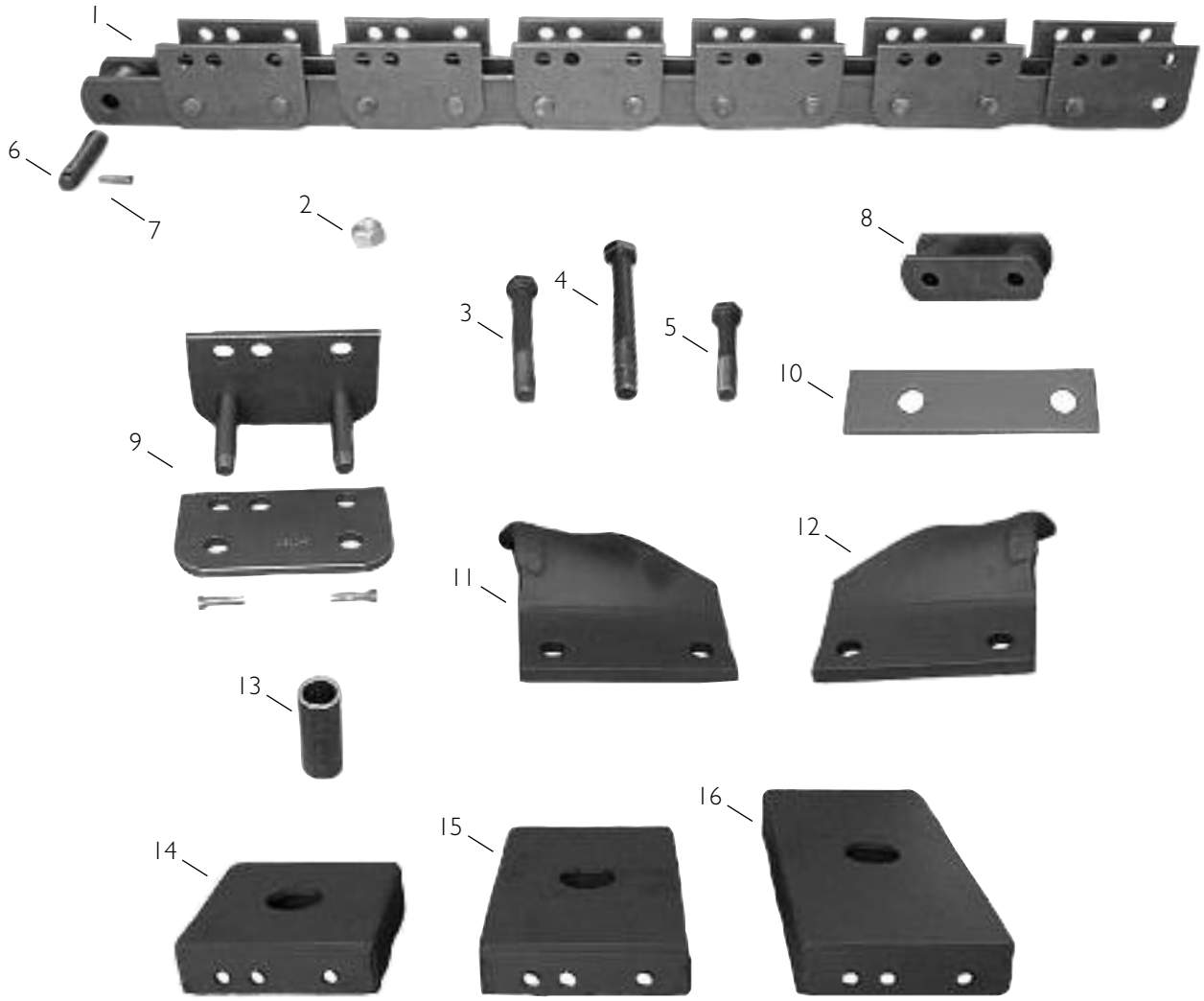

Ref No.	Part No.	Smart Pt. No.	Description	Weight (lbs)
1	B 135-812	B450000B24	18' Chain, Bare	360
1	B 135-808	B450000B06	4' 6" Chain, Bare	90
2	B 105-372		Locknut (¾")	.10
3	B 105-383		Bolt (¾" x 6")	.81
4	B 105-464		Bolt (¾" x 7")	1.00
5	B 105-473		Bolt (¾" x 5")	.75
6	B 135-801		Chain Pin	.6
7	B 135-802		Lock Key	.05
8	B 135-805		Roller Link	5.5
9	R100CL		Conn. Link	
10	B 136-009		Tooth Spacer (2 pcs. = 10" Width • 4 pcs. - 12" Width)	2.29
11	B 136-045		Cutter, L.H.	6.5
12	B 136-046		Cutter, R.H.	6.5
13	B 136-064		Chain Spacer	.3
14	B 136-010		14" - 16" Adapter	
15	B 136-012		18" - 20" Adapter	
16	B 136-014		22" - 24" Adapter	

https://truckmanualshub.com/

Boom Sprockets, Auger Sprockets, and Drive Sprockets and Accessories for Ditch Witch® Model R100, AR12

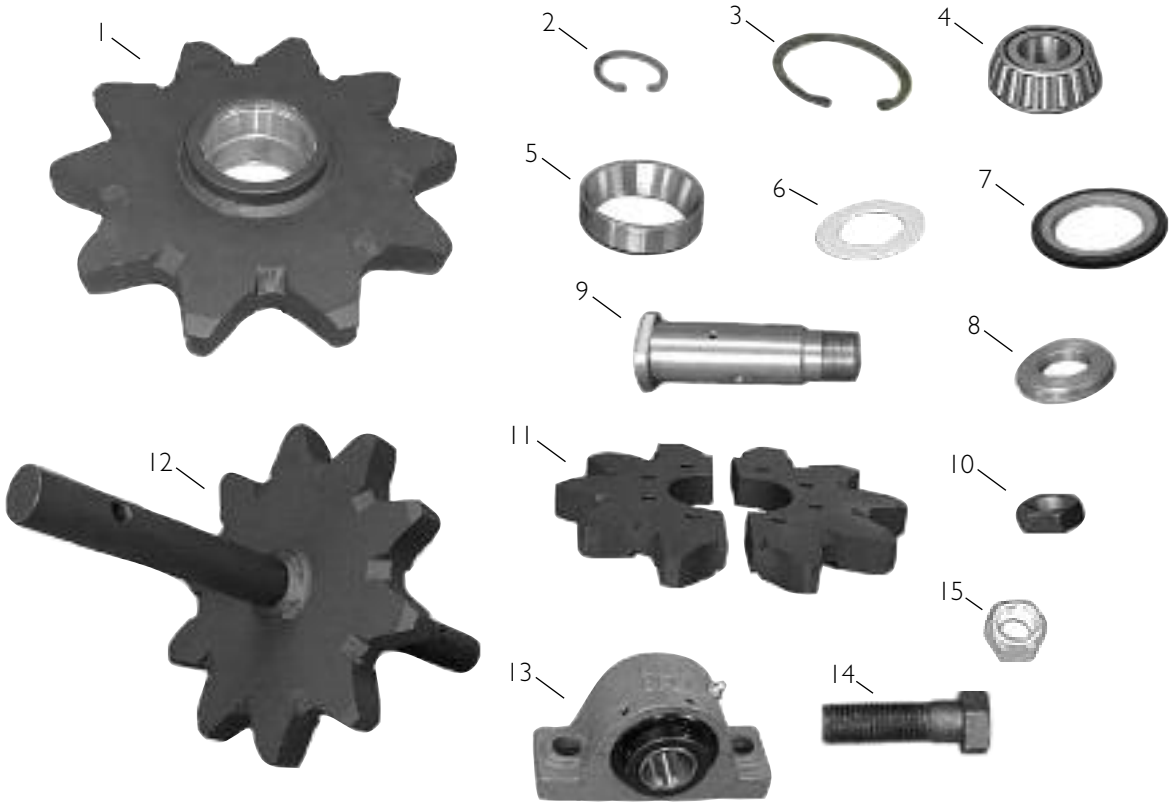

Ref No.	Part No.	Description	Weight (lbs)
1	B 142-001	Idler Sprocket	71.5
N/S	B 140-658	Idler Sprocket Assembly	84
2	B 115-498	Snap Ring	.05
3	B 115-492	Snap Ring	.06
4	B 125-287	Bearing	2.50
5	B 125-288	Races	1.19
6	B 145-475	Urethane Spacer	.03
7	B 155-870	Seals	.25
8	B 180-165	Seal Ring	.5
9	B 183-064	Idler Shaft	4.50
10	B 105-377	Nut	.50
11	B 140-739	Split Drive Sprocket (4.5"P Chain)	63
N/S	B 140-747	Split Drive Sprocket (3"P Chain)	
12	B 140-742	Auger Sprocket & Shaft (4.5"P Chain)	102
N/S	B 140-749	Auger Sprocket & Shaft (3"P Chain)	
13	B 125-514	Pillow Block Bearing (2¼" I.D.)	14.5
14	B 105-376	Bolt (⅝" X 3")	.25
15	B 105-357	Locknut (⅝")	.06
N/S	B 130-412	Chain #100-2 96P (used with Auger Setup)	
N/S	B 130-413	Chain #100-2 120P (used with Conveyor Setup)	
N/S	B 170-052	Belt Set of 4	6

https://truckmanualshub.com/

Ultra Heavy-Duty Trench-ALL® 4086 Digging Chain & Accessories (225,000# Test Chain) Replaces 41/2" Pitch – 150,000# Test Chain

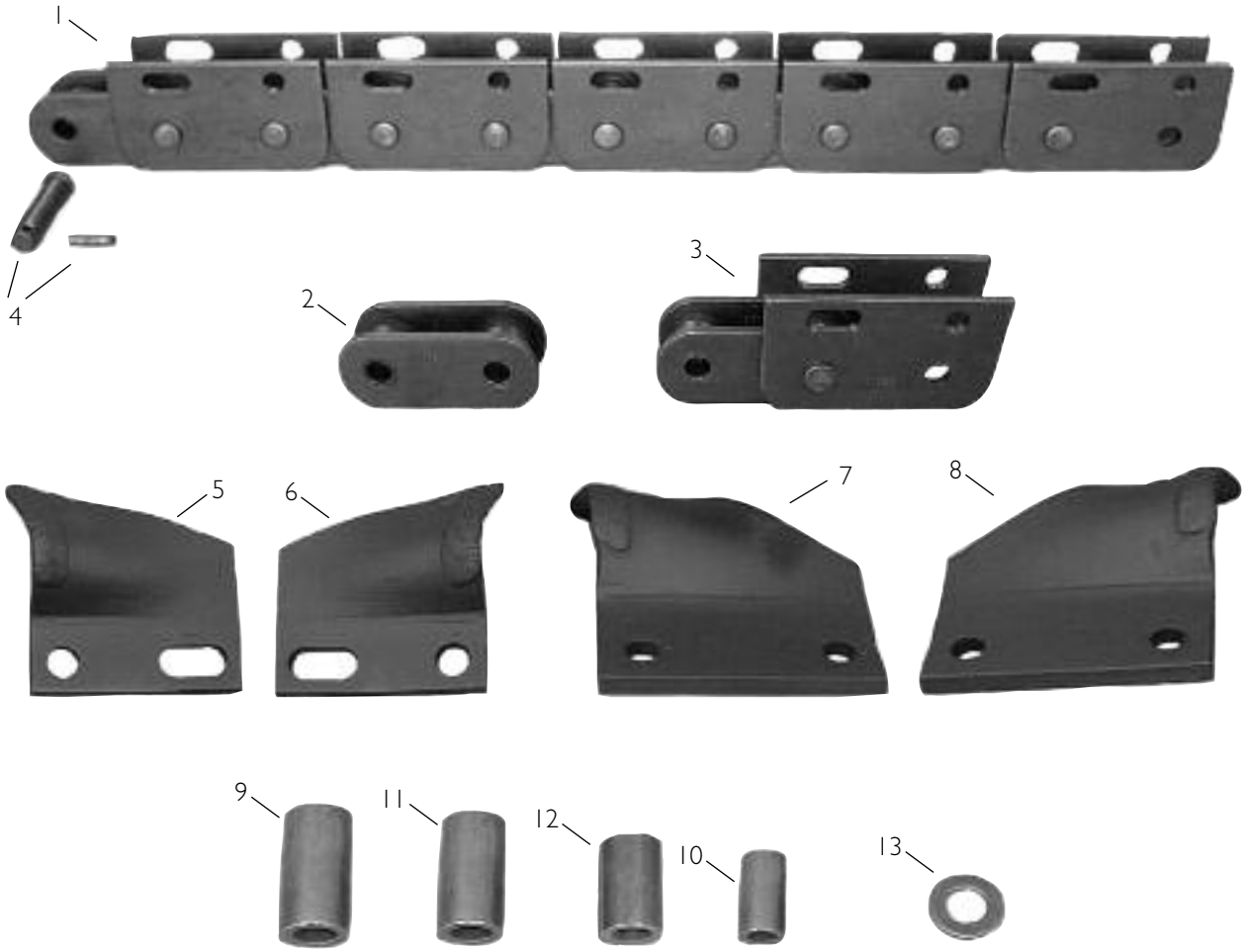

Ref No.	Part No.	Smart Pt. No.	Description	Weight (lbs)
1	TA 4086	TA408600B__	Bare Chain	
2	TA 4086 RL		Roller Link	
3	TA 4086 RPL		Repair Link	
4	TA 4086 PC		Chain Pin with keeper	
5	TA 4134 L		Cutter L.H.	
6	TA 4134 R		Cutter R.H.	
7	B 136-045		Cutter, L.H.	
8	B 136-046		Cutter, R.H.	
9	SP 2116		2 1/16" Alloy Tube Spacer	
10	SP 2716		2 7/16" Alloy Tube Spacer	
11	SP 238		2 3/8" Alloy Tube Spacer	
12	SP 11516		11 5/16" Alloy Tube Spacer	
13	34 FW		3/4" Flat Washer	

continued on next page

https://truckmanualshub.com/

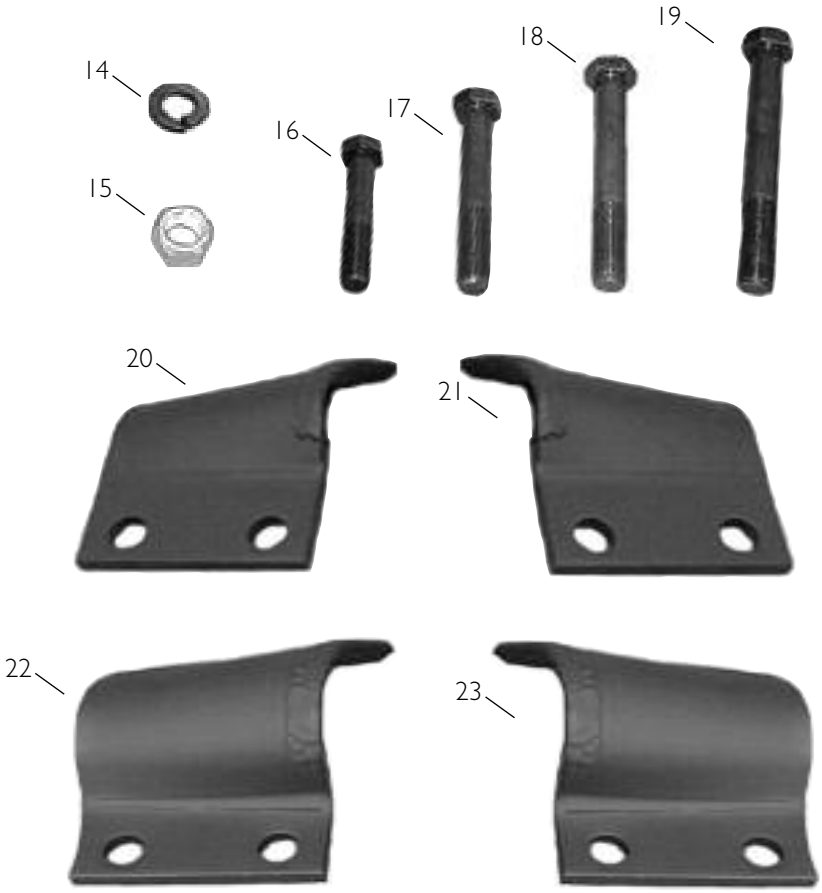

Ref No.	Part No.	Description	Weight (lbs)
14	34 LW	¾'' Lock Washer	
15	34 LN	¾'' Lock Nut	
16	34412-8	¾'' x 4 ½" Gr. 8 Bolt	
17	34500-8	¾'' x 5" Gr. 8 Bolt	
18	34512-8	¾'' x 5½" Gr. 8 Bolt	
19	34600-8	¾'' x 6" Gr. 8 Bolt	
N/S	34 HCCBS	¾'' Bolt Seat for 100MM Cup Cutter	
20	H 180 L	10" Cutter, L.H.	
21	H 180 R	10" Cutter, R.H.	
22	H 290 L	12" Cutter, L.H.	
23	H 290 R	12" Cutter, R.H.	
N/S	H 345 L	14" Cutter, L.H.	
N/S	H 345 R	14" Cutter, R.H.	
N/S	H 400 L	16" Cutter, L.H.	
N/S	H 400 R	16" Cutter, R.H.	

https://truckmanualshub.com/

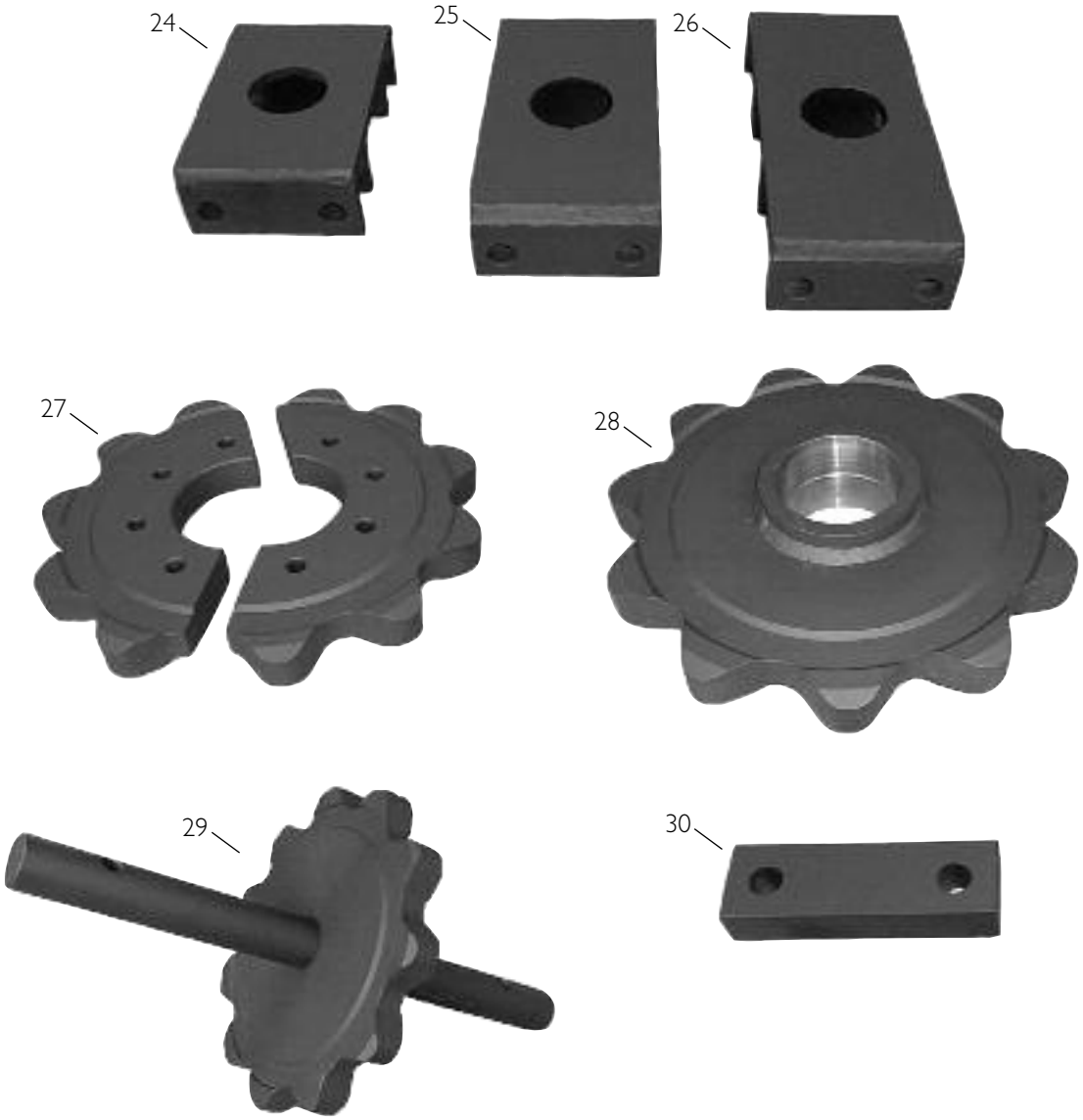

Ref No.	Part No.	Description	Weight (lbs)
24	PL 4115-12	12" Cup Cutter Expander Plate	
25	PL 4115-14	14" Cup Cutter Expander Plate	
26	PL 4115-16	16" Cup Cutter Expander Plate	
N/S	PL 4115-18	18" Cup Cutter Expander Plate	
27	TSDW 40161D	Drive Sprocket (Split)	
28	TSDW 40162I	Idler Sprocket	
N/S	TSDW 40162IA	Idler Sprocket Assembly	
29	TSDW 40163A	Auger Sprocket and Shaft	
30	BL 4086-10	Block Spacer - 2" Additional Cut	

Note: Sprocket conversion required

https://truckmanualshub.com/

Rock & Frost Section

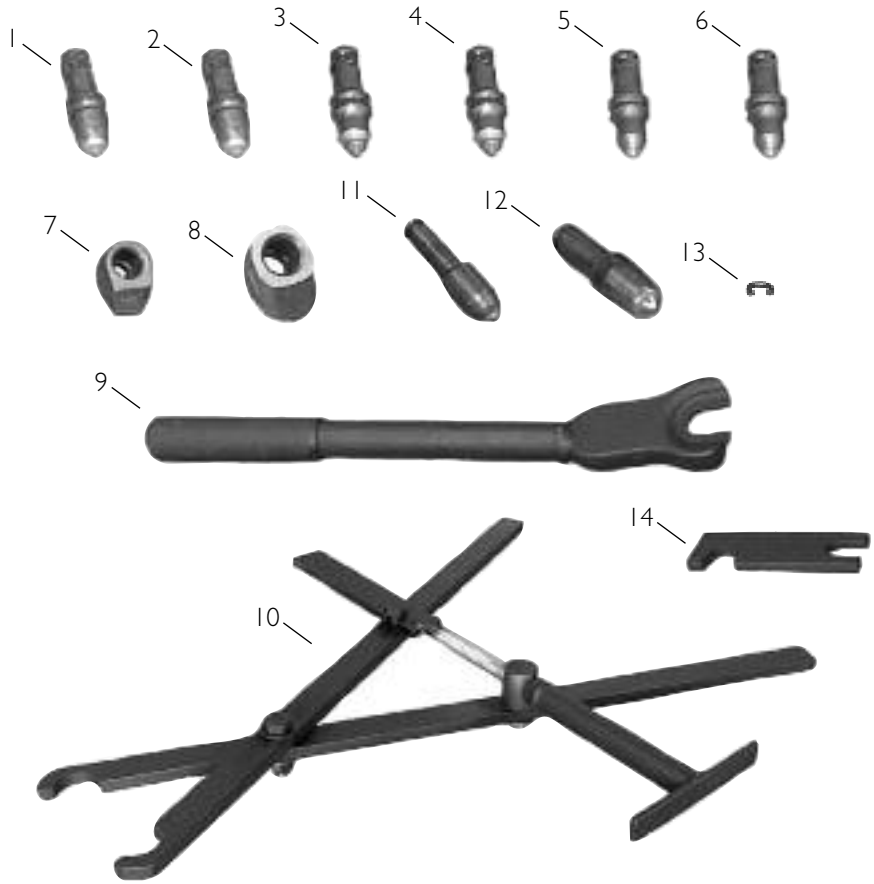

Ref No.	Part No.	Description	Weight (lbs)
1	B56KRB	Carbide Tooth, Rockbuster (.765 HB)	
2	B43KRB	Carbide Tooth, Rockbuster (.735 HB)	
3	B56-B	Carbide Tooth, Full Cap (.765 CB)	
4	B43-B	Carbide Tooth, Full Cap (.735 CB)	
5	B56-C	Carbide Tooth, Half Cap (.765 MB)	
6	B43-C	Carbide Tooth, Half Cap (.735 MB)	
7	CB43-10	Tooth Pockets (.735 BLK)	
8	CB56-10	Tooth Pockets (.765 BLK)	
9	Puller	Tooth Puller (Standard)	
N/S	Puller	Tooth Puller (Large)	
10	N/A	Chain Installer, Small (1.654" through 2")	
N/S	N/A	Chain Installer, Large (3" through 4")	
11	B43LH	Carbide Tooth 1/2 Cap w/clip (.735 MRW)	
12	B43LRB	Carbide Tooth Rockbuster w/Clip (.735 HR)	
13	B43LW	Lock Washers (K 91)	
N/S	C31HD	Carbide Tooth, Rockbuster (.990 HB)	
N/S	C31	Carbide Tooth, Half Cap (.990 MB)	
N/S	.990 CRF	Carbide Tooth, Full Cap with Flared Shoulder	
14	B 43 CW	Clip Wrench	

Note: We have all styles and sizes of Carbide Bits

https://truckmanualshub.com/

BALLANTINE

Trencher, Scrapers, and Horizontal Directional Drilling Parts Specialists

Terminator®, Alligator and Bolt-on Rock & Frost Chain, Teeth & Adapters for Ditch Witch® Walk Along Models Using 1.654" Pitch Chain & Accessories

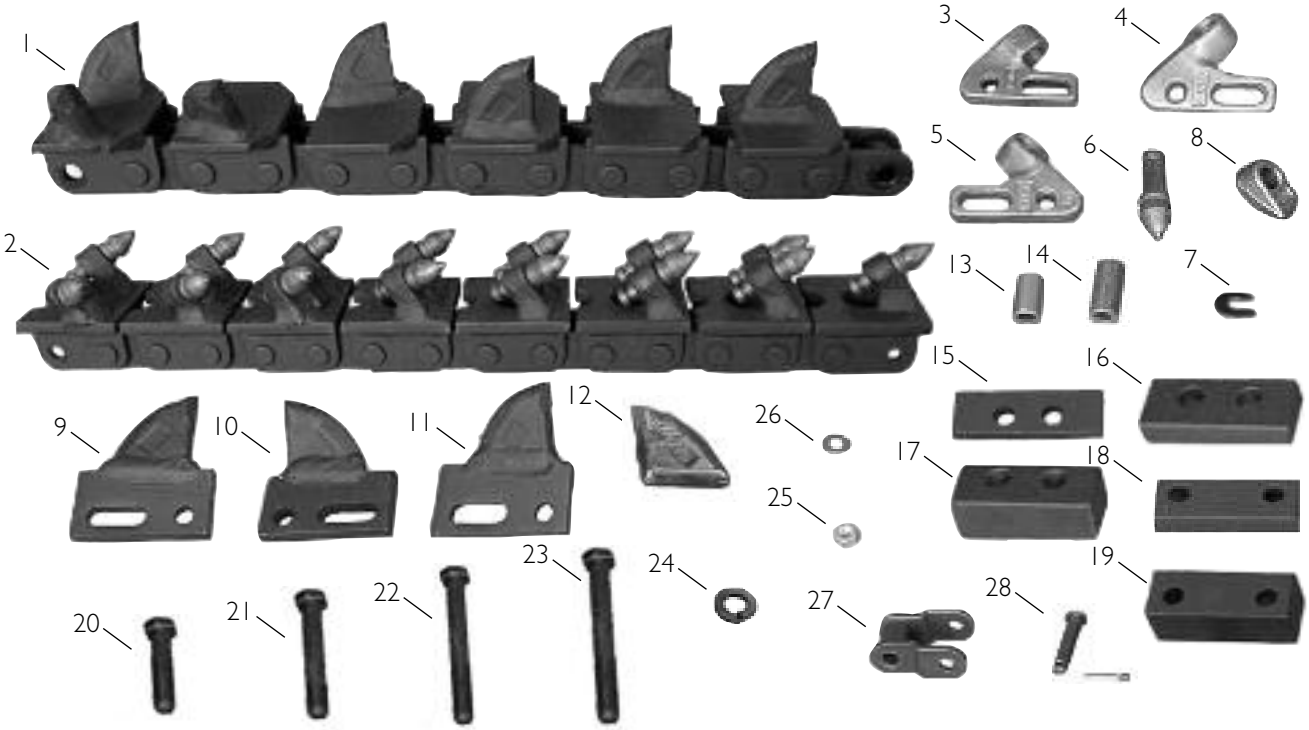

Ref No.	Part No.	Smart Pt. No.	Description	Weight (lbs)
1	N/A	SH16540426	1.654"P Welded Terminator Chain, 4" Cut, 26 Stations	
2	N/A	AL16540426	1.654"P Welded Alligator Chain, 4" Cut, 26 Stations	
3	B 135-316		Bit Adapter Center	.5
4	B 135-317		Bit Adapter L.H.	.5
5	B 135-318		Bit Adapter R.H.	.5
6	B17		Carbide Bit	.2
7	B17-D		Lockwasher	.02
8	B17-10		Tooth Holder	
9	T165404C		Terminator Adapter, Center	.75
10	T165404L		Terminator Adapter, L.H.	.75
11	T165404R		Terminator Adapter, R.H.	.75
12	TT1654		Terminator Tooth Only	.3
13	B 135-319		Tubular Spacer (Used with Bit Adapter on Inside)	
14	B 135-320		Tubular Spacer (Used with Bit Adapter on Outside)	
15	B 135-936		Flat Spacer (⅜") (28,000 Lb. - Chain Only)	
16	B 135-937		5" Flat Spacer (28,000 Lb. Chain Only)	
17	B 135-938		6" Flat Spacer (28,000 Lb. Chain Only)	
18	B 136-027		5" Flat Spacer (34,000 & 38,000 Lb. Chain)	
19	B 136-029		6" Flat Spacer (34,000 & 38,000 Lb. Chain)	
20	B 105-162		Bolt ⅜" x 2¼" Used with Bit Adapter on Inside	
21	B 105-915		Bolt ⅜" x 2¾" Used with Bit Adapter on Outside	
22	B 105-916		Bolt ⅜" x 4½" Used with Spacer for 5" Cut	
23	B 105-917		Bolt ⅜" x 5½" Used with Spacer for 6" Cut	
24	38LW		Lock Washer ⅜"	
25	B 105-047		Locknut ⅜"	
26	B 105-101		Flat Washer ⅜"	
27	B 059-360		Half Link with Connecting Pin (28,000 Lb. Chain Only)	
28	B 135-001		Connector Pin with Keeper (All Chains)	

Note: For additional bare chain components, see walk-along section.

https://truckmanualshub.com/

Terminator®, Alligator and Bolt-on Rock & Frost Chain, Teeth & Adapters (2" Pitch, 50,000 Lb. Test Chain) for Ditch Witch® Models V30, R30, 2300, 2200, 2310, R40, J20, 3500, 3610, 3700, R40, 4500, 4010

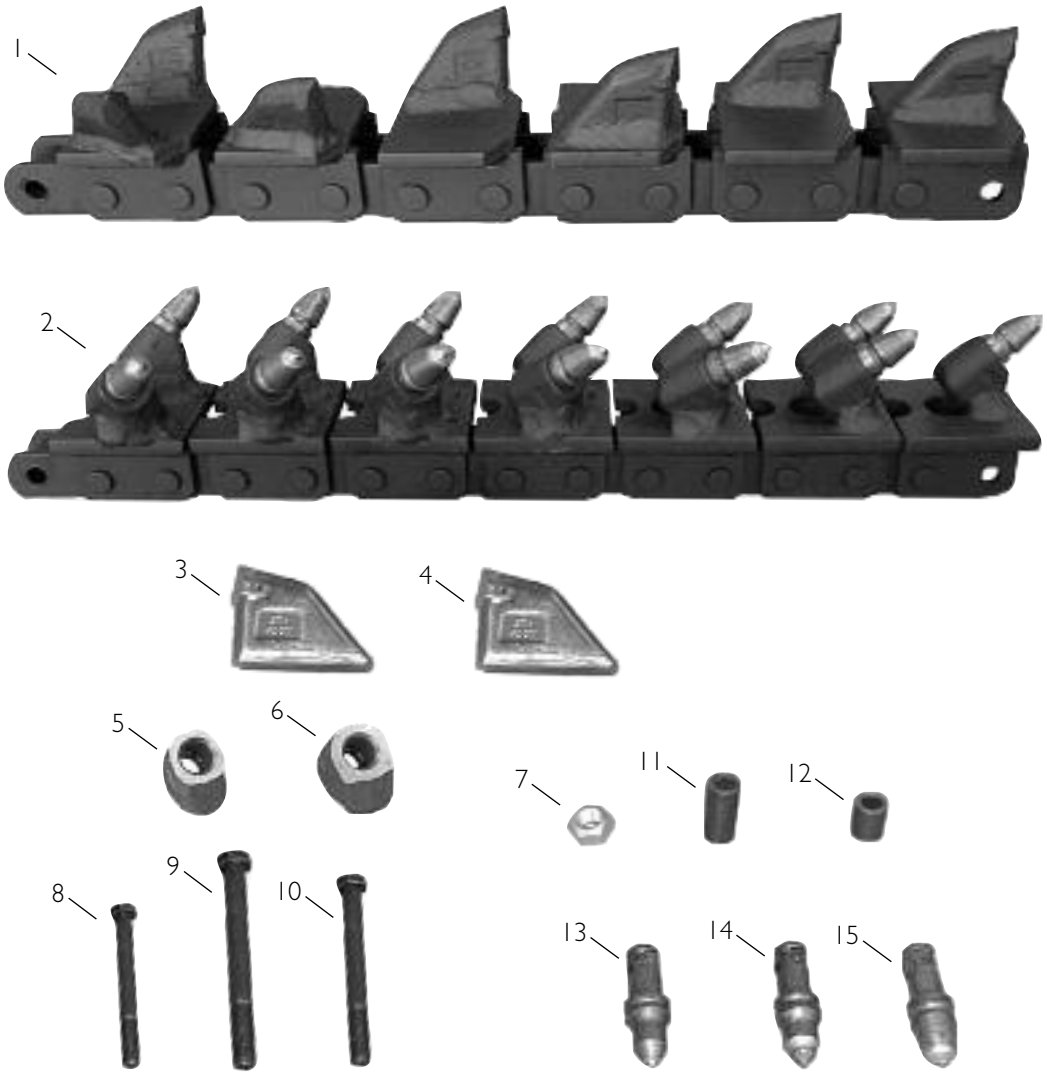

Ref No.	Part No.	Smart Pt. No.	Description	Weight (lbs)
1	N/A	SH20000636	2" P Welded Terminator Chain, 6" Cut, 36 Stations	
2	N/A	AL200006D36	2" P Welded Alligator Chain, 6" Cut, 36 Stations	
3	T 20034		Terminator Tooth, ¾" V-Carbide	.8
4	T 20078		Terminator Tooth, 7/8" V-Carbide	.85
5	765 BLK		Tooth Holder	.8
6	765 HDBLK		Heavy-Duty Tooth Holder	1.0
7	B 105-065		½" Locknut	
8	B 105-076		(½" x 3") Bolt	
9	B 105-110		(½" x 4½") Bolt	
10	B 105-111		(½" x 4") Bolt	
11	B 135-952		Chain Spacer (Used with Bit Adapter on Outside)	
12	B 135-043		Chain Spacer (Used with Bit Adapter on Inside)	
13	B 135-958		Carbide Bit Half Cap (B56-C) (765 MB)	.5
14	B 135-959		Carbide Bit Full Cap (B56-B) (765 CB)	.5
15	B 135-058		Carbide Rockbuster (CB56KRB) (765 HB)	.5

continued on next page

https://truckmanualshub.com/

Terminator®, Alligator and Bolt-on Rock & Frost Chain, Teeth & Adapters (2" Pitch, 50,000 Lb. Test Chain) for Ditch Witch® Models V30, R30, 2300, 2200, 2310, R40, J20, 3500, 3610, 3700, R40, 4500, 4010, continued

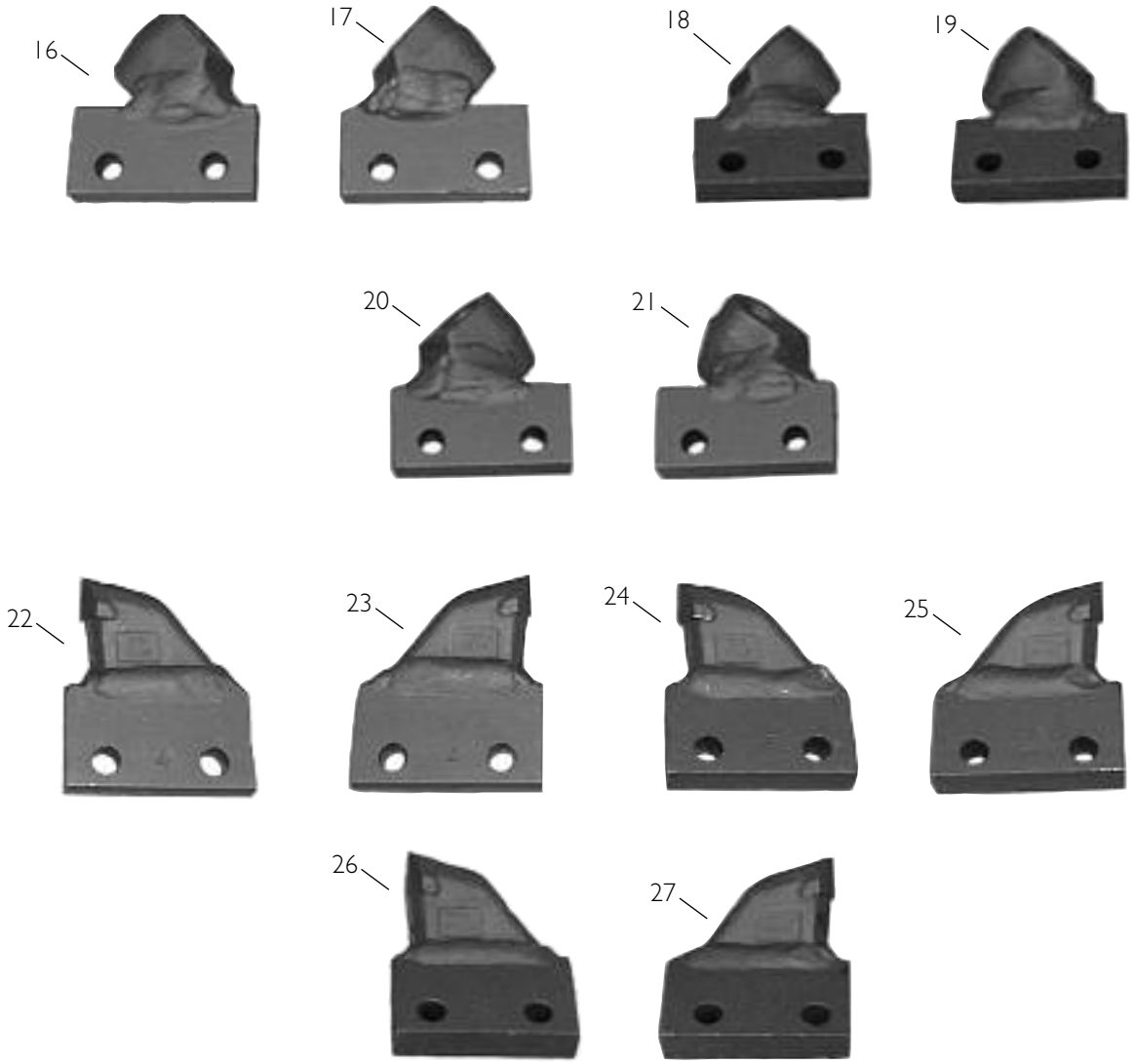

Ref No.	Part No.	Smart Pt. No.	Description	Weight (lbs)
16	B 136-036		Bit Adapter (Less Bit) R.H. Center - Through 4"	2.3
17	B 136-037		Bit Adapter (Less Bit) L.H. Center - Through 4"	2.3
18	B 136-038		Bit Adapter (Less Bit) L.H. 5"	2.3
19	B 136-039		Bit Adapter (Less Bit) R.H. 5"	2.3
20	B 136-041		Bit Adapter (Less Bit) L.H. 6"	2.3
21	B 136-040		Bit Adapter (Less Bit) R.H. 6"	2.3
22	T 20004L		Terminator Adapter, L.H. C-4"	2.3
23	T 20004R		Terminator Adapter, R.H. C-4"	2.3
24	T 20005L		Terminator Adapter, L.H. 5"	2.3
25	T 20005R		Terminator Adapter, R.H. 5"	2.3
26	T 20006L		Terminator Adapter, L.H. 6"	2.3
27	T 20006R		Terminator Adapter, R.H. 6"	2.3
N/S	T 20008L		Terminator Adapter, L.H. 8"	2.3
N/S	T 20008R		Terminator Adapter, R.H. 8"	2.3

Note: For additional bare chain components, see 2" pitch chain section.

https://truckmanualshub.com/

Terminator®, Alligator and Bolt-on Rock & Frost 2" Pitch Anti-Back Flex Chain, Teeth & Adapters for Ditch Witch® Models V30, R30, 2300, 2310, R40, 4010, 5010, 3500, 2200, 3610, 3700, 4500

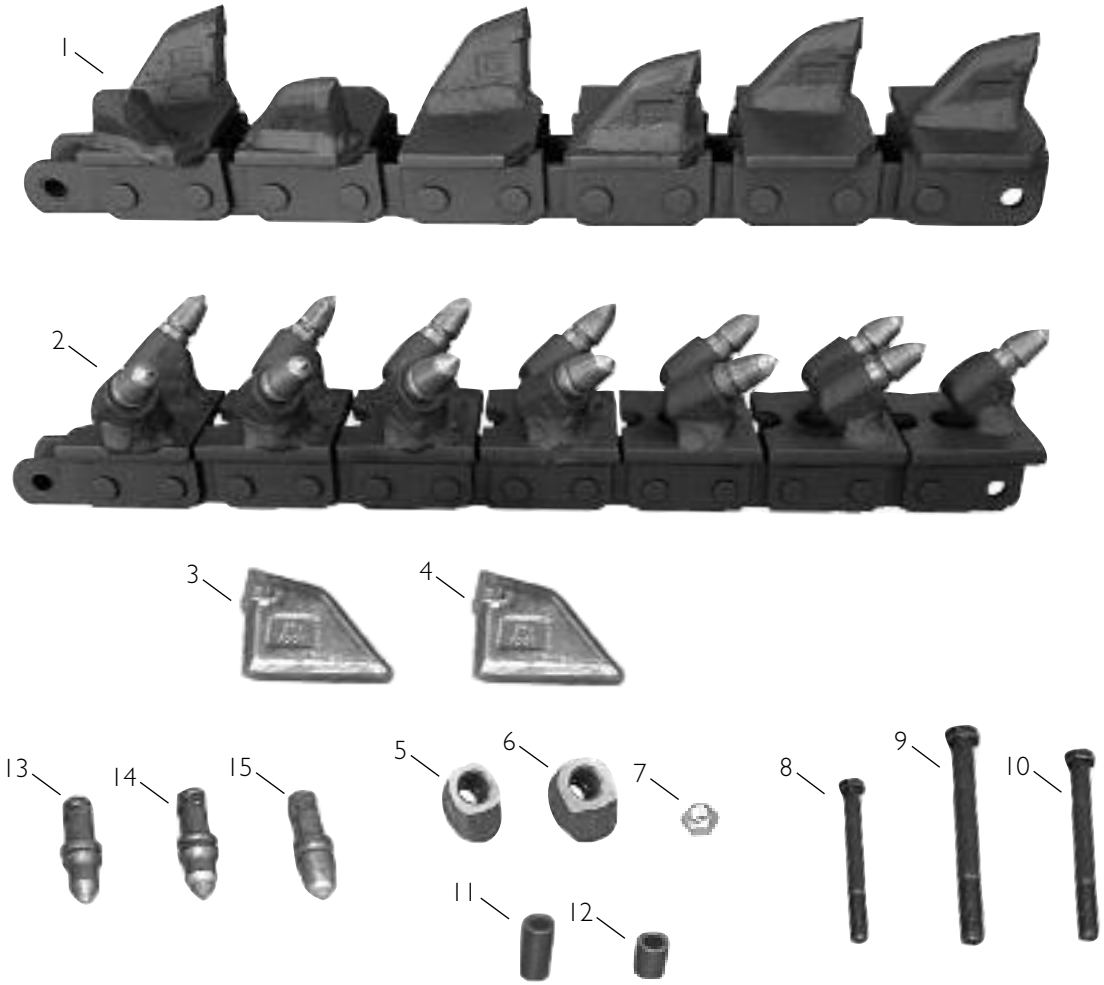

Ref No.	Part No.	Smart Pt. No.	Description	Weight (lbs)
1	N/A	SH20000636	2" P Welded Terminator Chain, 6" Cut, 36 Stations	
2	N/A	AL200006D36	2" P Welded Alligator Chain, 6" Cut, 36 Stations	
3	T 20034		Terminator Tooth, ¾"V-Carbide	.8
4	T 20078		Terminator Tooth, 7/8"V-Carbide	.85
5	765 BLK		Tooth Holder	.8
6	765 HDBLK		Heavy-Duty Tooth Holder	1.0
7	B 105-065		½" Locknut	
8	B 105-076		(½" x 3") Bolt	
9	B 105-110		(½" x 4½") Bolt	
10	B 105-111		(½" x 4") Bolt	
11	B 135-952		Chain Spacer (Used with Bit Adapter on Outside)	
12	B 135-043		Chain Spacer (Used with Bit Adapter on Inside)	
13	B 135-958		Carbide Bit Half Cap (B56-C) (765 MB)	.5
14	B 135-959		Carbide Bit Full Cap (B56-B) (765 CB)	.5
15	B 135-058		Carbide Rockbuster (CB56KRB) (765 HB)	.5

continued on next page

https://truckmanualshub.com/

Terminator®, Alligator and Bolt-on Rock & Frost 2" Pitch Anti-Back Flex Chain, Teeth & Adapters for Ditch Witch® Models V30, R30, 2300, 2310, R40, 4010, 5010, 3500, 2200, 3610, 3700, 4500, continued

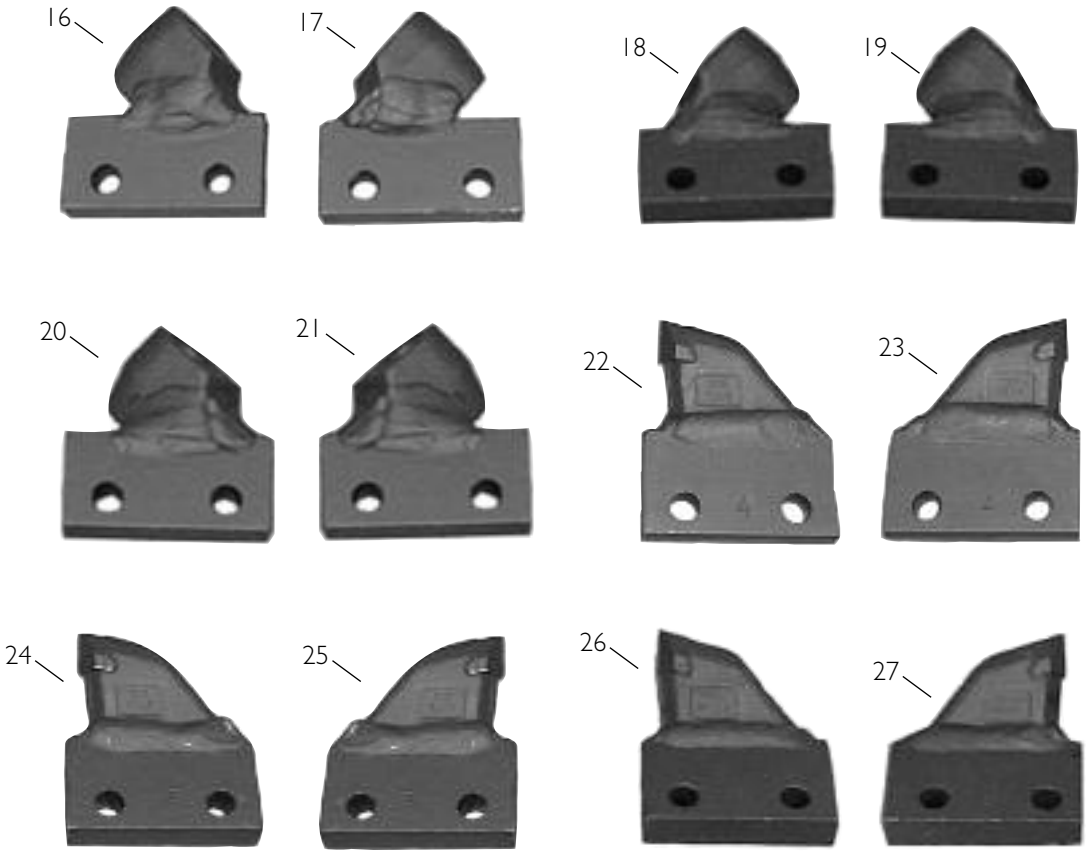

Ref No.	Part No.	Description	Weight (lbs)
16	B 136-036	Bit Adapter (Less Bit) R.H. Center - Through 4"	2.3
17	B 136-037	Bit Adapter (Less Bit) L.H. Center - Through 4"	2.3
18	B 136-038	Bit Adapter (Less Bit) L.H. 5"	2.3
19	B 136-039	Bit Adapter (Less Bit) R.H. 5"	2.3
20	B 136-040	Bit Adapter (Less Bit) R.H. 6"	2.3
21	B 136-041	Bit Adapter (Less Bit) L.H. 6"	2.3
22	T 20004L	Terminator Adapter, L.H. C-4"	2.3
23	T 20004R	Terminator Adapter, R.H. C-4"	2.3
24	T 20005L	Terminator Adapter, L.H. 5"	2.3
25	T 20005R	Terminator Adapter, R.H. 5"	2.3
26	T 20006L	Terminator Adapter, L.H. 6"	2.3
27	T 20006R	Terminator Adapter, R.H. 6"	2.3
N/S	T 20008L	Terminator Adapter, L.H. 8"	2.3
N/S	T 20008R	Terminator Adapter, R.H. 8"	2.3

Note: For additional bare chain components, see 2" pitch ABF chain section.

https://truckmanualshub.com/

Terminator®, Alligator and Bolt-on Rock & Frost Chain, Teeth & Adapters for Ditch Witch® Models R60, R65, R6510, R40, 4010, 5010, 7510, 7610, 8020 Using 3.067"P Chain

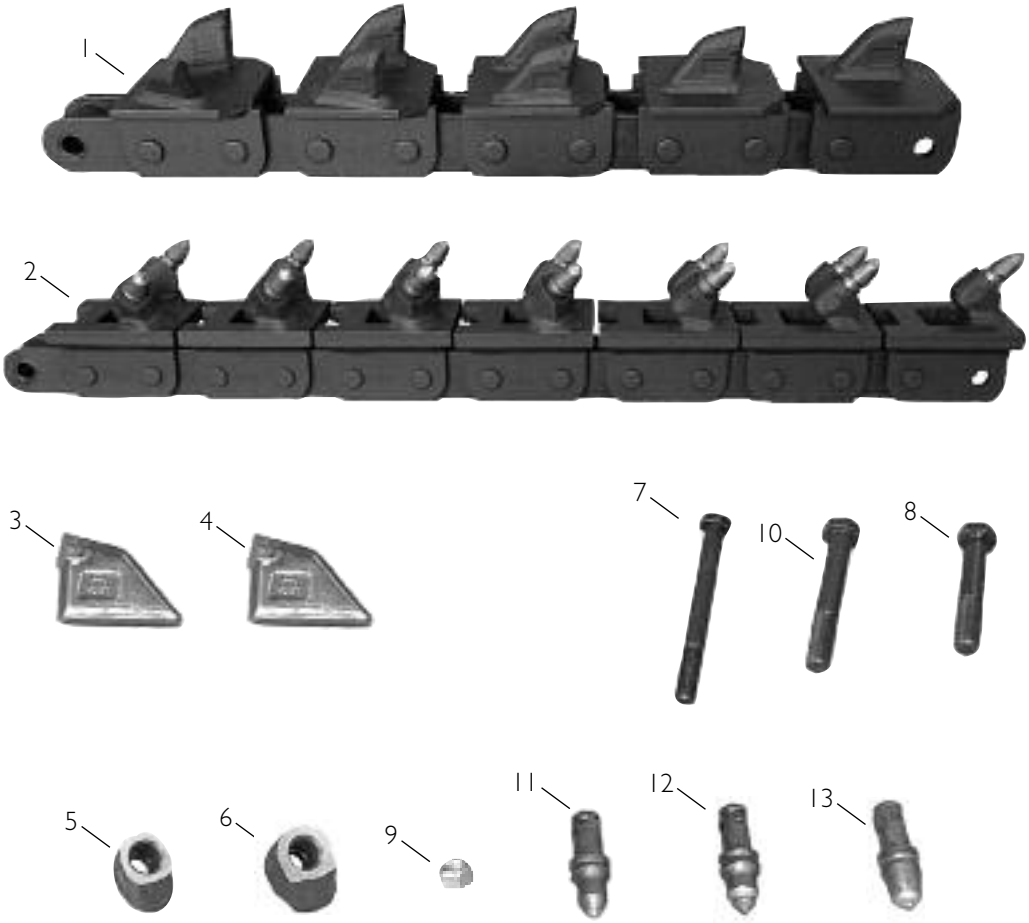

Ref No.	Part No.	Smart Pt. No.	Description	Weight (lbs)
1	N/A	SH3067HD0632	3"P, 110,000 Lb. Welded Terminator Chain, 6" Cut, 32 Sta.	
2	N/A	AL30670632	3"P, 110,000 Lb. Welded Alligator Chain, 6" Cut, 32 Sta.	
3	T 20034		Terminator Tooth, ¾" V-Carbide	.8
4	T 20078		Terminator Tooth, ⅞" V-Carbide	.85
5	765 BLK		Tooth Holder	.8
6	765 HDBLK		Heavy Duty Tooth Holder	1.
7	B 105-322		Bolt (¾" x 5½")	
8	B 105-365		Bolt (¾" x 4")	
9	B 105-372		Locknut (¾")	
10	B 105-111		Bolt (¾" x 4½")	
11	B 135-958		Carbide Bit Half Cap (B56-C) (765 MB)	
12	B 135-959		Carbide Bit Full Cap (B56-B) (765 CB)	
13	B 135-058		Carbide Bit Rockbuster (CB56KRB) (765 HB)	

continued on next page

https://truckmanualshub.com/

Terminator®, Alligator and Bolt-on Rock & Frost Chain, Teeth & Adapters for Ditch Witch® Models R60, R65, R6510, R40, 4010, 5010, 7510, 7610, 8020 Using 3.067"P Chain, continued

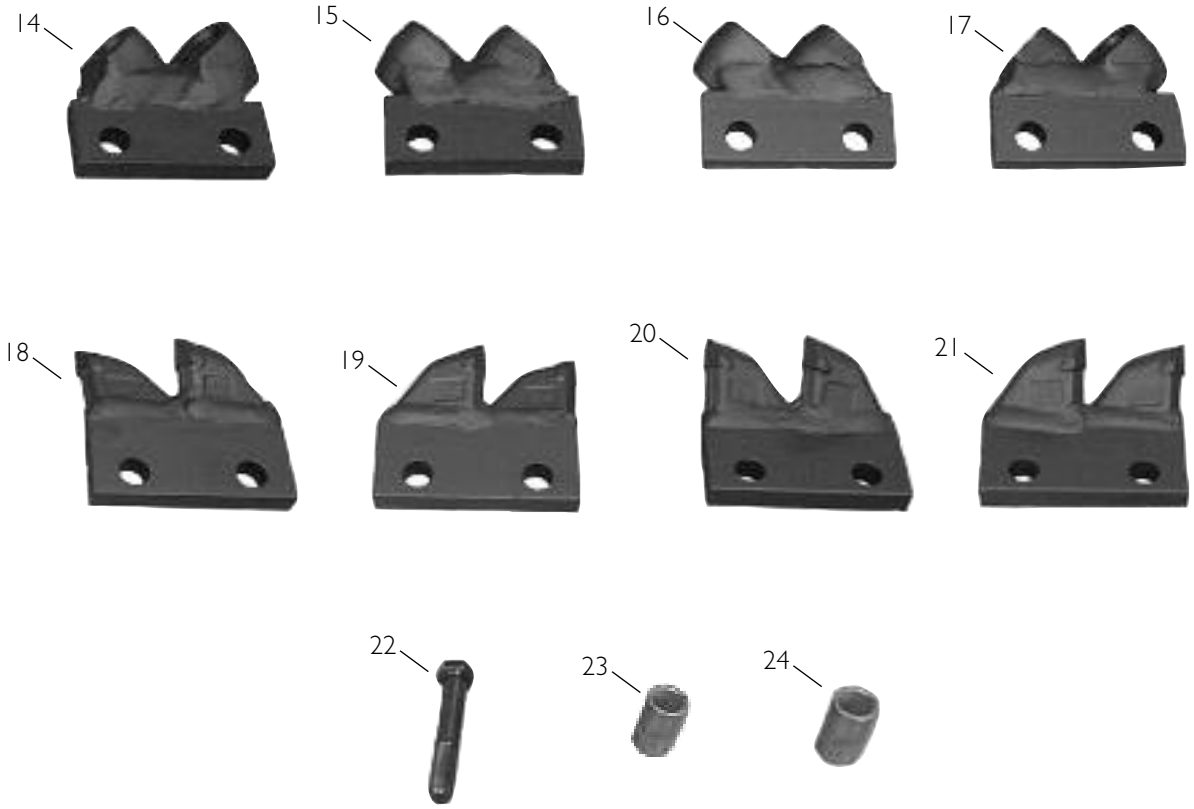

Ref No.	Part No.	Description	Weight (lbs)
14	B 135-973	Bit Adapter (Less Teeth) L.H. 8" Cut	
15	B 135-974	Bit Adapter (Less Teeth) R.H. 8" Cut	
16	B 135-975	Bit Adapter (Less Teeth) R.H. cc - 6"	
17	B 135-976	Bit Adapter (Less Teeth) L.H. cc - 6"	
18	T 306706L	Terminator Adapter, L.H. 6"	
19	T 306706R	Terminator Adapter, R.H. 6"	
20	T 306708L	Terminator Adapter, L.H. 8"	
21	T 306708R	Terminator Adapter, R.H. 8"	
22	B 105-373	Bolt (¾" x 5")	
23	B 135-977	Chain Spacer, Outside (110,000 Lb.)	
24	B 135-978	Chain Spacer, Inside (110,000 Lb.)	
N/S	B 135-979	Chain Spacer, Outside (70,000 Lb.)	
N/S	B 135-980	Chain Spacer, Inside (70,000 Lb.)	

Note: For additional bare chain components, see pages 42 and 43.

https://truckmanualshub.com/

BALLANTINE

Trencher, Scrapers, and Horizontal Directional Drilling Parts Specialists

Terminator®, Alligator and Bolt-on Rock & Frost 3.067" Pitch Anti-Back Flex Chain, Teeth & Adapters for Ditch Witch® Models R60, R65, R6510, R40, 4010, 5010, 7510, 7610, 8020 & Attachments A/H500, A/H700

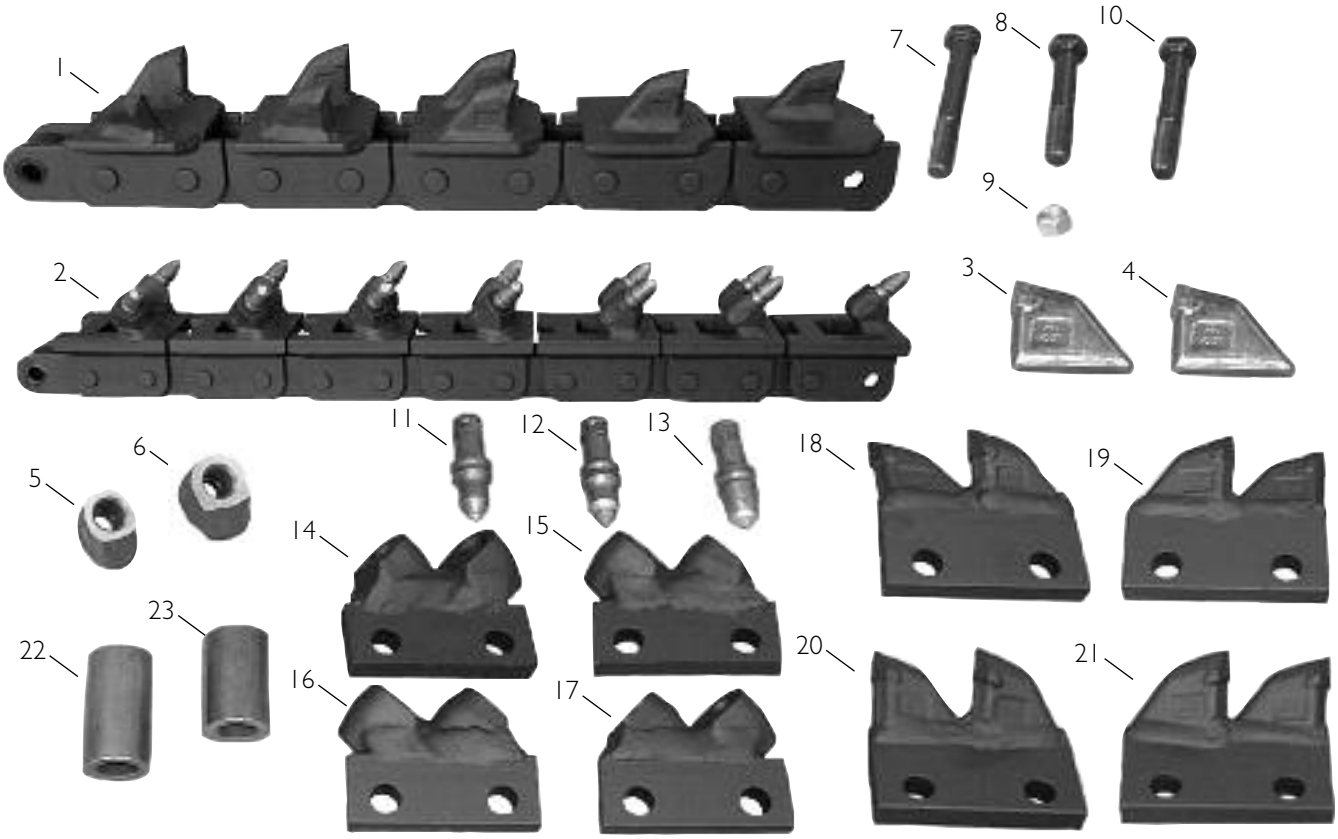

Ref No.	Part No.	Smart Pt. No.	Description	Weight (lbs)
1	N/A	SH3067ABF06D32	ABF, 110,000# Welded Terminator, 6" Cut, 32 Stations	
2	N/A	AL3067ABF06D32	ABF, 110,000# Welded Alligator, 6" Cut, 32 Stations	
3	T 20034		Terminator Tooth, ¾" V-Carbide	.8
4	T 20078		Terminator Tooth, ⅞" V-Carbide	.85
5	765 BLK		Tooth Holder	.8
6	765 HDBLK		Heavy Duty Tooth Holder	1.
7	B 105-322		Bolt (¾" x 5½") Used with Two Outside Bit Adapters	
8	B 105-365		Bolt (¾" x 4") Used with Inside Bit Adapter	
9	B 105-372		Locknut (¾")	
10	B 105-373		Bolt (¾" x 5") Used with Outside Bit Adapter	
11	B 135-958		Carbide Bit Half Cap (B56-C) (765 MB)	
12	B 135-959		Carbide Bit Full Cap (B56-B) (765 CB)	
13	B 135-058		Carbide Rockbuster (CB56KRB) (765 HB)	
14	B 135-973		Bit Adapter L.H. 8"	
15	B 135-974		Bit Adapter R.H. 8"	
16	B 135-975		Bit Adapter R.H. Center through 6" Cut	
17	B 135-976		Bit Adapter L.H. Center through 6" Cut	
18	T 306706L		Terminator Adapter, L.H. 6"	
19	T 306706R		Terminator Adapter, R.H. 6"	
20	T 306708L		Terminator Adapter, L.H. 8"	
21	T 306708R		Terminator Adapter, R.H. 8"	
22	B 135-977		Chain Spacer (Used with Bit Adapter on Outside)	
23	B 135-978		Chain Spacer (Used with Bit Adapter on Inside)	

Note: For additional bare chain components, see page 44.

https://truckmanualshub.com/

H-Plate, Terminator®, and Bolt-on Rock & Frost Chain, Teeth and Adapters for TA3110 Ultra Heavy-Duty Chain (165,000# Test Chain) Replaces all 3"P Chains

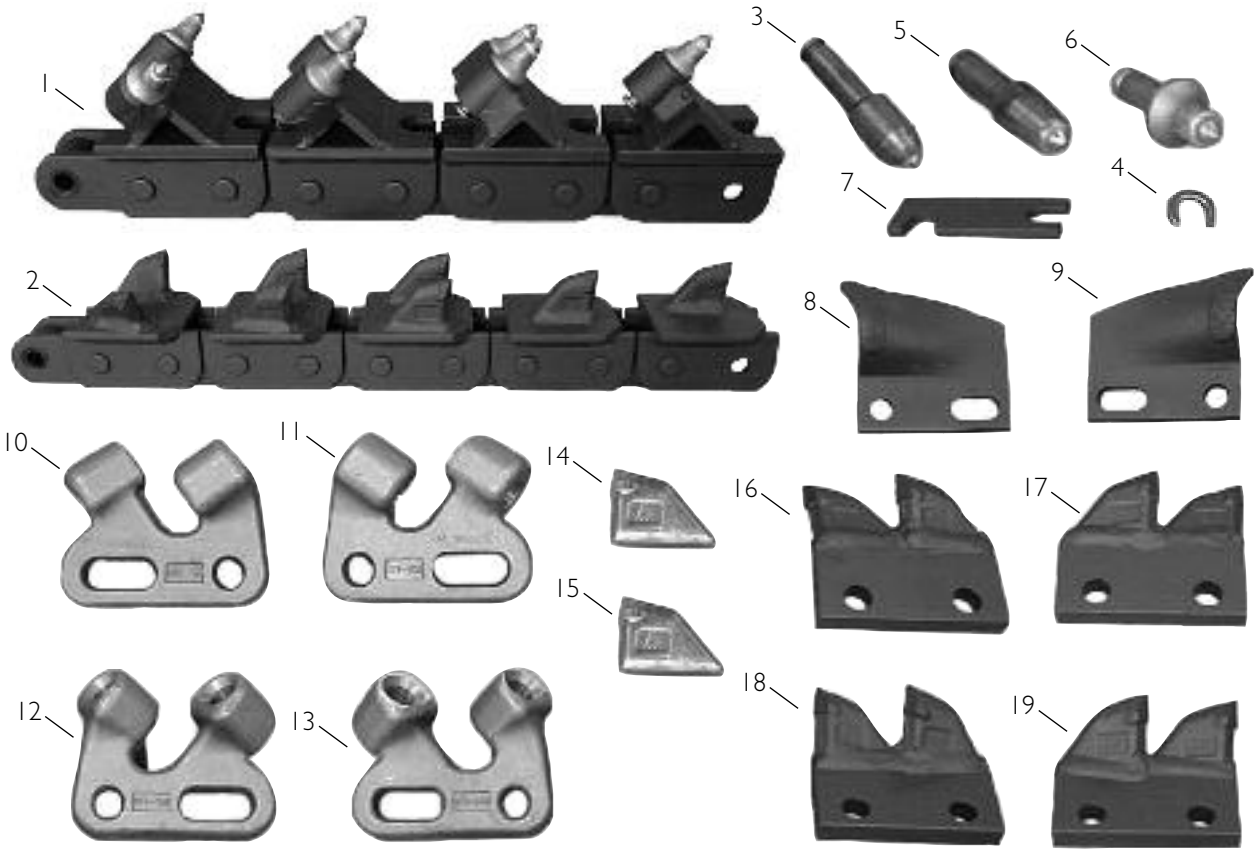

Ref No.	Part No.	Smart Pt. No.	Description	Weight (lbs)
1	N/A	TA31006H32	Welded H-Plate Chain, 6" Cut, 32 Stations	
2	N/A	SH31100632	Welded Terminator Chain, 6" Cut, 32 Stations	
3	B 43 LH		Carbide Tooth with clip (735MRW)	
4	B 43 LC		Lock Clip Only (K91)	
5	B 43 LRB		Rockbuster Bit with clip	
6	765 CRFN		Full Cap Carbide Bit with clip	
7	B 43 CW		Clip Wrench	
8	TA 4134 LPL		Cutter, L.H., Low-profile	
9	TA 4134 LPR		Cutter, R.H., Low-profile	
10	H 75-6L		Carbide Holder, L.H. 6"	
11	H 75-6R		Carbide Holder, R.H. 6"	
12	H 75-8L		Carbide Holder, L.H. 8"	
13	H 75-8R		Carbide Holder, R.H. 8"	
14	T 20034		Terminator Tooth, ¾" V-Carbide	.8
15	T 20078		Terminator Tooth, ⅞" V-Carbide	.85
16	T 306706L		Terminator Adapter, L.H. 6"	
17	T 306706R		Terminator Adapter, R.H. 6"	
18	T 306708L		Terminator Adapter, L.H. 8"	
19	T 306708R		Terminator Adapter, R.H. 8"	

Note: For additional bare chain components, see page 49.

continued on next page

https://truckmanualshub.com/

H-Plate, Terminator®, and Bolt-on Rock & Frost Chain, Teeth and Adapters for TA3110 Ultra Heavy-Duty Chain (165,000# Test Chain) Replaces all 3"P Chains, continued

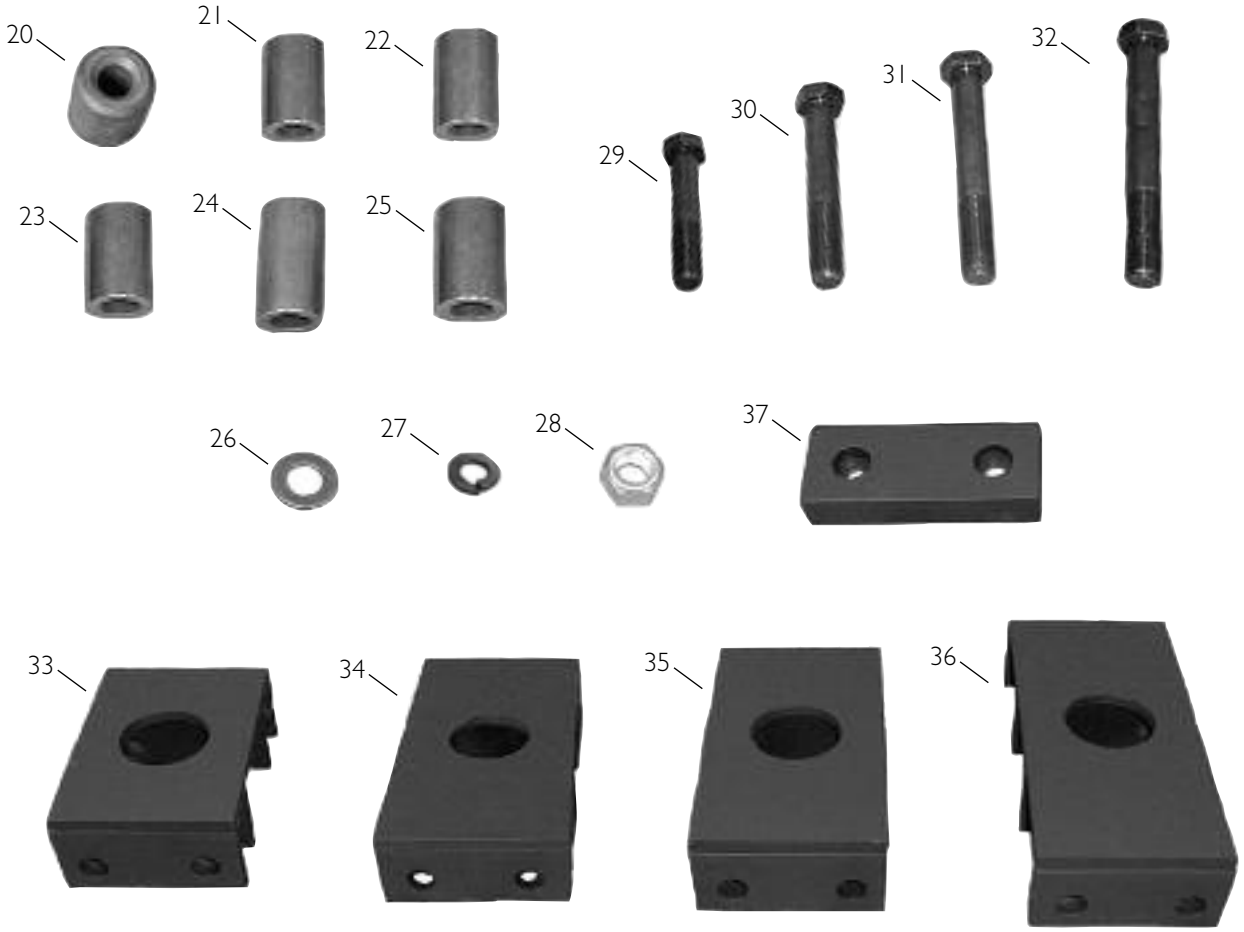

Ref No.	Part No.	Description	Weight (lbs)
20	TP 17	Heat Treated Tooth Pocket	
21	SP 1916	1 9/16" Alloy Tube Spacer	
22	SP 178	1 7/8" Alloy Tube Spacer	
23	SP 200	2" Alloy Tube Spacer	
24	SP 238	2 3/8" Alloy Tube Spacer	
25	SP 218	2 1/8" Alloy Tube Spacer	
26	34 FW	3/4" Flat Washer	
27	34 LW	3/4" Lock Washer	
28	34 LN	3/4" Lock Nut	
29	34412-8	3/4" x 4 1/2" Gr. 8 Bolt	
30	34500-8	3/4" x 5" Gr. 8 Bolt	
31	34512-8	3/4" x 5 1/2" Gr. 8 Bolt	
32	34600-8	3/4" x 6" Gr. 8 Bolt	
33	PL 75-10	10" Carbide Expander	
34	PL 75-12	12" Carbide Expander	
35	PL 75-14	14" Carbide Expander	
36	PL 75-16	16" Carbide Expander	
37	BL 3110-10	Block Spacer - Space for 2" Additional Cut	

https://truckmanualshub.com/

BALLANTINE

Trencher, Scrapers, and Horizontal Directional Drilling Parts Specialists

Alligator and Bolt-on Rock & Frost Chain, Teeth & Adapters (4½" Pitch 150,000# Test Chain) for Ditch Witch® Models R100, AR12, R150

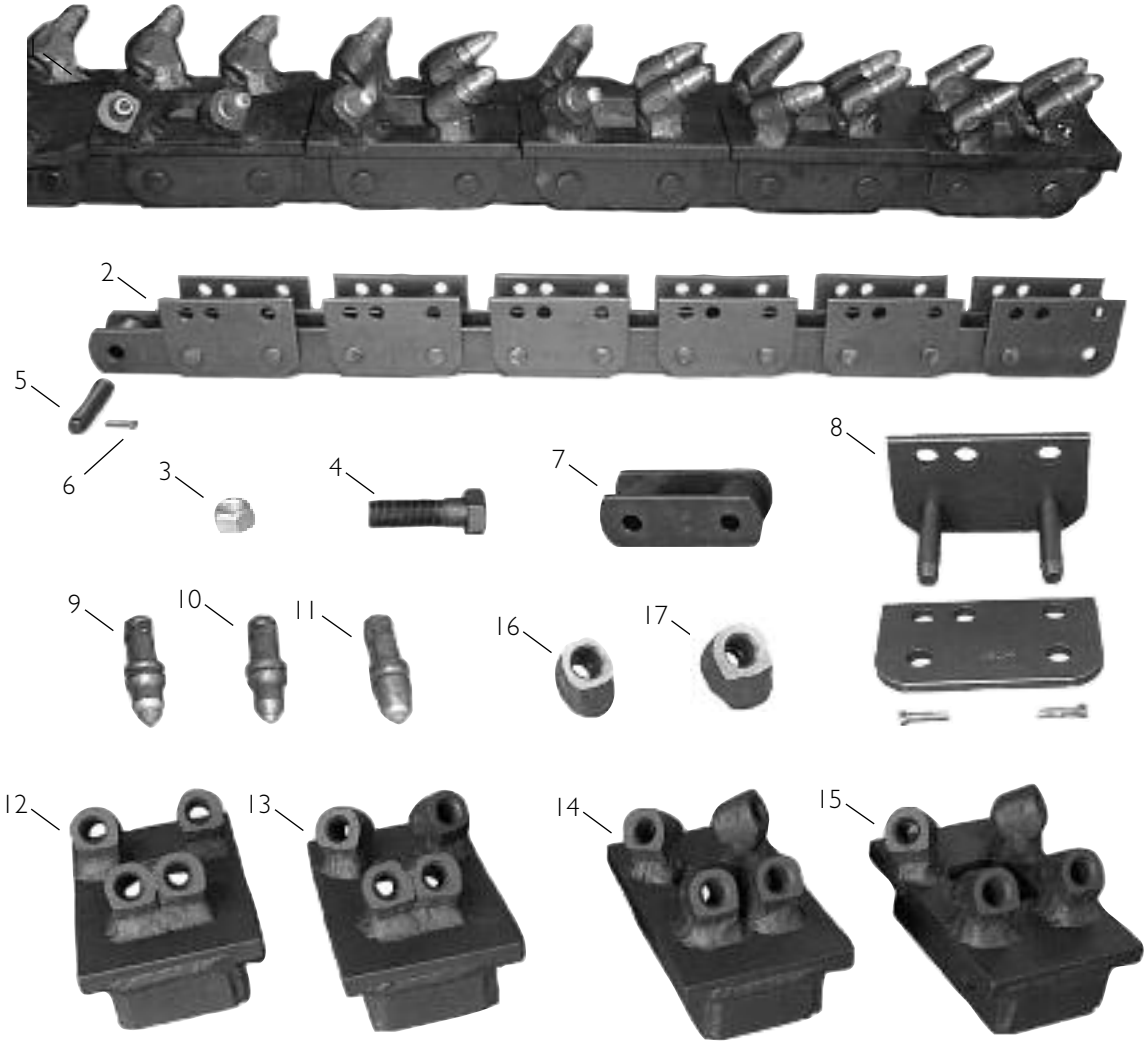

Ref No.	Part No.	Smart Pt. No.	Description	Weight (lbs)
1	N/A	AL450008D24	Welded Alligator Chain, 8'' Cut, 24 Stations	
2	B 135-812	B450000B24	18'0" Chain, Bare	360
3	B 105-372		Locknut (¾" N.C.)	
4	B 105-499		Bolt (¾" x 1¾")	
5	B 135-801		Chain Pin	
6	B 135-802		Key	
7	B 135-805		Roller Link	
8	R 100CL		Conn. Link	
9	B 136-100		Carbide Bit (Full Cap) (765 CB)	
10	B 136-101		Carbide Bit (Half Cap) (765 MB)	
11	B 136-102		Carbide Bit (Rock Buster) (765 HB)	
12	B 136-060		Bit Adapter (Position 1)	
13	B 136-061		Bit Adapter (Position 2)	
14	B 136-062		Bit Adapter (Position 3)	
15	B 136-063		Bit Adapter (Position 4)	
16	765 BLK		Tooth Holder	.8
17	765 HDBLK		Heavy Duty Tooth Holder	1.0

Note: MTO adapters can be manufactured upon request.

https://truckmanualshub.com/

H-Plate, Terminator® and Bolt-on Rock & Frost Chain, Teeth and Adapters for Ditch Witch® Models R100, AR12, R150 using TA4086 Chain (225,000# Test) replaces 4.5" 150,000 Chains

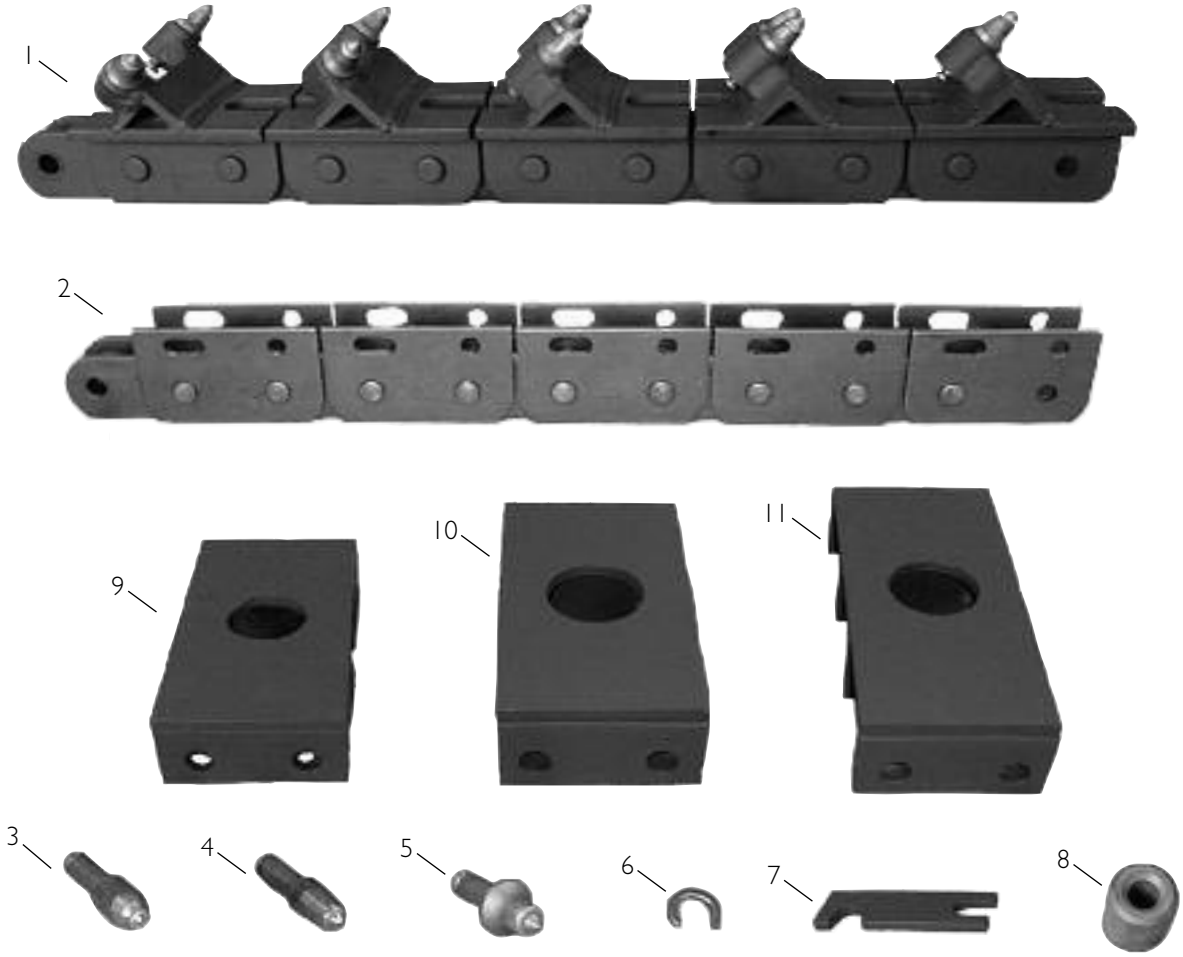

Ref No.	Part No.	Smart Pt. No.	Description	Weight (lbs)
1	N/A	TA408608H26	4.086"P Welded H-Plate Chain, 8" Cut, 26 Stations	
2	N/A	TA408600B26	4.086"P Chain, Bare, 26 Stations	
3	B 43 LH		Carbide Tooth with clip (735 MRW)	
4	B 43 LRB		Carbide Tooth with clip (735 HR)	
5	765 CRFN		Carbide Tooth with clip (Full Cap)	
6	B 43 LC		Lock Clip Only (K91)	
7	B 43 CW		Clip Wrench	
8	TP 17		Heat Treated Tooth Pocket	
9	PL 75-12		12" Carbide Expander Plate	
10	PL 75-14		14" Carbide Expander Plate	
11	PL 75-16		16" Carbide Expander Plate	
N/S	PL 75-18		18" Carbide Expander Plate	
N/S	H 300-10L		Carbide Holder 10" Cut, L.H.	
N/S	H 300-10R		Carbide Holder 10" Cut, R.H.	
N/S	H 300-12L		Carbide Holder 12" Cut, L.H.	
N/S	H 300-12R		Carbide Holder 12" Cut, R.H.	

Note: For additional bare chain components, see pages 54 & 55.

continued on next page

https://truckmanualshub.com/

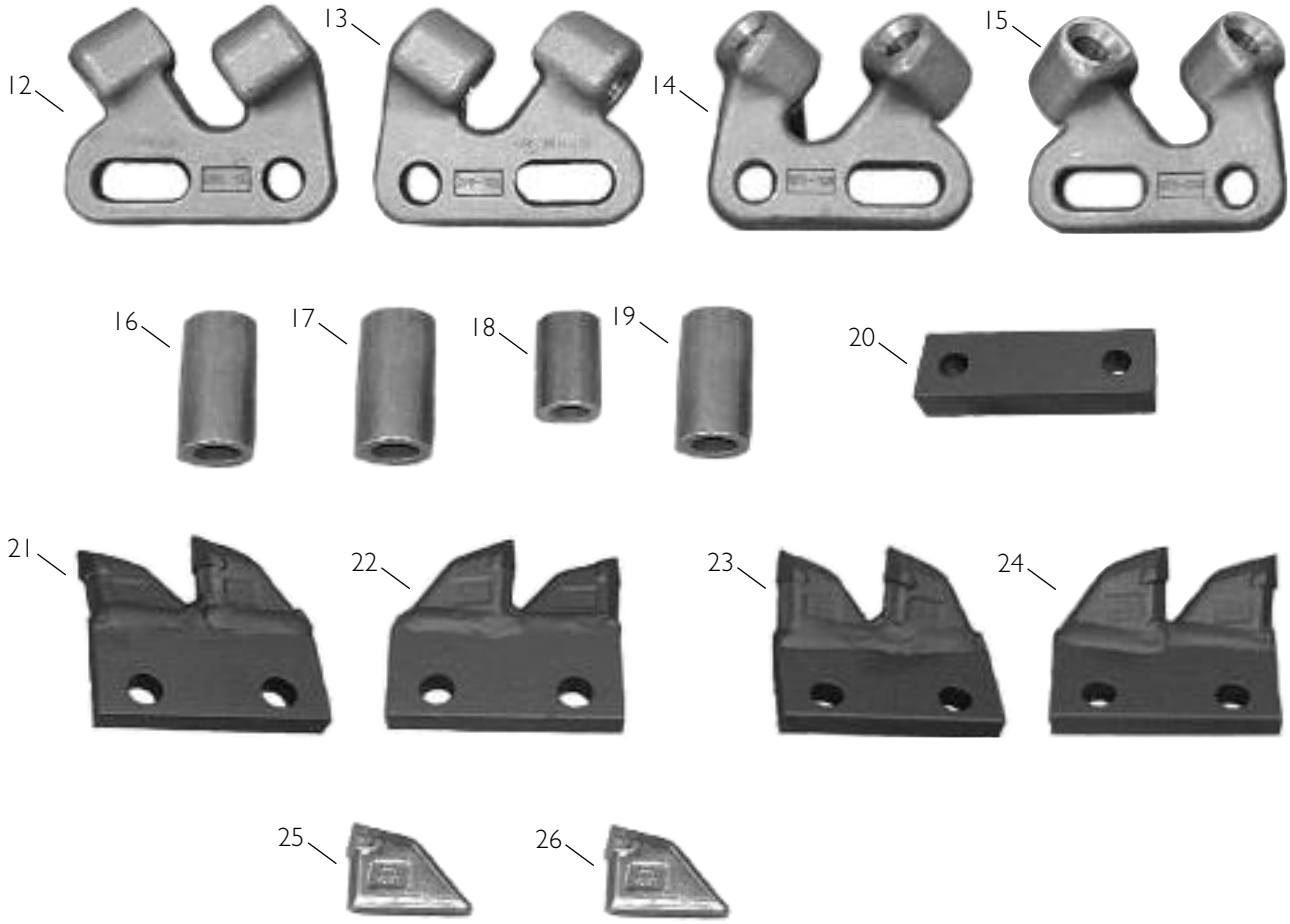

Ref No.	Part No.	Description	Weight (lbs)
12	H 75-6L	Carbide Holder, L.H. 6"	
13	H 75-6R	Carbide Holder, R.H. 6"	
14	H 75-8L	Carbide Holder, L.H. 8"	
15	H 75-8R	Carbide Holder, R.H. 8"	
16	SP 2716	2 7/16" Alloy Tube Spacer	
17	SP 238	2 3/8" Alloy Tube Spacer	
18	SP 11516	1 15/16" Alloy Tube Spacer	
19	SP 2116	2 1/16" Alloy Tube Spacer	
20	BL 4086-10	Block Spacer – Spacer for 2" Additional Cut	
21	T 306706L	Terminator Adapter, L.H. 6"	
22	T 306706R	Terminator Adapter, R.H. 6"	
23	T 306708L	Terminator Adapter, L.H. 8"	
24	T 306708R	Terminator Adapter, R.H. 8"	
25	T 20034	Terminator Tooth, 3/4" V-Carbide	.8
26	T 20078	Terminator Tooth, 7/8" V-Carbide	.85

continued on next page

https://truckmanualshub.com/

H-Plate, Terminator® and Bolt-on Rock & Frost Chain, Teeth and Adapters for Ditch Witch® Models R100, AR12, R150 using TA4086 Chain (225,000# Test) replaces 4.5" 150,000 Chains, continued

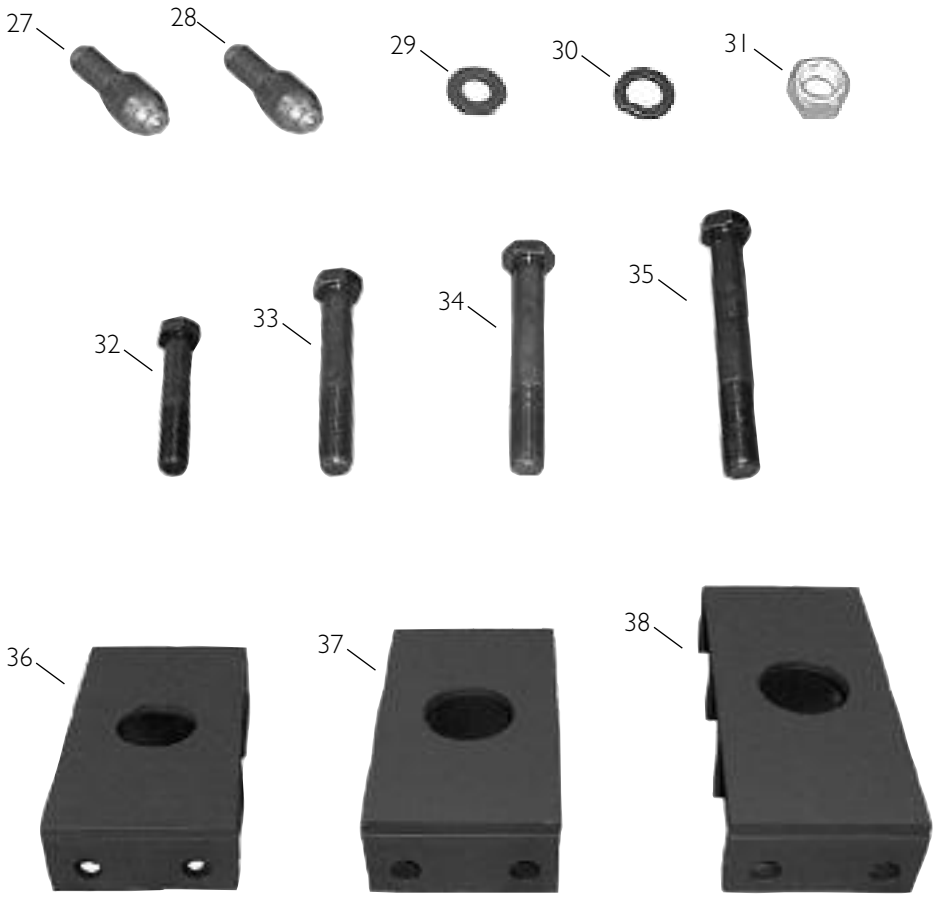

Ref No.	Part No.	Description	Weight (lbs)
27	B 83 LH	Carbide Tooth with clip	
28	B 83 LC	Lock Clip	
29	34 FW	¾" Flat Washer	
30	34 LW	¾" Lock Washer	
31	34 LN	¾" Lock Nut	
32	34412-8	¾" x 4½" Gr. 8 Bolt	
33	34500-8	¾" x 5" Gr. 8 Bolt	
34	34512-8	¾" x 5½" Gr. 8 Bolt	
35	34600-8	¾" x 6" Gr. 8 Bolt	
N/S	34 TABS	¾" Bolt Seat for TA300 Holder	
36	PL 300-16	16" Carbide Expander Plate	
37	PL 300-18	18" Carbide Expander Plate	
38	PL 300-20	20" Carbide Expander Plate	
N/S	PL 300-22	22" Carbide Expander Plate	
N/S	PL 300-24	24" Carbide Expander Plate	

https://truckmanualshub.com/

Warning

Use Care To Prevent Injury Comply with the Following to Avoid Serious Personal Injury

1. Guards must be provided on all chain and sprocket installations in accordance with provisions of ANSI/ASME B15.1 - 1996 “Safety Standards for Mechanical Power Transmission Apparatus,” and ANSI/ASME B20.1 - 1996 “Safety Standards for Conveyors and Related Equipment,” or other applicable safety standards. When revisions of these standards are published, the updated edition shall apply.

2. Always lock out power switch before installing, removing, lubricating or servicing a chain system.

3. When connecting or disconnecting chain:
   a. Eye protection is required. Wear safety glasses, protective clothing, gloves, and safety shoes.

   b. Support the chain to prevent uncontrolled movement of chain and parts.

   c. Use of pressing equipment is recommended. Tools must be in good condition and properly used.

   d. Determine correct direction for pin/rivet removal or insertion.

https://truckmanualshub.com/

Part No.T01101 REV9/13

©Ballantine, Inc. 2013
All Rights Reserved