https://truckmanualshub.com/

Lightning Series
TRTS0580

January 2008

FRLO-14410C-T2
FRLO-15410C
FRLO-15410C-T2
FRLO-16410C
FRLO-16410C-T2
FRLOF-14410C
FRLOF-14410C-T2
FRLOF-15410C
FRLOF-15410C-T2
FRLOF-16410C
FRLOF-16410C-T2

EATON
Powering Business Worldwide

BACKED BY
Roadranger
SUPPORT

https://truckmanualshub.com/

For parts or service call us
Pro Gear & Transmission, Inc.

1 (877) 776-4600

(407) 872-1901

parts@eprogear.com

906 W. Gore St.

Orlando, FL 32805

General Warnings

Before starting a vehicle:

1. Sit in driver's seat
2. Place shift lever in neutral
3. Set the parking brake

Before working on a vehicle or leaving the cab with engine running:

1. Place shift lever in neutral
2. Set parking brake
3. Block wheels

Do not release the parking brake or attempt to select a gear until the air pressure is at the correct level.

When parking the vehicle or leaving the cab:

1. Place shift lever in neutral
2. Set the parking brake

Do not operate if alternator lamp is lit or if gauges indicate low voltage.

Suggested Tools

- Volt/Ohm Meter
  SPX / Kent-Moore 1 (800) 328-6657
  P/N 5505027
- PC-based Service Tool "ServiceRanger"
  Contact your OEM
- Data Link Tester
  Eaton Service Parts 1 (800) 826-4357
  P/N MF-KIT-04
- Eaton Test Adapter Kit
  SPX / Kent-Moore 1 (800) 328-6657
  P/N J-43318
- 6-Pin Deutsch Diagnostic Adapter
  SPX / Kent-Moore 1 (800) 328-6657
  P/N J-38500-60A

Related Publications

- TRIG-0580 - Lightning Installation Guide
- TRDR-0580 - Lightning Driver Instructions
- TRSM-0580 - Lightning Service Manual

For more information call 1-800-826-HELP (4357) or visit www.Roadranger.com.

Section 1: Basic Troubleshooting

Diagnostic Procedure for Lightning Models 1-2
Operational Check List 1-3
Basic System Troubleshooting 1-4
What To Do If The Transmission
Is Not Operating Properly 1-5
Retrieving Fault Information 1-6
Fault Code Table for Lightning Transmission 1-7
Symptom Complaints 1-8

Air System Troubleshooting

Vehicle Air Supply Requirement 1-12
Air System - Overview 1-13
Air System - ECU 1-14
Air System - Splitter Subsystem 1-15
Air System - Range Subsystem 1-16
Clutch Housing Breather Leak Overview 1-18
Clutch Housing Breather Leak 1-19
Transmission ECU Breather Leak Overview 1-20
Transmission ECU Breather Leak 1-21
Range Cylinder Test Overview 1-22
Range Cylinder Test 1-23
Splitter Cylinder Test Overview 1-26
Splitter Cylinder Test 1-27

Electronic System Troubleshooting

Electrical System Requirements 1-30
Wiring Diagram 1-31
Pinouts 1-32
Power-Up Sequence Test Overview 1-34
Power-up Sequence Test 1-35
Electrical Pretest Overview 1-38
Electrical Pretest 1-39
Shift Knob Test- No Fault Codes Overview 1-42
Shift Knob Test- No Fault Codes 1-43
J-1587 Data Link Test Overview 1-46
J-1587 Data Link Test 1-47

Section 2: Fault Isolation Procedures

Component Code 11(SID 254, FMI 12)
Transmission ECU 2-1
Component Code 33 (PID 158 or 168, FMI 3 or 4)
System Voltage Fault 2-3
Component Code 35 (SID 231, FMI 2)
J-1939 Data Link Test 2-5
Component Code 36 (SID 48 or 49, FMI 2)
Position Sensor Test 2-13
Component Code 43 (SID 36, FMI 4, 5, 6)
Low Range Solenoid 2-15
Component Code 46 (SID 37, FMI 4, 5, 6)
Splitter Solenoid 2-17
Component Code 48 (SID 35, FMI 4, 5, 6)
High Range Solenoid 2-19
Component Code 58 (PID 191, FMI 2)
Output Shaft Speed Sensor 2-21
System Code 66 (SID 58, FMI 1)
Unconfirmed Torque Path 2-25
System Code 71 (SID 61, FMI 7)
Range or Splitter Stuck in Gear 2-29
Component Code 73 (SID 58, FMI 11)
Transmission Missed Synchronous 2-31
System Code 74 (SID 14, FMI 7)
Engine Missed Synchronous 2-33
System Code 93 (SID 231, FMI 14)
J-1939 Engine Message Fault 2-33
Reverse Switch Test Overview 2-39
Reverse Switch Test 2-40
Neutral Switch Test Overview 2-43
Neutral Switch Test 2-44

Diagnostic Procedure for Lightning Models

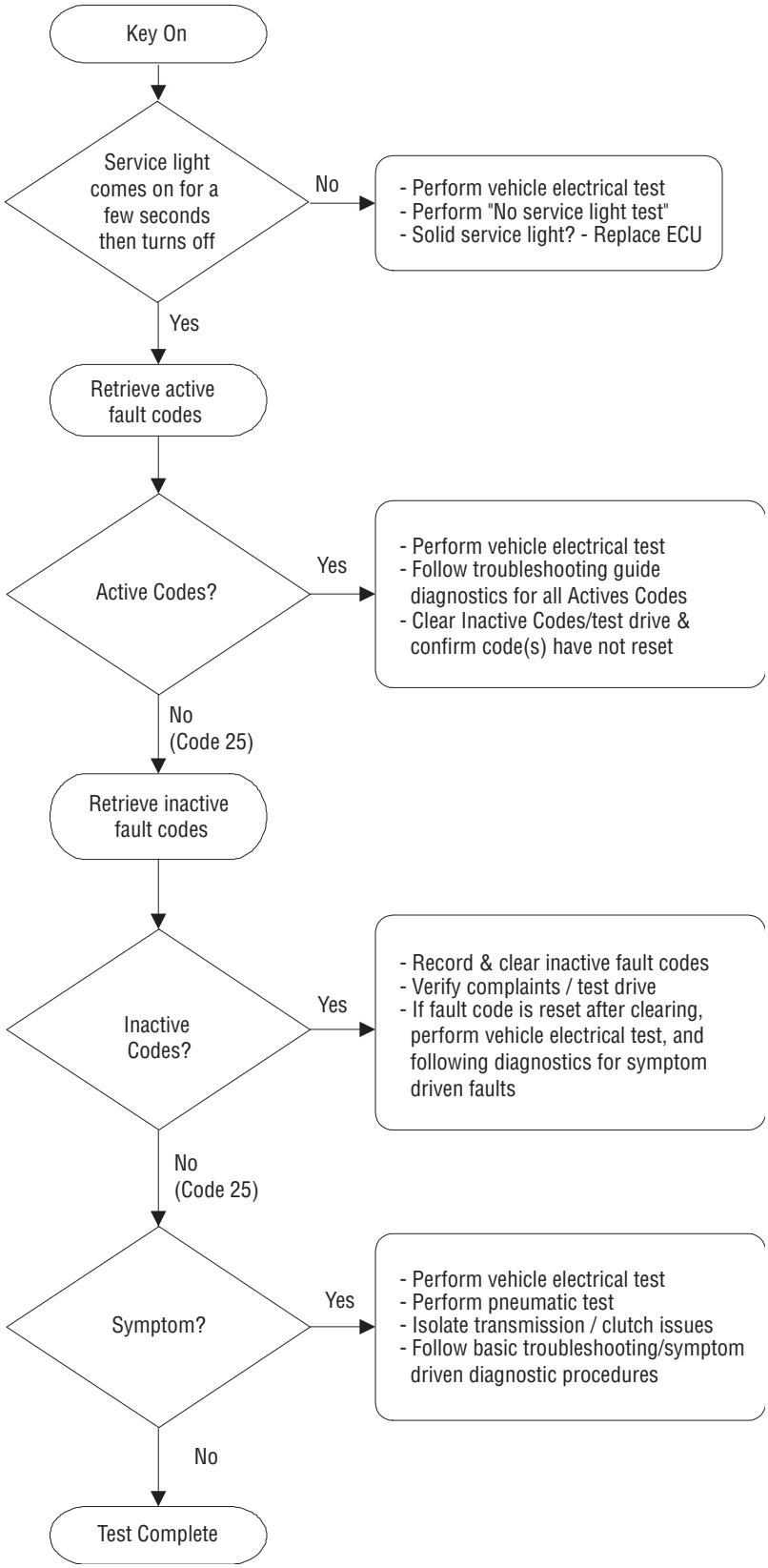

Operational Check List

When operating properly, the lightning transmission will act in the following manner:

- Top-2 feature will not function with cruise control turned off.
- Service light flashes once at vehicle initial power up.
- Service light flickers at vehicle power down.
- Service light flashes continuously with an active fault code.
- Synchronizer will not trigger with key off.
- Synchronizer will not trigger in neutral with key on and vehicle stationary.
- Synchronizer will trigger with key on, vehicle stationary and lever moved into a high range gear.
- Synchronizer will not downshift into low range if lever is moved into a low range gear at too high of road speed.
- If started in a high range gear the vehicle accelerator pedal will be “dead”.
- If driver beats the range up-shift with lever movement to a high range gear the accelerator pedal is “dead” until synchronous is made.
- Splitter will not trigger with key off.
- Splitter will trigger with key on and in any lever position.
- Accelerator pedal is “dead” when splitter is up shifting if the driver attempts to accelerate before splitter synchronous is made.
- Engine accelerates when splitter downshifts if the driver doesn’t control engine RPM for proper synchronous.
- Aggressive splitter shifts below 1100 engine RPMs and whenever the transmission has a fast deceleration of the output shaft.
- Aggressive splitter shifts with clutch disengaged or foot resting on clutch pedal disengaging clutch switch.
- Aggressive splitter shifts with clutch switch wired improperly – check for engine brake and cruise control functionality.

Basic System Troubleshooting

Following is information to help a vehicle operator start basic troubleshooting of the transmission system.This is not a complete list. In many cases, the vehicle needs to be evaluated by a trained and experienced transmission technician.

Problem	Possible Causes
Growl/Rattle in a “float” or coast condition.	Check for damaged, worn, or defective driveshaft, support bearing, or u-joints, which would result in noise or vibration. Check for improper vehicle ride height, which would cause improper u-joint operating angles. Check for axle problem, which would result in noise or vibration. Check for tire problem, which would result in noise or vibration.
At idle	Check for damaged or defective master clutch, master clutch release bearing, or clutch linkage, which would result in noise or vibration. Check for loose components, brackets, exhaust system, and hoses in transmission area, which would result in noise or vibration.
Growl/Rattle on a “pull”	Check for engine problem, which would result in noise or excessive vibration.Check master clutch for defects in dampening devices.
Lever	Check for loose or damaged shift lever, which may vibrate and cause noise. Check for components added to the shift lever; such as, cruise control, which may vibrate and cause noise.
All other conditions	Check for loose clutch housing bolts. Check transmission oil for excessive metal particles, which may indicate internal problem. Check for damaged or worn gearing.

Problem	Possible Causes
Hard Lever Shifting	Check for damaged or binding shift lever or shift control system.Check for lever interference with cab floor. Check for upper or lower shift boot tugging on shift lever. Check for a defective or damaged master clutch, which would result in clutch drag. Check for improper clutch brake engagement. Check that proper shifting procedures are followed.

Problem	Possible Cause
Transmission is operating at higher than normal temperature	If transmission is equipped with an internal cooler, check for pinched engine coolant hoses or closed shut off valves. See section on Operating Temperatures with Coolers. Check oil level.

What to Do if the Transmission is Not Operating Properly

If a problem occurs with the transmission or vehicle system, the transmission may not shift correctly. These effects may include:

- Harsh, slow, or grinding button only shifts.
- No button shifts (5 gear ratios only).
- No range shift (low range or high range gear ratios only).

The Service Light on the Shift Knob may be on continuously, may be flashing, or may not illuminate at all.

If the Transmission is Not Operating Properly, Try the Following Steps:

1. Check the dash air gauge to make sure at least 90 PSI is available in both primary and secondary air systems.
2. Try resetting the Transmission Electronic Control Unit (ECU) - See procedure below.
3. If vehicle and road conditions permit, you may be able to operate the transmission as a 5 speed (no button shifts).

Transmission Reset Procedure

In some cases, “resetting” the transmission Electronic Control Unit (ECU) can restore proper transmission operation. Use the following procedure to reset the ECU.

- When it is safe to do so, stop the vehicle.
- Place the transmission shift lever in neutral and turn the ignition key to the “off” position.
- Wait 5 seconds.
- Restart the engine.
- If the problem continues, proceed to page 9 and identify the symptom.

Transmission Diagnostics

The Lightning Series Transmission ECU has self-diagnostic capability. The transmission recognizes when a problem occurs and “stores” the information about these problems (faults) in the ECU memory. This information can be retrieved by the following methods:

- Retrieve basic fault information (flash codes) by counting flashes of the service light.
- Some OEM vehicles have an electronic dashboard, which displays fault information. Refer to the specific OEM chassis operator instructions for the procedure.
- Connect an applicable hand-held or PC diagnostic tool to the vehicle’s SAE J-1587 diagnostic connector.

Retrieving Fault Information

The transmission Electronic Control Unit (ECU) turns on the service lamp, located on the shift knob, in the event the ECU detects an electronic fault and at initial power-up. Once the ECU has successfully powered-up, the ECU turns off the service lamp. The power-up sequence usually takes a few seconds. The service lamp remains on continuously if the ECU execution malfunctioned at power-up. The ECU begins code diagnostics only after the ECU has successfully powered-up. The service lamp flashes steadily if the ECU has detected an Active fault code.

Note: Any Active code detected at vehicle start-up immediately starts flashing the service light on the shift knob.

The service light provides access to diagnostic fault information, which has been logged in the transmission ECU. The service light flashes a sequence of on/off pulses, which can be translated into specific “flash codes”. The flash codes can then be used to identify a specific fault in the transmission system.

Transmission faults are classified as either Active (current problem) or In-Active (non-current problem). An Active fault is logged when the ECU recognizes a problem with the transmission. During an Active fault, the service light flashes steadily or may stay on continuously. If during vehicle operation, the problem corrects itself, the service light stops flashing and the fault is logged as an In-Active fault.

How to Retrieve Fault Codes

Retrieve Lightning fault codes by enabling the Lightning system’s self-diagnostic mode.

Note: You can also use a P.C. based diagnostic tool such as ServiceRanger to retrieve fault codes.

Retrieving Active Fault Codes:

1. Place the shift lever in neutral.
2. Set the parking brakes.
3. Turn the ignition key on but do not start the engine.
4. Starting with the key in the on position. Turn the key off and on two (2) times within five seconds ending with the key in the on position.
5. Observe the flash sequence of the service light on the shift knob. Flash codes may take 5 seconds to begin flashing. A one or two second pause separates each stored code, and the sequence automatically repeats itself after flashing all codes.

Retrieving In-Active Fault Codes:

1. Use the procedure to retrieve Active fault codes except, turn the key off and on four (4) times within five seconds ending with the key in the on position.
2. Observe the flash sequence of the service light on the shift knob. A one or two second pause separates each stored code, and the sequence automatically repeats itself after flashing all codes.

Clearing Fault Codes:

The following procedure clears all In-Active fault codes from the ECU’s memory.

1. Place the shift lever in neutral.
2. Set the parking brakes.
3. Turn the ignition key on but do not start the engine.
4. Start with the key in the on position. Turn the key off and on six (6) times within five seconds ending with the key in the on position. The service light will flash on for 5 seconds confirming the codes are cleared.

Example of Flash Codes

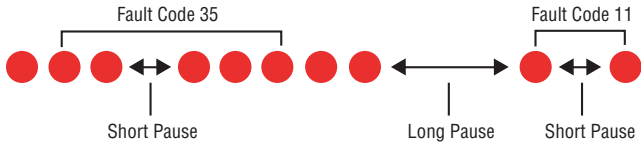

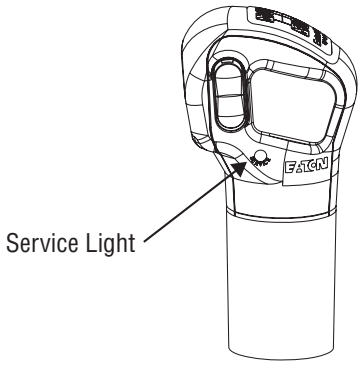

Fault Code Table for Lightning Transmission

Component Fault Codes*

Flash Code	Description	MID	PID	SID	FMI
11	Transmission ECU	130		254	12
25	No Codes	130			
33	Ignition/Battery Voltage Low or High	130	158 or 168		3 or 4
35	Engine to Transmission J1939 Communication Link	130		231	2
36	Shift Lever Position Sensor	130		48 or 49	2
43	Low Range Shift Solenoid	130		36	4, 5, or 6
46	Splitter Shift Solenoid	130		37	4, 5, or 6
48	High Range Shift Solenoid	130		35	4, 5, or 6
58	Output Speed Sensor	130	191		2

System Fault Codes **

Flash Code	Description	MID	PID	SID	FMI
66	Unconfirmed Torque Path (Input speed and output speed do not equal known gear ratio)	130		58	1
71	Splitter or Range Stuck in Gear	130		61	7
73	Transmission Missed Synchronization	130		58	11
74	Engine/Transmission Missed Synchronization	130		14	7
93	J-1939 Engine Message Fault	130		231	14

***Component Fault Codes** specifically isolate problems that may arise with the electronic components used in the Lightning series transmissions. These codes occur at initial vehicle power-up if not induced by intermittent vibration or heat problems.

****System Fault Codes** specifically isolate problems that may arise from a mechanical or pneumatic problem that has prevented or missed a shift in the Lightning transmission. System fault codes are only active during vehicle operation and are not detected at initial vehicle power-up.

Note: System fault codes also indicate problems with other components that affect the performance of the transmission such as low air pressure. Troubleshoot the code properly to isolate the component causing the fault to become active.

Hand Held Codes

MID – Message ID Assignment. In this case, MID 130 represents the transmission.

PID – Parameter ID Assignment. Generally represents a status or value.

SID – Subsystem ID Assignment. Identifies a failure in a subsystem.

FMI – Failure Mode ID. Describes the type of failure detected in the subsystem

Symptom Complaints

Symptom	Possible Condition	Remedy	Reference
No service light	Electrical circuit is open, grounded, or blown VIGN fuse or faulty light	No fault codes set. Performance of transmission not affected by non-functioning light. Check fuse then if necessary, perform service light test.	
Service light on continuously	Light circuit grounded to VBATT, transmission performance not affected	Repair vehicle wiring harness.	
	Transmission ECU internal failure; 3 speed operation only; No splitter or range shifts	Perform vehicle electrical test, if OK - replace transmission ECU.	
Top 2 option not functioning	Cruise control turned off	Turn on cruise control.	
	Top 2 option stops functioning as a result of another problem	Repair for other faults such as Output Speed Sensor Position Sensor. Look for other complaints such as engine brake or cruise not functioning.	
No button shifts after cruise control if turned off while in Top 2 mode	Hold Mode	Normal Operation. Lever must be cycled through neutral to regain button function.	
Harsh or aggressive splitter shifts	ECU Malfunction	Active Fault Code 11.	page 1
Before proceeding, see note at bottom of page.	Position Sensor Malfunction	Active Fault Code 36.	page 13
(any shift using the splitter button)	Engine Missed Synchronization	Active Fault Code 74.	page 33
Grinding or Raking Splitter Shifts	Out-Of-Synchronous or shifts Engine Synchronous speed out-of-limit of operating range	Lever/Splitter shifts attempted in an out-of-synchronous condition. Review Driver Instruction Book - TRDR-0580 - for proper driving techniques.	
(Shifts from 1st to 2nd, 3rd. to 4 th, 5th to 6th, 7 th to 8 th, and 9 th to 10th. Shift grinds but engages.)	Low or high air pressure	Faulty Air Regulator.	
	Splitter leak or partial blocked air system	Perform Splitter Cylinder Test.	page 26
	Driver resting foot on Clutch Pedal so as to disengage clutch switch but still has clutch engaged	Remove foot from clutch pedal except when necessary to shift, start or stop the vehicle.	

Symptom	Possible Condition	Remedy	Reference
	Clutch Switch Contamination built up on switch, for example, dirt, ice, etc. or Mechanical Clutch Linkage	Cruise control and engine brake is also inoperative when the clutch switch malfunctions. Refer to OEM manual for troubleshooting clutch switch.	

Note: Aggressive splitter shifts may occur normally under the following conditions.

1. Low speed splitter shifts below 1100 RPMs. - This is normal operation.
2. Splitter shifts on grades with heavily loaded vehicle. - This is normal operation.
3. Anytime the vehicle has a fast deceleration of the transmission output shaft. For example, making a hard left-hand turn and moving the splitter at the same time. - This is normal operation.

Symptom	Possible Condition	Remedy	Reference
Harsh shifts (Lever Only)	Out-Of-Synchronous Shifts	Lever shifts attempted in an out-of-synchronous condition. Review Driver's Instruction Book for proper techniques.	
(Skip shifts. i.e. 1 st to 3 rd., or 3 rd. to 5 th.)	Clutch Drag	Adjust Clutch and check for clutch slippage and drag.	
	Clutch Brake	Check for improper clutch brake engagement.	
Slow/grinding/raking or inoperative Range Shift (Shift from 6 th to 7 th or from 7 th to 6 th.)	Low or High Air Pressure Air System Leaks Reduced Air Flow Damaged Mechanical parts internal to the transmission	Perform Range Cylinder Test.	page 22
Five speed transmission. (Only Even or Odd Numbered Gears.)	ECU Malfunction	Active Fault Code 11.	page 1
	Unconfirmed torque path through transmission	Active Fault Code 66.	page 25
	Splitter stuck in gear	Active Fault Code 71.	page 29
		Review Air System Overview.	page 13
		Repair for damaged internal parts.	
	Output Speed Sensor Malfunction	Perform Output Shaft Speed Sensor test.	page 21
	Splitter System Air Leak	Perform Splitter Cylinder test.	page 26
	Shift Knob Malfunction	No Active Fault Codes. Perform Shift Knob test.	page 42

Symptom	Possible Condition	Remedy	Reference
	Splitter Solenoid Short or Open	Active Fault Code 46. Perform Solenoid test.	page 17
	Loss of communication with engine	Active Fault Code 35 and gears 1, 3, 5, 7, 9. J-1939 communication link broken.	page 5
Six speed transmission. (Only 1st through 6th gears.)	Range system air leak	Perform Range Cylinder test.	page 22
	Position sensor malfunction	Active Fault Code 36.	page 13
	Low Range Solenoid Malfunction	Active Fault Code 43.	page 15
	High Range Solenoid Malfunction	Active Fault Code 48.	page 19
	Range stuck in gear.	Active Fault Code 71.	page 29
	Transmission missed synchronous.	Active Fault Code 73.	page 31
	High Range Synchronizer Mechanical Failure	Perform Range Cylinder test prior to disassembly, then replace damaged synchronizer parts if required. Refer to “Synchronizer” repair strategy item TRSM-0915 (Note: after 12/31/04 this publication will be TRMT-0001) for repair details.	page 22
Four Speed Transmission. (Only 7 th through 10 th gears.)	Low Range Solenoid Malfunction	Active Fault Code 43.	page 15
	Range System Air Leak	Perform Range Cylinder test.	page 22
	High Range Solenoid Malfunction	Active Fault Code 48.	page 19
	Range stuck in gear.	Active Fault Code 71.	page 29
	Low Range Synchronizer Mechanical Failure	Perform air system test prior to disassembly, then replace damaged synchronizer parts if required. Refer to “Synchronizer” repair strategy item TRSM-0915 (Note: after 12/31/04 this publication will be TRMT-0001) for repair details.	
Three Speed Transmission (Only 1 st, 3 rd., 5 th gears)	Low System Voltage	Active Fault Code 33.	page 3
	Loss of air pressure to transmission.	Check vehicle air pressure.	
	ECU Malfunction.	Active Fault Code 11.	page 1
		Service light on continuously. Replace ECU.	

Symptom	Possible Condition	Remedy	Reference
	Software download unsuccessful	Replace ECU.	
Two Speed Transmission (only 7 th, 9 th gears)	ECU malfunction service light on continuously	Replace ECU.	
Neutral Switch	Wheel Chair Lift / PTO etc. not operating	Perform Neutral Switch Test per OEM recommendations.	
	Engine will not crank (some applications)	Perform Neutral Switch Test per OEM recommendations.	
Reverse Switch	Reverse Light / Beeper not functioning.	Perform Reverse Switch Test per OEM recommendations.	

Vehicle Air Supply Requirement

The transmission filter/regulator assembly provides the inlet port for transmission supplied air. You will find the filter/regulator located at the rear of the transmission on the driver's side of the truck. The filter/regulator assembly regulates the transmission supply to 80 PSI (551 kPa) maximum.

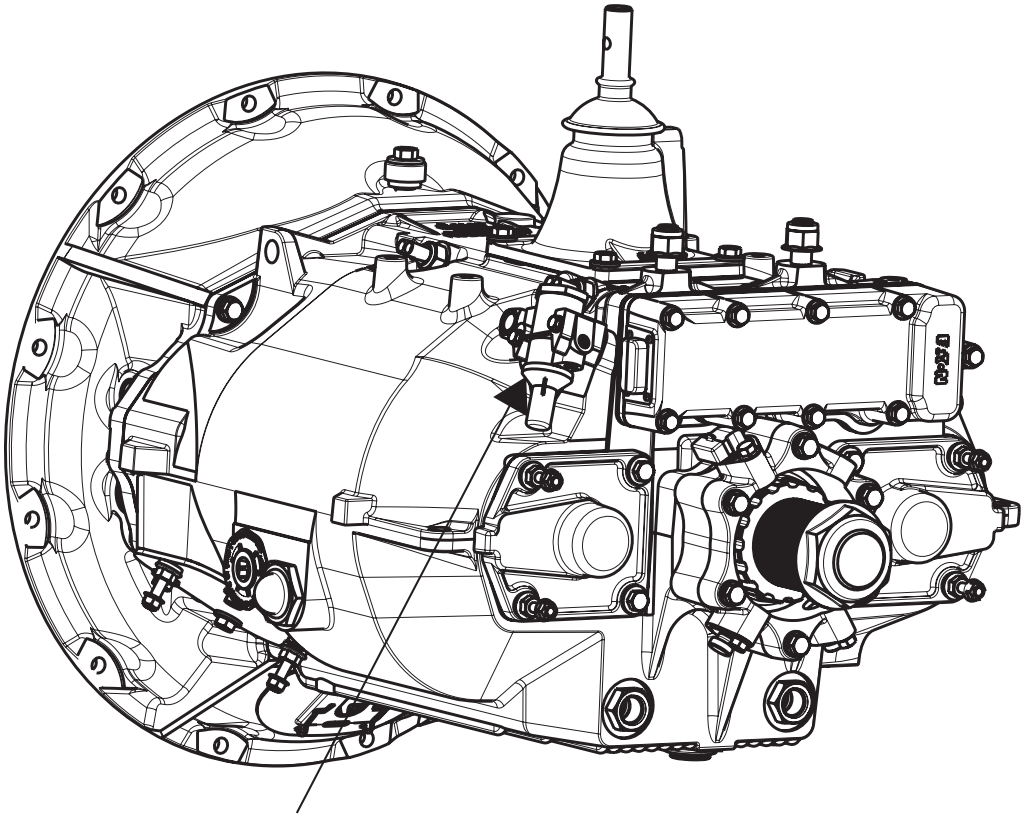

Inlet Air Pressure Required	90-130 PSI (620-896 kPa)
Air Dryer	Required
Inlet Port Size	SAE 3/8" – 18 NPT

Air System - Overview

The Lightning series transmission uses an automatically controlled range cylinder to manage the air operated range shift between 6th and 7th gear. The button on the shift knob controls the splitter shift. Splitter shifts occur every time the transmission shifts consecutive from one gear to the next gear or when the button is moved from one state to the next.

The simple block diagram below shows the relationship between the air system and electronic controls.

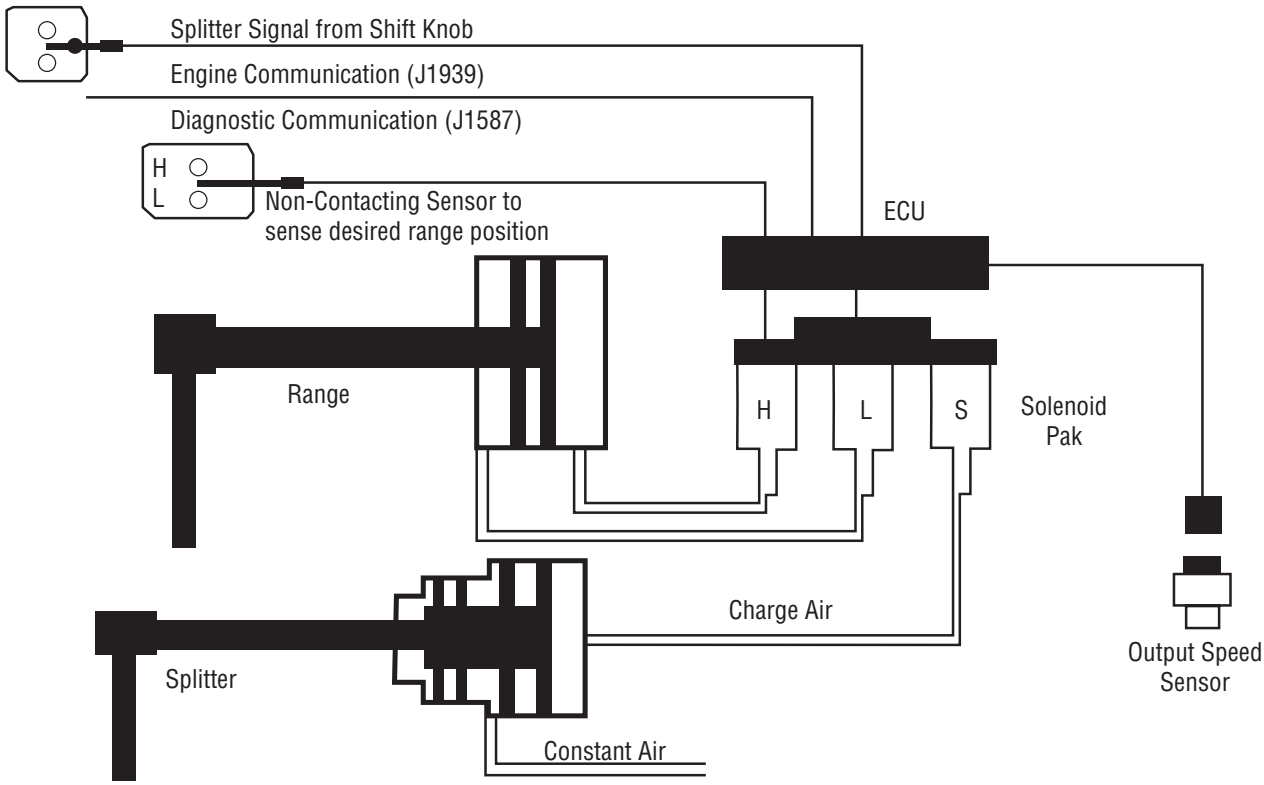

The Lightning series transmission utilizes an electric over air concept for actuating the splitter and range cylinders. An electric signal is sent to the ECU. The ECU then, enables a solenoid valve, which in turn directs air to the appropriate cylinder. A switch in the shift knob directs the splitter shift. The position of the switch indicates to the ECU the desired splitter state. The ECU makes the shift automatically when the proper conditions are achieved. The signal to the ECU for a range shift is automatically made when the shift lever passes from the middle rail (6th gear) to the outside rail (7th gear). A sensor detects the movement and signals the ECU to actuate the range valve. As with the splitter shift, the range shift only occurs when a specific set of conditions is achieved.

Air System - ECU

The transmission's electronic control unit (ECU) activates solenoids in the ECU, which opens up internal air passages. The transmission air filter/regulator is the only external air system component.

The air moves through passages internal to the transmission and the seal plate of the ECU. The illustration below shows the air passages as viewed through the ECU.

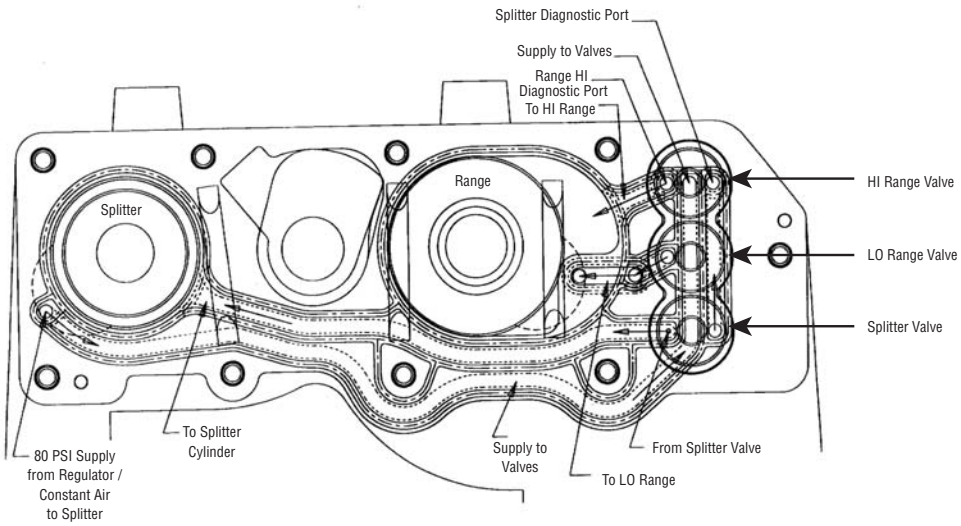

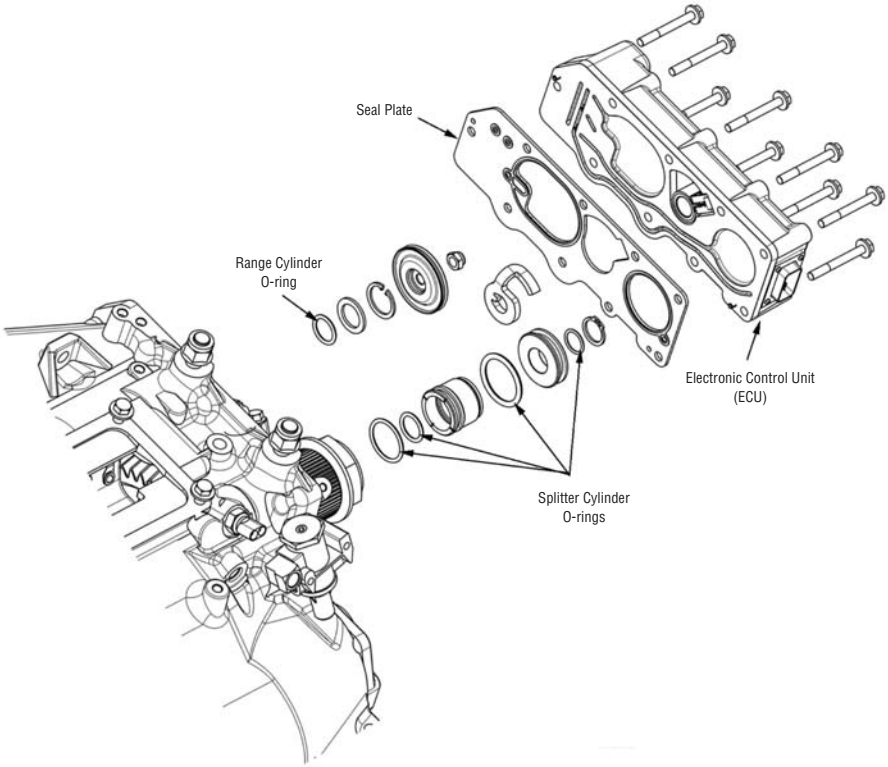

Exploded View of Air System

Air System - Splitter Subsystem

The ECU controls the operation of the splitter solenoid function, responding to driver input from the splitter button on the shift knob or Top-2 operation.

The splitter cylinder has three distinct positions, forward (overdrive), rear (direct) and intermediate (neutral). The forward position is achieved by activating the splitter solenoid valve, which applies air pressure to the rearward side of the piston. This is the splitter state for the even numbered gears (2, 4, 6, 8 and 10)

The rearward position is achieved by de-activating the splitter solenoid valve, which exhausts the air pressure from the rearward side of the splitter piston. The constant air pressure then forces the piston rearward. This is the splitter state for the odd numbered gears (1, 3, 5, 7 and 9).

The intermediate or neutral state is achieved by the ECU rapidly turning on and off the splitter solenoid valve. This condition results in a pressure on the rearward side of the splitter piston that is between 0 and full system pressure. This neutral state is used to allow the gears to synchronize prior to engagement, thereby significantly improving the shift quality.

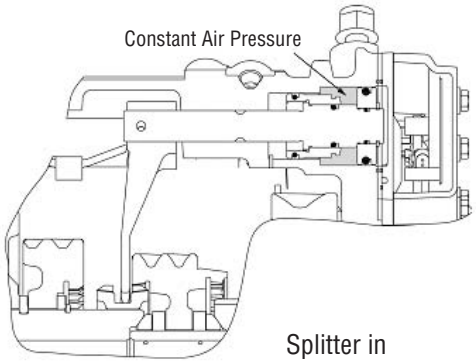

Splitter in Direct

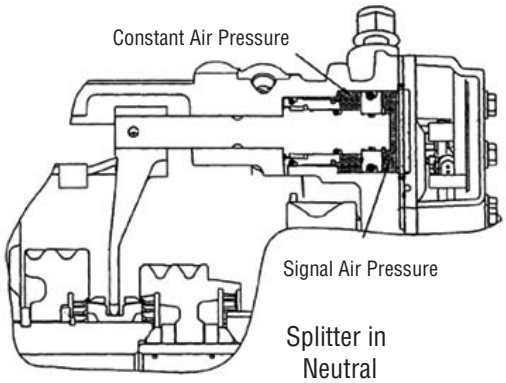

Splitter in Neutral

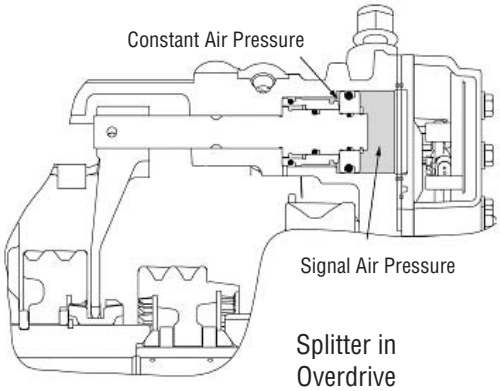

Splitter in Overdrive

Air System - Range Subsystem

The ECU controls the operation of all range solenoid valve functions. The driver's movement of the shift lever accomplishes a change in the position of the range from high range to low range or vice versa.

The range piston has two distinct positions. Both the forward and rearward positions are a function of mechanical stops. Only one side of the piston has air pressure at any one time. The ECU automatically selects either high or low range as the lever passes through neutral when making an up-shift from 6th gear to 7th gear or the downshift from 7th gear to 6th gear.

In either case, the distinct sound of the range shifting is audible outside the cab, standing next to the stationary truck.

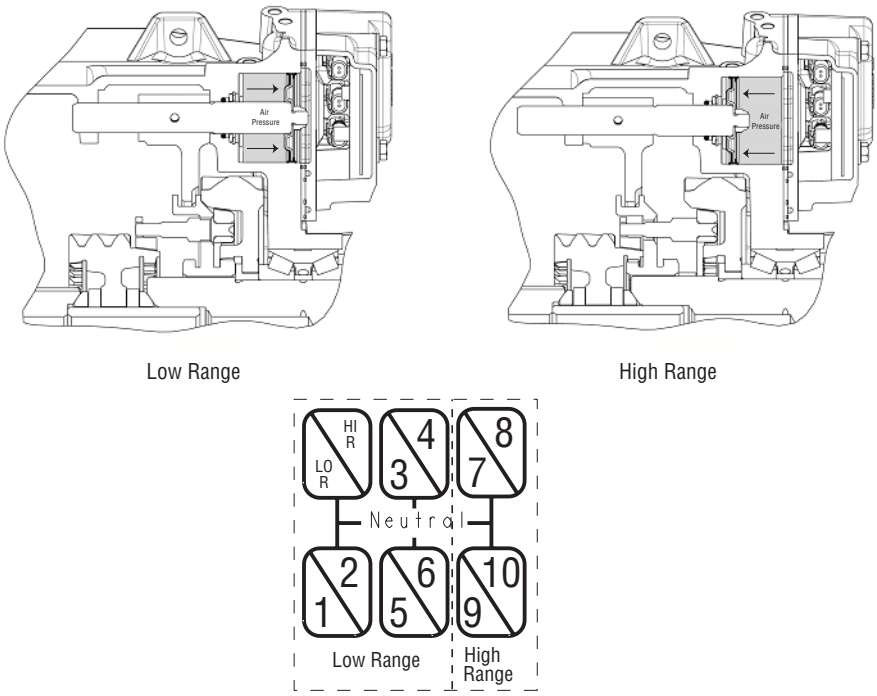

This page left blank intentionally.

Clutch Housing Breather Leak Overview

Overview

Air leaks out the breather located on top of clutch housing.

An air operated PTO with an air leak can pressurize the transmission and cause air to leak out the transmission breather.

Detection

Audible Air Leak

Fallback

There is no fallback mode for this failure.

Required Tools

- Basic Hand Tools

Possible Causes

- Splitter Cylinder O-Rings
- Range Cylinder O-Ring
- Air operated PTO leak

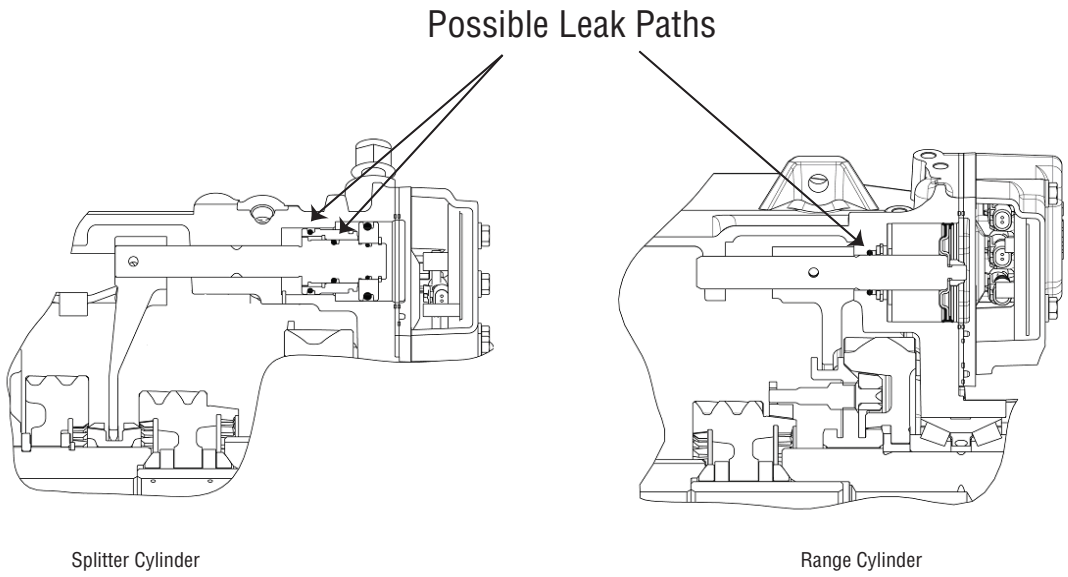

Clutch Housing Breather Leak

Step A	Procedure	Condition	Action
	1. Key on.		
	2. Vehicle stationary and secured, air system fully charged, engine not running.		
	3. Listen for air leaking out the breather while moving the shift lever to make the range cylinder shift from low range to high range. When stationary, the lever must be moved in and out of a high range gear to make the synchronizer shift.	Air leaks in both positions	**Repair the splitter cylinder, and replace all cylinder o-rings.** Go to **Step V**.
	Note: Oil leaking out the breather may be a sign indicating an air leak internal to the transmission.	Air leaks only in low range	**Repair the range cylinder, and replace all cylinder o-rings.** Go to **Step V**.

Step V	Procedure	Condition	Action
	1. Fully charge air system on vehicle and check for effectiveness of repair.	Breather still leaks	Go to **Step A.**
		Breather does not leak	Test Complete.

Transmission ECU Breather Leak Overview

Overview

Air leaks out the breather on the ECU.

The breather exhausts a slight amount of air every time the transmission makes a range shift and when the splitter shifts to any odd numbered gear.

Detection

Audible Air Leak.

Fallback

There is no fallback mode for failure.

Required Tools

- Basic Hand Tools

Possible Causes

This fault can be caused by any of the following:

- Splitter or Range Cylinder O-rings
- Solenoid Seals or O-rings (ECU)
- Seal Plate

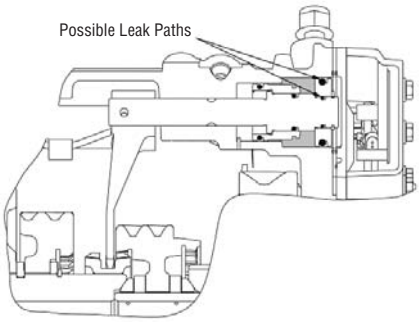

Splitter Cylinder

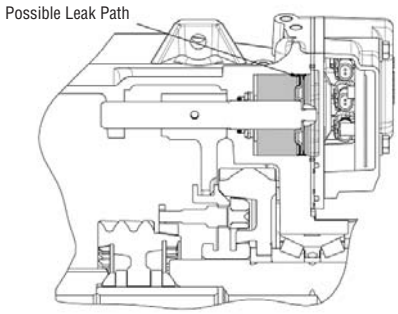

Range Cylinder

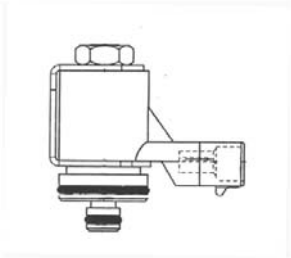

Solenoid
(Non-Serviceable - Inside ECU)

Transmission ECU Breather Leak

Step A	Procedure	Condition	Action
	1. Key on, vehicle stationary and secured, air system fully charged, engine not running.		
	2. Cycle the splitter cylinder by moving the button on the shift knob from the down position to the up position. →	Leak stops with the button in the up position. →	**Replace the splitter cylinder o-rings** and clean out any contamination in the cylinder. If leak continues after making this repair, then replace the transmission ECU and seal plate. Go to **Step V.**
		Leaks in either position →	Go to **Step B.**

Step B	Procedure	Condition	Action
	1. Key on, vehicle stationary and secured, air system fully charged, engine not running.		
	2. Cycle the range cylinder by moving the shift lever into high range (the 7/8 gear position) then back into neutral. The synchronizer makes a distinct audible noise when shifting. →	Leak stops when in high range. →	**Replace the range cylinder piston** and clean out any contamination in the cylinder. If leak continues after making this repair, then replace the transmission ECU and seal plate. Go to **Step V**
		Leak stops when in low range. →	**Replace the range cylinder piston** and clean out any contamination in the cylinder. If leak continues after making this repair, then replace the transmission ECU and seal plate. Go to **Step V.**

Step V	Procedure	Condition	Action
	1. Charge the vehicle air system and test repairs for effectiveness. →	No Leaks →	Test Complete
		Air still leaks out breather on ECU. →	Repeat test procedures for air leaks.

Range Cylinder Test Overview

Overview

The range cylinder test does not relate to any specific fault code, but must be performed prior to disassembly of the transmission if a range system mechanical failure is suspected. The range cylinder test verifies the basic air system inputs are operating correctly, before proceeding with disassembly. The driver complaint must be confirmed or duplicated before preceding with the testing.

Detection

There is no detection process specifically for the Range Cylinder. However, failures of this type are generally detected by the driver as a symptom such as the transmission range shift may grind, rake, or fail to operate.

Fallback

There is no fallback for the Range Cylinder Test.

Required Tools

- Basic Hand Tools

Possible Causes

This fault can be caused by any of the following:

- Truck air pressure out of range
- Faulty air/filter regulator
- Air system contamination
- Friction material worn or damaged on synchronizer
- Other internal mechanical failure

Range Cylinder Test

Step A	Procedure	Condition	Action
	1. Start vehicle and build up air pressure to maximum. Shut off vehicle.	Vehicle's primary and secondary air supply is less than 90 PSI or leaks down	Repair vehicle's air system and go to **Step V.**
		Vehicle air pressure is greater than 90 PSI and no leaks.	Go to **Step B.**

Step B	Procedure	Condition	Action
	1. Drain air tanks to prevent injury.		
	2. Remove one of three plugs in transmission filter/regulator and insert pressure gauge.		
	3. Start vehicle and build up air pressure to maximum. Shut off vehicle.	Transmission filter/ regulator pressure less than or greater than 77 to 82 PSI.	**Replace filter/regulator assembly.** Go to **Step V.**
		Regulator pressure between 77 and 82 PSI.	Go to **Step C.**

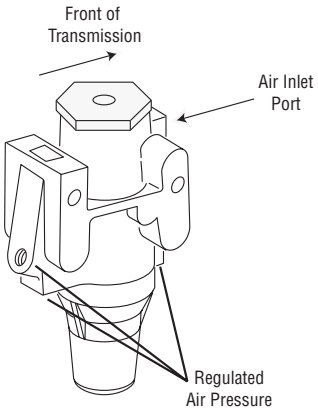

Filter / Regulator

Range Cylinder Test, continued

Step C	Procedure	Condition	Action
	1. Drain air tanks to prevent injury.		
	2. Remove either the plug for the high range test port or low range test port located on the top of the transmission and insert pressure gauge.		
	3. Start vehicle and build up air pressure to maximum. Shut off vehicle.		
	4. Key in the on position, do not start vehicle.		
	5. Have an assistant move the lever to cycle the range cylinder by moving the lever in and out of a high range gear position.		
	6. Watch the reaction of the pressure gauge and listen for the range to shift. →	Gauge response is sudden and immediate. Gauge reads between 77 to 82 PSI and the distinct sound of the range shifting is audible. →	Go to **Step D.**
		Gauge is slow to respond or the range shift is not audible. →	**Remove transmission ECU** and clean out any contamination in air passages or cylinders. Go to **Step V.**

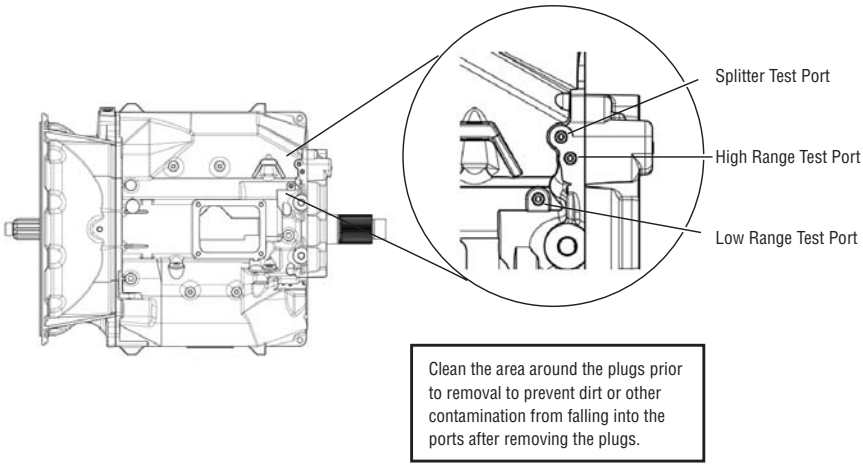

Range Cylinder Test, continued

Step D	Procedure	Condition	Action
	1. Remove and disassemble transmission.		
	2. Inspect all synchronizer parts. →	Synchronizer parts excessively worn or damaged. Refer to publication TRSM-0915 for synchronizer replacement guidelines. →	Replace damaged parts. Go to **Step V.**
		No parts worn or damaged →	Go to **Step V.**

Step V	Procedure	Condition	Action
	1. Start vehicle and road test to determine repair effectiveness. →	Range shifts properly →	Test complete
		Range still grinds/rakes or inoperative →	Repeat test procedures

Splitter Cylinder Test Overview

Overview

The Splitter Cylinder Test does not relate to any specific fault code, but must be performed prior to disassembly of the transmission if a splitter system mechanical failure is suspected. The splitter cylinder test verifies the basic air system inputs are operating correctly, before proceeding with transmission disassembly.

Detection

There is no detection process specifically for the splitter cylinder. However, failures of this type are generally detected by the driver as a symptom such as the transmission splitter shift may grind, rake, or fail to operate. The driver complaint must be confirmed or duplicated before proceeding with the testing.

Fallback

There is no fallback for the Splitter Cylinder Test.

Required Tools

- Basic Hand Tools

Possible Causes

This fault can be caused by any of the following:

- Truck air pressure out of range
- Faulty air/filter regulator
- Air system contamination
- Faulty shift knob / splitter switch or vehicle wiring
- Internal mechanical failure

Splitter Cylinder Test

Step A	Procedure	Condition	Action
	1. Review driver's instruction for proper driving technique.		
	2. Test drive truck with operator. →	Driver operating splitter improperly →	Provide instruction and end test.
		Driver operating splitter properly →	Go to **Step B.**

Step B	Procedure	Condition	Action
	1. Start vehicle and build up air pressure to maximum. Shut off vehicle. →	Vehicle's primary and secondary air supplies less than 90 PSI or leaks down →	Repair vehicle's air system and go to **Step V.**
		Vehicle air pressure is greater than 90 PSI and no leaks →	Go to **Step C.**

Step C	Procedure	Condition	Action
	1. Drain air tanks to prevent injury.		
	2. Remove one of three plugs in transmission filter/regulator and insert pressure gauge.		
	3. Start vehicle and build up air pressure to maximum. Shut off vehicle. →	Transmission filter/ regulator pressure less than or greater than 77 to 82 PSI →	**Replace filter/regulator assembly**. Go to **Step V.**
		Regulator pressure between 77 and 82 PSI →	Go to **Step D.**

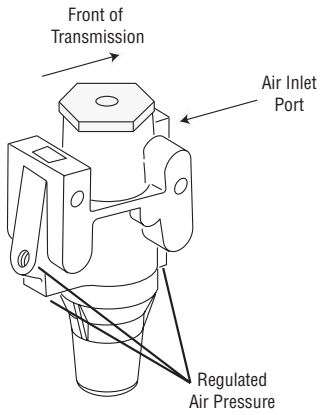

Filter / Regulator

Splitter Cylinder Test, continued

Step D	Procedure	Condition	Action
	1. Drain air tanks to prevent injury.		
	2. Remove the plug for the splitter test port located on the top of the transmission and insert pressure gauge. See illustration below.		
	3. Start vehicle and build up air pressure to maximum. Shut off vehicle.		
	4. Key in the on position, do not start vehicle.		
	5. Have an assistant move the button to cycle the splitter cylinder.		
	6. Watch the reaction of the pressure gauge and listen for the splitter to shift. →	Gauge response is sudden and immediate. Gauge reads between 77 to 82 PSI with button in the up position and the faint sound of the splitter shifting is audible →	Go to **Step E.**
		Gauge is slow to respond or the splitter shift is not audible →	**Remove transmission ECU** and clean out any contamination in air passages or cylinders. Go to **Step V.**
		No response on gauge. Gauge reads “0”. →	Perform “Shift Knob Test - No Fault Codes Overview” on page 42.

Splitter Cylinder Test, continued

Step D	Procedure	Condition	Action

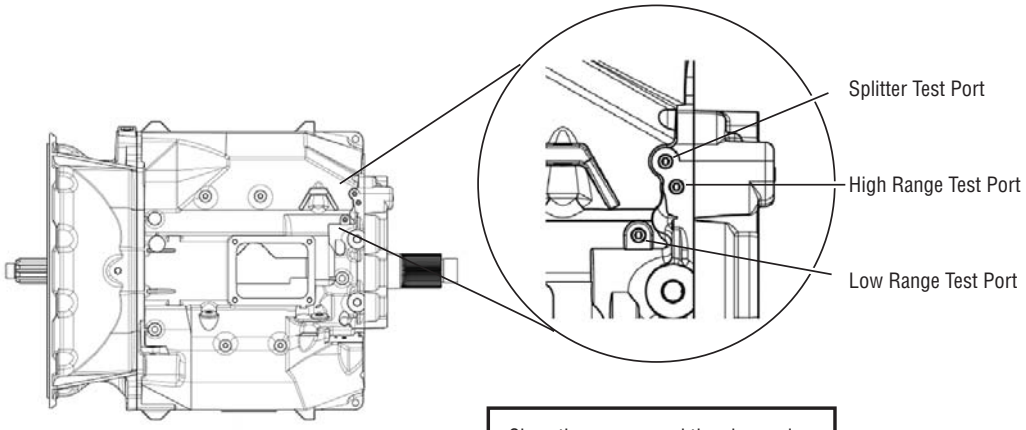

Clean the area around the plugs prior to removal to prevent dirt or other contamination from falling into the ports after removing the plugs.

Step E	Procedure	Condition	Action
	1. Remove and disassemble transmission.		
	2. Inspect all splitter parts. →	Splitter parts excessively worn or damaged →	Replace damaged parts. Go to **Step V.**
		No parts worn or damaged →	Go to **Step V.**

Step V	Procedure	Condition	Action
	1. Start vehicle and road test to determine repair effectiveness. →	Splitter shifts properly →	Test Complete.
		Splitter still grinds/rakes or inoperative →	Repeat test procedures.

Electrical System Requirements

This transmission requires an electronically managed engine, which complies with current SAE J-1939 provisions. The transmission electronic control unit (ECU) communicates with the engine ECU over the J-1939 communication link. The OEM also provides the J-1939 and J-1587 data-link to the transmission.

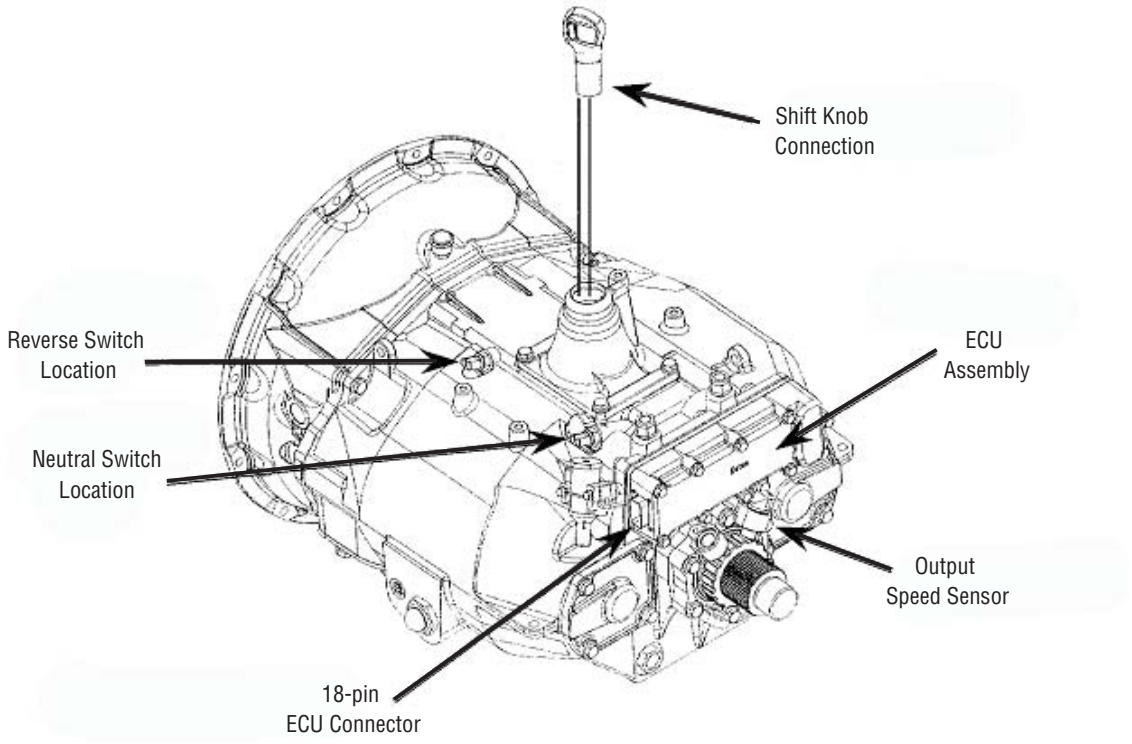

Transmission Electrical Attachment Points

Wiring Diagram

The Lightning transmission uses a single 18-pin connector at the ECU. The transmission receives input to manage splitter shifts, into this connector from the engine, shift knob, and output speed sensor. The drawing below illustrates these connections:

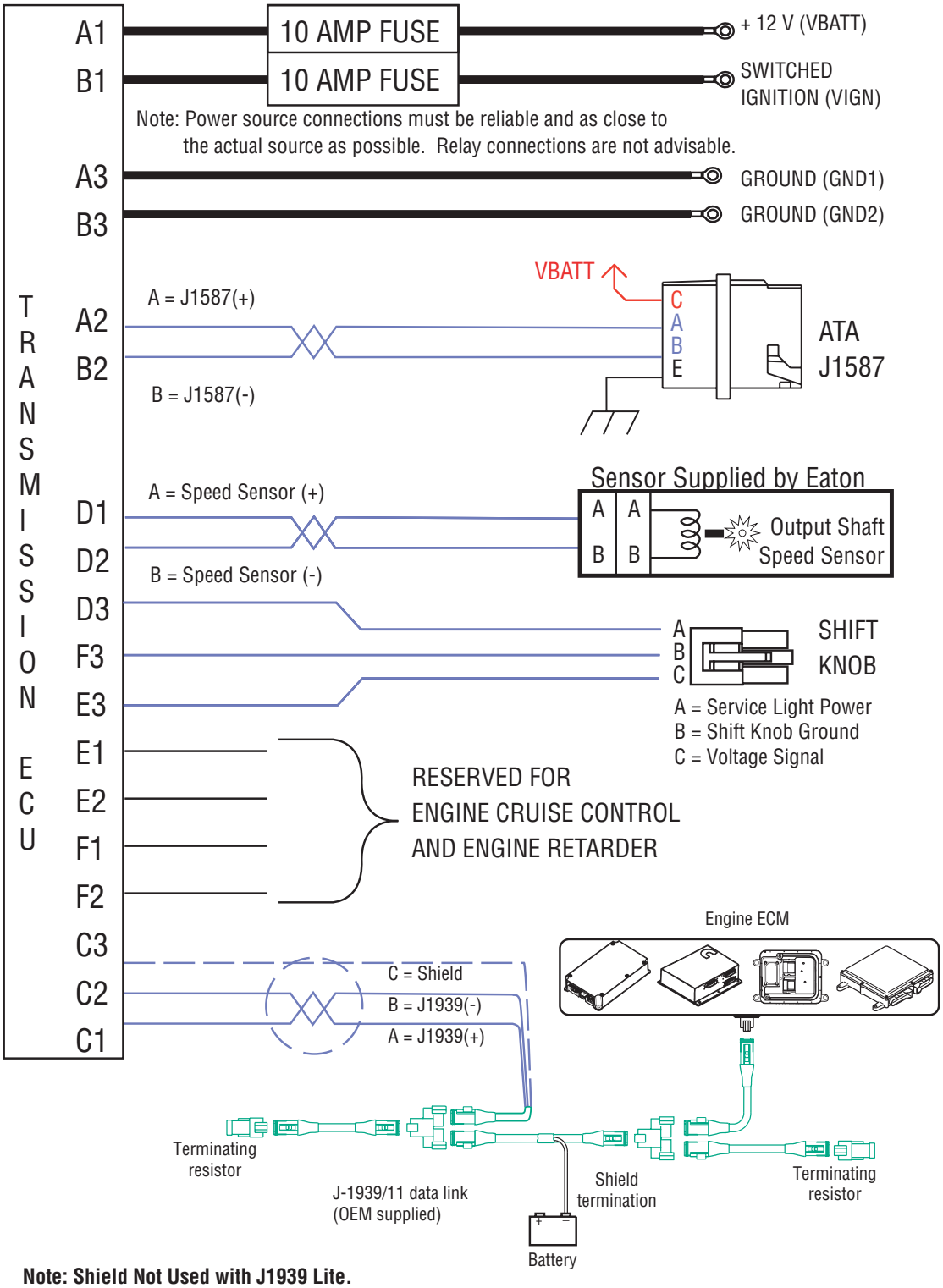

Note: Shield Not Used with J1939 Lite.

18-way Pinout

Circuit	Pin Location	Description	Notes
VBATT	A1	Battery Positive Voltage 12 volt	10 Amp Fuse or auto reset (thermal) circuit breaker required
VIGN	B1	Switch Battery Positive Voltage Switched Ignition - 12 volt	10 Amp Fuse or auto reset (thermal) circuit breaker required
GND1	A3	Battery Negative	Connection required at or near vehicle ground point
GND2	B3	Battery Negative	Connection required at or near vehicle ground point
J-1939+	C1	Serial Communication- Engine J-1939	Configured per J-1939 physical layer specification
J-1939-	C2	Serial Communication- Engine J-1939	Configured per J-1939 physical layer specification
CAN_Shield (J-1939)	C3	Serial Communication- Engine	Configured per J-1939 physical layer specification
J-1587+	A2	Serial Communication - Diagnostics J-1587- High	
J-1587-	B2	Serial Communication - Diagnostics J-1587- Low	
SPD1+	D1	Transmission Output Speed	
SPD1-	D2	Transmission Output Speed	
Knob_Gnd	F3	Shift Knob Ground	
Srv_ Light	D3	Power to Knob mounted service light	
Splitter_SW	E3	Voltage Signal to Splitter Switch	
Cruise / Retarder	E1, E2, F1, F2	Reserved for engine cruise / engine retarder	Not available as of January 1, 1999

Note: Always use the correct connector pin lead adapters from Eaton Test Adapter Kit when performing pin-out diagnostics. This will prevent damage to the connector pins.

This page left blank intentionally.

Power-Up Sequence Test Overview

Overview

The power-up Sequence Test is used to identify a faulty component as the result of a failure during the transmission self-check.

Detection

The power-up self-check is performed automatically each time the key is turned on. Turn the key on and watch the service lamp located on the driver's side of the shift knob. If power-up stops with the service lamp constantly on or it never comes on, self-check has failed. There are no fault codes to identify a failure of the self-check.

Fallback

If the self-check fails, the transmission may have full functionality or range and splitter function may be lost.

Required Tools

- Basic Hand Tools

Possible Causes

This fault can be caused by any of the following:

- Shift Knob
- Wiring harness or connectors from 18-way connector to shift knob
- Transmission ECU

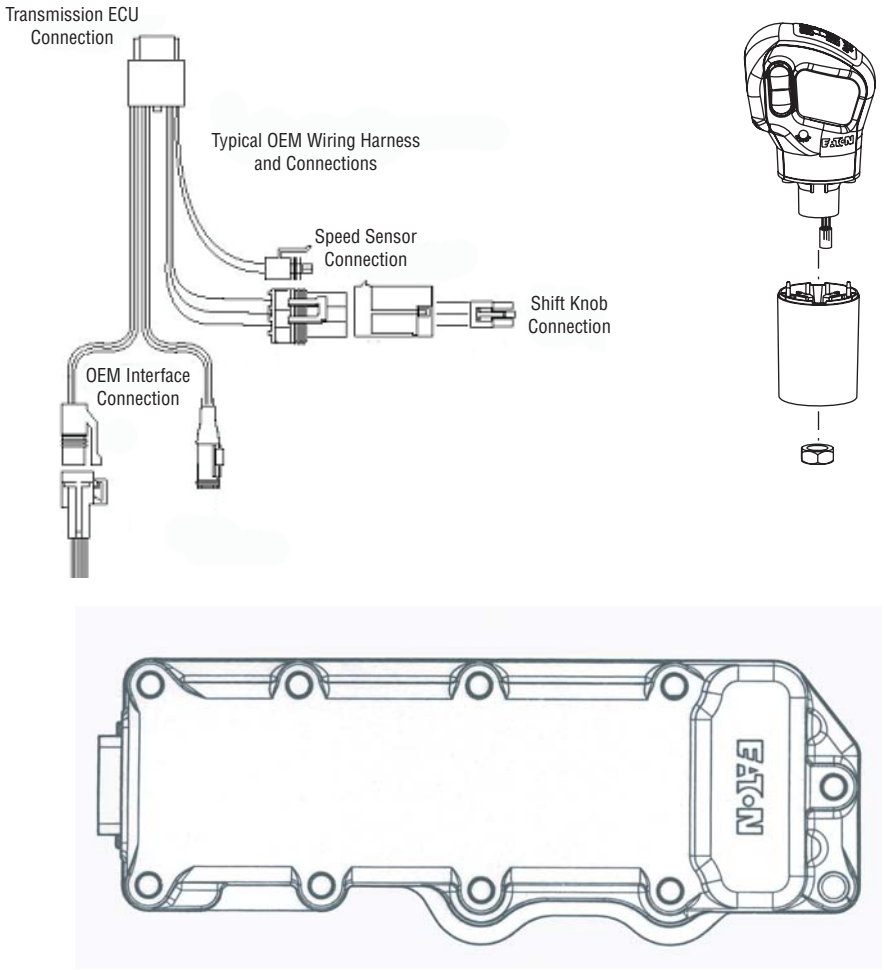

Power-Up Sequence Test

Step A	Procedure	Condition	Action
	1. Key on.		
	2. Observe service lamp. →	If service lamp lights for one second and turns off. →	Test Complete.
		Light comes on →	Go to **Step B.**
		If test fails →	Go to **Step V.**

Step B	Procedure	Condition	Action
	1. Key off.		
	2. Remove 18-way connector from transmission ECU.		
	3. Using a 1.5 volt DC battery connect the positive (+) side of the battery to pin D3 and the negative (-) side of the battery to pin F3. This should illuminate the light. →	Light comes on →	**Replace Transmission ECU.**
		If test fails →	Go to **Step C.**

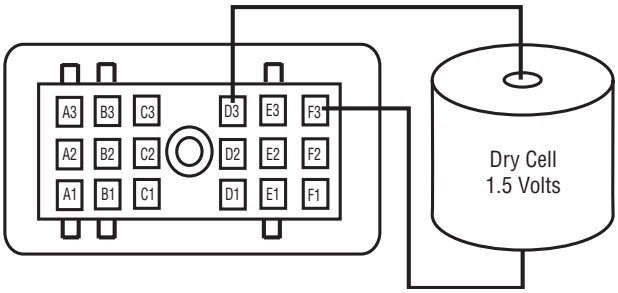

Power-Up Sequence Test, continued

Step C	Procedure	Condition	Action
	1. Remove skirt from bottom of shift knob and disconnect shift knob from wiring harness		
	2. Using a 1.5 volt DC battery, connect the positive (+) side of the battery to pin A and the negative (-) side of the battery to pin B. This should illuminate the light.	Light comes on	Repair or replace damaged wiring harness.
	Note: Raised ribs on the connector identify pin locations	If test fails	**Replace shift knob.**

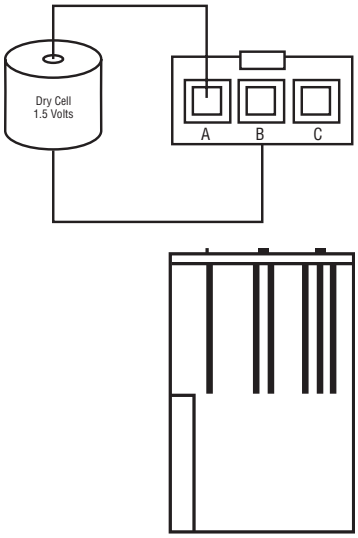

Step V	Procedure	Condition	Action
	1. Perform Electrical Pre-Test.		
	2. Using a 1.5 volt DC battery, connect the positive (+) side of the battery to pin A and the negative (-) side of the battery to pin B. This should illuminate the light.	Pre-test fails	Repair vehicle harness or electrical system according to OEM specifications.
		Pre-test passes	**Replace Transmission ECU.**

Power-Up Sequence Test, continued

This page left blank intentionally.

Electrical Pretest Overview

Overview

The pretest does not relate to any specific fault code, but must be completed before performing Fault Code Isolation Table procedures. The pretest verifies the basic electrical inputs before testing individual circuits.

Detection

There is no detection process specifically for the basic electrical supply. However, failures of this type are generally detected by the transmission or driver as different symptom or fault code.

Fallback

There is no fallback for the electrical pretest, however, it may effect other systems.

Required Tools

- Basic Hand Tools
- Digital Volt/Ohm Meter
- Troubleshooting Guide

Possible Causes

This pretest can be used for any of the following:

- Corroded Power Contacts
- Blown Fuse
- Wiring Harness
- Low Batteries

Electrical Pretest

Step A	Procedure	Condition	Action
	1. Key off.		
	2. Check VBATT and ignition fuse or circuit breaker. →	Fuses or circuit breakers blown or tripped. →	Replace or reset the fuse. Check for short to ground on VBATT or VIGN. Go to **Step V.**
		Fuses or circuit breakers good. →	Go to **Step B.**
	Note: System has two fuses or circuit breakers, one for switched ignition and the other for VBATT.		

Step B	Procedure	Condition	Action
	1. Key on - Engine Running.		
	2. Check truck charging system including alternator, regulator and batteries. Check per OEM or manufacturer recommendations. →	Truck charging system does not meet OEM specifications for charging requirements. →	Repair charging system, i.e. alternator, batteries, etc., and Go to **Step V.**
		Charging system meets OEM specifications. →	Go to **Step C.**

Step C	Procedure	Condition	Action
	1. Key off		
	2. Locate transmission power and ground connections (2 of each) and inspect for looseness or corrosion. →	Connections loose or corroded →	Repair connections and Go to **Step V.**
		Connections clean and tight →	Go to **Step D.**

Electrical Pretest, continued

Step D	Procedure	Condition	Action
	1. Key off.		
	2. Disconnect 18-way connector from transmission.		
	3. Disconnect negative (-) battery cable from battery.		
	4. Measure resistance between ECU connector pin A3 and negative battery cable and between connector pin B3 and negative battery cable. →	If resistance is 0 to 0.3 ohms →	Go to **Step E.**
		If resistance is outside of range →	Repair ground path for transmission and repeat this step.

Step E	Procedure	Condition	Action
	1. Key off.		
	2. Reconnect negative (-) battery cable removed from previous test.		
	3. Leave 18-way connector disconnected from transmission.		
	4. Check voltage from A1 to A3 and from A1 to B3. →	Voltage across pins greater than or less than specified system voltage or 12 to 13 volts. →	Repair truck harness or electrical system according to OEM specification and go to **Step V.**
		Voltage equals specified system voltage of 12 to 13 volts. →	Go to **Step F.**

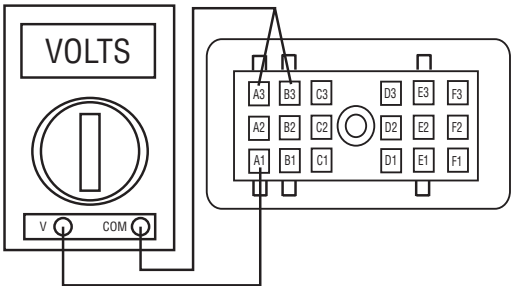

Electrical Pretest, continued

Step F	Procedure	Condition	Action
	1. Leave 18-way connector disconnected from transmission.		
	2. Key on.		
	3. Check voltage across pins A1 to A3 and across B1 to B3 of the harness. →	Voltage across pins greater than or less than specified system voltage or 12 to 13 volts. →	Repair truck harness or electrical system according to OEM specification and go to **Step V.**
		Voltage equals specified system voltage of 12 to 13 volts. →	System OK. Go to Symptom Driven/Trouble Code Diagnostics.

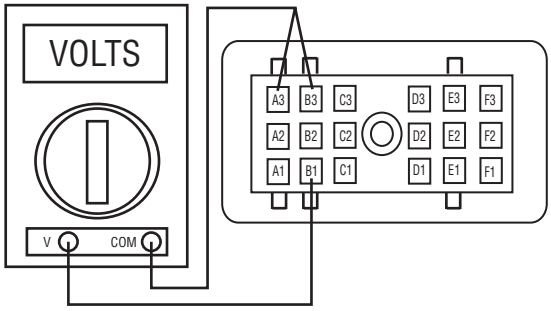

Step V	Procedure	Condition	Action
	1. Road test vehicle for repair effectiveness. →	Condition does not reoccur →	Test complete
		Condition reoccurs →	Repeat test procedures.

Shift Knob Test - No Fault Codes Overview

Overview

Perform the Shift Knob test if there is no splitter function when the splitter switch on the Shift Knob is moved up or down, and no active fault codes are logged.

Detection

The splitter does not change from low to high or high to low when the splitter switch on the shift knob is changed. There are no fault codes for a splitter switch failure.

Fallback

Odd number gears only 1st, 3rd, 5th, 7th, and 9th.

Required Tools

- Basic Hand Tools

Possible Causes

This fault can be caused by any of the following:

- Faulty Shift Knob
- Harness Between Shift Knob and Transmission ECU
- Transmission ECU

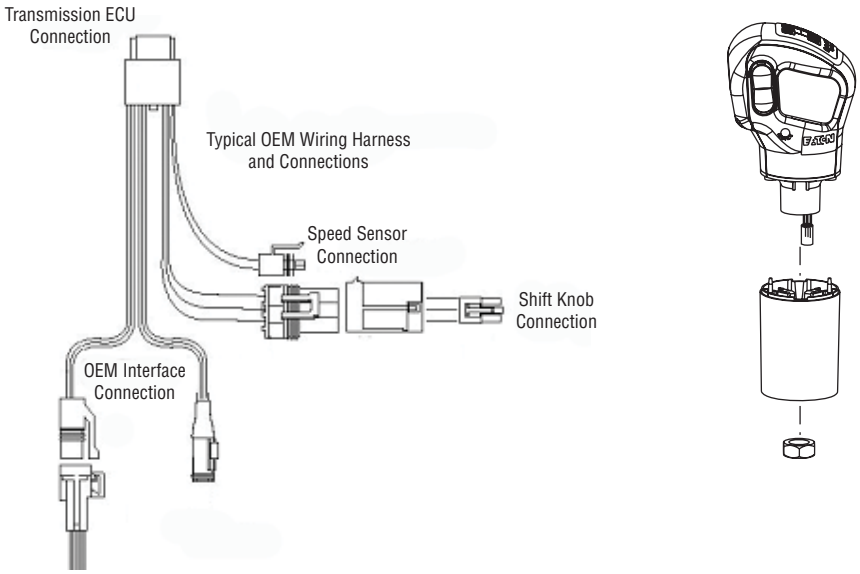

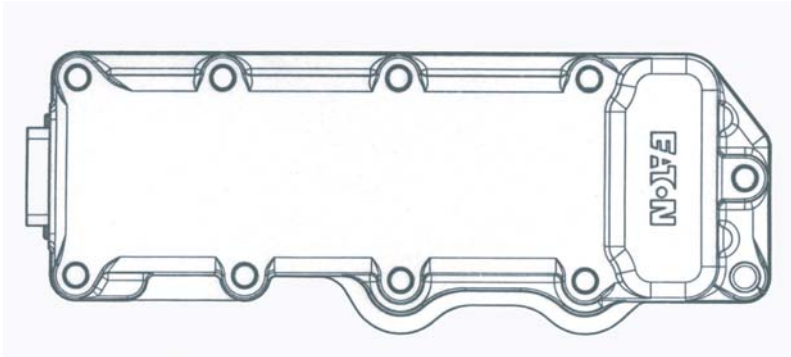

Shift Knob Test - No Fault Codes

Step A	Procedure	Condition	Action
	1. Key off.		
	2. Remove 18-pin connector from the transmission ECU.		
	3. Measure resistance across pins F3 and E3 of the harness with the splitter button in the down position then in the up position. →	If the button down position meter reads .5 ohms or less and button up position meter reads infinite ohms →	**Replace transmission ECU.** Go to **Step V.**
		If either position falls outside this range →	Go to **Step B.**

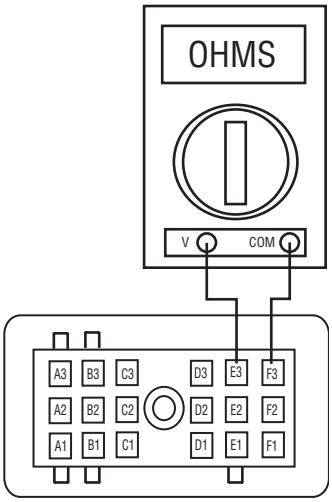

Shift Knob Test - No Fault Codes, continued

Step B	Procedure	Condition	Action
	1. Gently remove the shift knob skirt being careful not to damage electrical connections.		
	2. Disconnect 3-way connector located under skirt.		
	3. Measure resistance across pins B and C of the connector with the splitter button in the down position then in the up position. →	In the button down position meter reads .5 ohms or less and Button up position meter reads infinite ohms →	Replace or repair wiring harness between shift knob and transmission ECU. Go to **Step V.**
	Note: Raised ribs on the connector identify pin locations.	If either position falls outside this range →	**Replace shift knob.** Go to **Step V.**

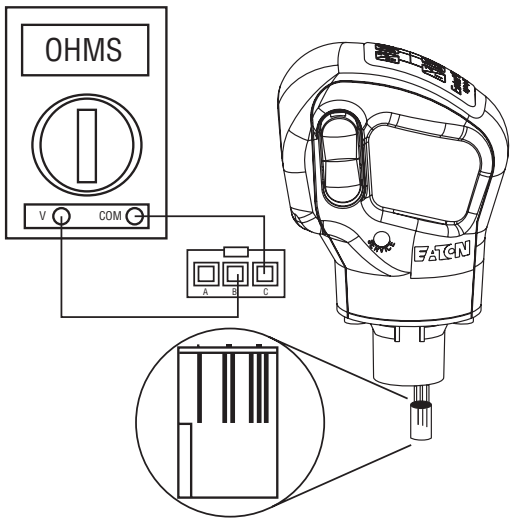

Step V	Procedure	Condition	Action
	1. Reconnect all connectors.		
	2. Key on.		
	3. Drive vehicle to test for repair effectiveness. →	Transmission has all available gears →	Test Complete.
		Transmission still has only five available gears →	Review tests procedures and check for any active fault codes. Re-run necessary tests.

Shift Knob Test - No Fault Codes, continued

This page left blank intentionally.

J-1587 Data Link Test Overview

Overview

Does not affect transmission operation. Any tool connected to the ATA J-1587 Data Link connector does not work correctly.

Detection

The service technician observes the failure when operating the PC-based Service Tool. To observe this failure, simply connect the PC-based Service Tool to the transmission via the J-1587 diagnostic connector located in the cab.

Fallback

There is no fallback mode for J-1587 Data Link. The PC-Based Service Tool will not work correctly.

Required Tools

- Basic Hand Tools
- Digital Volt/Ohm Meter
- Troubleshooting Guide
- Service Tool

Possible Causes

This fault can be caused by any of the following:

- J-1587 data link
- Transmission ECU
- Service Tool

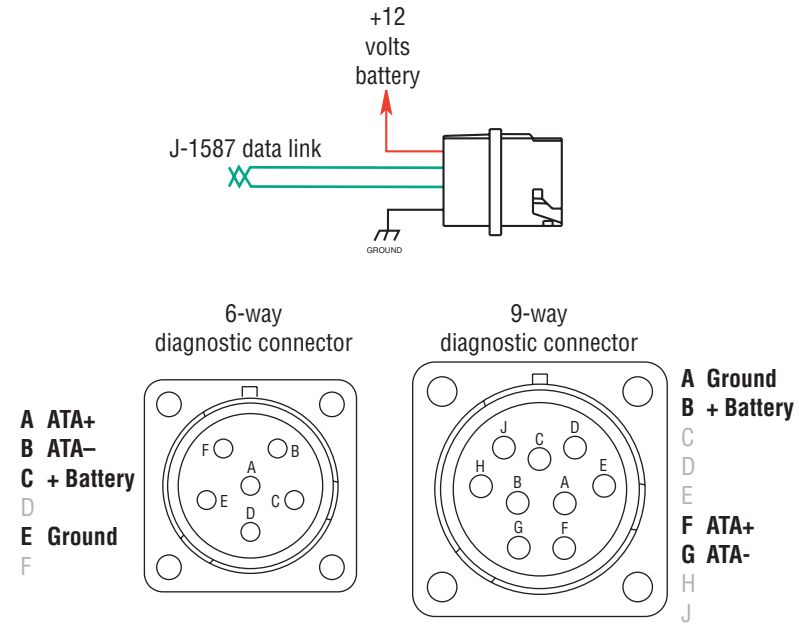

All OEM responsible wiring shown is "typical". Consult specific application.
+12 volt non-switched from battery
Communication from and to the ECU

J-1587 Data Link Test

Step A	Procedure	Condition	Action
	1. Key on.		
	2. Measure voltage between pins C and E on the 6-way diagnostic connector or pins B and A on the 9-way connector. →	If voltage is within .6 volts of battery voltage →	Go to **Step B**
		If voltage is outside of range →	Repair battery or ground line to vehicle diagnostic connector. Go to **Step V.**

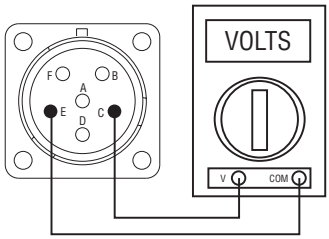

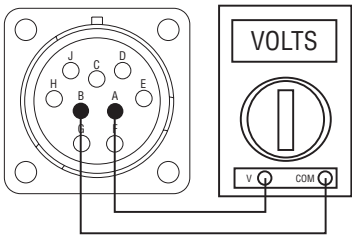

Step B	Procedure	Condition	Action
	1. Disconnect Transmission ECU 18-way connector.		
	2. Measure resistance across 18-way connector pin A2 and either 6-way diagnostic connector pin A or 9-way diagnostic connector pin F. →	If resistance is 0 to .3 ohms →	Go to **Step C.**
		If resistance is outside of range →	Repair vehicle's interface harness and go to **Step V.**

J-1587 Data Link Test, continued

Step C	Procedure	Condition	Action
	1. Measure resistance across either 6-way diagnostic connector pin A or 9-way diagnostic connector pin F and ground.	If resistance is greater than 10K ohms or infinite	Go to **Step D.**
		If resistance is less than 10K ohms	Repair vehicle's harness and go to **Step V.**

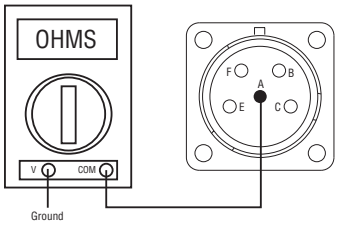

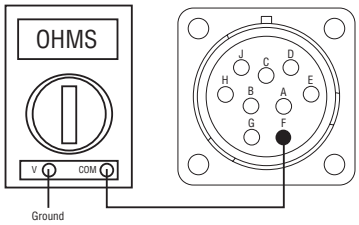

J-1587 Data Link Test, continued

Step D	Procedure	Condition	Action
	1. Measure resistance across 18-way connector pin B2 and either 6-way diagnostic connector pin B or 9-way diagnostic connector pin G. →	If resistance is 0 to .3 ohms →	Go to **Step E.**
		If resistance is outside of range →	Repair vehicle's harness and go to **Step V.**

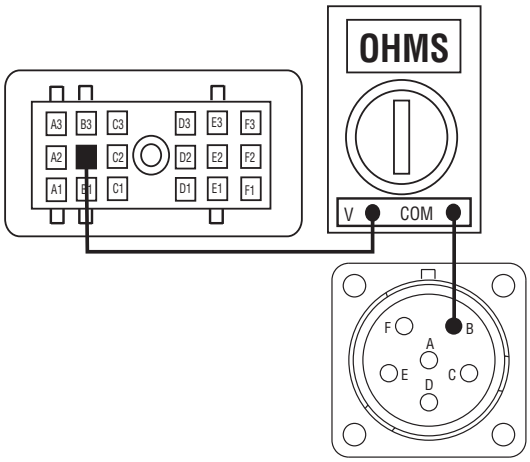

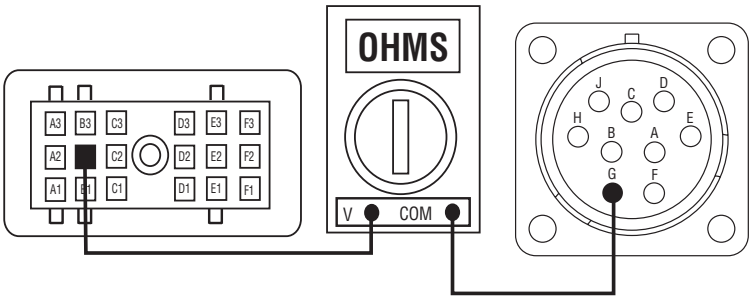

J-1587 Data Link Test, continued

Step E	Procedure	Condition	Action
	1. Measure resistance between either 6-way diagnostic connector pin B or 9-way diagnostic connector pin G and ground.	If resistance is greater than 10K ohms or infinite	Go to **Step F.**
		If resistance is less than 10K ohms	Repair vehicle's harness and go to **Step V.**

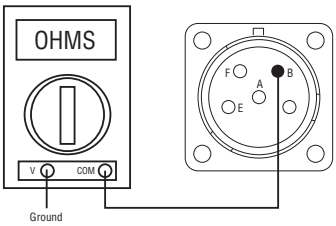

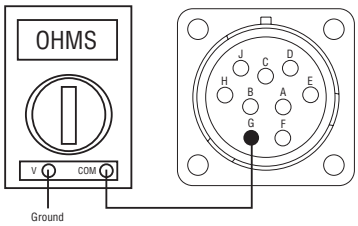

J-1587 Data Link Test, continued

Step F	Procedure	Condition	Action
	1. Disconnect all data links to the vehicle's diagnostic connector leaving only the transmission connected.		
	2. Connect the data link tester across the diagnostic connector pins A and B for the 6-way diagnostic connector or F and G of the 9-way diagnostic connector.		
	3. Key on.		
	4. Place the Data Link Tester in the communication test mode. →	If test passes →	Problem exits with service tool in one of the following area. Communication Box, Cables or the PC. Repair as required and go to **Step V.**
		If test fails →	**Replace transmission ECU** and go to **Step V.**

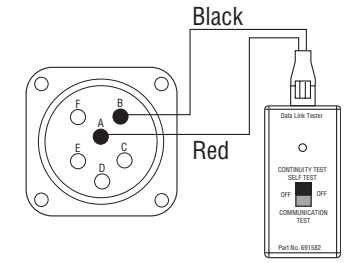

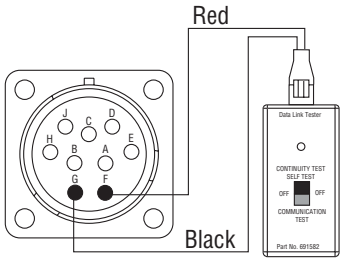

Step V	Procedure	Condition	Action
	1. Key on.		
	2. Connect tool to J-1587. →	If service tool functions correctly →	Test Complete.
		If service tool does not function correctly →	Return to **Step A** and repeat procedure.

Component Code 11 (SID 254, FMI 12) Transmission ECU

Overview

This fault code indicates an internal failure of the transmission ECU.

Detection

The transmission ECU detects an internal solenoid power supply problem or three consecutive attempts to read or write program memory information each time the ignition key is turned on. Active fault code 11 cannot be accessed using the key switch method to access flash codes. An electronic diagnostic tool such as ServiceRanger or Pro-Link must be used to confirm active fault code 11.

Fallback

Depending on the failure mode, shift performance may not be affected. The driver may have only odd number gears in either low or high range, or he may have 6-speed shifting with low range only.

Required Tools

- Basic Hand Tools
- Diagnostic Tool

Possible Causes

This fault can be caused by any of the following:

- Transmission ECU

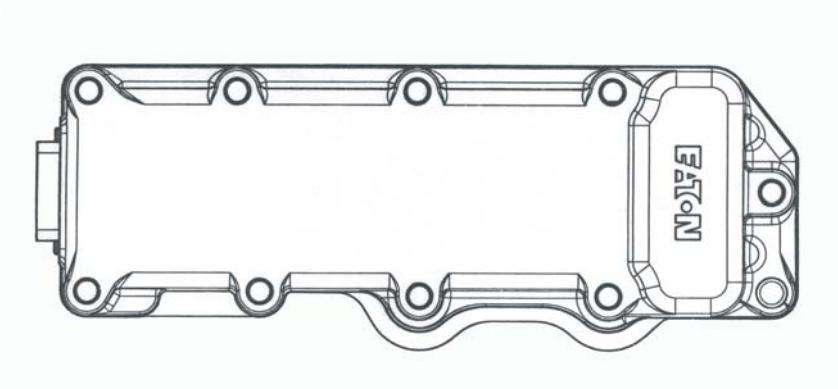

Transmission ECU

Code 11 (SID 254, FMI 12) Transmission ECU

Step A	Procedure		Condition		Action
	1. Key on.				
	2. Retrieve codes.	→	Active Code	→	**Replace Transmission ECU.**
			In-Active Code	→	Test Complete.

Component Code 33 (PID 158,168, FMI 3,4) System Voltage Fault

Overview

This fault code indicates vehicle ignition or battery voltage supplied to the transmission ECU connector pins A1 or B1 is outside the acceptable operating range.

Detection

The fault code can be set during initial power up or during normal operation if either of the following conditions occur:

1. Vehicle battery power supplied to transmission ECU connector pin A1 falls below 9 volts for 5 seconds.

2. Vehicle ignition power is lost at transmission ECU connector pin B1 longer than 60 seconds and J1939 data link remains active.

Fallback

Detection mode 1 results in fallback to 1st, 3rd, and 5th gears only.

Detection mode 2 results in fallback to odd gears only - 1st, 3rd, 5th, 7th, 9th.

Required Tools

- Basic Hand Tools

Possible Causes

This fault can be caused by any of the following:

- Truck charging system
- Battery or ground connections
- Fuses or circuit breakers
- Transmission ECU

Code 33 (PID 158,168, FMI 3,4) System Voltage Fault

Step A	Procedure	Condition	Action
	1. Perform Vehicle Electrical Pretest. →	Vehicle Passes Test →	Go to **Step V.**
		Vehicle Fails Test →	Repair according to manufacturers recommendations. Go to **Step V.**

Step V	Procedure	Condition	Action
	1. All connectors secure and in place on transmission		
	2. Clear all fault codes from transmission ECU.		
	3. Key on.		
	4. Wait 5 minutes and look for fault code 33 to reappear. →	Fault reoccurs →	**Replace transmission ECU.**
		Fault does not reoccur →	Test complete.

Component Code 35 (SID 231, FMI 2) J-1939 Data Link Test

Overview

This fault code indicates J1939 data link communication between the transmission and all other J1939 devices has failed.

Detection

15 seconds after key-on and throughout vehicle operation the transmission constantly monitors communication with all other J1939 devices. If communication to or from the engine or other devices is lost for more than a fraction of a second and there is a shift request, Fault Code 35 will be logged and the service light will begin flashing. If communication is lost and there is no shift request (steady speed condition), the fault code will not be set as long as communication is reestablished before a shift request. If communication is reestablished after an active fault code is set, the light will stop flashing and the fault will be logged as inactive.

Fallback

An active J-1939 fault causes the transmission to default to a 5-speed fallback mode in either low or high split depending on last known gear position. Range shift now triggers in neutral with engine running and the vehicle stationary.

Required Tools

- Basic Hand Tools
- Digital Volt/Ohm Meter
- Troubleshooting Guide
- Data Link Tester

Possible Causes

This fault can be caused by any of the following:

- J-1939 data link
- J- 1939 data link connectors
- Engine ECM
- Transmission ECU

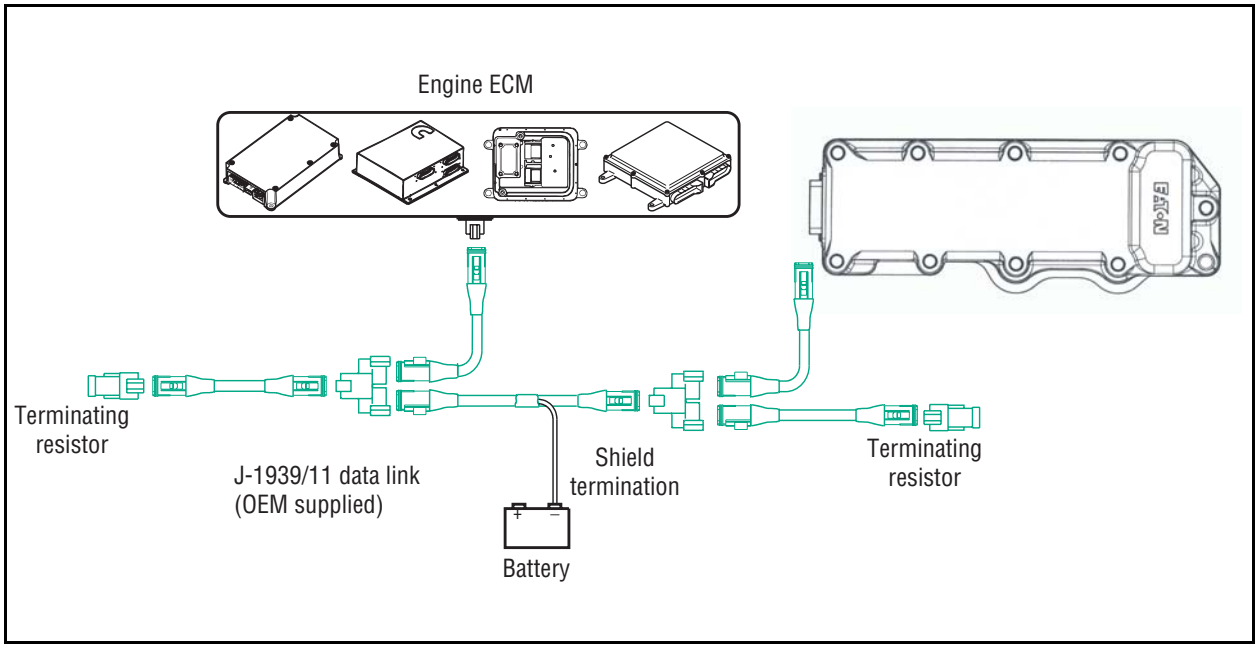

Code 35 (SID 231, FMI 2) J-1939 Data Link Test

Step A	Procedure	Condition	Action
	1. Key off		
	2. Disconnect transmission ECU 18-way connector.		
	3. Disconnect engine ECM's connector, which contains the J-1939 data link.		
	4. Measure resistance across vehicle interface harness from:		
	• Transmission ECU 18-way connector and engine ECM +J-1939 pin (See OEM Engine pinout). →	If resistance between pin C1 and engine ECM +J-1939 pin is 0 to .3 ohms and if resistance between pin C1 and ground is greater than 10K. →	Go to **Step B.**
	• Transmission ECU 18-way connector C1 and ground.		
		If resistance is outside of this range →	Repair J-1939 data link harness between ECM and transmission ECU, then go to **Step V.**

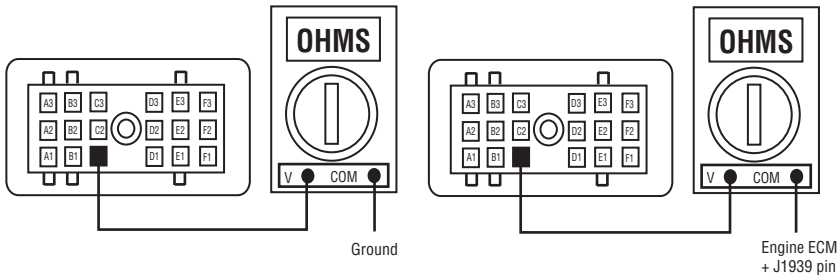

	EATON
	Lightning
	18-Way ECU Connector
J1939 (+)	*C1*
J1939 (-)	*C2*
Shield	*C3*

Code 35 (SID 231, FMI 2) J-1939 Data Link Test, continued

Step B	Procedure	Condition	Action
	1. Measure resistance across: • Transmission ECU 18-way connector C2 and Engine ECM -J-1939 pin (See OEM Engine pinout). • Transmission ECU 18-way connector C2 and ground.	If resistance between pin C2 and engine ECM -J-1939 pin is 0 to .3 ohms and if resistance between pin C2 and ground is greater than 10K ohms.	If equipped with J-1939 Lite. Go to **Step D.** If not equipped with J-1939 Lite Go to **Step C.**
		If resistance is outside of this range	Repair J-1939 data link harness between ECM and transmission ECU Go to **Step V.**

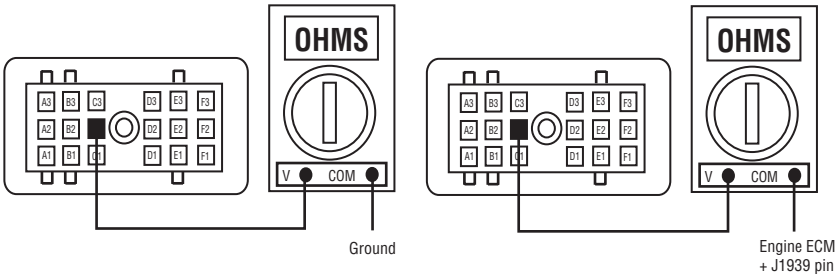

	EATON
	Lightning
	18-Way ECU Connector
J1939 (+)	*C1*
J1939 (-)	*C2*
Shield	*C3*

Code 35 (SID 231, FMI 2) J-1939 Data Link Test, continued

Step C	Procedure	Condition	Action
	1. Measure resistance across Transmission ECU 18-way connector C3 and Engine ECM Shield pin (See OEM Engine pinout). →		
		If resistance between pin C3 and engine ECM Shield pin is 0 to .3 ohms. →	Go to **Step D.** If working with Mack engine **Step E.**
		If resistance is outside of this range →	Repair J-1939 data link harness between ECM and transmission ECU, then go to **Step V.**

	EATON
	Lightning
	18-Way ECU Connector
J1939 (+)	*C1*
J1939 (-)	*C2*
Shield	*C3*

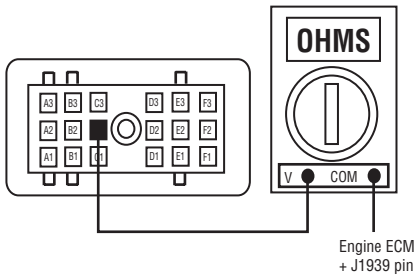

Code 35 (SID 231, FMI 2) J-1939 Data Link Test, continued

Step D	Procedure	Condition	Action
	1. Key off.		
	2. Measure resistance on vehicle interface harness between transmission 18-way connector pins C1 and C2.	If resistance between pin C1 and C2 is between 50 to 70 ohms	Go to **Step E.**
		If resistance is outside of range	Repair J-1939 data link harness and go to **Step V.**

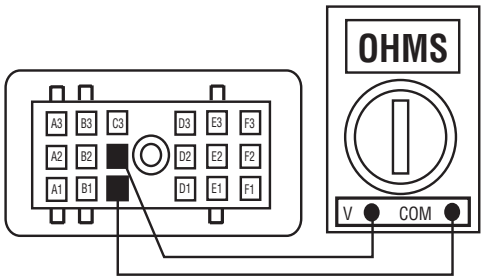

Code 35 (SID 231, FMI 2) J-1939 Data Link Test, continued

Step E	Procedure	Condition	Action
	1. Key off.		
	2. Reconnect engine ECM connector and transmission ECU 18-way connector.		
	3. Disconnect the 3-way stub connector, which connects the transmission into the J-1939 data link.		
	4. Connect the data link tester to the 3-way stub connector, which connects the transmission into the J-1939 data link.		
	5. Place the data link tester in communication test mode.		
	6. Key on. →	If test passes →	Problem exists with the engine ECM. Repair according to manufacturer's recommendations and go to **Step V.**
	Note: If vehicle does not use a 3-way connector, then do not reconnect the engine ECM and connect the data link tester across the +/- J-1939 terminals.	If test fails →	**Replace transmission ECU** and go to **Step V.**

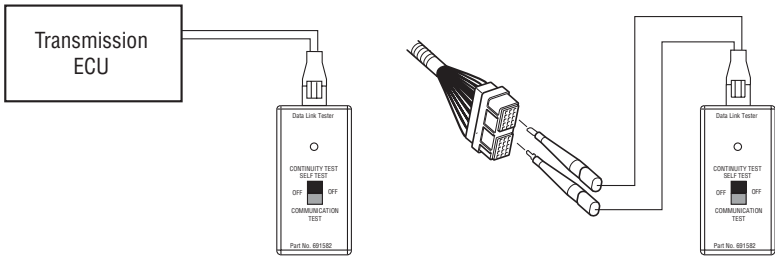

	EATON
	Lightning
	18-Way ECU Connector
J1939 (+)	*C1*
J1939 (-)	*C2*
Shield	*C3*

Code 35 (SID 231, FMI 2) J-1939 Data Link Test, continued

Step V	Procedure	Condition	Action
	1. Key off.		
	2. Key on.		
	3. Clear codes.		
	4. Drive the vehicle in an attempt to reset fault code.		
	5. Check for fault codes and associated fall back modes. →	If no codes →	Test Complete.
		Code reappears →	Return to **Step A** and retest.
		If different code appears →	Go to fault code testing for isolation procedure.

Code 35 (SID 231, FMI 2) J-1939 Data Link Test, continued

This page left blank intentionally.

Component Code 36 (SID 48,49, FMI 2) Position Sensor Test

Overview

This fault code indicates the transmission position sensor is outside the acceptable operating range.

Detection

The transmission ECU monitors the Position Sensor values every 10 milliseconds. The fault code is set if the value is outside the acceptable range 10 times within the last 1 second of operation.

Fallback

For SID 48 the transmission defaults to six speed shifting (low range gears only). For SID 49 all gears remain functional, but all engine control is returned to the driver.

Required Tools

- Basic Hand Tools

Possible Causes

Shift Position Sensor has failed but is non-serviceable (must replace complete transmission ECU).

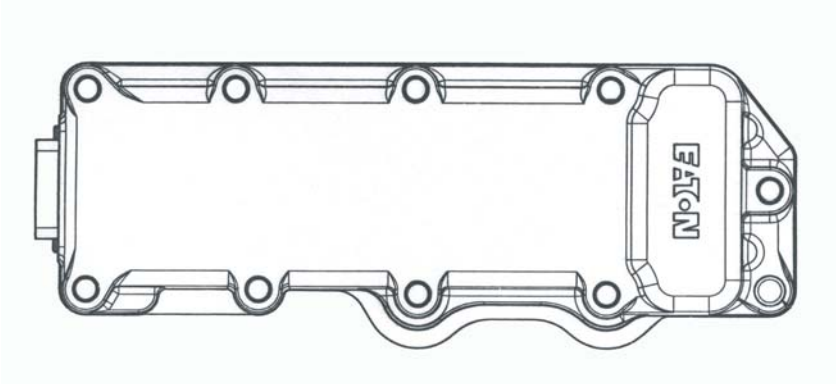

Transmission ECU

Code 36 (SID 48,49, FMI 2) Position Sensor Test

Step A	Procedure		Condition		Action
	1. Test drive vehicle to verify active Fault Code 36.	→	Active code 36.	→	**Replace transmission ECU** and reset.
			In-active code 36.	→	Record and clear all in-active fault codes. Test drive vehicle to verify complaint. Perform diagnostic test procedure for active fault code or follow symptom complaint procedure if no fault codes are logged.

Component Code 43 (SID 36, FMI 4,5,6) Low Range Solenoid

Overview

This fault code indicates an electrical failure of the Low Range solenoid.

Detection

Starting at key-on and during normal operation, the transmission continuously measures the low range solenoid circuit. Any condition resulting in an electrical short to ground, open circuit, or low / high current for at least 1 second will set the fault code.

Fallback

Depending on the failure mode, the transmission defaults to only odd number gears in either low or high range, or high range gears only.

Required Tools

- Basic Hand Tools

Possible Causes

Low Range solenoid has failed but is non-serviceable (must replace complete transmission ECU assembly).

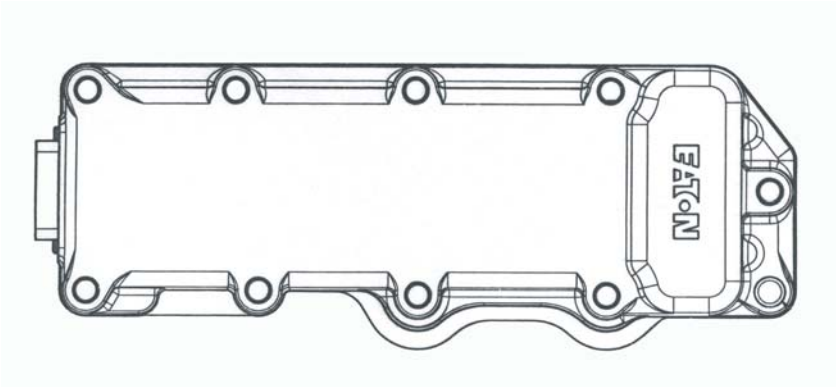

Transmission ECU

Code 43 (SID 36, FMI 4,5,6) Low Range Solenoid

Step A	Procedure		Condition		Action
	1. Test drive vehicle to verify active Fault Code 43.	→	Active code 43	→	**Replace transmission ECU** and retest.
			In-active code 43	→	Record and clear all inactive fault codes. Test drive vehicle to verify complaint. Perform diagnostic procedure for active fault codes or follow symptom complaint procedure if no faults are logged.

Component Code 46 (SID 37, FMI 4,5,6) Splitter Solenoid

Overview

This fault indicates an electrical failure of the Splitter solenoid.

Detection

Starting at key-on and during normal operation, the transmission continuously measures the splitter solenoid circuit. Any condition resulting in an electrical short to ground, open circuit, or low / high current for at least 1 second will set the fault code

Fallback

Depending on the failure mode, the transmission defaults to only odd number gears in either low or high range, or all odd number gears.

Required Tools

- Basic Hand Tools

Possible Causes

Splitter Solenoid has failed but is non-serviceable (must replace complete transmission ECU assembly).

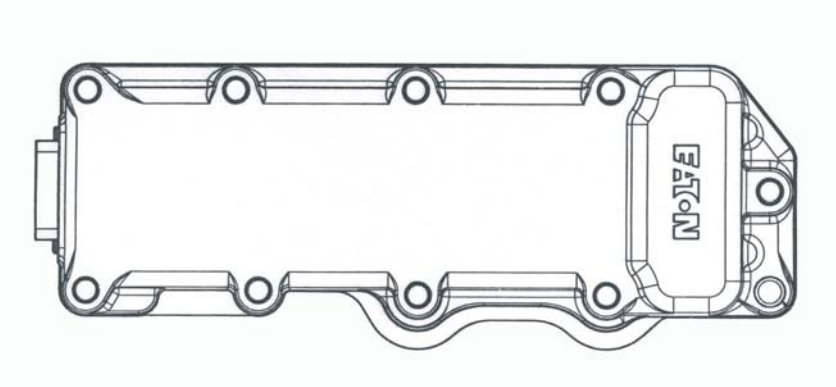

Transmission ECU

Code 46 (SID 37, FMI 4,5,6) Splitter Solenoid

Step A	Procedure		Condition		Action
	1. Test drive vehicle to verify active Fault Code 46.	→	Active code 46	→	**Replace transmission ECU** and retest
			In-active code 46	→	Record and clear all inactive fault codes. Test drive vehicle to verify complaint. Perform diagnostic procedure for active fault codes or follow symptom complaint procedure if no faults are logged.

Component Code 48 (SID 35, FMI 4,5,6) High Range Solenoid

Overview

This fault code indicates an electrical failure of the High Range solenoid.

Detection

Starting at key-on and during normal operation, the transmission continuously measures the high range solenoid circuit. Any condition resulting in an electrical short to ground, open circuit, or low / high current for at least 1 second will set the fault code.

Fallback

Depending on the failure mode, the transmission defaults to only odd number gears in either low or high range, or low range gears only.

Required Tools

- Basic Hand Tools

Possible Causes

High Range solenoid has failed but is non-serviceable (must replace complete transmission ECU assembly).

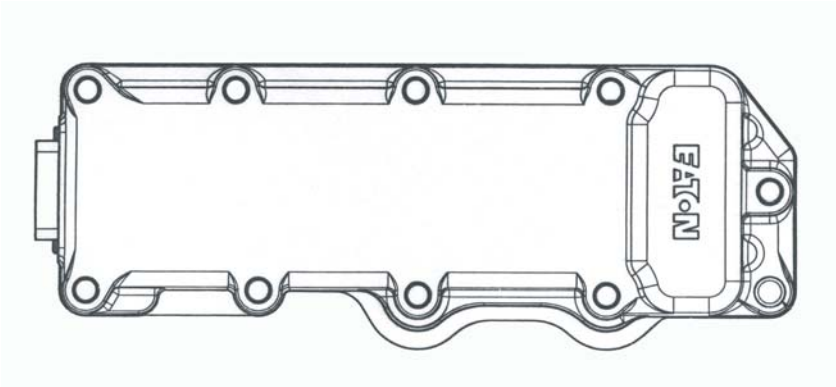

Transmission ECU

Code 48 (SID 35, FMI 4,5,6) High Range Solenoid

Step A	Procedure		Condition		Action
	1. Test drive vehicle to verify active Fault Code 48.	→	Active code 48	→	**Replace transmission ECU** and retest.
			In-active code 48	→	Record and clear all inactive fault codes. Test drive vehicle to verify complaint. Perform diagnostic procedure for active fault codes or follow symptom complaint procedure if no faults are logged.

Component Code 58 (PID 191, FMI 2) Output Shaft Speed Sensor

Overview

This fault code indicates an electrical problem has occurred in the output shaft speed sensor circuit.

Detection

This fault code can be set three ways:

1) With the truck stopped, at key-on the transmission ECU performs a continuity check on the output speed sensor circuit. The fault code will be set for an open circuit or a short to ground condition.

2) While the truck is moving, in gear, engine speed present, and clutch engaged - the fault code will be set if the output speed signal is lost for at least six seconds.

3) With the truck stopped, key on, transmission in 4th gear or higher, clutch engaged - the fault code will be set if the clutch switch fails open after five seconds (clutch state and output speed do not match).

Fallback

The transmission defaults to five speed shifting with odd number gears only.

Required Tools

- Basic Hand Tools

Possible Causes

This fault can be caused by any of the following:

- Faulty Output Speed Sensor
- Open or short in wiring Harness to Sensor
- Clutch Switch (at pedal) fails open
- Transmission ECU

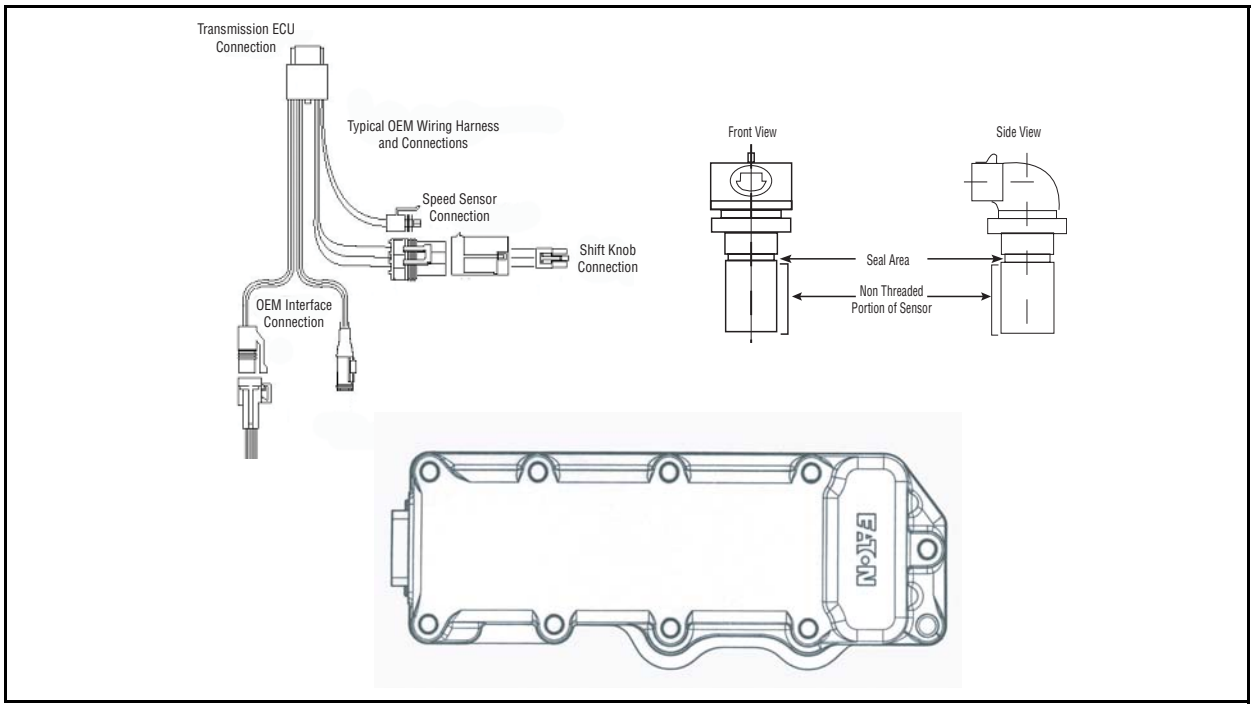

Code 58 (PID 191, FMI 2) Output Shaft Speed Sensor

Step A	Procedure	Condition	Action
	1. Check for debris/contamination around the output speed sensor and connection.		
	2. Check for proper adjustment of the speed sensor.		
	3. Check for loose speedometer tone wheel. →	If any of these conditions exist →	Repair, adjust, clean or tighten to manufacturer's specification then go to **Step V.**
		Speed sensor location is free of contamination, corrosion, and all cap screws and output nut tight →	Go to **Step B.**

Step B	Procedure	Condition	Action
	1. Key off.		
	2. Remove 18-way connector from transmission ECU and measure resistance across pins D1 to D2 and between pin D1 to ground. →	If resistance between pins D1 and D2 reads between 2K and 5K ohms and resistance from D1 to ground is greater than 10K →	Go to **Step C.**
		If resistance measures outside the above ranges than →	Go to **Step D.**

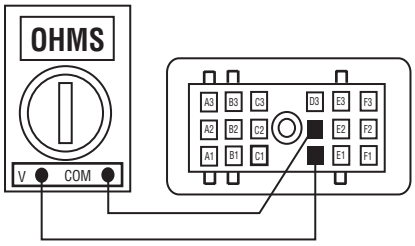

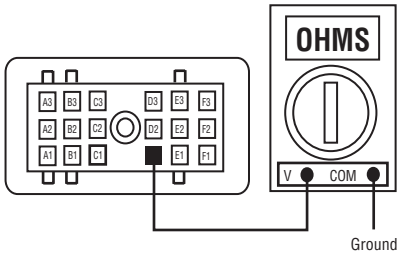

Code 58 (PID 191, FMI 2) Output Shaft Speed Sensor, continued

Step C	Procedure	Condition	Action
	1. Perform clutch pedal switch diagnostics per OEM instructions. Clutch switch contacts should be engaged (pedal in the up position) and closed when clutch is disengaged (pushed in). →	If clutch switch fails open or installation issues prevent the switch from operating correctly →	Adjust or replace clutch switch per OEM instructions and go to **Step V.**
		If clutch switch test passes and functions 100% of the time →	**Replace transmission ECU** and go to **Step V.**

Step D	Procedure	Condition	Action
	1. Disconnect transmission harness from output speed sensor.		
	2. Measure resistance between output speed sensor pins and each pin to ground. →	If output speed sensor resistance is 2K to 5K ohms and output sensor pin to ground is greater than 10K ohms →	Repair or replace harness from sensor to 18-way connector.
		For ohm readings outside the conditions above →	Replace output speed sensor and go to **Step V.**

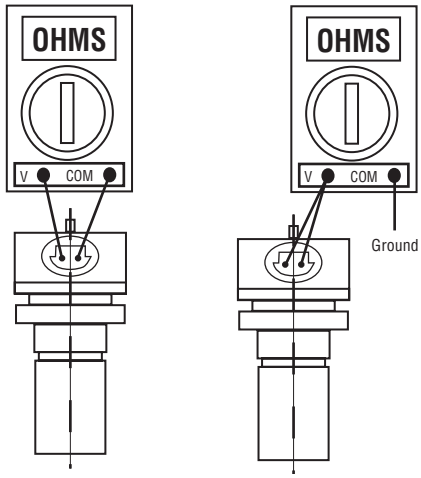

Code 58 (PID 191, FMI 2) Output Shaft Speed Sensor, continued

Step V	Procedure	Condition	Action
	1. Replace all connectors.		
	2. Clear any codes.		
	3. Drive vehicle to test effectiveness of repair. →	No fault codes →	Repair complete.
		Code reappears or other fault occurs →	Return to appropriate test procedure.

System Code 66 (SID 58, FMI 1) Unconfirmed Torque Path

Overview

This fault code indicates that the current input and output speeds do not match the current selected gear position ratio.

Detection

This fault code can only be set as an active fault code while driving the vehicle. The transmission ECU constantly monitors engine speed, output speed, shift lever position, and splitter button position to confirm actual gear position. The ECU will set the fault when speed information and gear position do not match for at least ten seconds with the master clutch engaged

Fallback

The transmission defaults to five-speed shifting with either all odd or all even number gears.

Required Tools

- Basic Hand Tools

Possible Causes

This fault can be caused by any of the following:

- Slipping Clutch
- Clutch Switch Failure
- Electrical Interference with J-1939 link or Transmission ECU.
- Service work on the vehicle created high electrical current through the transmission such as improper arc welding techniques.
- Output Speed Sensor
- Transmission ECU

Code 66 (SID 58, FMI 1) Unconfirmed Torque Path

Step A	Procedure	Condition	Action
	1. Test drive vehicle to determine clutch performance. →	Clutch slips or has other noticeable performance problems. →	Repair clutch according to manufacturer specification and retest.
		Clutch performs according to manufacturer specification →	Go to **Step B.**

Step B	Procedure	Condition	Action
	1. Perform diagnostics on clutch switch per OEM or manufacturer recommendation. →	Clutch switch does not pass diagnostics test →	Replace clutch switch per manufacturer or OEM recommendations
	Note: Clutch switch failure also results in an inoperable engine brake and cruise control.	Clutch switch passes diagnostics test →	Go to **Step C.**

Step C	Procedure	Condition	Action
	1. Using a hand-held tool or similar tool, drive the vehicle and monitor output speed in 9th gear. →	Output speed matches engine rpm within 50 rpm →	Problem lies outside the transmission. Contact vehicle or engine manufacturer
		Output speed and engine rpm do not match →	Go to **Step D.**

Step D	Procedure	Condition	Action
	1. Perform Diagnostics for Code 58 Output Speed Sensor. →	Output speed sensor test passes →	Go to **Step E.**
		Output speed sensor test fails →	Perform Repairs and Go to **Step V.**

Code 66 (SID 58, FMI 1) Unconfirmed Torque Path, continued

Step E	Procedure	Condition	Action
	1. Perform diagnostics for Position Sensor Code 36. →	Position Sensor Test Passes →	**Replace Transmission ECU.** Go to **Step V.**
		Position Sensor Test Fails →	Perform Repairs and Go to **Step V.**

Step V	Procedure	Condition	Action
	1. Test drive vehicle to test effectiveness of repair. →	Transmission operates properly and code does not reappear →	Test Complete
		Transmission fault code reappears →	Repeat test procedures for Active Fault.

This page left blank intentionally.

System Code 71
(SID 61, FMI 7)
Range or Splitter Stuck in Gear

Overview

This fault code indicates the transmission was unable to move the front box to neutral during a shift request.

Detection

This fault code is set differently for Top 2 shifts and non-Top 2 shifts and it can only be set as an active fault code while driving the vehicle.

1) For non-Top 2 shifts the fault code will be set during a shift attempt after the engine has crossed through zero torque five time and the transmission is unable to pull the splitter or range out of gear.

2) For Top 2 shifts the transmission controls the throttle and the fault code will be set if attempts to pull the splitter out of gear have failed after nine seconds. The driver should notice continuous engine throttle blips or surges and no manual throttle control during this nine-second period prior to setting the fault code.

Fallback

The transmission defaults to five-speed shifting with either all odd or all even number gears for an inoperable splitter system or six speed shifting for an inoperable range system.

Required Tools

- Basic Hand Tools

Possible Causes

This fault can be caused by any of the following:

- Air regulator malfunction
- Air cylinder malfunctions such as excessive air leaks or contamination
- Solenoid Mechanical Malfunctions
- Transmission internal damage with components such as range or splitter shift components

Code 71 (SID 61, FMI 7) Range or Splitter Stuck in Gear

Step A	Procedure	Condition	Action
	1. Key on, vehicle running		
	2. Test drive vehicle in a safe area then place the lever into 3rd gear.		
	3. Drive the vehicle and attempt to make an up-shift to 4th gear. →	Transmission completes shift →	Go to **Step V.**
		Transmission does not complete shift to 4th gear →	**Perform Splitter Cylinder Test.**

Step V	Procedure	Condition	Action
	1. Key on, vehicle running		
	2. Test drive vehicle in a safe area then place the lever into 6th gear		
	3. Drive the vehicle and attempt to make an up-shift to 7th gear. →	Transmission does not complete shift to 7th. Transmission goes back to 6th or 3rd/4th gear when vehicle has slowed down to 3rd/4th gear road speed. →	**Perform Range Cylinder Test.**
		Transmission completes shift →	Repeat test procedures to isolate problem.

System Code 73
(SID 58, FMI 11)
Transmission Missed Synchronous

Overview

An indication the transmission has failed to achieve complete ratio synchronization on splitter or range shifts where engine control is involved. The code can only be set as an active code while driving the vehicle and it can not be set while in Top 2 (auto) mode.

Detection

This fault code can only be set as an active fault code while driving the vehicle. Upon completion of an engine controlled non-Top 2 range or splitter shift, the transmission monitors gear ratio match information while the engine is reapplying torque. This fault code will be set if the ratio information fails to remain constant during the engine torque ramp-up on any three shift attempts during one vehicle key-on cycle.

Fallback

All gears remain available but engine control is fully returned to the driver.

Required Tools

- Basic Hand Tools

Possible Causes

This fault can be caused by any of the following:

- Clutch or clutch switch malfunction
- Air system malfunction such as low pressure, contamination, or leaks
- Transmission ECU

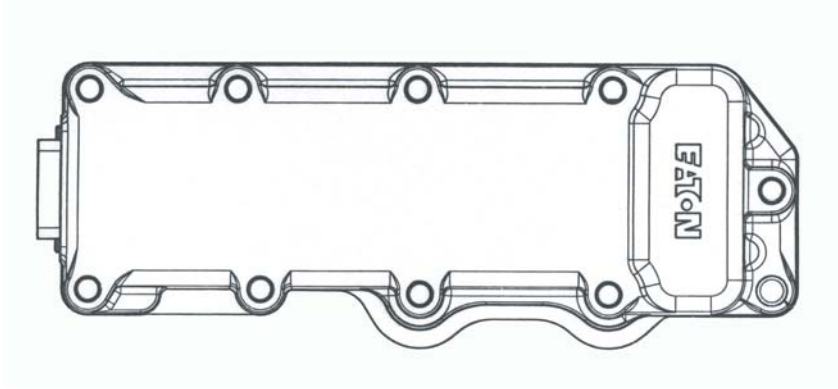

Transmission ECU

Code 73 (SID 58, FMI 11) Transmission Missed Synchronous

Step A	Procedure	Condition	Action
	1. Test drive vehicle to determine clutch performance. →	Clutch slips or has other noticeable performance problems →	Repair clutch according to manufacturer specification and retest.
		Clutch performs according to manufacturer specification →	Go to **Step B.**

Step B	Procedure	Condition	Action
	1. Perform diagnostics on clutch switch per OEM or manufacturer recommendation. →	Clutch switch does not pass diagnostics test →	Replace clutch switch per manufacturer or OEM recommendations and retest.
	Note: Clutch switch failure also results in an inoperable engine brake and cruise control.	Clutch switch passes diagnostics test →	Go to **Step C.**

Step C	Procedure	Condition	Action
	1. Test drive vehicle and attempt to duplicate complaint by performing splitter shifts and range shifts. →	Fault code is set while performing splitter shifts →	**Perform Splitter Cylinder Test.** Go to **Step V.**
	Note: The fault code will be set if the gear ratio match information fails to remain constant during engine torque ramp-up on any three shifts during one key-on cycle.	Fault code is set while performing range shifts →	**Perform Range Cylinder Test.** Go to **Step V.**

Step V	Procedure	Condition	Action
	1. Determine if air system tests for Range or Splitter systems pass for air related issues. →	Tests fail for air related problems →	Repair per procedures and retest.
		Tests pass up to point where you are instructed to remove and disassemble transmission →	**Replace Transmission ECU** and retest.

System Code 74
(SID 14, FMI 7)
Engine Missed Synchronous

Overview

This fault code indicates the engine failed to respond to transmission requests during a splitter shift.

Detection

This fault code can only be set as an active fault code while driving the vehicle. This fault code is set differently for Top 2 shifts and non-Top 2 shifts

1) For Top 2 shifts, the code will be set if the engine fails to respond to transmission requests for engine control for nine seconds during any one shift.

2) For non-Top 2 shifts the code will be set if the engine fails to respond to transmission requests for engine control for three separate three second occurrences during one vehicle key-on cycle.

Fallback

All gears remain available but engine control is returned to the driver for all shifts.

Required Tools

- Eaton Data Link Tester (MF-KIT-04)

Possible Causes

This fault can be caused by any of the following:

- J-1939 Communication Link
- Vehicle Dynamics
- Electrical Harness Interface
- Transmission ECU

Code 74 (SID 14, FMI 7) Engine Missed Synchronous

Step A	Procedure	Condition	Action
	1. Perform J-1939 communication link test. →	Link passes test →	Go to **Step B.**
		Link does not pass test →	Repair link according to test procedure. Test Complete.

Step B	Procedure	Condition	Action
	1. Key on and vehicle running and parking brakes set.		
	2. Disengage clutch and place lever into 7th/8th gear position.		
	3. Listen for the distinct noise of the range shifting into high range.		
	4. Depress accelerator pedal. →	Vehicle accelerates above engine idle. →	**Replace transmission ECU** and position sensor.
		Vehicle does not accelerate or accelerator pedal is "dead" →	Go to **Step V.**
		Note: This is the expected condition.	

Code 74 (SID 14, FMI 7) Engine Missed Synchronous, continued

Step V	Procedure	Condition	Action
	1. Key on and vehicle running. 2. Drive vehicle normally until 7th gear. 3. "Rush" the shift from 7th to 8th gear by: • Bringing the engine to governed RPM • Move the splitter button into the up position. • Release the accelerator and quickly reapply	Engine accelerates	Dynamic communication link problem. Repair for faulty harness connections.
		Vehicle does not accelerate or accelerator pedal is "dead" until shift is complete **Note:** This is the expected condition.	Contact engine or vehicle manufacturer to check for proper vehicle performance characteristics including: a. Electrical harness interface b. Vehicle dynamics, such as driveline setup c. Engine performance characteristics

Code 74 (SID 14, FMI 7) Engine Missed Synchronous, continued

This page left blank intentionally.

System Code 93
(SID 231, FMI 14)
J-1939 Engine Message Fault

Overview

This fault code indicates the transmission Electronic Control Unit (ECU) is broadcasting J-1939 messages and receiving J-1939 messages, but has not received J-1939 messages from the engine or another required devices such as the chassis control module.

Detection

The fault detected if J-1939 communication from the engine or other required device is lost for 5 seconds.

Fallback

If the fault occurs while moving it will cause a 5-speed fallback in either low or high split depending on last known gear position. If the fault occurs at system initialization (key-on), it causes a 5-speed fallback in low split.

Required Tools

- Basic Hand Tools
- Troubleshooting Guide

Possible Causes

This fault can be caused by any of the following:

- OEM Supplied J-1939 Harness
- Engine ECM
- Chassis ECM

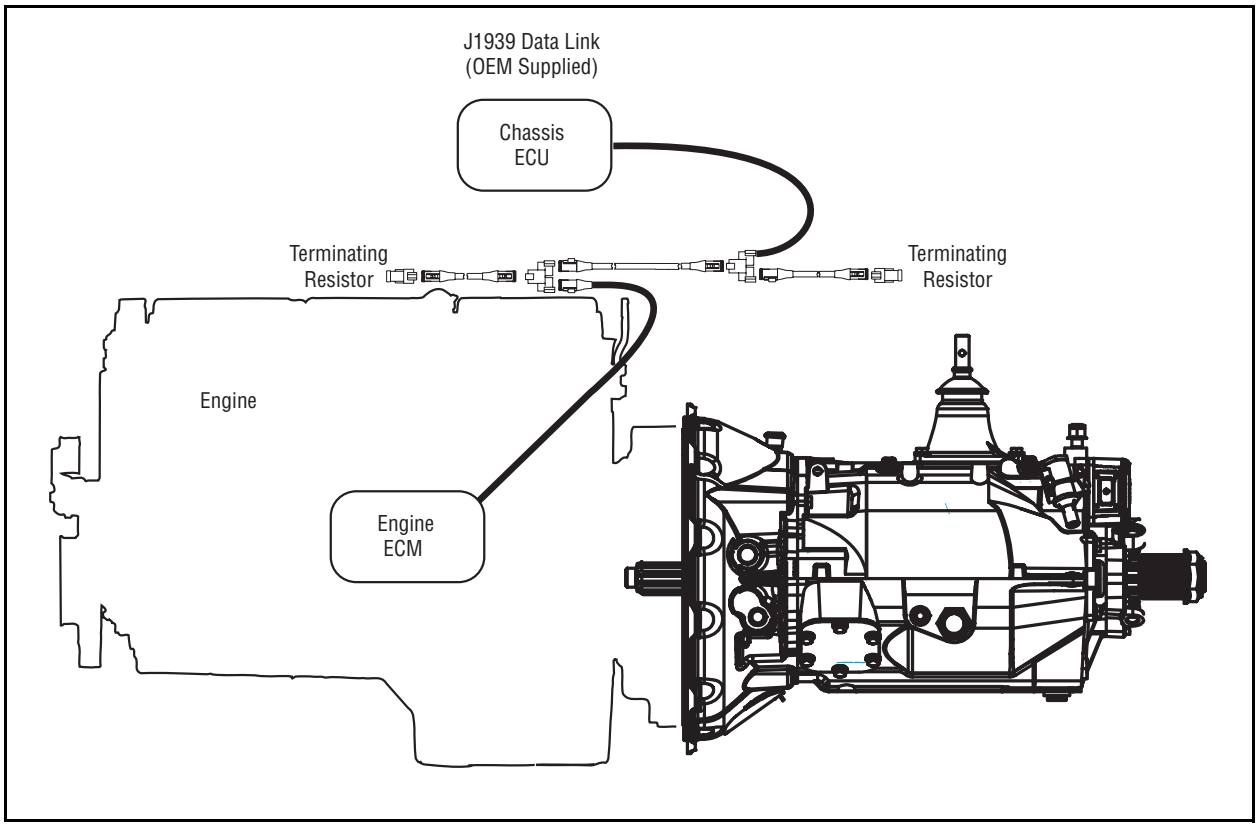

Code 93 (SID 231, FMI 14) J-1939 Engine Message Fault

Step A	Procedure	Condition	Action
	1. Key on. 2. If fault code 93 is present, inactive or active. 3. Inspect OEM J-1939 harness. →		
		If problem found →	Repair OEM J-1939 harness. Go to **Step V.**
		If no problem is found →	Go to **Step V.**

Step V	Procedure	Condition	Action
	1. Key off. 2. Reconnect all connectors. 3. Key on. 4. Clear codes. 5. Test drive vehicle to test effectiveness of repair. 6. Check for codes. →	If no codes →	Test complete.
		If code 93 appears →	Return to **Step A** to find error in testing.
		If code other than 93 appears →	Go to Fault Code Table on page 1-7 to diagnose.

Reverse Switch Test Overview

Overview

The reverse switch is a normally open switch. When the shift lever is in the reverse gear position the switch closes and electrical current flows through the switch.

Detection

The reverse switch normally provides an electrical signal to the vehicle back-up lights or alarm when the transmission shift lever is in the reverse gear position. The reverse switch is indepentent from the transmission controls. A failure of the switch or vehicle wiring running to the switch will not effect transmission operation.

Fallback

No Fallback Condition.

Required Tools

- Basic Hand Tools
- Digital Volt/Ohm Meter
- Troubleshooting Guide

Possible Causes

This fault can be caused by any of the following:

- Shorted or failed open switch
- Actuating pin failure

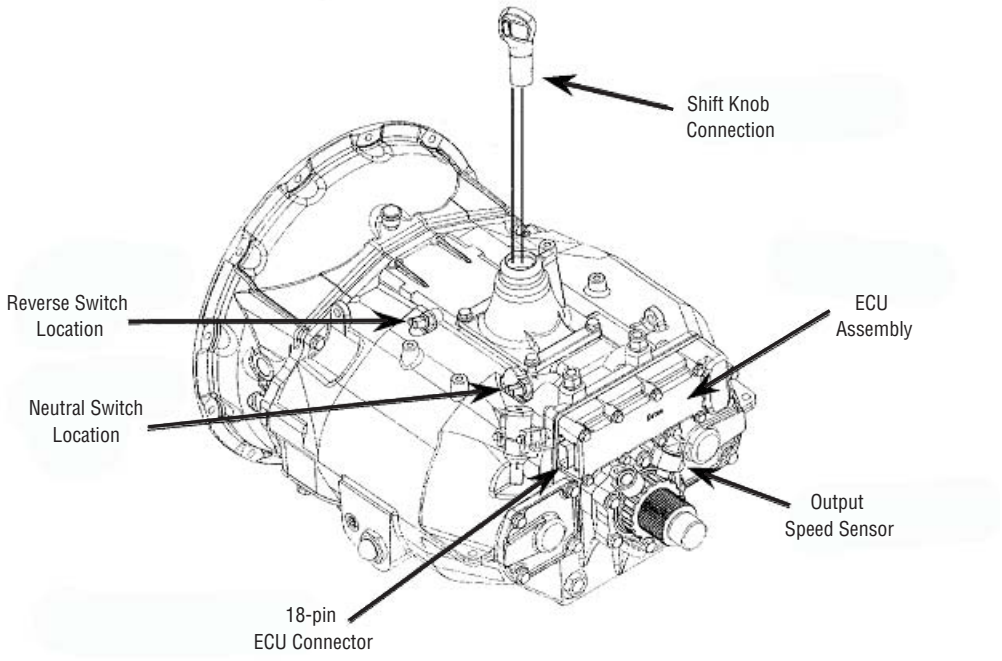

Transmission Electrical Attachment Points

Reverse Switch Test

Step A	Procedure	Condition	Action
	1. Key off.		
	2. Disconnect connector from reverse switch and place shift lever in reverse.		
	3. Measure resistance between the two pins on the reverse switch. →	If resistance is between 0 to .3 ohms →	Go to **Step B.**
		If resistance is outside of range or open →	Go to **Step V.**

Step B	Procedure	Condition	Action
	1. Key off.		
	2. Place shift lever in any gear position other than reverse.		
	3. Measure resistance between the two pins on the reverse swich. →	If resistance is open →	Reverse switch is functioning. Repair vehicle wiring harness.
		If resistance is not open or infinite →	Go to **Step V.**

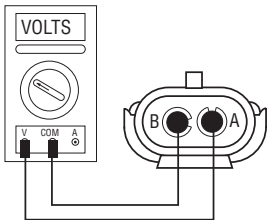

Reverse Switch Test, continued

Step V	Procedure		Condition		Action
	1. Remove reverse switch from transmission.				
	2. Inspect reverse switch opening checking for actuating pin movement while moving the shift lever. The pin should drop deeper in the hold with the transmission in any non-reverse gear position and move out in the hold when reverse gear is selected.	→	If pin moves in and out freely	→	**Replace reverse switch** and retest.
			If pin does not move freely or sticks	→	Remove actuating pin and inspect. Then repair or replace any faulty parts.

Reverse Switch Test, continued

Neutral Switch Test Overview

Overview

The neutral switch is a normally closed switch. When the shift lever is in the neutral position the switch is closed and electrical current flows through the switch.

Detection

This may cause a malfunction of accessory equipment powered by the Power Take Off (PTO) gear.

Fallback

No Fallback Condition.

Required Tools

- Basic Hand Tools
- Digital Volt/Ohm Meter
- Troubleshooting Guide

Possible Causes

This fault can be caused by any of the following:

- Shorted or failed open switch
- Actuating pin failure

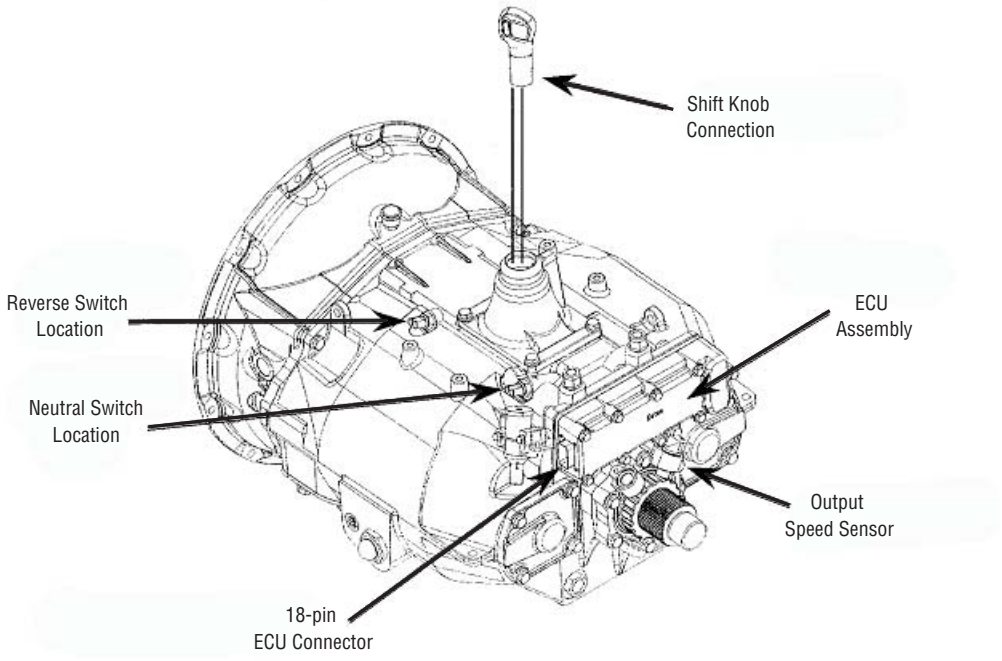

Transmission Electrical Attachment Points

Neutral Switch Test

Step A	Procedure	Condition	Action
	1. Key off.		
	2. Disconnect wire connector from neutral switch and place shift lever in neutral.		
	3. Measure resistance between the two pins on the neutral switch. →	If resistance is 0 to .3 ohms →	Go to **Step B.**
		If resistance is outside of range or open →	Go to **Step V.**

Step B	Procedure	Condition	Action
	1. Key off.		
	2. Place shift lever in any gear position other than neutral.		
	3. Measure resistance between the two pins on the neutral switch. →	If resistance is open →	Neutral switch passes, inspect vehicle wiring harness.
		If resistance is not open →	Go to **Step V.**

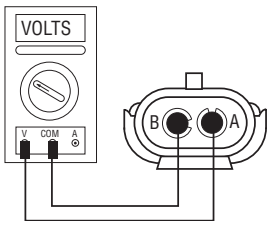

Step V	Procedure	Condition	Action
	1. Remove neutral switch from transmission.		
	2. Inspect neutral switch opening checking for actuating pin movement while moving the shift lever. →	If pin moves in and out freely →	**Replace neutral switch** and retest.
		If pin does not move freely or sticks →	Remove actuating pin and inspect. Then repair or replace any faulty parts.

https://truckmanualshub.com/

Copyright Eaton Corporation, 2012. Eaton hereby grant their customers, vendors, or distributors permission to freely copy, reproduce and/or distribute this document in printed format. It may be copied only in its entirety without any changes or modifications. THIS INFORMATION IS NOT INTENDED FOR SALE OR RESALE, AND THIS NOTICE MUST REMAIN ON ALL COPIES.

Note: Features and specifications listed in this document are subject to change without notice and represent the maximum capabilities of the software and products with all options installed. Although every attempt has been made to ensure the accuracy of information contained within, Eaton makes no representation about the completeness, correctness or accuracy and assumes no responsibility for any errors or omissions. Features and functionality may vary depending on selected options.

For spec'ing or service assistance, call 1-800-826-HELP (4357) or visit www.eaton.com/roadranger. In Mexico, call 001-800-826-4357.

Roadranger: Eaton and trusted partners providing the best products and services in the industry, ensuring more time on the road.

Eaton Corporation
Vehicle Group
P.O. Box 4013
Kalamazoo, MI 49003 USA
800-826-HELP (4357)
www.eaton.com/roadranger

Printed in USA

Powering Business Worldwide

BACKED BY
Roadranger
SUPPORT

https://truckmanualshub.com/

For parts or service call us
Pro Gear & Transmission, Inc.

1 (877) 776-4600

(407) 872-1901

parts@eprogear.com

906 W. Gore St.

Orlando, FL 32805