https://truckmanualshub.com/

Model 320
Body Builder Manual

For Trucks Produced After November 2013

Peterbilt

A PACCAR COMPANY

https://truckmanualshub.com/

BODY BUILDER MANUAL CONTENTS

SECTION 1: INTRODUCTION

SECTION 2: SAFETY AND COMPLIANCE

SAFETY SIGNALS v
FEDERAL MOTOR VEHICLE SAFETY STANDARDS (FMVSS) AND CANADIAN MOTOR VEHICLE SAFETY STANDARDS (CMVSS) COMPLIANCE vi

SECTION 3: DIMENSIONS

INTRODUCTION 3-1
ABBREVIATIONS 3-1
OVERALL DIMENSIONS 3-2
FRAME RAILS 3-4
FRAME HEIGHT CHARTS 3-6
REAR SUSPENSION LAYOUTS 3-13
- Reyco 79K Single 3-14
- Reyco 102AR Single 3-15
- Neway AD252 3-16
- Neway AD378 3-17
- Peterbilt Air Leaf 3-18
- Peterbilt Air Trac Single 3-19
- Peterbilt Air Trac Tandem 3-20
- Peterbilt Air Trac Tri-Drive 3-21
- Peterbilt Low Air Leaf 3-22
- Chalmers 854 3-23
- Hendrickson HMX 3-24
- Hendrickson RT/RTE 3-25
- Hendrickson HN 3-26
- Hendrickson R 3-27
- Hendrickson RS 3-28

PUSHER AND TAG LAYOUTS 3-29
- Hendrickson 3-29
- Watson-Chalin 3-33

EXHAUST HEIGHT CALCULATIONS 3-37
GROUND CLEARANCE CALCULATIONS 3-38
OVERALL CAB HEIGHT CALCULATIONS 3-39
FRAME COMPONENTS 3-40
- Fuel Tanks 3-40

EXHAUST SYSTEM 3-41

SECTION 4: BODY MOUNTING

INTRODUCTION 4-1
FRAME RAILS 4-1
CRITICAL CLEARANCES 4-2
BODY MOUNTING USING BRACKETS 4-3
- Brackets 4-4
- Mounting Holes 4-5
- Frame Drilling 4-6

BODY MOUNTING USING U–BOLTS 4-7
- Rear Body Mount 4-9

https://truckmanualshub.com/

TABLE OF CONTENTS

SECTION 5: FRAME MODIFICATIONS

INTRODUCTION 5-1
DRILLING RAILS 5-1
MODIFYING FRAME LENGTH 5-2
CHANGING WHEELBASE 5-2
CROSSMEMBERS 5-3
TORQUE REQUIREMENTS 5-4

SECTION 6: ELECTRICAL 320 FAMILY

CONTROL UNIT IDENTIFICATION 6-1
- Functional Description-Cab Electronic Control Unit (CECU) 6-1

HOW MULTIPLEXED INSTRUMENTS WORK 6-2
- CECU Architecture 6-2
- Power On Self-Test 6-3

ELECTRICAL INTERFACE 6-4
- Cab Harness 6-4
- Chassis Harness 6-5
- Body Builder Harness Extension 6-6

J1939 6-7

SECTION 8: PTO SECTION

INTRODUCTION 7-1
TRANSMISSION MOUTED PTO – GENERAL 7-1
FRONT ENGINE PTO 7-3
REAR ENGINE PTO 7-4
PTO INSTALLATIONS 7-5
REMOTE PTO CONTROL (12 PIN CONNECTOR) 7-6

https://truckmanualshub.com/

SECTION 1 **INTRODUCTION**

The Peterbilt 320 Body Builder Manual was designed to provide body builders with a comprehensive information set to guide the body planning and installation process. Use this information when installing bodies or other associated equipment.

In this manual you will find appropriate dimensional information, guidelines for mounting bodies, modifying frames, electrical wiring configurations, as well as other information useful in the body installation process.

The Peterbilt 320 Body Builder Manual can be very useful when specifying a vehicle, particularly when the body builder is involved in the vehicle selection and component ordering process. Information in this manual will help reduce overall costs through optimized integration of the body installation with vehicle selection.

As products continually evolve, Peterbilt reserves the right to change specifications or products at any time without prior notice. It is the responsibility of the user to ensure that he is working with the latest released information. If you require additional information or reference materials, please contact your local Peterbilt dealer.

https://truckmanualshub.com/

SECTION 2 **SAFETY AND COMPLIANCE**

SAFETY SIGNALS

A number of alerting messages are shown in this book. Please read and follow them. They are there for your protection and information. These alerting messages can help you avoid injury to yourself or others and help prevent costly damage to the vehicle.

Key symbols and “signal words” are used to indicate what kind of message is going to follow. Pay special attention to comments prefaced by “WARNING”, “CAUTION”, and “NOTE.” Please don't ignore any of these alerts.

WARNING

When you see this word and symbol, the message that follows is especially vital. It signals a potentially hazardous situation which, if not avoided, could result in death or serious injury. This message will tell you what the hazard is, what can happen if you don’t heed the warning, and how to avoid it.

Example:

WARNING! Be sure to use a circuit breaker designed to meet liftgate amperage requirements. An incorrectly specified circuit breaker could result in a electrical overload or fire situation. Follow the liftgate installation instructions and use a circuit breaker with the recommended capacity.

CAUTION

Signals a potentially hazardous situation which, if not avoided, could result in minor or moderate injury or damage to the vehicle.

Example:

CAUTION: Never use a torch to make a hole in the rail. Use the appropriate drill bit.

NOTE

Provides general information: for example, the note could warn you on how to avoid damaging your vehicle or how to drive the vehicle more efficiently.

Example:

NOTE: Be sure to provide maintenance access to the battery box and fuel tank fill neck.
Please take the time to read these messages when you see them, and remember:

WARNING	Indicates a potentially hazardous situation which, if not avoided, could result in death or serious injury.
CAUTION	Signals a potentially hazardous situation which, if not avoided, could result in minor or moderate injury or damage to the vehicle.
NOTE	Useful information that is related to the topic being discussed.

https://truckmanualshub.com/

FEDERAL MOTOR VEHICLE SAFETY STANDARDS (FMVSS) AND CANADIAN MOTOR VEHICLE SAFETY STANDARDS (CMVSS) COMPLIANCE

As an Original Equipment Manufacturer (OEM), Peterbilt Motors Company ensures that our products comply with all applicable Federal Motor Vehicle Safety Standards (FMVSS) and Canadian Motor Vehicle Safety Standards (CMVSS) where applicable. However, the fact that this vehicle has no fifth–wheel and that a Body Builder (Final Stage Manufacturer) will be doing additional modifications means that the vehicle was incomplete when it left the build plant.

Incomplete Vehicle Certification

An Incomplete Vehicle Document is shipped with the vehicle, certifying that the vehicle is not complete (see Figure 2-1). In addition, affixed to the driver's side door frame or edge is an Incomplete Vehicle Certification label.

NOTE: These documents list the FMVSS (or CMVSS) regulations that the vehicle complied with when it left the build plant. You should be aware that if you modify or alter any of the components or systems covered by these FMVSS (or CMVSS) regulations, it is your responsibility as the Final Stage Manufacturer to ensure that the complete vehicle maintains compliance with the particular FMVSS (or CMVSS) regulations when you complete your modifications.

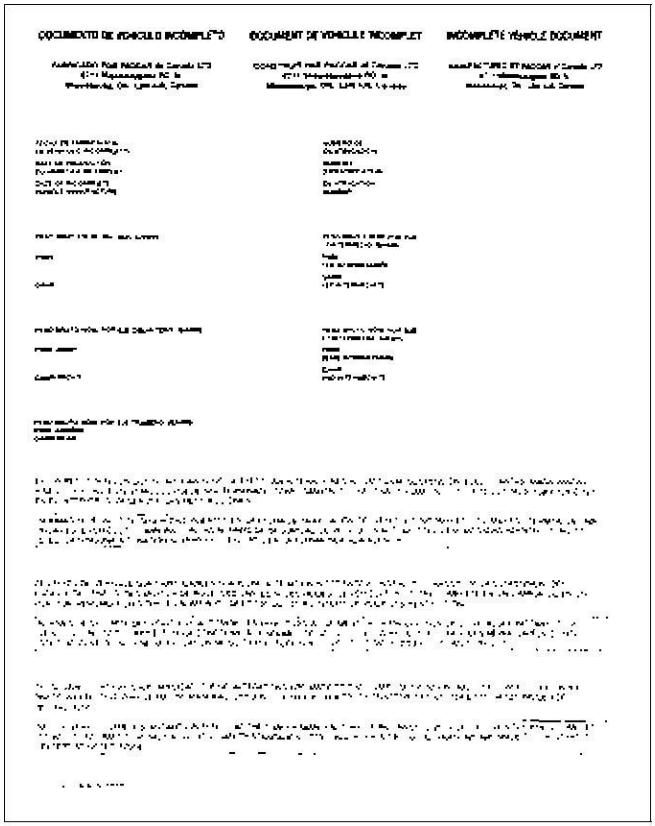

FIGURE 2-1. Incomplete Vehicle Certification Document

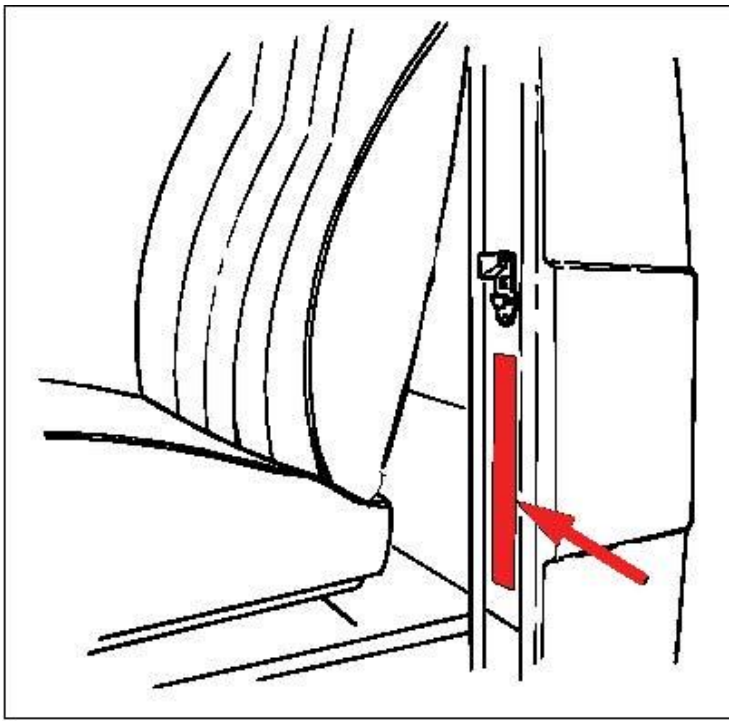

FIGURE 2-2. Location of Certification Labels -Driver's Door Frame

As the Final Stage Manufacturer, you should retain the Incomplete Vehicle Document for your records. In addition, you should record and retain the manufacturer and serial number of the tires on the vehicle. Upon completion of the vehicle (installation of the body and any other modifications), you should affix your certification label to the vehicle as required by Federal law. This tag identifies you as the "Final Stage Manufacturer" and certifies that the vehicle complies with Federal Motor Vehicle Safety Standards.

https://truckmanualshub.com/

Trucks equipped with a “Vehicle Emission Control Information” door label are certified to comply with United States Greenhouse Gas (GHG) regulations. Original tires may be substituted provided the new tires possess an equal to or lower Coefficient of rolling resistance (Crr).

The Emission Controls shown in Figure 2-3 may be indicated on the label.

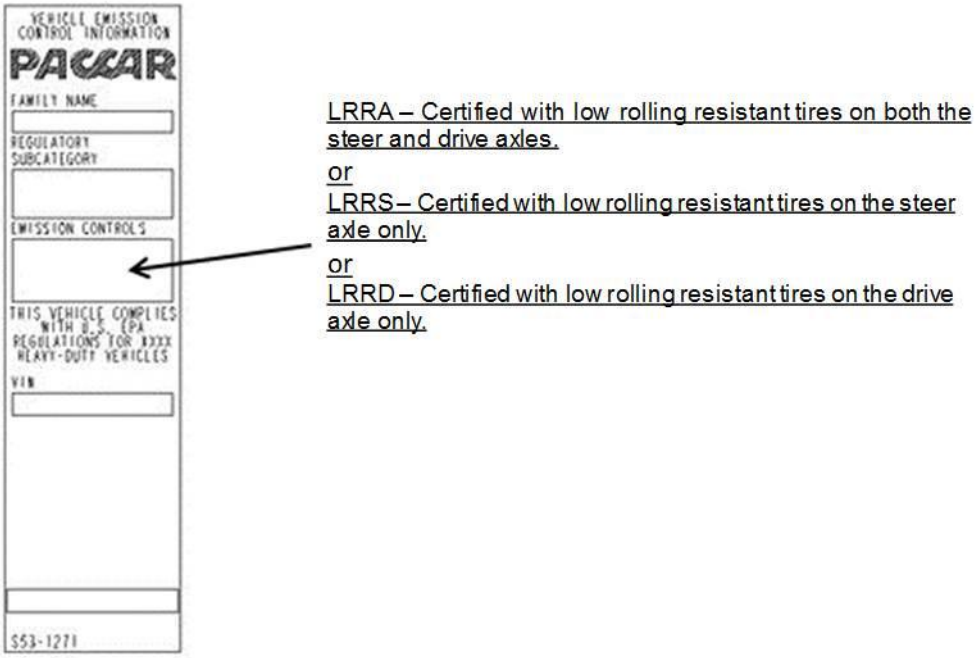

FIGURE 2-3. Incomplete Vehicle Certification Document

Noise and Emissions Requirements

NOTE: This truck may be equipped with a Diesel Particulate Filter (DPF) muffler unit in order to meet both noise and exhaust emissions requirements. Removal or tampering with the DPF muffler will not improve engine performance. Also tampering with the exhaust system is against the rules that are established by the U.S. Code of Federal Regulations and Environment Canada Regulations. The DPF muffler may only be replaced with an approved part.

NOTE: 2007/10/13 emissions engines are integrated with particulate filters for 2007/10/13 EPA certification. The particulate filter assembly may consist of one or more of the following components: a diesel oxidation catalyst, a diesel particulate filter, temperature sensors, differential pressure sensor, and exhaust silencing components integrated into a modular housing. Body Builders must not modify or relocate this assembly or any components associated with it. It is also the case that there should not be any modifications made to the exhaust piping from turbo outlet to aftertreatment inlet.

https://truckmanualshub.com/

SECTION 3 **DIMENSIONS**

INTRODUCTION

This section has been designed to provide enough information to successfully layout a chassis in the body planning process. All dimensions are inches unless otherwise noted. Optional equipment may not be depicted. Please contact your local Peterbilt dealer if more dimensional information is desired.

ABBREVIATIONS

Throughout this section and in other sections as well, abbreviations are used to describe certain characteristics on your vehicle. Table 3-1 below lists the abbreviated terms used.

TABLE 3-1. Abbreviations Used

CA	Cab to axle. Measured from the back of the cab to the centerline of the rear axle(s).
EOF	Frame rail overhang behind rear axle--measured from the centerline of tandems
FS	Front suspension height
RS	Rear suspension height
WB	Wheelbase
SOC	Side of cab
BOC	Back of cab

https://truckmanualshub.com/

OVERALL DIMENSIONS

This section includes drawings and charts of the Peterbilt Model 320.

On the pages that follow, detail drawings show particular views of the vehicle; all dimensions are in inches (in). They illustrate important measurements critical to designing bodies of all types. See the “Contents” at the beginning of the manual to locate the drawing that you need.

All heights are given from the bottom of the frame rail.

Peterbilt also offers .dxf files and frame layouts of ordered chassis prior to build. Please speak with your salesman to request this feature when specifying your chassis.

https://truckmanualshub.com/

MODEL 320

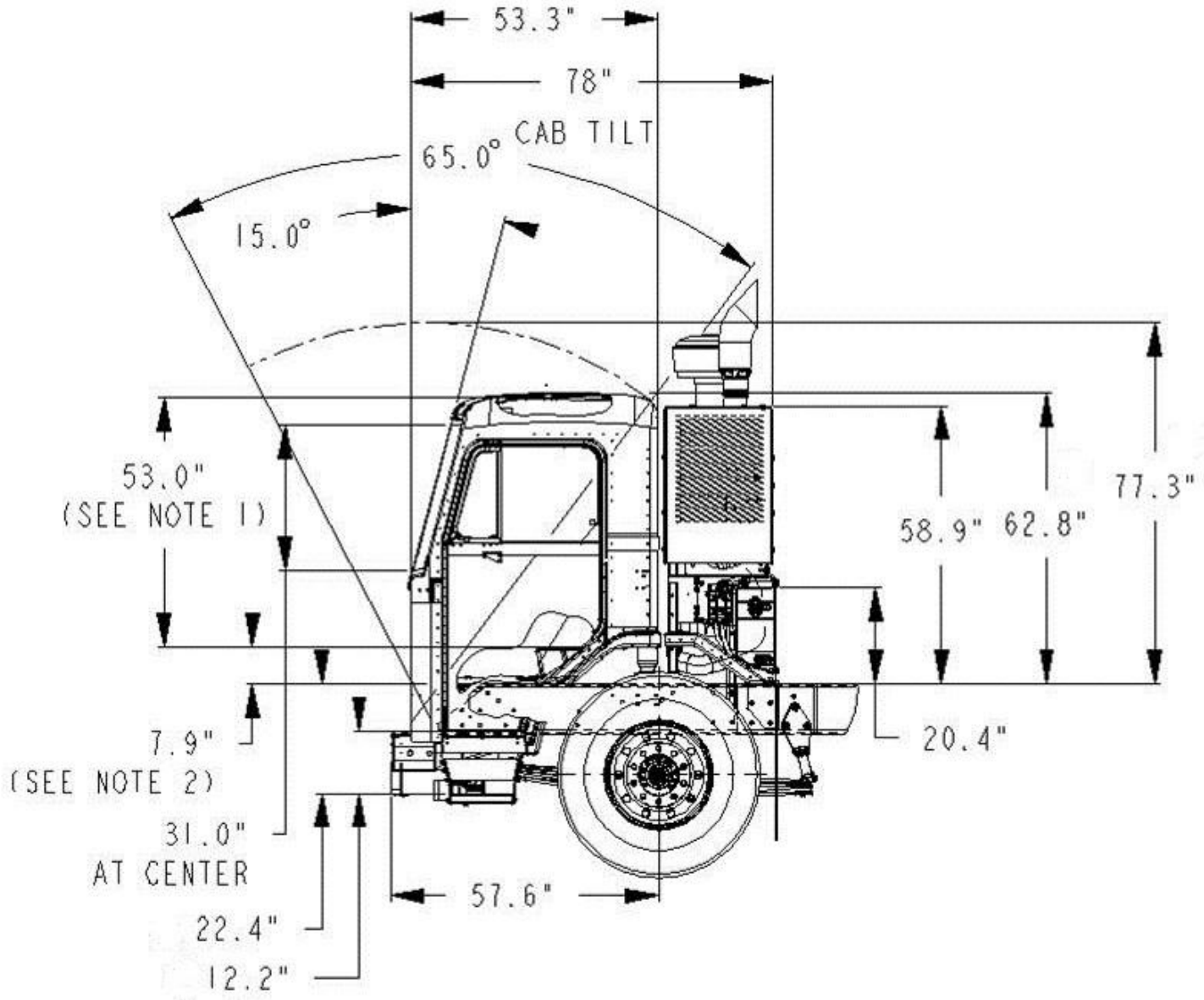

Notes:

1. Dimension header to seat base
2. Dimension seat base to floor
3. Door dimension is 33.4”W x 61”H

FIGURE 3-1. 320 Cab Dimensions

https://truckmanualshub.com/

FRAME RAILS

Frame rail configurations are shown in Figure 3-2. The under cab area of the 320 frame rails are splayed as shown in Figure 3-3. Frame height, flange and structural values can be found in the Body Mounting Section.

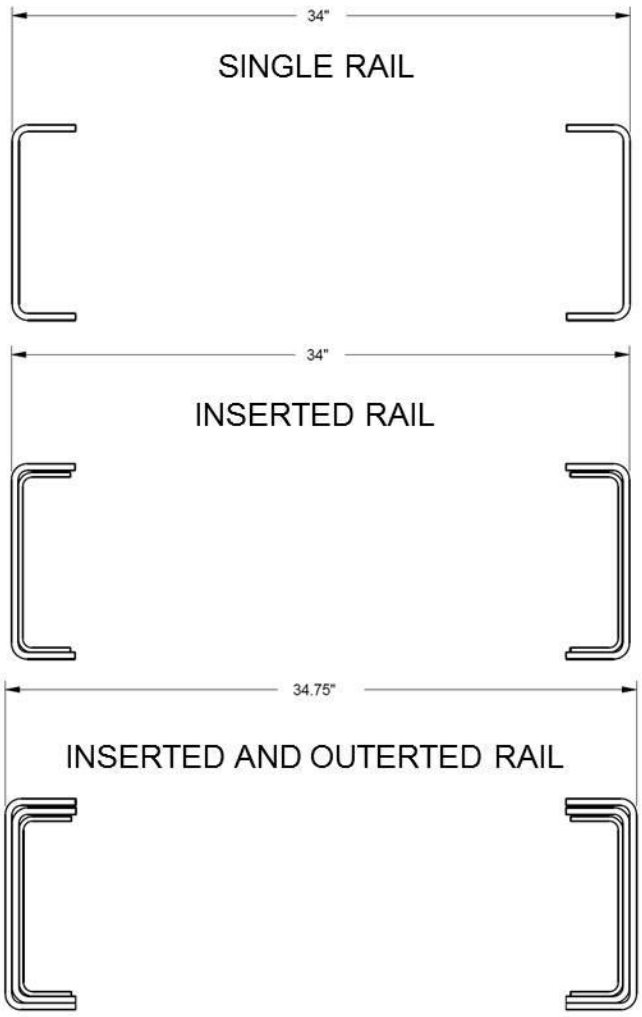

FIGURE 3-2. Frame Rail Configurations

NOTE: The outserted frame section does not extend through the rear suspension area. The outserted frame section does not extend through the splayed area.

https://truckmanualshub.com/

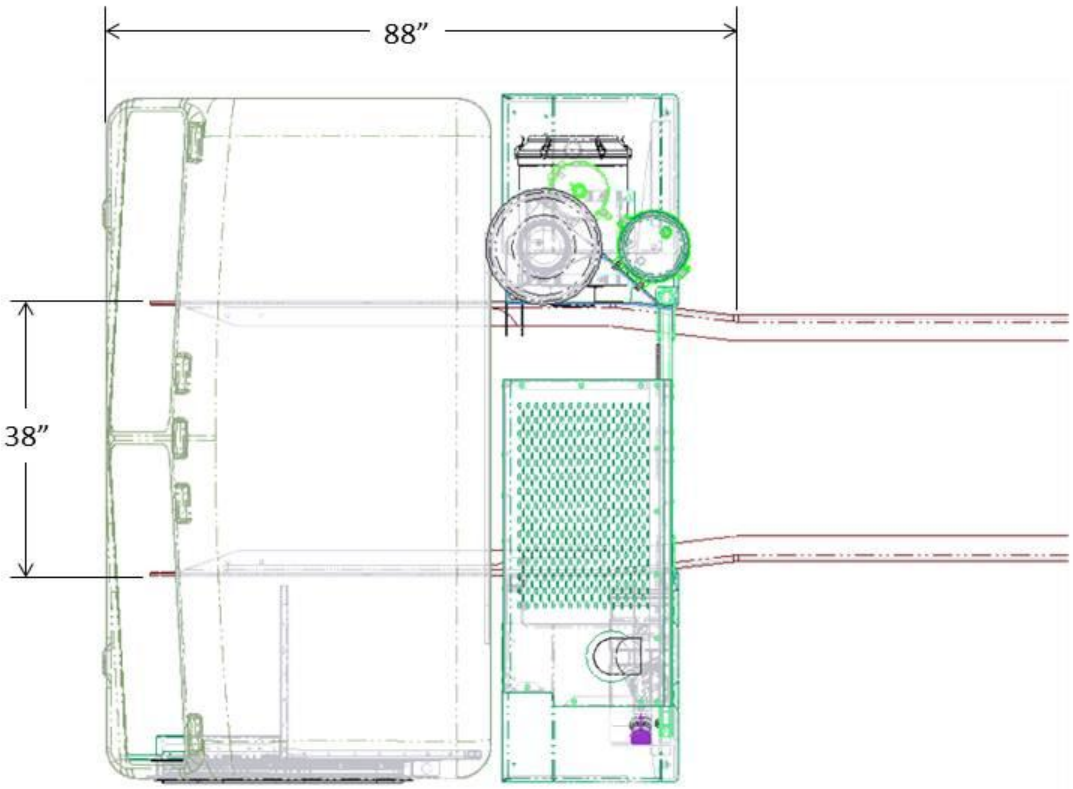

FIGURE 3-3. Model 320 Frame Rail

https://truckmanualshub.com/

FRAME HEIGHT CHARTS

THE FOLLOWING FRAME HEIGHT CHARTS MAY BE USED FOR FINDING APPROXIMATE FRONT AND REAR FRAME HEIGHTS.

THE RESULTS ARE APPROXIMATIONS BECAUSE OF THE MANY VARIABLES SUCH AS TIRE TREAD THICKNESS, MANUFACTURING TOLERANCES, SPRING SET, AND THE LOADING IMPOSED IN THE LOADED SITUATION.

LOADED VALUES ARE QUOTES FOR REPRESENTATIVE LOADS AT THE GROUND FOR THE PARTICULAR SPRING AND AXLE COMBINATION, AND, AS SUCH, CAN VARY WITH LOADING VARIATIONS.

SPECIAL INSTALLATIONS ARE SOMETIMES POSSIBLE WITH CERTAIN SUSPENSIONS ALLOWING VARIATIONS FROM STANDARD. PLEASE CONTACT APPLICATIONS ENGINEERING FOR INFORMATION.

FRONT FRAME HEIGHT

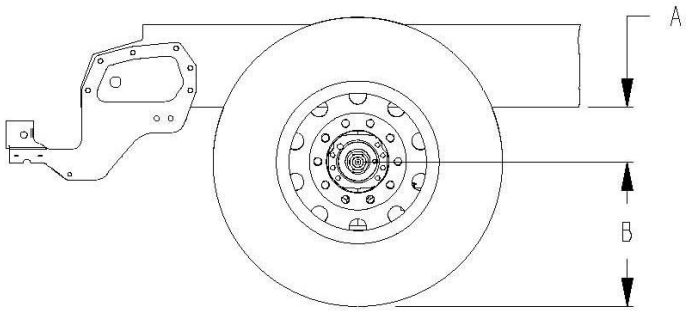

REAR FRAME HEIGHT

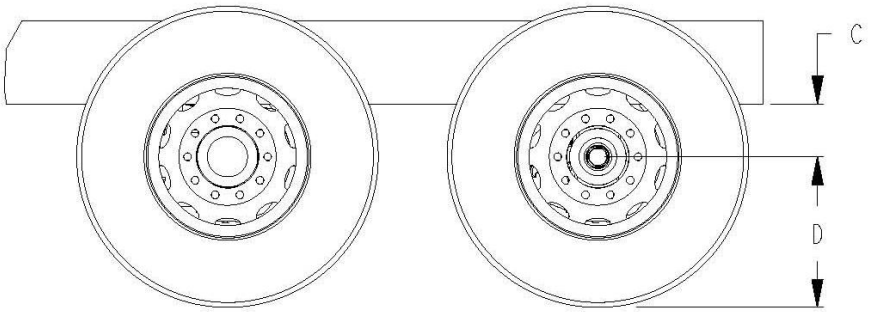

NOTES:

1) "B" AND "D" DIMENSIONS CAN BE FOUND IN THE TIRES/WHEELS SECTION OR IN THE TIRE VENDOR'S LITERATURE.

FIGURE 3-4. Frame Height

https://truckmanualshub.com/

TABLE 3-2. Front Frame Height “A” – 320

FRONT FRAME HEIGHT "A"				
320 SUSPENSION		**SPACER (mm)**	**LIGHT (in.)**	**LOADED (in.)**
20,000 lbs.	TAPERLEAF	OMIT	14.0	10.9
		25 mm (2)	15.0	11.9
17,000-23,000 lbs.	TAPERLEAF @ 18,000 lbs.	OMIT (1)	12.2	10.7
		25 mm	13.15	10.65
	TAPERLEAF @ 20,000 lbs.	OMIT (1)	12.5	9.5
		25 MM	13.5	10.5
17,000-23,000 lbs.	TAPERLEAF @ 23,000 lbs.	OMIT (1)	12.9	9.1
		25 mm	13.9	10.1
36,000 lbs.	TANDEM 4	25 mm (2)	13.2	11.2

NOTES:
1) Omit spacer block standard.
2) 25mm spacer block standard and required.
3) Standard 3-1/2" drop axle heights shown, for 5" drop axles, subtract an additional 1-1/2".
4) Spacer blocks are used by Engineering to obtain level frame and are not options.
5) "A" dimension shown is to bottom of frame rail. Add frame rail height dimension for frame height.

https://truckmanualshub.com/

REAR FRAME HEIGHTS "C"

TABLE 3-3. Single Drive Suspension Heights

Suspension	Rating	Version	Light Height	Laden Height
LOW AIR LEAF	21,000 lbs.	Standard	6.8	6.5
AIR TRAC	20,000 lbs.	Standard	11.4	11.0
	23,000 lbs.	Standard	11.4	11.0
REYCO 79KB	20,000 lbs.	Taper-leaf (3.38" saddle)	9.4	11.8
	21,000 lbs.	Taper-leaf (1.38" saddle)	7.4	9.8
	23,000 lbs.	Multi-leaf (1.38" saddle)	8.8	11.6
	26,000 lbs.	Multi-leaf (1.38" saddle)	9.2	11.8
	28,000 lbs.	Multi-leaf (1.38" saddle)	9.6	12.3
	31,000 lbs.	Multi-leaf (1.38" saddle)	10.7	13.3
REYCO 102	23K-29K lbs.	4.38 saddle	12.0	10.2
	23K-29K lbs.	4.63 saddle	12.2	10.4
	29,000 lbs.	3.50 saddle	11.7	10.0
	31,000 lbs.	3.50 saddle	12.2	10.5
	31,000 lbs.	4.38 saddle	12.5	10.7
	31,000 lbs.	4.63 saddle	12.7	10.9
REYCO 102AR (AIR)	17K -23K	Standard	9.3	9.3
		Low	8.3	8.3

https://truckmanualshub.com/

TABLE 3-4. Tandem Drive Peterbilt Suspension Heights

Suspension	Rating	Version	Light Height	Laden Height
AIR LEAF	38,000 lbs.		12.0	11.7
LOW AIR LEAF	40,000 lbs.		8.8	8.5
FLEX AIR	38,000 lbs.		8.8	8.5
LOW-LOW AIR LEAF	40,000 lbs.		6.8	6.5
AIR TRAC	40K-46K lbs.		11.4	11.0
QUADRAFLEX	38,000 lbs.	Taper-leaf	10.6	8.7

TABLE 3-5. Tandem Drive Neway Suspension Heights

Suspension	Rating	Version	Light Height	Laden Height
NEWAY AD	52,000 lbs.		10.0	10.0
NEWAY ADZ	46K-52K lbs.		10.0	10.0

TABLE 3-6. Tandem Drive Reyco Suspension Heights

Suspension	Rating	Version	Light Height	Laden Height
REYCO 102 MULTILEAF	40,000 lbs.	1.75 saddle (STD)	11.7	9.8
		1.38 saddle	10.2	8.3
		3.38 saddle	13.4	11.5
	44,000 lbs.	1.75 saddle (STD)	11.7	9.8
		1.38 saddle	11.5	9.7
REYCO 102AR (AIR)	34K-40K	STD LOW	8.3	8.3

https://truckmanualshub.com/

TABLE 3-7. Tandem Drive Chalmers Suspension Heights

Suspension	Rating	Version	Light Height	Laden Height
CHALMERS 854 & 860	40,000 lbs.	LOW	11.1	8.9
		HIGH	12.4	10.2
		X-HIGH	14.5	12.2
		XX-HIGH	17.2	14.9
CHALMERS 854 & 860	46,000 lbs.	LOW	11.3	8.9
		HIGH	12.5	10.1
		X-HIGH	14.7	12.2
		XX-HIGH	17.3	14.9
CHALMERS 854 & 860	50K-52K	LOW	11.3	8.9
		HIGH	12.5	10.1
		X-HIGH	14.6	12.1
		XX-HIGH	17.3	14.8
CHALMERS 872	46,000 lbs.	LOW	11.2	8.8
		HIGH	12.5	10.3
		X-HIGH	14.6	12.2
		XX-HIGH	17.3	14.9
CHALMERS 872	50,000 lbs.	LOW	11.2	8.8
		HIGH	12.5	10.3
		X-HIGH	14.6	12.1
		XX-HIGH	17.3	14.8

NOTES:

1) Laden dimension shown with standard restrictor cans. Add 0.7” for #29 High Stability Restrictor Cans.

https://truckmanualshub.com/

TABLE 3-8. Tandem Drive Hendrickson Suspension Heights

Suspension	Rating	Version	Light Height	Laden Height
RT-403	40,000 lbs.	6.00	9.9	8.9
		7.188 (std.)	11.2	10.1
RTE-403	40,000 lbs.	6.00	9.9	8.4
		7.188 (std.)	11.2	9.5
R-403	40,000 lbs.	12.80	5.8	5.8
		15.81 (std.)	8.8	8.8
		17.60	10.6	10.6
RS-403	40,000 lbs.	12.25	9.9	9.1
		14.00 (std.)	11.7	10.8
		15.25	12.9	12.1
HMX	40,000 lbs.	16.5 (low)	10.6	9.5
		18.5 (std.)	12.6	11.5
HMX	46,000 lbs.	16.5 (low)	10.6	9.5
		18.5 (std.)	12.6	11.5
HN462	46,000 lbs.	20.25 (high)	15.0	13.3
R-463	46,000 lbs.	15.75 (std.)	8.8	8.8
		20.50	13.5	13.5
RS-463	46,000 lbs.	12.25	9.7	8.9
		14.0 (std.)	11.5	10.6
		15.25	12.7	11.9
RT-463	46,000 lbs.	6.00	11.3	10.5
		7.188 (std.)	13.0	11.4
		11.00	16.3	15.2
RTE-463	46,000 lbs.	7.188 (std.)	11.6	10.2
		11.00	15.4	14.0
RS-503	50,000 lbs.	14.0 (std.)	11.7	10.8
		15.25	12.9	12.1
RT-503	50,000 lbs.	7.188 (std.)	12.1	11.1
		11.0 1	16.4	15.4
RTE-503	50,000 lbs.	7.188 (std.)	11.6	10.2
		11.00	15.4	14.0
RS-523	52,000 lbs.	14.0 (std.)	11.7	10.8
RT-523 , RT-650	52K-65K	7.188 (std.)	12.1	11.1
		11.00	16.4	15.4
HN522	52,000 lbs.	18.50 (std.)	12.6	11.5
RS650	65,000 lbs.	15.00 (std.)	12.0 [1]	11.0 [2]
		19.00	16.0 [2]	15.1 [2]
R650 *	65,000 lbs.	20.25 (std.)	12.5	12.5
R850 w/70K Meritor	85,000 lbs.	20.25	12.0	12.0
R850 w/SISU 70K		20.25	12.1	12.1
RS850 w/SISU 70K	85,000 lbs.	16.75	11.5	10.6

NOTES:

1) With SISU 70k axle subtract 0.39” from light/laden
2) With SISU 70k axle subtract 0.28” from light and 0.39” from laden

https://truckmanualshub.com/

TABLE 3-9. Tri-Drive Suspension Heights

SUSPENSION	RATING (lbs.)		LIGHT (in.)	LOADED (in.)
TRI-DRIVE SUSPENSION				
AIR TRAC	40K-46K		11.4	11.0
NEWAY ADZ369	69,000		10.0	10.0
NEWAY ADZ378	78,000		10.0	10.0

https://truckmanualshub.com/

REAR SUSPENSION LAYOUTS

The rear suspension layouts are provided as a tool to help layout bodies prior to arrival. The applicable dimensions are shown. Verify the axle spacing that is shown, as alternate spacings may exist and could change some of the dimensions. The dimensions shown below are the most typical installations, in special cases some hole locations will move.

If the holes shown will be used for body installation, please confirm with the local Peterbilt dealer the drawing below will be the installation used on the specific truck. In this case, ordering the frame layout of the chassis is advised. This can be done on any Peterbilt truck, and will be provided ahead of the build schedule. Ensure proper torque to reinstall any suspension components. See Tables 5-1 and 5-2 on page 5-4.

For hole locations not detailed, please work with the local Peterbilt Dealer to request that information.

https://truckmanualshub.com/

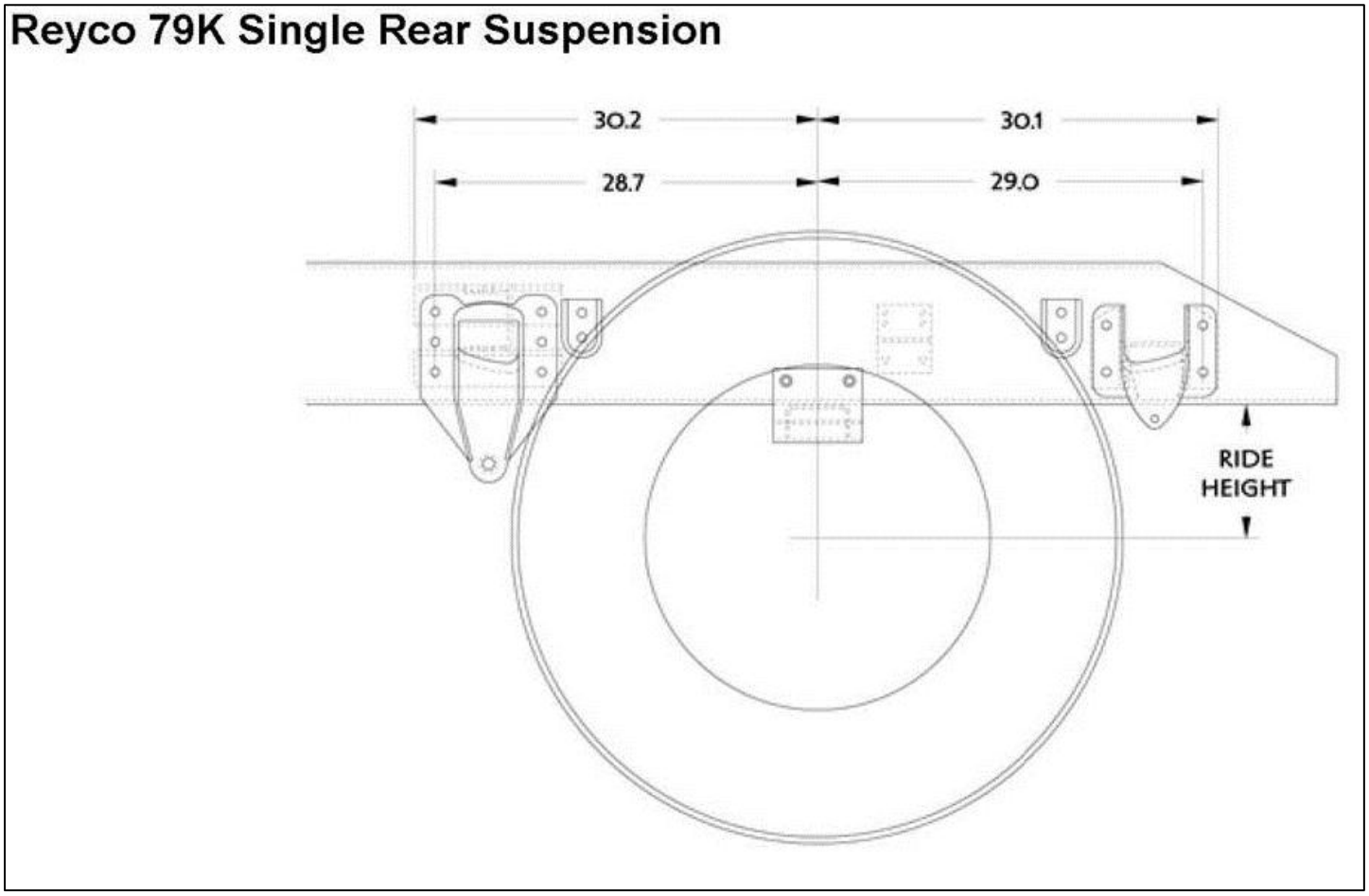

FIGURE 3-5. Reyco 79KB Frame Drilling

https://truckmanualshub.com/

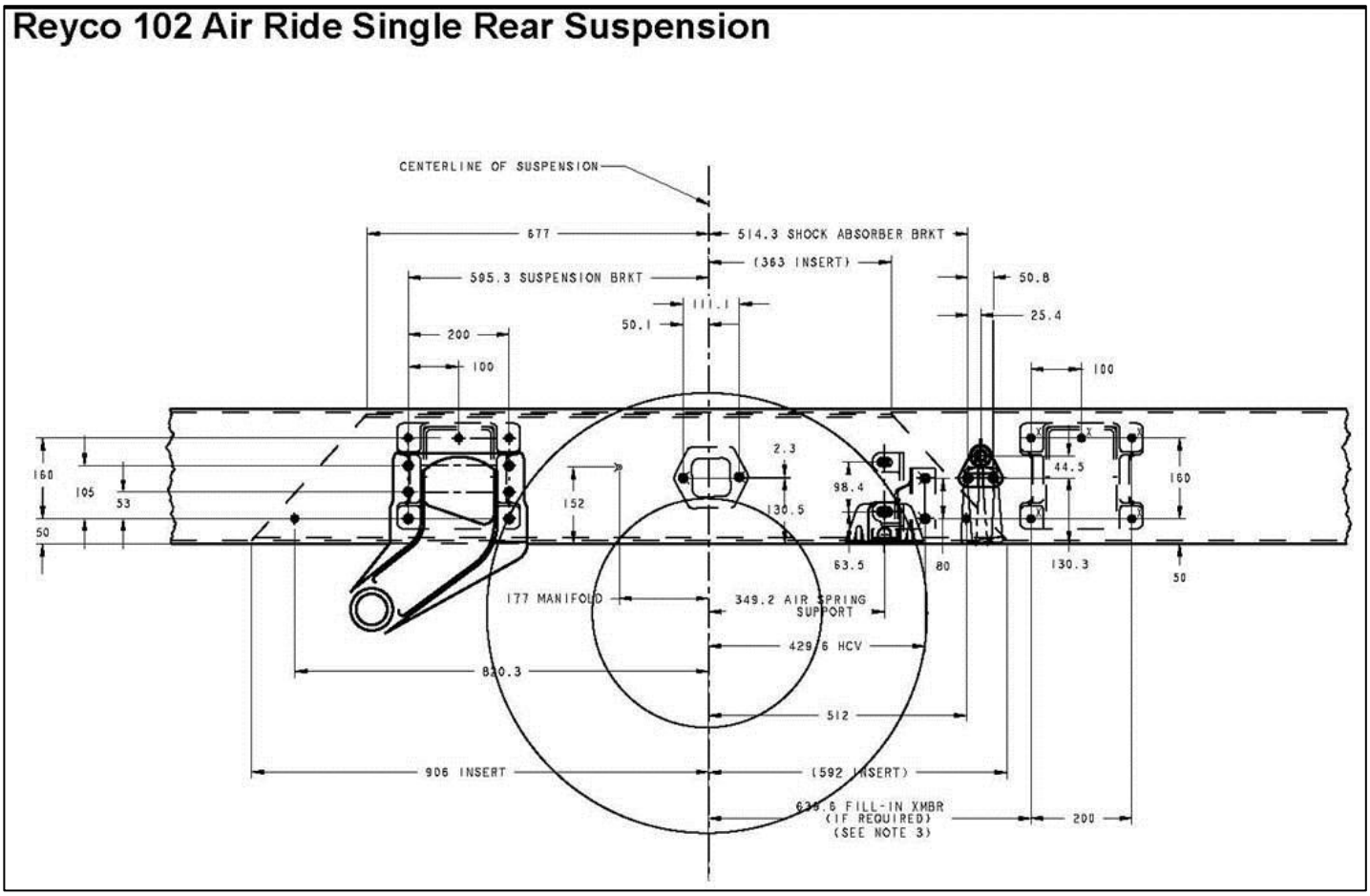

FIGURE 3-6. Reyco 102 Frame Drilling (Dimensions In Millimeters)

https://truckmanualshub.com/

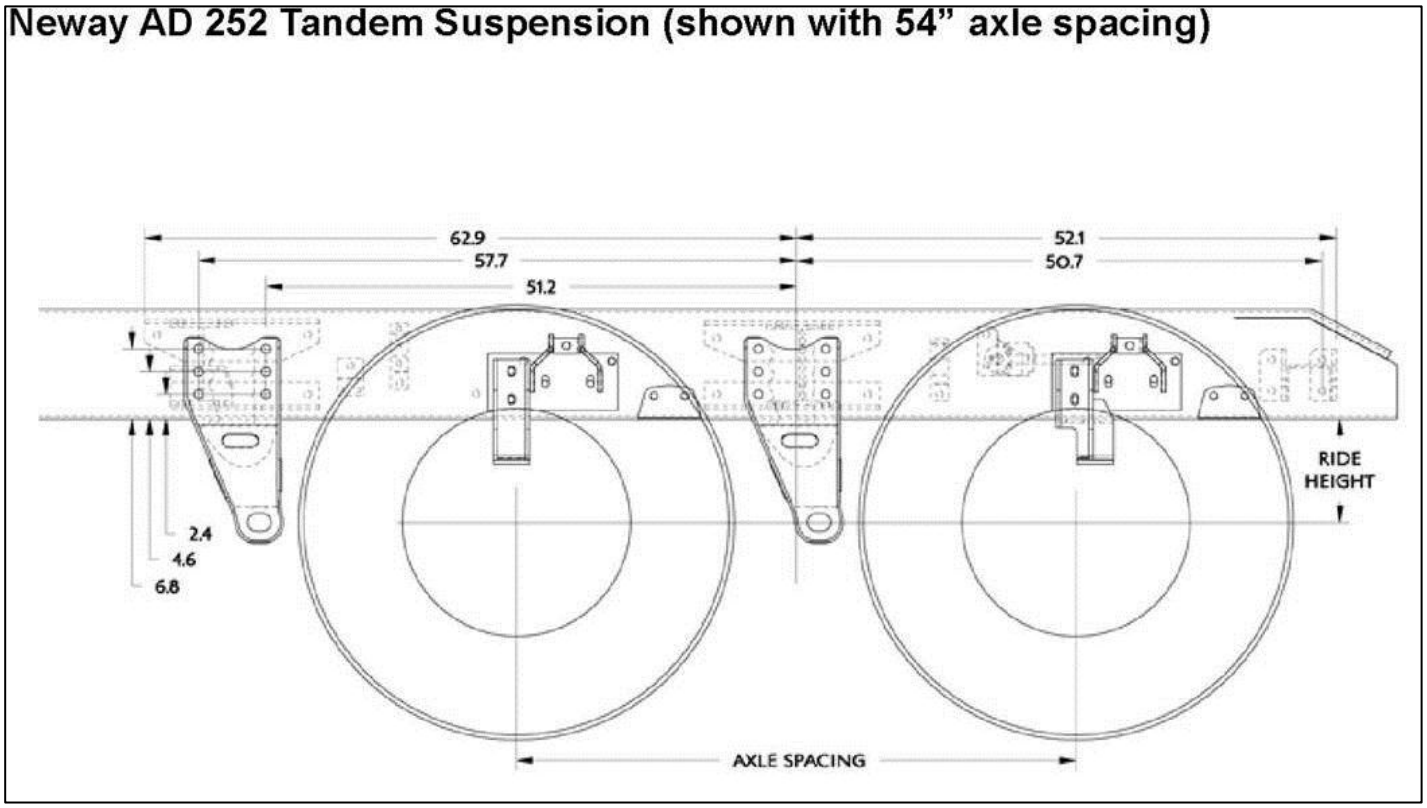

FIGURE 3-7. Neway AD 252 Frame Drilling

https://truckmanualshub.com/

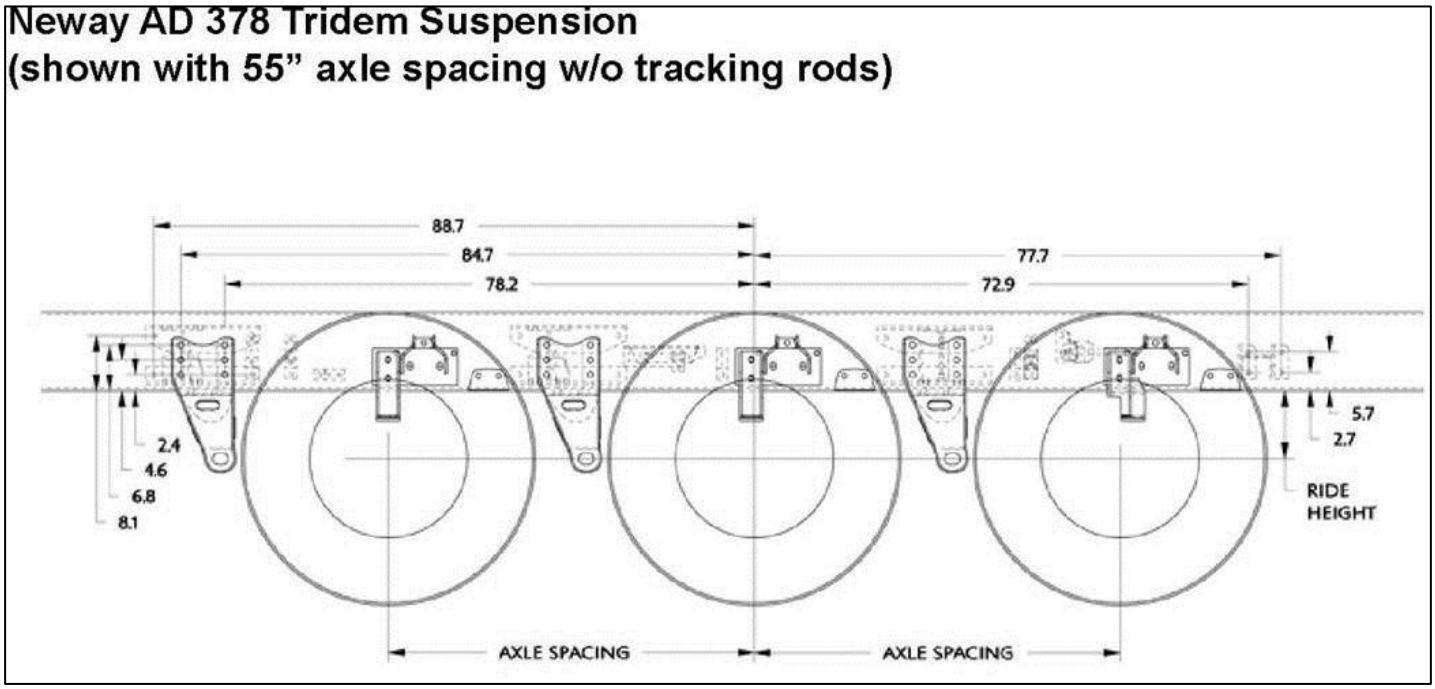

FIGURE 3-8. Neway AD 369/378 Frame Drilling

https://truckmanualshub.com/

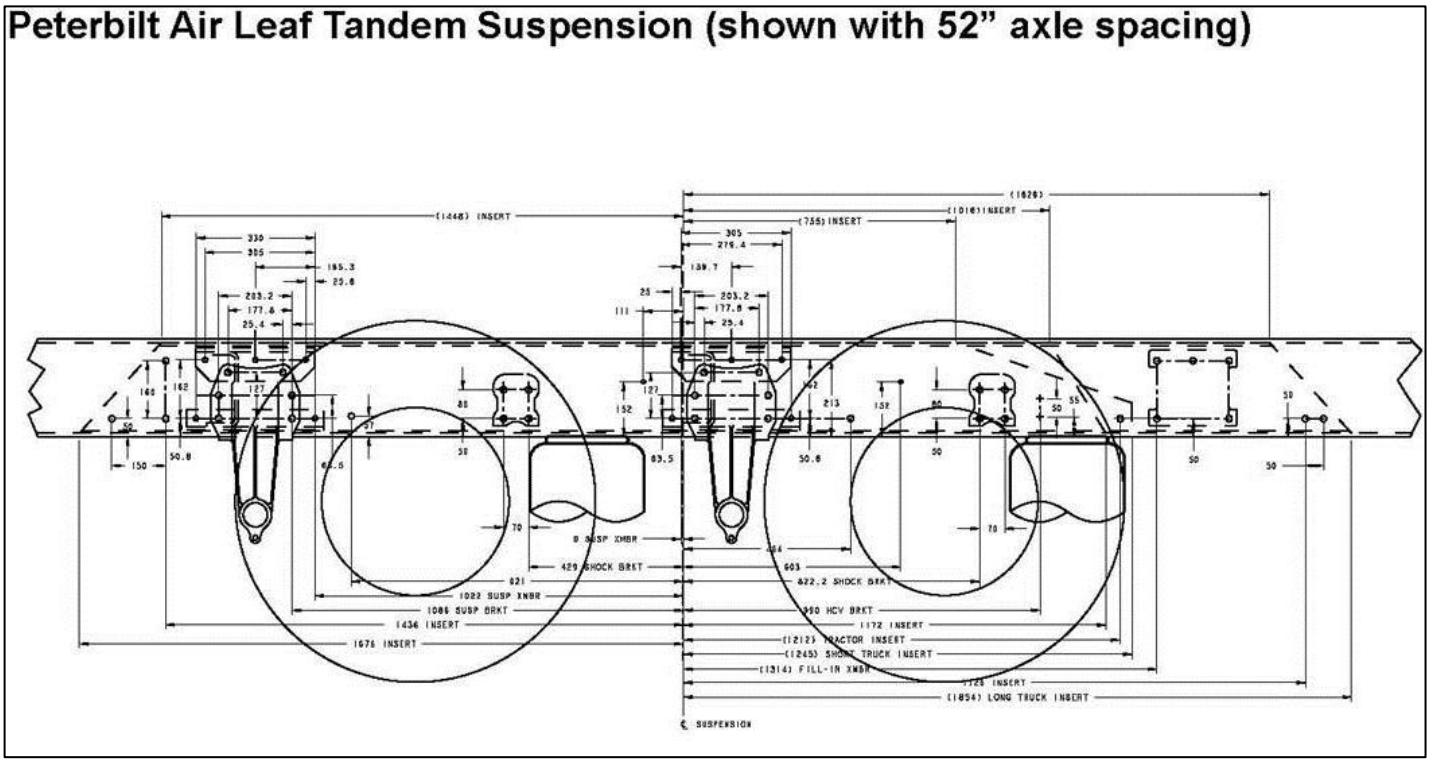

FIGURE 3-9. Peterbilt Air Leaf Tandem Frame Drilling (Dimensions In Millimeters)

https://truckmanualshub.com/

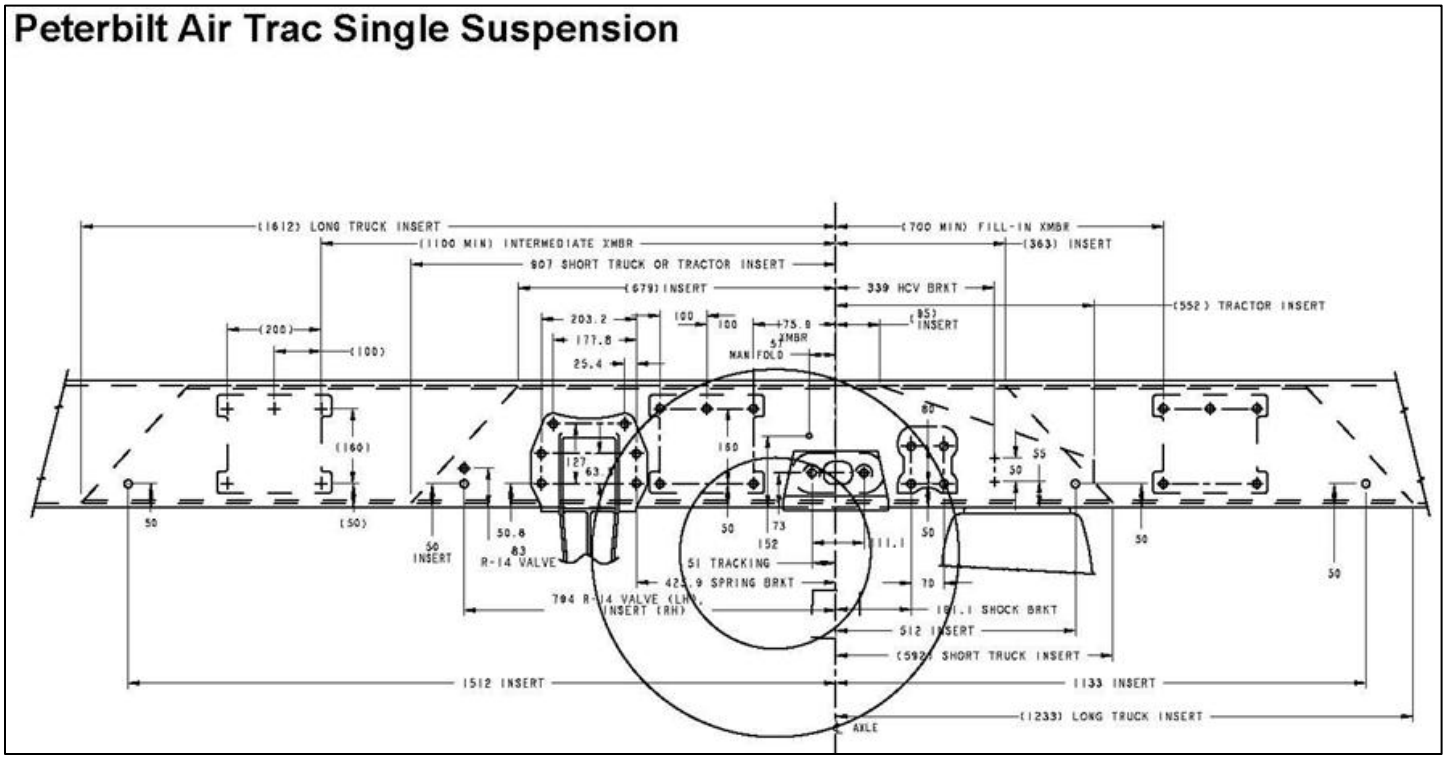

FIGURE 3-10. Peterbilt Air Trac Single Frame Drilling (Dimensions In Millimeters)

https://truckmanualshub.com/

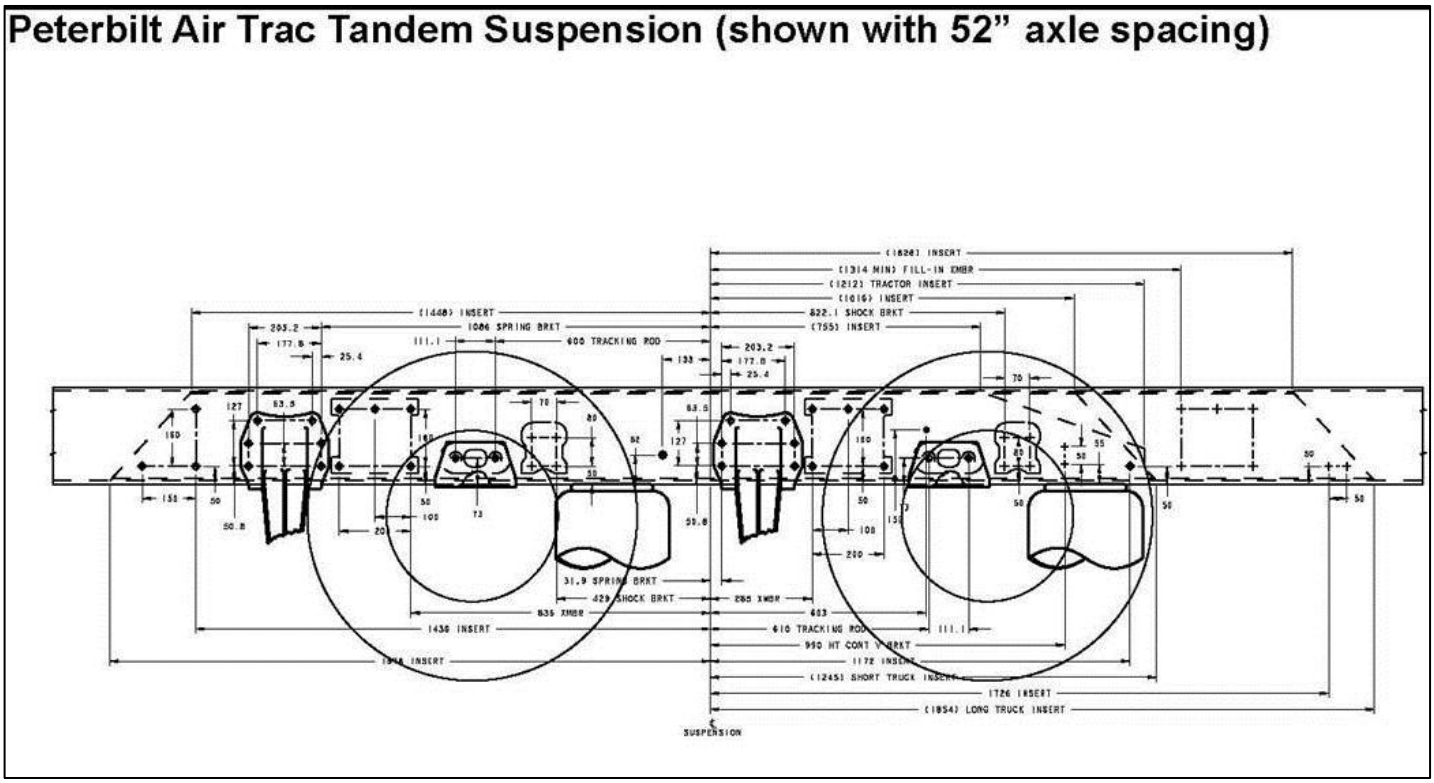

FIGURE 3-11. Peterbilt Air Trac Tandem Frame Drilling (Dimensions In Millimeters)

https://truckmanualshub.com/

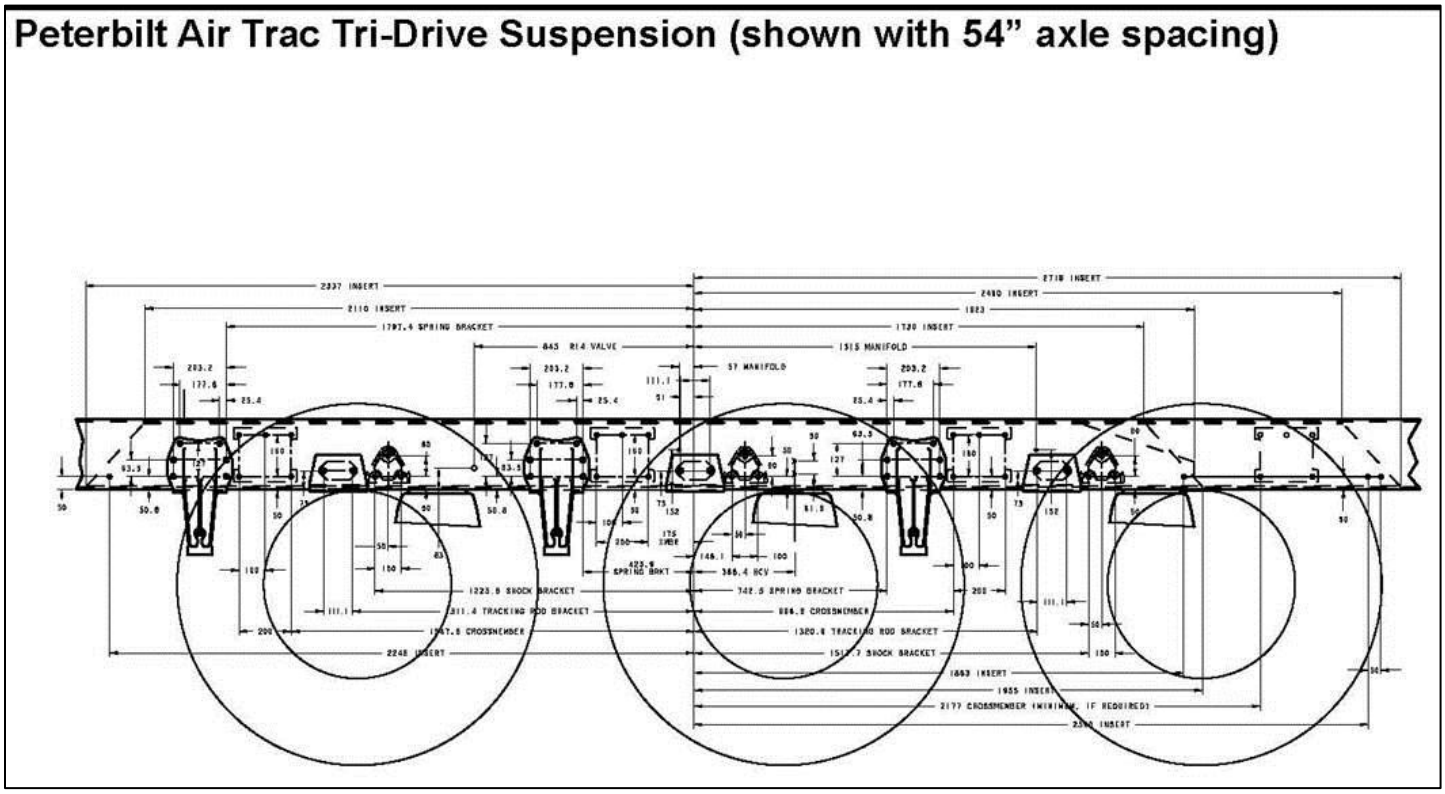

FIGURE 3-12. Peterbilt Air Trac Tri-Drive Frame Drilling (Dimensions In Millimeters)

https://truckmanualshub.com/

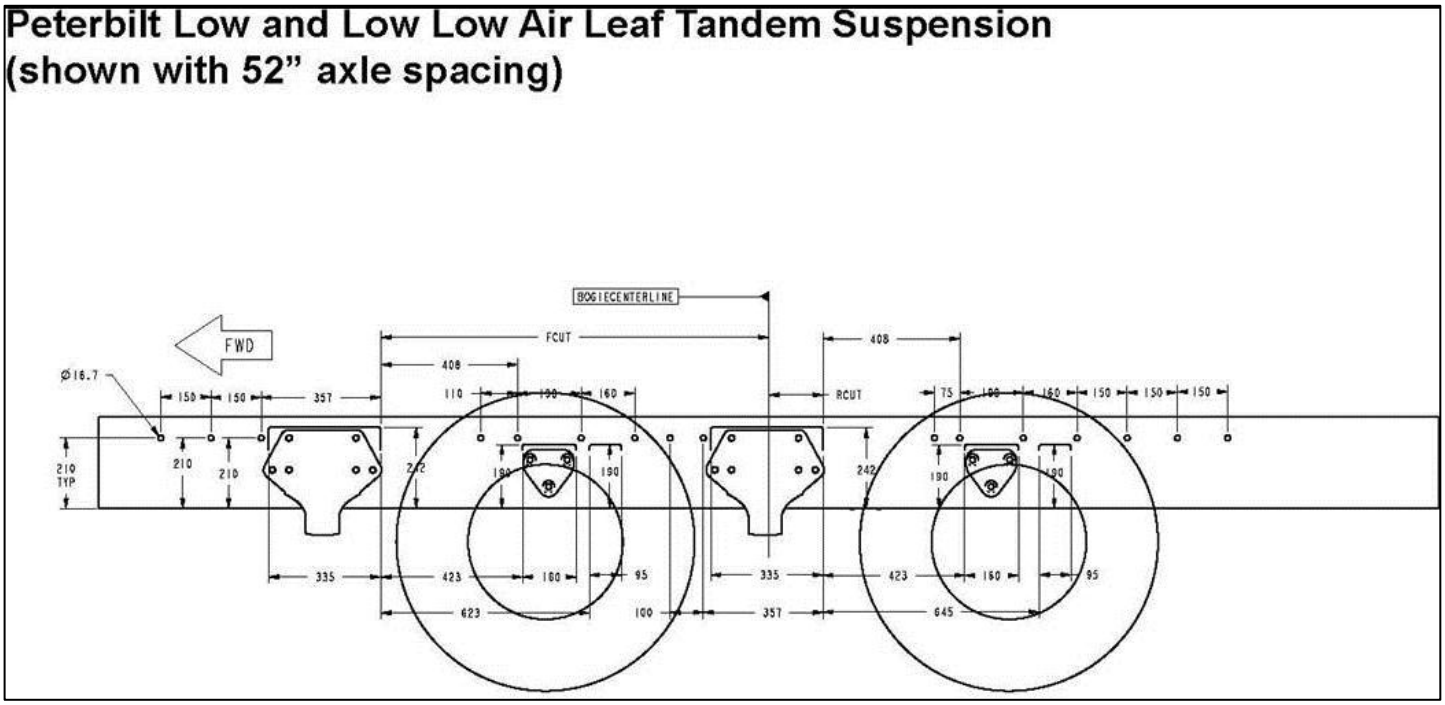

FIGURE 3-13. Peterbilt Low and Low-Low Air Leaf Tandem Frame Drilling (Dimensions In Millimeters)

https://truckmanualshub.com/

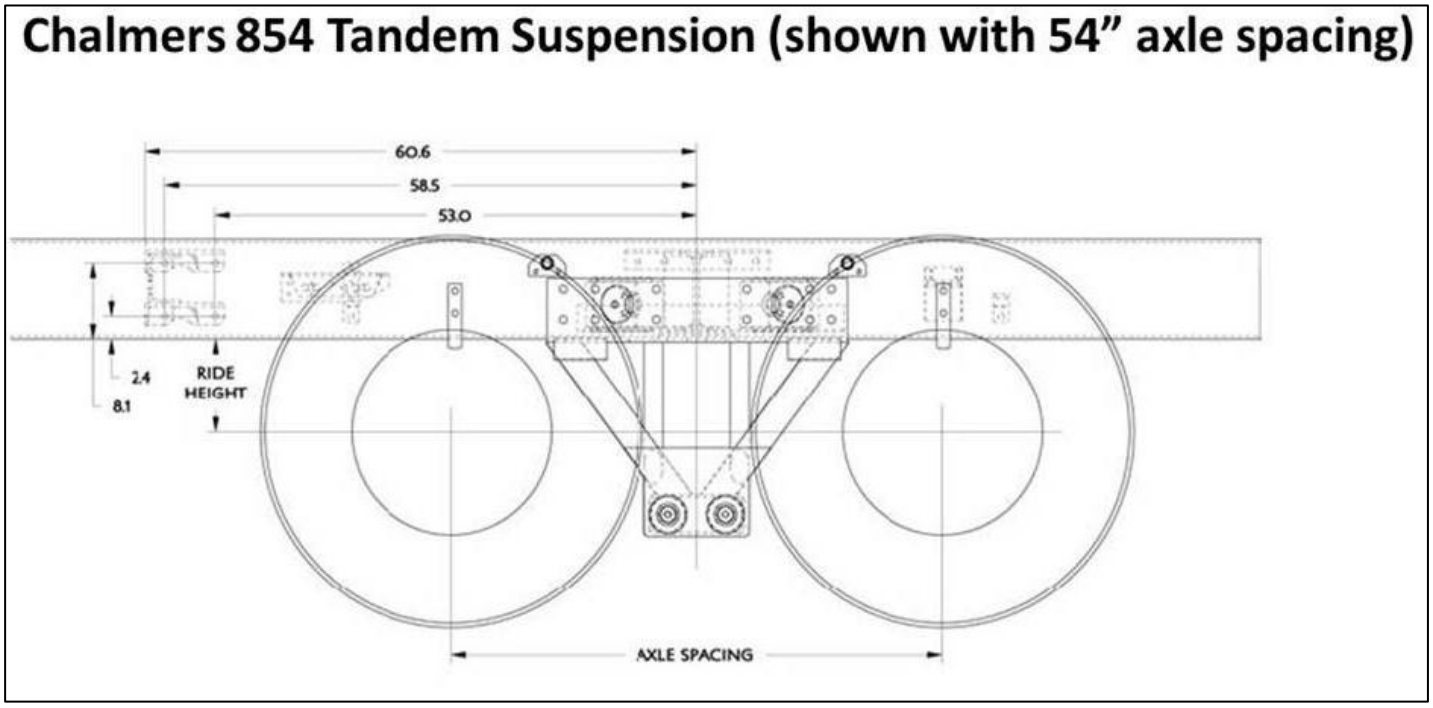

FIGURE 3-14. Chalmers 854 Tandem Frame Drilling

https://truckmanualshub.com/

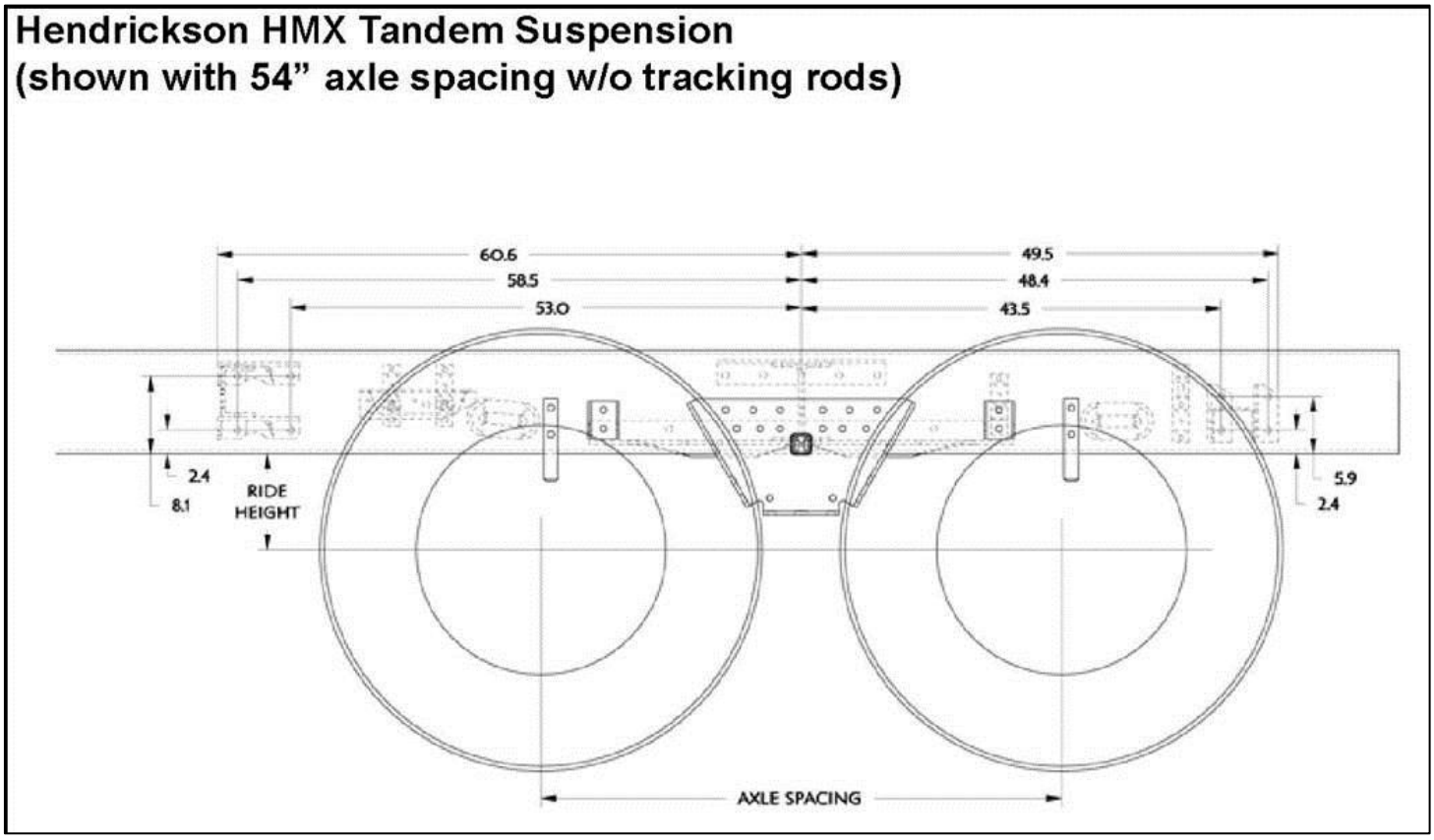

FIGURE 3-15. Hendrickson HMX Tandem Frame Drilling

https://truckmanualshub.com/

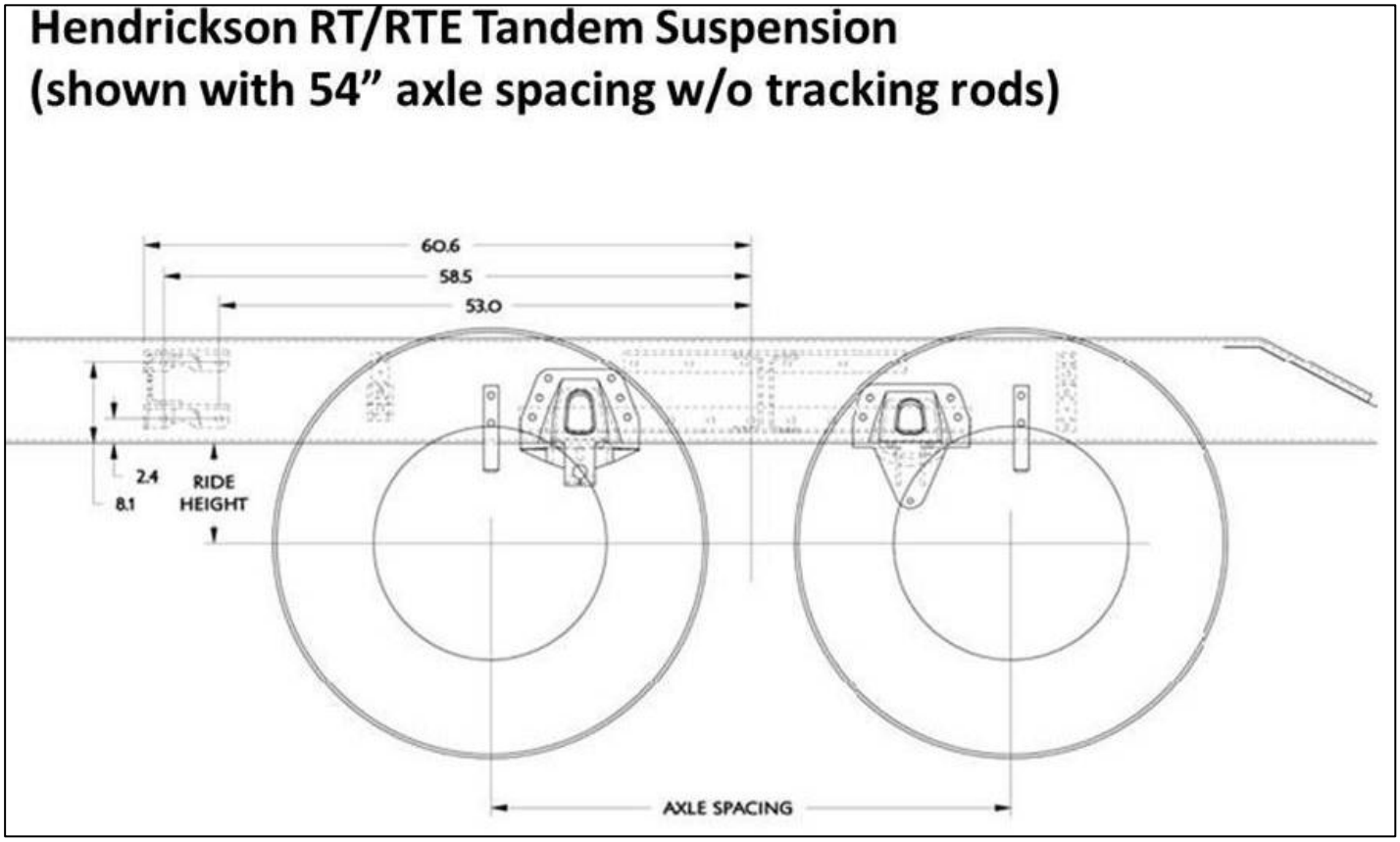

FIGURE 3-16. Hendrickson RT/RTE Tandem Frame Drilling

https://truckmanualshub.com/

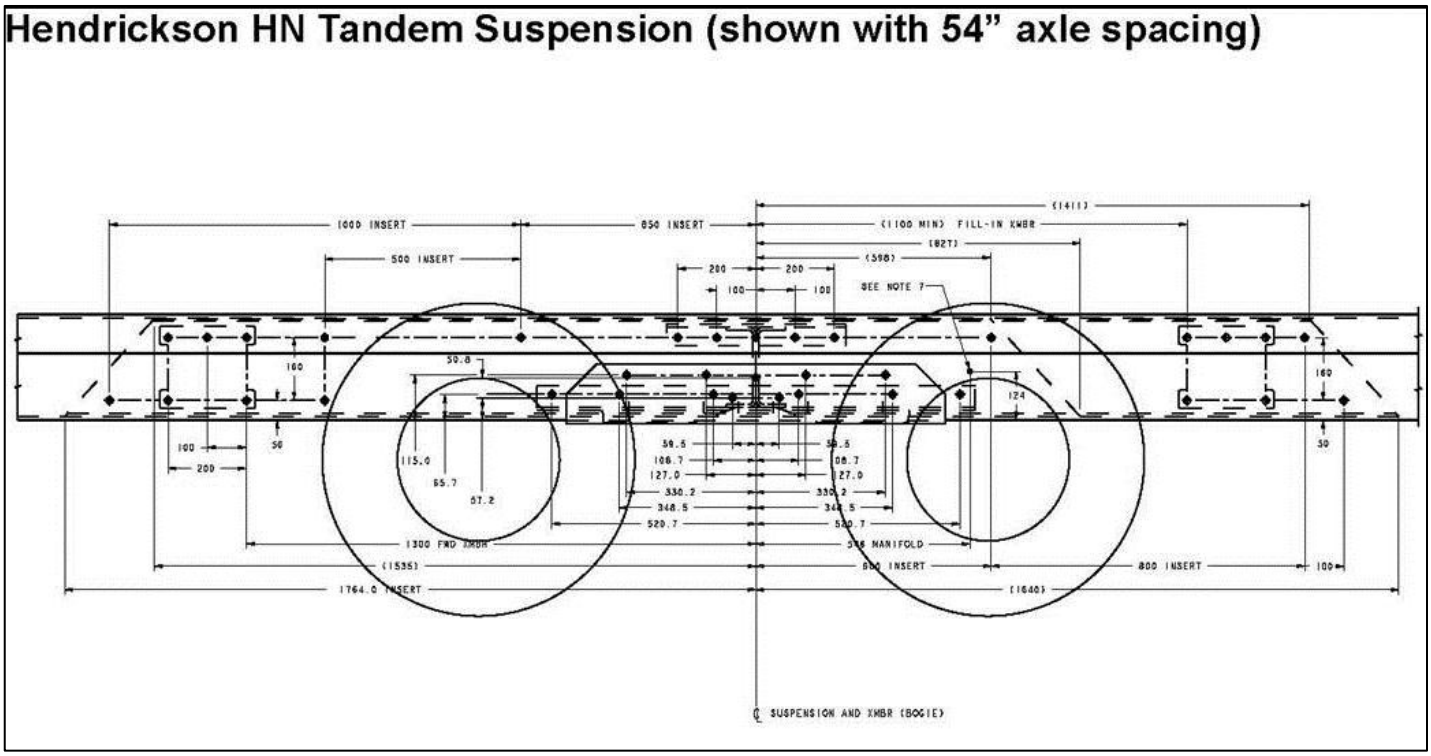

FIGURE 3-17. Hendrickson HN Tandem Frame Drilling (Dimensions In Millimeters)

https://truckmanualshub.com/

Hendrickson R Tandem Suspension

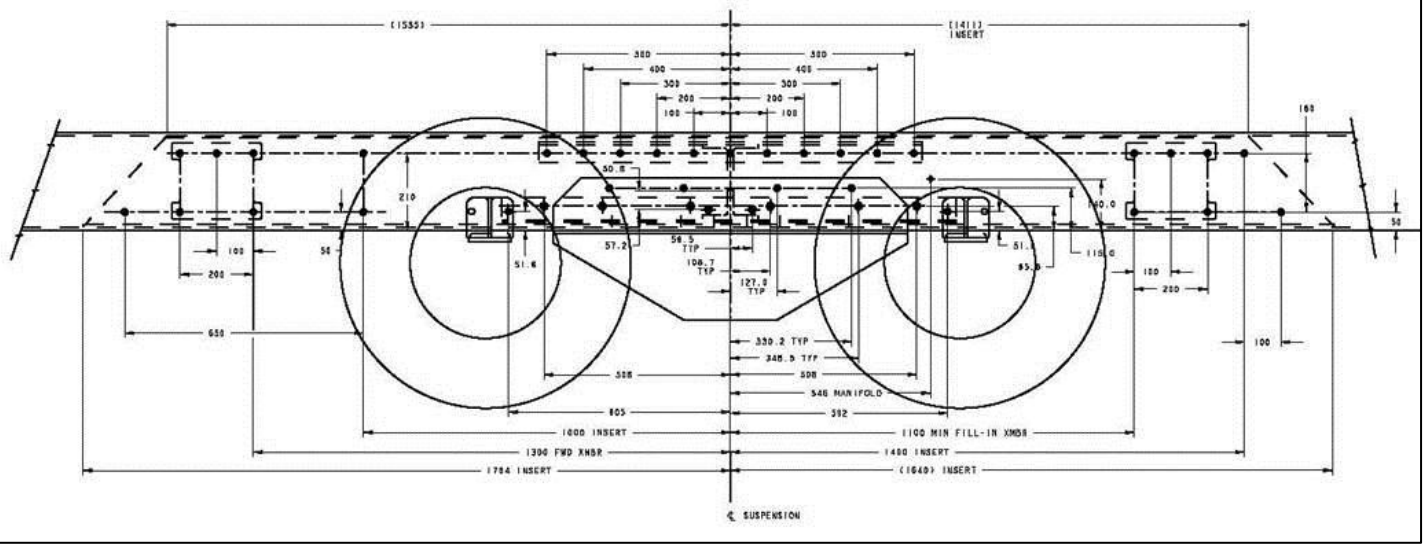

FIGURE 3-18. Hendrickson R Tandem Frame Drilling (Dimensions In Millimeters)

https://truckmanualshub.com/

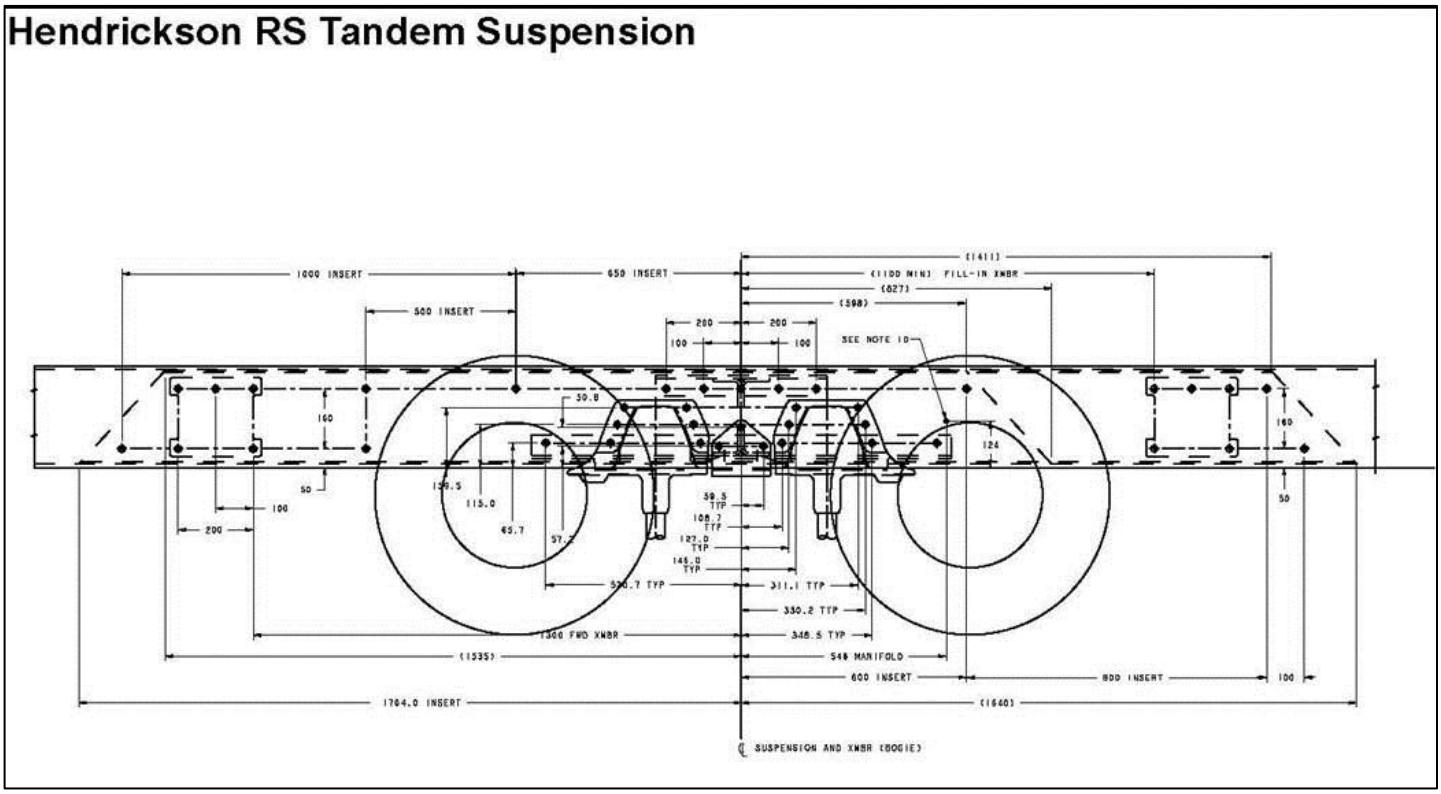

FIGURE 3-19. Hendrickson RS Tandem Frame Drilling (Dimensions In Millimeters)

https://truckmanualshub.com/

PUSHER AND TAG AXLE LAYOUTS

The rear pusher axle layouts are provided as a tool to help layout bodies prior to arrival. The applicable dimensions are shown. When using the pusher layouts to determine available frame space please be aware clearances required are not shown. For information that may not be detailed in these drawings, work with your local Peterbilt Dealer to request that information.

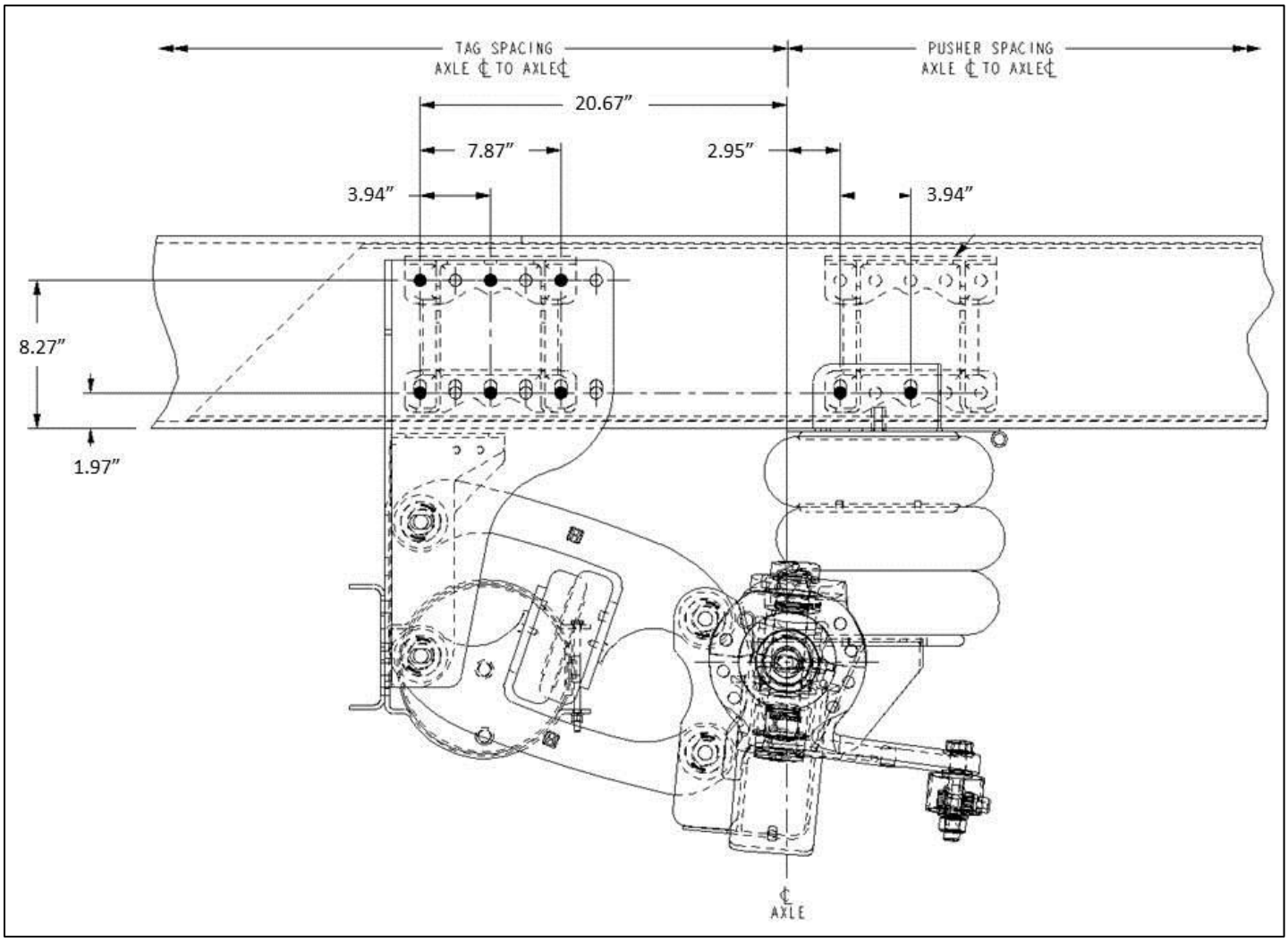

FIGURE 3-20. Hendrickson SC8, SC10, SC13, SCO13, FX or FXO Pusher or Tag

https://truckmanualshub.com/

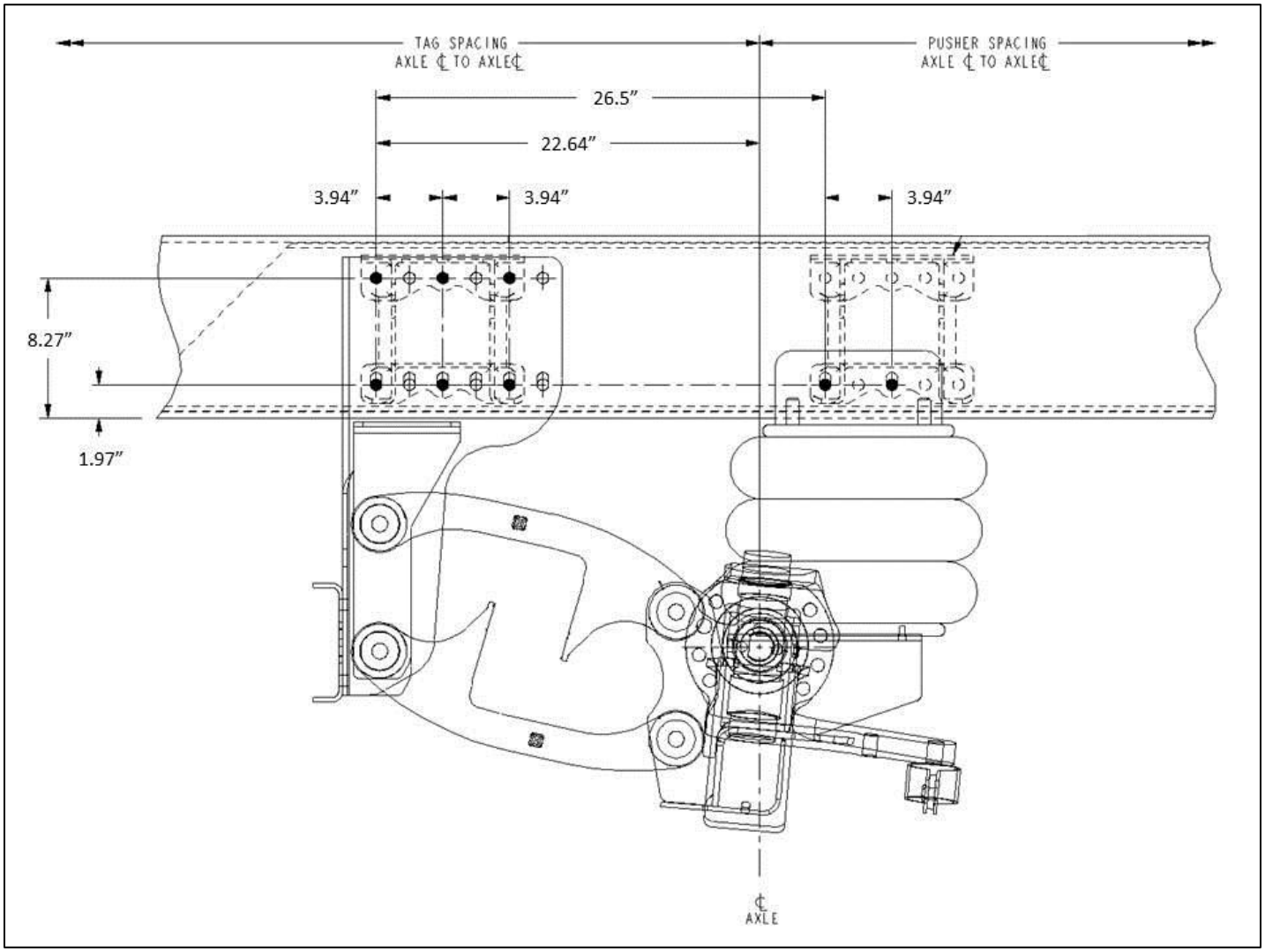

FIGURE 3-21. Hendrickson SC20 Pusher or Tag

https://truckmanualshub.com/

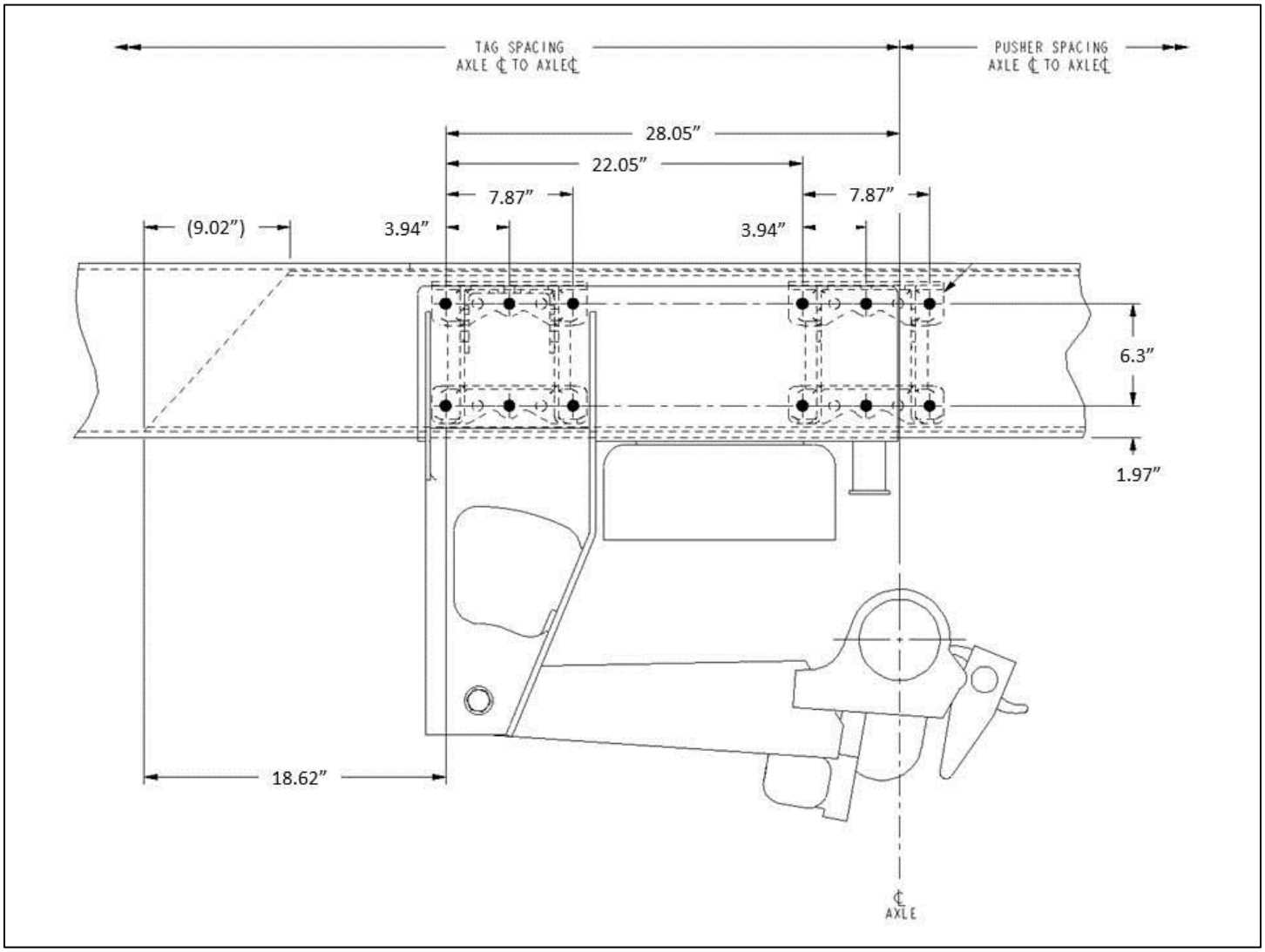

FIGURE 3-22. Hendrickson HLR2 Pusher

https://truckmanualshub.com/

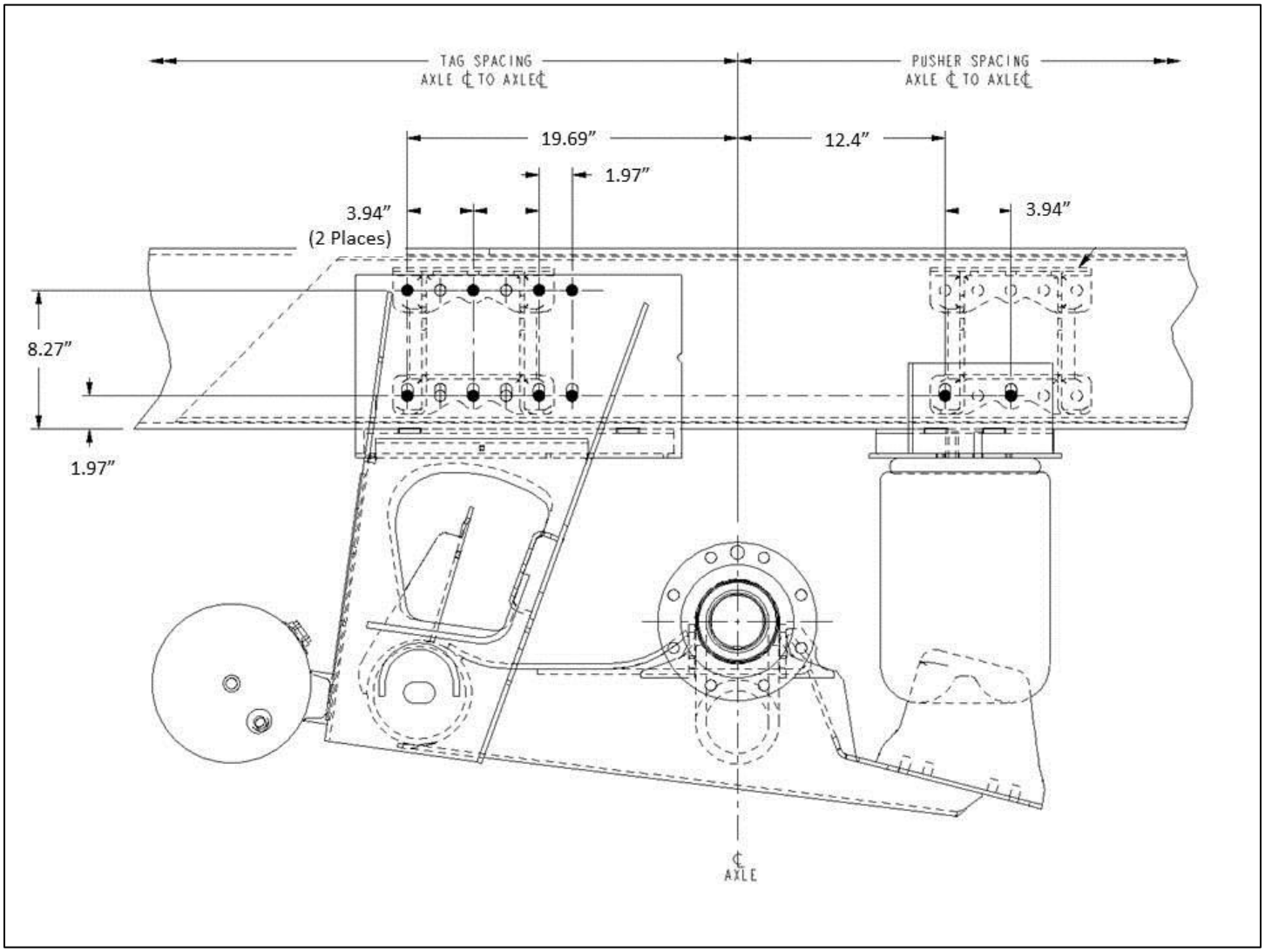

FIGURE 3-23. Hendrickson HLM Pusher or Tag

https://truckmanualshub.com/

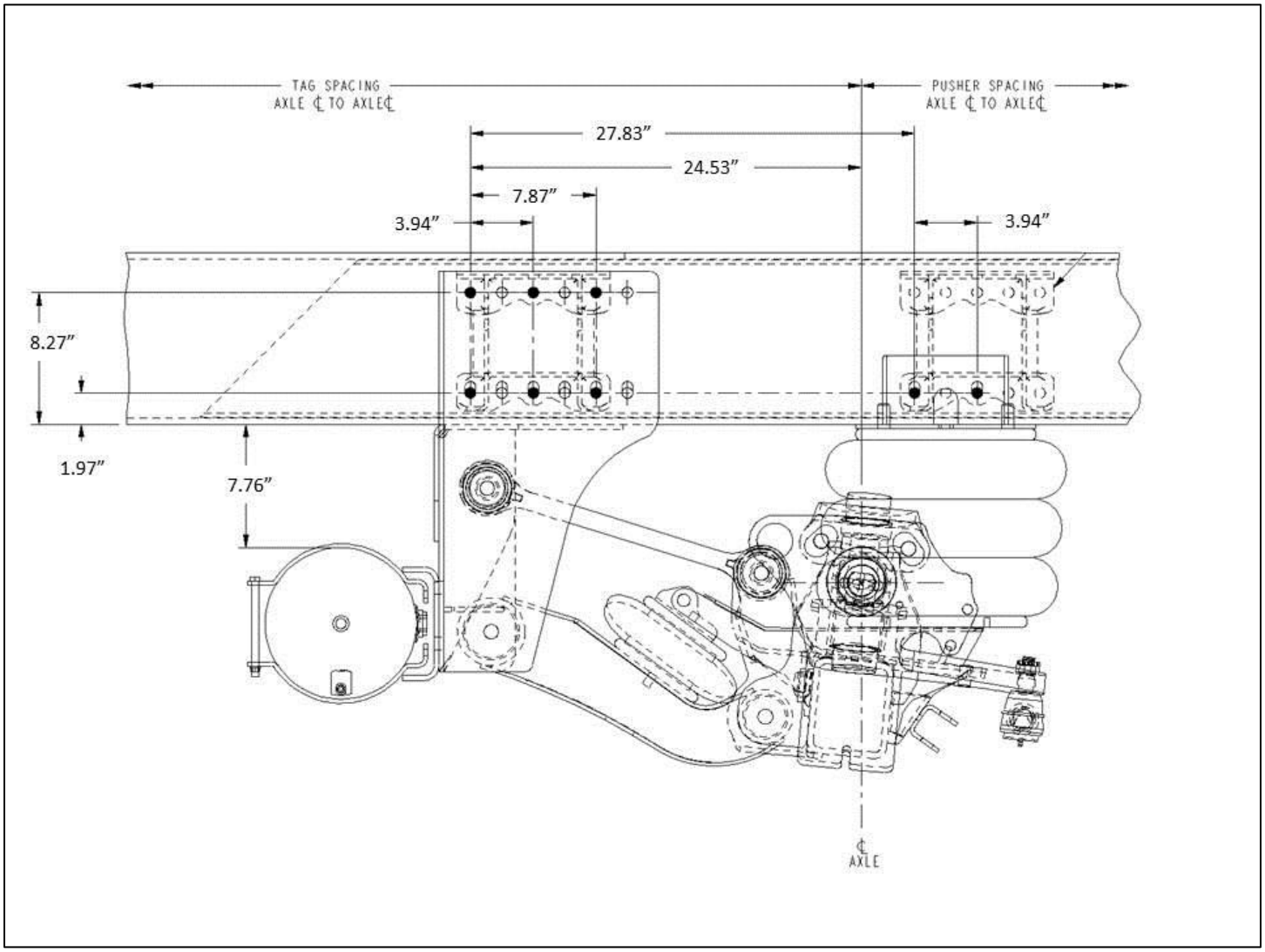

FIGURE 3-24. Watson-Chalin SL2065 Pusher or Tag

https://truckmanualshub.com/

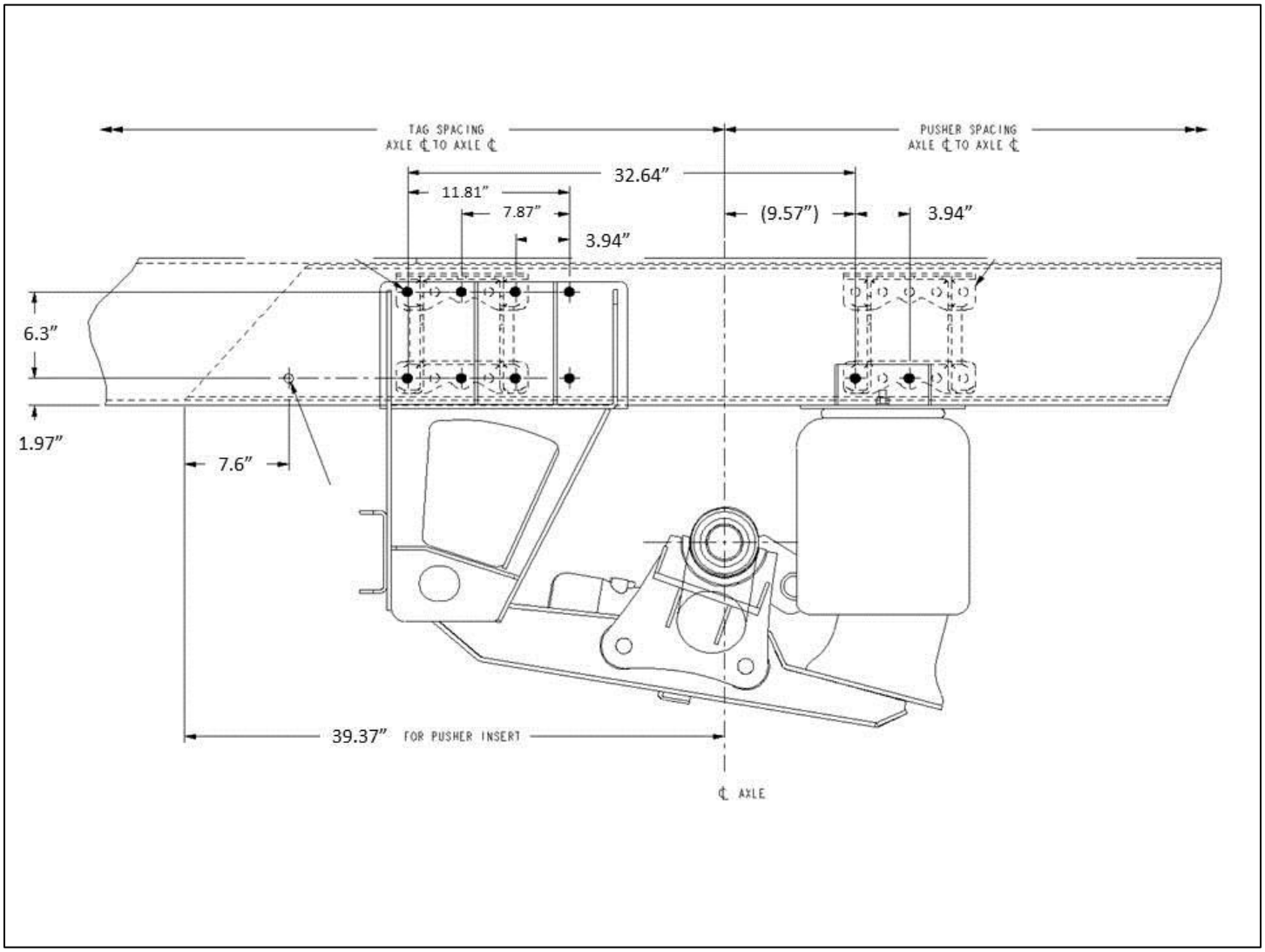

FIGURE 3-25. Watson-Chalin AL2200 Pusher or Tag

https://truckmanualshub.com/

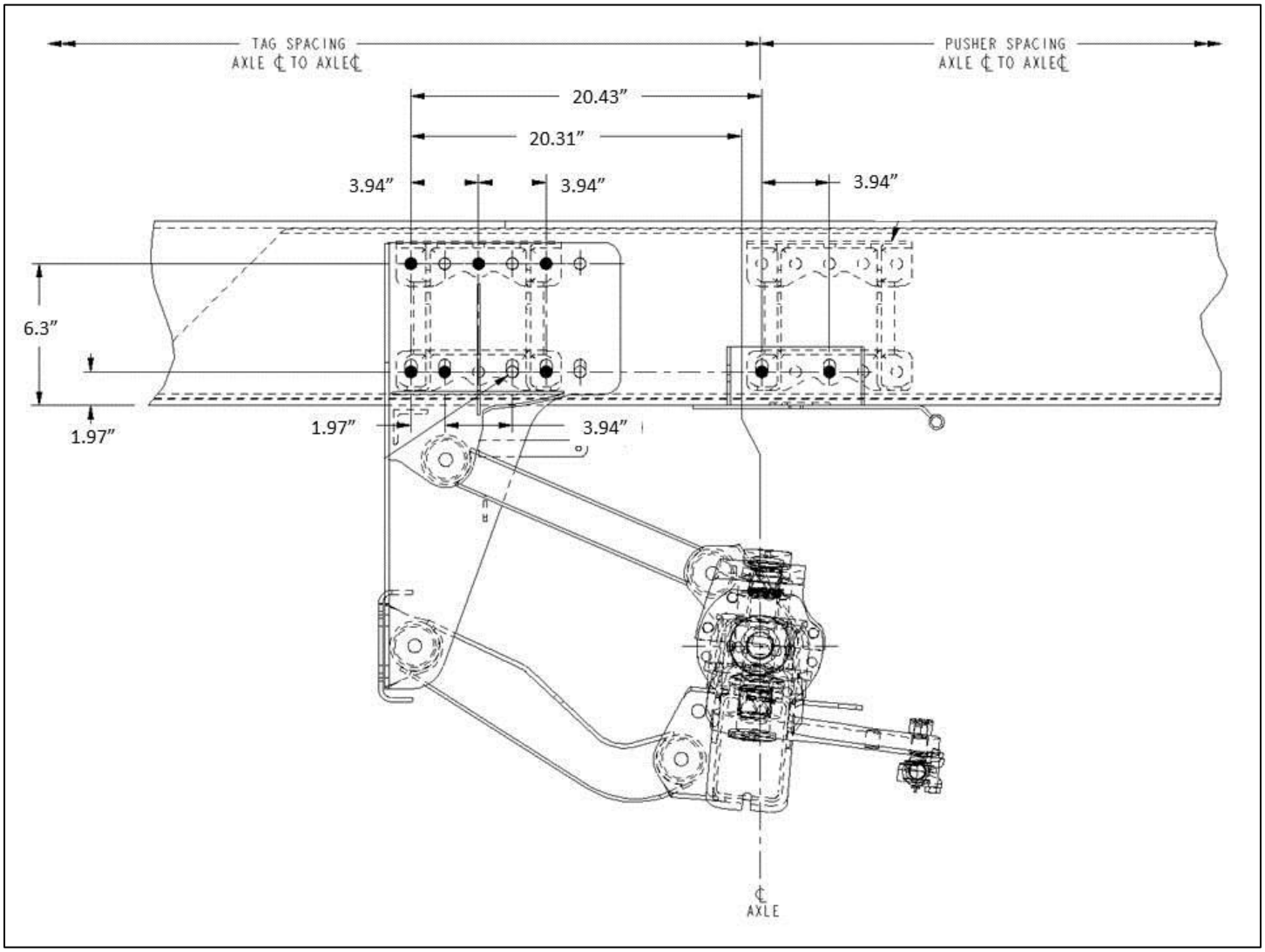

FIGURE 3-26. Watson-Chalin SL0893SSR or SL1093SSR Pusher or Tag

https://truckmanualshub.com/

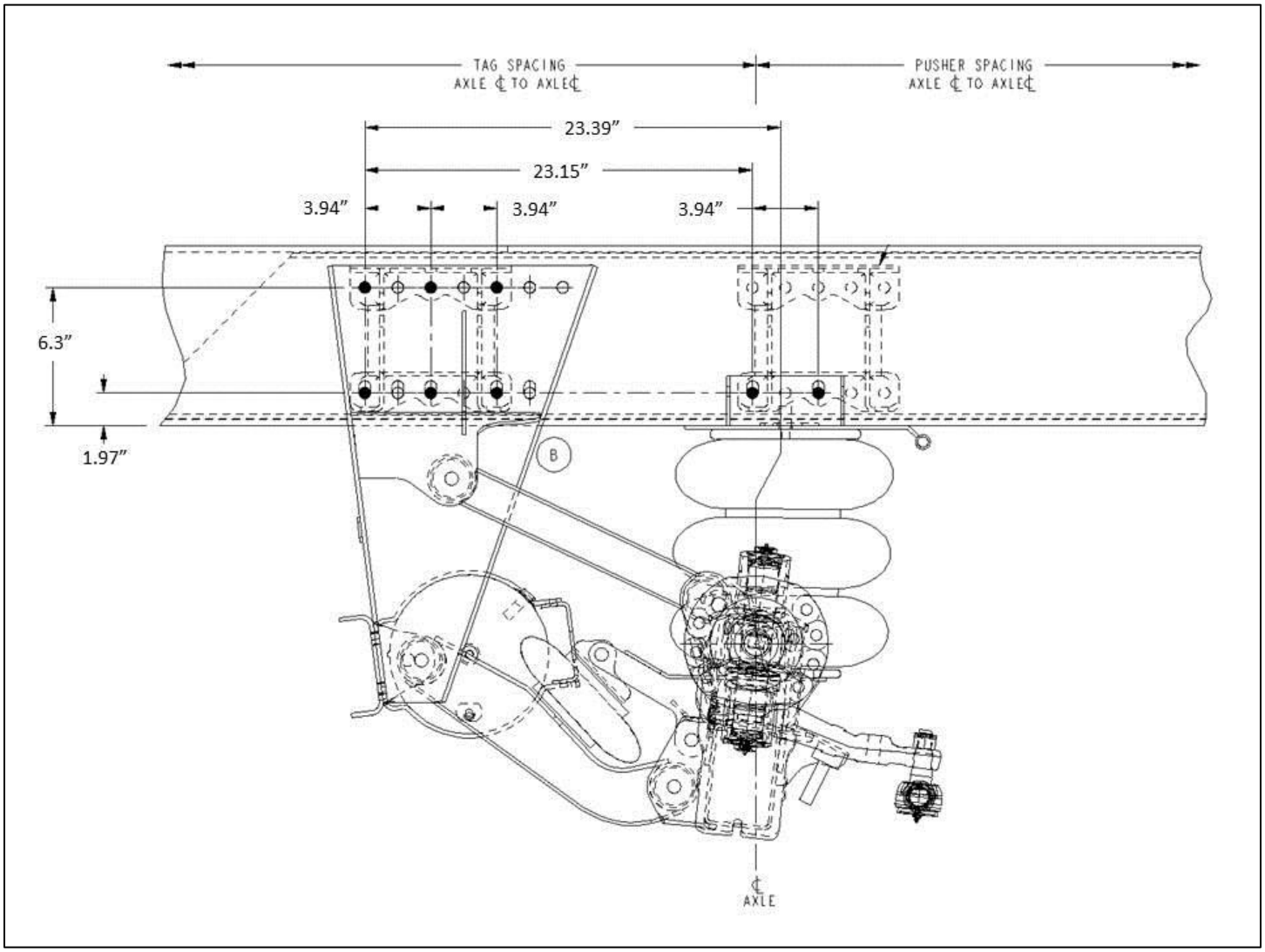

FIGURE 3-27. Watson-Chalin SL1190SSR Pusher or Tag

https://truckmanualshub.com/

EXHAUST HEIGHT CALCULATIONS

The exhaust height calculations are provided as a tool to help layout bodies prior to arrival as well as aid in exhaust configuration selection.

Please work with the local Peterbilt Dealer to request additional information if required.

The overall exhaust height (EH) can be estimated based on the following formula: EH = Y + SPL + (A + B + C + D) / 2

TABLE 3-10. Exhaust Heights

"Y" Dimension			
Exhaust Location	PX-9, ISX12	ISLG	ISX12 G
SOC Mounted (Day Cab)	67.2	69.2	70.2

NOTES:
1) For "A" and "C" values, reference the FRAME HEIGHTS section for front or rear suspension height.
2) For "B" and "D" values, reference the tire manufacturer's website or catalog for static loaded radius (SLR).
3) For Stand Pipe Length (SPL) values, reference the truck sales order.
4) Not applicable to horizontal exhaust.

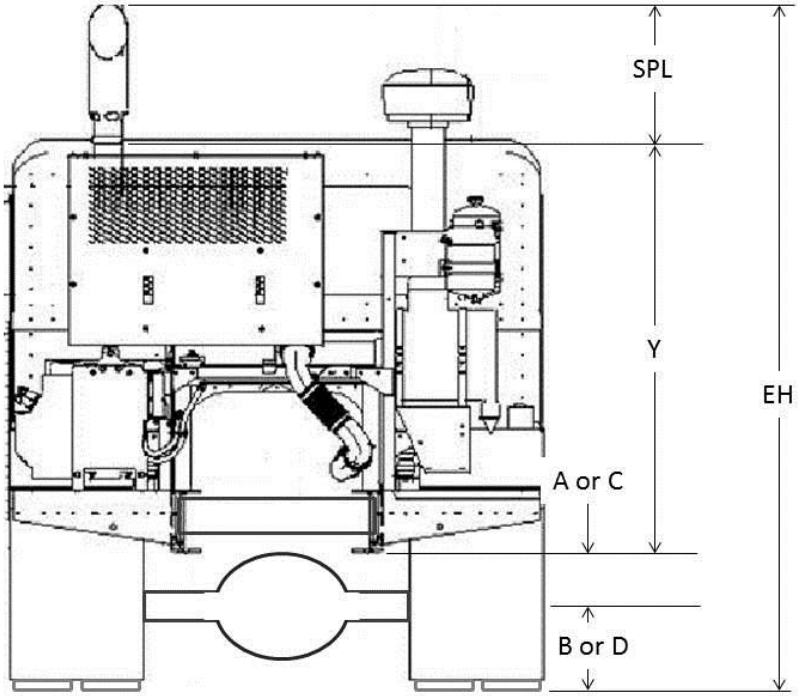

FIGURE 3-28. Exhaust Height Calculations

https://truckmanualshub.com/

GROUND CLEARANCE CALCULATIONS

The ground clearance tables are provided as a tool as a tool to help layout bodies prior to arrival, not all optional equipment is included.

The ground clearance (GC) can be estimated based on the following formula: GC = (A + B + C + D) / 2 - Y

TABLE 3-11. Ground Clearance

Y = DISTANCE FROM BOTTOM OF FRAME TO BOTTOM OF COMPONENT	
Component	**Y**
Cab Access Step	12.1
Alum Space Saver Battery Box	10.1
Steel Space Saver Battery Box	11.8
Narrow Space Saver Battery Box	11.9
Fender Mounted Battery Box	4.4
20" Diameter Fuel Tank	12.4
23" Diameter Fuel Tank	15.2
26" Diameter Fuel Tank	18.0

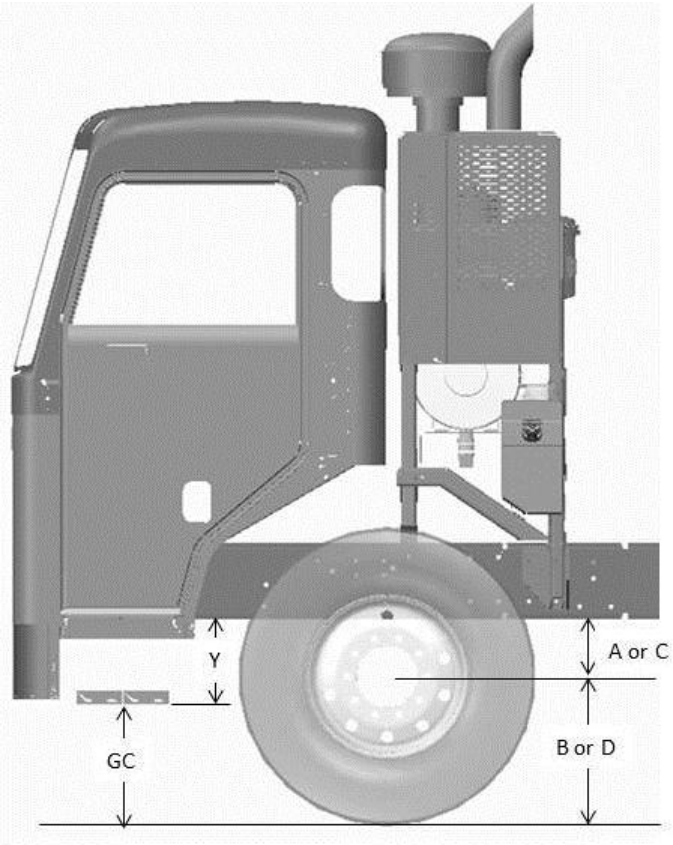

FIGURE 3-29. Ground Clearance Calculations

NOTES:

1) For “A” and “C” values, reference the FRAME HEIGHTS section for front suspension height or rear suspension height.
2) For “B” and “D” values, reference the tire manufacturer’s website or catalog for overall diameter or static loaded radius (SLR).

https://truckmanualshub.com/

OVERALL CAB HEIGHT CALCULATIONS

The overall cab height tables are provided as a tool as a tool to help layout bodies prior to arrival, no roof mounted equipment is included.

The overall cab height (CH) can be estimated based on the following formula: CH = (A + B + C + D) / 2 + 74”

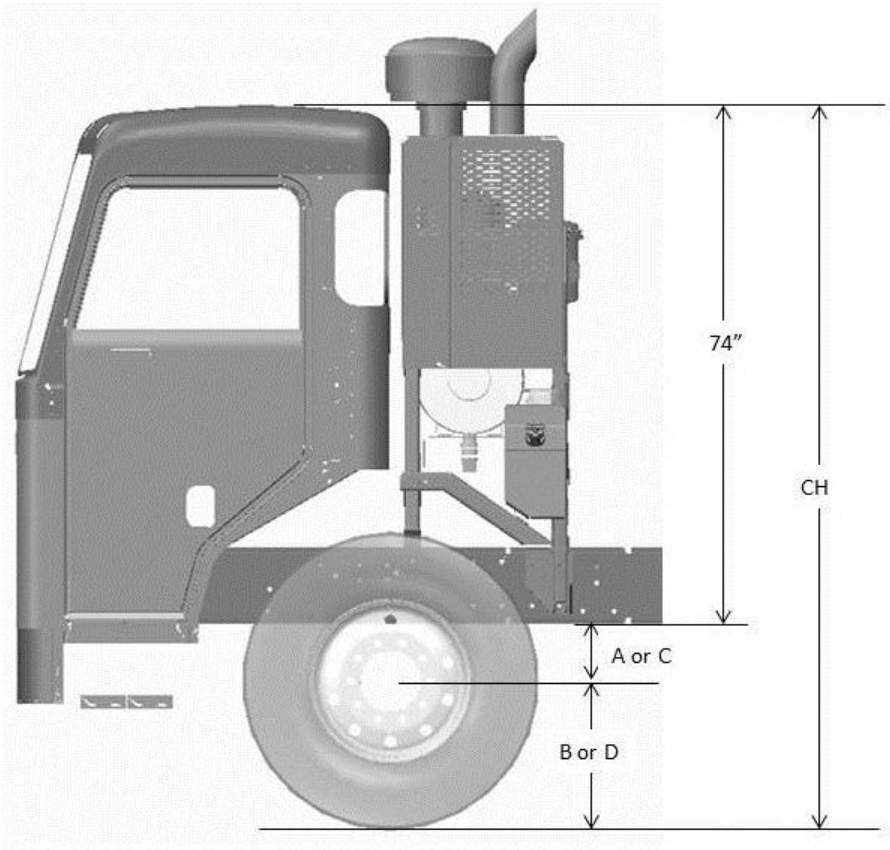

FIGURE 3-30. Overall Cab Height Calculations

NOTES:

1) For “A” and “C” values, reference the FRAME HEIGHTS section for front suspension height or rear suspension height.
2) For “B” and “D” values, reference the tire manufacturer’s website or catalog for overall diameter or static loaded radius (SLR).
3) Roof mounted content such as horns and antennas are not included.

https://truckmanualshub.com/

FRAME COMPONENTS

This section includes drawings and charts related to common frame mounted components. Optional equipment may not be depicted.

Please work with the local Peterbilt Dealer to request additional information if required. At the dealer's request, Peterbilt can provide frame layouts for individual vehicles prior to delivery.

FUEL TANKS

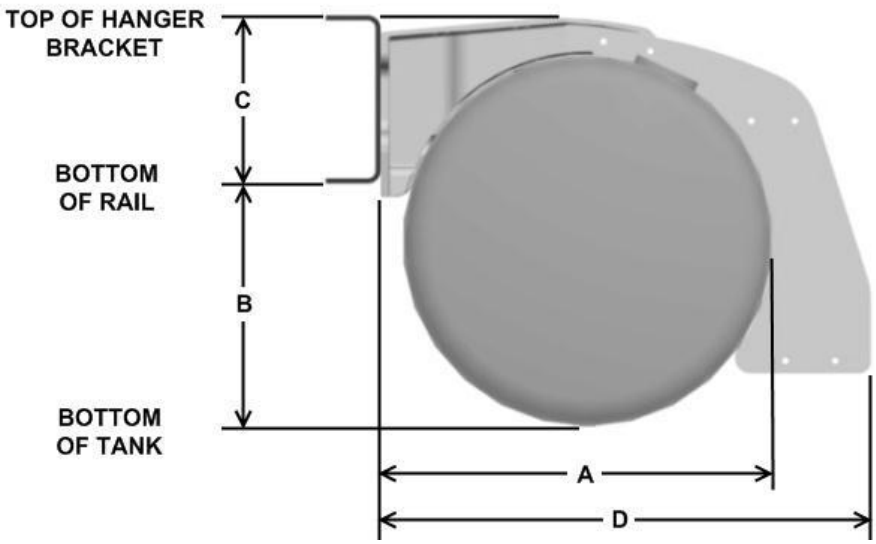

FIGURE 3-31. Fuel Tanks

TABLE 3-12. Fuel Tank Dimensions

	DIMENSIONS			
	A	B	C	D
20" TANK	22.7	12.4	10.3	27.5
23" TANK	24.5	15.2	10.5	31.0
26" TANK	27.2	18.0	10.6	33.7

TABLE 3-13. Fuel Tank Data

GALLONS		TANK LENGTH		
USEABLE	TOTAL	20"	23"	26"
40	46	33.3	N/A	N/A
50	57	43.2	34.5	26.7
60	67	51.3	40.7	31.5
70	78	57.3	46.8	36.2
80	89	65.3	52.9	41.0
90	99	N/A	59.0	45.7
100	110	N/A	*65.1	50.5
110	121	N/A	N/A	55.2
120	131	N/A	77.3	60.0
135	147	N/A	N/A	66.8
150	163	N/A	N/A	*74.0

NOTES:

1) * Largest capacity without a weld seam.

https://truckmanualshub.com/

EXHAUST TRANSVERSE DPF/SCR

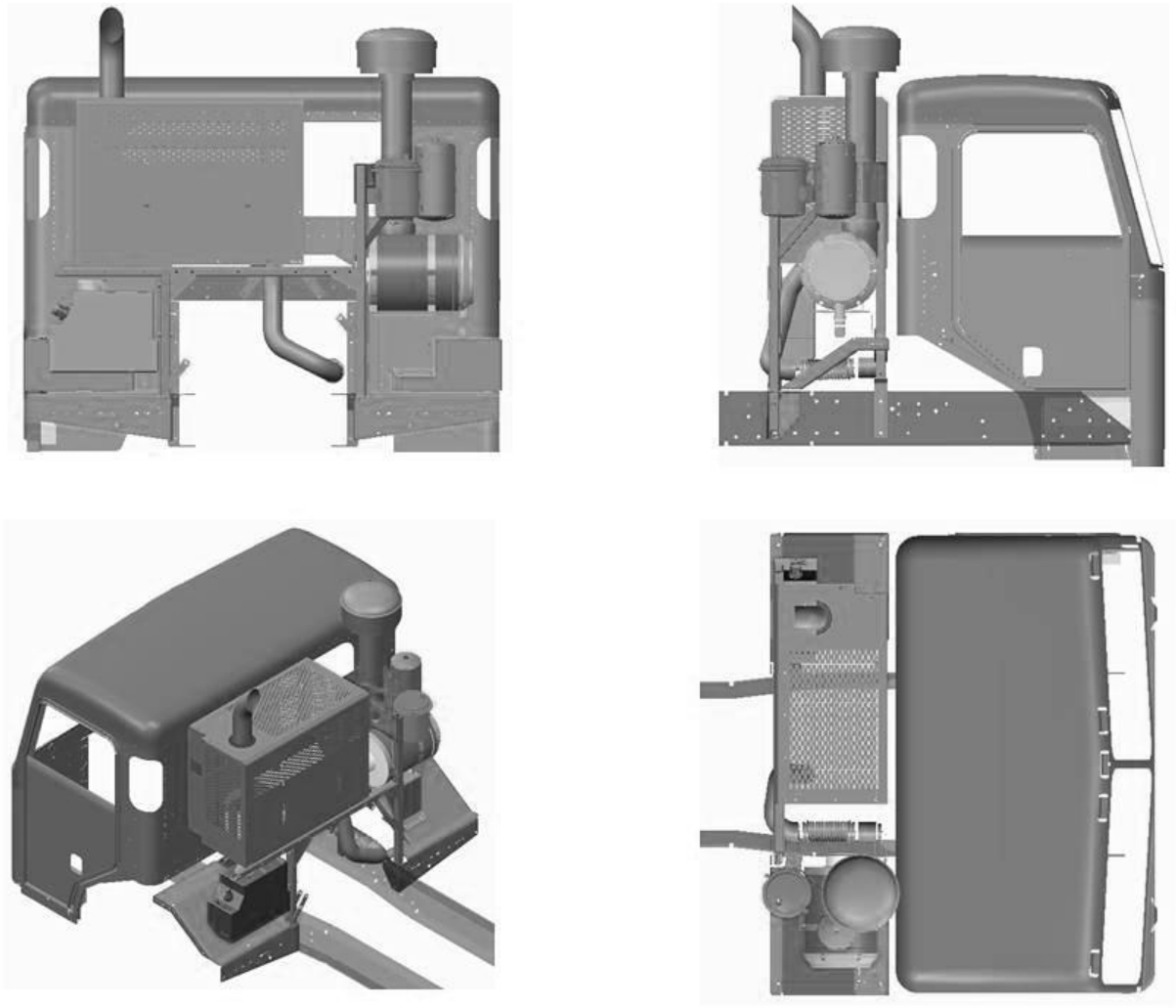

FIGURE 3-32. Exhaust transverse DPF/SCR.

https://truckmanualshub.com/

SECTION 4 **BODY MOUNTING**

INTRODUCTION

This section has been designed to provide guidelines to aid in body mounting. This is not intended a complete guide, rather as general information. Body mounting strategies are unique to each body type and body builder must determine the appropriate method.

Please contact your local Peterbilt dealer if more information is desired.

FRAME RAILS

Frame rail information is provided in Table 4-1 and Table 4-2.

TABLE 4-1. Single Frame Rails

Rail Height (in.)	Flange Width (in.)	Web Thickness (in)	Section Modulus (cu. In.)	RBM (per rail) (in.-lbs)	Weight (per rail) (lbs/in.)
10 3/4	3.50	0.375	17.8	2,136,000	1.74

TABLE 4-2. Built-up Frame Rails

Main Rail Height (in.)	Insert	Outsert	Section Modulus (cu. In.)	RBM (per rail) (in.-lbs)	Weight (per rail) (lbs/in.)
10 3/4	9.875 x 2.87 x .250	None	28.9	3,468,000	2.78
10 3/4	9.875 x 2.87 x .250	11.63 x 3.87 x .375	45.7	5,484,000	4.67(1)

https://truckmanualshub.com/

CRITICAL CLEARANCES

REAR TIRES AND CAB

CAUTION: *Insufficient clearance between rear tires and body structure could cause damage to the body during suspension movement.*

Normal suspension movement could cause contact between the tires and the body. To prevent this, mount the body so that the minimum clearance between the top of the tire and the bottom of the body is 8 inches (203 mm). This should be measured with the body empty. See Figure 4-1.

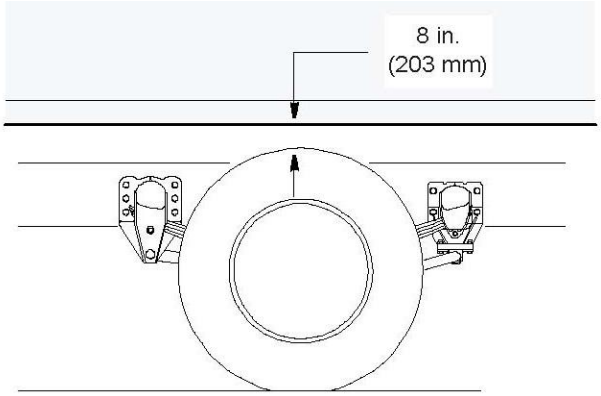

FIGURE 4-1. Minimum Clearance Between Top of Rear Tires and Body Structure Overhang

CAUTION: *Maintain adequate clearance between back of cab and the front (leading edge) of mounted body. It is recommended the body leading edge be mounted 4 in. behind the cab. See Figure 4-2.*

NOTE: *Be sure to provide access to all maintenance and service components.*

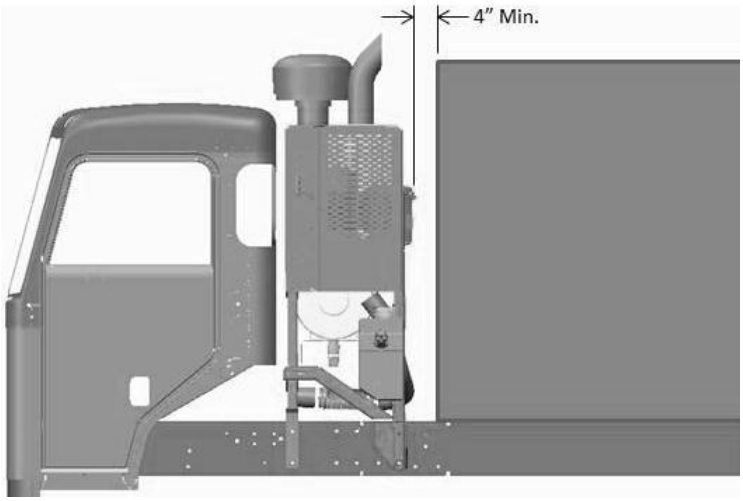

FIGURE 4-2. Minimum Back of Cab Clearance

https://truckmanualshub.com/

BODY MOUNTING USING BRACKETS

CAUTION: *Always install a spacer between the body subframe and the top flange of the frame rail. Installation of a spacer between the body subframe and the top flange of the frame rail will help prevent premature wear of the components due to chafing or corrosion.*

WARNING! *When mounting a body to the chassis, DO NOT drill holes in the upper or lower flange of the frame rail. If the frame rail flanges are modified or damaged, the rail could fail prematurely and cause an accident. Mount the body using body mounting brackets or U–bolts.*

FRAME SILL

If the body is mounted to the frame with brackets, we recommend a frame sill spacer made from a strip of rubber or plastic (delrin or nylon). These materials will not undergo large dimensional changes during periods of high or low humidity. The strip will be less likely to fall out during extreme relative motion between body and chassis. See Figure 4-3.

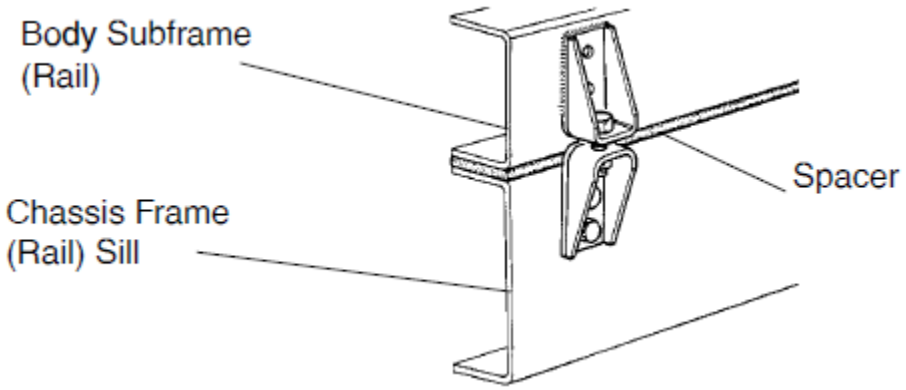

FIGURE 4-3. Spacer Between Frame Sill and Body Rail – Rubber or Plastic

https://truckmanualshub.com/

BRACKETS

When mounting a body to the chassis with brackets, we recommend designs that offer limited relative movement, bolted securely but not too rigid. Brackets should allow for slight movement between the body and the chassis. For instance, Figure 4-4 shows a high compression spring between the bolt and the bracket and Figure 4-5 shows a rubber spacer between the brackets. These designs will allow relative movement between the body and the chassis during extreme frame racking situations. Mountings that are too rigid could cause damage to the body. This is particularly true with tanker installations.

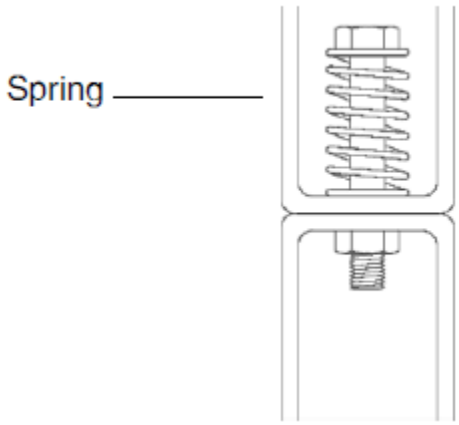

FIGURE 4-4. Mounting Brackets

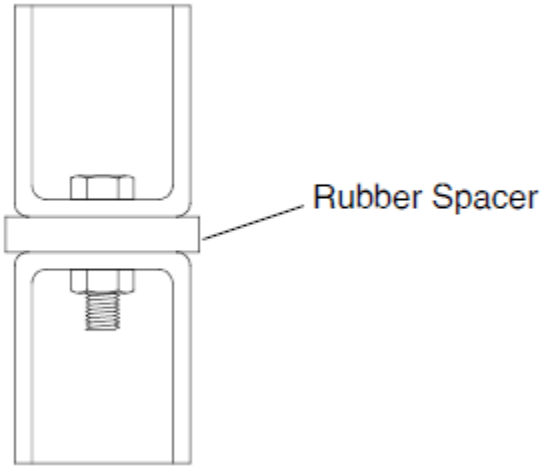

FIGURE 4-5. Mounting Brackets

https://truckmanualshub.com/

MOUNTING HOLES

When installing brackets on the frame rails, the mounting holes in the chassis frame bracket and frame rail must comply with the general spacing and location guidelines illustrated in Figure 4-6.

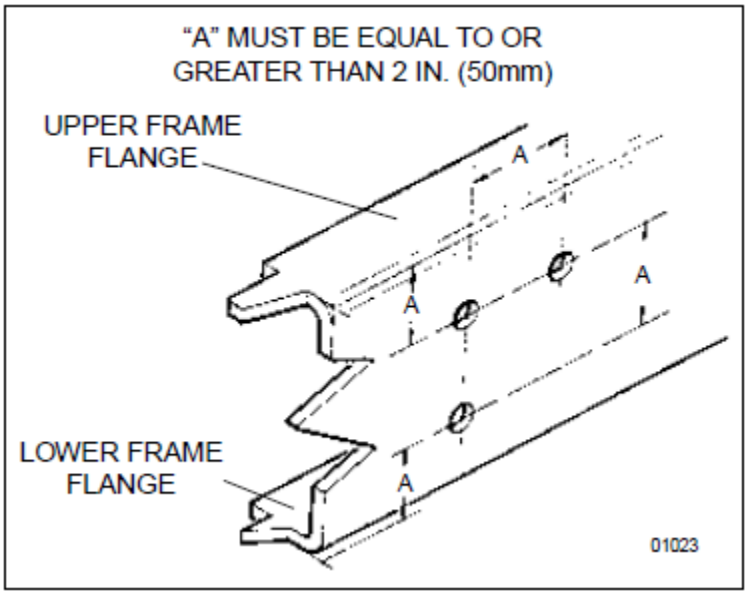

FIGURE 4-6. Hole Location Guidelines for Frame Rail and Bracket

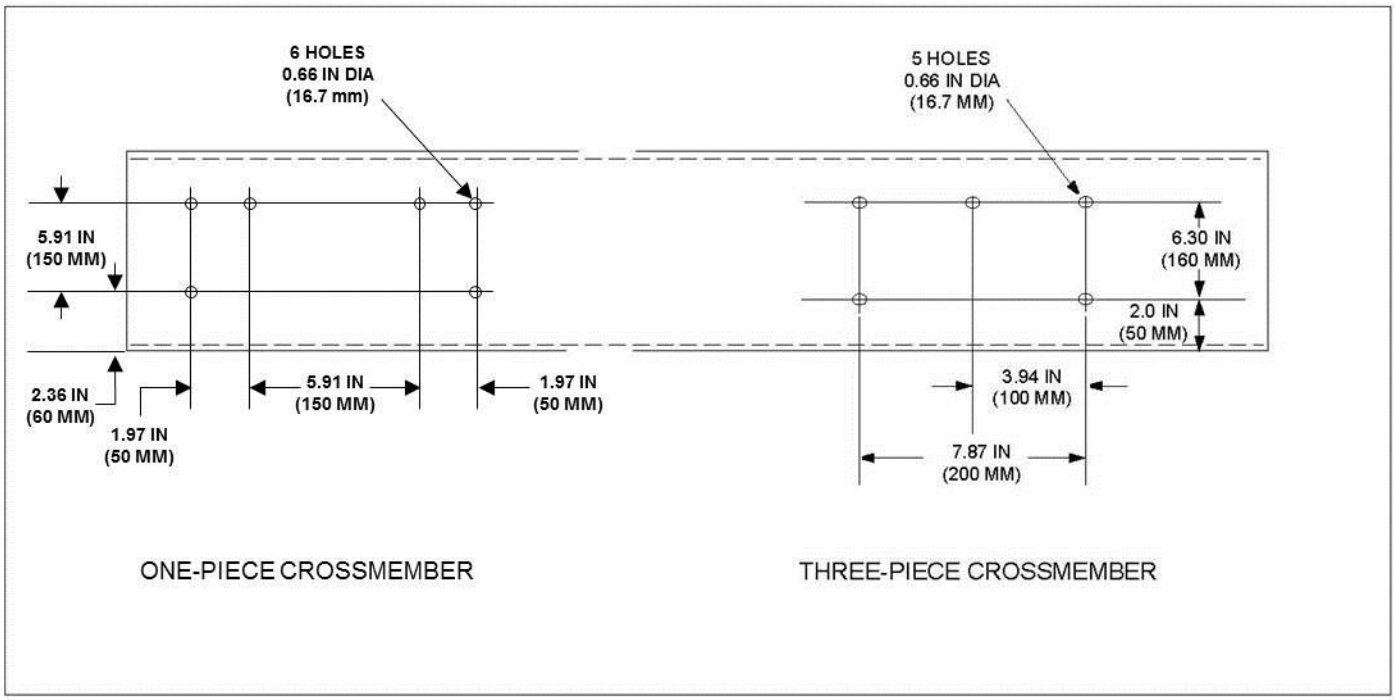

FIGURE 4-7. Crossmember Gusset Hole Patterns (Additional Holes Available in 50 mm Horizontal Increments)

https://truckmanualshub.com/

FRAME DRILLING

WARNING! *When mounting a body to the chassis, DO NOT drill holes in the upper or lower flange of the frame rail. If the frame rail flanges are modified or damaged, the rail could fail prematurely and cause an accident. Mount the body using body mounting brackets or U–bolts.*

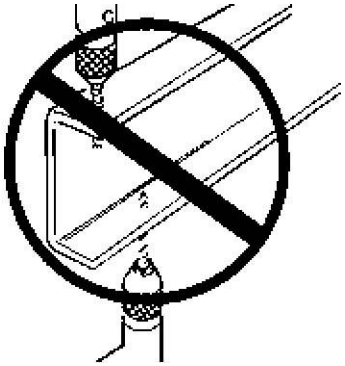

FIGURE 4-8. Frame Rail Flange Drilling Prohibited

WARNING! *DO NOT drill closely spaced holes in the frame rail. Hole centers of two adjacent holes should be spaced no less than twice the diameter of the largest hole. Closer spacing could induce a failure between the two holes.*

CAUTION: *An appropriately sized bolt and nut must be installed and torqued properly in all unused frame holes. Failure to do so could result in a frame crack initiation around the hole.*

CAUTION: *Use care when drilling the frame web so the wires and air lines routed inside the rail are not damaged. Failure to do so could cause an inoperable electrical or air system circuit.*

CAUTION: *Never use a torch to make holes in the rail. Use the appropriate diameter drill bit. Heat from a torch will affect the material properties of the frame rail and could result in frame rail cracks.*

CAUTION: *The hole diameter should not exceed the bolt diameter by more than .060 inches (1.5mm).*

https://truckmanualshub.com/

BODY MOUNTING USING U–BOLTS

If the body is mounted to the frame with U–bolts, use a hardwood sill (minimum 1/2 inch (12.7 mm) thick) between the frame rail and body frame to protect the top surface of the rail flange.

WARNING! *Do not allow the frame rails or flanges to deform when tightening the U–bolts. It will weaken the frame and could cause an accident. Use suitable spacers made of steel or hardwood on the inside of the frame rail to prevent collapse of the frame flanges.*

Use a hardwood spacer between the bottom flange and the U–bolt to prevent the U–bolt from notching the frame flange. See Figure 4-9.

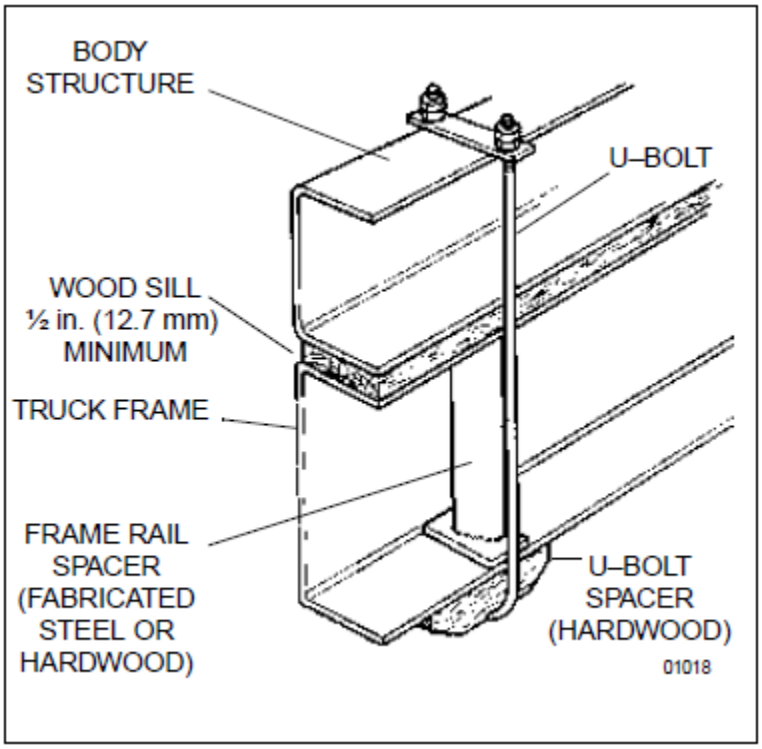

FIGURE 4-9. Acceptable U-Bolt Mounting with Wood and Fabricated Spacers

https://truckmanualshub.com/

WARNING! *Do not allow spacers and other body mounting parts to interfere with brake lines, fuel lines, or wiring harnesses routed inside the frame rail. Crimped or damaged brake lines, fuel lines, or wiring could result in loss of braking, fuel leaks, electrical overload or a fire. Carefully inspect the installation to ensure adequate clearances for air brake lines, fuel lines, and wiring. See Figure 4-10.*

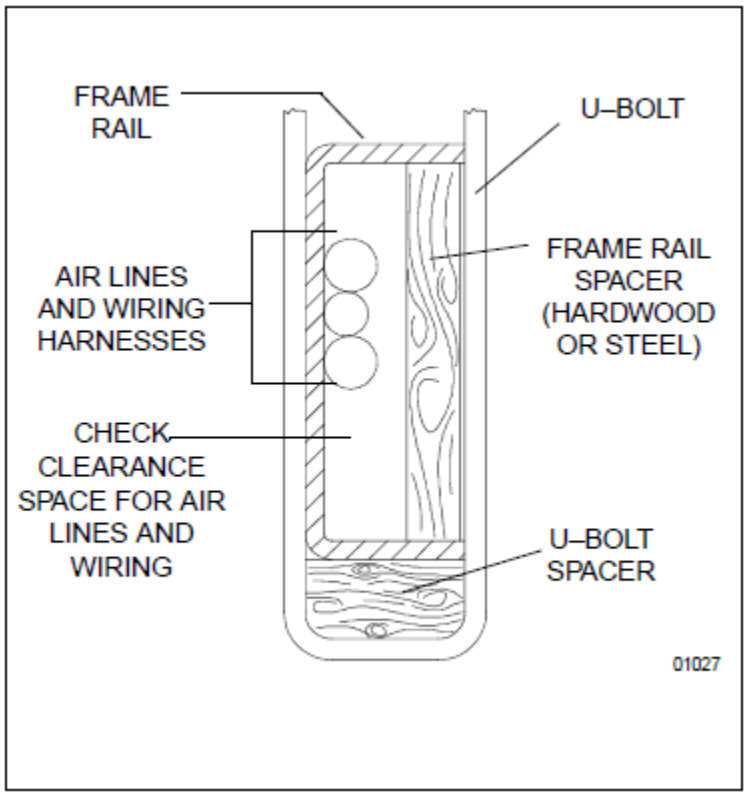

FIGURE 4-10. Clearance Space for Air Lines and Cables

WARNING! *Do not notch frame rail flanges to force a U–bolt fit. Notched or damaged frame flanges could result in premature frame failure. Use a larger size U-bolt.*

CAUTION: *Mount U–bolts so they do not chafe on frame rail, air or electric lines.*

https://truckmanualshub.com/

REAR BODY MOUNT

When U–bolts are used to mount a body we recommend that the last body attachment be made with a “fishplate” bracket. See Figure 4-11. This provides a firm attaching point and helps prevent any relative fore or aft movement between the body and frame. For hole location guidelines, See Figure 4-7.

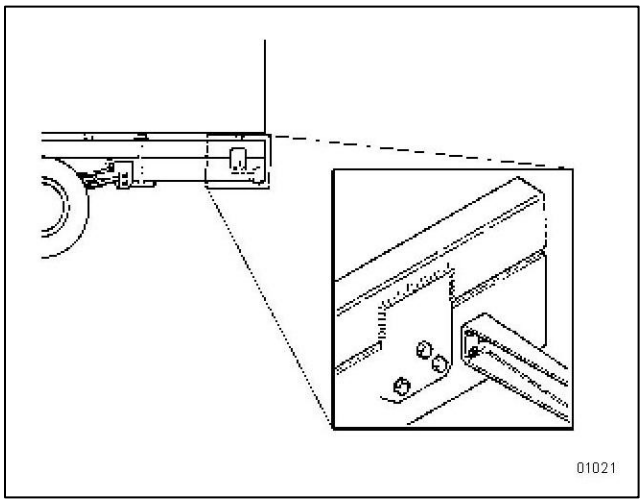

FIGURE 4-11. Fishplate Bracket at Rear End of Body

SECTION 5 **FRAME MODIFICATIONS**

INTRODUCTION

Peterbilt offers customer specified wheelbases and frame overhangs. So, in most cases frame modifications should not be necessary.

However, some body installations may require slight modifications, while other installations will require extensive modifications. Sometimes an existing dealer stock chassis may need to have the wheelbase changed to better fit a customer's application. The modifications may be as simple as modifying the frame cutoff, or as complex as modifying the wheelbase.

DRILLING RAILS

If frame holes need to be drilled in the rail, see SECTION 4 BODY MOUNTING for more information.

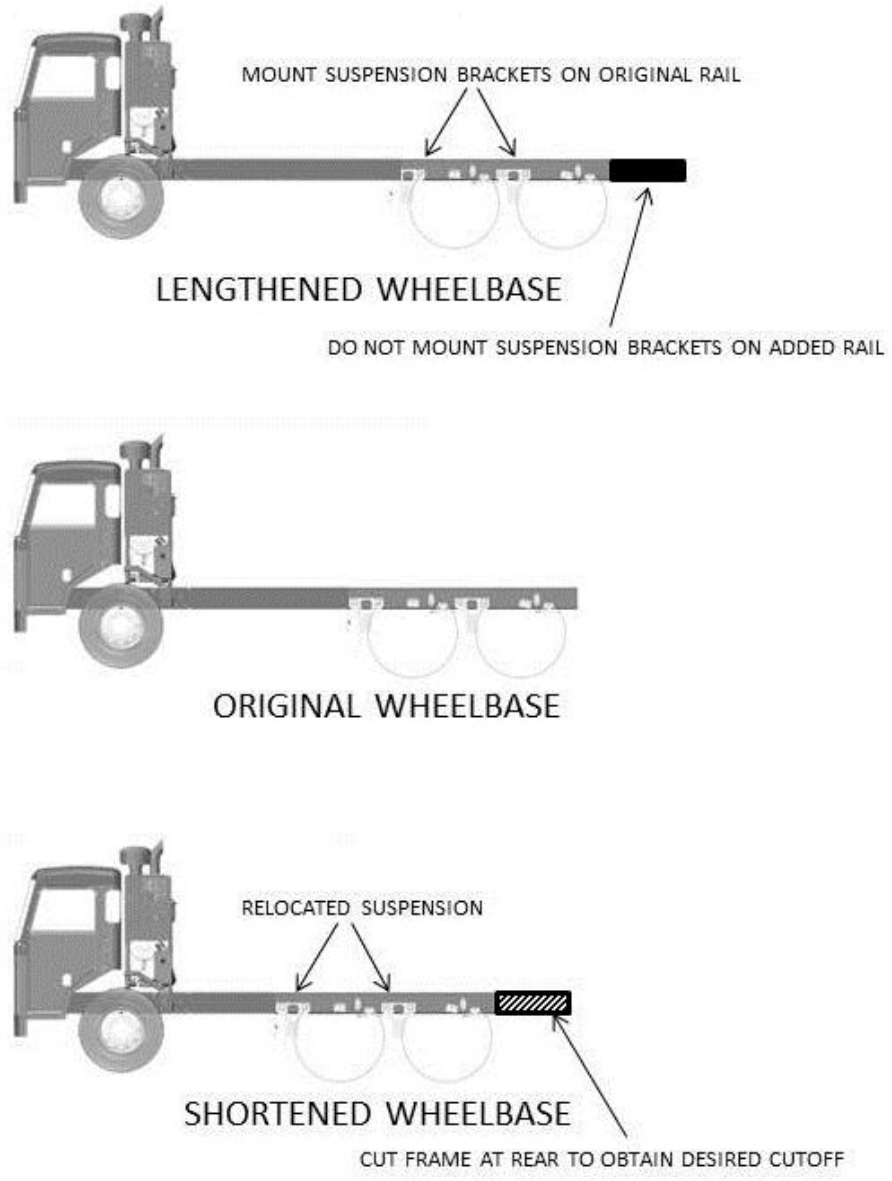

FIGURE 5-1. Wheelbase Customization

https://truckmanualshub.com/

MODIFYING FRAME LENGTH

The frame overhang after the rear axle can be shortened to match a particular body length. Using a torch is acceptable; however, heat from a torch will affect the material characteristics of the frame rail. The affected material will normally be confined to within 1 to 2 inches (25 to 50mm) of the flame cut and may not adversely affect the strength of the chassis or body installation.

CHANGING WHEELBASE

Changing a chassis' wheelbase is not recommended. Occasionally, however, a chassis wheelbase will need to be shortened or lengthened. Before this is done there are a few guidelines that should to be considered.

WARNING! *When changing the wheelbase, be sure to follow the driveline manufacturer's recommendations for driveline length or angle changes. Incorrectly modified drivelines can fail prematurely due to excessive vibration. This can cause an accident and severe personal injury.*

Before changing the wheelbase, the driveline angles of the proposed wheelbase need to be examined to ensure no harmful vibrations are created. Consult with the driveline manufacturer for appropriate recommendations.

Before the rear suspension is relocated, check the new location of the spring hanger brackets. The new holes for the spring hanger brackets must not overlap existing holes and should adhere to the guidelines in the "FRAME DRILLING" section of this manual.

When shortening the wheelbase, the suspension should be moved forward and relocated on the original rail. The rail behind the suspension can then be cut to achieve the desired frame overhang. See Figure 5-1.

https://truckmanualshub.com/

CROSSMEMBERS

After lengthening a wheelbase, an additional crossmember may be required to maintain the original frame strength. Contact Dealer for crossmember locations.

- The maximum allowable distance between the forward suspension crossmember and the next crossmember forward is 47.2 inches (1200 mm). If the distance exceeds 47.2 inches (1200 mm) after the wheelbase is lengthened, add a crossmember between them. See Figure 5-2. See Figure 4-7 on page 4-5 for crossmember hole patterns.

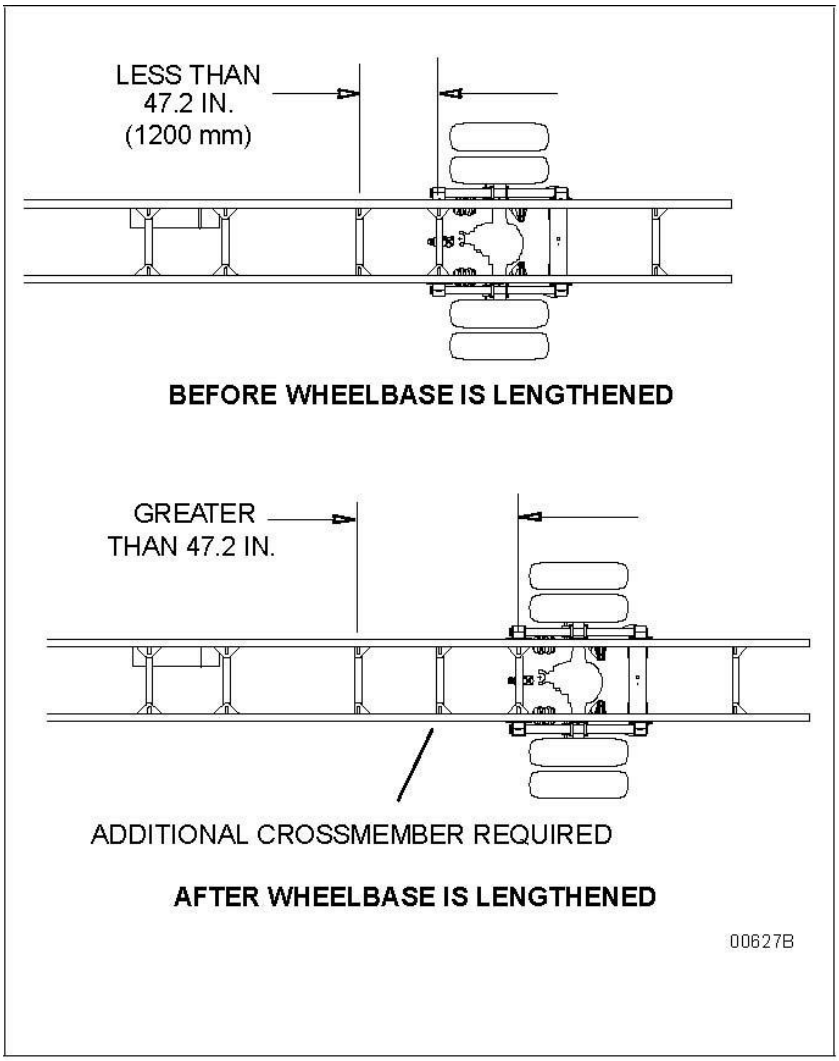

FIGURE 5-2. Crossmember Spacing Requirements

https://truckmanualshub.com/

TORQUE REQUIREMENTS

Torque values apply to fasteners with clean threads, lightly lubricated, with hardened steel washers, and nylon-insert nuts.

TABLE 5-1. Customary Grade 8 UNF or UNC.

Fastener	Torque	
Size	**Nm**	**Lb.-Ft**
5/16	22–30	16–22
3/8	41–54	30–40
7/16	75–88	55–65
1/2	109–122	80–90
9/16	156–190	115-140
5/8	224–265	165–195
3/4	394–462	290–340
7/8	517–626	380–460
1	952–1129	800–830
1-1/8	1346–1591	990–1170
1-1/4	1877–2217	1380–1630

TABLE 5-2. U.S. Customary - Grade 8 Metric Class 10.9

Fastener	Torque	
Size	**Nm**	**Lb-Ft**
M6	9–15	7–11
M8	23–31	17–23
M10	33–43	24–32
M12	75–101	55–75
M14	134–164	99–121
M16	163–217	120–160
M20	352–460	260–340

https://truckmanualshub.com/

SECTION 6 **ELECTRICAL 320 FAMILY**

CONTROL UNIT

This section is written to provide information to the body builder when installing equipment into vehicles built with Multiplexed instrumentation. The new technology presented by NAMUX 2.5 level instrumentation integrates J-1939 CAN data communications to various equipment on the vehicle. This book is intended to address how to work in aftermarket equipment while still maintaining full functionality of the OEM vehicle.

The most important advancement of NAMUX 2.5 instrumentation is the implementation of the CECU controlling aftermarket devices. While it is still possible to wire completely outside of the CECU system, utilizing the CECU functions will make a cleaner installation and will maintain OEM functionality. NAMUX 2.5 expands controls to devices by receiving input from dash switches, remote (aftermarket) switches, sensors mounted to the aftermarket equipment and other vehicle parameters (engine speed, transmission status etc.) With the proper programming, the CECU will then process the inputs and will create a J-1939 Data instruction.

FUNCTIONAL DESCRIPTION - CAB ELECTRONIC CONTROL UNIT (CECU)

The heart of the multiplexed instrumentation system is the CECU. The CECU is inside the center console below the cover panel. See Figure 6-1.

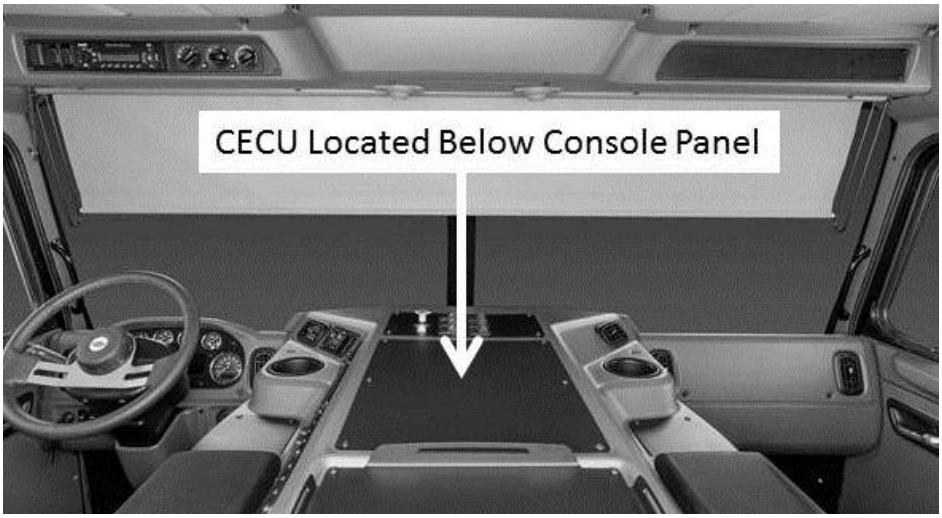

FIGURE 6-1. CECU Location

This manual provides service information covering trucks equipped with the multiplexed instrumentation system. Before attempting to make service repairs, the technician should be knowledgeable about the system design, components, operation and troubleshooting procedures for diagnosing multiplexed instrumentation problems.

https://truckmanualshub.com/

HOW MULTIPLEXED INSTRUMENTS WORK

Multiplexed gauges receive signals through the CECU located in the center console. The CECU receives sensor signals either through the J1939 data bus or via conventional wiring sending signals from sensors that read actual pressures or temperatures. The CECU interprets this data and monitors or controls vehicle operation through the CECU software. The CECU then sends data to the gauges, warning lamps, audible alarms, and displays located inside the gauge clusters.

CECU Architecture
The software programming of the control module can be grouped into three main types:

- Run Time (RT) - which acts as the operating system where all communication takes place.
- Programmable Logic Controller (PLC) Code - manufacturer specific programmed code and software that is developed, accessible and editable.
- Vendor Module - blocks of code that are developed for specific manufacturers to allow other features to be implemented more efficiently.

See Multiplexed Instrumentation Block Diagram (Figure 6-2).

To better understand how Electronic Service Analyst (ESA) functions and why there are current limitations on some of the multiplexed features, by explaining what ESA can see. Currently ESA can look at all information that is communicated between the RT and PLC Code portions of the programming. Any signals, be they inputs, outputs, or dataline signals, sent between the RT and PLC Code are visible to ESA. These are the signals that may be monitored and simulated using ESA.

Limitations with the ESA program are found in the communications that go to the pre-developed Vendor Modules. Currently this information is not available for ESA to look at. That is why some features that have Vendor Module programming, such as the odometer and the message display, are not available to monitor and/or simulate through ESA.

https://truckmanualshub.com/

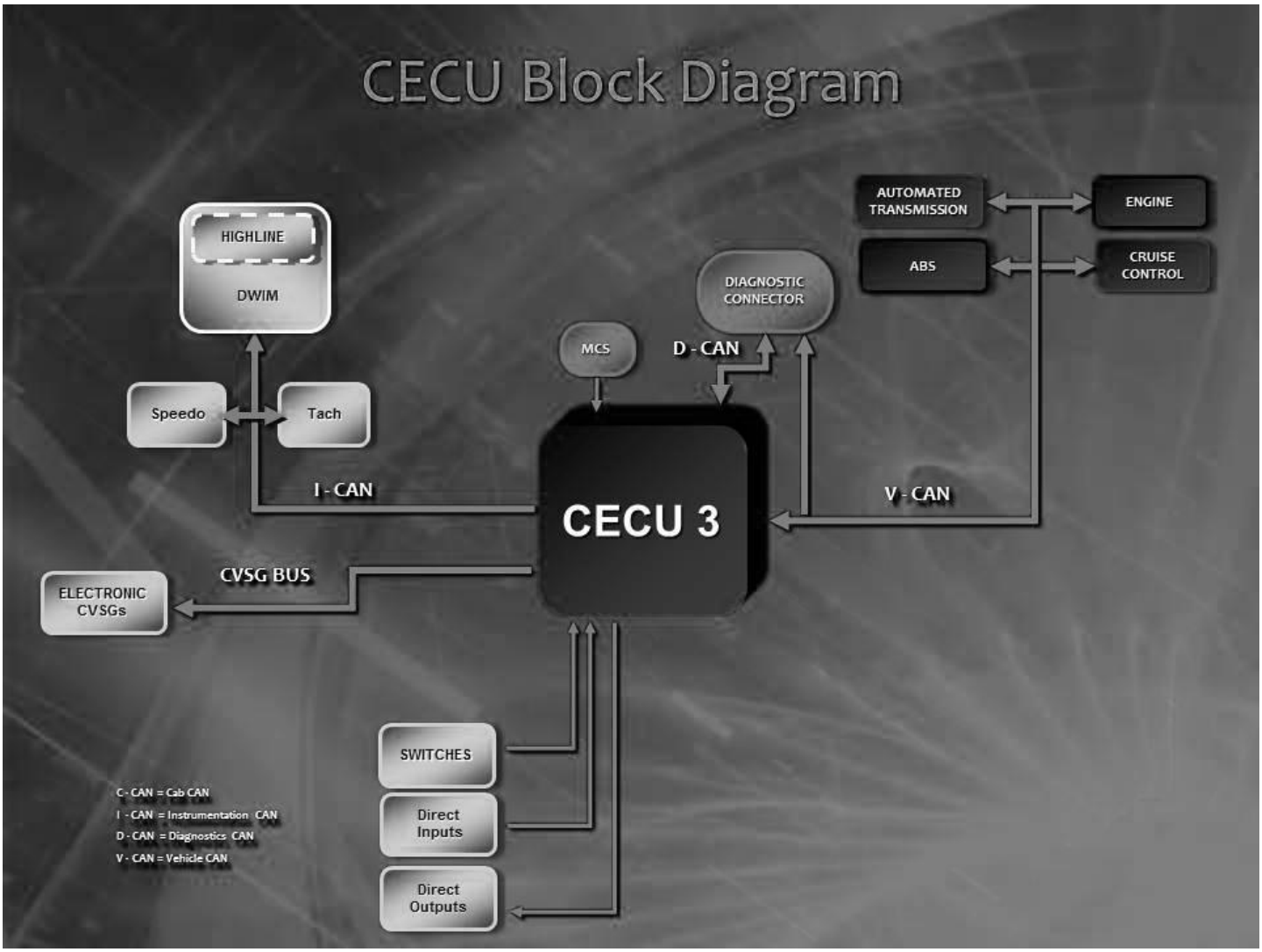

FIGURE 6-2. CECU Block Diagram

The Driver Warning Information Module (DWIM) receives input data from the CECU via the I-CAN data bus. When the ignition key
is first turned ON, the DWIM performs a calibration power on self-test.

Power On Self-Test

- Ignition key turned ON.
- The speedometer and tachometer gauge pointers move from pointing at zero to their mechanical limit, remain there for 1 second and return to pointing at zero.
- At the same time, all LED indicators and telltales are switched on together, and then switched off together.
- A warning sound sequence is also activated.
- The warning lamps are all activated by the CECU.

NOTE: Before replacing the CECU or any gauges, check the wiring and fuses, and perform the diagnostic tests using ESA to verify that you are not replacing a good component.

https://truckmanualshub.com/

Electrical Interface

The multiplexed 320 electrical systems features factory installed connections for the body builder to interface the system. This design limits the need for splicing harnesses.

Cab Harness

The two body builder interface connections inside the cab of the 320 are located near the CECU under the cover panel of the center console (see Figure 6-1). The first body builder connection is pinned per Figure 6-3. The second body builder connection is pinned per Figure 6-4.

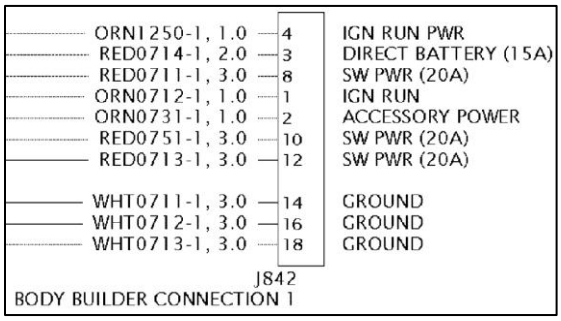

FIGURE 6-3. Cab Body Builder Connection 1

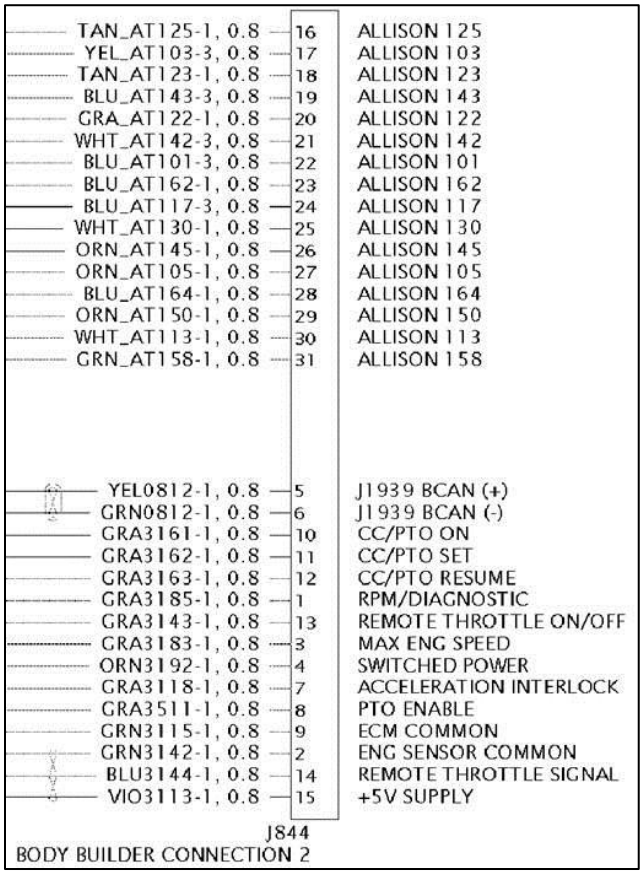

FIGURE 6-4. Cab Body Builder Connection 2

https://truckmanualshub.com/

Chassis Harness

The body builder connection that interfaces the chassis harness is located inside the right hand frame rail adjacent to the transmission per Figure 6-5. The chassis body builder connection is pinned per Figure 6-6.

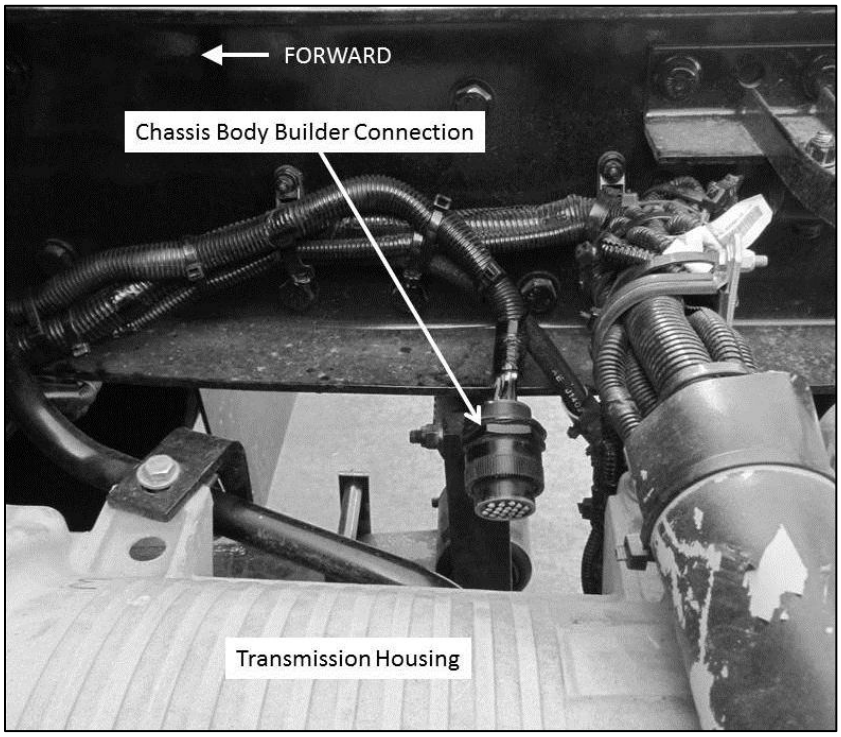

FIGURE 6-5. Chassis Body Builder Interface Location

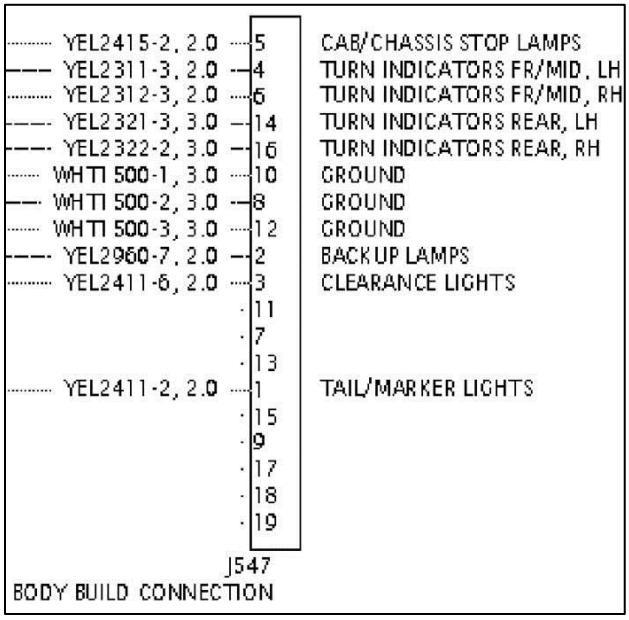

FIGURE 6-6. Chassis Body Builder Connection

https://truckmanualshub.com/

Body Builder Harness Extensions

Extension harnesses have been designed to ease in the installation of aftermarket electrical components. The extensions can be utilized to prevent the need to cut and splice the production harnesses. These extensions have a mating connector for the corresponding factory harness on one end and open wires on the other end. The extensions can be purchased from PACCAR Parts. The harness available to extend from the first body builder connector (J842) of the cab harness is P92-9275. The harness available to extend from the second body builder connector (J844) of the cab harness is P92-9276. The harness available to extend from the body builder connector (J547) of the chassis harness is P92-8961.

https://truckmanualshub.com/

J1939

Warning! The J1939 databus is the communication link between the engine and the Anti-Lock Braking System (ABS). Only J1939 compatible devices should be added to the databus. Some J1939 compatible aftermarket devices may disrupt the ability of the databus to communicate. If the databus is disrupted by an aftermarket device, it must be removed from the databus.

Guidelines - J1939 Circuit Requirements

- Circuits added must be a twisted pair consisting of a minimum of 1 twist per inch.
- Individual breakout length of circuits added cannot exceed 118 inches.
- Do not splice into existing J1939 circuits. Use the connection points provided.
- J1939 circuits are for data transmission only and are not to be used for power or ground circuits.
- Any modifications must conform to SAE J1939-15.

J1939 Access

All Peterbilt vehicles equipped with 2007 Emissions compliant engines include J1939-15 circuitry. The J1939 circuit can be accessed under the cover panel of the center console with the body builder cab harness connections (reference Figure 6-1 for access location) or on the top left side of the back of the engine (reference Figure 7-9 on page 7-6).

https://truckmanualshub.com/

J1939 Access Procedures

1. Identify J1939 Access Connector (note long blue shell)
2. Disconnect connection (note terminating resistor from inside blue connector)

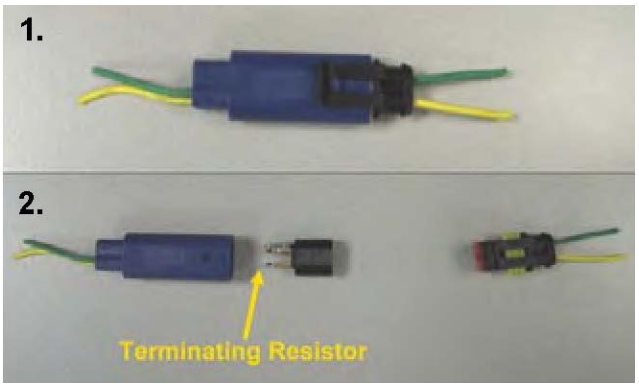

FIGURE 6-7. J1939 Access

3. Make connection in between original connection (tin).
4. Ensure terminating resistor is inserted in blue connector shell (arrow).

FIGURE 6-8. J1939 Access

SECTION 7 POWER TAKE-OFF (PTO)

INTRODUCTION

A Power Take Off (PTO) provides a way to divert some or all of the trucks engine power to another component. There are a wide variety of PTO options available on a Peterbilt that are described below.

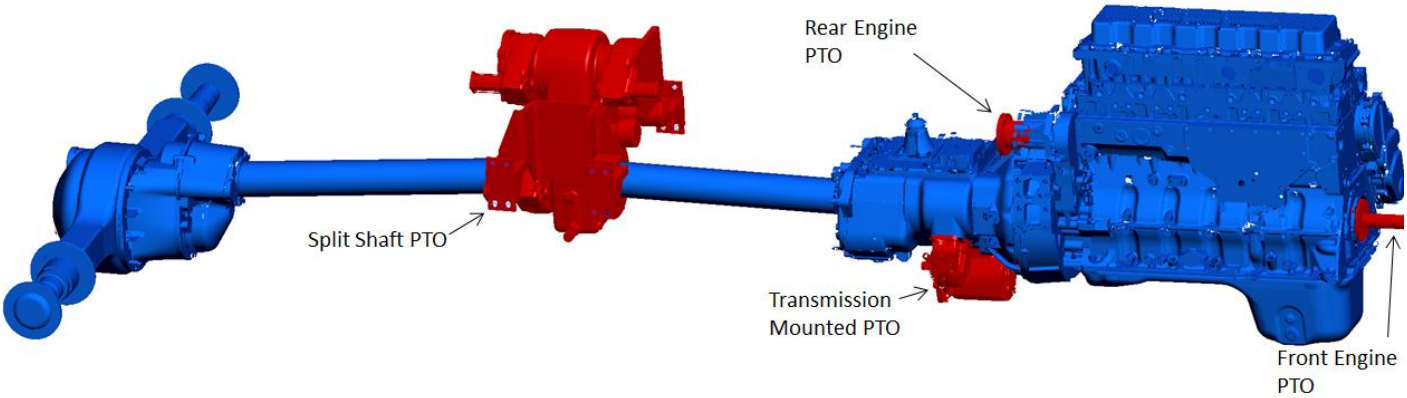

FIGURE 7-1. Power Take-Off Locations

TRANSMISSION MOUTED PTO – GENERAL

MANUAL TRANSMISSIONS

This is the most common type of PTO that is used. On a manual transmission there are two locations for PTO's. There is a 6 bolt PTO on the right and an 8 bolt PTO on the bottom left (Figure 7.2). For more information go to www.roadranger.com and enter "PTO Installation Guide" in the search bar in the upper right corner.

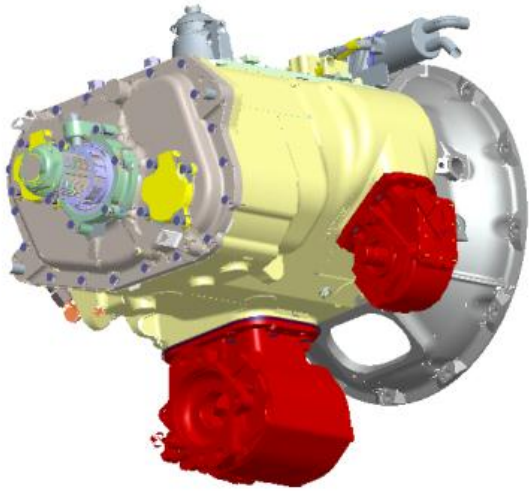

FIGURE 7-2. HD Manual Transmission

https://truckmanualshub.com/

AUTOMATIC TRANSMISSIONS

On Allison transmissions there are two locations for PTO's. The Allison 4000 series has PTO locations at 1 and 8 o'clock viewed from the back of the transmission. See Figure 7.3. The 4000HS transmissions do not have any PTO locations. The 3000 series Allison transmissions have PTO locations at 4 and 8 o'clock (Figure 7.4). For more information on using PTO's with an Allison transmission go to www.allisontransmission.com and refer to the "Rugged Duty Series Brochure" and "PTO Request Flyer" which is available in a 1000/2000 version and a 3000/4000 version.

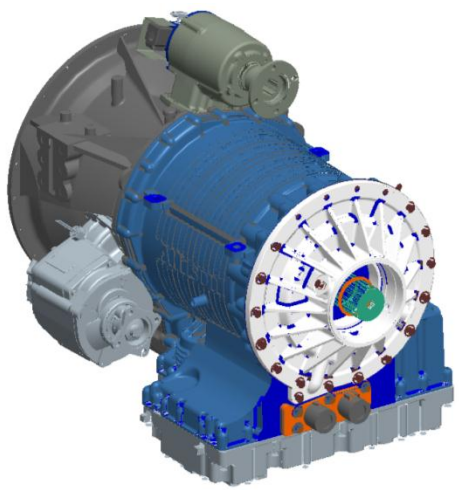

FIGURE 7-3. Allison 4000 Series

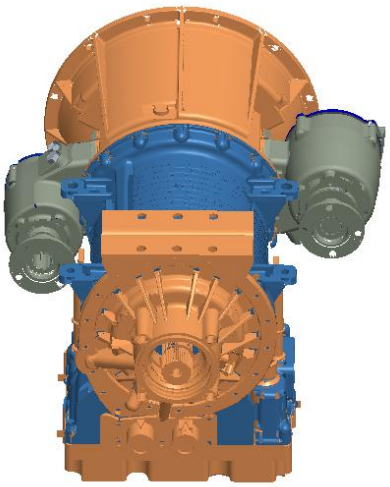

FIGURE 7-4. Allison 3000 Series

INSTALLATION CLEARANCES

Some PTO configurations will have clearance issues with other components on the truck. With manual transmissions, a 6-bolt PTO on the right will typically clear most components. This is also true when 30 and 45 degree adapters are used. The 8-bolt bottom mount PTO will not have any issues. On Allison 4000 series transmissions, most PTO's will fit in the 1 o'clock position without interfering with the cab. If a wet kit is used here, the dipstick housing will most likely need to be modified as it runs over the top of the transmission to the driver side of the vehicle. The PTO in the 8 o'clock position is typically ok. There are some scenarios where the PTO will be very close to or could interfere with the rear spring shackle on the front suspension.

https://truckmanualshub.com/

FRONT ENGINE PTO

Front engine PTO (FEPTO) is sometimes used in vocational applications. When a FEPTO is spec'd on a truck, the cooling module has a pass-thru to allow for a shaft to be bolted to the front of the crankshaft and extend out to the front of the truck. The bumper will be extended out to mount the customer installed aftermarket device. See Figure 7.5 and Figure 7.6 for radiator installations with and without FEPTO provisions.

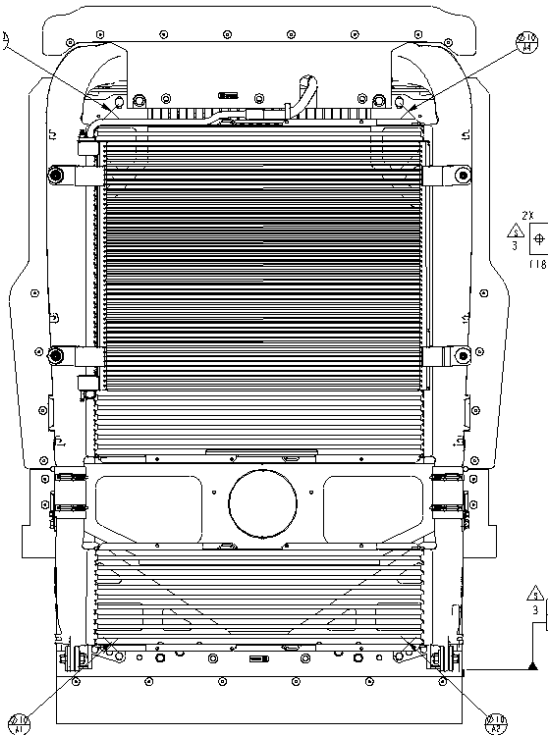

FIGURE 7-5. Cooling Module With FEPTO Provision

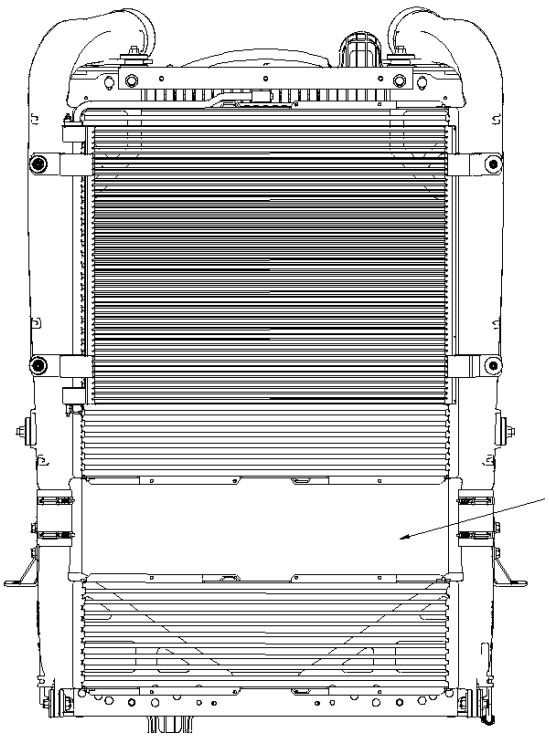

FIGURE 7-6. Cooling Module Without FEPTO Provision

https://truckmanualshub.com/

REAR ENGINE PTO

Rear Engine PTO (REPTO) is also sometimes used in vocational applications. The REPTO is driven off the rear gear train on the engine. There is a 1350/1410 flange on the bell housing in the 1 o'clock position that can be used to attach a hydraulic pump or driveshaft. See Figure 7.7 for an example. The REPTO flange will always be turning when the engine is running and the output rotation is the same as the engine. The Cummins ISL9 and PX-9 REPTO turns at a rate of 1.15:1. The Cummins ISX-12 REPTO turns at a rate of 1.32:1.

FIGURE 7-7. REPTO Flywheel Housing

https://truckmanualshub.com/

PTO INSTALLATIONS

Standard PTO operation is also called cab PTO. With this feature, the operator can set the engine to pre-programmed set speed(s) and ramp the engine speed up and down with the set/resume switch. To control the PTO there are dash switches that we offer. Standard with every vehicle is the Cruise Control/PTO on/off switch and the set/resume switch. There are also additional PTO control switches that can be used. The PTO control switch will be plumbed with air lines that will be plugged at the bulkhead. See Figure 7.8 for PTO dash switch plumbing. The cab air manifold is located where the floor meets the firewall on the LH side of the cab. When the cruise control switch is activated and all parameters set in the ECM for PTO mode are met, the engine will go into PTO mode. In this mode, the engine will respond to all PTO mode parameters that have been programmed into the software. These parameters can be changed with INSITE. There is a PTO light on the dash that should be wired to the PTO to inform the operator when the PTO has engaged or disengaged. This should be wired to the PTO output, not just a dash switch or PTO enable circuit. The wire can be found in the right hand rail in the area of the transmission.

On Allison transmissions, the PTO's will require an electric signal. We do not currently offer an electric PTO switch but there are several options available. The most common method of getting an electric signal for the PTO is to get a factory air switch and install a pressure switch on the air line. It is recommended to provide a 12 volt signal to the transmission control module (TCM) and have the TCM programmed to check for specific requirements such as engine speed, gear selection, output speed etc. before engaging the PTO. If the TCM logic is bypassed and the PTO is engaged directly it could cause damage to the PTO and the transmission. Contact your local Allison rep for more information.

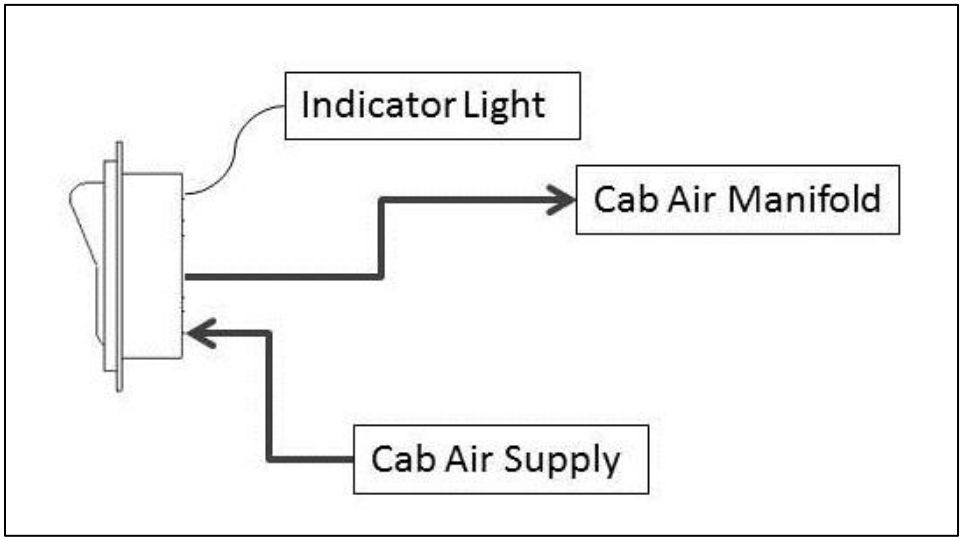

FIGURE 7-8. (1) Single acting PTO Controls Diagram

https://truckmanualshub.com/

REMOTE PTO CONTROL

When a truck is spec'd with remote PTO and throttle controls, a 12 pin connector will be provided. For all heavy duty models this will be a breakout of the main engine harness located on the left side of the back of the engine. See Figure 7.9. See Table 1 for the pin out descriptions on the 12 pin connector.

CUMMINS REMOTE PTO OPERATION

For Cummins engines and the Paccar PX-9, there are 2 different modes of operation through the 12 pin connector. If you put the engine in PTO mode by applying common switch return (ground) pin 3 to PTO on/off pin 5 the engine RPM will go to the first set speed. If the connection between pin 3 and 5 is broken and reapplied within ½ second, the engine will go to the second set speed. If this is done again, it will go to the 3rd set speed and so on. There are up to 5 preset speeds that can be modified with INSITE. If the connection is broken longer than ½ second and then reapplied, the RPM will go back to the first set speed. In this mode, the engine will not respond to any throttle inputs unless the throttle pedal override is engaged using INSITE. The second mode of operation is remote throttle which is engaged by applying common switch return (ground) pin 3 to remote throttle on/off pin 12. In this mode the engine will respond to the remote throttle signal. The throttle works off a variable 5V source. To control the throttle, you would use a potentiometer with pin 10 for the 5V source, pin 11 for the common sensor return (ground) and output the variable 5V signal to the remote throttle signal pin 4. In this mode the engine will not respond to the cab pedal unless the accelerator pedal override is engaged using INSITE.

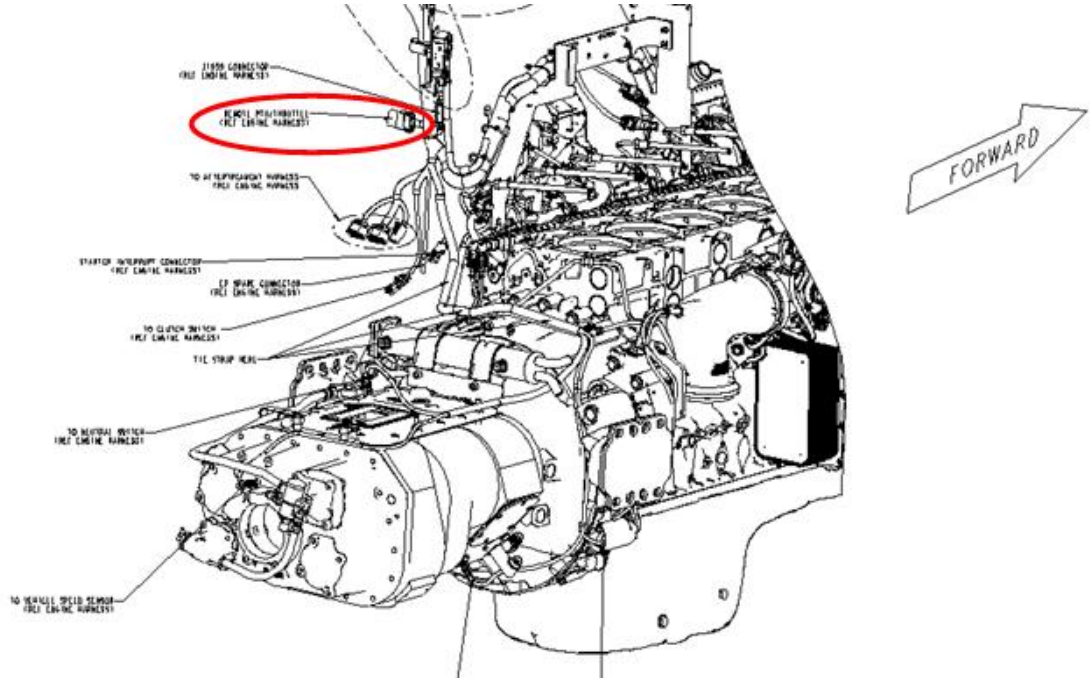

FIGURE 7-9. Connector Location

https://truckmanualshub.com/

TABLE 7-1. 12 Pin Connector

Pin	Cummins
1	Not Used
2	Not Used
3	Common Return #1 (Switch)
4	Remote Throttle Signal
5	PTO On/Off
6	Remote Throttle Enable
7	Keyed Switch Power
8	Ground
9	Torque Limit Switch
10	5V Supply
11	Common Return #3 (Sensor)
12	Remote Throttle On/Off