https://truckmanualshub.com/

SERVICE REPAIR

MANUAL

Hyster G138 (N30XMDR3, N45XMR3) Forklift

HYSTER

https://truckmanualshub.com/

STEERING SYSTEM

N25XMDR3, N30-40XMR3 [C470]; N50XMA3 [C471]; N30XMDR3, N45XMR3 [G138]; N30XMXDR3, N45XMXR3 [B264]

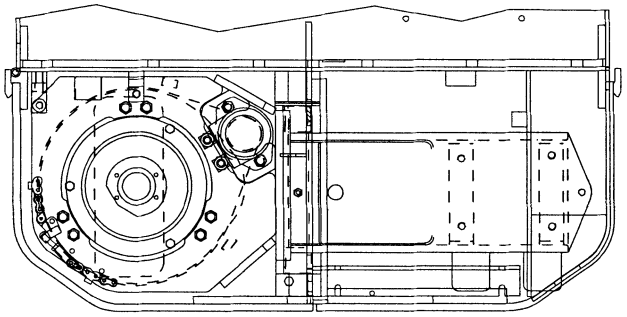

HM220246

HYSTER

PART NO. 1503624

1600 SRM 974

https://truckmanualshub.com/

SAFETY PRECAUTIONS
MAINTENANCE AND REPAIR

- When lifting parts or assemblies, make sure all slings, chains, or cables are correctly fastened, and that the load being lifted is balanced. Make sure the crane, cables, and chains have the capacity to support the weight of the load.
- Do not lift heavy parts by hand, use a lifting mechanism.
- Wear safety glasses.
- DISCONNECT THE BATTERY CONNECTOR before doing any maintenance or repair on electric lift trucks.
- Disconnect the battery ground cable on internal combustion lift trucks.
- Always use correct blocks to prevent the unit from rolling or falling. See HOW TO PUT THE LIFT TRUCK ON BLOCKS in the **Operating Manual** or the **Periodic Maintenance** section.
- Keep the unit clean and the working area clean and orderly.
- Use the correct tools for the job.
- Keep the tools clean and in good condition.
- Always use **HYSTER APPROVED** parts when making repairs. Replacement parts must meet or exceed the specifications of the original equipment manufacturer.
- Make sure all nuts, bolts, snap rings, and other fastening devices are removed before using force to remove parts.
- Always fasten a DO NOT OPERATE tag to the controls of the unit when making repairs, or if the unit needs repairs.
- Be sure to follow the **WARNING** and **CAUTION** notes in the instructions.
- Gasoline, Liquid Petroleum Gas (LPG), Compressed Natural Gas (CNG), and Diesel fuel are flammable. Be sure to follow the necessary safety precautions when handling these fuels and when working on these fuel systems.
- Batteries generate flammable gas when they are being charged. Keep fire and sparks away from the area. Make sure the area is well ventilated.

NOTE: The following symbols and words indicate safety information in this manual:

WARNING

Indicates a condition that can cause immediate death or injury!

CAUTION

Indicates a condition that can cause property damage!

https://truckmanualshub.com/

TABLE OF CONTENTS

General 1
Description 1
Steering Control Unit Assembly 2
  Description 2
  Remove 2
Steering Control Unit 2
  Description 2
  Operation 2
  Remove 3
  Repair 3
    Disassemble (Before May 2002) 3
    Disassemble (After May 2002) 4
    Clean 6
    Reassemble (Before May 2002) 7
    Reassemble (After May 2002) 7
  Install 8
Steering Pump and Motor Assembly 8
  Description 8
  Pump and Motor 9
    Remove and Disassemble 9
    Assemble and Install 9
  Pump 10
    Remove 10
    Install 11
    Disassemble 11
    Assemble 12
Axle Assembly Repair 12
  General 12
  Traction Motor 12
    Description 12
    Remove 12
    Install 13
  Master Drive Unit 13
    Description 13
    Remove Chain-Steered MDU 13
    Install 14
  Hydraulic Steering Motor 14
    Description 14
    Remove 15
    Install 16
  Caster Wheels 16
    Description 16
    Caster Replacement 16
    Wheel Replacement 17
  Axle Weldment 18
    Remove 18
    Install 18
  Check and Adjust 19
    Remove Air From Steering System 19
    Check Steering Chain 19
    Check Articulation Stop Adjustment 20

https://truckmanualshub.com/

Thanks very much for your reading,

Want to get more information,

Please click here, Then get the complete manual

JustClickHere

NOTE:

If there is no response to click on the link above, please download the PDF document first, and then click on it.

Have any questions please write to me:
admin@servicemanualperfect.com

https://truckmanualshub.com/

TABLE OF CONTENTS (Continued)

Steering Pressure 20
Troubleshooting 22

This section is for the following models:

N25XMDR3, N30-40XMR3 [C470];
N50XMA3 [C471];
N30XMDR3, N45XMR3 [G138];
N30XMXDR3, N45XMXR3 [B264]

https://truckmanualshub.com/

General

This manual describes the disassembly and assembly of the steering system for repairs. There is a description for each part of the steering system. The steering system rotates the master drive unit (MDU) to steer the lift truck. The steering pump for this system also supplies oil to operate auxiliary hydraulic functions when the lift truck has these functions.

The steering system for the narrow-aisle and grocery-reach-series lift trucks features a hydrostatic steering system. This system utilizes a steering control unit (SCU) and a hydraulic motor assembly. The components are mounted inside the drive unit compartment. The SCU is connected to the steering disk. The steering disk is positioned for easy operation and requires only four and one-quarter turns to obtain full steering of 180 degrees.

When the SCU is activated, hydraulic oil is directed to the hydraulic motor assembly. The hydraulic motor assembly, mounted on the articulating axle weldment, is connected to the MDU with a chain. The hydraulic oil from the SCU drives the hydraulic motor assembly to turn the MDU in the desired direction.

WARNING

The narrow aisle and grocery reach series lift trucks may be furnished with automotive or reverse steering. Before working on any of these lift trucks, be sure of the type of steering that is used on the lift truck being worked on. Reverse steering may be obtained by reversing the two hoses from the SCU to the steer motor assembly.

The steering system draws hydraulic oil from the same hydraulic tank used by the mast and reach assembly. The hydraulic oil is directed to the SCU by the power steering pump. This gear pump has a priority flow valve, which will provide hydraulic oil for power steering first if both the power steering and auxiliary functions are being used at the same time. The gear pump is driven by a 24- or 36-volt permanent magnet motor.

Description

The power steering system is a hydrostatic steering system. See Figure 1. The control of the steering is through a hydraulic circuit. An electric motor for the steering pump is energized when the brake switch and the operator sensing switch are closed and the key switch is in the **ON** position. When the electric pump motor operates the steering pump, hydraulic oil flows through the power steering system. Moving the steering disk rotates the shaft of the SCU. The SCU meters the flow of oil to the hydraulic motor on the axle weldment. The hydraulic motor moves a chain to rotate the MDU and steer the lift truck.

When the steering disk is not being moved, the hydraulic oil flows from the gear pump through the excess flow port of the steering pump to the proportional control valve for supplying the auxiliary functions. If the auxiliary functions are not selected, the oil is returned to the hydraulic tank. When the steering disk is being moved, the hydraulic oil flows through the priority flow line from the gear pump to the SCU, then to the hydraulic motor. This hydraulic oil returns from the hydraulic motor to the SCU, then to the hydraulic tank.

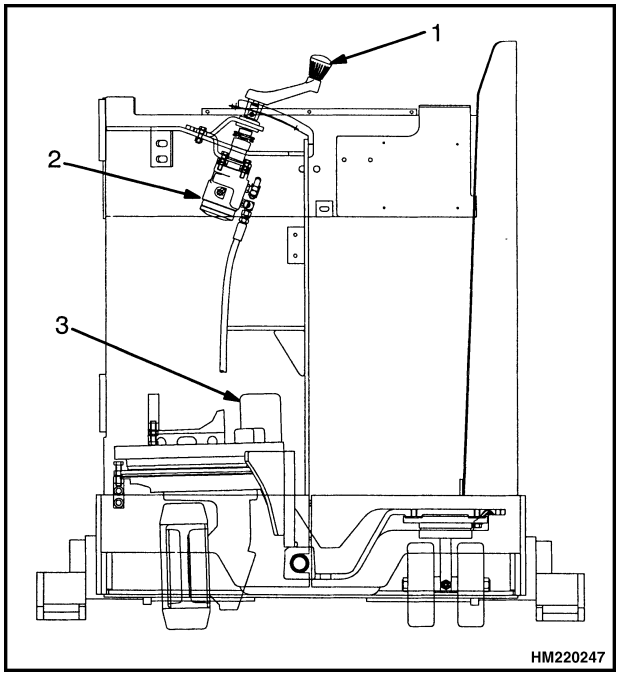

1. STEERING DISK/ARM
2. STEERING CONTROL UNIT (SCU)
3. STEERING MOTOR

Figure 1. Typical Steering System

https://truckmanualshub.com/

Steering Control Unit Assembly

DESCRIPTION

The steering disk is attached to the shaft of the SCU. This shaft engages the spool of the SCU. The SCU is a load-sensing, closed-center, rotary-type valve. During the steering operation, the signal generated is proportional to the rotation of the steering disk. The unit controls both the direction and regulation of oil flow to operate the hydraulic motor. If the steering pump fails to operate, a check valve closes in the SCU. The SCU then operates as a hand pump to make steering possible. The lift truck is difficult to steer when the power steering is not operating. The SCU is mounted to a bracket that is mounted to the lift truck frame.

REMOVE

WARNING

Make sure the brake pedal is released and the brake is applied. Put blocks on both sides (front and back) of the drive/steer tire and the caster wheels to prevent movement of the lift truck. Put a block on each side (front and back) of the load wheels to prevent movement of the lift truck.

1. Disconnect the battery. Block the drive/steer tires, caster wheels, and load wheels on both sides to prevent movement of the lift truck. Open the drive unit compartment cover. Remove the battery compartment cover and the drive unit cover.
2. Install labels on the hydraulic lines for proper installation at assembly. Disconnect the hydraulic lines and install caps on the lines and fittings.
3. Remove the shoulder screw, lockwasher, and nut that hold the steering control handle to the SCU. Remove the steering control handle.
4. Remove the two capscrews and lockwashers retaining the steering control unit to the mounting bracket, and remove the steering control unit.

Steering Control Unit

DESCRIPTION

The steering system is a hydraulic system that does not have a mechanical connection between the steering disk and the steering axle. The steering is controlled through a hydraulic circuit.

If the steering pump fails to operate, a check valve permits the Steering Control Unit (SCU) to operate as a hand pump and to make steering possible. The lift truck is difficult to steer when the hydraulic pump is not operating, but the SCU can operate the hydraulic motor and make steering possible.

OPERATION

The SCU is a rotary valve that is operated by the steering disk. During the steering operation, the SCU controls the direction of flow and amount of oil that flows to the hydraulic motor. The hydraulic motor actuates the steering chain or gear to turn the drive unit. Hydraulic oil returns from the hydraulic motor to the SCU and then returns to the hydraulic tank.

Turning the steering disk actuates three main parts of the SCU: (1) the spool for the control section, (2) the sleeve for the control section, and (3) the rotor in the metering section. When the steering disk is not moving, the spool and sleeve are held in the neutral (center) position by springs. During this time, oil flows freely through the SCU. The oil does not flow to the steering motor.

As the steering disk is turned, the spool just begins to rotate. The springs try to move the sleeve to keep the neutral position between the spool and sleeve. However, the force necessary to turn the rotor is greater than the pressure of the springs. The springs begin to compress, letting the spool move a small amount within the sleeve. The spool stops moving when it touches the center pin. In this position, the holes in the sleeve and the spool are aligned. Oil coming into the control unit flows to the metering section.

More rotation of the steering disk causes the spool to rotate the pin. This action causes the rotation of the sleeve and the rotor in the metering section. The oil then flows to one side of the steering cylinder. Hydraulic oil from the other side of the steering motor returns through the control section of the SCU.

https://truckmanualshub.com/

When the steering disk stops moving, the metering action in the metering section also stops. The neutral position springs return the sleeve to the neutral position. When this action occurs, the pressure stays in the steering motor to keep the steer tire in position. Oil from the pump flows through the SCU to the tank or other parts of the system. To return the steer tire to the straight position, the steering disk must be rotated in the opposite direction. The SCU will operate as described, but all parts will rotate in the opposite direction.

REMOVE

Clean around the ports of the SCU prior to removing the hydraulic hoses.

1. Identify and tag all hydraulic hoses attached to SCU for later installation.
2. Remove all hydraulic hoses attached to SCU, being careful not to spill any hydraulic oil.
3. Install a cap onto each hydraulic hose and install a plug into each port of the SCU. This is done to prevent oil from spilling and dirt from entering the system.
4. Remove the capscrews and lockwashers that hold the SCU to the bracket and remove the SCU.
5. Place SCU on a clean work bench. The work bench should have a vise with soft jaws.
6. Wipe up any spilled oil.

REPAIR

NOTE: Cleanliness is very important when repairing the SCU. Always repair the SCU in a clean work area. During repairs, always protect machined surfaces.

NOTE: Before disassembly, drain the oil, plug the ports and thoroughly clean the exterior of the SCU.

Put the control unit in a vise with soft jaws. See Figure 2.

NOTE: When removing O-rings carefully clean and inspect the groove for the O-ring. (Any dirt, burrs, or foreign material in the groove may cause the O-ring to leak hydraulic oil.)

Always replace any O-rings that are removed during repair of the SCU with new O-rings.

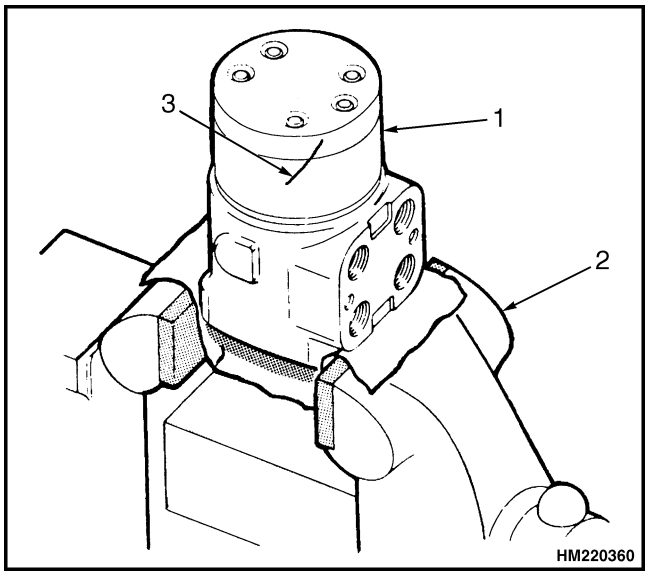

1. STEERING CONTROL UNIT
2. VISE
3. ALIGNMENT SCRIBE (MARK)

Figure 2. Steering Control Unit in Vise

Disassemble (Before May 2002)

1. Scribe (mark) a line across the housing, gerotor, and mounting cap. This is done so the unit can be reassembled by aligning the marks. It is critical to reassemble the SCU correctly because there are holes drilled into the different parts to allow oil to circulate through the SCU.

NOTE: Refer to Figure 3 for the following instructions.

2. Remove the capscrews that hold the mounting cap and remove the mounting cap.
3. Remove dust seal, pressure seal, and O-ring (8) from the mounting cap. Carefully clean and inspect all surfaces of the mounting cap.
4. Remove thrust race and thrust bearing from the shaft of the spool.
5. Remove the drive pin by gently pulling on the shaft enough to free the drive pin from the gerotor. Remove the drive pin from the shaft.
6. Remove the gerotor. Carefully clean and inspect all surfaces of the gerotor.
7. Remove the O-ring (8) from the housing. Carefully clean and inspect all surfaces of the housing.

https://truckmanualshub.com/

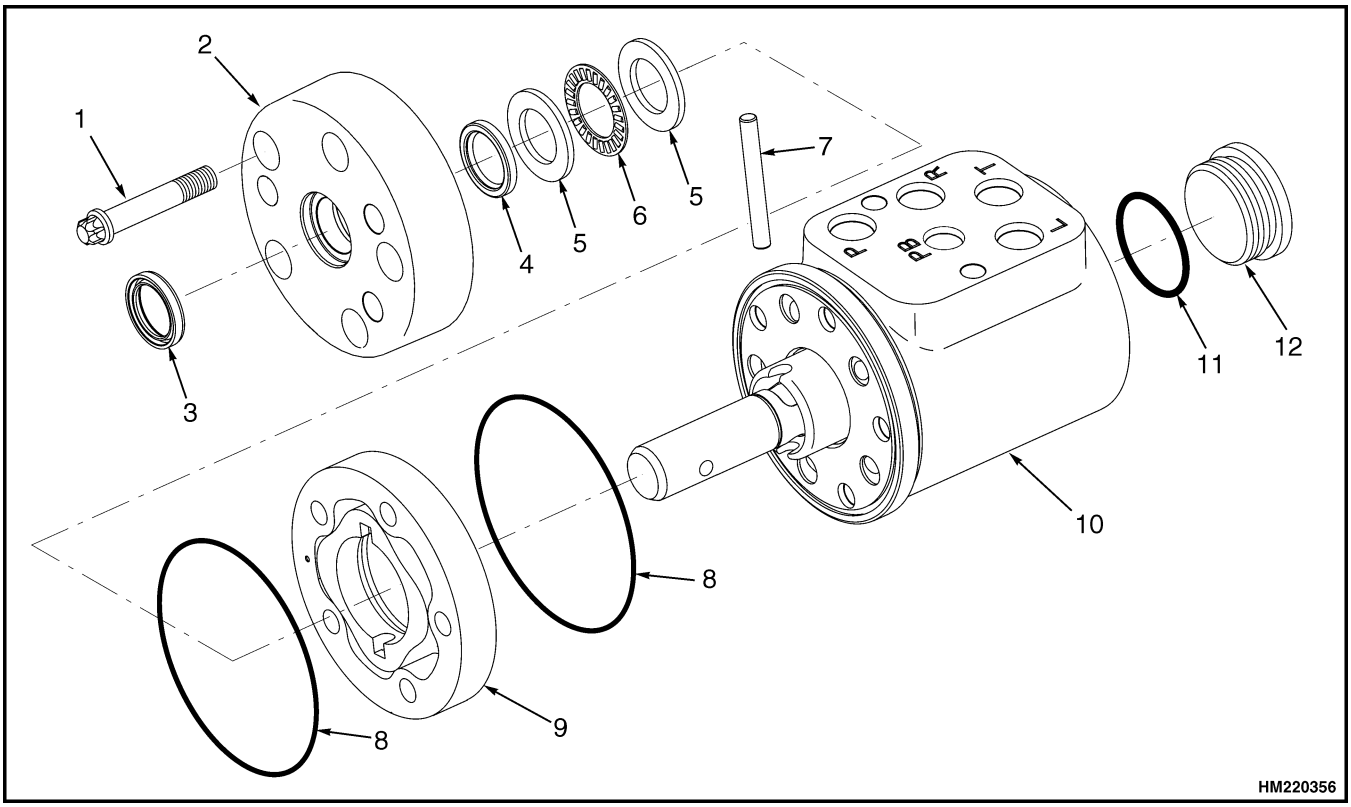

1. CAPSCREW
2. MOUNTING CAP
3. DUST SEAL
4. PRESSURE SEAL
5. THRUST RACE
6. THRUST BEARING
7. DRIVE PIN
8. O-RING
9. GEROTOR
10. HOUSING
11. O-RING
12. TANK PLUG

Figure 3. Steering Control Unit (Before May 2002)

Disassemble (After May 2002)

1. Put the control unit in a vise with soft jaws. See Figure 2. Scribe (mark) a line across housing, gerotor, and end cap. This is done so the unit can be reassembled by aligning the marks. It is critical to reassemble the SCU correctly because there are holes drilled into the different parts to allow oil to circulate through the SCU.

NOTE: Refer to Figure 4 for the following instructions.

2. Remove the capscrews that hold down the end cap and remove the end cap.

3. Remove both O-rings, the spacer, and seal ring from the end cap. Carefully clean and inspect all surfaces of the end cap.

4. Remove the gerotor. Carefully clean and inspect all surfaces of the gerotor.

5. Remove drive shaft.

6. Remove wear plate and O-ring. Carefully clean and inspect all surfaces of the wear plate.

7. Remove O-ring from housing.

NOTE: The manual steering check valve may be a check ball or a check/relief valve.

8. Remove the plug and manual steering check valve.

9. Remove the spool and sleeve from the housing. See Figure 5.

https://truckmanualshub.com/

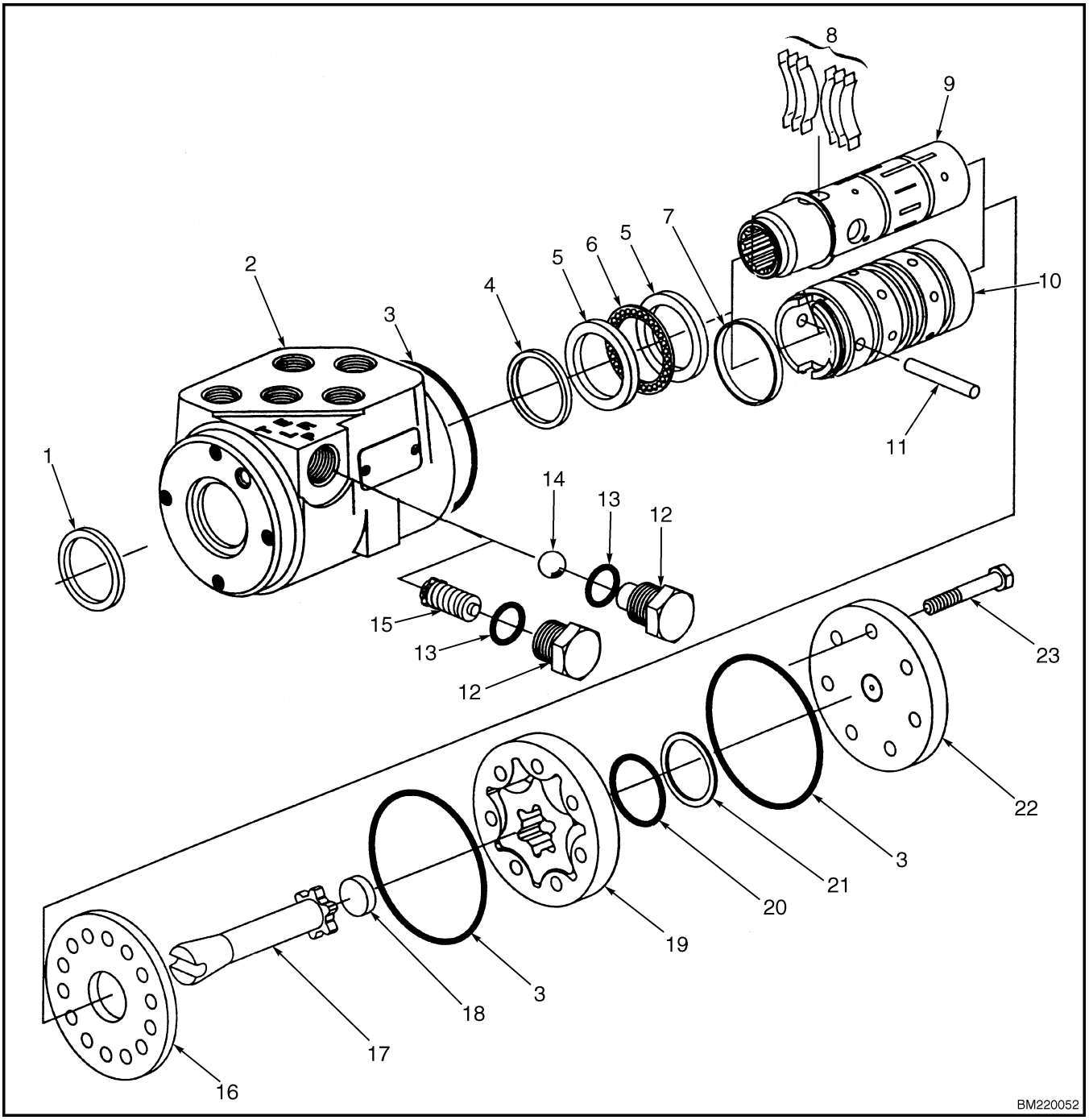

1. DUST SEAL
2. HOUSING
3. O-RING
4. QUAD SEAL
5. THRUST RACE
6. THRUST BEARING
7. SPRING RETAINING RING
8. CENTERING SPRINGS
9. SPOOL
10. SLEEVE
11. DRIVE PIN
12. PLUG
13. O-RING
14. CHECK BALL
15. CHECK/RELIEF VALVE
16. WEAR PLATE
17. DRIVE SHAFT
18. SPACER
19. GEROTOR
20. O-RING
21. SEAL RING
22. END CAP
23. CAPSCREW

Figure 4. Steering Control Unit (After May 2002)

https://truckmanualshub.com/

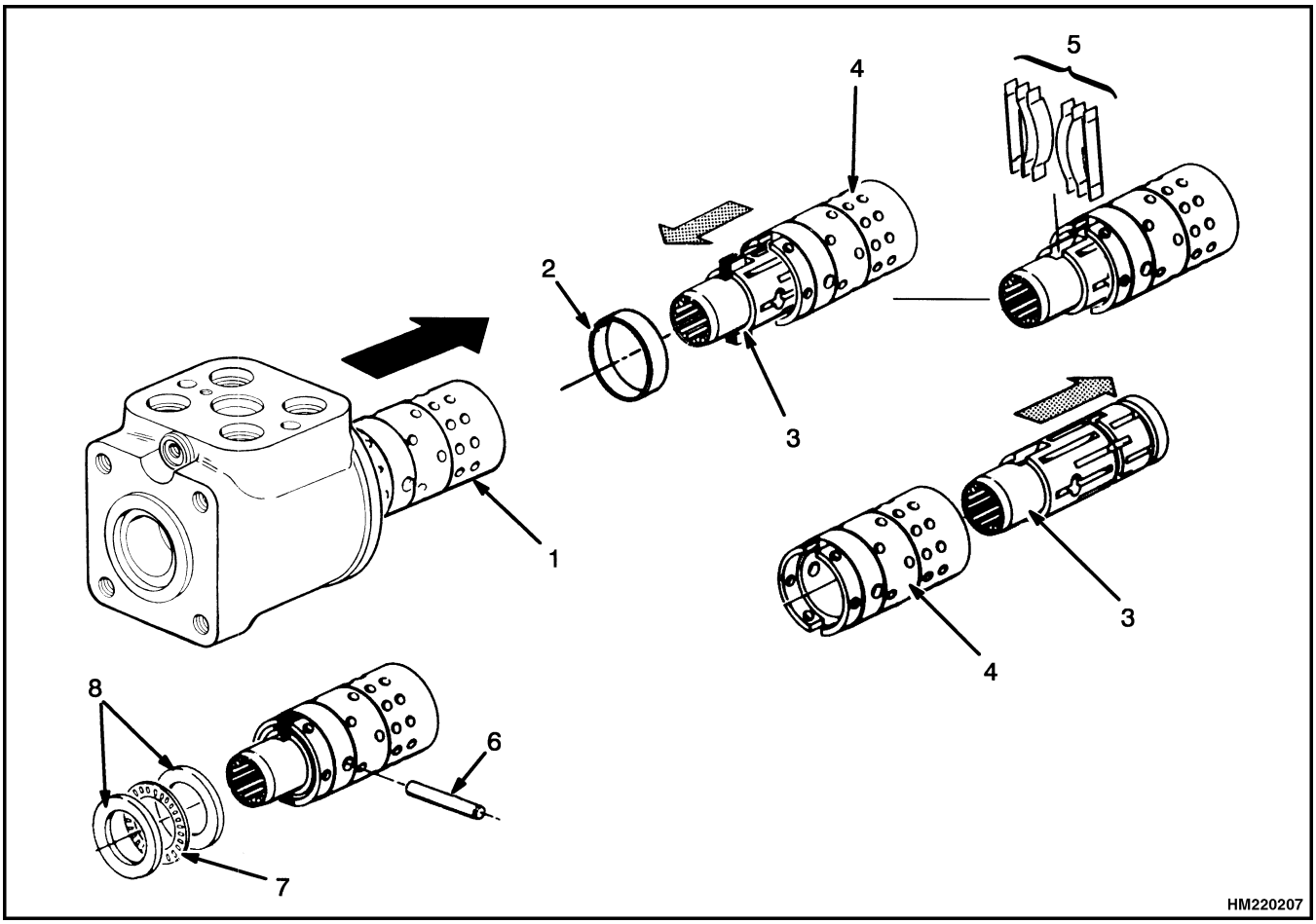

1. SPOOL AND SLEEVE ASSEMBLY
2. SPRING RETAINING RING
3. SPOOL
4. SLEEVE
5. CENTERING SPRINGS
6. DRIVE PIN
7. THRUST BEARING
8. THRUST RACE

Figure 5. Remove Spool and Sleeve

10. Remove thrust races and thrust bearing.

11. Remove the quad seal.

CAUTION

Make sure not to damage the dust seal when removing it.

12. Remove the dust seal using a small flat blade screwdriver. Carefully pry the dust seal from the housing.

13. Remove the drive pin.

14. Carefully slide the spool out of the sleeve. The springs and retaining ring will stay with the spool as it's removed.

CAUTION

The centering springs are under tension. Remove the retaining ring carefully.

15. Remove the retaining ring and springs.

Clean

WARNING

Cleaning solvents can be flammable and toxic and can cause skin irritation. When using cleaning solvents, always follow the solvent manufacturer's recommended safety precautions.

Clean all parts in solvent. Dry the parts with compressed air. Do not dry the parts with a cloth. Make

https://truckmanualshub.com/

sure all surfaces are free of scratches and sharp edges.

Reassemble (Before May 2002)

NOTE: Refer to Figure 3 for the following instructions.

1. Install the gerotor. Carefully align the scribe (mark) on the gerotor and the housing.
2. Install the drive pin.
3. Install new dust seal, pressure seal, and O-ring (8) on the mounting cap. Carefully align the scribe (mark) on the mounting cap and the gerotor.
4. Install new thrust races and thrust bearings into the housing.
5. Remove the tank plug on the bottom of the SCU with a spanner wrench. Remove the O-ring (11). Carefully clean and inspect the groove in which the O-ring is seated and install a new O-ring.

Reassemble (After May 2002)

NOTE: Refer to Figure 4 for the following instructions.

NOTE: Always use new seals when reassembling the SCU. During reassembly lubricate the new seals with a petroleum jelly such as Vaseline™. Also lubricate machined surfaces and bearings with clean hydraulic fluid.

1. Install the quad seal:
   - Install one of the bearing races and the sleeve into the housing.
   - Together, the housing and bearing race create a groove into which the quad seal will be installed.
   - Hold the bearing race tightly against the input end of the housing by pushing on the gerotor end of the sleeve.
   - Fit the quad seal into its seat through the input end of the housing. Make sure the seal is not twisted.
   - Remove the sleeve and bearing race.
2. Lubricate and install the dust seal.
3. Install the centering springs in the spool. It is best to install the two flat pieces first. Next, install the curved pieces, three at a time.
4. Fit the retaining ring over the centering springs.
5. Apply a light coating of clean hydraulic fluid to the spool and slide it into the sleeve. Make sure the centering springs fit into the notches in the sleeve.
6. Install the drive pin.

CAUTION

Do not damage the dust and quad seals.

7. Apply a light coating of petroleum jelly to the inner edge of the dust and quad seals.
8. Install the thrust bearing and races into the housing. The thrust bearing is installed between the two races.
9. Apply a light coating of clean hydraulic fluid to the spool and sleeve assembly and slide it into the housing.

CAUTION

Do not damage the housing by overtightening the vise.

10. Clamp the housing in a vise as shown in Figure 2. Use only enough clamping force to hold the housing securely.
11. Lubricate and install a new O-ring in the groove in the housing.
12. Install the wear plate and align the scribe (mark) you made earlier on both the wear plate and housing.
13. Install the drive shaft. Make sure the slot in the drive shaft engages the pin.
14. Lubricate and install a new O-ring in the groove in the wear plate.
15. Install the gerotor and align the scribe (mark) you made earlier on the wear plate, gerotor, and housing.
16. Lubricate and install a new O-ring in the groove in the gerotor.
17. Lubricate and install a new O-ring in the groove in the gerotor star.
18. Install the spacer.

https://truckmanualshub.com/

19. Install the end cap and align the scribe (mark) you made earlier on the wear plate, gerotor, end cap, and housing.

20. Install capscrews and tighten in a crisscross pattern to 16 - 18 N•m (140 - 160 lbf in) as shown in Figure 6.

21. Remove the SCU from the vise.

22. Install the check/relief valve or check ball and plug. Use a new O-ring and tighten the plug to 17 N•m (150 lbf in).

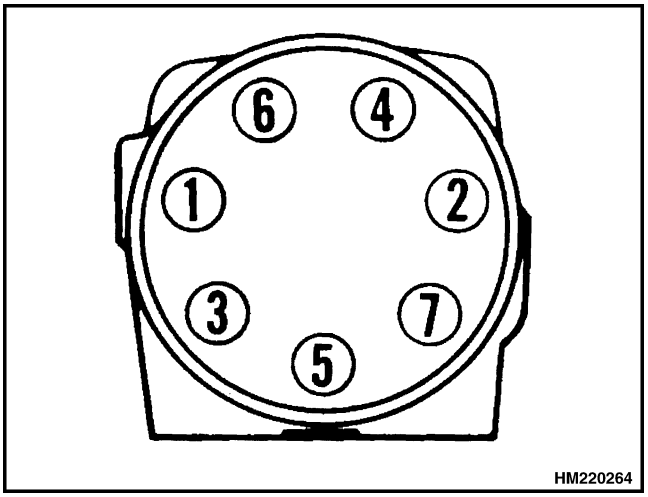

Figure 6. Tightening Sequence

INSTALL

WARNING

If the hoses are incorrectly connected, the steering disk can move rapidly with high force when the truck is started. Do not place the hands near the disk when starting the lift truck after connecting the pump.

1. Align the SCU with the mounting bracket and install the capscrews and lockwashers.

2. Remove the caps from the hydraulic lines and the plugs from the SCU. Install the hydraulic lines on the SCU.

3. Replace the steering control handle. Replace the shoulder screw, lockwasher, and nut that hold the steering control handle to the SCU.

4. Install the drive unit cover and the battery compartment cover. Remove the blocks from the tires and wheels. Connect the battery and test the SCU. Check for leaks. Close the drive unit compartment cover.

Steering Pump and Motor Assembly

DESCRIPTION

This pump and motor also supply oil for the auxiliary hydraulic functions. The steering pump and motor assembly are fastened to the lift truck frame. The steering pump and motor operate when the key switch is **ON** and the operator has both the brake pedal and the operator sensing switch depressed.

The steering pump is a small gear pump fastened to a permanent magnet DC motor. The steering pump has a built-in priority valve to ensure priority flow to the power steering. When both the power steering and auxiliary functions are used at the same time, the priority valve will ensure that full flow is provided to the power steering. The inlet (suction port) of the pump is connected to the hydraulic tank with a hydraulic hose.

The pump outlet (pressure) ports are connected to both the SCU and the main control valve with hydraulic hoses. The hose to the main control valve is the excess flow line. The hydraulic oil in this line will either be directed to the auxiliary functions or to return the oil to the hydraulic tank when the steering disk is not being rotated or the auxiliary functions are not being used. There are two hoses to the SCU. One hose is the priority flow line to the SCU. The other hose to the SCU is the load-sensing hose. The load-sensing hose is used to determine the amount of oil required to operate the SCU for the priority valve.

https://truckmanualshub.com/

PUMP AND MOTOR

Remove and Disassemble

WARNING

Make sure the brake pedal is released (in the UP position) and the brake is applied. Put blocks on both sides (front and back) of the drive/steer tire and the caster wheels. Put a block on each side (front and back) of the load wheels to prevent movement of the lift truck.

NOTE: The recommended maintenance and repairs for the steering pump motor are covered in the section **DC Motor Maintenance** 620 SRM 294.

1. Disconnect the battery.
2. Identify and tag the power cables on the terminals of the motor for correct connection during installation. Disconnect the cables from the motor.
3. Identify and tag the hydraulic hoses at the pump for the correct connection during installation. Disconnect the hoses, and install caps on the hoses and plug the ports to keep dirt out of the system.

WARNING

The motor and pump assembly have a weight of approximately 27 kg (60 lb). The steering pump motor has ceramic permanent magnets. Do not let the motor fall. The magnets can be damaged.

4. Remove the four capscrews, lockwashers, brackets, and rubber channel mounts. See Figure 7. Remove the motor, pump, and bracket from the lift truck frame.
5. Check the brushes. See the sections **Periodic Maintenance** 8000 SRM 970 and **DC Motor Repair** 620 SRM 294 for additional information for inspection of the brushes and commutator.
6. If the motor must be disassembled for cleaning or repairs, remove the pump so a new oil seal can be installed in the motor. Remove the mounting bracket from the motor. Make matchmarks for alignment on the pump mount flange and the motor housing. Make matchmarks for alignment of the parts of the motor housing. These marks are necessary to assemble the motor and pump correctly. Remove the capscrews and lockwashers retaining the pump to the motor.

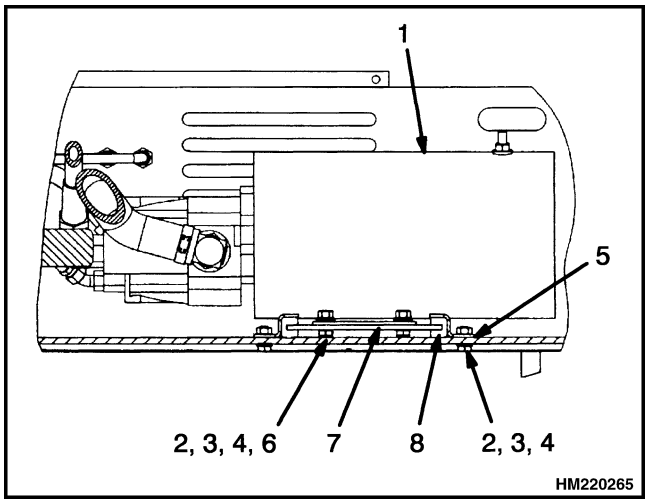

1. PUMP AND MOTOR ASSEMBLY
2. CAPSCREW
3. WASHER
4. NUT
5. BRACKET
6. WASHER
7. MOTOR MOUNT BRACKET
8. RUBBER CHANNEL MOUNT

Figure 7. Typical Steering Pump and Motor Mounting

Assemble and Install

1. Install a new seal in the motor end housing.
2. Put multipurpose grease on the splines of the pump shaft. Align the pump shaft with the opening in the motor and install the pump on the motor using the two capscrews and lockwashers.
3. Install the mounting bracket on the motor.

WARNING

The motor and pump assembly have a weight of approximately 27 kg (60 lb). The steering pump motor has ceramic permanent magnets. Do not let the motor fall. The magnets can be damaged.

4. Install the steering pump and motor. Use the four capscrews, lockwashers, brackets, and rubber channel mounts to retain the pump and motor assembly.
5. Connect the hydraulic hoses to the fittings as identified during removal.
6. Connect the power cables on the motor.

https://truckmanualshub.com/

WARNING

If the hoses are incorrectly connected, the disk will move rapidly with high force when the truck is started. Do not place the hands near the disk when starting the lift truck after connecting the pump.

7. Check the hydraulic level of the hydraulic tank. Test operate the steering pump. Connect the battery. Check for leaks. Install the instrument panel cover. Remove the blocks from both sides of the drive/steer tire, caster wheels, and the load wheels.

PUMP

Remove

1. Disconnect the battery. Block the drive tire, caster wheels, and load wheels on both sides to prevent movement of the lift truck.
2. Install labels on the hydraulic lines for proper installation at assembly. Disconnect the hydraulic lines and install caps on the lines and fittings.
3. Remove the two capscrews and lockwashers retaining the steering pump to the motor. Remove the pump from the motor. See Figure 8.

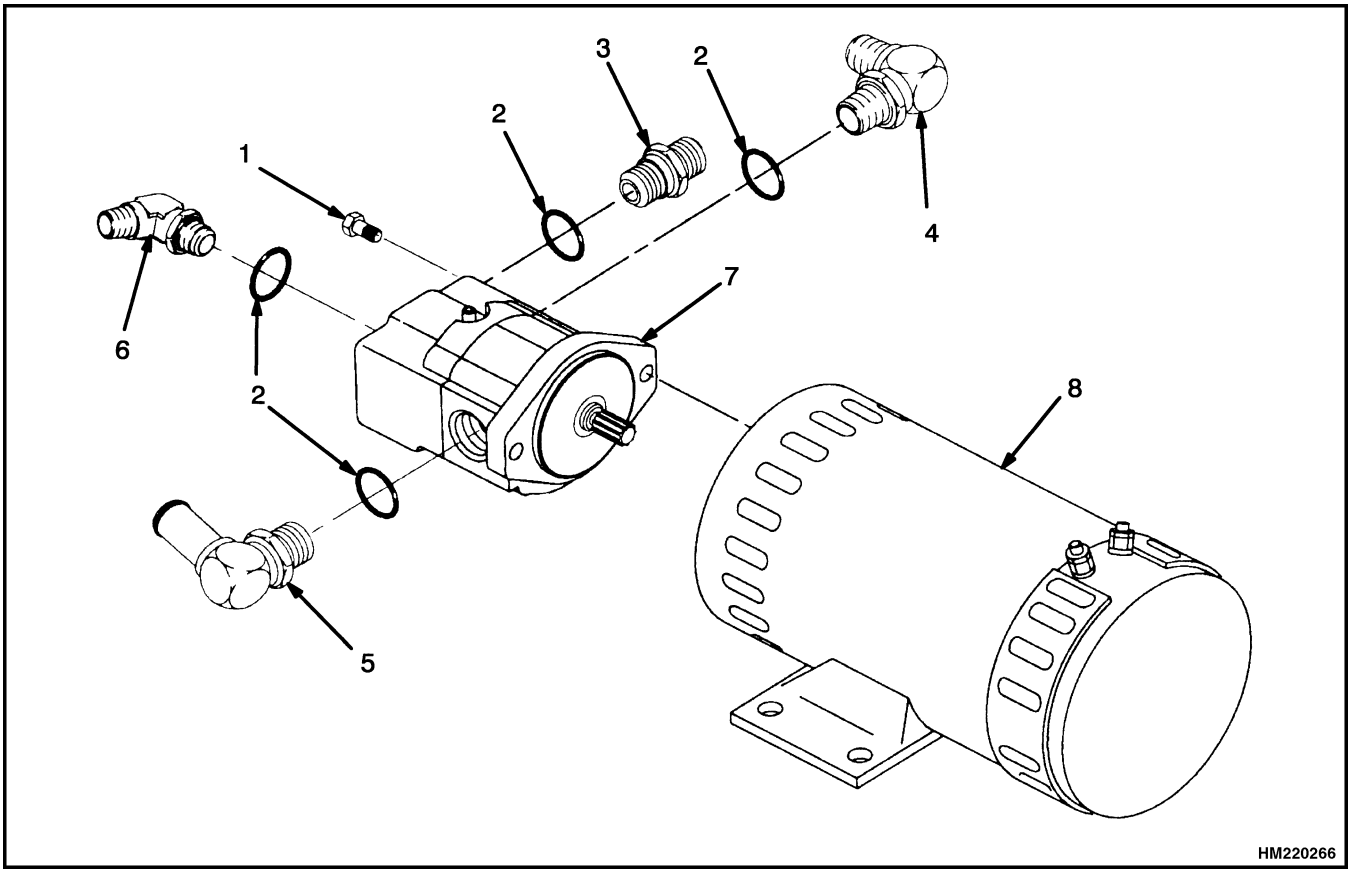

1. CAPSCREW
2. O-RING
3. FITTING
4. ELBOW
5. ELBOW
6. ELBOW
7. PUMP
8. MOTOR

Figure 8. Power Steering Pump and Motor

https://truckmanualshub.com/

Install

1. Align the splined shaft of the pump with the motor and install the pump.
2. Install the two capscrews and lockwashers to retain the pump to the motor.

Disassemble

1. Disassemble the fittings, elbows, and O-rings from the pump body. See Figure 9.

WARNING

Be careful when removing or installing snap rings. These snap rings can come loose during removal or installation with enough force to cause an injury. Always use the correct snap ring pliers and wear eye and face protection during removal and installation.

2. Use a pair of snap ring pliers and remove the snap ring retaining the shaft seal to the drive gear shaft. Remove the shaft seal.
3. Mark the flange, pump body, and load-sensing valve assembly for orientation during assembly.
4. Remove the four capscrews from the pump body. Separate the mounting flange and the end cover from the pump body. Remove the backup rings, seals, bushings, and O-rings.
5. Remove the idler gear and drive gear.
6. Inspect the drive gear, idler gear, and the pump body for damage. If any of these parts are damaged, the pump must be replaced with a new pump. All seals, O-rings, backup rings, and snap ring must be replaced if the present pump is to be used.

NOTE: The manufacturer does not recommend servicing the individual components within the load-sensing valve assembly.

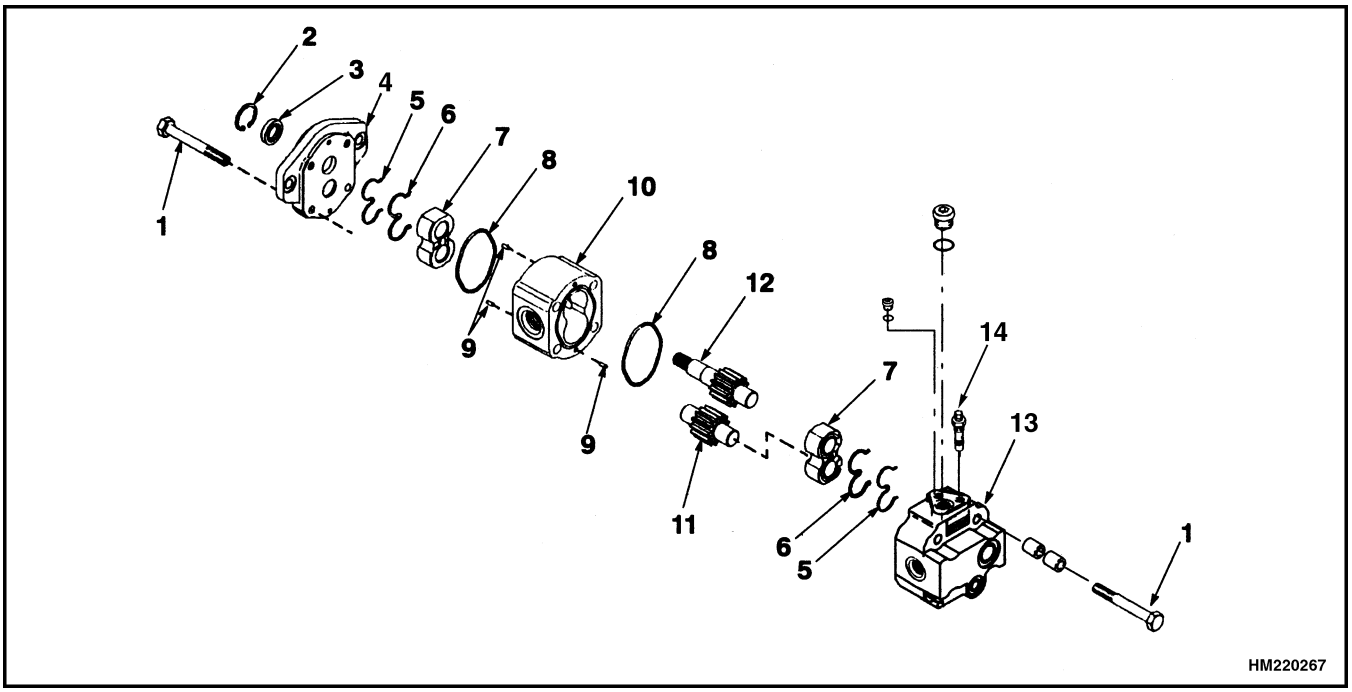

1. CAPSCREW
2. SNAP RING
3. SHAFT SEAL
4. FLANGE
5. BACKUP RING
6. SEAL
7. BUSHING
8. O-RING
9. DOWEL
10. PUMP BODY
11. IDLER GEAR
12. DRIVE GEAR SHAFT
13. LOAD-SENSING VALVE ASSEMBLY
14. PRESSURE RELIEF VALVE

Figure 9. Power Steering Pump

https://truckmanualshub.com/

Assemble

1. Apply clean hydraulic oil to all the pump components before assembly.
2. Align and install the idler gear and drive gear in the pump body. Install new O-rings in the pump body.
3. Install both bushings on the shafts. Install the seals and backup rings in the body of each of the bushings.
4. Align the load-sensing valve assembly, pump body, and mounting flange. Install the four capscrews. Tighten the capscrews to 68 to 74 N•m (50 to 55 lbf ft).
5. Install a new shaft seal on the drive gear shaft.

WARNING

Be careful when removing or installing snap rings. These snap rings can come loose during removal or installation with enough force to cause an injury. Always use the correct snap ring pliers, and wear eye and face protection during removal and installation.

6. Install a new snap ring.
7. Install new O-rings on the fittings and elbows. Install the fittings and elbows in the pump. Install the pilot relief valve and load-sensing valve in the pump body. Make sure the valves are properly adjusted.
8. Align the splined shaft of the pump with the motor and insert the shaft in the motor. Install the two lockwashers and capscrews.

Axle Assembly Repair

GENERAL

The axle assembly has an articulated axle weldment, which is a mount for the master drive unit (MDU), hydraulic steering motor, and the caster. The traction motor fastens to the top of the MDU near the left end of the axle weldment. The MDU is fastened to the bottom of the weldment and rotates on a large bearing. The traction motor supplies the power to turn the drive wheel for travel. The hydraulic steering motor rotates the MDU for steering. The caster supports the right end of the weldment. The articulated axle assembly is fastened to the lift truck by a shaft and articulates (tilts) on the shaft for better traction of the drive tire.

TRACTION MOTOR

Description

The traction motor is not part of the steering system. The motor is part of the MDU assembly and must be removed to remove the axle from the lift truck.

Remove

1. Disconnect the battery. Open the door to the drive unit compartment.
2. Put labels on the power cables of the traction motor for correct identification during installation. The motor terminals are identified on the motor as A1, A2, S1, or S2.
3. Tag and disconnect the wires to the brake switch.

CAUTION

Brake fluid damages paint. Immediately remove any brake fluid that is on a painted surface.

4. Position a container under the slave cylinder to catch the brake fluid and disconnect the hose assembly. Cap the hose assembly. Allow the brake fluid to drain from the slave cylinder.
5. Make a mark on the motor housing and the axle weldment for correct motor alignment during installation. Remove the six M8 capscrews and lockwashers that fasten the flange of the traction motor to the MDU bearing housing.

https://truckmanualshub.com/

WARNING

The traction motor is heavy. Be sure that all lifting devices (hoists, cables, chains, slings, etc.) are suitable and of adequate capacity to lift the traction motor. The traction motor can weigh approximately 57 kg (125 lb).

6. Use a sling around the traction motor and an overhead crane to carefully lift the traction motor. The crane and sling must have a lifting capacity of approximately 57 kg (125 lb). Do not damage the drive gear on the motor shaft. Do not damage the horn or brake assembly. Put the motor on its side so the gear, cable terminals, horn, brake assembly, and drip tray are not damaged.

Install

1. Install a new O-ring on the traction motor housing. Use O-ring lubricant on the O-ring.

WARNING

The traction motor is heavy. Be sure all lifting devices (hoists, cables, chains, slings, etc.) are suitable and of adequate capacity to lift the traction motor. The traction motor can weigh approximately 57 kg (125 lb).

2. Use an overhead crane and sling to carefully lift the traction motor into the correct position on the MDU housing. Make sure the crane and sling have a capacity of approximately 57 kg (125 lb). Do not damage the gear, motor terminals, horn, brake assembly, or drip tray. Make sure the motor and the MDU gears are aligned before completely lowering the motor onto the gear housing. Align the marks made during removal.

3. Install and tighten the six capscrews and lockwashers in a crisscross pattern to 20 N•m (15 lbf ft).

4. Connect the power cables to the motor terminals according to the labels made during removal.

5. Connect the wires to the brake switch.

CAUTION

Brake fluid damages paint. Immediately remove any brake fluid that is on a painted surface.

6. Remove the cap from the hose assembly. Connect the hose assembly to the slave cylinder. Add brake fluid to the reservoir with the recommended brake fluid. Remove the air from the brake system. See section **Brake System** 1800 SRM 976 and 1800 SRM 983 to remove the air from the brake system. Do not operate the lift truck without removing the air.

7. Close the drive unit compartment door. Connect the battery.

MASTER DRIVE UNIT

Description

The master drive unit (MDU) is turned by the steering chain, or gear and hydraulic motor. The housing for the steering bearing is fastened to the bottom of the axle weldment. The traction motor is also fastened to this bearing housing.

Remove Chain-Steered MDU

1. Turn the key switch **OFF**, disconnect the battery, and open the door of the drive unit compartment.

2. If the truck has a steering chain, use the steering system to move the master drive unit for access to the chain anchor of the steering chain.

3. If the truck has a steering chain, remove the steering chain from the sprocket of the hydraulic motor. To remove the chain, first make a mark on the chain anchor and the MDU housing at the chain anchor. Remove the cotter pin from the end of one offset link pin at the chain anchor. Remove the chain from the sprocket of the hydraulic motor. Use wire to fasten the chain to the MDU so it does not fall.

4. Put the rear of the lift truck on blocks and remove the drive tire as described in **Periodic Maintenance Manual** 8000 SRM 970. Make sure the blocks are in a location to permit removal of the MDU from the left side.

5. Position a container under the drain plug and drain the oil from the MDU. The container must have a capacity of 4 liter (1 gal). Allow time for the oil to drain; the oil must drain through the bearings. Install the drain plug.

6. Remove the traction motor. See Traction Motor, Remove.

https://truckmanualshub.com/

7. Make marks on the steering bearing housing and the axle weldment for alignment during installation.

8. If the truck has a steering gear, remove the two capscrews and lockwashers that hold the steer motor to the axle. Lift the steer motor and pinion gear up and place them on the truck axle.

9. Hold the MDU to keep it from falling. Use an overhead crane and sling to carefully remove the MDU. Remove the six large capscrews and lockwashers that fasten the MDU to the axle weldment. Carefully lower the MDU and tilt it to slide it out under the lift truck frame.

NOTE: See **Master Drive Unit** 630 SRM 1022 to repair the MDU.

Install

1. Slide the MDU under the lift truck frame into the correct position under the axle weldment. Use an overhead crane and sling to carefully lift the MDU into the correct position. Align the marks made during removal, and install the capscrews and lockwashers.

2. If the truck has a steering chain, tighten the capscrews in a crisscross pattern to pull the MDU into the axle weldment. Initially tighten the capscrews to 34 N•m (25 lbf ft). After all the capscrews have been initially tightened, tighten the capscrews to 68 N•m (50 lbf ft).

3. If the truck has a steering gear, tighten the capscrews in a crisscross pattern to pull the MDU into the axle weldment. Initially tighten the capscrews to 39 N•m (29 lbf ft). After all the capscrews have been initially tightened, tighten the capscrews to 78 N•m (58 lbf ft).

NOTE: If the chain anchor came off the MDU housing, install the chain anchor at the mark made during removal.

4. If the truck has a steering chain, install the chain on the motor sprocket. Install the offset link and link pin on the chain anchor. Use a new cotter pin to complete the assembly.

5. If the truck has a steering gear, carefully insert the steer motor with pinion gear into the hole. Use a gentle back-and-forth motion to correctly align the pinion gear to the steering gear, and install the two capscrews and lockwashers that hold the steer motor to the frame.

6. Remove the fill plug and fill the MDU using the recommended lubricant shown in the **Operating Manual** or **Periodic Maintenance** 8000 SRM 970. The oil must go through the bearings, so add the oil slowly and allow time for the oil to reach the correct level. Install and tighten the fill plug.

7. Install the traction motor. See Traction Motor, Install.

8. Operate the steering system to check that the steering system is operating correctly. Check for hydraulic leaks.

9. Install the drive wheel on the hub of the MDU. Tighten the wheel nuts in a crisscross pattern to 136 N•m (100 lbf ft).

HYDRAULIC STEERING MOTOR

Description

The hydraulic steering motor controls the steering function of the master drive unit (MDU) using a steering chain or gear. See Figure 10 and Figure 11. The hydraulic motor rotates the MDU for steering the lift truck.

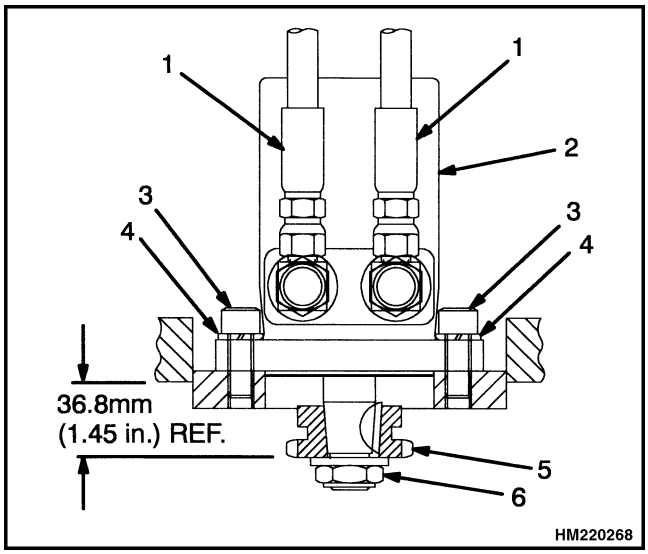

1. HOSE
2. STEER MOTOR
3. CAPSCREW
4. LOCKWASHER
5. SPROCKET
6. NUT

Figure 10. Hydraulic Steering Motor, Chain-Steered

https://truckmanualshub.com/

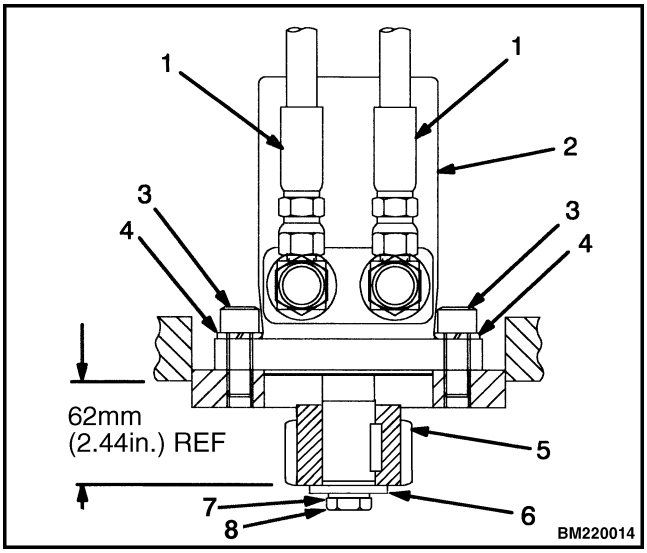

1. HOSE
2. STEER MOTOR
3. CAPSCREW
4. LOCKWASHER
5. GEAR
6. FLAT WASHER
7. LOCKWASHER
8. CAPSCREW

Figure 11. Hydraulic Steering Motor, Gear-Steered

The hydraulic steering motor uses a rotor assembly to change hydraulic energy into mechanical energy. The rotor assembly has a fixed rotor with seven vanes and a stator. There is hydraulic pressure between the vanes and stator. The pressure makes the stator rotate in the rotor.

A drive link in the motor housing has two purposes:
1. To rotate the output shaft
2. To rotate the commutator

The commutator is a valve that controls the flow of oil to and from the motor assembly. This control of oil flow permits the valve to control the amount of hydraulic energy. The need for hydraulic energy changes as the need for mechanical energy changes. The mechanical energy needed at the output shaft changes with the steering conditions.

Remove

WARNING

Make sure the brake pedal is released and the brake is applied. Put blocks on both sides (front and back) of the drive/steer tire and the caster wheels to prevent movement of the lift truck. Put a block on each side (front and back) of the load wheels to prevent movement of the lift truck. See the Operating Manual or Periodic Maintenance 8000 SRM 970.

1. If the truck has a steering chain, use the steering system to move the master drive unit for access to the chain anchor of the steering chain.

2. Disconnect the battery. Open the drive unit compartment cover. Block the drive/steer tires, caster wheels, and load wheels on both sides to prevent movement of the lift truck. See the **Operating Manual** or **Periodic Maintenance** 8000 SRM 970.

3. If the truck has a steering chain, remove the steering chain from the sprocket of the hydraulic motor. To remove the chain, first make a mark on the chain anchor and the MDU housing at the chain anchor. Remove the cotter pin from the end of one offset pin at the chain anchor. Remove the link pin and chain. Remove the chain from the sprocket of the hydraulic motor. Use wire to fasten the chain so that it does not fall.

4. Remove the capscrews and lockwashers that retain the hydraulic motor to the articulating axle weldment. Remove the motor.

5. Install labels on the hydraulic lines for proper installation at assembly. Disconnect the hydraulic lines and install caps on the lines and fittings. Plug the ports of the motor.

6. Put the flange of the motor in a soft-jawed vise.

7. For lift trucks with a chain sprocket, hold the sprocket and remove the nut and washer. Do not damage the sprocket teeth.

8. For lift trucks with a pinion gear, hold the gear and remove the nut and washer. Do not damage the gear teeth.

9. Carefully remove the sprocket or gear and woodruff key. The woodruff key is located between the sprocket or gear and shaft. Do not let the woodruff key fall.

NOTE: Most service personnel do not repair the hydraulic motor. The cost of repairs can be greater than the cost of a replacement motor.