https://truckmanualshub.com/

DYNAPAC

CONCRETE EQUIPMENT

BA41/BB VACUUM TREATMENT FOR STRONGER FLOORS

Instructions and spare parts catalogue

Manual number : 4700369943_ENG_NO.DOC
Revision : 3

https://truckmanualshub.com/

https://truckmanualshub.com/

SUMMARY

GENERAL SAFETY RULES 4
Machines submitted 4
Symbols 4
Important rules for your safety 4
Safety equipment 4
Working area 4
Power supply 5
Starting the machine 5
Operation 5
Maintenance 5
Be alert 5
GENERAL 6
DESIGN 6
DESCRIPTION 6
TECHNICAL DATA 7
OPERATING INSTRUCTIONS 7
ELECTRICAL CONNECTIONS 7
BEFORE STARTING 7
STARTING 7
WORK SCHEDULE 8
MAINTENANCE 8
WORKSHOP INSTRUCTIONS 9
DISASSEMBLY 9
ASSEMBLY 9
SUCTION MAT BB 10
SPARE PARTS CATALOGUE 11

https://truckmanualshub.com/

GENERAL SAFETY RULES

MACHINES SUBMITTED

Powered with : Electric, Pneumatic, Petrol or Diesel engine.

SYMBOLS

The words WARNING and CAUTION used in safety instructions, have the following meanings :

- **WARNING** indicates hazards or hazardous procedures which could result in serious injury or death , if the WARNING is not observed.
- **CAUTION** indicates hazards or hazardous procedures which could result in injury or damage to equipment if the WARNING is not observed.

IMPORTANT RULES FOR YOUR SAFETY

WARNING

The machine must not be modified without prior consent of the manufacturer. Use only original parts. If modifications are made without prior consent of the manufacturer there is a risk of serious injury to the personal.

- These safety recommendations have been compiled from international safety standards.
- Local regulations must also be checked and observed. Before using the machine, read carefully these instructions and keep them in a safe place.
- Make sure that the signs about using, safety, and maintenance are always legible.
- The use of the machine is restricted to the applications specified in the product literature.
- Always change damaged parts immediately. Change wear parts in due time.

SAFETY EQUIPMENT

WARNING

The admissible sound level of 85 dB (A), can be exceeded because of the machine and/or the application. Long time exposure to loud noise without ear protectors can cause permanent damage to hearing.

Long time exposure to vibrations can damage the hands, fingers and wrists. Do not use the machine if you are experiencing discomfort, cramp or pain. Consult a doctor before working again with the machine.

- Always use approved safety equipment. The following safety equipment applies to operators and other personnel in the immediate vicinity of the working zone.
- Safety helmet.
- Ear protectors.
- Dust mask in dusty environments.
- Protective gloves.
- Protective shoes.
- Goggles.

To avoid the risk of clothes being caught in the machine, avoid wearing loose-lifting clothes. If you have long hair, cover it with a hair net.

WORKING AREA

WARNING

Do not use the machine in explosive environments.

https://truckmanualshub.com/

Do not operate a machine powered by a petrol or diesel engine in poorly ventilated spaces. These types of engines produce toxic gases which can cause serious health troubles.

POWER SUPPLY

WARNING

Make sure that the power supply equipment complies with the relevant safety requirements of the local and the international standards.

- **Electric machine**: It must be ensured that the machine is connected to the voltage and the frequency specified on the name plate. The power supply cable has to be properly sized. Check that the cable and the plug of the machine are not damaged. Never switch off the machine by pulling the plug from its socket. Use the machine switch. Keep the cable out of the moving parts of the machine.
- **Pneumatic machine**: Check that the compressed-air hose and the hose coupling are not damaged. Never attempt to loosen a compressed-air hose which is pressurized. First switch off the air at the compressor and then leave the machine running itself to discharge the hose after some seconds.
- **Machine powered by petrol or diesel engine**: Petrol has an extremely low flash-point and can be explosive in certain situations. Keep away from all hot or spark-generating objects, do not smoke, when handling fuel. Wait until the machine has cooled before filling the tank. Avoid spilling petrol or diesel on the ground.

STARTING THE MACHINE

CAUTION

Before starting make yourself familiar with the machine and make sure that the machine does not show any obvious faults. Then start the machine according the instruction and spare parts catalogue.

OPERATION

CAUTION

Use the machine only for the purpose for which it is intended. Make sure you know how to stop the machine quickly in the event of an emergency situation. Do not touch rotating parts during operation.

MAINTENANCE

CAUTION

Maintenance work must only be carried out by skilled personnel. Keep unauthorized persons away from the machine. Do not carry out maintenance work while the machine is moving or the engine is running. Never use a machine which is damaged.

BE ALERT

CAUTION

Always concentrate on what you are doing. Use common sense. Never operate the machine if you are tired or under the influence of drugs alcohol or other substances which can affect your vision, reaction, ability or judgement.

https://truckmanualshub.com/

GENERAL

The vacuum unit BA41 is used together with the DYNAPAC suction mats BB in order to reduce the water content 20-25% in fresh concrete .

DESIGN

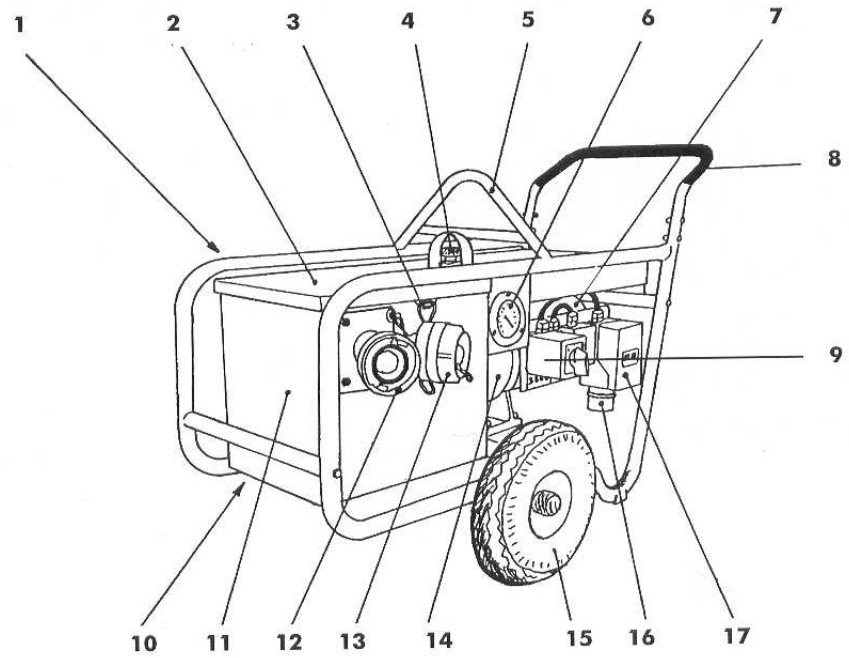

1 Discharge side
2 Lid
3 Clamps
4 Reduction valve
5 Lifting eye
6 Vacuum gauge
7 Electric motor
8 Handle
9 Switch with phase shifter
10 Lid in the bottom of the tank
11 Tank
12 Two-way valve in the suction side
13 Plug
14 Pump body
15 Pneumatic rubber wheel
16 Appliance inlet
17 Overload release .

DESCRIPTION

The vacuum pump 14 of liquid ring type, is driven by an electric motor 7. Water is removed from the concrete floor through the suction mat and connecting hose to the vacuum compartment 11 .

The water then passes through the pump and into the water compartment of the tank, from where it drains out through the discharge hose to a suitable collection point. The valve 4 is used to:

- Adjust the vacuum when starting or during operation.
- Equalize the water-levels in water and vacuum compartments.
- Avoid cavitation during extreme running conditions.

The motor protection 9 is used to choose the right direction of pump rotation.

The tank is provided with top and bottom easily removable lids making easier the cleaning .

A filter in the tank prevents dirt from getting into the pump .

The pump is equipped with double suction hose connection which enable the use of two suction mats simultaneously .

TECHNICAL DATA

	BA41E **P/N 369231**
3-phased current (V/Hz)	400V-3-50Hz
Intensity at 50Hz (A)	9.5
Speed at 50Hz (rpm)	2850
Output at 50Hz kW-(hp)	4 (5.4)
Maximum vacuum (%)	80
Suction capacity at 80 % vacuum air m³/mn-(cu.ft)	0.5 - (17 $^{11/16}$)
Noise level measured in air connected to one BB15 suction mat, at 1m from the machine dB(A), according to ISO 6081.	
Weight Kg-(Lb)	125 – (276)
Length x Width x Height mm (in)	1300x710x860 (51x28x33.8)

IMPORTANT

The above information is a general description only, is not guaranteed and contains no warranties of any kind

OPERATING INSTRUCTIONS

ELECTRICAL CONNECTIONS

The electrical motor is connected for 400V-3-50Hz.

BEFORE STARTING

Make sure that the tanks and the filter are cleaned.
Make sure that the main supply voltage coincides with electric motor voltage 400V-3-50Hz.
Fill both compartments of the tank with clean water. Fit the tank cover in place and secure.
Put in place the suction mat and connect the flexible hoses.
Make sure that flexible hoses and connections are undamaged.
If not used the second suction connection must be plugged (fig 5) .

STARTING

Start the motor and check direction of rotation . The arrow on the fan cover indicates the correct direction of rotation (fig 4) . If it rotates in the wrong direction switch the electric motor off and then start again in the reverse position of the switch.

https://truckmanualshub.com/

WORK SCHEDULE

Start work with the reduction valve (fig 7) completely opened and then progressively closed it in order to obtain:

-0.3 to -0.4 bars during 6 minutes.

-0.6 to -0.7 bars for 6 minutes again.

-0.9 bars (valve closed) 1 to 1.5 minutes per cm of concrete thickness.

IMPORTANT

DO NOT RUN THE PUMP WITHOUT WATER
DO NOT USE THE PUMP FOR PUMPING WATER
IF THERE IS DANGER OF FREEZING NO WATER SHOULD BE LEFT IN THE TANKS
DO NOT RUN THE PUMP WITH DIRTY TANKS. CEMENT SLURRY WILL INVOLVE SEALS AND PUMP WEARING.

MAINTENANCE

IMMEDIATELY AFTER FINISHING WORK OR EVERY 150 m² VACUUMED

Stop the pump . Disconnect the suction hoses .
Open the tank lids .
Remove the filter (fig 10) and clean it .
Flush the tank . Flush for about 2 minutes in the connection pipe of the filter (fig 11).
Or :
Let in place the bottom lid , pour water in all chambers up to the level of the discharge hole .
Place the top lid . Start the pump .
Cover one hose connection and close the valve of the suction hose .

Let the pump run till max vacuum (about 0.90 kp/cm^2) is reached . Open the valve of the suction hose . repeat the cycle once . Stop the motor . Empty the tank by tilting the pump forwards . Store the pump in the tilted position (fig 9) .

NOTE : DO NOT POUR ANY TYPE OF ACID OR OIL IN THE PUMP BECAUSE THERE ARE RUBBER PARTS IN THE PUMP BODY .

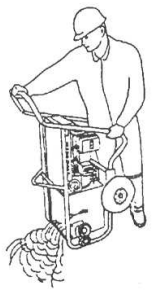

9

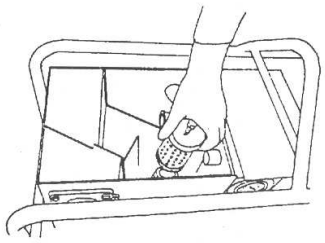

10

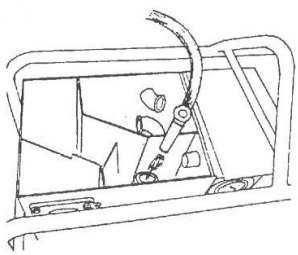

11

https://truckmanualshub.com/

WORKSHOP INSTRUCTIONS

DISASSEMBLY

1. Needed parts: Disassembly tool N°4700363380.
2. Dismantle the cover , unscrew the tank from the frame.
3. Unscrew the 5 screws **4** and take-off the tank.
4. Unscrew the 4 nuts **5** and take-off the assy motor-pump.
5. Remove the pump plate **6**.
6. Extract the pump wheel **7** by using tool N° 4700363380.
7. Take off tolerant ring **8** and the key **9** from the motor shaft.
8. Unscrew the 4 screws **10** and take off the pump body **11**.
9. From the pump body **11** extract sealing **12**, **13**, **14** seal holders **15** and **16**.

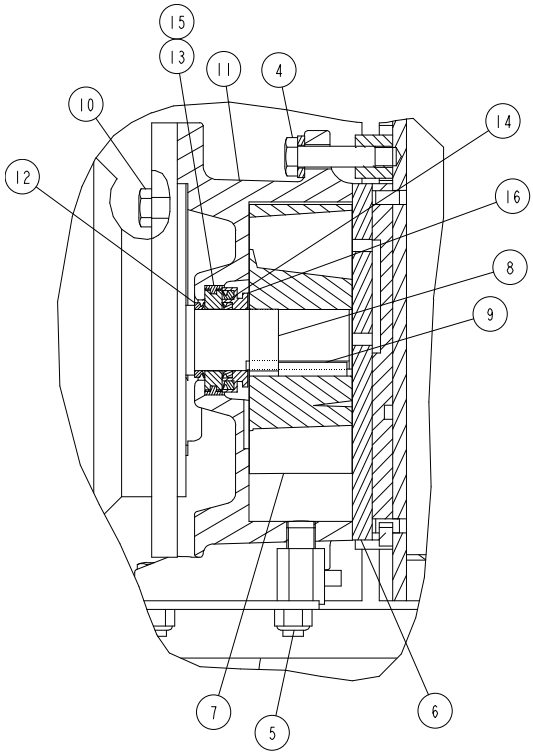

ASSEMBLY

1. Put in place seal **12** on the motor shaft. Fill all the space around the seal with high vacuum grease.
2. Place in order in the pump body **11**: Seal holder **15** equipped with its seal **13**, seal holder **16** equipped with seals **14** and **12**. Before assembly grease all the parts and fill all the space between seal holder **15** and **16**. Use high vacuum grease.
3. Position the complete pump body on the motor shaft and then tight screws **10**.
4. Place tolerant ring **8** on the pump shaft and key **9**. Push the pump wheel **7** on the pump shaft by using tool 367228.

IMPORTANT

Tolerant ring must be replaced each time the pump wheel is dismantled.

A gap of 0.1mm must be respected between the pump wheel and the bottom of the pump body .

5. Put the pump plate **6** on the pump body.
6. Place the tank with its rubber seal on the pump and then tight screws **4**. ***Tightening torque : 2mkg.***
7. Tight the tank **2** and cover **1** on the frame **3**.

https://truckmanualshub.com/

SUCTION MAT BB

A complete suction mat DYNAPAC BB, consists of a top mat with a hose and tapered connection, two carrying tubes, a roll of 30 m of bottom mats, a transportation bag of plastic net and a repair kit.

The plastic sheet, which is in contact with the concrete, acts as a filter, only allowing water to pass through it and excluding cement sludge.

The bubbles of the plastic sheet acts as a spacer under the top mat so that the vacuum is evenly spread over the entire surface to be treated.

The top mat is made of impervious plastic fabric with a suction channel in the centre of its underside.

The suction channel distributes the vacuum evenly along the length of the mat.

The suction mat is manufactured in six standard sizes of 1.5 to 6m bay width.

	BB15	**BB30**	**BB40**	**BB50**	**BB60**
Dim A x B (m)	1.5x5	3.0x5	4.0x5	5.0x5	6.0x5
Weight (kg)	19	35	46	57	67
Order N°	010520600	010520200	010520300	010520400	0 10520500

SUCTION HOSE N°805115

1.5" Diameter. per meter .

https://truckmanualshub.com/

SPARE PARTS CATALOGUE

RESERVDELSTÄLLNING

Följande uppgifter ska lämmas vid beställning av reservdelar för att undvika leveransfel :

1. Maskintyp.
2. Maskinens seriunmmer.
3. Antal av önskad reservdel.
4. Reserdelens artikelnummer.
5. Reservedelens benämning.
6. Måttupgifter vid beställning av metervara.

ORDERING SPARE PARTS

To avoid errors in delivery, please give the following information when ordering spare parts :

1. Type of machine.
2. Machine serial number.
3. Quantity required.
4. Part number.
5. Parts description.
6. Dimensions when ordering per length.

ERSATZTEILBESTELLUNG

Zur Vermeidung von Fehllieferungen sind bei der Bestellung von Ersatzteilen folgende Angaben zu machen :

1. Mashinentyp.
2. Herstellungsnummer.
3. Bestellmenge. (Quantity)
4. Ersatzteilbenennung. (Part N°)
5. Ersatzteilbenennung. (Description)
6. Massangaben bei Bestellung von Meterware.

ORDINI DI RICAMBI

Per evitare errori nelle consegne di ricambi, Vi preghiamo di comunicarci le seguenti informazioni al momento dell ‘ordinazione :

1. Tipo di macchina.
2. Numero di serie della macchina.
3. Quantitá dei pezzi desiderati. (Quantity)
4. Numero di codice del pezzo. (Part N°)
5. Descrizione del pezzo di ricambio. (Description)
6. Misura, in caso di ordine per metro.

PEDIDO DE RECAMBIOS

Para evitar errores en las entregas, deberá indicarse los siguientes datos al hacer un pedido de recambios :

1. Tipo de máquina.
2. Número de serie.
3. Cantidad de piezas deseadas. (Quantity)
4. Número de artículo de la pieza de recambio. (Part N°)
5. Denominación de la pieza. (Description)
6. Indíquese la medida al solicitar un artículo que se expide por metros.

COMMANDE DE PIECES DE RECHANGE

Les indications suivantes doivent être fournies lors de la commande de pièces de rechange, afin d’éviter toute erreur de livraison :

1. Type de machine.
2. Numéro de série.
3. Quantité désirée de pièce de rechange. (Quantity)
4. Numéro de la pièce de rechange. (Part N°)
5. Description de la pièce de rechange. (Description)
6. Longueur en cas de commande par mètre.

https://truckmanualshub.com/

SPARE PARTS

Note : To place spare parts order, use :

- The serial number of the machine
- The description and the part number

Ref.	Description	BA41E 4700369231	Qty
1	Fram	4700369285	1
21	Over-center catch	4700369293	4
22	Vacuum tank	4700369233	1
34	Vacuum adjustment	4700369295	1
42	Bracket	4700369348	1
43	Vacuum meter	4700369303	1
44	Label	4700704501	2
45	Gland	4700369349	3
46	Cable	4700369350	0.45
47	Motor protector	4700369351	1
49	Cable	4700369350	0.57
50	Switch	4700369352	1
51	Screw	4700107834	4
52	Nut	4700183557	4
53	Decal	4700369353	1
54	Screw	4700533027	4
55	Nut	4700586001	4
56	Electric motor	4700369354	1
57	Switch holder	4700369237	1
63	Screw	4700500051	4
64	Screw	4700500267	4
65	Washer	4700600267	4
67	Wheel	4700369327	2
68	Circlips	4700369328	4
69	Screw	4700185987	2
69	Screw	4700500056	3
70	Washer	4700603012	4

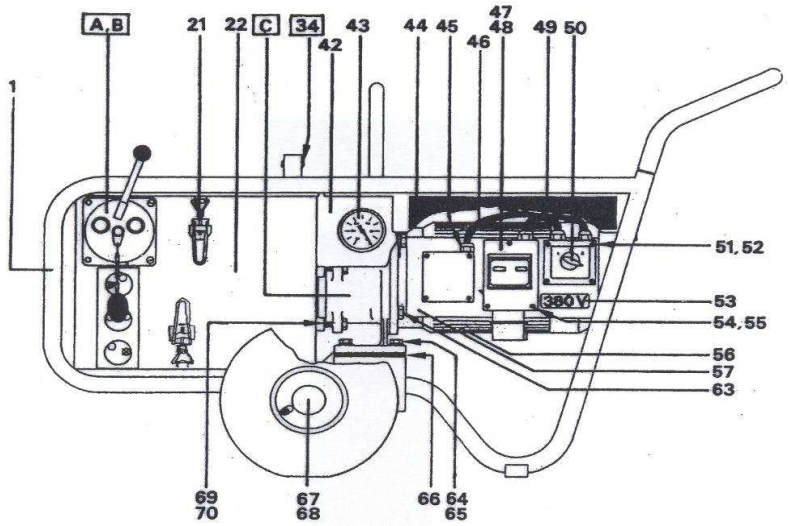

https://truckmanualshub.com/

Ref.	Description	BA41E 4700369231	Qty
2	Nut	4700586003	4
3	Sealing	4700369292	1
4	Screw	4700508019	4
5	Coupling	4700369289	3
6	Chain		1
7	Y Coupling	4700369238	1
8	Plug	4700369290	1
9	Adapter	4700369291	2

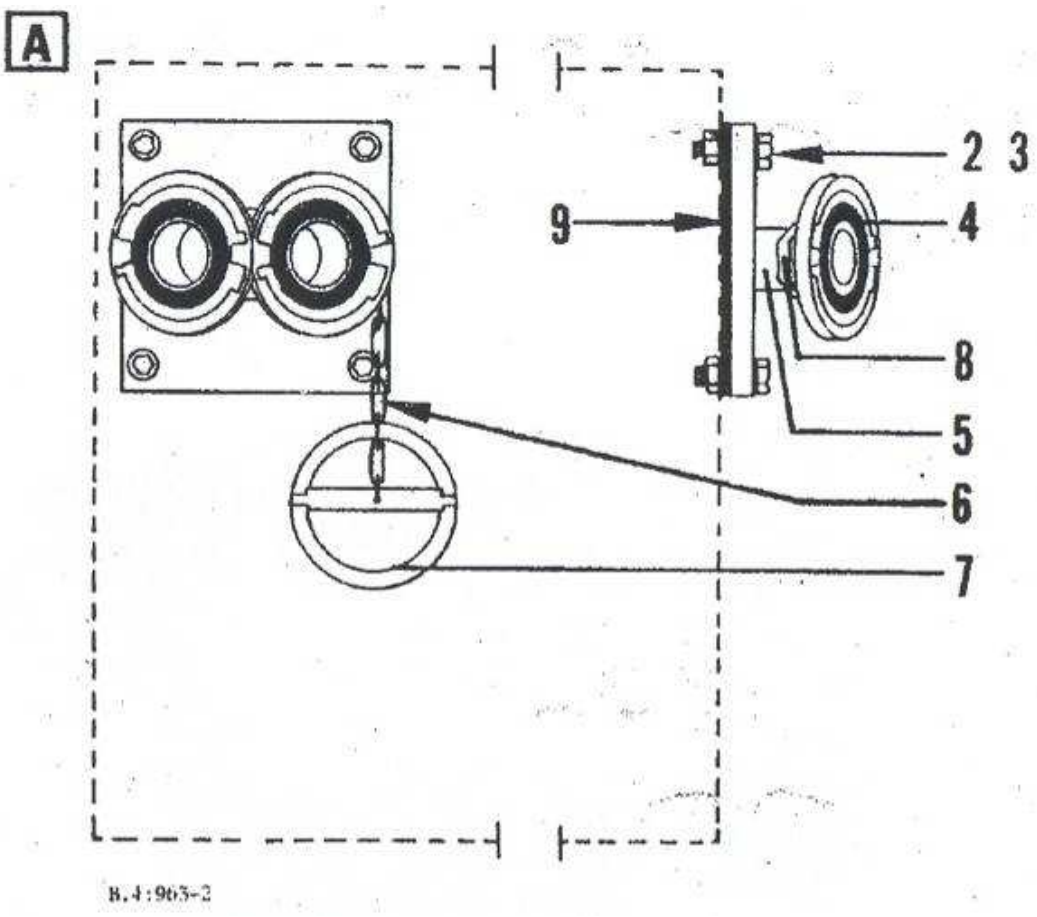

Ref.	Description	BA41E 4700369231	Qty
35	Star knob	4700369296	1
36	Nut	4700927233	1
37	Washer	4700600267	1
38	Valve housing	4700369298	1
39	Valve packing	4700369299	1
40	Valve screw	4700369300	1
41	Screw	4700533024	4

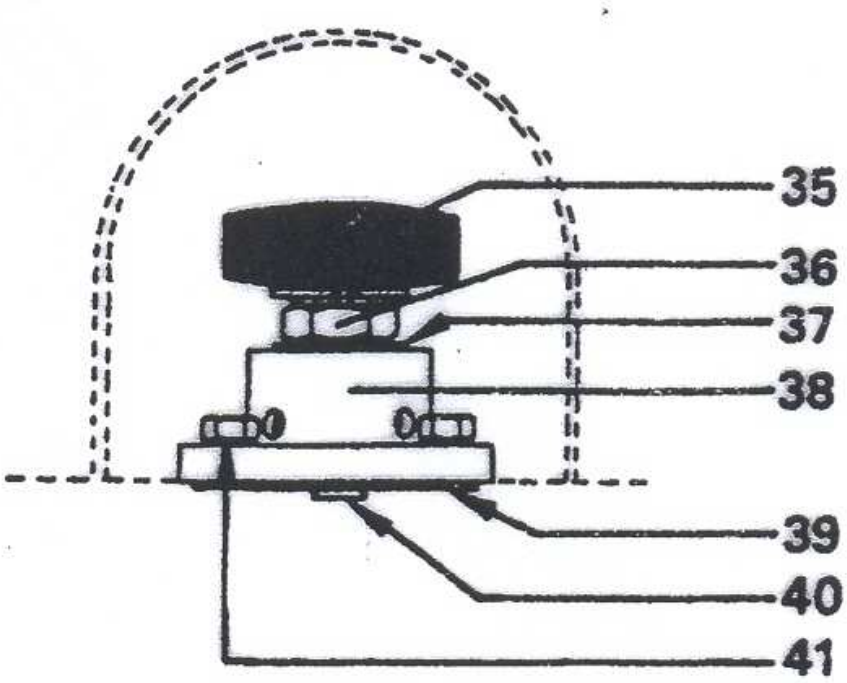

https://truckmanualshub.com/

Ref.	Description	BA41E 4700369231	Qty
23	Pump body	4700369232	1
24	Pump plate	4700369310	1
25	Pump sealing	4700369311	1
26	Impeller	4700369304	1
27	Key	4700185992	1
28	Tolerance ring	4700369305	1
29	Pin	4700185993	2
30	Sealing	4700369306	1
31	V-ring	4700369307	2
32	V-ring	4700369308	1
33	Seal holder	4700369309	1

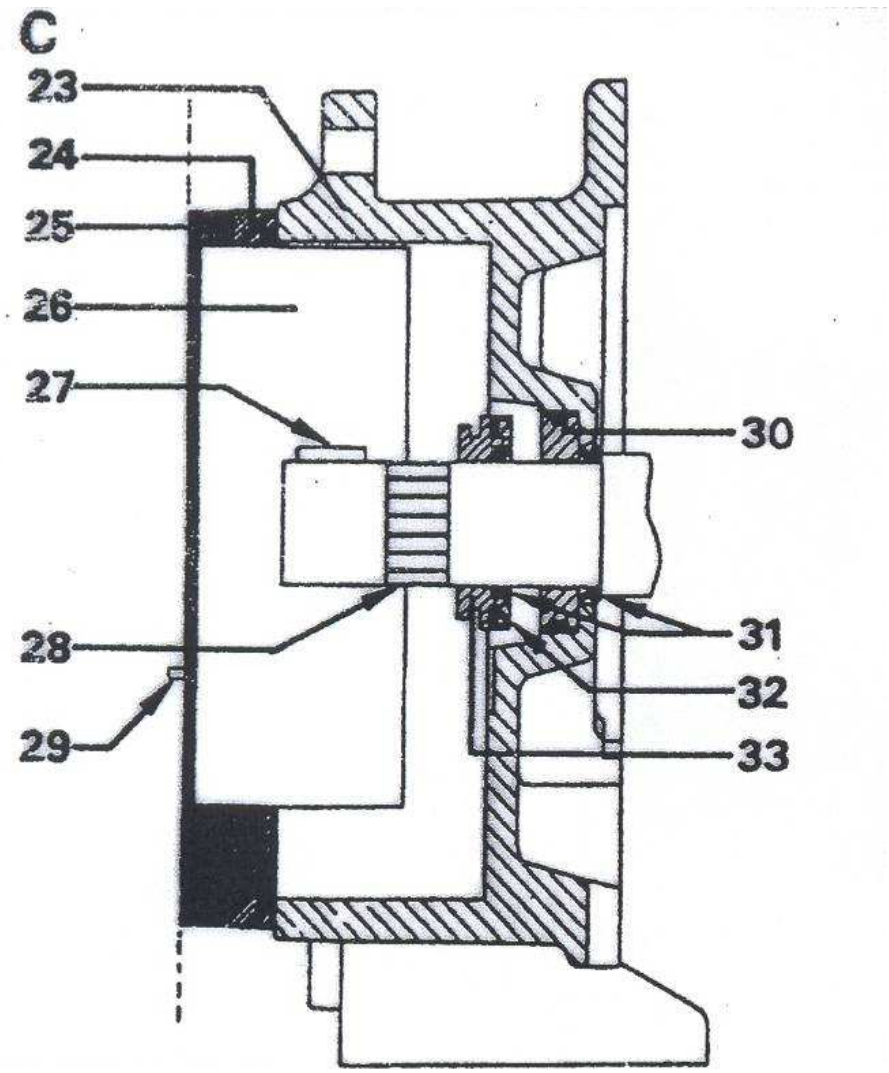

https://truckmanualshub.com/

Ref.	Description	BA41E 4700369231	Qty
71	Screw	4700500023	4
72	Coupling	4700369289	3
73	Coupling	4700369330	1
74	Clamp	4700369331	1
75	Hose	4700805115	1
76	Screw	4700185989	4
77	Cover	4700369236	1
78	Label instruction	4700369242	1
80	Cover	4700369235	1
81	Nut	4700185990	2
82	Plug	4700185986	4
84	Bottom plate	4700369240	1
85	Handle	4700369326	1
86	Decal fleche	4700369355	1
87	Nut	4700586002	4
88	Screw	4700500088	4
89	Sealing	4700369356	1
90	Holder	4700369357	1
91	Hose	4700369358	1
92	Collier	4700369359	2
93	Plug	4700369336	1
94	Filter holder	4700369337	1
95	Holder	4700369341	1
96	Wire netting	4700369339	1
98	Filter cpl	4700369340	1
99	Filter	4700369338	1
100	Clamp	4700369342	1
101	Label mini maxi	4700369343	1
102	Tank cover	4700369239	1
103	Tie bar	4700369332	2

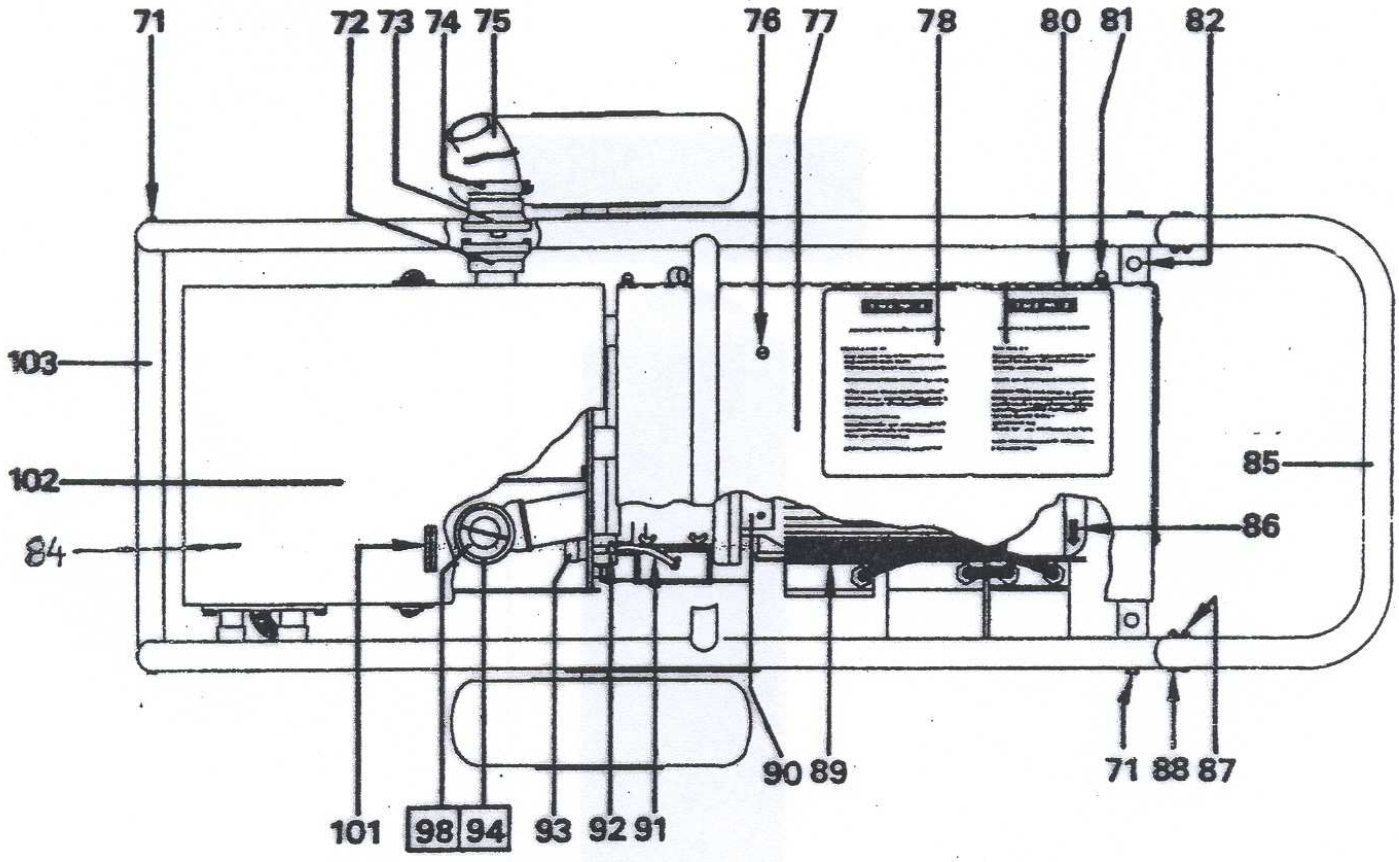
71
72 73 74 75
76 77
78
80 81
82
103
102
84
85
86
90 89
71 88 87
101
98 94
93 92 91

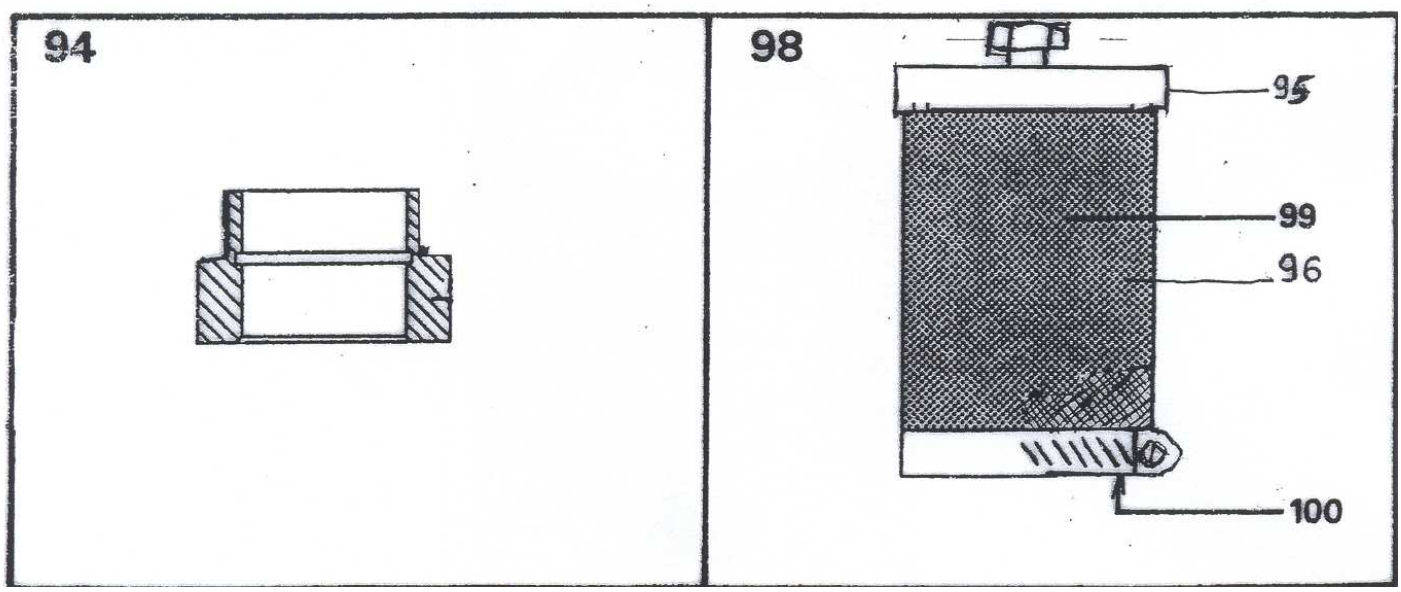
94
98
95
99
96
100

https://truckmanualshub.com/

Ref.	Description	BA41E 4700369231	Qty
99	Rubber washer	4700369344	4
100	Washer square	4700185991	4
101	Nut	4700586019	4

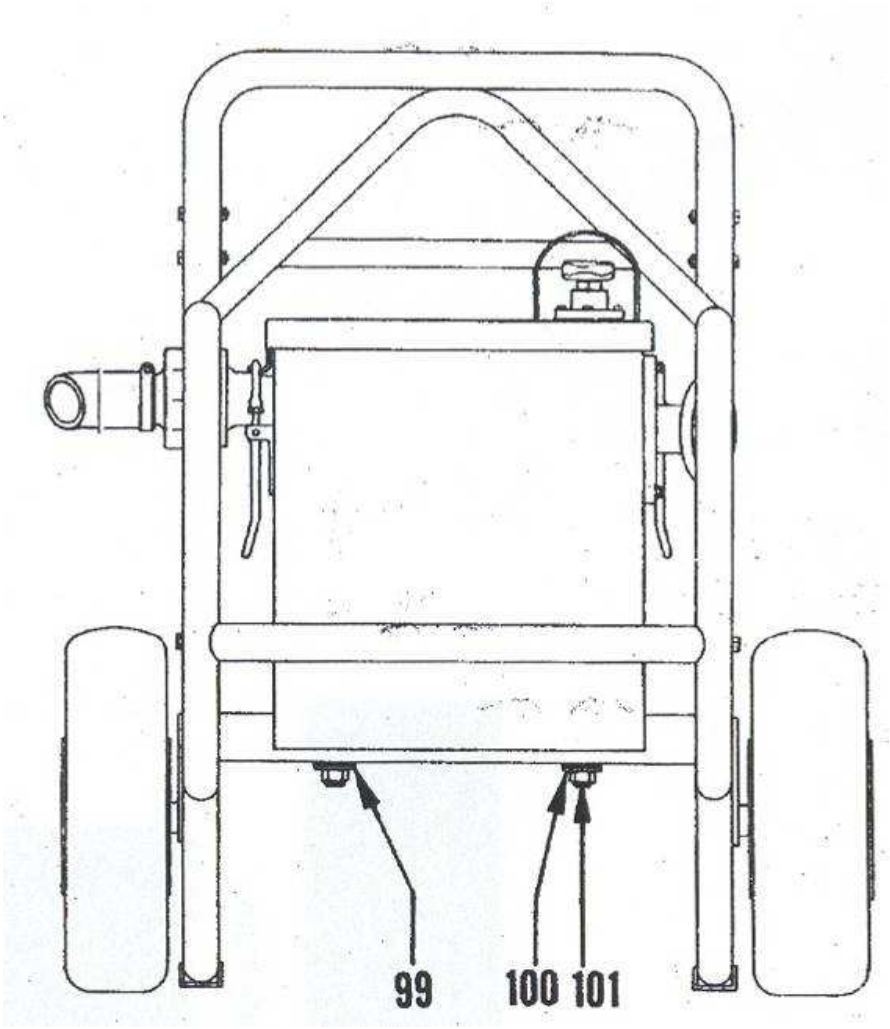

Ref.	Description	4700369286	Qty
2	Coupling	4700369330	1
3	Clamp	4700369331	2
4	Hose	4700805115	1
5	Nipple	4700369345	1
6	Cock	4700369346	1
7	Nipple	4700369347	1

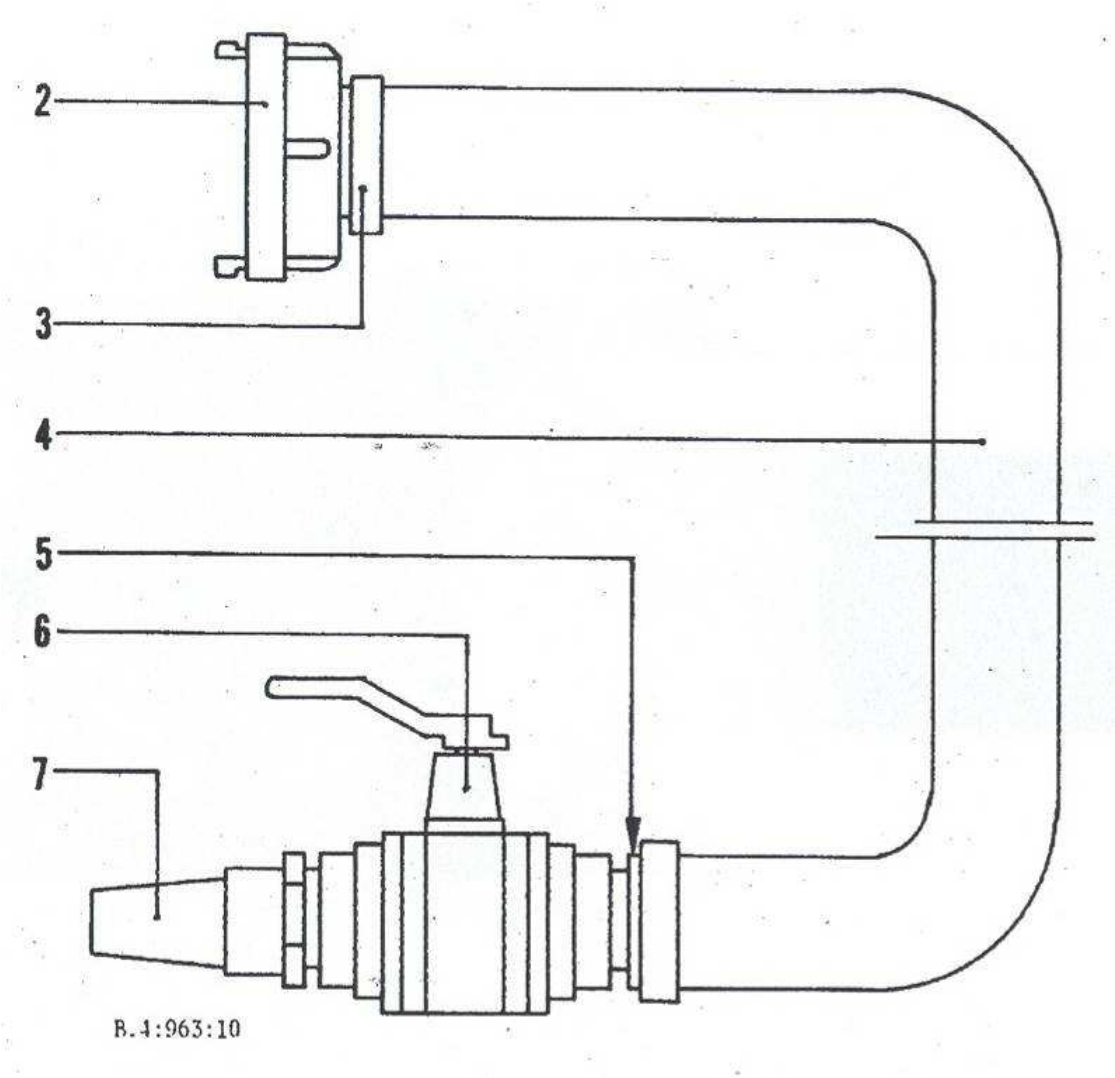

Ref.	Description	4700369287	Qty
9	Coupling	4700369330	2
10	Clamp	4700369331	2
11	Hose	4700805115	1

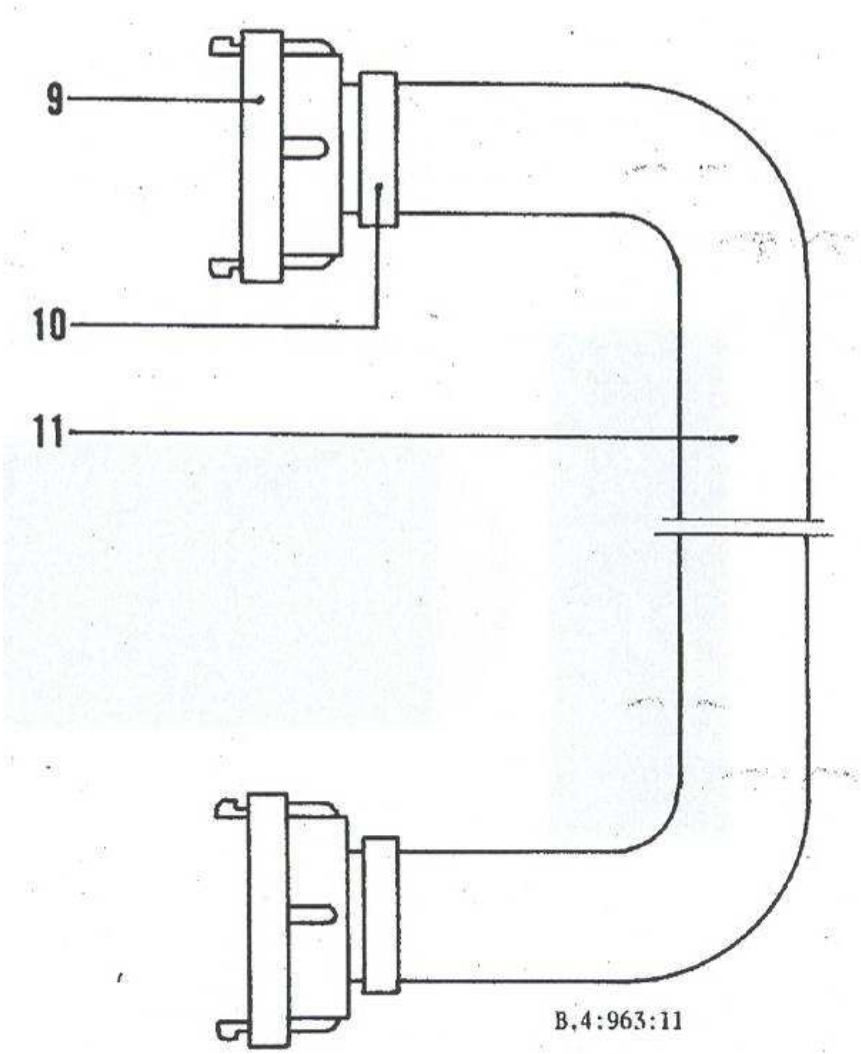

Ref.	Description	BB15 D010520600	Qty	BB30 D010520200	Qty	BB40 D010520300	Qty
1	Top covering cpl.	4700236471	1	4700236456	1	4723645601	1
2	*Connection	4700334528	1	4700334528	1	4700334528	1
3	*Hose	4700805115	1,50	4700805115	1,50	4700805115	1,50
4	*Hose coupling	4700701302	1	4700701302	1	4700701302	1
5	Repair kit	4700236473	1	4700236473	1	4700236473	1
6	Bottom mat (1.2mx30mroll)	4700362226	1	4700362226	1	4700362226	1

Ref.	Description	BB50 D010520400	Qty	BB60 D010520500	Qty
1	Top covering cpl.	4723645602	1	4723645603	1
2	*Connection	4700334528	1	4700334528	1
3	*Hose	4700805115	1,5	4700805115	1,5
4	*Hose coupling	4700701302	1	4700701302	1
5	Repair kit	4700236473	1	4700236473	1
6	Bottom mat (1.2mx30m roll)	4700362226	1	4700362226	1

Parts * marked are included in above subassembly

https://truckmanualshub.com/

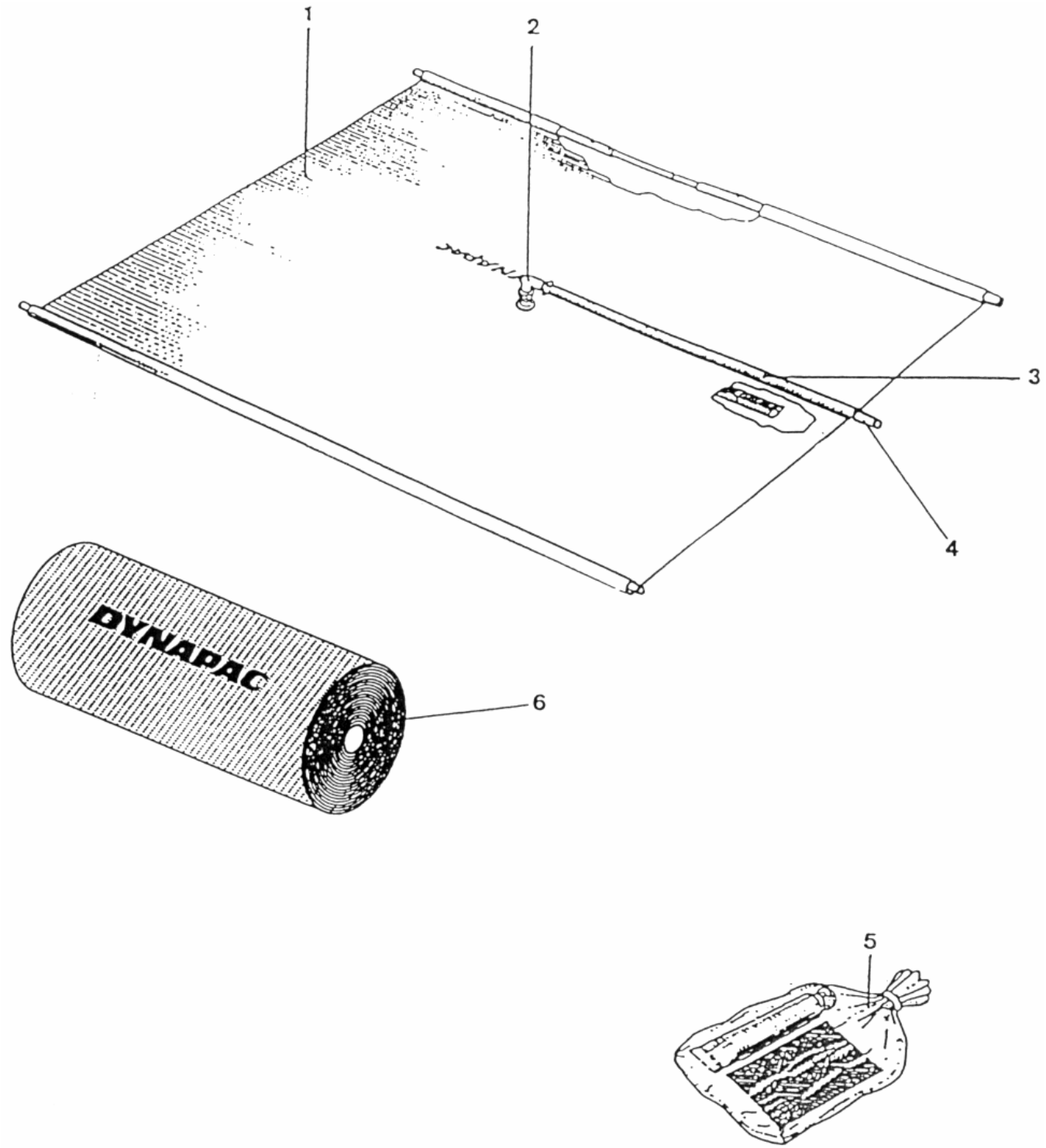

https://truckmanualshub.com/

ЕО СЕРТИФИКАТ ЗА СЪОТВЕТСТВИЕ / PROHLÁŠENÍ O SHODĚ EU / EU-OVERENSSTEMMELSESRKLÆRING / CONFORMITEITSVERKLARIN EC / CERTIFICATE OF CONFORMITY EC / EUROOPA ÜHENDUSE TÜÜBIVASTAVUSE TUNNISTUS / VAATIMUSTENMUKAISUUSTODISTUS (EU) / CERTIFICAT DE CONFORMITE CE / KONFORMITÄTSBESCHEINIGUNG EG / ΠΙΣΤΟΠΟΙΗΤΙΚΟ ΣΥΜΜΟΡΦΩΣΗΣ ΕΚ / CE MEGFELELŐSÉGI NYILATKOZAT / DICHIARAZIONE CE DI CONFORMITA' / EK ATBILSTĪBAS DEKLARĀCIJA / CE SERTIFIKATAS / CERTYFIKAT ZGODNOŚCI Z NORMAMI UNII EUROPEJSKIEJ / CERTIFICADO DE CONFORMIDADE CE / CERTIFICAT DE CONFORMITATE CE / СЕРТИФИКАТ СООТВЕТСТВИЯ ЕЭС / PREHLÁSENIE O ZHODE EU / CERTIFIKAT O SKLADNOSTI CE / CERTIFICADO DE CONFORMIDAD CON LA CE / KONFORMITETSCERTIFIKAT EC / UYGUNLUK BELGESİ AT / EF SAMSVARSSERTIFIKAT

Der Hersteller / The manufacturer / Производителят / Fabrikanten / El fabricante / Tootja / Valmistaja / Le fabricant / Ο κατασκευαστής / A gyártó / Ražotājs / Gamintojas / De fabrikant / Producent / Producatorul / Изготовитель / Výrobca / Proizvajalec / Tillverkaren / Üretici / Il Costruttore / O Fabricante / Výrobce / Fabrikanten	VIBRATECHNIQUES SNC Route de Néville – BP36 F-764560 Saint Valery en Caux

bescheinigt, dass die Maschine / certifies that the machine / удостоверява, че машината / bekræfter, at maskinen / certifica que la máquina / kinnitab, et antud seade / vakuuttaa, että kone / certifie que la machine / πιστοποιεί ότι η μηχανή / tanúsítja, hogy a berendezés / deklarē ka ierīce / patvirtina, kad mašina / verklaart dat de machine / zaświadcza, że urządzenie / certifica ca echipamentul / удостоверяет, что машина / prehlasuje, že tento stroj / potrjuje, da je stroj / intygar att maskinen / bu makinanın tasdik eder./ dichiara che l'apparecchiatura / certifica que o equipamento / prohlašuje, že tento stroj / bekrefter at maskinen

Electric vacuum pump **BA41E** **From S/N 6681543**

Handelsname / Brand / марка / Mærke / Marca / Kaubamärk / Tuotemerkki / Marque / Εμπορικό σήμα / Márkájú / Marka / Modelis / Merk / Marki / Марка / Typ / Znamka / Märke / Marka / Denominazione commerciale / Marca / Značka-typ / Merke

DYNAPAC

1. Hergestellt wurde unter Beachtung und Einhaltung der EUROPA-VERORDNUNG 98/37/EG.
Is manufactured in conformity with the EUROPEAN DIRECTIVE 98/37/EC.
произведена в съответствие с ЕВРОПЕЙСКА ДИРЕКТИВА 98/37/CE.
Er fremstillet i overensstemmelse med EUDIREKTIVET 98/37/EC
Ha sido fabricada en conformidad con la DIRECTIVA EUROPEA 98/37/EC.
On valmistatud vastavuses Euroopa Ühenduse direktiiviga 98/37/EÜ.
On valmistettu EU-DIREKTIIVIN 98/37/EY mukaisesti.
Est fabriquée conformément à la DIRECTIVE EUROPEENNE 98/37/CE.
Κατασκευάζεται σύμφωνα με την ΕΥΡΩΠΑΪΚΗ ΟΔΗΓΙΑ 98/37/EC.
Megfelel a 98/37/EK európai irányelv rendelkezéseinek.
Ir ražota saskaņā ar Eiropas Direktīvu 98/37/EC.
Pagaminta pagal Europos direktyvas 98/37/EC
Is vervaardigd in overeenstemming met de Europese richtlijn 98/37/EG.
Jest produkowane zgodnie z wymaganiami EUROPEJSKIEJ DYREKTYWY 98/37/EC.
Este produs in conformitate cu DIRECTIVA EUROPEANA 98/37/EC.
Произведена в соответствии с ЕВРОПЕЙСКОЙ ДИРЕКТИВОЙ 98/37/EC.
Je vyrobený v súlade v zhode s Európskou smernicou 98/37/EC.
Izdelan v skladu z EVROPSKO DIREKTIVO 98/37/CE.
Är tillverkad i överensstämmelse med det EUROPEISKA DIREKTIVET 98/37/EC.
AVRUPA DİREKTİFİ 98/37/EC 'ye uygun imal edildiğini,
è conforme alle disposizioni della Direttiva 98/37/CE (Direttiva Macchine);
Fabricado em conformidade com as DIRECTIVAS EUROPEIAS 98/37/EC.
Je vyroben ve shodě s EVROPSKÝM NAŘÍZENÍM 98/37 EC.
er fabrikkert i samsvar med EUROPEISK DIREKTIV 98/37/EF.

2. Sofern es sich um ein elektrisches Gerät handelt, ist auch die EUROPA-VERORDNUNG 2006/95, 2004/108, 2002/95 & 2002/96 entsprechend beachtet und eingehalten worden.
Is also manufactured in conformity with the EUROPEAN DIRECTIVE 2006/95, 2004/108, 2002/95 & 2002/96, if it is of an electric type.
Машината е произведена, също така, в съответствие с ЕВРОПЕЙСКИ ДИРЕКТИВИ 2006/95, 2004/108, 2002/95 и 2002/96, ако е от електрически тип.
Det er også fremstillet i overensstemmelse med EU-DIREKTIVERNE 2006/95, 2004/108, 2002/95 & 2002/96, hvis det er elektrisk.
Está fabricada asimismo en conformidad con la DIRECTIVA EUROPEA 2006/95, 2004/108, 2002/95 & 2002/96, si es de tipo eléctrico.
Kui tegemist on elektrilise seadmega, vastab selle valmistamine ka Euroopa Ühenduse direktiividele 2006/95, 2004/108, 2002/95 ja 2002/96.
On valmistettu EU-DIREKTIIVIEN 2006/95, 2004/108, 2002/95 & 2002/96 mukaisesti, jos kyseessä on sähkötoiminen kone.
Est également fabriquée conformément à la DIRECTIVE EUROPEENNE 2006/95, 2004/108, 2002/95 & 2002/96, si elle est de type électrique.
Κατασκευάζεται επίσης σύμφωνα με την ΕΥΡΩΠΑΪΚΗ ΟΔΗΓΙΑ 2006/95, 2004/108, την 2002/95 & την 2002/96, εάν είναι ηλεκτρικού τύπου.
Megfelel továbbá a 2006/95, 2004/108, 2002/95 és 2002/96 EURÓPAI IRÁNYELVEKNEK, amennyiben elektromos berendezésről van szó.
Ir arī ražota saskaņā ar Eiropas Direktīviem 2006/95, 2004/108, 2002/95 & 2002/96, ja tā ir elektriska.
Taip pat atitinka Europos direktyvas 2006/95, 2004/95 ir 2002/95, tik elektriniams prietaisams
Ook is vervaardigd in overeenstemming met de Europese richtlijn 2006/95, 2004/108, 2002/95 en 2002/96, indien het een elektrisch type is.
Jest także produkowane zgodnie z wymaganiami EUROPEJSKICH DYREKTYW 2006/95, 2004/108, 2002/95

https://truckmanualshub.com/

oraz 2002/96, jeżeli jest urządzenie zasilane prądem elektrycznym.
Este de asemenea produs in conformitate cu DIRECTIVA EUROPEANA 2006/95, 2004/108, 2002/95 & 2002/96, in cazul in care este de natura electrica.
Также произведена в соответствии с ЕВРОПЕЙСКИМИ ДИРЕКТИВАМИ 2006/95, 2004/108, 2002/95 & 2002/96, если это электрическое оборудование.
Je taktiež vyrobený v zhode s Európskou smernicou 2006/95, 2004/108, 2002/95 a 2002/96, ak ide o elektrický typ stroja.
Prav tako je izdelan v skladu z EVROPSKO DIREKTIVO 2006/95, 2004/108, 2002/95 & 2002/96, če je električnega tipa.
Om den är av elektrisk typ, är den även tillverkad i överensstämmelse med de EUROPEISKA DIREKTIVEN 2006/95, 2004/108, 2002/95 & 2002/96.
Ayrıca, bir elektrikli ürün ise, AVRUPA DİREKTİFİ 2006/95, 2004/108, 2002/95 ve 2002/96 'ye uygun imal edildiğini,
se l'apparecchiatura è elettrica, è altresì conforme alle Direttive Europee 2006/95, 2004/108, 2002/95 & 2002/96;
Também fabricado em conformidade com as DIRECTIVAS EUROPEIAS 2006/95, 2004/108, 2002/95 & 2002/96, se são do tipo eléctrico.
Je současně vyroben ve shodě s EVROPSKÝM NAŘÍZENÍM 2006/95, 2004/108, 2002/95 & 2002/96 CE, jestliže se jedná o elektrický typ stroje.
Den er også fabrikkert i samsvar med EU-DIREKTIV 2006/95, 2004/108, 2002/95 og 2002/96, hvis den er av den elektriske typen.

3. Die EUROPA STANDARD EN12100-1, EN12100-2, EN12649 wurden beachtet und eingehalten.
Also complies with the EUROPEAN STANDARD EN12100-1, EN12100-2, EN12649.
Машината е произведена също така в съответствие с ЕВРОПЕЙСКИ СТАНДАРТ EN12100-1, EN12100-2, EN12649.
Det er også i overensstemmelse med EU-STANDARDEN EN12100-1, EN12100-2, EN12649.
Cumple con la NORMA EUROPEA EN12100-1, EN12100-2, EN12649.
Vastab masin ka Euroopa standardile EN12100-1, EN12100-2, EN12649.
Täyttää EU-STANDARDIN EN12100-1, EN12100-2, EN12649 vaatimukset.
Est également conforme à la NORME EUROPEENNE EN12100-1, EN12100-2, EN12649.
Επίσης συμμορφώνεται με τα ΕΥΡΩΠΑΪΚΑ ΠΡΟΤΥΠΑ EN12100-1, EN12100-2, EN12649.
Megfelel továbbá az EN12100-1, EN12100-2, EN12649 EURÓPAI SZABVÁNYBAN foglaltaknak.
Ari atbilst Eiropas standartu EN12100-1, EN12100-2, EN12649.
Taip pat atitinka Europos standartus EN12100-1, EN12100-2, EN12649.
Ook voldoet aan de Europese norm EN12100-1, EN12100-2, EN12649.
Jest także zgodne z EUROPEJSKĄ NORMĄ EN12100-1, EN12100-2, EN12649.
Este de asemenea conform cu STANDARDUL EUROPEAN EN12100-1, EN12100-2, EN12649.
Также отвечает ЕВРОПЕЙСКИМ СТАНДАРТАМ EN12100-1, EN12100-2, EN12649.
Tiež vyhovuje Európskemu štandardu EN12100-1, EN12100-2, EN12649.
Prav tako je skladen z EVROPSKO NORMO EN12100-1, EN12100-2, EN12649.
Uppfyller den dessutom också den EUROPEISKA STANDARDEN EN12100-1, EN12100-2, EN12649.
Ayrıca AVRUPA STANDARDI EN12100-1, EN12100-2, EN12649 'e uyumlu olduğunu,
Sono state applicate le norme armonizzate EN12100-1, EN12100-2, EN12649.
Também de acordo com as normas EUROPEIAS STANDARD EN12100-1, EN12100-2, EN12649.
Také splňuje EVROPSKÝ STANDARD EN12100-1, EN12100-2, EN12649.
Den er også i samsvar med EUROPEISK NORM EN12100-1, EN12100-2, EN12649.

4. Name und Adresse der Person, die im Besitz der technischen Dokumentation ist / Name and address of person who owns technical information / Име и адрес на лицето, разполагащо с техническите документи. / Navn og adresse på den person, der ejer de tekniske oplysninger. / Nombre y dirección de la persona que posee la información técnica. / Tehnilist dokumentatsiooni omava isiku nimi ja aadress. / Teknisten tietojen omistajan nimi ja osoite. / Nom et adresse de la personne possédant les informations techniques. / Όνομα και διεύθυνση του προσώπου που είναι κύριου των τεχνικών πληροφοριών. / A műszaki információkkal rendelkező személy neve és címe. / Vārds un adrese personai, kura ir tehniskās informācijas īpašnieks. / Už techninę informaciją atsakingo žmogaus vardas ir adresas / Naam en adres van de persoon die eigenaar is van technische informatie. / Imię i nazwisko oraz adres osoby, która posiada informacje techniczne. / Numele si adresa persoanei care detine informatiile tehnice. / Фамилия и имя обладателя технической информации. / Meno a adresa osoby, ktorá vlastní technické informácie / Ime in naslov osebe, ki ima tehnične informacije. / Namn och adress av personen som äger teknisk information. / Teknik dökümanın sahibinin isim ve adresi. / Nome e recapito del proprietario delle informazioni tecniche / Nome e morada do Cliente / Jméno a adresa osoby, která vlastní technickou dokumentaci / Navn og adresse til personen som innehar de tekniske data.	Jean-Rémy CHASSE Vibratechniques SNC F-76460 Saint Valery en Caux
Ort / Place / Изготвено в / Sted / Lugar / Asukoht / Paikka / Fait à / Τόπος / Kelt / Vieta / Plaatsen / Miejsce / Localitatea / Местоположение / Miesto / Napisano v / Luogo / Localidade / Místo	Saint Valéry en Caux
Datum / Date / Дата / Dato / Fecha / Kuupäev / Päivämäärä / Date / Ημερομηνία / Dátum / Datums / Data / Дата / Dátum / Yer / Data / Den	28/05/2009
Unterschrift / Signature / Подпис / Underskrift / Firma / Allkiri / Allekirjoitus / Signatura / Υπογραφή / Aláírás / Paraksts / Parašas / Handtekening / Podpis / Semnatura / Подпись / Signatur / İmza / Firma / Assinatura /	Pascal Courroux *Plant Manager*

https://truckmanualshub.com/

DYNAPAC

Part of the Atlas Copco Group

DYNAPAC Concrete – HQ address: P.O Box 48 – 77220 Tournan-en-Brie, France, Tel:+33.1. 64.42.59.00, Fax: + 33.1. 64.42.00.04

Factory address : P.O Box 63, Route de Neville, 76460 Saint Valery-en-caux, France, Tel: +33.2.35.57.07.76, Fax: +33.2.35.97.48.82

We reserve the right to change specifications without notice. Photos and illustrations do not always show standard versions of machines.

www.dynapac.com