https://truckmanualshub.com/

Original instructions

iGo neo

Supplement to the series operating instructions for the CX-20

CX-20

1074

50108046085 EN - 02/2018

first in intralogistics

https://truckmanualshub.com/

https://truckmanualshub.com/

Address of manufacturer and contact details

STILL GmbH
Berzeliusstraße 10
22113 Hamburg, Germany
Tel. +49 (0) 40 7339-0
Fax: +49 (0) 40 7339-1622
Email: info@still.de
Website: http://www.still.de

Rules for the operating company of industrial trucks

In addition to these operating instructions, a code of practice containing additional information for the operating companies of industrial trucks is also available.

This guide provides information for handling industrial trucks:

- Information on how to select suitable industrial trucks for a particular area of application
- Prerequisites for the safe operation of industrial trucks
- Information on the use of industrial trucks
- Information on transport, initial commissioning and storage of industrial trucks

Internet address and QR code

The information can be accessed at any time by pasting the address **https://m.still.de/vdma** in a web browser or by scanning the QR code.

https://truckmanualshub.com/

https://truckmanualshub.com/

1 Foreword

Your iGo neo 2
Intelligent order picking - your iGo neo 2
CE labelling 4
EC declaration of conformity in accordance with the Machinery Directive 4

Using the iGo neo 4
Intended use 4
Improper use 5
Requirements for the place of use 6
Cold store application (variant) 7
Requirements for pallets and loads 8
Required safety distances in the aisle 9
Customer-specific configuration by the authorised service centre 10
Copyright clause for open-source programs 11

Roadways 11
Requirements for the ground conditions of roadways 11
Suitable roadways 11

Information about the documentation 12
Validity of this supplement to the operating instructions 12
Issue date and topicality of the operating instructions 13
Copyright and trademark rights 13
Explanation of information symbols used 14
Information for two-page PDF display 14

Environmental considerations 15
Disposing of components used for ASSISTANCE mode 15

2 Safety

Definition of terms used for responsible persons 18
Duties of the operating company 18
Duties of the operator 19
Additional requirements applicable to the authorised service centre 20
Specialist 20

Basic principles for safe operation 21
Modifications and retrofitting 21
Warning regarding non-genuine parts 22
Damage, defects and misuse of safety systems 22
Medical equipment 23

Residual risk 23
Residual dangers, residual risks 23

https://truckmanualshub.com/

Overview of hazards and countermeasures 25
Danger to employees when ASSISTANCE mode is used 26

Safety tests 27
Regular safety inspection of the truck 27

Emissions 28

3 Components of the iGo neo

Overview of components used for ASSISTANCE mode 30

LED signalling unit 31
Signals from the inner lighting zone on the LED signalling unit 31
Signals from the outer lighting zone on the LED signalling unit 32

Movement tracking sensors 33
Function of the movement tracking sensors 33

Safety laser scanner 35
Function of the safety laser scanner 35

Assistance button 39
Functions of the assistance button 39

Emergency off switch 40
Additional emergency off switches 40

Remote control 41
Functions of the remote control 41
Charging the remote control 43
Changing the remote control 45

4 Operating the iGo neo

Checks and tasks to be carried out when commencing ASSISTANCE mode 48
Safety information related to using this mode 48
Visual inspection before switching on ASSISTANCE mode 48
Visual inspection and brake test after switching on ASSISTANCE mode 49

Safety regulations in ASSISTANCE mode 51
Instructions for safe operation of the truck 51
Priority rules in mixed MANUAL/ASSISTANCE traffic 56
Keeping roadways clear of obstacles 57

Operating the truck in ASSISTANCE mode 59
Overview of ASSISTANCE mode 59
Switching the truck on and off 61
Switching on ASSISTANCE mode 62
Adjusting the truck alignment 63

https://truckmanualshub.com/

Positioning the truck correctly in the aisle 64
Switching between ACTIVE and PAUSED modes for movement tracking 66
Identifying the operator 67
Stopping automatically at the end of the racking 69
Behaviour of the truck in response to obstacles in the roadway 71
Truck behaviour in the event of an emergency stop 73
Moving the truck position to the next pallet 75
Driving automatically without movement tracking 76
"Z picking" mode 77
Setting the drive programme when operating in ASSISTANCE mode 78
Warning sounds in ASSISTANCE mode 79

5 Storage

Storing and shutting down the iGo neo 82

6 Cleaning

Cleaning the components used for ASSISTANCE mode 84

7 Transporting

Transporting the truck 88

8 Maintenance

Maintaining the iGo neo 92
Maintenance - 500 hours/every 6 months 93
Maintenance - 1000 hours/annually 94

9 Technical data

Dimensions 98
VDI datasheet: iGo neo CX 20 99
Technical data of the remote control components 101
Technical data of the safety laser scanner 102

https://truckmanualshub.com/

https://truckmanualshub.com/

1

Foreword

https://truckmanualshub.com/

Your iGo neo

Intelligent order picking - your iGo neo

The iGo neo works with its operator as an autonomous team-mate. It accompanies the operator at every stage of the order-picking process and is always within reach. It intuitively adapts to the working rhythm of its human companion.

This autonomous team function is made possible by the motion tracking system developed by STILL. Two high-performance sensors with a 360° circumferential view monitor the entire surrounding area. The intelligent software tracks all of the operator's movements, making the iGo neo the first order picker with cognitive skills.

Measurable increase in efficiency

The iGo neo is based on the concept of "Automation on Demand". The operator can opt to operate the truck manually or autonomously at any time, depending on the situation. Unlike conventional automation solutions, no complex setup is required for operation.

Once it is moved to the start position at the starting point, the highly adaptive iGo neo is ready for operation right away. The truck uses sensors to navigate at a selected distance from the racks. It intelligently adapts to the traffic situation, taking the local conditions into account and slotting seamlessly into the current material flow. The iGo neo observes junctions, obstacles and the traffic rules with respect to other trucks. This means that autonomous and conventional trucks can drive in convoy safely for the first time.

The operator can move freely around the truck during loading and unloading. It is irrelevant whether the operator is picking orders on the right, on the left or on both sides. Time that would normally be spent climbing in and out is saved. Walking along unnecessary routes is a thing of the past. The fast, faultless picking system moves straight to the central position.

The result is a measurable increase in process safety and efficiency.

Safety first

The iGo neo uses intelligent navigation and reliable safety monitoring to maintain a safe distance from obstacles. The surrounding

https://truckmanualshub.com/

area and people in the vicinity are completely protected.

The iGo neo autonomously detects the entire warehouse layout using its laser environment recognition system. As well as racks and obstacles, the system identifies its operator and all other people in the area.

The safety laser scanner on the front guarantees driving safety through early identification and intelligent assessment of obstacles. The truck's own robotic computer converts the scanner data to a steady driving style that can be adjusted at any time. Damage to the load during full braking is effectively avoided.

Less is more

The iGo neo also breaks new ground when it comes to communicating with the operator.

The innovative concept of the iGo eliminates the need for complex, cluttered operating status displays. Simple light codes and symbols convey everything that the operator needs to know during operation. The light codes are displayed via an innovative LED signal strip. The non-verbal interface to the operator means that the iGo neo overcomes linguistic, cultural and age-related limitations, and can be operated without the need for initial training.

First in intralogistics

The STILL iGo neo creates an intuitive partnership between the truck and its operator, paving the way for a safe and efficient future in intralogistics.

https://truckmanualshub.com/

CE labelling

The manufacturer uses CE labelling to indicate that the truck complies with the standards and regulations valid at the time the truck was placed on the market. Compliance is confirmed by the issue of an EC declaration of conformity. The CE labelling is attached to the nameplate.

An independent structural change or addition to the truck can compromise safety, thus invalidating the EC declaration of conformity.

The EC declaration of conformity must be carefully stored and made available to the relevant authorities.

▷

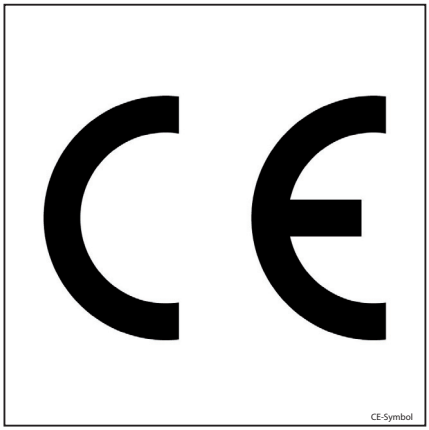

EC declaration of conformity in accordance with the Machinery Directive

The EC declaration of conformity in accordance with the Machinery Directive provided in the original operating instructions for the series-production truck is valid for the iGo neo.

Using the iGo neo

Intended use

The iGo neo is based on a manually operated STILL series-production truck that has been equipped with additional navigation and safety components.

The truck can switch between different modes of operation: `MANUAL` and `ASSISTANCE`.

`MANUAL` mode corresponds to normal operation of the series-production truck:

- Ride-on mode
- Pedestrian mode with cockpit (slow travel with drive switch)
- Pedestrian mode with push button (special equipment)

https://truckmanualshub.com/

ASSISTANCE mode is the additional operating mode of the iGo neo.

- When order picking, the truck automatically detects the aisle and the position of the operator. As soon as the operator climbs down from the truck, the truck automatically follows the operator at the same level along the racks. The truck maintains a constant distance to the racking, so that items can be transferred between the truck and the rack without interruption.
- ASSISTANCE mode can also be controlled by the operator using a remote control.

The truck must only be used for its intended purpose as set out and described in these operating instructions. In addition, the provisions in the original operating instructions for the series-production truck apply.

If the truck is to be used for purposes other than those specified in the operating instructions, the approval of the manufacturer and, if applicable, the relevant regulatory authorities must be obtained in advance to prevent hazards.

The truck is only to be used for company-internal transport in the MANUAL and ASSISTANCE operating modes. Use of the truck is restricted to the commercial and industrial sector.

Regardless of the safety devices present in the system, the operator remains responsible for the safe operation of the truck at all times, even in ASSISTANCE mode.

Improper use

The operating company or operator, and not the manufacturer, is liable for any hazards caused by improper use.

It is prohibited to use the truck for purposes other than those described in these operating instructions.

The truck is not permitted to be used:

- On or along public roads
- In areas at risk of explosion

https://truckmanualshub.com/

- For transporting dangerous goods
- For transporting people or animals as a load

Requirements for the place of use

The requirements for the place of use of the truck correspond to the requirements that are described in the original operating instructions for the series-production truck.

In addition, the following restrictions apply:

- The truck is **not** suitable for cleanroom environments
- The truck must only be used indoors in weather-protected locations
- Special controls apply for use in cold stores and in cold climates below +5°C (see the chapter entitled "Cold store application")

Permissible working environment for the truck:

Permitted temperatures		
Usage	**Min. °C**	**Max. °C**
Operation	0	40
Storage	5	45

Permitted air humidity		
Usage	**Min. %**	**Max. % (without condensation water)**
Operation	5	95
Storage	5	95

https://truckmanualshub.com/

Alternating operation between different temperature ranges

⚠ CAUTION

Danger from the optical safety systems fogging up when moving between warm areas and cold areas

During use, ensure that the optics covers (inspection windows) on the motion-tracking sensors and on the safety laser scanner do not fog up.

If the optics cover of the safety laser scanner fogs up, the truck may respond by initiating an emergency stop.

– Clean any fogged-up optics covers before starting operation in `ASSISTANCE` mode (see the chapter entitled "Cleaning").

Cold store application (variant)

The truck must be fitted with special cold store equipment for operation at temperatures below +5°C.

If cold store equipment is fitted, the truck may also be operated within the temperature range between 0°C and +5°C.

⚠ CAUTION

The truck must not be switched off or parked in the cold store area.

– Always drive out of the cold store area before parking and switching off the truck.

⚠ CAUTION

Danger from condensation water after driving out of the cold store area

After driving out of the cold store area, leave the truck to stand for at least 30 minutes until any condensation water has evaporated.

– Never drive the truck into the cold store area if it has condensation water on it.
– Avoid the formation of ice on the truck.

https://truckmanualshub.com/

⚠ CAUTION

Danger from the optical safety systems fogging up when moving between warm areas and cold areas

During use, ensure that the optics covers (inspection windows) on the motion-tracking sensors and on the safety laser scanner do not fog up.

If the optics cover of the safety laser scanner fogs up, the truck may respond by initiating an emergency stop.

– Clean any fogged-up optics covers before starting operation in ASSISTANCE mode (see the chapter entitled "Cleaning").

Requirements for pallets and loads

Pallets that are wider than the truck (max. 80 cm) must **not** be transported in ASSISTANCE mode.

The weight and type of load must conform to the specifications in the original operating instructions for the series-production truck.

Pallets and loads must not protrude beyond the lateral dimensions of the truck contour. The load must not protrude beyond the pallet in a longitudinal or lateral direction.

The stability of the truck must not be jeopardised by the weight and height of the load, including when cornering.

The load must be secured so that it cannot fall from the truck or slip and protrude beyond the lateral truck contour, including when cornering. The load must be stacked carefully, with the centre of gravity as low as possible.

Pallets and loads that do not meet these specifications may be moved in ASSISTANCE mode only if the truck safety devices are adjusted in advance by the manufacturer. Adjustments of this type must only be performed by qualified personnel at the manufacturer who have been trained to complete this work.

https://truckmanualshub.com/

Required safety distances in the aisle

Before using the iGo neo, the operating company must ensure that nobody may be at risk from operation in ASSISTANCE mode. The aisle widths must allow for the required safety distance between the truck and the racks or any obstacles on the roadway.

The shaded area shows the minimum safety distances (X_1, Y_1, Z_1) that the iGo neo must maintain. The authorised service centre can set increased safety distances (X_2, Y_2, Z_2) according to the requirements for use.

The iGo neo maintains the following safety distances from objects in the aisle during operation in ASSISTANCE mode:

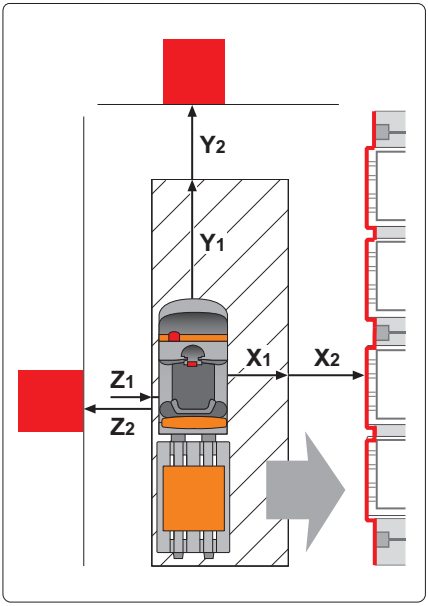

Example: Truck alignment RIGHT

Safety distances (example: "truck alignment RIGHT")		
Distance from the rack contour and obstacles on the right	X_1	50 cm (minimum distance)
	X_2	Adjustable
Distance from obstacles (front)	Y_1	100 cm (minimum distance)
	Y_2	Adjustable
Distance from the rack contour and obstacles on the left	Z_1	5 cm * (minimum distance)
	Z_2	Adjustable
		* 30 cm for "Z picking" variant

The truck always maintains a distance (X_1) of at least 50 cm from the rack contour on the side of the roadway to which the truck is aligned. This corridor is intended to ensure the safety of persons in the working environment. For safety reasons, it is recommended that a minimum distance of 50 cm is set for **both** sides of the truck (X_1, Z_1).

If a lateral distance (Z) of less than 50 cm is set on the opposite side of the roadway to

https://truckmanualshub.com/

which the truck is aligned, suitable protective measures may be required.

Suitable protective measures may include:

- Floor markings
- Warning signs

Customer-specific configuration by the authorised service centre

The authorised service centre can configure ASSISTANCE mode to suit the specific application conditions. Amongst other things, the following parameters can be set:

- "Alternating order picking" mode (support when frequently changing sides within the aisle)
- Dynamic and maximum speed of the drive programs
- Start/stop positions when transporting several pallets in succession
- Duration of the run-on time (robotics system) after the truck has been switched off
- Minimum distance to the racking in ASSISTANCE mode
- Minimum width of a crosswise roadway (crosswise roadway detection)
- Minimum lateral distance to any obstacles in the roadway
- Minimum distance to trucks ahead, with overhang
- Preferred truck alignment
- Adaptation to the fork length of the truck
- Automatic approach after losing track of the position of the operator (only the side to which the truck is aligned/both sides)

https://truckmanualshub.com/

Copyright clause for open-source programs

STILL uses open source software to operate the iGo neo as licensed by the owners of the respective rights. The used open source software can be made available for general use, however **excluding any liability**. This exclusion of liability includes implicit warranty of marketability or suitability of the software for a particular use. For more details, please refer to the individual license documents.

On request, the license text can be made available in print.

For further information please contact us:

`www.still.de/igo-licence`

Roadways

Requirements for the ground conditions of roadways

The truck is equipped with running wheels and drive wheels made from Vulkollan. The ground conditions of roadways affect the length of the braking distance (e.g. when performing an emergency stop) and therefore also have implications for the safety of persons and equipment.

The roadways on which the iGo neo will be used must be sufficiently flat, provide sufficient grip (good roughness properties) and offer sufficient load-bearing capacity. The requirements for the ground conditions correspond to the requirements for the series-production truck.

– Contact your authorised service centre if you are unsure about the correct conditions for the ground.

Suitable roadways

In `ASSISTANCE` mode, the truck must only be used on suitable roadways:

https://truckmanualshub.com/

The requirements for roadways described in the original operating instructions of the series-production truck also apply to trucks with the additional ASSISTANCE mode of operation.

In addition, the following provisions apply:

Additional requirements for roadways suitable for the ASSISTANCE mode of operation

DANGER

Risk of accident due to dirty roadways

Roadways must always be kept clean. Contamination resulting from moisture, oils, greases, dust, chips etc. can cause faults and reduce safety.

- Always keep roadways clean.
- For roadways, do not use any cleaning materials or care products that smooth the surface.

DANGER

Risk of accident from sloping edges and gradients on or in the roadway

In ASSISTANCE mode, the truck does not check the roadway for height differences, e.g. on sloping edges, steps, platforms, ramps and gradients. The truck will tip or fall over.

- Maintain a safe distance away from height differences on or in the roadway when the truck is in ASSISTANCE mode.
- Always cover difficult roadways in MANUAL mode.

Roadways must be free of impairments, such as holes, troughs or damage to the surface of the roadway.

The roadways must be free of sloped sections.

Information about the documentation

Validity of this supplement to the operating instructions

This supplement to the operating instructions applies in addition to the existing operating instructions for the series-production truck and both are to be considered as the original

https://truckmanualshub.com/

operating instructions. The operational and safety information in the standard operating instructions continues to be valid in its entirety unless it is specifically countermanded in this supplement to the operating instructions.

DANGER

Risk of accident!

It is essential that information in this supplement to the operating instructions that differs to the information in the operating instructions for the series-production truck is observed!

Storing the operating instructions

This supplement to the operating instructions must be kept with the operating instructions for the series-production truck so that operators and the operating company can access these instructions at any time. If the operating instructions are lost, the operating company must obtain a replacement from the manufacturer immediately. The operating instructions are included in the spare parts list and can be reordered as a spare part.

Sufficient quantities of the documentation must also be made available for staff training purposes.

Issue date and topicality of the operating instructions

The issue date of these operating instructions can be found on the title page.

STILL is continuously working to enhance and improve the trucks. These instructions are subject to change, and any claims based on the information and/or illustrations contained in these operating instructions cannot be asserted.

If you require technical support for the truck, please contact the authorised service centre.

Copyright and trademark rights

These instructions must not be reproduced, translated or made accessible to third par-

https://truckmanualshub.com/

ties—including as excerpts—except with the express written approval of the manufacturer.

Explanation of information symbols used

DANGER

Indicates procedures that must be strictly adhered to in order to prevent the risk of fatalities.

WARNING

Indicates procedures that must be strictly adhered to in order to prevent the risk of injuries.

CAUTION

Indicates procedures that must be strictly adhered to in order to prevent material damage and/or destruction.

NOTE

For technical requirements that require special attention.

ENVIRONMENT NOTE

To prevent environmental damage.

Information for two-page PDF display

▷

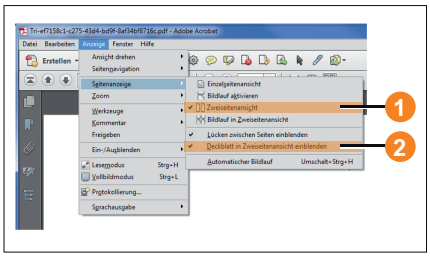

These operating instructions are optimised for both printing and for on-screen display.

The document contains double pages, with the illustrations on one side and the instructions shown in a table on the other side. To ensure that this arrangement is shown correctly on your screen, please set the following options in your PDF program:

View/Page Display

- Two Page View `ACTIVE`(1)
- Show Cover Page in Two Page View `ACTIVE`(2)

https://truckmanualshub.com/

Environmental considerations

Disposing of components used for ASSISTANCE mode

The instructions for environmentally friendly disposal of truck components that are specified in the operating instructions for the series-production truck also apply to components used for `ASSISTANCE` mode.

Disposing of the remote control and battery charger

Once they are deemed obsolete, the radio remote control and the battery charger must be scrapped in a collection point for hazardous waste.

NOTE

Batteries that are no longer in use must be collected in appropriate containers.

https://truckmanualshub.com/

https://truckmanualshub.com/

2

Safety

https://truckmanualshub.com/

Definition of terms used for responsible persons

Duties of the operating company

The operating company is the natural or legal person or group who uses the truck or on whose authority the truck is used.

The operating company must ensure that the truck is only used for its intended purpose and in compliance with the safety regulations in these operating instructions and the operating instructions for the series-production truck.

The operating company must ensure that all users read and understand the safety information in these operating instructions and in the operating instructions for the series-production truck. Both sets of operating instructions must be accessible to the truck operator at all times.

The operating company is responsible for scheduling and correctly performing regular safety inspections, including safety inspections on the components used for ASSISTANCE mode.

The requirements for the operating company—as well as the rights, duties and rules of behaviour of the operating company—as described in the operating instructions of the series-production truck also apply to trucks with the additional ASSISTANCE mode of operation.

In addition, the following provisions apply:

- As part of safety training, the operating company must instruct the operator on how to handle the truck in ASSISTANCE mode. This information applies in particular for the different methods of handling the truck in the MANUAL and ASSISTANCE modes of operation.
- The operating company must instruct all affected personnel in the safe handling of a truck in ASSISTANCE mode.
- The operating company is responsible for ensuring the safe condition of roadways (refer to the chapter entitled "Suitable roadways").
- The operating company must ensure that the truck is only operated by persons

https://truckmanualshub.com/

who have been trained in the handling of ASSISTANCE mode.

The operating company must observe the national regulations, laws and accident prevention regulations.

Duties of the operator

The operator is the person who drives the truck in MANUAL mode or ASSISTANCE mode.

The requirements for the driver—as well as the rights, duties and rules of behaviour of the driver—as described in the operating instructions of the series-production truck also apply to the operator of trucks with the additional ASSISTANCE mode of operation.

As part of safety training, the operator must receive instruction from the operating company on how to handle the truck in ASSISTANCE mode.

In addition, the following provisions apply:

Special responsibility of the operator for the remote control

The operator must never leave the remote control unattended when performing their work and must never give the remote control to anyone else. The remote control may only be operated by the operator.

When the truck is switched on, the remote control must be kept in a safe place to prevent unintentional operation. The remote control can be operated unintentionally, e.g. if it is carried in a trouser pocket / jacket pocket, or if objects are placed on top of the remote control. While operating the truck, the remote control must always be kept in the supplied holder.

Once work has been completed, the operator must ensure that the remote control cannot be accessed by unauthorised persons.

https://truckmanualshub.com/

Additional requirements applicable to the authorised service centre

Work on components used for ASSISTANCE mode must only be performed only by the service centre authorised by the manufacturer.

The service engineer must have received special training from the manufacturer regarding the handling processes, technology and repair work involved with the iGo neo. It is not permitted for other persons to perform work on the components used for ASSISTANCE mode. This instruction does not apply to cleaning procedures on components that are not located inside the truck; refer to the chapter entitled "Cleaning".

The following components are used for ASSISTANCE mode:

- Safety laser scanner
- Movement tracking sensors
- Control components
- Control electronics and control software
- Emergency off switches
- LED signalling unit
- Switches
- Remote control

Specialist

A qualified person is defined as a service engineer or a person who fulfils the following requirements:

- A completed vocational qualification that demonstrably proves their professional expertise. This proof should consist of a vocational qualification or a similar document.
- Professional experience indicating that the qualified person has gained practical experience of industrial trucks over a proven period during their career During this time, this person has become familiar with a wide range of symptoms that require checks to be carried out, such as based

https://truckmanualshub.com/

on the results of a hazard assessment or a daily inspection

- Recent professional involvement in the field of the industrial truck test in question and an appropriate further qualification are essential. The qualified person must have experience of carrying out the test in question or of carrying out similar tests. Moreover, this person must be aware of the latest technological developments regarding the industrial truck to be tested and the risk being assessed

Basic principles for safe operation

Modifications and retrofitting

If the truck needs to be converted or retrofitted for work that is not listed in these operating instructions or in the operating instructions for the series-production truck, approval from the manufacturer must be obtained in advance. Any modifications to the construction can impair the safety of the truck in ASSISTANCE mode and cause accidents.

Modifications to components used for ASSISTANCE mode may be carried out only with the specific approval of the manufacturer. Approval from the relevant authority must be obtained where applicable. If modifications are carried out without the required approval, the CE declaration of conformity provided by the manufacturer is invalidated.

In particular, the following are not permitted:

- Modifications to components used for ASSISTANCE mode (safety laser scanner, movement tracking sensors, control components, control electronics and control software, emergency off switches, LED signalling unit, switches and remote control)
- Use of attachment parts (e.g. headlights) on the truck. Attachment parts may be fitted only with the approval of the manufacturer as attachment parts can impair the safety functions of the truck. Approved attachment parts must not project beyond the contour of the truck

https://truckmanualshub.com/

- Use of fork extensions on the truck
- Modifications to the fork spacing

Modifying the truck parameters

DANGER

Risk of accident as a result of all safety functions being lost

Modifications by unauthorised persons to the parameters used by safety devices are forbidden.

Modifications to the truck parameters or component parameters may be performed exclusively by qualified personnel at the manufacturer who have been trained to complete this work! All modifications must be documented.

Warning regarding non-genuine parts

Genuine parts, components and accessories, including for ASSISTANCE mode, are specially designed for this truck. We specifically draw your attention to the fact that parts, components and attachments and accessories supplied by other companies have not been tested and approved by STILL.

CAUTION

Installation and/or use of such products may therefore have a negative impact on the design features of the truck and thereby impair active and/or passive driving safety in certain circumstances.

Only the authorised service centre may perform work on the components used for ASSISTANCE mode. The manufacturer accepts no liability for any damage caused by the use of non-genuine parts and accessories without approval.

Damage, defects and misuse of safety systems

The operator must report any damage or other defects in components used for ASSISTANCE mode to the supervisory personnel immediately. The truck must only be operated in MANUAL mode until the problem is

https://truckmanualshub.com/

completely resolved. Components used for ASSISTANCE mode include the safety laser scanner, movement tracking sensors, control components, control electronics and control software, emergency off switches, LED signalling unit, switches and remote control.

Trucks that are not safe for operation or for use on the road must not be used until they have been properly repaired.

Do not remove or deactivate safety systems and switches.

The contractually agreed set values for ASSISTANCE mode may be changed only by qualified personnel at the manufacturer who have been trained to complete this work.

Work on the electrical system (e.g. additional headlights) is only permitted with the manufacturer's written approval. All work carried out on the electrical system must be documented.

Medical equipment

⚠ WARNING

Electromagnetic interference may occur on medical devices!

Only use equipment that is sufficiently protected against electromagnetic interference.

Medical equipment, such as pacemakers or hearing aids, may not work properly when the truck is in operation.

– Ask your doctor or the manufacturer of the medical equipment to confirm that the medical equipment is sufficiently protected against electromagnetic interference.

Residual risk

Residual dangers, residual risks

Despite working carefully and complying with directives and standards, the possibility of other dangers occurring when operating the truck in ASSISTANCE mode cannot be entirely excluded.

https://truckmanualshub.com/

Residual risk

The system components used for ASSISTANCE mode comply with current safety requirements. Nevertheless, there remains a degree of residual risk, even when the truck is used for its intended purpose and all instructions are followed.

Even beyond the narrow danger area of the truck itself, a residual risk cannot be excluded when operating the truck in ASSISTANCE mode. Persons and drivers of other trucks must exercise a heightened degree of awareness regarding the truck, so that they can react immediately in the event of any malfunction, incident or breakdown etc.

⚠ WARNING

All persons that are in the vicinity of the truck must be instructed regarding the dangers that arise from a truck operating in ASSISTANCE mode.

In addition, we draw attention to the safety regulations given in these operating instructions.

Additional risks that may arise when operating the truck in ASSISTANCE mode include:

- Risk of accident due to obstructed or blind roadways
- Risk of accident due to poor operator visibility over the working area
- Risk of accident due to an unsuitable working environment that the scanner cannot detect, e.g. operation in unsuitable warehouse aisles
- Risk of accident as a result of objects protruding into the driving area that the safety laser scanner cannot detect (e.g. obstacles above or below the scanner range)
- Accidental operation of the remote control by the operator, e.g. if the remote control is carried in a trouser pocket / jacket pocket, or if objects are placed on top of the remote control
- Risk of accident at bottlenecks (e.g. narrowed aisles, obstacles on the roadway) if a small safety distance is parameterised on the opposite side of the roadway to which the truck is aligned
- Human error resulting from failure to observe the safety regulations

https://truckmanualshub.com/

- Unrepaired damage or faulty and worn components
- Work performed on components in the system by unauthorised persons
- Insufficient maintenance and testing of safety components
- Testing intervals for safety components exceeded
- Risk of accident if the truck automatically starts moving again after an emergency stop when operating in `ASSISTANCE` mode

The manufacturer accepts no responsibility for accidents involving the truck caused by the failure of the operating company or the operator to note these risks either intentionally or due to lack of care.

Overview of hazards and counter-measures

NOTE

This table is designed to help operators evaluate the hazards present in `ASSISTANCE` *mode. It does not claim to be complete.*

– Observe the national regulations for the country in which the truck is being used.

Hazard	Course of action	Check note √ Complete - Not applicable	Notes
For transport systems with an assistance system for driverless operation			
Roadway quality inadequate	Clean/clear roadways	O	BetrSichVO (Workplace Safety Ordinance)
Load-carrying equipment incorrect; load could slip	Reposition load on pallet	O	BetrSichVO (Workplace Safety Ordinance)
Unpredictable driving behaviour	Employee training	O	BetrSichVO (Workplace Safety Ordinance)

https://truckmanualshub.com/

Hazard	Course of action	Check note √ Complete - Not applicable	Notes
Roadways blocked or (temporarily) closed	Mark roadways Keep roadways clear	O	BetrSichVO (Workplace Safety Ordinance)
Roadways intersect in a mix of ASSISTANCE / MANUAL mode	Announce right-of-way rule	O	BetrSichVO (Workplace Safety Ordinance)
No person detection in ASSISTANCE mode	Employee training	O	BetrSichVO (Workplace Safety Ordinance)
Obstacles such as ladders and working platforms within the movement area of the truck, e.g. for performing repair or maintenance work in the aisle	Close off roadways to the affected movement or working areas using cones. There must be no driverless trucks in the closed-off area.	O	BetrSichVO (Workplace Safety Ordinance)
Obstacles that are crosswise to the roadway or that protrude into the roadway that cannot be detected by the safety systems on the truck.	Employee training	O	BetrSichVO (Workplace Safety Ordinance)
Bottlenecks (e.g. narrowed aisles, obstacles on the roadway) if a small safety distance is parameterised on the opposite side of the roadway to which the truck is aligned.	Employee training Suitable protective measures in the vicinity of bottlenecks may include: – Floor markings – Warning signs	O	BetrSichVO (Workplace Safety Ordinance)

Danger to employees when ASSISTANCE mode is used

According to the German Ordinance on Industrial Safety and Health (BetrSichV) and labour protection law (ArbSchG), the operating company must determine and assess hazards during operation, and establish the labour protection measures required for employees (BetrSichVO). This investigation must also include any hazards that arise as a result of using ASSISTANCE mode. The operating company must therefore draw up appropriate operating instructions (§ 6 ArbSchG) and make them available to the operator. A responsible person must be appointed.

https://truckmanualshub.com/

NOTE

Please note the definition of the following responsible persons: "operating company" and "operator".

The construction and equipment of the truck correspond to the Machinery Directive 2006/42/EC and are therefore marked with CE labelling. These elements are therefore not included in the hazard assessment. Attachments possess their own CE labelling and likewise are not included for that reason. However, the operating company must select the type and equipment of the truck so as to comply with the local provisions for deployment.

The result must be documented (§ 6 ArbSchG). In the case of applications involving similar hazard situations, it is permitted to summarise the results. The overview in the chapter entitled "Overview of hazards and countermeasures" provides advice on complying with this regulation. The overview specifies the primary hazards that, in the event of non-compliance, are the most frequent causes of accidents. If other major hazards are present as a result of the specific operating conditions, these hazards must also be taken into consideration.

The conditions of use for the truck are broadly similar in many plants, so the hazards can be summarised in one overview. Observe the information provided by the relevant employers' liability insurance association on this subject.

Safety tests

Regular safety inspection of the truck

Safety inspection based on time and extraordinary incidents

The operating company must ensure that the entire truck is inspected by a qualified person at least once a year or after unusual incidents.

As part of this inspection of the entire truck, the condition and function of the components

https://truckmanualshub.com/

used for ASSISTANCE mode must also be checked.

These components (safety laser scanner, movement tracking sensors, control components, emergency off switch, LED signalling unit, switches and remote control) must only be inspected by the authorised service centre. The person performing the inspection in the authorised service centre must have sufficient knowledge and experience to be able to assess the condition of the truck and the effectiveness of the devices according to technical conventions and the principles for testing industrial trucks.

A test log must be created, with the date specified. The results of the inspection must be retained at least until a further two inspections have been carried out.

The operating company is responsible for ensuring that any faults on these components are rectified without delay by the authorised service centre.

Emissions

NOTE

The emissions values correspond to the values listed in the standard operating instructions.

https://truckmanualshub.com/

3

Components of the iGo neo

https://truckmanualshub.com/

Overview of components used for ASSISTANCE mode

1 LED signalling unit
2 Movement tracking sensors (left and right-hand side of the truck)
3 Additional emergency off switches (left and right-hand side of the truck)
4 Assistance button (on switch/two-way switch for ASSISTANCE mode; left and right-hand side of the truck)
5 Driver's platform (for switching between movement tracking modes ACTIVE/PAUSED)
6 Two-way switch for drive programmes in ASSISTANCE mode (hare/tortoise buttons)
7 Safety laser scanner

https://truckmanualshub.com/

LED signalling unit

Signals from the inner lighting zone on the LED signalling unit ▷

The inner zone (1) provides information on:

- Whether ASSISTANCE mode is switched on/switched off
- Emergency stops

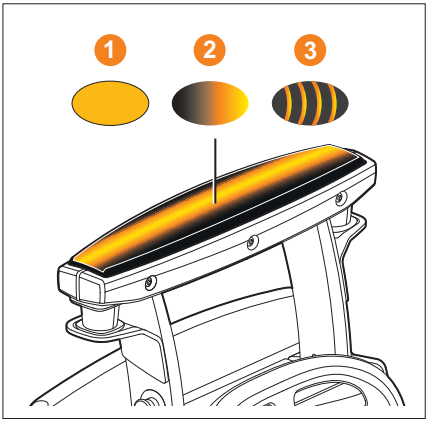

Signal	Truck function signalled	Description
(1) - Lighting zone remains permanently lit	Truck in ASSISTANCE mode	• Movement tracking set to ACTIVE or PAUSED • The operator has exited the driver's compartment
(2) - Lighting zone pulsates slowly (approx. once per second)	Truck in MANUAL mode	• Movement tracking is not active • Operator is in the driver's compartment and is operating the truck manually
(3) - Light signal flashes quickly (approx. 10 x per second)	Emergency stop	Truck is stationary, triggered by the safety laser scanner or by pressing the emergency off switch

https://truckmanualshub.com/

Signals from the outer lighting zone on the LED signalling unit

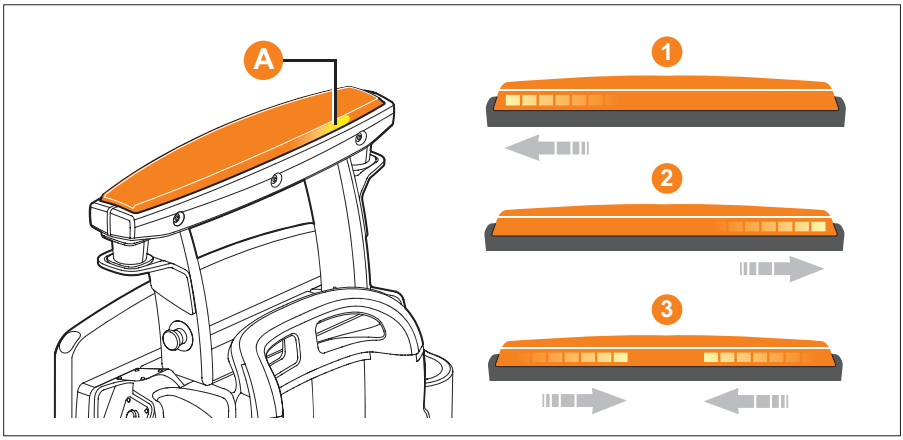

A light spot (A) in the outer rotating zone shows the selected truck alignment to the racking. The remote control allows the truck alignment to be set to RIGHT, LEFT or CENTRE.

Signal	Truck function signalled	Description
(1) - Light spot moves to the left along the lighting zone	Truck alignment LEFT	Truck maintains a constant distance to the rack contour on the left
(2) - Light spot moves to the right along the lighting zone	Truck alignment RIGHT	Truck maintains a constant distance to the rack contour on the right
(3) - Light spot moves towards the centre along the lighting zone	Truck alignment CENTRE	Truck moves in the centre between the two rack contours
Truck alignment (1, 2, 3)**plus** "PAUSED" LED signal for the movement-tracking sensors	Waiting in front of an intersec-tion or rack end	Drive the truck manually to the next rack contour that the truck can detect

https://truckmanualshub.com/

Movement tracking sensors

Function of the movement tracking sensors

Using the sensors, the truck identifies and tracks the position of the operator.

The two movement tracking sensors (1) detect the area around the truck at a height of 135 cm. The sensors follow the position of the operator in a line-of-sight radius of max. 15 m. The light from the sensors (infrared laser scanner) is not dangerous for the human eye.

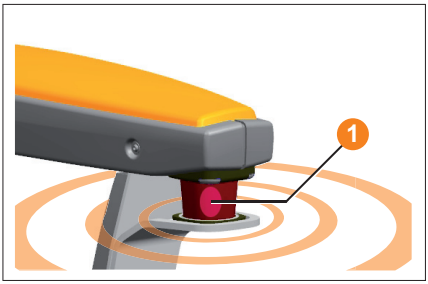

LED signals from the movement tracking sensors

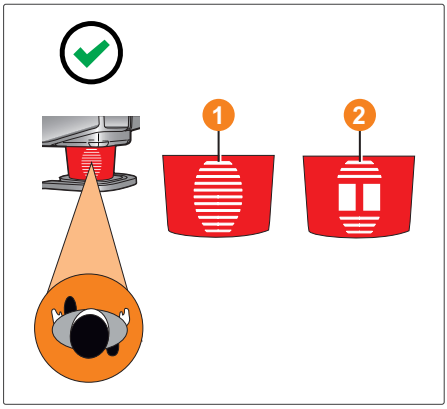

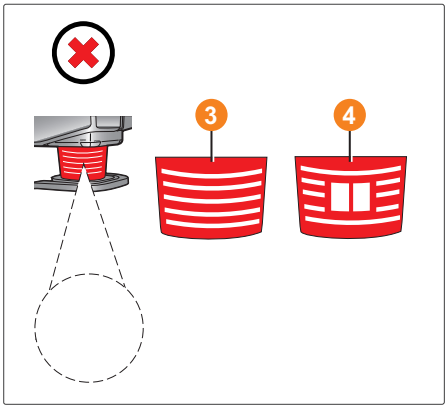

The indicator LEDs on the movement tracking sensors inform the operator about the status of the movement tracking system.

(1) "Operator detected/ACTIVE" signal	Information
The "Eye" icon (1) is displayed.	Operator detected.
	Movement tracking system ACTIVE.
	The truck follows the operator automatically.
	The icon always points toward the operator and follows the position of the operator. This indicates to the operator that the movement tracking system is focused on him.

https://truckmanualshub.com/

(2) "Operator detected/PAUSED" signal	Information
The "paused icon" (2) is displayed within the current "eye" icon.	Operator detected.
	Movement tracking system PAUSED.
	The truck remains stationary or stops.
	The icon always points toward the operator and follows the position of the operator. This indicates to the operator that the movement tracking system is focused on him.

(3) "Operator not detected" signal	Information
The "lines" icon (3) is displayed.	Operator currently not detected or position lost.
	The truck remains stationary or stops.
	As soon as the system detects the operator again, movement tracking is ACTIVE again. The truck follows the operator again without further intervention.
	If the operator is not detected for more than 30 seconds, the truck switches to "Operator not detected/PAUSED"
	If necessary, refocus the movement tracking system back onto the operator using the assistance button.

(4) "Operator not detected/PAUSED" signal	Information
The "paused icon" (4) is displayed within the current "lines" icon.	Operator currently not detected or position lost.
	The truck remains stationary.
	As soon as the system detects the operator again, the display changes to "Operator detected/PAUSED".
	If necessary, refocus the movement tracking system back onto the operator using the assistance button.

https://truckmanualshub.com/

Safety laser scanner

Function of the safety laser scanner

The safety laser scanner (1) is part of the safety concept for driverless navigation.

The safety laser scanner checks the roadway for obstacles while the truck is in motion.

- If the scanner detects an obstacle on the side of the roadway to which the truck is aligned, the truck automatically drives around the obstacle. The truck then continues on its path.
- If an obstacle is too large to drive around, the truck will stop. The truck will then continue on its path as soon as the obstacle is removed.
- If an obstacle enters the protective field of the safety laser scanner, the truck performs an emergency stop.

The safety laser scanner detects the rack contour and the surrounding environment.

- Using the spatial data, the truck can automatically follow the operator along the rack contour.

The safety laser scanner poses no risk of damaging the human eye.

Size and location of the monitored area

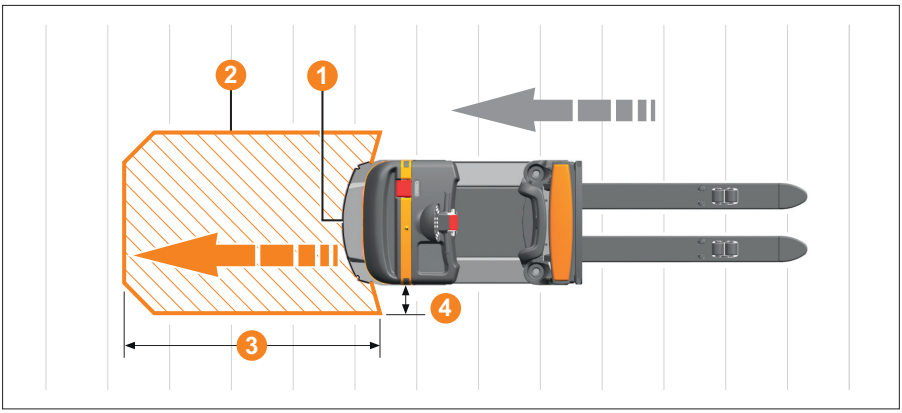

https://truckmanualshub.com/

The safety laser scanner (1) monitors the area (2) in front of the truck.

- In the drive direction, the size of the monitored range depends on the current speed. At higher speeds, the monitored area (3) in front of the truck also increases.
- The monitored area at the side (4) extends beyond the truck contour.

Limits to the detection of obstacles

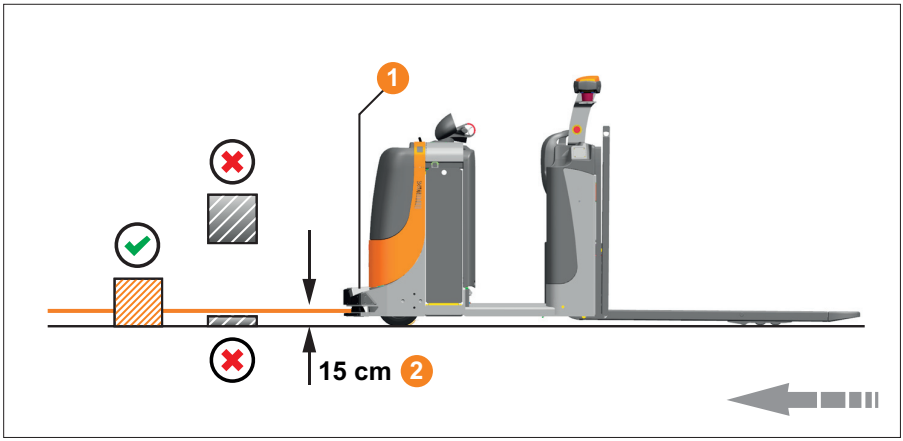

Detection of obstacles

✓ Can be detected by the safety laser scanner

✗ Cannot be detected by the safety laser scanner

(1) Safety laser scanner
(2) **15 cm** scanning height of the safety laser scanner

DANGER

Danger of collisions with obstacles that the safety laser scanner cannot detect.

This chapter outlines the limits of the iGo neo in detecting obstacles.

– Check the roadway above all for obstacles that the safety laser scanner cannot detect and remove these obstacles.
– If there is a risk of danger, press one of the emergency off switches on the truck. The truck will immediately come to a standstill.

While the truck is in motion, the safety laser scanner horizontally scans the area in front

https://truckmanualshub.com/

of the truck. The scanning height is approx. 15 cm (position (2) on the illustration).

The safety laser scanner detects stationary objects on the ground that have the following minimum dimensions (✓ on the illustration):

- Diameter: at least 70 mm in scanning height (on the side facing the safety laser scanner)
- Height: at least 200 mm

If the safety laser scanner does not detect an obstacle because these required dimensions do not apply, the truck could ram the obstacle.

For this reason, it is necessary to pay special attention to the following obstacles (✗ on the illustration):

- Obstacles that are too flat to be detected by the safety laser scanner
- Obstacles that do not reach down to the floor

Obstacles of this nature could include:

- The load on a pallet that protrudes into the roadway above the scanning height of the safety laser scanner
- A bar in a rack that protrudes into the roadway above the scanning height of the safety laser scanner
- Hand pallet trucks and their tillers, or the forks of trucks
- A cable that hangs crosswise to the roadway
- Ladders and mobile workshop hoists that protrude into the roadway
- An object that is too small or too narrow to be detected by the safety laser scanner (e.g. a narrow rack support or the leg of a chair)

https://truckmanualshub.com/

Overhang for obstacles

If the iGo neo is used in the vicinity of trucks or objects with an overhang (1), an increased safety distance is required.

The authorised service centre can set a safety distance, (X), which takes the overhang of trucks or objects into account.

▷

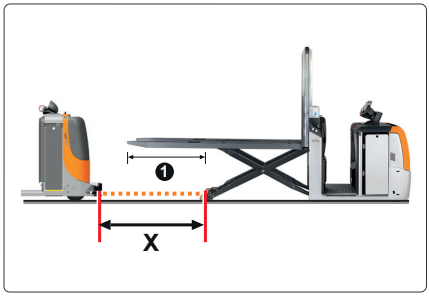

https://truckmanualshub.com/

Assistance button

Functions of the assistance button ▷

1 Assistance button on the truck

Function in ASSISTANCE mode

Truck is stationary	Assistance button
Identify and track the operator (Movement tracking PAUSED ➡ ACTIVE)	Press 1 x **briefly**
Pause movement tracking (Movement tracking ACTIVE ➡ PAUSED)	Press 1 x **long** (2 sec.)

Truck is in motion	Assistance button
Stop the truck (Movement tracking ACTIVE ➡ PAUSED)	Press 1 x **briefly**

Function in MANUAL mode

Switch on `ASSISTANCE` mode initially	Press 1 x **briefly**

https://truckmanualshub.com/

Emergency off switch

Additional emergency off switches

The truck is equipped with additional emergency off switches (1) (left and right-hand side of the truck).

– In the event of imminent danger to people, the load or the truck, press one of the emergency off switches immediately. This is the fastest way to bring the truck to a standstill.

When the emergency off switch is pressed, the truck performs an emergency stop (refer to the chapter entitled "Truck behaviour in the event of an emergency stop").

1 Additional emergency off switches (left and right-hand side of the truck)

https://truckmanualshub.com/

Remote control

Functions of the remote control

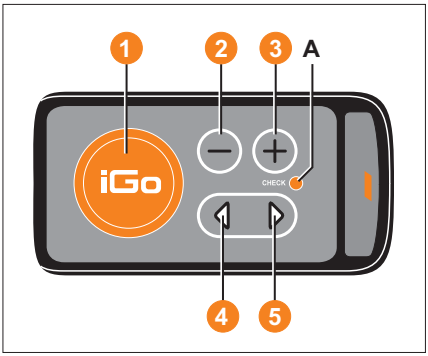

Switching the remote control on and off

The remote control does not have to be switched on and off manually.

The remote control switches on automatically

- As soon as one of its buttons is pressed

The remote control switches off automatically

- If the truck is switched off using the on/off switch in the cockpit and the run-on time set for the robotic system has expired (3 minutes; this can be set by the authorised service centre)
- If the battery male connector is disconnected

NOTE

The "Check" (A) indicator light shows that the remote control is connected to the truck by flashing continually.

Operating movement tracking

	Truck is stationary	iGo button
1	Identify and track the operator (Movement tracking PAUSED ➡ ACTIVE)	Press 1 x **briefly**
	Pause movement tracking (Movement tracking ACTIVE ➡ PAUSED)	Press 1 x **briefly**

	Truck is in motion	iGo button
1	Stop the truck (Movement tracking ACTIVE ➡ PAUSED)	Press 1 x **briefly**

Driving automatically without movement tracking

	Function	iGo button	Information
1	The truck is travelling along the rack contour automatically	Press and hold (>2 sec.)	Can only be executed with "movement tracking PAUSED"

https://truckmanualshub.com/

Setting the truck position

	Function	iGo button	Information
2	Move the truck position to the next pallet (in the direction of the load side)	Press 1 x long (2 sec.)	Can only be executed with "movement tracking PAUSED"
3	Move the truck position to the next pallet (in the direction of the drive side)	Press 1 x long (2 sec.)	Can only be executed with "movement tracking PAUSED"

Setting the truck alignment

	Function	iGo button	Information
4	Switch the truck alignment in sequence (LEFT▸ MIDDLE▸ RIGHT▸ LEFT etc.)	Push once briefly	Can only be executed when the truck is stationary.
5	Switch the truck alignment in sequence (RIGHT▸ MIDDLE ▸ LEFT ▸ RIGHT etc.)	Push once briefly	Can only be executed when the truck is stationary.

https://truckmanualshub.com/

Charging the remote control

Discharge indicator on the remote control ▷

The charging state of the battery is displayed by the "Check" indicator light (1).

If the battery is charged, the "Check" indicator light flashes quickly (lights up once per second).

If the battery capacity is close to the lower limit, the "Check" indicator light flashes slowly (lights up once every two seconds). This happens for approx. 10 minutes before the remote control automatically switches off.

If the battery charge is no longer sufficient to ensure that commands are reliably transmitted, the remote control remains switched off. Keeping the remote control charged prolongs the life cycle of the rechargeable batteries.

https://truckmanualshub.com/

Charging process

NOTE

The rechargeable batteries are permanently installed in the remote control. In the event of a malfunction, do not force the remote control open. Notify the authorised service centre.

Rechargeable batteries are installed in the remote control (1) that can be recharged using the appropriate battery charger (2). When using the battery charger, the charging state of the rechargeable batteries is displayed by the "Power"(3) and "Status"(4)indicator lights.

As far as possible, the remote control must be charged without interruption and at a room temperature of between +0°C and +45°C.

– Connect the supplied power supply unit to the battery charger.

– Connect the power supply unit to the socket. The "Power" indicator light is switched on.

– Insert the remote control into the battery charger and press down until the remote control snaps firmly into place in the battery charger. Charging of the rechargeable batteries then starts. Inserting the remote control into the battery charger ends any radio communication with the truck that may still be active.

The rechargeable batteries are charged in two phases.

1. First phase (quick charge)
- "Power" indicator light off, "Status" indicator light on
- Duration: 2–3 hours
- Charge capacity once finished: 90%

2. Second phase (slow charge)
- "Power" indicator light on, "Status" indicator light on
- Duration: 1–2 hours
- Charge capacity once finished: 100%

At very high (above 45°C) or very low (below 0°C) temperatures, charging is interrupted in order to protect the batteries. To indicate such instances, the "Power" indicator light is

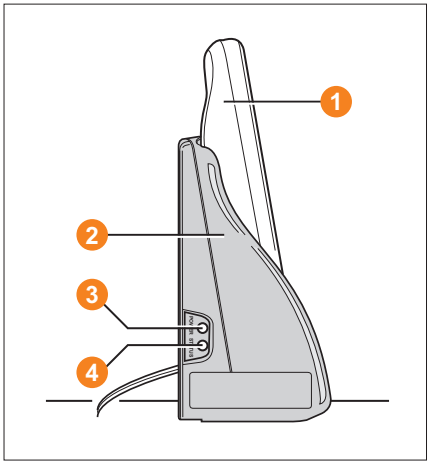

1 Remote control
2 Battery charger
3 "Power" indicator light for the charger
4 "Status" indicator light for the charger

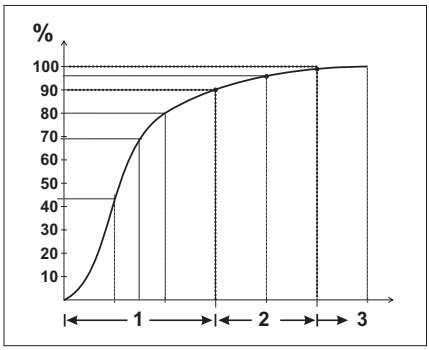

Charging phases of the remote control
1 1. Phase (2–3 hours)
2 2. Phase (1–2 hours)
3 Charging complete

https://truckmanualshub.com/

switched on and the "Status" indicator light is switched off. Charging resumes as soon as the temperature returns to within the safety limits.

– Only store the remote control for a prolonged period when the rechargeable batteries are fully charged. If the remote control is not used for an extended period of time and the rechargeable batteries are nearly empty, the service life of the remote control can be significantly reduced.

Maximum operating time of remote control when the battery is fully charged

The maximum operating time of the remote control when the battery is fully charged is approx. 50 hours (at 20°C).

Changing the remote control

Each remote control has a unique pairing code that is defined by the manufacturer. Remote controls are only able to control the truck if the relevant pairing code has been recognised by the receiving unit. This prevents non-registered remote controls from accessing the truck.

If a truck is to be controlled using a new or additional remote control, the pairing code for the remote control must first be saved in the receiving unit on the truck.

Each receiving unit can save a maximum of 20 pairing codes. If there are already 20 pairing codes present and more codes need to be saved, all existing pairing codes must first be deleted. Individual pairing codes cannot be deleted from the memory of the receiving unit.

If multiple remote controls that are registered to a truck attempt to access the truck simultaneously, the remote control that first made contact with the truck retains control. Other remote controls do not receive access until the first remote control has stopped transmitting.

https://truckmanualshub.com/

Registering a new or additional remote control on the truck

Registration must be performed in accordance with the supplied operating instructions from the manufacturer of the remote control.

– Contact the authorised service centre to register a remote control on the truck.

https://truckmanualshub.com/

4

Operating the iGo neo

https://truckmanualshub.com/

Checks and tasks to be carried out when commencing ASSISTANCE mode

Safety information related to using this mode

⚠ WARNING

Damage or other defects to the components used for ASSISTANCE mode can result in accidents.

If damage or other defects are identified on the components during the following inspections, the truck must not be used until it has been properly repaired. Do not open, remove or deactivate components for ASSISTANCE mode. Do not change any predefined set values.

– Report defects to the supervisory personnel.

Visual inspection before switching on ASSISTANCE mode

Before commencing ASSISTANCE mode, the operator must ensure that the components used for ASSISTANCE mode are safe for operation:

- The hoop guard on the front of the truck that protects the safety laser scanner against mechanical damage must be undamaged. The alignment and the scanner's field of vision must not be impaired
- The mountings for the movement tracking sensors must not be damaged. The alignment of the sensors must not be impaired
- The LED signalling unit and its mountings must not be damaged
- The optics covers (windows) in front of safety laser scanner and the movement tracking sensors must be free of dirt, scratches and damage. This is important to ensure that the sensor system can function correctly
- All covers must be present and sealed
- The remote control for ASSISTANCE mode must be undamaged and must be charged. The remote control must be carried in the supplied holder when operating in ASSISTANCE mode, to protect the remote control and to prevent operating errors

https://truckmanualshub.com/

– Report defects to the supervisory personnel. Do not use the truck until it has been properly repaired

Visual inspection and brake test after switching on ASSISTANCE mode

Safety brake test after switching on ASSISTANCE mode

After switching on ASSISTANCE mode, a check must be performed to ascertain whether the truck automatically stops in front of an obstacle.

– Stop the truck in front of an unobstructed, straight section of roadway.

– Place a suitable test object (with an edge length and height of at least 20 cm) one metre in front of the truck.

– Move off the driver's platform and move the truck using the remote control so that it approaches the test object.

The truck must automatically come to a standstill just in front of the obstacle. Once the truck stops, the LED signalling unit and the warning buzzer emit the "Emergency stop" signal.

– Report defects to the supervisory personnel and do not use the truck until it has been properly repaired.

Visual inspections after switching on ASSISTANCE mode

After switching on ASSISTANCE mode, the operator must check the following truck functions during operation:

- During operation, check that the truck responds correctly to entries made with the remote control.
- During operation, check that the warning signals and information signals function in ASSISTANCE mode.

The signals are part of the safety concept of the truck. These signals provide important information for people in the working area

https://truckmanualshub.com/

as they indicate that there is a driverless truck close by. The signals will help to avoid accidents.

– For details on the information and warning signals in ASSISTANCE mode, refer to the chapter entitled "Information and warning signals in ASSISTANCE mode".

– Report defects to the supervisory personnel and do not use the truck until it has been properly repaired.

https://truckmanualshub.com/

Safety regulations in ASSISTANCE mode

Instructions for safe operation of the truck

Wear safety shoes

In the interest of safety, the operator and people in close proximity to the truck must wear work safety shoes while the truck is being operated.

Risk of crushing feet

DANGER

Risk of feet being crushed by the fork of the truck

When the truck moves off in ASSISTANCE mode or when lowering the load, feet can be crushed if they project beneath the forks.

- Keep your feet a safe distance away from the forks. Pay attention to the warning sound from the truck when the truck moves off in ASSISTANCE mode.
- Wear work safety shoes.

Risk of accident from crossing the roadway immediately in front of the truck

▷

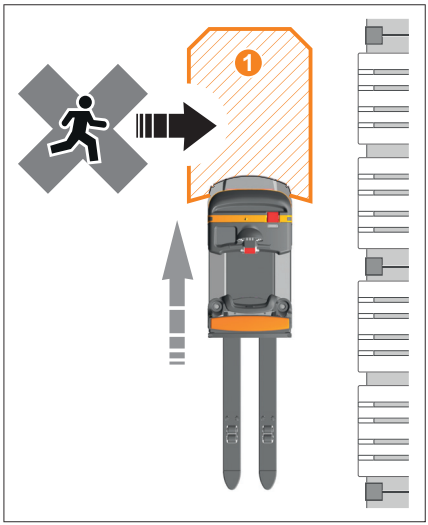

DANGER

Danger for people or objects that quickly cross the roadway immediately in front of the truck.

The safety laser scanner detects obstacles in the roadway in front of the truck. If a person or object quickly crosses the detection area (1) immediately in front of the truck, under certain circumstances the immediate emergency stop may not prevent a collision.

- Do not jump or step in the roadway if the truck is almost at the same level.
- Do not cross the roadway of the iGo neo with a manually operated truck if the iGo neo is almost at the same level. Note the fork length of the manually operated truck.
- The truck operating in ASSISTANCE mode always has priority. Observe lighting signals from the iGo neo.

https://truckmanualshub.com/

Particular care must be taken when there are bottlenecks in the aisle

WARNING

It is possible to set safety distances that are maintained between the truck and the rack contour or any obstacles. A safety distance of less than 50 cm can be set on the opposite side of the roadway to which the truck is aligned, if the truck is being used in narrow aisles. See the chapter entitled "Required safety distances in the aisle".

- If there are bottlenecks on the roadway, especially due to obstacles, these must be anticipated during operation.
- If there are people are in the vicinity of the bottleneck, switch the motion tracking to PAUSE immediately, using either the iGo button on the remote control or the assistance button on the truck. If necessary, push the emergency off switch on the truck.
- Do not continue operation in ASSISTANCE mode until all people have left the area around the bottleneck.

Maintain a safe distance from sloping edges and gradients

▷

DANGER

Risk of accident from sloping edges and gradients on or in the roadway

In ASSISTANCE mode, the truck does not check the roadway for height differences, e.g. on sloping edges, steps, platforms, ramps and gradients. The truck will tip or fall over.

- Maintain a safe distance away from height differences on or in the roadway when the truck is in ASSISTANCE mode.
- Always cover difficult roadways in MANUAL mode.

https://truckmanualshub.com/

Observe the maximum permissible dimensions of pallets and loads

DANGER

Risk of accident from pallets and loads that protrude beyond the truck contour

The load must not protrude beyond the truck contour in a longitudinal or lateral direction, as otherwise the load may collide with persons or the load may fall off.

– Only use suitable pallets (refer to the chapter entitled "Suitable pallets and loads").

Risk of accident due to excessive speed

DANGER

Risk of collision due to excessive speed when operating in ASSISTANCE mode

When operating in ASSISTANCE mode, the operator controls the driving speed of the truck via movement tracking or by using the remote control. Accidents may occur if the speed is not adapted to the current operating situation.

– When operating in ASSISTANCE mode, only allow the truck to drive at such a speed so that no persons or objects are endangered.

Risk of collision when driving on slopes

DANGER

Risk of collision when driving on slopes when operating in ASSISTANCE mode

When driving on slopes, the alignment of the safety laser scanner is no longer horizontal. Under certain circumstances, obstacles may not be detected.

– Always cover slopes in MANUAL mode.

https://truckmanualshub.com/

Information and warning signals in ASSISTANCE mode

DANGER

Risk of accident due to failure to observe warning signals

When operating in ASSISTANCE mode, the truck emits audible and optical information signals and warning signals. The LED signalling unit provides information about ASSISTANCE mode, the warning buzzer uses a rhythmic sound to warn when the truck is moving off.

– Observe warning signals. Act with due care and attention

DANGER

Risk of accident due to faulty warning units

When operating in ASSISTANCE mode, the truck emits audible and optical information signals and warning signals.

– Faulty components (LED signalling unit, warning buzzer) must be changed immediately, before operation in ASSISTANCE mode is commenced or resumed.

Transport of people and jumping onto the truck prohibited when operating in ASSISTANCE mode

DANGER

Risk of injury for persons when travelling as a passenger or when jumping onto the truck in ASSISTANCE mode

While the truck is being controlled via movement tracking or by using the remote control, only the operator is permitted to stand in the working area of the truck. If people ride the truck as passengers or jump onto the truck, they are at risk of falling down or interrupting operation of the truck.

– In ASSISTANCE mode, do not travel on the truck as a passenger or jump onto the truck.

https://truckmanualshub.com/

Risk of accident due to smoke in the event of fire

DANGER

Risk of accident due to optical safety systems being rendered inactive by smoke in the event of fire

The optical assistance systems (safety laser scanner, movement tracking sensors) can be affected by smoke in the event of fire.

– Do not operate the truck in ASSISTANCE mode if there is smoke in the area surrounding the truck.

Safe storage of the remote control

DANGER

Risk of accident from unintentional actuation of the remote control

When the truck is switched on, the remote control must always be kept in a safe place to prevent unintentional actuation. The remote control can be actuated unintentionally, e.g. if it is carried in a trouser pocket / jacket pocket, or if objects are placed on top of the remote control.

– While operating the truck, always keep the remote control in the supplied holder.

DANGER

Risk of accident if the remote control is actuated by anyone other than the operator

If anyone else actuates the remote control, the truck may move unexpectedly and injure people.

– Never give the remote control to anyone else while you are working. The remote control may only be operated by the operator.
– Never leave the remote control unattended while you are working.
– Once work has been completed, ensure that the remote control cannot be accessed by unauthorised persons.

https://truckmanualshub.com/

Risk of accident due to incorrect detection of the operator

DANGER

Risk of accident due to incorrect detection of the operator

In some circumstances, the truck can identify another person moving in the working environment of the truck as the operator. As a result, the truck can unexpectedly follow this other person along the aisle.

- Ensure that there are no persons moving or standing between the truck and the operator.
- Immediately switch the motion tracking to PAUSE using the iGo button on the remote control. If necessary, push the emergency off switch on the truck.

Priority rules in mixed MANUAL/ASSISTANCE traffic

DANGER

Risk of collision in areas with mixed MANUAL/ASSISTANCE traffic

A truck in ASSISTANCE mode may not detect a second truck or may detect it too late, for example if the forks of the second truck are above or below the 15-cm scanning height of the safety laser scanner.

A truck in ASSISTANCE mode may start moving or stop moving unexpectedly.

- Observe the flashing and warning signals from the truck that indicate that the truck is driving or setting off in ASSISTANCE mode.
- Always give trucks operating in ASSISTANCE mode priority over trucks being driven manually.
- In areas with mixed MANUAL/ASSISTANCE traffic, always drive with special care.

"Mixed traffic" means that trucks in ASSISTANCE mode and trucks driven manually are operated in the same area.

In these areas, the following rule applies:

- Driverless trucks always have priority over manually driven trucks.

https://truckmanualshub.com/

Keeping roadways clear of obstacles ▷

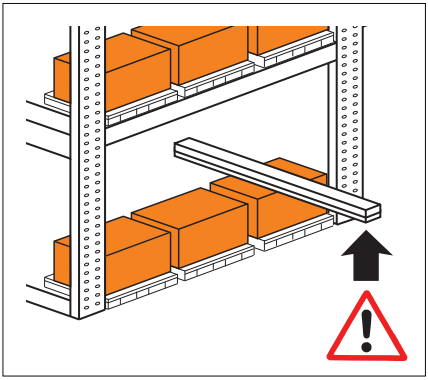

DANGER

Risk of accident in the event of additional work being performed in the roadway that could impede ASSISTANCE mode, e.g. in the form of people on ladders and workshop hoists.

- If additional work is being performed in the working area, close off the roadways using cones at a maximum distance of 1.0 m.
- The cones must have a minimum height of 200 mm so that they can be reliably detected by the safety laser scanner.

CAUTION

Increased danger of collisions with objects that the safety laser scanner cannot detect.

The safety laser scanner covers only the area close to the ground. Objects in the roadway that extend more than approx. 15 cm in height above the ground pose an increased risk of accidents. The truck does not brake automatically in such instances.

- Before moving the truck, check the roadway for obstacles that the safety laser scanner cannot detect. Pay particular attention to objects that extend laterally into the roadway. Clear the roadway
- Pay attention to cables, ladders and workshop hoists that cross the roadway. Remove these obstacles
- Pay attention to half-open roll-up doors as the safety laser scanner cannot detect half-open roll-up doors.

The roadways for driving in ASSISTANCE mode must be level and free of obstacles in order for the safety laser scanner to reliably detect the working environment.

- Before moving the truck, check the roadway for any obstacles. Clear the roadway
- Pay particular attention to objects in the roadway that extend more than approx. 15 cm in height above the ground, e.g. long objects that protrude out of the rack. The safety laser scanner detects only the area close to the ground.

https://truckmanualshub.com/

Minimum distance to obstacles in the roadway

Pallets, containers and similar items must always be set down in such a way that a safety distance of 50 cm is always maintained between the truck contour (including the load) and the obstacles.

If this safety distance is not maintained, the operating company must ensure that safety is guaranteed for persons and objects in another way.

https://truckmanualshub.com/

Operating the truck in ASSISTANCE mode

Overview of ASSISTANCE mode

⚠ CAUTION

Risk of accident as a result of differences between the MANUAL and ASSISTANCE modes of operation.

In MANUAL mode, the safety devices available in ASSISTANCE mode do not assist the driver. The truck does not brake automatically or steer automatically.

When manoeuvring in MANUAL mode, be aware that the safety laser scanner extends out over the truck contour at the front of the truck.

– Pay full attention when operating the truck, taking safety into account at all times.

The operator can switch between the different modes of operation: MANUAL and ASSISTANCE.

MANUAL mode corresponds to the operation of the series-production truck:

- Ride-on mode
- Pedestrian mode with cockpit, slow travel with drive switch
- Pedestrian mode with push button (special equipment)
- Controlling the truck using the remote control or via automatic movement tracking is **not** possible in MANUAL mode.

ASSISTANCE mode is the additional operating mode of the iGo neo.

ASSISTANCE mode

ASSISTANCE mode supports the operator when picking items from the rack or placing them into the rack.

While the operator is standing on the driver's platform, the truck behaves exactly as it does MANUAL mode.

In ASSISTANCE mode, the movement tracking sensors on the truck automatically detect the position of the operator. As soon as the operator moves off the bottom plate of the driver's compartment, the truck automatically follows him at the same level along the racks.

https://truckmanualshub.com/

Operating the truck in ASSISTANCE mode

The operator can transfer between the truck and the rack without interruption.

During this process, the truck maintains a safety distance (1) to the rack in which the operator can move safely. The safety distance is always set to at least 50 cm.

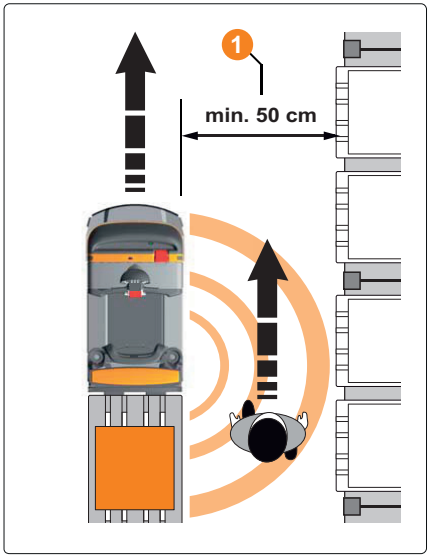

In ASSISTANCE mode, the truck moves only in the drive direction, not in the load direction.

The operator can also control ASSISTANCE mode using a remote control.

A safety laser scanner monitors the roadway. The safety laser scanner stops the truck in the event of danger represented by obstacles or persons.

https://truckmanualshub.com/

Switching the truck on and off

Switching on the truck

– Plug in the battery male connector.

The components for ASSISTANCE mode are initialised when the battery male connector on the truck is plugged in. The components are ready to operate after approximately 30 seconds.

– Switch on the truck following the instructions given in the original operating instructions for the series-production truck.

The truck can now be operated in MANUAL mode.

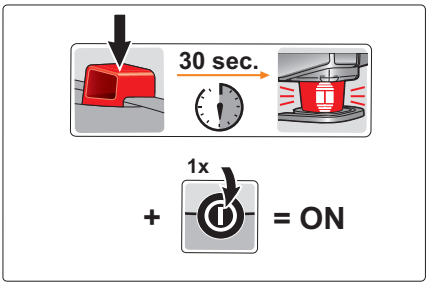

NOTE

The truck can be switched on during the initialisation of ASSISTANCE mode and operated in MANUAL *mode.*

Switching off the truck

– Switch off the truck following the instructions given in the original operating instructions for the series-production truck. The truck is switched off.

NOTE

The robotics system does not switch off automatically until the selected run-on time has elapsed. The authorised service centre can configure the run-on time to a period between 30 seconds and 60 minutes.

https://truckmanualshub.com/

Switching on ASSISTANCE mode

Before ASSISTANCE mode is available, the remote control must be activated and ASSISTANCE mode must be switched on.

Activating the remote control

The connection between the truck and remote control must first be established.

- While operating the truck, keep the remote control in the supplied holder to ensure that it cannot be actuated unintentionally.
- Press the button (1) on the remote control for two seconds.

If the CHECK indicator light flashes continuously, there is a connection between the remote control and truck.

The LED signalling unit shows the truck alignment in the aisle (LEFT - MIDDLE - RIGHT). The authorised service centre can configure the preferred initial truck alignment.

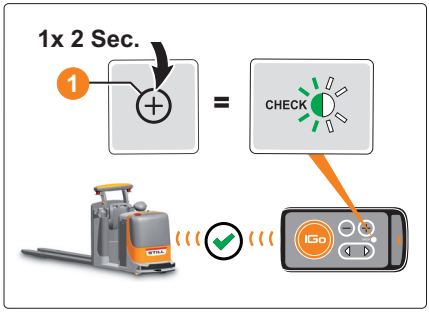

Switching on ASSISTANCE mode

- If necessary, the desired truck alignment can be adjusted using the remote control (see the following chapter "Adjusting the truck alignment").
- Press the assistance buttons on the side to which the truck is aligned to switch on ASSISTANCE mode.

Once ASSISTANCE mode has been switched on, movement tracking is ACTIVE immediately and is focused on the operator. The truck follows the operator along the rack contour.

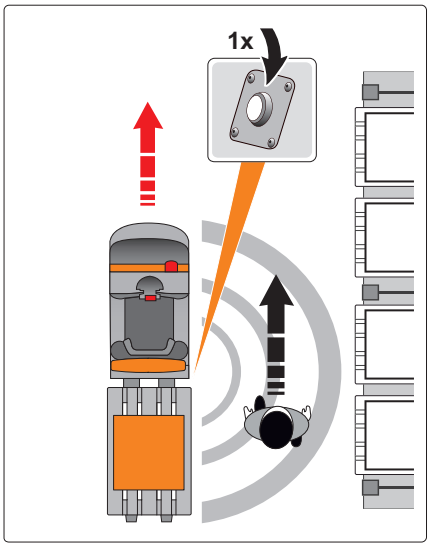

https://truckmanualshub.com/

Adjusting the truck alignment

Before order picking starts, the operator specifies whether the truck must align to the right (1), left (3) or to the centre (2) of the aisle. In ASSISTANCE mode, the truck then automatically follows the selected rack contour.

– Adjust the truck alignment using the remote control:

Button (A)

- Push once briefly: Switch the truck alignment in sequence (LEFT ▸ MIDDLE ▸ RIGHT ▸ LEFT)

Button (B)

- Push once briefly: Switch the truck alignment in sequence (RIGHT ▸ MIDDLE ▸ LEFT ▸ RIGHT)

The LED signalling unit signals the set truck alignment:

- Truck alignment RIGHT (1)
- Truck alignment MIDDLE (2)
- Truck alignment LEFT (3)

The truck emits a short signal tone to confirm the selection of the truck alignment. If the truck does not detect the rack contour on the side of the roadway to which the truck is aligned, the truck position must be corrected manually.

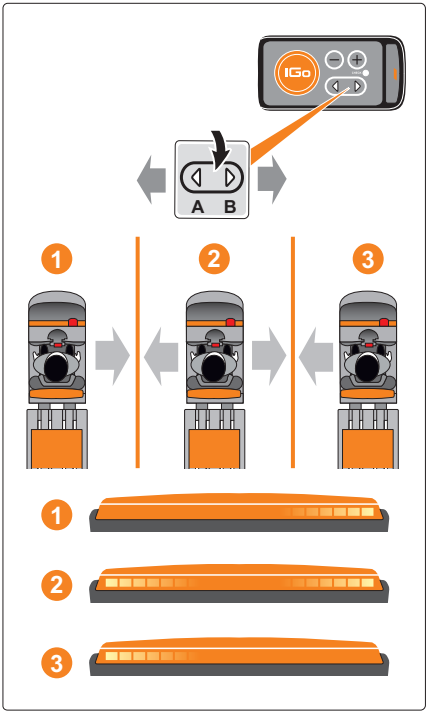

https://truckmanualshub.com/

Positioning the truck correctly in the aisle ▷

Positioning the truck in the aisle
It must be possible for the truck to detect a straight rack contour.
The rack contour must not have any gaps larger than 2.7 m (can be parameterised).
It must be possible for the truck to detect the rack contour (1) over a distance of 2–3 m in front of the truck.
The truck must be positioned parallel to the rack.

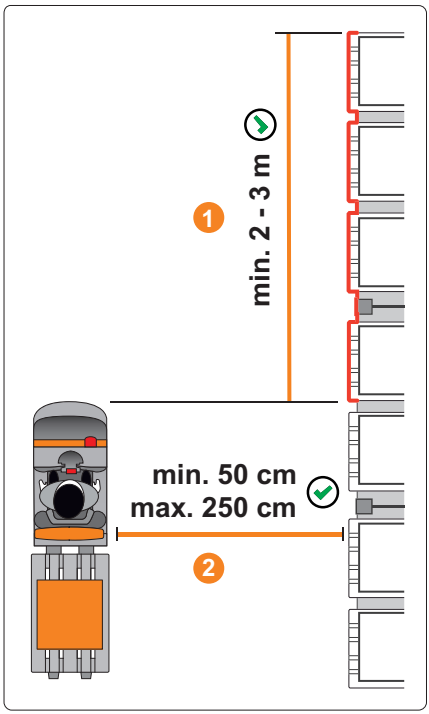

Specifying the distance to the rack contour in combination with movement tracking

The distance to the rack contour when movement tracking is activated specifies the distance that the truck maintains when it drives automatically. If movement tracking is already switched on, the distance is determined when the operator leaves the driver's platform.

- Drive the truck manually to the starting point for movement tracking.
- Position the truck at the required distance parallel to the rack contour. The selected distance (2) must be between 50 cm and 250 cm. If an insufficient distance is specified, the truck will steer when it moves off until a distance of 50 cm is reached.
- Move off the driver's platform and, if necessary, switch on movement tracking.

The truck follows the rack contour at the specified distance.

NOTE

The authorised service centre can configure a permanent minimum distance to the rack contour.

https://truckmanualshub.com/

Correctly positioning the truck in line with the rack when the truck is aligned sideways

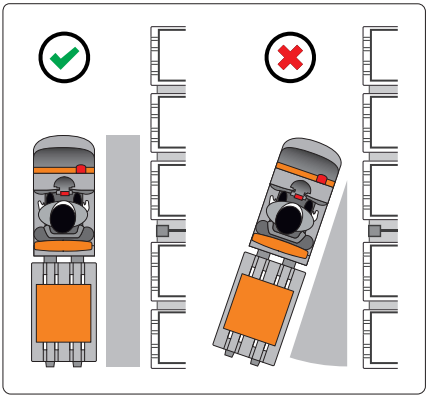

CAUTION

Risk of collision if the truck is positioned at too sharp an angle in relation to the rack contour

If the truck is positioned at too sharp an angle in relation to the rack contour, the system may not correctly detect the rack under certain circumstances and will therefore collide with the rack.

- Before starting movement tracking, always position the truck parallel to the rack.
- Slowly set the truck in motion. Bring the truck to an immediate standstill if the safety distance of 50 cm to the rack is not reached.

- Move the truck in MANUAL mode to the starting point for ASSISTANCE mode.
- Position the truck parallel to the rack at the desired distance (min. 50 cm).

Correctly positioning the truck in the centre of the aisle

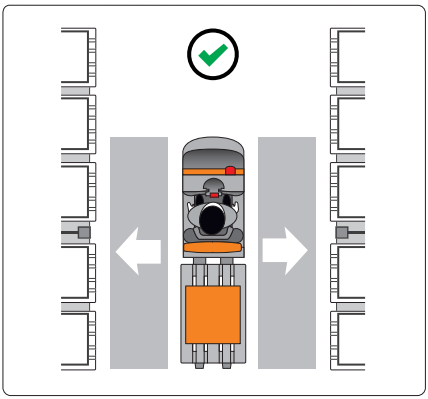

- Move the truck in MANUAL mode to the starting point for ASSISTANCE mode.
- Position the truck parallel to the rack so that it is in the centre between the two racks.

https://truckmanualshub.com/

Switching between ACTIVE and PAUSED modes for movement tracking

Movement tracking can be interrupted or restarted using the remote control (iGo button) or the assistance button.

– Monitor the signals displayed by the indicator LEDs for the movement tracking sensors. The indicator LEDs show the current status of the movement tracking function.

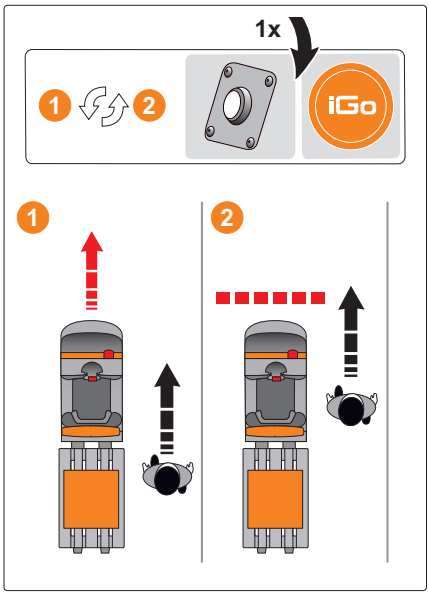

	Truck is stationary	iGo button or assistance button
1	Identify and track the operator (Movement tracking PAUSED ➡ ACTIVE)	Press 1 x **briefly**

	Truck is in motion	iGo button or assistance button
2	Stop the truck (Movement tracking ACTIVE ➡ PAUSED)	Press 1 x **briefly**

Pause movement tracking (truck is stationary)

Truck is stationary	Assistance button
Pause movement tracking (Movement tracking ACTIVE ➡ PAUSED)	Press 1 x **long** (2 sec.)

Truck is stationary	iGo button
Pause movement tracking (Movement tracking ACTIVE ➡ PAUSED)	Press 1 x **briefly**

https://truckmanualshub.com/

Identifying the operator

For the movement tracking to work, the truck must identify the operator. This is necessary when you start ASSISTANCE mode or if the truck has lost the position of the operator.

Identification as operator in ASSISTANCE mode
Automatically when the operator steps off the driver's platform
By pressing the assistance button on the truck
By pressing the iGo button on the remote control (identifies the person who is closest to the driver's platform)
Automatically in the zones close to the truck (depending on the settings configured by the authorised service centre)

– Carefully monitor the LED signals for the movement-tracking sensors which indicate whether the movement tracking is focussed on the operator and is ACTIVE.

NOTE

The truck loses the position of the operator if the operator changes to the other side of the truck beyond the fork.

- *Change sides in front of/behind the truck or via the driver's compartment*

Automatic approach of the truck

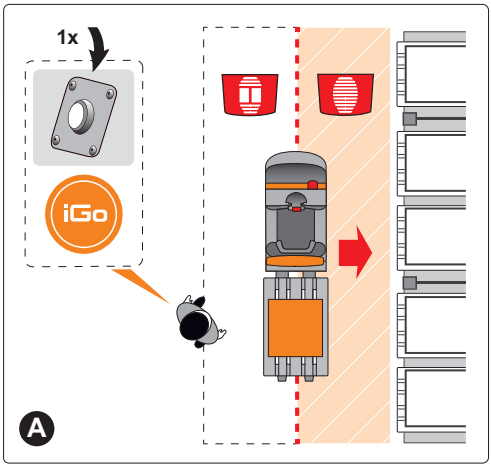

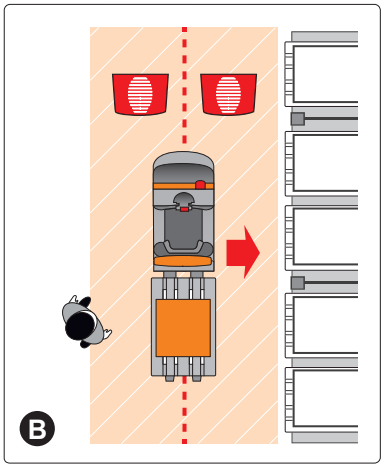

https://truckmanualshub.com/

Operating the truck in ASSISTANCE mode

If there is heavy pedestrian traffic, the movement tracking can focus on a third party, having lost track of the position of the operator. It may therefore be prudent to have the automatic approach of the truck dependent on confirmation by the operator.

The authorised service centre can configure how the truck responds when the operator is re-identified:

- (A) Automatic approach only on the side to which the truck is aligned
- (B) Automatic approach on both sides

Configuration (A)		
Identification	**LED signals**	**Information**
Side to which the truck is aligned	Movement tracking ACTIVE	The truck follows the operator immediately.
The opposite side to which the truck is aligned	Motion tracking PAUSED	The truck follows the operator only after confirmation with the iGo button or the assistance button.

Configuration (B)		
Identification	**LED signals**	**Information**
On both sides	Movement tracking ACTIVE	The truck follows the operator immediately.

https://truckmanualshub.com/

Stopping automatically at the end of the racking

⚠ CAUTION

Risk of collision by entering the crosswise roadway at the end of a rack

If an object, e.g. another truck, is stationary in an unfavourable position at the end of a rack or in a crosswise roadway, the truck may not detect the end of the rack under certain circumstances. Crossing trucks could then collide with the truck that is operating in ASSISTANCE mode.

– The operator must be particularly alert at the end of a rack. When using movement tracking, the operator must ensure that the truck does not drive beyond the end of the rack. When using remote control, the operator must stop the truck in good time. The operator is responsible for stopping the truck safely.

The truck is equipped with automatic end-of-rack detection. If the racking on the side to which the truck is aligned ends or if the racking is interrupted by a crosswise roadway, the truck will stop automatically. The movement-tracking sensors will show the "PAUSED" LED signal.

Stopping at the end of the aisle

The truck detects that the rack contour does not continue, and will stop automatically at the end of the aisle.

– To continue operating in ASSISTANCE mode, first drive to a rack contour that the truck can detect in MANUAL mode.

▷

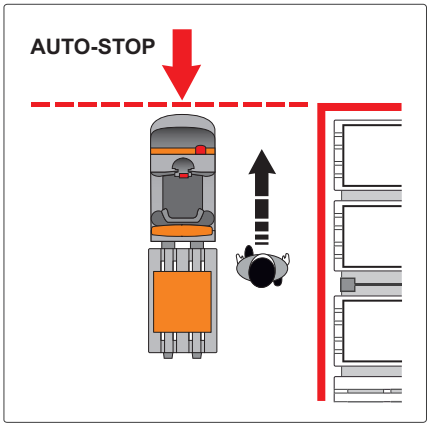

https://truckmanualshub.com/

Stopping before a crosswise roadway

When the truck is in ASSISTANCE mode, the truck can proceed across a crosswise roadway after confirmation using the remote control.

The truck detects that the rack contour continues beyond the crosswise roadway, and will stop automatically before the crosswise roadway.

- Press the iGo button on the remote control 1 x long (> 2 sec.). The LED signals for the movement tracking scanner switch to "movement tracking PAUSED" (1).
- Make sure that the truck can cross the crosswise roadway safely.
- Press and hold the iGo button (2). The truck will drive over the crosswise roadway. Once the truck has passed the crosswise roadway, release the iGo button. The truck will stop.
- Press the iGO button 1 x briefly. The LED signals for the movement tracking scanner switch to "movement tracking ACTIVE". The truck again follows the operator automatically.

If the truck fails to detect a continuation of the rack contour beyond the crosswise roadway, the truck will not move off. The truck must then be driven in MANUAL mode to the next rack contour.

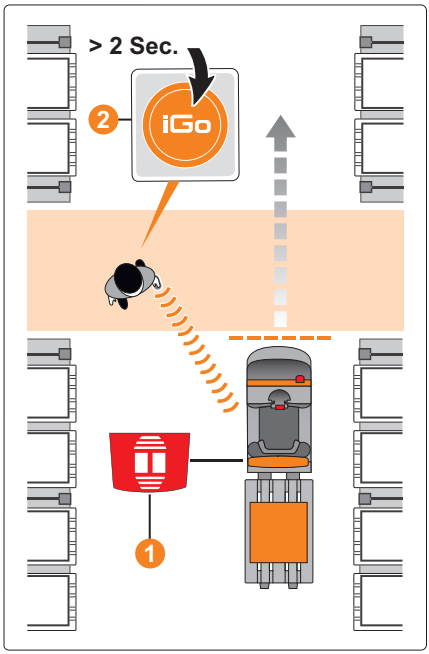

NOTE

The authorised service centre can configure the value for the minimum width of crosswise roadways, thereby improving the detection of crosswise roadways.

https://truckmanualshub.com/

Behaviour of the truck in response to obstacles in the roadway

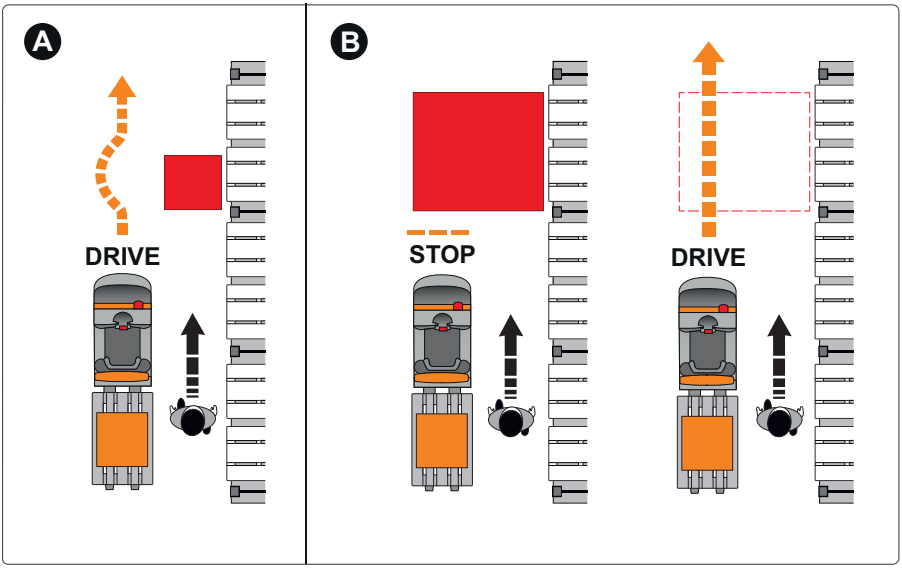

DANGER

Danger of collisions with obstacles that the safety laser scanner cannot detect.

Observe the notes about the limits to detecting obstacles given in the chapter entitled "Function of the safety laser scanner".

- Check the roadway above all for obstacles that the safety laser scanner cannot detect and remove these obstacles.
- If there is a risk of danger, immediately bring the truck to a standstill by pressing one of the emergency off switches.

If the truck detects an obstacle on the side of the roadway to which the truck is aligned, the truck automatically drives around the obstacle and continues on its path (A).

If an obstacle is too large to drive around, the truck will stop in front of the obstacle (B). ASSISTANCE mode is resumed without intervention from the operator as soon as the obstacle is removed.

https://truckmanualshub.com/

Minimum distance to obstacles

The authorised service centre can configure a minimum distance (1) at which the truck the truck may pass an obstacle when in ASSISTANCE mode.

– Observe the notes in the chapter entitled "Required safety distances in the aisle".

▷

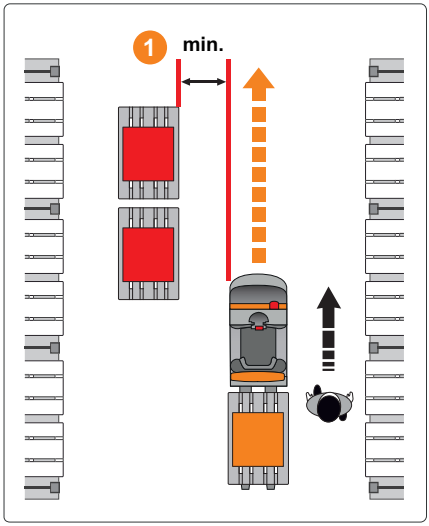

https://truckmanualshub.com/

Truck behaviour in the event of an emergency stop

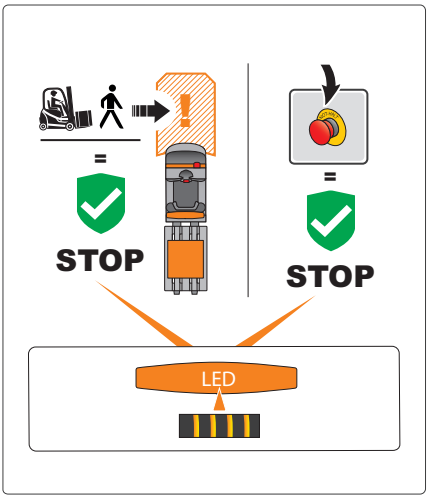

⚠ CAUTION

Risk of accident if the truck starts moving again after an emergency stop.

After an emergency stop, movement tracking is ACTIVE again as soon as the reason for the stop has been eliminated or the emergency off switch has been reset.

– Maintain a safety distance if the truck starts to move again automatically after an emergency stop.

If an obstacle appears suddenly in front of the truck or approaches the truck, the safety laser scanner detects a critical situation. The truck will automatically perform an emergency stop to prevent a collision.

Truck response in the event of an emergency stop

- The electromagnetic truck brake is applied. The truck stops at the maximum deceleration rate
- The LED signalling unit shows the "Emergency stop" signal. The lighting zones flash in rapid alternation (approx. ten times per second)
- The truck emits the audible warning sound to indicate the "emergency stop" (short, rhythmic warning sounds for two seconds)

Setting off after an emergency stop

- The electromagnetic truck brake is released
- The LED signalling unit stops showing the "Emergency stop" signal and changes back to the previous display
- The truck stops emitting the audible warning sound to indicate the "emergency stop"
- The truck emits the warning tone to indicate that it is "setting off" (two short warning sounds in succession)

`ASSISTANCE` mode is resumed without intervention from the operator as soon as the obstacle is removed.

https://truckmanualshub.com/

Operating the truck in ASSISTANCE mode

– If the emergency stop was triggered via one of the emergency off switches (1) on the side of the truck, pull out the emergency off switch before resuming operation. ▷

– If the emergency stop was triggered via the emergency brake push button (2) in the cockpit, switch on the truck again by pressing the ON push button (3). ▷

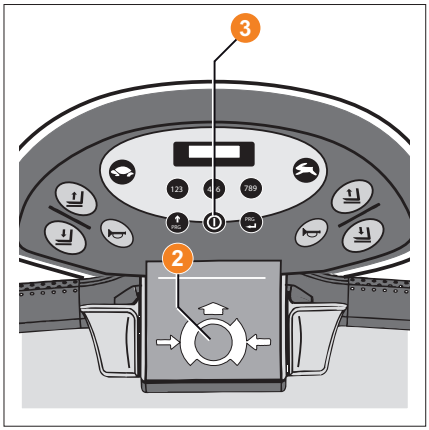

https://truckmanualshub.com/

Moving the truck position to the next pallet ▷

Trucks with long forks can transport several pallets one behind another. The position of the truck relative to the operator can be changed using the remote control so that the desired pallet is at the same level as the driver.

– Press and hold button (1): Move the truck position by one position in the drive side direction.

– Press and hold button (2): Move the truck position by one position in the load side direction.

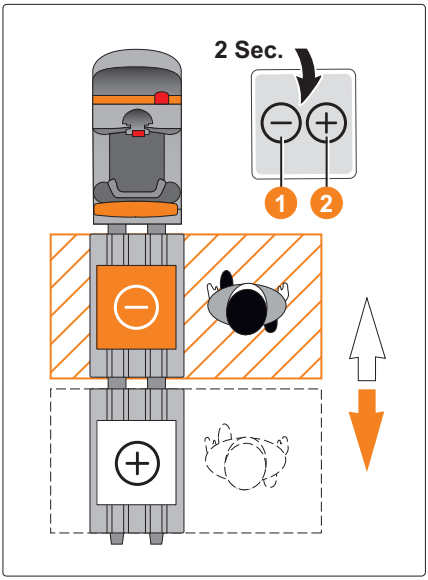

NOTE

The authorised service centre can configure a maximum of four different truck positions.

https://truckmanualshub.com/

Driving automatically without movement tracking

The operator can allow the truck to drive a short distance along the rack contour independently of the movement tracking.

- The LED signals for the movement tracking scanner must display "movement tracking PAUSED" (1).
- Press and hold the iGo button on the remote control for at least two seconds.

The truck moves along the rack contour until the button is released. Movement tracking and the safety functions of the truck remain active.

NOTE

If the truck fails to detects a rack contour it will not proceed. The movement tracking-sensors will show the "PAUSED" LED signal.

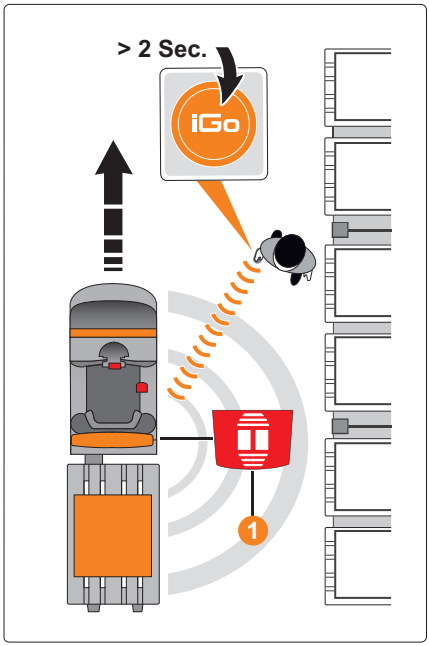

https://truckmanualshub.com/

"Z picking" mode

"Z picking" mode assists the operator in allowing frequent changes between the left and right side of the racking.

If the operator pushes the right or left assistance button when leaving the truck, the alignment of the truck changes to the corresponding side. The truck now aligns itself with the rack contour on the selected side.

"Z picking" mode must be set up by an authorised service centre. The distance (X) from the rack contour cannot be changed. The fixed value for the distance is configured during setup by the authorised service centre, depending on the application conditions. The minimum distance that can be set is 30 cm.

The operator cannot switch between standard mode in which the distance can be changed and "Z picking" mode.

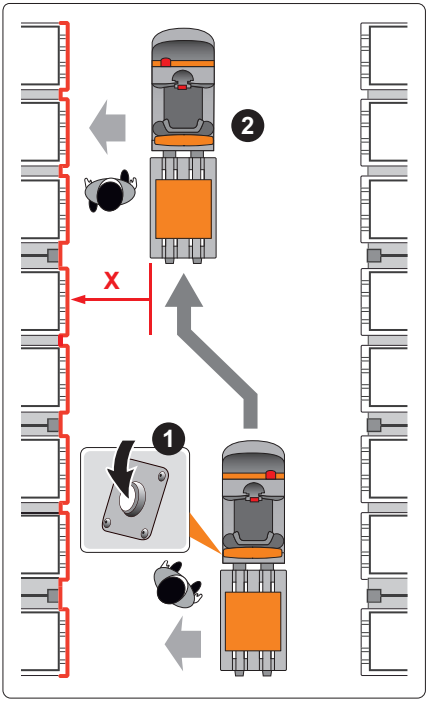

Operating the truck in "Z picking" mode

- Leave the driver's compartment on the side of the racking where the order picking is to be performed.
- Push the assistance button (1) on this side to switch operation to ASSISTANCE mode.

The truck then follows the operator at a fixed distance from the rack contour on the selected side. The truck then steers automatically until the specified distance is reached (2).

The truck alignment can be redefined at any time using the remote control.

https://truckmanualshub.com/

Setting the drive programme when operating in ASSISTANCE mode

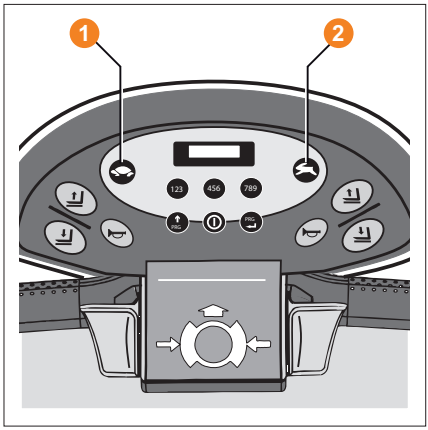

In ASSISTANCE mode, the operator can select between two drive programmes. By setting the drive program, the truck characteristics (driving, steering and braking dynamics) can be adapted to the relevant operating situation. All safety-related features of the truck remain unchanged.

– Press button (1) or (2) to set the drive programme.

NOTE

The authorised service centre can configure the drive programs for ASSISTANCE *mode to suit the specific requirements of the customer.*

https://truckmanualshub.com/

Warning sounds in ASSISTANCE mode

The truck produces different warning sounds to alert the driver and bystanders that the truck is being operated in ASSISTANCE mode.

Audible signals

Type of signal	Signal	Information
1 short warning sound	"Setting off" warning sound	Truck begins moving automatically (with "movement tracking switched on")
Short, rhythmic warning sounds (for two seconds)	"Safety stop" warning sound (safety laser scanner)	Truck has performed an emergency stop
Short, rhythmic warning sounds	"Safety stop" warning sound (emergency off switch)	The operator has pressed the emergency off switch
A warning sound for one second	"Truck alignment not possible" warning sound	The truck does not detect a rack contour on the selected side

https://truckmanualshub.com/

https://truckmanualshub.com/

5

Storage

https://truckmanualshub.com/

Storing and shutting down the iGo neo

Driverless transport vehicles cannot be stored in an operational state. They must therefore be taken out of operation.

– To shut down the truck, contact the authorised service centre.

https://truckmanualshub.com/

6

Cleaning

https://truckmanualshub.com/

Cleaning the components used for ASSISTANCE mode

Preparing the components used for ASSISTANCE mode for cleaning

⚠ CAUTION

If water penetrates the electrical system, there is a risk of a short circuit occurring!

- Never clean the components used for ASSISTANCE mode using devices such as high-pressure cleaners or rotating brushes.
- While cleaning the rest of the truck, avoid cleaning the components used for ASSISTANCE mode and only clean these components in accordance with the instructions specified below.

⚠ CAUTION

Risk from damage to electrical components when cleaning!

Only the authorised service centre is permitted to clean the components used for ASSISTANCE mode inside the truck.

- Contact the authorised service centre.

- Park the truck securely.

⚠ CAUTION

Risk of component damage!

If you remove the battery male connector while the truck is switched on (under load), an arc will be produced. This can lead to erosion at the contacts, which considerably shortens their service life.

- Switch off the truck before the battery male connector is disconnected.
- Do not disconnect the battery male connector while the truck is switched on, except in an emergency.

- Disconnect the battery male connector.
- Contact the authorised service centre to arrange for the components used for ASSISTANCE mode **inside** the truck to be cleaned.

https://truckmanualshub.com/

Cleaning the optics covers (inspection windows) on the motion-tracking sensors and on the safety laser scanner

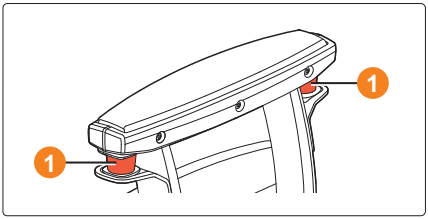

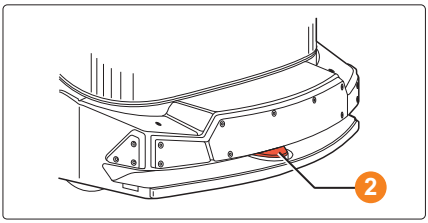

⚠ CAUTION

Abrasive cleaning materials can damage the surfaces of components!

Using abrasive cleaning materials that are unsuitable for plastics may dissolve plastic parts or make them brittle. The covers of optical sensors can become cloudy.

- Do not use aggressive cleaning materials.
- Do not use any abrasive cleaning materials.

- Clean the optics covers (inspection windows) on the motion-tracking sensors (1) and on the safety laser scanner (2) regularly and in the event of contamination.
- A static charge causes dust particles to accumulate on the optics cover. To clean the optics cover, use the antistatic plastic cleaning agent listed in the table.

Recommended cleaning material for the optics covers	
Cleaning material	SICK item number
Antistatic plastic cleaning agent	5600006
SICK optics cloth	4003353

- Remove any dust from the optics covers using a clean, soft brush.
- Moisten the SICK optics cloth with the antistatic plastic cleaning agent. Use the damp cloth to wipe the light output window on the optics covers.

Cleaning other components used for ASSISTANCE mode

- Regularly clean the LED signalling unit using a soft, damp cloth without cleaning agents.
- Clean the remote control using a brush and a damp cloth. Do not use alcohol, solvents or cleaning materials.

https://truckmanualshub.com/

Alternating operation between different temperature ranges

⚠ CAUTION

Danger from the optical safety systems fogging up when moving between warm areas and cold areas

During use, ensure that the optics covers (inspection windows) on the motion-tracking sensors and on the safety laser scanner do not fog up.

If the optics cover of the safety laser scanner fogs up, the truck may respond by initiating an emergency stop.

– Clean any fogged-up optics covers before starting operation in ASSISTANCE mode (see the chapter entitled "Cleaning").

https://truckmanualshub.com/

7

Transporting

https://truckmanualshub.com/

Transporting the truck

The instructions in the operating instructions for the series-production truck apply for transporting the truck. In addition, the following provisions listed in this chapter also apply.

CAUTION

Risk of accident when using ASSISTANCE mode for loading purposes

When operating in ASSISTANCE mode, the truck can respond with involuntary steering and driving movements when used in an unsuitable environment.

– Routes to a loading point, on a loading bridge or on the transport vehicle must always be driven in MANUAL mode.

Crane loading of the truck not permitted

CAUTION

Risk of damage to the truck by impermissible crane loading

The mounting bracket for the LED signalling unit or the safety laser scanner can be damaged when loading by crane. Loading of the truck by crane is not permitted.

Safety regulations for lashing down the truck

DANGER

Risk of accident if the lashing straps slip!

The truck must be lashed securely so that it cannot move during transportation.

– Make sure that the lashing straps are tightened securely and that the pads cannot slip off.

CAUTION

Risk of damage to the truck due to improper lashing

The mounting bracket for the LED signalling unit or the safety laser scanner can be damaged by lashing straps.

– Do not attach lashing straps to the LED signalling unit or the safety laser scanner or guide lashing straps over these components.

https://truckmanualshub.com/

CAUTION

Abrasive lashing straps can rub against the surface of the truck and cause damage.

– Position slip-resistant pads underneath the lifting points (e.g. rubber mats or foam).

Safety regulations for driving on loading bridges

DANGER

Risk of accident from the truck falling off the loading bridge

Steering movements can cause the truck to fall from the loading bridge.

– Before driving across a loading bridge, ensure that the loading bridge is properly attached and secured.
– Ensure that the transport vehicle onto which the truck is to be driven has been sufficiently secured against moving.
– Maintain a safe distance from loading bridges, ramps, working platforms and similar objects.
– Drive slowly and carefully onto the transport vehicle.

CAUTION

Danger due to excessive transport weight on the loading bridge

The load capacity of the means of transport, the ramps and the loading bridges must be greater than the actual total weight of the truck. Components can be permanently deformed or damaged due to overloading.

– Determine the actual total weight from the nameplate on the truck.
– Only load the truck if the load capacity of the means of transport, ramps and loading bridges is greater than the total actual weight of the truck.

https://truckmanualshub.com/

https://truckmanualshub.com/

8

Maintenance

https://truckmanualshub.com/

Maintaining the iGo neo

This section contains all of the information required for maintaining the iGo neo. Maintenance must be performed in accordance with the points in the maintenance checklist. This is the only way guarantee that the truck remains ready for operation; it is also a pre-condition for any warranty claims.

Maintenance schedule

Maintenance tasks on the components for the ASSISTANCE mode of the iGo neo must **be performed in addition to the scheduled maintenance of the series-production truck**.

The intervals are defined for standard use. Shorter maintenance intervals can be defined in consultation with the operating company, depending on the application conditions of the truck.

The following factors may necessitate shorter maintenance intervals:

- Dirty, poor-quality roadways
- Dusty or salty air
- High levels of air humidity
- Extremely high or low ambient temperatures, or extreme changes in temperature
- Multi-shift operation with a high duty cycle
- National regulations for the truck or for individual components

Responsibility for maintenance

⚠ DANGER

Work performed by unauthorised persons on components used for ASSISTANCE mode jeopardises the safety functions of the truck.

To maintain components used for ASSISTANCE mode, contact the authorised service centre.

Maintenance work on components used for ASSISTANCE mode must only be performed by the service centre authorised by the manufacturer.

The service engineer must have received special training from the manufacturer regarding the handling processes, technology and repair

https://truckmanualshub.com/

work involved with the iGo neo. It is not permitted for other persons to perform work on the components used for ASSISTANCE mode. This instruction does not apply to cleaning procedures on components that are not located inside the truck; refer to the chapter entitled "Cleaning".

The following components are used for ASSISTANCE mode:

- Safety laser scanner
- Movement tracking sensors
- Control components
- Control electronics and control software
- Emergency off switches
- LED signalling unit
- Switches
- Remote control

Safety regulations for maintenance

– Before starting any work on electrical and mechanical equipment, disconnect the system from the power supply. On the iGo neo, this is done by **disconnecting the battery male connector**.

– Secure and demarcate the working area. Use warning signs to indicate the increased level of danger.

Maintenance documentation

The maintenance steps and results must be documented in writing and archived by the operating company.

Maintenance - 500 hours/every 6 months

At operating hours										Carried out	
500		1000		1500		2000		2500			
3000		3500		4000		4500		5000			
5500										✓	✗
Brake											
Check the clearance of the electromagnetic brake (in accordance with the maintenance manual for the series-production truck)											

https://truckmanualshub.com/

At operating hours											
500		1000		1500		2000		2500			
3000		3500		4000		4500		5000		Carried out	
5500										✓	✗
General											
Read out and check the error numbers and clear the list											
Reset the maintenance interval											

Maintenance - 1000 hours/annually

At operating hours											
1000		2000		3000		4000		5000			
6000		7000		8000		9000		10000		Carried out	
11000										✓	✗
Note											
Perform all 500-hour maintenance work.											
Safety laser scanner S300											
Check the safety laser scanner and the support mounting for damage (visual inspection).											
Check the alignment and the field of vision of the SICK safety laser scanner using the SICK CDS software.											
Clean the optical cover of the safety laser scanner.											
Movement tracking sensors											
Check the movement tracking sensors and the mounting for damage (visual inspection).											
Check the plug contacts (power supply and communications supply).											
Check the status LEDs for the movement tracking sensors (visual inspection).											
Clean the movement tracking sensors.											
LED signalling unit											
Check the LED signalling unit and the support mounting for damage (visual inspection).											
Components compartment (load side)											
Perform a visual inspection of the wiring and of the components (robotics computer, safety controller [MCU2], receiving unit for the remote control, switchbox, DC/DC converter and Digisound beeper)											

https://truckmanualshub.com/

At operating hours										Carried out	
1000		2000		3000		4000		5000			
6000		7000		8000		9000		10000			
11000										✓	✗
Check the mechanical attachment of all components.											
Check all screwed contacts on the robotics computer are securely attached.											
Check that the earth cable between the chassis and the carrier plate is securely attached.											
Components compartment (drive side)											
Perform a visual inspection of the mountings, wiring and components (odometry signal transmitter, signal converter [analogue/CAN] IN/OUT, LES steering controller, incremental transducer for speed)											
Robotics system											
Practical function check of the robotics system in `ASSISTANCE` mode. Check the function of the safety laser scanner S300 and the movement tracking sensors, including the LED signals, LED signalling unit, assistance button, emergency off switch, remote control.											
Personal protection system (PPS)											
Check the function of the personal protection system. Check the function of the emergency off switch and the safety laser scanner S300 in `ASSISTANCE` mode.											
Check the emergency off switching signal in DIAMON.											
General											
Read out and check the error numbers and clear the list.											
Reset the maintenance interval.											

https://truckmanualshub.com/

https://truckmanualshub.com/

9

Technical data

https://truckmanualshub.com/

Dimensions

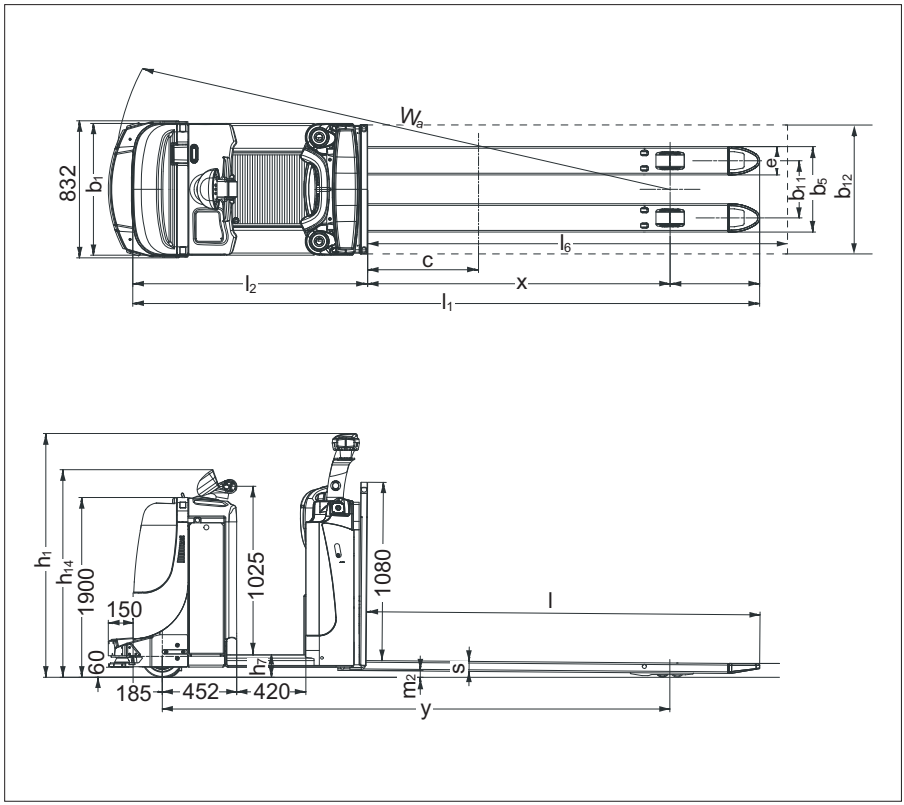

https://truckmanualshub.com/

VDI datasheet: iGo neo CX 20

Key data

1.1	Manufacturer				STILL
1.2	Manufacturer's type designation				iGo neo CX 20
1.3	Drive				Electric
1.4	Operation				Order picker
1.5	Load capacity/load		Q	kg	2000
1.6	Load centre of gravity distance		c	mm	1200
1.8	Load distance		x	mm	1615
1.9	Wheelbase		y	mm	2843 [1)]

Weights

2.1	Net weight (including battery)			kg	1228
2.2	Axle load laden	Drive side/load side		kg	1250/1895
2.3	Axle load unladen	Drive side/load side		kg	880/265

Wheels/chassis frame

3.1	Tyres				Polyureth-ane
3.2	Tyre size	Drive side		mm	∅ 250 x 100
3.3	Tyre size	Load side		mm	∅ 85 x 80
3.4	Support rollers			mm	∅ 150 x 50
3.5	Number of wheels (x = driven)	Drive side/load side			1 x 1/4
3.6	Track width	Drive side	b_{10}	mm	475
3.7	Track width	Load side	b_{11}	mm	348

Basic dimensions

4.6	Initial lift		h_5	mm	130
4.8	Standing height		h_7	mm	135
4.9	Height of tiller handle in driving position	Min./max.	h_{14}	mm	1165
4.14	Overall height		h_1	mm	1418

https://truckmanualshub.com/

4.15	Height when lowered		h_{13}	mm	85
4.19	Overall length		l_1	mm	3955 [1)]
4.20	Length including fork back		l_2	mm	1575 [1)]
4.21	Overall width		b_1/ b_2	mm	832
4.22	Fork arm dimensions DIN ISO 2331		s/e/l	mm	61/172/2390
4.25	Width over forks		b_5	mm	520
4.32	Ground clearance at the centre of the wheelbase		m_2	mm	24
4.34.2	Aisle width for pallet 800 x 2400 length-wise (b_{12} x l_6)		A_{st}	mm	4277 [1)]
4.35	Turning radius		W_a	mm	3196 [1)]

Performance data

5.1	Conventional driving speed	With/without load		km/h	9.0/12.5
5.1.2	Automatic driving speed	With/without load		km/h	6.1
5.2	Lifting speed	With/without load		m/s	0.13/0.20
5.3	Lowering speed	With/without load		m/s	0.12/0.09
5.7	Climbing capability	With/without load		%	1.7/3.2
5.8	Max. climbing capability	With/without load		%	6/6
5.9	Acceleration time (on 10 m)	With/without load		s	6.4/5.2
5.10	Service brake				Electromag-netic

Electric motor

6.1	Traction motor, rating S2 = 60 min			kW	30
6.2	Lift motor, power rating at S3 = 15%			kW	2.2
6.3	Battery in accordance with DIN 43531/35/36 A, B, C, no				IEC 254 - 2; B
6.4	Battery voltage/nominal capacity K_5			V/Ah	24/450
6.5	Battery weight ± 5% (depending on the manufacturer)			kg	410
6.6	Energy consumption in accordance with VDI cycle			kW-h/h	0.99

https://truckmanualshub.com/

Other

8.1	Type of traction controller				AC controller
8.4	Noise level at the driver's ear			dB(A)	66.5
[1] With 600-Ah battery tray: + 85 mm					

Technical data of the remote control components

General	
Manufacturer	ELCA S.r.l.
Radio remote control model	MITO
Working frequency	868.0125–869.9875 MHz (limited to 869.710–870.000 MHz)
Modulation type	GFSK
Hamming distance	≥ 10
Operating temperature	-20 to +55°C
Storage and transport temperature	-20 to +55°C
Range	150 m
Passive stop time (maximum stop time)	< 1 s

Sender	
Model	AT MITO MINI
Sender module/encoder	SWE-01
Antenna	Integrated antenna
Battery supply	Lithium polymer battery pack, 3.7 V, 1100 mA
Current draw	< 25 mA
Power consumption	< 0.1 W
Transmission power	< 5 mW ERP
Voltage for message: "Battery empty"	3.4 V
Cut-off voltage	3.0 V
Operating time with fully charged battery at 20°C	Approx. 50 hours
Advance warning before "Battery empty" message is displayed	Approx. 10 minutes
IP protection level	IP67

https://truckmanualshub.com/

Sender	
Dimensions	113 x 60 x 26 mm
Weight	100 g

Battery charger	
Model	AT MITO
Supply voltage	≈ 5.0 V
Nominal capacity	< 3 W
Rated output voltage	≈ 4.2 V
Rated output current	450 mA
Charge time	≤ 4 hours
Operating temperature	-20 to +55°C
IP protection level	IP40
Dimensions	110 x 75 x 60 mm
Weight	100 g
AC power supply unit:	
Supply voltage of power supply unit	80–250 V ~ 50/60 Hz
Output voltage	5.0 V / 1 A
Nominal capacity	5 W
DC power supply unit for cigarette lighter:	
Supply voltage of power supply unit	9–30 V ≈
Output voltage	5.0 V / 1 A
Nominal capacity	5 W

Technical data of the safety laser scanner

General			
	Minimum	Typical	Maximum
Type	3 (EN 61496B1)		
Safety integrity level	SIL2 (IEC 61508)		
SIL claim limit	SILCL2 (EN 62061)		
Category	Category 3 (EN ISO 13849B1)		

https://truckmanualshub.com/

General			
	Minimum	Typical	Maximum
Performance level	PL d (EN ISO 13849)		
PFHd (probability of dangerous failure per hour)	8×10^{-8}		
T_M (service life)	20 years (EN ISO 13849)		
Laser safety class	Laser class 1 (according to IEC 60825-1 as well as CDRH 21 CFR 1040.10 and 1040.11; deviations due to Laser Notice No. 50, dated 24/06/2007, are excluded)		
Protection type	IP 65 (EN 60529)		
Protection class S300 — medium range	II (EN 50178)		
Protection class S300 — long range	III (EN 50178 and EN 60950)		
Operating temperature range	-10°C		+50 °C
Storage temperature range	-25 °C		+50 °C
	-25 °C		+70°C (≤ 24 h)
Humidity (taking into account the operating temperature range)	EN 61496B1, section 5.1.2 and 5.4.2, as well as CLC/TS 61496B3, section 5.4.2		
Vibrations	EN 61496B1 as well as CLC/TS 61496B3		
Frequency range	10 Hz		150 Hz
Amplitude	0.35 mm or 5 g		
Shock resistance	EN 61496B1, section 5.1 and 5.4.4 as well as CLC/TS 61496B3, section 5.4.4		
Single shock	15 g, 11 ms		
Continuous shock	10 g, 16 ms		
Transmitter	Pulsed laser diode		
Wavelength	895 nm	905 nm	915 nm
Divergence of collimated beam (full angle)		14 mrad	
Pulse duration			5.5 ns
Average output power			3.42 mW
Light spot size on optics cover		8 mm	
Light spot size at a range of 2.0 m		28 mm	
Housing			
– Material		Die-cast aluminium	

https://truckmanualshub.com/

General			
	Minimum	Typical	Maximum
– Colour		RAL 1021 (rape yellow)	
Optics cover			
– Material	Polycarbonate		
– Surface	Scratchproof coating on outside		
System connector	Protected against ESD		
– Material	Die-cast aluminium		
– Colour	RAL 9005 (black)		
Dimensions S300			
– Height			152 mm
– Width			102 mm
– Depth			105 mm
Total weight (without connecting wires)		1.2 kg	

https://truckmanualshub.com/

A

Address of manufacturer I
Adjusting the truck alignment 63
Assistance button (functions) 39
ASSISTANCE mode of operation
Overview 59
Audible signals 79
Automatic approach of the truck 67

B

Battery charger
Charging the remote control 44
Bottlenecks in the aisle 52

C

CE labelling 4
Changing the remote control 45
Cleaning
Cleaning the components used for ASSISTANCE mode 84
Motion-tracking sensors 85
Safety laser scanner 85
Contact details I
Copyright and trademark rights 13
Crosswise roadway 70
Customer-specific configuration 10

D

Damage to safety systems 22
Danger to employees 26
Defects in safety systems 22
Dimensions 98
Driving automatically without movement tracking 76

E

EC declaration of conformity in accordance with the Machinery Directive 4
Emergency off switches 40
Emergency stop 73
End of the aisle 69

H

Hazards and countermeasures 25

I

Identifying the operator 67
Improper use 5
Information symbols 14
Intended use 4

L

LED signalling unit
Information and warning signals . . 31 – 32
LED signals from the movement tracking sensors 33
Lint trap 4

M

Maintenance 92
1000 hours/annually 94
500 hours/every 6 months 93
Safety regulations 93
Medical equipment 23
Minimum distance to obstacles 72
Misuse of safety systems 22
Modifying the truck . . . . . 21 – 22
Modifying the truck parameters 22
Motion-tracking sensors
Cleaning 85
Movement tracking ACTIVE/PAUSED
Switching 66
Movement tracking sensors
Function 33
Signals from the indicator LEDs 33
Moving the truck position to the next pallet 75

O

Obstacles in the roadway 71

https://truckmanualshub.com/

Operating ASSISTANCE mode
Adjusting the truck alignment 63
Driving automatically without movement tracking 76
Emergency stop 73
Identifying the operator 67
Moving the truck position to the next pallet 75
Obstacles in the roadway 71
Positioning in the aisle 64
Setting the drive programme 78
Specifying the distance to the rack contour 64
Stopping at the end of the racking . . . 69
Switching between ACTIVE/PAUSED modes for movement tracking 66
Switching on 62
Z picking 77
Operating company
Duties 18
Operating instructions
Storing 13
Validity 12
Operator
Duties 19
Responsibility for the remote control . 19
Overhang for obstacles 38
Overview of components 30

P

Positioning in the aisle 64
Priority rules in mixed MANUAL/ASSISTANCE traffic 56

Q

Quick overview
Overview of components 30

R

Remote control
Changing the remote control 45
Charging the remote control 44
Discharge indicator 43
Functions 41
Maximum operating time when the battery is fully charged 45
Registering a remote control on the truck 46
Switching on and off 41
Required safety distances in the aisle 9
Requirements for pallets and loads 8
Requirements for the ground conditions of roadways 11
Requirements for the place of use 6
Residual dangers, residual risks 23
Retrofitting 21
Roadways
Keeping roadways clear of obstacles . 57
Minimum distance to obstacles 58
Suitable roadways 11

S

Safety distances 9
Safety inspection 27
Safety laser scanner
Cleaning 85
Function 35
Limits to the detection of obstacles . . . 36
Overhang for obstacles 38

https://truckmanualshub.com/

Safety regulations in ASSISTANCE mode 51
Bottlenecks in the aisle 52
Information and warning signals 54
Maintain a safe distance from sloping edges and gradients 52
Maximum permissible dimensions of pallets and loads 53
Priority rules in mixed MANUAL/AS-SISTANCE traffic 56
Risk of accident due to excessive speed 53
Risk of accident due to smoke in the event of fire 55
Risk of accident from crossing the roadway immediately in front of the truck 51
Risk of collision when driving on slopes 53
Risk of crushing feet 51
Safe storage of the remote control . . . 55
Transport of people and jumping onto the truck (not permitted) 54
Wear safety shoes 51
Setting the drive programme 78
Specifying the distance to the rack contour 64
Stopping at the end of the aisle 69
Stopping at the end of the racking 69
Stopping before a crosswise roadway . . . 70
Switching off (truck) 61
Switching off the truck 61
Switching on (truck) 61
Switching on the truck 61

T

Technical data
Dimensions 98
Remote control components 101
Safety laser scanner 102
Transporting
Crane loading (not permitted) 88
Driving on loading bridges 89
Lashing down the truck 88
Two-page PDF display 14

V

VDI datasheet 99
Visual inspection
After switching on ASSISTANCE mode 49
Before switching on ASSISTANCE mode 48
Brake test after switching on ASSISTANCE mode 49
Safety information 48

W

Warning regarding non-genuine parts . . . 22
Warning sounds in ASSISTANCE mode . 79

Z

Z picking 77

https://truckmanualshub.com/

https://truckmanualshub.com/

https://truckmanualshub.com/

STILL GmbH

50108046085 EN – 02/2018