HINO

QUALITY PARTS,
THE PERFECT FIT™

QUICK REFERENCE PARTS CATALOG 1998 - 2004

MODEL YEAR EDITION

Note: all parts listed for 2003 models also fit 2004 models.

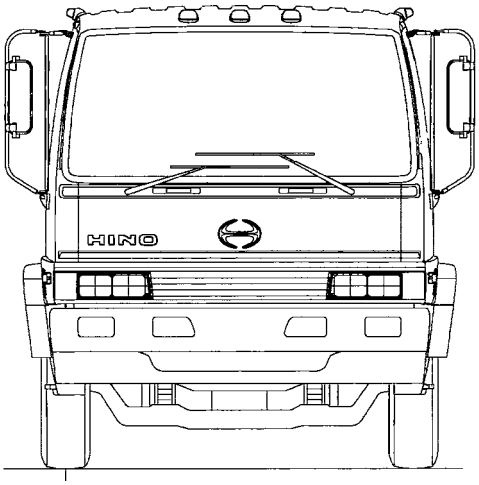

HINO DIESEL TRUCKS (U.S.A.) INC

TABLE OF CONTENTS

SECTION	CONTENTS	PAGE

MODEL INFORMATION & CATALOGS

Hino Model Determination A-1
Model Designator Chart A-2
Gross Weight Ratings A-2
Engine Type A-2
Hino Model Availability By Model Year A-3
Model Number Interpretation A-3
Hino Parts Catalogs A-4
Hino Workshop Manuals A-5

AIR CONDITIONING AND HEATING

Air Conditioning Kits, Replacement Parts and Compressor Drive Belt 1
Heater Fan Motor, Fan Switch and Heater Core 1

ACCESSORIES

Block Heater 2
Air Ride Suspension Seat - Base Kit 2
Radio Kits 2
Heated Mirrors 2
Stainless Steel Wheel Liners 3
Locking Fuel Caps 3
Floor Mat Sets 3
Storage Bin Drawer 3
Grille Guards 3
CAB Air Deflectors 3

BEARINGS

Front Wheel Bearings 4
Rear Axle Bearings 4

BRAKE SYSTEM

Relined Exchange Brake Shoes 6
Brake Shoe Lining 6
Brake Drums 6
Brake Shoe Retracting Spring 7
Wheel Cylinders - Front Brakes 7
Wheel Cylinders - Rear Brakes 8
Brake Chambers - Front Brakes 8
Brake Chambers - Rear Brakes 8
Air Brake Valve Assemblies 9
Air Brake Foot Valve Assemblies 10
Air Compressor Assemblies 10
Brake Master Cylinders - FA/FB 10
Brake Servo Assemblies - FA/FB 10
ABS Wheel Sensors 10
Vacuum Brake ABS Modulator 10
Air Brake Valve Assemblies - Air Over Hydraulic Systems 2000-1-FB 11
Air Brake Valve Assemblies - Air Over Hydraulic Systems 1998-FD/FE/FF 12
Air Brake Valve Assemblies - Air Over Hydraulic Systems 1999-2001-FD/FE/FF 13
Air Brake Valve Assemblies - Full Air Systems 1998-SG 14

TABLE OF CONTENTS

SECTION	CONTENTS	PAGE

BRAKE SYSTEM
Air Brake Valve Assemblies - Full Air Systems 1999-2001-SG 15
Rockwell Automatic Slack Adjusters - Full Air Systems 16
Parking Brake Cable 16
Parking Brake Drums, Shoes, Lining & Return Springs 16

CAB AND LAMPS
Hino Paints 17
FA/FB - Cab Panels & Trim, Bumpers, Glass, and Mirrors 18
FD/FE - Cab Panels & Trim, Bumpers, Glass, and Mirrors 20
FF/SG - Cab Panels & Trim, Bumpers, Glass, and Mirrors 24
Mirror Replacement Parts 28
Seat Assemblies 30
FA/FB - Lamp Assemblies & Lens 32
FD/FE/FF/SG - Lamp Assemblies & Lens 34

CABLES
Transmission Control Shift Cables - Manual Transmission 36
Engine Control and Speedometer Cables 36

CHASSIS
Front and Rear Suspension - Shocks, Springs and King Pin Sets 37
Steering - P/S Pump, Gear Box, Tie Rod Ends, Drag Links 38
Axles 39
Lug Nuts, Studs & Hub Bolt Kits 39
Rear Wheel Inner Cap Nuts 39
Lug Nut Wrench 40
Wheels 40
Valve Stem For Tubeless Wheels 40
Universal Joints 40
Front And Rear Spring Repair: Bushings, Pins & Hardware 41

CLUTCH & FLYWHEEL
Clutches 42
Clutch Release Bearing, Hubs & Forks 42
Clutch Cylinders and Repair kits 43
Flywheels 43
Flywheel Dowel Pins (Pressure Plate Alignment Dowels) 43

COOLING SYSTEM - Water Pump, Hoses, Drive Belts, Thermostats, Radiators, Kits
FA/FB Cooling System 44
FD/FE/FF/SG Cooling System 45

ELECTRICAL
Starters, Alternators & Alternator Drive Belts 46
Fusible Links and Cover 46
Battery Box Covers 47
Electrical Horns 47
Relay & Flasher Assemblies 47
Engine Electrical - Water Temperature Sender, Oil Pressure Switch, Glow Plugs 47
Instruments and Gauges 48
Electrical Switches 49
Steering Column Combination Switch 49
Ignition Switch & Key blanks 49
Complete Lock Sets & Door Key With Tumblers 49

TABLE OF CONTENTS

SECTION	CONTENTS	PAGE

ENGINE

Engine Series Identification 50
Piston Liners 51
Piston and Liner Kits 51
Piston, Piston Ring Sets, Wrist Pins, Snap Rings, Wrist Pin Kits & Connecting Rod Bearing Sets 51
Main Bearings & Thrust Washers 52
Valves, Valve Springs, Valve Guides & Seals 52
Oil Pump Assemblies 52
Oil Filler Cap 52
Drain Plug - Oil Pan 52

EXHAUST SYSTEM

FA/FB Exhaust System 53
FD/FE/FF/SG Exhaust System 54

FILTERS

Oil, Fuel & Air Filters 55
Power Steering & Automatic Transmission Filters 55

FUEL SYSTEM

Fuel Tank, Caps, Fuel Gauge Sending Unit 56
Fuel Injection System - Nozzles, Pumps 56

GASKETS

Engine Gaskets & Gasket Overhaul Sets 57
Transmission Gasket Sets 57

OIL SEALS

Engine Oil Seals 58
Axle Seals 58
Transmission & Differential Oil Seals 58

TURBOCHARGER

FA/FB Turbocharger 59
FD/FE/FF/SG Turbocharger 60

WINDSHIELD WIPERS

Windshield Wipers 61

HINO MODEL DETERMINATION

In order to use this catalog and determine the correct part number for the vehicle, it is necessary to determine the Model and model year. In some cases, it may be necessary to determine the wheelbase length, engine model and the type of transmission.

The Model, model year, wheelbase and engine model information is contained on the Vehicle Identification Number (VIN) plate. This plate is located on the drivers door sill as shown.

Use the following chart to determine the Model, model year and engine for the vehicle.

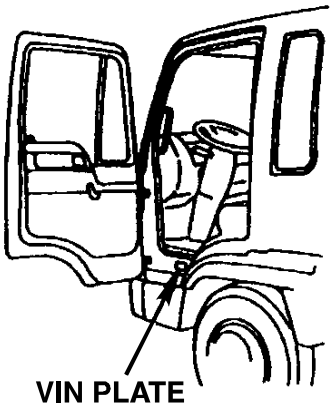

JHB FD 2J P 8 W 2 S 10016

DIGITS 1 thru 3: manufacturer identification
HINO MOTORS, LTD.

DIGITS 4 & 5: MODEL
(SEE MODEL LIST)

DIGITS 6 & 7: ENGINE TYPE
(SEE ENGINE LIST)

DIGIT 8: WHEELBASE CODE
(HIGHER NUMBER/LETTER REPRESENTS LONGER WHEELBASE)

DIGIT 9: CHECK DIGIT

DIGIT 10: MODEL YEAR

W	1998	1	2001
X	1999	2	2002
Y	2000	3	2003

DIGIT 11: ASSEMBLY PLANT CODE
1 HINO MOTORS, LTD, HINO PLANT IN JAPAN

DIGIT 12: MODIFICATION CODE
S: STARTING
T: SEQUENTIALLY ALPHABETIC CHANGING BY MAJOR MODIFICATION

DIGITS 13 thru 17: SEQUENTIAL SERIES NUMBER

MODEL DESIGNATOR CHART

VIN CODE	CAB/BODY TYPE	SERIES, GVWR (lbs)	BRAKE SYSTEMS
FA	FORWARD CONTROL TYPE TRUCK	14,001 - 15,500 (Class 4)	HYDRAULIC BRAKE SYSTEM
FB	FORWARD CONTROL TYPE TRUCK	16,001 - 18,000 (Class 5)	HYDRAULIC BRAKE SYSTEM
FD	FORWARD CONTROL TYPE TRUCK	19,501 - 22,500 (Class 6)	AIR OVER HYDRAULIC BRAKE SYSTEM
FE	FORWARD CONTROL TYPE TRUCK	22,501 - 26,000 (Class 6)	AIR OVER HYDRAULIC BRAKE SYSTEM
FF	FORWARD CONTROL TYPE TRUCK	26,001 - 30,000 (Class 7)	AIR OVER HYDRAULIC BRAKE SYSTEM
SG	FORWARD CONTROL TYPE TRUCK	30,001 - 33,000 (Class 7)	AIR BRAKE SYSTEM

GROSS WEIGHT RATINGS

MODELS	TIRE SIZE	GVWR (kg)	GAWR (kg)		GVWR (lbs.)	GAWR (lbs.)	
			FRONT	REAR		FRONT	REAR
FA	215/85R16-10	6,800	2,430	4,480	15,000	5,360	9,880
FB	215/75R17.5-12	8,000	2,700	5,500	17,600	5,950	12,100
	235/85R16-10	7,740	2,700	5,040	17,060	5,950	11,100
FD	9R22.5-12(F)	10,100	3,500	7,170	22,300	7,700	15,800
	245/70R19.5-133/131J	10,100	3,500	7,200	22,300	7,700	15,900
	225/70R22.5-140/137M	11,790	4,670	9,200	25,995	10,300	20,280
FE	11R22.5-14(G)	11,790	4,670	9,200	25,995	10,300	20,300
	295/75R22.5-14(G)	11,790	4,670	9,200	25,995	10,300	20,300
FF	11R22.5-14(G)	13,600	5,300	9,610	30,000	11,700	21,200
	295/75R22.5-14(G)	13,600	5,300	9,610	30,000	11,700	21,200
SG	11R22.5-14(G)	14,900	5,300	9,610	32,900	11,700	21,200
	295/75R22.5-14(G)	14,900	5,300	9,610	32,900	11,700	21,200

ENGINE TYPE

CODE	MANUFACTURER	MODEL	DESCRIPTION
4J	HINO MOTORS, LTD	J05C-TB/TD	5.3 LITERS, DIESEL, 165HP / 168HP
2J	HINO MOTORS, LTD.	J08C-TD/TP	8.0 LITERS, DIESEL, 200HP / 200HP
1J	HINO MOTORS, LTD.	J08C-TE/TR	8.0 LITERS, DIESEL, 250HP / 252HP

HINO MODEL DETERMINATION
HINO MODEL AVAILABILITY BY MODEL YEAR

MODELS	MODEL YEARS													
	98	99	00	01	02	03	04	05	06	07	08	09	10	11
FA1517 (FA4J)	X	X	X	X	X	X								
FB1817 (FB4J)	X	X	X	X	X	X								
FD2220 (FD2J)	X	X	X	X	X	X								
FE2620 (FE2J)	X	X	X	X	X	X								
FF3020 (FF2J)	X	X	X	X	X									
SG3320 (SG2J)	X	X	X	X	X									
SG3325 (SG1J)	X	X	X	X	X	X								

MODEL NUMBER INTERPRETATION
(EXAMPLE)

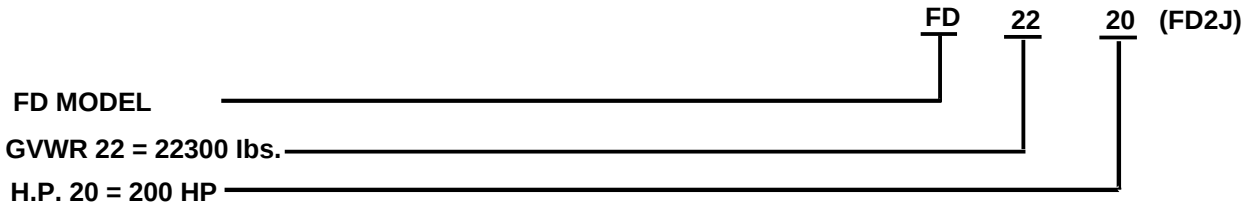

HINO PARTS CATALOGS

NOTE: 1998 through 2001 Hino Parts Catalogs are available in sets of microfiche or in printed parts catalogs. When ordering a printed parts catalog, please utilize the listed catalog number followed by the letter “B” (ie. FB2231EB). Please specify which you require when ordering.

YEAR	MODEL	CATALOG NO.	LATEST REVISION DATE
1998	FA/FB4J	FB2231E	JUNE 1997
	FD/FE2J	FD2171E	JUNE 1997
	FF2J	FF2571E	JUNE 1997
	SG2J	SG2201E	JUNE 1997
	SG1J	SG2191E	JUNE 1997
1999	FA/FB4J	FB2240E	JAN. 1998
	FD/FE2J	FD2180E	JAN. 1998
	FF2J	FF2580E	JAN. 1998
	SG2J	SG2220E	JAN. 1998
	SG1J	SG2210E	JAN. 1998
2000	FA/FB4J	FB2250E	AUG. 1998
	FD/FE/FF2J	FD2190E	AUG. 1998
	SG2J/SG1J	SG2230E	AUG. 1998
2001	FA/FB4J	FB2260E	MAR. 2000
	FD/FE/FF2J	FD2200E	MAR. 2000
	SG2J/SG1J	SG2240E	MAR. 2000
2002	FA/FB4J	FA2231E	MAR. 2001
	FD/FE/FF2J	FD2210E	MAR. 2001
	SG2J/SG1J	SG22451E	MAR. 2001
2003	FA/FB4J	CD-ROM	JUNE 2002
	FD/FE/FF2J		
	SG2J/SG1J		

HINO WORKSHOP MANUALS

MODEL YEAR	MODEL	DESCRIPTION	MANUAL PART NUMBER
1998	FA, FB	ENGINE, CHASSIS, BODY, ELECTRICAL	S1239E09
	FD, FE, FF, SG	ENGINE	S1134E131
		CHASSIS, BODY, ELECTRICAL	S1134E132
1999	FA, FB	ENGINE, CHASSIS, BODY, ELECTRICAL	S1239E10
	FD, FE, FF, SG	ENGINE	S1134E141
		CHASSIS, BODY, ELECTRICAL	S1134E142
2000	FA, FB	ENGINE, CHASSIS, BODY, ELECTRICAL	S1239E11
	FD, FE, FF, SG	ENGINE	S1134E151
		CHASSIS, BODY, ELECTRICAL	S1134E152
2001	FA, FB	ENGINE, CHASSIS, BODY, ELECTRICAL	S1239E12
	FD, FE, FF, SG	ENGINE	S1134E161
		CHASSIS, BODY, ELECTRICAL	S1134E162
2002	FA, FB	ENGINE, CHASSIS, BODY, ELECTRICAL	S1239E13
	FD, FE, FF, SG	ENGINE	S1134E171
		CHASSIS, BODY, ELECTRICAL	S1134E172
2003	FA, FB	ENGINE, CHASSIS, BODY, ELECTRICAL	S1239E14
	FD, FE, FF, SG	ENGINE	S1134E181
		CHASSIS, BODY, ELECTRICAL	S1134E182

NOTES

AIR CONDITIONING

DESCRIPTION	PART NUMBER	APPLICATION	YEAR
A/C Kits	883005543A	FA	1998 - 2001
	883005544A	FA	2002 - 2003
	883005543A	FB	1998 - 1999
	883006691A	FB	2002 - 2003
	883006690A	FB	2000 - 2001
	883005501A	FD	1998 - 2001
	883006760A	FD	2002 - 2003
	883005512A	FE	1998 - 2001
	883006770A	FE	2002 - 2003
	883005522A	FF/SG	1998 - 2001
	883005522A	FF/SG	2002 - 2003
Receiver Dryer	884701140A	ALL MODELS	1998 - 2003
A/C Thermostats	886211260A	ALL MODELS	1998 - 2003
A/C ON/OFF Control Switch	886101130A	ALL MODELS	1998 - 2003
A/C Expansion Valves	885151060A	FA/FB	1998 - 2003
	885151050A	FD/FE/FF/SG	1998 - 2003
Idler Pulley Assemblies	883601280A	ALL MODELS	1998 - 2003
A/C Compressors - With Clutch	883101710A	ALL MODELS	1998 - 2003
- Without Clutch	883201520A	ALL MODELS	1998 - 2003
Compressor Clutch	883301130A	ALL MODELS	1998 - 2003
A/C Relay Assembly	859202480A	FA/FB	1998 - 2003
	859201920A	FD/FE/FF/SG	1998 - 2001
A/C Compressor Drive Belt	883811100A	ALL MODELS	1998 - 2001

HEATER FAN MOTOR, FAN SWITCH AND HEATER CORE

DESCRIPTION	PART NUMBER	APPLICATION	YEAR
Heater Fan Motor	871041060A	ALL MODELS	1998 - 2003
Heater Fan Switch	874801170A	ALL MODELS	1998 - 2003
Heater Core	871071101A	ALL MODELS	1998 - 2003

BLOCK HEATER - ENGINE COOLANT

DESCRIPTION	PART NUMBER	APPLICATION	YEAR
Block Heaters (120V 1000W)	H3500018	J05C, J08C	1998 - 2003

AIR RIDE SUSPENSION SEAT - BASE KIT

APPLICATION: FD/FE/FF/SG MODELS

NOTE: Convert the existing drivers seat to an Air Ride Seat by installing an Air Suspension seat base as shown along with the air pipe.

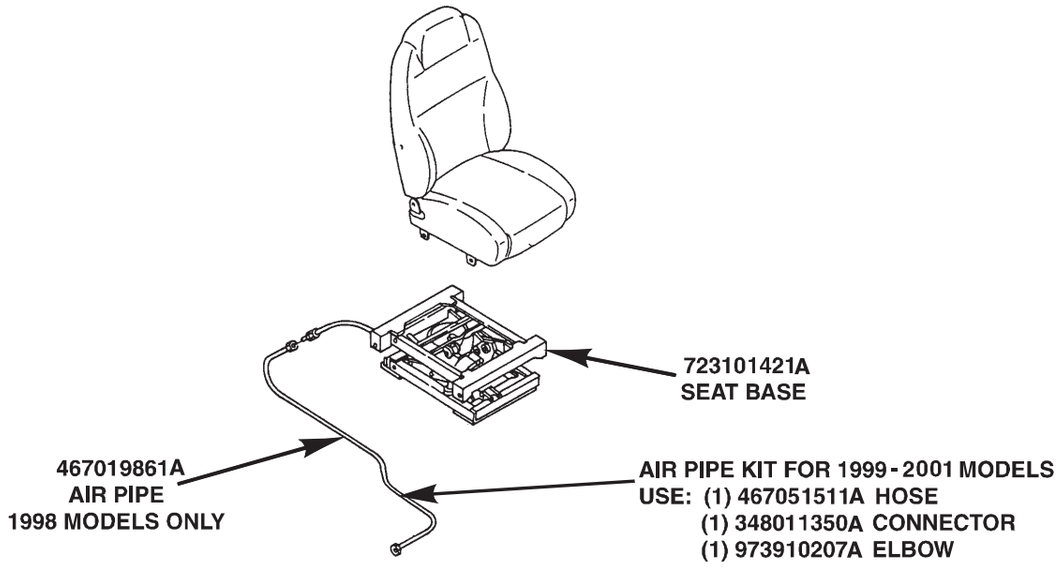

RADIO KITS

DESCRIPTION	PART NUMBER	APPLICATION	YEAR
AM/FM Stereo Kit	C100	ALL MODELS	1998 - 2000
AM/FM Stereo Cassette Kit	C300	ALL MODELS	1998 - 2000
Antenna	863201230A	ALL MODELS	1998 - 2003
AM/FM Stereo Cassette Kit W/Remote	86110H460D	ALL MODELS	2001 - 2003
AM/FM Stereo CD Kit W/Remote	86110H465D	ALL MODELS	2001 - 2003
Premium AM/FM Stereo CD Kit W/Remote	86110H665D	ALL MODELS	2001 - 2003

HEATED REAR VIEW OUTSIDE DOOR MIRRORS

DESCRIPTION	PART NUMBER	APPLICATION	YEAR
R/H Heated Mirror	H207020012V	ALL MODELS	1998 – 2003
L/H Heated Mirror	H207030012V	ALL MODELS	1998 - 2003
R/H Heated Mirror with Clearance Light	H207070012V	ALL MODELS	2001
L/H Heated Mirror with Clearance Light	H207060012V	ALL MODELS	2001
Heated Mirror Switch	842803020A	ALL MODELS	1998 - 2003

NOTE: Wiring not available in 1998 - 99 vehicles. Wiring is at installers discretion on these vehicles.

STAINLESS STEEL WHEEL LINERS

DESCRIPTION			PART NUMBER	APPLICATION	YEAR
16 X 6.0	1 PC.	6 LUG	42600H4010	FA	1998 - 2003
17.5 X 6.0	1 PC.	6 LUG	42600H4080	FB	1998 - 2003
22.5 X 6.75	1 PC.	6 LUG	42600H4100	FD	1998 - 2003
19.5 X 6.75	1 PC.	6 LUG	42600H4090	FD (Low Profile)	1998 - 2003
22.5 X 7.5	1 PC.	10 LUG	42600H4100	FE/FF/SG	1998 - 2003
22.5 X 8.25	1 PC.	10 LUG	42600H4100	FF/SG	1998 - 2003

FEATURES

Each Hino Stainless Steel Wheel Liner Set Includes:

- 2 front and 2 rear wheel simulators
- 8 screw stud extenders †
- 8 screw jam nuts †
- 8 lug nut covers to go over jam nuts †
- 4 Hino emblems for the center hub covers
- Special Tools
- Special Bolts*
- 4 Locking Rings*
- A set of Air Valve Extenders*

Ease of Installation
Lifetime Warranty
All parts in the set are tough stainless steel which affords a lifetime warranty against rust, peeling and corrosion.
† - All Models Except 42600H4100
* - 42600H4100 Only

LOCKING FUEL CAPS

DESCRIPTION	PART NUMBER	APPLICATION	YEAR
Locking Fuel Caps	77310H3600	ALL MODELS	1998 - 2003

FLOOR MAT SETS

DESCRIPTION	PART NUMBER	APPLICATION	YEAR
Floor Mat Set (Rubber) With Hino Emblem	74700H3545	ALL MODELS	1998 - 2003

STORAGE BIN DRAWER FOR UNDER DRIVER'S SEAT ONLY

DESCRIPTION	PART NUMBER	APPLICATION	YEAR
Storage Bin Drawer	72702101 0A	ALL MODELS	1998 - 2003

NOTE: Cannot be used with Air Ride Driver's Seat.

CAB AIR DEFLECTORS

DESCRIPTION	HEIGHT	PART NUMBER	APPLICATION	YEAR
Air Deflector Kit	90"	F4	FA/FB	1998 - 2001
Air Deflector Kit	96"	F5	FA/FB	1998 - 2001
Air Deflector Kit	95"	F2S	FD/FE	1998 - 2001
Air Deflector Kit	102"	F2W	FD/FE	1998 - 2001
Air Deflector Kit	95"	F3S	FF/SG	1998 - 2001
Air Deflector Kit	102"	F3W	FF/SG	1998 - 2001

All Hino Air Deflectors come finished in Hino White, gel coat. Air Deflectors are only shipped via ground transportation, due to size limitations.

FRONT WHEEL BEARINGS

DESCRIPTION	PART NUMBER	APPLICATION	YEAR
Inner Front Wheel Bearing	988450124A	FA/FB	1998 - 2003
	988450104A	FD	1998 - 2003
	988465115A	FE/FF/SG	1998 - 2003
Outer Front Wheel Bearing	988435105A	FA/FB	1998 - 2001
	988435109A	FA/FB	2002 - 2003
	988435120A	FD	1998 - 2003
	988450104A	FE/FF/SG	1998 - 2003

REAR AXLE BEARINGS

DESCRIPTION	PART NUMBER	APPLICATION	YEAR
Inner Rear Axle Bearing	988475101A	FA/FB/FD	1998 - 2003
	988485104A	FE/FF/SG	1998 - 2003
Outer Rear Axle Bearing	988465109A	FA/FB/FD	1998 - 2003
	988475101A	FE/FF/SG	1998 - 2003

RELINED EXCHANGE BRAKE SHOES

DESCRIPTION	PART NUMBER	APPLICATION	YEAR
Front Brake Shoe (Non-Asbestos)	474103430R	FA/FD	1998 - 2003
	474103430R	FB	1998 - 1999
	474105220R	FB	2000 - 2003
	474103730R	FE/FF	1998 - 2003
	H4700R	SG	1998 - 2003
Rear Brake Shoe (Non-Asbestos)	474302800R	FA/FD	1998 - 2003
	474302800R	FB	1998 - 1999
	474304570R	FB	2000 - 2003
	474303090R	FE/FF	1998 - 2003
	H4701R	SG	1998 - 2003

BRAKE SHOE LINING

DESCRIPTION	PART NUMBER	RIVET	APPLICATION	YEAR
Front Brake Lining - Non-Asbestos (Qty Per Shoe)	474415580A (1)	947906101A (14)	FA/FD	1998 - 2003
	474415580A (1)	947906101A (14)	FB	1998 - 1999
	474417970A (1)	947906101A (14)	FB	2000 - 2003
	474416140A (2)	947906105A (20)	FE/FF	1998 - 2003
	474416590A (2)	947906108A (16)	SG	1998 - 2003
Rear Brake Lining - Non-Asbestos (Qty Per Shoe)	474432050A (1)	947906101A (14)	FA/FD	1998 - 2003
	474432050A (1)	947906101A (14)	FB	1998 - 1999
	474433240A (1)	947906101A (14)	FB	2000 - 2003
	474432350A (2)	947906105A (24)	FE/FF	1998 - 2001
	474416630A (2)	947906108A (24)	SG	1998 - 2001

BRAKE DRUMS

DESCRIPTION	PART NUMBER	APPLICATION	YEAR
Left Front Drum	435123231A	FA/FB	1998 - 2003
	435123950A	FD	1998 - 2003
	435123960A	FE/FF	1998 - 2003
	435123980A	SG	1998 - 2003
Right Front Drum	435123221A	FA/FB	1998 - 2003
	435123940A	FD	1998 - 2003
	435123970A	FE/FF	1998 - 2003
	435123980A	SG	1998 - 2003
Rear Drum - Left & Right Same	435122780A	FA/FB	1998 - 1999
	435124470A	FA/FB	2000 - 2003
	435122780A	FD	1998
	435124470A	FD	1999 - 2003
	435122570A	FE/FF	1998 - 2003
	435123140A	SG	1999 - 2003

BRAKE SHOE RETRACTING SPRING

DESCRIPTION	PART NUMBER (QTY)	APPLICATION	YEAR
Front Brake Shoe (Qty. Per Wheel)	474501220A (2)	FA/FB	1998 - 2003
	474501220A (2)	FD	1998 - 2003
	474501190A (2)	FE/FF	1998 - 2003
	476601290A (1)	SG	1998 - 2003
Rear Brake Shoe (Qty. Per Wheel)	474501230A (2)	FA/FB	1998 - 2003
	474501230A (2)	FD	1998 - 2003
	474501250A (2)	FE/FF	1998 - 2003
	476601300A (1) & 987306105A (1)	SG	1998 - 2003

WHEEL CYLINDERS - FRONT BRAKES

DESCRIPTION	PART NUMBER (QTY)	APPLICATION	YEAR
Left Front Wheel Cylinder (Qty Per Side)	475301511A (2)	FA/FB	1998 - 2003
	475301451A (2)	FD	1998 - 2003
	475301531A (2)	FE/FF	1998 - 2003
Right Front Wheel Cylinder (Qty Per Side)	475101511A (2)	FA/FB	1998 - 2003
	475101451A (2)	FD	1998 - 2003
	475101531A (2)	FE/FF	1998 - 2003
Repair Kit (Qty Per Axle)	040475134A (1)	FA/FB	1998 - 2003
	040475158A (1)	FD	1998 - 2003
	040475142A (1)	FE/FF	1998 - 2003

WHEEL CYLINDERS - REAR BRAKES

REAR WHEEL CYLINDER LOCATOR

PART NUMBER PREFIX	LOCATION OF BRAKE CYLINDER
47550	FRONT CYLINDER ON RIGHT REAR BACKING PLATE
47560	REAR CYLINDER ON RIGHT REAR BACKING PLATE
47570	FRONT CYLINDER ON LEFT REAR BACKING PLATE
47580	REAR CYLINDER ON LEFT REAR BACKING PLATE

DESCRIPTION	PART NUMBER (QTY)	APPLICATION	YEAR
Left Rear Wheel Cylinder (Qty Per Side)	475801381A (1)	FA	1998 - 2003
	475801471A (1)	FB	1998 - 1999
	475801381A (1)	FB	2000 - 2003
	475701391A (1)	FA/FB	1998 - 2003
	475701571A (1)	FD	1998 - 2003
	475801521A (1)		
	475701551A (1)	FE/FF	1998 - 2003
	475801501A (1)		
Right Rear Wheel Cylinder (Qty Per Side)	475601511A (1)	FA	1998 - 2003
	475601601A (1)	FB	1998 - 1999
	475601511A (1)	FB	2000 - 2003
	475501971A (1)	FA/FB	1998 - 2003
	475502211A (1)	FD	1998 - 2003
	475601651A (1)		
	475502191A (1)	FE/FF	1998 - 2003
	475601631A (1)		
Repair Kit (Qty Per Axle)	040475135A (1)	FA/FB	1998 - 2003
	040475144A (1)	FD	1998 - 2003
	040475163A (1)	FD	2002 - 2003
	040475143A (1)	FE/FF	1998 - 2003
	040475164A (1)	FE/FF	2002 - 2003

BRAKE CHAMBERS - FRONT BRAKES

DESCRIPTION	PART NUMBER	APPLICATION	YEAR
Left Brake Chamber	478303040A	SG	1998 - 2003
Right Brake Chamber	478303050A	SG	1998 - 2003

BRAKE CHAMBERS - REAR BRAKES

DESCRIPTION	PART NUMBER	APPLICATION	YEAR
Left Rear Brake Chamber	478502380A	SG	1998 - 2003
Right Rear Brake Chamber	478502390A	SG	1998 - 2003

AIR BRAKE VALVE ASSEMBLIES

445101310A

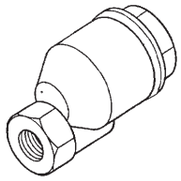

CHECK VALVE

45101320A

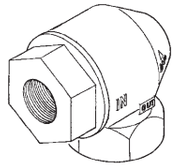

CHECK VALVE

445201060A

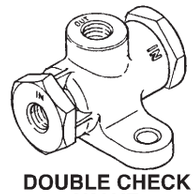

DOUBLE CHECK VALVE

445301340A
445301360A

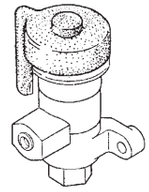

AIR PRESSURE REGULATOR

445601561A

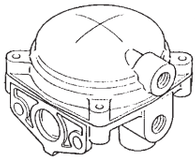

RELAY VALVE

445501021A

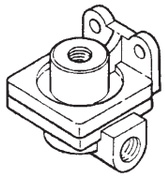

QUICK RELEASE VALVE

445701050A
445701100A

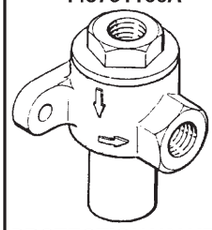

PROTECTION VALVE

447801020A

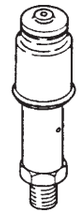

SAFETY VALVE

479301440A

SPRING BRAKE CONTROL VALVE

448501230A
448501240A

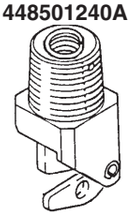

DRAIN COCK

NOTE: See pages 10 through 15 for applications.

AIR BRAKE
FOOT VALVE ASSEMBLIES

DESCRIPTION	PART NUMBER	APPLICATION	YEAR
Foot Valve Assembly (With Pedal)	471602630A	FB	2000 - 2003
	471603270A	FB	2002 - 2003
Foot Valve Assembly (With Pedal)	471602630A	FD/FE	1998 - 2003
Foot Valve Assembly (Without Pedal)	471602620A	FF/SG	1998 - 2003
Foot Valve Repair Kit	440693590A	FD/FE/FF/SG	1998 - 2003

AIR COMPRESSOR ASSEMBLIES

DESCRIPTION	PART NUMBER	APPLICATION	YEAR
Air Compressor Assembly	291002344A	FB	2000 - 2003
Air Compressor Assembly	291002344A	FD/FE/FF	1998 - 2003
Air Compressor Assembly	291002364A	SG	1998 - 2003

BRAKE MASTER CYLINDERS - FA/FB (VACUUM SERVO)

DESCRIPTION	PART NUMBER	APPLICATION	YEAR
Brake Master Cylinder	472001490A	FA	ALL
		FB	1998 - 1999
Repair Kit, Master Cylinder	040472024A	FA	ALL
		FB	1998 - 1999

BRAKE VACUUM SERVO ASSEMBLIES - FA/FB

DESCRIPTION	SERVO TYPE	PART NUMBER	REPAIR KIT	APPLICATION	YEAR
Brake Servo	HYDRO-VAC	446201392A	440694120A	FA/FB	1998 - 1999
Brake Servo	HYDRO-VAC	446201600A	440695520A	FA	2000 - 2003

ABS WHEEL SENSORS
(1999-2001 MODELS ONLY)

DESCRIPTION	PART NUMBER	APPLICATION	YEAR
Front Wheel ABS Wheel Sensor	894413611A	FA/FB	2000 - 2003
	894412590A	FD	1999 - 2003
	894412612A	FE/FF	1999 - 2003
	894412561A	SG	1999 - 2003
Rear Wheel ABS Wheel Sensor	894413621A	FA/FB	2000 - 2003
	894412600A	FD	1999 - 2003
	894412622A	FE/FF	1999 - 2003
- R/H	894412572A	SG	1999 - 2003
- L/H	894412582A	SG	1999 - 2003

VACUUM BRAKE ABS MODULATOR

DESCRIPTION	PART NUMBER	APPLICATION	YEAR
ABS Modulator	446001570A	FA	2000 - 2003
Modulator Replacement Cushions (3)	1330744000	FA	2000 - 2003
Modulator Replacement Studs (3)	1330764000	FA	2000 - 2003

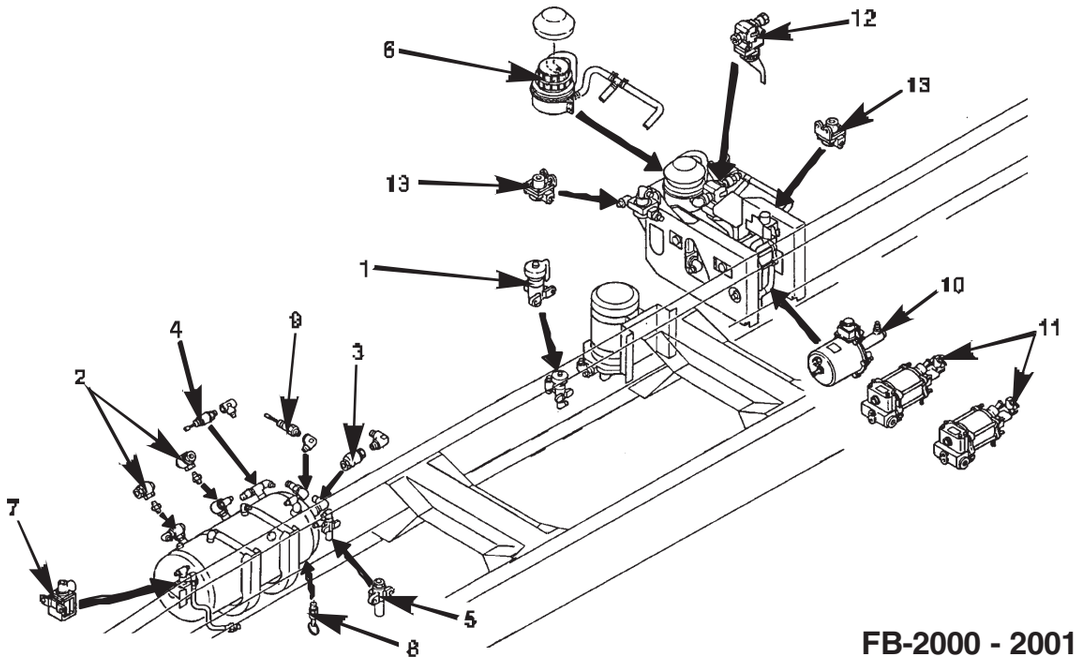

FB-2000 - 2001

AIR BRAKE VALVE ASSEMBLIES - AIR OVER HYDRAULIC SYSTEMS FB-2000 - 2001

KEY	DESCRIPTION	PART NUMBER	APPLICATION	YEAR
1	Air Pressure Regulator Assembly	445301360A	FB	2000 - 2001
2	Check Valve Assembly	445101320A	FB	2000 - 2001
2	Check Valve Assembly	445101190A	FB	2002 - 2003
3	Check Valve Assembly	445101310A	FB	2000 - 2001
3	Check Valve Assembly	445101090A	FB	2002 - 2003
4	Safety Valve Assembly	447801020A	FB	2000 - 2001
5	Protection Valve Assembly	445701050A	FB	2000 - 2001
6	Reservoir Assembly	472203820A	FB	2000 - 2001
7	Solenoid Valve, Exhaust Brake	276103690A	FB	2000 - 2001
8	Drain Cock	448501240A	FB	2000 - 2001
8	Drain Cock	448501251A	FB	2002 - 2003
9	Low Pressure Switch	833801510A	FB	2000 - 2003
10	Brake Servo AIR MASTER	446403290A	FB	2000 - 2003
	Repair Kits MAJOR KIT	440695340A	FB	2000 - 2003
11	ABS Modulator Assembly (2 Required)	446001560A	FB	2000 - 2003
	Seal Repair Kits	440695440A	FB	2000 - 2001
	Seal Repair Kits	440695520A	FB	2002 - 2003
	Piston Repair Kits	440695420A	FB	2000 - 2003
12	ABS Modulator Assembly	446001550A	FB	2000 - 2003
13	Quick Release Valve Assembly (2 Required)	445501021A	FB	2000 - 2003

FD/FE/FF - 1998 ONLY

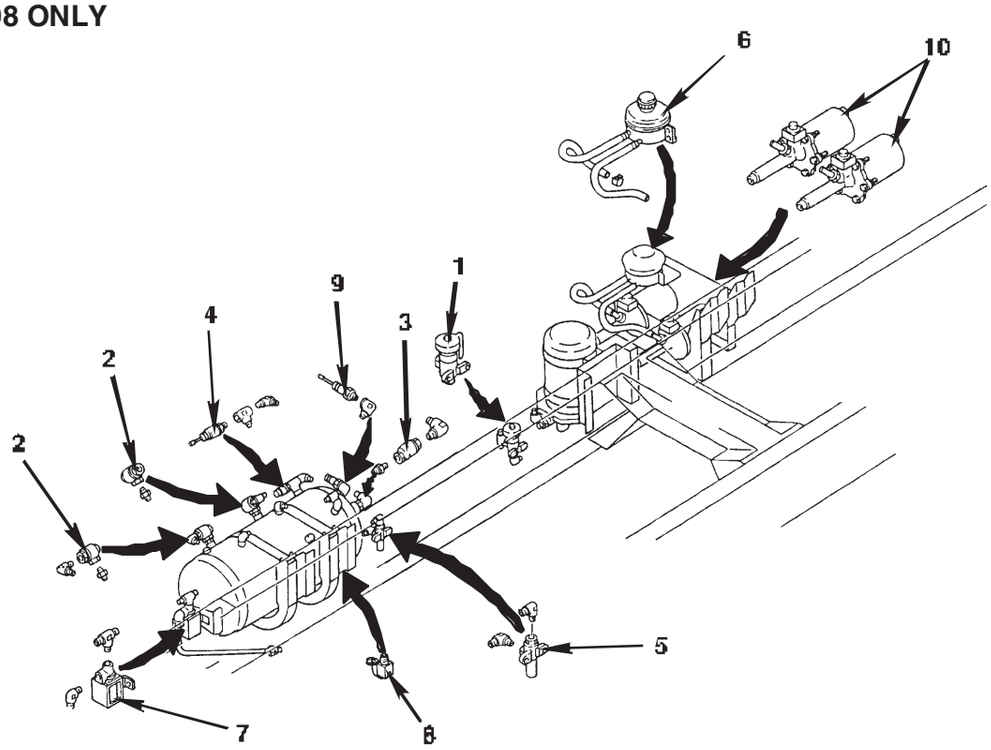

AIR BRAKE VALVE ASSEMBLIES - AIR OVER HYDRAULIC SYSTEMS FD/FE/FF-1998

KEY	DESCRIPTION			PART NUMBER	APPLICATION	YEAR
1	Air Pressure Regulator Assembly			445301360A	FD/FE/FF	1998
2	Check Valve Assembly			445101320A	FD/FE/FF	1998
3	Check Valve Assembly			445101310A	FD/FE/FF	1998
4	Safety Valve Assembly			447801020A	FD/FE/FF	1998
5	Protection Valve Assembly			445701050A	FD/FE/FF	1998
6	Reservoir Assembly			472202890A	FD/FE/FF	1998
7	Solenoid Valve, Exhaust Brake			276102161A	FD/FE/FF	1998
8	Drain Cock			448501230A	FD/FE/FF	1998
9	Low Pressure Switch			833801570A	FD/FE/FF	1998
10	Brake Servo	Front	AIR MASTER	446402410A	FD	1998
		Rear	AIR MASTER	446402490A	FD	1998
		Repair Kits	MAJOR KIT	440692340A	FD	1998
			MINOR KIT	440692330A	FD	1998
		Front & Rear	AIR MASTER	446402410A	FE	1998
		Repair Kits	MAJOR KIT	440692340A	FE	1998
			MINOR KIT	440692330A	FE	1998
		Front & Rear	AIR MASTER	446403050A	FF	1998
		Repair Kits	MAJOR KIT	440692340A	FF	1998
			MINOR KIT	440692330A	FF	1998

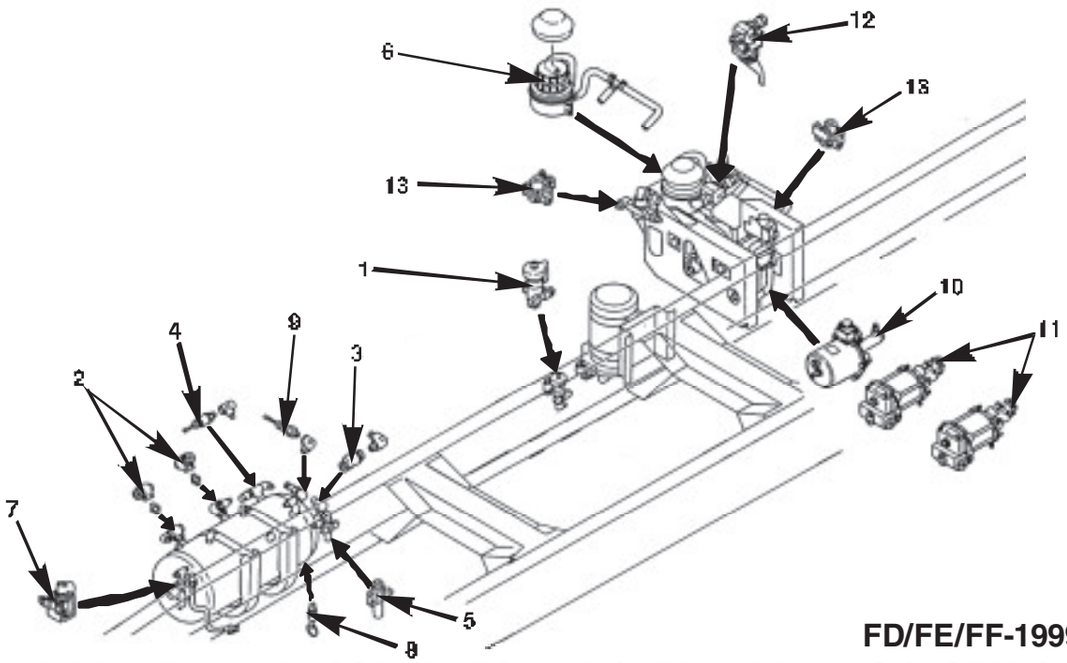

FD/FE/FF-1999 - 2001

AIR BRAKE VALVE ASSEMBLIES - AIR OVER HYDRAULIC SYSTEMS 1999 - 2001

KEY	DESCRIPTION		PART NUMBER	APPLICATION	YEAR
1	Air Pressure Regulator Assembly		445301360A	FD/FE/FF	1999 - 2003
2	Check Valve Assembly		445101320A	FD/FE/FF	1999 - 2001
2	Check Valve Assembly		445101190A	FD/FE/FF	2002 - 2003
3	Check Valve Assembly		445101310A	FD/FE/FF	1999 - 2001
3	Check Valve Assembly		445101090A	FD/FE/FF	2002 - 2003
4	Safety Valve Assembly		447801020A	FD/FE/FF	1999 - 2003
5	Protection Valve Assembly		445701050A	FD/FE/FF	1999 - 2003
6	Reservoir Assembly		472203610A	FD/FE/FF	1999
			472203800A	FD/FE/FF	2000 - 2003
7	Solenoid Valve, Exhaust Brake		276102161A	FD/FE/FF	1999
			276103690A	FD/FE/FF	2000 - 2003
8	Drain Cock		448501240A	FD/FE/FF	1999 - 2001
8	Drain Cock		448501251A	FD/FE/FF	2002 - 2003
9	Low Pressure Switch		833801510A	FD/FE/FF	1999 - 2003
10	Brake Servo	AIR MASTER	446402600A	FD/FE/FF	1999
	Repair Kits	MAJOR KIT	440692340A	FD/FE/FF	1999
		MINOR KIT	440692330A	FD/FE/FF	1999
	Brake Servo	AIR MASTER	446403290A	FD/FE/FF	2000 - 2003
	Repair Kits	MAJOR KIT	440695340A	FD/FE/FF	2000 - 2003
11	ABS Modulator Assembly (2 Required)		446001391A	FD/FE/FF	1999
	Seal Repair Kits		440695260A	FD/FE/FF	1999
	Piston Repair Kits		440695270A	FD/FE/FF	1999
	ABS Modulator Assembly (2 Required)		446001560A	FD/FE/FF	2000 - 2003
	Seal Repair Kits		440695440A	FD/FE/FF	2000 - 2003
	Piston Repair Kits		440695420A	FD/FE/FF	2000 - 2003
12	ABS Modulator Assembly		446001380A	FD/FE/FF	1999
			446001550A	FD/FE/FF	2000 - 2003
13	Quick Release Valve Assembly (2 Required)		445501021A	FD/FE/FF	1999 - 2003

SG-1998 ONLY

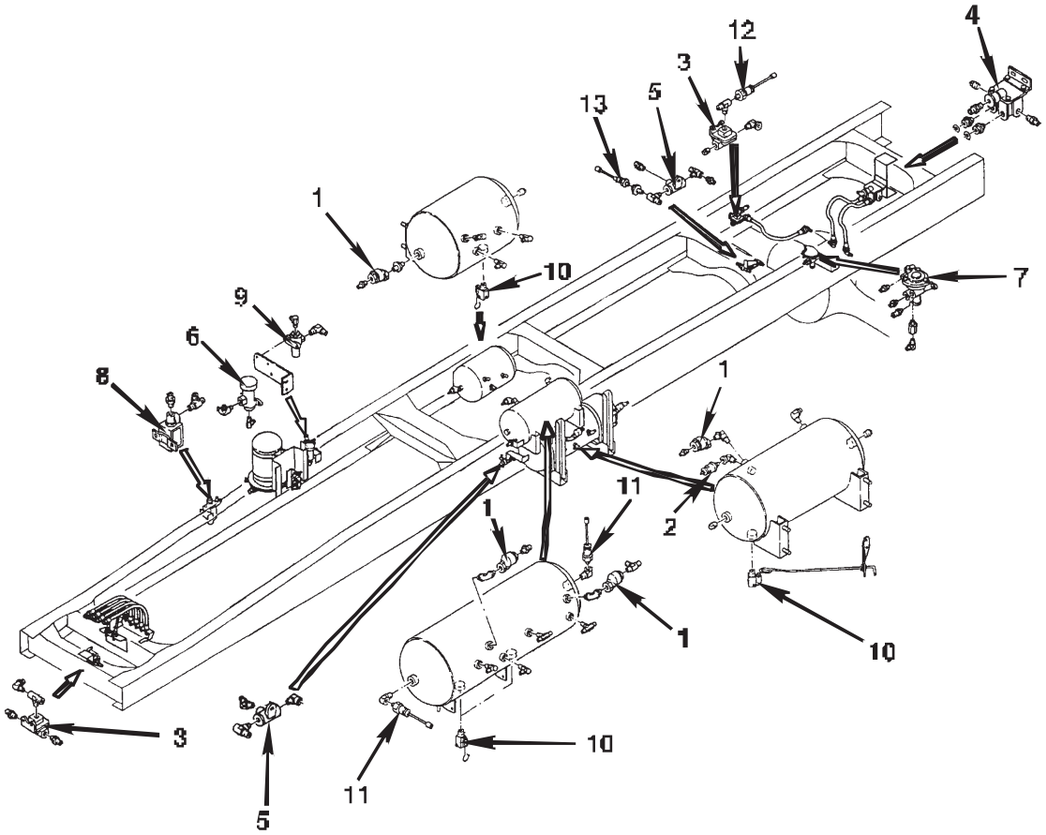

AIR BRAKE VALVE ASSEMBLIES - FULL AIR SYSTEMS SG-1998

KEY	DESCRIPTION	PART NUMBER	APPLICATION	YEAR
1	Check Valve Assembly (4 required)	445101310A	SG	1998
2	Safety Valve Assembly	447801020A	SG	1998
3	Quick Release Valve (2 required)	445501021A	SG	1998
4	Relay Valve Assembly	445401630A	SG	1998
5	Double Check Valve (2 required)	445201060A	SG	1998
6	Air Pressure Regulator	445301340A	SG	1998
7	Pressure Control Valve Assembly	447601050A	SG	1998
8	Solenoid Valve Assembly, Exhaust Brake	276102161A	SG	1998
9	Protection Valve	445701100A	SG	1998
10	Drain Cock (4 required)	448501230A	SG	1998
11	Pressure Switch Assembly (2 required)	833801510A	SG	1998
12	Pressure Switch Assembly	833801570A	SG	1998
13	Oil Pressure Switch Assembly	835301290A	SG	1998
Page 9	Spring Brake Control Valve Assembly	479301440A	SG	1998

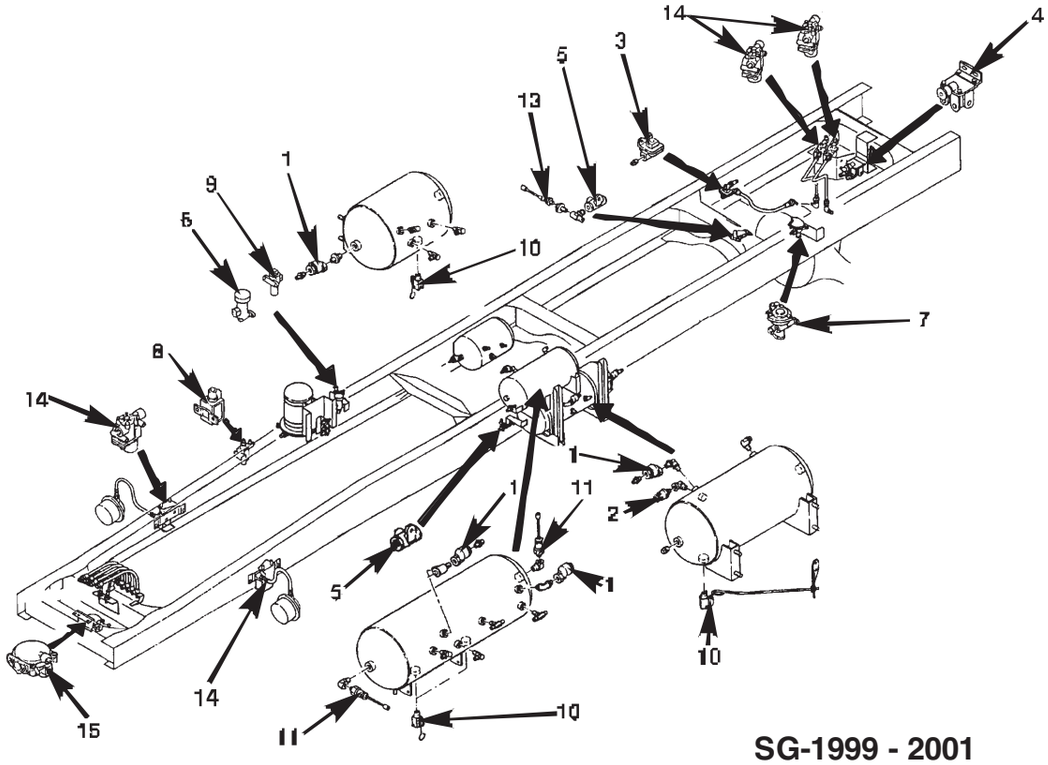

AIR BRAKE VALVE ASSEMBLIES - FULL AIR SYSTEMS SG 1999 - 2001

KEY	DESCRIPTION	PART NUMBER	APPLICATION	YEAR
1	Check Valve Assembly (4 required)	445101310A	SG	1999 - 2003
2	Safety Valve Assembly	447801020A	SG	1999 - 2003
3	Quick Release Valve (1 required)	445501021A	SG	1999 - 2003
4	Relay Valve Assembly	445401630A	SG	1999 - 2003
5	Double Check Valve (2 required)	445201060A	SG	1999 - 2003
6	Air Pressure Regulator	445301330A	SG	1999 - 2003
7	Pressure Control Valve Assembly	447601060A	SG	1999 - 2003
8	Solenoid Valve Assembly, Exhaust Brake	276102161A	SG	1999
		276103690A	SG	2000 - 2003
9	Protection Valve	445701100A	SG	1999 - 2000
		445701050A	SG	2001 - 2003
10	Drain Cock (4 required)	448501230A	SG	1999 - 2003
11	Pressure Switch Assembly (2 required)	833801510A	SG	1999 - 2003
12	Pressure Switch Assembly	833801570A	SG	1999 - 2003
13	Oil Pressure Switch Assembly	835301290A	SG	1999 - 2003
14	ABS Modulator Assembly (4 required)	446001370A	SG	1999 - 2001
		446001920A	SG	2002 - 2003
	Seal Repair Kit	440695260A	SG	1999 - 2003
	Piston Repair Kit	440695270A	SG	1999 - 2003
15	Relay Valve Assembly	445401561A	SG	1999 - 2003
Page 9	Spring Brake Control Valve Assembly	479301440A	SG	1999 - 2003

ROCKWELL AUTOMATIC SLACK ADJUSTERS FULL AIR SYSTEMS

DESCRIPTION	PART NUMBER	APPLICATION	YEAR
Left Front	474901150A	SG	1998 - 2003
Right Front	474801730A	SG	1998 - 2003
Left Rear	474901140A	SG	1998 - 2003
Right Rear	474801700A	SG	1998 - 2003

PARKING BRAKE CABLE

DESCRIPTION	PART NUMBER	APPLICATION	YEAR
Parking Brake Cable	464025431A	FA/FB Manual Trans.	1998 - 2003
	464025334A	FA/FB Auto. Trans.	1998 - 2003
Parking Brake Cable	464025234A	FD All	1998 - 2003
Parking Brake Cable	464025245A	FE Manual Trans.	1998 - 2003
	464025253A	FE Auto Trans.	1998 - 2003
Parking Brake Cable	464025314A	FE Manual Trans.	1998 - 2003
	464025324A	FE Auto Trans.	1998 - 2003

PARKING BRAKE DRUMS, SHOES, LINING & RETURN SPRINGS

DESCRIPTION	PART NUMBER	APPLICATION	YEAR
Drums - Parking Brake	465501200A	FA/FB Manual Trans.	1998 - 2001
	465111350A	FA/FB Auto. Trans.	1998 - 2001
	465501130A	FD Manual Trans.	1998 - 2003
	465111350A	FD Auto. Trans.	1998 - 2003
	465111350A	FE/FF All	1998 - 2003
Shoes - Parking Brake	465301340A	FA/FB Manual Trans.	1998 - 2003
	465301240A	FA/FB Auto. Trans.	1998 - 2003
	465301210A	FD Manual Trans.	1998 - 2003
	465301240A	FD Auto Trans.	1998 - 2003
	465301240A	FE/FF All	1998 - 2003
Lining - 1 per Shoe - Parking Brake	N/A	FA/FB/FD Manual Trans.	1998 - 2003
(Rivets - Required per Shoe [12]	465311330A	FA/FB/FD Auto Trans.	1998 - 2003
P/N 9459-05109)	465311330A	FE/FF All	1998 - 2003
Return Springs - Parking Brake	987303116A (2)	FA/FB Manual Trans.	1998 - 2003
	987302213A (1)		
	474531040A (2)	FD Manual Trans	1998 - 2003
	987302213A (1)		
	987303155A (2)	FA/FB/FD Auto. Trans. and FE/FF All	1998 - 2003
	987302182A (1)		

SECTION CONTENTS

SECTION **PAGE**

CAB PANELS & TRIM, BUMPERS, GLASS AND, MIRRORS 18
FA/FB 18
FD/FE 20
FF/SG 24
Mirror Assembly Replacement Parts 28

SEAT ASSEMBLIES, BOTTOM CUSHIONS, BACK RESTS
Seat Assemblies, Bottom Cushions, Back Rests 30
Bottom Cushions 30
Back Rests 30

LAMP ASSEMBLIES & LENS
FA/FB 32
FD/FE/FF/SG 34

HINO PAINTS

Hino paint is available from any local Dupont Automotive Paint Supplier.

HINO PAINT CODE

DUPONT NO.	COLOR	USAGE	YEAR
L-8568L L-8568A L-8568U	WHITE	ALL HINO CABS	1998 - 2003

NOTE: “L” Lucite Acrylic Lacquer
“A” Centari Acrylic Enamel
“U” IMRON Polyurethane Enamel

CAB PANELS & TRIM, BUMPERS, GLASS, AND MIRRORS

MODELS	YEARS
FA/FB	1998 - 2003

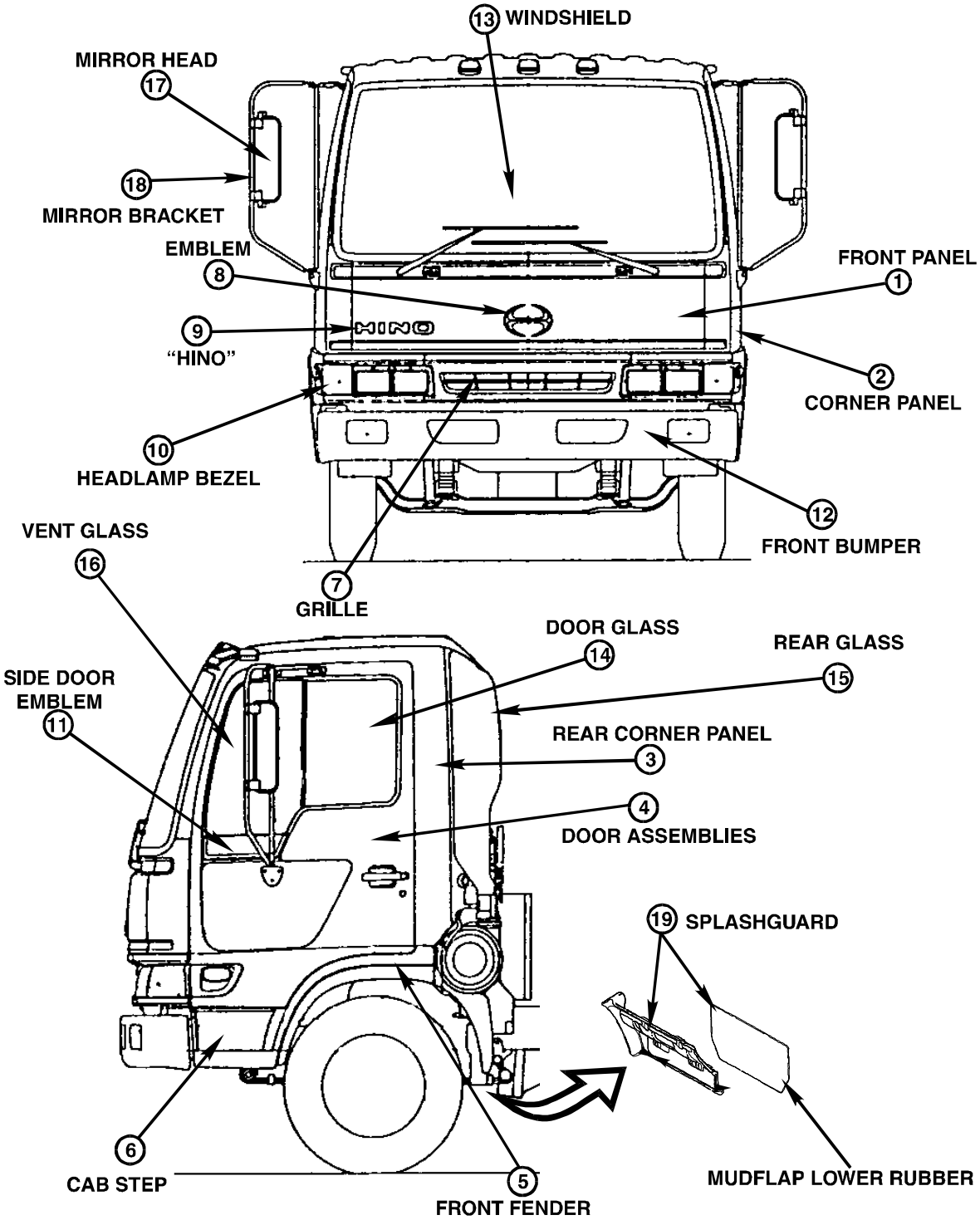

CAB PANELS & TRIM, BUMPERS, GLASS, AND MIRRORS

MODELS	YEARS
FA/FB	1998-2003

KEY	DESCRIPTION/APPLICATION			PART NUMBER
	PANELS & TRIM			
1	Front Panel			557013490A
2	Front Corner Panels		L/H	557031281A
			R/H	557021621A
3	Rear Corner Panels		L/H	610743491A
			R/H	610732000A
4	Groomed Door Assy	(1998-9)	L/H	672004280A
		(1998-9)	R/H	671004100A
		(2000-1)	L/H	672004860A
		(2000-1)	R/H	671005000A
		(2002-3)	L/H	670122580A
		(2002-3)	R/H	670112390A
	Door Shells	(1998-9)	L/H	670125311A
		(1998-9)	R/H	670111965A
		(2000-1)	L/H	670125321A
		(2000-1)	R/H	670112225A
		(2002-3)	L/H	672005380A
		(2002-3)	R/H	671005540A
5	Front Fenders		L/H	537022020A
			R/H	537011910A
6	Cab Step		L/H	583121781A
			R/H	583111751A
7	Grille			763012901A
8	Emblem			765311360A
9	'HINO' Emblem			765147560A
	Black Plate		L/H	688021091A
			R/H	688011140A
10	Headlamp Bezel - Outer		L/H	761081321A
			R/H	761071461A
	Headlamp Bezel - Inner		L/H	761081341A
			R/H	761071481A
11	Side Door Emblems		FA	765147270A
			FB	765147260A

KEY	DESCRIPTION/APPLICATION			PART NUMBER
	BUMPERS			
12	Front Bumper			521016650A
	Front Bumper		(2003)	521019040A
	Spoiler Not Shown (Optional)			52107H1700
	GLASS			
13	Windshield			794111750A
	- Weatherstrip, Windshield			794131380A
14	Door Glass With Bottom Metal		L/H	684601802A
	Channel		R/H	684501482A
15	Rear Glass (Glass Only)			794311300A
	- Weatherstrip			794331240A
16	Vent Glass (Glass Only)	(1998-2001)	L/H	794611580A
		(1998-2001)	R/H	794611590A
		(2002-2003)	L/H	794611580A
		(2002-2003)	R/H	794611590A
	Vent Glass With Trim	(1998-2001)	L/H	794601570A
		(1998-2001)	R/H	794601560A
		(2002-2003)	L&R	794601550A
	DOOR MIRROR			
17	Mirror Head	(1998-1999)	L/H	H2072100
		(1998-1999)	R/H	H2072000
		(2000-2003)	L/H	H2070500
		(2000-2003)	R/H	H2070400
18	Door Mirror Bracket			
	Large Outer Stay (1 Per Side)			
		(1998-2001)		879064741A
		(2000-2003)		879067740A
	Vertical Stay (1 Per Side)			
		(1998-2001)		879065780A
		(2000-2003)		879065890A
	Short Horizontal			879064950A
	Long Horizontal		L/H	879064970A
			R/H	879064960A
	SPLASHGUARD			
19	Splashguard		L/H	583522364A
			R/H	583522354A
	Mudflap Lower Rubber		L/H & R/H	762112260A

CAB PANELS & TRIM, BUMPERS, GLASS, AND MIRRORS

MODELS	YEARS
FD2220 (FD2J)	1998 - 2003
FE2620 (FE2J)	1998 - 2003

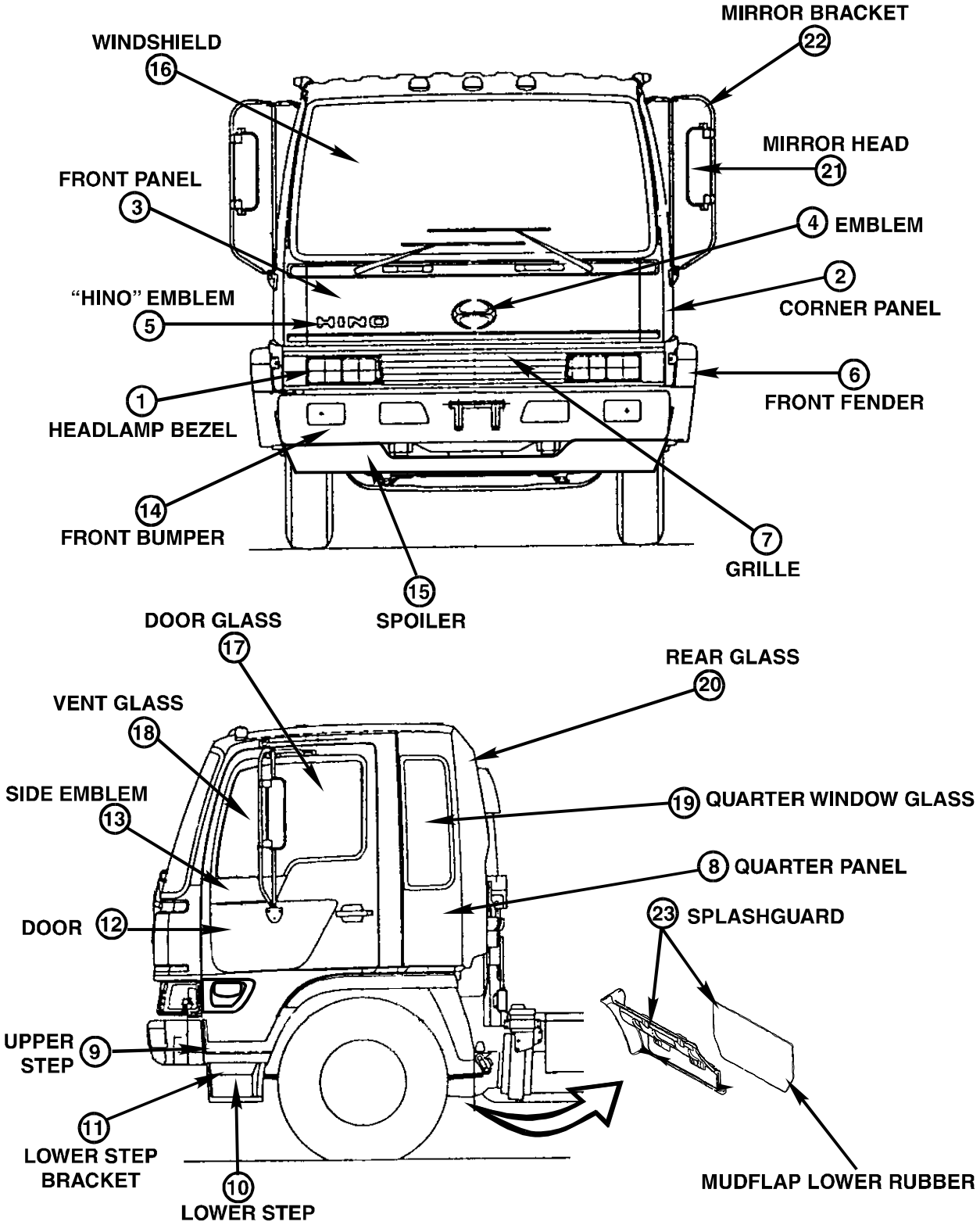

CAB PANELS & TRIM, BUMPERS, GLASS, AND MIRRORS

MODELS	YEARS
FD2220 (FD2J)	1998 - 2003
FE2620 (FE2J)	1998 - 2003

KEY	DESCRIPTION/APPLICATION			PART NUMBER
	PANELS & TRIM			
1	Headlamp Bezels – Outer			
		(1998-2001)	L/H	761081331A
		(2002-2003)	L/H	761081321A
		(1998-2001)	R/H	761071471A
		(2002-2003)	R/H	761071461A
	Headlamp Bezels - Inner		L/H	761121581A
			R/H	761111621A
2	Corner Panels		L/H	557031281A
			R/H	557021621A
	Stripe		L/H	765211500A
			R/H	765211510A
3	Front Panel			557011900A
	Stripe			765211480A
4	Emblem			765311360A
5	'HINO' Emblem			765147560A
6	Front Fenders		L/H	537022040A
			R/H	537011860A
7	Grille	(1998-2001)		763012421A
		(2002-2003)		
8	Quarter Panels		L/H	610741691A
			R/H	610731582A
9	Step, Upper, Plastic, White			
	- FD/FE		L/H	583121530A
			R/H	583111480A
	- FD Low Profile		L/H	583121560A
			R/H	583111530A
	Cast Aluminum Plate, Step			
	- FD & FE			576621183A
	- FD Low Profile			576621224A
10	Step, Lower Plastic, White		L/H	583121421A
			R/H	583114401A
	Cast Aluminum Plate,			
	Lower Step		L/H & R/H	576621232A
11	Step Bracket - To Frame			
	- FD		L/H & R/H	510871620A
	- FE		L/H	510871900A
			R/H	510871891A

KEY	DESCRIPTION/APPLICATION			PART NUMBER
12	Groomed Door Assy	(1998-9)	L/H	672004250A
		(1998-9)	R/H	671004070A
		(2000-1)	L/H	672005080A
		(2002-3)	L/H	672005390A
		(2000-1)	R/H	671005230A
		(2002-3)	R/H	671005550A
	Door Shells	(1998-9)	L/H	670122300A
		(1998-9)	R/H	670111962A
		(2000-1)	L/H	670125320A
		(2002-3)	L/H	670125580A
		(2000-1)	R/H	670112225A
		(2002-3)	R/H	670112390A
13	Side Door Emblem		FD	765147280A
			FE	765147300A
	Black Plate		L/H	688021091A
			R/H	688011080A
	BUMPERS			
14	Front Bumper	(1998-2001)		521015100A
		(2002-2003)		521019050A
15	Spoiler			521071540A
	GLASS			
16	Windshield			794115060A
	Weatherstrip, Windshield			794135570A
17	Door Glass With Bottom Metal		L/H	684601802A
	Channel		R/H	684501482A
18	Vent glass (Glass Only)		L/H	794611580A
			R/H	794611570A
	Vent glass With Trim		L/H	794601550A
			R/H	794601560A
19	Quarter Window Glass		L/H	794411521A
			R/H	794411531A
	- Weatherstrip		L/H	794431080A
			R/H	794431090A
20	Rear Glass (Glass Only)			794311291A
	- Weatherstrip			794331230A

CAB AND LAMPS

MODELS	YEARS
FD2220 (FD2J)	1998 - 2003
FE2620 (FE2J)	1998 - 2003

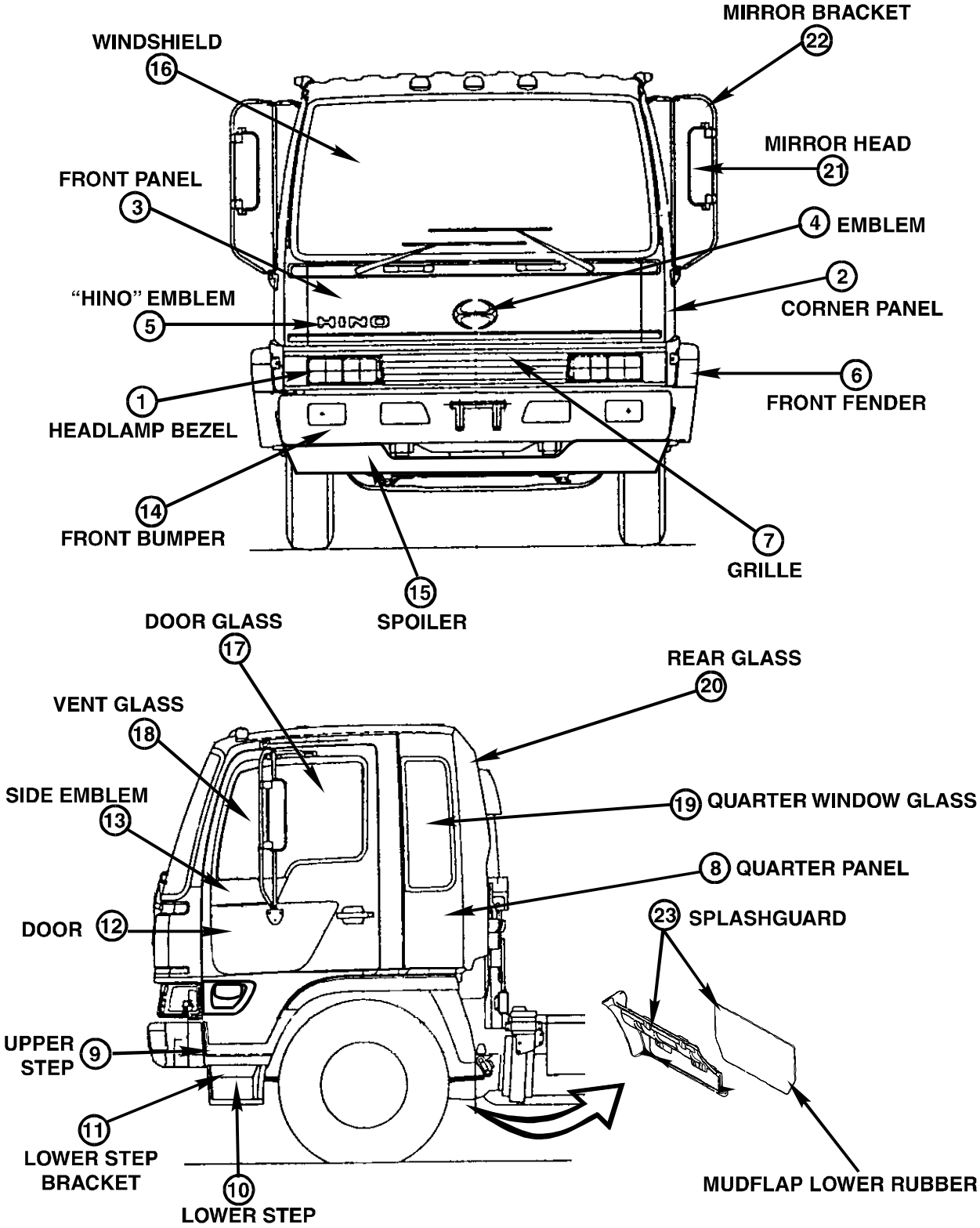

MODELS	YEARS
FD2220 (FD2J)	1998 - 2003
FE2620 (FE2J)	1998 - 2003

KEY	DESCRIPTION/APPLICATION			PART NUMBER
	DOOR MIRROR			
21	Mirror Head	(1998 - 1999)	L/H	H2072100
		(1998 - 1999)	R/H	H2072000
		(2000 - 2003)	L/H	H2070500
		(2000 - 2003)	R/H	H2070400
22	Bracket Upper Stay	- Front		879064950A
		- Rear	L/H	879064970A
			R/H	879064960A
	Large Outer Stay (1 Per Side)			
		(1998 - 2001)		879064741A
		(2002 – 2003)		879067740A
	Vertical Stay Intermediate (1 Per Side)			
		(1998 - 2001)		879065780A
		(2002 – 2003)		879065790A
	SPLASHGUARD			
23	Splashguard		L/H	583524500A
			R/H	583524411A
	Mudflap Lower Rubber	- 1998	L/H	762115090A
		- 1999 - 2003	L/H	762112350A
		- FD2J	R/H	762111811A
		- FE2J	R/H	762112212A

CAB PANELS & TRIM, BUMPERS, GLASS, AND MIRRORS

MODELS	YEARS
FF3020 (FF2J)	1998 - 2003
SG3320 (SG2J)	1998 - 2003
SG3325 (SG1J)	1998 - 2003

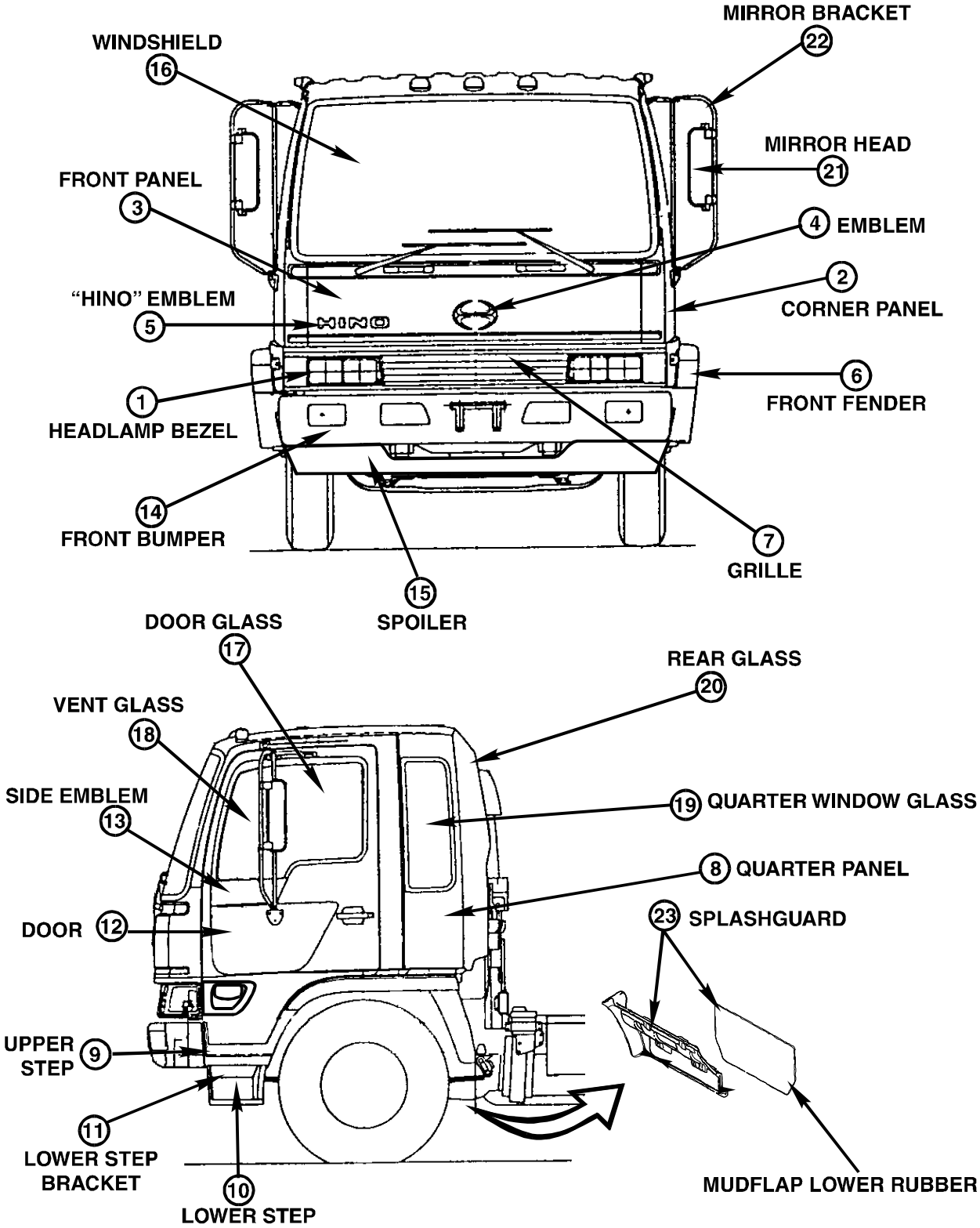

CAB PANELS & TRIM, BUMPERS, GLASS, AND MIRRORS

MODELS	YEARS
FF3020 (FF2J)	1998 - 2003
SG3320 (SG2J)	1998 - 2003
SG3325 (SG1J)	1998 - 2003

KEY	DESCRIPTION/APPLICATION			PART NUMBER
	PANELS & TRIM			
1	Headlamp Bezels - Outer			
		(1998-2001)	L/H	761081331A
		(2002-2003)	L/H	761081321A
		(1998-2001)	R/H	761071471A
		(2002-2003)	R/H	761071461A
	Headlamp Bezels - Inner			
		(1998-2001)	L/H	761121581A
		(2002-2003)	L/H	761121552A
		(1998-2001)	R/H	761111621A
		(2002-2003)	R/H	761111562A
2	Corner panels		L/H	557031281A
			R/H	557021621A
	Stripe		L/H	765211500A
			R/H	765211510A
3	Front Panel			557011910A
	Stripe			765211490A
4	Emblem			765311360A
5	'HINO' Emblem			765147560A
6	Fender Panels		L/H	537021670A
			R/H	537011631A
7	Grille	(1998-2001)		763012431A
		(2002-2003)		763013080A
8	Quarter Panels		L/H	610741732A
			R/H	610731813A
9	Step, Upper, Plastic, White		L/H	583121480A
			R/H	583111440A
	Cast Aluminum Plate, Lower Step		L/H & R/H	576621195A
10	Step, Lower, Plastic, White		L/H	583121441A
			R/H	583111401A
	Cast Aluminum Plate, Step		L/H & R/H	576621201A
11	Step Bracket To Frame		L/H	510871920A
			R/H	510871910A
12	Groomed Door Assy	(1998-1999)	L/H	672004250A
		(1998-1999)	R/H	671004070A
		(2000-2001)	L/H	672005080A

KEY	DESCRIPTION/APPLICATION			PART NUMBER
12	Groomed Door Assy	(2002-2003)	R/H	672005400A
		(2000-2001)	L/H	671005230A
		(2002)	R/H	671005550A
		(2003)	R/H	671005560A
	Door Shells	(1998 - 1999)	L/H	670122300A
		(1998 - 1999)	R/H	670111962A
		(2000 - 2001)	L/H	670125321A
		(2000 - 2001)	R/H	670112225A
13	Side Door Emblem		FF	765147310A
			SG	765147340A
	Blacking Plate		L/H	688021091A
			R/H	688011140A
	BUMPERS			
14	Front Bumper	(1998 - 2001)		521015110A
		(2002 - 2003)		521018480A
15	Spoiler			521071550A
	GLASS			
16	Windshield			794115070A
	- Weatherstrip, Windshield			794135580A
17	Door Glass With Bottom Metal Channel		L/H	684601802A
			R/H	684501482A
18	Vent Glass (Glass Only)		L/H	794611580A
			R/H	794611570A
	Vent Glass With Trim		L/H	794601550A
			R/H	794601560A
19	Quarter Window Glass		L/H	794411521A
			R/H	794411531A
	- Weatherstrip		L/H	794431080A
			R/H	794431090A
20	Rear Glass (Glass Only)			794311291A
	- Weatherstrip			794331230A

CAB PANELS & TRIM, BUMPERS, GLASS, AND MIRRORS

MODELS	YEARS
FF3020 (FF2J)	1998 - 2003
SG3320 (SG2J)	1998 - 2003
SG3325 (SG1J)	1998 - 2003

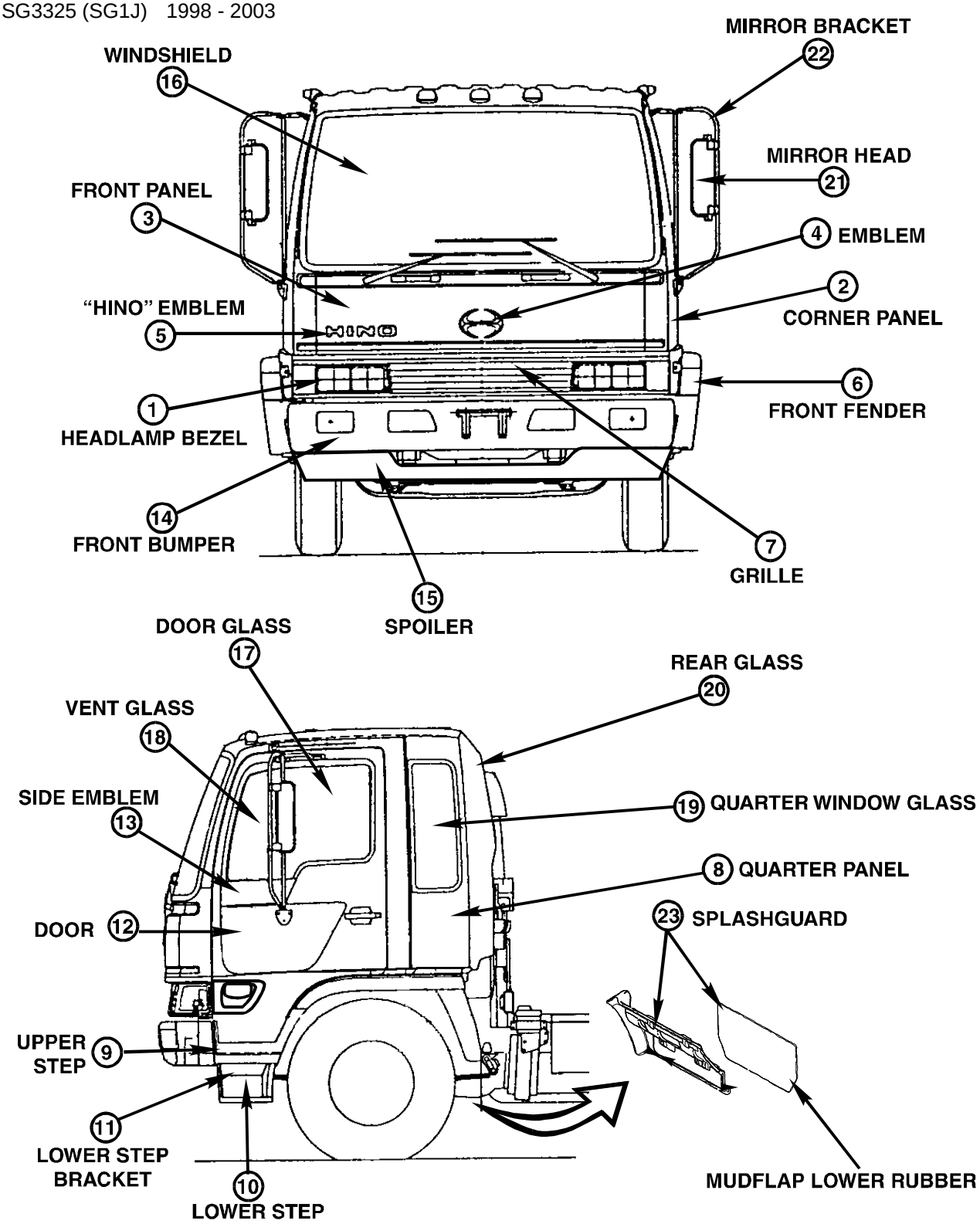

CAB PANELS & TRIM, BUMPERS, GLASS, AND MIRRORS

MODELS	YEARS
FF3020 (FF2J)	1998 - 2003
SG3320 (SG2J)	1998 - 2003
SG3325 (SG1J)	1998 - 2003

KEY	DESCRIPTION/APPLICATION			PART NUMBER
	DOOR MIRROR			
21	Mirror Head	(1998 - 1999)	L/H	H2072100
		(1998 - 1999)	R/H	H2072000
		(2000 - 2003)	L/H	H2070500
		(2000 - 2003)	R/H	H2070400
22	Door Mirror Bracket			
	Upper Stay	- Front		879064950A
		- Rear	L/H	879064970A
			R/H	879064960A
	Large Outer Stay	(1 Per Side)		879064731A
	Vertical Stay Intermediate (1 Per Side)			879065780A
	SPLASHGUARD			
23	Splashguard		L/H	583521760A
			R/H	583524411A
	Mudflap Lower Rubber		L/H	762114970A
			R/H	762112212A

CAB PANELS & TRIM, BUMPERS, GLASS, AND MIRRORS

MIRROR REPLACEMENT PARTS

Diag #	DESCRIPTION	PART NUMBER	MIRROR APPLICATION #							
			1	2	3	4	5	6	7	8
1	Flat Glass	H2051590			X	X			X	X
1	Heated Flat Glass (Voltage 12V)	H207034612V	X	X			X	X		
2	Convex Frame	H2051509	X	X	X	X	X	X	X	X
3	Bolt Kit	H20719AA	X	X	X	X	X	X	X	X
4	19mm or ¾" Clamp	H201240219	X	X	X	X	X	X	X	X
5	Moulding	H2051505	X	X	X	X	X	X	X	X
6	Convex Glass	H2072123			X	X			X	X
6	Heated Convex Glass (Voltage 12V)	H207074512V	X	X			X	X		
7	Light ASSEMBLY (Voltage 12V)	H205391412V			X	X	X	X		

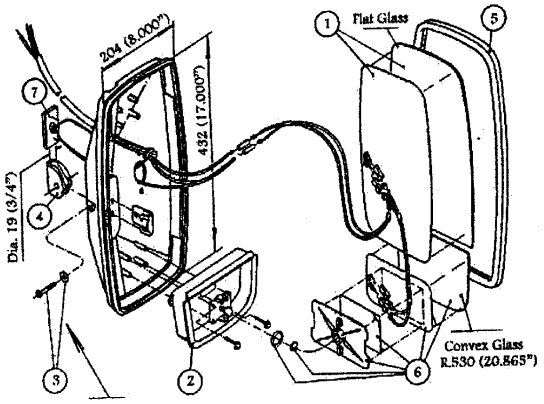

KEY #	MIRROR ASSY #	SIDE	PART NUMBER
1	H207020012V	R/H	HEATED
2	H207030012V	L/H	HEATED
3	H2070400	R/H	LIGHTED
4	H2070500	L/H	LIGHTED
5	H207060012V	R/H	HEATED & LIGHTED
6	H207070012V	L/H	HEATED & LIGHTED
7	H2072000	R/H	STANDARD
8	H2072100	L/H	STANDARD

**For specific application, see "CAB PANELS & TRIM, BUMPERS, GLASS, AND MIRRORS" OR "ACCESSORIES" (for Heated Mirrors) sections of this Quick Reference.

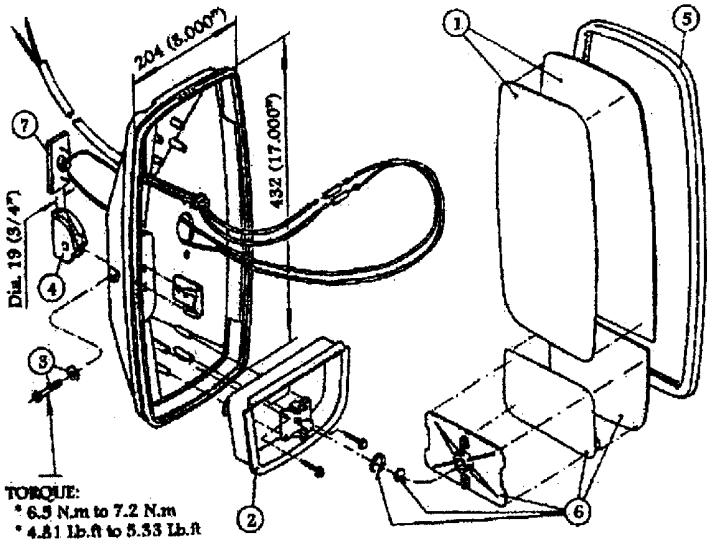

NOTES

SEAT ASSEMBLIES

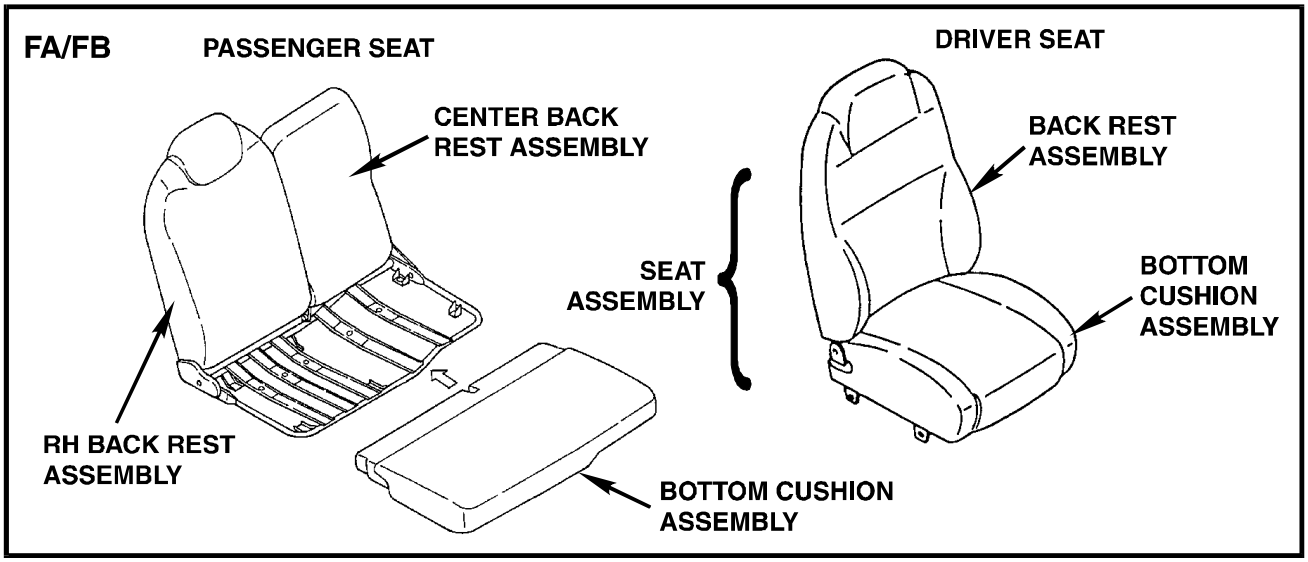

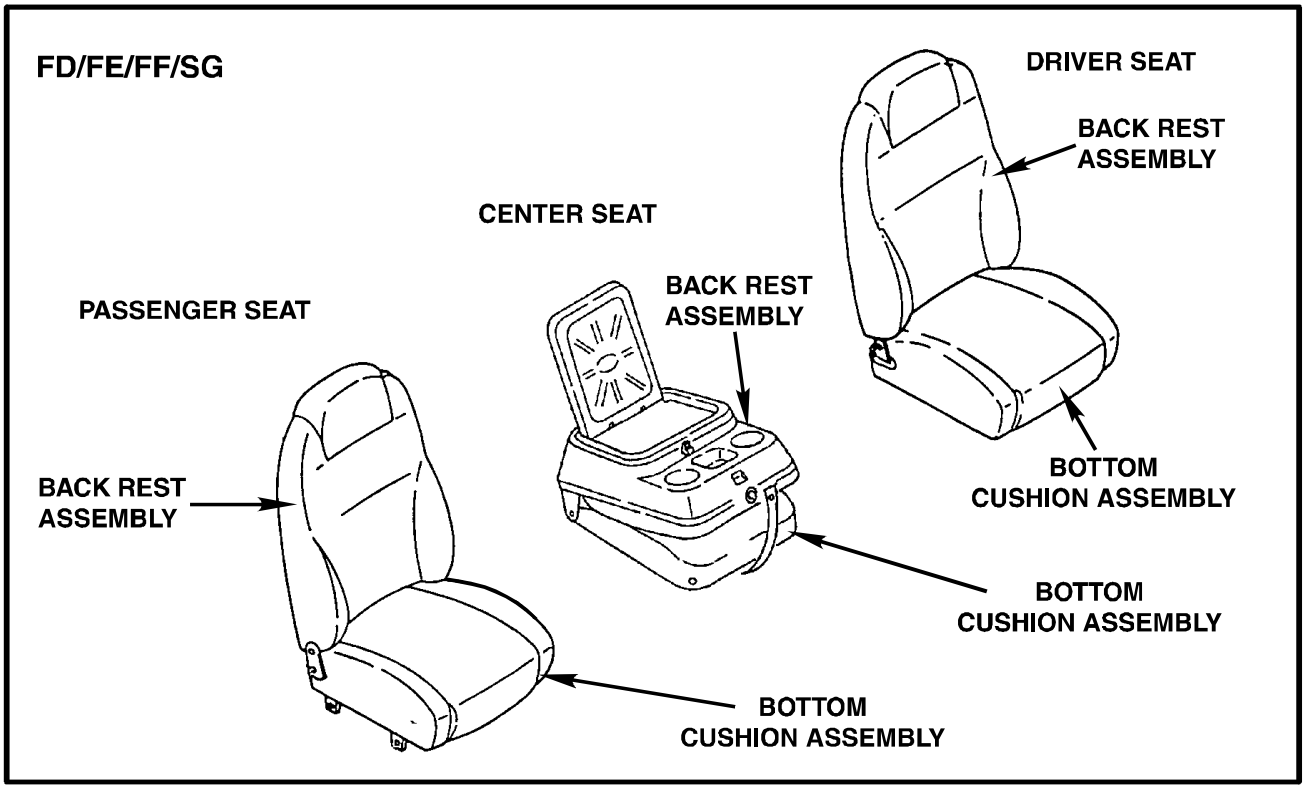

SEAT ASSEMBLIES, BOTTOM CUSHIONS, BACKRESTS (1998 - 2003)

DESCRIPTION		PART NUMBER	APPLICATION
DRIVER'S SIDE			
Complete Seat Assembly		712003053A	FA - Vinyl
		712003032A	FB - Fabric
		712003022A	FD/FE/FF/SG
Bottom Bottom And Back Rest Assembly		711801751A	FA - Vinyl
		711801760A	FB - Fabric
		711801772A	FD/FE/FF/SG
Bottom Cushion		711202310A	FA - Vinyl
		711202320A	FB - Fabric
		711041510A	FD/FE/FF/SG
Back Seat Assembly		712202190A	FA - Vinyl
		712202200A	FB - Fabric
		712202150A	FD/FE/FF/SG
PASSENGER'S SEAT			
Complete Seat Assembly		711011262A	FA - Vinyl
		711011271A	FB - Fabric
		711701833A	FD/FE/FF/SG
Back Rest Assembly	R/H	712102150A	FA - Vinyl
	R/H	712102160A	FB - Fabric
	Center	712301700A	FA - Vinyl
	Center	712301710A	FB - Fabric
		712102130A	FD/FE/FF/SG
Bottom Cushion		711102302A	FA - Vinyl
		711102311A	FB - Fabric
		711041540A	FD/FE/FF/SG
CENTER SEAT ASSEMBLY			
Complete Seat Assembly		713001991A	FD/FE/FF/SG
Bottom Cushion Assembly	(1998 – 2001)	711301581A	FD/FE/FF/SG
	(2002 – 2003)	711301701a	FD/FE/FF/SG
Back Rest Assembly		712301650A	FD/FE/FF/SG

LAMP ASSEMBLIES & LENS

MODELS	YEARS
FA/FB	1998 - 2003

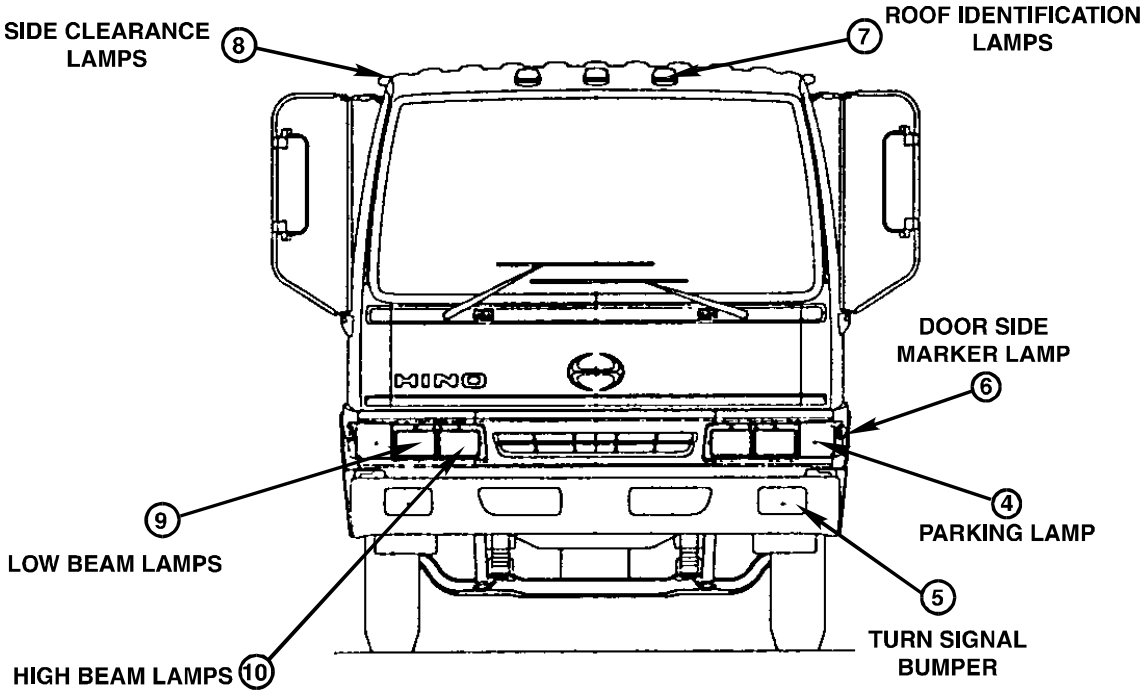

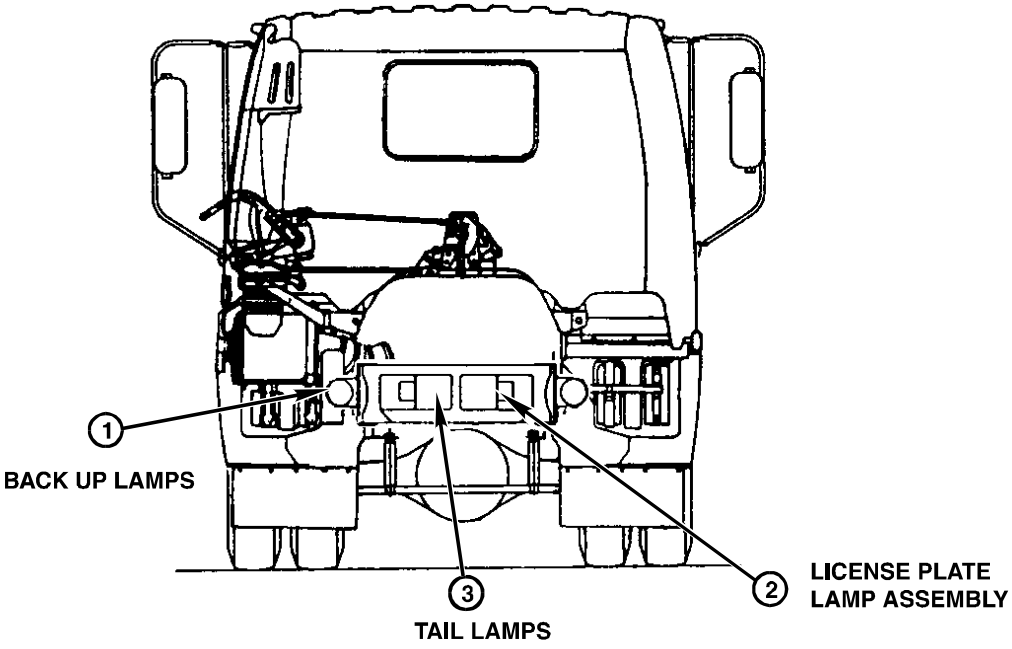

LAMP ASSEMBLIES & LENS

MODELS FA/FB

YEARS 1998 - 2003

KEY	DESCRIPTION/APPLICATION			LAMP ASSY	LENS	BULB
1	Back-Up Lamps	(1998)	- L/H	816801170A	816711050A	900834111A
		(1999 - 2003)	- L/H	816801180A	816711050A	900834111A
		(1998)	- R/H	816701330A	816711050A	900834111A
		(1999 - 2003)	- R/H	816701360A	816711050A	900834111A
2	License Plate Lamp Assy	(1998)		812701321A	LENS: 812711081A	900834110A
		(1999 - 2003)		812701351A		
					COVER 812781040A	
3	Tail Lamps	(1998)	- L/H	815601491A	RED LENS: 815511031A	900835102A
		(1999 - 2003)	- L/H	815601531A		
					YELL LENS: 815611021A	900834111A
		(1998)	- R/H	815501721A	RED LENS: 815511031A	900835102A
		(1999 - 2003)	- R/H	815501761A		
					YEL LENS: 815511041A	900834111A
4	Parking Lamp		- L/H	818501110A	N/A	900834118A
			- R/H	818401100A	N/A	900834118A
5	Turn Signal, Bumper		- L/H	815201840A	815211192A	900834111A
			- R/H	815101970A	815111302A	900834111A
6	Door Side Marker		- L/H	817401061A	N/A	900834108A
7	Roof Identification Lamp			818201030A	N/A	900837102A
8	Roof Clearance Lamp		- L/H	816201200A	N/A	900837104A
			- R/H	816101340A	N/A	900837104A
9	Low Beams		- L/H	811502352A	N/A	900824106A
			- R/H	811102932A	N/A	900824106A
10	High Beams		- L/H	811502341A	N/A	900824105A
			- R/H	811102921A	N/A	900824105A

LAMP ASSEMBLIES & LENS

MODELS	YEARS	MODELS	YEARS
FD	1998 - 2003	FF	1998 - 2003
FE	1998 - 2003	SG	1998 - 2003

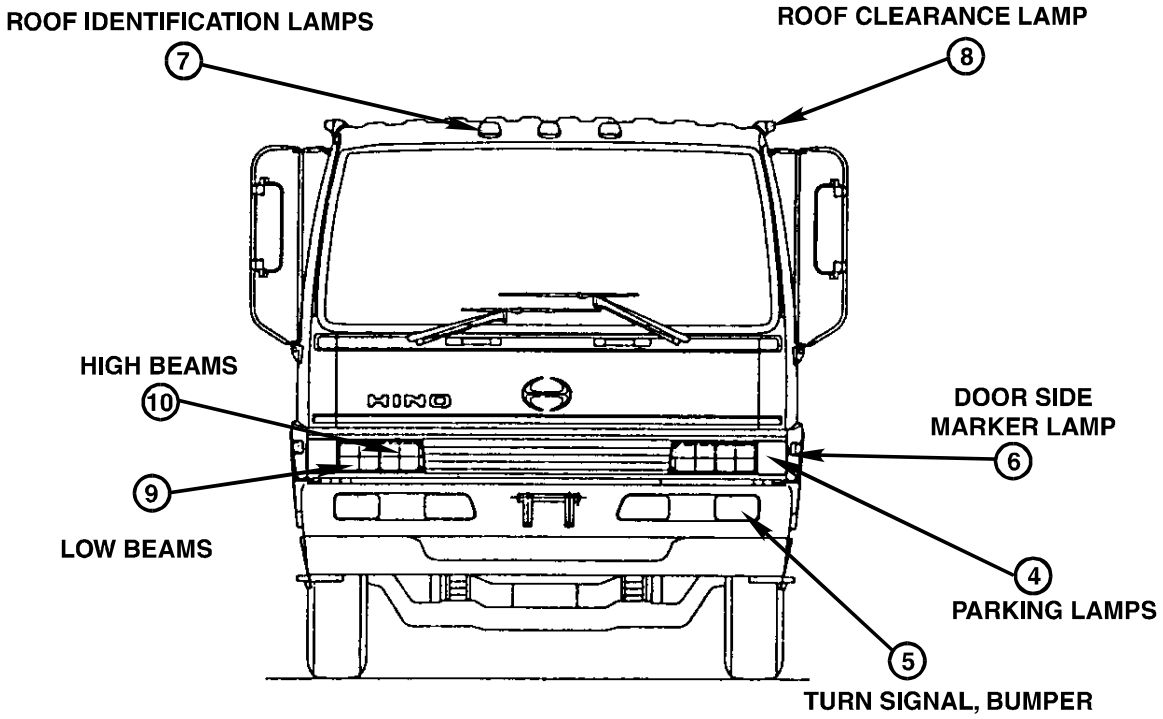

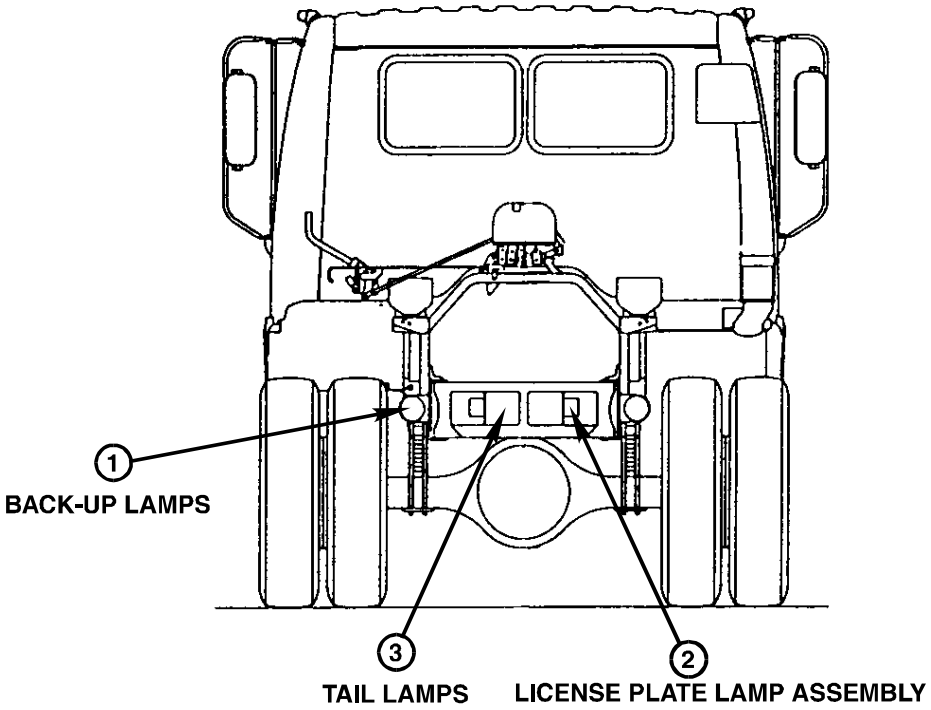

LAMP ASSEMBLIES & LENS

MODELS	YEARS
FD	1998 - 2003
FE	1998 - 2003
FF	1998 - 2003
SG	1998 - 2003

KEY	DESCRIPTION/APPLICATION			LAMP ASSY	LENS	BULB
1	Back-Up Lamps	(1998)	- L/H	816801170A	816711050A	900834111A
		(1999 - 2003)	- L/H	816801180A	816711050A	900834111A
		(1998)	- R/H	816701330A	816711050A	900834111A
		(1999 - 2003)	- R/H	816701360A	816711050A	900834111A
2	License Plate Lamp Assy	(1998)		812701321A	LENS: 812711081A	900834110A
		(1999 - 2003)		812701351A		
					COVER 812781040A	
3	Tail Lamps	(1998)	- L/H	815601491A	RED LENS: 815511031A	900835102A
		(1999 - 2003)	- L/H	815601531A		
					YELL LENS: 815611021A	900834111A
		(1998)	- R/H	815501721A	RED LENS: 815511031A	900835102A
		(1999 - 2003)	- R/H	815501761A		
					YEL LENS: 815511041A	900834111A
4	Parking Lamp		- L/H	818501110A	N/A	900834118A
			- R/H	818401100A	N/A	900834118A
5	Turn Signal, Bumper		- L/H	815201840A	815211192A	900834111A
			- R/H	815101970A	815111302A	900834111A
6	Door Side Marker		- L/H	817401061A	N/A	900834108A
7	Roof Identification Lamp			818201030A	N/A	900837102A
8	Roof Clearance Lamp		- L/H	816201200A	N/A	900837104A
			- R/H	816101340A	N/A	900837104A
9	Low Beams		- L/H	811502352A	N/A	900824106A
			- R/H	811102932A	N/A	900824106A
10	High Beams		- L/H	811502341A	N/A	900824105A
			- R/H	811102921A	N/A	900824105A

TRANSMISSION CONTROL SHIFT CABLES MANUAL TRANSMISSION

DESCRIPTION		PART NUMBER	APPLICATION	YEAR
Trans. Control Shift Cables	- Short	337022973A	FA/FB	1998 - 2003
	- Long	337023184A	FA/FB	1998 - 2003

ENGINE CONTROL AND SPEEDOMETER CABLES

DESCRIPTION	PART NUMBER	LENGTH (Inches)	APPLICATION	YEAR
Accelerator Cable	780159911A		FA/FB	1998 - 2003
	780159852A		FD/FE/FF/SG	1998 - 2003
Throttle Cable	780171221A		FA/FB	1998 - 2003
	780171221A		FA/FE/FF/SG	1998 - 2003
Engine Stop Cable	780183532A		FA/FB	1998 - 2003
	780183504A		FD/FE/FF/SG	1998 - 2003
Engine Stop Solenoid (Motor Assembly)	285701221A		ALL MODELS	1998 - 2003
Speedometer Cable, Complete - Manual Trans.	837109720A	151.6	FA	1998 - 2003
	837109720A	151.6	FB	1998 - 1999
	837203421A	171.3	FB	2000 - 2003
Speedometer Cable, Cab To Chassis - Manual & Auto. Trans.	837109101A	69.3	FD/FE/FF/SG	1998 - 2003
- Auto. Trans. (Only)	837202761A	49.2	FA/FB	1998 - 2003
Speedometer Cable, Chassis - Manual Trans.	837201520A	128.5	FD/FE/FF	1998 - 2003
	837201520A	128.5	SG	1998 - 2003
- Auto. Trans.	837202773A	114.2	FA/FB	1998 - 2003
	837201850A	143.7	FD/FE/FF	1998 - 2003
	837201860A	143.7	SG	1998 - 2003

FRONT AND REAR SUSPENSION

DESCRIPTION	PART NUMBER	APPLICATION	YEAR
Shock Absorbers, Front	485003091A	FA/ FB	1998 - 2003
	485001801A	FD	1998 - 2003
	485001941A	FE/FF/SG	1998 - 2003
Shock Absorber, Rear	485302770A	FA/FB	1998 - 2003
	485301880A	FD	1998 - 2003
	485301900A	FE/FF	1998 - 2003
	485301740A	SG	1998 - 2003
Front Spring Assemblies	481206790A	FA	1998 - 2003
	481207690A	FB	1998 - 2003
	481201300A	FD	1998 - 2003
	481204381A	FE	1998 - 2003
	481202471A	FF	1998 - 2003
	481202550A	SG1JM, SG2JK, SG2JM	1998 - 2003
	481202561A	SG1JP, SG1JR, SG2JP, SG2JR	1998 - 2003
Rear Main Spring Assembly	482306860A	FA	1998 - 2003
	482306870A	FB	1998 - 2003
	482305890A	FD	1998 - 2003
	482306010A	FE/FF/SG	1998 - 2003
Complete Rear Spring Assembly (Includes both the helper and main spring)	482205920A	FA	1998 - 2003
	482205240A	FB	1998 - 2003
	482202910A	FD	1998 - 2003
	482203990A	FE	1998 - 2003
	482203100A	FF/SG	1998 - 2003
King Pin Set (Covers 1 Side)	040432030A	FA/FB	1998 - 2003
	040432042A	FD	1998 - 2003
	040432062A	FE/FF/SG	1998 - 2003
King Pin Set (Covers 2 Sides)	040432032A	FD	1998 - 2003
	040432028A	FE/FF/SG	1998 - 2003

STEERING

DESCRIPTION	PART NUMBER	APPLICATION	YEAR
Power Steering Box Assembly	441101742A	FA/FB/FD	1998 - 2003
	441101501A	FE/FF/SG	1998 - 2003
Major Overhaul Repair Kit, Steering Box Assembly	441991090A	FA/FB/FD	1998 - 2003
	441991080A	FE/FF/SG	1998 - 2003
Minor Overhaul Repair Kit, Steering Box	441091570A	FA/FB/FD	1998 - 2003
	441091440A	FE/FF/SG	1998 - 2003
Power Steering Oil Pump Assembly	443102242A	FA/FB	1998 - 2003
	443102232A	FD/FE/FF/SG	1998 - 2003
Tie Rod End Assembly - L/H	454301940A	FA/FB	1998 - 2003
	454301880A	FD	1998 - 2003
	454301611A	FE/FF/SG	1998 - 2003
Tie Rod End Assembly - R/H	454201940A	FA/FB	1998 - 2003
	454201880A	FD	1998 - 2003
	454201611A	FE/FF/SG	1998 - 2003
Drag Link Assembly	454408940A	FA/FB	1998 - 2003
	454409150A	FD	1998 - 2003
	454404241A	FE/FF/SG	1998 - 2003

AXLES

DESCRIPTION	PART NUMBER	APPLICATION	YEAR
Axle Shafts	423114310A	FA/FB	1998 - 2003
	423113660A	FD	1998 - 2003
	423112760A	FE/FF/SG	1998 - 2003

LUG NUTS, STUDS, & HUB BOLT KITS

DESCRIPTION		PART NUMBER	APPLICATION	YEAR
Hub Bolt Kit, Front Hub	- L/H	040431072A	FA/FB	1998 - 2003
		040431081A	FD/FE/FF/SG	1998 - 2003
	- R/H	040431073A	FA/FB	1998 - 2003
		040431080A	FD/FE/FF/SG	1998 - 2003
Hub Bolt Kit, Rear Hub	- L/H	040421035A	ALL MODELS	1998 - 2003
	- R/H	040421036A	ALL MODELS	1998 - 2003
Wheel Studs, Front	- L/H	900426188A	FA/FB	1998 - 2003
		900426105A	FD/FE/FF/SG	1998 - 2003
	- R/H	900425225A	FA/FB	1998 - 2003
		900425214A	FD/FE/FF/SG	1998 - 2003
Wheel Studs, Rear	- L/H	900426184A	ALL MODELS	1998 - 2003
	- R/H	900425213A	ALL MODELS	1998 - 2003
Wheel Stud Retaining Nut	- Front	924922101A	ALL MODELS	1998 - 2003
	- Rear	920920105A	ALL MODELS	1998 - 2003
Lug Nuts, Front	- L/H	900422117A	ALL MODELS	1998 - 2003
	- R/H	900421128A	ALL MODELS	1998 - 2003
Lug Nuts, Rear	- L/H	900422104A	ALL MODELS	1998 - 2003
	- R/H	900421112A	ALL MODELS	1998 - 2003

Hub Bolt Kits Include: 1 Lug Nut; 1 Stud & Rear Nut
1 Inner Cap Nut (Rears Only)

REAR WHEEL INNER CAP NUTS

DESCRIPTION		PART NUMBER	APPLICATION	YEAR
Rear Wheel Inner Cap Nuts	- L/H	900424111A	ALL MODELS	1998 - 2003
	- R/H	900423111A	ALL MODELS	1998 - 2003

WHEELS

DESCRIPTION	RIM SIZE & SPECIFICATIONS			PART NUMBER	COMMON APPLICATION	YEAR
Wheel	16 X 6.0	1 PC	6 Lug	426113061A	FA	1998 - 2001
				426114690A	FA	2002 - 2003
Wheel	17.5 X 6	1 PC	6 Lug	426114200A	FB	1998 - 2001
				26113791A	FB	2002 - 2003
Wheel	22.5 X 6.75	1 PC	6 Lug	426113031A	FD	1998 - 2001
				426114700A	FD	2002 - 2003
Wheel	19.5 X 6.75	1 PC	6 Lug	426113641A	FD Low Profile	1998 - 2001
				426113670A	FD Low Profile	2002 - 2003
Wheel	22.5 X 7.5	1 PC	10 Lug	426113652A	FE/FF/SG	1998 - 2001
				426114230A	FE/FF/SG	2002 - 2003
Wheel	22.5 X 8.25	1 PC	10 Lug	426113671A	FF/SG	1998 - 2001
				426113431A	FF/SG	2002 - 2003

NOTE: Hino wheels have their size stamped on the center hub section of each wheel. It is important to know the wheel size and Hino model before determining which is the correct part number.

LUG NUT WRENCH

APPLICATION/WHEEL	PART NUMBER	APPLICATION	YEAR
Lug Nut Wrench	098494107A	ALL MODELS	1998 - 2003
Torque Bar	098492501A	ALL MODELS	1998 - 2003

VALVE STEM FOR TUBELESS WHEELS

APPLICATION/WHEEL	PART NUMBER	YEAR
FA - 16 X 6 - 1 PC Wheel	479041550A	1998 - 2003
All Other Models - 17.5 X 6; 22.5 X 6.75; 22.5 X 7.5; 22.5 X 8.25	479041330A	1998 - 2003

UNIVERSAL JOINT KITS

DESCRIPTION	PART NUMBER	APPLICATION	YEAR
Universal Joint Kits	040374040A	FA/FB/FD	1998 - 2003
	040374044A	FE/FF	1998 - 2003
	040374030A	SG	1998 - 2003

FEATURES

Replacement Hino universal joints are the same as original equipment used for production. Each kit includes all the necessary items for proper replacement.

EACH KIT INCLUDES:

- Spider assembly with needle bearing assemblies.
- Sets of washers, shims and retaining rings in various thicknesses for adjusting play (as necessary).
- All bolts, lock washers and grease fittings, as required.

FRONT SPRING REPAIR - BUSHINGS, PINS & HARDWARE
(Quantity Shown Required Per Axle)

DESCRIPTION		FA/FB - ALL PART NUMBER	FD - ALL PART NUMBER	FE/FF/SG - ALL PART NUMBER	YEAR
Spring Bushings		(4) 986725121A	(4) 986725121A	(4) 999312101A	1998 - 2003
Pins -	Front Of Spring	(2) 484232430A	(2) 484232430A	(2) 484231561A	1998 - 2003
	Rear Of Spring	(4) 484231890A	(4) 484232050A	(4) 484231771A	1998 - 2003
Thrust Washers -	Front	N/A	(4) 926926102A	(2) 927122120A (4) 900485331A	1998 - 2003
	Rear	(4) 926926102A	(8) 926926102A	(8) 900485331A	1998 - 2003
Lock Washers / Plates -	Front	(2) 927918106A	(2) 927918106A	N/A	1998 - 2003
	Rear	N/A	(2) 493421070A	(2) 927922110A	1998 - 2003
Lock Nuts -	Front	(2) 921018090A	(2) 921918105A	(2) 921022100A	1998 - 2003
	Rear	N/A	(4) 921918105A	(4) 921922100A	1998 - 2003
Grease Fittings -	Front	(2) 980210102A	(2) 980210102A	(2) 980210102A	1998 - 2003
	Rear	(4) 980210100A	(4) 980210100A	(4) 980210102A	1998 - 2003
Bushings For Front Spring Rear Chassis Hanger Bracket		(2) 986725121A	(2) 986725121A	(2) 999312101A	1998 - 2003

REAR SPRING REPAIR - BUSHINGS, PINS & HARDWARE
(Quantity Shown Required Per Axle)

DESCRIPTION	FA/FB - ALL PART NUMBER	FD - ALL PART NUMBER	FE/FF/SG - ALL PART NUMBER	YEAR
Spring Bushings	(4) 986725121A	(4) 986730113A	(4) 999312101A	1998 - 2001
Pins (2 Front & 4 Rear)	(6) 484231890A	(6) 484231320A	(6) 484231790A	1998 - 2001

CLUTCHES

DESCRIPTION	PART NUMBER	APPLICATION	YEAR
Clutch Pack - Includes a Matched Spicer Clutch Set (Pressure Plate, Disc, Release Bearing & Pilot Bearing)	31200H3214	FA/FB/FD/FE/FF	1998 - 2003
Pressure Plate	312102371A	SG	1998 - 2003
Clutch Disc	312505082A	SG	1998 - 2003
Release Bearing	312421141A	FA/FB/FD/FE/FF	1998 - 2003
	312421210A	SG2J	1999 - 2003
	312421060A	SG2J	1998
		SG1J	1998 - 2003
Pilot Bearing (Bushing)	988120119A	ALL MODELS	1998 - 2003

CLUTCH RELEASE BEARING HUBS & FORKS

DESCRIPTION	PART NUMBER	APPLICATION	YEAR
Hub For Clutch Release Bearing	312311740A	FA/FB	1998 - 2003
	312311671A	FD/FE/FF	1999 - 2001
	312311740A	FD/FE/FF	2002 - 2003
	312311061A	SG2J	1998
		SG1J	1998 - 2003
Fork For Clutch Release Hub & Bearing	312331360A	FA/FB/FD/FE/FF	1998 - 2003
	312331370A	SG2J	1999 - 2003
	312331180A	SG2J	1998
		SG1J	1998 - 2003
Anti-Rattle Springs Fork To Hub (Quantity 2 Required)	312341070A	FA/FB/FD/FE/FF	1998 - 2003
	312341070A	SG2J	1998
	312341080A	SG2J	1999 - 2003
	312341080A	SG1J	1998 - 2003

CLUTCH CYLINDERS AND REPAIR KITS

DESCRIPTION	PART NUMBER	APPLICATION	YEAR
Master Cylinder	314201700A	FA/FB/FD/FE/FF	1998 - 2003
	314201630A	SG	1998 - 2001
	314201720A	SG	2002 - 2003
Repair Kit - Master Cylinder	040314027A	ALL MODELS	1998 - 2001
	314204033A	ALL MODELS	2002 - 2003
Slave Cylinder	314701171A	FA/FB/FD/FE/FF	1998 - 2003
	314701191A	SG	1998 - 2001
	322101681A	SG	2002 - 2003
Repair Kit - Slave Cylinder Major Repair Kit (Pistons & Seals)	040315018A	ALL MODELS	1998 - 2003
Minor Repair Kit (Seals only)	040315014A	ALL MODELS	1998 - 2001
	322091200A	ALL MODELS	2002 - 2003

FLYWHEELS
(For Standard Transmissions)

DESCRIPTION	PART NUMBER	APPLICATION
Flywheel - STD Transmission	134503110A	FA/FB
Flywheel - STD Transmission	134503092A	FD/FE/FF
Flywheel - STD Transmission	134502830A	SG

FLYWHEEL DOWEL PINS
(Pressure Plate Alignment Dowels)

DESCRIPTION	PART NUMBER	APPLICATION
Pins (2 Required)	950408240A	FA/FB/FD/FE/FF
Pins (2 Required)	950410240A	SG

COOLING SYSTEM - FA/FB

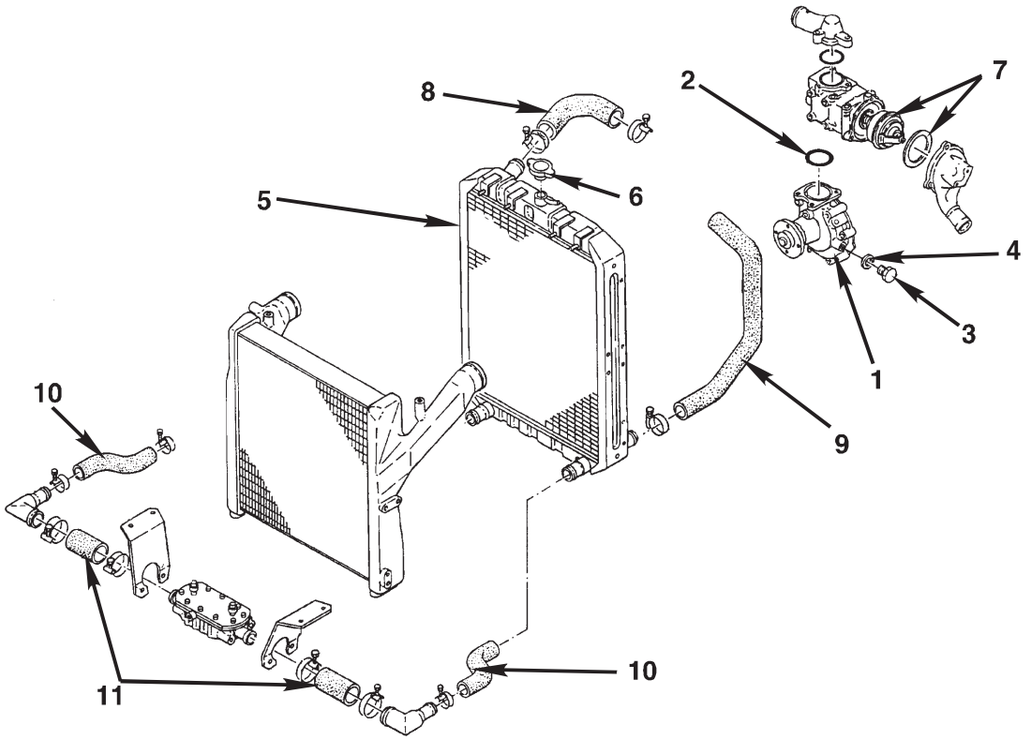

KEY	DESCRIPTION	PART NUMBER	APPLICATION	YEAR
1	Water Pump (Use silicone sealer P/N 041321217A)	161003641A	FA/FB	1998 - 2003
	Water Pump Repair Kit (Seal, O-Ring, Silicone Bond)	040161069A	FA/FB	1998 - 2003
2	O-Ring	985160110A	FA/FB	1998 - 2003
3	Plug	961916103A	FA/FB	1998 - 2003
4	Washer, Plug	965916105A	FA/FB	1998 - 2003
5	Radiator (Includes Cap) Auto Trans	160905513A	FA/FB	1998 - 2003
	Manual Trans	160905523A	FA/FB	1998 - 2003
6	Radiator Cap	164011341A	FA/FB	1998 - 2003
7	Thermostat Kit (Includes 82ºC/180ºF Thermostat & Thermostat Gasket)	040166046A	FA/FB	1998 - 2003
	Thermostat Gasket	163251320A	FA/FB	1998 - 2003
8	Hose, Radiator Upper	900155219A	FA/FB	1998 - 2003
9	Hose, Radiator Lower	900155187A	FA/FB	1998 - 2003
10	Hose, Radiator to Elbow (2 Required), Auto Trans	900155191A	FA/FB	1998 - 2003
11	Hose, Elbow to Cooler (2 Required), Auto Trans	900155245A	FA/FB	1998 - 2003
N/A	Drive Belt - Water Pump & Alternator Belt (Set)	900149290A	FA/FB	1998 - 2001
		900149215A	FA/FB	2002 - 2003

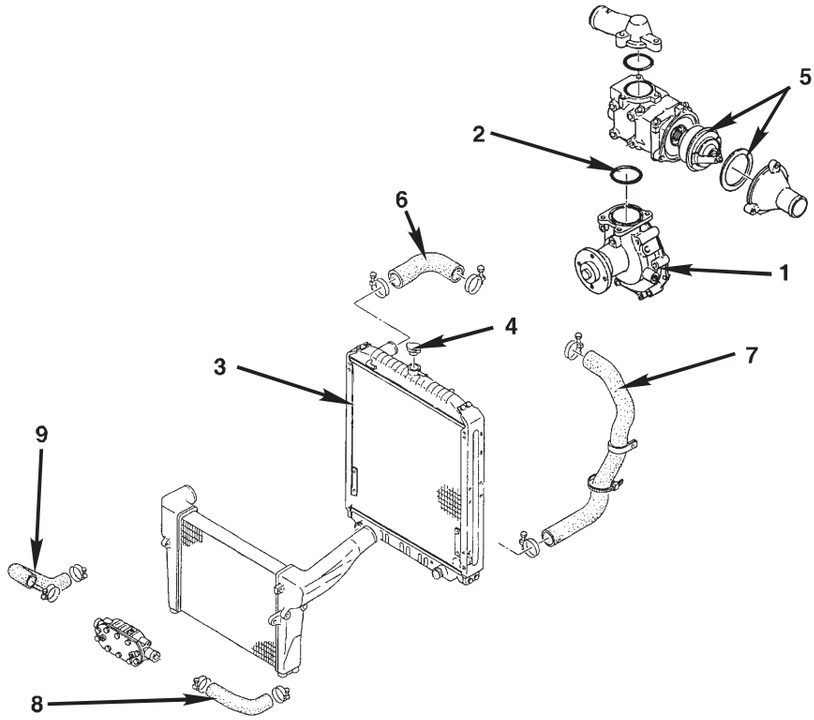

KEY	DESCRIPTION		PART NUMBER	APPLICATION	YEAR
1	Water Pump (Use silicone sealer P/N 041321217)		161003466A	FD/FE/FF/SG	1998 - 2003
	Water Pump Repair Kit (Seal, O-Ring, Silicone Bond)		040161069A	FD/FE/FF/SG	1998 - 2003
2	O-Ring		985160110A	FD/FE/FF/SG	1998 - 2003
3	Radiator (Includes Cap)	Manual Trans	160905462A	FD	1998 - 2001
		Auto Trans	160905474A	FD	1998 - 2001
		Manual Trans	160905601A	FE/FF/SG	1998 - 2001
		Auto Trans	160905612A	FE/FF/SG	1998 - 2001
4	Radiator Cap		164011341A	FD/FE/FF/SG	1998 - 2003
5	Thermostat Kit (Includes 82ºC/180ºF Thermostat & Thermostat Gasket)		040166046A	FD/FE/FF/SG	1998 - 2003
	Thermostat Gasket		163251320A	FD/FE/FF/SG	1998 - 2003
6	Hose, Radiator Upper		900155243A	FD/FE/FF/SG	1998 - 2001
			900155439A	FD/FE/FF/SG	2001 - 2003
7	Hose, Radiator Lower	Auto Trans	900155140A	FD/FE/FF/SG	1998 - 2001
		Auto Trans	900155623A	FD/FE/FF/SG	2001 - 2003
		Manual Trans	900155174A	FD/FE/FF/SG	1998 - 2001
		Manual Trans	900155624A	FD/FE/FF/SG	2001 - 2003
8	Hose, Radiator to Cooler, Auto Trans - LH		900155198A	FD	1998 - 2001
			900155620A	FD	2001 - 2003
			900155186A	FE/FF/SG	1998 - 2001
			900155415A	FE/FF/SG	2001 - 2003
9	Hose, Radiator to Cooler, Auto Trans - RH		900155199A	FD	1998 - 2001
			900155621A	FD	2001 - 2003
			900155185A	FE/FF/SG	1998 - 2001
			900155414A	FE/FF/SG	2001 - 2003
N/A	Drive Belt - Water Pump & Alternator Belt (Set)		900149290A	FD/FE/FF/SG	1998 - 2001
			900149215A	FD/FE/FF/SG	2001 - 2003

STARTERS & ALTERNATORS

DESCRIPTION	PART NUMBER	APPLICATION	YEAR
Starter (Remanufactured Only)	281002541R	FA/FB	1998 - 2003
	281002521R	FD/FE/FF	1998 - 2003
	281002510R	SG	1998
	281002521R	SG	1999 - 2003
Alternator (Remanufactured Only)	270401970R	ALL MODELS	1998 - 2001
Alternator (Remanufactured Only)	270402300R	ALL MODELS	2002 - 2003
Drive Belt - Alternator & Water Pump (Set)	900149290A	ALL MODELS	1998 - 2001
Drive Belt - Alternator & Water Pump (Set)	900149215A	ALL MODELS	2002 - 2003

FUSIBLE LINKS AND COVER (TYPICAL INSTALLATIONS)

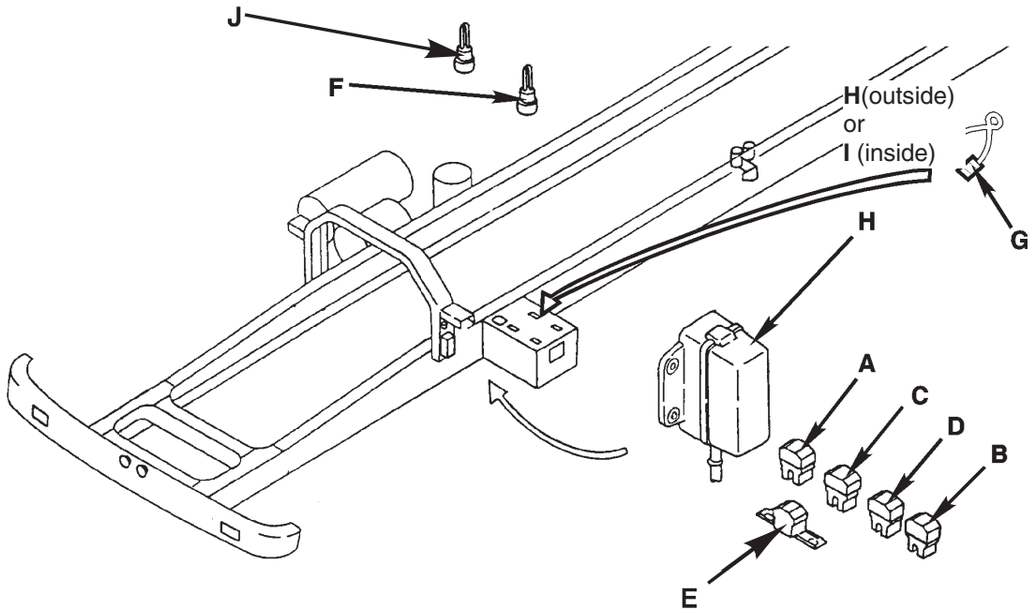

KEY	DESCRIPTION	PART NUMBER	APPLICATION	YEAR
A	30 Amp / Pink Plug	900858127A	ALL MODELS	1998 - 2003
B	Green Plug / 40 Amp (No Wire) (Old)/ Upgraded to 60 Amp	900858129A	ALL MODELS	1998 - 2003
C	50 Amp / Red Plug (No Wire)	900858128A	ALL MODELS	1998 - 2003
D	60 Amp / Green Plug	900858129A	ALL MODELS	1998 - 2003
E	100 Amp / Blue Plug (No Wire)	900858133A	ALL MODELS	1998 - 2003
F	Round Green Plug / Red Wire	900858114A	ALL MODELS	1998 - 2003
G	2 White Plugs / 2 Blue Wires	900858121A	ALL MODELS	1998 - 2003
H	Cover (Outside)	826261171A	ALL MODELS	1998 - 2003
I	Cover (Inside)	826261240A	ALL MODELS	2000 - 2001
		826261310A	ALL MODELS	2002 - 2003
J	24 Amp / White round Plug / Green Wire	900857113A	ALL MODELS	1998 - 2003

BATTERY BOX COVERS

DESCRIPTION	PARTNUMBER	APPLICATION	YEAR
Battery Box Cover, Metal Type	767011690A	ALL	1998 - 2003

ELECTRICAL HORNS

DESCRIPTION	PART NUMBER	APPLICATION	YEAR
High Note Horn	865101150A	ALL	1998 - 2003
Low Note Horn	865201160A	ALL	1998 - 2003

RELAY & FLASHER ASSEMBLIES

DESCRIPTION	PART NUMBER	RELAY MARKINGS	APPLICATION	YEAR
Power Relay for Headlights & Tail Lamps	859202170A	ND0568001200A	ALL	1998 - 2003
Wiper Relay	859401090A	ASMO 66100680A	ALL	1998 - 2003
Stop Lamp Relay	859202191A	0857003610A	ALL	1998 - 2003
ON/OFF Switch Relay	859202160A	ND0568001180A	ALL	1998 - 2003
P.L. Cut Relay	859201420A	ND0567006850A	ALL	1998 - 2003
Start Relay	283001180A	ND1828002620A	ALL	1998 - 2003
Air Intake Heater Relay (For Glow Plug)	286201370A	ND1828002010A	ALL	1998 - 2003
Flasher, Turn Signal/Hazard	819801430A	ND0665001810A	ALL	1998 - 2003

ENGINE ELECTRICAL
Water Temperature Sender, Oil Pressure Switch, Glow Plugs

DESCRIPTION	PART NUMBER	APPLICATION	YEAR
Water Temperature Sensor for the ECU	894301070A	ALL	1998 - 2003
Water Temperature Sender For Gauge	834201060A	ALL	1998
	834201240A	ALL	1999 - 2003
Oil Pressure Switch	835301300A	ALL	1998 - 2003
Glow Plugs	191101240A	ALL	1998 - 2003

INSTRUMENTS AND GAUGES

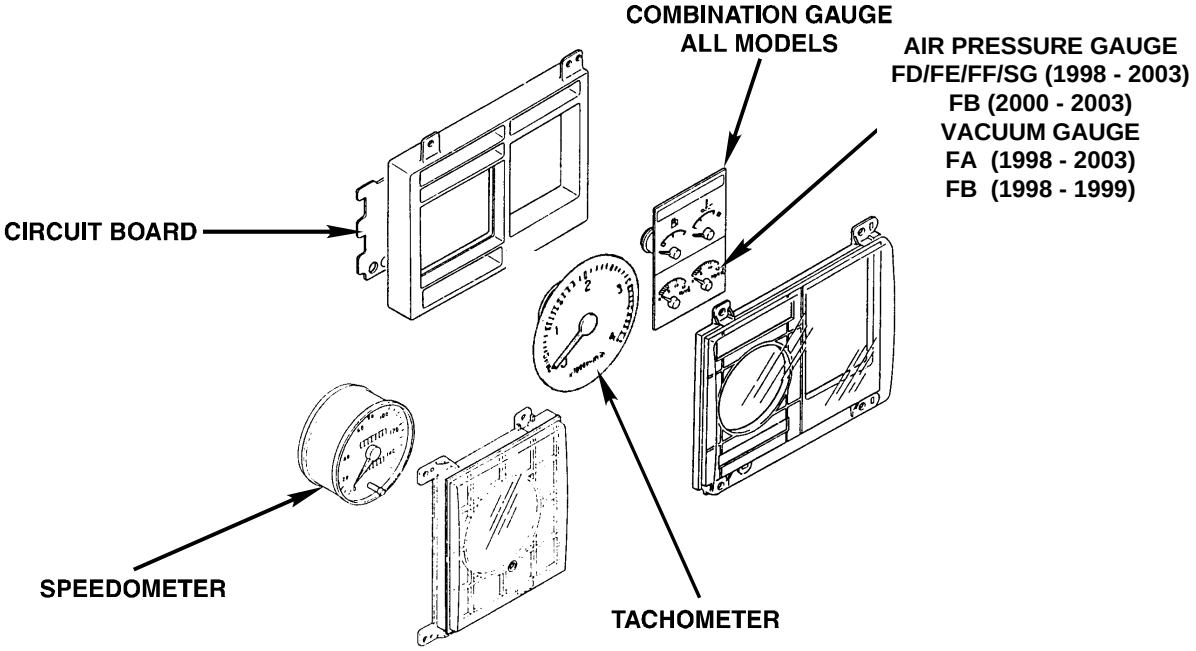

DESCRIPTION	PART NUMBER	APPLICATION	YEAR
Speedometer	831102000A	ALL MODELS	1998 - 2003
Complete Meter Assembly	832002371A	FA	1998 - 2003
	832001811A	FA/FB With Optional Tachometer	1998
	832002391A	FA With Optional Tachometer	1999 – 2003
	832002960A	FB	2000 – 2003
	832002970A	FB With Optional Tachometer	2000 - 2003
	832002320A	FD/FE/FF	1998 - 1999
	832003070A	FD/FE/FF	2000 - 2003
	832002441A	SG	1998 - 2003
Circuit Board	831022550A	FA/SG	1998 - 2003
	831022550A	FB	1998 - 1999
	831022230A	FA/FB With Optional Tachometer	1998
	831022470A	FA With Optional Tachometer	1999 - 2003
	831022470A	FB With Optional Tachometer	1999
	831022410A	FB With Optional Tachometer	2000 - 2003
	831022410A	FD/FE/FF	1998 - 2003
Combination Gauge (Fuel & Temp.)	834001900A	ALL MODELS	1998 - 2003
Air Pressure Gauge	834902400A	FD/FE/FF	1998 - 1999
	834902410A	FB/FD/FE/FF	2000 - 2003
	834902410A	SG	1998 - 2003
Vacuum Gauge	834902420A	FA	1998 - 2003
	834902320A	FA With Optional Tachometer	1998 - 2003
	834902420A	FB	1998 - 1999
	834902320A	FB With Optional Tachometer	1998 - 1999
Tachometer	832704420A	FA/FB Optional Equipment	1998
	832704650A	FA/FB Optional Equipment	1999 - 2003
	832704640A	FD/FE/FF/SG	1998 - 2003

ELECTRICAL SWITCHES

DESCRIPTION	PART NUMBER	APPLICATION	YEAR
Stop Light Switch	843401010A	FA	1998 - 2003
	843401010A	FB	1998 - 1999
	833801480A	FB	2000 - 2003
	833801480A	FD/FE/FF/SG	1998 - 2003
Warm-Up Switch (Cold Start)	842802700A	ALL MODELS	1998 - 1999
Dash Lights (Dimmer) Switch	841101350A	ALL MODELS	1998 - 2003
Exhaust Brake Control Switch	843801110A	ALL MODELS	1998
- Clutch Pedal Control Switch	843801950A	ALL MODELS	1999 - 2003
Exhaust Brake Control Switch - Accelerator Pedal Control Switch	843801640A	ALL MODELS	1998 - 2003
Cab Lock Indicator Switch	843801570A	ALL MODELS	1998 - 2003
Heated Mirror Switch (Optional)	842803020A	ALL MODELS	2000 - 2003

STEERING COUMN COMBINATION SWITCH
Headlamps, Directional, High Beams, Wipers
Hazard & Exhaust Brake (If So Equipped)

DESCRIPTION		PART NUMBER	APPLICATION	YEAR
Complete Steering Column Switch Assy.	- Manual Trans.	840402402A	FA/FB	1998 - 2003
	- Manual Trans	840402292A	FD/FE/FF/SG	1998 - 2003
	- Auto. Trans.	840402412A	FA/FB	1998 - 2003
	- Auto. Trans.	840402312A	FD/FE/FF/SG	1998 - 2003
L/H Side - Headlamp & Directional Switch		840111292A	FA/FB	1998 - 2003
		840111113A	FD/FE/FF/SG	1998 - 2003
R/H Side - Wiper, Hazard,	- Manual Trans.	840311502A	FA/FB	1998 - 2003
Exhaust Brake Switch	- Manual Trans.	840311452A	FD/FE/FF/SG	1998 - 2003
	- *Auto. Trans.	840311511A	FA/FB	1998 - 2003
	- *Auto. Trans.	840311461A	FD/FE/FF/SG	1998 - 2003

* Switch for Auto. Trans. does not have Exhaust Brake feature.

IGNITION SWITCH & KEY BLANKS

DESCRIPTION	PART NUMBER	APPLICATION	YEAR
Ignition Switch Assembly	845102131A	ALL MODELS	1998 - 2003
Key Blanks	845121890A	ALL MODELS	1998 - 2003

COMPLETE LOCK SETS & DOOR KEY WITH TUMBLERS
(Complete lock sets include: ignition switch tumbler and key only with matching door keys with tumblers)

DESCRIPTION	PART NUMBER	APPLICATION	YEAR
Complete Lock Set	696102910A	ALL MODELS	1998 - 2003
L/H Door lock - Key With Tumbler	696102880A	ALL MODELS	1998 - 2003
R/H Door Lock - Key With Tumbler	696102890A	ALL MODELS	1998 - 2003

ENGINE SERIES IDENTIFICATION

The engine model code can be found on the valve cover. The engine serial number can be found on the left side of the engine block as shown.

MODELS	MODEL YEARS	ENGINE MODEL
FA/FB4J	1998 / 1999 - 2003	J05C-TB (165HP) / TD (168HP)
FD/FE/FF2J	1998 / 1999 - 2003	J08C-TD (200HP) / TP (200HP)
SG1J	1998 / 1999 - 2003	J08C-TE (200HP) / TR (252HP)

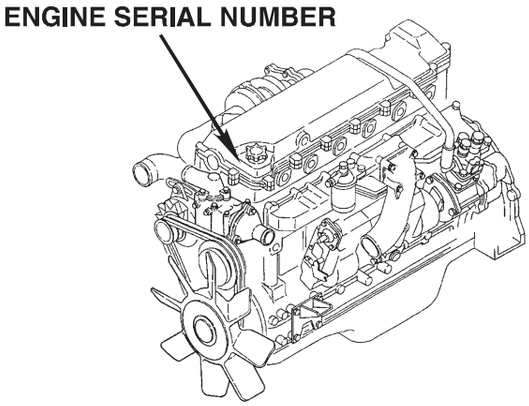

PISTON LINERS (1998 - 2003)

NOTE: Determine which liners “A”, “B”, or “C” are required by checking the identification marks on the engine block. Please refer to the HINO service manuals for further information.

DESCRIPTION	PART NUMBER	APPLICATION	ENGINE SERIAL #
Piston Liner “A”	114672601A	ALL MODELS	ALL
Piston Liner “B”	114672611A	ALL MODELS	ALL
Piston Liner “C”	114672621A	ALL MODELS	ALL

PISTON AND LINER KITS (1998 - 2003)

NOTE: Each kit includes: 1 piston, 1 liner, rings, piston pin, pin snap rings & 1 con rod

DESCRIPTION	PART NUMBER	APPLICATION	ENGINE SERIAL #
For 1 cylinder with liner code: A	040131413A	FA/FB	UP TO J05C - TD 11606
For 1 cylinder with liner code: B	040131414A		
For 1 cylinder with liner code: C	040131415A		
For 1 cylinder with liner code: A	040131476A	FA/FB	FROM J05C - TD 11607
For 1 cylinder with liner code: B	040131477A		
For 1 cylinder with liner code: C	040131478A		
For 1 cylinder with liner code: A	040131440A	FD/FE/FF/SG	UP TO J08C - TP 11540 J08C - TR 102445
For 1 cylinder with liner code: B	040131439A		
For 1 cylinder with liner code: C	040131438A		
For 1 cylinder with liner code: A	040131479A	FD/FE/FF/SG	FROM J08C - TP 11541 J08C - TR 102446
For 1 cylinder with liner code: B	040131480A		
For 1 cylinder with liner code: C	040131481A		

PISTON, PISTON RING SETS, WRIST PINS, SNAP RINGS, WRIST PIN KITS & CONNECTING ROD BEARING SETS (1998 - 2003)

DESCRIPTION	PART NUMBER	APPLICATION	ENGINE SERIAL #
Piston - Without Wrist Pin	133061030A	ALL MODELS	*C
	133061080A	ALL MODELS	*Z
Piston Ring Set - 1 per engine	130113401A	FA/FB	*A
	130113600A	FA/FB	*X
	130112962A	FD/FE/FF/SG	*B
	130113570A	FD/FE/FF/SG	*Y
Single Piston Ring Set (One per piston)	13011H1341	FA/FB	*A
	13011H1342	FA/FB	*X
	13011H1311	FD/FE/FF/SG	*B
	13011H1312	FD/FE/FF/SG	*Y
Wrist Pin	132511360A	ALL MODELS	ALL J - SERIES
Wrist Pin Kit - For 1 Cylinder	040132048A	ALL MODELS	ALL J - SERIES
Includes: Wrist pin, 2 snap rings and 1 con rod bushing Snap Rings, Wrist Pin	981943112A	ALL MODELS	ALL J - SERIES
Connecting Rod Bearing Set	132011800A	FA/FB	ALL J - SERIES
(Std Size)	132011761A	FD/FE/FF/SG	ALL J - SERIES

*A - UP TO J05C - TD 11606, ALL J05C-TB
*B - UP TO J08C - TP 11540, ALL J08C-TD
UP TO J08C - TR 10245, ALL J08C-TE
*C - Both *A and *B APPLY
*X - FROM J05C - TD 11607
*Y - FROM J08C - TP 11541
FROM J08C - TR 10246
*Z - Both *X and *Y APPLY

MAIN BEARINGS & THRUST WASHERS

DESCRIPTION	PART NUMBER	APPLICATION	YEAR
Main Bearing Set	117012310A	FA/FB	1998 - 2003
(Std Size)	117012140A	FD/FE/FF/SG	1998 - 2003
Thrust Washer Set (Std Size)	110111380A	ALL MODELS	1998 - 2003

VALVES, VALVE SPRINGS, VALVE GUIDES & SEALS

DESCRIPTION	PART NUMBER	APPLICATION	YEAR
Intake Valve	137111631A	ALL MODELS	1998 - 2003
Exhaust valve	137151732A	ALL MODELS	1998 - 2003
Outer Valve Spring	137311610A	ALL MODELS	1998 - 2003
Inner Valve Spring	137321500A	ALL MODELS	1998 - 2003
Valve Guides - Intake & Exhaust	111221220A	ALL MODELS	1998 - 2003
Valve Stem Seals	137191360A	ALL MODELS	1998
	137191470A	ALL MODELS	1998 - 2003

OIL PUMP ASSEMBLIES

DESCRIPTION	PART NUMBER	APPLICATION	YEAR
Oil Pump Assembly	151102050A	FA/FB	1998 - 2003
Oil Pump Assembly	151102040A	FD/FE/FF/SG	1998 - 2003

OIL FILLER CAP

DESCRIPTION	PART NUMBER	APPLICATION	YEAR
Oil Filler Cap	121081100A	ALL MODELS	1998 - 2003

DRAIN PLUG - OIL PAN

DESCRIPTION	PART NUMBER	APPLICATION	YEAR
Drain Plug - Oil Pan (Magnetic)	961918107A	ALL MODELS	1998 - 2003
Gasket / Washer For Plug	965918113A	ALL MODELS	1998 - 2003

EXHAUST SYSTEM - FA/FB

FA-1998-2001
FB-1998-9

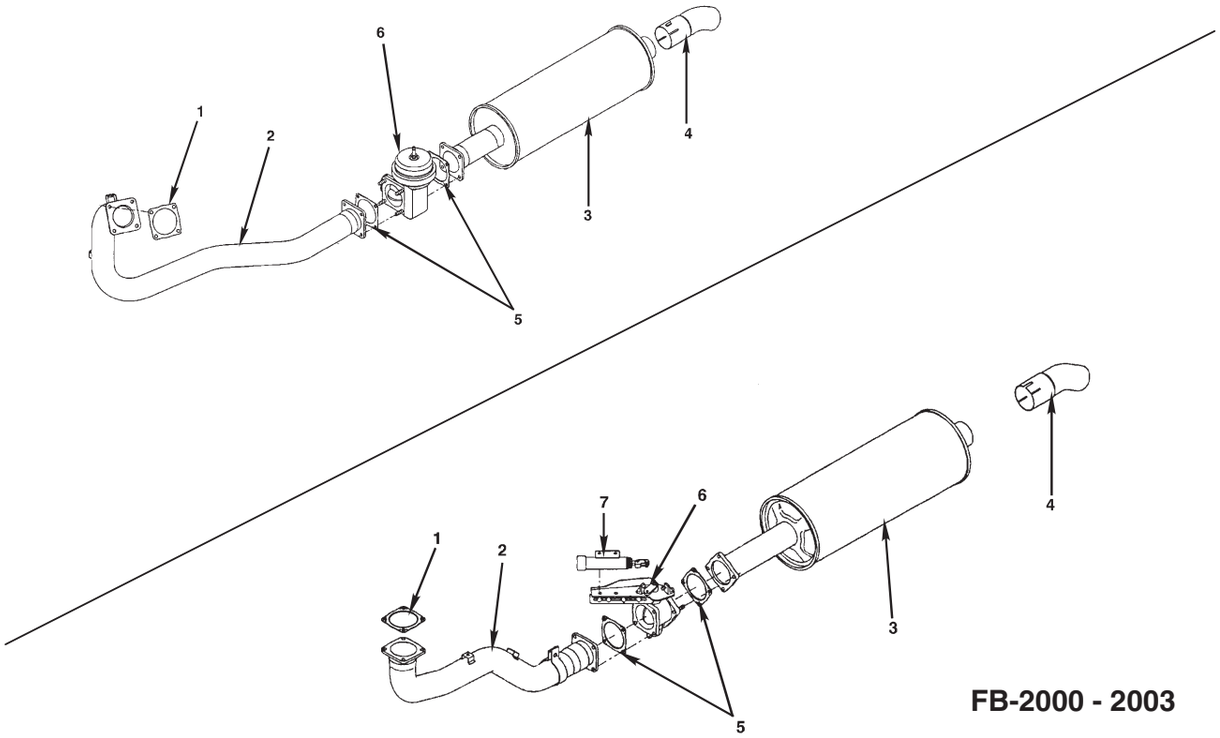

KEY	DESCRIPTION	PART NUMBER	APPLICATION	YEAR
1	Gasket, Exhaust Manifold	171041580A	FA/FB	1998-2003
2	Front Pipe	176015121A	FA/FB	1998
		176015790A	FA/FB	1999 - 2001
	Manual Trans.	176019561A	FA/FB	2000 - 2003
	Auto Trans.	176019571A	FA/FB	2000 - 2003
3	Muffler	175016751A	FA/FB	1998
	Muffler With Catalyst	176071010A	FA/FB	1999 - 2003
4	Tail Pipe	174055490A	FA/FB	1998
		174059341A	FA/FB	1999 - 2003
5	Gaskets, Exhaust Pipes	171041580A	FA/FB	1998 - 2003
6	Exhaust Brake Assembly - With Control Cylinder	174703040A	FA	1998 - 2003
	- With Control Cylinder	174703040A	FB	1998 - 1999
	- Without Control Cylinder	174703110A	FA	1998 - 2003
	- Without Control Cylinder	174703110A	FB	1998 - 1999
	- Without Control Cylinder	174703133A	FB	2000 - 2003
	- Control Cylinder	174902000A	FA	1998 - 2003
	- Control Cylinder	174902000A	FB	1998 - 1999
7	Exhaust Brake Control Cylinder	174902070A	FB	2000 - 2003

EXHAUST SYSTEM - FD/FE/FF/SG

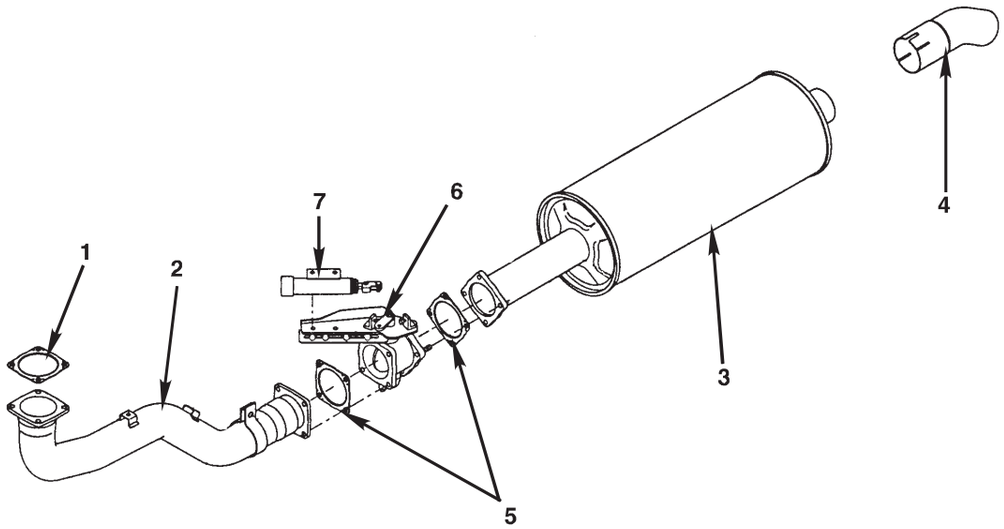

KEY	DESCRIPTION	PART NUMBER	APPLICATION	YEAR
1	Gasket, Exhaust Manifold	171041580A	FD/FE/FF/SG	1998 - 2003
2	Front Pipe	174402421A	FD	1998 - 1999
	Manual Trans.	176014991A	FD	2000 - 2001
		176019640A	FD	2002 - 2003
	Auto Trans.	174402871A	FD	2000 - 2001
		174403230A	FD	2002 - 2003
		176015650A	FE/FF/SG	1998 - 1999
	Manual Trans.	176015001A	FE/FF/SG	2000 - 2001
		176019640A	FE/FF/SG	2002 - 2003
	Auto Trans.	174402851A	FE/FF	2000 - 2001
		174403250A	FE/FF	2002 - 2003
	Auto Trans.	176017112A	SG	2000 - 2001
		176019620A	SG	2002 - 2003
3	Muffler	175016810A	FD/FE/FF/SG	1998
	Muffler With Catalyst	176071010C	FD/FE/FF/SG	1999 - 2003
4	Tail Pipe	174059190A	FD/FE/FF/SG	1998
		174059380A	FD/FE/FF/SG	1999 - 2003
5	Gaskets, Exhaust Pipes	171041580A	FD/FE/FF/SG	1998 - 2003
6	Exhaust Brake Assembly	174702881A	FD/FE/FF/SG	1998 - 2001
	Without Control Cylinder	174703241A	FD/FE/FF/SG	2002 - 2003
7	Control Cylinder	174902070A	FD/FE/FF/SG	1998 - 2001
		174901871A	FD/FE/FF/SG	2002 - 2003

OIL, FUEL & AIR FILTERS

DESCRIPTION	PART NUMBER	APPLICATION	YEAR
Oil Filter	156072170A	ALL MODELS	1998 - 2003
Combination Element For Fuel Filter/Water Separator By fuel Tank	234011440A	ALL MODELS	1998 - 2003
Fuel Filter By Engine	234011510A	FA/FB	1998 - 2002
	234011402A	FD/FE/FF/SG	1998 - 2002
	234011510A	ALL MODELS	2003
Air Filter	178013000A	FA/FB	1998 - 2003
	178012810A	FD/FE/FF/SG	1998 - 2003

POWER STEERING & AUTOMATIC TRANSMISSION FILTERS

DESCRIPTION	PART NUMBER	APPLICATION	YEAR
Power Steering Reservoir Strainer	472281050A	ALL MODELS	1998 - 2003
Power Steering Reservoir Filter	443611070A	FD/FE/FF/SG	1998 - 2003
Automatic Transmission Filter	349261041A	ALL MODELS	1998 - 2001

FUEL TANK

DESCRIPTION	PART NUMBER	APPLICATION	YEAR
Primary Fuel Tank - 35/SNYDER	771003441A	FA/FB	1998 - 2001
	771001160A	FA/FB	2002 - 2003
Primary Fuel Tank - 56/SNYDER	771003022A	FD/FE/FF/SG	1998 - 2001
	771001180A	FD/FE/FF/SG	2002 - 2003
Band Strap - 2 Per Tank	776013170A	FA/FB	1998 - 2001
	776012250A	FA/FB	2002 - 2003
	776012700A	FD/FE/FF/SG	1998 - 2001
	776012051A	FD/FE/FF/SG	2002 - 2003
L-Support Bracket - 2 Per Tank	776098740A	FA/FB	1998 - 2001
	776095610A	FA/FB	2002 - 2003
	776097351A	FD/FE/FF/SG	1998 - 2001
	776094611A	FD/FE/FF/SG	2002 - 2003
Secondary Fuel Tanks (Optional Equipment) - 56/SNYDER	771003022A	FD/FE/FF/SG	1998 - 2001
	771001190A	FD/FE/FF/SG	2002 - 2003
Cap, Fuel Tank	773201390A	ALL MODELS	1998 - 2001
	773201640A	ALL MODELS	2002 - 2003
Fuel Gauge Sending Unit	833202060A	FA/FB	1998 - 2001
	833201590A	FA/FB	2002 - 2003
	833201950A	FD/FE/FF/SG	1998 - 2001
	833202160A	FD/FE/FF/SG	2002 - 2003

FUEL INJECTION SYSTEM

DESCRIPTION	PART NUMBER	APPLICATION	YEAR
Complete Nozzle & Holder (Remanufactured)	236002971R	ALL MODELS	1998
	236003210R	ALL MODELS	1999 - 2003
Nozzle Assembly Only	236402491A	ALL MODELS	1998
	236402650A	ALL MODLES	1999 - 2003
Shim	900115214A	ALL MODELS	1999 - 2003
Gasket	965908119A	ALL MODELS	1999 - 2003
Fuel Feed Pump Assembly	225602510A	FA/FB	1998 - 2003
	225602150A	FD/FE/FF/SG	1998 - 2003

ENGINE GASKETS

DESCRIPTION	PART NUMBER	APPLICATION	YEAR
Complete Engine Overhaul Gasket Set With Seals (See NOTE)	040100767A	FA/FB	1998 - 2001
	040100715A	FD/FE/FF/SG	1998 - 2001
Head Gasket Sel (See NOTE)	040102073A	FA/FS	1998 - 2004
	040102072A	FD/FE/FF/SG	1998 - 2004
Cylinder Head Gasket	111152611A	FA/FS	1998 - 2004
	111152650A	FD/FE/FF/SG	1998 - 2004
Valve Cover Gasket	112131920A	FA/FB	1998 - 2004
	112131880A	FD/FE/FF/SG	1998 - 2004
Camshaft Housing Gasket	111181030A	FA/FB	1998 - 2004
	111181011A	FD/FE/FF/SG	1998 - 2004
Oil Pan Gasket	121512622A	FA/FB	1998 - 2004
	121512611A	FD/FE/FF/SG	1998 - 2004
Intake Manifold Gasket	171712000A	FA/FB	1998 - 2004
	171711911A	FD/FE/FF/SG	1998 - 2004
Intake Pipe to Manifold Gasket	171712080A	FA/FB	1998 - 2001
	171711931A	FD/FE/FF/SG	1998 - 2004
Exhaust Manifold Gaskets (4 Required)	171041610A	FA/FB	1998 - 2004
Exhaust Manifold Gaskets (6 Required)	171041610A	FD/FE/FF/SG	1998 - 2004
Silicone Bond	041321207A	ALL MODELS	1998 - 2004

NOTE: Gasket sets do not include valve stem seals, but do include front and rear crankshaft seals, timing cover injection pump shaft seals.

TRANSMISSION GASKETS SETS

DESCRIPTION	PART NUMBER	APPLICATION	YEAR
Transmission Gasket Set	040330168A	FN/FB/FD	1998 - 2004
	040330162A	FF/FF	1998 - 2004
	040330098A	SG2J	1998 - 2004
	040330162A	SG2J	1998 - 2004
	040330098A	SG1J	1998 - 2004

ENGINE OIL SEALS

DESCRIPTION	PART NUMBER	APPLICATION	YEAR
Front Crankshaft Seal	982879103A	ALL MODELS	1998 - 2004
Rear Crankshaft Seal	982801228A	ALL MODELS	1998 - 2004
Valve Stem Oil Seals	137191360A	ALL MODELS	1998
	137191470A	ALL MODELS	1999 - 2004

AXLE SEALS

DESCRIPTION	PART NUMBER	APPLICATION	YEAR
Front Axle Inner Hub Seal	982885106A	FA/FB	1998 - 2004
	982801231A	FD	1998 - 2004
	982801229A	FE/FF/SG	1998 - 2004
Rear Axle Outer Hub Seal	982857103A	FA/FB/FD	1998 - 2004
	982866106A	FE/FF/SG	1998 - 2004
Rear Axle Inner Hub Seal	982801232A	FA/FB/FD	1998 - 2004
	982801204A	FE/FF/SG	1998 - 20014

TRANSMISSION & DIFFERENTIAL OIL SEALS

DESCRIPTION	PART NUMBER	APPLICATION	YEAR
Transmission Front Seal Input Shaft (Manual Trans.)	982848120A	FA/FB/FD/FE/FF	1998 - 2004
	982850105A	SG2J	1998 - 1999
	982848120A	SG2J	2000 - 2004
	982850105A	SG1J	1998 - 2004
Transmission Rear Seal Output Shaft (Manual Trans.)	982860131A	FA/FB/FD	1998 - 2004
	982863108A	FE/FF	1998 - 2004
	982870101A	SG2J	1998 - 1999
	982863108A	SG2J	2000 - 2004
	982870101A	S1J	1998 - 2001
Rear Differential Pinion Seal	982865127A	FA/FB/FD/FE	1998 - 2004
	982880111A	FF/SG	1998 - 2001

TURBOCHARGER - FA/FB

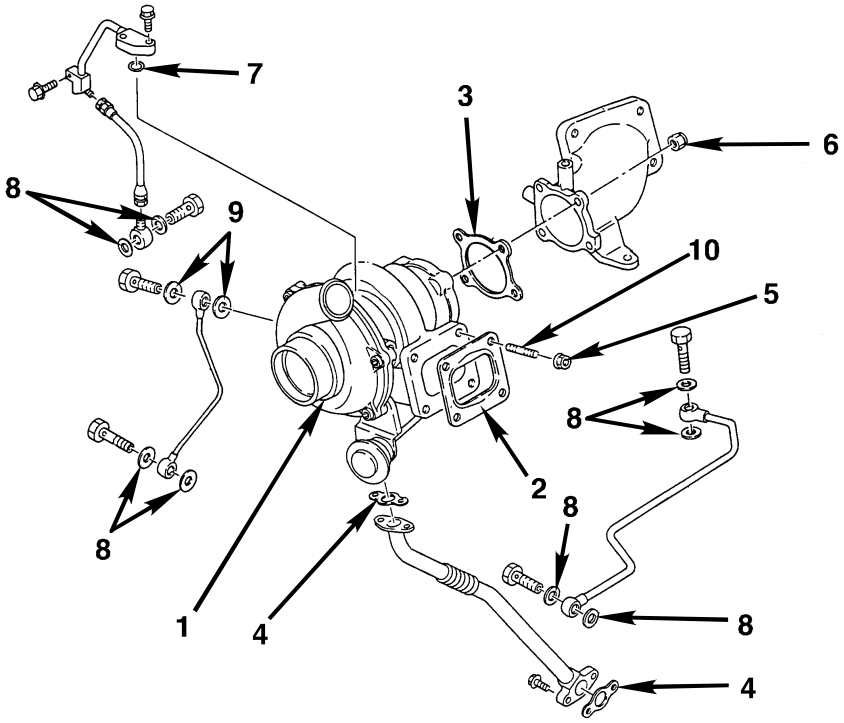

KEY	DESCRIPTION	PART NUMBER	APPLICATION	YEAR
1	Turbocharger	241003400A	FA/FB	1998 - 2003
2	Gasket	241091650A	FA/FB	1998 - 2003
3	Gasket	241091291A	FA/FB	1998 - 2003
4	Gasket, Oil Return (2 required)	241351120A	FA/FB	1998 - 2003
5	Nut (4 required)	924910102A	FA/FB	1998 - 2003
6	Nut (4 required)	924908102A	FA/FB	1998 - 2003
7	O-Ring	985114102A	FA/FB	1998 - 2003
8	Gasket (8 required)	965914104A	FA/FB	1998 - 2003
9	Gasket (2 required)	965916105A	FA/FB	1998 - 2003
10	Stud (4 Required)	936910138A	FA/FB	1998 - 2003

TURBOCHARGER - FD/FE/FF/SG

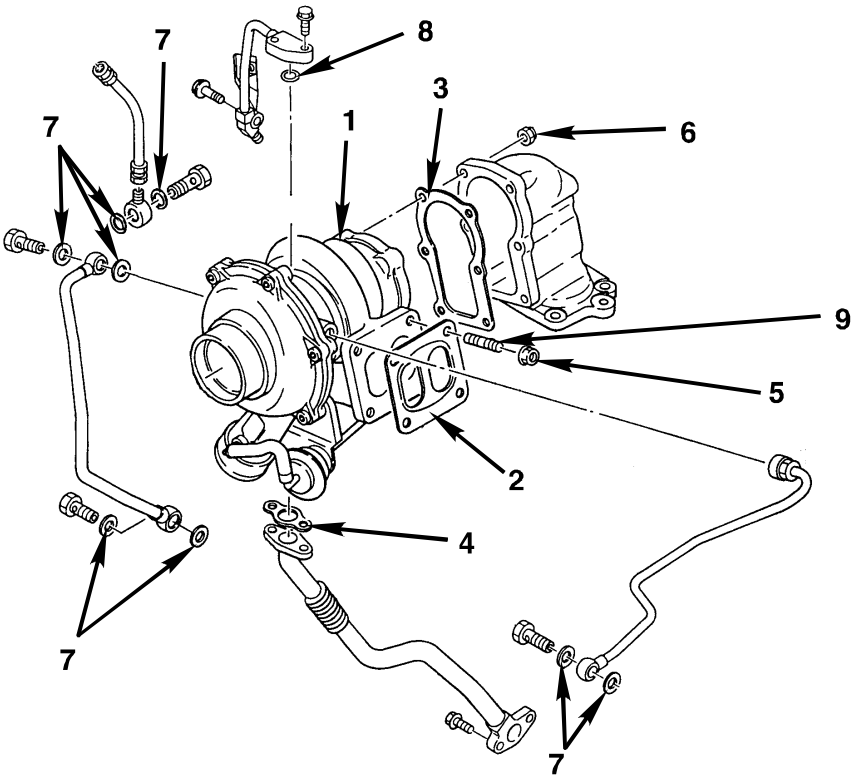

KEY	DESCRIPTION	PART NUMBER	APPLICATION	YEAR
1	Turbocharger	241003251A	FD/FE/FF/SG	1998 - 2003
2	Gasket	241091610A	FD/FE/FF/SG	1998 - 2003
3	Gasket	241091700A	FD/FE/FF/SG	1998 - 2003
4	Gasket, Oil Return (2 required)	241351120A	FD/FE/FF/SG	1998 - 2003
5	Nut (4 required)	924910102A	FD/FE/FF/SG	1998 - 2003
6	Nut (6 required)	924908102A	FD/FE/FF/SG	1998 - 2003
7	Gasket (8 required)	965914104A	FD/FE/FF/SG	1998 - 2003
8	O-Ring	985114102A	FD/FE/FF/SG	1998 - 2003
9	Stud (4 Required)	936910138A	FD/FE/FF/SG	1998 - 2003

WINDSHIELD WIPERS

DESCRIPTION	PART NUMBER	APPLICATION	YEAR
Wiper Blade Assemblies	852201481A	ALL MODELS	1998 - 2001
Winter Wiper Blades	852201383A	ALL MODELS	1998 - 2001
Inserts For Standard Blades	852211080A	ALL MODELS	1998 - 2001
Wiper Arms -RH	851901592A	FA/FB/FD/FE	1998 - 1999
	851901701A	FA/FB/FD/FE	2000 - 2001
	851901603A	FF/SG	1998 - 1999
	851901712A	FF/SG	2000 - 2001
-LH	852101392A	FA/FB/FD/FE	1998 - 1999
	852101521A	FA/FB/FD/FE	2000 - 2001
	852101403A	FF/SG	1998 - 1999
	852101532A	FF/SG	2000 - 2001
Wiper Motor Assembly	851201392A	FA/FB/FD/FE	1998 - 2001
	851201402A	FF/SG	1998 - 2001
Windshield Washer Nozzle (On Blade Arm)	853411031A	ALL MODELS	1998 - 2001
	853411061A	ALL MODELS	1998 - 2001
Windshield Washer Jar & Pump Assembly 1/2 GAL	853001811A	FA/FB	1998 - 1999
1/2 GAL	853001773A	FD/FE/FF/SG	1998 - 1999
1 GAL	853002002A	ALL MODELS	2000 - 2001

NOTE: Please check size before purchasing. Additional parts required when upgrading or downgrading washer jar & pump assembly. 1999 - 2000 MY vehicles may have either, since the larger jar & pump was optional in late 1999 and 2000.