https://truckmanualshub.com/

UTILEV®
THE UTILITY LIFT TRUCK™

UT15-18P

1500 - 1750kg

Technical Specifications

Utility you can trust™

www.utilev.com

https://truckmanualshub.com/

UT15-18P Specifications

Characteristics	1.1	Manufacturer		UTILEV	UTILEV	UTILEV	UTILEV
	1.2	Model designation		UT15P	UT15P	UT18P	UT18P
	1.3	Power: battery, diesel, LPG, electric mains		Diesel	LPG	Diesel	LPG
	1.4	Operation: manual, pedestrian, stand, seat, orderpicker		Seat	Seat	Seat	Seat
	1.5	Load capacity	Q (kg)	1500	1500	1750	1750
	1.6	Load centre	c (mm)	500	500	500	500
	1.8	Load distance	x (mm)	405	405	405	405
	1.9	Wheelbase	y (mm)	1400	1400	1400	1400
Weights	2.1	Unladen weight	kg	2740	2740	2930	2930
	2.2	Axle loading with load front/rear	kg	3690/550	3690/550	4075/605	4075/605
	2.3	Axle loading without load, front/rear	kg	1220/1520	1220/1520	1190/1740	1190/1740
Wheels and Tyres	3.1	Tyres: L = pneumatic, V = cushion, SE = superelastic		L	L	L	L
	3.2	Tyre size, front		6.50-10-10PR	6.50-10-10PR	6.50-10-10PR	6.50-10-10PR
	3.3	Tyre size, rear		5.00-8-10PR	5.00-8-10PR	5.00-8-10PR	5.00-8-10PR
	3.5	Number of wheels, front/rear (X = driven)		2X/2	2X/2	2X/2	2X/2
	3.6	Track width, front	b10 (mm)	890	890	890	890
	3.7	Track width, rear	b11 (mm)	900	900	900	900
Dimensions	4.1	Mast tilt, forward α/back β	degrees	6/12	6/12	6/12	6/12
	4.2	Height of mast, lowered	h1 (mm)	1995	1995	1995	1995
	4.3	Free lift ▲	h2 (mm)	155	155	155	155
	4.4	Lift height ▲	h3 (mm)	3000	3000	3000	3000
	4.5	Height of mast, extended ✚	h4 (mm)	3955	3955	3955	3955
	4.7	Height to top of overhead guard ❍	h6 (mm)	2130	2130	2130	2130
	4.8	Seat height ✘	h7 (mm)	1015	1015	1015	1015
	4.12	Towing coupling height	h10 (mm)	270	270	270	270
	4.19	Overall length	l1 (mm)	3185	3185	3220	3220
	4.20	Length to face of forks	l2 (mm)	2265	2265	2300	2300
	4.21	Overall width, Std/Dual	b1/b2 (mm)	1080/1500	1080/1500	1080/1500	1080/1500
	4.22	Fork dimensions	s/e/l (mm)	35/100/920	35/100/920	35/100/920	35/100/920
	4.23	Fork carriage to DIN 15173. Class, A/B		IIA	IIA	IIA	IIA
	4.24	Fork carriage width ◗	b3 (mm)	1000	1000	1000	1000
	4.31	Ground clearance under mast, with load	m1 (mm)	95	95	95	95
	4.32	Ground clearance at centre of wheelbase	m2 (mm)	130	130	130	130
	4.33	Aisle width with pallets 1 000mm long x 1 200mm wide	Ast (mm)	3575	3575	3610	3610
	4.34	Aisle width with pallets 800mm wide x 1 200mm long	Ast (mm)	3775	3775	3810	3810
	4.35	Outer turning radius	Wa (mm)	1970	1970	2005	2005
	4.36	Inner turning radius	b13 (mm)	60	60	60	60
Performance	5.1	Travel speed with/without load	km/h	14.0/14.5	14.5/15.0	14.0/14.5	14.5/15.0
	5.2	Lifting speed with/without load	m/sec	0.59/0.65	0.47/0.51	0.59/0.65	0.47/0.51
	5.3	Lowering speed with/without load	m/sec	0.52/0.47	0.52/0.47	0.52/0.47	0.52/0.47
	5.5	Drawbar pull with/without load, @ 1.6km/h	N	24750/8370	20100/8370	24750/8160	20100/8160
		Drawbar pull with/without load, @ 4.8km/h	N	19800/8370	17500/8370	19800/8160	17500/8160
	5.6	Maximum drawbar pull with/without load	N	17300/8370	25125/8370	17300/8160	25125/8160
	5.7	Gradeability with/without load, @ 1.6km/h	%	45/28	45/28	40/25	31/25
	5.8	Gradeability with/without load @ 4.8km/h	%	39/28	39/28	35/25	35/25
	5.9	Acceleration time with/without load	sec	14/9	14/9	14/9	14/9
	5.10	Service brake		Hydraulic	Hydraulic	Hydraulic	Hydraulic
Engine	7.1	Engine manufacturer/type		YANMAR/4TNE92	GCT / K21	YANMAR/4TNE92	GCT / K21
	7.2	Engine output, in accordance with ISO1585	kW	32.8	31.5	32.8	31.5
	7.3	Governed speed	rpm	2450	2300	2450	2300
	7.4	Number of cylinders/displacement	cm3	4/2659	4/2065	4/2659	4/2065
	7.5	Fuel comsumption in accordance with VDI cycle	l/h or kg/h	2.6	2.7	2.6	2.7
Other	8.1	Drive control		Automatic	Automatic	Automatic	Automatic
	8.2	Working pressure for attachments	bar	0-145	0-145	0-145	0-145
	8.3	Oil flow for attachments ●	l/min	50	50	50	50
	8.4	Average noise level at operator's ear ★	dB(A)	84	84	84	84
		Guaranteed sound power 2001/14/EC	dB	103	103	103	103
	8.5	Towing coupling type		Pin	Pin	Pin	Pin

★ LPAZ, measured according to the test cycles and based on the weighting values contained in EN12053
▲ Bottom of Forks
✘ Full suspension seat specified
✚ Without load backrest

◗ Add 32mm with load backrest
❍ h6 subject to +/- 5 mm tolerance. When full-suspension seat or cab is fitted, overhead guard height is raised by 60mm
● Variable

Specification data is based on VDI 2198, with the following configuration:
Complete truck with 3000mm 2-stage limited free lift mast, standard carriage and 920mm forks, overhead guard and standard pneumatic drive and steer tyres.

https://truckmanualshub.com/

UT15-18P Mast Table

Mast Type	Maximum Fork Height (mm)	Lowered Height (mm)	Overall Extended Height		Free Lift		Mast tilt Forward/Back (deg)
			Without LBR (mm)	With LBR (mm)	Without LBR (mm)	With LBR (mm)	
2 Stage LFL	3000	1995	3585	3955	155	155	6/12
	3300	2145	3885	4255	155	155	6/12
	3600	2345	4185	4555	155	155	6/12
	4300	2745	4885	5255	155	155	6/6
	4500	2845	5085	5455	155	155	6/6
2 Stage FFL	3300	2160	3905	4255	1545	1215	6/12
3 Stage FFL	4500	2120	5130	5465	1510	1175	6/6
	4800	2235	5445	5755	1600	1290	6/6
	5500	2460	6120	6455	1850	1515	3/6

UT15-18P Capacity Table

Capacity in kg with pneumatic or superelastic tyres

Mast Type	Maximum Fork Height (mm)	500mm Load Centre				600mm Load Centre			
		Without Integral Sideshift		With Integral Sideshift		Without Integral Sideshift		With Integral Sideshift	
		UT15P	**UT18P**	**UT15P**	**UT18P**	**UT15P**	**UT18P**	**UT15P**	**UT18P**
2 Stage LFL	3000	1500	1750	1400	1650	1350	1550	1250	1450
	3300	1500	1750	1400	1650	1350	1550	1250	1450
	3600	1500	1750	1400	1650	1350	1550	1250	1450
	4300	1350	1600	1250	1500	1200	1400	1100	1300
	4500	1350	1500	1200	1400	1150	1350	1050	1250
2 Stage FFL	3300	1500	1750	1400	1650	1350	1550	1250	1450
3 Stage FFL	4500	1250	1400	1150	1300	1100	1250	1000	1150
	4800	1200	1350	1100	1250	1050	1200	950	1100
	5500	800	850	700	750	700	750	600	650

https://truckmanualshub.com/

Features Overview

Front End

The range of rigid Class II and Class III LFL and FFL masts feature heavy sections and large diameter rollers. Thanks to the wide opening between the mast channels, the operator has an excellent view of both the load and the operating environment. The mast design also helps to reduce load damage, as the excellent visibility helps to ensure precise handling.

The masts are compatible with a range of carriages and forks, as well as attachments, including an integral sideshift available to order from the factory.

Masts are mounted on the drive axle for maximum stability and are supported by large tilt cylinders with fine rod threads and spherical bearings. The carriages are Class IIA and IIIA and are made from high tensile steel sections.

Hydraulic System

Operated through cowl-mounted levers, with the standard arrangement of 2-valve, 2-lever. The hydraulic tank features a combined dipstick and oil breather.

Wheels and Tyres

Conventional rim assembly with pneumatic bias ply tyres. Superelastic tyres are available as an option.

Frame

The steel fabricated frame is extremely durable for a long life and features integrated hydraulic and fuel tanks.

Brakes

Conventional drum brakes all-round, with automatic adjustment.

Engines

UTILEV® trucks are available with a range of efficient, quiet, clean running engines.

The UT15-18P can be configured with either a Yanmar 2.6L Diesel or a GCT 2.1L LPG / Dual-Fuel engine.

https://truckmanualshub.com/

Operator Compartment

A wide, low mounted intermediate step with good grip plus large grab handles allow the driver to get on and off the truck easily from either side.

The standard seat offers superior comfort and lumbar support and the excellent view through the mast ensures the operator can work efficiently throughout the day.

The familiar automotive-style controls ensure ease of operation. The dash display includes a Fuel Gauge (Diesel / Dual-Fuel), Water Temperature, Oil Temperature and Transmission Oil Level Warning Lights plus an LCD Hour Meter.

The small diameter steering wheel features light, precise steering and is tilt adjustable for optimum comfort.

The manual hydraulic controls are cowl-mounted and within easy reach. 3rd and 4th function levers are available as an option.

The uncluttered floor plate offers excellent foot space with a traditional 3 pedal arrangement, for accelerator, brake and inching.

Cooling and Filtration

Large, high-quality filters are used for each key system to ensure optimum performance and a long working life. The radiator manages engine coolant and transmission oil, maximising cooling and reducing the risk of unplanned downtime.

Transmission

The single-speed powershift transmission is reliable and efficient, delivering low noise and vibration thanks to the flexi-coupled suspended powertrain. A 5 litre microfilter removes particles from the fibre clutch pack plates before cooling the fluid. Inching is mechanical and adjustable, delivering precise truck positioning during handling operations.

Drive & Steering Axle

Both axles are designed for durability and longevity. The drive axle features a conventional cast iron arrangement, with a differential ring gear and pinion and conventional half shafts leading to the drive wheels. The robust steer axle incorporates a fabricated axle weldment, with a dual functioning centrally mounted hydrostatic steer cylinder connected to a conventional steering knuckle and kingpin arrangement.

https://truckmanualshub.com/

Truck Dimensions

Ast = Wa + x + l6 + a
a = Minimum operating clearance of 200mm
l6 = Load length

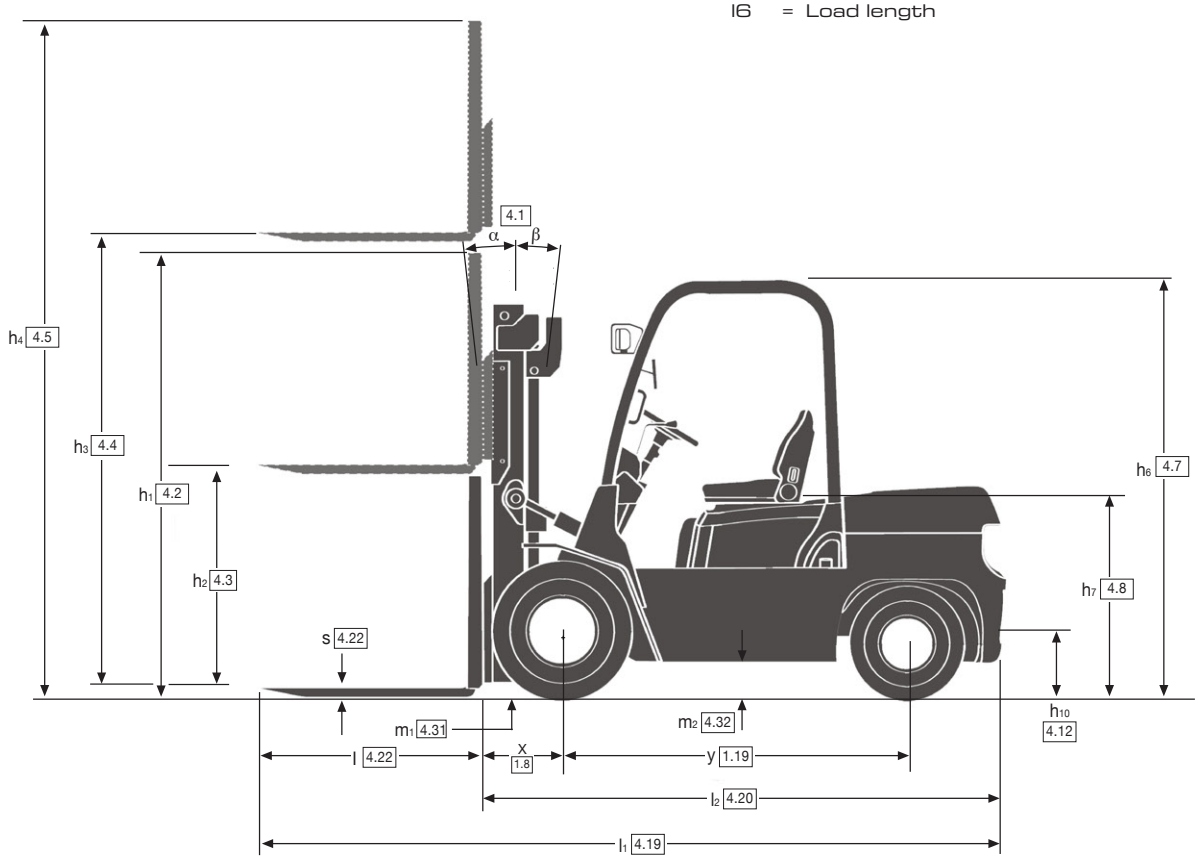

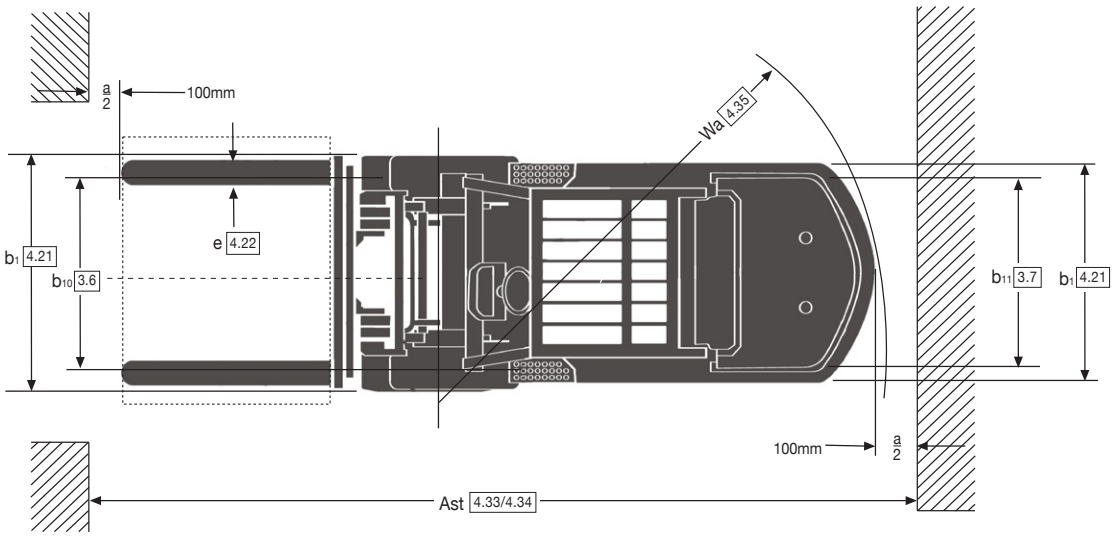

https://truckmanualshub.com/

Features

Standard Features Include:

- 2.0-2.5T - Yanmar 2.6L Diesel or GCT 2.1L LPG / Dual-Fuel
- Transmission: Powershift, 1-Speed
- Mast: 2-stage LFL 3000mm
- Carriage: 1000mm Class II
- Forks: 920 x 100 x 35mm Class II
- Pneumatic Tyres: Drive - 6.50-10-10PR
  Steer - 5.00-8-10PR
- Two Function Cowl Mounted Manual Lever - Lift / Tilt
- Forward / Reverse Directional Lever
- Manual Park Brake
- Three Pedal Layout with Mechanical Inching
- Non-Suspension Seat (Vinyl) with Seat Belt
- Steering Wheel with Spinning Knob
- Power Steering and Tilt Adjustable Steering Column
- Key Switch Start
- Entry Grab Handle
- Dash Display: Fuel Gauge (Diesel/Dual - Fuel), LCD Hour Meter, Water Temperature / Oil Temperature / Transmission Oil Level Warning Lights
- Rear View Mirrors
- Load Backrest
- Mast Tilt - 6° Forward / 12° Back
- Strobe Light (magnetically mounted)
- Audible Reverse Alarm
- Light Kit - 2 x Front Work, 2 x Front Turn, Rear Turn / Tail / Brake / Reverse
- Counterweight Exhaust
- Radiator with Transmission Oil Cooler
- Cyclonic Air Filter
- Fixed Tank Bracket (LPG Trucks)
- Fuel Tank Capacity - 60L
- Toolbox
- Towing Pin
- Operator Manual
- 12 Months / 2000 Hours Manufacturer's Warranty

Options Include:

- Upswept Exhaust
- Muffler - LPG only with 3-way Catalyst
- Air Intake with Pre-cleaner
- 2-stage LFL Masts 3000mm - 4500mm MFH (ClassII)
- 2-stage FFL Masts 3300mm MFH (ClassII)
- 3-stage FFL Masts 4500mm - 5500mm MFH (ClassII)
- Mast Tilt - 6° Forward / 6° Back or 3° Forward / 6° Back
- Carriage: 1100mm
- Forks: 1070mm or 1150mm
- Integral Sideshift or Integral Sideshift with Fork Positioner
- Valve and Hose Groups - 3 and 4 way
- Cab with/without Heater
- Full Suspension Seat
- Rear Work Light
- Superelastic Drive and Steer Tyres

Rated Capacities

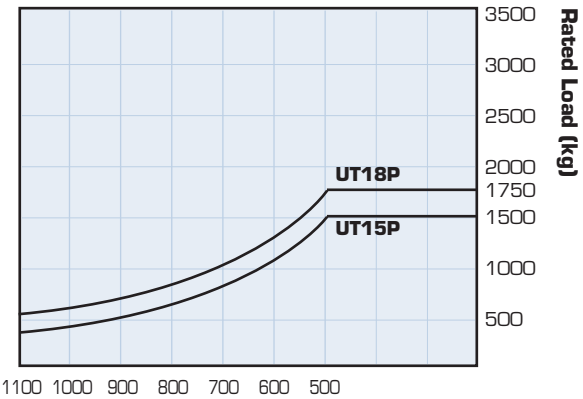

Load Centre
Distance from forks to centre of gravity of load.

Rated Load
Based on vertical masts as shown in VDI table.

https://truckmanualshub.com/

Overview

Utility you can trust™
The UTILEV® range of affordable forklift trucks delivers reliable and cost-effective materials handling solutions for applications across many industries, particularly where users require equipment without advanced functionality or attachments.

The product range has been designed to be easy to operate and maintain, and is backed up by a standard warranty and comprehensive parts availability.

Furthermore, a network of experienced distributors is on-hand to provide maintenance and support, whenever it is required.

The Range
The range consists of 1.5 and 1.75 tonne IC counterbalance forklift trucks, available in two different capacities.

1.5t - UT15P

1.75t - UT18P

Simple to Use
The ergonomically designed operator compartment, with a familiar automotive layout means that drivers will be able to work comfortably, preventing tiredness during handling operations.

A range of standard features and options help to ensure that the truck is configured to the needs of the application.

Easy to Maintain
Thanks to the simplicity of the components and specification, servicing can be carried out quickly and easily, even when PCs, laptops or diagnostic tools are not available

Affordable to Own
The use of proven, high quality, robust components, efficient filtration and excellent cooling result in reliable operation and lower wear and tear. This - together with the fast availability of cost-effective replacement parts - helps to reduce service and maintenance requirements and costs.

Standard service intervals are 500 hours and the trucks have a standard warranty of 2000hrs / 12 months.

Simple to Use, **Easy** to Maintain and **Affordable** to Own.
UTILEV - Utility you can trust™.

Call: +44 1276 538500

Email: marketing@utilev.com

UTILEV®
THE UTILITY LIFT TRUCK™

These trucks conform to current legislative requirements.
Specification is subject to change without notice.
Trucks shown with optional equipment.

Publication part no. 99990001 Rev.04. Designed in The United Kingdom.
© HYSTER-YALE UK LIMITED 2017. All rights reserved.

UTILEV is a registered trademark.
THE UTILITY LIFT TRUCK and UTILITY YOU CAN TRUST are trademarks in the United States and certain other jurisdictions.

HYSTER-YALE UK LIMITED, Centennial House,
Frimley Business Park, Frimley, Surrey, GU16 7SG, United Kingdom.
Tel: + 44 (0) 1276 538500, Fax: + 44 (0) 1276 538559
www.utilev.com