https://truckmanualshub.com/

Husqvarna®

289580

(LGTH2454)

Owner's Manual

532 43 49-25 Rev. 1

Downloaded from www.Manualslib.com manuals search engine

https://truckmanualshub.com/

SAFETY RULES

Safe Operation Practices for Ride-On Mowers

DANGER: THIS CUTTING MACHINE IS CAPABLE OF AMPUTATING HANDS AND FEET AND THROWING OBJECTS. FAILURE TO OBSERVE THE FOLLOWING SAFETY INSTRUCTIONS COULD RESULT IN SERIOUS INJURY OR DEATH.

WARNING: In order to prevent accidental starting when setting up, transporting, adjusting or making repairs, always disconnect spark plug wire and place wire where it cannot contact spark plug.

WARNING: Do not coast down a hill in neutral, you may lose control of the tractor.

WARNING: Tow only the attachments that are recommended by and comply with specifications of the manufacturer of your tractor. Use common sense when towing. Operate only at the lowest possible speed when on a slope. Too heavy of a load, while on a slope, is dangerous. Tires can lose traction with the ground and cause you to lose control of your tractor.

WARNING

Engine exhaust, some of its constituents, and certain vehicle components contain or emit chemicals known to the State of California to cause cancer and birth defects or other reproductive harm.

WARNING

Battery posts, terminals and related accessories contain lead and lead compounds, chemicals known to the State of California to cause cancer and birth defects or other reproductive harm. Wash hands after handling.

I. GENERAL OPERATION

- Read, understand, and follow all instructions on the machine and in the manual before starting.
- Do not put hands or feet near rotating parts or under the machine. Keep clear of the discharge opening at all times.
- Only allow responsible adults, who are familiar with the instructions, to operate the machine.
- Clear the area of objects such as rocks, toys, wire, etc., which could be picked up and thrown by the blades.
- Be sure the area is clear of bystanders before operating. Stop machine if anyone enters the area.
- Never carry passengers.
- Do not mow in reverse unless absolutely necessary. Always look down and behind before and while backing.
- Never direct discharged material toward anyone. Avoid discharging material against a wall or obstruction. Material may ricochet back toward the operator. Stop the blades when crossing gravel surfaces.
- Do not operate machine without the entire grass catcher, discharge chute, or other safety devices in place and working.
- Slow down before turning.
- Never leave a running machine unattended. Always turn off blades, set parking brake, stop engine, and remove keys before dismounting.
- Disengage blades when not mowing. Shut off engine and wait for all parts to come to a complete stop before cleaning the machine, removing the grass catcher, or unclogging the discharge chute.
- Operate machine only in daylight or good artificial light.
- Do not operate the machine while under the influence of alcohol or drugs.
- Watch for traffic when operating near or crossing roadways.
- Use extra care when loading or unloading the machine into a trailer or truck.
- Always wear eye protection when operating machine.
- Data indicates that operators, age 60 years and above, are involved in a large percentage of riding mower-related injuries. These operators should evaluate their ability to operate the riding mower safely enough to protect themselves and others from serious injury.
- Follow the manufacturer's recommendation for wheel weights or counterweights.
- Keep machine free of grass , leaves or other debris build-up which can touch hot exhaust / engine parts and burn. Do not allow the mower deck to plow leaves or other debris which can cause build-up to occur. Clean any oil or fuel spillage before operating or storing the machine. Allow machine to cool before storage.

II. SLOPE OPERATION

Slopes are a major factor related to loss of control and tip-over accidents, which can result in severe injury or death. Operation on all slopes requires extra caution. If you cannot back up the slope or if you feel uneasy on it, do not mow it.

- Mow up and down slopes, not across.
- Watch for holes, ruts, bumps, rocks, or other hidden objects. Uneven terrain could overturn the machine. Tall grass can hide obstacles.
- Choose a low ground speed so that you will not have to stop or shift while on the slope.
- Do not mow on wet grass. Tires may lose traction. Always keep the machine in gear when going down slopes. Do not shift to neutral and coast downhill.
- Avoid starting, stopping, or turning on a slope. If the tires lose traction, disengage the blades and proceed slowly straight down the slope.
- Keep all movement on the slopes slow and gradual. Do not make sudden changes in speed or direction, which could cause the machine to roll over.
- Use extra care while operating machine with grass catchers or other attachments; they can affect the stability of the machine. Do no use on steep slopes.
- Do not try to stabilize the machine by putting your foot on the ground.
- Do not mow near drop-offs, ditches, or embankments. The machine could suddenly roll over if a wheel is over the edge or if the edge caves in.

Downloaded from www.Manualslib.com manuals search engine

https://truckmanualshub.com/

SAFETY RULES

Safe Operation Practices for Ride-On Mowers

III. CHILDREN

Tragic accidents can occur if the operator is not alert to the presence of children. Children are often attracted to the machine and the mowing activity. Never assume that children will remain where you last saw them.

- Keep children out of the mowing area and in the watchful care of a responsible adult other than the operator.
- Be alert and turn machine off if a child enters the area.
- Before and while backing, look behind and down for small children.
- Never carry children, even with the blades shut off. They may fall off and be seriously injured or interfere with safe machine operation. Children who have been given rides in the past may suddenly appear in the mowing area for another ride and be run over or backed over by the machine.
- Never allow children to operate the machine.
- Use extra care when approaching blind corners, shrubs, trees, or other objects that may block your view of a child.

IV. TOWING

- Tow only with a machine that has a hitch designed for towing. Do not attach towed equipment except at the hitch point.
- Follow the manufacturer's recommendation for weight limits for towed equipment and towing on slopes.
- Never allow children or others in or on towed equipment.
- On slopes, the weight of the towed equipment may cause loss of traction and loss of control.
- Travel slowly and allow extra distance to stop.

V. SERVICE

SAFE HANDLING OF GASOLINE

To avoid personal injury or property damage, use extreme care in handling gasoline. Gasoline is extremely flammable and the vapors are explosive.

- Extinguish all cigarettes, cigars, pipes, and other sources of ignition.
- Use only approved gasoline container.
- Never remove gas cap or add fuel with the engine running. Allow engine to cool before refueling.
- Never fuel the machine indoors.
- Never store the machine or fuel container where there is an open flame, spark, or pilot light such as on a water heater or other appliances.
- Never fill containers inside a vehicle or on a truck or trailer bed with plastic liner. Always place containers on the ground away from your vehicle when filling.
- Remove gas-powered equipment from the truck or trailer and refuel it on the ground. If this is not possible, then refuel such equipment with a portable container, rather than from a gasoline dispenser nozzle.
- Keep the nozzle in contact with the rim of the fuel tank or container opening at all times until fueling is complete. Do not use a nozzle lock-open device.
- If fuel is spilled on clothing, change clothing immediately.
- Never overfill fuel tank. Replace gas cap and tighten securely.

GENERAL SERVICE

- Never operate machine in a closed area.
- Keep all nuts and bolts tight to be sure the equipment is in safe working condition.
- Never tamper with safety devices. Check their proper operation regularly.
- Keep machine free of grass, leaves, or other debris build-up. Clean oil or fuel spillage and remove any fuel-soaked debris. Allow machine to cool before storing.
- If you strike a foreign object, stop and inspect the machine. Repair, if necessary, before restarting.
- Never make any adjustments or repairs with the engine running.
- Check grass catcher components and the discharge chute frequently and replace with manufacturer's recommended parts, when necessary.
- Mower blades are sharp. Wrap the blade or wear gloves, and use extra caution when servicing them.
- Check brake operation frequently. Adjust and service as required.
- Maintain or replace safety and instruction labels, as necessary.

- Be sure the area is clear of bystanders before operating. Stop machine if anyone enters the area.
- Never carry passengers.
- Do not mow in reverse unless absolutely necessary. Always look down and behind before and while backing.
- Never carry children, even with the blades shut off. They may fall off and be seriously injured or interfere with safe machine operation. Children who have been given rides in the past may suddenly appear in the mowing area for another ride and be run over or backed over by the machine.
- Keep children out of the mowing area and in the watchful care of a responsible adult other than the operator.
- Be alert and turn machine off if a child enters the area.
- Before and while backing, look behind and down for small children.
- Mow up and down slopes (15° Max), not across.
- Choose a low ground speed so that you will not have to stop or shift while on the slope.
- Avoid starting, stopping, or turning on a slope. If the tires lose traction, disengage the blades and proceed slowly straight down the slope.
- If machine stops while going uphill, disengage blades, shift into reverse and back down slowly.
- Do not turn on slopes unless necessary, and then, turn slowly and gradually downhill, if possible.

Downloaded from www.Manualslib.com manuals search engine

https://truckmanualshub.com/

PRODUCT SPECIFICATIONS

Gasoline Capacity and type:	4.0 Gallons Unleaded Regular
Oil Type (API-SG-SL):	SAE 30 (above 32°F) SAE 5W-30 (below 32°F)
Oil Capacity:	54 oz
Spark Plug:	Champion RC12YC (Gap: .030")
Ground Speed (MPH):	Forward: 0 - 5.8 Reverse: 0 - 2.1
Charging System:	15 AMPS @ 3600 RPM
Battery:	AMP/HR: 28 MIN. CCA: 230 Case Size: U1R
Blade Bolt Torque:	45-55 FT. LBS.

CONGRATULATIONS on your purchase of a new tractor. It has been designed, engineered and manufactured to give you the best possible dependability and performance.

Should you experience any problem you cannot easily remedy, please contact your nearest authorized servicecenter/department We have competent, well-trained technicians and the proper tools to service or repair this tractor.

Please read and retain this manual. The instructions will enable you to assemble and maintain your tractor properly. Always observe the "SAFETY RULES".

CUSTOMER RESPONSIBILITIES

- Read and observe the safety rules.
- Follow a regular schedule in maintaining, caring for and using your tractor.
- Follow the instructions under "Maintenance" and "Storage" sections of this manual.

WARNING: This tractor is equipped with an internal combustion engine and should not be used on or near any unimproved forest-covered, brush-covered or grass-covered land unless the engine's exhaust system is equipped with a spark arrester meeting applicable local or state laws (if any). If a spark arrester is used, it should be maintained in effective working order by the operator.

In the state of California the above is required by law (Section 4442 of the California Public Resources Code). Other states may have similar laws. Federal laws apply on federal lands.

A spark arrester for the muffler is available through your nearest authorized service center/department (See REPAIR PARTS section of this manual).

TABLE OF CONTENTS

SAFETY RULES 2-3
PRODUCT SPECIFICATIONS 4
CUSTOMER RESPONSIBILITIES 4
ASSEMBLY 5-9
OPERATION 10-16
MAINTENANCE SCHEDULE 17
MAINTENANCE 17-20
SERVICE AND ADJUSTMENTS 21-25
STORAGE 26
TROUBLESHOOTING 27-28
REPAIR PARTS 30-44
REPAIR PARTS - ENGINE 45-49
REPAIR PARTS - TRANSAXLE 50-51
WARRANTY ..... BACK PAGE

Downloaded from www.Manualslib.com manuals search engine

https://truckmanualshub.com/

UNASSEMBLED PARTS

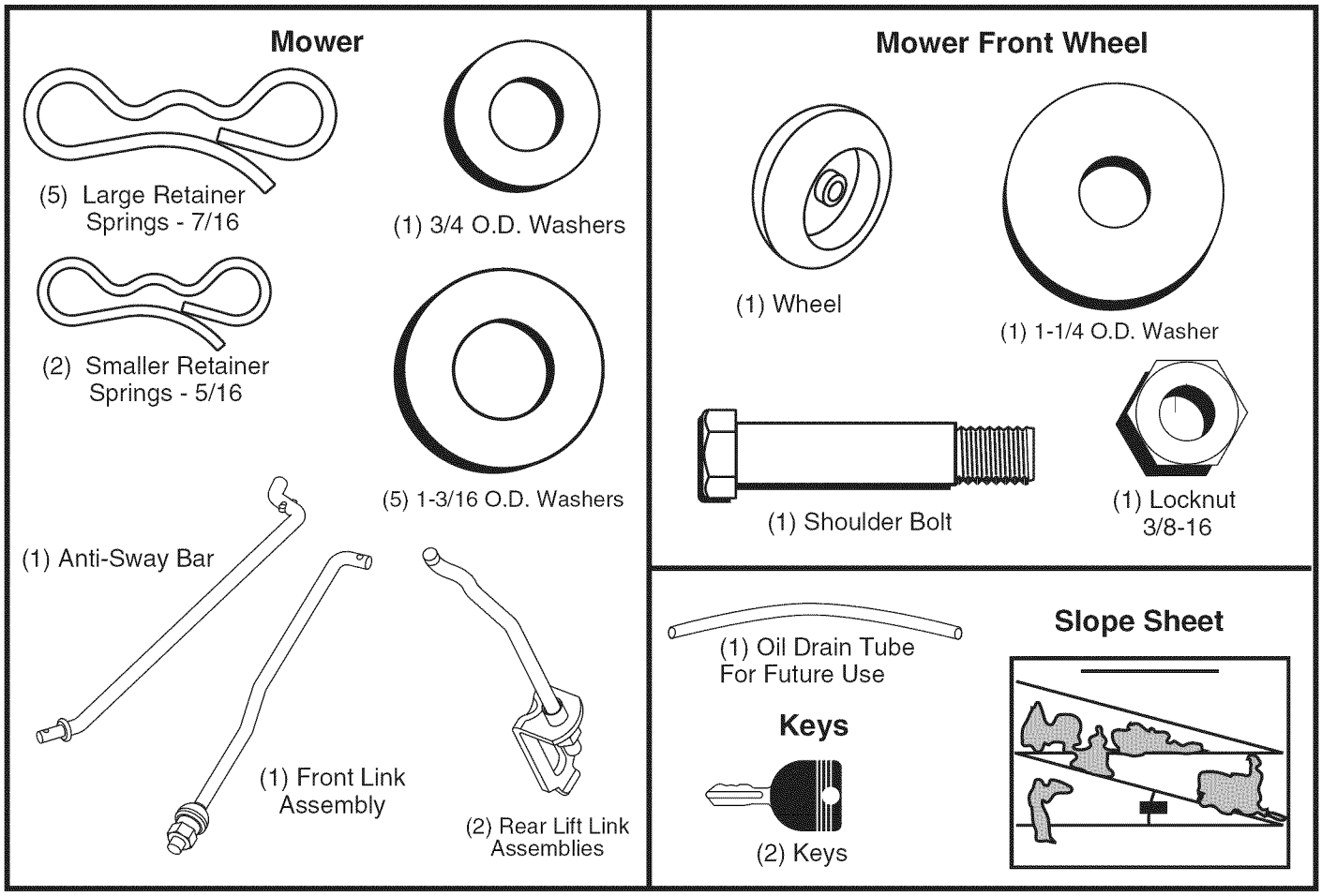

ASSEMBLY

Your new tractor has been assembled at the factory with exception of those parts left unassembled for shipping purposes. To ensure safe and proper operation of your tractor all parts and hardware you assemble must be tightened securely. Use the correct tools as necessary to ensure proper tightness.

TOOLS REQUIRED FOR ASSEMBLY

A socket wrench set will make assembly easier. Standard wrench sizes are listed.

(2) 7/16" wrenches	Utility knife
(1) 1/2" wrench	Tire pressure gauge
(1) 3/4" wrench	Pliers
(1) 3/4" socket w/drive ratchet	

When right or left hand is mentioned in this manual, it means when you are in the operating position (seated behind the steering wheel).

TO REMOVE TRACTOR FROM CARTON

UNPACK CARTON

- Remove all accessible loose parts and parts cartons from carton .
- Cut along dotted lines on all four panels of carton. Remove end panels and lay side panels flat.
- Remove mower and packing materials.
- Check for any additional loose parts or cartons and remove.

Downloaded from www.Manualslib.com manuals search engine

https://truckmanualshub.com/

ASSEMBLY

BEFORE REMOVING TRACTOR FROM SKID

TO CHECK BATTERY (See Fig. 1)

- Lift hood to raised position.

NOTE: If this battery is put into service after month and year indicated on label (label is located between terminals) charge battery for minimum of one hour at 6-10 amps. (See "BATTERY" in Maintenance section of this manual for charging instructions).

- For battery and battery cable installation see "REPLACING BATTERY" in the "Service and Adjustments" section in this manual.

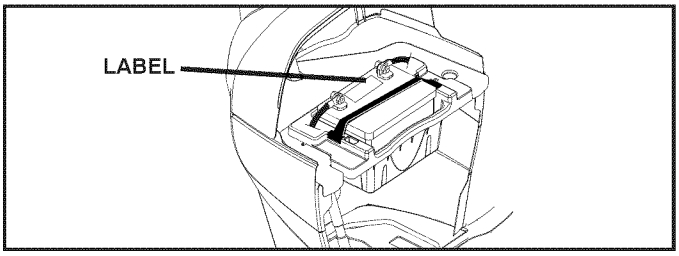

Fig. 1

ADJUST SEAT (See Fig. 2)

- Sit in seat.
- Lift up adjustment lever (A) and slide seat until a comfortable position is reached which allows you to press clutch/brake pedal all the way down.
- Release lever to lock seat in position.

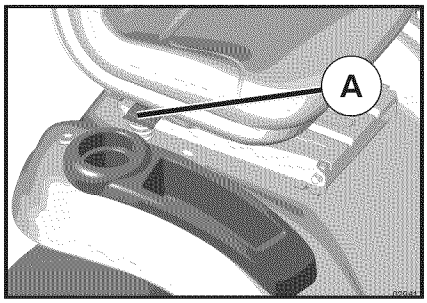

Fig. 2

NOTE: You may now roll your tractor off the skid. Follow the instruction below to remove the tractor from the skid.

⚠ WARNING: Before starting, read, understand and follow all instructions in the Operation section of this manual. Be sure tractor is in a well-ventilated area. Be sure the area in front of tractor is clear of other people and objects.

TO ROLL TRACTOR OFF SKID (See Operation section for location and function of controls)

- Raise attachment lift lever to its highest position.
- Release parking brake by depressing brake pedal.
- Place freewheel control in disengaged position to disengage transmission (See "TO TRANSPORT" in the Operation section of this manual).
- Roll tractor forward off skid.

Continue with the instructions that follow.

TO INSTALL MOWER AND DRIVE BELT (See Figs. 3 - 15)

1. SET PARKING BRAKE LEVER AND LOWER ATTACHMENT LIFT LEVER (See Fig. 3 and 4)

- Depress clutch/brake pedal all the way down and hold.
- Pull parking brake lever up and hold, release pressure from clutch/brake pedal, then release parking brake lever. Pedal should remain in brake position. Ensure parking brake will hold tractor secure.

Fig. 3

CAUTION: Lift lever is spring loaded. Have a tight grip on lift lever, lower it slowly and engage in lowest position. Lift lever is located on left side of fender.

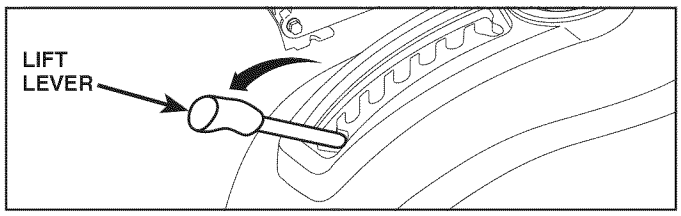

Fig. 4

Downloaded from www.Manualslib.com manuals search engine

https://truckmanualshub.com/

ASSEMBLY

2. ASSEMBLE FRONT GAUGE WHEEL (W) TO FRONT OF MOWER (See Fig. 5)

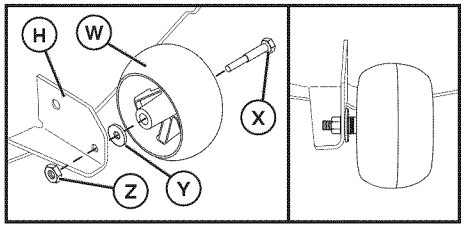

H. FRONT MOWER BRACKET
W. FRONT GAUGE WHEEL
X. SHOULDER BOLT
Y. 1-1/4 O.D. WASHER
Z. 3/8-16 LOCKNUT

Fig. 5

3. TURN STEERING WHEEL LEFT AND POSITION MOWER (See Fig. 6)

- Turn steering wheel to the left as far as it will go and position mower on right side of tractor with deflector shield (Q) to the right.

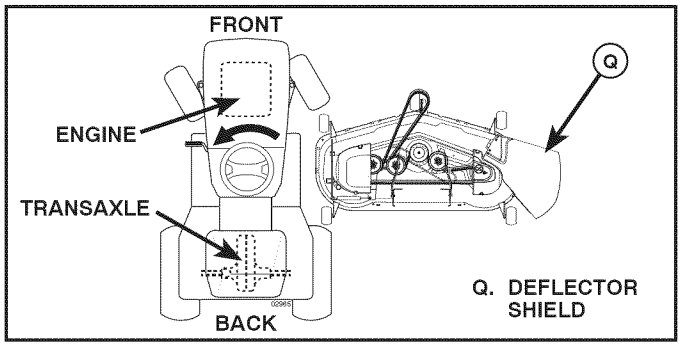

Fig. 6

4. SLIDE MOWER UNDER TRACTOR (See Fig. 7)

- Bring belt forward and check belt for proper routing in all mower pulley grooves.

NOTE: Be sure mower side suspension arms (A) are pointing forward before sliding mower under tractor.

- Slide mower under tractor until it is centered under tractor.

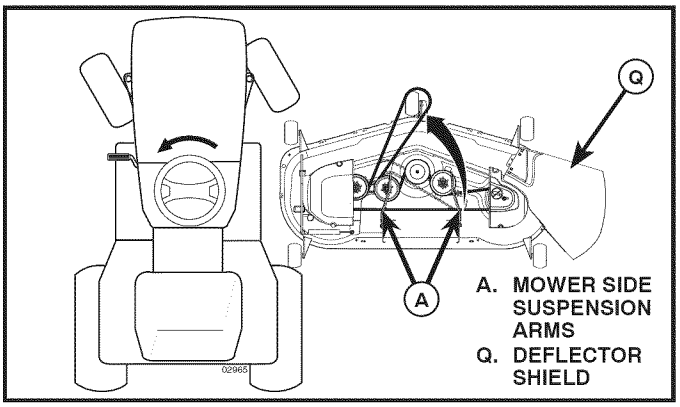

Fig. 7

5. INSTALL ANTI-SWAY BAR (S) (IF EQUIPPED) (See Fig. 8 - 11)

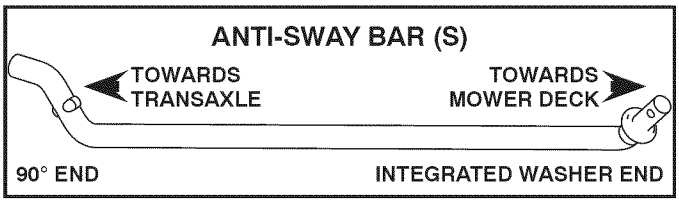

Fig. 8

- From right side of mower, first insert 90° end of anti-sway bar (S) into hole in transaxle bracket (T), located near left rear tire in front of transaxle.

NOTE: Flashlight may be helpful.

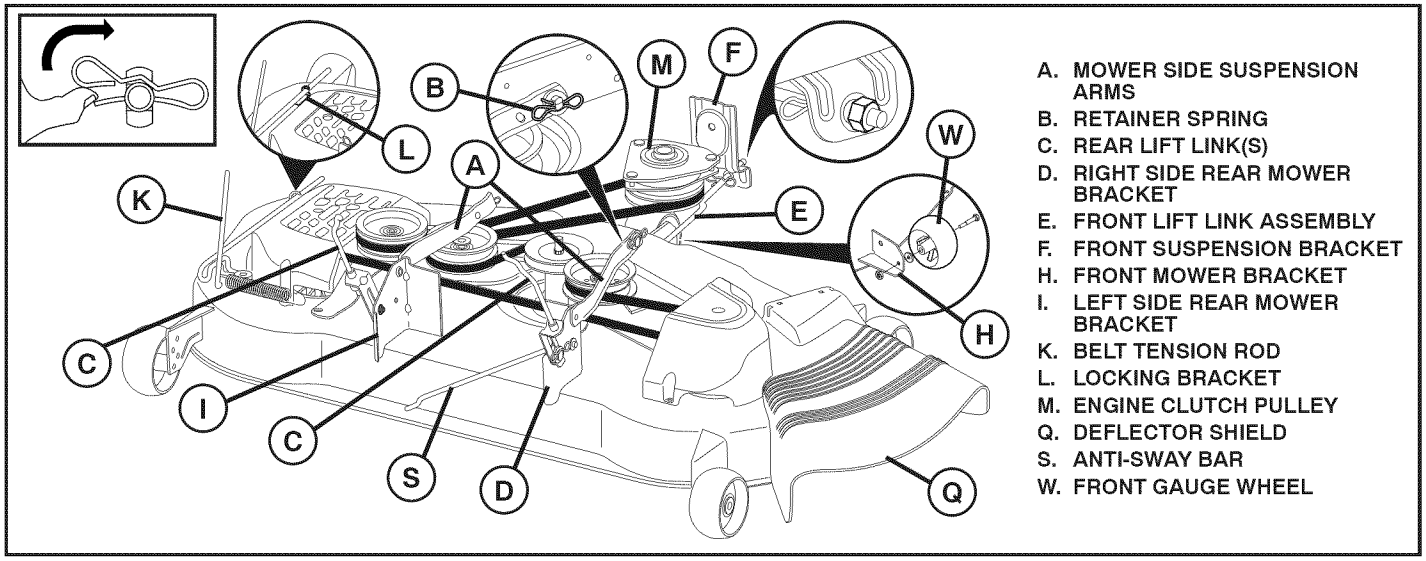

Fig. 9

Downloaded from www.Manualslib.com manuals search engine

https://truckmanualshub.com/

ASSEMBLY

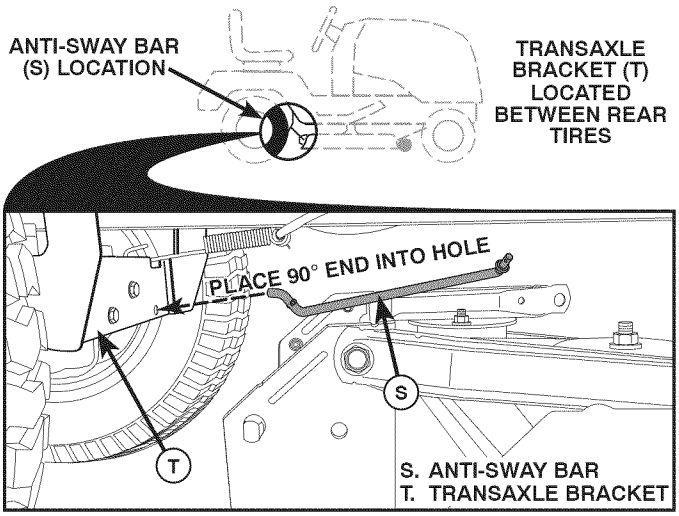

Fig. 10

NOTE: Depending on model, bracket (T) may be different than shown but hole for anti-sway bar will be in same position/location.

- Pivot the integrated washer end of anti-sway bar (S) towards mower deck bracket on right side of mower. Insert integrated washer end of bar into hole in rear mower bracket (D). Move mower as needed to insert integrated washer end of bar into rear mower bracket (D).
- Secure with small washer and small retainer spring as shown.

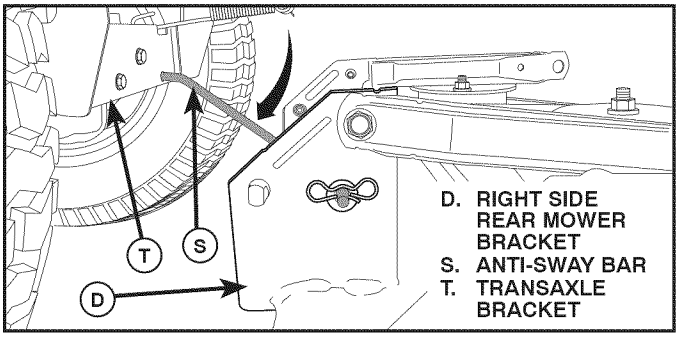

Fig. 11

6. ATTACH MOWER SIDE SUSPENSION ARMS (A) TO CHASSIS (See Fig. 12)

- Position front hole in side suspension arm (A) over pin on outside of tractor chassis and secure with large washer and large retainer spring (B).
- Repeat on opposite side of tractor.

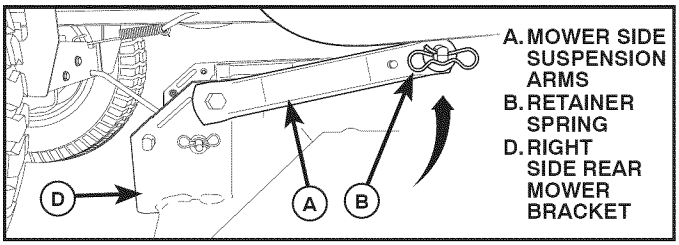

Fig. 12

7. ATTACH REAR LIFT LINKS (C) (See Fig. 13)

- Insert rod end of rear lift link (C) into hole (U) in tractor lift shaft suspension arm and pivot link down to mower.
- Lift rear corner of mower and position slot in link assembly over pin on rear mower bracket (D) and secure with large washer and large retainer spring.
- Repeat on opposite side of tractor.

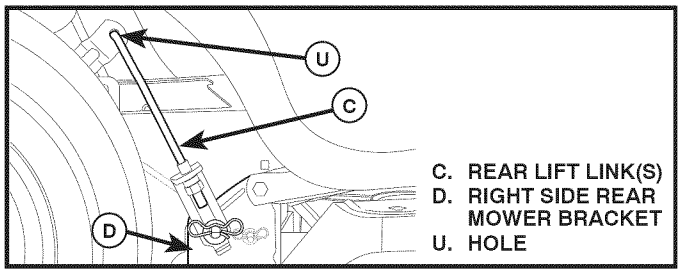

Fig. 13

8 ATTACH FRONT LINK (E) (See Fig. 14)

- Turn steering wheel to position wheels straight forward.
- From front of tractor, insert rod end of front link (E) through front hole in tractor front suspension bracket (F).
- Move to left side of mower and and insert large retainer spring (G) through hole in front link (E) behind front suspension bracket (F).
- Insert other end of link (E) into hole in front mower bracket (H) and secure with washer and small retainer spring (J).

NOTE: Requires deck lifting.

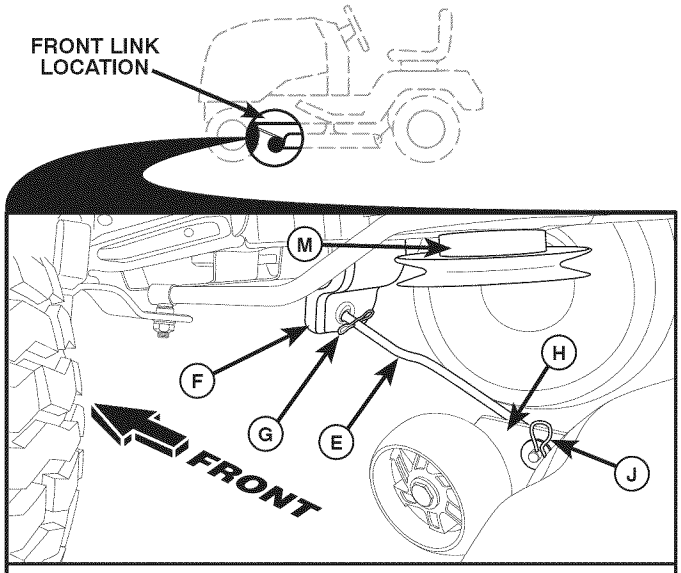

E. FRONT LIFT LINK ASSEMBLY
F. FRONT SUSPENSION BRACKET
G. LARGE RETAINER SPRING
H. FRONT MOWER BRACKET
J. SMALL RETAINER SPRING
M. ENGINE CLUTCH PULLEY

Fig. 14

Downloaded from www.Manualslib.com manuals search engine

https://truckmanualshub.com/

ASSEMBLY

9 INSTALL BELT ON ENGINE CLUTCH PULLEY (M) (See Fig. 9 & 15)

- Disengage belt tension rod (K) from locking bracket (L).
- Install belt onto engine clutch pulley (M).

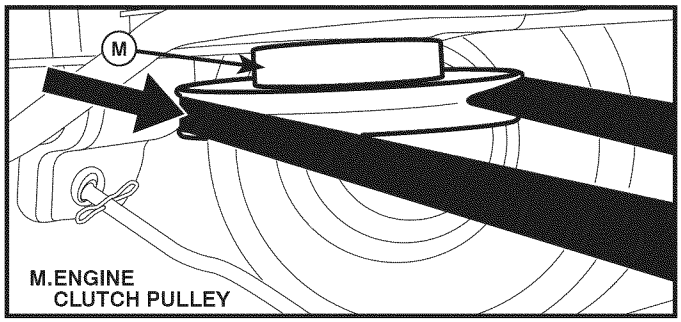

Fig. 15

IMPORTANT: Check belt for proper routing in all mower pulley grooves and under mandrel covers.

- Engage belt tension rod (K) on locking bracket (L).

CAUTION: Belt tension rod is spring loaded. Have a tight grip on rod and engage slowly.

- Raise attachment lift lever to highest position.
- If necessary, adjust gauge wheels before operating mower as shown in the Operation section of this manual.

MOWER DRIVE BELT INSTALLATION

Follow procedure described in "TO REPLACE MOWER BLADE DRIVE BELT " in the "Service and Adjustments" section of this manual.

CHECK TIRE PRESSURE

The tires on your tractor were overinflated at the factory for shipping purposes. Correct tire pressure is important for best cutting performance.

- Reduce tire pressure to PSI shown on tires.

CHECK DECK LEVELNESS

For best cutting results, mower housing should be properly leveled. See "TO LEVEL MOWER HOUSING" in the Service and Adjustments section of this manual.

CHECK FOR PROPER POSITION OF BELTS

See the figures that are shown for replacing motion and mower blade drive belts in the Service & Adjustments section of this manual. Verify that the belts are routed correctly.

CHECK BRAKE SYSTEM

After you learn how to operate your tractor, check to see that the brake is operating properly. See "TO CHECK BRAKE" in the Service and Adjustments section of this manual.

✓ CHECKLIST

BEFORE YOU OPERATE YOUR NEW TRACTOR, WE WISH TO ASSURE THAT YOU RECEIVE THE BEST PERFORMANCE AND SATISFACTION FROM THIS QUALITY PRODUCT.

PLEASE REVIEW THE FOLLOWING CHECKLIST:

- ✓ All assembly instructions have been completed.
- ✓ No remaining loose parts in carton.
- ✓ Battery is properly prepared and charged.
- ✓ Seat is adjusted comfortably and tightened securely.
- ✓ All tires are properly inflated. (For shipping purposes, the tires were overinflated at the factory).
- ✓ Be sure mower deck is properly leveled side-to-side/ front-to-rear for best cutting results. (Tires must be properly inflated for leveling).
- ✓ Check mower and drive belts. Be sure they are routed properly around pulleys and inside all belt keepers.
- ✓ Check wiring. See that all connections are still secure and wires are properly clamped.
- ✓ Before driving tractor, be sure freewheel control is in "transmission engaged" position (see "TO TRANSPORT" in the Operation section of this manual).

WHILE LEARNING HOW TO USE YOUR TRACTOR, PAY EXTRA ATTENTION TO THE FOLLOWING IMPORTANT ITEMS:

- ✓ Engine oil is at proper level.
- ✓ Fuel tank is filled with fresh, clean, regular unleaded gasoline.
- ✓ Become familiar with all controls, their location and function. Operate them before you start the engine.
- ✓ Be sure brake system is in safe operating condition.
- ✓ Be sure Operator Presence System and Reverse Operation System (ROS) are working properly (See the Operation and Maintenance sections in this manual).
- ✓ It is important to purge the transmission before operating your tractor for the first time. Follow proper starting and transmission purging instructions (See "TO START ENGINE" and "PURGE TRANSMISSION" in the Operation section of this manual).

Downloaded from www.Manualslib.com manuals search engine

https://truckmanualshub.com/

OPERATION

These symbols may appear on your tractor or in literature supplied with the product. Learn and understand their meaning.

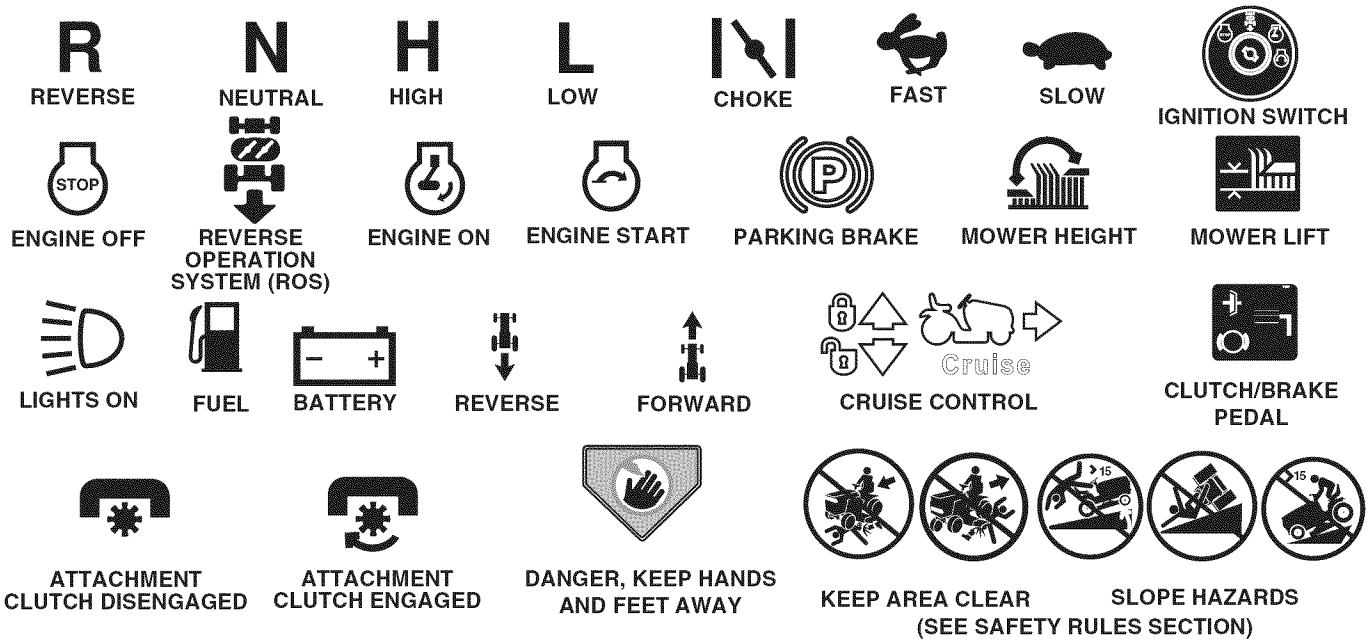

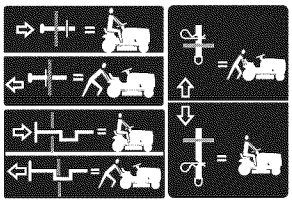

FREE WHEEL
(Automatic Models only)

Failure to follow instructions could result in serious injury or death. The safety alert symbol is used to identify safety information about hazards which can result in death, serious injury and/or property damage.

DANGER indicates a hazard which, if not avoided, **will result in death or serious injury.**

WARNING indicates a hazard which, if not avoided, **could result in death or serious injury.**

CAUTION indicates a hazard which, if not avoided, **might result in minor or moderate injury.**

CAUTION when used **without** the alert symbol, indicates a situation that **could result in damage to the tractor and/or engine.**

HOT SURFACES indicates a hazard which, if not avoided, **could result in death, serious injury and/or property damage.**

FIRE indicates a hazard which, if not avoided, **could result in death, serious injury and/or property damage.**

Downloaded from www.Manualslib.com manuals search engine

https://truckmanualshub.com/

OPERATION

KNOW YOUR TRACTOR

READ THIS OWNER'S MANUAL AND SAFETY RULES BEFORE OPERATING YOUR TRACTOR

Compare the illustrations with your tractor to familiarize yourself with the locations of various controls and adjustments. Save this manual for future reference.

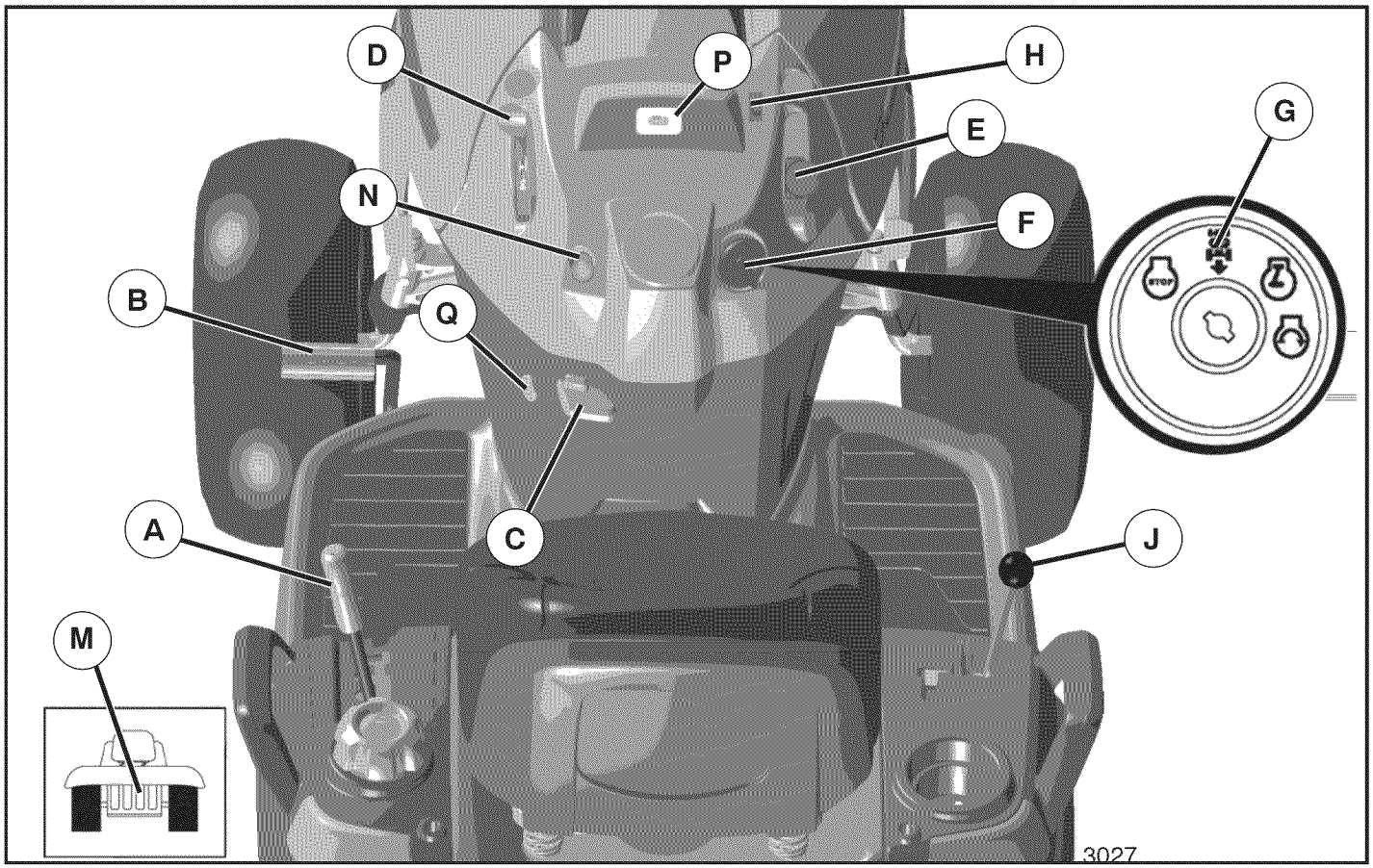

Fig. 16

Our tractors conform to the applicable safety standards of the American National Standards Institute.

(A) ATTACHMENT LIFT LEVER - Used to raise and lower the mower or other attachments mounted to your tractor.

(B) BRAKE PEDAL - Used for braking the tractor and starting the engine.

(C) PARKING BRAKE - Locks clutch/brake pedal into the brake position.

(D) THROTTLE CONTROL - Used to control engine speed.

(E) ATTACHMENT CLUTCH SWITCH - Used to engage the mower blades, or other attachments mounted to your tractor.

(F) IGNITION SWITCH - Used for starting and stopping the engine.

(G) REVERSE OPERATION SYSTEM (ROS) "ON" POSITION - Allows operation of mower or other powered attachment while in reverse.

(H) LIGHT SWITCH - Turns the headlights on and off.

(J) MOTION CONTROL LEVER - Selects the speed and direction of the tractor.

(M) FREEWHEEL CONTROL - Disengages transmission for pushing or slowly towing the tractor with the engine off.

(N) CHOKE CONTROL - Used when starting a cold engine.

(P) SERVICE REMINDER / HOUR METER - Indicates when service is required for the engine and mower.

(Q) 12-VOLT POWER PORT - Used for 12-volt accessories.

Downloaded from www.Manualslib.com manuals search engine

https://truckmanualshub.com/

OPERATION

The operation of any tractor can result in foreign objects thrown into the eyes, which can result in severe eye damage. Always wear safety glasses or eye shields while operating your tractor or performing any adjustments or repairs. We recommend standard safety glasses or a wide vision safety mask worn over spectacles.

HOW TO USE YOUR TRACTOR

TO SET PARKING BRAKE (See Fig. 17)

Your tractor is equipped with an operator presence sensing switch. When engine is running, any attempt by the operator to leave the seat without first setting the parking brake will shut off the engine.

- Depress brake pedal (B) all the way down and hold.
- Pull parking brake lever (C) up and hold, release pressure from brake pedal (B), then release parking brake lever. Pedal should remain in brake position. Make sure parking brake will hold tractor secure.

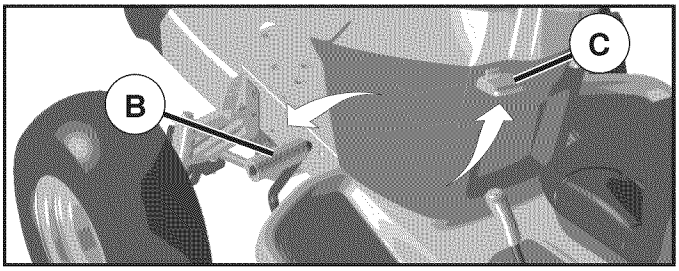

Fig. 17

STOPPING (See Fig. 18)

MOWER BLADES -

- To stop mower blades, place attachment clutch control in the "DISENGAGED" position ( ).

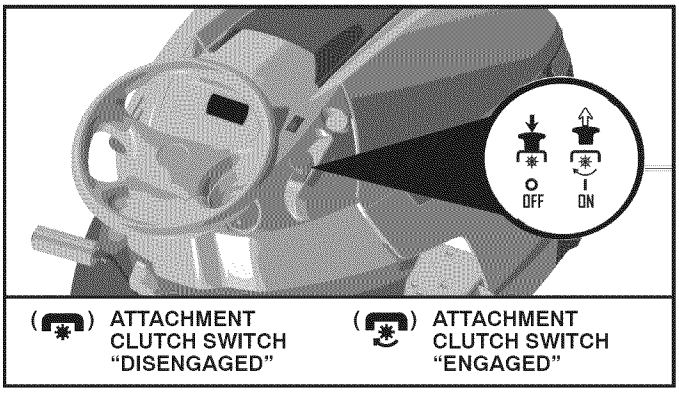

Fig. 18

GROUND DRIVE -

- To stop ground drive, depress brake pedal all the way down.
- Move motion control lever (J) to neutral position.

ENGINE -

- Move throttle control (D) between half and full speed (fast) position.

NOTE: Failure to move throttle control between half and full speed (fast) position, before stopping, may cause engine to "backfire".

- Turn ignition key (F) to "STOP" position and remove key. Always remove key when leaving tractor to prevent unauthorized use.
- Never use the choke to stop the engine.

IMPORTANT: LEAVING THE IGNITION SWITCH IN ANY POSITION OTHER THAN "STOP" WILL CAUSE THE BATTERY TO DISCHARGE AND GO DEAD.

NOTE: Under certain conditions when tractor is standing idle with the engine running, hot engine exhaust gases may cause "browning" of grass. To eliminate this possibility, always stop engine when stopping tractor on grass areas.

CAUTION: Always stop tractor completely, as described above, and set parking brake before leaving the operator's position.

TO USE THROTTLE CONTROL (D) (See Fig. 19)

Always operate engine at full speed (fast).

- Operating engine at less than full speed (fast) reduces engines operating efficiency.
- Full speed (fast) offers the best bagging and mower performance.

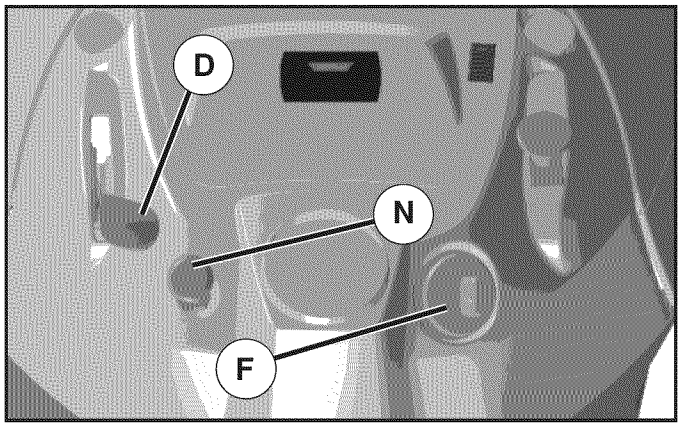

Fig. 19

TO USE CHOKE CONTROL (N) (See Fig. 19)

Use choke control whenever you are starting a cold engine. Do not use to start a warm engine.

- To engage choke control, pull knob out. Slowly push knob in to disengage.

Downloaded from www.Manualslib.com manuals search engine

https://truckmanualshub.com/

OPERATION

TO MOVE FORWARD AND BACKWARD (See Fig. 20)

The direction and speed of movement is controlled by the motion control lever. (J)

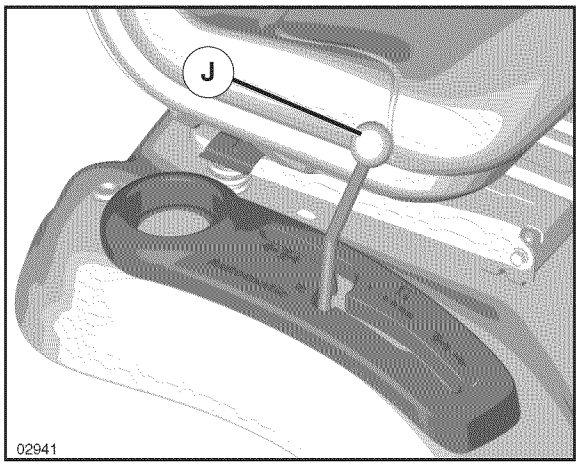

Fig. 20

- Start tractor with motion control lever in neutral position.
- Release parking brake.
- Slowly move motion control lever to desired position.

TO ADJUST MOWER CUTTING HEIGHT (See Fig. 21)

The position of the attachment lift lever (A) determines the cutting height.

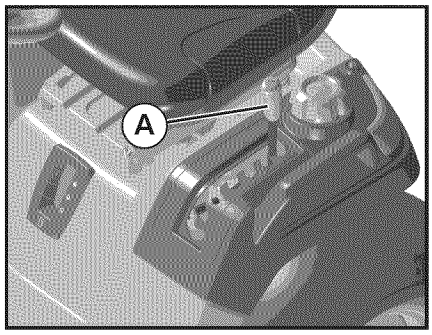

Fig. 21

- Put attachment lift lever in desired cutting height slot.

The cutting height range is approximately 1" to 4". The heights are measured from the ground to the blade tip with the engine not running. These heights are approximate and may vary depending upon soil conditions, height of grass and types of grass being mowed.

- The average lawn should be cut to approximately 2-1/2" during the cool season and to over 3" during hot months. For healthier and better looking lawns, mow often and after moderate growth.
- For best cutting performance, grass over 6" in height should be mowed twice. Make the first cut relatively high; the second to desired height.

TO ADJUST GAUGE WHEELS (See Fig. 22)

Gauge wheels are properly adjusted when they are slightly off the ground when mower is at the desired cutting height in operating position. Gauge wheels then keep the deck in proper position to help prevent scalping in most terrain conditions.

NOTE: Adjust gauge wheels with tractor on a flat level surface.

- Adjust mower to desired cutting height (See "TO ADJUST MOWER CUTTING HEIGHT" in this section of manual).
- With mower in desired height of cut position, gauge wheels should be assembled so they are slightly off the ground. Install gauge wheel in appropriate hole. Tighten securely.
- Repeat for all, installing gauge wheel in same adjustment hole.

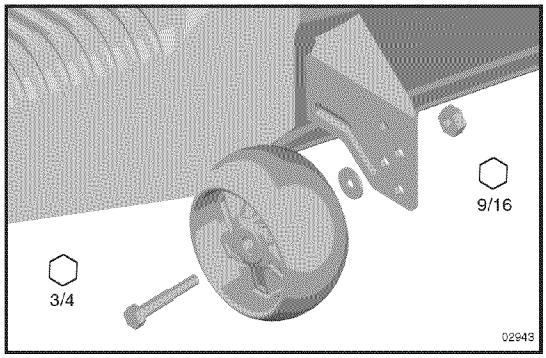

Fig. 22

TO OPERATE MOWER

Your tractor is equipped with an operator presence sensing switch. Any attempt by the operator to leave the seat with the engine running and the attachment clutch engaged will shut off the engine. You must remain fully and centrally positioned in the seat to prevent the engine from hesitating or cutting off when operating your equipment on rough, rolling terrain or hills.

- Select desired height of cut with attachment lift lever.
- Start mower blades by engaging attachment clutch control.

TO STOP MOWER BLADES

- Disengage attachment clutch control.

CAUTION: Do not operate the mower without either the entire grass catcher, on mowers so equipped, or the deflector shield (S) in place (See Fig. 23).

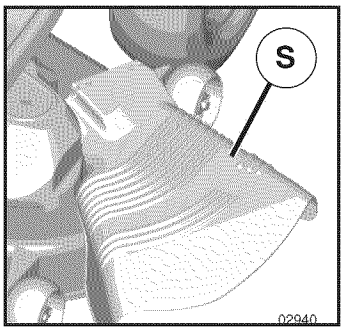

Fig. 23

Downloaded from www.Manualslib.com manuals search engine

https://truckmanualshub.com/

OPERATION

REVERSE OPERATION SYSTEM (ROS)

Your tractor is equipped with a Reverse Operation System (ROS). Any attempt by the operator to travel in the reverse direction with the attachment clutch engaged will shut off the engine unless ignition key is placed in the ROS "ON" position.

⚠WARNING: Backing up with the attachment clutch engaged while mowing is strongly discouraged. Turning the ROS "ON", to allow reverse operation with the attachment clutch engaged, should only be done when the operator decides it is necessary to reposition the machine with the attachment engaged. **Do not mow in reverse unless absolutely necessary**.

USING THE REVERSE OPERATION SYSTEM (See Fig. 24)
Only use if you are certain no children or other bystanders will enter the mowing area.

- Move motion control lever to neutral (N) position.
- With engine running, turn ignition key counterclockwise to ROS "ON" position.
- Look down and behind before and while backing.
- Slowly move motion control lever to reverse (R) position to start movement.
- When use of the ROS is no longer needed, turn the ignition key clockwise to engine "ON" position.

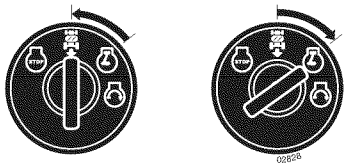

Fig. 24

TO OPERATE ON HILLS

CAUTION: Do not drive up or down hills with slopes greater than 15° and do not drive across any slope.

- Choose the slowest speed before starting up or down hills.
- Avoid stopping or changing speed on hills.
- If slowing is necessary, move throttle control lever to slower position.
- If stopping is absolutely necessary, push clutch/brake pedal quickly to brake position and engage parking brake.
- Move motion control lever to neutral position.

IMPORTANT: THE MOTION CONTROL LEVER DOES NOT RETURN TO NEUTRAL POSITION WHEN THE BRAKE PEDAL IS DEPRESSED.

- To restart movement, slowly release parking brake and clutch/brake pedal.
- Slowly move motion control lever to slowest setting.
- Make all turns slowly.

TO TRANSPORT (See Figs. 16 and 25)

When pushing or towing your tractor, be sure to disengage transmission by placing freewheel control in freewheeling position. Free wheel control is located at the rear drawbar of tractor.

- Raise attachment lift to highest position with attachment lift control.
- Pull freewheel control out and down into the slot and release so it is held in the disengaged position.
- Do not push or tow tractor at more than two (2) MPH.
- To reengage transmission, reverse above procedure.

NOTE: To protect hood from damage when transporting your tractor on a truck or a trailer, be sure hood is closed and secured to tractor. Use an appropriate means of tying hood to tractor (rope, cord, etc.).

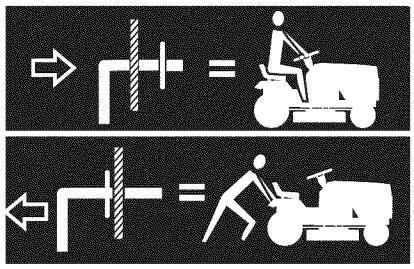

Fig. 25

TOWING CARTS AND OTHER ATTACHMENTS

Tow only the attachments that are recommended by and comply with specifications of the manufacturer of your tractor. Use common sense when towing. Too heavy of a load, while on a slope, is dangerous. Tires can lose traction with the ground and cause you to lose control of your tractor.

SERVICE REMINDER/HOUR METER

Service reminder shows the total number of hours the engine has run and flashes to indicate that the engine or mower needs servicing. When service is required, the service reminder will flash for two hours. To service engine and mower, see the Maintenance section of this manual.

NOTE: Service reminder runs when the ignition key is in any position but "STOP". For accurate reading, be sure key remains in the "STOP" position when engine is not running.

Downloaded from www.Manualslib.com manuals search engine

https://truckmanualshub.com/

OPERATION

BEFORE STARTING THE ENGINE

CHECK ENGINE OIL LEVEL

The engine in your tractor has been shipped, from the factory, already filled with summer weight oil.

- Check engine oil with tractor on level ground.
- Remove oil fill cap/dipstick and wipe clean, reinsert the dipstick and screw cap tight, wait for a few seconds, remove and read oil level. If necessary, add oil until "FULL" mark on dipstick is reached. Do not overfill.
- For cold weather operation you should change oil for easier starting (See "OIL VISCOSITY CHART" in the Maintenance section of this manual).
- To change engine oil, see the Maintenance section in this manual.

ADD GASOLINE

- Fill fuel tank to bottom of filler neck. Do not overfill. Use fresh, clean, regular unleaded gasoline with a minimum of 87 octane. (Use of leaded gasoline will increase carbon and lead oxide deposits and reduce valve life). Do not mix oil with gasoline. Purchase fuel in quantities that can be used within 30 days to assure fuel freshness.

CAUTION: Wipe off any spilled oil or fuel. Do not store, spill or use gasoline near an open flame.

IMPORTANT: WHEN OPERATING IN TEMPERATURES BELOW 32°F (0°C), USE FRESH, CLEAN WINTER GRADE GASOLINE TO HELP ENSURE GOOD COLD WEATHER STARTING.

CAUTION: Alcohol blended fuels (called gasohol or using ethanol or methanol) can attract moisture which leads to separation and formation of acids during storage. Acidic gas can damage the fuel system of an engine while in storage. To avoid engine problems, the fuel system should be emptied before storage of 30 days or longer. Drain the gas tank, start the engine and let it run until the fuel lines and carburetor are empty. Use fresh fuel next season. See Storage Instructions for additional information. Never use engine or carburetor cleaner products in the fuel tank or permanent damage may occur.

TO START ENGINE (See Fig. 16)

When starting the engine for the first time or if the engine has run out of fuel, it will take extra cranking time to move fuel from the tank to the engine.

- Be sure freewheel control is in the transmission engaged position.
- Sit on seat in operating position, depress clutch/brake pedal and set parking brake.
- Place motion control lever in neutral position.
- Move attachment clutch to "DISENGAGED" position.
- Move throttle control to fast position
- Pull choke control out for a cold engine start attempt. For a warm engine start attempt the choke control may not be needed.

NOTE: Before starting, read the warm and cold starting procedures below.

- Insert key into ignition and turn key clockwise to "START" position and release key as soon as engine starts. Do not run starter continuously for more than fifteen seconds per minute. If the engine does not start after several attempts, push choke control in, wait a few minutes and try again. If engine still does not start, pull the choke control out and retry.

WARM WEATHER STARTING (50°F/10°C and above)

- When engine starts, slowly push choke control in until the engine begins to run smoothly. If the engine starts to run roughly, pull the choke control out slightly for a few seconds and then continue to push the control in slowly.
- The attachments and ground drive can now be used. If the engine does not accept the load, restart the engine and allow it to warm up for one minute using the choke as described above.

COLD WEATHER STARTING (50°F/10°C and below)

- When engine starts, slowly push choke control in until the engine begins to run smoothly. Continue to push the choke control in small steps allowing the engine to accept small changes in speed and load, until the choke control is fully in. If the engine starts to run roughly, pull the choke control out slightly for a few seconds and then continue to push the control in slowly. This may require an engine warm-up period from several seconds to several minutes, depending on the temperature.

AUTOMATIC TRANSMISSION WARM UP

- Before driving the unit in cold weather, the transmission should be warmed up as follows:
  - Be sure the tractor is on level ground.
  - Place the motion control lever in neutral. Release the parking brake and let the clutch/brake slowly return to operating position.
  - Allow one minute for transmission to warm up. This can be done during the engine warm up period.
- The attachments can be used during the engine warm-up period after the transmission has been warmed up and may require the choke control be pulled out slightly.

NOTE: If at a high altitude (above 3000 feet) or in cold temperatures (below 32° F/0°C) the carburetor fuel mixture may need to be adjusted for best engine performance. See "TO ADJUST CARBURETOR" in the Service and Adjustments section of this manual.

Downloaded from www.Manualslib.com manuals search engine

https://truckmanualshub.com/

OPERATION

PURGE TRANSMISSION

CAUTION: Never engage or disengage freewheel lever while the engine is running.

To ensure proper operation and performance, it is recommended that the transmission be purged before operating tractor for the first time. This procedure will remove any trapped air inside the transmission which may have developed during shipping of your tractor.

IMPORTANT: SHOULD YOUR TRANSMISSION REQUIRE REMOVAL FOR SERVICE OR REPLACEMENT, IT SHOULD BE PURGED AFTER REINSTALLATION BEFORE OPERATING THE TRACTOR.

1. Place tractor safely on a level surface - that is clear and open - with engine off and parking brake set.
2. Disengage transmission by placing freewheel control in freewheeling position (See "TO TRANSPORT" in this section of manual).
3. Sitting in the tractor seat, start engine. After the engine is running, move throttle control to slow position. With motion control lever in neutral position, slowly disengage clutch/brake pedal.

CAUTION: At any time, during step 4, there may be movement of the drive wheels.

4. Move motion control lever to full forward position and hold for five (5) seconds. Move lever to full reverse position and hold for five (5) seconds. Repeat this procedure three (3) times.
5. Move motion control lever to neutral position. Shut- off engine and set parking brake.
6. Engage transmission by placing freewheel control in engaged position (See "TO TRANSPORT" in this section of manual).
7. Sitting in the tractor seat, start engine. After the engine is running, move throttle control to half (1/2) speed. With motion control lever in neutral position, slowly disengage clutch/brake pedal.
8. Slowly move motion control lever forward, after the tractor moves approximately five (5) feet, slowly move motion control lever to reverse position. After the tractor moves approximately five (5) feet return the motion control lever to the neutral position. Repeat this procedure with the motion control lever three (3) times.

Your transmission is now purged and now ready for normal operation.

MOWING TIPS

- Mower should be properly leveled for best mowing performance. See "TO LEVEL MOWER HOUSING" in the Service and Adjustments section of this manual.
- The left hand side of mower should be used for trimming.
- Drive so that clippings are discharged onto the area that has been cut. Have the cut area to the right of the machine. This will result in a more even distribution of clippings and more uniform cutting.
- When mowing large areas, start by turning to the right so that clippings will discharge away from shrubs, fences, driveways, etc. After one or two rounds, mow in the opposite direction making left hand turns until finished (See Fig. 26).

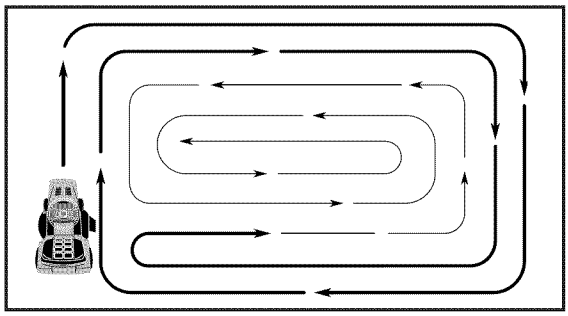

Fig. 26

- If grass is extremely tall, it should be mowed twice to reduce load and possible fire hazard from dried clippings. Make first cut relatively high; the second to the desired height.
- Do not mow grass when it is wet. Wet grass will plug mower and leave undesirable clumps. Allow grass to dry before mowing.
- **Always operate engine at full throttle when mowing** to assure better mowing performance and proper discharge of material. Regulate ground speed by selecting a low enough gear to give the mower cutting performance as well as the quality of cut desired.
- When operating attachments, select a ground speed that will suit the terrain and give best performance of the attachment being used.

Downloaded from www.Manualslib.com manuals search engine

https://truckmanualshub.com/

MAINTENANCE

	MAINTENANCE SCHEDULE	BEFORE EACH USE	EVERY 8 HOURS	EVERY 25 HOURS	EVERY 50 HOURS	EVERY 100 HOURS	EVERY SEASON	BEFORE STORAGE
TRACTOR	Check Brake Operation	✔	✔					
	Check Tire Pressure	✔	✔					
	Check Operator Presence & ROS Systems	✔						
	Check for Loose Fasteners	✔				✔		✔
	Check/Replace Mower Blades			✔[3]				
	Lubrication Chart			✔				✔
	Check Battery Level			✔[4]				
	Clean Battery and Terminals			✔				✔
	Clean Debris Off Steering Plate			✔[5]				
	Check Transaxle Cooling			✔				
	Check Mower Levelness				✔			
	Check V-Belts					✔		
ENGINE	Check Engine Oil Level	✔	✔					
	Change Engine Oil (with oil filter)				✔[1,2]			✔
	Change Engine Oil (without oil filter)			✔[1,2]				✔
	Clean Air Filter			✔[2]				
	Clean Air Screen			✔[2]				
	Inspect Muffler/Spark Arrester				✔			
	Replace Oil Filter (If equipped)					✔[1,2]		
	Clean Engine Cooling Fins					✔[2]		
	Replace Spark Plug					✔	✔	
	Replace Air Filter Paper Cartridge					✔[2]		
	Replace Fuel Filter						✔	

1 - Change more often when operating under a heavy load or in high ambient temperatures.
2 - Service more often when operating in dirty or dusty conditions.
3 - Replace blades more often when mowing in sandy soil.
4 - Not required if equipped with maintenance-free battery.
5 - See Cleaning in Maintenance Section.

GENERAL RECOMMENDATIONS

The warranty on this tractor does not cover items that have been subjected to operator abuse or negligence. To receive full value from the warranty, operator must maintain tractor as instructed in this manual.

Some adjustments will need to be made periodically to properly maintain your tractor.

At least once a season, check to see if you should make any of the adjustments described in the Service and Adjustments section of this manual.

- At least once a year you should replace the spark plug, clean or replace air filter, and check blades and belts for wear. A new spark plug and clean air filter assure proper air-fuel mixture and help your engine run better and last longer.

BEFORE EACH USE

- Check engine oil level.
- Check brake operation.
- Check tire pressure.
- Check operator presence and ROS systems for proper operation.
- Check for loose fasteners.

LUBRICATION CHART

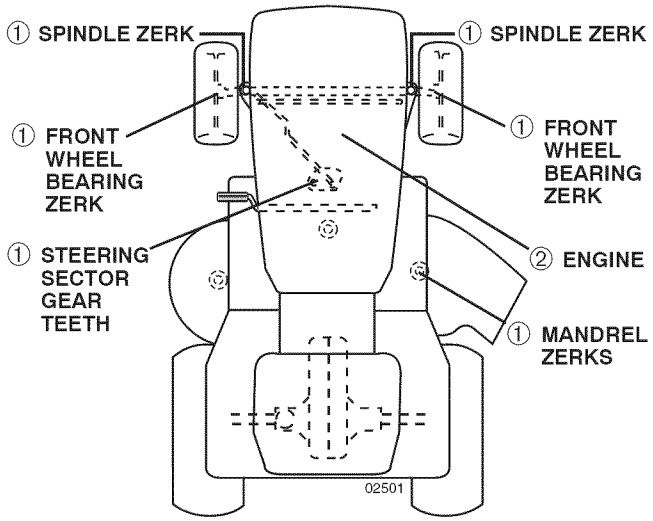

① General Purpose Grease

② Refer to Maintenance "ENGINE" Section

IMPORTANT: DO NOT OIL OR GREASE THE PIVOT POINTS WHICH HAVE SPECIAL NYLON BEARINGS. VISCOUS LUBRICANTS WILL ATTRACT DUST AND DIRT THAT WILL SHORTEN THE LIFE OF THE SELF-LUBRICATING BEARINGS. IF YOU FEEL THEY MUST BE LUBRICATED, USE ONLY A DRY, POWDERED GRAPHITE TYPE LUBRICANT SPARINGLY.

Downloaded from www.Manualslib.com manuals search engine

https://truckmanualshub.com/

MAINTENANCE

TRACTOR

Always observe safety rules when performing any maintenance.

BRAKE OPERATION

If tractor requires more than five (5) feet to stop at highest speed in highest gear on a level, dry concrete or paved surface, then brake must be checked and adjusted. (See "TO CHECK BRAKE" in the Service and Adjustments section of this manual).

TIRES

- Maintain proper air pressure in all tires (See the sides of tires for proper PSI).
- Keep tires free of gasoline, oil, or insect control chemicals which can harm rubber.
- Avoid stumps, stones, deep ruts, sharp objects and other hazards that may cause tire damage.

NOTE: To seal tire punctures and prevent flat tires due to slow leaks, tire sealant may be purchased from your local parts dealer. Tire sealant also prevents tire dry rot and corrosion.

OPERATOR PRESENCE SYSTEM AND REVERSE OPERATION SYSTEM (ROS) (See Fig. 27)

Be sure operator presence and reverse operation systems are working properly. If your tractor does not function as described, repair the problem immediately.

- The engine should not start unless the brake pedal is fully depressed, and the attachment clutch control is in the disengaged position.

CHECK OPERATOR PRESENCE SYSTEM

- When the engine is running, any attempt by the operator to leave the seat without first setting the parking brake should shut off the engine.
- When the engine is running and the attachment clutch is engaged, any attempt by the operator to leave the seat should shut off the engine.
- The attachment clutch should never operate unless the operator is in the seat.

CHECK REVERSE OPERATION (ROS) SYSTEM

- When the engine is running with the ignition switch in the engine "ON" position and the attachment clutch engaged, any attempt by the operator to shift into reverse should shut off the engine.
- When the engine is running with the ignition switch in the ROS "ON" position and the attachment clutch engaged, any attempt by the operator to shift into reverse should NOT shut off the engine.

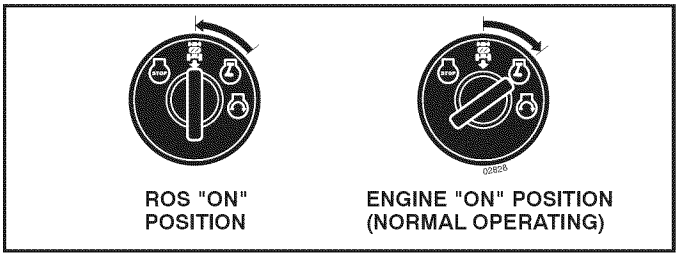

Fig. 27

BLADE CARE

For best results mower blades must be kept sharp. Replace bent or damaged blades.

CAUTION: Use only a replacement blade approved by the manufacturer of your tractor. Using a blade not approved by the manufacturer of your tractor is hazardous, could damage your tractor and void your warranty.

BLADE REMOVAL (See Fig. 28)

- Raise mower to highest position to allow access to blades.

NOTE: Protect your hands with gloves and/or wrap blade with heavy cloth.

- Remove blade bolt by turning counterclockwise.
- Install new or resharpened blade with stamped "THIS SIDE UP" facing deck and mandrel assembly.

IMPORTANT: TO ENSURE PROPER ASSEMBLY, CENTER HOLE IN BLADE MUST ALIGN WITH STAR ON MANDREL ASSEMBLY.

- Install and tighten blade bolt securely (45-55 Ft. Lbs. torque).

IMPORTANT: SPECIAL BLADE BOLT HEAT TREATED.

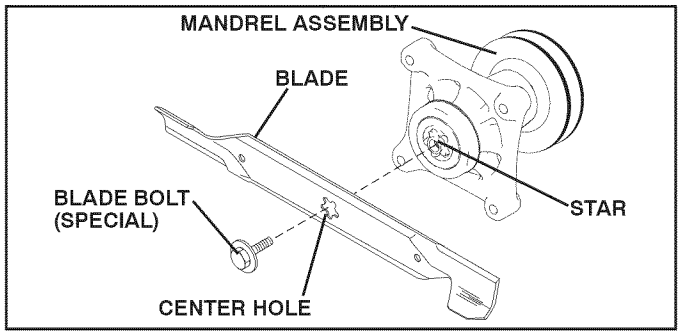

Fig. 28

BATTERY

Your tractor has a battery charging system which is sufficient for normal use. However, periodic charging of the battery with an automotive charger will extend its life.

- Keep battery and terminals clean.
- Keep battery bolts tight.
- Keep small vent holes open.
- Recharge at 6-10 amperes for 1 hour.

NOTE: The original equipment battery on your tractor is maintenance free. Do not attempt to open or remove caps or covers. Adding or checking level of electrolyte is not necessary.

TO CLEAN BATTERY AND TERMINALS

Corrosion and dirt on the battery and terminals can cause the battery to "leak" power.

- Raise hood.
- Disconnect BLACK battery cable first then RED battery cable and remove battery from tractor.
- Rinse the battery with plain water and dry.
- Clean terminals and battery cable ends with wire brush until bright.
- Coat terminals with grease or petroleum jelly.
- Reinstall battery (See "REPLACING BATTERY" in the SERVICE AND ADJUSTMENTS section of this manual).

Downloaded from www.Manualslib.com manuals search engine

https://truckmanualshub.com/

MAINTENANCE

V-BELTS

Check V-belts for deterioration and wear after 100 hours of operation and replace if necessary. The belts are not adjustable. Replace belts if they begin to slip from wear.

TRANSAXLE COOLING

The transmission fan and cooling fins should be kept clean to assure proper cooling.

Do not attempt to clean fan or transmission while engine is running or while the transmission is hot. To prevent possible damage to seals, do not use high pressure water or steam to clean transaxle.

- Inspect cooling fan to be sure fan blades are intact and clean.
- Inspect cooling fins for dirt, grass clippings and other materials. To prevent damage to seals, do not use compressed air or high pressure sprayer to clean cooling fins.

TRANSAXLE PUMP FLUID

The transaxle was sealed at the factory and fluid maintenance is not required for the life of the transaxle. Should the transaxle ever leak or require servicing, contact your nearest authorized service center/department.

ENGINE COOLING SYSTEM

To ensure proper cooling, make sure the grass screen, cooling fins, and other external surfaces of the engine are kept clean at all times.

Every 100 hours of operation (more often under extremely dusty, dirty conditions), remove the blower housing and other cooling shrouds. Clean the cooling fins and external surfaces as necessary. Ensure the cooling shrouds are reinstalled.

NOTE: Operating the engine with a blocked grass screen, dirty or plugged cooling fins, and/or cooling shrouds removed will cause engine damage due to overheating.

TO CHANGE ENGINE OIL (See Fig. 31)

Determine temperature range expected before oil change. All oil must meet API service classification SG-SL.

- Be sure tractor is on level surface.
- Oil will drain more freely when warm.
- Catch oil in a suitable container.
- Remove oil fill cap/dipstick. Be careful not to allow dirt to enter the engine when changing oil.
- Install the drain tube onto the valve.
- Open drain valve by using a 10mm wrench turning counterclockwise.

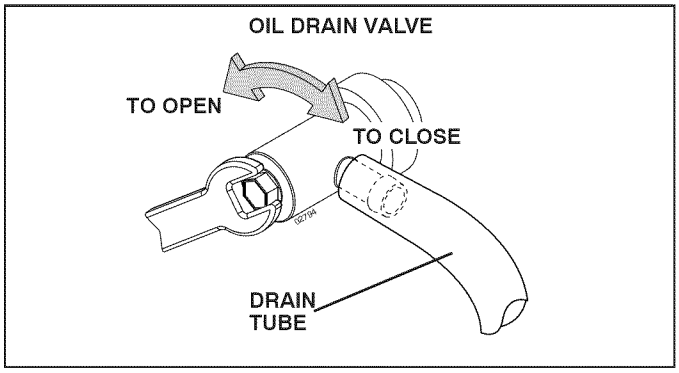

Fig. 31

- After oil has drained completely, close the drain valve turning clockwise. Use the 10mm wrench to apply a small amount of torque to keep it closed. Do not over tighten.
- Remove the drain tube and store in a safe place.
- Refill engine with oil through oil fill dipstick tube. Pour slowly. Do not overfill. For approximate capacity see "PRODUCT SPECIFICATIONS" section of this manual.
- Use gauge on oil fill cap/dipstick for checking level. Insert dipstick into the tube and rest the oil fill cap on the tube. Do not thread the cap onto the tube when taking reading. Keep oil at "FULL" line on dipstick. Tighten cap onto the tube securely when finished.

ENGINE OIL FILTER

Replace the engine oil filter every season or every other oil change if the tractor is used more than 100 hours in one year. See engine manual.

AIR FILTER

Your engine will not run properly using a dirty air filter. Service air cleaner more often under dusty conditions.

CLEAN AIR SCREEN

Air screen must be kept free of dirt and chaff to prevent engine damage from overheating. Clean with a wire brush or compressed air to remove dirt and stubborn dried gum fibers.

MUFFLER

Inspect and replace corroded muffler and spark arrester (if equipped) as it could create a fire hazard and/or damage.

SPARK PLUGS

Replace spark plugs at the beginning of each mowing season or after every 100 hours of operation, whichever occurs first. Spark plug type and gap setting are shown in "PRODUCT SPECIFICATIONS" section of this manual.

Downloaded from www.Manualslib.com manuals search engine

https://truckmanualshub.com/

IN-LINE FUEL FILTER (See Fig. 32)

The fuel filter should be replaced once each season. If fuel filter becomes clogged, obstructing fuel flow to carburetor, replacement is required.

- With engine cool, remove filter and plug fuel line sections.
- Place new fuel filter in position in fuel line with arrow pointing towards carburetor.
- Be sure there are no fuel line leaks and clamps are properly positioned.
- Immediately wipe up any spilled gasoline.

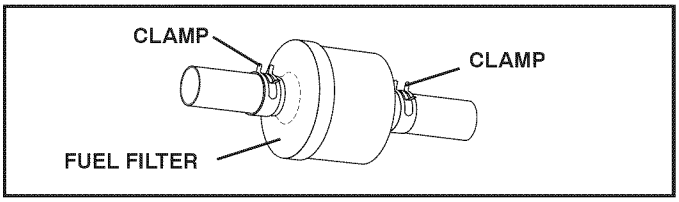

Fig. 32

CLEANING

- Clean engine, battery, seat, finish, etc. of all foreign matter.
- Clean debris from steering plate. Debris can restrict clutch/brake pedal shaft movement, causing belt slip and loss of drive.

CAUTION: Avoid all pinch points and movable parts (See Fig. 33)

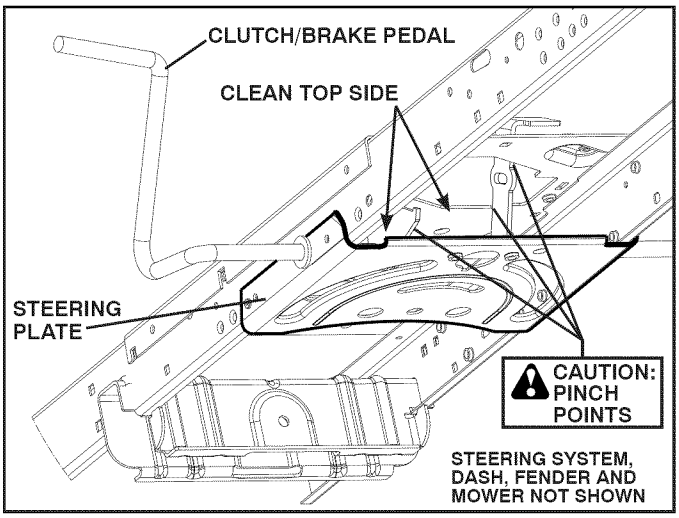

Fig. 33

- Keep finished surfaces and wheels free of all gasoline, oil, etc.
- Protect painted surfaces with automotive type wax.

We do not recommend using a garden hose or pressure washer to clean your tractor unless the engine and transmission are covered to keep water out. Water in engine or transmission will shorten the useful life of your tractor. Use compressed air or a leaf blower to remove grass, leaves and trash from tractor and mower.

DECK WASHOUT PORT (See Fig. 34)

Your tractor's deck is equipped with a washout port on its surface as part of its deck wash system. It should be utilized after each use.

1. Drive the tractor to a level, clear spot on your lawn, near enough to a water spigot for your garden hose to reach.

IMPORTANT: Make certain the tractor's discharge chute is directed AWAY from your house, garage, parked cars, etc. Remove bagger chute or mulch cover if attached.

2. Make sure the attachment clutch control is in the "DISENGAGED" position, set the parking brake, and stop the engine.
3. Thread the nozzle adapter (packaged with your tractor's Operator's Manual) onto the end of your garden hose.
4. Pull back the lock collar of the nozzle adapter and push the adapter onto the deck washout port at the left end of the mower deck. Release the lock collar to lock the adapter on the nozzle.

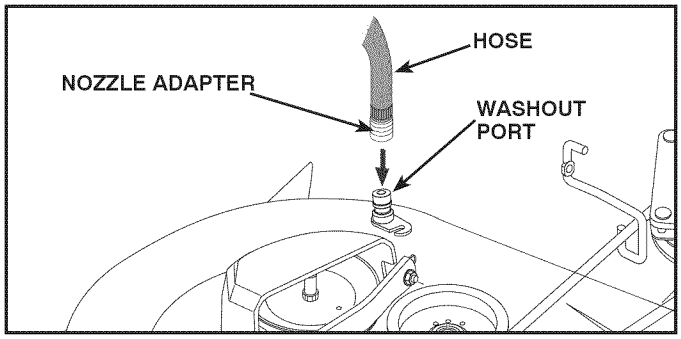

Fig. 34

IMPORTANT: Tug hose ensuring connection is secure.

5. Turn the water on.
6. While sitting in the operator's position on the tractor, re-start the engine and place the throttle lever in the Fast "🐇" position.

IMPORTANT: Recheck the area making certain the area is clear.

7. Move the tractor's attachment clutch control to the "ENGAGED" position. Remain in the operator's position with the cutting deck engaged until the deck is cleaned.
8. Move the tractor's attachment clutch control to the "DISENGAGED" position. Turn the ignition key to the STOP position to turn the tractor's engine off. Turn the water off.
9. Pull back the lock collar of the nozzle adapter to disconnect the adapter from the nozzle washout port.
10. Move the tractor to a dry area, preferably a concrete or paved area. Place the attachment clutch control in the "ENGAGED" position to remove excess water and to help dry before putting the tractor away.

WARNING: A broken or missing washout fitting could expose you or others to thrown objects from contact with the blade.

- **Replace broken or missing washout fitting immediately, prior to using mower again.**
- **Plug any holes in mower with bolts and locknuts.**

Downloaded from www.Manualslib.com manuals search engine

https://truckmanualshub.com/

SERVICE AND ADJUSTMENTS

WARNING: TO AVOID SERIOUS INJURY, BEFORE PERFORMING ANY SERVICE OR ADJUSTMENTS:
- **Depress brake pedal fully and set parking brake.**
- **Ensure transaxle is in the neutral position.**
- **Place attachment clutch in "DISENGAGED" position.**
- **Turn ignition key to "STOP" and remove key.**
- **Ensure the blades and all moving parts have completely stopped.**
- **Disconnect spark plug wire from spark plug and place wire where it cannot come in contact with plug.**

TO REMOVE MOWER (See Fig. 35)

- Place attachment clutch in "DISENGAGED" position.
- Lower attachment lift lever to its lowest position.
- Disengage belt tension rod (K) from lock bracket (L).

CAUTION: Belt tension rod is spring loaded. Have a tight grip on rod and release slowly.

- Remove mower belt from electric clutch pulley (M).
- Disconnect front link (E) from mower - remove retainer spring and washer.
- Go to either side of mower and disconnect mower suspension arm (A) from chassis and rear lift link (C) from rear mower bracket (D) - remove retainer springs and washers.
- Go to other side of mower and disconnect the suspension arm and rear lift link.

CAUTION: After rear lift links are disconnected, the attachment lift lever will be spring loaded. Have a tight grip on lift lever when changing position of the lever.

- From right side of mower, disconnect anti-sway bar (S) from right rear mower bracket (D) - remove retainer spring and washer and pull mower toward you until the bar falls from the hole in bracket.
- Turn tractor steering wheel to the left as far as it will go.
- Slide mower out from under right side of tractor.

TO INSTALL MOWER

Follow procedure described in "INSTALL MOWER AND DRIVE BELT" in the Assembly section of this manual.

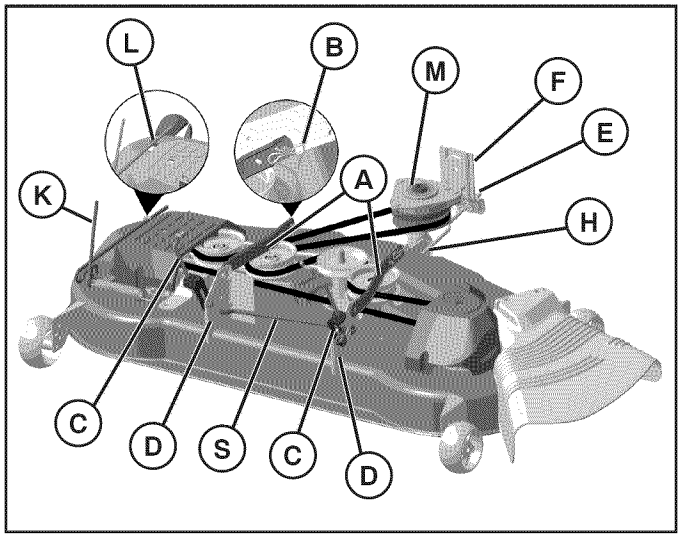

Fig. 35

TO REPLACE MOWER BLADE DRIVE BELT (See Fig. 36)

MOWER DRIVE BELT REMOVAL

- Park tractor on a level surface. Engage parking brake.
- Lower attachment lift lever to its lowest position.
- Disengage belt tension rod (K) from lock bracket (L).

CAUTION: Belt tension rod is spring loaded. Have a firm grip on rod and release slowly.

- Remove screws (P) from mandrel covers (Q) and remove covers.
- Remove any dirt or grass clippings which may have accumulated around mandrels and entire upper deck surface.
- Remove belt from electric clutch pulley (M), both mandrel pulleys (R) and all idler pulleys (V).

MOWER DRIVE BELT INSTALLATION

- Install belt around all mandrel pulleys (R) and around idler pulleys (V) as shown.
- Install belt onto electric clutch pulley (M).

IMPORTANT: Check belt for proper routing in all mower pulley grooves.

- Reassemble mandrel covers (Q). Securely tighten all screws.
- Engage belt tension rod (K) on locking bracket (L).

CAUTION: Belt tension rod is spring loaded. Have a tight grip on rod and engage slowly.

- Raise attachment lift lever to highest position.

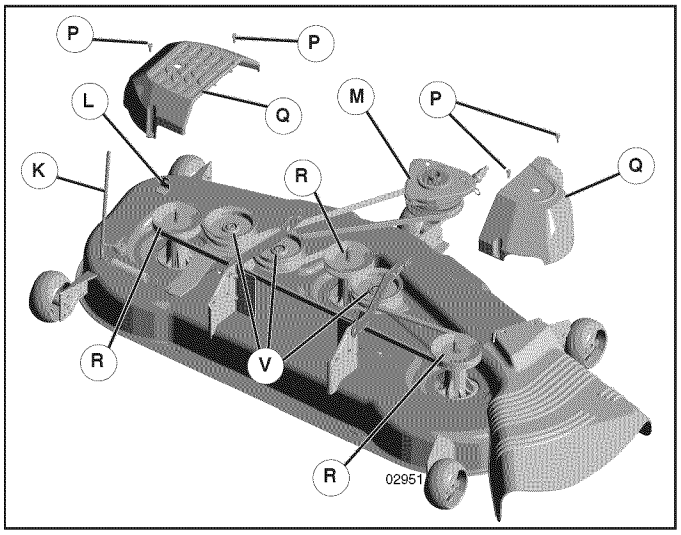

Fig. 36

Downloaded from www.Manualslib.com manuals search engine

https://truckmanualshub.com/

SERVICE AND ADJUSTMENTS

TO LEVEL MOWER

Make sure tires are properly inflated to the PSI shown on tires. If tires are over or under inflated, it may affect the appearance of your lawn and lead you to think the mower is not adjusted properly.

VISUAL SIDE-TO-SIDE ADJUSTMENT (See Fig. 37)

- With all tires properly inflated and if your lawn appears unevenly cut, determine which side of mower is cutting lower.

NOTE: As desired, you can raise the low side of mower or lower the high side.

- Go to side of mower you wish to adjust.
- With a 3/4" or adjustable wrench, turn lift link adjustment nut (A) to the left to lower the mower, or, to the right to raise the mower.

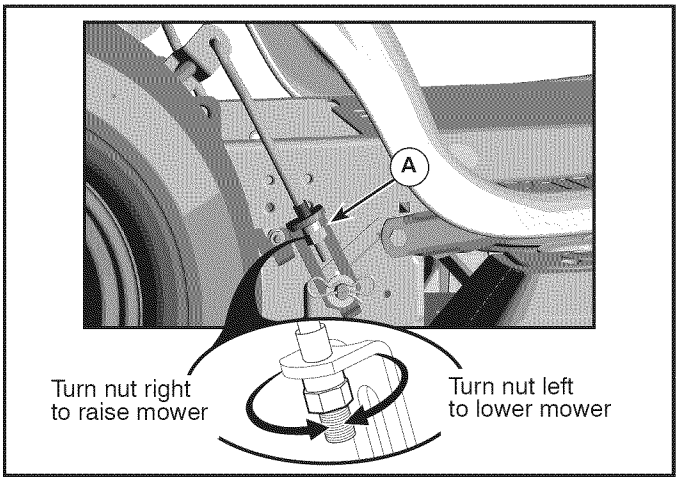

Fig. 37

NOTE: Each full turn of adjustment nut will change mower height about 3/16".

- Test your adjustment by mowing some uncut grass and visually checking the appearance. Readjust, if necessary, until you are satisfied with the results.

PRECISION SIDE-TO-SIDE ADJUSTMENT (See Fig. 38)

- With all tires properly inflated, park tractor on level ground or driveway.

CAUTION: Blades are sharp. Protect your hands with gloves and/or wrap blade with heavy cloth.

- Raise mower to its highest position.
- At both sides of mower, position blade at side and measure the distance (A) from bottom edge of blade to the ground. The distance should be the same on both sides.

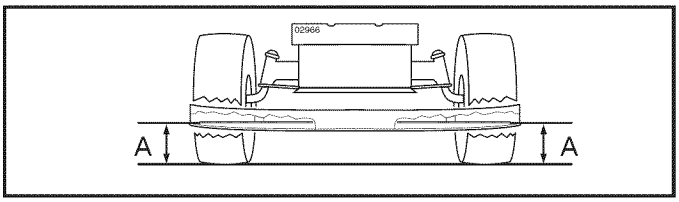

Fig. 38

- If adjustment is necessary, see steps in Visual Adjustment instructions above.
- Recheck measurements, adjust if necessary until both sides are equal.

FRONT-TO-BACK ADJUSTMENT (See Figs. 39 & 40)

IMPORTANT: Deck must be level side-to-side.

To obtain the best cutting results, the mower blades should be adjusted so the front tip is 1/8" to 1/2" lower than the rear tip when the mower is in its highest position.

CAUTION: Blades are sharp. Protect your hands with gloves and/or wrap blade with heavy cloth.

- Raise mower to highest position.
- Position any blade so the tip is pointing straight forward. Measure distance (B) to the ground at front and rear tip of the blade.

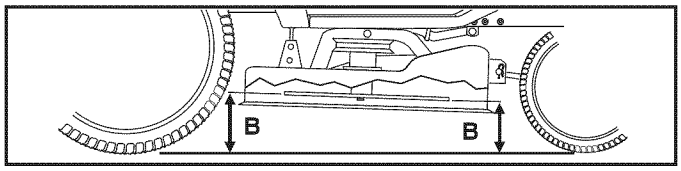

Fig. 39

- If front tip of blade is not 1/8" to 1/2" lower than the rear tip, go to the front of tractor.
- With an 11/16" or adjustable wrench, loosen jam nut A several turns to clear adjustment nut B.
- With a 3/4" or adjustable wrench, turn front link adjustment nut (B) clockwise (tighten) to raise the front of mower, or, counterclockwise (loosen) to lower the front mower.

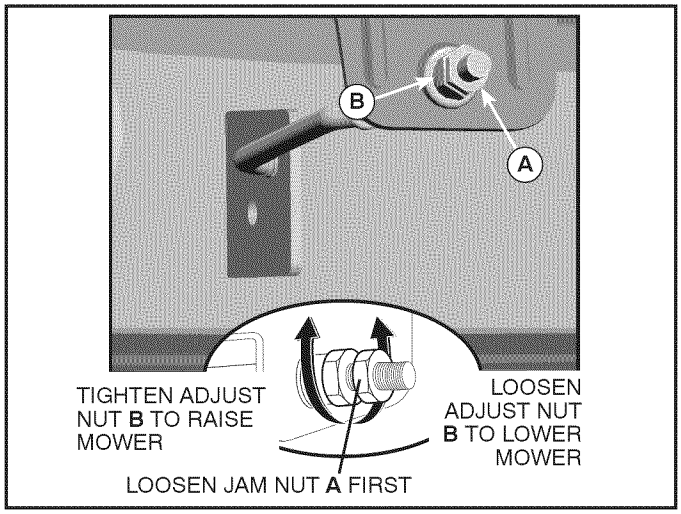

Fig. 40

NOTE: Each full turn of the adjustment nut will change mower height about 1/8".

- Recheck measurements, adjust if necessary until front tip of blade is 1/8" to 1/2" lower than the rear tip.
- Hold adjustment nut in position with wrench and tighten jam nut securely against adjustment nut.

Downloaded from www.Manualslib.com manuals search engine

https://truckmanualshub.com/

TO REPLACE MOTION DRIVE BELT (See Fig. 41)

Park the tractor on level surface. Engage parking brake. For assistance, there is a belt installation guide decal on bottom side of left footrest.

BELT REMOVAL -

1. Remove mower (See "TO REMOVE MOWER" section in this manual).

NOTE: Observe entire motion drive belt and position of all belt guides and keepers.

2. Disconnect clutch wire harness (A).
3. Remove anti-rotation link (B) on right side of tractor.
4. Remove belt from stationary idler (C) and clutching idler (D).
5. Remove belt from centerspan idler (E).
6. Pull belt slack toward rear of tractor. Carefully remove belt upwards from transmission input pulley and over cooling fan blades (F).
7. Remove belt downward from engine pulley and around electric clutch (G).
8- Slide belt toward rear of tractor, off the steering plate (H) and remove from tractor.

BELT INSTALLATION -

1. Install new belt from tractor rear to front, over the steering plate (H) and above clutch brake pedal shaft (J).
2. Pull belt toward front of tractor and roll belt around electric clutch and onto engine pulley (G).
3. Pull belt toward rear of tractor. Carefully work belt down around transmission cooling fan and onto the input pulley (F). Be sure belt is inside the belt keeper.
4. Install belt on centerspan idler (E).
5. Install belt through stationary idler (C) and clutching idler (D).
6. Reinstall anti-rotation link (B) on right side of tractor. Tighten securely.

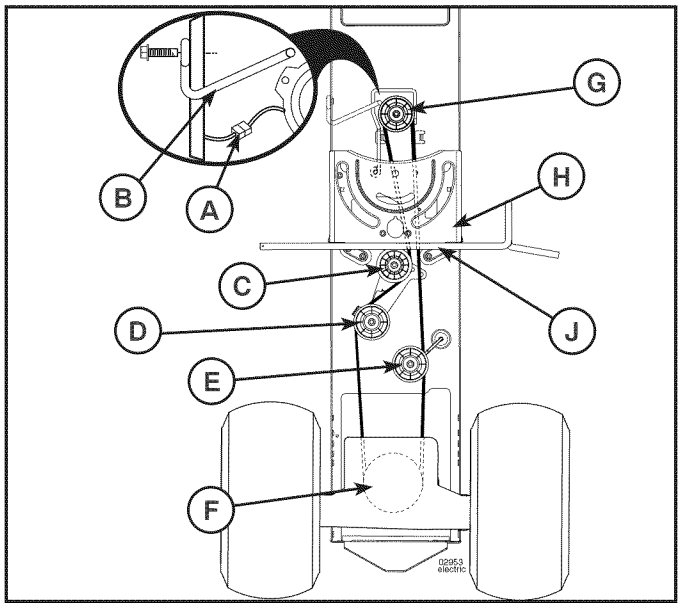

Fig. 41

7. Reconnect clutch harness (A).
8- Make sure belt is in all pulley grooves and inside all belt guides and keepers.
9. Install mower (See "TO INSTALL MOWER" section in this manual).

TO CHECK BRAKE

If tractor requires more than five (5) feet to stop at highest speed in highest gear on a level, dry concrete or paved surface, then brake must be serviced.

You may also check brake by:

- Park tractor on a level, dry concrete or paved surface, depress brake pedal all the way down and engage parking brake.
- Disengage transmission by placing freewheel control in "transmission disengaged" position. Pull freewheel control out and into the slot and release so it is held in the disengaged position.

The rear wheels must lock and skid when you try to manually push the tractor forward. If the rear wheels rotate, then the brake needs to be serviced. Contact a qualified service center.

TRANSAXLE MOTION CONTROL LEVER NEUTRAL ADJUSTMENT (See Fig. 42)

The motion control lever has been preset at the factory and adjustment should not be necessary.

- Loosen adjustment bolt in front of the right rear wheel, and lightly tighten.
- Start engine and move motion control lever until tractor does not move forward or backward.
- Hold motion control lever in that position and turn engine off.
- While holding motion control lever in place, loosen the adjustment bolt.
- Move motion control lever to the neutral (lock gate) position.
- Tighten adjustment bolt securely.

NOTE: If additional clearance is needed to get to adjustment bolt, move mower deck height to the lowest position.

After above adjustment is made, if the tractor still creeps forward or backward while motion control lever is in neutral position, follow these steps:

- Loosen the adjustment bolt.
- Move the motion control lever 1/4" to 1/2" in the direction it is trying to creep.
- Tighten adjustment bolt securely.
- Start engine and test.
- If tractor still creeps, repeat above steps until satisfied.

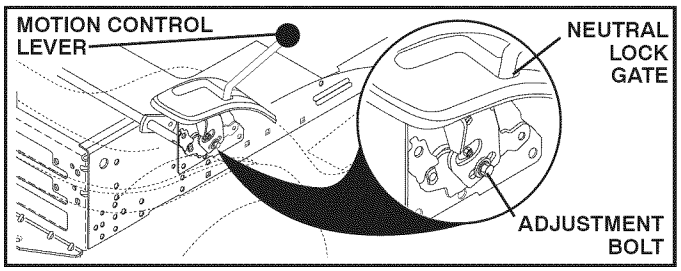

Fig. 42

Downloaded from www.Manualslib.com manuals search engine

https://truckmanualshub.com/

SERVICE AND ADJUSTMENTS

FRONT WHEEL TOE-IN/CAMBER

Your new tractor front wheel toe-in and camber is set at the factory and is normal. The front wheel toe-in and camber are not adjustable. If damage has occurred to affect the factory set front wheel toe-in or camber, contact a qualified service center.

TO REMOVE WHEEL FOR REPAIRS (See Fig. 43)

- Block up axle securely.
- Remove axle cover, retaining ring and washers to allow wheel removal (rear wheel contains a square key - Do not lose).
- Repair tire and reassemble.
- On rear wheels only: align grooves in rear wheel hub and axle. Insert square key.
- Replace washers and snap retaining ring securely in axle groove.
- Replace axle cover.

NOTE: To seal tire punctures and prevent flat tires due to slow leaks, tire sealant may be purchased from your local parts dealer. Tire sealant also prevents tire dry rot and corrosion.

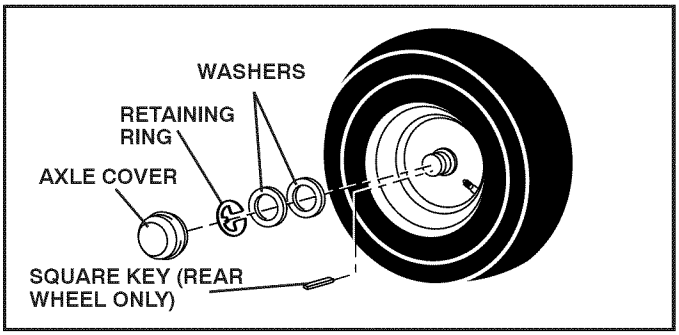

Fig. 43

TO START ENGINE WITH A WEAK BATTERY (See Fig. 44)

WARNING: Lead-acid batteries generate explosive gases. Keep sparks, flame and smoking materials away from batteries. Always wear eye protection when around batteries.

If your battery is too weak to start the engine, it should be recharged. (See "BATTERY" in the MAINTENANCE section of this manual).

If "jumper cables" are used for emergency starting, follow this procedure:

IMPORTANT: YOUR TRACTOR IS EQUIPPED WITH A 12 VOLT SYSTEM. THE OTHER VEHICLE MUST ALSO BE A 12 VOLT SYSTEM. DO NOT USE YOUR TRACTOR BATTERY TO START OTHER VEHICLES.

TO ATTACH JUMPER CABLES -

- Connect one end of the RED cable to the POSITIVE (+) terminal of each battery(A-B), taking care not to short against tractor chassis.
- Connect one end of the BLACK cable to the NEGATIVE (-) terminal (C) of fully charged battery.

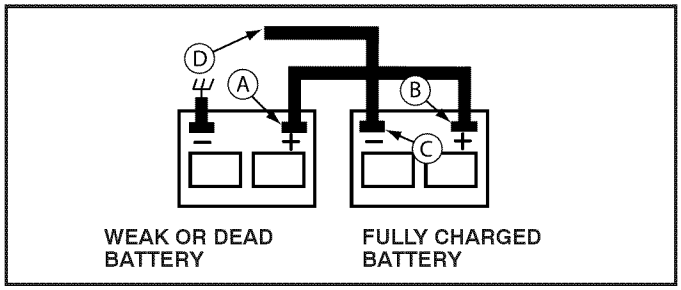

Fig. 44

- Connect the other end of the BLACK cable (D) to good chassis ground, away from fuel tank and battery.

TO REMOVE CABLES, REVERSE ORDER -

- BLACK cable first from chassis and then from the fully charged battery.
- RED cable last from both batteries.

REPLACING BATTERY (See Fig. 45)

WARNING: Do not short battery terminals by allowing a wrench or any other object to contact both terminals at the same time. Before connecting battery, remove metal bracelets, wristwatch bands, rings, etc. Positive terminal must be connected first to prevent sparking from accidental grounding.

- Lift hood to raised position.
- Remove terminal cover.
- Disconnect BLACK battery cable then RED battery cable and carefully remove battery from tractor.
- Install new battery with terminals in same position as old battery.
- Reinstall terminal cover.
- First connect RED battery cable to positive (+) battery terminal with bolt and nut as shown. Tighten securely.
- Connect BLACK grounding cable to negative (-) battery terminal with remaining bolt and nut. Tighten securely
- Close hood.

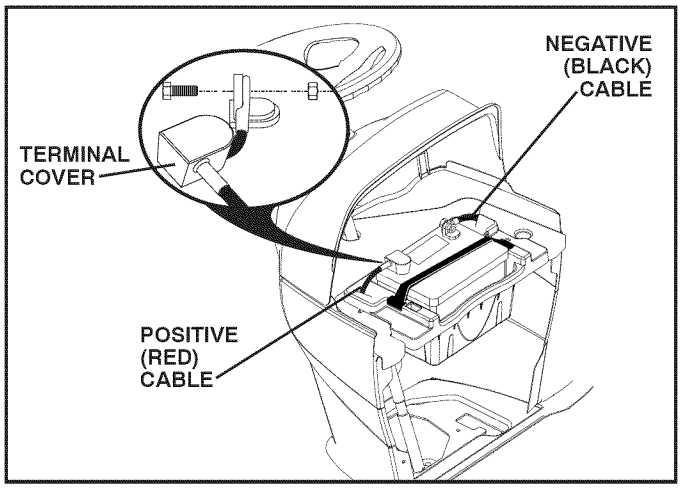

Fig. 45

Downloaded from www.Manualslib.com manuals search engine

https://truckmanualshub.com/

SERVICE AND ADJUSTMENTS

INTERLOCKS AND RELAYS

Loose or damaged wiring may cause your tractor to run poorly, stop running, or prevent it from starting.

- Check wiring. See electrical wiring diagram in the repair parts section.

TO REPLACE FUSE

Replace with 20 amp automotive-type plug-in fuse. The fuse holder is located behind the dash.

TO REPLACE HEADLIGHT BULB

- Raise hood.
- Pull bulb holder out of the hole in the backside of the grill.
- Replace bulb in holder and push bulb holder securely back into the hole in the backside of the grill.
- Close hood.

TO REMOVE HOOD AND GRILL ASSEMBLY (See Fig. 46)

- Raise hood.
- Unsnap headlight wire connector.
- Stand in front of tractor. Grasp hood at sides, tilt toward engine and lift off of tractor.
- To replace, reverse above procedure.

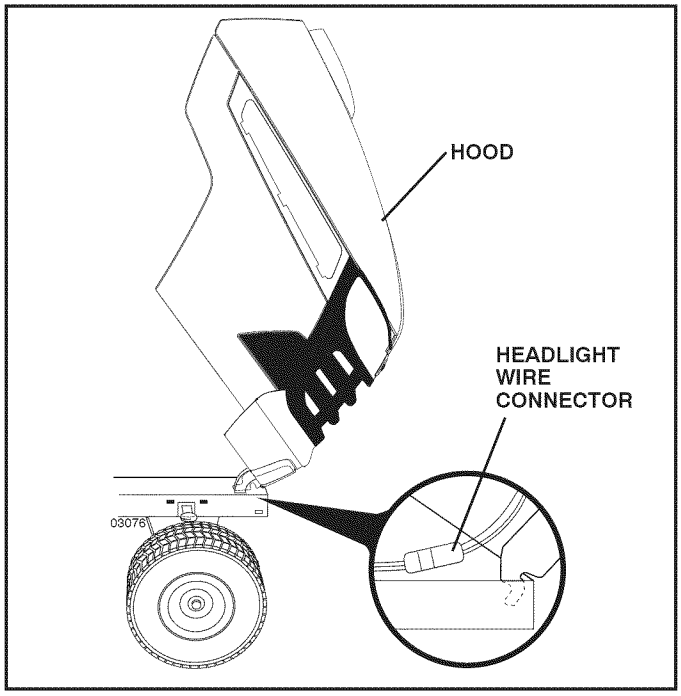

Fig. 46

TRANSMISSION

REMOVAL/REPLACEMENT

Should your transmission require removal for service or replacement, it should be purged after reinstallation and before operating the tractor. See "PURGE TRANSMISSION" in the Operation section of this manual.

ENGINE

TO ADJUST THROTTLE CONTROL CABLE

The throttle control has been preset at the factory and adjustment should not be necessary. If adjustment is necessary, see engine manual.

TO ADJUST CHOKE CONTROL

The choke control has been preset at the factory and adjustment should not be necessary. If adjustment is necessary, see engne manual.

TO ADJUST CARBURETOR

Your carburetor is not adjustable. If your engine does not operate properly due to suspected carburetor problems, take your tractor to an authorized service center for repair and/or adjustment.

Downloaded from www.Manualslib.com manuals search engine

https://truckmanualshub.com/

STORAGE

Immediately prepare your tractor for storage at the end of the season or if the tractor will not be used for 30 days or more.

WARNING: Never store the tractor with gasoline in the tank inside a building where fumes may reach an open flame or spark. Allow the engine to cool before storing in any enclosure.

TRACTOR

Remove mower from tractor for winter storage. When mower is to be stored for a period of time, clean it thoroughly, remove all dirt, grease, leaves, etc. Store in a clean, dry area.

- Clean entire tractor (See "CLEANING" in the Maintenance section of this manual).
- Inspect and replace belts, if necessary (See belt replacement instructions in the Service and Adjustments section of this manual).
- Lubricate as shown in the Maintenance section of this manual.
- Be sure that all nuts, bolts and screws are securely fastened. Inspect moving parts for damage, breakage and wear. Replace if necessary.
- Touch up all rusted or chipped paint surfaces; sand lightly before painting.

BATTERY

- Fully charge the battery for storage.
- After a period of time in storage, battery may require recharging.
- To help prevent corrosion and power leakage during long periods of storage, battery cables should be disconnected and battery cleaned thoroughly (see "TO CLEAN BATTERY AND TERMINALS" in the Maintenance section of this manual).
- After cleaning, leave cables disconnected and place cables where they cannot come in contact with battery terminals.
- If battery is removed from tractor for storage, do not store battery directly on concrete or damp surfaces.

ENGINE

FUEL SYSTEM

IMPORTANT: IT IS IMPORTANT TO PREVENT GUM DEPOSITS FROM FORMING IN ESSENTIAL FUEL SYSTEM PARTS SUCH AS CARBURETOR, FUEL FILTER, FUEL HOSE, OR TANK DURING STORAGE. ALSO, EXPERIENCE INDICATES THAT ALCOHOL BLENDED FUELS (CALLED GASOHOL OR USING ETHANOL OR METHANOL) CAN ATTRACT MOISTURE WHICH LEADS TO SEPARATION AND FORMATION OF ACIDS DURING STORAGE. ACIDIC GAS CAN DAMAGE THE FUEL SYSTEM OF AN ENGINE WHILE IN STORAGE.

- Empty the fuel tank by starting the engine and let it run until the fuel lines and carburetor are empty.
- Never use engine or carburetor cleaner products in the fuel tank or permanent damage may occur.
- Use fresh fuel next season.

NOTE: Fuel stabilizer is an acceptable alternative in minimizing the formation of fuel gum deposits during storage. Add stabilizer to gasoline in fuel tank or storage container. Always follow the mix ratio found on stabilizer container. Run engine at least 10 minutes after adding stabilizer to allow the stabilizer to reach the carburetor. Do not empty the gas tank and carburetor if using fuel stabilizer.

ENGINE OIL

Drain oil (with engine warm) and replace with clean engine oil. (See "ENGINE" in the Maintenance section of this manual).

CYLINDER(S)

- Remove spark plug(s).
- Pour one ounce of oil through spark plug hole(s) into cylinder(s).
- Turn ignition key to "START" position for a few seconds to distribute oil.
- Replace with new spark plug(s).

OTHER

- Do not store gasoline from one season to another.
- Replace your gasoline can if your can starts to rust. Rust and/or dirt in your gasoline will cause problems.
- If possible, store your tractor indoors and cover it to give protection from dust and dirt.
- Cover your tractor with a suitable protective cover that does not retain moisture. Do not use plastic. Plastic cannot breathe which allows condensation to form and will cause your tractor to rust.

IMPORTANT: NEVER COVER TRACTOR WHILE ENGINE AND EXHAUST AREAS ARE STILL WARM.

Downloaded from www.Manualslib.com manuals search engine

https://truckmanualshub.com/

TROUBLESHOOTING

PROBLEM	CAUSE	CORRECTION
Will not start	1. Out of fuel.	1. Fill fuel tank.
	2. Engine not “CHOKED” properly.	2. See “TO START ENGINE” in Operation section.
	3. Engine flooded.	3. Wait several minutes before attempting to start.
	4. Bad spark plug.	4. Replace spark plug.
	5. Dirty air filter.	5. Clean/replace air filter.
	6. Dirty fuel filter.	6. Replace fuel filter.
	7. Water in fuel.	7. Empty fuel tank and carburetor, refill tank with fresh gasoline and replace fuel filter.
	8. Loose or damaged wiring.	8. Check all wiring.
	9. Carburetor out of adjustment.	9. See “To Adjust Carburetor” in Service Adjustments section.
	10. Engine valves out of adjustment.	10. Contact an authorized service center/department.
Hard to start	1. Dirty air filter.	1. Clean/replace air filter.
	2. Bad spark plug.	2. Replace spark plug.
	3. Weak or dead battery.	3. Recharge or replace battery.
	4. Dirty fuel filter.	4. Replace fuel filter.
	5. Stale or dirty fuel.	5. Empty fuel tank and refill tank with fresh, clean gas.
	6. Loose or damaged wiring.	6. Check all wiring.
	7. Carburetor out of adjustment.	7. See “To Adjust Carburetor” in Service Adjustments section.
	8. Engine valves out of adjustment.	8. Contact an authorized service center/department.
Engine will not turn over	1. Brake pedal not depressed.	1. Depress brake pedal.
	2. Attachment clutch is engaged.	2. Disengage attachment clutch.
	3. Weak or dead battery.	3. Recharge or replace battery.
	4. Blown fuse.	4. Replace fuse.
	5. Corroded battery terminals.	5. Clean battery terminals.
	6. Loose or damaged wiring.	6. Check all wiring.
	7. Faulty ignition switch.	7. Check/replace ignition switch.
	8. Faulty solenoid or starter.	8. Check/replace solenoid or starter.
	9. Faulty operator presence switch(es).	9. Contact an authorized service center/department.
Engine clicks but will not start	1. Weak or dead battery.	1. Recharge or replace battery.
	2. Corroded battery terminals.	2. Clean battery terminals.
	3. Loose or damaged wiring.	3. Check all wiring.
	4. Faulty solenoid or starter.	4. Check/replace solenoid or starter.
Loss of power	1. Cutting too much grass/too fast.	1. Raise cutting height/reduce speed.
	2. Throttle in “CHOKE” position.	2. Adjust throttle control.
	3. Build-up of grass, leaves, trash under mower.	3. Clean underside of mower housing.
	4. Dirty air filter.	4. Clean/replace air filter.
	5. Low oil level/dirty oil.	5. Check oil level/change oil.
	6. Faulty spark plug.	6. Clean and regap or change spark plug.
	7. Dirty fuel filter.	7. Replace fuel filter.
	8. Stale or dirty fuel.	8. Empty fuel tank and refill tank with fresh, clean gas.
	9. Water in fuel.	9. Empty fuel tank and carburetor, refill tank with fresh gasoline and replace fuel filter.
	10. Spark plug wire loose.	10. Connect and tighten spark plug wire.
	11. Dirty engine air screen/fins.	11. Clean engine air screen/fins.
	12. Dirty/clogged muffler.	12. Clean/replace muffler.
	13. Loose or damaged wiring.	13. Check all wiring.
	14. Carburetor out of adjustment.	14. See “To Adjust Carburetor” in Service Adjustments
	15. Engine valves out of adjustment.	15. Contact an authorized service center/department.
Excessive vibration	1. Worn, bent or loose blade.	1. Replace blade. Tighten blade bolt.
	2. Bent blade mandrel.	2. Replace blade mandrel.
	3. Loose/damaged part(s).	3. Tighten loose part(s). Replace damaged parts.

Downloaded from www.Manualslib.com manuals search engine

https://truckmanualshub.com/

TROUBLESHOOTING

PROBLEM	CAUSE	CORRECTION
Engine continues to run when operator leaves seat with attachment clutch engaged	1. Faulty operator-safety presence control system.	1. Check wiring, switches and connections. If not corrected, contact an authorized service center/ department.
Poor cut - uneven	1. Worn, bent or loose blade. 2. Mower deck not level. 3. Buildup of grass, leaves, trash under mower. 4. Bent blade mandrel. 5. Clogged mower deck vent holes from buildup of grass, leaves, and trash around mandrels.	1. Replace blade. Tighten blade bolt. 2. Level mower deck. 3. Clean underside of mower housing. 4. Replace blade mandrel. 5. Clean around mandrels to open vent holes.
Mower blades will not rotate	1. Obstruction in clutch mechanism. 2. Worn/damaged mower drive belt. 3. Frozen idler pulley. 4. Frozen blade mandrel.	1. Remove obstruction. 2. Replace mower drive belt. 3. Replace idler pulley. 4. Replace blade mandrel.
Poor grass discharge	1. Engine speed too slow. 2. Travel speed too fast. 3. Wet grass. 4. Mower deck not level. 5. Low/uneven tire air pressure. 6. Worn, bent or loose blade. 7. Buildup of grass, leaves, trash under mower. 8. Mower drive belt worn. 9. Blades improperly installed. 10. Improper blades used. 11. Clogged mower deck vent holes from buildup of grass, leaves, trash around mandrels.	1. Place throttle control in “FAST” position. 2. Shift to slower speed. 3. Allow grass to dry before mowing. 4. Level mower deck. 5. Check tires for proper air pressure. 6. Replace blade. Tighten blade bolt. 7. Clean underside of mower housing. 8. Replace mower drive belt. 9. Reinstall blades sharp edge down. 10. Replace with blades listed in parts manual. 11. Clean around mandrels to open vent holes.
Headlight(s) not working (if so equipped)	1. Switch is “OFF”. 2. Bulb(s) or lamp(s) burned out. 3. Faulty light switch. 4. Loose or damaged wiring. 5. Blown fuse.	1. Turn switch “ON”. 2. Replace bulb(s) or lamp(s). 3. Check/replace light switch. 4. Check wiring and connections. 5. Replace fuse.
Battery will not charge	1. Bad battery cell(s). 2. Poor cable connections. 3. Faulty regulator (if so equipped). 4. Faulty alternator.	1. Replace battery. 2. Check/clean all connections. 3. Replace regulator. 4. Replace alternator.
Loss of drive	1. Freewheel control in “disengaged” position. 2. Debris on steering plate (if equipped). 3. Motion drive belt worn, damaged, or broken. 4. Air trapped in transmission during shipment or servicing. 5. Axle key missing.	1. Place freewheel control in “engaged” position. 2. See "CLEANING" in the maintenance section. 3. Replace motion drive belt. 4. Purge transmission. 5. Install axle key at rear wheel. See "TO REMOVE WHEEL" in the Service and Adjustments section.
Engine "back-fires” when turning engine “OFF”	1. Engine throttle control not set between half and full speed (fast) position before stopping engine.	1. Move throttle control between half and full speed (fast) position before stopping engine.
Engine dies when tractor is shifted into reverse	1. Reverse operation system (ROS) is not "ON" while mower or other attachment is engaged.	1. Turn ignition key to ROS "ON" position. See Operation section.

Downloaded from www.Manualslib.com manuals search engine

https://truckmanualshub.com/

SERVICE NOTES

Downloaded from www.Manualslib.com manuals search engine

https://truckmanualshub.com/

TRACTOR - MODEL NO. (289580), PRODUCT NO. LGTH2454

DECALS

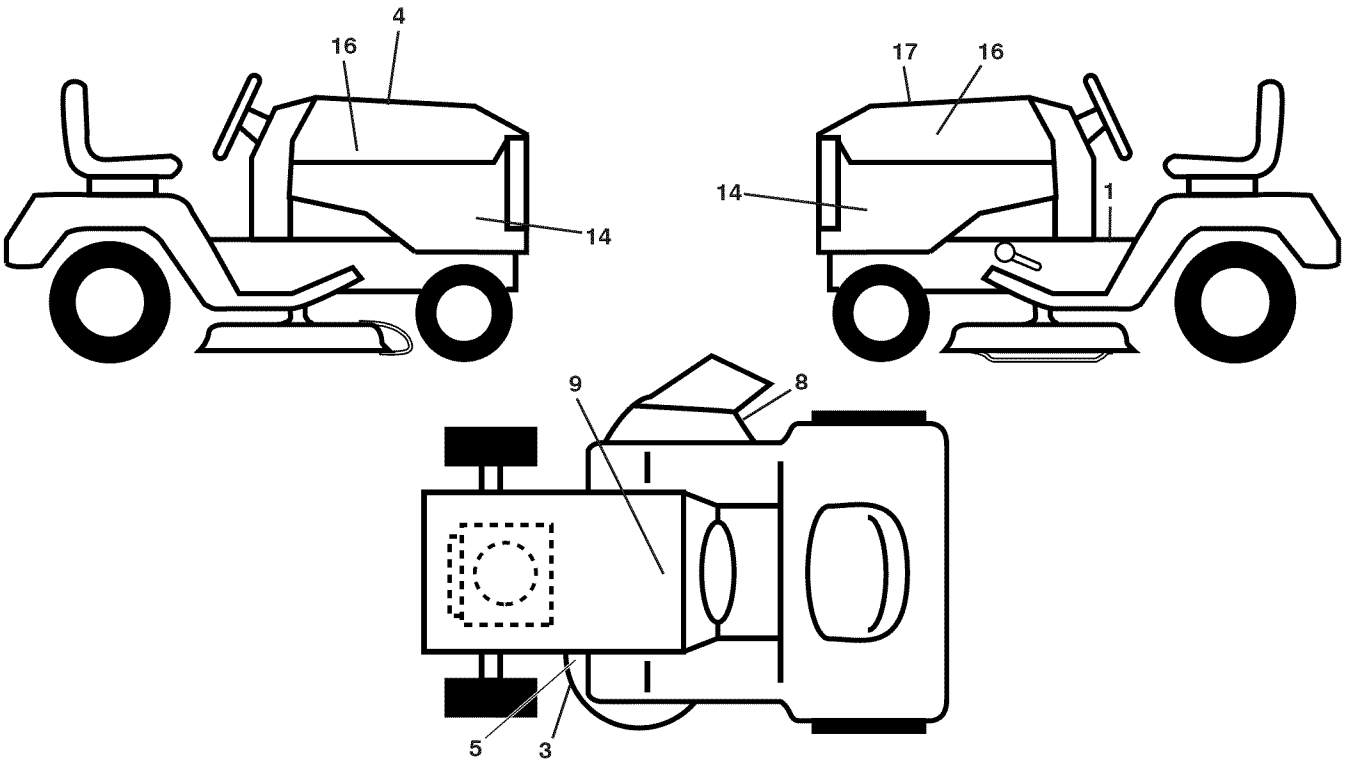

KEY NO.	PART NO.	DESCRIPTION
1	532 41 16-58	Decal, Fender Warning
3	532 17 05-63	Decal, Warning
4	532 42 38-29	Decal, Hood Cust Resp
5	532 17 84-55	Decal, Mower Caution Tension
8	532 19 87-85	Decal, Mower Sch.
9	532 14 50-05	Decal, Battery Dnge/Poi
14	532 43 49-44	Decal, Panel Side
16	532 42 91-96	Decal, Hood Logo
17	532 42 49-29	Decal, Replacement
- -	532 16 69-60	Decal, Bypass
- -	532 40 17-71	Pad, Footrest, LH
- -	532 40 17-70	Pad, Footrest, RH
- -	532 43 49-25	Manual, Owner's (English)
- -	532 43 49-26	Manual, Owner's (French)

WHEELS AND TIRES

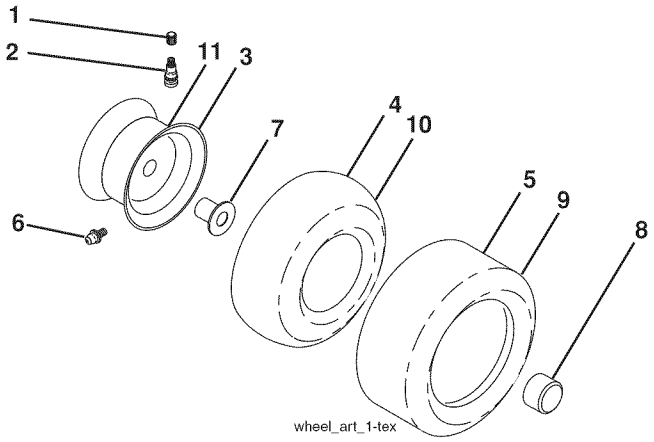

KEY NO.	PART NO.	DESCRIPTION
1	532 05 91-92	Cap, Valve, Tire
2	532 06 51-39	Stem, Valve
3	532 14 45-09	Rim Assembly, Front
4	532 00 81-34	Tube, Front (Service Item Only)
5	532 10 62-30	Tire, Front
6	532 12 49-57	Fitting, Grease (Front Wheel Only)
7	532 12 49-59	Bearing, Flange (Front Wheel Only)
8	532 17 50-39	Cap, Axle
9	532 18 47-08	Tire, Rear
10	532 00 71-54	Tube, Rear (Service Item Only)
11	532 40 17-82	Rim Assembly, Rear
- -	532 14 43-34	Sealant, Tire (10 oz. Tube)

NOTE: All component dimensions given in U.S. inches
1 inch = 25.4 mm

Downloaded from www.Manualslib.com manuals search engine

https://truckmanualshub.com/

TRACTOR - MODEL NO. (289580), PRODUCT NO. LGTH2454

SCHEMATIC

SCH12

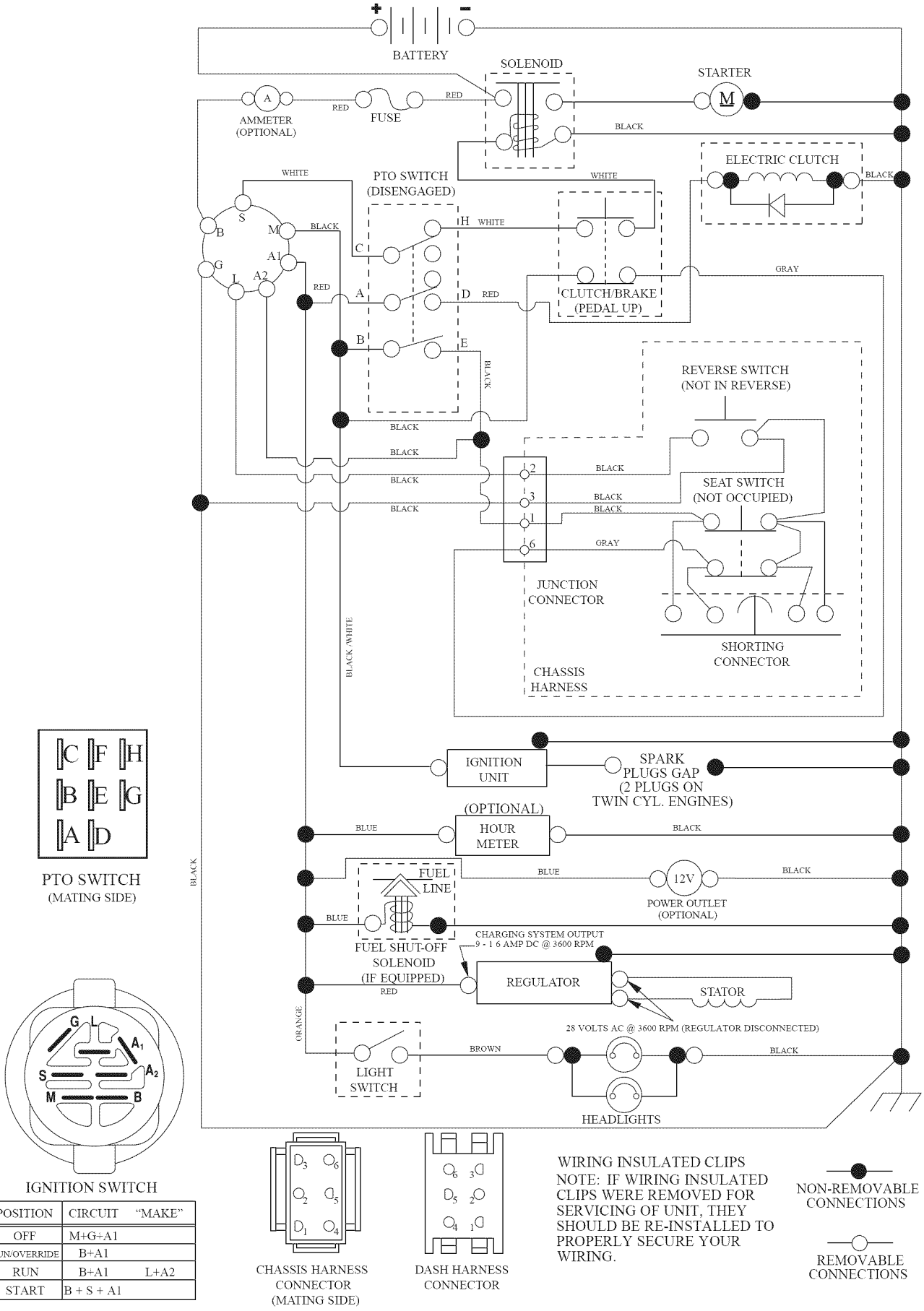

POSITION	CIRCUIT	"MAKE"
OFF	M+G+A1	
RUN/OVERRIDE	B+A1	
RUN	B+A1	L+A2
START	B + S + A1	

Downloaded from www.Manualslib.com manuals search engine

https://truckmanualshub.com/

TRACTOR - MODEL NO. (289580), PRODUCT NO. LGTH2454

ELECTRICAL

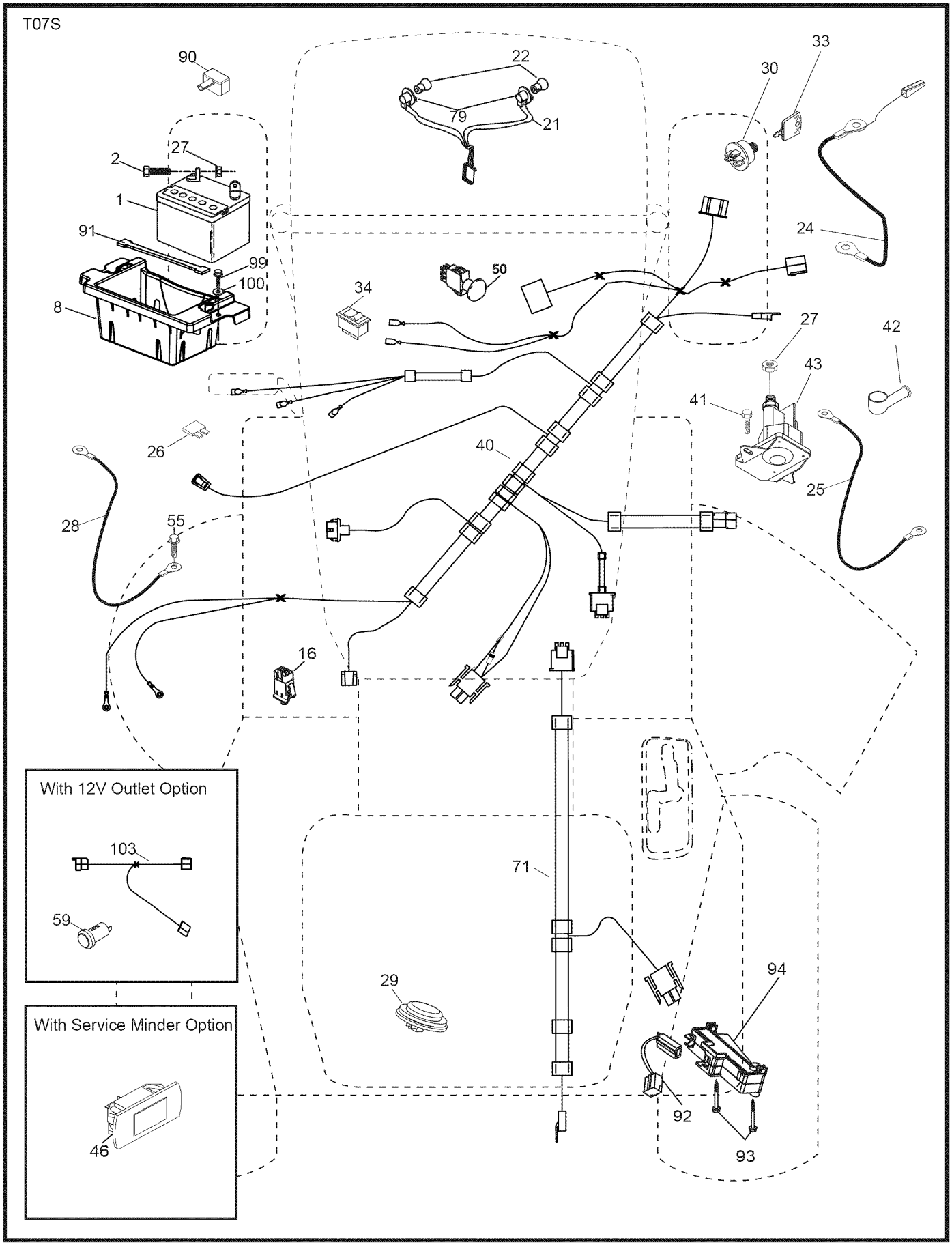

Downloaded from www.Manualslib.com manuals search engine

https://truckmanualshub.com/

ELECTRICAL

KEY NO.	PART NO.	DESCRIPTION
1	532 16 34-65	Battery
2	874 76 04-12	Bolt Hex Hd 1/4-20 unc x 3/4
8	532 18 64-91	Battery Box
16	532 17 61-38	Switch Interlock
21	532 18 37-59	Harness Socket Light
22	532 00 41-52	Bulb, Light # 1156
24	532 40 02-53	Cable Battery
25	532 41 28-95	Cable Starter
26	532 17 51-58	Fuse
27	873 51 04-00	Nut Keps Hex 1/4-20 unc
28	532 14 54-91	Cable Ground 21" Blk 6 Ga.
29	532 40 15-45	Switch Seat
30	532 19 33-50	Switch Ign
33	532 41 19-35	Key/Chain
34	532 11 07-12	Switch Light/Reset
40	532 40 11-04	Harness Ign. Dash
41	817 72 04-08	Screw Thd Cut 1/4-20 x 1/2
42	532 13 15-63	Cover Terminal Red
43	532 19 25-07	Solenoid
46	532 40 17-63	Gauge Hourmeter
50	532 17 46-51	Switch PTO
55	817 06 05-12	Screw Thdrol 5/16-18 x 3/4
59	532 40 03-03	Outlet 12-Volt
71	532 19 42-76	Harness Ign
79	532 17 52-42	Socket Asm Bulb Twistlock
90	532 40 07-24	Cover Terminal Battery
91	532 19 02-70	Strap Battery
92	532 19 66-15	Harness Pigtail Console ROS
93	532 19 25-40	Screw Plastite 10-14 x 2.0
94	532 19 18-34	Module Reverse ROS
99	817 67 04-12	Screw Hexwsh Thdrol 1/4-20 x 3/4
100	819 09 14-16	Washer 9/32 x 7/8 x 16 Ga.
103	532 40 79-62	Harness Pigtail 12V Outlet

NOTE: All component dimensions given in U.S. inches
1 inch = 25.4 mm

Downloaded from www.Manualslib.com manuals search engine

https://truckmanualshub.com/

TRACTOR - MODEL NO. (289580), PRODUCT NO. LGTH2454

CHASSIS

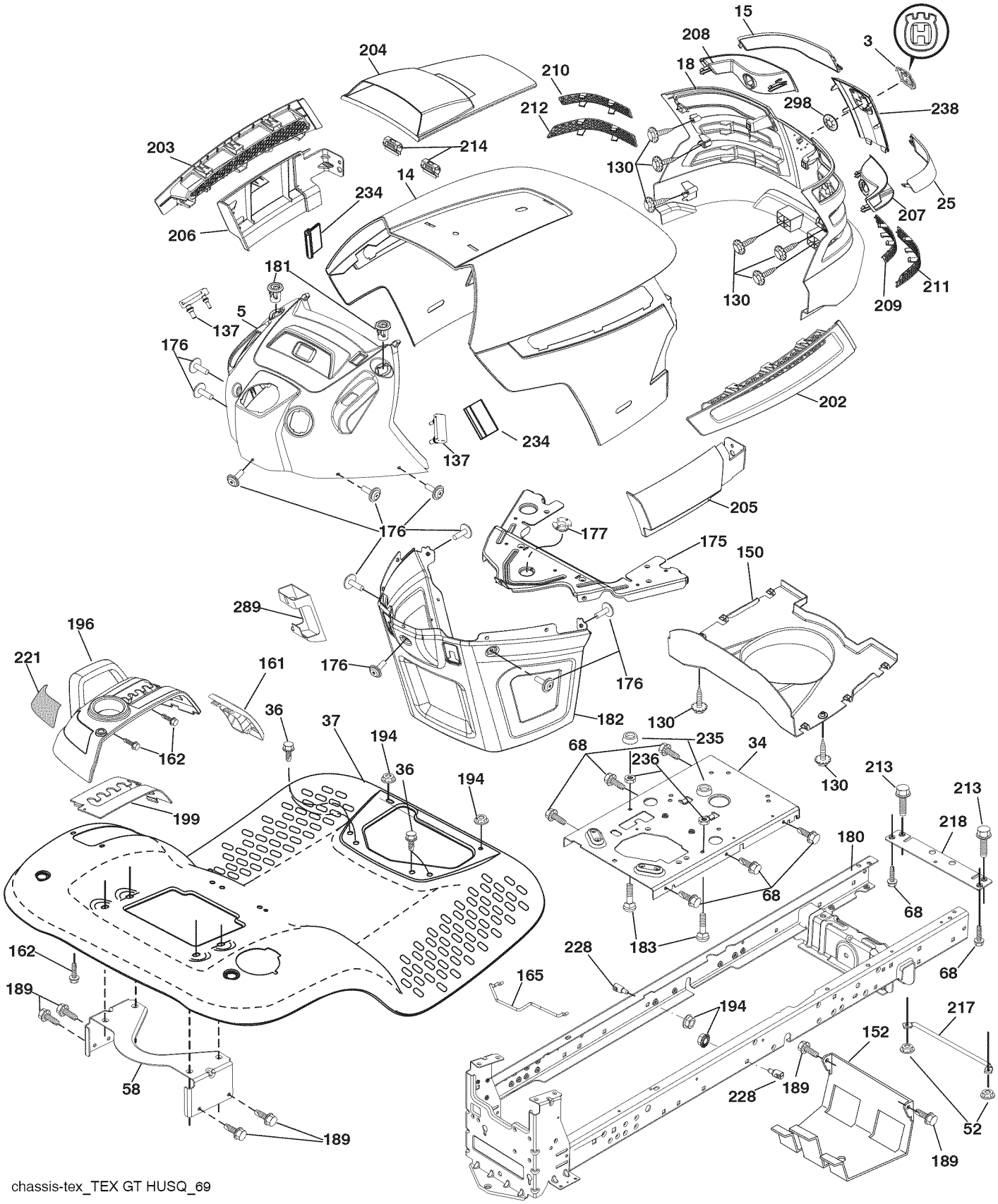

chassis-tex_TEX GT HUSQ_69

Downloaded from www.Manualslib.com manuals search engine

https://truckmanualshub.com/

TRACTOR - MODEL NO. (289580), PRODUCT NO. LGTH2454

CHASSIS

KEY NO.	PART NO.	DESCRIPTION
3	532 40 50-12	Logo
5	532 40 87-01	Dash
14	532 41 10-46	Hood
15	532 19 89-07	Lens LH
18	532 40 86-07	Grille
25	532 19 89-06	Lens RH
34	532 19 61-25	Plate Engine
36	817 06 05-12	Screw 5/16-18 x 3/4
37	532 40 18-25	Fender
52	873 68-05-00	Nut Crown Lock 5/16-18
58	532 19 43-14	Bracket Fender
68	817 49 05-08	Screw 5/16-18 x 1/2
130	532 41 63-58	Screw #10 x 0.750 BOS Thread
137	532 40 75-90	Bumper Dash
150	532 19 85-12	Duct Heat Hood
152	532 19 95-35	Shield Browning/Debris
161	532 40 18-26	Console Fuel Window
162	532 14 24-32	Screw Hex Wsh Hi-Lo 1/4 x 1/2
165	532 19 68-26	Bracket Support Tank
175	532 19 63-04	Crossmember
176	532 40 07-76	Screw 10-24 x 5/8 Wshd Qdrx
177	532 19 52-27	Bushing Steering
180	532 19 54-77	Chassis
181	532 40 30-25	Bushing MMT Fender
182	532 40 68-59	Dash Lower
183	874 52 05-20	Bolt 5/16-18 x 1-1/4
189	817 00 05-12	Screw 5/16-18 x 3/4
194	873 90 05-00	Nut Lock 5/16-18
196	532 40 02-99	Console Asm. Deck Lift
199	532 19 82-59	Plate Deck Lift
202	532 40 30-48	Vent Side Hood RH
203	532 40 30-76	Vent Side Hood LH
204	532 41 66-13	Vent Asm Hood Top
205	532 40 17-09	Skirt Hood Side RH
206	532 40 17-11	Skirt Hood Side LH
207	532 19 71-98	Bezel RH
208	532 19 71-99	Bezel LH
209	532 19 91-30	Insert Hex Top RH
210	532 19 91-31	Insert Hex Top LH
211	532 19 91-32	Insert Hex Bottom RH
212	532 19 91-33	Insert Hex Bottom LH
213	874 76 05-12	Bolt Hex Hd 5/16-18 unc x 3/4
214	532 19 91-45	Clip Retainer
217	532 40 91-67	Rod Pivot
218	532 19 63-95	Hood Stop X Piece
221	532 19 89-09	Reflector LH
228	532 19 51-61	Stud Fastener
234	532 40 47-42	Bumper Hood
235	532 40 61-29	Spacer Fender
236	873 93 05-00	Nut Center Lock 5/16-18 unc
238	532 40 86-06	Trim
289	532 40 35-71	Plug Cruise/Phone
298	532 11 04-52	Nut Push

NOTE: All component dimensions given in U.S. inches
1 inch = 25.4 mm

Downloaded from www.Manualslib.com manuals search engine

https://truckmanualshub.com/

TRACTOR - MODEL NO. (289580), PRODUCT NO. LGTH2454

DRIVE

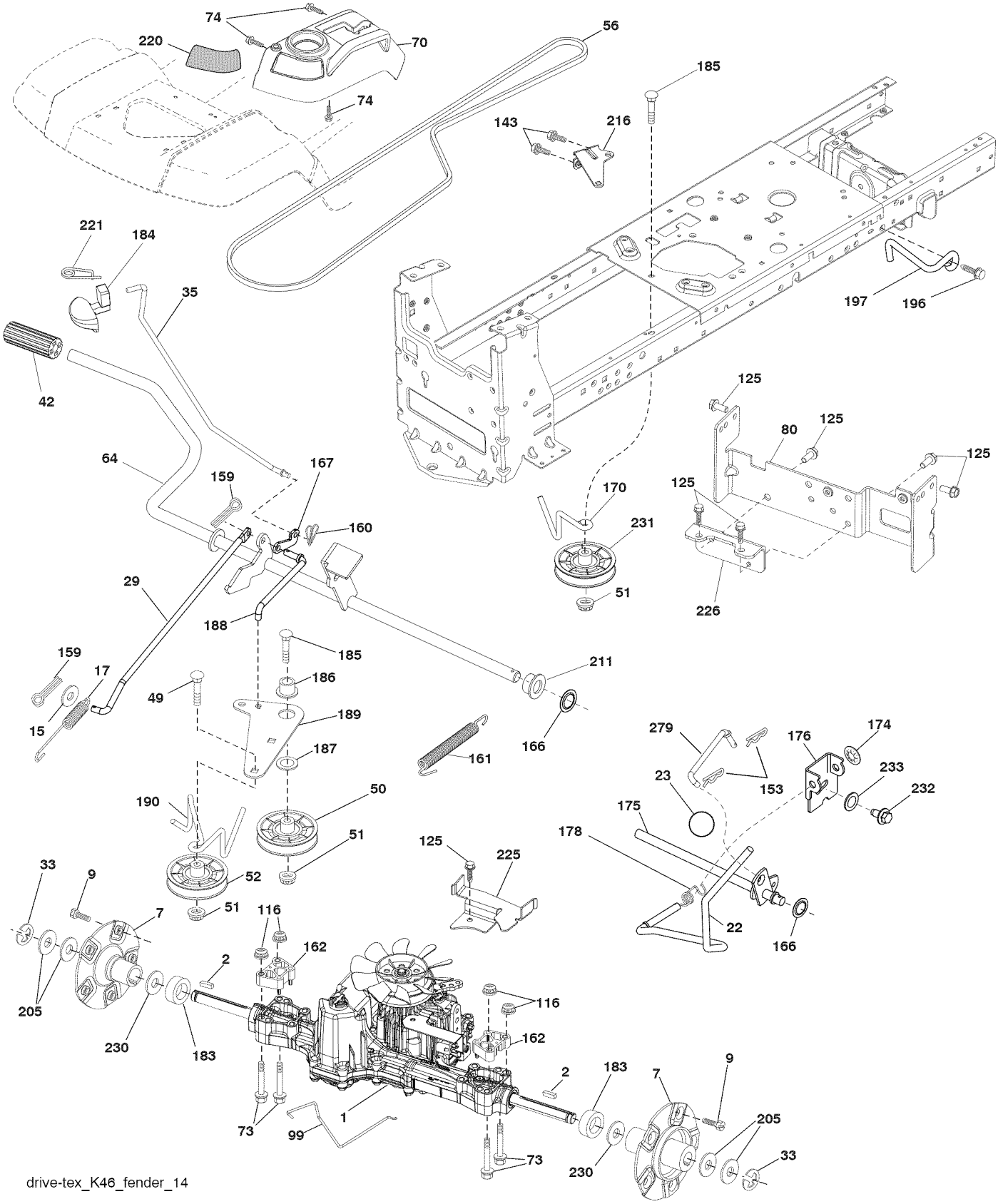

Downloaded from www.Manualslib.com manuals search engine

https://truckmanualshub.com/

TRACTOR - MODEL NO. (289580), PRODUCT NO. LGTH2454

DRIVE

KEY NO.	PART NO.	DESCRIPTION
1	- - - - - - - - -	Transaxle, TUFFTORQ K46 AW
2	532 18 62-11	Key
7	532 19 98-44	Hub Asm. Wheel Rear 22" TX GT .06
9	532 14 00-80	Bolt Hub Wheel Rear
15	819 13 13-16	Washer 13/32 x 13/16 x 16 Ga.
17	532 41 36-78	Spring Brake
22	532 19 73-29	Rod Shift
23	532 14 08-45	Knob
29	532 40 38-06	Rod, Brake
33	812 00 00-01	Ring E
35	532 19 95-91	Rod Brake Park
42	532 12 48-72	Cover Foot Pedal
49	872 11 06-14	Bolt
50	532 19 43-27	Pulley Idler Flat
51	873 90 06-00	Lock Nut 3/8-16
52	532 19 43-26	Idler V-Groove 910" Offset
56	532 13 09-69	V-Belt Drive
64	532 19 62-00	Shaft Asm. Pedal Brake Control
70	532 40 02-98	Console Asm.
73	874 49 05-60	Bolt Hex Flghd 5/16-18 x 3.75
74	532 14 24-32	Screw 1/4 x 1/2
80	532 41 00-24	Strap Torque
99	532 41 57-43	Rod Bypass
116	873 90 05-00	Nut Lock Hex Flange 5/16-18
125	817 00 05-12	Screw 5/16-18 x 3/4
143	817 49 05-08	Screw 5/16-18 x 1/2
153	532 12 47-88	Retainer Spring
159	876 02 04-12	Pin Cotter 1/8 x 3/4
160	532 16 94-84	Retainer Clip
161	532 10 57-09	Spring Return Clutch
162	532 19 57-85	Spacer Transaxle 18 and 22
166	532 42 91-64	Nut Push
167	532 40 52-57	Latch Brake Parking
170	532 41 34-30	Keeper Belt Centerspan
174	532 19 72-89	Nut Push
175	532 40 62-08	Shaft Asm Shift
176	532 19 62-14	Arm Clevis Rod Shift
178	532 19 74-56	Spring Shift
183	532 40 04-24	Spacer Split
184	532 40 31-18	Handle Parking Brake
185	872 11 06-22	Bolt Rdhd Sqnk 3/8-16 x 2-3/4 Gr. 5
186	532 19 43-21	Spacer Retainer
187	819 13 32-10	Washer
188	532 19 43-23	Link Clutch Ground Drive
189	532 19 43-17	Bellcrank Ground Drive
190	532 19 43-18	Keeper Bellcrank Ground Drive
196	817 00 06-16	Screw 3/8-16 x 1
197	532 19 97-69	Link Clutch Anti-Rotation
205	532 12 17-48	Washer
211	532 19 62-12	Bushing Brake Shaft
216	532 19 61-31	Bracket Pulley Idler
220	532 19 89-08	Reflector RH
221	532 40 31-87	Retainer Spring Clip Handle
225	532 40 33-19	Keeper Belt Trans.
226	532 40 08-31	Bracket Mount Torque
230	532 18 89-67	Washer Hardened
231	532 40 72-87	Idler V-Groove 1.688" Offset
232	874 78 07-16	Bolt 7/16-14 x 1 Gr. 5
233	532 40 52-96	Washer Serrated
279	532 40 62-07	Link Shift

NOTE: All component dimensions given in U.S. inches
1 inch = 25.4 mm

Downloaded from www.Manualslib.com manuals search engine

https://truckmanualshub.com/

TRACTOR - MODEL NO. (289580), PRODUCT NO. LGTH2454

ENGINE

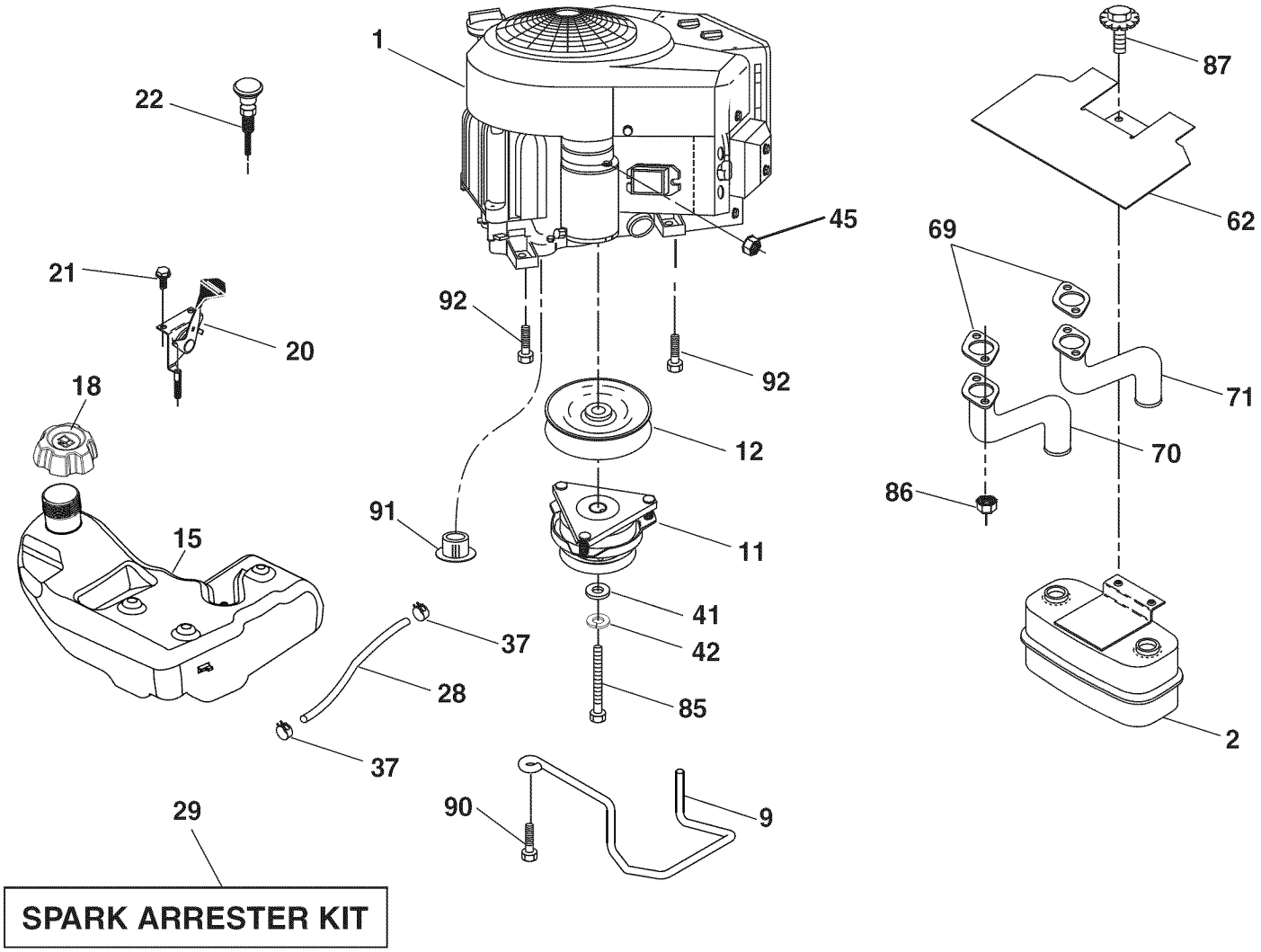

engine-tex_Kawa-2cyl_4

Downloaded from www.Manualslib.com manuals search engine

https://truckmanualshub.com/

ENGINE

KEY NO.	PART NO.	DESCRIPTION
1	- - - - - -	Engine Kawa Model No. FR691V-AS06
2	532 14 97-23	Muffler
9	532 19 43-20	Keeper Belt Engine
11	532 17 93-35	Clutch Electric
12	532 19 43-43	Pulley Engine
15	532 19 34-99	Tank Fuel 4.0
18	532 43 02-17	Cap Asm
20	532 17 83-85	Control Throttle
21	532 41 63-58	Screw #10 x 0.750 BOS Thread
22	532 19 15-96	Control Choke
28	532 40 11-35	Fuel Line
29	532 13 71-80	Spark Arrester Kit
37	532 12 34-87	Clamp Hose
41	532 12 61-97	Washer 1-1/2 OD x 15/32 ID x .250
42	810 04 07-00	Washer Lock 7/16
45	873 51 04-00	Nut Keps Hex 1/4-20 unc
62	532 43 40-17	Shield Heat Muffler
69	532 17 81-51	Gasket
70	532 42 47-65	Tube Exhaust LH
71	532 42 47-66	Tube Exhaust RH
85	532 17 99-53	Bolt Hex 7/16-20 x 3.75 Gr. 5
86	532 18 43-62	Nut Hex Flange Toplock M8-1.25
87	532 19 82-39	Bolt 5/16-18 unc x 1 w/Sems
90	817 00 06-16	Screw 3/8-16 x 1
91	532 18 74-95	Bushing
92	817 12 06-16	Screw 3/8-16 x 1

NOTE: All component dimensions given in U.S. inches
1 inch = 25.4 mm

For engine service and replacement parts, call the toll free number for your engine manufacturer listed below:

Kawasaki 1-949-460-5688

Downloaded from www.Manualslib.com manuals search engine

https://truckmanualshub.com/

TRACTOR - MODEL NO. (289580), PRODUCT NO. LGTH2454

STEERING ASSEMBLY

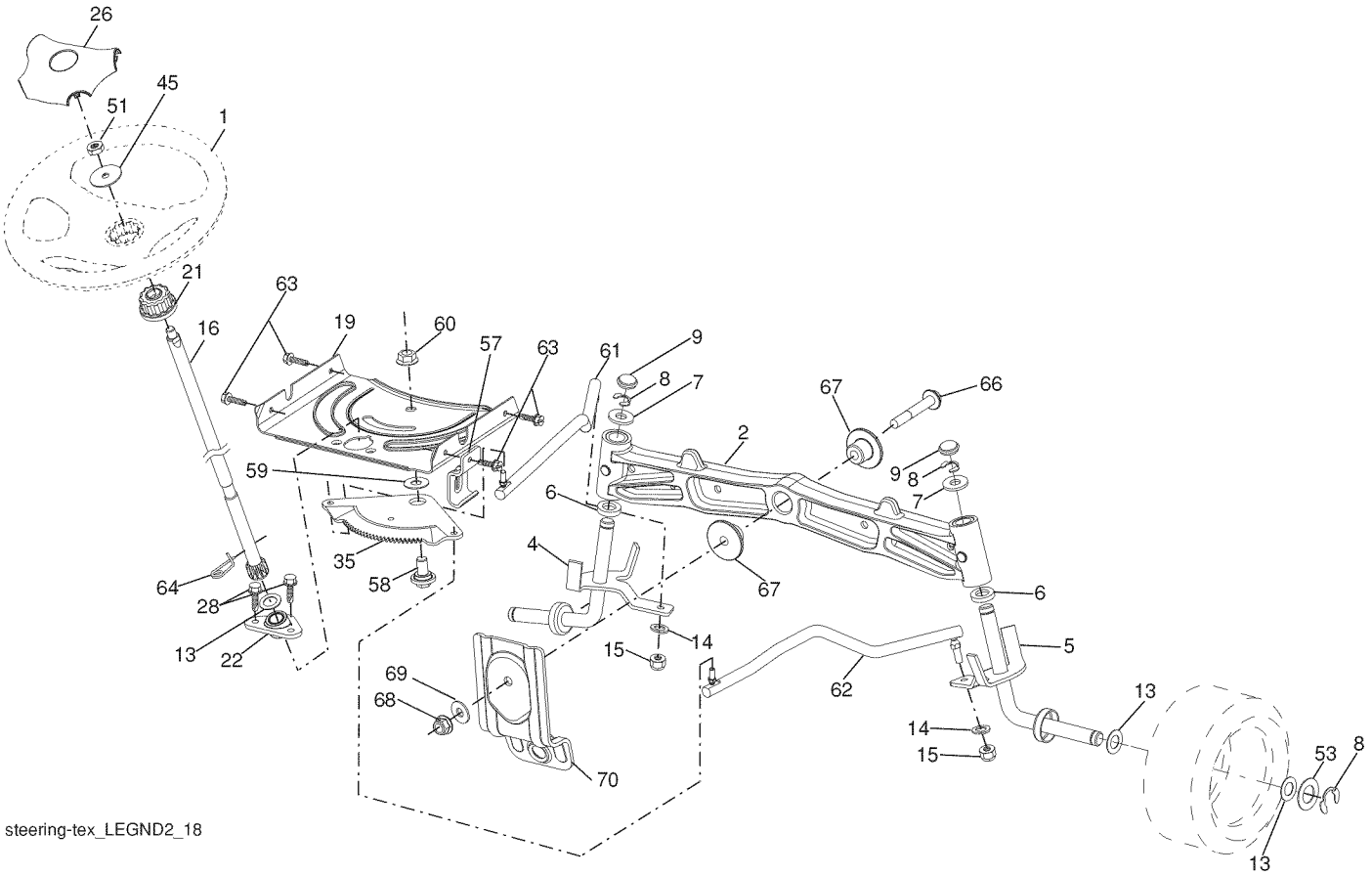

KEY NO.	PART NO.	DESCRIPTION
1	532 42 34-69	Wheel, Steering
2	532 19 59-68	Axle Asm., Front
4	532 40 30-89	Spindle Asm., LH
5	532 40 30-90	Spindle Asm., RH
6	532 12 49-31	Bearing, Race Thrust Harden
7	532 12 17-48	Washer 25/32 x 1-5/8 x 16 Ga.
8	812 00 00-29	Ring, Klip #T5304-75
9	532 12 12-32	Cap, Spindle
13	532 12 17-49	Washer 25/32 x 1-1/4 x 16 Ga.
14	810 04 06-00	Washer, Lock Hvy Hlcl Spr 3/8
15	873 54 06-00	Nut, Crown Lock 3/8-24 unf
16	532 40 82-19	Shaft Steering
19	532 19 47-29	Plate Steering
21	532 18 67-37	Adapter, Wheel Steering
22	532 42 05-37	Strg. Supt. Lower
26	532 41 59-87	Insert, Wheel Steering
28	817 00 06-12	Screw 3/8-16 x 3/4
35	532 19 47-32	Gear, Sector Plate
45	819 18 38-12	Washer 9/16 x 2-3/8 x 12 Ga.

KEY NO.	PART NO.	DESCRIPTION
51	873 94 08-00	Nut Hex Jam Toplock 1/2-20 unf
53	532 18 89-67	Washer Hardened .793 x 1.637 x .060
57	532 19 72-46	Bracket Upstop
58	532 19 47-47	Bolt Shoulder Sector Pivot CFM
59	532 19 47-48	Washer Thrust Sector Steering
60	873 97 10-00	Nut Flange Lock 5/8-11
61	532 19 47-40	Draglink, LH
62	532 19 47-41	Draglink, RH
63	817 00 05-12	Screw 5/16-18 x 3/4
64	532 19 98-49	Retainer Clip Spring Steering
66	871 02 07-48	Bolt Hex Fghd 7/16-14 x 3 Serr
67	532 19 47-37	Bushing PM Front Axle
68	873 90 07-00	Nut Lock Flange 7/16-14 Gr. 5
69	532 19 91-62	Washer 1.5 x .505 x .118
70	532 19 61-97	Bracket Deck Susp. Front

NOTE: All component dimensions given in U.S. inches
1 inch = 25.4 mm

Downloaded from www.Manualslib.com manuals search engine

https://truckmanualshub.com/

TRACTOR - MODEL NO. (289580), PRODUCT NO. LGTH2454

SEAT ASSEMBLY

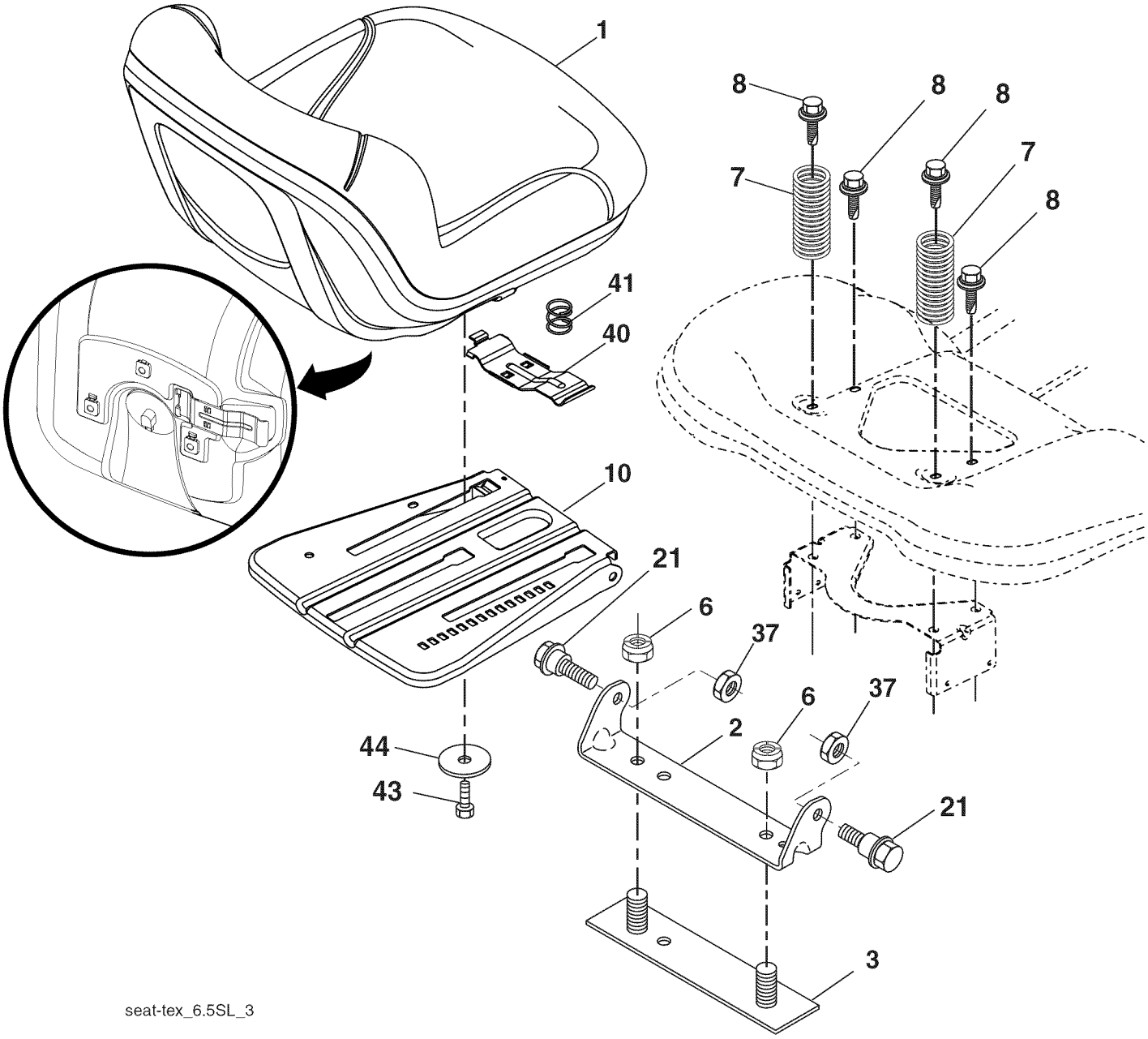

KEY NO.	PART NO.	DESCRIPTION
1	532 42 40-68	Seat
2	532 18 01-66	Bracket Pivot Fender
3	532 14 06-75	Strap, Asm Fender
6	873 80 06-00	Nut, Lock w/Ins. 3/8-16 unc
7	532 12 41-81	Spring, Seat Cprsn
8	532 17 18-77	Bolt 5/16-18 unc x 3/4 w/Sems
10	532 19 69-77	Pan, Seat
21	532 17 18-52	Bolt, Shoulder 5/16-18

KEY NO.	PART NO.	DESCRIPTION
37	873 80 05-00	Nut, Lock 5/16-18 unc
40	532 19 76-61	Handle Slide Seat
41	532 19 82-00	Spring Latch Seat
43	874 76 06-12	Bolt 3/8-16 x 3/4
44	819 13 38-12	Washer 13/32 x 2-3/8 x 12 Ga.

NOTE: All component dimensions given in U.S. inches
1 inch = 25.4 mm

Downloaded from www.Manualslib.com manuals search engine

https://truckmanualshub.com/

TRACTOR - MODEL NO. (289580), PRODUCT NO. LGTH2454

MOWER DECK

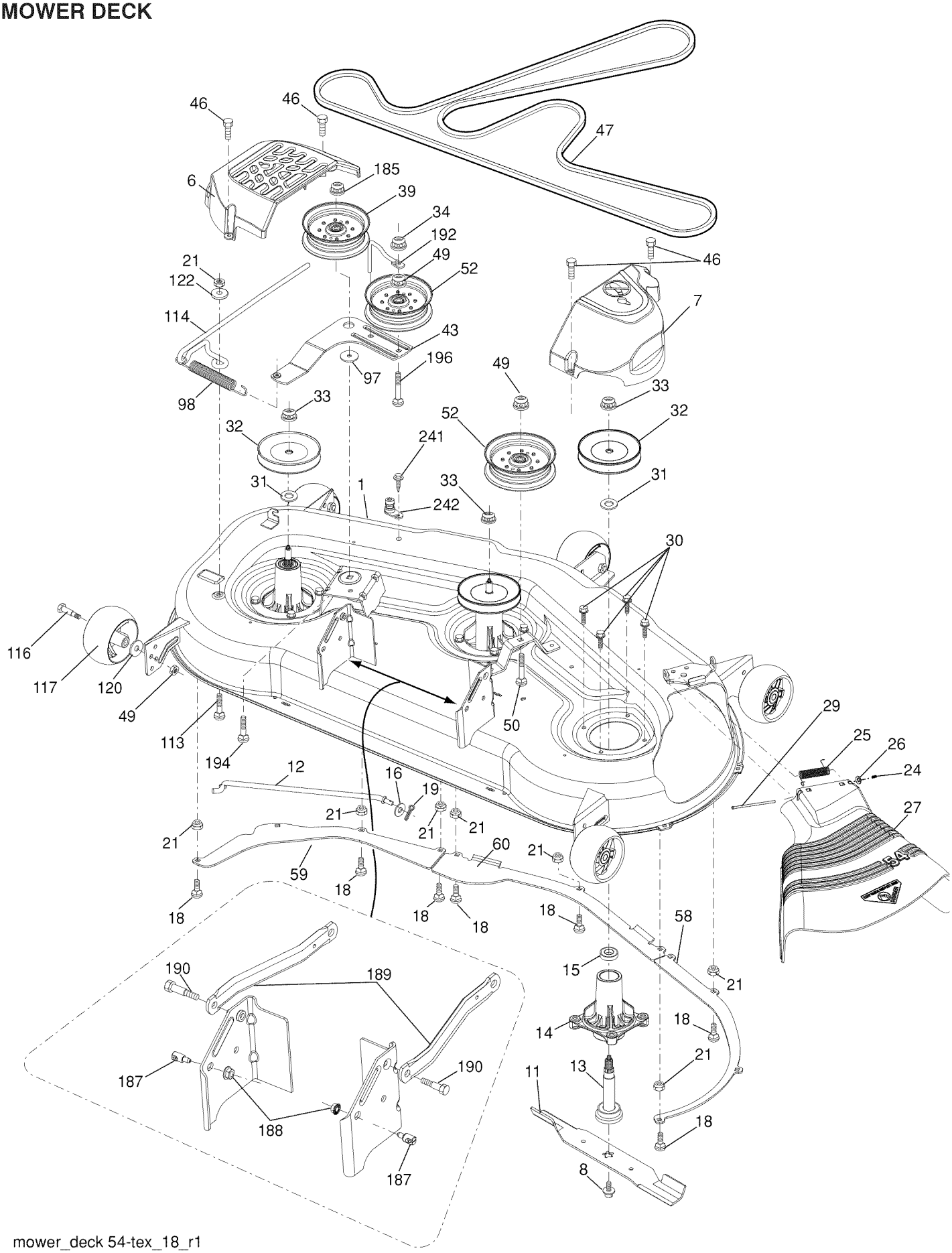

Downloaded from www.Manualslib.com manuals search engine

https://truckmanualshub.com/

TRACTOR - MODEL NO. (289580), PRODUCT NO. LGTH2454

MOWER DECK

KEY NO.	PART NO.	DESCRIPTION
1	532 40 31-25	Deck Weldment Mower
6	532 19 60-66	Cover Mandrel LH
7	532 19 71-81	Cover Mandrel RH
8	532 19 30-03	Bolt 7/16 Asm. Blade
11	532 18 72-56	Blade Bagging
- -	532 18 72-55	Blade Mulching
12	532 40 48-51	Rod Anti-Sway
13	532 18 72-91	Shaft Asm. w/Lower Bearing
14	532 18 72-81	Housing, Mandrel
16	819 13 13-12	Washer 3/8
15	532 11 04-85	Bearing, Ball, Mandrel
18	872 14 05-05	Bolt Carriage 5/16-18 x 5/8
19	532 19 42-08	Pin Cotter 5/16 Bowtie
21	873 68 05-00	Nut, Crownlock 5/16-18 unc
24	532 10 53-04	Cap Sleeve
25	532 17 81-02	Spring, Torsion
26	532 11 04-52	Nut, Push
27	532 18 89-38	Deflector Shield
29	532 13 14-91	Rod, Hinge
30	532 17 39-84	Screw, Thdroll Washer Head
31	532 18 76-90	Washer, Spacer Mower Vented
32	532 15 35-35	Pulley, Mandrel
33	532 40 02-34	Nut, Flg. Top Lock
34	873 68 06-00	Nut Crownlock 3/8-16 unc
39	532 19 73-80	Pulley, Idler, 4.50
43	532 19 60-65	Arm, Idler
46	532 13 77-29	Screw, Thdroll. 1/4-20 x 5/8
47	532 19 61-03	Belt Deck Drive
49	873 90 06-00	Nut, Lock Flg. 3/8-16 unc
50	872 11 06-16	Bolt Rdhd Sqnk 3/8-16 unc x 2
52	532 19 73-79	Pulley Idler
58	532 18 73-42	Baffle Right
59	532 18 73-44	Baffle Left
60	532 18 76-07	Baffle Center
97	532 17 85-15	Washer Hardened
98	532 19 61-05	Spring Drive
113	872 11 05-08	Bolt Rdhd Sqnk 5/16-18 x 3/4
114	532 18 75-56	Rod Tension Relief
116	532 19 34-06	Bolt, Shoulder
117	532 17 48-73	Gauge Wheel
120	819 13 20-12	Washer 13/32 x 1-1/4 x 12 Ga.
122	532 18 75-57	Bushing Tension Relief
185	873 90 07-00	Nut Lock Flange 7/16-14 Gr. 5
187	532 19 51-61	Stud Fastener w/"D" Anti-Rotation
188	873 90 05-00	Nut Lock Hex Flange
189	532 19 51-85	Arm Susp. Mower Rear
190	532 19 65-39	Bolt Shoulder
192	532 19 84-68	Keeper Belt Idler
194	872 14 07-16	Bolt Carr Sqnk 7/16-24 x 2
196	872 14 06-20	Bolt Rdhd 3/8-16 x 2-1/2 Gr. 5
241	532 15 29-27	Screw #10-32.5 3/8 Flange
242	532 41 55-98	Port Washout
- -	532 18 72-92	Mandrel Asm. Service Mandrel Assembly (Includes housing, shaft assembly, and bearing only - pulley/nut/washer and blade bolt/ washers not included)
- -	532 43 29-07	Replacement Mower, Complete

NOTE: All component dimensions given in U.S. inches
1 inch = 25.4 mm

Downloaded from www.Manualslib.com manuals search engine

https://truckmanualshub.com/

TRACTOR - MODEL NO. (289580), PRODUCT NO. LGTH2454

MOWER LIFT

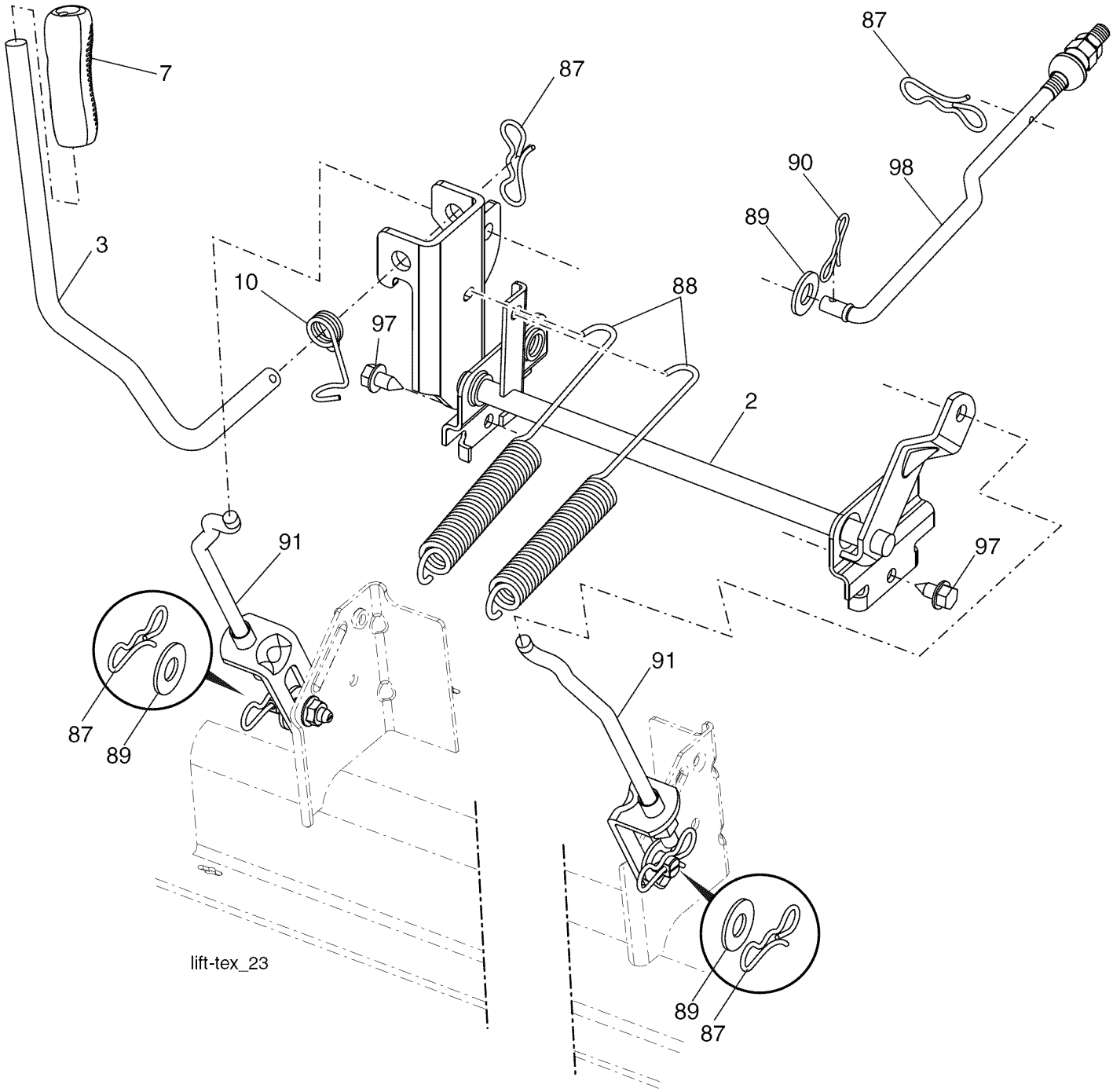

KEY NO.	PART NO.	DESCRIPTION
2	532 42 20-27	Shaft Asm., Lift
3	532 19 52-30	Lever Asm., Lift RH
7	532 41 15-55	Grip, Lever
10	532 19 63-14	Spring Torsion
87	532 19 42-09	Pin Cotter 7/16 Bow Tie Lock
88	532 19 53-04	Spring Lift Assist
89	819 19 19-12	Washer Clear Zinc
90	532 19 42-08	Pin Cotter 5/16 Bow Tie Lock
91	532 40 34-07	Link Lift Susp Mower Rear
97	817 00 06-12	Screw 3/8-16 x 3/4
98	532 19 52-64	Link Lift Susp. Front Mower

NOTE: All component dimensions given in U.S. inches
1 inch = 25.4 mm

Downloaded from www.Manualslib.com manuals search engine

https://truckmanualshub.com/

TRACTOR - - MODEL NUMBER (289580)

KAWASAKI ENGINE - MODEL NUMBER FR691V, TYPE NUMBER AS06

CYLINDER/CRANKCASE

E0110-A652A

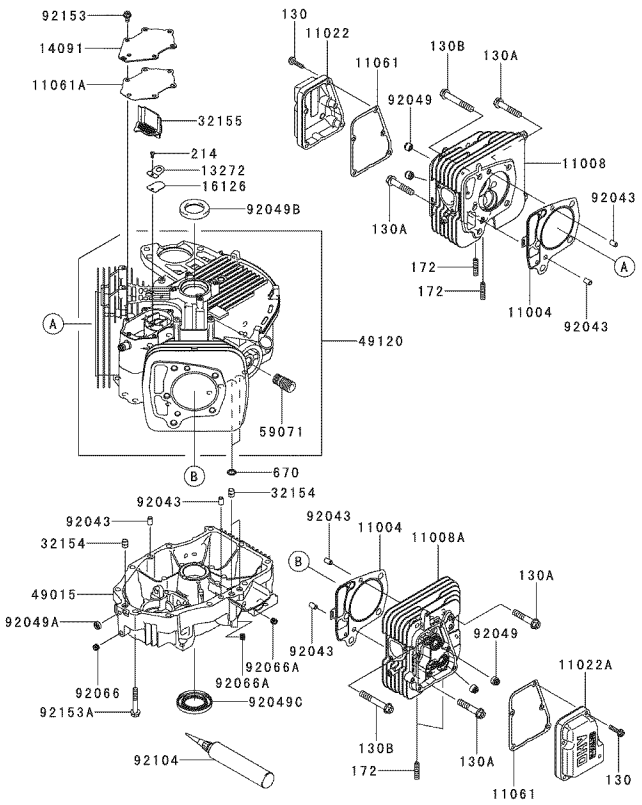

PISTON/CRANKSHAFT

E0120-A407A

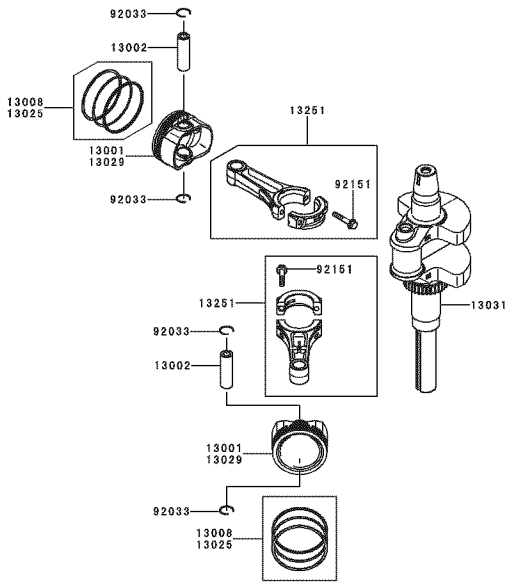

VALVE/CAMSHAFT

E0130-A176A

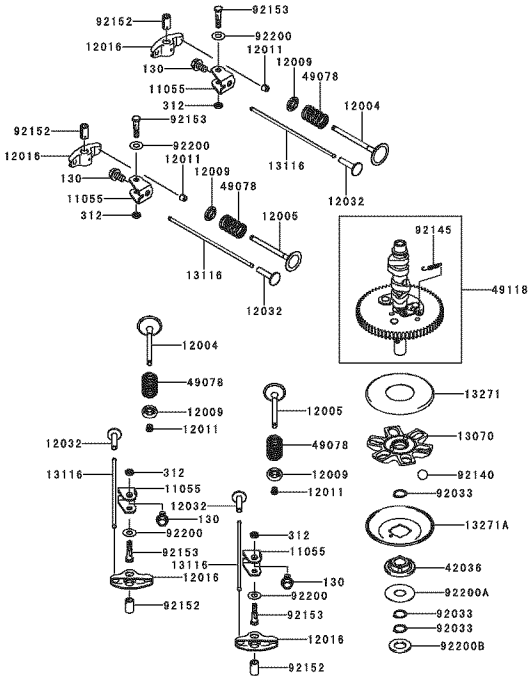

LUBRICATION-EQUIPMENT

E0140-A474A

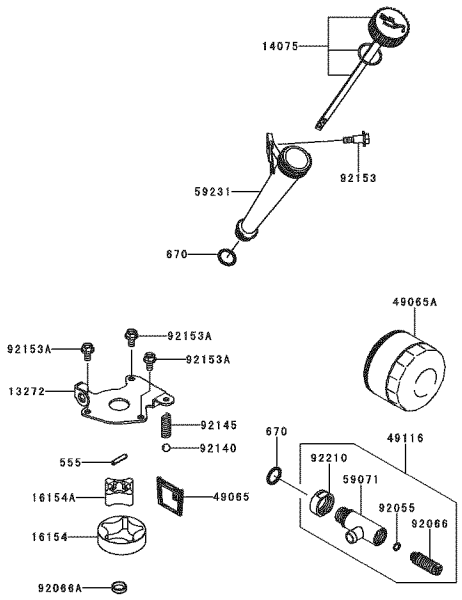

Downloaded from www.Manualslib.com manuals search engine

https://truckmanualshub.com/

TRACTOR - - MODEL NUMBER (289580)

KAWASAKI ENGINE - MODEL NUMBER FR691V, TYPE NUMBER AS06

COOLING-EQUIPMENT

E0150-A996A

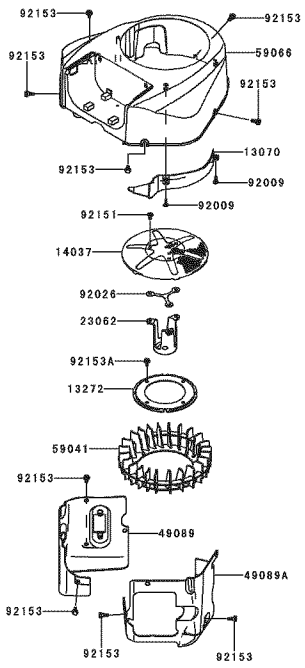

CONTROL-EQUIPMENT

E0170-A686A

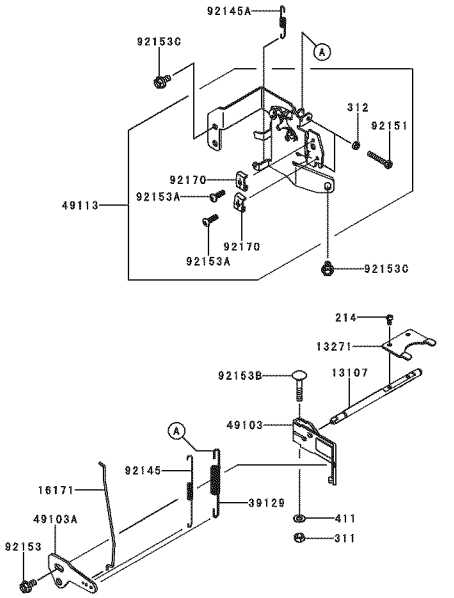

ELECTRIC-EQUIPMENT

E0160-B400B

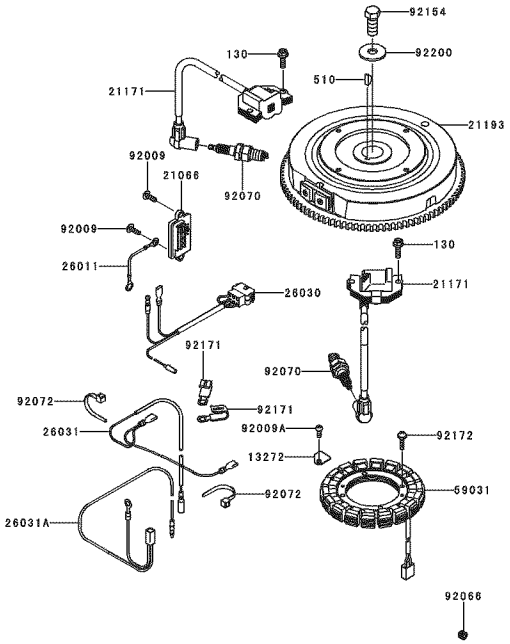

CARBURETOR

E0180-A778E

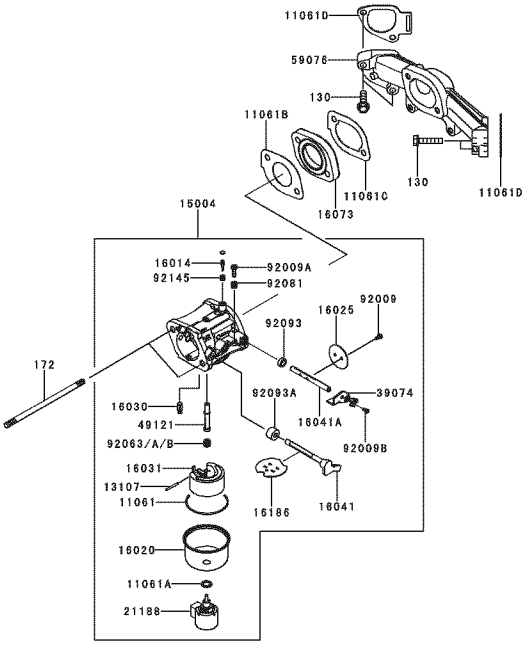

Downloaded from www.Manualslib.com manuals search engine

https://truckmanualshub.com/

TRACTOR - - MODEL NUMBER (289580)

KAWASAKI ENGINE - MODEL NUMBER FR691V, TYPE NUMBER AS06

AIR-FILTER/MUFFLER

E0190-B178A

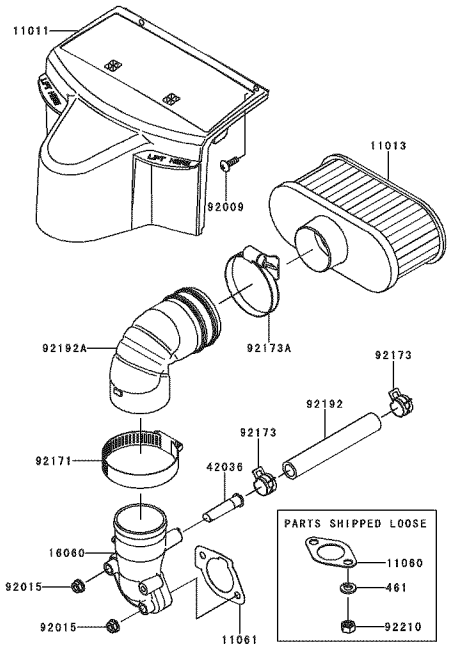

STARTER

E0210-A487A

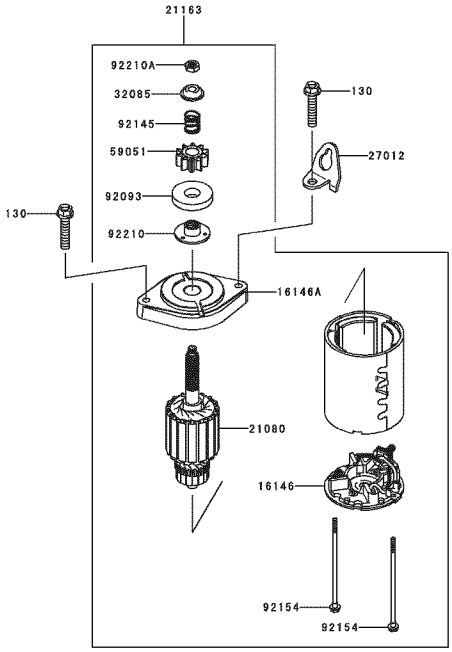

FUEL-TANK/FUEL-VALVE

E0200-A752A

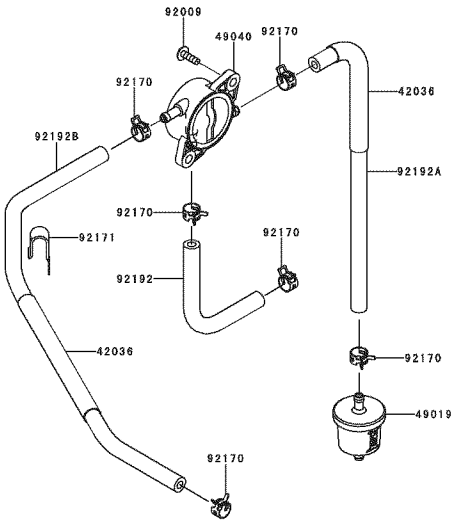

LABEL

F0290-B505A

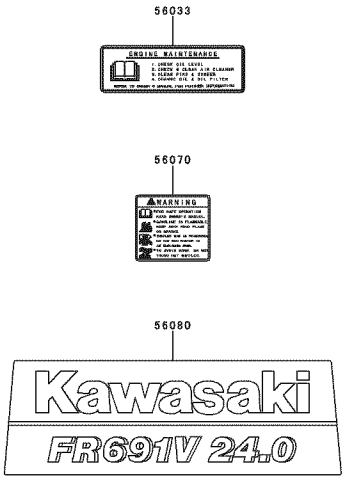

Downloaded from www.Manualslib.com manuals search engine

https://truckmanualshub.com/

TRACTOR - - MODEL NUMBER (289580)

KAWASAKI ENGINE - MODEL NUMBER FR691V, TYPE NUMBER AS06

CYLINDER/CRANKCASE

11004	11004-7026	Gasket-Head
11008	11008-7039	Head-Comp-Cylinder,#1
11008a	11008-7040	Head-Comp-Cylinder,#2
11022	11022-7019	Case-Rocker,#1
11022a	11022-7020	Case-Rocker,#2
11061	11061-7083	Gasket,Case-Rocker
11061a	11061-7094	Gasket,Breather
13272	13272-7004	Plate,Breather
14091	14091-7064	Cover,Breather
16126	16126-7020	Valve,Breather
32154	32154-7019	Pipe
32155	32155-7003	Pipe,Breather
49015	49015-7106	Cover-Crankcase
49120	49120-7142	Crankcase-Comp
59071	59071-2079	Joint
92043	92043-1263	Pin
92049	92049-7001	Seal-Oil,Rvc2 6x11x10.2
92049a	92049-7005	Seal-Oil,So 8x14x5 Hs
92049b	92049-7010	Seal-Oil,Sd 35x48x8 R Hs
92049c	92049-7028	Seal-Oil,38x62x8mtclv
92066	92066-7023	Plug
92066a	92066-7026	Plug
92104	92104-7001	Gasket-Liquid,Tb1217h
92153	92153-7043	Bolt,6x12
92153a	92153-7054	Bolt,8x50
130	130aa0625	Bolt-Flanged,6x25
130a	130ca1050	Bolt-Flanged,10x50
130b	130ca1065	Bolt-Flanged,10x65
172	172ba0818	Bolt-Stud,8x18
214	214aa0408	Screw-Pan+-,4x8
670	670b2011	O Ring,11mm

PISTON/CRANKSHAFT

13001	13001-7027	Piston-Engine
13002	13002-7006	Pin-Piston
13008	13008-7005	Ring-Set-Piston
13025	13025-7009	Ring-Set-Piston L,0.5
13029	13029-7010	Piston-Engine L,0.5
13031	13031-7083	Crankshaft-Comp
13251	13251-7025	Rod-Assy-Connecting
92033	92033-7018	Ring-Snap
92151	92151-7017	Bolt,6x35

AIR-FILTER/MUFFLER

11011	11011-7065	Case-Air Filter
11013	11013-7049	Element-Air Filter
11060	11060-7016	Gasket,Muffler
11061	11061-7086	Gasket,Carburetor/Pipe-Intake
16060	16060-7035	Pipe-Intake
42036	42036-7017	Sleeve,Breather
92009	92009-2303	Screw
92015	92015-1367	Nut
92171	92171-7007	Clamp
92173	92173-7003	Clamp
92173a	92173-7007	Clamp
92192	92192-7146	Tube,12.6x18.6x118
92192a	92192-7165	Tube
92210	92210-7027	Nut,M8
461	461da0800	Washer-Spring,8mm

LUBRICATION-EQUIPMENT

13272	13272-7011	Plate,Rotor
14075	14075-7013	Cap-Assy,Oil Gauge
16154	16154-7010	Rotor-Pump,Outer
16154a	16154-7011	Rotor-Pump,Inner
49065	49065-7006	Filter-Oil
49065a	49065-7007	Filter-Oil
49116	49116-7001	Valve-Assy
59071	59071-7008	Joint
59231	59231-7016	Filler
92055	92055-7002	Ring-O,6mm
92066	92066-7007	Plug
92066a	92066-7028	Plug
92140	92140-7003	Ball
92145	92145-7002	Spring
92153	92153-7008	Bolt
92153a	92153-7043	Bolt,6x12
92210	92210-7012	Nut,M22
555	555a0420	Pin-Spring,4x20
670	670d2016	O Ring,16mm

ELECTRIC-EQUIPMENT

13272	13272-7012	Plate
21066	21066-7017	Regulator-Voltage
21171	21171-7047	Coil-Assy-Ignition
21193	21193-7038	Flywheel-Assy
26011	26011-7025	Wire-Lead,L=95
26030	26030-7008	Harness
26031	26031-7040	Harness
26031a	26031-7041	HarnesS
59031	59031-7017	Coil-Charging
92009	92009-2303	Screw
92009a	92009-2308	Screw
92066	92066-7026	Plug
92070	92070-7004	Plug-Spark, Bpr4es(Ngk), Solid
92072	92072-7003	Band
92154	92154-7003	Bolt,12x30
92171	92171-7008	Clamp
92172	92172-7018	Screw,5x20
92200	92200-7002	Washer
130	130aa0620	Bolt-Flanged,6x20
510	510a5100	Key-Woodruff

COOLING-EQUIPMENT

13070	13070-7019	Guide,Cooling Air
13272	13272-7006	Plate,Fan
14037	14037-7008-9h	Screen
23062	23062-7022	Bracket-Comp
49089	49089-7079	Shroud-Engine
49089a	49089-7080	Shroud-Engine
59041	59041-7014	Fan
59066	59066-7052	Housing-Fan
92009	92009-2303	Screw
92026	92026-7007	Spacer
92151	92151-7012	Bolt,6x12
92153	92153-7007	Bolt
92153a	92153-7043	Bolt,6x12

Downloaded from www.Manualslib.com manuals search engine

https://truckmanualshub.com/

TRACTOR - - MODEL NUMBER (289580)

KAWASAKI ENGINE - MODEL NUMBER FR691V, TYPE NUMBER AS06

CARBURETOR

11061	11061-7009	Gasket,Chamber
11061a	11061-7010	Gasket,Screw
11061b	11061-7087	Gasket,Insulator
11061c	11061-7088	Gasket,Insulator/Manifold
11061d	11061-7093	Gasket,Manifold
13107	13107-7018	Shaft
15004	15004-7063	Carburetor-Assy
16014	16014-7010	Screw-Pilot Air
16020	16020-7003	Chamber-Float
16025	16025-7017	Valve-Throttle
16030	16030-7003	Valve-Float
16031	16031-7002	Float
16041	16041-7050	Shaft-Carburetor,Choke
16041a	16041-7051	Shaft-Carburetor,Throttle
16073	16073-7013	Insulator
16186	16186-7006	Valve-Assy-Choke
21188	21188-7002	Solenoid
39074	39074-7001	Lever-Assy-Throttle
49121	49121-7018	Nozzle-Main
59076	59076-7019	Manifold-Intake
92009	92009-2083	Screw
92009a	92009-2349	Screw
92009b	92009-2402	Screw
92063	92063-7141	Jet-Main,#122,3280ft
92063a	92063-7142	Jet-Main,#124
92063b	92063-7149	Jet-Main,#120,6560ft
92081	92081-2234	Spring
92093	92093-2100	Seal
92093a	92093-7003	Seal
92145	92145-2122	Spring
130	130aa0630	Bolt-Flanged,6x30
172	172ba06115	Bolt-Stud,6x115

CONTROL-EQUIPMENT

13107	13107-7047	Shaft,Governor
13271	13271-7038	Plate
16171	16171-7022	Link
39129	39129-7028	Spring-Governor
49103	49103-7014	Arm-Governor
49103a	49103-7015	Arm-Governor
49113	49113-7059	Panel-Comp-Control
92145	92145-7057	Spring
92145a	92145-7058	Spring
92151	92151-7014	Bolt,5x30
92153	92153-0009	Bolt,6x12
92153a	92153-7001	Bolt,Socket,5x16
92153b	92153-7033	Bolt,6x35
92153c	92153-7043	Bolt,6x12
92170	92170-7001	Clamp
214	214aa0408	Screw-Pan+-,4x8
311	311aa0600	Nut-Hex,6mm
312	312aa0500	Nut-Hex,5mm
411	411aa0600	Washer-Plain,6mm

VALVE/CAMSHAFT

11055	11055-7009	Bracket
12004	12004-7008	Valve-Intake
12005	12005-7009	Valve-Exhaust
12009	12009-7001	Retainer-Valve Spring
12011	12011-2056	Collet
12016	12016-2066	Arm-Rocker
12032	12032-7001	Tappet
13070	13070-7017	Guide,Governor
13116	13116-7007	Rod-Push
13271	13271-7007	Plate
13271a	13271-7021	Plate,Governor
42036	42036-7010	Sleeve
49078	49078-7002	Spring-Engine Valve,In
49118	49118-7022	Camshaft-Comp
92033	92033-7001	Ring-Snap
92140	92140-7005	Ball
92145	92145-7001	Spring
92152	92152-7020	Collar
92153	92153-7100	Bolt,6x29.5
92200	92200-2151	Washer,8.1x18x0.5
92200a	92200-7009	Washer,16x42x0.91
92200b	92200-7048	Washer,16.3x30x2.28
130	130aa0814	Bolt-Flanged,8x14
312	312aa0600	Nut-Hex,6mm

FUEL-TANK/FUEL-VALVE

42036	42036-7015	Sleeve
49019	49019-7005	Filter-Fuel
49040	49040-7008	Pump-Fuel
92009	92009-2303	Screw
92170	92170-2009	Clamp
92171	92171-7008	Clamp
92192	92192-7148	Tube,6.4x12.7x150
92192a	92192-7182	Tube,6.35x12.7x315
92192b	92192-7188	Tube,6.35x12.7x390

STARTER

16146	16146-7027	Cover-Assy
16146a	16146-7030	Cover-Assy
21080	21080-7006	Armature
21163	21163-7034	Starter-Electric
27012	27012-7008	Hook
32085	32085-7005	Stopper
59051	59051-7034	Gear-Spur
92093	92093-7007	Seal
92145	92145-7060	Spring
92154	92154-7001	Bolt
92210	92210-7017	Nut
92210a	92210-7036	Nut
130	130aa0840	Bolt-Flanged,8x40

LABEL

56033	56033-7001	Label-Manual
56070	56070-7001	Label-Warning
56080	56080-7076	Label-Brand

Downloaded from www.Manualslib.com manuals search engine

https://truckmanualshub.com/

TRACTOR - MODEL NO. (289580), PRODUCT NO. LGTH2454

TUFFTORQ TRANSAXLE MODEL NUMBER K46AW

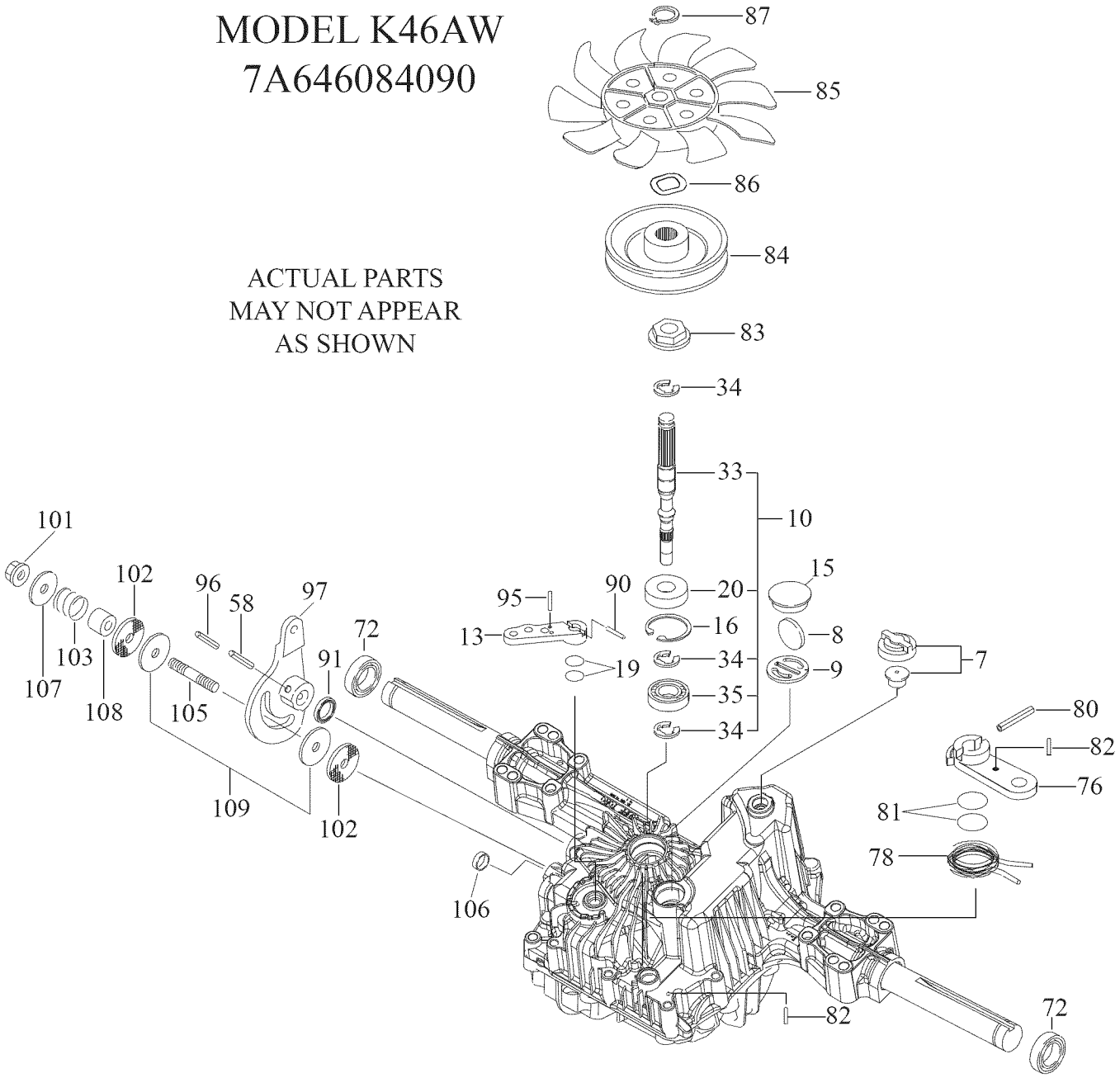

Downloaded from www.Manualslib.com manuals search engine

https://truckmanualshub.com/

TRACTOR - MODEL NO. (289580), PRODUCT NO. LGTH2454

TUFFTORQ TRANSAXLE MODEL NUMBER K46AW

KEY NO.	PART NO.	DESCRIPTION
7	414395	VENT VALVE 15
8	414396	MAGNET
9	414397	MAGNET HOLDER
10	415923	PUMP SHAFT/BEARING KIT
13	414398	BYPASS LEVER
15	414399	SEALING CAP 30
16	414400	SNAP RING C 35
19	414401	O-RING 1A P10A
20	414402	SEAL TC 153507
33	414403	PUMP SHAFT (STANDARD
34	414404	E-RING 15
35	414405	BEARING 6202C3
58	414406	ROLL PIN 6 * 40
72	414407	SEAL 19 * 32 * 8
76	414408	BRAKE LEVER
78	414409	BRAKE RETURN SPRING
80	414410	SPRING PIN 5 * 32
81	414411	0-RING 1A P12
82	414412	SPRING PIN 4 * 16
83	414413	SPINE COLLAR
84	414414	PULLEY L
85	414415	FAN, BLACK
86	414416	WAVE WASHER
87	414417	SNAP RING
90	414418	SPRING PIN 3.0A * 20
91	414419	OIL SEAL 16 * 22 * 03
95	415850	SPRING PIN 3.0A * 16
96	414420	ROLL PIN 3.5 * 40
97	414421	CONTROL LEVER
101	414216	LOCK NUT 10
102	414423	WASHER 10 * 40 * 4
103	414424	SPRING
105	414425	STUD 10 * 60
106	414426	SEALING CAP 18
107	414427	WASHER 10 * 36 * 2.8
108	414428	COLLAR 10 * 20 * 17
109	414429	FRICTION PLATE KIT

NOTE: All component dimensions given in U.S. inches
1 inch = 25.4 mm

Downloaded from www.Manualslib.com manuals search engine

https://truckmanualshub.com/

SERVICE NOTES

Downloaded from www.Manualslib.com manuals search engine

https://truckmanualshub.com/

SERVICE NOTES

Downloaded from www.Manualslib.com manuals search engine

https://truckmanualshub.com/

SERVICE NOTES

Downloaded from www.Manualslib.com manuals search engine

SUGGESTED GUIDE FOR SIGHTING SLOPES FOR SAFE OPERATION

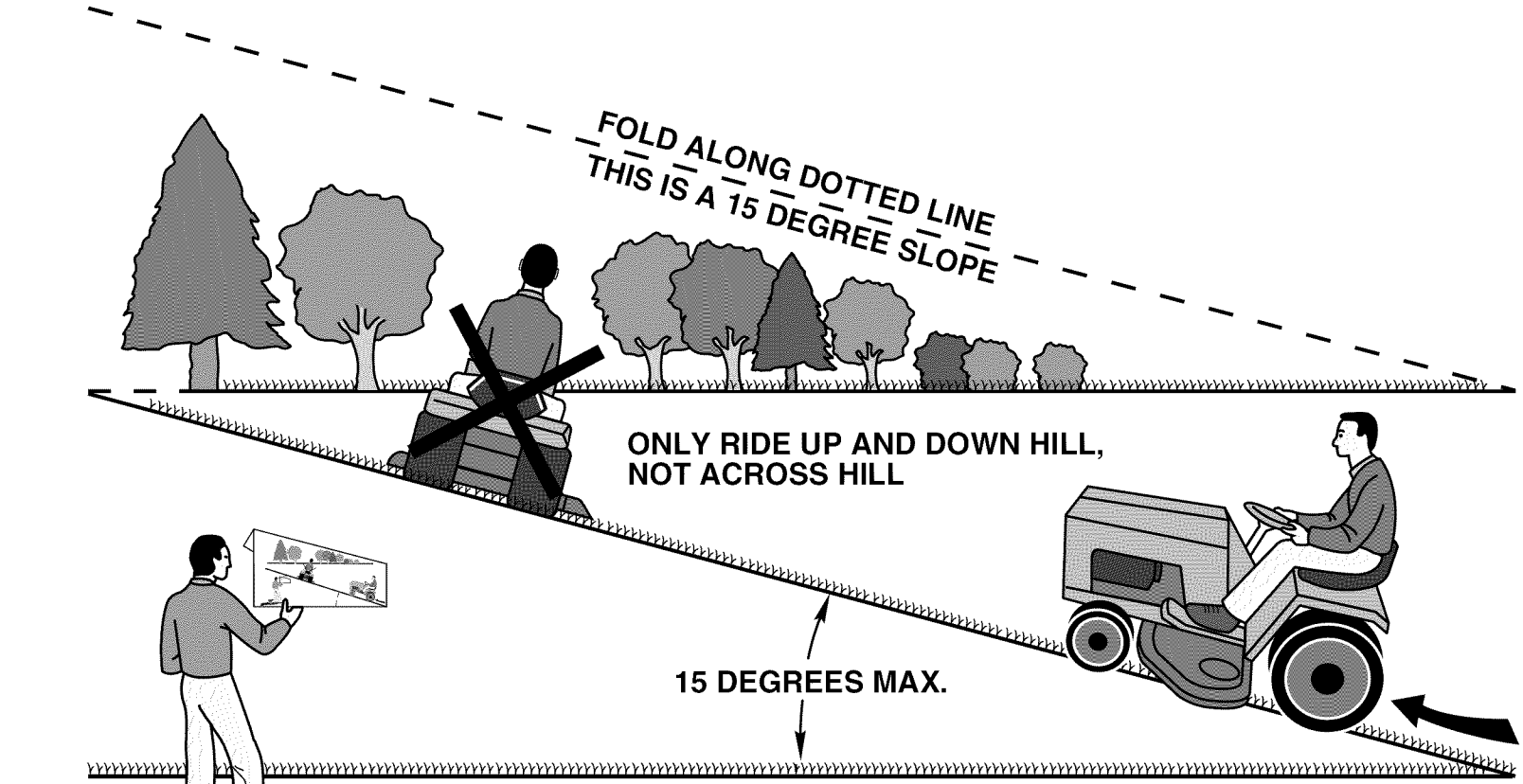

WARNING: To avoid serious injury, operate your tractor up and down the face of slopes, never across the face. Do not mow slopes greater than 15 degrees. Make turns gradually to prevent tipping or loss of control. Exercise extreme caution when changing direction on slopes.

1. Fold this page along dotted line indicated above.
2. Hold page before you so that its left edge is vertically parallel to a tree trunk or other upright structure.
3. Sight across the fold in the direction of hill slope you want to measure.
4. Compare the angle of the fold with the slope of the hill.

https://truckmanualshub.com/

Downloaded from www.Manualslib.com manuals search engine

Downloaded from www.Manualslib.com manuals search engine

02.19.10 CL

Husqvarna

Printed in the U.S.A.

Husqvarna WARRANTY STATEMENT

SECTION 1: LIMITED WARRANTY

Husqvarna Forest & Garden Company ("Husqvarna") warrants Husqvarna product to the original purchaser to be free from defects in material and workmanship from the date of purchase for the "Warranty Period" of the product as set forth below:
Lifetime Warranty (Parts and Labor): All tiller tines and trimmer shafts against breakage. Proof of purchase required.
Lifetime Warranty ("PARTS ONLY" after initial warranty expiration): Ignition coils and modules on handheld product. Proof of purchase required.
WARRANTY SCHEDULE FOR TURF CARE Equipment - Zero Turn Riders
(New warranty applies to units sold after August 1, 2005. Also applies to units factory-equipped with R.O.P.S.
EZ Zero Turn Riders: 3 year consumer warranty or 600 hours of use (when used solely at the owner's residence.)
EZ & MZ Zero Turn Riders: 1 year commercial warranty or 600 hours of use.
iZ, LZ & BZ Zero Turn Riders: 5 year consumer warranty or 1,500 hours of use.
iZ, LZ & BZ Zero Turn Riders: 5 year commercial warranty or 1,500 hours of use.
3 Year or 1,500 Hour Commercial Use Warranty: spindles on zero turn riders, hydraulic pumps and wheel motors.
Warranty Schedule for Turf Care Walk Behind Units - W, WG & WH Zero Turn Riders - 3 year consumer and commercial warranty. New warranty applies to units sold after August 1, 2005. Also applies to units factory-equipped with R.O.P.S.
2 Year COMMERCIAL and CONSUMER Warranty: all Husqvarna ground-engaging commercial equipment.
WARRANTY SCHEDULE FOR CONSUMER TURF CARE EQUIPMENT:
2 Year Consumer Warranty: Automatic mower, all Residential Zero Turn Riders, all lawn, yard and garden tractors, all noncommercial walk behind mowers, tillers, snow blowers, electrical products and power-assist collection systems for noncommercial, nonprofessional, noninstitutional or nonincome producing use, except as herein stated. All consumer product use must have been limited to the owner's residence.

WARRANTY SCHEDULE FOR CONSUMER FOREST & GARDEN EQUIPMENT:
2 Year Consumer Warranty: all consumer chain saws, trimmers, brushcutters, clearing saws, handheld blowers, backpack blowers, hedge trimmers, and electrical products for noncommercial, nonprofessional, noninstitutional or nonincome producing use, except as herein stated. All consumer product use must have been limited to the owner's residence.
2 Year or 2,000 Hour Powertrain & 1 Year or 1,000 Hour Body Warranty: Husqvarna Utility Vehicles.
1 Year Warranty: Power cutters, stump grinder, pole pruners and pole saws for non-commercial, non-professional, noninstitutional, non-municipality or non-income producing use. All 300 series trimmers, brushcutters, clearing saws, hovering trimmers, stick edgers, backpack blowers, hand held blowers, hedge trimmers, power-assist collection systems for commercial, institutional, professional or income producing purposes or use.
1 Year Conditional Component Warranty: Chain saw crankshafts for commercial/professional use (parts and labor).Saw must be operated with Husqvarna XP 2 cycle oil.
90 Day Commercial Warranty: Automatic mower, chain saws, 100 series trimmers, power cutters, stump grinders, pole saws, pole pruners, snow throwers, model series 580 & 600 walk-behind mowers, or any Husqvarna product used for commercial, institutional, professional, municipality or income producing purposes or use except as otherwise provided herein.
Batteries: 1 year prorated limited warranty with 100% replacement during the first 6 months.
Rental Warranty: 90 days on all applicable professional equipment reference warranty time period charts located in the back of the Retailer Warranty Policy & Procedure Manual.
Husqvarna Safety Apparel carries a 90-day warranty from the date of the customer's original purchase for defects in material and workmanship. Normal wear, tear or abuse is not covered under warranty. Product must be returned to Charlotte with a warranty claim form. All care and maintenance instructions must be followed as stated by the manufacturer on the care label. The fit of the protective apparel/boot is not covered under warranty.
30 Day Warranty: Replacement parts, accessories including bars and chains, tools and display items. Emission control system components necessary to comply with CARB-TIER II and EPA regulations, except for those components which are part of engine systems manufactured by third part engine manufacturers for which the purchaser has received a separate warranty with product at time of purchase.

SECTION 2: HUSQVARNA'S OBLIGATIONS UNDER THE WARRANTY

Husqvarna will repair or replace defective components without charge for parts or labor if a component fails because of a defect in material or workmanship during the warranty period.

SECTION 3: ITEMS NOT COVERED BY THIS WARRANTY

The following items are not covered by this warranty:
(1) Normal customer maintenance items which become worn through normal regular use, including, but not limited to, belts, blades, blade adapters, bulbs, clutches, clutch drums, filters, guide bars, lubricants, rewind springs, saw chain, spark plugs, starter ropes and tiller tines;
(2) Natural discoloration of material due to ultraviolet light;
(3) Engine and drive systems not manufactured by Husqvarna; these items are covered by the respective manufacturer's warranty as provided in writing with the product information supplied at the time of purchase; all claims must be sent to the appropriate manufacturer;
(4) Lawn and garden attachments are covered by a third party which gives a warranty, all claims for warranty should be sent to the manufacturer,
(5) Commercial or consumer mowing decks with sand abrasion damage.
(6) Emission Control System components necessary to comply with CARB-TIER II and EPA regulations which are manufactured by third party engine manufacturer.

SECTION 4: EXCEPTIONS AND LIMITATIONS

This warranty shall be inapplicable to defects resulting from the following:
(1) Accident, abuse, misuse, negligence and neglect, including stale fuel, dirt, abrasives, moisture, rust, corrosion, or any adverse reaction due to incorrect storage or use habits;
(2) Failure to operate or maintain the unit in accordance with the Owner's/Operator's manual or instruction sheet furnished by Husqvarna;
(3) Alterations or modifications that change the intended use of the product or affects the product's performance, operation, safety, or durability, or causes the product to fail to comply with any applicable laws; or:
(4) Additional damage to parts or components due to continued use occurring after any of the above.

REPAIR OR REPLACEMENT AS PROVIDED UNDER THIS WARRANTY IS THE EXCLUSIVE REMEDY OF THE PURCHASER. HUSQVARNA SHALL NOT BE LIABLE FOR ANY INCIDENTAL OR CONSEQUENTIAL DAMAGES FOR BREACH OF ANY EXPRESS OR IMPLIED WARRANTY ON THESE PRODUCTS EXCEPT TO THE EXTENT PROHIBITED BY APPLICABLE LAW. ANY IMPLIED WARRANTY OF MERCHANTABILITY OR FITNESS FOR A PARTICULAR PURPOSE ON THESE PRODUCTS IS LIMITED IN DURATION TO THE WARRANTY PERIOD AS DEFINED IN THE LIMITED WARRANTY STATEMENT. HUSQVARNA RESERVES THE RIGHT TO CHANGE OR IMPROVE THE DESIGN OF THE PRODUCT WITHOUT NOTICE, AND DOES NO T ASSUME OBLIGATION TO UPDATE PREVIOUSLY MANUFACTURED PRODUCTS.

Some states do not allow the exclusion of incidental or consequential damages, or limitations on how long an implied warranty lasts, so the above limitations or exclusions may not apply to you. This warranty gives you specific legal rights, and you may also have other rights which vary from state to state.

SECTION 5: CUSTOMER RESPONSIBILITIES

The product must exhibit reasonable care, maintenance, operation, storage and general upkeep as written in the maintenance section of the Owner's/Operator's manual. Should an operational problem or failure occur, the product should not be used, but delivered as is to an authorized Husqvarna retailer for evaluation. Proof of purchase, as explained in section 6, rests solely with the customer.

SECTION 6: PROCEDURE TO OBTAIN WARRANTY CONSIDERATION

It is the Owner's and Retailer's responsibility to make certain that the Warranty Registration Card is properly filled out and mailed to Husqvarna Forest & Garden Company. This card should be mailed within ten (10) days from the date of purchase in order to confirm the warranty and to facilitate post-sale service.

Proof of purchase must be presented to the authorized Husqvarna retailer in order to obtain warranty service. This proof must include date purchased, model number, serial number, and complete name and address of the selling retailer.

To obtain the benefit of this warranty, the product believed to be defective must be delivered to an authorized Husqvarna retailer in a timely manner, no later than thirty (30) days from date of the operational problem or failure. The product must be delivered at the owner's expense. Downtime, pick-up and delivery charges are not covered by this warranty. An authorized Husqvarna retailer can be normally located through the "Yellow Pages" of the local telephone directory or by calling 1-800-HUSKY62 for a retailer in your area.

HUSQVARNA
7349 Statesville Road
Charlotte, NC 28269 2008

https://truckmanualshub.com/