https://truckmanualshub.com/

Illustrated Parts Manual

Model
G6-42P

S/N 0189001 thru 0189345
& 0160000230 & After

91404001

Revised
March 31, 2014

An Oshkosh Corporation Company

Downloaded from www.Manualslib.com manuals search engine

https://truckmanualshub.com/

Downloaded from www.Manualslib.com manuals search engine

https://truckmanualshub.com/

EFFECTIVITY PAGE

December 17, 2004 - A - Revised Manual

June 3, 2005 - B - Revised Manual

September 30, 2005 - C - Revised Manual

April 24, 2006 - D - Revised Manual

August 25, 2006 - E - Revised Manual

February 23, 2007 - F - Revised Manual

July 6, 2007 - G - Revised Manual

November 26, 2008 - H - Revised Manual

February 25, 2010 - I - Revised Manual

September 24, 2012 - J - Revised Manual

January 3, 2013 - K - Revised Manual

March 31, 2014 - L - Revised Manual

Downloaded from www.Manualslib.com manuals search engine

https://truckmanualshub.com/

EFFECTIVITY PAGE

Downloaded from www.Manualslib.com manuals search engine

https://truckmanualshub.com/

TABLE OF CONTENTS

FIGURE NO.	TITLE	PAGE NO.
SECTION 1 – FRAME & ATTACHING PARTS		**1-1**
1-1	Frame Shrouding & Trim	1-2
1-2	Rear Axle & Attaching Parts	1-8
1-3	Front Axle Mounting	1-12
SECTION 2 – BOOM		**2-1**
2-1	First Boom Section	2-2
2-2	Bearing Pads, Spacers & Shims, (First Boom Section)	2-4
2-3	Second Boom Section	2-6
2-4	Bearing Pads, Spacers & Shims, (Second Boom Section)	2-8
2-5	Third Boom Section	2-12
2-6	Bearing Pads, Spacers & Shims, (Third Boom Section)	2-14
2-7	Push/Beam Extend Chain & Roller Assembly	2-16
2-8	Quick Switch Assembly	2-18
SECTION 3 – ATTACHMENTS		**3-1**
3-1	Tilt Carriage	3-2
3-2	Buckets	3-6
3-3	48 Inch & 72 Inch Slope Piler Carriage	3-8
3-4	Side Tilt Carriage	3-10
3-5	Truss Boom	3-12
3-6	10 Foot & 15 Foot Truss Boom With Winch	3-16
3-7	12 Foot Truss Boom With Winch	3-18
3-8	100 Degree Swing Fork Assembly	3-20
3-9	90 Degree Swing Carriage	3-24
3-10	Sheet Material Handler	3-26
3-11	Winch Installation	3-30
3-12	100 Degree Drywall Swing Carriage Assembly	3-32
3-13	Personnel Platform	3-36
3-14	Fork Mounted Platform	3-38
3-15	100 Degree Swing Carriage With Side Tilt	3-42
3-16	Forks	3-46
3-17	Fork Mounted Lifting Hook	3-48
3-18	Grapple Bucket	3-52
3-19	Fork Pin Lock Installation	3-54
3-20	6 Foot Mast With 48 Inch & 72 Inch Carriage	3-56
3-21	8 Foot Standard Mast	3-58
3-22	8 Foot Side Tilt Electric Mast	3-62

Downloaded from www.Manualslib.com manuals search engine

https://truckmanualshub.com/

TABLE OF CONTENTS

FIGURE NO.	TITLE	PAGE NO.
SECTION 4 – ENGINE & ATTACHING PARTS		**4-1**
4-1	Engine Assembly, LH View	4-2
4-2	Engine Assembly, RH View	4-14
4-3	John Deere Engine	4-26
4-4	Fuel Tank & Lines	4-38
4-5	Radiator Assembly	4-42
4-6	Air Cleaner & Installation	4-46
4-7	Exhaust Installation	4-52
SECTION 5 – DRIVE TRAIN		**5-1**
5-1	Front Axle Assembly - Rockwell	5-2
5-2	Front Axle - Rockwell	5-4
5-3	Carrier Assembly - Rockwell	5-6
5-4	Brake Assembly - Rockwell	5-10
5-5	Left & Right Housing & Axle & Wheel Flange Assemblies - Rockwell	5-12
5-6	Front Axle Assembly - Carraro	5-14
5-7	Front Axle - Carraro	5-16
5-8	Carrier Assembly - Carraro	5-18
5-9	Brake Assembly - Carraro	5-22
5-10	Axle Housing Assembly - Carraro	5-24
5-11	Rear Axle Drive Hub	5-26
5-12	Tires & Rims	5-30
SECTION 6 – CAB		**6-1**
6-1	Open Cab	6-2
6-2	Cab Enclosure With Heater Option	6-4
6-3	Cab Enclosure	6-10
6-4	Cab Enclosure	6-12
6-5	Suspension Seat	6-14
6-6	Dash Assembly	6-16
6-7	Instrument Panel	6-18
SECTION 7 – CONTROLS		**7-1**
7-1	Tilt & Sway	7-2
7-2	Accelerator Pedal Assembly	7-4
7-3	Steering Column & Attaching Parts	7-10
7-4	Brake Pedal Assembly	7-12
7-5	Foot Switch	7-14
7-6	Boom Joystick Assembly	7-18
7-7	Joystick Assembly	7-20

Downloaded from www.Manualslib.com manuals search engine

https://truckmanualshub.com/

TABLE OF CONTENTS

FIGURE NO.	TITLE	PAGE NO.
7-8	RH Horizontal Control Assembly	7-22
SECTION 8 – HYDRAULIC CIRCUITS		**8-1**
8-1	Oil Supply Lines	8-2
8-2	Dump Circuit	8-4
8-3	Front Drive Motor	8-8
8-4	Rear Drive Motors	8-10
8-5	Steering Cylinders	8-14
8-6	Service/Parking Brake	8-16
8-7	Boom Joystick	8-18
8-8	Lift Cylinder	8-20
8-9	Crowd Cylinder	8-22
8-10	Tilt & Compensating Cylinder	8-24
8-11	Sway Cylinder	8-28
SECTION 9 – HYDRAULIC COMPONENTS		**9-1**
9-1	Lift Cylinder	9-2
9-2	Crowd Cylinder - Iowa	9-12
9-3	Tilt Cylinder - Iowa	9-16
9-4	Compensating Cylinder	9-20
9-5	Sway Cylinder - Iowa	9-26
9-6	Steering Cylinder - Iowa	9-30
9-7	Main Control Valve	9-34
9-8	Hydrostatic Transmission	9-38
9-9	Implement Pump	9-44
9-10	Front Drive Motor	9-46
9-11	Rear Drive Motors	9-48
9-12	Hydraulic Tank Assembly	9-50
9-13	Oil Filter Assembly	9-52
9-14	Traction Lock Valve	9-54
9-15	Inching Valve	9-56
9-16	Brake Valve	9-58
9-17	Priority Flow Divider Valve & Assembly	9-62
9-18	Thermal Bypass Valve	9-64
9-19	Sway Cylinder Valve	9-66
9-20	Solenoid Valve	9-70
9-21	Grapple Bucket Cylinder	9-72
9-22	Side Tilt Carriage Cylinder	9-74
9-23	72 Inch 90 Degree Swing Carriage Cylinder	9-76

Downloaded from www.Manualslib.com manuals search engine

https://truckmanualshub.com/

TABLE OF CONTENTS

FIGURE NO.	TITLE	PAGE NO.
SECTION 10 – ELECTRICAL		**10-1**
10-1	Battery & Cables	10-2
10-2	Engine Harness	10-4
10-3	Boom Work Lights Harness	10-10
10-4	Cab Work Light Harness	10-12
10-5	Cab Work Light & Beacon Light Harness	10-14
10-6	Frame Road Lights Harness	10-16
10-7	Cab Road Lights Harness	10-18
SECTION 11 – DECALS		**11-1**
11-1	Cab & Frame Decals	11-2
11-2	Boom Decals	11-10
SECTION 12 – OPTIONS		**12-1**
12-1	Turbo Option	12-2
12-2	Turbo Engine Assembly, LH View	12-6
12-3	Turbo Engine Assembly, RH View	12-14
12-4	John Deere Turbo Engine	12-22
12-5	Turbo Radiator Assembly	12-26
12-6	Turbo Air Cleaner & Installation	12-28
12-7	Turbo Exhaust Installation	12-32
12-8	Heater Option Assembly	12-34
12-9	Suspension Seat	12-40
12-10	Work Light Package	12-42
12-11	Cold Start Installation	12-46
12-12	Block Heater Installation	12-48
12-13	Stabilizer Option	12-50
12-14	Stabilizer Cylinder - Iowa	12-52
12-15	Beacon Light Package	12-54
12-16	Tilt on Joystick With LH Sway	12-56
12-17	Tilt on Joystick With RH Sway	12-58
12-18	LH Sway Option Assembly	12-62
12-19	RH Tilt & Sway Assembly	12-64
12-20	Auxiliary Boom Assembly	12-66
12-21	LH Auxiliary Hydraulics Assembly	12-70
12-22	RH Auxiliary Hydraulics Assembly	12-72
12-23	Auxiliary Electrics Assembly	12-74
12-24	Main Control Valve With Auxiliary Hydraulics	12-82
12-25	Boom Joystick With Tilt	12-90
12-26	Sway Cylinder	12-92
12-27	Swing Cylinder	12-94

Downloaded from www.Manualslib.com manuals search engine

https://truckmanualshub.com/

TABLE OF CONTENTS

FIGURE NO.	TITLE	PAGE NO.
12-28	5 Inch & 8 Inch Winch	12-96
12-29	Winch Motor	12-100
12-30	Truss Boom Pressure Reducer Valve - 1200 PSI	12-102
12-31	Truss Boom Pressure Reducer Valve - 1360 PSI	12-104
12-32	Starter Kit	12-106
12-33	Fuel/Water Separator Installation	12-108
12-34	Standard Seat Replacement Kit	12-110
12-35	Heavy Seat Replacement Kit	12-112
12-36	Work Light Installation	12-114
12-37	Pintle Hook Installation	12-122
12-38	Winch	12-124
12-39	Swing Cylinder	12-126
12-40	Road Lights Installation	12-128
12-41	Beacon Light Installation	12-132
12-42	Stabilizer Valve	12-136

SECTION 13 – RECOMMENDED SPARE PARTS 13-1

SECTION 14 – PART NUMBER INDEX 14-1

Downloaded from www.Manualslib.com manuals search engine

https://truckmanualshub.com/

TABLE OF CONTENTS

FIGURE NO.	TITLE	PAGE NO.

Downloaded from www.Manualslib.com manuals search engine

https://truckmanualshub.com/

SECTION 1
FRAME & ATTACHING PARTS

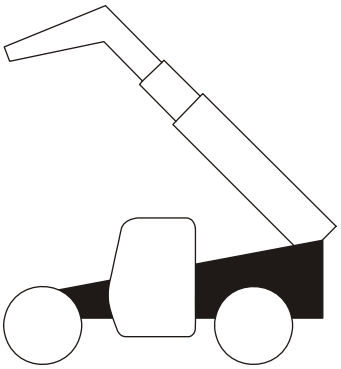

Downloaded from www.Manualslib.com manuals search engine

https://truckmanualshub.com/

Figure 1-1 Frame Shrouding & Trim

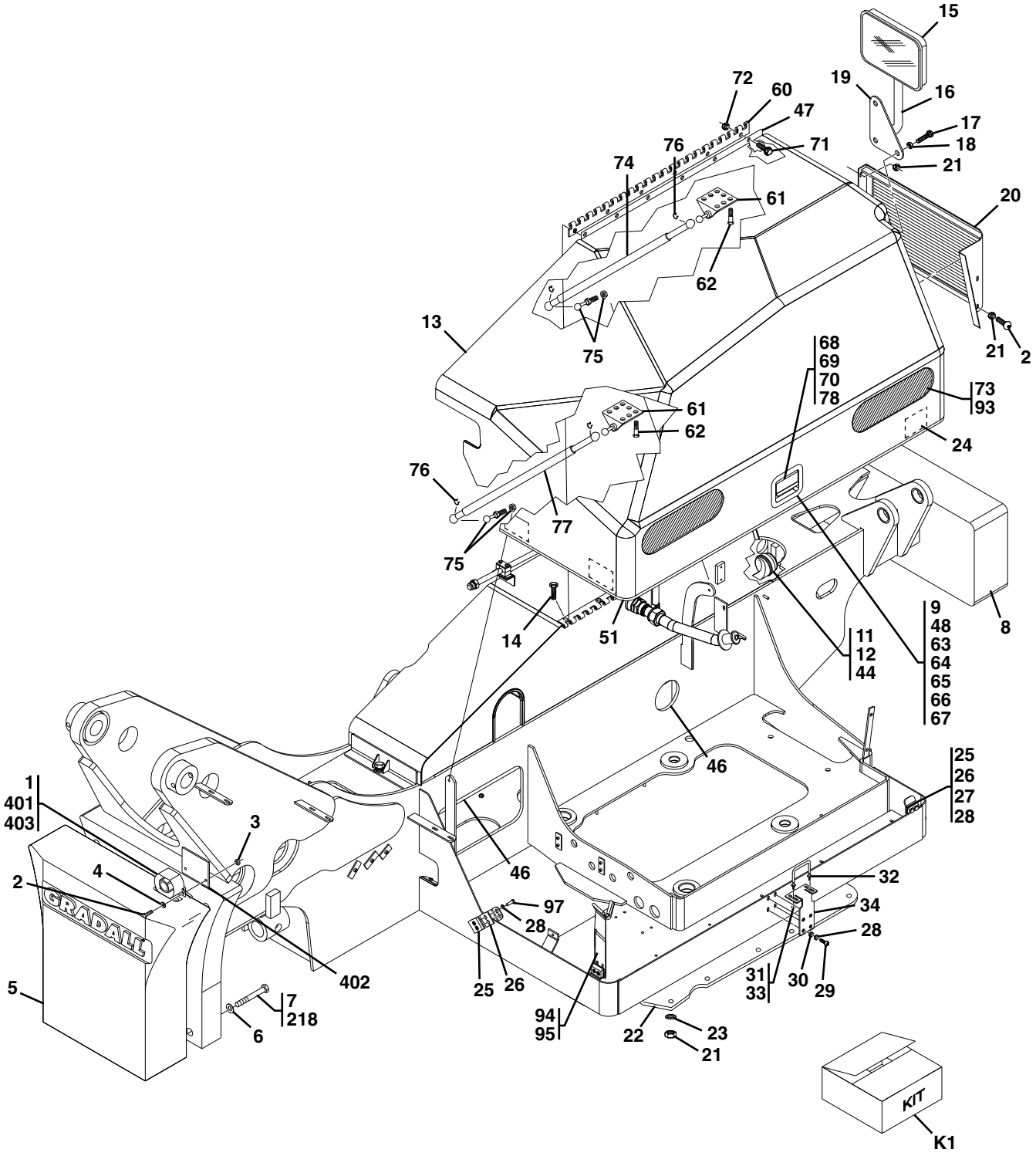

PAP23330

Downloaded from www.Manualslib.com manuals search engine

https://truckmanualshub.com/

Figure 1-1 Frame Shrouding & Trim (Continued)

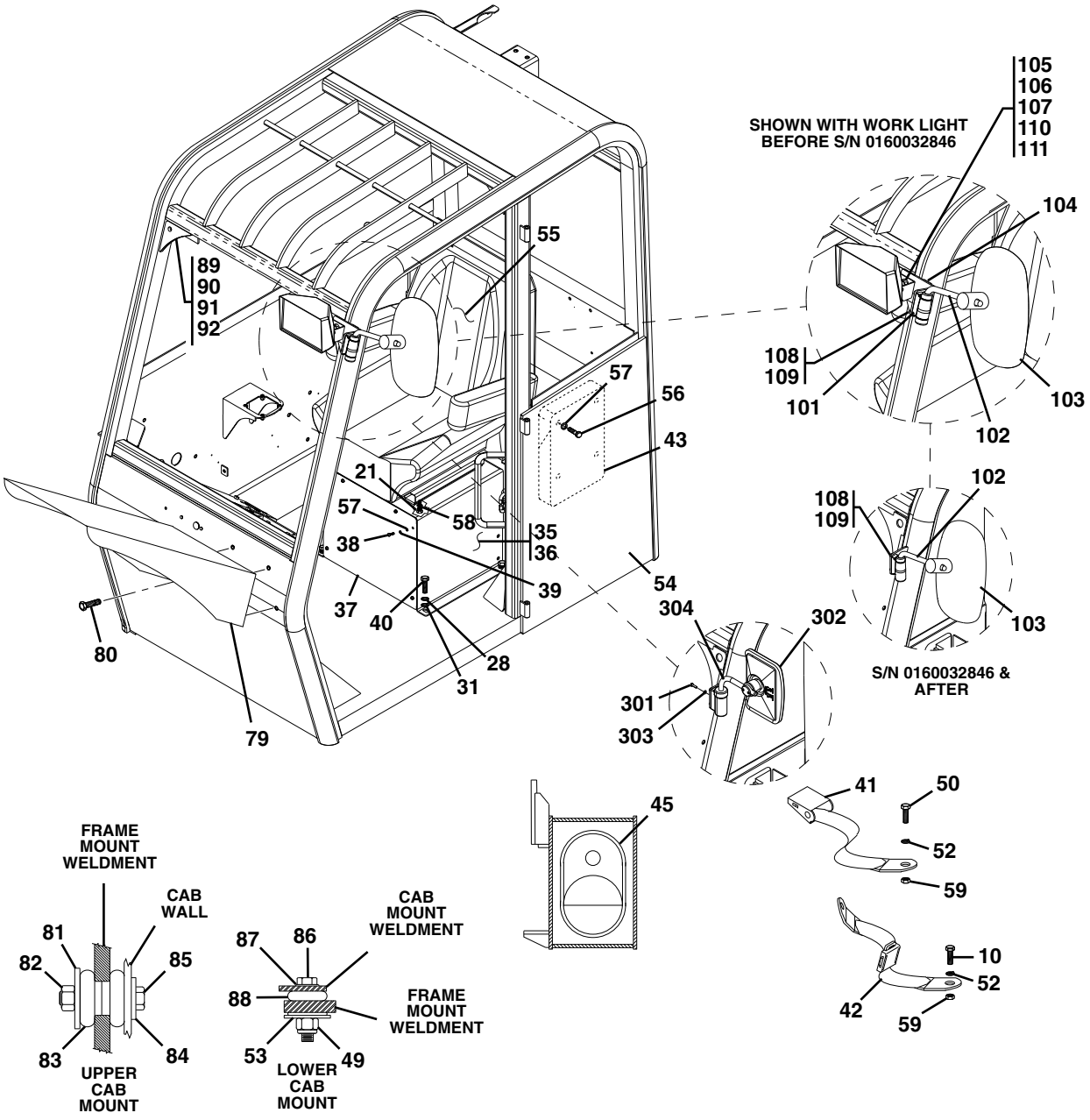

PAP23310

Downloaded from www.Manualslib.com manuals search engine

https://truckmanualshub.com/

Figure 1-1 Frame Shrouding & Trim

Item	Part Number	Qty.	Description	Rev.
	14404646	AR	T-9 METAL PROTECTANT, (1 gal.)	
	14404645	AR	T-9 METAL PROTECTANT, (12 oz.)	
1	91403574	Ref	BACK-UP ALARM, **(Before S/N 0160016458)**, (no longer available, use Kit K1 for replacement)	
	8270621	1	BACK-UP ALARM, **(S/N 0160016458 & After)**	
2	0641406	2	HEX HD CAPSCREW, 1/4-20X3/4	
3	8305624	2	HEX NUT, 1/4-20	
4	4711400	2	FLAT WASHER, 1/4	
5	91140001	1	COUNTERWEIGHT, **(no pintle hook)**	
	1001091458	1	COUNTERWEIGHT, **(with pintle hook)**	
6	88561011	4	FLAT WASHER, 1	
7	83201183	4	HEX HD CAPSCREW, 1-18X6, (torque to 545-595 lb-ft)	
8	NSS	1	FRAME WELDMENT	
9	91404346	2	ROD CLIP	
10	88201551	2	HEX HD CAPSCREW, 7/16-20X1-1/2, GR5, **(S/N 0189001 thru 0160015436)**	
11	4761500	1	LOCKWASHER, 5/16	
12	91143357	1	HORN	
13	91403268	1	ENGINE COVER, (includes items 9, 24, 47, 48, 51, 60 thru 78 & 93)	E
	91404275	1	ENGINE COVER KEY	
14	88261029	6	SOCKET BUTTON HD CAPSCREW, 3/8-16X1	
15	80263053	1	MIRROR	
16	91406094	1	MIRROR BRACKET	
17	88201036	3	HEX HD CAPSCREW, 3/8-16X1-1/4, GR5	
18	88501106	3	HEAVY HEX JAM NUT, 3/8-16	
19	91401347	1	MIRROR MOUNT BRACKET PLATE	
20	91406117	1	FRONT SHEET METAL COVER	
21	77143006	21	WHIZ-LOCKNUT, 5/16-18, **(S/N 0189001 thru 0160015436)**	
22	91403441	1	DUST SHIELD	
23	91083533	14	FENDER WASHER	
24	91404344	3	ALUMINUM WEAR PLATES	
25	91403582	3	BEARING PAD	
26	91401524	AR	SHIM	
27	88201534	4	HEX HD CAPSCREW, 3/8-24X1, GR5	
28	88551011	14	LOCKWASHER, 3/8	
29	88261030	4	SOCKET BUTTON HD CAPSCREW, 3/8-16X1-1/4	
30	90027470	4	HARDENED WASHER, 3/8	
31	88561004	6	FLAT WASHER, 3/8	
32	91403600	1	U-BOLT	
33	88501006	2	HEX NUT, 3/8-16	
34	91401570	1	LATCH PLATE	
35	91405051	1	SEAT RISER ASSY, (includes items 36 thru 39)	
36	91406115	1	RISER WELDMENT, **(S/N 0189001 thru 0160015436)**	
	91516044	1	RISER WELDMENT, **(S/N 0160015465 & After)**	
37	91401415	1	ACCESS COVER, **(S/N 0189001 thru 0160015436)**	
38	88261015	6	SOCKET BUTTON HD CAPSCREW, 1/4-20X5/8	
39	88551009	6	LOCKWASHER, 1/4	
40	88201035	4	HEX HD CAPSCREW, 3/8-16X1, GR5	

Downloaded from www.Manualslib.com manuals search engine

https://truckmanualshub.com/

Figure 1-1 Frame Shrouding & Trim (Continued)

Item	Part Number	Qty.	Description	Rev.
41	91033029	1	SEAT BELT, (not used with optional seat), (includes items 50 & two of items 52 & 59)	
42	91513099	1	TETHER, **(S/N 0189001 thru 0160015436)**, (includes items 10, 52 & 59)	
43	91403230	1	MANUAL CASE	
44	88201016	1	HEX HD CAPSCREW, 5/16-18X1/2, GR5	
45	90206202	45 in	TRIM-LOCK	
46	91143220	118 in	TRIM-LOCK	
47	91404343	1	REINFORCING PLATE	
48	91404342	4	RIVET WASHERS	
49	88501012	4	HEX LOCKNUT, 3/4-10	
50	88201549	2	HEX HD CAPSCREW, 7/16-20X1, GR5	
51	91404437	13 ft	BULB SEAL	
52	88551012	4	LOCKWASHER, 7/16, **(S/N 0189001 thru 0160015436)**	
53	91403098	4	TAIL WASHER	
54		Ref	OPEN CAB ASSY, (see Figure 6-1 for details)	
55		1	TRIM LINE SEAT, (no longer available, see Figure 12-34 for details), **(S/N 0189001 thru 0160015436)**	
		Ref	SUSPENSION SEAT WITH 2 IN SEAT BELT, (see Figure 6-5 for details), **(S/N 0160015465 & After)**	
56	88201005	4	HEX HD CAPSCREW, 1/4-20X1, GR5	
57	88561002	10	FLAT WASHER, 1/4	
58	88561003	4	FLAT WASHER, 5/16, **(S/N 0189001 thru 0160015436)**	
59	88501307	4	HEX NUT, 7/16-20, **(S/N 0189001 thru 0160015436)**	
60	91404450	1	HINGE, 36 IN	
61	91514246	2	PROP BRACKET, (13mm)	
62	91474411	23	HEX HD SCREW, 8X3/4	
63	91474412	2	LOCKWASHER, 5/16	
64	91474413	2	NUT, 5/16	
65	91474414	2	BOLT, 5/16X1-1/4	
66	91404345	1	LINKAGE ROD	
67	91474416	4	RIVETS, 3/16	
68	91474417	1	PADDLE HANDLE GASKET	
69	91404442	1	ROTARY LATCH	
70	91404441	1	PADDLE HANDLE	
71	80384162	6	BOLT, 3/8X1-1/2	
72	80384164	6	NUT, 3/8	
73	91404347	2	EXPANDED SCREEN	
74	91474423	1	GAS PROP, 225#	
75	8340035	2	BALL STUD, (13mm)	
76	7023483	4	PROP CLIP	
77	91404348	1	GAS PROP, 100#	
78	91474427	1	LATCH PACKING PLATE	
79	91401487	1	CAB FENDER	
80	80973025	4	WHIZ-LOCK BOLT, 3/8-16X1	
81	91403217	2	REBOUND WASHER	
82	88501014	2	HEX NUT, 7/8-9	
83	91403153	4	SHOCK MOUNT	
84	91403325	2	HARDENED WASHER	
85	77321274	2	HEX HD CAPSCREW, 7/8-9X5	

Downloaded from www.Manualslib.com manuals search engine

https://truckmanualshub.com/

Figure 1-1 Frame Shrouding & Trim (Continued)

Item	Part Number	Qty.	Description	Rev.
86	83201058	4	HEX HD CAPSCREW, 3/4-10X3-3/4	
87	86681572	4	HARD WASHER, 13/16	
88	91403097	4	CAB ISOLATOR MOUNT	
89	91033320	Ref	TILT GAUGE, **(Before S/N 0160005745)**, (no longer available, use 8466306 for replacement)	
	8466306	1	TILT GAUGE, (with adhesive), **(S/N 0160005745 & After)**	
90	88204912	1	HEX HD CAPSCREW, 1/4-20X1, GR5, **(Before S/N 0160005745)**	
91	88561107	1	FLAT WASHER, 1/4, **(Before S/N 0160005745)**	
92	88521204	1	HEX LOCKNUT, 1/4-20, **(Before S/N 0160005745)**	
93	7027772	1	ADHESIVE KIT, (includes 3 tubes & applicator)	
94	91411071	1	COVER SUPPORT	
95	91513197	AR	BULB SEAL	
97	88201532	2	HEX HD CAPSCREW, 3/8-24X3/4, GR5	
	1001096344	1	LH MIRROR INSTALLATION, **(Before S/N 0160032846)**, (includes items 101 thru 111)	B
	1001097149	Ref	LH MIRROR INSTALLATION, **(S/N 0160032846 & After)**, (no longer available, order 1001115153 or items 102, 103, 108 & 109 for service)	B
101	1001096327	1	MIRROR BRACKET	
102	8866530	1	MIRROR MOUNT ARM ASSY	
103	8866514	1	MIRROR HEAD	
104	4420060	AR	DOUBLE SIDED TAPE	
105	1001096728	1	BOLT, 1/2-13	
106	4751800	1	WASHER, 1/2	
107	4761800	1	LOCKWASHER, 1/2	
108	8303799	2	HEX HD CAPSCREW, M6X1X14mm, GR8.8	
109	8307024	2	LOCKWASHER, M6	
110	88501008	1	HEX NUT, 1/2-13	
111	91403503	1	SPACER	
218	0100019	AR	LOCTITE® 271™	
	1001115153	1	LH MIRROR INSTALLATION, (includes items 301 thru 304)	A
301	0700610	2	HEX HD CAPSCREW, M6X20, GR8.8	
302	3140007	1	RECTANGULAR MIRROR	
303	8307024	2	LOCKWASHER, M6	
304	1001114675	1	MIRROR ARM	
401	1001116274	1	MOLDED RESISTOR	
402	NSS	1	MOUNTING BAR	
403	86683480	2	BUTT CONNECTOR	
K1	2915184	1	BACK-UP ALARM SERVICE KIT, (includes items 1 thru 4, 402 & 403)	A

Downloaded from www.Manualslib.com manuals search engine

https://truckmanualshub.com/

Figure 1-1 Frame Shrouding & Trim (Continued)

Item	Part Number	Qty.	Description	Rev.

Downloaded from www.Manualslib.com manuals search engine

https://truckmanualshub.com/

Figure 1-2 Rear Axle & Attaching Parts

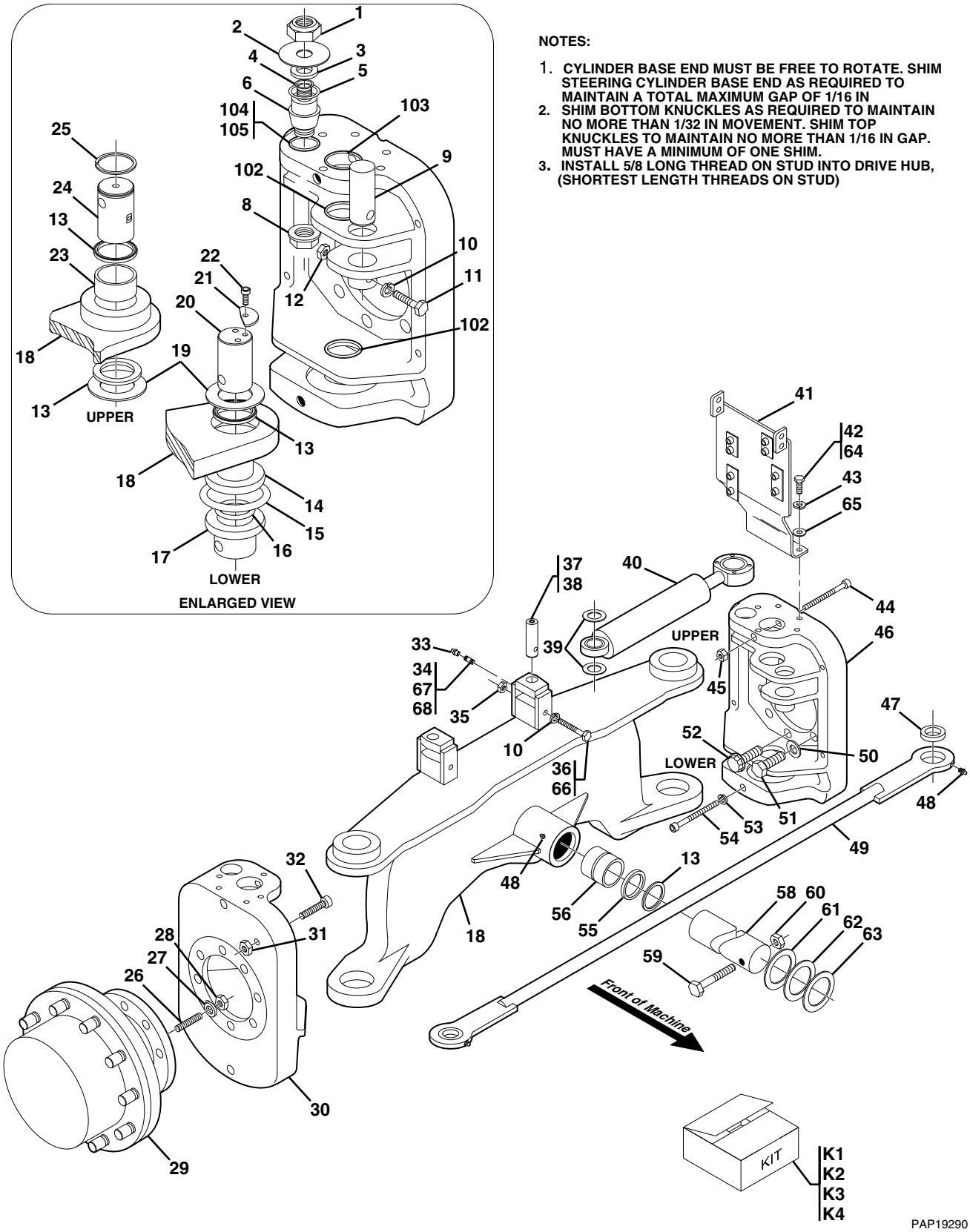

NOTES:

1. CYLINDER BASE END MUST BE FREE TO ROTATE. SHIM STEERING CYLINDER BASE END AS REQUIRED TO MAINTAIN A TOTAL MAXIMUM GAP OF 1/16 IN
2. SHIM BOTTOM KNUCKLES AS REQUIRED TO MAINTAIN NO MORE THAN 1/32 IN MOVEMENT. SHIM TOP KNUCKLES TO MAINTAIN NO MORE THAN 1/16 IN GAP. MUST HAVE A MINIMUM OF ONE SHIM.
3. INSTALL 5/8 LONG THREAD ON STUD INTO DRIVE HUB, (SHORTEST LENGTH THREADS ON STUD)

Downloaded from www.Manualslib.com manuals search engine

https://truckmanualshub.com/

Figure 1-2 Rear Axle & Attaching Parts

Item	Part Number	Qty.	Description	Rev.
1	88521312	2	LOCKNUT, 3/4-10, (torque to 160-175 lb-ft)	
2	91081415	2	DIRT SHIELD	
3	91041732	2	SPACER	
4	88591019	2	O-RING	
5	3790226	2	O-RING	
6	91343052	2	ROD END STEER CYLINDER PIN	
8	1001099173	2	FLANGE NUT	
9	91403082	2	TIE ROD PIN	
10	88551011	4	LOCKWASHER, 3/8	
11	83201021	2	HEX HD CAPSCREW, 3/8-16X3	
12	88521306	2	HEX LOCKNUT, 3/8-16, (nylok)	
13	91403145	8	WIPER SEAL	
14	91403034	2	LOWER BUSHING	
15	91403146	2	O-RING	
16	3790230	2	O-RING	
17	91401081	2	THRUST BUSHING	
18	91406017	1	REAR AXLE WELDMENT, (includes items 14, 23, 56 & 69)	
19	91403163	AR	KING PIN SHIM, (see note #2)	
	91403164	AR	KING PIN SHIM, (see note #2)	
	91403165	AR	KING PIN SHIM, (see note #2)	
	91403166	AR	KING PIN SHIM, (see note #2)	
20	91403078	2	LOWER KING PIN	
21	91403067	2	RETAINING WASHER	
22	88211068	2	SOCKET HD CAPSCREW, 3/8-16X5/8, GR8	
23	91403031	2	UPPER BUSHING	
24	91403079	2	UPPER KING PIN	
25	88581325	2	SNAP RING	
26	91123092	8	STUD, (see note #3)	
27	85401340	8	HARD WASHER	
28	91083449	8	HEX NUT, 1/2-13	
29		Ref	DRIVE HUB, (see Figure 5-11 for details)	
30	Use Kit K3	1	RH KNUCKLE	
31	88501110	2	HEX NUT, 5/8-11	
32	88212321	2	SOCKET HD CAPSCREW, 5/8-11X3-3/4, GR8	
33	90028740	2	FEMALE GREASE FITTING	
34	88701021	2	NIPPLE, 1/8X2	
35	88501006	2	HEX NUT, 3/8-16	
36	83201144	2	HEX HD CAPSCREW, 3/8-16X5-3/4	
37	91403372	2	BASE END STEER CYLINDER PIN	
38	88711280	2	HEX SOCKET PIPE PLUG, 1/8	
39	91403065	AR	KING PIN SHIM, (see note #1)	
	91403066	AR	KING PIN SHIM, (see note #1)	
40		Ref	STEERING CYLINDER, (see Figure 9-6 for details)	
41	91406098	1	LH TUBE SUPPORT	
	91406099	1	RH TUBE SUPPORT	
42	0641608	4	HEX HD CAPSCREW, 3/8-16X1, GR5	
43	4761600	4	LOCKWASHER, 3/8	
44	88212272	2	SOCKET HD CAPSCREW, 5/8-11X8, GR8	
45	88521210	2	HEX LOCKNUT, 5/8, (nylok)	

Downloaded from www.Manualslib.com manuals search engine

https://truckmanualshub.com/

Figure 1-2 Rear Axle & Attaching Parts (Continued)

Item	Part Number	Qty.	Description	Rev.
46	Use Kit K4	1	LH KNUCKLE	
47	8050001	2	SELF-ALIGNING BUSHING, (tie rod)	
48	88671001	4	STRAIGHT LUBE FITTING, 1/8	
49	91406021	1	TIE ROD WELDMENT, (includes item 47)	
50	86681572	12	HARDENED WASHER, 3/4	
51	83201006	12	HEX HD CAPSCREW, 3/4-10X2	
52	91043222	4	12 POINT SCREW, 3/4-10X2	
53	88551154	2	LOCKWASHER, 3/4, (hi-collar)	
54	88212285	2	SOCKET HD CAPSCREW, 3/4-10X5, GR8	
55	91403145	2	WIPER SEAL	
56	91403033	2	PIVOT TUBE BUSHING	
58	91081177	1	REAR AXLE PIN	
59	90020247	1	HEX HD CAPSCREW, 1-1/4-7X6	
60	88521020	1	LOCKNUT, 1-1/4-7	
61	91403174	AR	SHIM, (.125 thick)	
62	91403173	AR	SHIM, (.109 thick)	
63	91403172	AR	SHIM, (.062 thick)	
64	14404793	AR	UNION 76 MEGAPLEX GREASE	
65	4711600	4	FLAT WASHER, 3/8	
67	14403303	AR	LOCTITE PIPE SEALANT	
68	14404102	AR	LOCTITE® 277™	
69	91163019	2	BUSHING, (not shown)	
102	91403354	2	BUSHING	
103	91403355	1	BUSHING	
104	91551039	1	BUSHING	
105	14404978	AR	LOCTITE® 641™	
201	14404067	AR	SILICON SEALANT	
K1	91415039	1	STEERING KNUCKLE KIT, (includes items 2 thru 5, 13 thru 17, 19 thru 25, 44, 45, 53 & 54)	
K2	91415040	1	STEERING CYLINDER PIN KIT, (includes one each of items 1 thru 8, one kit needed for each side)	
K3	91555032	AR	RH KNUCKLE KIT, (includes items 8, 30 & 102 thru 105)	
K4	91555031	AR	LH KNUCKLE KIT, (includes items 8, 46 & 102 thru 105)	

Downloaded from www.Manualslib.com manuals search engine

https://truckmanualshub.com/

Figure 1-2 Rear Axle & Attaching Parts (Continued)

Item	Part Number	Qty.	Description	Rev.

Downloaded from www.Manualslib.com manuals search engine

https://truckmanualshub.com/

Figure 1-3 Front Axle Mounting

ROCKWELL

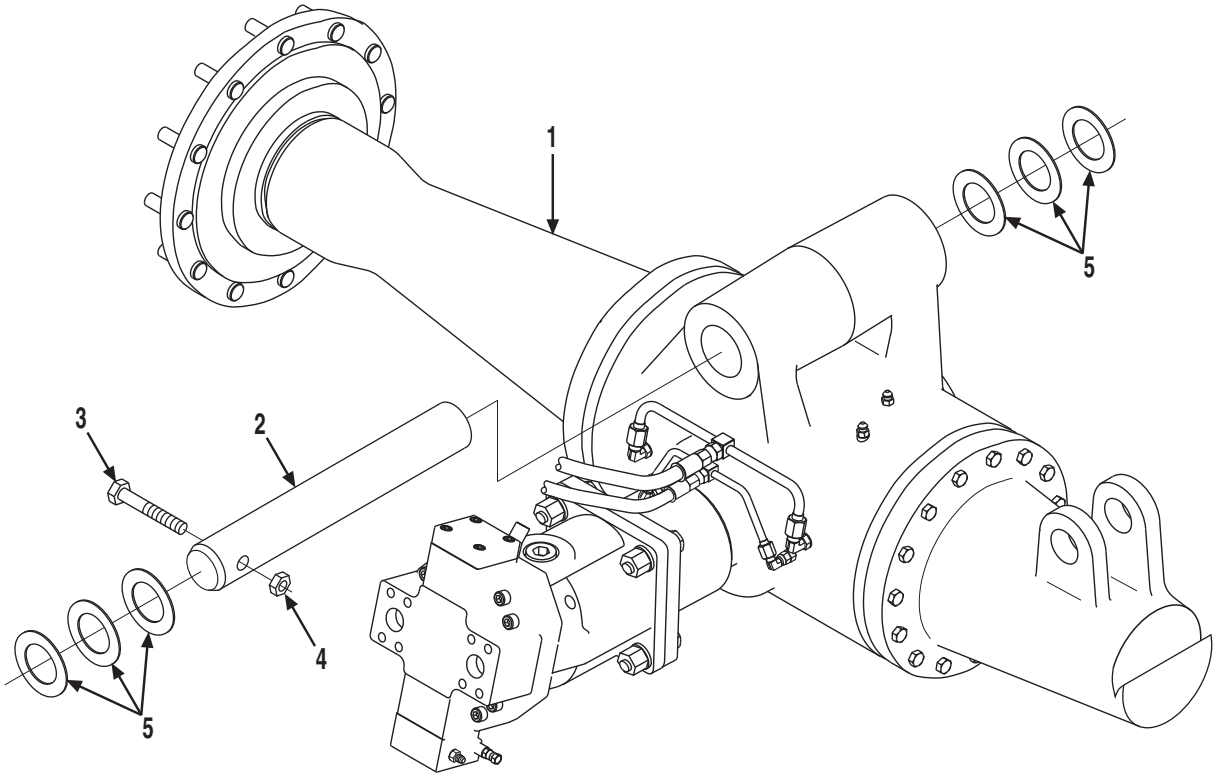

Downloaded from www.Manualslib.com manuals search engine

https://truckmanualshub.com/

Figure 1-3 Front Axle Mounting

Item	Part Number	Qty.	Description	Rev.
1		Ref	FRONT AXLE ASSY, (see Figure 5-1 for details)	
2	91413004	1	FRONT AXLE PIVOT PIN	
3	83201172	1	HEX HD CAPSCREW, 1-8X6, GR8	
4	88521016	1	HEX LOCKNUT, 1-8	
5	91403241	AR	HARDENED WASHER	
	91403242	AR	HARDENED WASHER	
	91403243	AR	HARDENED WASHER	
6	14404793	AR	MYSTIK TETRIMOLY GREASE, (not shown)	

Downloaded from www.Manualslib.com manuals search engine

https://truckmanualshub.com/

Figure 1-3 Front Axle Mounting

CARRARO

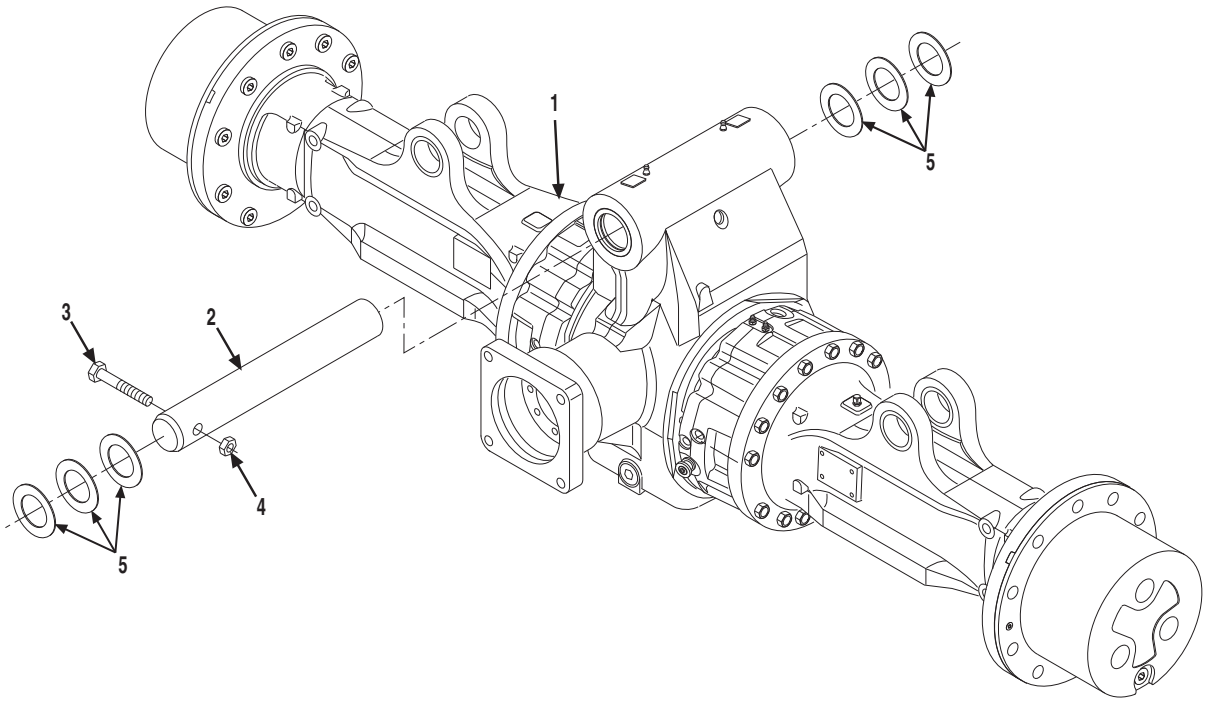

Downloaded from www.Manualslib.com manuals search engine

https://truckmanualshub.com/

Figure 1-3 Front Axle Mounting

Item	Part Number	Qty.	Description	Rev.
1		Ref	FRONT AXLE ASSY, (see Figure 5-6 for details)	
2	91413004	1	FRONT AXLE PIVOT PIN	
3	83201036	1	HEX HD CAPSCREW, 1-8X6, GR8	
4	88521016	1	HEX LOCKNUT, 1-8	
5	91403241	AR	HARDENED WASHER	
	91403242	AR	HARDENED WASHER	
	91403243	AR	HARDENED WASHER	

Downloaded from www.Manualslib.com manuals search engine

https://truckmanualshub.com/

This Page Intentionally Left Blank

Downloaded from www.Manualslib.com manuals search engine

https://truckmanualshub.com/

SECTION 2
BOOM

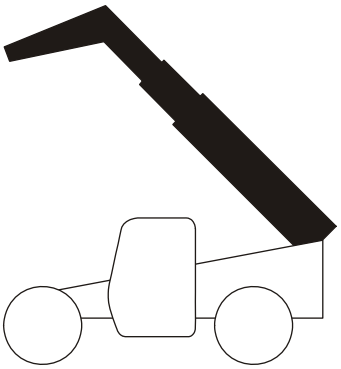

Downloaded from www.Manualslib.com manuals search engine

https://truckmanualshub.com/

Figure 2-1 First Boom Section

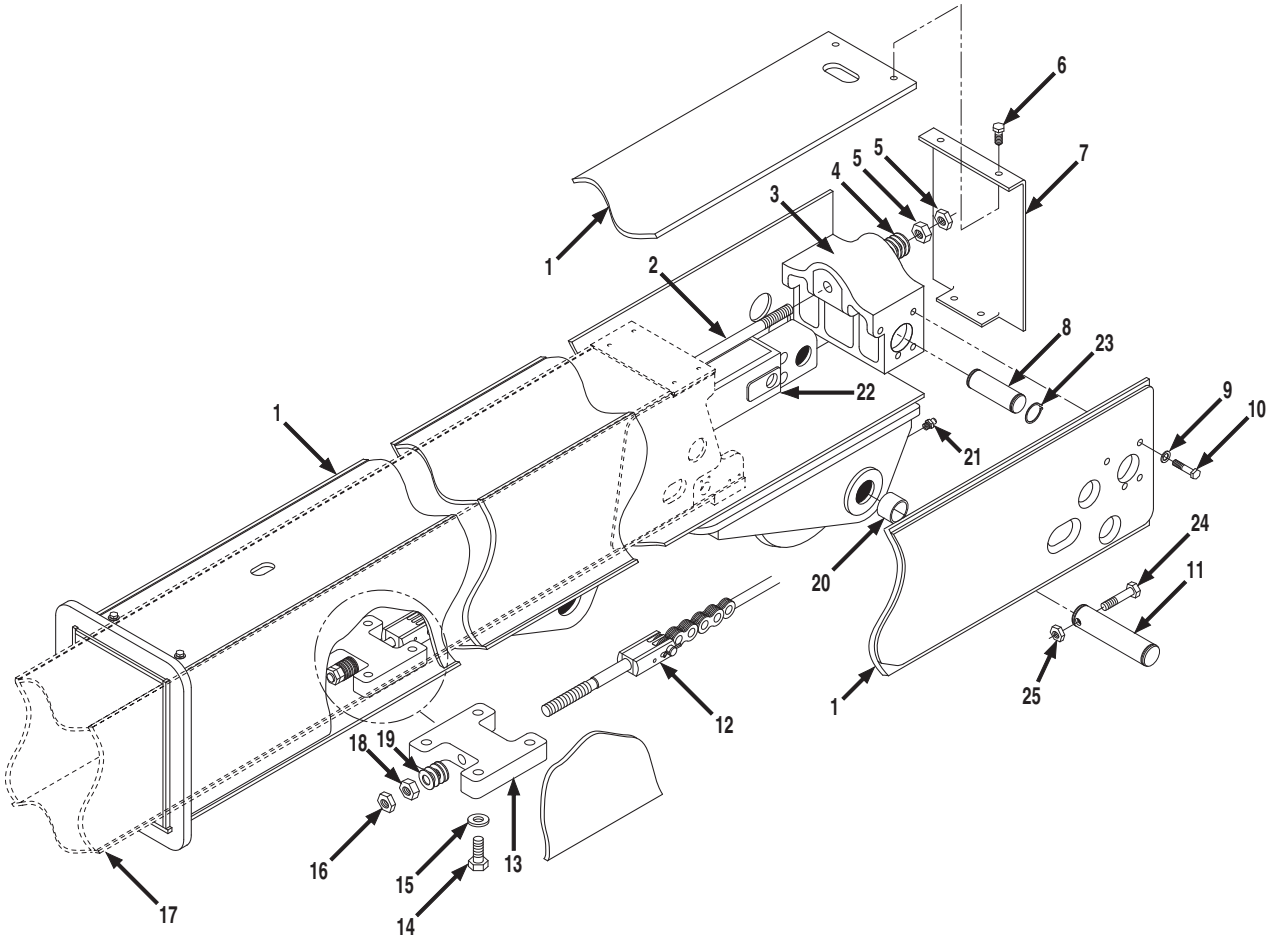

NOTE:

1. USE LOCTITE® 242™ (0100011) ON ALL BOLT THREADS & JAM NUTS.
2. COAT STATIC, NON ROTATING, PIN BORES WITH MOLY-PASTE (3020040). DO NOT COAT THE PIN OR ANY ROTATING PARTS.
3. COAT ALL BUSHINGS, SHEAVES & ROTATING PIN BORES WITH MYSTIK TETRIMOLY GREASE (14404793) PRIOR TO INSTALLATION OF THE PIN.

Downloaded from www.Manualslib.com manuals search engine

https://truckmanualshub.com/

Figure 2-1 First Boom Section

Item	Part Number	Qty.	Description	Rev.
1	91406012	1	FIRST BOOM SECTION	
2		Ref	CHAIN CLEVIS ROD, (see Figure 2-7, item 4 for details)	
3	91403061	1	STRONG BACK	
4	91413139	8	SPRING WASHER, 7/8	
5	91403493	2	HEAVY HEX NUT, 7/8-14, (torque to 100-110 lb-ft)	
6	80973025	4	WHIZ-LOCK SCREW, 3/8-16X1	
7	1001128273	1	REAR COVER	
8		Ref	EXTEND/RETRACT CYLINDER PIN, (see Figure 9-2 for details)	
9	4712000	8	FLAT WASHER, 5/8	
10	0642012	8	HEX HD CAPSCREW, 5/8-11X1-1/2, GR5, (torque to 125-155 lb-ft)	
11	91403025	1	BOOM PIVOT PIN	
12		Ref	CHAIN CLEVIS, (see Figure 2-3, item 12 for details)	
13	91401193	1	ANCHOR PLATE	
14	0641810	4	HEX HD CAPSCREW, 1/2-13X1-1/4, GR5	
15	4711800	4	WASHER, 1/2	
16	88501410	1	HEX JAM NUT, 5/8-18, (torque to 100-110 lb-ft)	
17		Ref	SECOND BOOM SECTION, (see Figure 2-3 for details)	
18	88501310	1	HEX NUT, 5/8-18	
19	91413138	8	SPRING WASHER, 5/8	
20	91403114	2	BOOM PIVOT BUSHING	
21	88671001	2	STRAIGHT LUBE FITTING, 1/8	
22		Ref	PUSH BEAM, (see Figure 2-7 for details)	
23	88581149	2	RETAINING RING	
24	0682048	1	HEX HD CAPSCREW, 5/8-11X6, GR8	
25	88521010	1	HEX NUT, 5/8-11	

Downloaded from www.Manualslib.com manuals search engine

https://truckmanualshub.com/

Figure 2-2 Bearing Pads, Spacers & Shims, (First Boom Section)

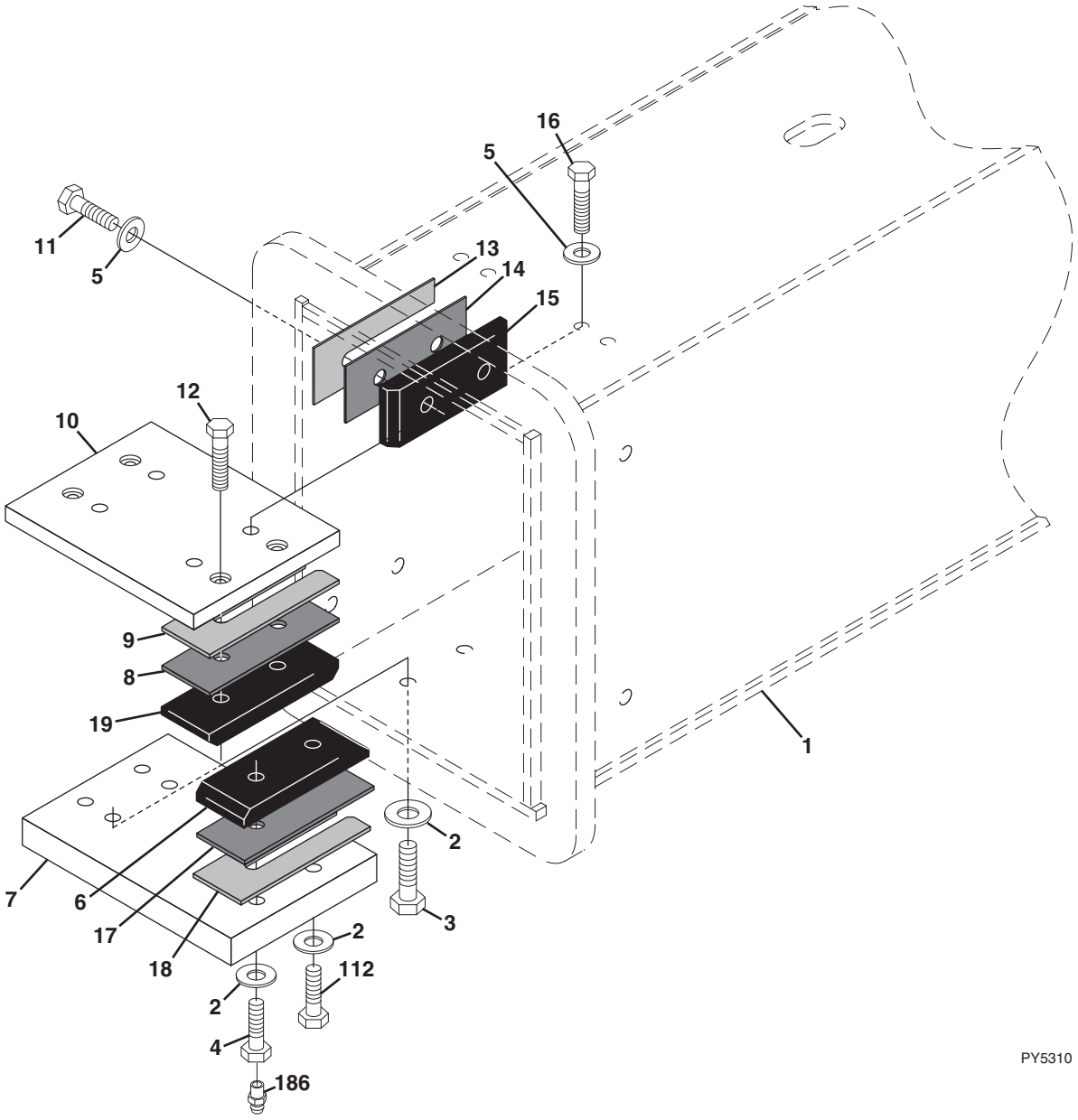

NOTE:
1. WEAR PAD SHIMMING:
   A. WHENEVER A SHIM IS USED WITH A PAD, A SPACER WITH HOLES MUST BE INSERTED BETWEEN PAD & SHIM.
   B. THE WEAR PAD OR WEAR PAD INSERT MUST NOT SIT DIRECTLY ON THE SLOTTED SURFACE OF SHIMS.
   C. ADD WEAR PAD SHIMS & SPACERS AS REQUIRED TO SHIM BOOM TO MAINTAIN A TOTAL MINIMUM GAP OF 0.070 TO 0.130 IN (1.8MM TO 3.3MM) IN BOTH HORIZONTAL & VERTICAL DIRECTIONS.
   D. WEAR PAD BOLTS REQUIRE ONE HARDENED WASHER. HOWEVER, UPTO (2) HARDENED WASHERS MAY BE USED EXCEPT WHERE NOTED OTHERWISE. UNDER NO CIRCUMSTANCES SHOULD MORE THAN (2) HARDENED WASHERS EVER BE USED.
   E. THE LENGTH OF PAD BOLTS DEPENDS ON THE NUMBER OF THE SHIMS USED. THE BOLT CANNOT EXTEND PAST CHAMFER ON WEAR PAD.

2. ADD MYSTIK TETRIMOLY GREASE (14404793) TO ALL BEARING PADS & ALL BEARING PAD SLIDE PATHWAYS. IF APPLICABLE, THIS INCLUDES ALL PAD GREASE FITTINGS AT THE REAR OF BOOM.

Downloaded from www.Manualslib.com manuals search engine

https://truckmanualshub.com/

Figure 2-2 Bearing Pads, Spacers & Shims, (First Boom Section)

Item	Part Number	Qty.	Description	Rev.
1		Ref	FIRST BOOM SECTION, (see Figure 2-1 for details)	
2	90027471	8	HARDENED WASHER, 1/2	
3	0641808	4	HEX HD CAPSCREW, 1/2-13X1, GR5, (torque to 76-86 lb-ft)	
4	88991005	AR	HEX HD CAPSCREW, 1/2-20X1, (torque to 45-50 lb-ft)	
	91161222	4	MODIFIED BOLT, **(S/N 0160037689 & After)**, (torque to 45-50 lb-ft)	
5	90027470	12	HARDENED WASHER, 3/8	
6	1001117654	2	WEAR PAD	
7	91401469	1	MOUNT PLATE	
8	91401224	2	SPACER	
9	91401215	AR	SHIM	
	91401216	AR	SHIM	
10	91401472	1	MOUNT PLATE	
11	0651607	AR	HEX HD CAPSCREW, 3/8-24X7/8, GR5, (torque to 32-37 lb-ft)	
	0651606	AR	HEX HD CAPSCREW, 3/8-24X3/4, GR5, **(S/N 0160037689 & After)**, (torque to 32-37 lb-ft)	
	0651608	AR	HEX HD CAPSCREW, 3/8-24X1, GR5, **(S/N 0160037689 & After)**, (torque to 32-37 lb-ft)	
12	0651608	AR	HEX HD CAPSCREW, 3/8-24X1, GR5, (torque to 32-37 lb-ft)	
	0651610	AR	HEX HD CAPSCREW, 3/8-24X1-1/4, GR5, **(S/N 0160037689 & After),** (torque to 32-37 lb-ft)	
13	91471227	AR	SHIM	
	91471226	AR	SHIM	
14	91401223	4	SPACER	
15	91403530	4	WEAR PAD	
16	0641607	AR	HEX HD CAPSCREW, 3/8-16X7/8, GR5, (torque to 32-37 lb-ft)	
	0651610	AR	HEX HD CAPSCREW, 3/8-24X1-1/4, GR5, (torque to 32-37 lb-ft)	
17	91401450	2	SPACER	
18	91401456	AR	SHIM	
	91401457	AR	SHIM	
19	91403532	2	WEAR PAD	
112	0651810	AR	HEX HD CAPSCREW, 1/2-20X1-1/4, GR5, **(S/N 0160037689 & After)**	
	0651812	AR	HEX HD CAPSCREW, 1/2-20X1-1/2, GR5, **(S/N 0160037689 & After)**	
186	88671008	2	STRAIGHT GREASE FITTING, **(S/N 0160037689 & After)**	

Downloaded from www.Manualslib.com manuals search engine

https://truckmanualshub.com/

Figure 2-3 Second Boom Section

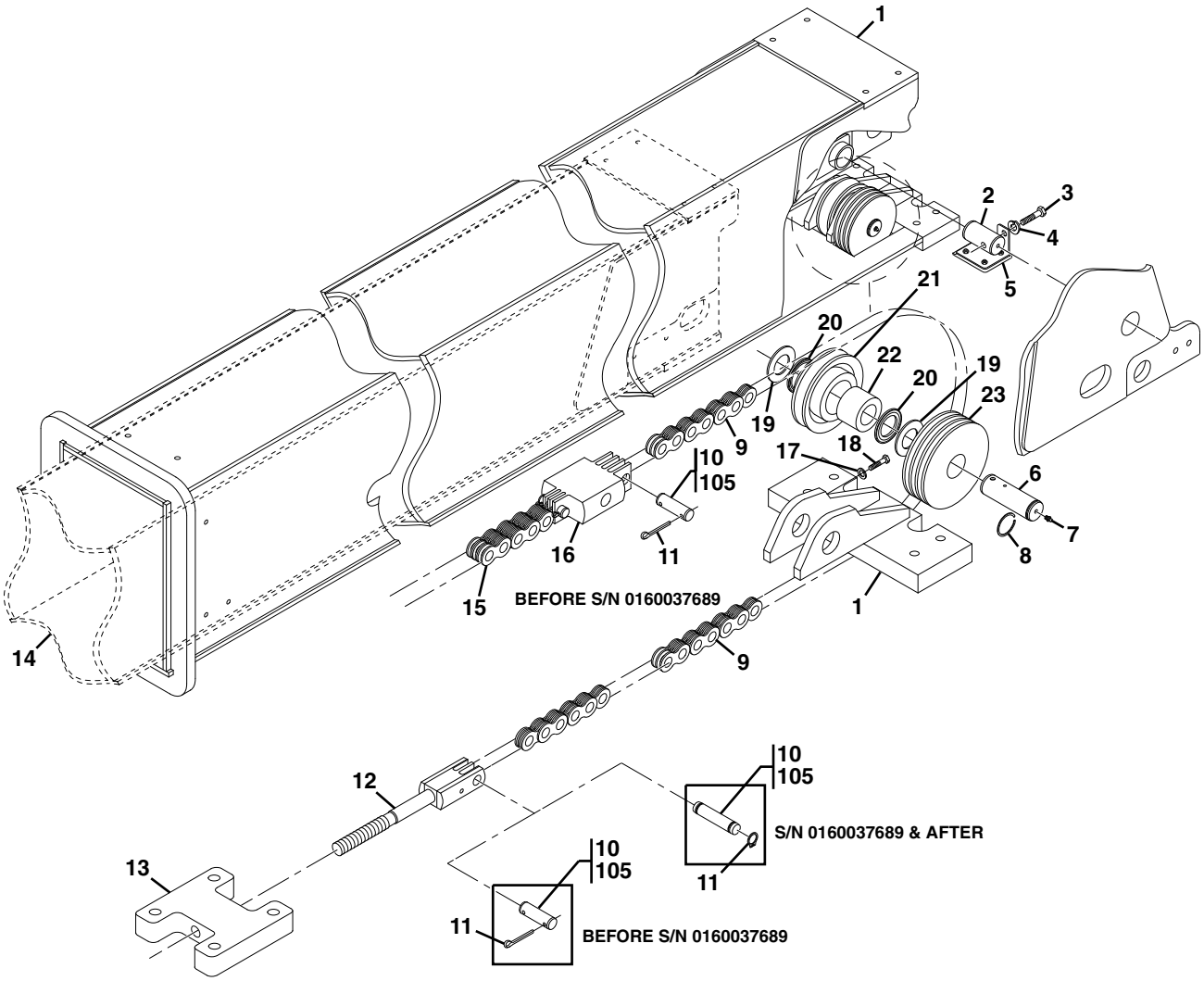

NOTE:

PAP23920

1. USE LOCTITE® 242™ (0100011) ON ALL BOLT THREADS & JAM NUTS.
2. COAT STATIC, NON ROTATING, PIN BORES WITH MOLY-PASTE (3020040). DO NOT COAT THE PIN OR ANY ROTATING PARTS.
3. COAT ALL BUSHINGS, SHEAVES & ROTATING PIN BORES WITH MYSTIK TETRIMOLY GREASE (14404793) PRIOR TO INSTALLATION OF THE PIN.

Downloaded from www.Manualslib.com manuals search engine

https://truckmanualshub.com/

Figure 2-3 Second Boom Section

Item	Part Number	Qty.	Description	Rev.
1	91406013	1	SECOND BOOM SECTION	
2	91141128	2	PUSH BEAM PIN	
3	0641829	2	HEX HD CAPSCREW, 1/2-13X3-5/8, GR5	
4	4761800	2	LOCKWASHER, 1/2	
	4751800	2	PLAIN WASHER, 1/2	
5	91405085	1	HOSE RETAINER, (includes the following items)	
	91401435	1	LH HOSE RETAINER	
	91403499	1	PAD	
	88241023	4	SOCKET FLAT HD CAPSCREW, #10-24X5/8	
	88501612	4	HEX NUT, #10-24	
6	91403018	1	RETRACTION SHEAVE PIN, **(Before S/N 0160037689)**	
	91403019	1	RETRACTION SHEAVE PIN, **(S/N 0160037689 & After)**	
7	88671001	1	STRAIGHT LUBE FITTING, 1/8, **(Before S/N 0160037689)**	
	2160001	1	GREASE FITTING, **(S/N 0160037689 & After)**	
8	90028932	1	RETAINING RING	
9	91403433	1	LEAF CHAIN, 643	
10	91403071	Ref	ANCHOR PIN, (no longer available, use 91413127 for replacement)	
	91413127	2	ANCHOR PIN	
11	88631302	2	COTTER PIN, 1/16X3/4, **(Before S/N 0160037689)**	
	88681344	2	SNAP RING, **(S/N 0160037689 & After)**	
12	1360291	1	CHAIN CLEVIS	
13		Ref	ANCHOR PLATE, (see Figure 2-1, item 13 for details)	
14		Ref	THIRD BOOM SECTION, (see Figure 2-5 for details)	
15		Ref	LEAF CHAIN, 866, (see Figure 2-7, item 101 for details)	
16		Ref	CLEVIS, 866-634, (see Figure 2-7, item 102 for details)	
17	4761600	1	LOCKWASHER, 3/8	
18	0641632	1	HEX HD CAPSCREW, 3/8-16X4, GR5	
19	91403126	AR	THRUST WASHER	
	91403127	AR	THRUST WASHER	
20	91403053	2	SEAL	
21	91403519	1	RETRACT ROLLER ASSY, (includes items 20 & 22)	
22	91403052	1	BUSHING	
23	3580347	1	HOSE SHEAVE	
105	8522012	AR	ANTI-SEIZE LUBE	

Downloaded from www.Manualslib.com manuals search engine

https://truckmanualshub.com/

Figure 2-4 Bearing Pads, Spacers & Shims, (Second Boom Section)

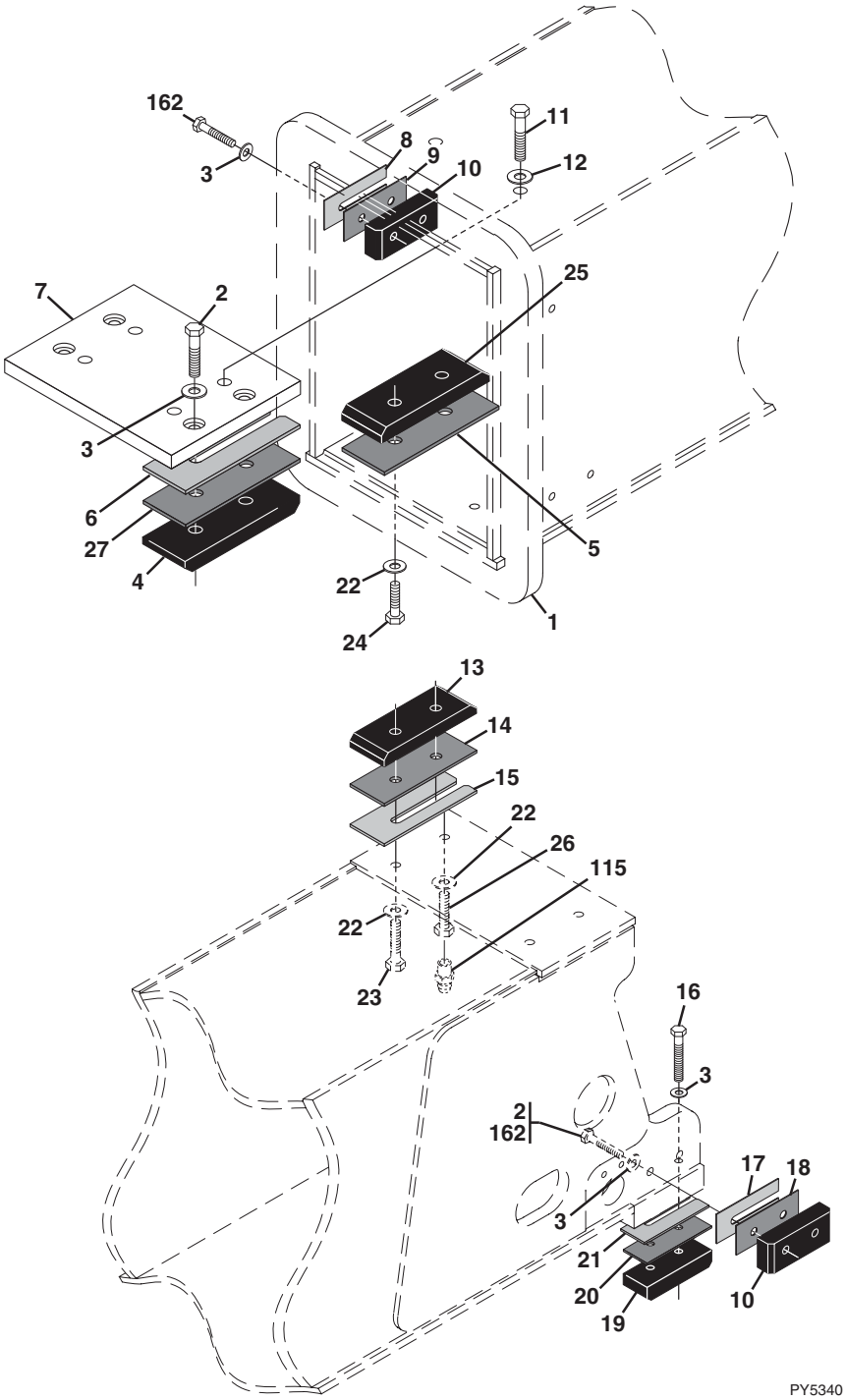

NOTE:

1. WEAR PAD SHIMMING :
   - A. WHENEVER A SHIM IS USED WITH A PAD, A SPACER WITH HOLES MUST BE INSERTED BETWEEN PAD & SHIM.
   - B. THE WEAR PAD OR WEAR PAD INSERT MUST NOT SIT DIRECTLY ON THE SLOTTED SURFACE OF SHIMS.
   - C. ADD WEAR PAD SHIMS & SPACERS AS REQUIRED TO SHIM BOOM TO MAINTAIN A TOTAL MINIMUM GAP OF 0.070 TO 0.130 IN (1.8MM TO 3.3MM) IN BOTH HORIZONTAL & VERTICAL DIRECTIONS.
   - D. WEAR PAD BOLTS REQUIRE ONE HARDENED WASHER. HOWEVER, UP TO TWO HARDENED WASHERS MAY BE USED EXCEPT WHERE NOTED OTHERWISE. UNDER NO CIRCUMSTANCES SHOULD MORE THAN TWO HARDENED WASHERS EVER BE USED.
   - E. THE LENGTH OF PAD BOLTS DEPENDS ON THE NUMBER OF THE SHIMS USED. THE BOLT CANNOT EXTEND PAST CHAMFER ON WEAR PAD.

2. ADD MYSTIK TETRIMOLY GREASE (14404793) TO ALL BEARING PADS & ALL BEARING PAD SLIDE PATHWAYS. IF APPLICABLE, THIS INCLUDES ALL PAD GREASE FITTINGS AT THE REAR OF BOOM.

Downloaded from www.Manualslib.com manuals search engine

https://truckmanualshub.com/

Figure 2-4 Bearing Pads, Spacers & Shims, (Second Boom Section)

Item	Part Number	Qty.	Description	Rev.
1		Ref	SECOND BOOM SECTION, (see Figure 2-3 for details)	
2	0651606	AR	HEX HD CAPSCREW, 3/8-24X3/4, GR5, **(S/N 0160037689 & After)**, (torque to 32-37 lb-ft)	
	0651608	AR	HEX HD CAPSCREW, 3/8-24X1, GR5, **(S/N 0160037689 & After)**, (torque to 32-37 lb-ft)	
	0651607	AR	HEX HD CAPSCREW, 3/8-24X7/8, GR5, (torque to 32-37 lb-ft)	
3	90027470	20	HARDENED WASHER, 3/8	
4	91403532	2	WEAR PAD	
5	91401450	2	SPACER	
6	91401215	AR	SHIM	
	91401216	AR	SHIM	
7	91401197	1	MOUNT PLATE	
8	91403126	AR	SHIM	
	91403127	AR	SHIM	
9	91401223	4	SPACER	
10	91403530	6	WEAR PAD	
11	0641807	4	HEX HD CAPSCREW, 1/2-13X7/8, GR5	
12	4711800	4	FLAT WASHER, 1/2	
13	1001117655	2	WEAR PAD	
14	91401191	AR	SPACER	
	91401451	AR	SPACER	
15	91401453	AR	SHIM	
	91401454	AR	SHIM	
16	0651614	4	HEX HD CAPSCREW, 3/8-24X1-3/4, GR5, (torque to 32-37 lb-ft)	
17	91471227	AR	SHIM	
	91471226	AR	SHIM	
18	91401223	2	SPACER	
19	91403531	2	WEAR PAD	
20	91401225	2	SPACER	
21	91471228	AR	SHIM	
	91471229	AR	SHIM	
22	90027471	8	HARDENED WASHER, 1/2	
23	0651810	AR	HEX HD CAPSCREW, 1/2-20X1-1/4, GR5, **(S/N 0160037689 & After)**, (torque to 76-86 lb-ft)	
	0651812	AR	HEX HD CAPSCREW, 1/2-20X1-1/2, GR5, (torque to 76-86 lb-ft)	
	0651807	AR	HEX HD CAPSCREW, 1/2-20X7/8, GR5, **(S/N 0160037689 & After)**, (torque to 76-86 lb-ft)	
	0651806	AR	HEX HD CAPSCREW, 1/2-20X3/4, GR5, **(S/N 0160037689 & After)**, (torque to 76-86 lb-ft)	
	0651808	AR	HEX HD CAPSCREW, 1/2-20X1, GR5, **(S/N 0160037689 & After)**, (torque to 76-86 lb-ft)	
24	0651805	AR	HEX HD CAPSCREW, 1/2-20X5/8, (torque to 76-86 lb-ft)	
	0651807	AR	HEX HD CAPSCREW, 1/2-20X7/8, **(S/N 0160037689 & After)**, (torque to 76-86 lb-ft)	
	0651806	AR	HEX HD CAPSCREW, 1/2-20X3/4, **(S/N 0160037689 & After)**, (torque to 76-86 lb-ft)	
25	1001117654	2	WEAR PAD	
26	88201563	2	HEX HD CAPSCREW, 1/2-20X7/8, GR5, **(Before S/N 0160037689)**, (torque to 76-86 lb-ft)	

Downloaded from www.Manualslib.com manuals search engine

https://truckmanualshub.com/

Figure 2-4 Bearing Pads, Spacers & Shims, (Second Boom Section) (Continued)

Item	Part Number	Qty.	Description	Rev.
	88991005	AR	HEX HD CAPSCREW, 1/2-20X1, GR5, **(S/N 0160037689 & After)**, (torque to 45-50 lb-ft)	
27	91401224	2	SPACER	
115	88671027	2	GREASE FITTING, **(S/N 0160037689 & After)**	
162	88201533	8	HEX HD CAPSCREW, 3/8-24X7/8, GR5, **(Before S/N 0160037689)**, (torque to 32-37 lb-ft)	
	88201530	AR	HEX HD CAPSCREW, 3/8-24X1/2, GR5, **(S/N 0160037689 & After)**, (torque to 32-37 lb-ft)	
	0651606	AR	HEX HD CAPSCREW, 3/8-24X3/4, GR5, **(S/N 0160037689 & After)**, (torque to 32-37 lb-ft)	
	0651605	AR	HEX HD CAPSCREW, 3/8-24X5/8, GR5, **(S/N 0160037689 & After)**, (torque to 32-37 lb-ft)	

Downloaded from www.Manualslib.com manuals search engine

https://truckmanualshub.com/

Figure 2-4 Bearing Pads, Spacers & Shims, (Second Boom Section) (Continued)

Item	Part Number	Qty.	Description	Rev.

Downloaded from www.Manualslib.com manuals search engine

https://truckmanualshub.com/

Figure 2-5 Third Boom Section

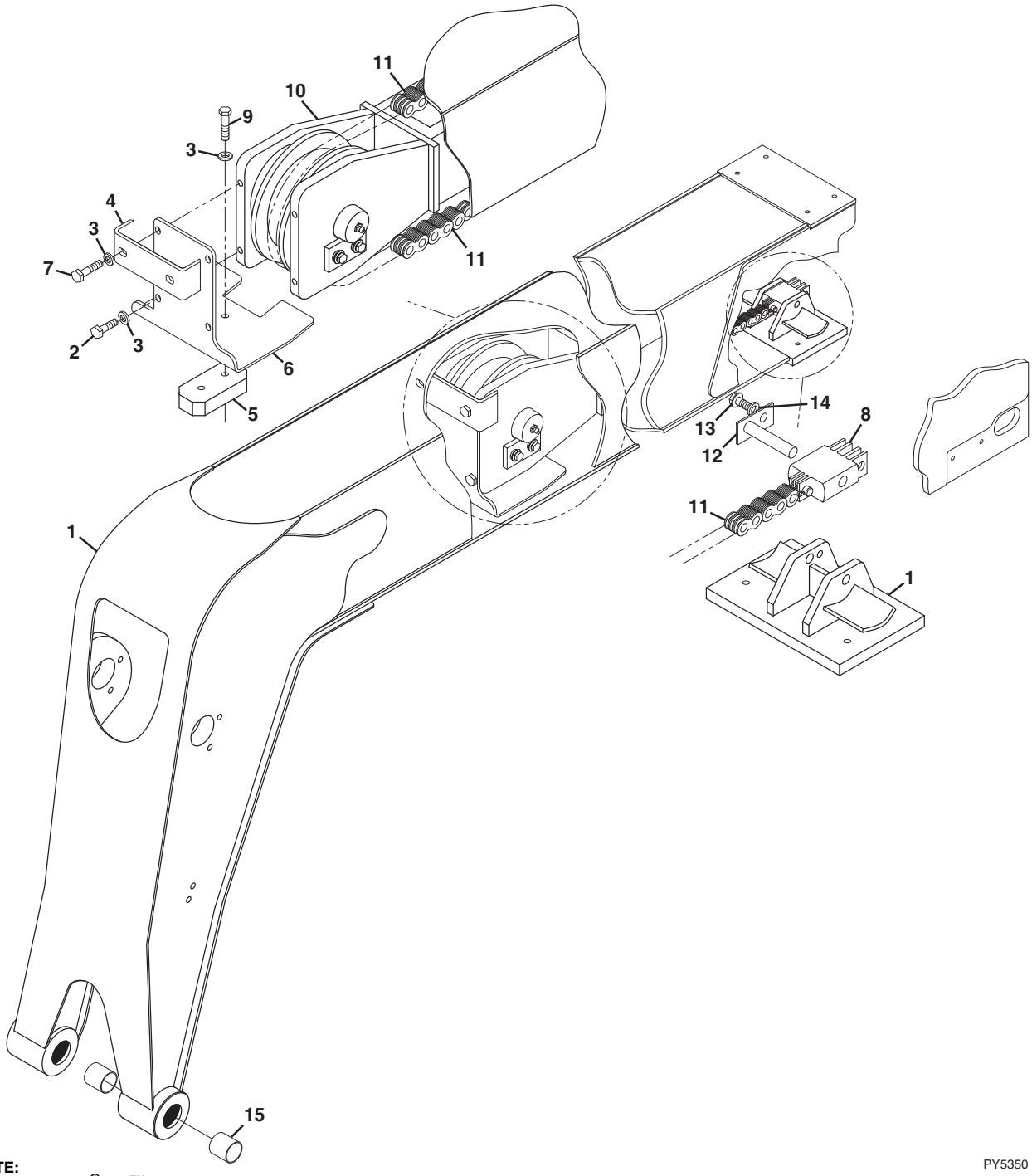

NOTE:
1. USE LOCTITE® 242™ (0100011) ON ALL BOLT THREADS & JAM NUTS.
2. COAT STATIC, NON ROTATING, PIN BORES WITH MOLY-PASTE (3020040). DO NOT COAT THE PIN OR ANY ROTATING PARTS.
3. COAT ALL BUSHINGS, SHEAVES & ROTATING PIN BORES WITH MYSTIK TETRIMOLY GREASE (14404793) PRIOR TO INSTALLATION OF THE PIN

Downloaded from www.Manualslib.com manuals search engine

https://truckmanualshub.com/

Figure 2-5 Third Boom Section

Item	Part Number	Qty.	Description	Rev.
1	91406014	1	THIRD BOOM SECTION, **(Before S/N 0160037689)**	
	1001102577	1	THIRD BOOM SECTION, **(S/N 0160037689 & After)**	
2	0641607	2	HEX HD CAPSCREW, 3/8-16X7/8, GR5	
3	4711600	6	FLAT WASHER, 3/8	
4	91401568	1	GUIDE BAR	
5	91403087	1	PUSH BEAM BEARING PAD	
6	91401204	1	CHAIN RETAINER	
7	0681610	2	HEX HD CAPSCREW, 3/8-16X1-1/4, (torque to 25-30 lb-ft)	
8		Ref	CLEVIS, 866-634, (see Figure 2-7 for details)	
9	0651614	2	HEX HD CAPSCREW, 3/8-24X1-3/4, GR5	
10		Ref	PUSH BEAM ASSY, (see Figure 2-7 for details)	
11		Ref	LEAF CHAIN ASSY, (see Figure 2-7 for details)	
12	91403425	1	ANCHOR PIN	
13	0641606	1	HEX HD CAPSCREW, 3/8-16X3/4, GR5, (torque to 25-30 lb-ft)	
14	4761600	1	LOCKWASHER, 3/8	
15	91403377	4	BUSHING	

Downloaded from www.Manualslib.com manuals search engine

https://truckmanualshub.com/

Figure 2-6 Bearing Pads, Spacers & Shims, (Third Boom Section)

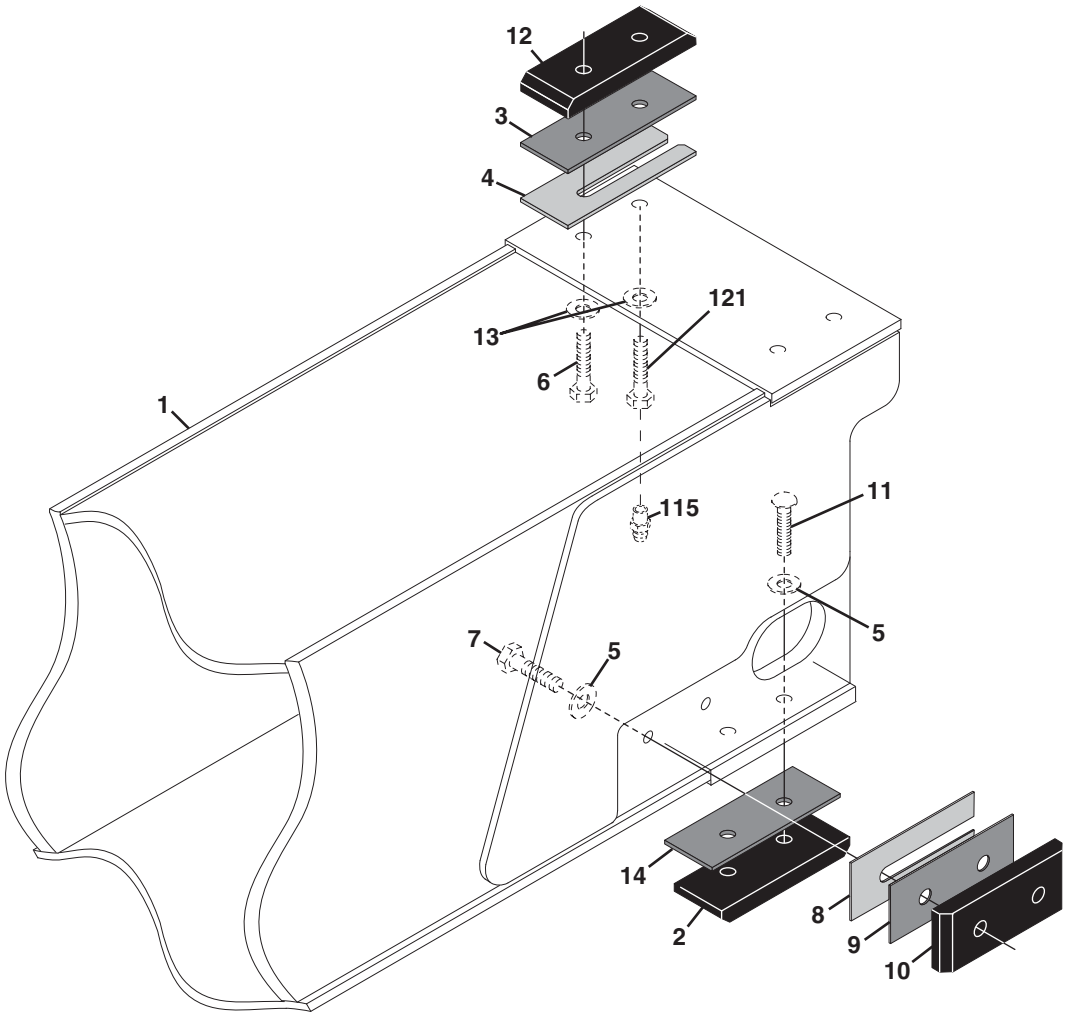

NOTE:
1. WEAR PAD SHIMMING:
   A. WHENEVER A SHIM IS USED WITH A PAD, A SPACER WITH HOLES MUST BE INSERTED BETWEEN PAD & SHIM.
   B. THE WEAR PAD OR WEAR PAD INSERT MUST NOT SIT DIRECTLY ON THE SLOTTED SURFACE OF SHIMS.
   C. ADD WEAR PAD SHIMS & SPACERS AS REQUIRED TO SHIM BOOM TO MAINTAIN A TOTAL MINIMUM GAP OF 0.070 TO 0.130 IN (1,8MM TO 3,3MM) IN BOTH HORIZONTAL & VERTICAL DIRECTIONS.• N
   D. WEAR PAD BOLTS REQUIRE ONE HARDENED WASHER. HOWEVER, UP TO TWO HARDENED WASHERS MAY BE USED EXCEPT WHERE NOTED OTHERWISE. UNDER NO CIRCUMSTANCES SHOULD MORE THAN TWO HARDENED WASHERS EVER BE USED.
   E. THE LENGTH OF PAD BOLTS DEPENDS ON THE NUMBER OF THE SHIMS USED. THE BOLT CANNOT EXTEND PAST CHAMFER ON WEAR PAD.

2. ADD MYSTIK TETRIMOLY GREASE (14404793) TO ALL BEARING PADS & ALL BEARING PAD SLIDE PATHWAYS. IF APPLICABLE, THIS INCLUDES ALL PAD GREASE FITTINGS AT THE REAR OF BOOM.

Downloaded from www.Manualslib.com manuals search engine

https://truckmanualshub.com/

Figure 2-6 Bearing Pads, Spacers & Shims, (Third Boom Section)

Item	Part Number	Qty.	Description	Rev.
1		Ref	THIRD BOOM SECTION, (see Figure 2-5 for details)	
2	91403533	2	WEAR PAD	
3	91401451	2	SPACER	
4	91401453	AR	SHIM	
	91401454	AR	SHIM	
5	90027470	AR	FLAT WASHER, 3/8	
6	0651812	AR	HEX HD CAPSCREW, 1/2-20X1-1/2, GR5, (torque to 76-86 lb-ft)	
	0651810	AR	HEX HD CAPSCREW, 1/2-20X1-1/4, GR5, **(S/N 0160037689 & After)**, (torque to 76-86 lb-ft)	
7	0651607	AR	HEX HD CAPSCREW, 3/8-24X7/8, GR5, (torque to 32-37 lb-ft)	
	0651606	AR	HEX HD CAPSCREW, 3/8-24X3/4, GR5, **(S/N 0160037689 & After)**, (torque to 32-37 lb-ft)	
	0651605	AR	HEX HD CAPSCREW, 3/8-24X5/8, GR5, **(S/N 0160037689 & After)**, (torque to 32-37 lb-ft)	
8	91471228	AR	SHIM	
9	91401225	2	SPACER	
10	91403531	2	WEAR PAD	
11	88261128	AR	SOCKET BUTTON HD CAPSCREW, 3/8-24X1, (torque to 32-37 lb-ft)	
	88261129	AR	SOCKET BUTTON HD CAPSCREW, 3/8-24X1-1/4, **(S/N 0160037689 & After)**, (torque to 32-37 lb-ft)	
12	1001117655	2	WEAR PAD	
13	90027471	4	HARDENED WASHER, 1/2	
14	91401226	2	SPACER	
115	88671027	2	GREASE FITTING, **(S/N 0160037689 & After)**	
121	88991005	AR	HEX HD CAPSCREW, 1/2-20X1, GR5, **(S/N 0160037689 & After)**, (torque to 45-50 lb-ft)	
	91161222	AR	MODIFIED BOLT, GR5, **(S/N 0160037689 & After)**, (torque to 45-50 lb-ft)	

Downloaded from www.Manualslib.com manuals search engine

https://truckmanualshub.com/

Figure 2-7 Push/Beam Extend Chain & Roller Assembly

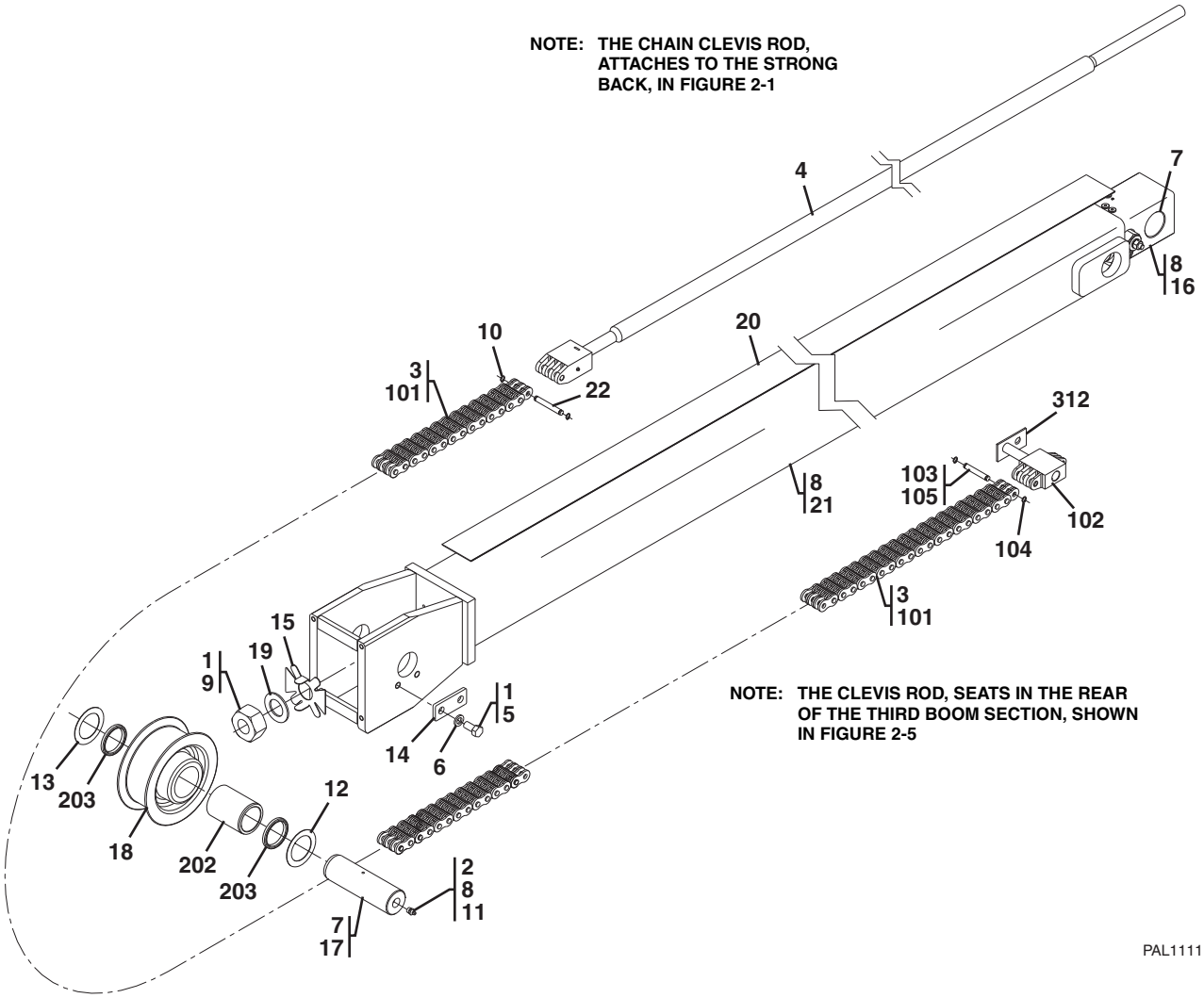

NOTE: SEE FIGURE 2-5 FOR PUSH BEAM, CHAIN RETAINER & WEAR PADS.

Downloaded from www.Manualslib.com manuals search engine

https://truckmanualshub.com/

Figure 2-7 Push/Beam Extend Chain & Roller Assembly

Item	Part Number	Qty.	Description	Rev.
	0275798	1	PUSH BEAM ASSY, (includes items 1 thru 22)	B
1	0100011	AR	LOCTITE® 242™	
2	0100075	AR	LOCTITE® 545™	
3	0274674	1	LEAF CHAIN ASSY, (includes items 101 thru 105)	C
4	0274799	1	CHAIN CLEVIS ROD	
5	0641808	2	HEX HD CAPSCREW, 1/2-13X1, GR5	
6	4761800	2	LOCKWASHER, 1/2	
7	14403323	AR	NEVER SEEZE LUBE	
8	14404793	AR	MYSTIK TETRIMOLY GREASE	
9	88501322	1	HEX NUT, 1-3/8-12, (torque to 155-195 lb-ft)	
10	88581112	2	SNAP RING, 3/8	
11	88671001	1	STRAIGHT LUBE FITTING, 1/8	
12	91041451	1	SHIM	
13	91041596	1	SHIM	
14	91401189	1	KEEPER	
15	91401190	1	TAB WASHER	
16		Ref	CROWD CYLINDER, (see Figure 9-2 for details)	
17	91403017	1	EXTEND SHEAVE PIN	
18	91403045	1	CHAIN ROLLER ASSY, (includes items 202 & 203)	B
19	91403065	1	HARD WASHER	
20	91513029	1	UHMW TAPE, 13 FT	
21	91406015	1	PUSH BEAM WELDMENT	
22	91413122	1	ANCHOR PIN	
101	91403432	1	LEAF CHAIN, 866	
102	1360298	1	CLEVIS, 866-634	
103	91413123	1	ANCHOR PIN	
104	88581112	2	SNAP RING, 3/8	
105	8522012	AR	ANTI-SEIZE LUBE	
202	91403047	1	BUSHING	
203	91403119	2	SEAL	
312		Ref	ANCHOR PIN, (see Figure 2-5 for details)	

Downloaded from www.Manualslib.com manuals search engine

https://truckmanualshub.com/

Figure 2-8 Quick Switch Assembly

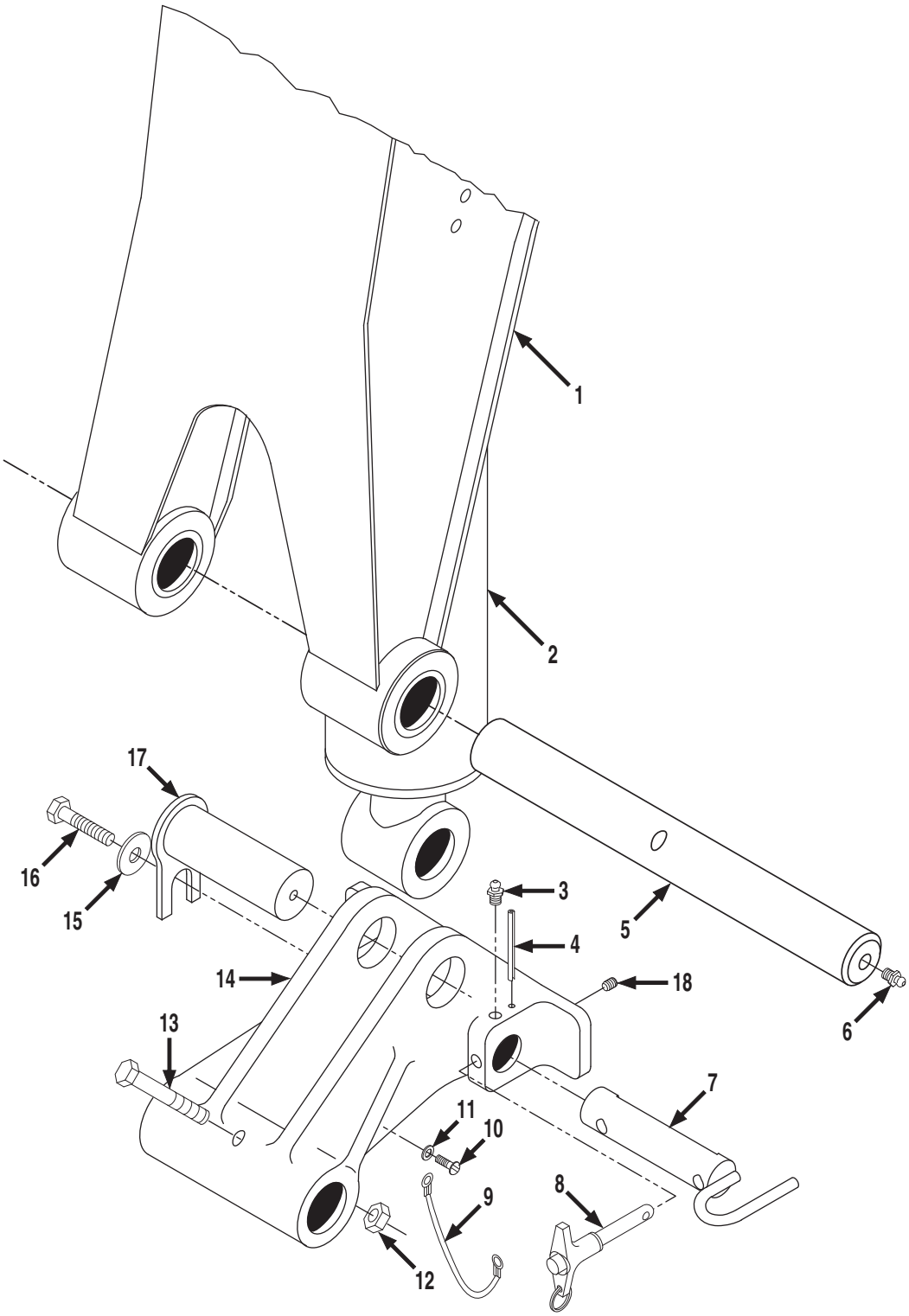

NOTE:

USE LOCTITE, 14403364, ON ALL BOLT THREADS.

Downloaded from www.Manualslib.com manuals search engine

https://truckmanualshub.com/

Figure 2-8 Quick Switch Assembly

Item	Part Number	Qty.	Description	Rev.
	91405032	1	QUICK SWITCH ASSY, (includes items 3, 4, 7 thru 11, 14 & 18)	F
1		Ref	THIRD BOOM SECTION, (see Figure 2-5 for details)	
2		Ref	TILT CYLINDER, (see Figure 9-3 for details)	
3	88671008	1	STRAIGHT LUBE FITTING, 1/4-28	
4	3440832	1	ROLL PIN, 1/4X2	
5	91403020	1	HEAD PIN	
6	88661001	2	STRAIGHT LUBE FITTING, 1/8	
7	91403404	1	QUICK SWITCH PIN	
8	91403407	1	QUICK RELEASE PIN	
9	91403411	1	TETHER CABLE	
10	88301193	1	ROUND HD MACHINE SCREW, #10-32X1/2	
11	88561105	1	FLAT WASHER, #10	
12	88521012	1	HEX LOCKNUT, 3/4-10	
13	91403412	1	HEX HD CAPSCREW, 1/2-13X6	
14	91403060	1	QUICK SWITCH CASTING	
15	8310308	1	HARDENED WASHER, 1/2	
16	88201067	1	HEX HD CAPSCREW, 1/2-13X1-1/2, GR5	
17	91403405	1	PIN WELDMENT	
18	88221276	1	SOCKET SET SCREW, (flat point), 1/2-13X1/2	

Downloaded from www.Manualslib.com manuals search engine

https://truckmanualshub.com/

Figure 2-8 Quick Switch Assembly

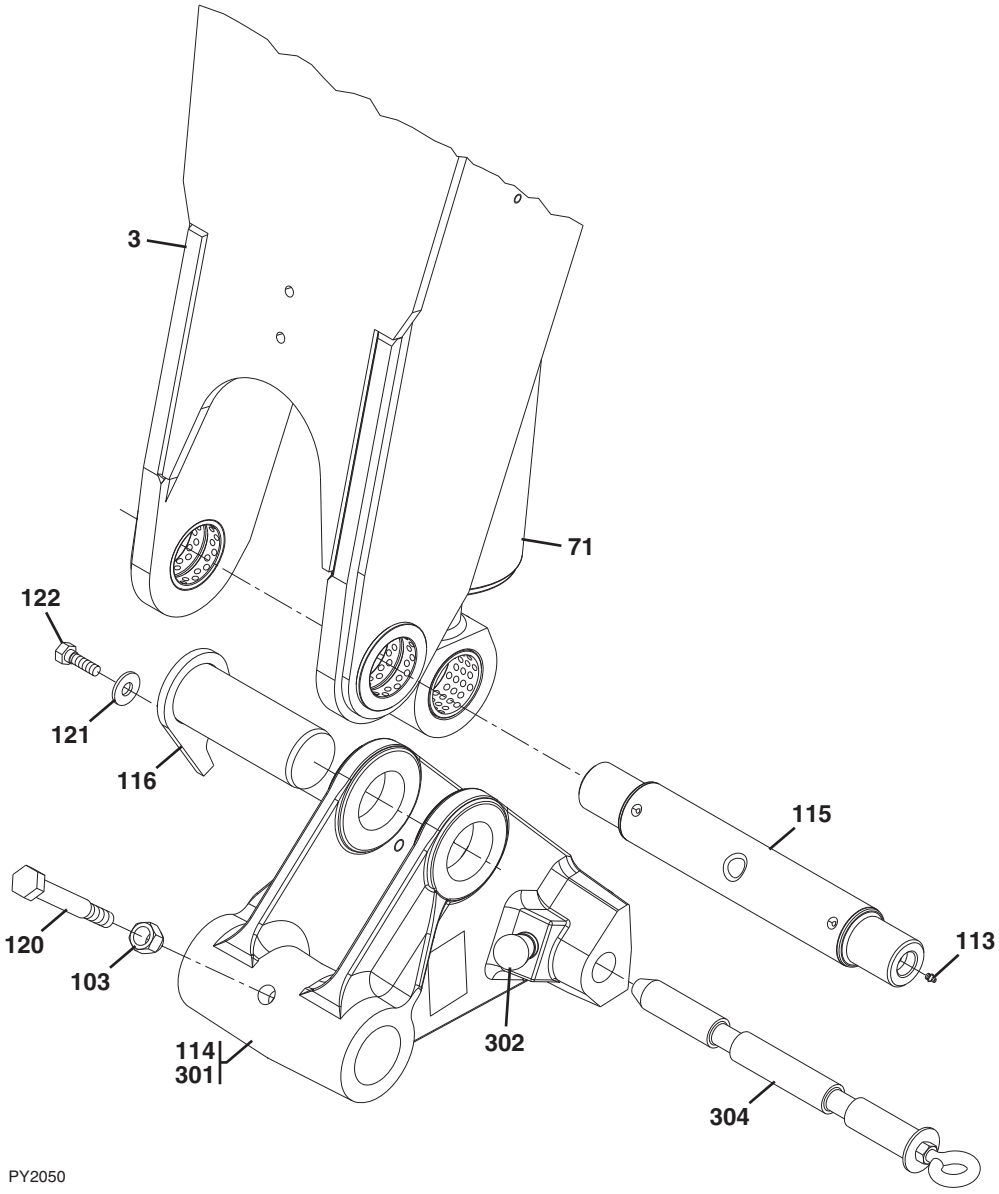

Downloaded from www.Manualslib.com manuals search engine

https://truckmanualshub.com/

Figure 2-8 Quick Switch Assembly

Item	Part Number	Qty.	Description	Rev.
3		Ref	THIRD BOOM SECTION, (see Figure 2-5 for details)	
71		Ref	TILT CYLINDER, (see Figure 9-3 for details)	
103	8310067	1	LOCKNUT, 3/4-10	
113	88671008	2	STRAIGHT GREASE FITTING	
114	1001098382	1	QUICK SWITCH COUPLING ASSY, (includes items 301 thru 304)	D
115	1001098233	1	PIVOT PIN	
116	1001098218	1	PIN WELDMENT	
120	0682244	1	HEX HD CAPSCREW, 3/4-10X5-1/2, GR8	
121	4740003	1	WASHER, 1/2	
122	0641808	1	HEX HD CAPSCREW, 1/2-13X1, GR5	
124	8307916	AR	WASHER, SHIM, (not shown)	
125	8307917	AR	WASHER, SHIM, (not shown)	
301	1001098174	1	QUICK SWITCH COUPLER	
302	1001098176	1	POPPIN PIN ASSY	
304	1001105441	1	QUICK SWITCH LOCK PIN	

Downloaded from www.Manualslib.com manuals search engine

https://truckmanualshub.com/

This Page Intentionally Left Blank

Downloaded from www.Manualslib.com manuals search engine

https://truckmanualshub.com/

SECTION 3
ATTACHMENTS

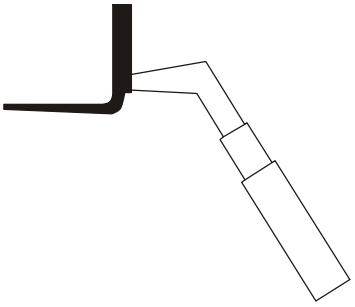

Downloaded from www.Manualslib.com manuals search engine

https://truckmanualshub.com/

Figure 3-1 Tilt Carriage

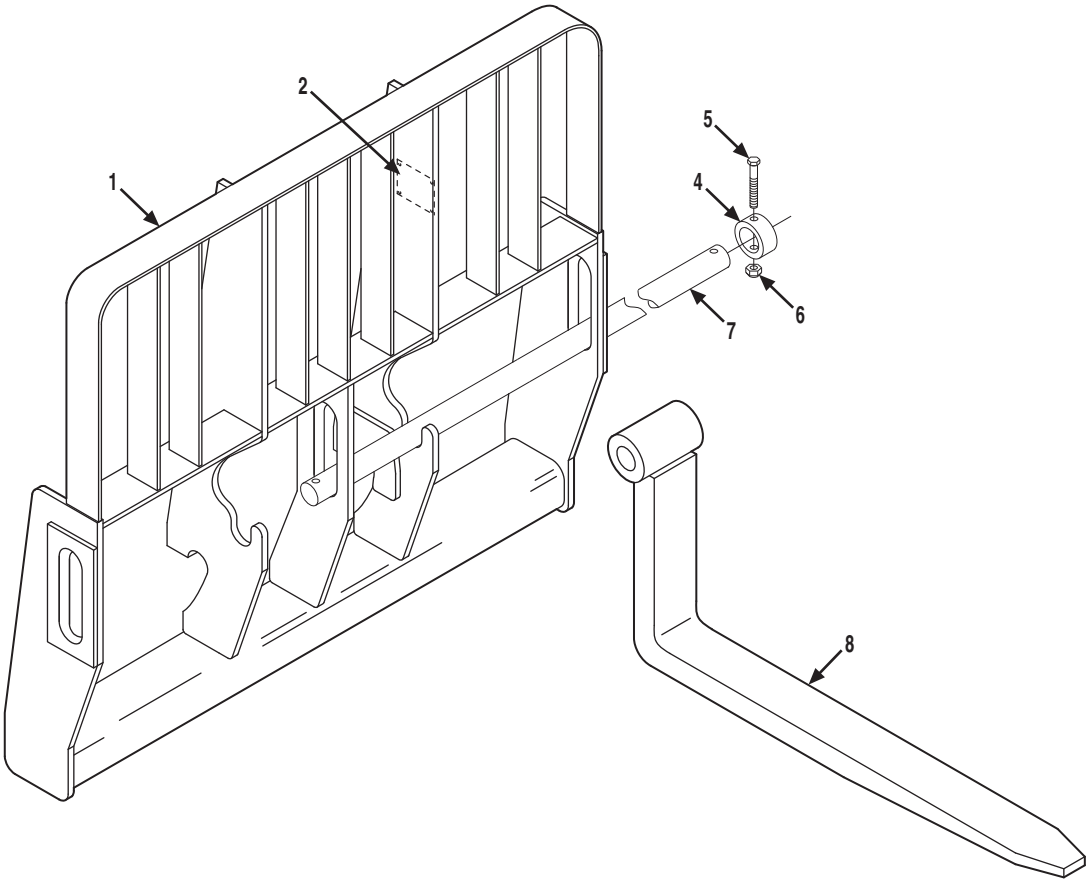

Downloaded from www.Manualslib.com manuals search engine

https://truckmanualshub.com/

Figure 3-1 Tilt Carriage

Item	Part Number	Qty.	Description	Rev.
	91405073	1	48 IN CARRIAGE ASSY, (includes items 1 thru 7)	D
	91405074	1	72 IN CARRIAGE ASSY, (includes items 1 thru 7)	D
1	NSS	1	48 IN CARRIAGE WELDMENT	
	NSS	1	72 IN CARRIAGE WELDMENT	
2	NSS	1	S/N PLATE	
4	90200003	2	COLLAR	
5	88201105	2	HEX HD CAPSCREW, 5/8-11X4, GR5	
6	88521310	2	HEX LOCKNUT, 5/8-11, (nylok)	
7	91401303	1	FORK PIN, (48 IN carriage)	
	91401324	1	FORK PIN, (72 IN carriage)	
8		Ref	FORK, (see Figure 3-16 for details)	

Downloaded from www.Manualslib.com manuals search engine

https://truckmanualshub.com/

Figure 3-1 Tilt Carriage

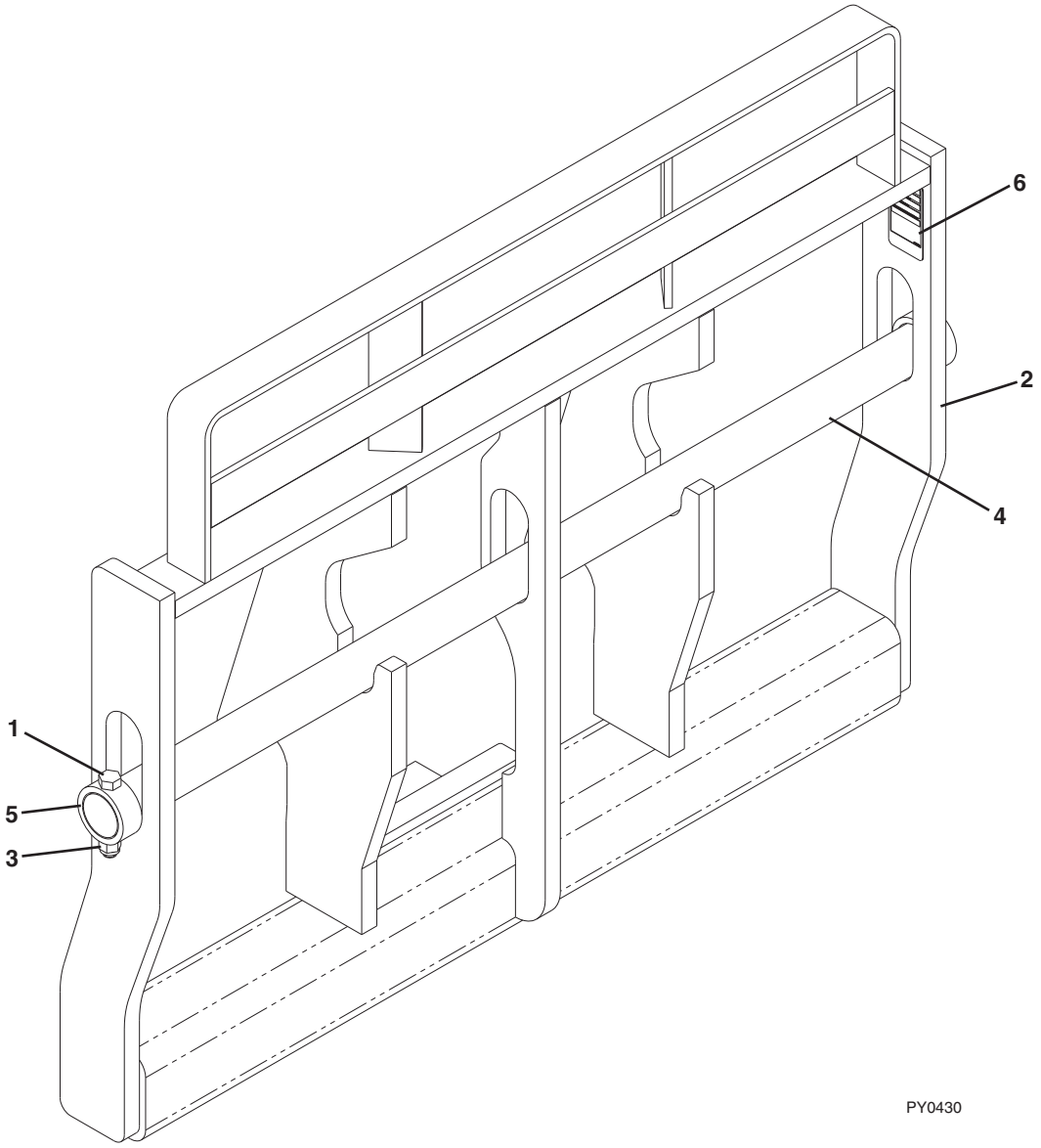

Downloaded from www.Manualslib.com manuals search engine

https://truckmanualshub.com/

Figure 3-1 Tilt Carriage

Item	Part Number	Qty.	Description	Rev.
	1170019	1	50 IN TILT CARRIAGE, **(Before S/N 0160037689),** includes all items)	C
	1170021	1	50 IN TILT CARRIAGE, **(S/N 0160037689 & After)**, (includes all items)	D
	1170022	1	60 IN TILT CARRIAGE, **(Before S/N 0160037689),** (includes all items)	C
	1170024	1	60 IN TILT CARRIAGE, **(S/N 0160037689 & After)**, (includes all items)	D
	1170025	1	72 IN TILT CARRIAGE, **(Before S/N 0160037689),** (includes all items)	C
	1001132514	1	72 IN TILT CARRIAGE, **(S/N 0160037689 & After)**, (includes all items)	A
1	0642032	2	HEX HD CAPSCREW, 5/8-11X4, GR5	
2	NSS	1	TILT CARRIAGE	
3	3300240	2	LOCKNUT, 5/8-11	
4	3423275	1	50 IN FORK PIN	
	3423242	1	60 IN FORK PIN	
	3423276	1	72 IN FORK PIN	
5	90200003	2	COLLAR	
6	NSS	1	S/N PLATE	

Downloaded from www.Manualslib.com manuals search engine

https://truckmanualshub.com/

Figure 3-2 Buckets

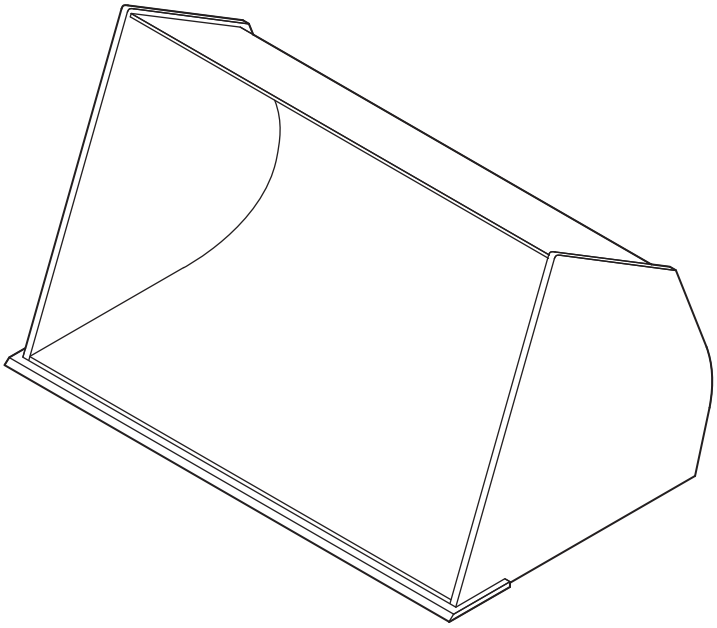

Downloaded from www.Manualslib.com manuals search engine

https://truckmanualshub.com/

Figure 3-2 Buckets

Item	Part Number	Qty.	Description	Rev.
	91405054	1	60 IN BUCKET, 3/4 ^{3} YARD, **(Before S/N 0160037689)**	
	1001100822	1	72 IN BUCKET, 1.0 ^{3} YARD, **(S/N 0160037689 & After)**	
	91405055	1	74 IN BUCKET, 1-1/4 ^{3} YARD, **(Before S/N 0160037689)**	
	1001100823	1	96 IN BUCKET, 1-1/2 ^{3} YARD, **(S/N 0160037689 & After)**	
	91405071	1	102 IN BUCKET, 1-1/4 ^{3} YARD, **(Before S/N 0160037689)**	
	1001100824	1	102 IN BUCKET, 2.0 ^{3} YARD, **(S/N 0160037689 & After)**	

Downloaded from www.Manualslib.com manuals search engine

https://truckmanualshub.com/

Figure 3-3 48 Inch & 72 Inch Slope Piler Carriage

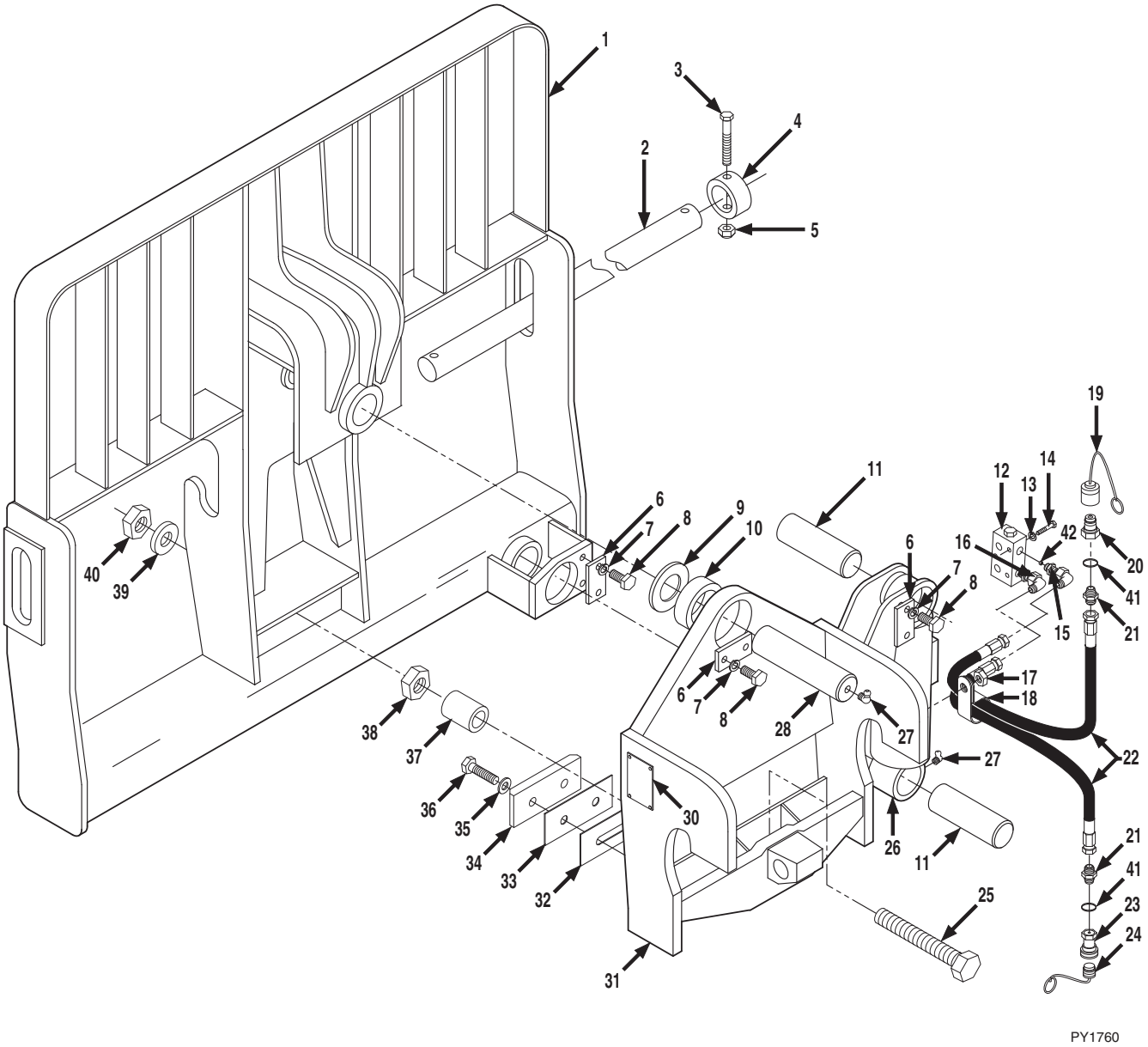

Downloaded from www.Manualslib.com manuals search engine

https://truckmanualshub.com/

Figure 3-3 48 Inch & 72 Inch Slope Piler Carriage

Item	Part Number	Qty.	Description	Rev.
	91405101	1	48 IN SLOPE PILER CARRIAGE, (includes all items)	O
	91405079	1	72 IN SLOPE PILER CARRIAGE, (includes all items)	T
1	NSS	1	48 IN CARRIAGE WELDMENT	
	NSS	1	72 IN CARRIAGE WELDMENT	
2	91401324	1	FORK PIN, (72 IN carriage)	
	91401303	1	FORK PIN, (48 IN carriage)	
3	88201105	2	HEX HD CAPSCREW, 5/8-11X4, GR5	
4	90200003	2	COLLAR	
5	88521310	2	HEX LOCKNUT, 5/8-11, (nylok)	
6	91081313	3	KEEPER PLATE	
7	88551013	6	LOCKWASHER, 1/2	
8	88201065	6	HEX HD CAPSCREW, 1/2-13X1, GR5	
9	91081594	1	THRUST WASHER	
10	91083248	1	BUSHING	
11	3423263	2	SWAY CYLINDER PIN	
12		Ref	SWAY CYLINDER VALVE, (see Figure 9-19 for details)	
13	88551009	3	LOCKWASHER, 1/4	
14	88201008	3	HEX HD CAPSCREW, 1/4-20X1-3/4, GR5	
15	91081630	2	MODIFIED CONNECTOR	
16	8760268	2	ELBOW, 90 DEGREE, (swivel nut)	
17	77143015	1	WHIZ-LOCKNUT, 3/8-16	
18	84521062	1	SUPPORT CLAMP	
19	91043126	1	DUST CAP	
20	91403414	1	MALE QUICK DISCONNECT	
21	2220372	2	CONNECTOR, (includes item 41)	
22	84719223	2	HOSE ASSY	
23	91403413	1	FEMALE QUICK DISCONNECT	
24	91043125	1	DUST PLUG	
25	91081577	1	TAP BOLT	
26		Ref	SWAY CYLINDER, (see Figure 12-26 for details)	
27	88671022	2	LUBE FITTING, 90 DEGREE, 1/8	
28	91081622	1	PIN, (adapter weldment)	
30	NSS	1	S/N PLATE	
31	NSS	1	ADAPTER WELDMENT	
32	90205870	AR	SHIM	
33	91031236	2	SPACER	
34	91033186	2	BEARING PAD	
35	88561109	4	FLAT WASHER, 3/8	
36	88201534	4	HEX HD CAPSCREW, 3/8-24X1, GR5	
	88201535	4	HEX HD CAPSCREW, 3/8-24X1-1/4, GR5	
37	90204007	1	TUBE	
38	88521016	1	HEX LOCKNUT, 1-8	
39	05101441	1	WASHER, 1-1/16	
40	88501016	1	HEX NUT, 1-8	
41	88591205	2	O-RING	
42	91041387	2	ORIFICE PLUG	

Downloaded from www.Manualslib.com manuals search engine

https://truckmanualshub.com/

Figure 3-4 Side Tilt Carriage

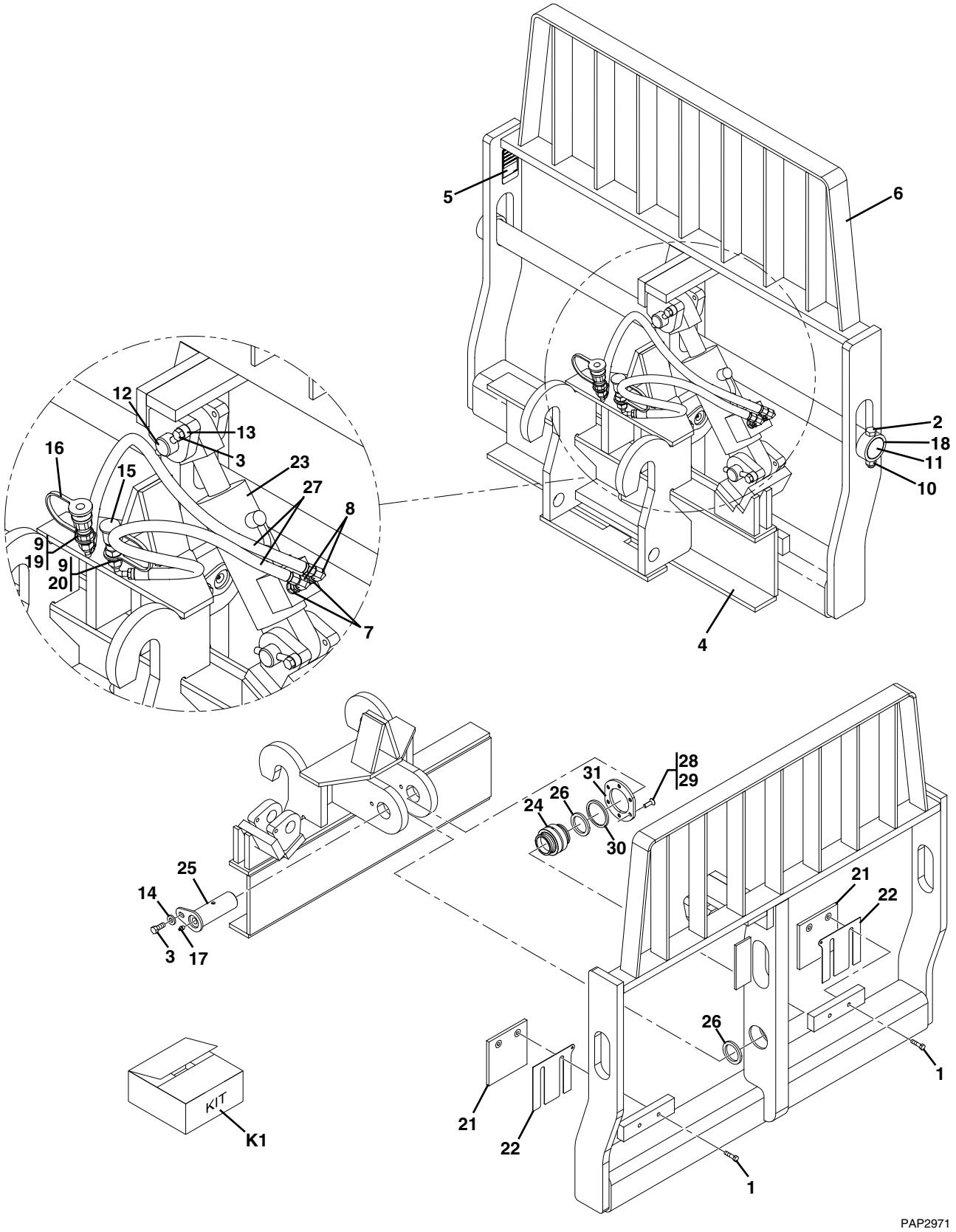

Downloaded from www.Manualslib.com manuals search engine

https://truckmanualshub.com/

Figure 3-4 Side Tilt Carriage

Item	Part Number	Qty.	Description	Rev.
	1170054	1	50 IN SIDE TILT CARRIAGE, (includes all items)	H
	1001101956	1	60 IN SIDE TILT CARRIAGE, (includes all items)	H
	1170057	1	72 IN SIDE TILT CARRIAGE, (includes all items)	H
1	0641612	4	HEX HD CAPSCREW, 3/8-16X1-1/2	
2	0642032	2	HEX HD CAPSCREW, 5/8-11X4	
3	0681810	3	HEX HD CAPSCREW, 1/2-13X1-1/4	
4	NSS	1	CARRIAGE BASE	
5	NSS	1	S/N PLATE	
6	NSS	1	SIDE TILT CARRIAGE	
7	2110606	2	ADAPTER	
8	2172106	2	ADAPTER, 90 DEGREE	
9	2110808	2	ADAPTER, (50 IN & 72 IN side tilt carriage)	
	2110608	2	ADAPTER, (60 IN side tilt carriage)	
10	3300240	2	LOCKNUT, 5/8-11	
11	3423275	1	50 IN FORK PIN	
	3423242	1	60 IN FORK PIN	
	3423276	1	72 IN FORK PIN	
12	3423307	2	PIN	
13	3841203	2	KEEPER	
14	4891800	1	WASHER, 1/2	
15	8420053	1	DUST CAP	
16	8420055	1	DUST PLUG	
17	88671001	1	GREASE FITTING	
18	90200003	2	COLLAR	
19	91403413	1	FEMALE QUICK DISCONNECT	
20	91403414	1	MALE QUICK DISCONNECT	
21	1001090063	2	WEAR PAD	
22	1001090064	AR	SHIM	
23		Ref	HYDRAULIC CYLINDER, (see Figure 9-22 for details)	
24	1001090140	1	BEARING	
25	1001099113	1	PIN	
26	1001099115	2	SLEEVE	
27	1001102378	2	HOSE ASSY, 3/8X39	
28	0100011	AR	LOCTITE® 242™	
29	0741610	6	FLAT HD SOCKET SCREW, 3/8-16X1-1/4	
30	1001120914	1	BEARING RETAINER SHIM	
31	1001120915	1	BEARING RETAINER PLATE	
K1	2890228	1	SIDE TILT CARRIAGE KIT, (includes items 30 & 31)	C

Downloaded from www.Manualslib.com manuals search engine

https://truckmanualshub.com/

Figure 3-5 Truss Boom

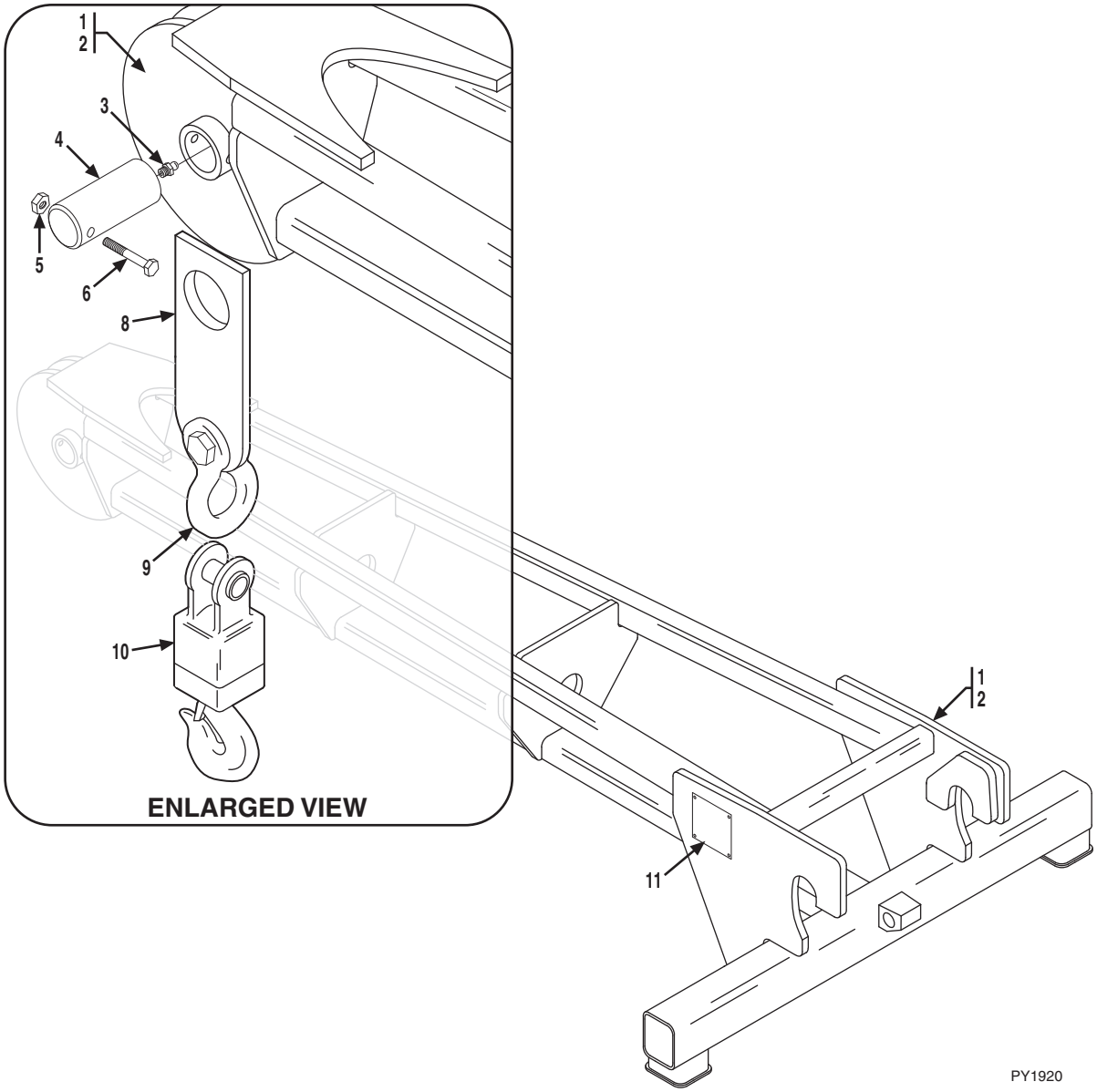

Downloaded from www.Manualslib.com manuals search engine

https://truckmanualshub.com/

Figure 3-5 Truss Boom

Item	Part Number	Qty.	Description	Rev.
	91405083	1	10 FT TRUSS BOOM ASSY, (includes all items, except item 2)	D
	91405082	1	15 FT TRUSS BOOM ASSY, (includes all items, except item 1)	D
1	NSS	1	10 FT TRUSS BOOM WELDMENT	
2	NSS	1	15 FT TRUSS BOOM WELDMENT	
3	88671001	1	STRAIGHT LUBE FITTING, 1/8	
4	90402948	1	PIN	
5	88501008	1	HEX NUT, 1/2-13	
6	88201073	1	HEX HD CAPSCREW, 1/2-13X3, GR5	
8	90451053	1	HANGER	
9	90453041	1	SHACKLE	
10	90453040	1	SWIVEL HOOK	
	91164440	1	SAFETY LATCH KIT	
11	NSS	1	ATTACHMENT S/N PLATE	

Downloaded from www.Manualslib.com manuals search engine

https://truckmanualshub.com/

Figure 3-5 Truss Boom

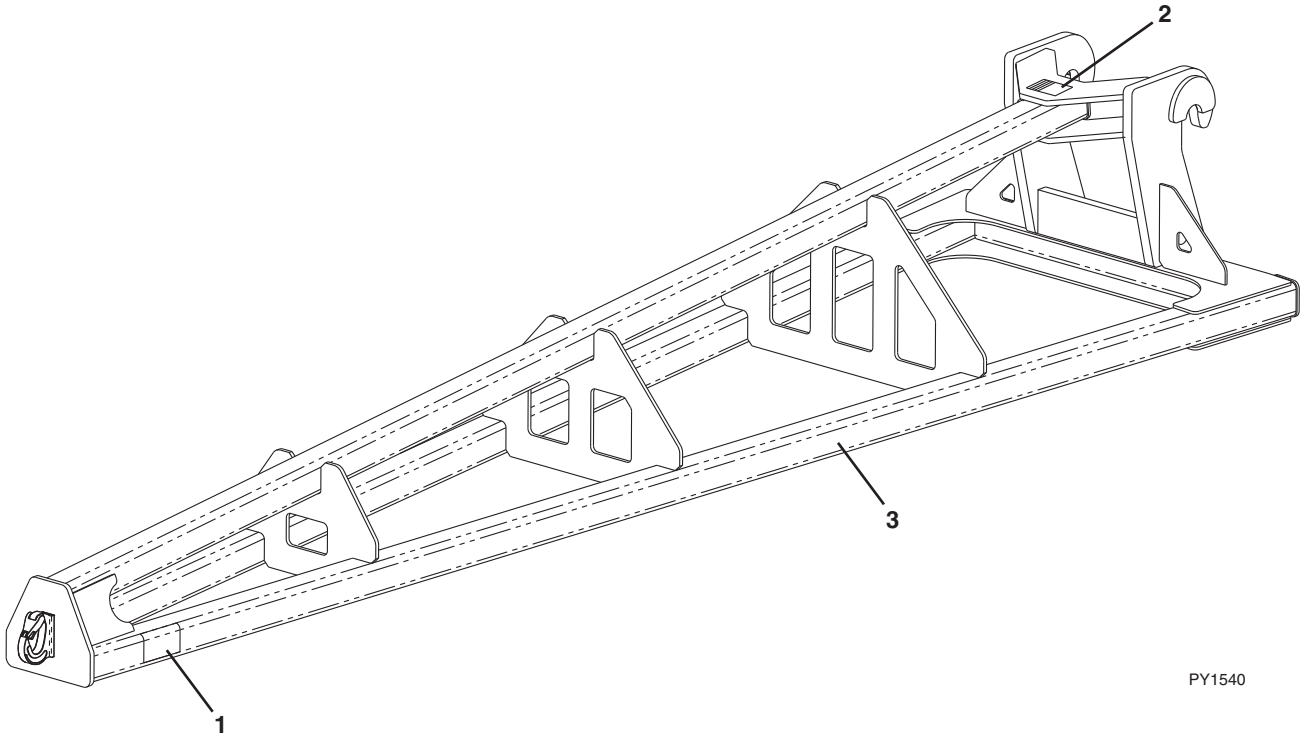

Downloaded from www.Manualslib.com manuals search engine

https://truckmanualshub.com/

Figure 3-5 Truss Boom

Item	Part Number	Qty.	Description	Rev.
	1001099902	1	12 FT TRUSS BOOM, (includes all items)	A
	1001099901	1	15 FT TRUSS BOOM, (includes all items)	A
1	4110422	2	WARNING SWINGING LOADS DECAL	
2	NSS	1	S/N PLATE	
3	NSS	1	TRUSS BOOM	

Downloaded from www.Manualslib.com manuals search engine

https://truckmanualshub.com/

Figure 3-6 10 Foot & 15 Foot Truss Boom With Winch

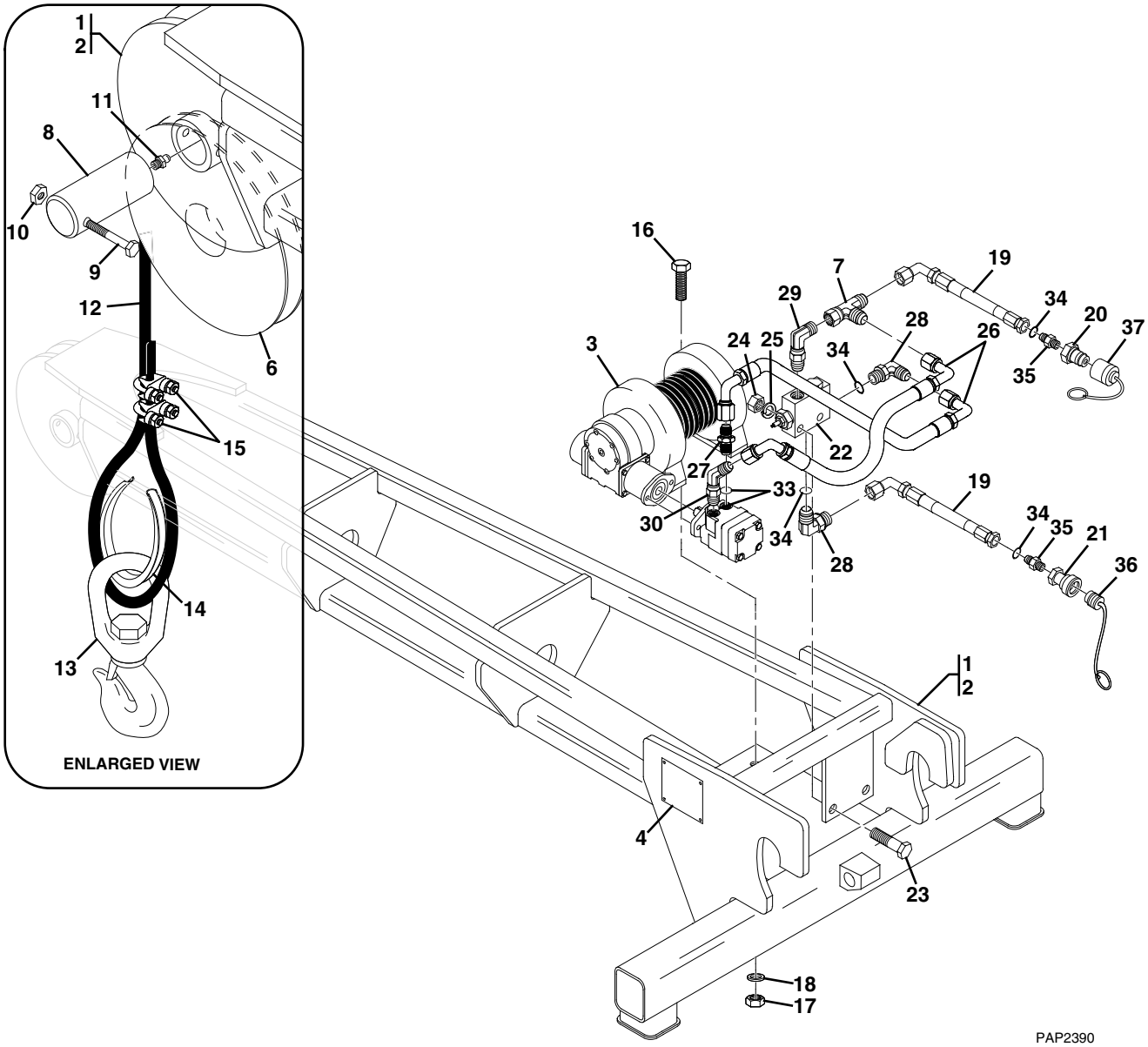

Downloaded from www.Manualslib.com manuals search engine

https://truckmanualshub.com/

Figure 3-6 10 Foot & 15 Foot Truss Boom With Winch

Item	Part Number	Qty.	Description	Rev.
	91405081	1	10 FT TRUSS BOOM WITH WINCH, (includes items 1 & 3 thru 35)	O
	91405080	1	15 FT TRUSS BOOM WITH WINCH, (includes items 2 thru 35)	O
1	NSS	1	10 FT TRUSS BOOM WELDMENT	
2	NSS	1	15 FT TRUSS BOOM WELDMENT	
3		Ref	WINCH WITH MOTOR, (see Figures 12-28 & 12-29 for details)	
4	NSS	1	S/N PLATE	
6	90403056	1	SHEAVE	
7	2220385	1	SWIVEL NUT RUN TEE, 1/2, TUBE	
8	90402948	1	PIN	
9	88201073	1	HEX HD CAPSCREW, 1/2-13X3, GR5	
10	88501008	1	HEX NUT, 1/2-13	
11	88671001	1	STRAIGHT LUBE FITTING, 1/8	
12	90207882	1	WIRE ROPE, 3/8	
13	91403448	1	SWIVEL HOOK	
14	90026965	1	THIMBLE	
15	90028990	2	WIRE ROPE CLIP	
16	83201062	4	HEX HD CAPSCREW, 5/8-11X2-1/4, GR8	
17	88501010	4	HEX NUT, 5/8-11	
18	90027472	4	HARDENED WASHER, 5/8	
19	84717593	2	HOSE ASSY	
20	91403414	1	MALE QUICK DISCONNECT	
21	91403413	1	FEMALE QUICK DISCONNECT	
22		Ref	TRUSS BOOM PRESSURE REDUCER VALVE, (see Figure 12-30 for details)	
23	88201024	2	HEX HD CAPSCREW, 5/16-18X2, GR5	
24	88501005	2	HEX NUT, 5/16-18	
25	88551010	2	LOCKWASHER, 5/16	
26	84719732	2	HOSE ASSY	
27	2220374	1	CONNECTOR, (includes item 33)	
28	2220596	2	ELBOW, 90 DEGREE, (includes two of item 34)	
29	2220726	2	ELBOW, 90 DEGREE	
30	2220499	1	ELBOW, 45 DEGREE, (includes item 33)	
33	88591206	2	O-RING	
34	88591205	4	O-RING	
35	2220373	2	CONNECTOR, (includes two of item 34)	
36	91043125	1	DUST PLUG	
37	91043126	1	DUST CAP	

Downloaded from www.Manualslib.com manuals search engine

https://truckmanualshub.com/

Figure 3-7 12 Foot Truss Boom With Winch

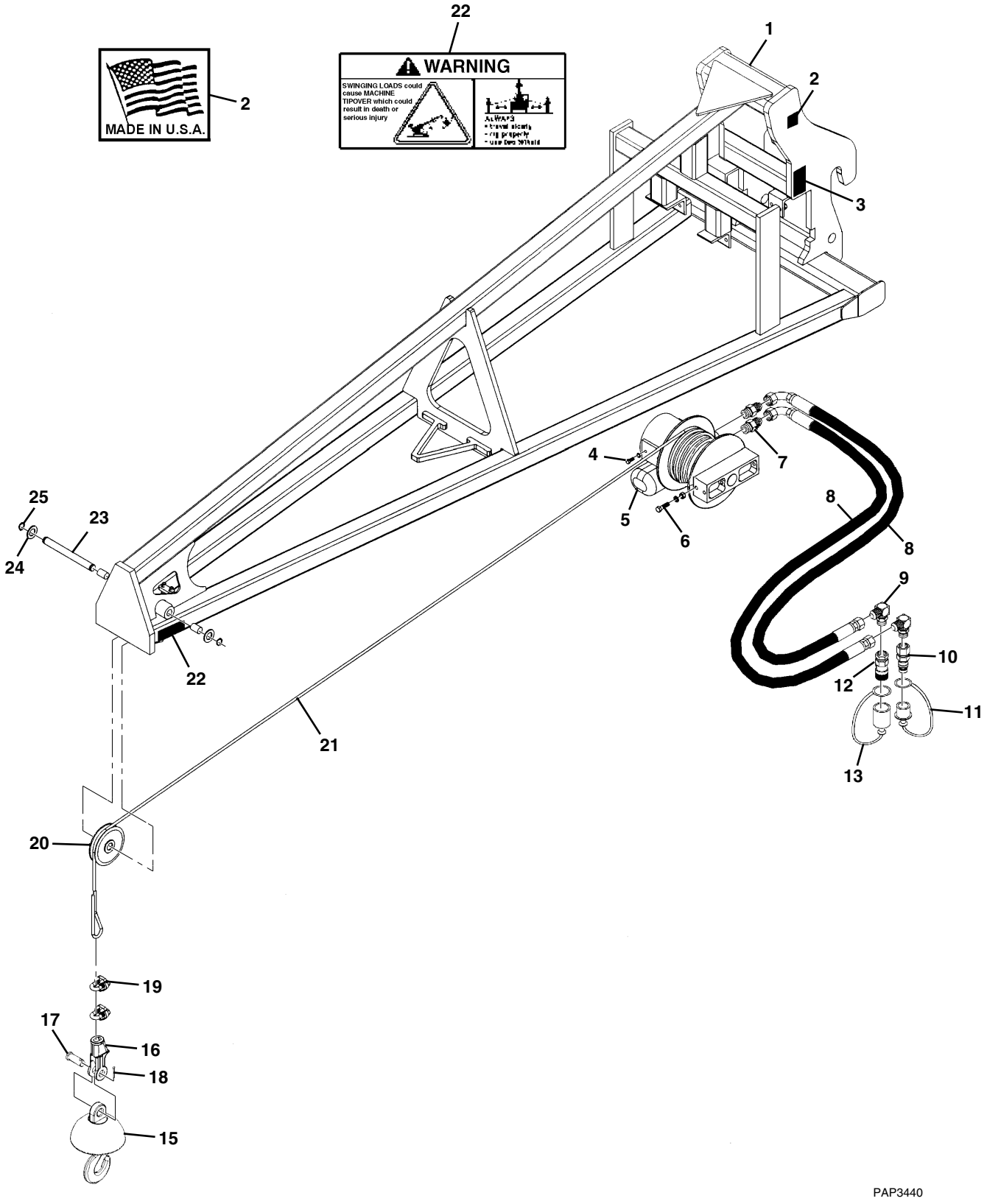

Downloaded from www.Manualslib.com manuals search engine

https://truckmanualshub.com/

Figure 3-7 12 Foot Truss Boom With Winch

Item	Part Number	Qty.	Description	Rev.
	1001099351	1	12 FT TRUSS BOOM WITH WINCH, (includes all items)	F
1	NSS	1	TRUSS BOOM FRAME	
2	90554016	1	MADE IN USA DECAL	
3	NSS	1	S/N PLATE	
4	70021349	4	HEX HD CAPSCREW, 3/8X1	
	90554042	4	LOCK WASHER, 3/8	
5	70021921	1	TRUSS BOOM WINCH MOTOR	
6	NSS	2	HEX HD CAPSCREW, 1/2X1-3/4	
	90554020	2	LOCK WASHER, 1/2	
	90554054	2	HEX NUT, 1/2	
7	70021415	2	CONNECTOR	
8	70021977	2	HOSE ASSY, 3/8X32	
9	NSS	1	ELBOW, 90 DEGREE	
10	7029692	1	MALE QUICK COUPLER	
11	90554062	1	DUST CAP	
12	70021342	1	FEMALE QUICK COUPLER	
13	90554076	1	DUST COVER	
15	70021978	1	BALL SWIVEL WITH SAFETY HOOK	
16	70021979	1	SOCKET ASSY, (includes items 17 & 18)	
17	NSS	1	PIN	
18	NSS	1	COTTER PIN	
19	NSS	2	CLAMP	
20	70021935	1	PULLEY	
21	70022028	1	CABLE	
22	4110422	2	WARNING SWINGING LOADS DECAL	
23	NSS	1	PIN	
24	NSS	2	FLAT WASHER	
25	NSS	2	SNAP RING	

Downloaded from www.Manualslib.com manuals search engine

https://truckmanualshub.com/

Figure 3-8 100 Degree Swing Fork Assembly

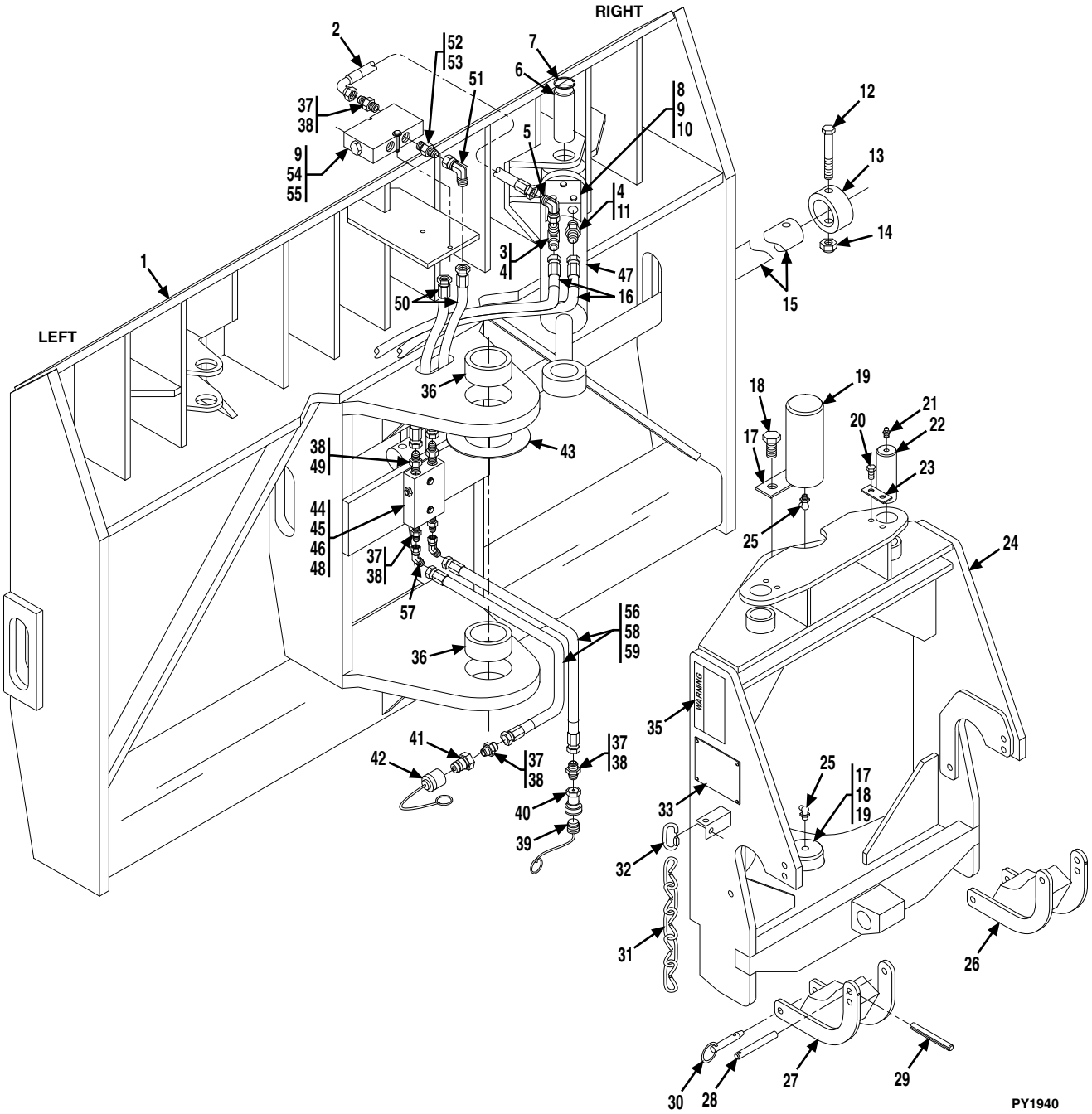

Downloaded from www.Manualslib.com manuals search engine

https://truckmanualshub.com/

Figure 3-8 100 Degree Swing Fork Assembly

Item	Part Number	Qty.	Description	Rev.
	91405075	1	100 DEGREE SWING FORK ASSY, (includes all items)	O
1	NSS	1	CARRIAGE WELDMENT	
2	84719167	2	HOSE ASSY	
3	2220606	2	RUN TEE, (includes item 4)	
4	88591204	4	O-RING	
5	8760268	2	ELBOW, 90 DEGREE, (swivel nut)	
6	91041326	2	PIVOT PIN, (swing cylinder)	
7	88581136	4	SNAP RING	
8	91413100	2	MANIFOLD BLOCK	
9	88201008	8	HEX HD CAPSCREW, 1/4-20X1-3/4, GR5	
10	88551009	6	LOCKWASHER, 1/4	
11	2220371	2	CONNECTOR, (includes item 4)	
12	88201105	2	HEX HD CAPSCREW, 5/8-11X4, GR5	
13	90200003	2	COLLAR	
14	88521310	2	HEX LOCKNUT, 5/8-11	
15	91401324	1	FORK PIN	
16	84719197	2	HOSE ASSY	
17	91041322	2	LOCKING PLATE	
18	83201026	4	HEX HD CAPSCREW, 1/2-13X1-1/2, GR8	
19	91041325	2	PIVOT PIN	
20	83201024	4	HEX HD CAPSCREW, 3/8-16X1, GR8	
21	88671008	2	STRAIGHT LUBE FITTING, 1/4-28	
22	91041324	2	PIVOT PIN	
23	91411073	2	LOCKING PLATE	
24	NSS	1	PIVOT WELDMENT	
25	88671018	2	LUBE FITTING, 45 DEGREE, 1/8	
26	91406070	1	RH SUPPORT BRACKET	
27	91406069	1	LH SUPPORT BRACKET	
28	91401266	2	PIN	
29	88631449	2	ROLL PIN, 1/8X1-1/2	
30	91043221	2	DETENT PIN	
31	91033038	24 in	CHAIN	
32	91033039	2	CHAIN CONNECTION	
33	NSS	1	S/N PLATE	
35	91143282	2	PINCH POINT DECAL	
36	91041327	2	BUSHING	
37	2220372	6	CONNECTOR, (includes item 38)	
38	88591205	8	O-RING	
39	91043125	1	DUST PLUG	
40	91403413	1	FEMALE QUICK DISCONNECT	
41	91403414	1	MALE QUICK DISCONNECT	
42	91043126	1	DUST CAP	
43	91041356	6	SPACER	
44	91413099	1	RELIEF VALVE	
45	88201029	2	HEX HD CAPSCREW, 5/16-18X3-1/4, GR5	
46	88551010	2	LOCKWASHER, 5/16	
47		Ref	SWING CYLINDER, (see Figure 12-27 for details)	
48	88501005	2	HEX NUT, 5/16-18	
49	2220373	2	CONNECTOR, (includes item 38)	

Downloaded from www.Manualslib.com manuals search engine

https://truckmanualshub.com/

Figure 3-8 100 Degree Swing Fork Assembly (Continued)

Item	Part Number	Qty.	Description	Rev.
50	84719760	2	HOSE ASSY	
51	8765204	2	ELBOW, 90 DEGREE, (swivel nut)	
52	91041361	2	MODIFIED FITTING	
53	91411050	2	ORIFICE	
54	88561002	2	FLAT WASHER, 1/4	
55	91043186	1	DBL PILOT CHECK VALVE	
56	84718208	2	HOSE ASSY	
57	2220657	2	ELBOW, 45 DEGREE, (swivel nut)	
58	71492142	24 in	FLEX LOOM	
59	86683122	4	TIE WRAP	

Downloaded from www.Manualslib.com manuals search engine

https://truckmanualshub.com/

Figure 3-8 100 Degree Swing Fork Assembly (Continued)

Item	Part Number	Qty.	Description	Rev.

Downloaded from www.Manualslib.com manuals search engine

https://truckmanualshub.com/

Figure 3-9 90 Degree Swing Carriage

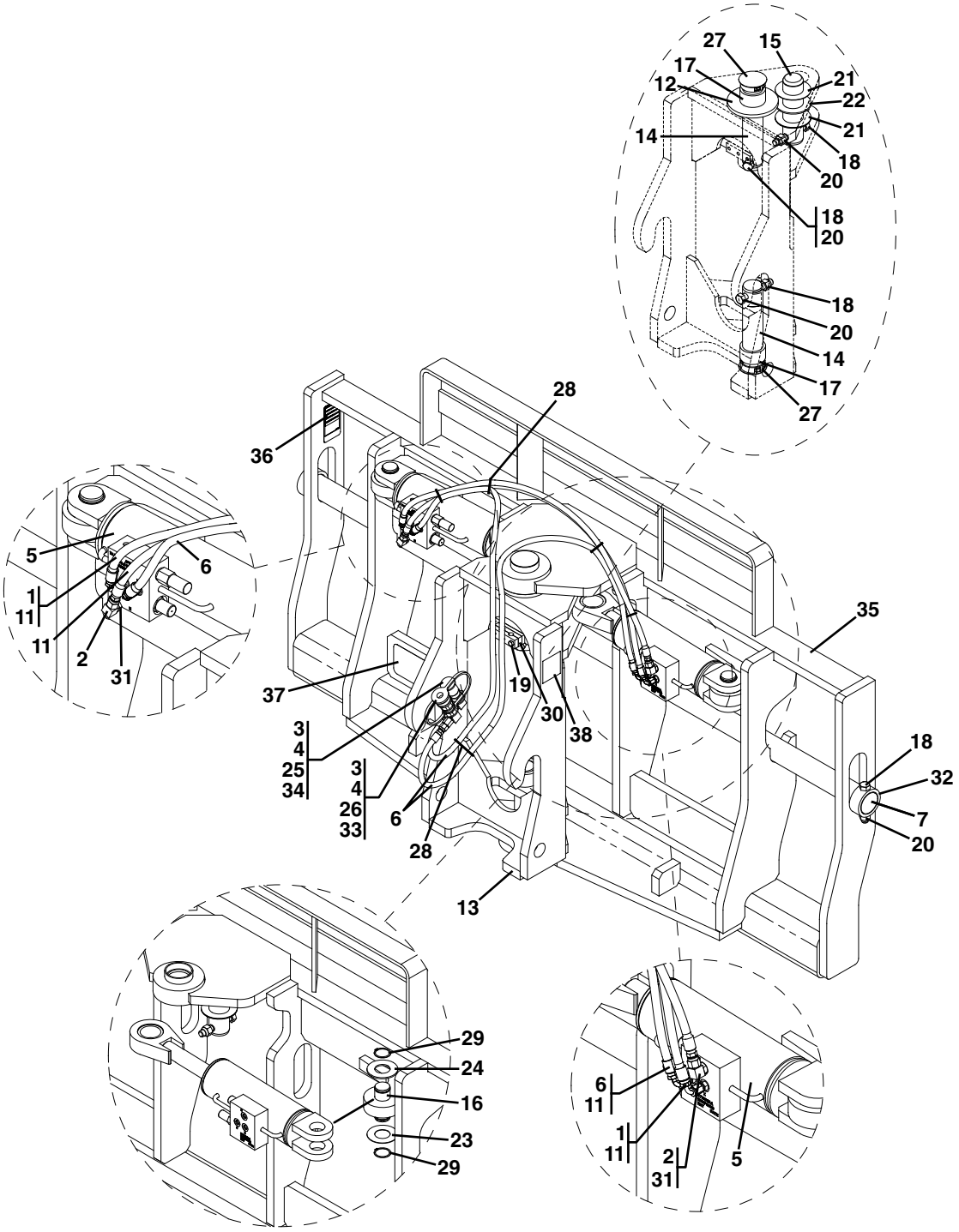

Downloaded from www.Manualslib.com manuals search engine

https://truckmanualshub.com/

Figure 3-9 90 Degree Swing Carriage

Item	Part Number	Qty.	Description	Rev.
	1001095418	1	90 DEGREE SWING CARRIAGE, 72 IN, (includes all items)	K
1	2220415	4	ADAPTER	
2	2220473	2	ADAPTER, 90 DEGREE	
3	2220609	2	ADAPTER	
4	2220628	2	ADAPTER, 90 DEGREE	
5		Ref	SWING CYLINDER, (see Figure 9-23 for details)	
6	2717287	2	HOSE ASSY, 1/4X58	
7	3423276	1	PIN	
11	6604662	2	HOSE ASSY, 1/4X40-1/2	
12	7062922	1	WASHER	
13	NSS	1	PIVOT WELDMENT	
14	7110702	2	PIVOT PIN	
15	7110712	1	PIN	
16	7110722	2	PIN	
17	8065062	2	BUSHING	
18	8303634	5	HEX HD CAPSCREW, 5/8-11X4, GR5	
19	8303715	3	HEX HD CAPSCREW, 5/16-18X1-1/2, GR5	
20	8305643	5	HEX NUT, 5/8-11	
21	8307904	AR	SHIM	
22	8307918	AR	SHIM	
23	8310160	AR	SHIM	
24	8310161	AR	SHIM	
25	8420053	1	DUST CAP	
26	8420055	1	DUST PLUG	
27	8580315	2	PLUG	
28	8584001	5	TIE WRAP	
29	8642207	4	RETAINING RING	
30	8769132	2	CLAMP	
31	8770016	2	ADAPTER	
32	90200003	2	COLLAR	
33	91403413	1	FEMALE QUICK DISCONNECT	
34	91403414	1	MALE QUICK DISCONNECT	
35	NSS	1	CARRIAGE FRAME	
36	NSS	1	S/N PLATE	
37	1001110704	1	WARNING CRUSH HAZARD DECAL	
38	1001111190	2	WARNING DECAL	

Downloaded from www.Manualslib.com manuals search engine

https://truckmanualshub.com/

Figure 3-10 Sheet Material Handler

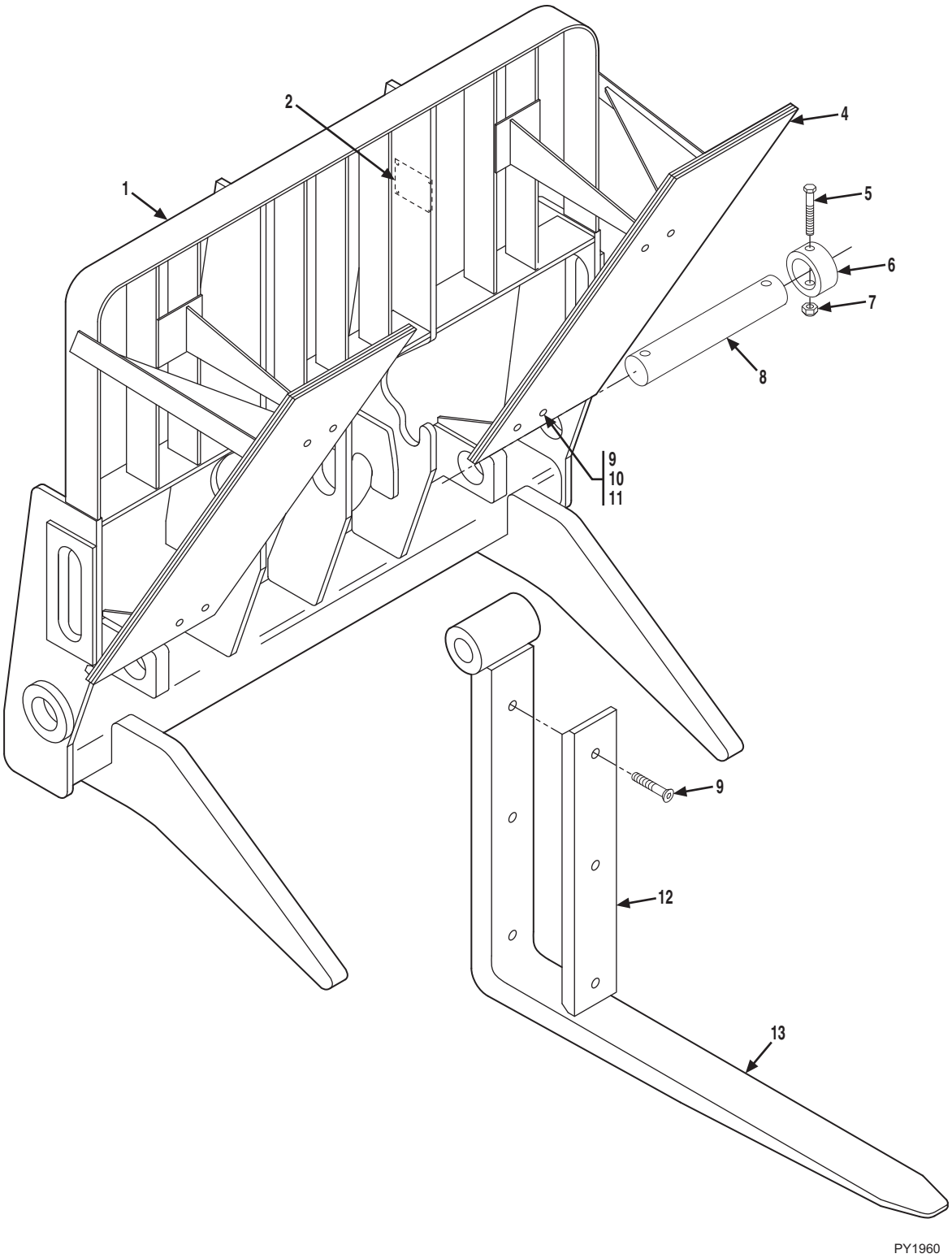

Downloaded from www.Manualslib.com manuals search engine

https://truckmanualshub.com/

Figure 3-10 Sheet Material Handler

Item	Part Number	Qty.	Description	Rev.
	91405077	1	SHEET MATERIAL HANDLER ASSY, (includes all items)	E
1	NSS	1	CARRIAGE WELDMENT	
2	NSS	1	ATTACHMENT S/N PLATE	
4	90553012	2	SIDE DRYWALL GUARD	
5	88201105	4	HEX HD CAPSCREW, 5/8-11X4, GR5	
6	90200003	4	COLLAR	
7	88521310	4	HEX LOCKNUT, 5/8-11, (nylok)	
8	91401340	2	FORK PIN	
9	88241053	14	SOCKET FLAT HD CAPSCREW, 3/8-16X1-1/2	
10	88551011	8	LOCKWASHER, 3/8	
11	88501006	8	HEX NUT, 3/8-16	
12	90553013	2	BOTTOM DRYWALL GUARD	
13	91403366	2	DRYWALL FORK	

Downloaded from www.Manualslib.com manuals search engine

https://truckmanualshub.com/

Figure 3-10 Sheet Material Handler

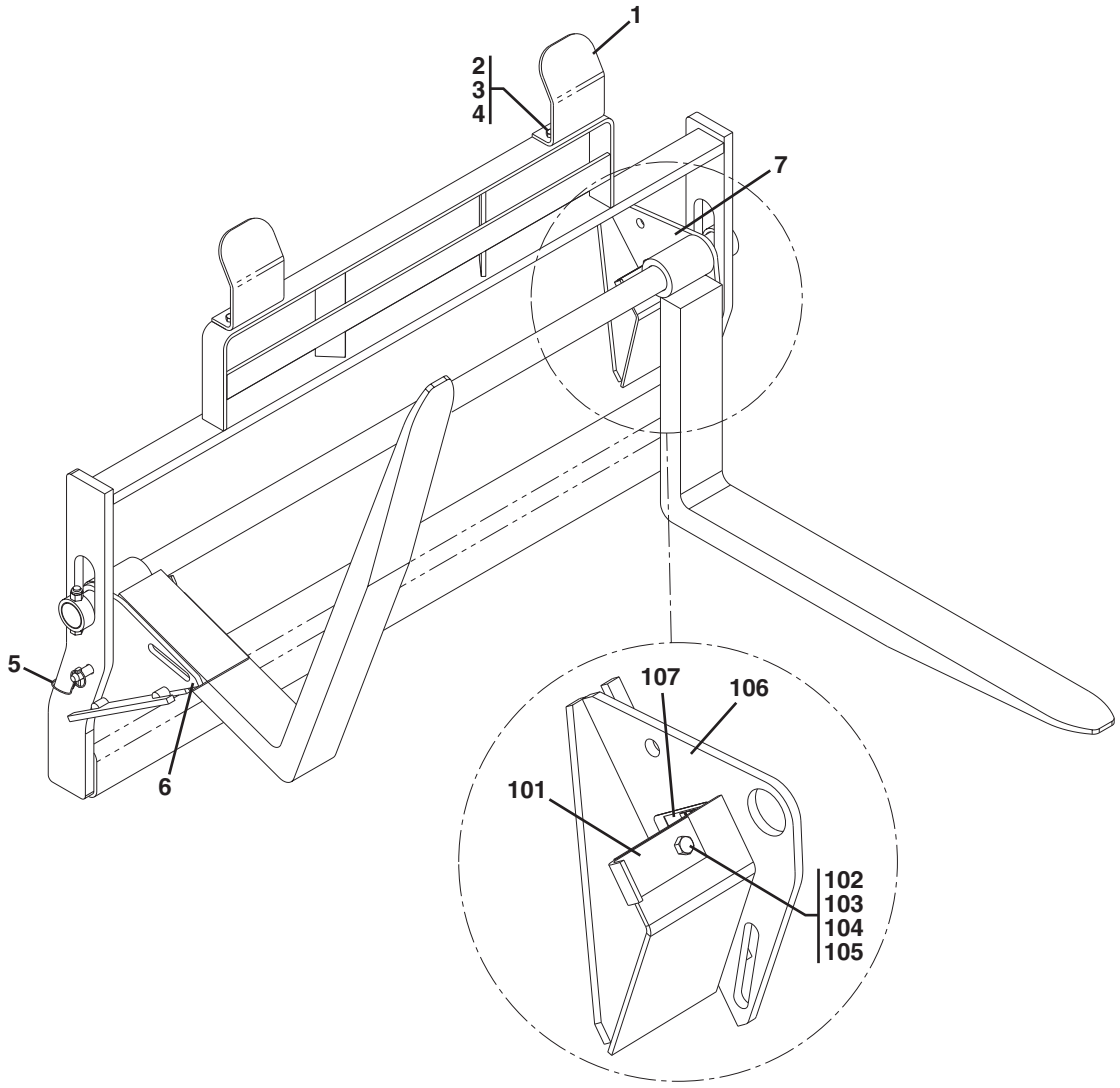

LEFT SIDE SHOWN,
RIGHT SIDE OPPOSITE

PY1510

Downloaded from www.Manualslib.com manuals search engine

https://truckmanualshub.com/

Figure 3-10 Sheet Material Handler

Item	Part Number	Qty.	Description	Rev.
	1001100227	1	SHEET MATERIAL HANDLER ASSY, (includes all items)	A
1	7112642	2	BACKREST EXTENSION	
2	8303626	4	HEX HD CAPSCREW, 1/2-13X1-1/2, GR5	
3	8305012	4	HEX NUT, 1/2-13	
4	8307007	4	LOCKWASHER, 1/2	
5	1001093377	2	HITCH PIN	
6	1001101115	1	RH FORK SUPPORT ASSY, (includes items 101 thru 107)	A
7	1001101116	1	LH FORK SUPPORT ASSY, (includes items 101 thru 107)	B
101	7114941	1	LOCK BAR	
102	8303626	1	HEX HD CAPSCREW, 1/2-13X1-1/2, GR5	
103	8305644	1	HEX LOCKNUT, 1/2-13	
104	8307007	4	LOCK WASHER, 1/2	
105	8307112	1	WASHER, 1/2	
106	1001100228	1	RH FORK SUPPORT, (not shown)	
	1001100229	1	LH FORK SUPPORT, (shown)	
107	NSS	1	S/N PLATE	

Downloaded from www.Manualslib.com manuals search engine

https://truckmanualshub.com/

Figure 3-11 Winch Installation

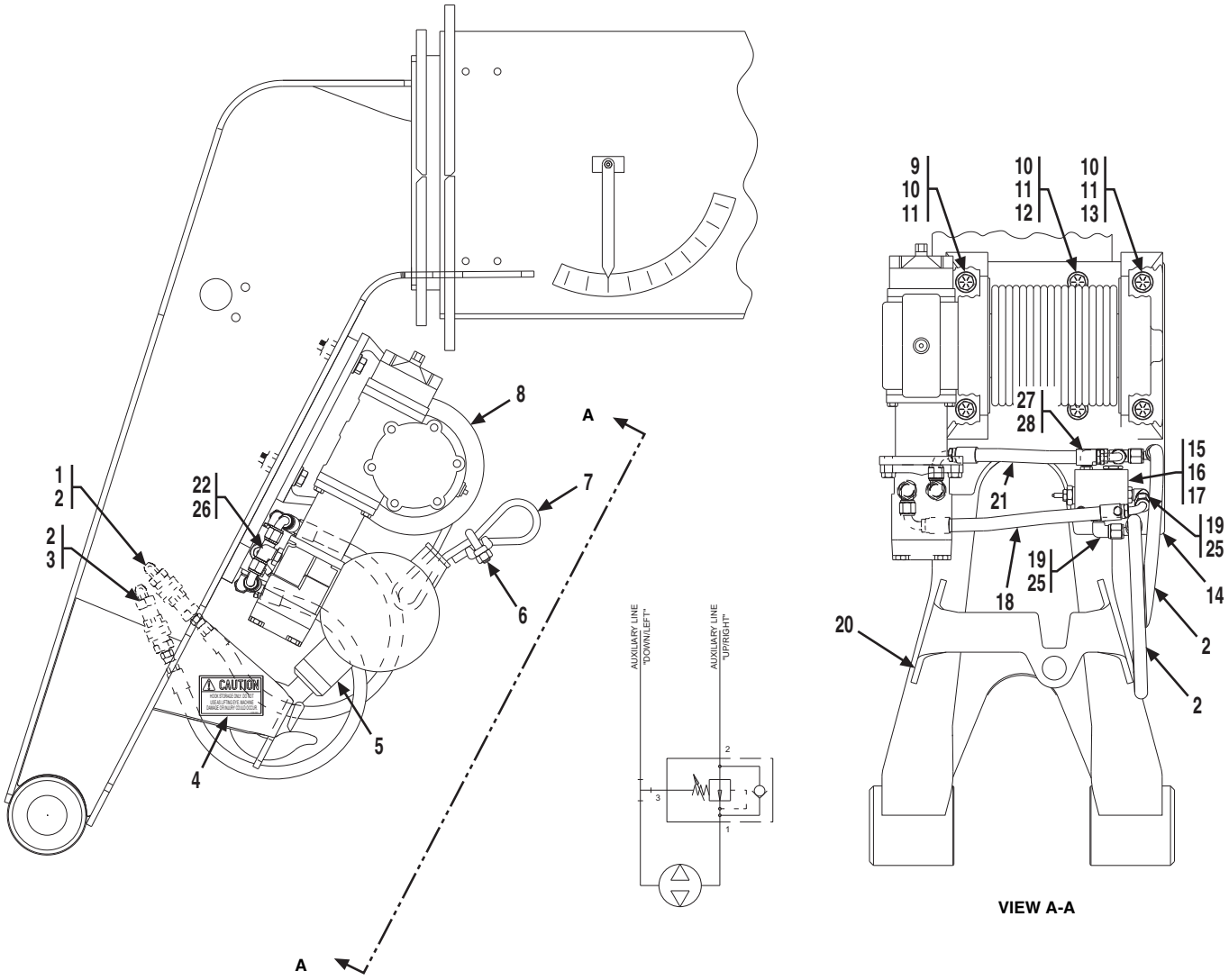

Downloaded from www.Manualslib.com manuals search engine

https://truckmanualshub.com/

Figure 3-11 Winch Installation

Item	Part Number	Qty.	Description	Rev.
	91405024	Ref	WINCH INSTALLATION, (not available to order, see items 1 thru 28 for service)	L
1	91403413	1	FEMALE QUICK DISCONNECT	
2	84719236	2	HOSE ASSY	
3	91403414	1	MALE QUICK DISCONNECT	
4	91083535	1	CAUTION DECAL	
5	90201443	1	HOOK & BALL	
6	90029999	1	WIRE ROPE CLIP, 7/16	
7	91403384	1	CABLE	
8		Ref	WINCH WITH MOTOR, (see Figures 12-28 & 12-29 for details)	
9	83201095	2	HEX HD CAPSCREW, 5/8-11X2-3/4, GR8, (torque to 200-215 lb-ft)	
10	90027472	6	HARDENED WASHER	
11	88501010	6	HEX NUT, 5/8-11	
12	83201062	2	HEX HD CAPSCREW, 5/8-11X2-1/4, GR8, (torque to 200-215 lb-ft)	
13	83201102	2	HEX HD CAPSCREW, 5/8-11X2-1/2, GR8, (torque to 200-215 lb-ft)	
14	91401296	1	WINCH MOUNTING PLATE	
15		Ref	PRESSURE REDUCER VALVE, 1360 PSI, (see Figure 12-31 for details)	
16	88201023	2	HEX HD CAPSCREW, 5/16-18X1-3/4, GR5	
17	88551010	2	LOCKWASHER, 5/16	
18	1001115014	1	HOSE ASSY	
19	2220596	2	ELBOW, 90 DEGREE, (includes item 25)	
20	91411044	1	WINCH HOOK STOWAGE	
21	2753902	1	HOSE ASSY	
22	2220671	2	ELBOW, 90 DEGREE, (includes item 26)	
25	88591205	2	O-RING	
26	88591206	2	O-RING	
27	2220726	1	ELBOW, 90 DEGREE	
28	2220385	1	SWIVEL NUT RUN TEE, 1/2, TUBE	

Downloaded from www.Manualslib.com manuals search engine

https://truckmanualshub.com/

Figure 3-12 100 Degree Drywall Swing Carriage Assembly

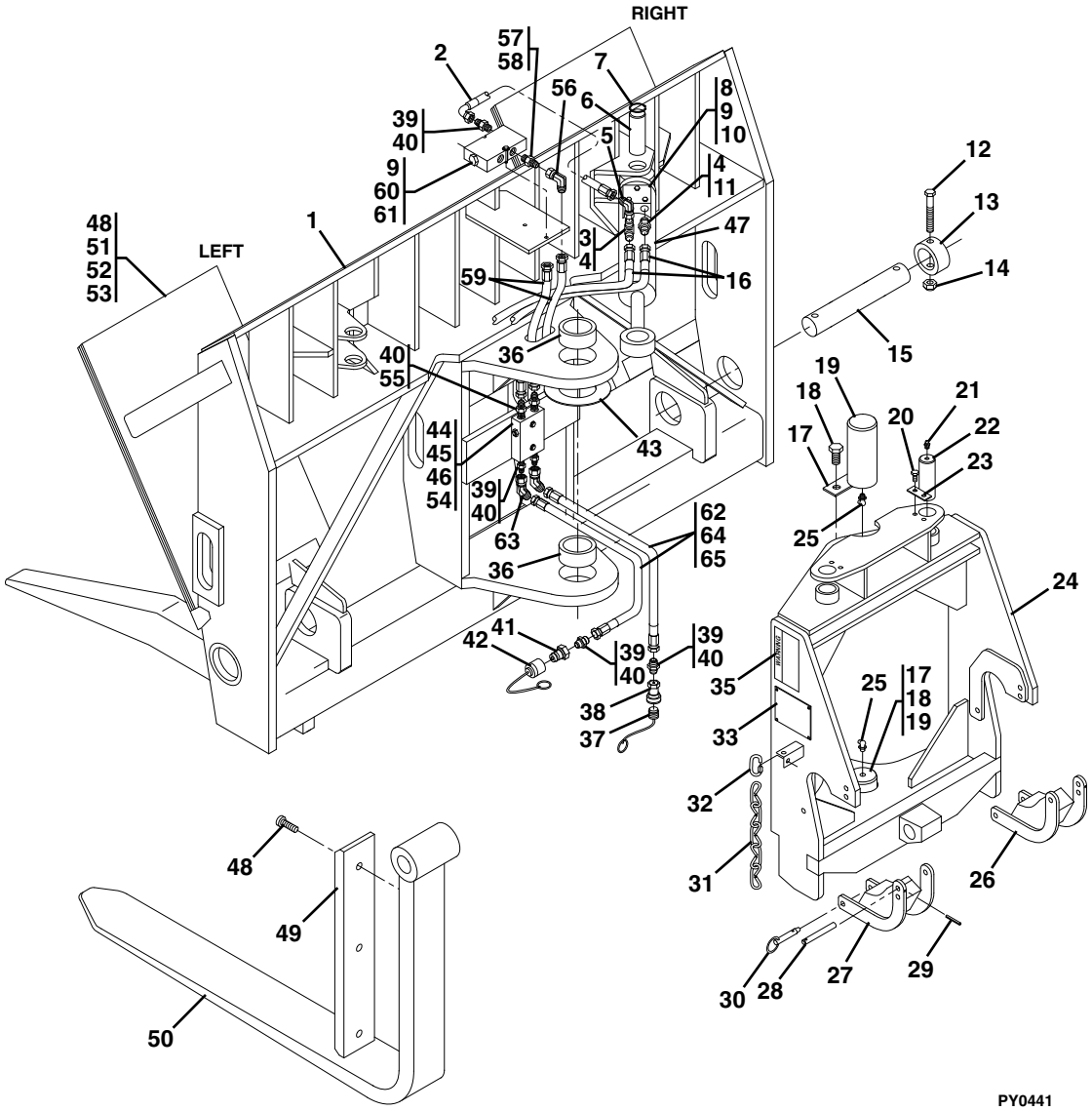

Downloaded from www.Manualslib.com manuals search engine

https://truckmanualshub.com/

Figure 3-12 100 Degree Drywall Swing Carriage Assembly

Item	Part Number	Qty.	Description	Rev.
	91405078	1	100 DEGREE DRYWALL SWING CARRIAGE, (includes all items)	O
1	NSS	1	DRYWALL CARRIAGE WELDMENT	
2	84719167	2	HOSE ASSY	
3	2220606	2	RUN TEE, (includes item 4)	
4	88591204	4	O-RING	
5	8760268	2	ELBOW, 90 DEGREE, (swivel nut)	
6	91041326	2	PIVOT PIN	
7	88581136	4	SNAP RING	
8	91413100	2	MANIFOLD BLOCK	
9	88201008	8	HEX HD CAPSCREW, 1/4-20X1-3/4, GR5	
10	88551009	6	LOCKWASHER, 1/4	
11	2220371	2	CONNECTOR, (includes item 4)	
12	88201105	4	HEX HD CAPSCREW, 5/8-11X4, GR5	
13	90200003	4	COLLAR	
14	88521310	4	HEX LOCKNUT, 5/8-11	
15	91401340	2	FORK PIN	
16	84719197	2	HOSE ASSY	
17	91041322	2	LOCKING PLATE	
18	83201026	4	HEX HD CAPSCREW, 1/2-13X1-1/2, GR8	
19	91041325	2	PIVOT PIN	
20	83201024	4	HEX HD CAPSCREW, 3/8-16X1, GR8	
21	88671008	2	STRAIGHT LUBE FITTING, 1/4-28	
22	91041324	2	PIVOT PIN	
23	91411073	2	LOCKING PLATE	
24	NSS	1	PIVOT WELDMENT	
25	88671018	2	LUBE FITTING, 45 DEGREE, 1/8	
26	91406070	1	RH SUPPORT BRACKET	
27	91406069	1	LH SUPPORT BRACKET	
28	91401266	2	PIN	
29	88631449	2	ROLL PIN, 1/8X1-1/2	
30	91043221	2	DETENT PIN	
31	91033038	24 in	CHAIN	
32	91033039	2	CHAIN CONNECTION	
33	NSS	1	S/N PLATE	
35	91143282	2	PINCH POINT DECAL	
36	91041327	2	BUSHING	
37	91043125	1	DUST PLUG	
38	91403413	1	FEMALE QUICK DISCONNECT	
39	2220372	6	CONNECTOR, (includes item 40)	
40	88591205	8	O-RING	
41	91403414	1	MALE QUICK DISCONNECT	
42	91043126	1	DUST CAP	
43	91041356	6	SPACER	
44	91413099	1	RELIEF VALVE	
45	88201029	2	HEX HD CAPSCREW, 5/16-18X3-1/4, GR5	
46	88501005	2	HEX NUT, 5/16-18	
47		Ref	SWING CYLINDER, (see Figure 12-27 for details)	
48	88241053	14	SOCKET FLAT HD CAPSCREW, 3/8-16X1-1/2	
49	90553013	2	BOTTOM DRYWALL GUARD	

Downloaded from www.Manualslib.com manuals search engine

https://truckmanualshub.com/

Figure 3-12 100 Degree Drywall Swing Carriage Assembly (Continued)

Item	Part Number	Qty.	Description	Rev.
50	91403366	2	DRYWALL FORK	
51	90553012	2	SIDE DRYWALL GUARD	
52	88551011	8	LOCKWASHER, 3/8	
53	88501006	8	HEX NUT, 3/8-16	
54	88551010	2	LOCKWASHER, 5/16	
55	2220373	2	CONNECTOR, (includes item 40)	
56	8765204	2	ELBOW, 90 DEGREE, (swivel nut)	
57	91041361	2	MODIFIED FITTING	
58	91411050	2	ORIFICE	
59	84719760	2	HOSE ASSY	
60	91043186	1	DBL PILOT CHECK VALVE	
61	88561002	2	FLAT WASHER, 1/4 IN	
62	84718208	2	HOSE ASSY	
63	2220657	2	ELBOW, 45 DEGREE, (swivel nut)	
64	71492142	24 in	FLEX LOOM	
65	86683122	4	TIE WRAP	

Downloaded from www.Manualslib.com manuals search engine

https://truckmanualshub.com/

Figure 3-12 100 Degree Drywall Swing Carriage Assembly (Continued)

Item	Part Number	Qty.	Description	Rev.

Downloaded from www.Manualslib.com manuals search engine

https://truckmanualshub.com/

Figure 3-13 Personnel Platform

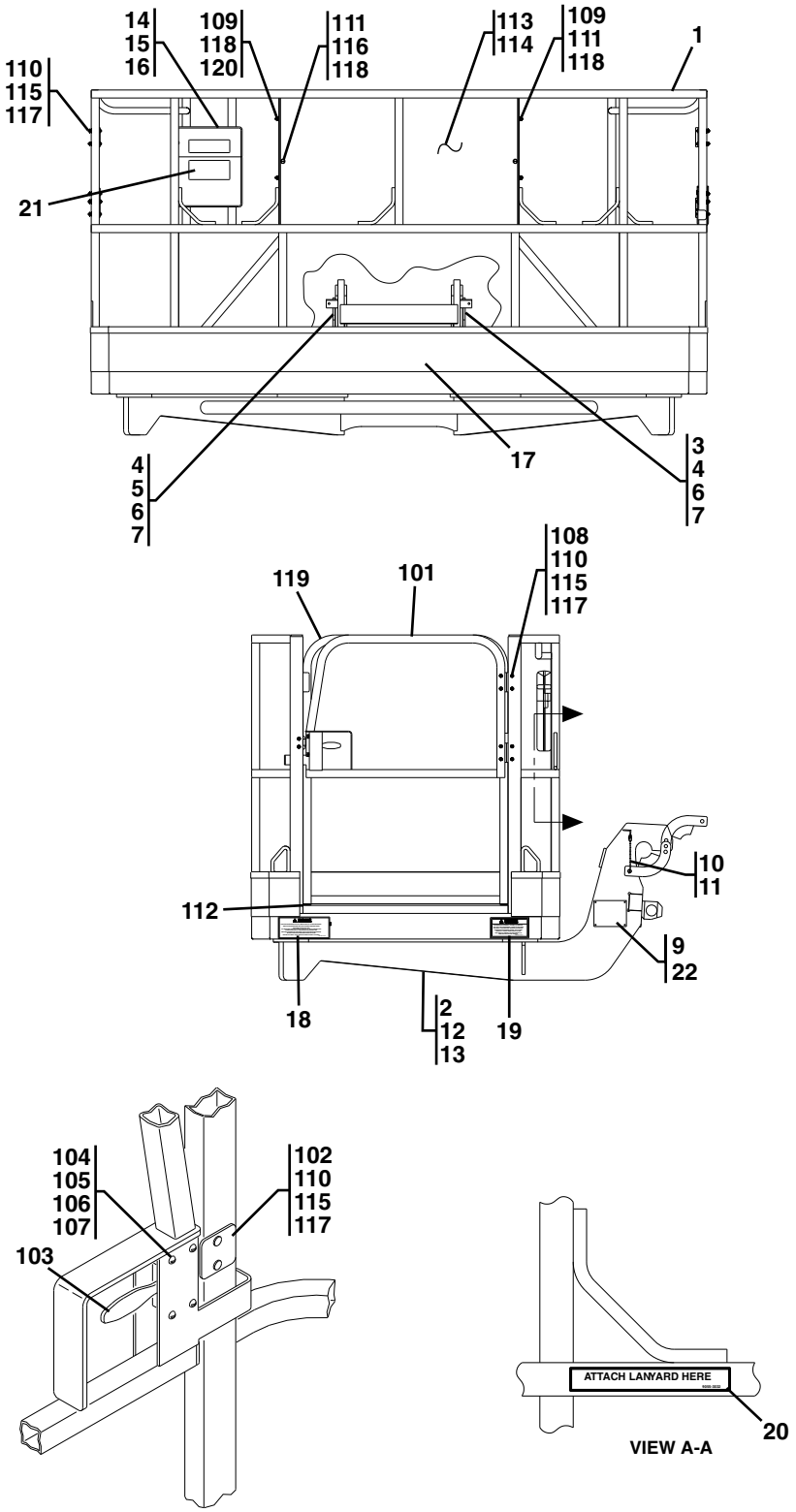

Downloaded from www.Manualslib.com manuals search engine

https://truckmanualshub.com/

Figure 3-13 Personnel Platform

Item	Part Number	Qty.	Description	Rev.
	91415025	1	PERSONNEL PLATFORM ASSY, (includes items 1 thru 22)	H
1	NSS	1	106 IN PERSONNEL PLATFORM, (includes items 101 thru 120)	
	3510809	1	96 IN PERSONNEL PLATFORM, (includes items 101 thru 120)	
2	91406156	1	ADAPTER SUPPORT	
3	91406069	1	LH SUPPORT BRACKET	
4	91401266	2	PIN	
5	91406070	1	RH SUPPORT BRACKET	
6	88631449	2	ROLL PIN, 1/8X1-1/2	
7	91043221	2	DETENT PIN	
9	88341022	4	DRIVE SCREW	
10	91033039	2	CHAIN CONNECTION	
11	91033038	24 in	CHAIN	
12	0682012	8	HEX HD CAPSCREW, 5/8-11X1-1/2	
13	4762000	8	LOCKWASHER, 5/8	
14	91403230	1	MANUAL HOLDER	
15	8310382	4	WHIZ-LOCKNUT, 1/4-20	
16	31200160	1	PERSONNEL WORK PLATFORM MANUAL	
17	1702773	1	JLG DECAL	
18	1706893	1	WARNING DECAL	
19	1706892	1	WARNING DECAL	
20	1704277	6	LANYARD DECAL	
21	1701509	1	MANUAL DECAL	
22	NSS	1	S/N PLATE	
101	4846265	1	GATE	
102	3539685	1	LATCH PLATE	
103	2940074	1	LATCH	
104	3911008	4	ROUND HD SCREW	
105	3311001	4	HEX NUT, #10-24	
106	4751000	4	WASHER, #10	
107	4761000	4	WASHER	
108	2600216	2	HINGE	
109	0641524	4	HEX HD CAPSCREW, 5/16-18X3	
110	2080063	16	NYLON LOCKNUT, 1/4-20	
111	2080064	14	NYLON LOCKNUT, 5/16-18	
112	3520072	5	CAP PLUG	
113	3573363	1	GUARD PLATE	
114	3641438	1	BENT RAIL	
115	3911428	16	ROUND HD SCREW, 1/4-20X1-3/4	
116	3911528	12	ROUND HD SCREW, 5/16-18X1-3/4	
117	4711400	16	WASHER, 1/4	
118	4711500	32	WASHER, 5/16	
119	4846528	1	BASKET END WELDMENT	
120	3311501	2	HEX NUT, 5/16-18	

Downloaded from www.Manualslib.com manuals search engine

https://truckmanualshub.com/

Figure 3-14 Fork Mounted Platform

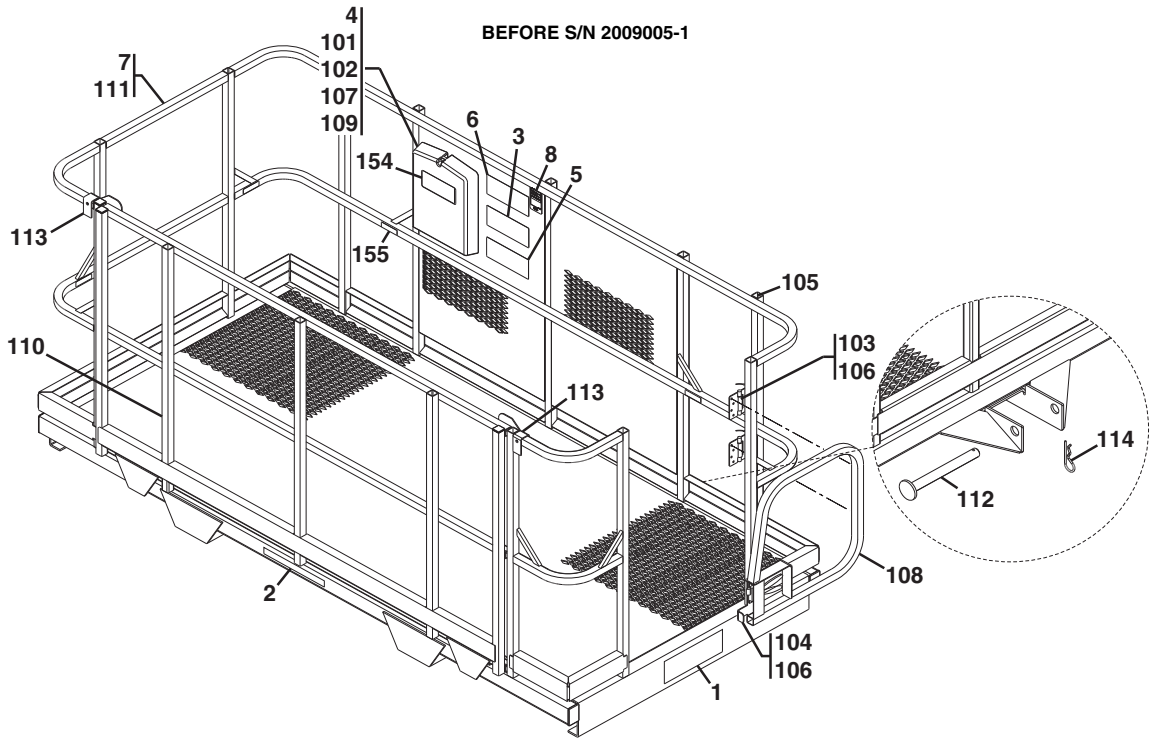

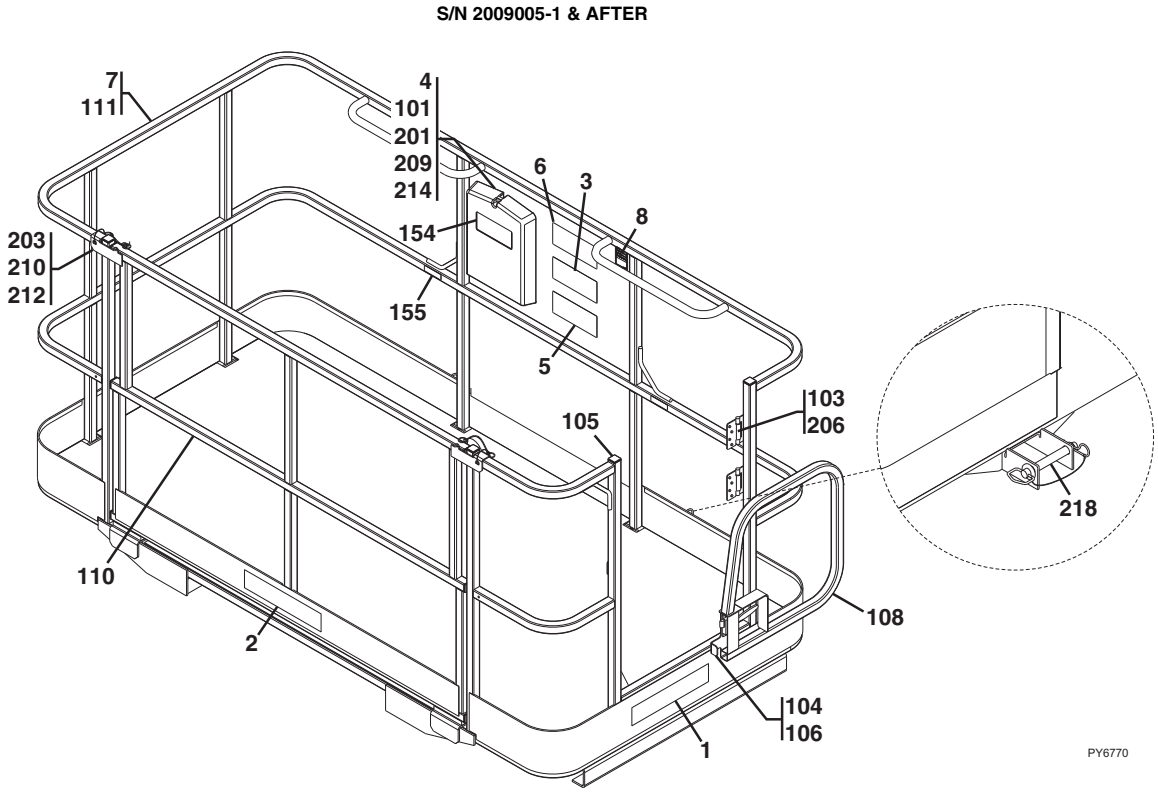

Downloaded from www.Manualslib.com manuals search engine

https://truckmanualshub.com/

Figure 3-14 Fork Mounted Platform

Item	Part Number	Qty.	Description	Rev.
	1001092280	Ref	FORK MOUNTED PLATFORM, **(Before S/N 2009005-1)**, **(ASME)**, (no longer available, order 1001103637 for replacement or items 1 thru 8 for service)	E
	1001103637	1	FORK MOUNTED PLATFORM, **(S/N 2009005-1 & After)**, **(ASME)**, (includes items 1 thru 8)	D
	1001096306	Ref	FORK MOUNTED PLATFORM, **(Before S/N 2009005-1)**, **(ISO)**, (no longer available, order 1001103730 for replacement or items 1 thru 8 for service)	C
	1001103730	1	FORK MOUNTED PLATFORM, **(S/N 2009005-1 & After)**, **(ISO)**, (includes items 1 thru 8)	D
	1001097072	Ref	FORK MOUNTED PLATFORM, **(Before S/N 2009005-1)**, **(ASME - FRENCH)**, (no longer available, order 1001103736 for replacement or items 1 thru 8 for service)	C
	1001103736	1	FORK MOUNTED PLATFORM, **(S/N 2009005-1 & After)**, **(ASME - FRENCH)**, (includes items 1 thru 8)	D
1	1702773	2	JLG DECAL	
2	1704885	1	WEBSITE DECAL	
3	1706892	1	PLATFORM WARNING DECAL, **(ASME)**	
	1001096025	1	PLATFORM WARNING DECAL, **(ISO)**	
	1001096024	1	PLATFORM WARNING DECAL, **(ASME - FRENCH)**	
4	31200160	1	OPERATION & SAFETY MANUAL, **(ASME)**	
	31200387	1	OPERATION & SAFETY MANUAL, **(ISO - SPANISH)**	
	31200388	1	OPERATION & SAFETY MANUAL, **(ISO - PORTUGUESE)**	
	31200336	1	OPERATION & SAFETY MANUAL, **(ASME - FRENCH)**	
5	1001092481	1	WARNING DECAL, **(ASME)**	
	1001096021	1	WARNING DECAL, **(ISO)**	
	1001096019	1	WARNING DECAL, **(ASME - FRENCH)**	
6	1001092482	1	CAPACITY DECAL, **(ASME)**	
	1001096023	1	CAPACITY DECAL, **(ISO)**	
	1001096020	1	CAPACITY DECAL, **(ASME - FRENCH)**	
7	NSS	1	FORK MOUNTED PLATFORM, **(Before S/N 2009005-1)**, (includes items 101 thru 114, 154 & 155)	B
	NSS	1	FORK MOUNTED PLATFORM, **(S/N 2009005-1 & After)**, (includes items 101, 103 thru 106, 108, 110, 111, 154, 155, 201, 203, 206, 210, 212, 214 & 218)	J
8	NSS	1	S/N PLATE	
101	0860520	1	MANUAL STORAGE BOX	
102	2080044	4	RIVNUT FASTENER 1/4-20	
103	2600281	2	HINGE	
104	2940074	1	LATCH	
105	3520198	21	PLUG, **(Before S/N 2009005-1)**	
	3520072	10	PLUG, **(S/N 2009005-1 & After)**	
106	3820020	20	POP RIVET, **(Before S/N 2009005-1)**	
	3820020	4	POP RIVET, **(S/N 2009005-1 & After)**	
107	4751400	4	WASHER, 1/4	
108	4846452	1	GATE WELDMENT	
109	80263012	4	SCREW WHIZ-LOCK, 1/4-20 X 1/2	
110	1001093140	1	GATE WELDMENT, **(Before S/N 2009005-1)**	
	1001095810	1	GATE WELDMENT, **(S/N 2009005-1 & After)**	
111	NSS	1	PLATFORM WELDMENT	

Downloaded from www.Manualslib.com manuals search engine

https://truckmanualshub.com/

Figure 3-14 Fork Mounted Platform (Continued)

Item	Part Number	Qty.	Description	Rev.
112	1001093171	2	PIN	
113	1001097168	2	PIN, SAFETY SNAP, WITH LANYARD	
114	1001098582	2	LYNCH PIN 3/16 WITH LANYARD	
154	1701509	1	MANUAL DECAL	
155	1704277	3	LANYARD ATTACH DECAL	
201	0641405	4	HEX HD CAPSCREW, 1/4-20X5/8	
203	1060379	2	6 IN LANYARD CABLE	
206	2080040	16	FASTENER	
209	3311405	4	HEX NUT, 1/4-20	
210	3421453	2	PIN	
212	3760170	4	RING	
214	4711400	8	WASHER, 1/4	
218	1001102813	2	HITCH PIN	

Downloaded from www.Manualslib.com manuals search engine

https://truckmanualshub.com/

Figure 3-14 Fork Mounted Platform (Continued)

Item	Part Number	Qty.	Description	Rev.

Downloaded from www.Manualslib.com manuals search engine

https://truckmanualshub.com/

Figure 3-15 100 Degree Swing Carriage With Side Tilt

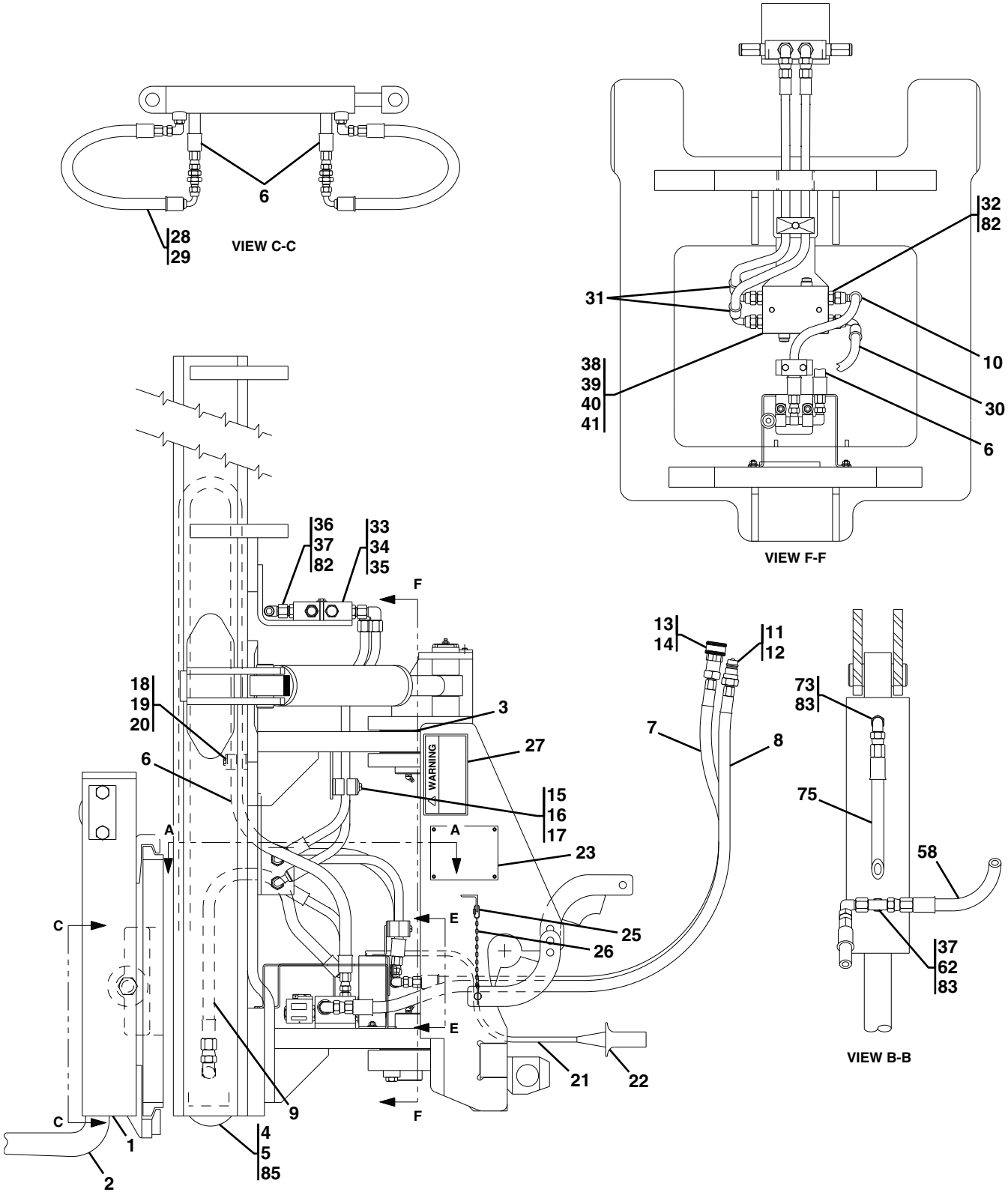

Downloaded from www.Manualslib.com manuals search engine

https://truckmanualshub.com/

Figure 3-15 100 Degree Swing Carriage With Side Tilt (Continued)

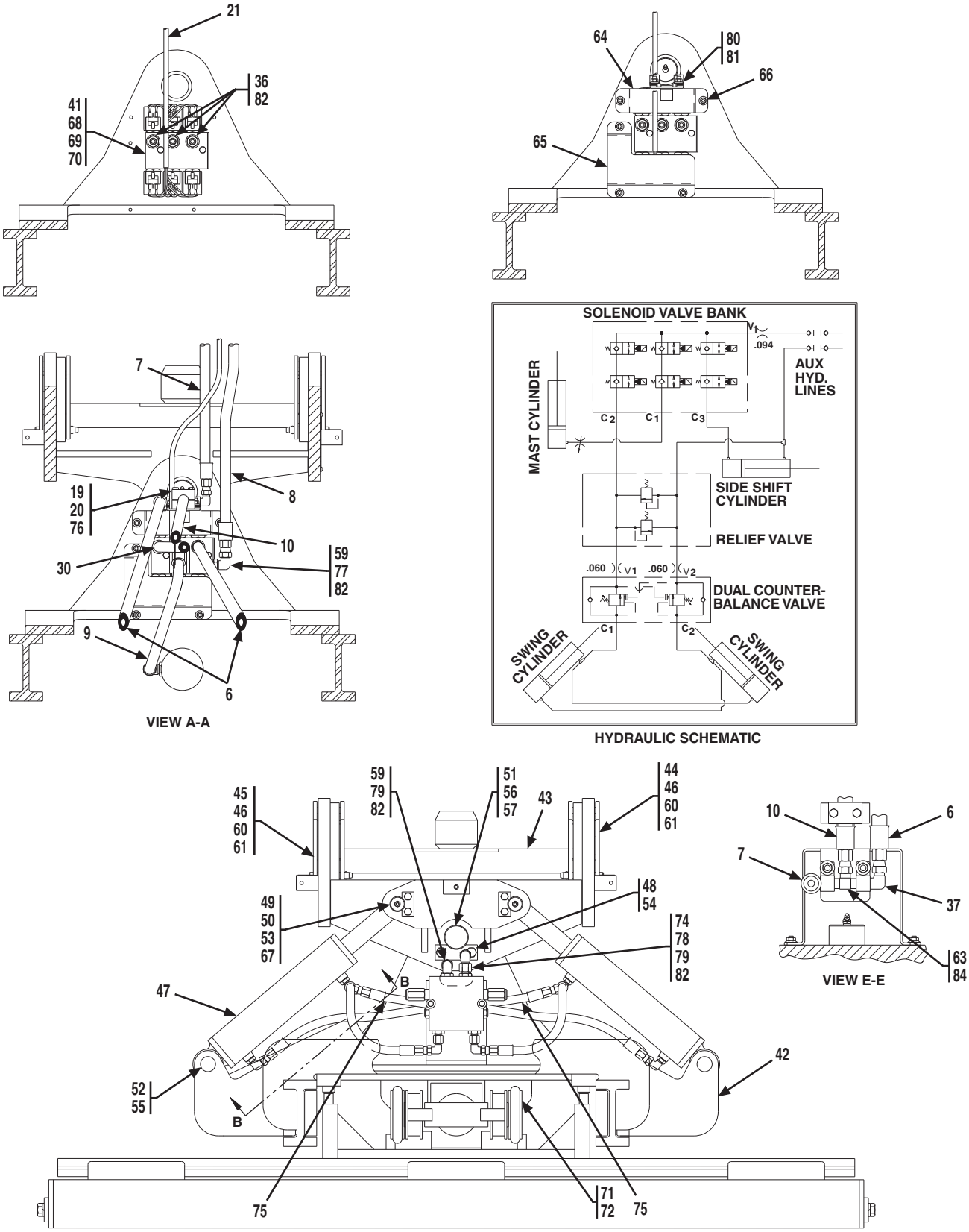

Downloaded from www.Manualslib.com manuals search engine

https://truckmanualshub.com/

Figure 3-15 100 Degree Swing Carriage With Side Tilt

Item	Part Number	Qty.	Description	Rev.
	91405070	1	100 DEGREE SWING CARRIAGE WITH SIDE SHIFT, 48 IN FORKS, (includes all items)	N
1	NSS	1	72 IN SIDE SHIFT CARRIAGE	
2	91403364	2	FORK, 1-3/4X4X48	
3	91041356	6	SPACER	
4	91034374	6	LOAD ROLLER	
5	91034375	12	SHIM	
6	84719060	2	HOSE ASSY	
7	84719229	1	HOSE ASSY	
8	84719499	1	HOSE ASSY	
9	84718737	1	HOSE ASSY	
10	84719765	1	HOSE ASSY	
11	91403414	1	MALE QUICK DISCONNECT COUPLING	
12	91043126	1	DUST CAP	
13	91403413	1	FEMALE QUICK DISCONNECT COUPLING	
14	91043125	1	DUST CAP	
15	77133136	1	CLAMP SET	
16	77133137	1	COVER PLATE	
17	88201023	1	HEX HD CAPSCREW, 5/16-18X1-3/4, GR5	
18	77133810	2	STANDARD CLAMP KIT	
19	77133052	3	COVER PLATE	
20	77133209	6	HEX HD CAPSCREW, 1/4-20X1-3/8	
21	90453023	1	WIRING HARNESS	
22	90207662	1	6 CONTACT PLUG	
23	NSS	1	S/N PLATE	
25	91033039	2	CHAIN CONNECTION	
26	91033038	24 in	CHAIN	
27	91143282	2	PINCH POINT DECAL	
28	84719185	2	HOSE ASSY	
29	2230024	2	BULKHEAD UNION, 9/16-18X3/8, TUBE	
30	84719766	1	HOSE ASSY	
31	84719767	2	HOSE ASSY	
32	2220373	4	CONNECTOR, (includes item 82)	
33	90453018	1	DUAL COUNTERBALANCE VALVE	
34	88201008	2	HEX HD CAPSCREW, 1/4-20X1-3/4, GR5	
35	88561002	2	FLAT WASHER, 1/4	
36	2220372	5	CONNECTOR, (includes item 82)	
37	8760268	3	ELBOW, 90 DEGREE, SWIVEL NUT	
38	91413099	1	RELIEF VALVE	
39	88201029	2	HEX HD CAPSCREW, 5/16-18X3-1/4, GR5	
40	88501005	2	HEX NUT, 5/16-18	
41	88551010	4	LOCKWASHER, 5/16	
42	91406072	1	MAST WELDMENT	
43	91416018	1	SWING FORK PIVOT WELDMENT	
44	91406069	1	LH PIN SUPPORT WELDMENT	
45	91406070	1	RH PIN SUPPORT WELDMENT	
46	91401266	2	PIN	
47		Ref	SWING CYLINDER, (see Figure 12-39 for details)	
48	91041322	2	LOCKING PLATE	

Downloaded from www.Manualslib.com manuals search engine

https://truckmanualshub.com/

Figure 3-15 100 Degree Swing Carriage With Side Tilt (Continued)

Item	Part Number	Qty.	Description	Rev.
49	91411073	2	LOCKING PLATE	
50	91041324	2	PIVOT PIN	
51	91041325	2	PIVOT PIN	
52	91041326	2	PIVOT PIN	
53	83201024	4	HEX HD CAPSCREW, 3/8-16X1, GR8	
54	83201026	4	HEX HD CAPSCREW, 1/2-13X1-1/2, GR8	
55	88581136	4	SNAP RING	
56	88671018	2	LUBE FITTING, 45 DEGREE, 1/8	
57	91041327	2	BUSHING	
58	77133201	2	HOSE ASSY	
59	90203384	2	90 DEGREE ELBOW, MODIFIED	
60	88631449	2	ROLL PIN, 1/8X1-1/2	
61	91043221	2	DETENT PIN	
62	2220899	2	BRANCH TEE, (includes item 83)	
63	2220490	1	UNION TEE, 3/8, TUBE	
64	91406155	1	FRONT COVER WELDMENT	
65	90451061	1	BACK COVER SOLENOID VALVE	
66	77143013	5	WHIZ-LOCKNUT, 1/4-20	
67	88671008	2	STRAIGHT LUBE FITTING, 1/4-28	
68	91403338	1	SOLENOID VALVE BANK	
69	88201025	2	HEX HD CAPSCREW, 5/16-18X2-1/4, GR5	
70	88561108	2	FLAT WASHER, 5/16	
71	91034399	2	HOSE SHEAVE	
72	91034400	2	SHOULDER BOLT	
73	2220473	2	ELBOW, 90 DEGREE, (includes item 83)	
74	91041361	1	MODIFIED FITTING	
75	90204097	2	HOSE ASSY	
76	77133053	1	CLAMP SET	
77	91041362	1	ORIFICE FITTING	
78	8765204	1	ELBOW, 90 DEGREE, SWIVEL NUT	
79	91411050	2	ORIFICE	
80	86521144	2	SUPPORT CLAMP	
81	77143006	2	WHIZ-LOCKNUT, 5/16-18	
82	3780140	9	O-RING	
83	3780177	4	O-RING	
84	91403415	1	ELBOW, 90 DEGREE, SWIVEL NUT	
85	91034377	2	SCREW	

Downloaded from www.Manualslib.com manuals search engine

https://truckmanualshub.com/

Figure 3-16 Forks

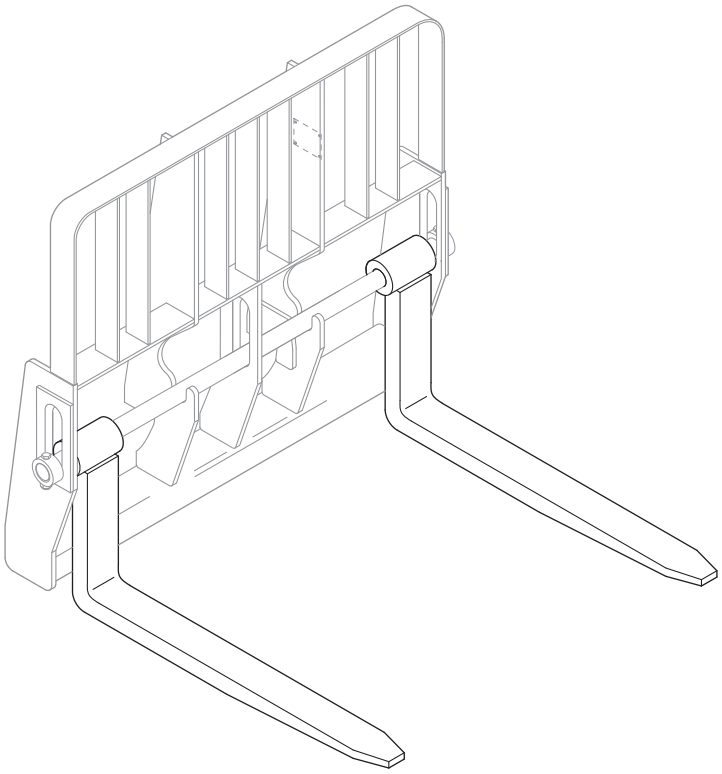

Downloaded from www.Manualslib.com manuals search engine

https://truckmanualshub.com/

Figure 3-16 Forks

Item	Part Number	Qty.	Description	Rev.
	91403359	6	48 IN CUBING FORK, 2X2, 3,880 lbs.	B
	2340037	6	48 IN CUBING FORK, 2X2, 3,880 lbs.	A
	91403364	2	48 IN PALLET FORK, 1-3/4X4, 6,100 lbs., (only used with 100 Degree Swing Carriage with Side Shift, 91405070)	B
	2340045	2	48 IN PALLET FORK, 2-23/64X4, 10,950 lbs.	A
	2340038	2	48 IN PALLET FORK, 2-23/64X5, 13,700 lbs.	A
	91563141	2	48 IN PALLET FORK, 2-1/4X5, 13,700 lbs.	C
	91403366	2	48 IN DRYWALL CARRIAGE FORK, 2X6, 5,000 lbs., (only used with Drywall Carriage, 91405077 or 100 Degree Drywall Swing Carriage, 91405078)	B
	91513206	2	48 IN PALLET FORK, 2-1/4X4, 10,950 lbs.	D
	91563142	2	60 IN PALLET FORK, 2-1/4X6, 16,300 lbs.	C
	2340046	2	60 IN DUAL TAPER FORK, 1-3/4X7, 10,800 lbs.	A
	2340039	2	60 IN DUAL TAPER FORK, 2-23/64X6, 16,300 lbs.	A
	1001092391	2	72 IN DUAL TAPER FORK, 2X6, 11,300 lbs.	A
	91563143	2	72 IN PALLET FORK, 2-1/4X6, 16,300 lbs.	C
N1	Note	Ref	**FORKS RATED LESS THAN THE ATTACHMENT OR MACHINE'S CAPACITY DECREASES CAPACITY OF THE ATTACHMENT OR MACHINE TO THAT OF THE FORKS. FORKS RATED MORE THAN THE ATTACHMENT OR MACHINE'S CAPACITY DO NOT INCREASE ATTACHMENT OR MACHINE'S CAPACITY.**	
N2	Note	Ref	**PLEASE CONSULT JLG PARTS DEPARTMENT TO DETERMINE THE CORRECT FORKS APPLICABLE TO YOUR SPECIFIC CARRIAGE ASSEMBLY & APPLICATION.**	

Downloaded from www.Manualslib.com manuals search engine

https://truckmanualshub.com/

Figure 3-17 Fork Mounted Lifting Hook

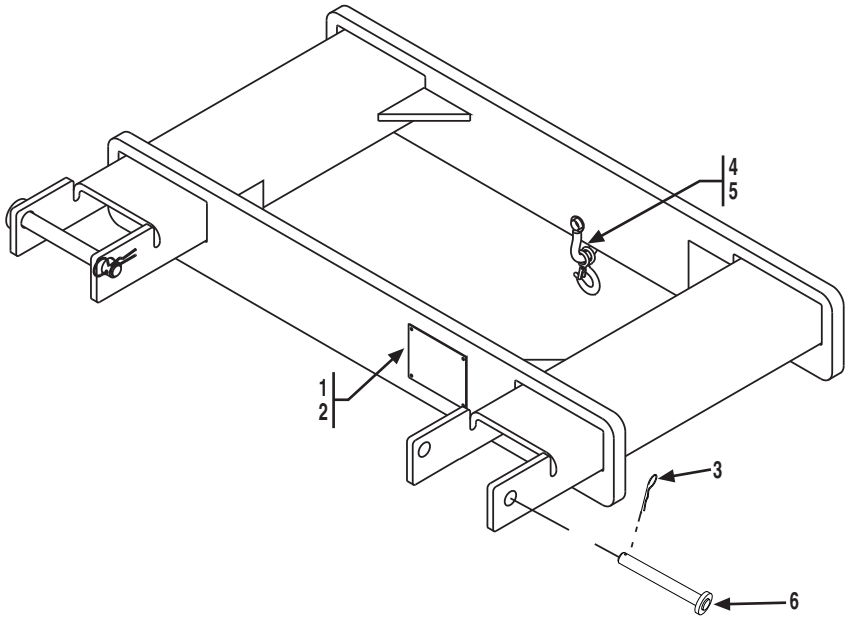

NOTE:

PALLET/LUMBER FORKS OF AN APPROPRIATE LOAD RATING MUST BE USED

Downloaded from www.Manualslib.com manuals search engine

https://truckmanualshub.com/

Figure 3-17 Fork Mounted Lifting Hook

Item	Part Number	Qty.	Description	Rev.
	90553036	Ref	FORK MOUNTED LIFTING HOOK ASSY, (no longer available, use 91565094 for replacement or use items 1 thru 6 for service)	E
1	NSS	1	S/N ATTACHMENT PLATE	
2	88341022	4	DRIVE SCREW, 3/8	
3	90554078	2	HAIRPIN CLIP	
4	90554079	1	CLEVIS CONNECTOR	
5	90554080	1	HOOK	
6	90554081	2	PIN	

Downloaded from www.Manualslib.com manuals search engine

https://truckmanualshub.com/

Figure 3-17 Fork Mounted Lifting Hook

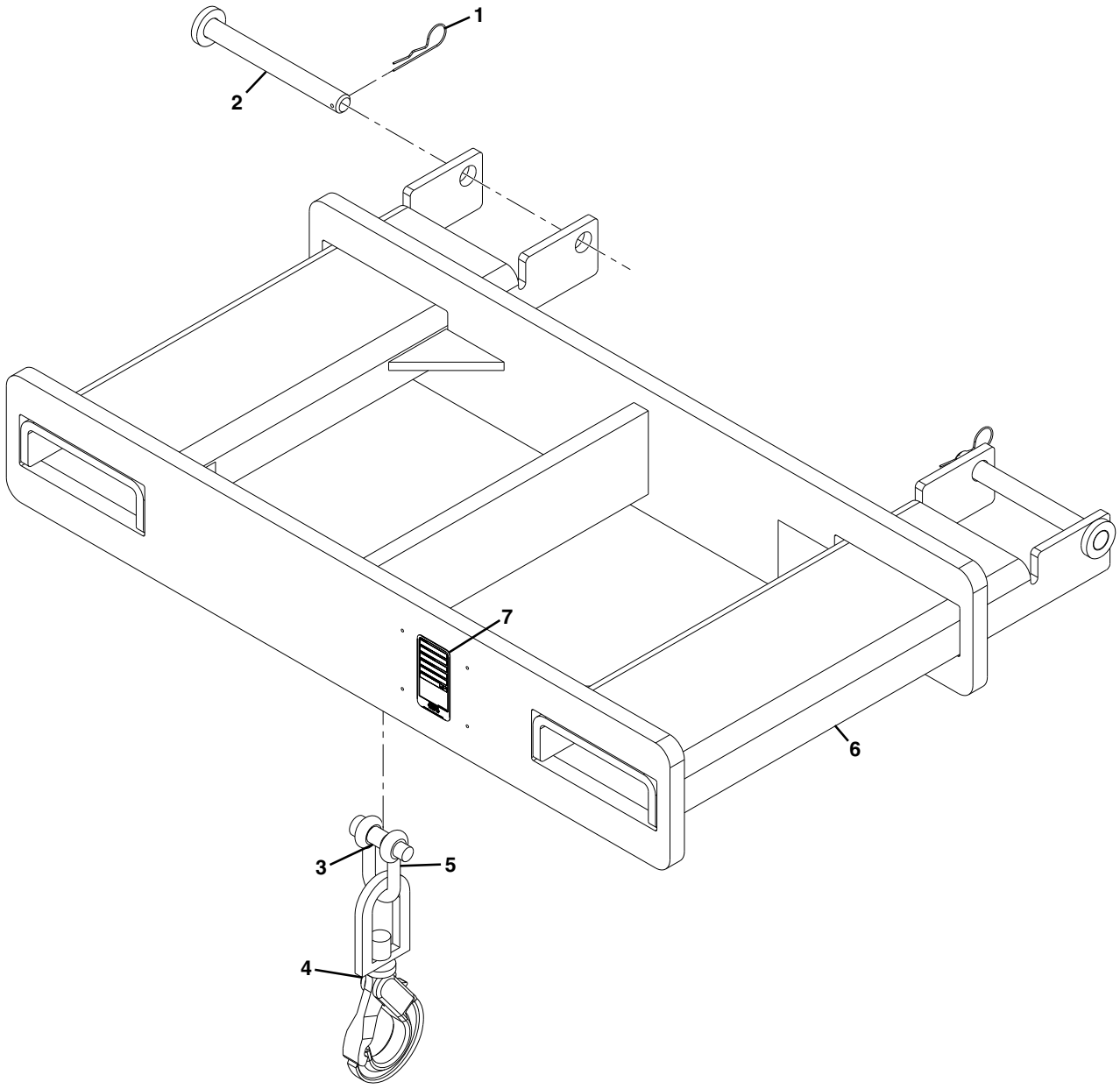

NOTE:

PALLET/LUMBER FORKS OF AN APPROPRIATE LOAD RATING MUST BE USED.

PAP23210

Downloaded from www.Manualslib.com manuals search engine

https://truckmanualshub.com/

Figure 3-17 Fork Mounted Lifting Hook

Item	Part Number	Qty.	Description	Rev.
	91565094	1	FORK MOUNTED LIFTING HOOK, (includes all items)	F
1	7029520	2	HAIRPIN CLIP	
2	1001093171	2	PIN	
3	70020555	1	SPRING BUSHING	
4	90554080	1	SLING HOOK	
5	7029521	1	CHAIN SHACKLE, 12,000LB	
6	NSS	1	LIFTING HOOK	
7	NSS	1	S/N PLATE	

Downloaded from www.Manualslib.com manuals search engine

https://truckmanualshub.com/

Figure 3-18 Grapple Bucket

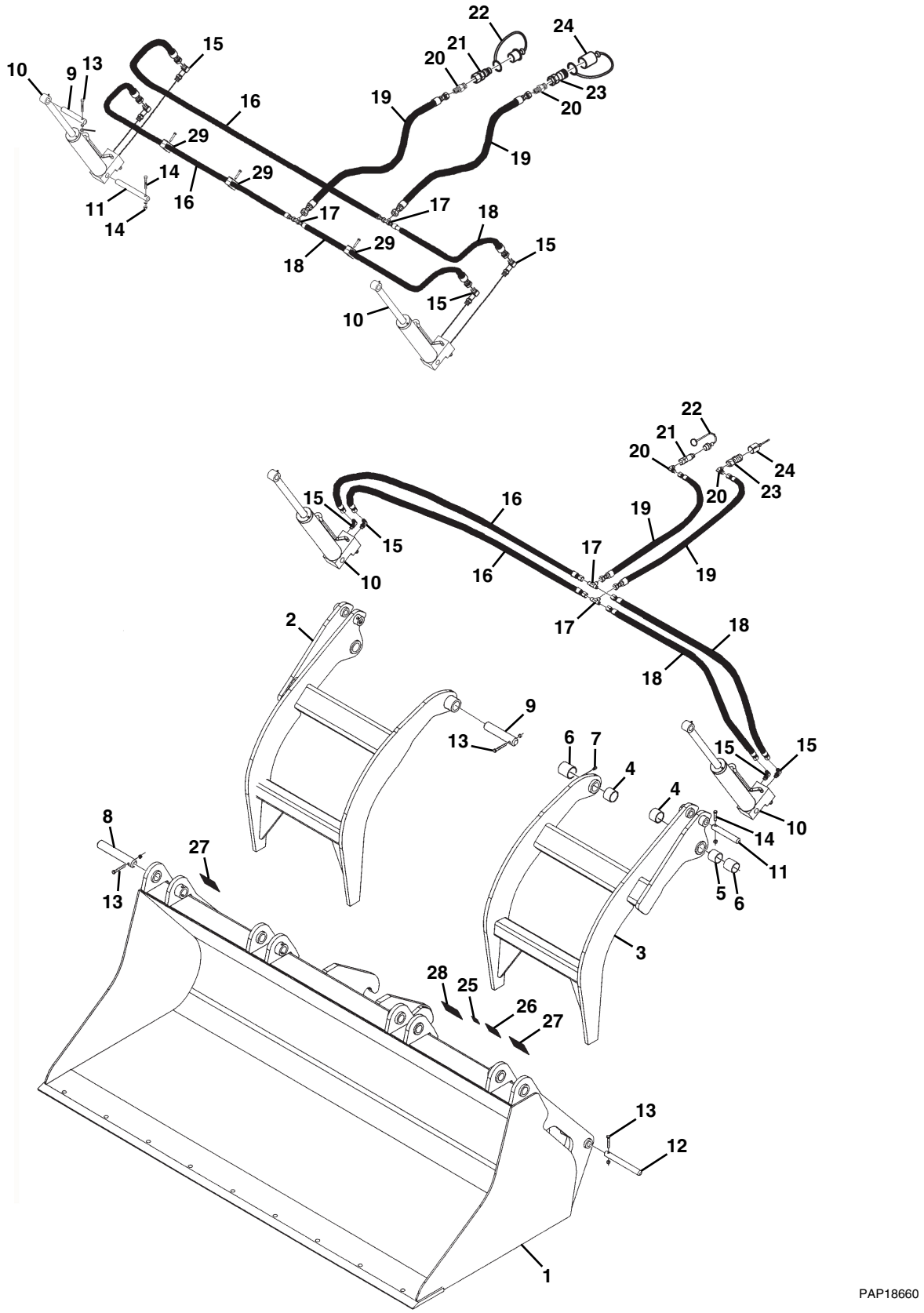

Downloaded from www.Manualslib.com manuals search engine

https://truckmanualshub.com/

Figure 3-18 Grapple Bucket

Item	Part Number	Qty.	Description	Rev.
	0930020	1	GRAPPLE BUCKET, (includes all items)	G
1	NSS	1	BUCKET	
2	70021391	1	RIGHT GRAPPLE HOOK	
3	70021392	1	LEFT GRAPPLE HOOK	
4	70021358	4	BUSHING	
5	70021359	2	SPACER	
6	70021360	4	BUSHING	
7	7029714	4	GREASE FITTING	
8	70021361	2	OUTER PIVOT PIN	
9	70021362	2	INNER PIVOT PIN	
10		Ref	CYLINDER ASSY, (see Figure 9-21 for details)	
11	70021364	2	PIN	
12	70021365	2	PIN	
13	70021366	4	HEX HD CAPSCREW, 3/8X2-3/4	
	70021367	4	LOCKNUT, 3/8	
14	70021399	4	HEX HD CAPSCREW, 3/8X2-1/4	
	70021367	4	LOCKNUT, 3/8	
15	90554065	4	ELBOW, 90 DEGREE	
16	70021395	2	HOSE ASSY, 3/8X64	
17	70020562	2	TEE FITTING	
18	70021981	2	HOSE ASSY, 3/8X46	
19	70021395	2	HOSE ASSY, 3/8X64	
20	70022527	2	ELBOW, 90 DEGREE	
21	7029692	1	MALE QUICK COUPLER	
22	90554062	1	DUST COVER	
23	70021342	1	FEMALE QUICK COUPLER	
24	90554076	1	DUST COVER	
25	90554016	1	MADE IN USA DECAL	
26	NSS	1	S/N PLATE	
27	90554017	2	DANGER PINCH POINT DECAL	
28	90554018	1	WARNING HIGH PRESSURE DECAL	
29	70021387	4	HOSE CLAMP	

Downloaded from www.Manualslib.com manuals search engine

https://truckmanualshub.com/

Figure 3-19 Fork Pin Lock Installation

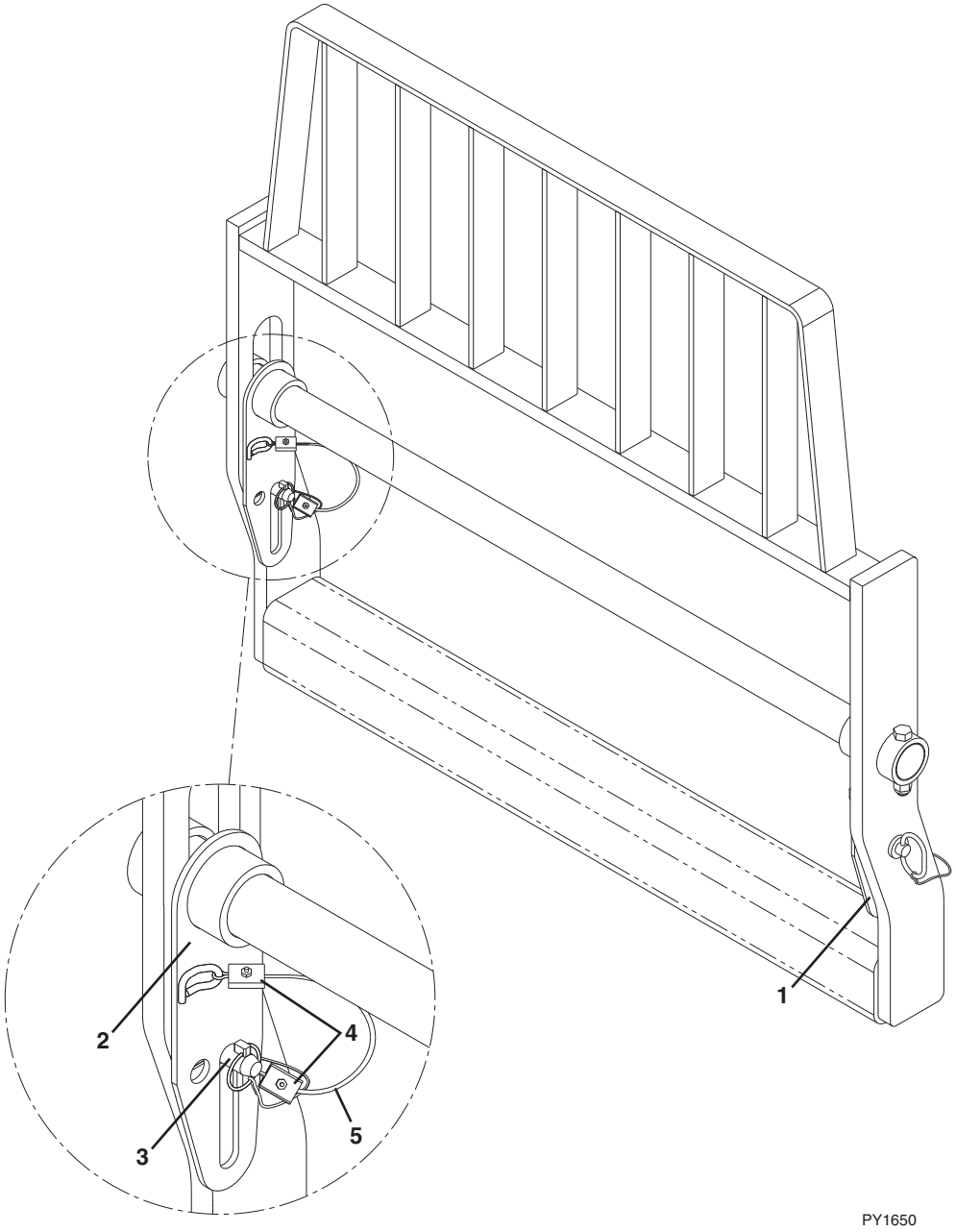

Downloaded from www.Manualslib.com manuals search engine

https://truckmanualshub.com/

Figure 3-19 Fork Pin Lock Installation

Item	Part Number	Qty.	Description	Rev.
	1001093465	1	FORK PIN LOCK INSTALLATION, (includes all items)	B
1	0240156	1	LH FORK PIN LOCK	
2	1001093273	1	RH FORK PIN LOCK	
3	1001093377	2	HITCH PIN	
4	1001094830	4	CLAMP	
5	1001094330	2	LANYARD	

Downloaded from www.Manualslib.com manuals search engine

https://truckmanualshub.com/

Figure 3-20 6 Foot Mast With 48 Inch & 72 Inch Carriage

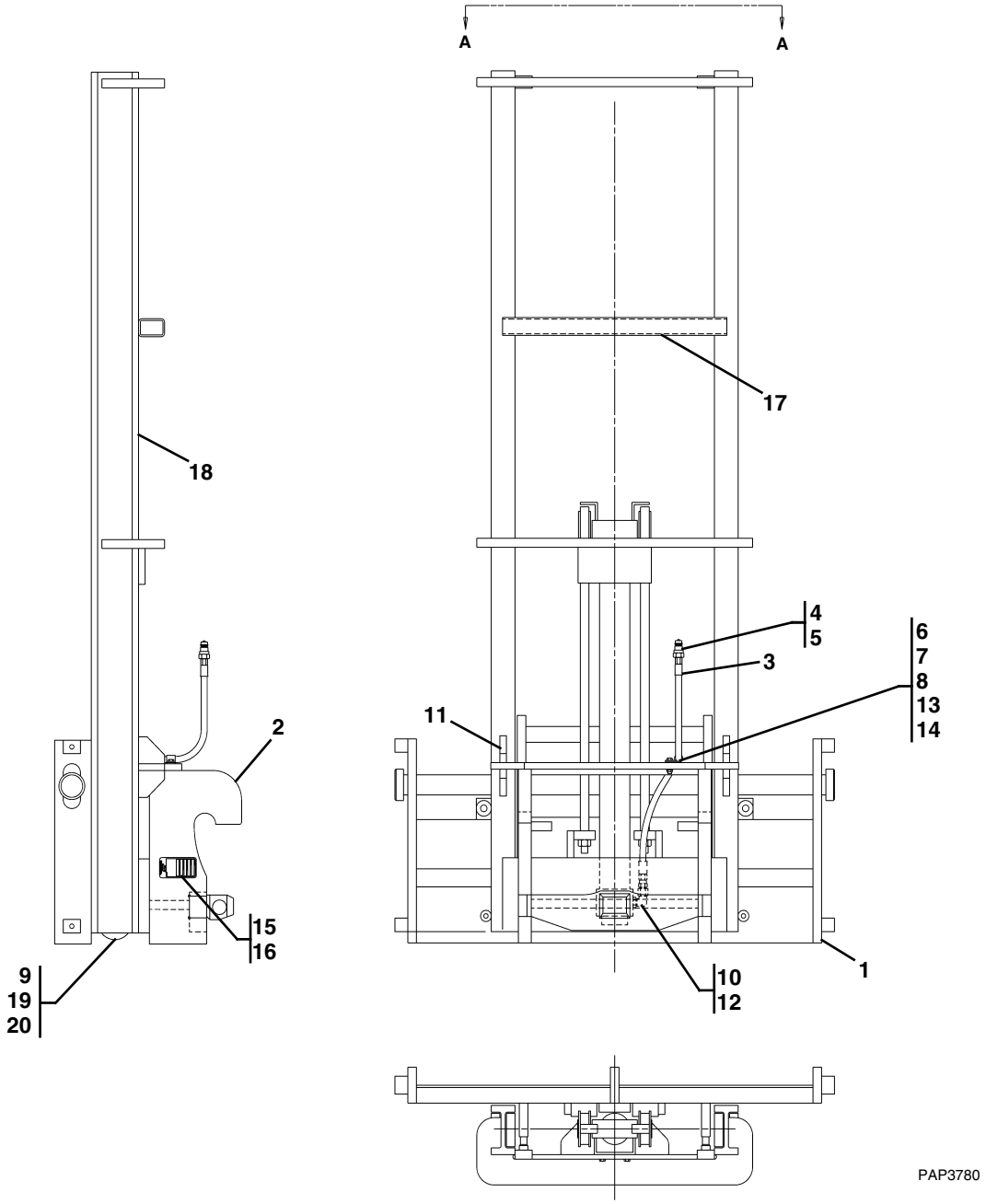

Downloaded from www.Manualslib.com manuals search engine

https://truckmanualshub.com/

Figure 3-20 6 Foot Mast With 48 Inch & 72 Inch Carriage

Item	Part Number	Qty.	Description	Rev.
	91405060	1	6 FT MAST WITH 48 IN CARRIAGE, (includes all items)	L
	91405061	1	6 FT MAST WITH 72 IN CARRIAGE, (includes all items)	H
1	NSS	1	CARRIAGE WELDMENT	
2	NSS	1	ADAPTER	
3	84719229	1	HOSE ASSY	
4	91403414	1	ADAPTER	
5	91043126	1	DUST CAP	
6	24431386	1	CLAMP	
7	88201037	1	HEX HD SCREW, 3/8-16	
8	88561004	1	FLAT WASHER	
9	91034377	2	SCREW	
10	1001094695	1	ADAPTER	
11	NSS	4	GUSSET	
13	88501006	1	HEX NUT, 3/8-16	
14	88551011	1	LOCKWASHER, 3/8	
15	NSS	1	S/N PLATE	
17	NSS	1	STOP TUBE	
18	91403339	1	6 FT MAST	
19	91034374	6	LOAD ROLLER	

Downloaded from www.Manualslib.com manuals search engine

https://truckmanualshub.com/

Figure 3-21 8 Foot Standard Mast

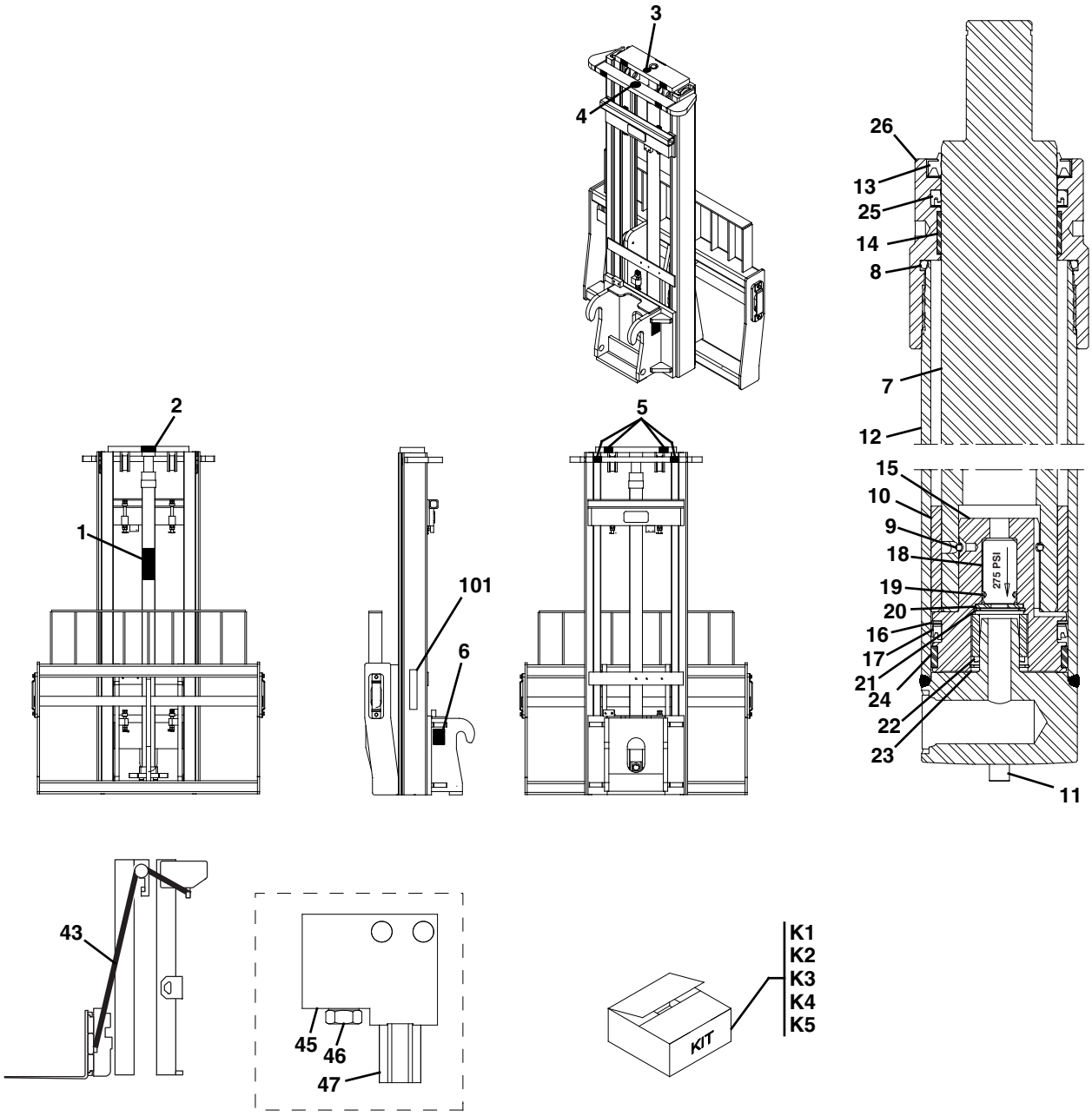

PAP11330

Downloaded from www.Manualslib.com manuals search engine

https://truckmanualshub.com/

Figure 3-21 8 Foot Standard Mast (Continued)

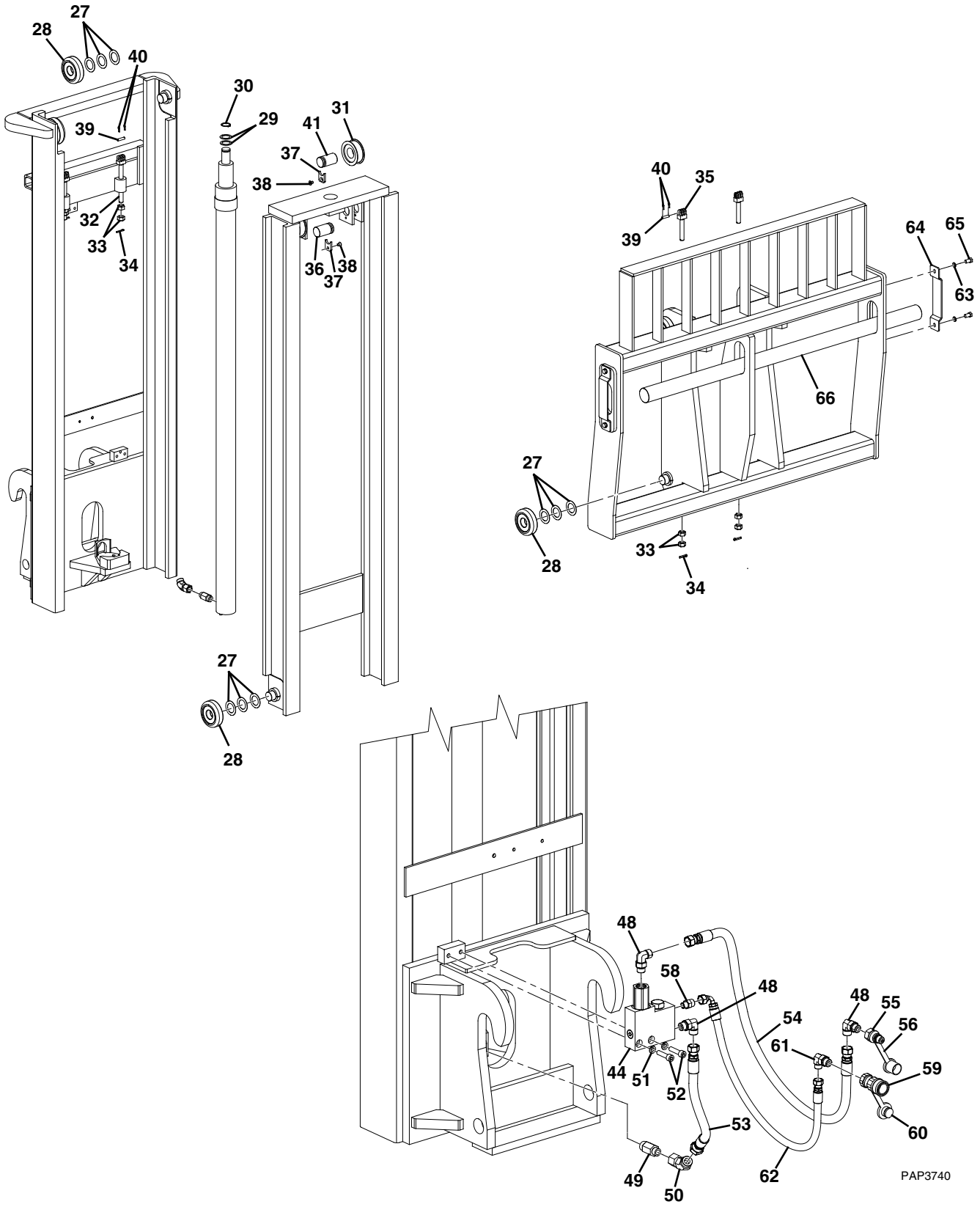

Downloaded from www.Manualslib.com manuals search engine

https://truckmanualshub.com/

Figure 3-21 8 Foot Standard Mast

Item	Part Number	Qty.	Description	Rev.
	1001108668	1	8 FT STANDARD MAST, (includes all items)	B
1	Use Kit K1	1	WARNING DECAL	
2	Use Kit K1	1	WARNING DECAL	
3	Use Kit K1	1	NO STEP DECAL	
4	Use Kit K1	1	NO STEP DECAL	
5	Use Kit K1	4	HANDS OFF DECAL	
6	1001111190	2	HOSE ROUTING	
	70023008	1	MAIN LIFT CYLINDER	
7	NSS	1	ROD/PLUNGER	
8	Use Kit K2	1	O-RING	
9	Use Kit K2	1	PULL WIRE	
10	NSS	1	SPACER	
11	NSS	2	ROLL PIN	
12	NSS	1	BARREL	
13	Use Kit K2	1	WIPER	
14	Use Kit K2	1	BUSHING	
15	NSS	1	PISTON	
16	Use Kit K2	1	NYLON RING	
17	Use Kit K2	1	PISTON SEAL	
18	Use Kit K3	1	CHECK VALVE	
19	Use Kit K2 or K3	1	O-RING	
20	Use Kit K3	1	WASHER	
21	Use Kit K2 or K3	1	CIRCLIP	
22	NSS	1	SLEEVE	
23	Use Kit K2 or K3	1	RETAINING RING	
24	Use Kit K2	1	WEAR RING	
25	Use Kit K2	1	ROD SEAL	
26	70023004	1	RETAINER/GLAND	
27	70023014	24	SHIM	
28	70022987	8	BALL BEARING	
29	Use Kit K5	2	WASHER SHIM	
30	70023016	1	SNAP RING	
31	70022969	2	SHEAVE ASSY	
32	70022960	2	CHAIN ANCHOR	
33	70022957	8	NUT, 5/8-18UNF	
34	70022993	4	COTTER PIN	
35	70022995	2	CHAIN ANCHOR	
36	70022984	1	SHEAVE SHAFT	
37	70022970	2	RETAINER BAR	
38	70023003	2	FLAT HD CAPSCREW	
39	70022994	4	CHAIN ANCHOR PIN	
40	70022992	8	COTTER PIN	
41	70022985	1	SHEAVE SHAFT	
43	70023009	2	LIFT CHAIN	
44	70022932	1	P.O. CHECK VALVE ASSY, (includes items 45 thru 47)	
45	NSS	1	MANIFOLD	
46	70022931	1	P.O. CHECK VALVE CARTRIDGE	
47	70023010	1	P.O. CHECK	
48	70022934	3	FITTING, 90 DEGREE	

Downloaded from www.Manualslib.com manuals search engine

https://truckmanualshub.com/

Figure 3-21 8 Foot Standard Mast (Continued)

Item	Part Number	Qty.	Description	Rev.
49	70022936	1	FLOW LIMITER	
50	70022937	1	FITTING, 45 DEGREE	
51	70022949	2	LOCKWASHER, M10	
52	70022950	2	HEX SOCKET CAPSCREW	
53	70022942	1	HOSE ASSY	
54	70022952	1	HOSE ASSY	
55	91403414	1	MALE QUICK DISCONNECT COUPLING	
56	91043126	1	DUST CAP	
58	70022939	1	STRAIGHT FITTING, #6	
59	91403413	1	FEMALE QUICK DISCONNECT COUPLING	
60	91043125	1	DUST PLUG	
61	70022935	1	STRAIGHT THREAD ELBOW	
62	70022946	1	HOSE ASSY	
63	70022949	4	LOCKWASHER, M10	
64	70022980	2	FORK PIN KEEPER	
65	70022998	4	CAPSCREW, M10X20	
66	70022990	1	FORK PIN	
101	NSS	1	S/N PLATE	
K1	70023925	1	DECAL KIT, (includes items 1 thru 6)	
K2	70023005	1	SEAL KIT, MAIN LIFT CYLINDER, (includes items 8, 9, 13, 14, 16, 17, 19, 21, 23, 24 & 25)	
K3	70023006	1	CHECK VALVE KIT, (includes items 18, 19, 20, 21 & 23)	
K4	70023007	1	SHIM KIT	
K5	70023015	1	MAST COMMON PARTS KIT, (includes items 27 thru 41)	

Downloaded from www.Manualslib.com manuals search engine

https://truckmanualshub.com/

Figure 3-22 8 Foot Side Tilt Electric Mast

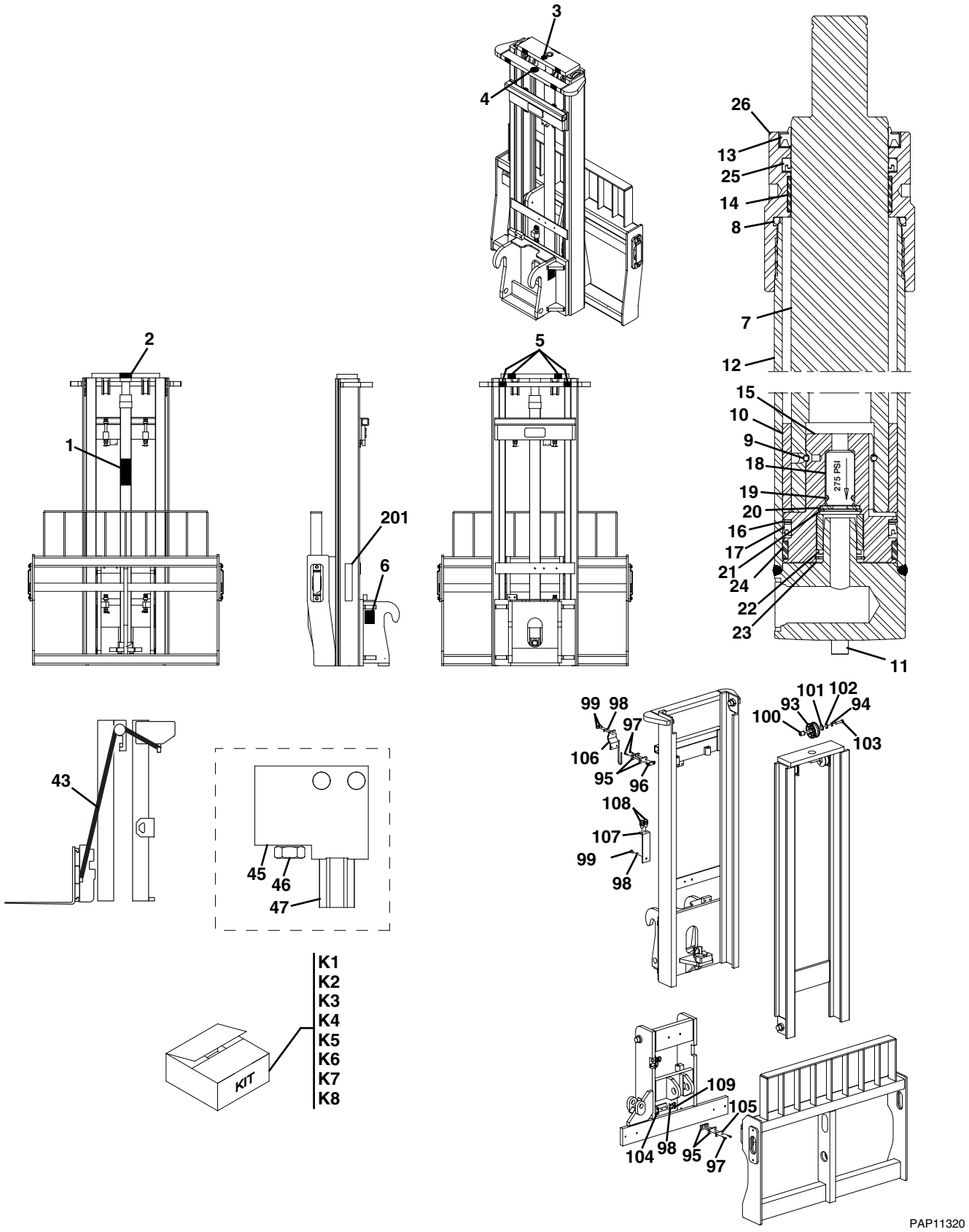

Downloaded from www.Manualslib.com manuals search engine

https://truckmanualshub.com/

Figure 3-22 8 Foot Side Tilt Electric Mast (Continued)

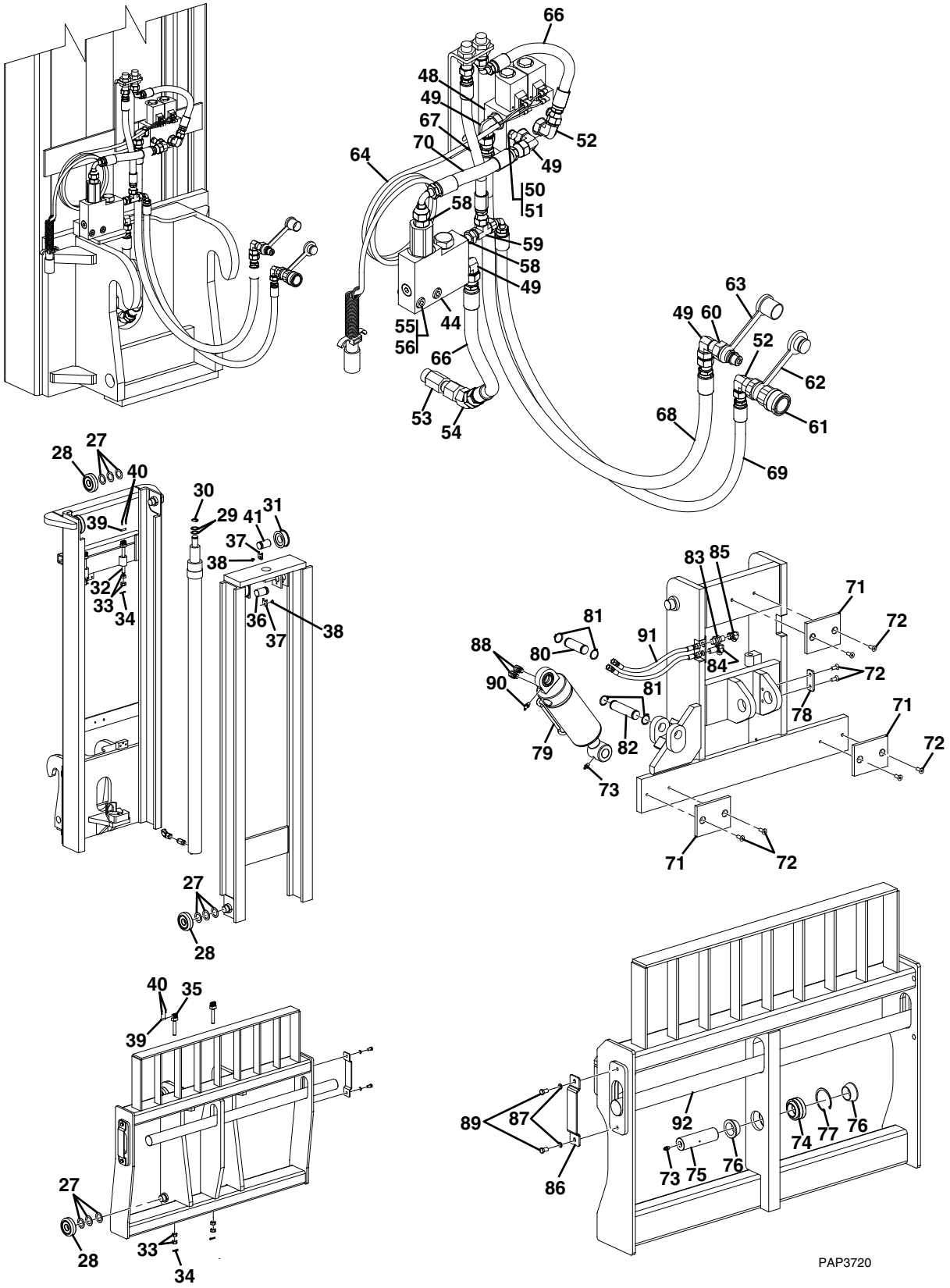

Downloaded from www.Manualslib.com manuals search engine

https://truckmanualshub.com/

Figure 3-22 8 Foot Side Tilt Electric Mast

Item	Part Number	Qty.	Description	Rev.
	1001108669	1	8 FT SIDE TILT ELECTRIC MAST, (includes all items)	B
1	Use Kit K1	1	WARNING DECAL	
2	Use Kit K1	1	WARNING DECAL	
3	Use Kit K1	1	NO STEP DECAL	
4	Use Kit K1	1	NO STEP DECAL	
5	Use Kit K1	4	HANDS OFF DECAL	
6	1001111190	2	WARNING DECAL	
	70023008	1	MAIN LIFT CYLINDER	
7	NSS	1	ROD/PLUNGER	
8	Use Kit K2	1	O-RING	
9	Use Kit K2	1	PULL WIRE	
10	NSS	1	SPACER	
11	NSS	2	ROLL PIN	
12	NSS	1	BARREL	
13	Use Kit K2	1	WIPER	
14	Use Kit K2	1	BUSHING	
15	NSS	1	PISTON	
16	Use Kit K2	1	NYLON RING	
17	Use Kit K2	1	PISTON SEAL	
18	Use Kit K3	1	CHECK VALVE	
19	Use Kit K2 or K3	1	O-RING	
20	Use Kit K3	1	WASHER	
21	Use Kit K2 or K3	1	CIRCLIP	
22	NSS	1	SLEEVE	
23	Use Kit K2 or K3	1	RETAINING RING	
24	Use Kit K2	1	WEAR RING	
25	Use Kit K2	1	ROD SEAL	
26	70023004	1	RETAINER/GLAND	
27	70023014	24	SHIM	
28	70022987	8	BALL BEARING	
29	Use Kit K5	2	WASHER SHIM	
30	70023016	1	SNAP RING	
31	70022969	2	SHEAVE ASSY	
32	70022960	2	CHAIN ANCHOR	
33	70022957	8	NUT, 5/8-18UNF	
34	70022993	4	COTTER PIN	
35	70022995	2	CHAIN ANCHOR	
36	70022984	1	SHEAVE SHAFT	
37	70022970	2	RETAINER BAR	
38	70023003	2	FLAT HD CAPSCREW	
39	70022994	4	CHAIN ANCHOR PIN	
40	70022992	8	COTTER PIN	
41	70022985	1	SHEAVE SHAFT	
43	70023009	2	LIFT CHAIN	
44	70022932	1	P.O. CHECK VALVE ASSY, (includes items 45, 46 & 47)	
45	NSS	1	MANIFOLD	
46	70022931	1	P.O. CHECK VALVE CARTRIDGE	
47	70023010	1	P.O. CHECK	
48	70022933	1	SOLENOID VALVE BANK	

Downloaded from www.Manualslib.com manuals search engine

https://truckmanualshub.com/

Figure 3-22 8 Foot Side Tilt Electric Mast (Continued)

Item	Part Number	Qty.	Description	Rev.
49	70022934	4	FITTING, 90 DEGREE	
50	70022948	2	LOCKWASHER, M8	
51	70022951	2	CAPSCREW, M8X60	
52	70022935	2	STRAIGHT THREAD ELBOW	
53	70022936	1	FLOW LIMITER	
54	70022937	1	FITTING, 45 DEGREE	
55	70022949	2	LOCKWASHER, M10	
56	70022950	2	HEX SOCKET CAPSCREW	
57	70022938	1	STRAIGHT FITTING, (not shown)	
58	70022939	1	STRAIGHT FITTING	
59	70022940	1	TEE FITTING	
60	91403414	1	MALE QUICK DISCONNECT COUPLING	
61	91403413	1	FEMALE QUICK DISCONNECT COUPLING	
62	91043125	1	DUST PLUG	
63	91043126	1	DUST CAP	
64	70022941	1	HARNESS	
65	70022942	1	HOSE ASSY, (not shown)	
66	70022943	1	HOSE ASSY	
67	70022944	1	HOSE ASSY	
68	70022945	1	HOSE ASSY	
69	70022946	1	HOSE ASSY	
70	70022947	1	HOSE ASSY	
71	70022972	3	WEAR PAD	
72	70022971	8	FLAT HD CAPSCREW	
73	70023001	2	GREASE FITTING	
74	70022975	1	BEARING	
75	70022973	1	PIVOT SHAFT	
76	70022974	2	BEVELED SPACER	
77	70022988	1	RETAINING RING	
78	70022976	1	RETAINER PLATE	
79	2716143	1	TILT CYLINDER	
80	70022977	1	PIN, 128.1mm	
81	70023016	4	SNAP RING, 1-1/4	
82	70022978	1	PIN, 128.1mm	
83	70023000	1	BULKHEAD UNION, (with locknut)	
84	70022999	1	BULKHEAD UNION ELBOW	
85	70022982	1	STRAIGHT THREAD ELBOW	
86	70022980	2	FORK PIN KEEPER	
87	70022949	4	LOCKWASHER, M10	
88	70022991	2	STRAIGHT THREAD ELBOW, 90 DEGREE	
89	70022998	4	CAPSCREW, M10X20	
90	70022966	1	GREASE FITTING	
91	70022979	2	HOSE ASSY	
92	70022990	1	FORK PIN	
93	70022965	1	SHEAVE	
94	70022997	1	LOCKWASHER, M12	
95	70022967	4	HOSE CLAMP	
96	70022962	1	BAR ASSY	
97	70023002	4	CAPSCREW, M6X25	

Downloaded from www.Manualslib.com manuals search engine

https://truckmanualshub.com/

Figure 3-22 8 Foot Side Tilt Electric Mast (Continued)

Item	Part Number	Qty.	Description	Rev.
98	70022949	5	LOCKWASHER, M10	
99	70022958	3	CAPSCREW, M10X20	
100	70022961	1	SHAFT	
101	70022959	1	WASHER	
102	70022989	1	RETAINING RING	
103	70022964	1	CAPSCREW, M12X55	
104	70022981	1	IHR BRACKET	
105	70022968	1	HOSE CLAMP BAR	
106	70023011	1	IHR BRACKET	
107	70022983	1	TERMINATION BRACKET	
108	70023000	2	BULKHEAD UNION & LOCKNUT	
109	70022996	3	CAPSCREW, M10X16	
110	70022963	2	HOSE ASSY, (not shown)	
201	NSS	1	S/N PLATE	
K1	70023925	1	DECAL KIT, (includes items 1 thru 6)	
K2	70023005	1	SEAL KIT, MAIN LIFT CYLINDER, (includes items 8, 9, 13, 14, 16, 17, 19, 21, 23, 24 & 25)	
K3	70023006	1	CHECK VALVE KIT, (includes items 18, 19, 20, 21 & 23)	
K4	70023007	1	SHIM KIT	
K5	70023015	1	MAST COMMON PARTS KIT, (includes items 27 thru 41)	
K6	8035831	1	SEAL KIT, TILT CYLINDER	
K7	70023013	1	IHR COMMON PARTS KIT, (includes items 93 thru 109)	
K8	70022986	1	IHR KIT, (includes items 93 thru 110)	

Downloaded from www.Manualslib.com manuals search engine

https://truckmanualshub.com/

Figure 3-22 8 Foot Side Tilt Electric Mast (Continued)

Item	Part Number	Qty.	Description	Rev.

Downloaded from www.Manualslib.com manuals search engine

https://truckmanualshub.com/

This Page Intentionally Left Blank

Downloaded from www.Manualslib.com manuals search engine

https://truckmanualshub.com/

SECTION 4
ENGINE & ATTACHING PARTS

Downloaded from www.Manualslib.com manuals search engine

https://truckmanualshub.com/

Figure 4-1 Engine Assembly, LH View

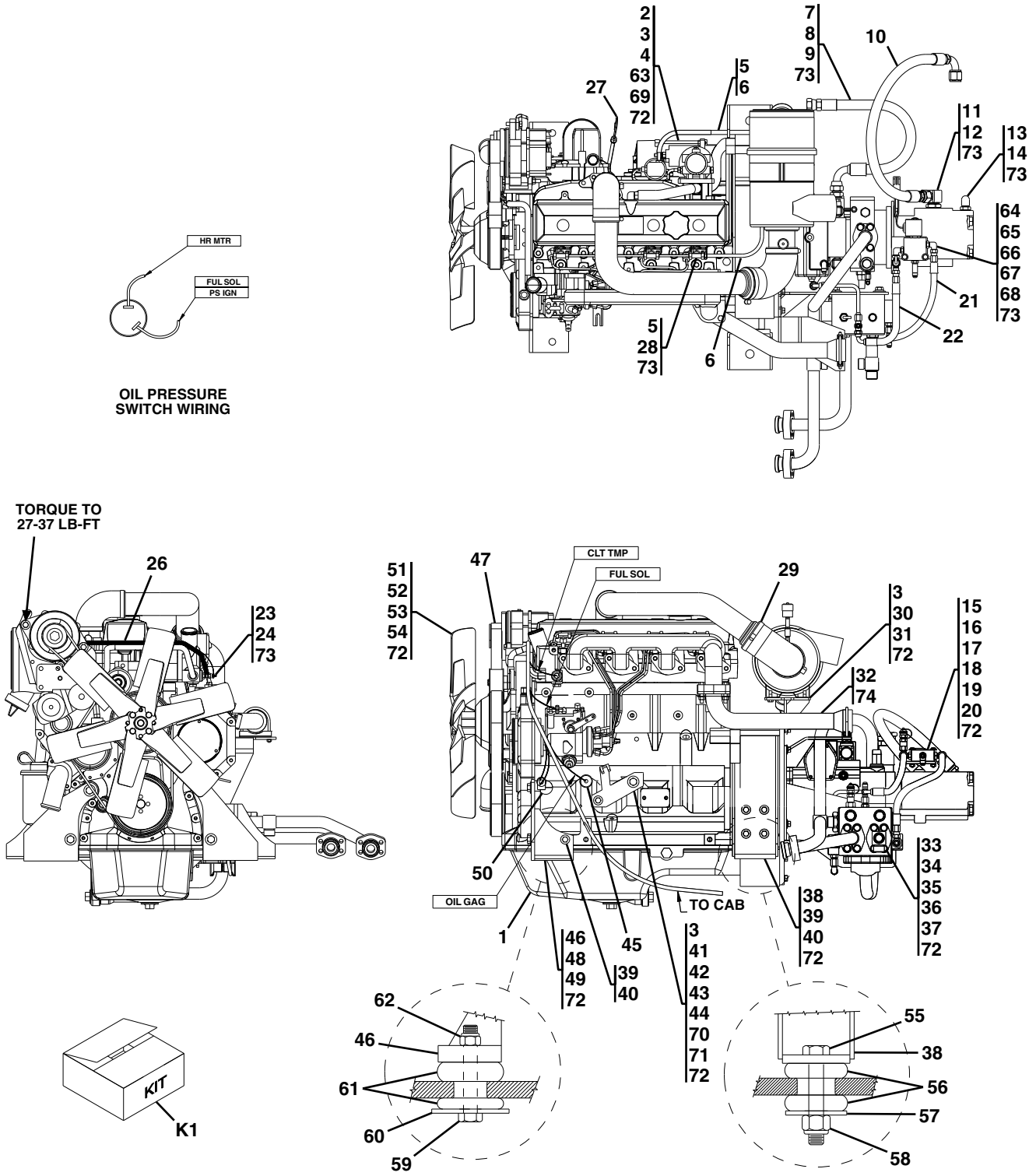

NOTES:

1. USE LOCTITE® 242™ (14403364) ON ALL BOLT THREADS
2. USE LOCTITE® 545™ (14404043) ON ALL FITTINGS.

PAP23380

Downloaded from www.Manualslib.com manuals search engine

https://truckmanualshub.com/

Figure 4-1 Engine Assembly, LH View

Item	Part Number	Qty.	Description	Rev.
	91415007	Ref	ENGINE ASSY, (includes items 1 thru 54 & 63 thru 73 on Figure 4-1 & all items on Figure 4-2)	K
1		Ref	JOHN DEERE ENGINE, (see Figure 4-3 for details)	
2	91403160	1	STARTER, **(Leece-Neville)**, **(S/N 0189001 thru 0189345)**, (includes item 63), (no longer available, see Figure 12-32 for details)	
		Ref	STARTER, **(Prestolite)**, **(S/N 0189346 thru 0160001775)**, (includes item 63), (no longer available, see Figure 12-32 for details)	
3	83191013	6	LOCKWASHER, M10	
4	83191040	1	SOCKET HD CAPSCREW, M10X1-1/2X30, (torque to 38-48 lb-ft), (top inner mtg hole)	
5	86883106	2	HOSE CLAMP	
6	82092118	120 in	FUEL LINE, 5/16 ID	
7	2220451	1	CONNECTOR, (includes item 8)	
8	88591207	1	O-RING	
9	84719407	1	HOSE ASSY	
10	84719468	1	HOSE ASSY	
11	88662429	1	ELBOW, 90 DEGREE, (includes item 12)	
12	88591209	1	O-RING	
13	88662059	1	ELBOW, 90 DEGREE, (includes item 14)	
14	88591206	1	O-RING	
15		Ref	SOLENOID VALVE, (see Figure 9-20 for details)	
16	91401535	1	VALVE BRACKET	
17	88201009	2	HEX HD CAPSCREW, 1/4-20X2, GR5	
18	88501304	2	HEX NUT, 1/4-28	
19	88561002	2	FLAT WASHER, 1/4	
20	88551009	2	LOCKWASHER, 1/4	
21	77133201	1	HOSE ASSY	
22	84719408	1	HOSE ASSY	
23	91143314	1	WATER TEMPERATURE SENDER	
24	91403265	1	ADAPTER FITTING, (includes o-ring)	
26	90027187	6	NYLON TIE	
27	91404085	1	DIPSTICK	
28	80373025	1	PUSH LOCK FITTING	
29		Ref	AIR CLEANER & ATTACHING PARTS, (see Figure 4-6 for details)	
30	91406118	1	AIR CLEANER BRACKET	
31	83191027	2	HEX HD CAPSCREW, M10X1-1/2X35	
32		Ref	EXHAUST & ATTACHING PARTS, (see Figure 4-7 for details)	
33	91403455	1	HYDRAULIC TUBE	
34	91083106	1	O-RING	
35	83201135	4	HEX HD CAPSCREW, 7/16-14X1-1/2	
36	88551012	4	LOCKWASHER, 7/16	
37	84712738	2	CLAMP HALF	
38	91406032	2	REAR ENGINE MOUNT	
39	83191032	10	HEX HD CAPSCREW, M12X1-3/4X35, (torque to 66-76 lb-ft)	
40	83191010	10	LOCKWASHER, M12	
41	91401227	1	ACCELERATOR CABLE BRACKET, **(S/N 0189001 thru 0160001379)**	
	91411060	1	ACCELERATOR CABLE BRACKET, **(S/N 0160001388 thru 0160001775)**	
42	83191038	1	HEX HD CAPSCREW, M10X1-1/2X20	
43	91403293	1	HEX HD CAPSCREW, M14X2X25	

Downloaded from www.Manualslib.com manuals search engine

https://truckmanualshub.com/

Figure 4-1 Engine Assembly, LH View (Continued)

Item	Part Number	Qty.	Description	Rev.
44	83191014	1	LOCKWASHER, M14	
45	91143315	1	OIL PRESSURE SENDER	
46	91406026	1	LH FRONT ENGINE MOUNT	
	91406027	1	RH FRONT ENGINE MOUNT	
47	91404086	1	FAN BELT	
48	83191043	4	HEX HD CAPSCREW, M16X2X30, (torque to 166-181 lb-ft)	
49	83783030	4	LOCKWASHER, M16	
50	24741047	1	OIL PRESSURE SWITCH	
51	91403105	1	FAN	
52	91403248	1	FAN SPACER	
53	83191041	4	HEX HD CAPSCREW, M8X1-1/4X70	
54	88561108	4	FLAT WASHER, 5/16	
55	77321274	2	HEX HD CAPSCREW, 7/8-9X5	
56	91333003	2	SHOCK MOUNT	
57	91403137	2	REBOUND WASHER	
58	88521214	2	HEX LOCKNUT, 7/8-9	
59	88201105	2	HEX HD CAPSCREW, 5/8-11X4, GR5	
60	91403138	2	REBOUND WASHER	
61	91333002	2	SHOCK MOUNT	
62	88521010	2	HEX LOCKNUT, 5/8-11	
63	91404274	1	STARTER SOLENOID, **(S/N 0189001 thru 0189345)**	
	91414040	1	STARTER SOLENOID, **(S/N 0189346 thru 0160001775)**	
64	2220635	1	SWIVEL NUT RUN TEE, 3/8, TUBE	
65	88662064	2	ELBOW, 90 DEGREE, (includes item 66)	
66	88591204	3	O-RING	
67	2220606	1	RUN TEE, (includes item 66)	
68	91143172	1	TEST COUPLING	
69	83191062	2	SOCKET HD CAPSCREW, M10X1-1/2X40, (torque to 38-48 lb-ft)	
70	88561007	1	FLAT WASHER, 9/16	
71	80233220	1	FLAT WASHER, M10	
72	14403364	AR	LOCTITE® 242™	
73	14404043	AR	LOCTITE® 545™	
74	91473222	1	EXHAUST GASKET	
K1	91405102	1	ENGINE FILTER KIT, (includes all items)	
	91404005	1	OIL FILTER ELEMENT	
	91404004	1	FUEL FILTER	
	91403103	1	AIR FILTER SAFETY ELEMENT	
	91403102	1	AIR FILTER ELEMENT	
	91083218	1	FUEL STRAINER	

Downloaded from www.Manualslib.com manuals search engine

https://truckmanualshub.com/

Figure 4-1 Engine Assembly, LH View (Continued)

Item	Part Number	Qty.	Description	Rev.

Downloaded from www.Manualslib.com manuals search engine

https://truckmanualshub.com/

Figure 4-1 Engine Assembly, LH View

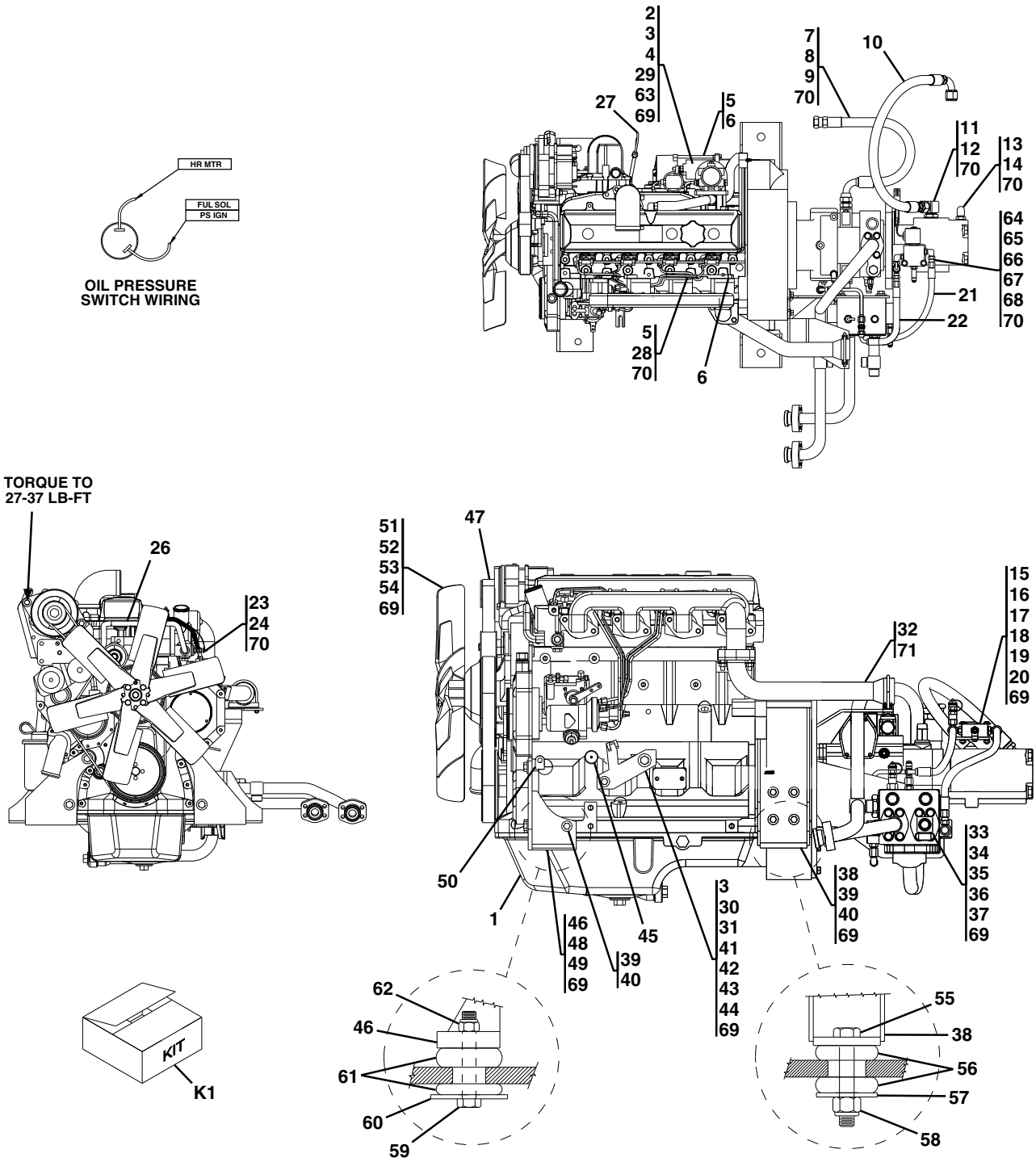

NOTES:

1. USE LOCTITE® 242™, 14403364, ON ALL BOLT THREADS.
2. USE LOCTITE® 545™, 14404043, ON ALL FITTINGS.

Downloaded from www.Manualslib.com manuals search engine

https://truckmanualshub.com/

Figure 4-1 Engine Assembly, LH View

Item	Part Number	Qty.	Description	Rev.
	91415007	Ref	ENGINE ASSEMBLY, (includes items 1 thru 54 & 63 thru 70 on Figure 4-1 & all items on Figure 4-2)	O
1		Ref	JOHN DEERE ENGINE, (see Figure 4-3 for details)	
2		Ref	STARTER, **(Prestolite)**, (includes item 63), (no longer available, see Figure 12-32 for details)	
3	83191013	6	LOCKWASHER, M10	
4	83191040	1	SOCKET HD CAPSCREW, M10X1-1/2X30, (torque to 38-48 lb-ft), (top inner mtg hole)	
5	86883106	2	HOSE CLAMP	
6	82092118	120 in	FUEL LINE, 5/16 ID	
7	2220451	1	CONNECTOR, (includes item 8)	
8	88591207	1	O-RING	
9	84719407	1	HOSE ASSY	
10	84719468	1	HOSE ASSY	
11	88662429	1	ELBOW, 90 DEGREE, (includes item 12)	
12	88591209	1	O-RING	
13	88662059	1	ELBOW, 90 DEGREE, (includes item 14)	
14	88591206	1	O-RING	
15		Ref	SOLENOID VALVE, (see Figure 9-20 for details)	
16	91401535	1	VALVE BRACKET	
17	88201009	2	HEX HD CAPSCREW, 1/4-20X2, GR5	
18	88501304	2	HEX NUT, 1/4-28	
19	88561002	2	FLAT WASHER, 1/4	
20	88551009	2	LOCKWASHER, 1/4	
21	77133201	1	HOSE ASSY	
22	84719408	1	HOSE ASSY	
23	91143314	1	WATER TEMPERATURE SENDER	
24	91403265	1	ADAPTER FITTING, (includes o-ring)	
26	90027187	6	NYLON TIE	
27	91404085	1	DIPSTICK	
28	80373025	1	PUSH LOCK FITTING	
29	83191062	2	SOCKET HD CAPSCREW, M10X1-1/2X40, (torque to 38-48 lb-ft)	
30	88561007	1	FLAT WASHER, 9/16	
31	80233220	1	FLAT WASHER, M10	
32		Ref	EXHAUST & ATTACHING PARTS, (see Figure 4-7 for details)	
33	91403455	1	HYDRAULIC TUBE	
34	91083106	1	O-RING	
35	83201135	4	HEX HD CAPSCREW, 7/16-14X1-1/2	
36	88551012	4	LOCKWASHER, 7/16	
37	84712738	2	CLAMP HALF	
38	91406032	2	REAR ENGINE MOUNT	
39	83191032	10	HEX HD CAPSCREW, M12X1-3/4X35, (torque to 66-76 lb-ft)	
40	83191010	10	LOCKWASHER, M12	
41	91411060	1	ACCELERATOR CABLE BRACKET	
42	83191038	1	HEX HD CAPSCREW, M10X1-1/2X20	
43	91403293	1	HEX HD CAPSCREW, M14X2X25	
44	83191014	1	LOCKWASHER, M14	
45	91143315	1	OIL PRESSURE SENDER	
46	91406026	1	LH FRONT ENGINE MOUNT	

Downloaded from www.Manualslib.com manuals search engine

https://truckmanualshub.com/

Figure 4-1 Engine Assembly, LH View (Continued)

Item	Part Number	Qty.	Description	Rev.
	91406027	1	RH FRONT ENGINE MOUNT	
47	91404086	1	FAN BELT	
48	83191043	4	HEX HD CAPSCREW, M16X2X30, (torque to 166-181 lb-ft)	
49	83783030	4	LOCKWASHER, M16	
50	24741047	1	OIL PRESSURE SWITCH	
51	91403105	1	FAN	
52	91403248	1	FAN SPACER	
53	83191041	4	HEX HD CAPSCREW, M8X1-1/4X70	
54	88561108	4	FLAT WASHER, 5/16	
55	77321274	2	HEX HD CAPSCREW, 7/8-9X5	
56	91333003	2	SHOCK MOUNT	
57	91403137	2	REBOUND WASHER	
58	88521214	2	HEX LOCKNUT, 7/8-9	
59	88201105	2	HEX HD CAPSCREW, 5/8-11X4, GR5	
60	91403138	2	REBOUND WASHER	
61	91333002	2	SHOCK MOUNT	
62	88521010	2	HEX LOCKNUT, 5/8-11	
63	91414040	1	STARTER SOLENOID	
64	2220635	1	SWIVEL NUT RUN TEE, 3/8, TUBE	
65	2220473	2	ELBOW, 90 DEGREE, (includes item 66)	
66	88591204	3	O-RING	
67	2220606	1	RUN TEE, (includes item 66)	
68	91143172	1	TEST COUPLING	
69	14403364	AR	LOCTITE® 242™	
70	14404043	AR	LOCTITE® 545™	
71	91473222	1	EXHAUST GASKET	
K1	91415035	1	ENGINE FILTER KIT, (includes all items)	C
	91404005	1	OIL FILTER ELEMENT	
	91404004	1	FUEL FILTER	
	80273042	1	AIR FILTER SAFETY ELEMENT	
	80273010	1	AIR FILTER ELEMENT	
	91083218	1	FUEL STRAINER	

Downloaded from www.Manualslib.com manuals search engine

https://truckmanualshub.com/

Figure 4-1 Engine Assembly, LH View (Continued)

Item	Part Number	Qty.	Description	Rev.

Downloaded from www.Manualslib.com manuals search engine

https://truckmanualshub.com/

Figure 4-1 Engine Assembly, LH View

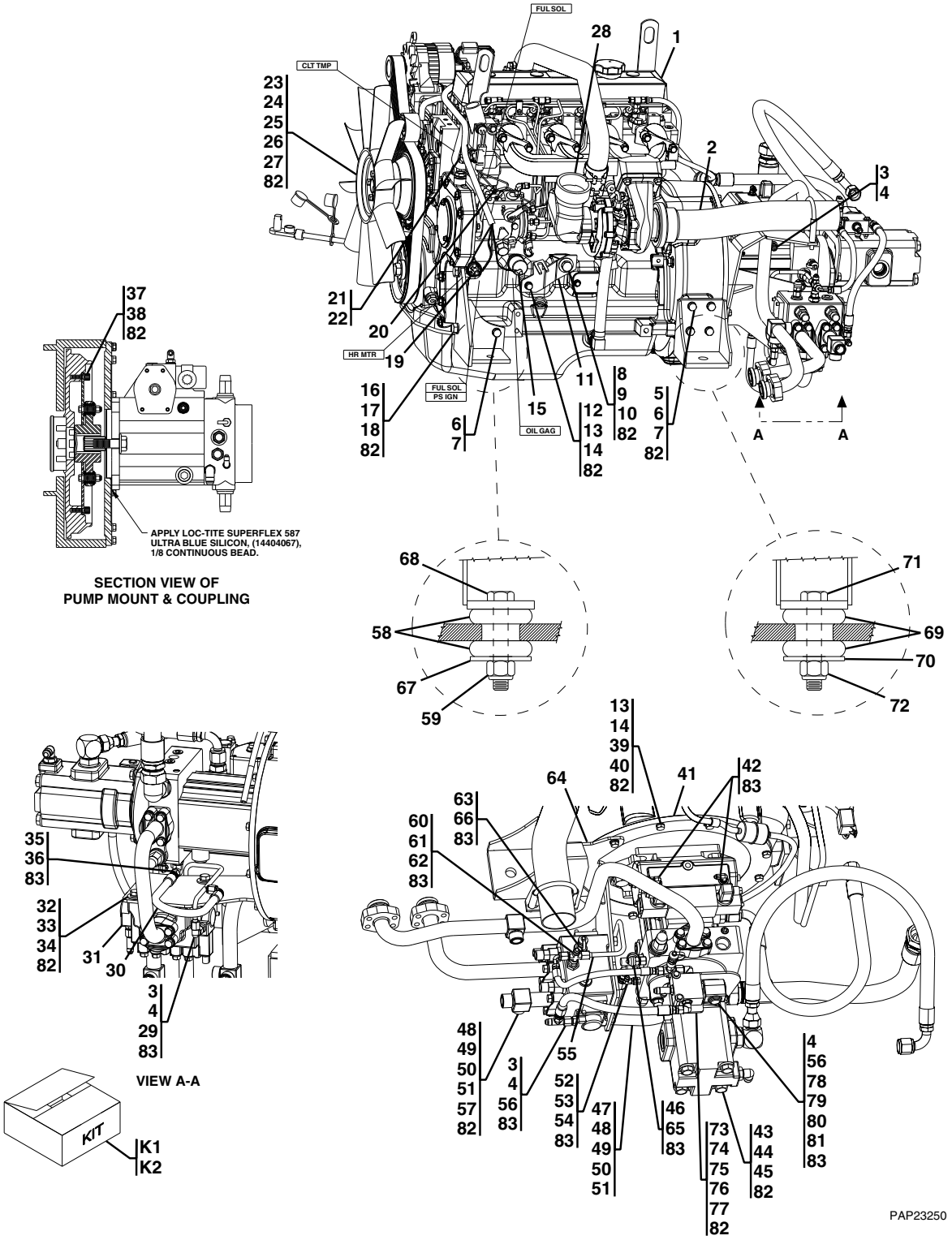

NOTE:

1. USE LOCTITE® 242™ 14403364, ON ALL BOLT THREADS.
2. USE LOCTITE® 545™ 14404043, ON ALL FITTINGS.

Downloaded from www.Manualslib.com manuals search engine

https://truckmanualshub.com/

Figure 4-1 Engine Assembly, LH View

Item	Part Number	Qty.	Description	Rev.
	91415078	Ref	ENGINE ASSEMBLY, (includes items 1 thru 57, 60 thru 66 & 73 thru 83 on Figure 4-1 & all items on Figure 4-2)	N
1		Ref	JOHN DEERE ENGINE, (see Figure 4-3 for details)	
2		Ref	EXHAUST & ATTACHING PARTS, (see Figure 4-7 for details)	
3	2220371	3	CONNECTOR, (includes item 4)	
4	88591204	6	O-RING	
5	91406032	1	REAR ENGINE MOUNT	
6	83191032	5	HEX HD CAPSCREW, M12X1-3/4X35, (torque to 66-76 lb-ft)	
7	83191010	5	LOCKWASHER, M12	
8	91403293	1	HEX HD CAPSCREW, M14X2X25	
9	83191014	1	LOCKWASHER, M14	
10	88561007	1	FLAT WASHER, 9/16	
11	91411060	1	ACCELERATOR CABLE BRACKET	
12	83191038	1	HEX HD CAPSCREW, M10X1-1/2X20	
13	83191013	13	LOCKWASHER, M10	
14	80233220	4	FLAT WASHER, M10	
15	91143315	1	OIL PRESSURE SENDER	
16	91406026	1	LH FRONT ENGINE MOUNT	
17	83191043	2	HEX HD CAPSCREW, M16X2X30, (torque to 166-181 lb-ft)	
18	83783030	2	LOCKWASHER, M16	
19	24741047	1	OIL PRESSURE SWITCH	
20	91473223	1	MALE SPADE TAB	
21	91143314	1	WATER TEMPERATURE SENDER	
22	88712306	1	REDUCER BUSHING, 1/2-1/8	
23	88561108	4	FLAT WASHER, 5/16	
24	88551010	4	LOCKWASHER, 5/16	
25	83191041	4	HEX HD CAPSCREW, M8X1-1/4X70	
26	91403248	1	FAN SPACER	
27	91513159	1	FAN	
28		Ref	AIR INTAKE ELBOW, (see Figure 4-6 for details)	
29	8760268	1	ELBOW, 90 DEGREE, (swivel nut)	
30	84719163	1	HOSE ASSY	
31		Ref	TRACTION LOCK VALVE, (see Figure 9-14 for details)	
32	88561006	2	FLAT WASHER, 1/2	
33	88551013	2	LOCKWASHER, 1/2	
34	88201065	2	HEX HD CAPSCREW, 1/2-13X1, GR5	
35	2220628	1	ELBOW, 90 DEGREE, (includes item 36)	
36	88591205	1	O-RING	
37	88551011	8	LOCKWASHER, 3/8	
38	88211068	8	SOCKET HD CAPSCREW, 3/8-16X5/8, GR8, (torque to 40-45 lb-ft)	
39	83191021	9	HEX HD CAPSCREW, M10X1-1/2X30	
40	83191006	3	HEX HD CAPSCREW, M10X1-1/2X40, (torque to 38-48 lb-ft)	
41	91163011	1	PUMP MOUNT & COUPLING	
42	2220472	2	ELBOW, 90 DEGREE	
43		Ref	HYDRAULIC PUMP, (see Figure 9-9 for details)	
44	88201066	2	HEX HD CAPSCREW, 1/2-13X1-1/4, GR5, (torque to 68-78 lb-ft)	
45	90027471	2	HARDENED WASHER	
46	91053020	1	MINI-CHECK, (includes item 65)	
47	91403454	1	HYDRAULIC TUBE	

Downloaded from www.Manualslib.com manuals search engine

https://truckmanualshub.com/

Figure 4-1 Engine Assembly, LH View (Continued)

Item	Part Number	Qty.	Description	Rev.
48	91083106	3	O-RING	
49	84712738	6	CLAMP HALF	
50	83201135	12	HEX HD CAPSCREW, 7/16-14X1-1/2	
51	88551012	12	LOCKWASHER, 7/16	
52	2220654	1	ELBOW, 90 DEGREE, (swivel nut)	
53	2220415	1	CONNECTOR, (includes item 54)	
54	88591202	1	O-RING	
55	91163098	1	TUBE ASSY	
56	2220635	2	SWIVEL NUT RUN TEE, 3/8, TUBE	
57	91403455	1	HYDRAULIC TUBE	
58	91333002	2	SHOCK MOUNT	
59	88521010	2	HEX LOCKNUT, 5/8-11	
60	91403523	1	ADAPTER	
61	2220497	1	CONNECTOR, (includes item 62)	
62	88591206	1	O-RING	
63	77133089	1	MINI-CHECK, (includes item 66)	
64	91406112	1	FLOW DIVIDER BRACKET	
65	91054002	1	VITON O-RING, (lubricate lightly)	
66	83763056	1	VITON O-RING, (lubricate lightly)	
67	91081158	2	REBOUND WASHER	
68	88201105	2	HEX HD CAPSCREW, 5/8-11X4, GR5	
69	91333003	2	SHOCK MOUNT	
70	91403137	2	REBOUND WASHER	
71	77321274	2	HEX HD CAPSCREW, 7/8-9X5	
72	88521214	2	LOCKNUT, 7/8-9	
73	88501304	2	HEX NUT, 1/4-20 UNC	
74	88551009	2	LOCKWASHER, 1/4	
75	88561002	2	FLAT WASHER, 1/4	
76	88201009	2	HEX HD CAPSCREW, 1/4-20X2, GR5	
77	91401535	1	VALVE BRACKET	
78	91405088	1	SOLENOID VALVE ASSY, (includes 3 of item 4, 1 of item 56 & items 79 thru 81)	G
79	91143172	1	TEST COUPLING	
80	2220606	1	RUN TEE, (includes item 4)	
81	2220473	2	ELBOW, 90 DEGREE, (includes item 4)	
82	14403364	AR	LOCTITE® 242™	
83	14404043	AR	LOCTITE® 545™	
K1	91415084	1	250 HOUR FILTER KIT, (includes all items)	6
	91534005	1	OIL FILTER ELEMENT	
	91404004	1	FUEL FILTER	
	1101313	1	AIR FILTER SAFETY ELEMENT	
	1101312	1	AIR FILTER ELEMENT	
	91083218	1	FUEL STRAINER	
	91534006	1	OIL FILTER SEAL	
K2	2915179	1	1000 HOUR FILTER KIT, (includes 91415084 & the following)	5
	1001093626	2	HYDRAULIC RETURN	
	1340021	1	HYDRAULIC BREATHER	

Downloaded from www.Manualslib.com manuals search engine

https://truckmanualshub.com/

Figure 4-1 Engine Assembly, LH View (Continued)

Item	Part Number	Qty.	Description	Rev.

Downloaded from www.Manualslib.com manuals search engine

https://truckmanualshub.com/

Figure 4-2 Engine Assembly, RH View

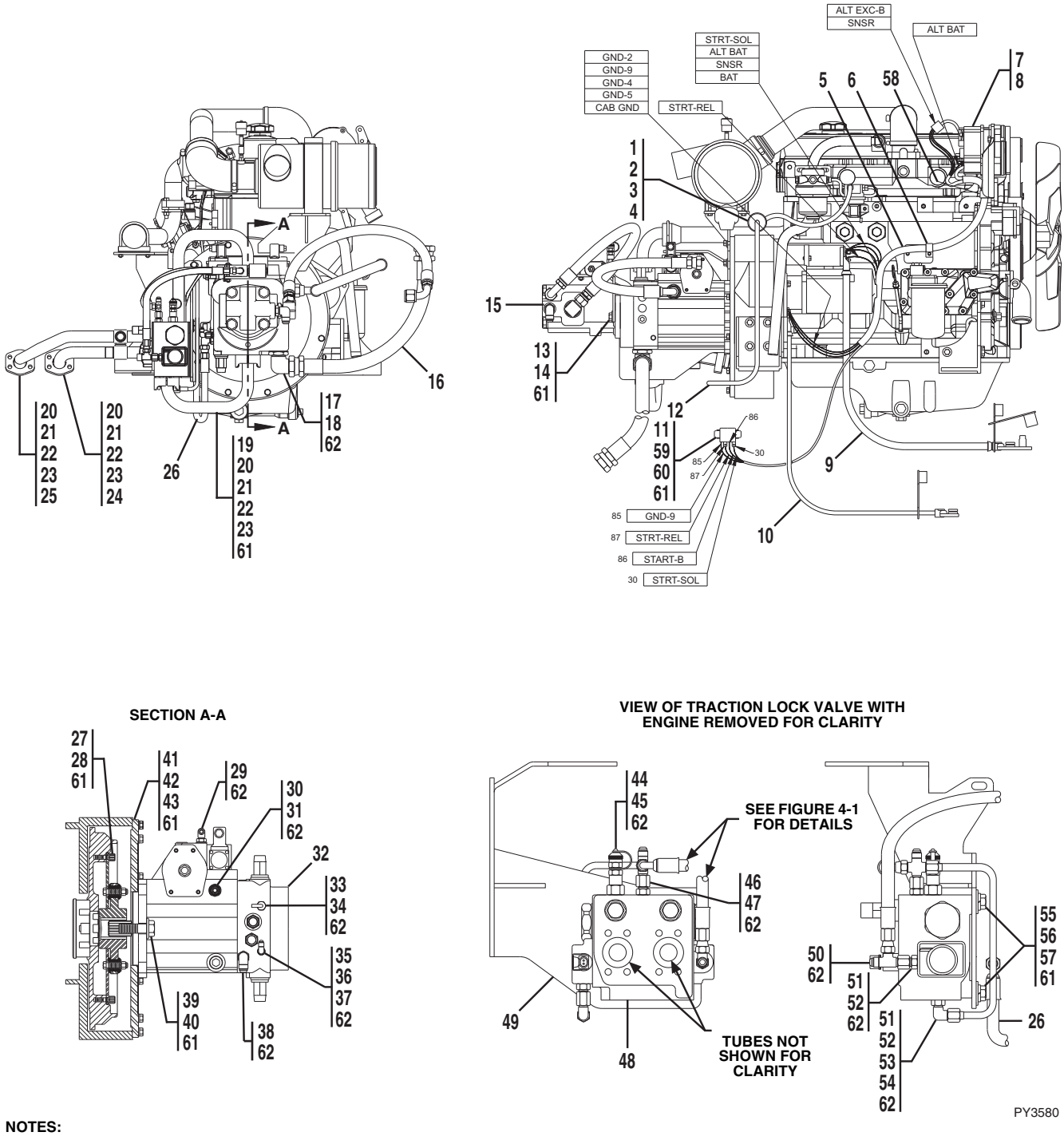

NOTES:

1. USE LOCTITE® 242™, 14403364, ON ALL BOLT THREADS
2. USE LOCTITE® 545™, 14404043, ON ALL FITTINGS.

Downloaded from www.Manualslib.com manuals search engine

https://truckmanualshub.com/

Figure 4-2 Engine Assembly, RH View

Item	Part Number	Qty.	Description	Rev.
	91415007	Ref	ENGINE ASSEMBLY, (includes items 1 thru 54 & 63 thru 73 on Figure 4-1 & all items on Figure 4-2)	K
1	91083218	1	FUEL STRAINER	
2	90028660	1	SUPPORT CLAMP	
3	88561003	1	FLAT WASHER, 5/16	
4	86883106	2	HOSE CLAMP	
5		Ref	WIRING HARNESS, (see Figure 10-2 for details)	
6	85941017	1	SUPPORT CLAMP	
7	1001108293	1	ALTERNATOR, (includes item 8)	
8	1001108291	1	REGULATOR	
9		Ref	POSITIVE BATTERY CABLE, (see Figure 10-1 for details)	
10		Ref	NEGATIVE BATTERY CABLE, (see Figure 10-1 for details)	
11	77383377	1	STARTER RELAY	
12	82092118	89 in	FUEL LINE, 5/16 ID	
13	88201066	2	HEX HD CAPSCREW, 1/2-13X1-1/4, GR5, (torque to 68-78 lb-ft)	
14	90027471	2	HARDENED WASHER, 1/2	
15		Ref	HYDRAULIC PUMP, (see Figure 9-9 for details)	
16	84719593	1	HOSE ASSY	
17	88662070	1	ELBOW, 90 DEGREE, (includes item 18)	
18	88591210	1	O-RING	
19	91403454	1	HYDRAULIC TUBE	
20	91083106	4	O-RING	
21	83201135	16	HEX HD CAPSCREW, 7/16-14X1-1/2	
22	88551012	16	LOCKWASHER, 7/16	
23	84712738	8	CLAMP HALF	
24	91403556	1	HYDRAULIC TUBE	
25	91413005	1	HYDRAULIC TUBE	
26	84719163	1	HOSE ASSY	
27	88211068	8	SOCKET HD CAPSCREW, 3/8-16X5/8, GR8, (torque to 40-45 lb-ft)	
28	88551011	8	LOCKWASHER, 3/8	
29	90027906	2	ELBOW, 90 DEGREE	
30	2220371	1	CONNECTOR, (includes item 31)	
31	88591204	1	O-RING	
32		Ref	HYDROSTATIC TRANSMISSION, (see Figure 9-8 for details)	
33	91053020	1	MINI-CHECK, (includes item 34)	
34	91054002	1	VITON O-RING, (lubricate lightly)	
35	88662103	1	ELBOW, 90 DEGREE, (swivel nut)	
36	2220415	1	CONNECTOR, (includes item 37)	
37	88591202	1	O-RING	
38	91083222	1	ELBOW, 90 DEGREE, (swivel nut)	
39	88201112	2	HEX HD CAPSCREW, 3/4-10X2-1/4, GR5, (torque to 240-265 lb-ft)	
40	90027473	2	HARDENED WASHER, 3/4	
41	91163011	1	PUMP MOUNT & COUPLING	
42	83191006	7	HEX HD CAPSCREW, M10X1-1/2X40, (torque to 38-48 lb-ft)	
43	83191013	7	LOCKWASHER, M10	
44	77133089	1	MINI-CHECK, (includes item 45)	
45	83763056	1	VITON O-RING, (lubricate lightly)	
46	91403523	1	SPECIAL FITTING	
47	2220497	1	STRAIGHT THREAD CONNECTOR	

Downloaded from www.Manualslib.com manuals search engine

https://truckmanualshub.com/

Figure 4-2 Engine Assembly, RH View (Continued)

Item	Part Number	Qty.	Description	Rev.
48		Ref	TRACTION LOCK VALVE, (see Figure 9-14 for details)	
49	91406112	1	FLOW DIVIDER BRACKET	
50	2220635	1	SWIVEL NUT RUN TEE, 3/8, TUBE	
51	2220371	2	CONNECTOR, (includes item 52)	
52	88591204	2	O-RING	
53	88662105	1	ELBOW, 90 DEGREE, (swivel nut)	
54	91163098	1	TUBE ASSY	
55	88201065	2	HEX HD CAPSCREW, 1/2-13X1, GR5	
56	88551013	2	LOCKWASHER, 1/2	
57	88561006	2	FLAT WASHER, 1/2	
58	24431386	1	SUPPORT CLAMP	
59	88551009	2	LOCKWASHER, 1/4	
60	88201003	2	HEX HD CAPSCREW, 1/4-20X3/4, GR5	
61	14403364	AR	LOCTITE® 242™	
62	14404043	AR	LOCTITE® 545™	

Downloaded from www.Manualslib.com manuals search engine

https://truckmanualshub.com/

Figure 4-2 Engine Assembly, RH View (Continued)

Item	Part Number	Qty.	Description	Rev.

Downloaded from www.Manualslib.com manuals search engine

https://truckmanualshub.com/

Figure 4-2 Engine Assembly, RH View

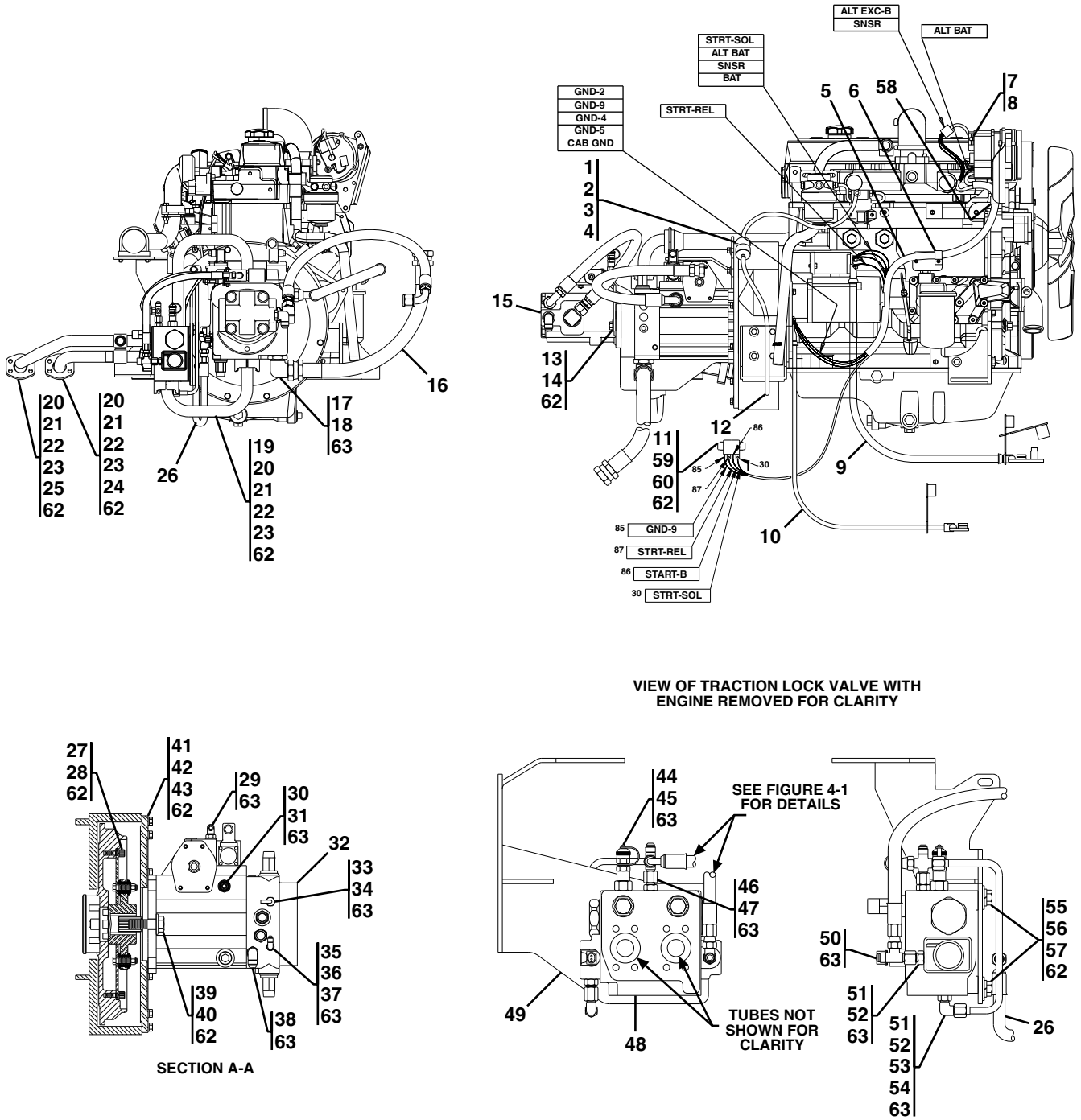

NOTES:

1. USE LOCTITE® 242™ (14403364) ON ALL BOLT THREADS
2. USE LOCTITE® 545™ (14404043) ON ALL FITTINGS.

PAP23480

Downloaded from www.Manualslib.com manuals search engine

https://truckmanualshub.com/

Figure 4-2 Engine Assembly, RH View

Item	Part Number	Qty.	Description	Rev.
	91415007	Ref	ENGINE ASSEMBLY, (includes items 1 thru 54 & 63 thru 70 on Figure 4-1 & all items on Figure 4-2)	O
1	91083218	1	FUEL STRAINER	
2	90028660	1	SUPPORT CLAMP	
3	88561003	1	FLAT WASHER, 5/16	
4	86883106	2	HOSE CLAMP	
5		Ref	WIRING HARNESS, (see Figure 10-2 for details)	
6	85941017	1	SUPPORT CLAMP	
7	1001108293	1	ALTERNATOR, (includes item 8)	
8	1001108291	1	REGULATOR	
9		Ref	POSITIVE BATTERY CABLE, (see Figure 10-1 for details)	
10		Ref	NEGATIVE BATTERY CABLE, (see Figure 10-1 for details)	
11	77383377	1	STARTER RELAY	
12	82092118	89 in	FUEL LINE, 5/16 ID	
13	88201066	2	HEX HD CAPSCREW, 1/2-13X1-1/4, GR5, (torque to 68-78 lb-ft)	
14	90027471	2	HARDENED WASHER, 1/2	
15		Ref	HYDRAULIC PUMP, (see Figure 9-9 for details)	
16	84719593	1	HOSE ASSY	
17	88662070	1	ELBOW, 90 DEGREE, (includes item 18)	
18	88591210	1	O-RING	
19	91403454	1	HYDRAULIC TUBE	
20	91083106	4	O-RING	
21	83201135	16	HEX HD CAPSCREW, 7/16-14X1-1/2	
22	88551012	16	LOCKWASHER, 7/16	
23	84712738	8	CLAMP HALF	
24	91403556	1	HYDRAULIC TUBE	
25	91413005	1	HYDRAULIC TUBE	
26	84719163	1	HOSE ASSY	
27	88211068	8	SOCKET HD CAPSCREW, 3/8-16X5/8, GR8, (torque to 40-45 lb-ft)	
28	88551011	8	LOCKWASHER, 3/8	
29	90027906	2	ELBOW, 90 DEGREE	
30	2220371	1	CONNECTOR, (includes item 31)	
31	88591204	1	O-RING	
32		Ref	HYDROSTATIC TRANSMISSION, (see Figure 9-8 for details)	
33	91053020	1	MINI-CHECK, (includes item 34)	
34	91054002	1	VITON O-RING, (lubricate lightly)	
35	88662103	1	ELBOW, 90 DEGREE, (swivel nut)	
36	2220415	1	CONNECTOR, (includes item 37)	
37	88591202	1	O-RING	
38	91083222	1	ELBOW, 90 DEGREE, (swivel nut)	
39	88201112	2	HEX HD CAPSCREW, 3/4-10X2-1/4, GR5, (torque to 240-265 lb-ft)	
40	90027473	2	HARDENED WASHER, 3/4	
41	91163011	1	PUMP MOUNT & COUPLING	
42	83191006	7	HEX HD CAPSCREW, M10X1-1/2X40, (torque to 38-48 lb-ft)	
43	83191013	7	LOCKWASHER, M10	
44	77133089	1	MINI-CHECK, (includes item 45)	
45	83763056	1	VITON O-RING, (lubricate lightly)	
46	91403523	1	SPECIAL FITTING	
47	2220497	1	STRAIGHT THREAD CONNECTOR	

Downloaded from www.Manualslib.com manuals search engine

https://truckmanualshub.com/

Figure 4-2 Engine Assembly, RH View (Continued)

Item	Part Number	Qty.	Description	Rev.
48		Ref	TRACTION LOCK VALVE, (see Figure 9-14 for details)	
49	91406112	1	FLOW DIVIDER BRACKET	
50	2220635	1	SWIVEL NUT RUN TEE, 3/8, TUBE	
51	2220371	2	CONNECTOR, (includes item 52)	
52	88591204	2	O-RING	
53	88662105	1	ELBOW, 90 DEGREE, (swivel nut)	
54	91163098	1	TUBE ASSY	
55	88201065	2	HEX HD CAPSCREW, 1/2-13X1, GR5	
56	88551013	2	LOCKWASHER, 1/2	
57	88561006	2	FLAT WASHER, 1/2	
58	24431386	1	SUPPORT CLAMP	
59	88551009	2	LOCKWASHER, 1/4	
60	88201003	2	HEX HD CAPSCREW, 1/4-20X3/4, GR5	
62	14403364	AR	LOCTITE® 242™	
63	14404043	AR	LOCTITE® 545™	

Downloaded from www.Manualslib.com manuals search engine

https://truckmanualshub.com/

Figure 4-2 Engine Assembly, RH View (Continued)

Item	Part Number	Qty.	Description	Rev.

Downloaded from www.Manualslib.com manuals search engine

https://truckmanualshub.com/

Figure 4-2 Engine Assembly, RH View

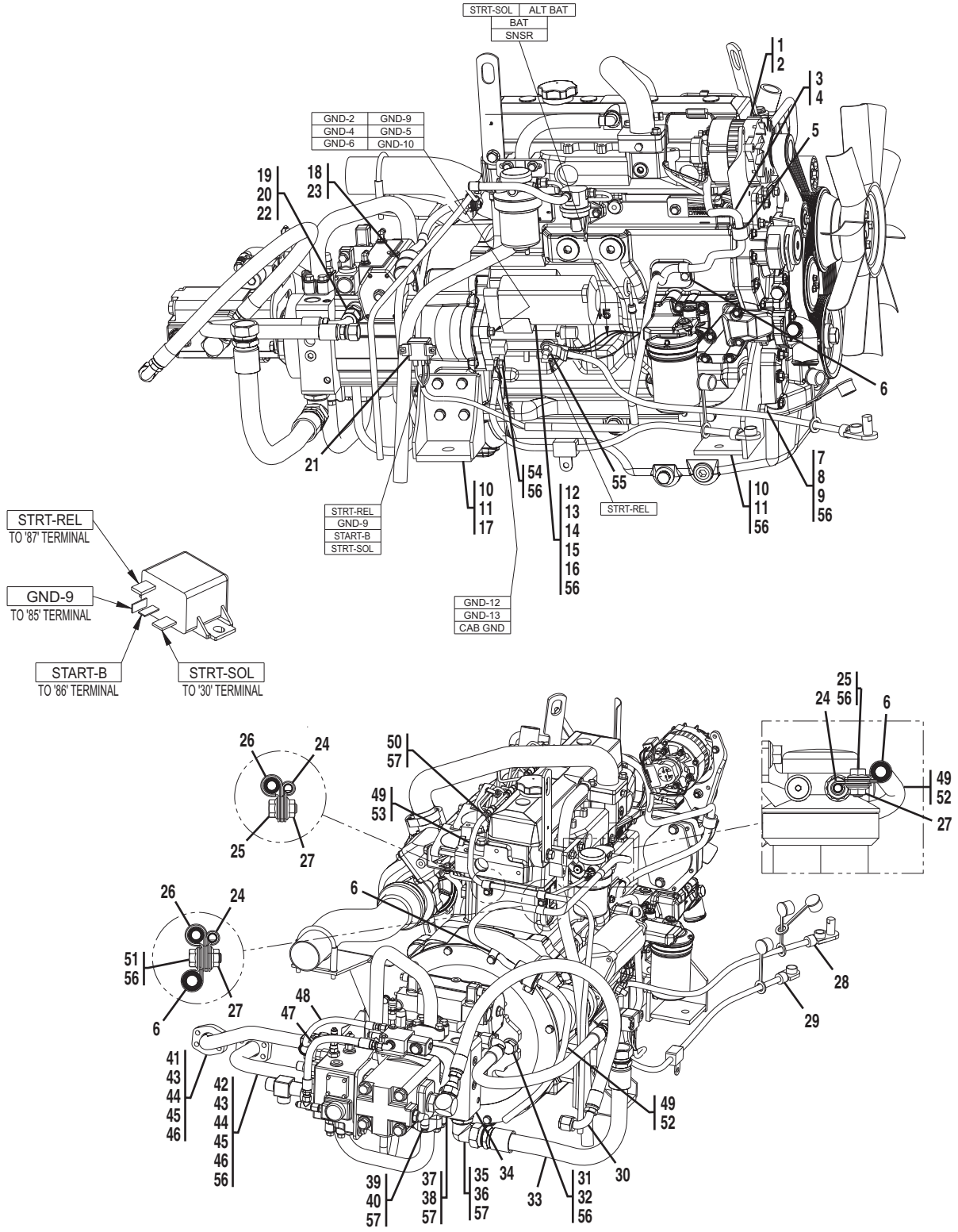

NOTES:

1. USE LOCTITE® 242™, 14403364, ON ALL BOLT THREADS
2. USE LOCTITE® 545™, 14404043, ON ALL FITTINGS.

Downloaded from www.Manualslib.com manuals search engine

https://truckmanualshub.com/

Figure 4-2 Engine Assembly, RH View

Item	Part Number	Qty.	Description	Rev.
	91415078	Ref	ENGINE ASSEMBLY, (includes items 1 thru 57, 60 thru 66 & 73 thru 83 on Figure 4-1 & all items on Figure 4-2)	N
1	1001108293	1	ALTERNATOR, (includes item 2)	
2	1001108291	1	REGULATOR	
3	90027187	6	NYLON TIE	
4		Ref	WIRING HARNESS, (see Figure 10-2 for details)	
5	80633013	1	SUPPORT CLAMP	
6	91143122	4	SUPPORT CLAMP	
7	83191043	2	HEX HD CAPSCREW, M16X2X30, (torque to 166-181 lb-ft)	
8	83783030	2	LOCKWASHER, M16	
9	91406027	1	RH FRONT ENGINE MOUNT	
10	83191032	5	HEX HD CAPSCREW, M12X1-3/4X35, (torque to 66-76 lb-ft)	
11	83191010	5	LOCKWASHER, M12	
12	91413104	Ref	STARTER, **(Prestolite), (S/N 0160003213 thru 0160006643 including 0160002657, excluding 0160006494 & 0160006643)**, (no longer available, for service order kit 91415083), (see Figure 12-32 for details)	
	7026921	1	STARTER, **(Denso), (S/N 0160006786 & After including 0160006494 & 0160006543)**	
13	91414040	1	STARTER SOLENOID	
14	83191062	2	SOCKET HD CAPSCREW, M10X1-1/2X40, (torque to 38-48 lb-ft)	
15	83191040	1	SOCKET HD CAPSCREW, M10X1-1/2X30, (top inner mtg hole)	
16	83191013	3	LOCKWASHER, M10	
17	91406032	1	REAR ENGINE MOUNT	
18	91083218	1	FUEL STRAINER	
19	88591207	1	O-RING	
20	84719407	1	HOSE ASSY	
21	77383377	1	STARTER RELAY	
22	2220451	1	ADAPTER, (includes item 19)	
23	90028660	1	SUPPORT CLAMP	
24	91203039	3	SUPPORT CLAMP	
25	77143003	2	WHIZ-LOCK SCREW, 5/16-18X5/8	
26	24861170	2	SUPPORT CLAMP	
27	77143006	3	WHIZ-LOCKNUT, 5/16-18	
28		Ref	POSITIVE BATTERY CABLE, (see Figure 10-1 for details)	
29		Ref	NEGATIVE BATTERY CABLE, (see Figure 10-1 for details)	
30	84719468	1	HOSE ASSY	
31	88201112	2	HEX HD CAPSCREW, 3/4-10X2-1/4, GR5, (torque to 240-265 lb-ft)	
32	90027473	2	HARDENED WASHER, 3/4	
33	84719593	1	HOSE ASSY	
34		Ref	HYDROSTATIC TRANSMISSION, (see Figure 9-8 for details)	
35	88662070	1	ELBOW, 90 DEGREE, (includes item 36)	
36	88591210	1	O-RING	
37	2131216	1	ELBOW, 90 DEGREE, (includes item 38)	
38	88591209	1	O-RING	
39	2220671	1	ELBOW, 90 DEGREE, (includes item 40)	
40	88591206	1	O-RING	
41	91413005	1	HYDRAULIC TUBE	
42	91403556	1	HYDRAULIC TUBE	
43	88551012	8	LOCKWASHER, 7/16	

Downloaded from www.Manualslib.com manuals search engine

https://truckmanualshub.com/

Figure 4-2 Engine Assembly, RH View (Continued)

Item	Part Number	Qty.	Description	Rev.
44	83201135	8	HEX HD CAPSCREW, 7/16-14X1-1/2	
45	84712738	4	CLAMP HALF	
46	91083106	2	O-RING	
47	77133201	1	HOSE ASSY	
48	84719408	1	HOSE ASSY	
49	86883106	4	HOSE CLAMP	
50	80373025	1	PUSH LOCK FITTING	
51	0791506	1	WHIZ-LOCK SCREW, 5/16-18X3/4	
52	2750532	114 in	FUEL LINE, 3/8 I.D.	
53	2720058	100 in	FUEL LINE, 5/16 I.D.	
54	5251016	1	HEX FLANGE SCREW, 10-15X40mm	
55	3291201	1	HEX NUT, 12mm-1-3/4	
56	14403364	AR	LOCTITE® 242™	
57	14404043	AR	LOCTITE® 545™	

Downloaded from www.Manualslib.com manuals search engine

https://truckmanualshub.com/

Figure 4-2 Engine Assembly, RH View (Continued)

Item	Part Number	Qty.	Description	Rev.

Downloaded from www.Manualslib.com manuals search engine

https://truckmanualshub.com/

Figure 4-3 John Deere Engine

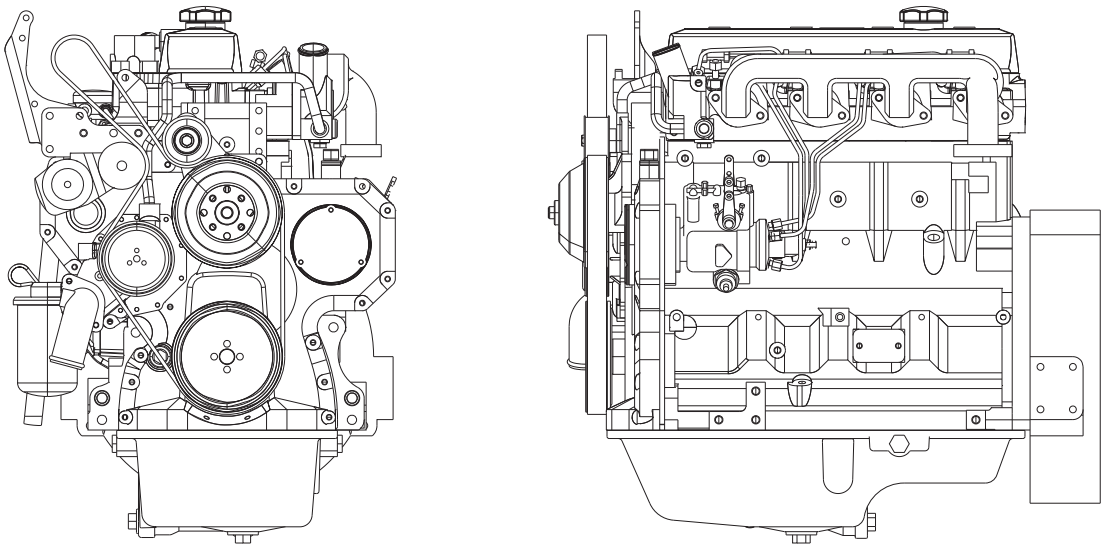

Downloaded from www.Manualslib.com manuals search engine

https://truckmanualshub.com/

Figure 4-3 John Deere Engine

Item	Part Number	Qty.	Description	Rev.
	91403030	1	JOHN DEERE ENGINE, (includes all items)	E
	91404219	1	GASKET OVERHAUL KIT	
	91404220	1	ENGINE CYLINDER HEAD GASKET	
	91404221	1	BOLT, BELT TENSIONER	
	91404222	1	SCREW, BELT TENSIONER	
	91404223	1	SHEAVE, BELT TENSIONER	
	91404224	1	OIL COOLER	
	91404225	1	GASKET, OIL COOLER	
	91404226	1	GASKET, OIL COOLER	
	91404227	2	O-RING, OIL COOLER	
	91404228	2	O-RING, OIL COOLER	
	91404229	1	O-RING, WATER PUMP INLET	
	91404230	1	KIT, WATER PUMP INLET	
	70023425	1	SEAL, FRONT MAIN SEAL	
	91404232	1	GASKET, WATER PUMP	
	91404233	1	WATER PUMP	
	70024392	1	PULLEY, WATER PUMP	
	91404451	1	WATER TEMPERATURE SENDER	
	91404234	4	GASKET, EXHAUST MANIFOLD	
	91404235	1	PULLEY, FAN	
	91404236	1	SCREW, FAN PULLEY	
	91404237	1	SPACER, FAN PULLEY	
	91404238	1	SLEEVE, FAN PULLEY	
	91404239	1	BEARING HOUSING WITH BEARING	
	7026927	1	GASKET, THERMOSTAT	
	91404241	3	PLUG, OIL PAN	
	91404242	1	GASKET, OIL PAN	
	91404243	2	O-RING, OIL PAN	
	91404244	1	SEAL, INJECTOR	
	91404245	1	VALVE, INJECTOR	
	91404246	1	STEEL, INJECTOR	
	91404247	1	O-RING, INJECTOR	
	91404249	1	INJECTION NOZZLE	
	91404250	1	FLYWHEEL, WITH RING GEAR	
	91404251	1	SEAL, REAR MAIN	
	91404252	1	PULLEY, MAIN	
	91404253	2	GASKET, OIL FILLER	
	91404254	1	PACKING, VALVE COVER NUT	
	91404255	1	PACKING, FILLER CAP	
	91404256	4	PLUG, VALVE COVER	
	91404257	1	GASKET, VALVE COVER	
	91404258	1	FILLER CAP, VALVE COVER	
	91404259	4	O-RING, VALVE COVER	
	91404260	1	COOLANT, PRE-MIX, (2.5 gal)	
	91404261	1	COOLANT CONDITIONER	
	91404262	1	FUEL TRANSFER PUMP	
	91404263	1	THERMOSTAT	
	91404264	1	THERMOSTAT COVER SEAL	
	91474629	1	ALTERNATOR BRACKET	

Downloaded from www.Manualslib.com manuals search engine

https://truckmanualshub.com/

Figure 4-3 John Deere Engine (Continued)

Item	Part Number	Qty.	Description	Rev.
	91474630	1	ALTERNATOR SUPPORT	
	91474631	1	ALTERNATOR STRAP	

Downloaded from www.Manualslib.com manuals search engine

https://truckmanualshub.com/

Figure 4-3 John Deere Engine (Continued)

Item	Part Number	Qty.	Description	Rev.

Downloaded from www.Manualslib.com manuals search engine

https://truckmanualshub.com/

Figure 4-3 John Deere Engine

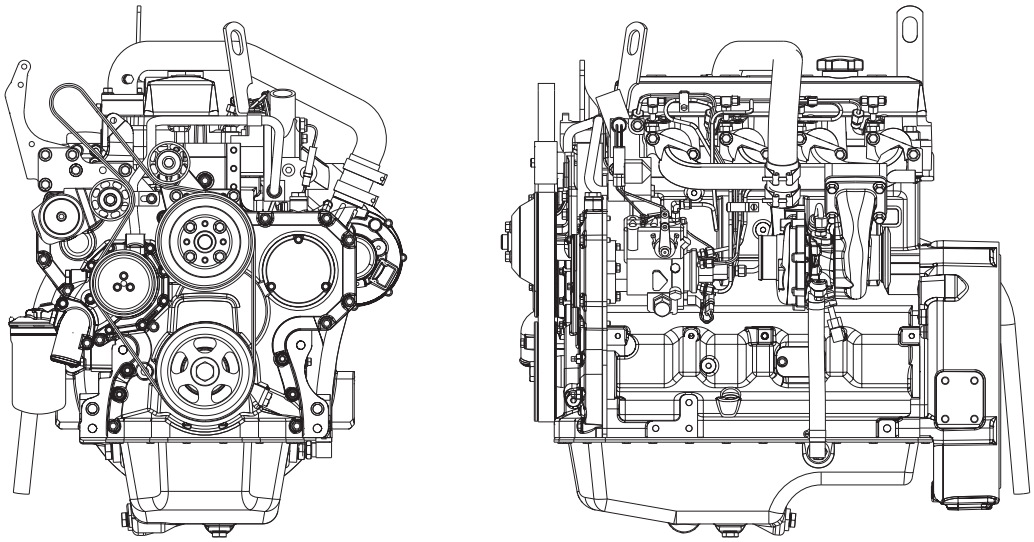

Downloaded from www.Manualslib.com manuals search engine

https://truckmanualshub.com/

Figure 4-3 John Deere Engine

Item	Part Number	Qty.	Description	Rev.
	91413134	1	JOHN DEERE ENGINE, 99HP, (includes all items)	C
	91404257	1	GASKET, VALVE COVER	
	91404256	4	PLUG, VALVE COVER	
	91404259	4	O-RING, VALVE COVER PLUG	
	91404258	1	FILLER CAP, VALVE COVER, (includes Packing)	
	91404255	1	PACKING, FILLER CAP	
	91404253	2	GASKET, OIL FILLER	
	91404251	1	SEAL, REAR MAIN	
	91404250	1	FLYWHEEL, (includes Ring Gear)	
	80374031	1	RING GEAR	
	91514256	1	FUEL PUMP	
	7026919	1	GASKET, AIR INLET	
	7026918	1	GASKET, AIR INLET	
	91404242	1	GASKET, OIL PAN	
	80374037	1	O-RING, OIL PUMP INTAKE	
	7026927	1	GASKET, THERMOSTAT COVER	
	7026920	1	THERMOSTAT	
	91404086	1	BELT	
	91404234	4	GASKET, EXHAUST MANIFOLD	
	91404004	1	FUEL FILTER ELEMENT	
	80374054	1	KIT, FUEL FILTER	
	80374050	1	SEAL KIT, FUEL FILTER	
	91404262	1	FUEL PUMP, (includes o-ring)	
	7026923	1	O-RING, FUEL PUMP	
	91404085	1	DIPSTICK	
	91554032	1	DIPSTICK TUBE	
	91404233	1	WATER PUMP	
	91404232	1	GASKET, WATER PUMP	
	91404264	1	GASKET, WATER PUMP	
	70023425	1	SEAL, FRONT MAIN	
	91514260	1	GASKET, FRONT MAIN	
	91514257	1	O-RING, FRONT MAIN COVER	
	91514258	1	OIL PUMP	
	91404220	1	GASKET, CYLINDER HEAD	
	91404229	1	O-RING, WATER PUMP INLET	
	91404224	1	OIL COOLER	
	91404225	1	GASKET, OIL COOLER	
	91404226	1	GASKET, OIL COOLER	
	91514259	1	TURBOCHARGER	
	91404267	1	GASKET, TURBOCHARGER	
	91404265	1	GASKET, TURBOCHARGER	
	91534005	1	OIL FILTER	
	80374036	1	GASKET, OIL FILTER	
	91474506	1	DRAIN PLUG, OIL FILTER HEAD, (includes o-ring)	
	80374020	1	O-RING, DRAIN PLUG	
	91404221	1	BOLT, BELT TENSIONER	
	91404222	1	SCREW, BELT TENSIONER	
	91404223	1	SHEAVE, BELT TENSIONER	
	91474629	1	ALTERNATOR BRACKET	

Downloaded from www.Manualslib.com manuals search engine

https://truckmanualshub.com/

Figure 4-3 John Deere Engine (Continued)

Item	Part Number	Qty.	Description	Rev.
	91474630	1	ALTERNATOR SUPPORT	
	91474631	1	ALTERNATOR STRAP	

Downloaded from www.Manualslib.com manuals search engine

https://truckmanualshub.com/

Figure 4-3 John Deere Engine (Continued)

Item	Part Number	Qty.	Description	Rev.

Downloaded from www.Manualslib.com manuals search engine

https://truckmanualshub.com/

Figure 4-3 John Deere Engine

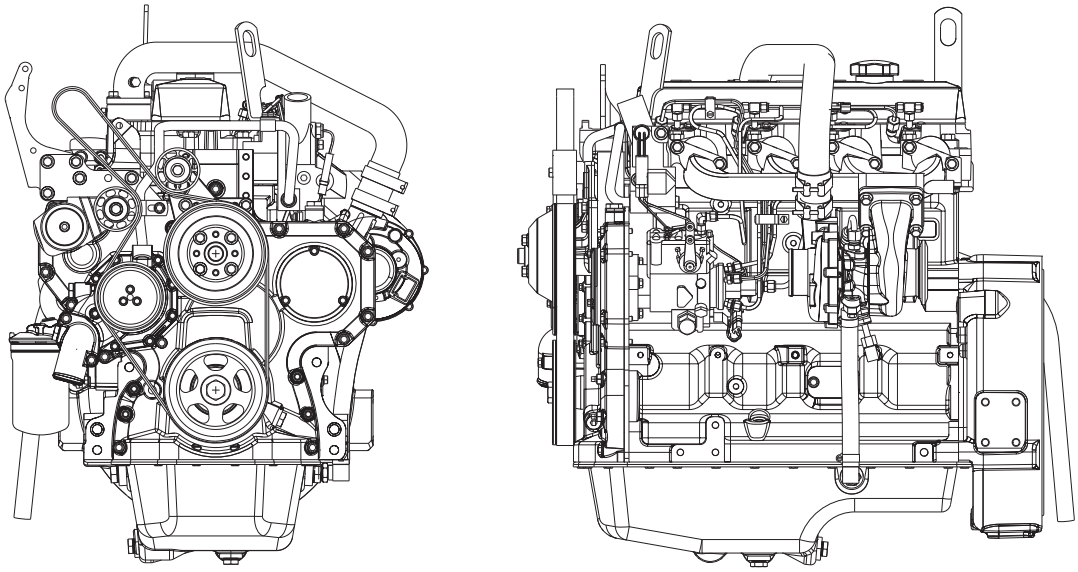

Downloaded from www.Manualslib.com manuals search engine

https://truckmanualshub.com/

Figure 4-3 John Deere Engine

Item	Part Number	Qty.	Description	Rev.
	91413145	1	JOHN DEERE ENGINE, 99HP, (includes all items)	B
	91404257	1	GASKET, VALVE COVER	
	91404256	4	PLUG, VALVE COVER	
	91404259	4	O-RING, VALVE COVER PLUG	
	91404258	1	FILLER CAP, VALVE COVER, (includes Packing)	
	91404255	1	PACKING, FILLER CAP	
	91404253	2	GASKET, OIL FILLER	
	91404251	1	SEAL, REAR MAIN	
	91404250	1	FLYWHEEL, (includes Ring Gear)	
	80374031	1	RING GEAR	
	91514256	1	FUEL PUMP	
	7026919	1	GASKET, AIR INLET	
	7026918	1	GASKET, AIR INLET	
	91404242	1	GASKET, OIL PAN	
	80374037	1	O-RING, OIL PUMP INTAKE	
	7026927	1	GASKET, THERMOSTAT COVER	
	7026920	1	THERMOSTAT	
	91404086	1	BELT	
	91404234	4	GASKET, EXHAUST MANIFOLD	
	91404004	1	FUEL FILTER ELEMENT	
	80374054	1	KIT, FUEL FILTER	
	80374050	1	SEAL KIT, FUEL FILTER	
	91404262	1	FUEL PUMP, (includes o-ring)	
	7026923	1	O-RING, FUEL PUMP	
	91404085	1	DIPSTICK	
	91554032	1	DIPSTICK TUBE	
	91404233	1	WATER PUMP	
	91404232	1	GASKET, WATER PUMP	
	91404264	1	GASKET, WATER PUMP	
	70023425	1	SEAL, FRONT MAIN	
	91514260	1	GASKET, FRONT MAIN	
	91514257	1	O-RING, FRONT MAIN COVER	
	91514258	1	OIL PUMP	
	91404220	1	GASKET, CYLINDER HEAD	
	91404229	1	O-RING, WATER PUMP INLET	
	91404224	1	OIL COOLER	
	91404225	1	GASKET, OIL COOLER	
	91404226	1	GASKET, OIL COOLER	
	91514259	1	TURBOCHARGER	
	91404267	1	GASKET, TURBOCHARGER	
	91404265	1	GASKET, TURBOCHARGER	
	91534005	1	OIL FILTER	
	80374036	1	GASKET, OIL FILTER	
	91474506	1	DRAIN PLUG, OIL FILTER HEAD, (includes o-ring)	
	80374020	1	O-RING, DRAIN PLUG	
	91404221	1	BOLT, BELT TENSIONER	
	91404222	1	SCREW, BELT TENSIONER	
	91404223	1	SHEAVE, BELT TENSIONER	
	7026921	1	STARTER	

Downloaded from www.Manualslib.com manuals search engine

https://truckmanualshub.com/

Figure 4-3 John Deere Engine (Continued)

Item	Part Number	Qty.	Description	Rev.
	91474629	1	ALTERNATOR BRACKET	
	91474630	1	ALTERNATOR SUPPORT	
	91474631	1	ALTERNATOR STRAP	

Downloaded from www.Manualslib.com manuals search engine

https://truckmanualshub.com/

Figure 4-3 John Deere Engine (Continued)

Item	Part Number	Qty.	Description	Rev.

Downloaded from www.Manualslib.com manuals search engine

https://truckmanualshub.com/

Figure 4-4 Fuel Tank & Lines

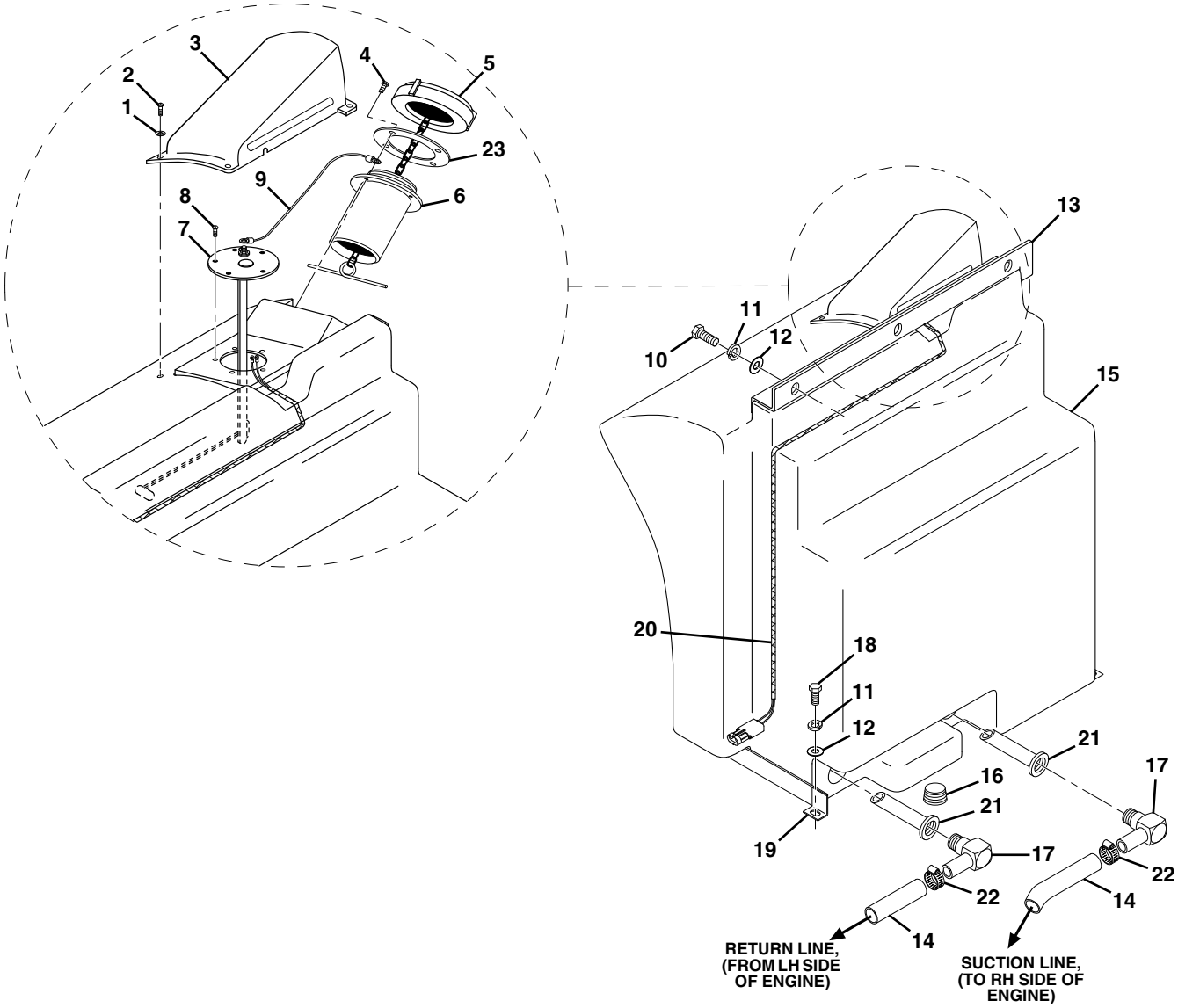

Downloaded from www.Manualslib.com manuals search engine

https://truckmanualshub.com/

Figure 4-4 Fuel Tank & Lines

Item	Part Number	Qty.	Description	Rev.
	91405042	1	FUEL TANK ASSY, (not available to order, see items 4 thru 9, 15, 20 & 23)	K
1	88561003	4	FLAT WASHER, 5/16	
2	88261024	4	SOCKET BUTTON HD CAPSCREW, 5/16-18X1	
3	91403254	1	FUEL TANK HOOD	
4	88261014	4	SOCKET BUTTON HD CAPSCREW, 1/4-20X1/2	
5	91403513	1	FUEL TANK CAP, (with chain)	
	91403514	1	LOCKING FUEL TANK CAP, (optional), (includes key)	
	91404443	1	KEY	
6	91403524	1	FILLER NECK	
7	91403609	1	FUEL LEVEL SENDER	
8	88301191	5	ROUND HD MACHINE SCREW, #10-32X3/8	
9	91401581	1	JUMPER WIRE, **(Before S/N 0160001777)**	
10	88201036	3	HEX HD CAPSCREW, 3/8-16X1-1/4, GR5	
11	88561004	5	FLAT WASHER, 3/8	
12	88551011	5	LOCKWASHER, 3/8	
13	91401198	1	FUEL TANK HOLD DOWN	
14		Ref	FUEL LINE, 5/16 ID	
15	91403176	1	FUEL TANK, (includes item 21)	
16	88711283	1	HEX SOCKET PIPE PLUG, 1/2	
17	1001113251	2	ELBOW, 90 DEGREE	
18	88201035	2	HEX HD CAPSCREW, 3/8-16X1, GR5	
19	91416014	1	FUEL TANK STRAP WELDMENT	
20	91403437	1	FUEL GAUGE HARNESS	
21	91404068	2	PICK-UP TUBE, 6 IN	
22	86883106	2	HOSE CLAMP	
23	3960616	1	GASKET, FILLER NECK	

Downloaded from www.Manualslib.com manuals search engine

https://truckmanualshub.com/

Figure 4-4 Fuel Tank & Lines

NOTE: WHEN USING FUEL CAP ADAPTER KIT, 2902446 OR OLD VERSION LOCKING CAP
1. COAT ALL THREADS OF ADAPTER (ITEM 301) & SET SCREWS (ITEM 303) WITH LOCTITE® 641™ (14404978) BEFORE INSTALLING FILLER NECK ADAPTER.
2. HAND TIGHTEN SET SCREWS JUST UNTIL RESISTANCE IS FELT. OVERTIGHTENED SCREWS WILL DISTORT PLASTIC THREADS.

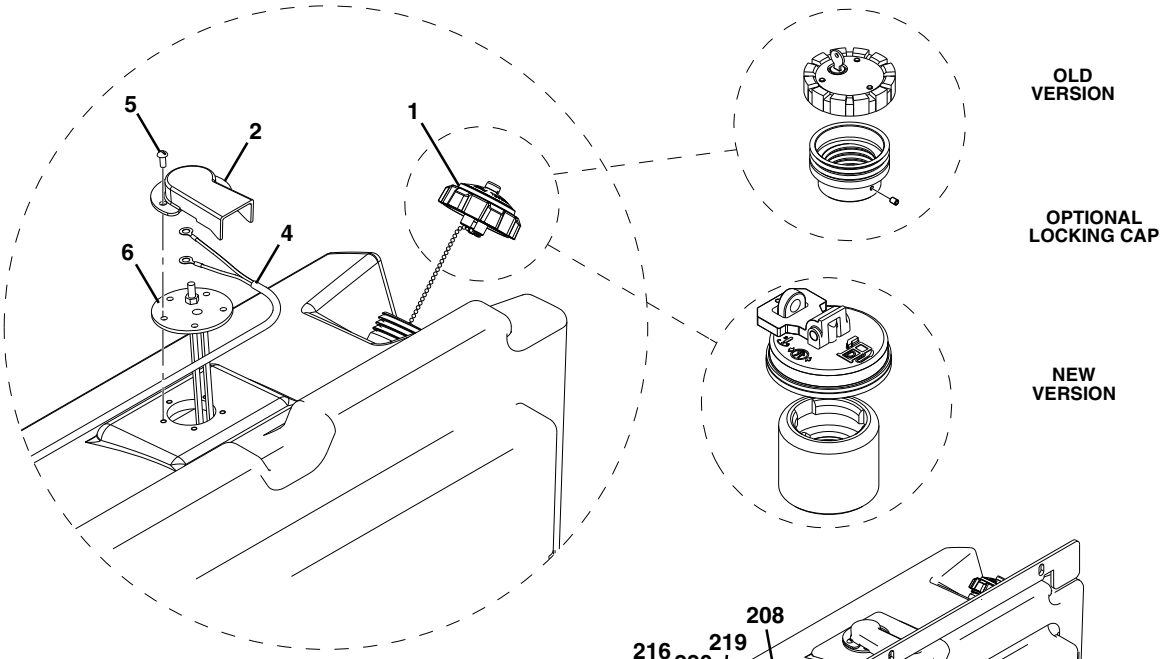

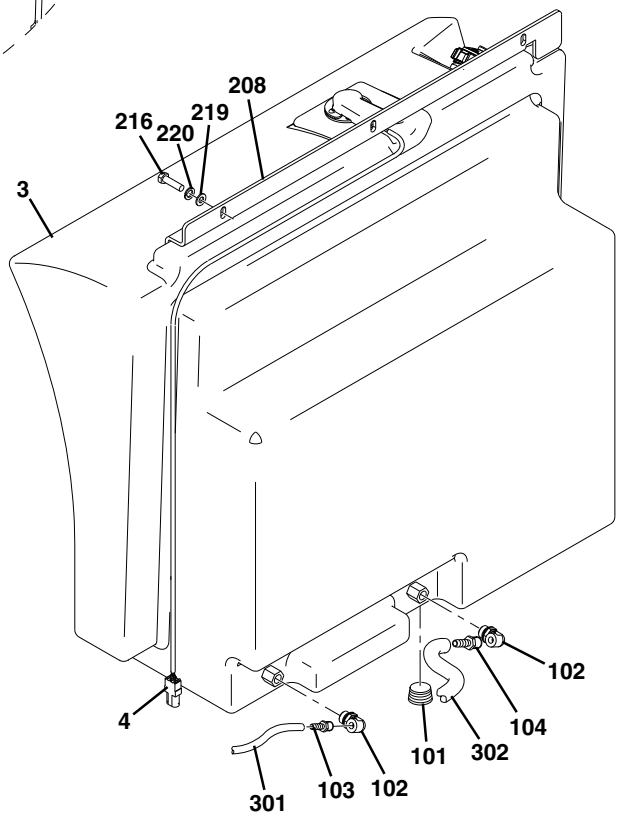

NOTE: NEW VERSION
1. APPLY LOCTITE® 30512™ (0100093) ON ALL ADAPTER THREADS UP TO GASKET START AT BOTTOM OF THE THREADS, 360 DEGREE. AIR DRY FOR 3 TO 4 MINUTES ON BOTH MATING PARTS.
2. APPLY 1/2 IN. ALL THE WAY AROUND THE FILLER NECK THREADS. APPLY THE ADAPTER TO THE FILLER NECK ON THE TANK.
3. ONCE ASSEMBLED, NO FUEL SHOULD BE ADDED FOR 8 HOURS.

PAP23400

Downloaded from www.Manualslib.com manuals search engine

https://truckmanualshub.com/

Figure 4-4 Fuel Tank & Lines

Item	Part Number	Qty.	Description	Rev.
	4400496	1	FUEL TANK ASSY, (includes items 2 thru 6)	E
1	1001093641	1	NON-LOCKING FUEL CAP, **(if equipped)**	
	2902446	Ref	LOCKING FUEL TANK CAP, (no longer available, use 1001102657 for replacement or the following five items for service)	
	0080272	1	FILLER NECK ADAPTER	
	1120591	1	CAP	
	3900140	2	SET SCREW, 1/4-20X3/8	
	14404978	AR	LOCTITE® 641™	
	8342813	1	KEY	
	1001102657	1	LOCKING FUEL TANK CAP, **(if equipped)**	
	1001001422	1	FILLER NECK ADAPTER	
	1001080707	1	CAP	
	0100093	AR	LOCTITE® 30512™	
2	1671313	1	FUEL SENDER COVER	
3	4400490	1	FUEL TANK ASSY, (includes items 101 thru 104)	D
4	4923452	1	FUEL SENDER HARNESS	
5	88302192	5	ROUND HD SLOTTED MACHINE SCREW, #10-32X7/16	
6	91403609	1	FUEL LEVEL SENDER, **(Before S/N 0160029741)**	
	1001093388	1	FUEL LEVEL SENDER, **(S/N 0160029741 & After)**	
101	88711283	1	HEX SOCKET PIPE PLUG, 1/2	
102	1001113251	2	ELBOW, 90 DEGREE	
103	8420231	1	HOSE BARB FITTING	
104	8430007	1	HOSE BARB FITTING	
208	91401198	1	FUEL TANK HOLD DOWN	
210	91416014	1	FUEL TANK STRAP, (not shown)	
216	88201036	3	HEX HD CAPSCREW, 3/8-16X1-1/4, GR5	
219	88561004	5	FLAT WASHER, 3/8	
220	88551011	5	LOCKWASHER, 3/8	
221	88201035	2	HEX HD CAPSCREW, 3/8-16X1, GR5, (not shown)	
301		Ref	FUEL LINE, (see Figure 4-1 for details)	
302		Ref	FUEL LINE, (see Figure 4-1 for details)	

Downloaded from www.Manualslib.com manuals search engine

https://truckmanualshub.com/

Figure 4-5 Radiator Assembly

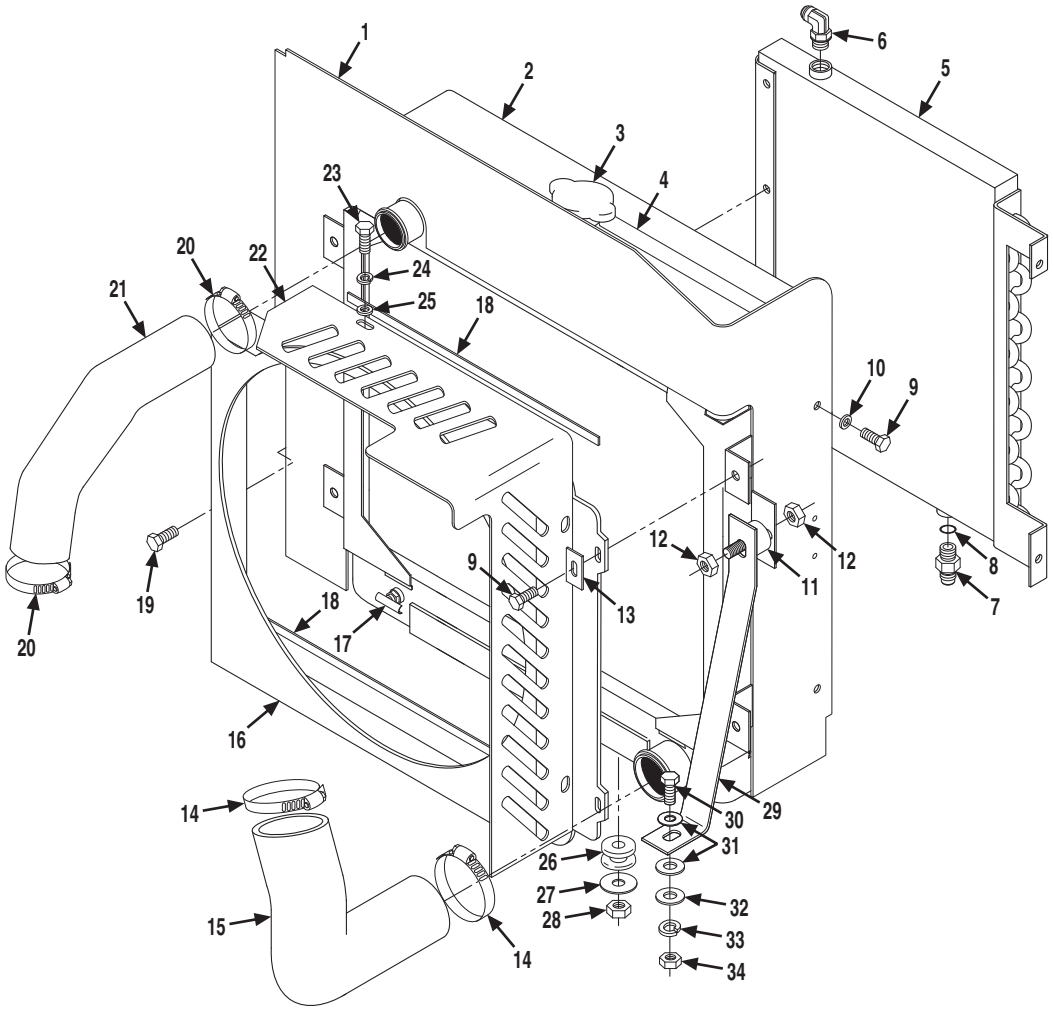

Downloaded from www.Manualslib.com manuals search engine

https://truckmanualshub.com/

Figure 4-5 Radiator Assembly

Item	Part Number	Qty.	Description	Rev.
	91405003	1	RADIATOR ASSY, (includes items 1 thru 21)	L
1	91403403	1	AIR DAM	
2	91403141	1	RADIATOR, (includes items 3 & 4)	
3	91404008	1	RADIATOR CAP, 10 PSI	
4	NSS	38 in	OVERFLOW HOSE	
5	91403086	1	OIL COOLER	
6	83291198	1	ELBOW, 90 DEGREE	
7	2220376	1	CONNECTOR, (includes item 8)	
8	88591207	1	O-RING	
9	77143003	6	WHIZ-LOCK SCREW, 5/16-18X5/8	
10	88561003	2	FLAT WASHER, 5/16	
11	91033137	2	SHOCK MOUNT	
12	77143006	4	WHIZ-LOCKNUT, 5/16-18	
13	91143348	4	CLAMP BAR	
14	86883327	2	HOSE CLAMP	
15	91403096	1	LOWER RADIATOR HOSE	
16	91406090	1	FAN SHROUD	
17	84521056	1	DRAIN COCK	
18	90200755	38 in	GASKA-TAPE	
19	91123124	4	WHIZ-LOCK SCREW, 5/16-18X1/2	
20	85071128	2	HOSE CLAMP	
21	91403095	1	UPPER RADIATOR HOSE	
22	91401233	1	FAN GUARD	
23	88201017	3	HEX HD CAPSCREW, 5/16-18X5/8, GR5	
24	88551010	3	LOCKWASHER, 5/16	
25	88561108	3	FLAT WASHER, 5/16	
26	83683308	2	SHOCK MOUNT	
27	90205918	2	SPECIAL WASHER	
28	88521206	2	HEX LOCKNUT, 3/8-16	
29	91401322	1	RADIATOR SUPPORT BRACKET, **(S/N 0189001 thru 0160001448)**	
	91471108	1	RADIATOR SUPPORT BRACKET, **(S/N 0160001470 thru 0160003058)**	
30	88201036	1	HEX HD CAPSCREW, 3/8-16X1-1/4, GR5	
31	88561004	2	FLAT WASHER, 3/8	
32	90027470	1	HARDENED WASHER, 3/8	
33	88551011	1	LOCKWASHER, 3/8	
34	88501006	1	HEX NUT, 3/8-16	

Downloaded from www.Manualslib.com manuals search engine

https://truckmanualshub.com/

Figure 4-5 Radiator Assembly

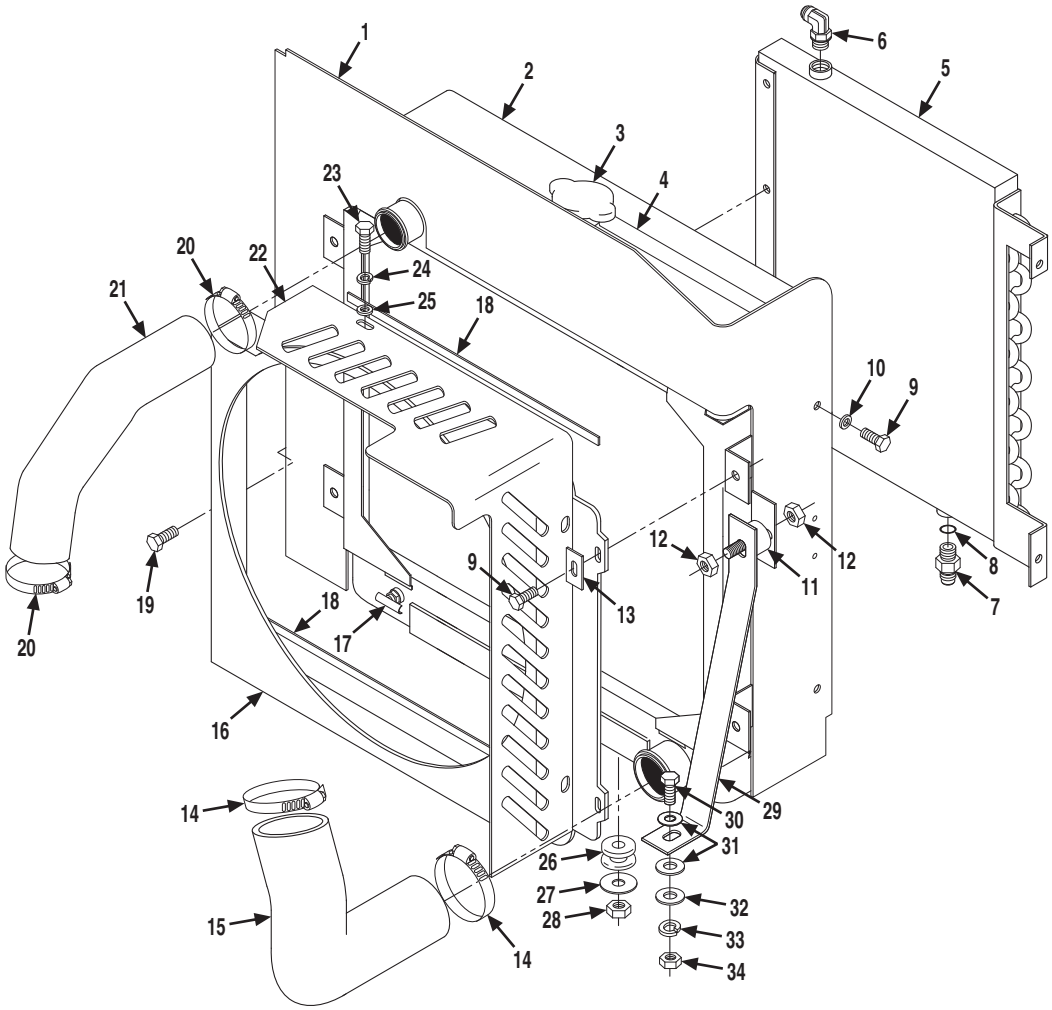

Downloaded from www.Manualslib.com manuals search engine

https://truckmanualshub.com/

Figure 4-5 Radiator Assembly

Item	Part Number	Qty.	Description	Rev.
	91405010	1	RADIATOR ASSY, (includes items 1 thru 21)	K
1	91403403	1	AIR DAM	
2	91403142	1	RADIATOR, (includes items 3 & 4)	
3	91404008	1	RADIATOR CAP, 10 PSI	
4	NSS	38 in	OVERFLOW HOSE	
5	91403086	1	OIL COOLER	
6	2220664	1	ELBOW, 90 DEGREE	
7	2220376	1	ADAPTER, (includes item 8)	
8	88591207	1	O-RING	
9	77143003	6	WHIZ-LOCK SCREW, 5/16-18X5/8	
10	88561003	2	FLAT WASHER, 5/16	
11	91033137	2	SHOCK MOUNT	
12	77143006	4	WHIZ-LOCKNUT, 5/16-18	
13	91143348	4	CLAMP BAR	
14	86883327	2	HOSE CLAMP	
15	91403096	1	LOWER RADIATOR HOSE	
16	91406090	1	FAN SHROUD	
17	84521056	1	DRAIN COCK	
18	90200755	38 in	GASKA-TAPE	
19	91123124	4	WHIZ-LOCK SCREW, 5/16-18X1/2	
20	85071128	2	HOSE CLAMP	
21	91403095	1	UPPER RADIATOR HOSE	
22	91401233	1	FAN GUARD	
23	88201017	3	HEX HD CAPSCREW, 5/16-18X5/8, GR5	
24	88551010	3	LOCKWASHER, 5/16	
25	88561108	3	FLAT WASHER, 5/16	
26	83683308	2	SHOCK MOUNT	
27	90205918	2	SPECIAL WASHER	
28	88521206	2	HEX LOCKNUT, 3/8-16	
29	91471108	1	RADIATOR SUPPORT BRACKET	
30	88201036	1	HEX HD CAPSCREW, 3/8-16X1-1/4, GR5	
31	88561004	2	FLAT WASHER, 3/8	
32	90027470	1	HARDENED WASHER, 3/8	
33	88551011	1	LOCKWASHER, 3/8	
34	88501006	1	HEX NUT, 3/8-16	

Downloaded from www.Manualslib.com manuals search engine

https://truckmanualshub.com/

Figure 4-6 Air Cleaner & Installation

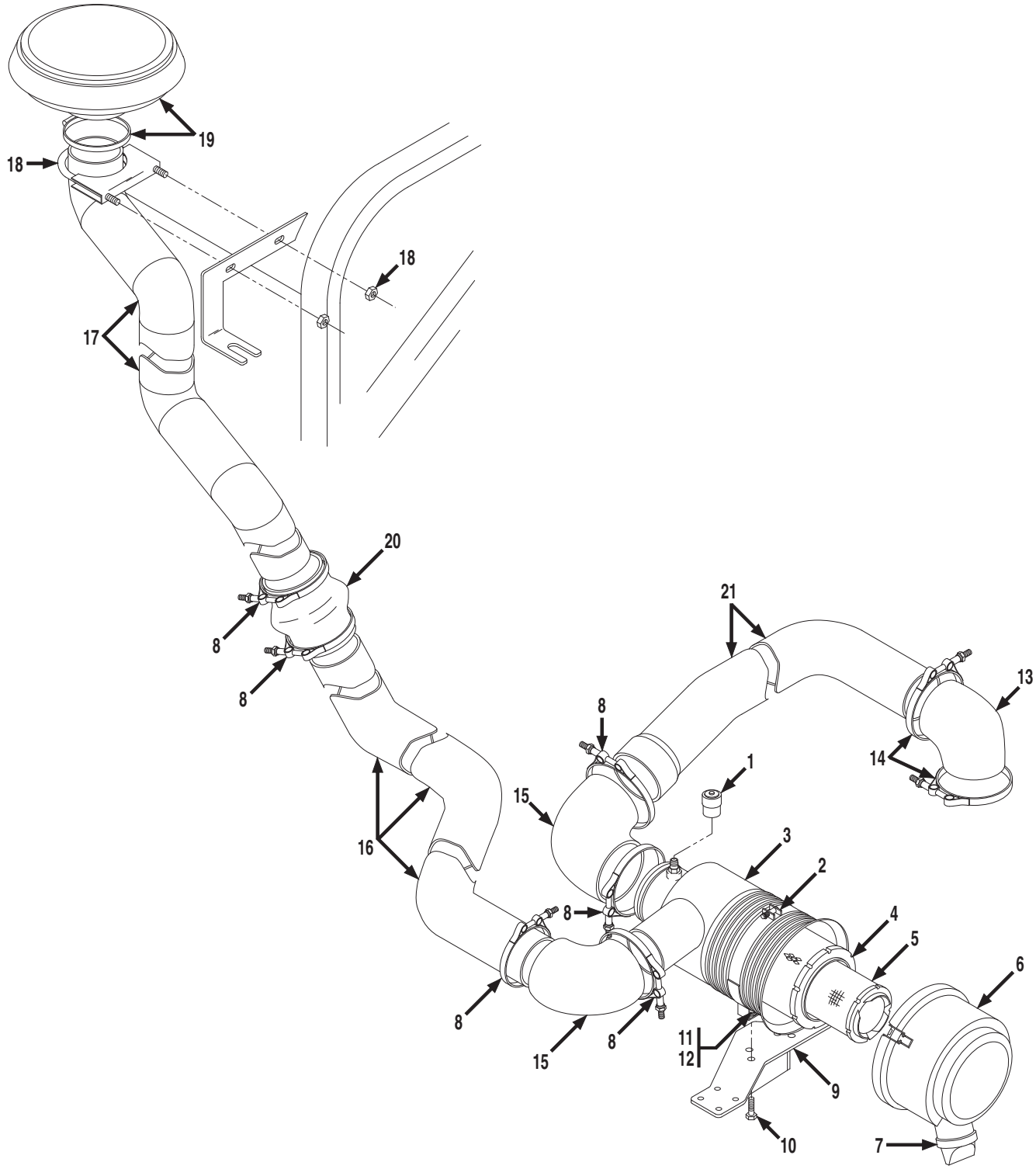

Downloaded from www.Manualslib.com manuals search engine

https://truckmanualshub.com/

Figure 4-6 Air Cleaner & Installation

Item	Part Number	Qty.	Description	Rev.
	91405027	Ref	AIR CLEANER ASSY, (includes items 1 thru 7)	C
1	83671475	1	INDICATOR	
2	91403104	1	BAND CLAMP	
3	91403100	1	AIR CLEANER, (includes items 4 thru 7)	
4	91403102	1	ELEMENT, (outer)	
5	91403103	1	ELEMENT, (inner)	
6	91404007	1	COVER ASSY	
7	10733183	1	VACUATOR	
8	91163129	6	BAND CLAMP	
9		Ref	BRACKET, (see Figure 4-1 for details)	
10	88201020	2	HEX HD CAPSCREW, 5/16-18X1, GR5	
11	88561108	1	FLAT WASHER, 5/16	
12	88521205	2	HEX LOCKNUT, 5/16-18	
13	91413096	1	AIR INTAKE ELBOW	
14	90028488	2	BAND CLAMP	
15	91083128	2	RUBBER ELBOW, 90 DEGREE	
16	91403471	1	AIR INTAKE TUBE	
17	91403515	1	AIR INTAKE TUBE	
18	24921332	1	MUFFLER CLAMP	
19	91403512	1	AIR INTAKE HOOD, (includes clamp)	
20	91403244	1	STRAIGHT HUMP	
21	91403125	1	AIR INTAKE TUBE	

Downloaded from www.Manualslib.com manuals search engine

https://truckmanualshub.com/

Figure 4-6 Air Cleaner & Installation

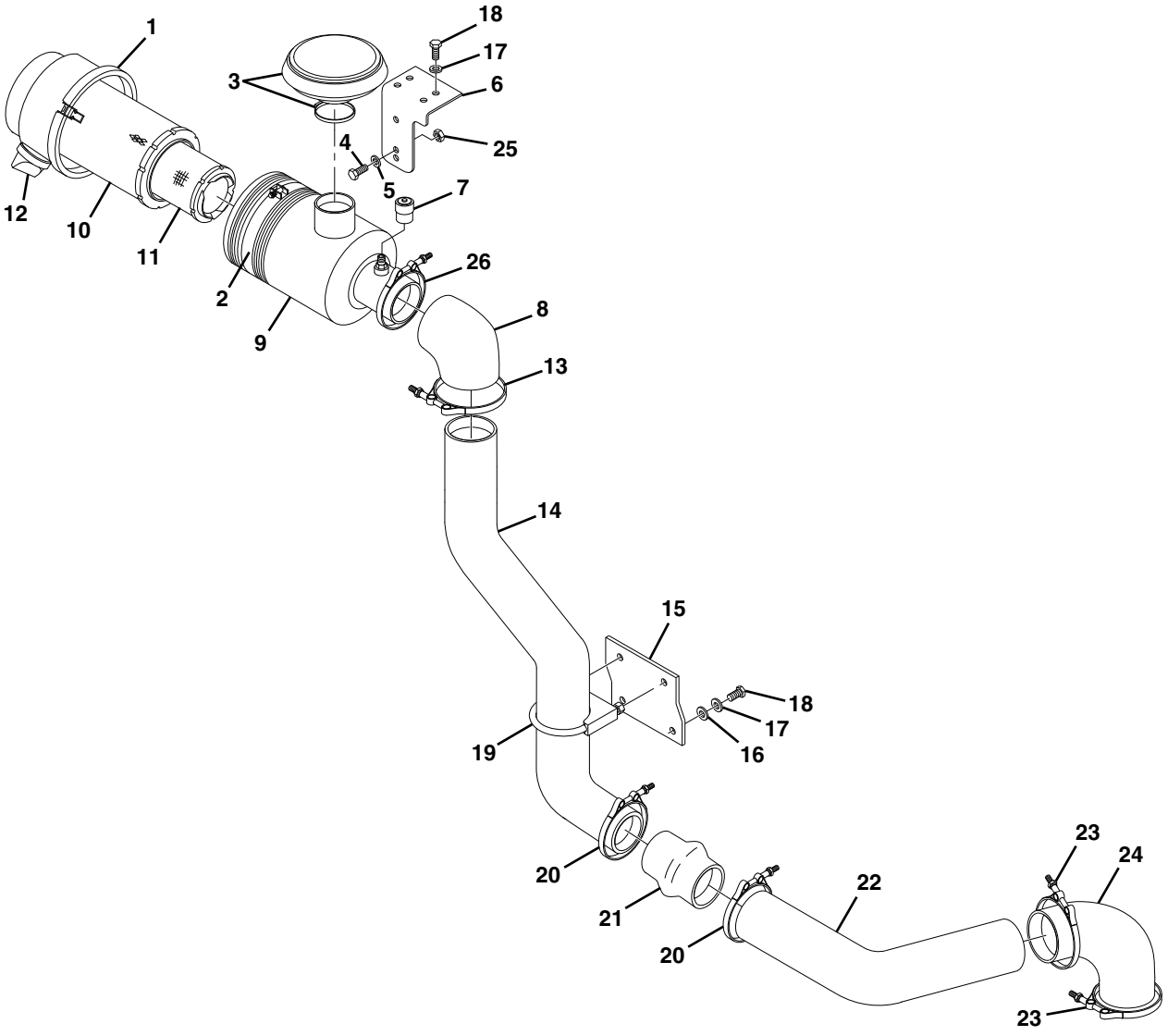

PAP21950

Downloaded from www.Manualslib.com manuals search engine

https://truckmanualshub.com/

Figure 4-6 Air Cleaner & Installation

Item	Part Number	Qty.	Description	Rev.
	91475046	Ref	AIR CLEANER ASSY, (includes items 1 thru 12, 25 & 26)	C
1	80274004	1	COVER ASSY	
2	80273011	1	BAND CLAMP	
3	91473100	1	AIR INTAKE HOOD, (includes clamp)	
4	88201018	2	HEX HD CAPSCREW, 5/16-18X3/4, GR5	
5	88551010	2	LOCKWASHER, 5/16	
6	91471181	1	BRACKET	
7	83671475	1	INDICATOR	
8	91083129	1	ELBOW, 90 DEGREE	
9	91403101	1	AIR CLEANER, (includes items 1 & 10 thru 12)	
10	80273010	1	OUTER ELEMENT	
11	80273042	1	INNER ELEMENT	
12	10733183	1	VACUATOR	
13	91163129	1	BAND CLAMP	
14	91473104	1	AIR INTAKE TUBE	
15	91471133	1	BRACKET	
16	88561004	2	FLAT WASHER, 3/8	
17	88551011	4	LOCKWASHER, 3/8	
18	88201033	4	HEX HD CAPSCREW, 3/8-16X3/4, GR5	
19	24921332	1	MUFFLER CLAMP	
20	91163129	2	BAND CLAMP	
21	91403244	1	STRAIGHT HUMP	
22	91473102	1	AIR INTAKE TUBE	
23	90028488	2	HOSE CLAMP	
24	91403240	1	RUBBER ELBOW	
25	77143006	2	WHIZ-LOCKNUT, 5/16-18	
26	91163137	1	BAND CLAMP	

Downloaded from www.Manualslib.com manuals search engine

https://truckmanualshub.com/

Figure 4-6 Air Cleaner & Installation

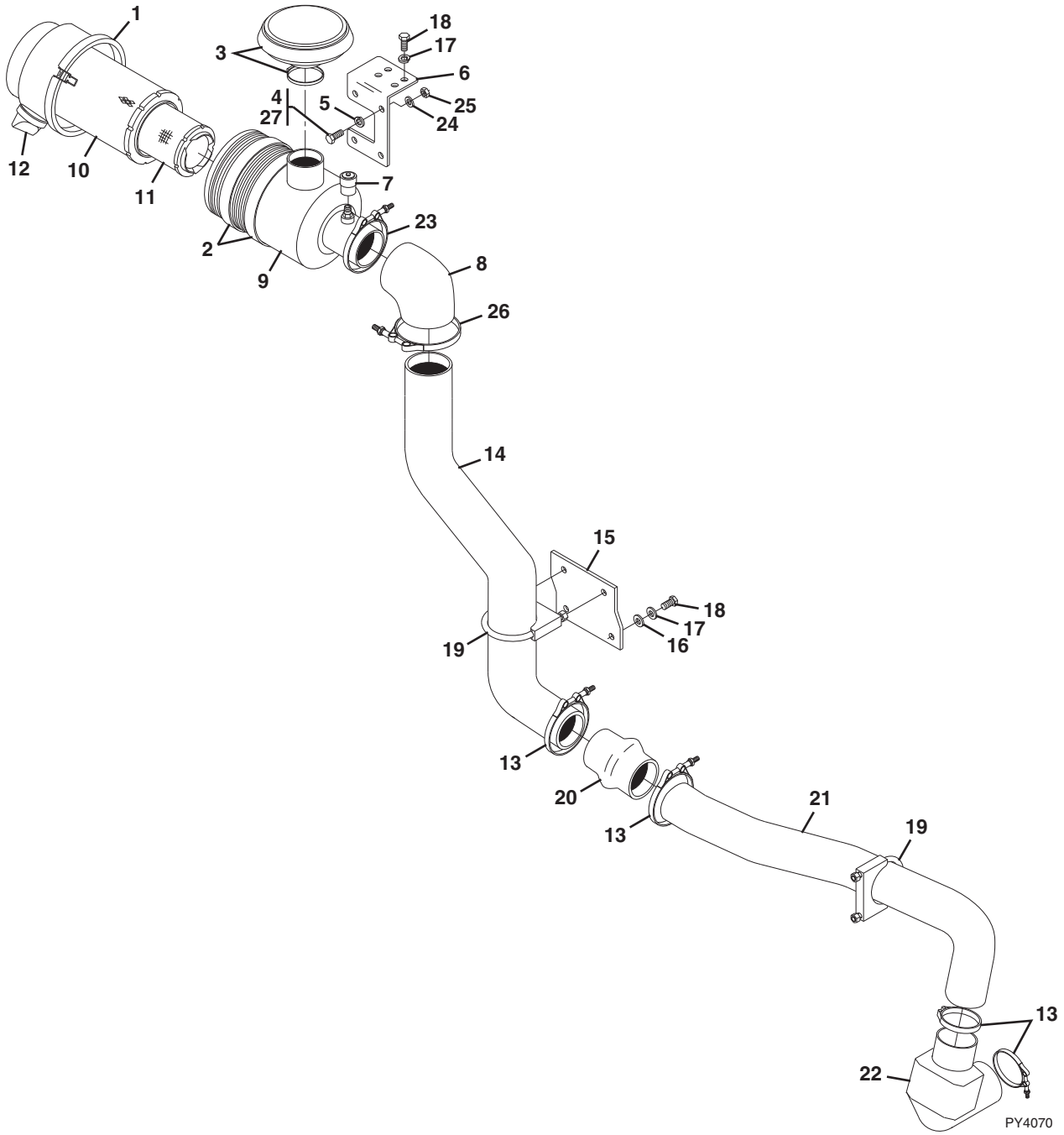

Downloaded from www.Manualslib.com manuals search engine

https://truckmanualshub.com/

Figure 4-6 Air Cleaner & Installation

Item	Part Number	Qty.	Description	Rev.
	91515041	Ref	AIR CLEANER ASSY, (not available to order, see items 2 thru 9, 23 thru 25 & 27 for service)	B
1	91364023	1	COVER ASSY	
2	10268516	2	MOUNTING BAND	
3	8273257	1	AIR INLET HOOD, (includes clamp)	
4	88201021	4	HEX HD CAPSCREW, 5/16-18X1-1/4, GR5	
5	88551010	4	LOCKWASHER, 5/16	
6	91511144	1	MOUNTING BRACKET	
7	77383154	1	SERVICE INDICATOR	
8	91153007	1	ELBOW, 90 DEGREE	
9	8273029	1	AIR CLEANER, (includes items 1 & 10 thru 12)	
10	1101312	1	OUTER ELEMENT	
11	1101313	1	INNER ELEMENT	
12	80373094	1	VACUATOR	
13	91163129	4	BAND CLAMP	
14	91473104	1	AIR INTAKE TUBE	
15	91471133	1	INTAKE SUPPORT BRACKET	
16	4751600	2	FLAT WASHER, 3/8	
17	4761600	4	LOCKWASHER, 3/8	
18	0641606	4	HEX HD CAPSCREW, 3/8-16X3/4, GR5	
19	24921332	2	CLAMP	
20	91403244	1	STRAIGHT HUMP	
21	91473103	1	AIR INTAKE TUBE	
22	91083126	1	AIR INTAKE ELBOW	
23	77383790	1	BAND CLAMP	
24	88561108	4	FLAT WASHER, 5/16	
25	77143006	4	WHIZ-LOCKNUT, 5/16-18	
26	91163137	1	BAND CLAMP	
27	0100011	AR	LOCTITE® 242™	

Downloaded from www.Manualslib.com manuals search engine

https://truckmanualshub.com/

Figure 4-7 Exhaust Installation

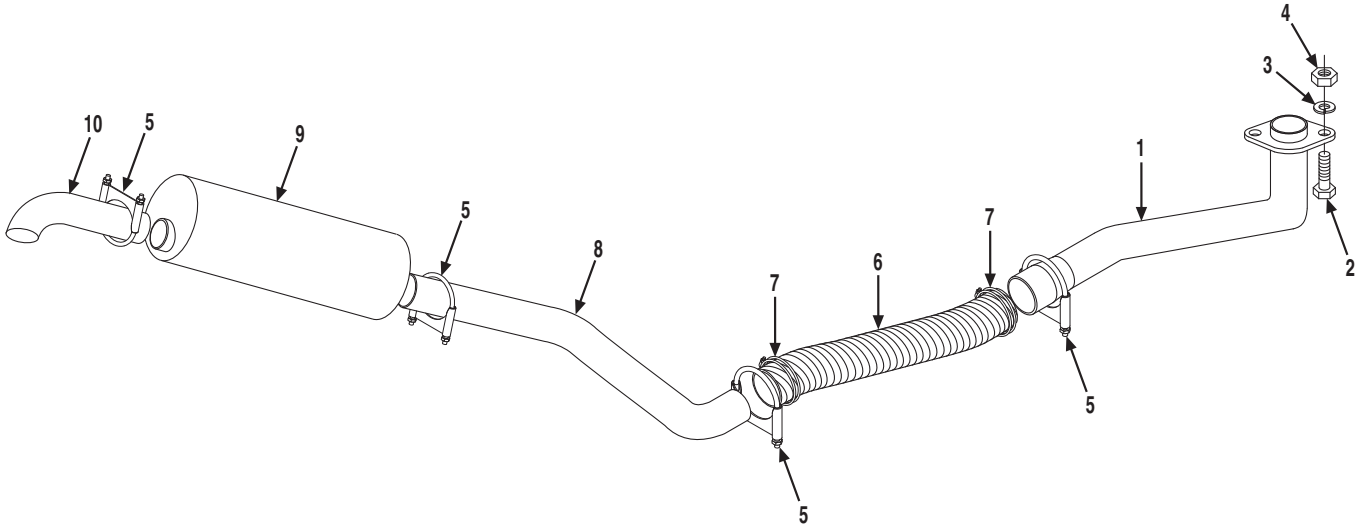

Downloaded from www.Manualslib.com manuals search engine

https://truckmanualshub.com/

Figure 4-7 Exhaust Installation

Item	Part Number	Qty.	Description	Rev.
1	91403484	1	EXHAUST ELBOW	
2	88201038	2	HEX HD CAPSCREW, 3/8-16X1-3/4, GR5	
3	88551011	2	LOCKWASHER, 3/8	
4	88501006	2	HEX NUT, 3/8-16	
5	83683175	4	MUFFLER CLAMP	
6	91413031	1	FLEXIBLE TUBING	
7	91163268	2	FLEXIBLE TUBE CLAMP	
8	91403510	1	EXHAUST TUBE	
9	91083250	1	MUFFLER	
10	91403488	1	TAIL PIPE	

Downloaded from www.Manualslib.com manuals search engine

https://truckmanualshub.com/

Figure 4-7 Exhaust Installation

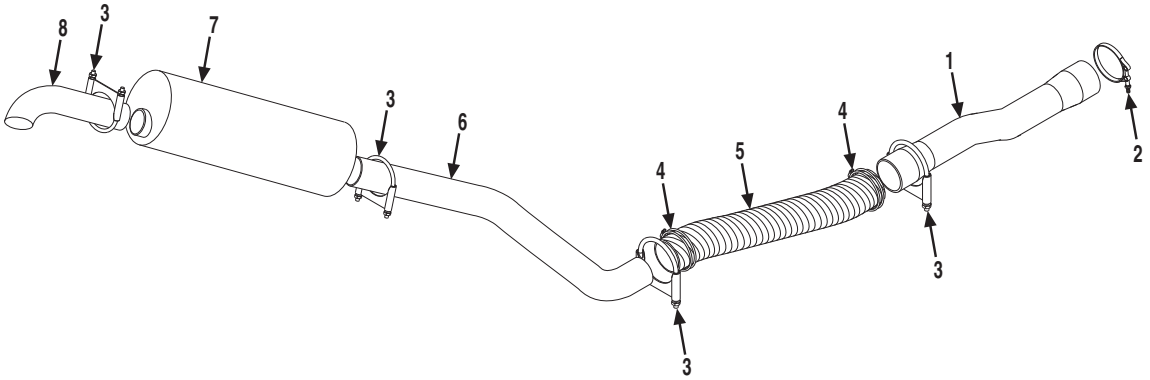

Downloaded from www.Manualslib.com manuals search engine

https://truckmanualshub.com/

Figure 4-7 Exhaust Installation

Item	Part Number	Qty.	Description	Rev.
1	91403485	1	EXHAUST TUBE	
2	91403216	1	V-BAND CLAMP	
3	24921332	4	MUFFLER CLAMP	
4	91403601	2	FLEXIBLE TUBE CLAMP	
5	91413030	1	FLEXIBLE TUBING	
6	91403511	1	EXHAUST TUBE	
7	91163035	1	MUFFLER	
8	91403489	1	TAIL PIPE	

Downloaded from www.Manualslib.com manuals search engine

https://truckmanualshub.com/

This Page Intentionally Left Blank

Downloaded from www.Manualslib.com manuals search engine

https://truckmanualshub.com/

SECTION 5
DRIVE TRAIN

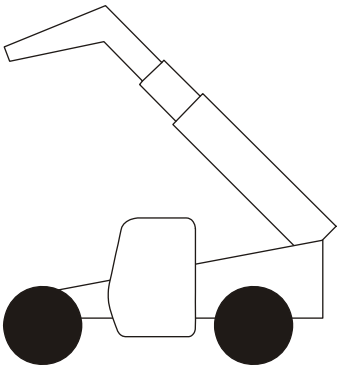

Downloaded from www.Manualslib.com manuals search engine

https://truckmanualshub.com/

Figure 5-1 Front Axle Assembly - Rockwell

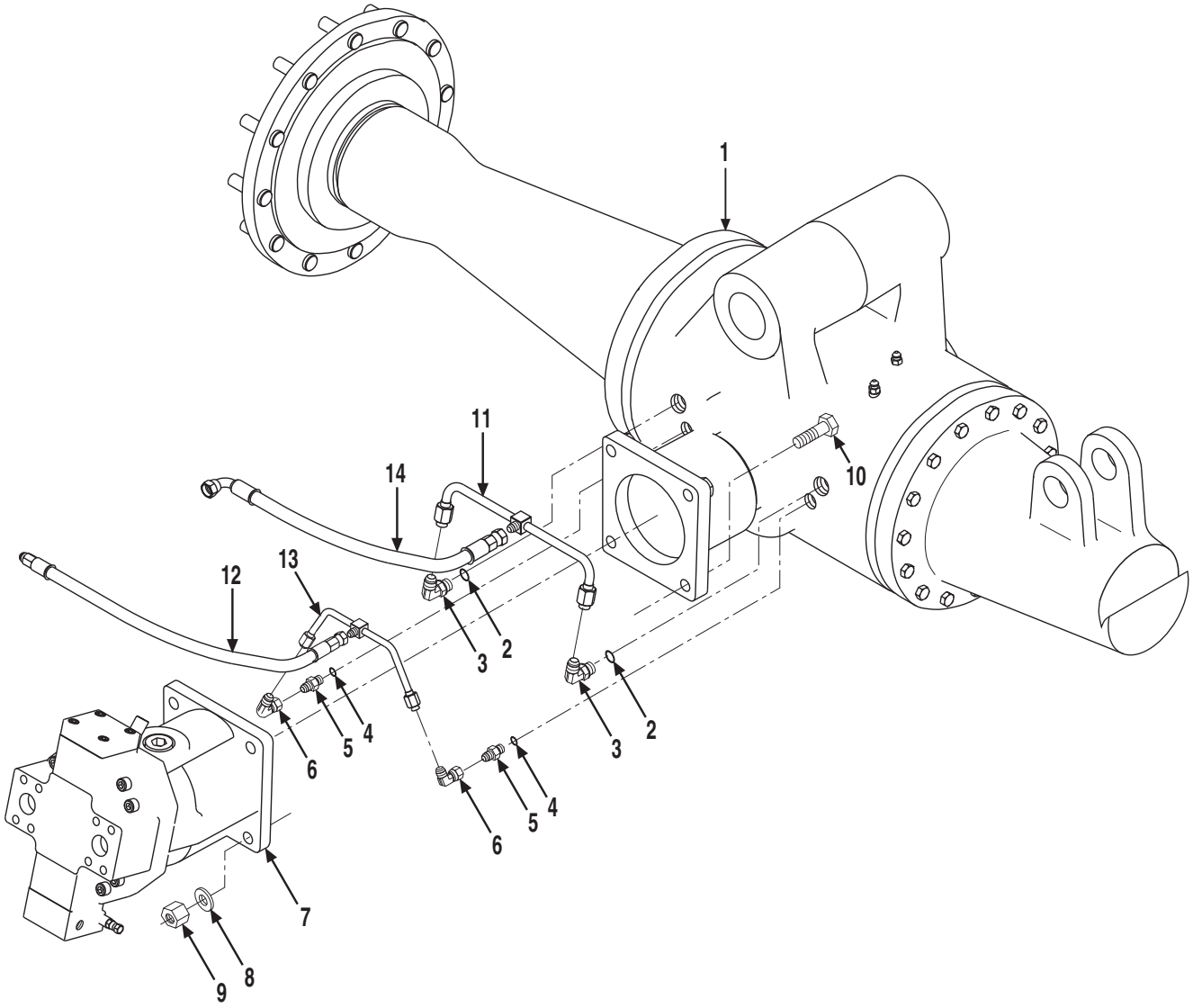

Downloaded from www.Manualslib.com manuals search engine

https://truckmanualshub.com/

Figure 5-1 Front Axle Assembly - Rockwell

Item	Part Number	Qty.	Description	Rev.
	91415001	1	FRONT AXLE ASSY, (includes all items)	E
1		Ref	FRONT AXLE, (see Figure 5-2 for details)	
2	88591205	2	O-RING	
3	88662065	2	ELBOW, 90 DEGREE, (includes item 2)	
4	88591204	2	O-RING	
5	2220371	2	CONNECTOR, (includes item 4)	
6	88662105	2	ELBOW, 90 DEGREE, (swivel nut)	
7		Ref	HYDRAULIC MOTOR, (see Figure 9-10 for details)	
8	90027473	4	HARDENED WASHER	
9	77383580	4	HIGH NUT	
10	88201616	4	HEX HD CAPSCREW, 3/4-16X3-1/2, GR5	
11	91413002	1	BRAKE TUBE, (park)	
12	84719217	1	HOSE ASSY	
13	91413003	1	BRAKE TUBE, (service)	
14	84719218	1	HOSE ASSY	

Downloaded from www.Manualslib.com manuals search engine

https://truckmanualshub.com/

Figure 5-2 Front Axle - Rockwell

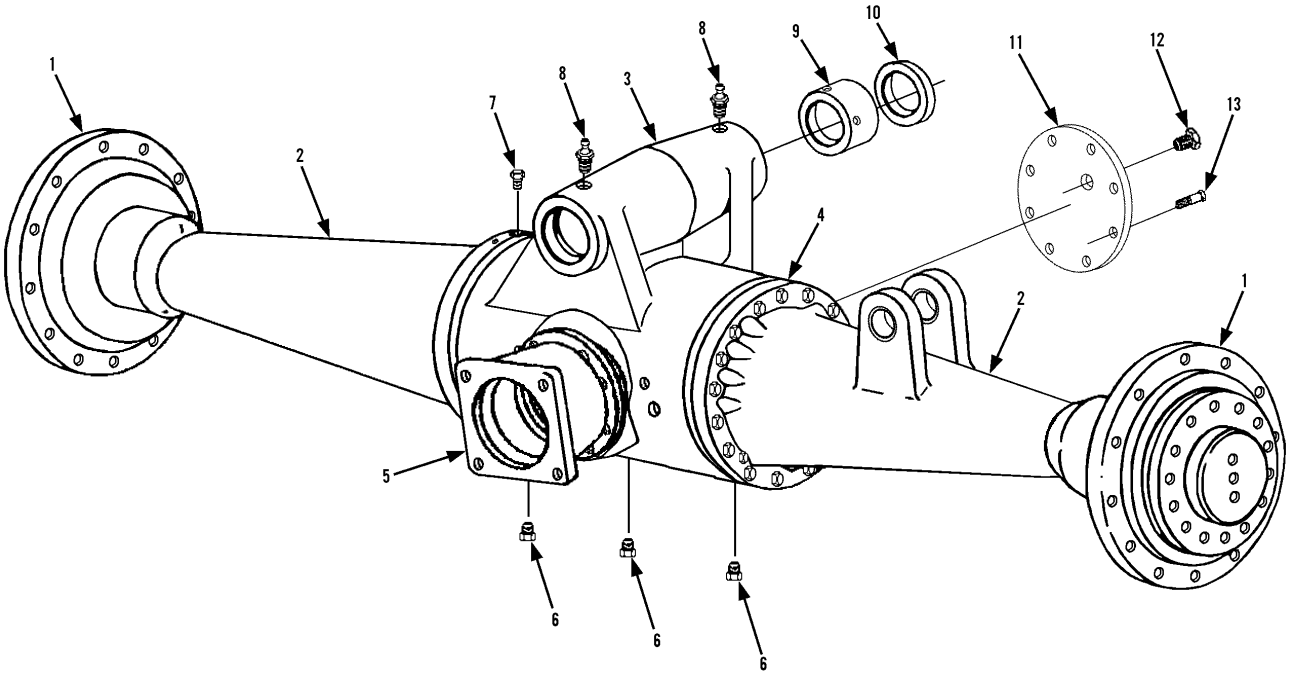

Downloaded from www.Manualslib.com manuals search engine

https://truckmanualshub.com/

Figure 5-2 Front Axle - Rockwell

Item	Part Number	Qty.	Description	Rev.
	91123119	1	FRONT AXLE, (includes all items)	D
1		Ref	WHEEL FLANGE ASSY, (see Figure 5-5 for details)	
2		Ref	LEFT & RIGHT HOUSING ASSY, (see Figure 5-5 for details)	
3	91144326	1	CENTER HOUSING ASSY, (includes item 9)	
4		Ref	BRAKE ASSY, (see Figure 5-4 for details)	
5		Ref	CARRIER ASSY, (see Figure 5-3 for details)	
6	91144327	3	DRAIN PLUG	
7	91144328	1	VENT PLUG	
8	91144329	2	LUBE FITTING	
9	91084046	2	BUSHING	
10	91084047	2	TRUNNION OIL SEAL	
11	91141511	1	COVER	
12	88711284	1	LEVEL PLUG	
13	91144332	8	CAPSCREW, M8X1-1/4X16	

Downloaded from www.Manualslib.com manuals search engine

https://truckmanualshub.com/

Figure 5-3 Carrier Assembly - Rockwell

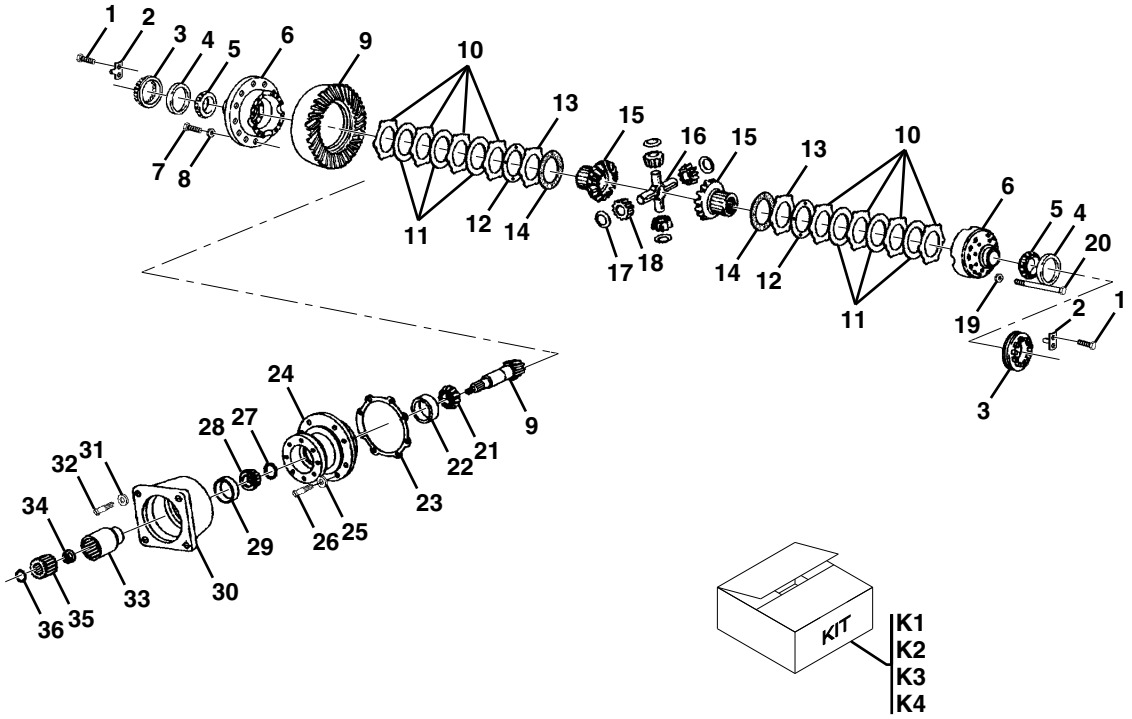

Downloaded from www.Manualslib.com manuals search engine

https://truckmanualshub.com/

Figure 5-3 Carrier Assembly - Rockwell

Item	Part Number	Qty.	Description	Rev.
1	91144386	4	CAPSCREW	
2	91144387	2	ADJUSTER RING LOCK	
3	91144388	2	ADJUSTER RING	
4	83073828	2	BEARING CUP	
5	91144389	2	BEARING CONE	
6	91144390	1	DIFFERENTIAL CASE	
7	91144391	12	CAPSCREW, M10X1X30	
8	83483584	12	WASHER	
9	91144392	1	SPIRAL GEAR & PINION	
10	Use Kit K1	8	DRIVE FRICTION DISC, (included in 91144382 kit)	
11	Use Kit K1	6	DRIVEN FRICTION DISC, (included in 91144382 kit)	
12	Use Kit K1 or K4	2	SHIM, (0.33), (included in shim kit)	
	Use Kit K1 or K4	2	SHIM, (0.38), (included in shim kit)	
	Use Kit K1 or K4	2	SHIM, (0.25), (included in shim kit)	
	Use Kit K1 or K4	2	SHIM, (0.13), (included in shim kit)	
13	Use Kit K1	2	COMPRESSION DISC, (included in 91144382 kit)	
14	Use Kit K1	2	THRUST WASHER, (included in 91144382 kit)	
15	91144393	2	SIDE GEAR	
16	91144394	1	SPIDER	
17	91144395	4	THRUST WASHER	
18	91144396	4	PINION GEAR	
19	83483584	12	WASHER	
20	91144397	12	CAPSCREW, M10X1-1/2X80	
21	90207204	1	BEARING CONE	
22	90200440	1	BEARING CUP	
23	Use Kit K2	4	SHIM, (0.05), (included in shim kit)	
	Use Kit K2	2	SHIM, (0.125), (included in shim kit)	
	Use Kit K2	3	SHIM, (0.20), (included in shim kit)	
	Use Kit K2	1	SHIM, (0.50), (included in shim kit)	
24	91144398	1	PINION CAGE ASSY, (includes items 22 & 29)	
25	91144399	8	WASHER	
26	91144400	8	CAPSCREW, M12X1-3/4X40	
27	Use Kit K3	1	SHIM, (1.20), (included in shim kit)	
	Use Kit K3	1	SHIM, (1.25), (included in shim kit)	
	Use Kit K3	1	SHIM, (1.30), (included in shim kit)	
	Use Kit K3	1	SHIM, (1.35), (included in shim kit)	
	Use Kit K3	1	SHIM, (1.40), (included in shim kit)	
	Use Kit K3	1	SHIM, (1.45), (included in shim kit)	
	Use Kit K3	1	SHIM, (1.50), (included in shim kit)	
28	91144401	1	BEARING CONE	
29	91144402	1	BEARING CUP	
30	91144403	1	MOTOR ADAPTER FLANGE	
31	83483584	8	WASHER	
32	91144404	8	CAPSCREW, 3/8-16UNC-2AX1-1/4	
33	91144405	1	DRIVEN SLEEVE	
34	91144406	1	PINION NUT, M24X1-1/2	
35	91144407	1	DRIVE SLEEVE	
36	91144408	1	SNAP RING	

Downloaded from www.Manualslib.com manuals search engine

https://truckmanualshub.com/

Figure 5-3 Carrier Assembly - Rockwell (Continued)

Item	Part Number	Qty.	Description	Rev.
K1	91144382	1	LIMITED SLIP PLATE STACK KIT, (includes items 10, 11, 12, 13 & 14)	
K2	91144383	1	PINION CAGE SHIM KIT, (includes item 23)	
K3	91144384	1	DRIVE PINION SHIM KIT, (includes item 27)	
K4	91144385	1	LIMITED SLIP SHIM KIT, (includes item 12)	

Downloaded from www.Manualslib.com manuals search engine

https://truckmanualshub.com/

Figure 5-3 Carrier Assembly - Rockwell (Continued)

Item	Part Number	Qty.	Description	Rev.

Downloaded from www.Manualslib.com manuals search engine

https://truckmanualshub.com/

Figure 5-4 Brake Assembly - Rockwell

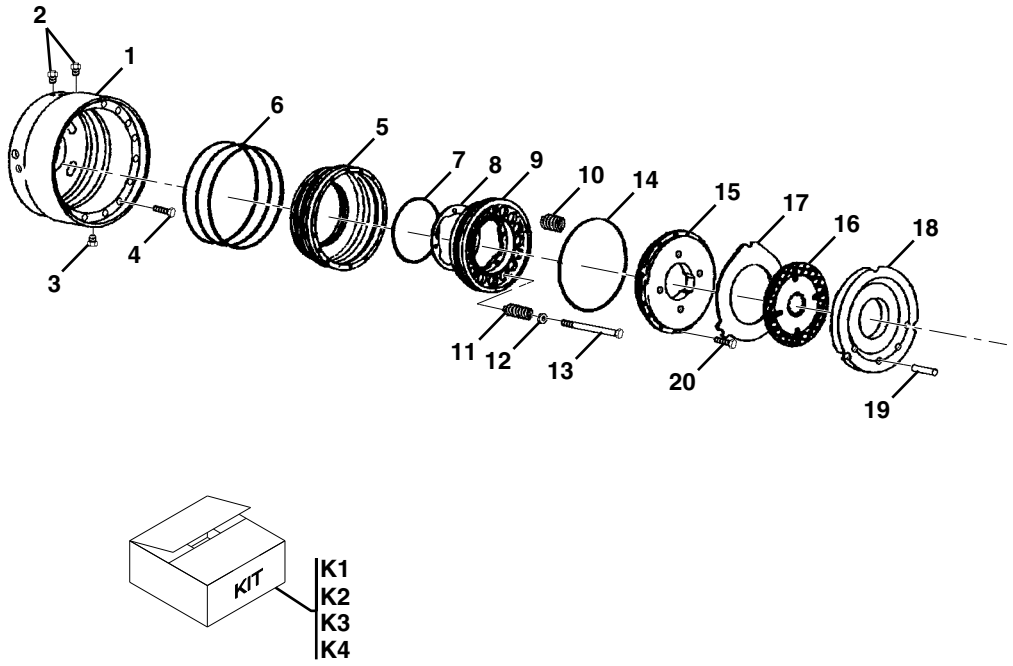

PAP23750

Downloaded from www.Manualslib.com manuals search engine

https://truckmanualshub.com/

Figure 5-4 Brake Assembly - Rockwell

Item	Part Number	Qty.	Description	Rev.
1	91144372	1	BRAKE HOUSING, (right side only - left side included in center housing)	
2	91144373	4	HYDRAULIC LINE BLEEDER	
3		Ref	DRAIN PLUG, (see Figure 5-2 for details)	
4	91144374	3	CAPSCREW, M8X1-1/4X40, (right side only)	
5	91124094	2	BRAKE PISTON & PLATE ASSY, (includes items 6, 7, 9, 10, 14, 15 & 20)	
6	Use Kit K1 or K3	6	O-RING	
7	Use Kit K1 or K3	2	O-RING	
8	Use Kit K4	8	SHIM, (0.075), (included in shim kit)	
	Use Kit K4	8	SHIM, (0.125), (included in shim kit)	
	Use Kit K4	8	SHIM, (0.255), (included in shim kit)	
	Use Kit K4	8	SHIM, (0.555), (included in shim kit)	
9	91144376	2	BRAKE PISTON	
10	91144377	24	SPRING	
11	91144378	16	SPRING	
12	86881421	16	WASHER	
13	91144379	16	RETURN SPRING BOLT	
14	Use Kit K1 or K3	2	O-RING	
15	Use Kit K2 or K3	2	BRAKE ACTUATING PLATE	
16	Use Kit K2 or K3	8	FRICTION DISC	
17	Use Kit K2 or K3	8	STATIONARY DISC	
18	Use Kit K2 or K3	2	BRAKE REACTION PLATE	
19	91144380	6	BRAKE DISC LOCK PIN	
20	91144381	42	CAPSCREW, M6X1X12, (allen)	
K1	91144442	1	BRAKE SEAL KIT, (includes items 6, 7 & 14)	
K2	91144369	1	BRAKE PISTON PLATE KIT, (includes items 15 thru 18)	
K3	91144370	1	BRAKE PLATE & SEAL KIT, (includes items 6, 7 & 14 thru 18)	
K4	91144371	1	PISTON BRAKE SHIM KIT, (includes item 8)	

Downloaded from www.Manualslib.com manuals search engine

https://truckmanualshub.com/

Figure 5-5 Left & Right Housing & Axle & Wheel Flange Assemblies - Rockwell

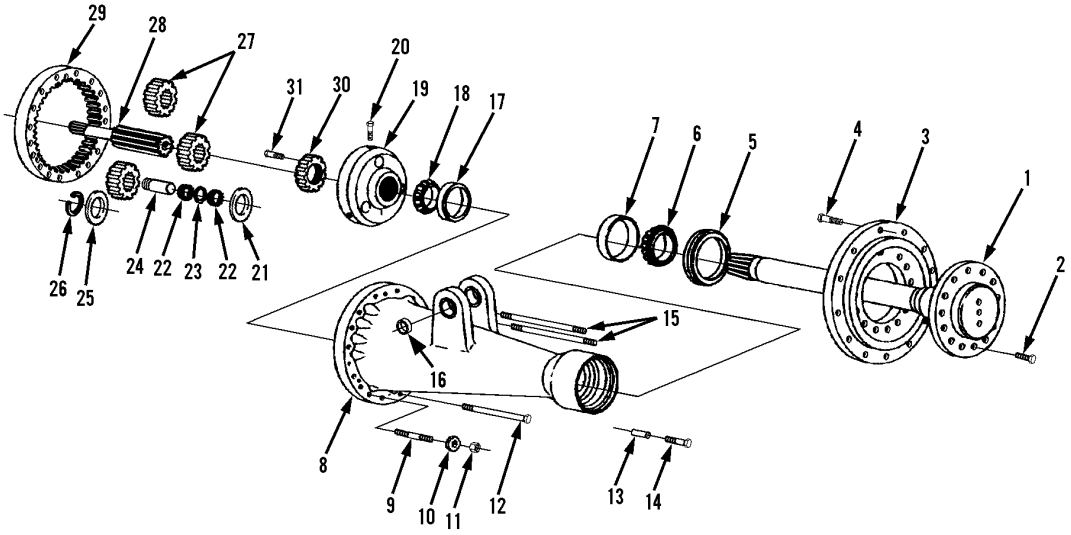

Downloaded from www.Manualslib.com manuals search engine

https://truckmanualshub.com/

Figure 5-5 Left & Right Housing & Axle & Wheel Flange Assemblies - Rockwell

Item	Part Number	Qty.	Description	Rev.
1	91144333	2	AXLE SHAFT ASSY, (includes items 2, 3, 4 & 5)	
2	91144334	28	CAPSCREW, M20X1-1/2X50	
3	91144335	2	WHEEL FLANGE ASSY, (includes item 4)	
4	90203543	24	WHEEL BOLT	
5	91144336	2	SHAFT OIL SEAL	
6	86984451	2	BEARING CONE	
7	86984452	2	BEARING CUP	
8	91144337	1	HOUSING ASSY - RIGHT SIDE, (shown), (includes items 7, 16 & 17)	
	91144338	Ref	RING GEAR & HOUSING ASSY - RIGHT SIDE, (shown), (includes items 7, 16, 17 & 29)	
	91144339	1	HOUSING ASSY - LEFT SIDE, (not shown), (includes items 7 & 17)	
	91144340	Ref	RING GEAR & HOUSING ASSY - LEFT SIDE, (not shown), (includes items 7, 17 & 29)	
9	91144341	4	SET SCREW	
10	91144342	32	WASHER	
11	91144343	8	NUT, M14X1-1/2	
12	91144344	14	CAPSCREW, M14X1-1/2X212, (right side)	
	91144345	14	CAPSCREW, M14X1-1/2X120, (left side)	
13	91144346	2	SPACER, 19mm	
	91144347	4	SPACER, 26mm	
14	91144348	4	CAPSCREW - USE WITH 26mm SPACER, M14X1-1/2X85, (position at 7 & 5 o'clock)	
	91144349	2	CAPSCREW - USE WITH 19mm SPACER, M14X1-1/2X78, (position at 12 o'clock)	
15	91144350	2	STUD, M14X1-1/2X232, (right side)	
	91144351	2	STUD, M14X1-1/2X112, (left side)	
16	91144352	2	BUSHING	
17	91144353	2	BEARING CUP	
18	91144354	2	BEARING CONE	
19	91144355	2	SPIDER ASSY, (includes items 20 & 24)	
20	91144356	6	CAPSCREW, M10X23	
21	91144357	6	THRUST WASHER	
22	91144358	6	KIT ROLLER	
23	91144359	6	SPACER	
24	91144360	6	PLANETARY PINION SHAFT	
25	91144361	6	WASHER	
26	91144362	6	SNAP RING	
27	91144363	6	PLANETARY PINION	
28	91144364	1	SUN GEAR, 287mm, (right side), (shown)	
	91144365	1	SUN GEAR, 247mm, (left side), (not shown)	
29	91144366	2	RING GEAR	
30	91144367	2	ADJUSTING NUT	
31	91144368	2	CAPSCREW, (adjusting nut lock)	

Downloaded from www.Manualslib.com manuals search engine

https://truckmanualshub.com/

Figure 5-6 Front Axle Assembly - Carraro

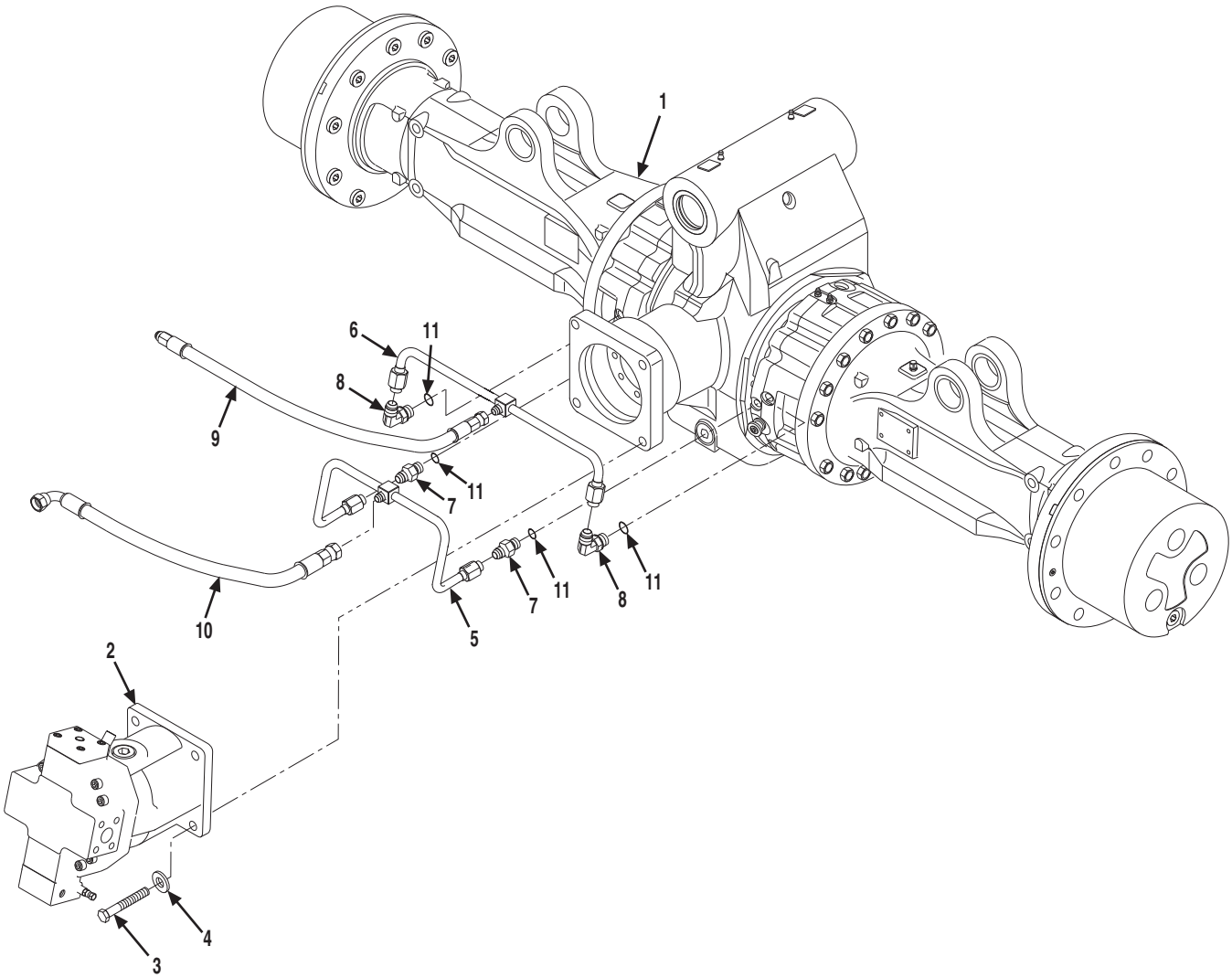

Downloaded from www.Manualslib.com manuals search engine

https://truckmanualshub.com/

Figure 5-6 Front Axle Assembly - Carraro

Item	Part Number	Qty.	Description	Rev.
	91415053	1	FRONT AXLE ASSY, (includes items 1 thru 10)	
1		Ref	FRONT AXLE, (see Figure 5-7 for details)	
2		Ref	HYDRAULIC MOTOR, (see Figure 9-10 for details)	
3	80333162	4	HEX HD CAPSCREW, M20-2-1/2X65	
4	90027473	4	HARDENED WASHER	
5	91413107	1	PARK BRAKE TUBE LINE	
6	91413106	1	SERVICE BRAKE TUBE LINE	
7	77363046	2	CONNECTOR, (includes item 11)	
8	91403258	2	ELBOW, 90 DEGREE, (includes item 11)	
9	84719217	1	HOSE ASSY	
10	84719218	1	HOSE ASSY	
11	88591202	4	O-RING	

Downloaded from www.Manualslib.com manuals search engine

https://truckmanualshub.com/

Figure 5-7 Front Axle - Carraro

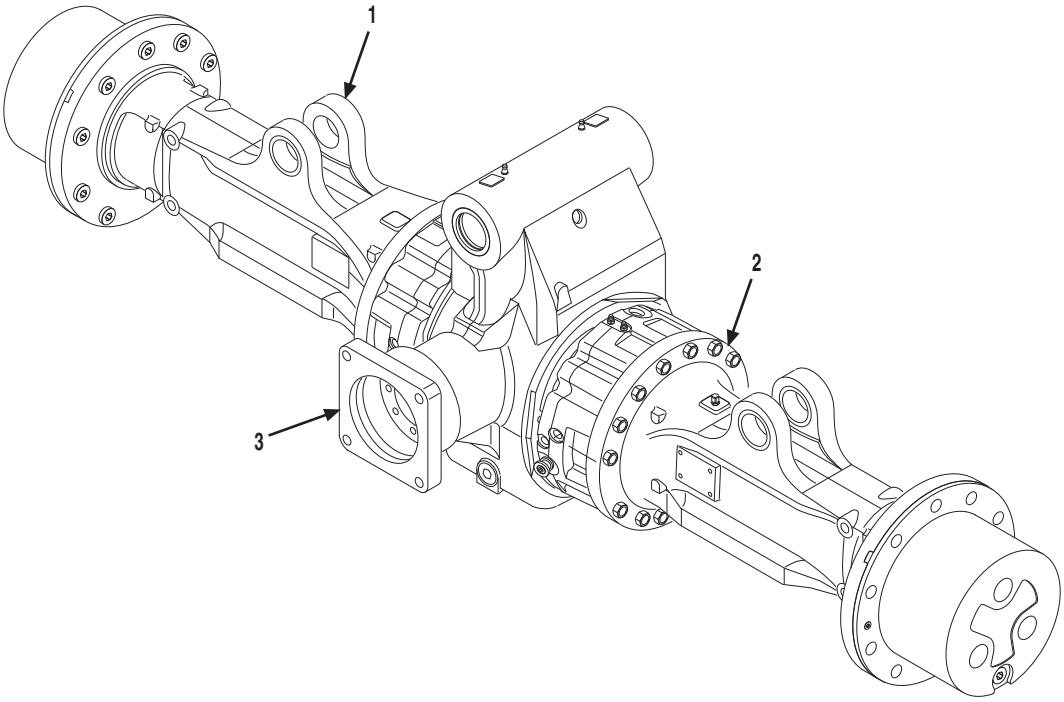

Downloaded from www.Manualslib.com manuals search engine

https://truckmanualshub.com/

Figure 5-7 Front Axle - Carraro

Item	Part Number	Qty.	Description	Rev.
	91363158	1	FRONT AXLE, (includes all items)	A
1		Ref	HOUSING ASSY, (see Figure 5-8 for details)	
2		Ref	BRAKE ASSY, (see Figure 5-9 for details)	
3		Ref	CARRIER ASSY, (see Figure 5-10 for details)	

Downloaded from www.Manualslib.com manuals search engine

https://truckmanualshub.com/

Figure 5-8 Carrier Assembly - Carraro

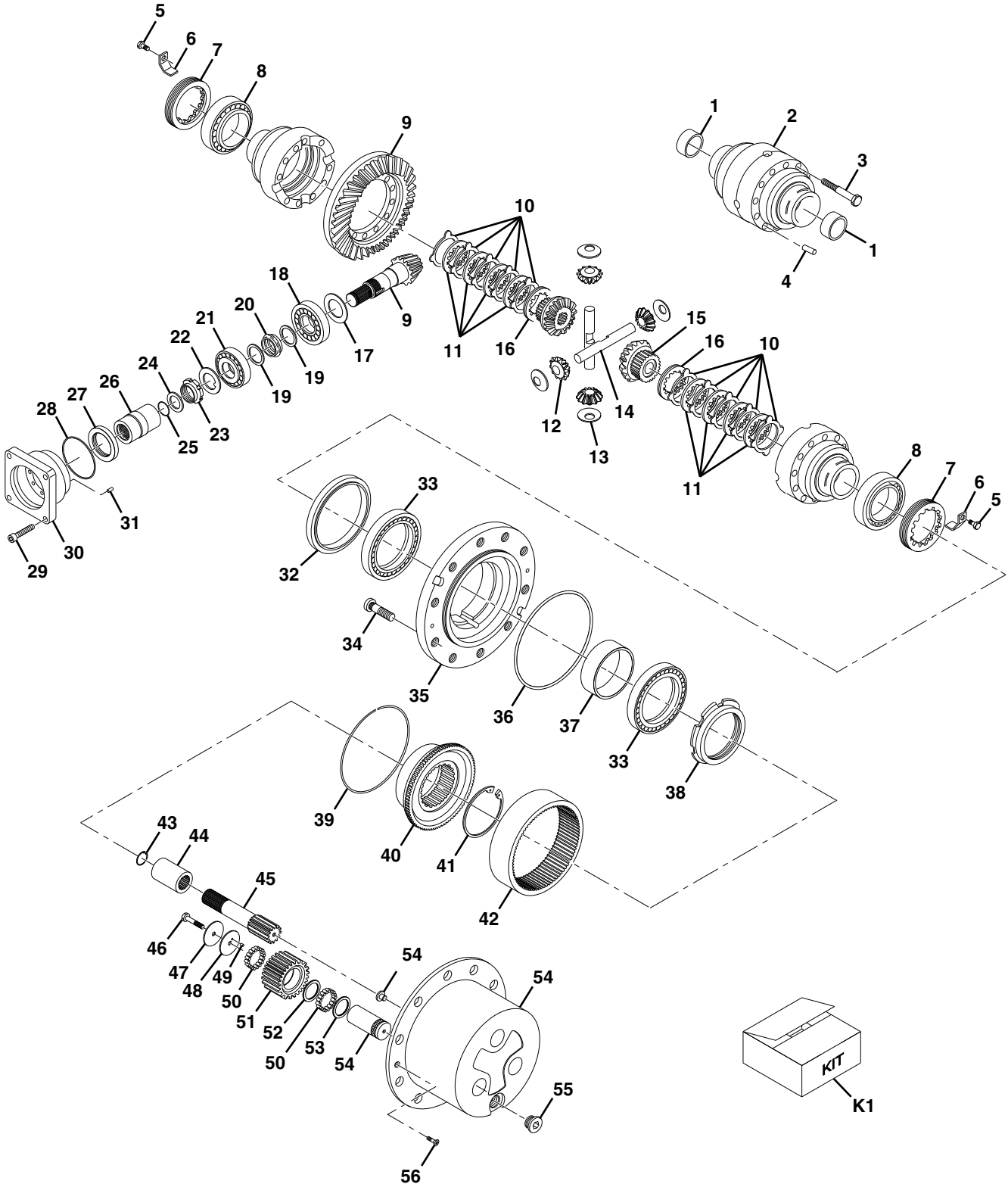

PAP23540

Downloaded from www.Manualslib.com manuals search engine

https://truckmanualshub.com/

Figure 5-8 Carrier Assembly - Carraro

Item	Part Number	Qty.	Description	Rev.
1	91364046	2	BUSHING	
2	91364047	1	DIFFERENTIAL HOUSING	
3	91364048	10	BOLT, M12X90	
4	91364049	1	PIN	
5	8035180	2	BOLT, M6X10	
6	91474126	2	LOCKING PLATE	
7	91364050	2	BEARING	
8	91474128	2	RING NUT, M104X2	
9	91364051	1	SPIRAL GEAR & PINION, (includes items 19, 20, & 22 thru 25)	
10	91364052	10	DIFFERENTIAL DRIVE DISC	
11	91364053	8	DIFFERENTIAL DISC	
12	NSS	4	GEAR, Z12	
13	91364054	4	THRUST WASHER	
14	91364055	2	SHAFT	
15	NSS	2	GEAR, Z18	
16	91364056	2	DIFFERENTIAL DISC	
17	91364057	AR	SHIM, 2.50mm	
	91364058	AR	SHIM, 2.60mm	
	91364059	AR	SHIM, 2.70mm	
	91364060	AR	SHIM, 2.80mm	
	91364061	AR	SHIM, 2.90mm	
	91364062	AR	SHIM, 3.00mm	
	91364063	AR	SHIM, 3.10mm	
	91364064	AR	SHIM, 3.20mm	
	91364065	AR	SHIM, 3.30mm	
	91364066	AR	SHIM, 3.40mm	
18	91364067	1	BEARING	
19	91364068	2	WASHER	
20	91364069	1	SPACER	
21	91364070	1	BEARING	
22	91364071	1	LOCKWASHER	
23	91364072	1	RING NUT, M45X1-1/2	
24	91474115	1	WASHER	
25	91474116	1	O-RING	
26	91364073	1	COUPLER	
27	91364074	1	SEAL RING	
28	91364075	1	O-RING	
29	91364076	8	BOLT, M12X60	
30	91364077	1	FLANGE	
31	91364078	1	PIN, 12X25	
32	91364079	2	SEAL RING	
33	91364080	4	BEARING	
34	91364081	20	BOLT	
35	91364082	2	WHEEL HUB KIT, (includes wheel hub & item 34)	
36	91474155	2	O-RING	
37	91364083	2	SPACER	
38	91364084	2	RING NUT, M130X2	
39	91474157	2	RING	
40	91364085	2	RING GEAR CARRIER	

Downloaded from www.Manualslib.com manuals search engine

https://truckmanualshub.com/

Figure 5-8 Carrier Assembly - Carraro (Continued)

Item	Part Number	Qty.	Description	Rev.
41	91364086	2	SNAP RING, 115X4	
42	91364087	2	RING GEAR	
43	91364088	2	SNAP RING	
44	91364089	2	COUPLING SLEEVE	
45	91364090	2	HALF-SHAFT	
46	91474162	6	BOLT	
47	91364091	6	INNER THRUST WASHER	
48	91364092	6	THRUST WASHER	
49	91474163	0.6	NEEDLE BEARINGS, (by tens)	
50	91364093	38.4	NEEDLE BEARINGS, (by tens)	
51	91364094	6	GEAR	
52	91364095	6	THRUST WASHER	
53	91364096	6	THRUST WASHER	
54	91364097	2	PLANETARY CARRIER KIT, (includes planetary carrier & locking pad)	
55	91474037	2	PLUG, M30X2	
56	7028492	4	SCREW	
K1	91364098	1	DIFFERENTIAL KIT, (includes items 12 thru 15)	

Downloaded from www.Manualslib.com manuals search engine

https://truckmanualshub.com/

Figure 5-8 Carrier Assembly - Carraro (Continued)

Item	Part Number	Qty.	Description	Rev.

Downloaded from www.Manualslib.com manuals search engine

https://truckmanualshub.com/

Figure 5-9 Brake Assembly - Carraro

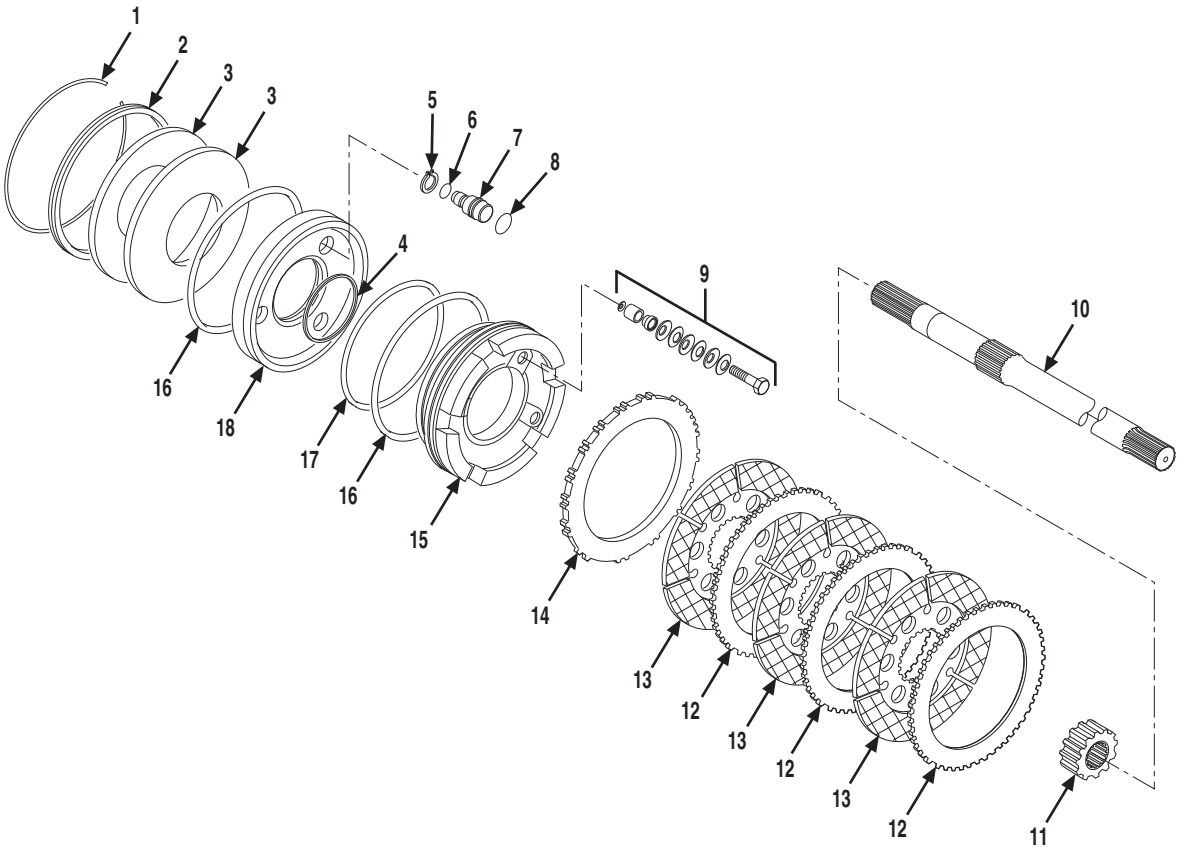

Downloaded from www.Manualslib.com manuals search engine

https://truckmanualshub.com/

Figure 5-9 Brake Assembly - Carraro

Item	Part Number	Qty.	Description	Rev.
1	91474143	2	RING	
2	91474144	2	SLEEVE	
3	91474145	4	WASHER	
4	91474147	2	O-RING	
5	91364041	6	SNAP RING	
6	91474149	6	O-RING	
7	91364042	6	PIN	
8	91474151	6	O-RING	
9	91364043	2	SELF-ADJUST KIT, (includes the following)	
	NSS	36	WASHER	
	NSS	6	WASHER	
	NSS	6	PIN	
	NSS	6	BOLT, M14X65	
	NSS	6	SPACER	
10	91364044	2	HALF SHAFT	
11	91474142	2	SLEEVE	
12	91474141	6	DRIVE PLATE	
13	91474140	6	BRAKE DISK	
14	91474139	2	DRIVE PLATE	
15	91364045	2	BRAKE PISTON	
16	91474137	4	O-RING	
17	91474136	2	O-RING	
18	91474146	2	BRAKE PISTON	

Downloaded from www.Manualslib.com manuals search engine

https://truckmanualshub.com/

Figure 5-10 Axle Housing Assembly - Carraro

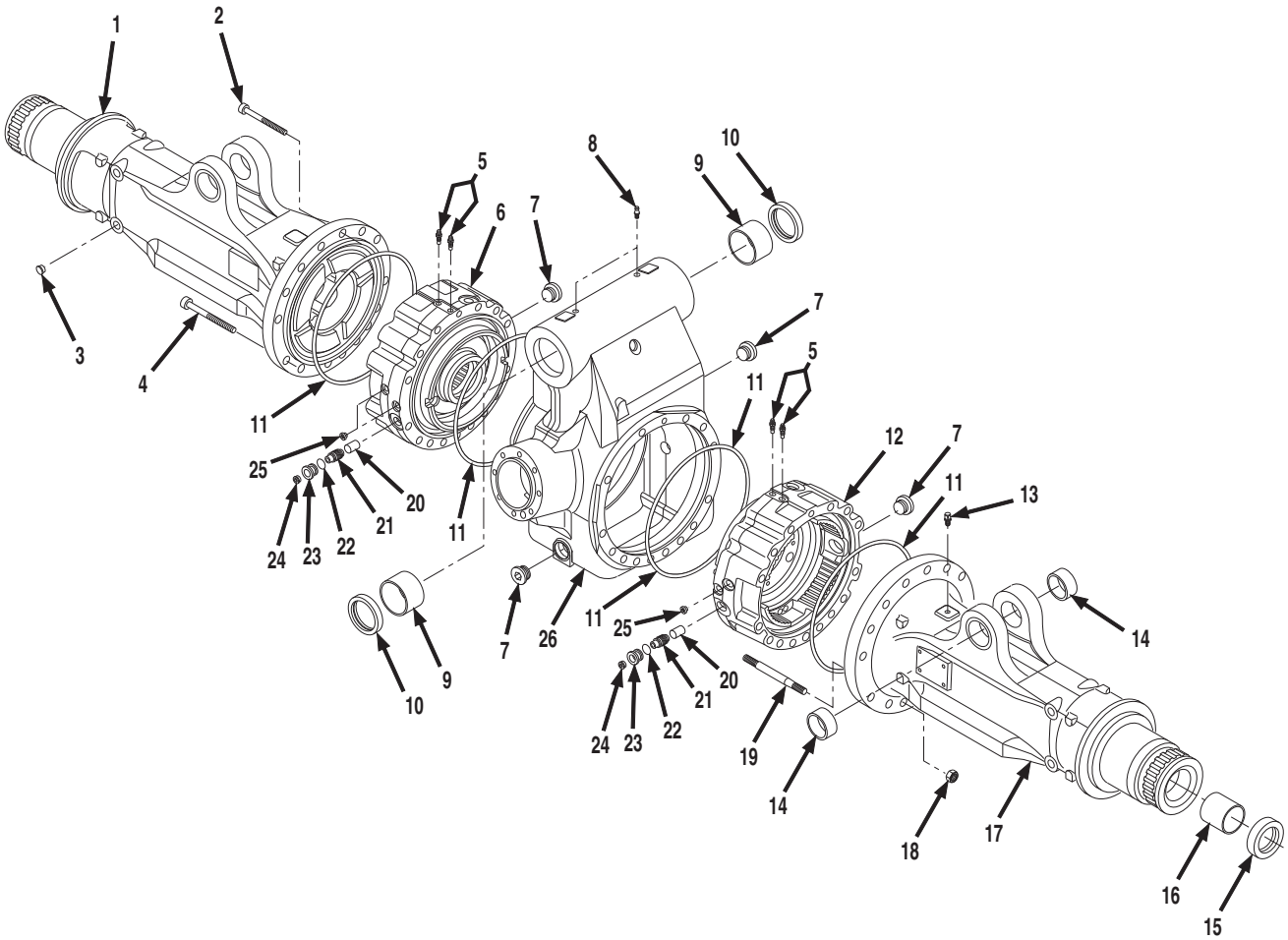

Downloaded from www.Manualslib.com manuals search engine

https://truckmanualshub.com/

Figure 5-10 Axle Housing Assembly - Carraro

Item	Part Number	Qty.	Description	Rev.
1	91364026	1	LH AXLE HOUSING	
2	91364027	2	CAPSCREW, M12X130	
3	91474098	8	PLUG	
4	91364028	28	CAPSCREW, M16X160	
5	91474039	4	BREATHER, M10X1	
6	91364029	1	LH BRAKE HOUSING	
7	91474037	4	PLUG, M30X2	
8	91474095	2	GREASE FITTING	
9	91364030	2	BUSHING	
10	91364031	2	SEAL RING	
11	91364032	4	O-RING	
12	91364033	1	RH BRAKE HOUSING	
13	91474058	1	BREATHER, M10X1	
14	91364034	2	BUSHING	
15	91364035	2	SEAL RING	
16	91364036	2	BUSHING	
17	91364037	1	RH AXLE HOUSING	
18	91474061	2	NUT, M16X2	
19	91474060	2	STUD, M16X2	
20	91364038	6	RELEASE PIN	
21	91474066	6	BOLT, M16X1-1/2	
22	91474065	6	O-RING	
23	91474064	6	SCREW, M22X1-1/2	
24	91474075	6	PLUG, M16X1-1/2	
25	91364039	4	PLUG, M10X1	
26	91364040	1	CENTRAL BODY	

Downloaded from www.Manualslib.com manuals search engine

https://truckmanualshub.com/

Figure 5-11 Rear Axle Drive Hub

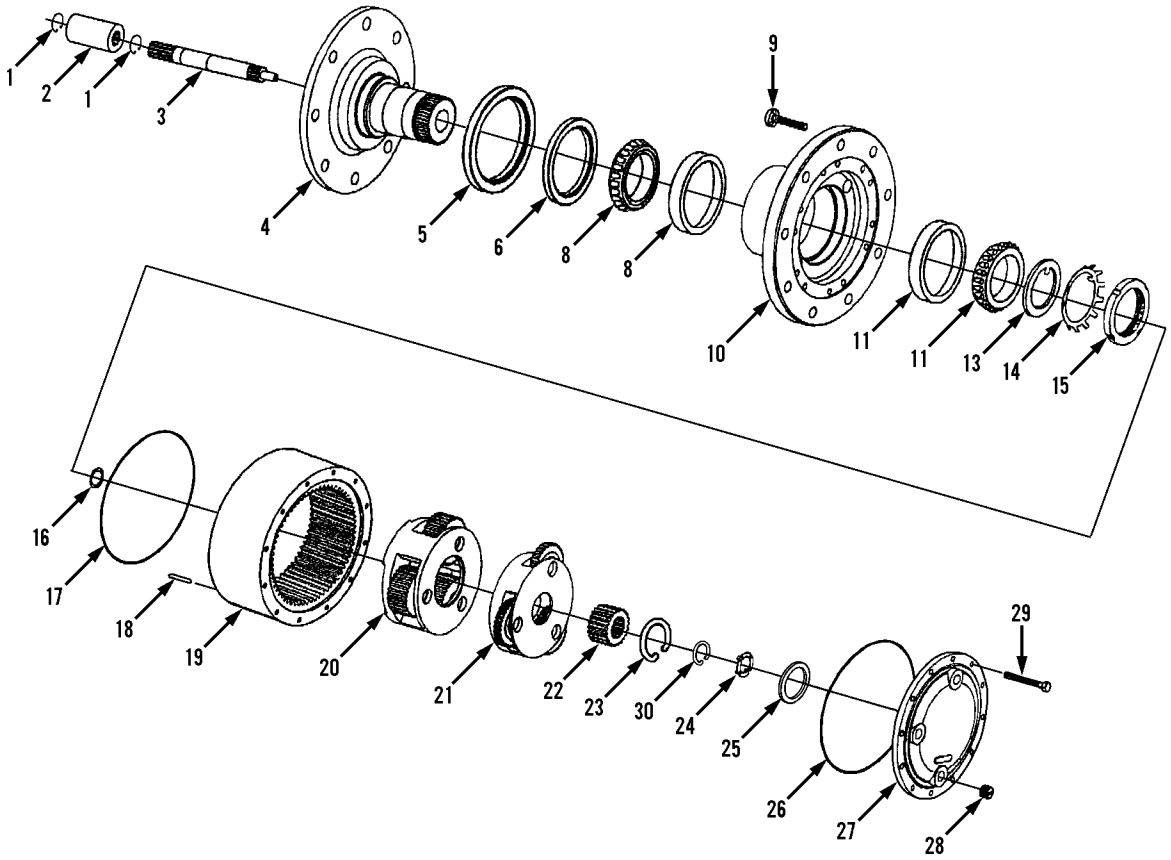

Downloaded from www.Manualslib.com manuals search engine

https://truckmanualshub.com/

Figure 5-11 Rear Axle Drive Hub

Item	Part Number	Qty.	Description	Rev.
	91413001	1	REAR DRIVE HUB, (includes all items)	C
1	7000297	2	RETAINING RING	
2	91414001	1	COUPLING	
3	91414002	1	INPUT SHAFT	
4	91414003	1	SPINDLE	
5	91414004	1	BOOT SEAL	
6	91414005	1	OIL SEAL	
8	91414007	1	BEARING CUP & CONE KIT	
9	91034028	12	WHEEL BOLT	
10	91414008	1	HUB	
11	91414009	1	BEARING CUP & CONE KIT	
13	91414011	1	THRUST WASHER	
14	91414012	1	LOCKWASHER	
15	91414013	1	BEARING NUT	
16	91414014	1	THRUST WASHER	
17	91414015	1	O-RING	
18	7017047	2	DOWEL PIN	
19	7024167	1	RING GEAR	
20	70021141	1	SECONDARY CARRIER SUB-ASSY, (includes item 16)	
21	70021146	1	PRIMARY CARRIER SUB-ASSY, (includes items 22 & 23)	
22	91414019	1	PRIMARY SUN GEAR	
23	91414020	1	RETAINING RING	
24	91414021	1	THRUST WASHER	
25	91414022	1	THRUST WASHER	
26	7024177	1	O-RING	
27	91414024	1	COVER	
28	7017094	3	MAGNETIC PIPE PLUG	
29	91414026	20	HEX HD BOLT	
30	91414027	1	RETAINING RING	

Downloaded from www.Manualslib.com manuals search engine

https://truckmanualshub.com/

Figure 5-11 Rear Axle Drive Hub

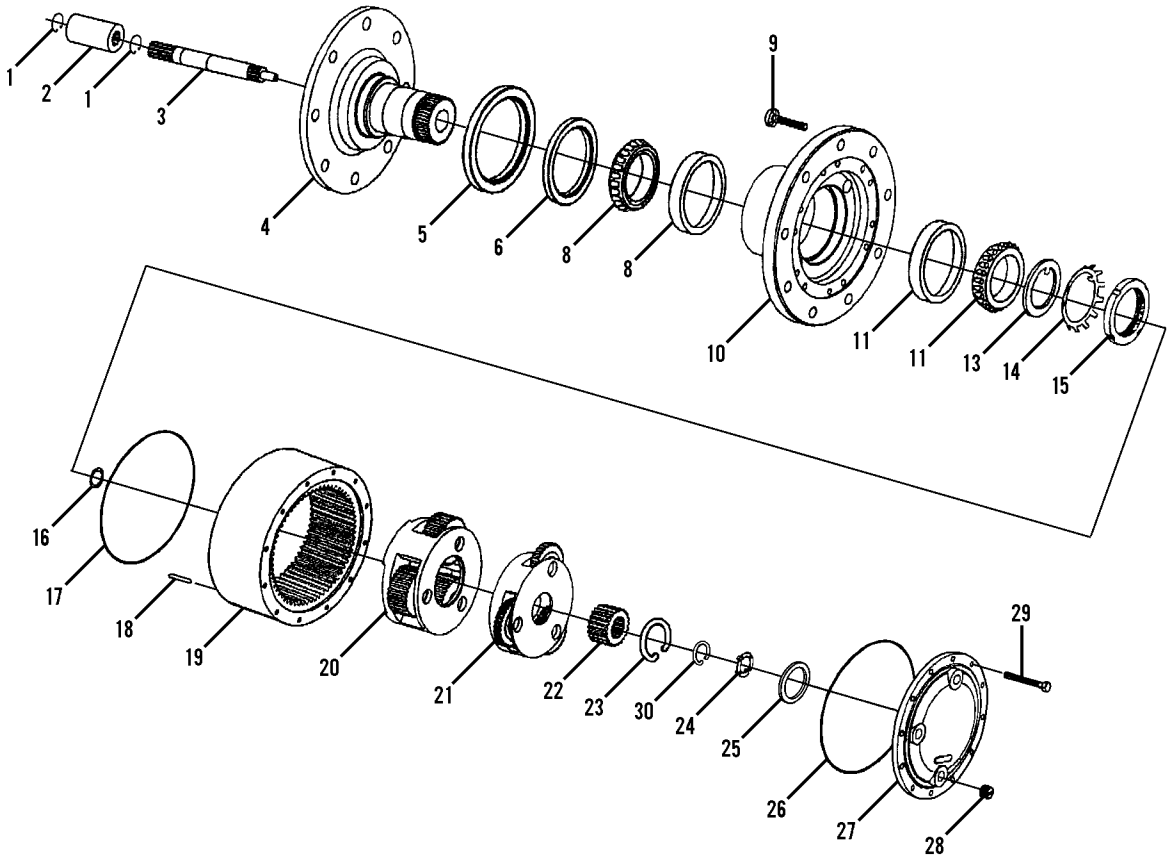

NOTE:

TO SERVICE ITEM 15, BEARING NUT, A SPECIAL WRENCH IS REQUIRED. ORDER 91404449 WRENCH.

Downloaded from www.Manualslib.com manuals search engine

https://truckmanualshub.com/

Figure 5-11 Rear Axle Drive Hub

Item	Part Number	Qty.	Description	Rev.
	91403588	1	REAR DRIVE HUB, (includes all items)	
1	7000297	2	RETAINING RING	
2	91414001	1	COUPLING	
3	91414002	1	INPUT SHAFT	
4	91414003	1	SPINDLE	
5	91414004	1	BOOT SEAL	
6	91414005	1	OIL SEAL	
8	91414007	1	BEARING CUP & CONE KIT	
9	91404435	10	WHEEL BOLT	
10	91404436	1	HUB	
11	91414009	1	BEARING CUP & CONE KIT	
13	91414011	1	THRUST WASHER	
14	91414012	1	LOCKWASHER	
15	91414013	1	BEARING NUT	
16	91414014	1	THRUST WASHER	
17	91414015	1	O-RING	
18	7017047	2	DOWEL PIN	
19	7024167	1	RING GEAR	
20	70021141	1	SECONDARY CARRIER SUB-ASSY, (includes item 16)	
21	70021146	1	PRIMARY CARRIER SUB-ASSY, (includes items 22 & 23)	
22	91414019	1	PRIMARY SUN GEAR	
23	91414020	1	RETAINING RING	
24	91414021	1	THRUST WASHER	
25	91414022	1	THRUST WASHER	
26	7024177	1	O-RING	
27	91414024	1	COVER	
28	7017094	3	MAGNETIC PIPE PLUG	
29	91414026	20	HEX HD BOLT	
30	91414027	1	RETAINING RING	

Downloaded from www.Manualslib.com manuals search engine

https://truckmanualshub.com/

Figure 5-12 Tires & Rims

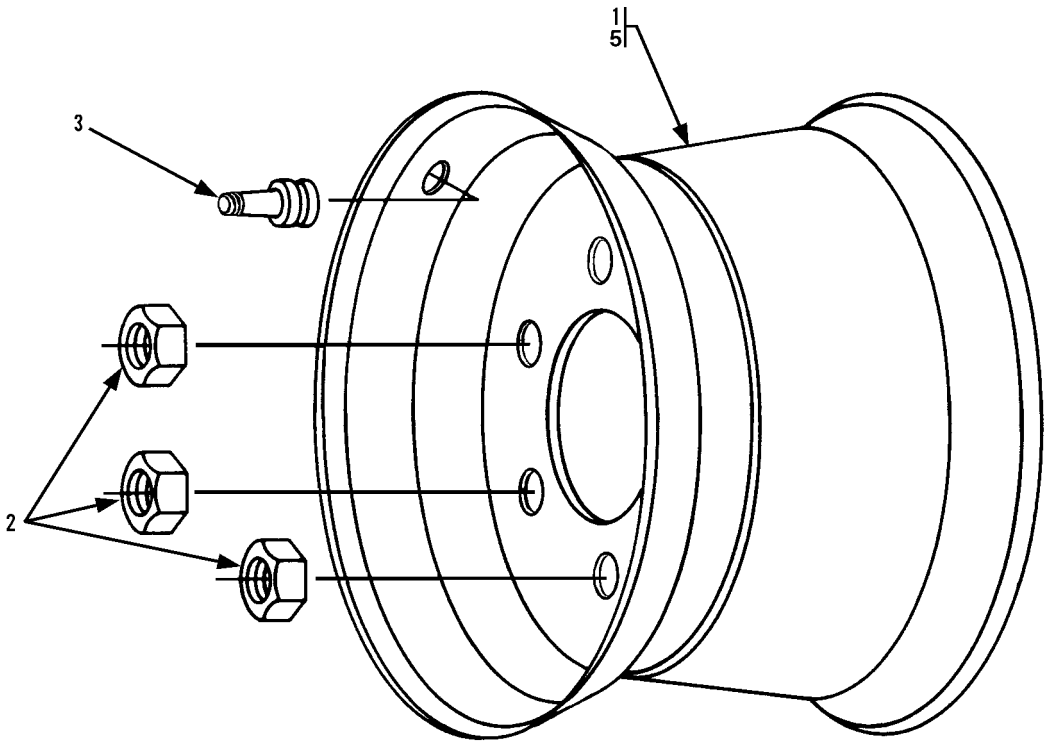

Downloaded from www.Manualslib.com manuals search engine

https://truckmanualshub.com/

Figure 5-12 Tires & Rims

Item	Part Number	Qty.	Description	Rev.
	91125002	2	RH TIRE & WHEEL ASSY, 13.00X24, (includes items 1, 3 & 4)	Q
	91125003	2	LH TIRE & WHEEL ASSY, 13.00X24, (includes items 1, 3 & 4)	Q
	91405039	1	TIRE SET, 14.00-24, (optional)	B
	91045106	2	RH TIRE & WHEEL ASSY, 14.00X24, (includes items 2, 3, 5 & 6)	K
	91045107	2	LH TIRE & WHEEL ASSY, 14.00X24, (includes items 2, 3, 5 & 6)	K
	91405021	1	TIRE SET, 13.00R24 RADIAL, (optional)	B
	91085040	4	TIRE & WHEEL ASSY, 13.00-24 RADIAL, (includes items 2, 3, 5 & 7)	R
	91405018	1	TIRE SET, 14.00R24 RADIAL, (optional)	B
	91045089	4	TIRE & WHEEL ASSY, 14.00-24 RADIAL, (includes items 2, 3, 5 & 8)	R
1	91363202	1	WHEEL, 24X9	
2	91043146	12	LUG NUT	
3	91083385	1	VALVE	
4	8780031	1	TIRE, (not shown), 13.00X24, 12 PLY, G-2 TRACTION	
5	91363202	1	WHEEL, 24X9	
6	91043084	1	TIRE, (not shown), 14.00X24 BIAS, DIRECTIONAL	
7	91033321	1	TIRE, (not shown), 13.00R24 RADIAL, NON-DIRECTIONAL	
8	91043295	1	TIRE, (not shown), 14.00R24 RADIAL, NON-DIRECTIONAL	

Downloaded from www.Manualslib.com manuals search engine

https://truckmanualshub.com/

Figure 5-12 Tires & Rims

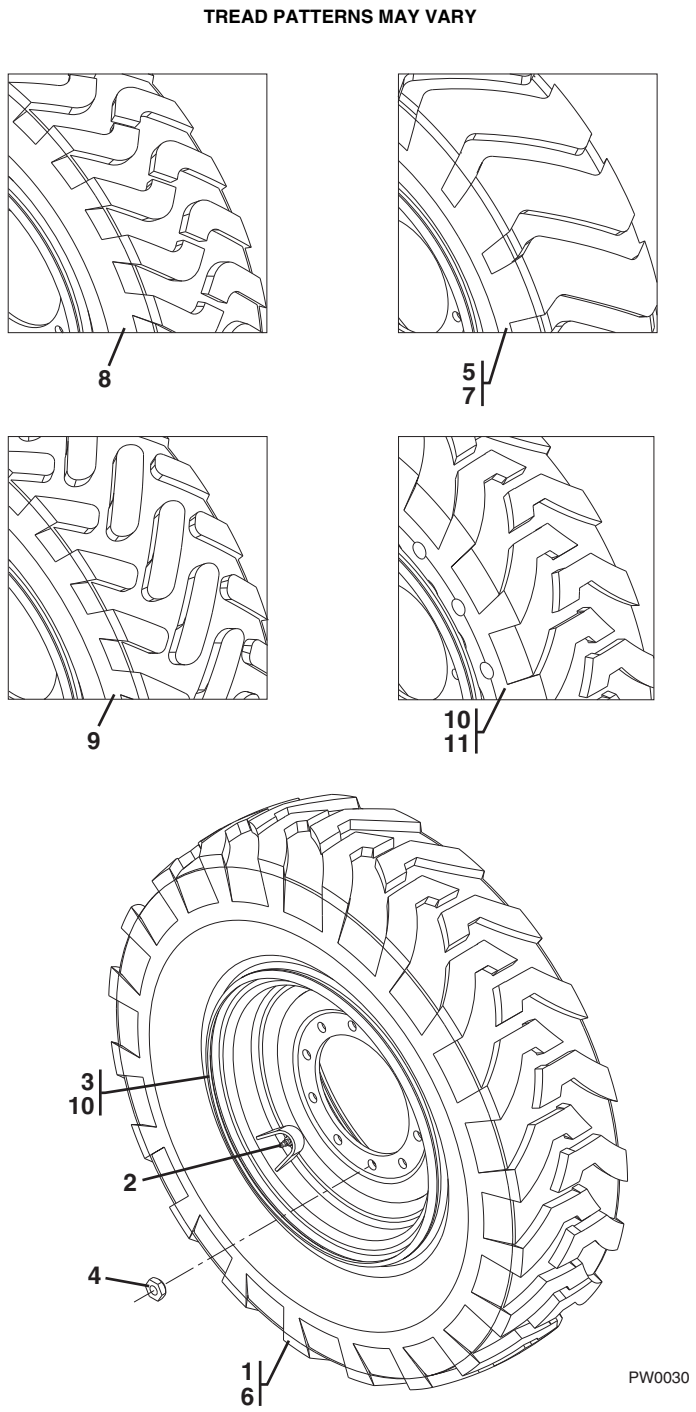

Downloaded from www.Manualslib.com manuals search engine

https://truckmanualshub.com/

Figure 5-12 Tires & Rims

Item	Part Number	Qty.	Description	Rev.
	4520368	1	TIRE SET, 13.00-24 BIAS	A
	91405035	2	RH TIRE & WHEEL ASSY, 13.00-24 BIAS, (includes items 1 thru 3)	H
	91405036	2	LH TIRE & WHEEL ASSY, 13.00-24 BIAS, (includes items 1 thru 3)	H
	4520369	1	TIRE SET, 13.00-24 BIAS, ROCK TREAD	A
	91535017	4	TIRE & WHEEL ASSY, 13.00-24 BIAS, ROCK TREAD, (includes items 2, 3 & 5)	B
	4520481	1	TIRE SET, 14.00-24 BIAS	A
	91355034	2	RH TIRE & WHEEL ASSY, 14.00-24 BIAS, (includes items 2, 3 & 6)	C
	91355035	2	LH TIRE & WHEEL ASSY, 14.00-24 BIAS, (includes items 2, 3 & 6)	C
	4520485	1	TIRE SET, 14.00-24 ROCK TREAD, PNEUMATIC	A
	91545010	4	TIRE & WHEEL ASSY, 14.00-24 BIAS, ROCK TREAD, (includes items 2, 3 & 7)	E
	4520374	1	TIRE SET, 13.00-24 RADIAL	A
	91515056	4	TIRE & WHEEL ASSY, 13.00-24 RADIAL, (includes items 2, 3 & 8)	B
	4520489	1	TIRE SET, 14.00-24 RADIAL, PNEUMATIC	A
	91415072	4	TIRE & WHEEL ASSY, 14.00-24 RADIAL, (includes items 2, 3 & 9)	C
	4520370	1	TIRE SET, 13.00-24 BIAS, FOAM FILLED	A
	91475054	2	RH TIRE & WHEEL ASSY, 13.00-24 BIAS, FOAM FILLED, 542#, (includes items 1 thru 3 & 12)	D
	91475055	2	LH TIRE & WHEEL ASSY, 13.00-24 BIAS, FOAM FILLED, 542#, (includes items 1 thru 3 & 12)	D
	4520375	1	TIRE SET, 13.00-24 RADIAL, FOAM FILLED	A
	91475093	4	TIRE & WHEEL ASSY, 13.00-24 RADIAL, FOAM FILLED, 542#, (includes items 2, 3, 8 & 12)	E
	4520371	1	TIRE SET, 13.00-24 BIAS, ROCK TREAD, FOAM FILLED	A
	91535019	4	TIRE & WHEEL ASSY, 13.00-24 BIAS, ROCK TREAD, FOAM FILLED, 542#, (includes items 2, 3, 5 & 12)	D
	4520482	1	TIRE SET, 14.00-24 BIAS, FOAM FILLED	B
	91355037	2	RH TIRE & WHEEL ASSY, 14.00-24 BIAS, FOAM FILLED, 720#, (includes items 2, 3, 6 & 12)	E
	91355038	2	LH TIRE & WHEEL ASSY, 14.00-24 BIAS, FOAM FILLED, 720#, (includes items 2, 3, 6 & 12)	E
	4520486	1	TIRE SET, 14.00-24 ROCK TREAD, FOAM FILLED	A
	91545008	4	TIRE & WHEEL ASSY, 14.00-24, ROCK TREAD, FOAM FILLED, 720#, (includes items 2, 3, 7 & 12)	F
	4520490	1	TIRE SET, 14.00-24 RADIAL, FOAM FILLED	A
	91365076	4	TIRE & WHEEL ASSY, 14.00-24, RADIAL, FOAM FILLED, (includes items 2, 3 , 9 & 12)	D

Downloaded from www.Manualslib.com manuals search engine

https://truckmanualshub.com/

Figure 5-12 Tires & Rims (Continued)

Item	Part Number	Qty.	Description	Rev.
	4520645	1	SOLID TIRE SET, 13.00-24, (includes items 10 & 11)	A
1	8780031	1	TIRE, 13.00-24 BIAS, DIRECTIONAL	
2	8786514	1	VALVE STEM	
3	91473206	1	WHEEL, 24X9	
4	91403193	10	LUG NUT	
5	8780045	1	TIRE, 13.00-24 BIAS, ROCK TREAD, NON-DIRECTIONAL	
6	91043084	1	TIRE, 14.00-24 BIAS, DIRECTIONAL	
7	91543002	1	TIRE, 14.00-24 BIAS, ROCK TREAD, NON-DIRECTIONAL	
8	8780264	1	TIRE, 13.00-24 RADIAL, NON-DIRECTIONAL	
9	91363215	1	TIRE, 14.00-24 RADIAL, NON-DIRECTIONAL	
10	4520646	2	RH SOLID TIRE & WHEEL ASSY	B
11	4520647	2	LH SOLID TIRE & WHEEL ASSY	B

Downloaded from www.Manualslib.com manuals search engine

https://truckmanualshub.com/

Figure 5-12 Tires & Rims (Continued)

Item	Part Number	Qty.	Description	Rev.

Downloaded from www.Manualslib.com manuals search engine

https://truckmanualshub.com/

This Page Intentionally Left Blank

Downloaded from www.Manualslib.com manuals search engine

https://truckmanualshub.com/

SECTION 6
CAB

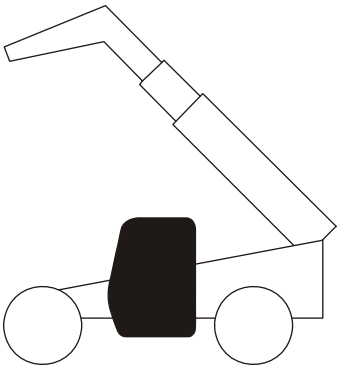

Downloaded from www.Manualslib.com manuals search engine

https://truckmanualshub.com/

Figure 6-1 Open Cab

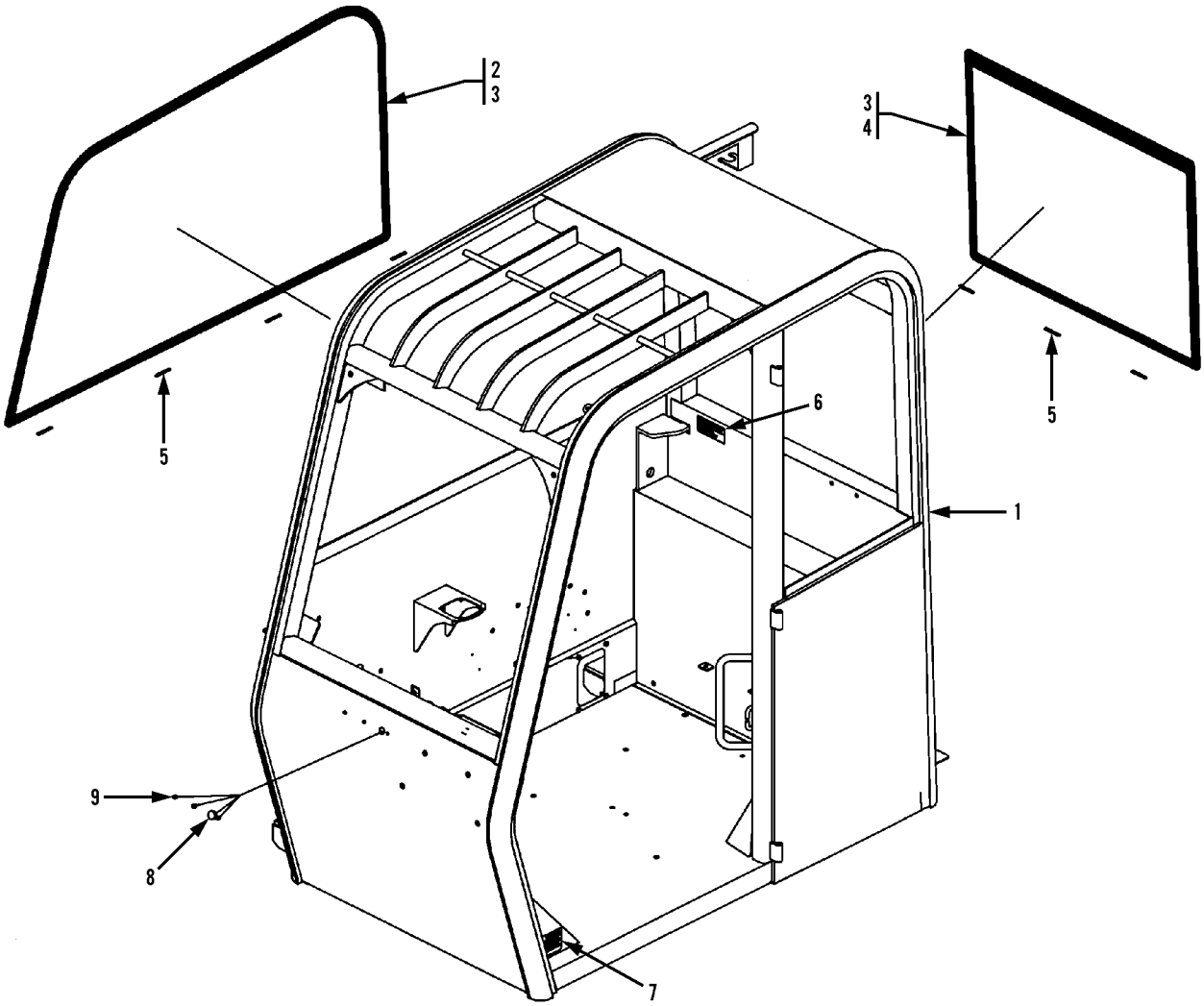

Downloaded from www.Manualslib.com manuals search engine

https://truckmanualshub.com/

Figure 6-1 Open Cab

Item	Part Number	Qty.	Description	Rev.
	91403076	1	OPEN CAB ASSY, (includes all items)	W
1	91404108	1	CAB WELDMENT	
2	91404109	1	RH SIDE WINDOW WITH BORDER	
3	80364009	AR	URETHANE SEALANT	
4	91404110	1	REAR WINDOW WITH BORDER	
5	80264031	7	SETTING BLOCK, 1/8X1/4X2	
6	NSS	1	SERIAL TAG	
7	91164094	1	ROPS WARNING DECAL	
8	91164087	1	HOLE PLUG, 3/4	
9	91164086	3	HOLE PLUG, 3/8	

Downloaded from www.Manualslib.com manuals search engine

https://truckmanualshub.com/

Figure 6-2 Cab Enclosure With Heater Option

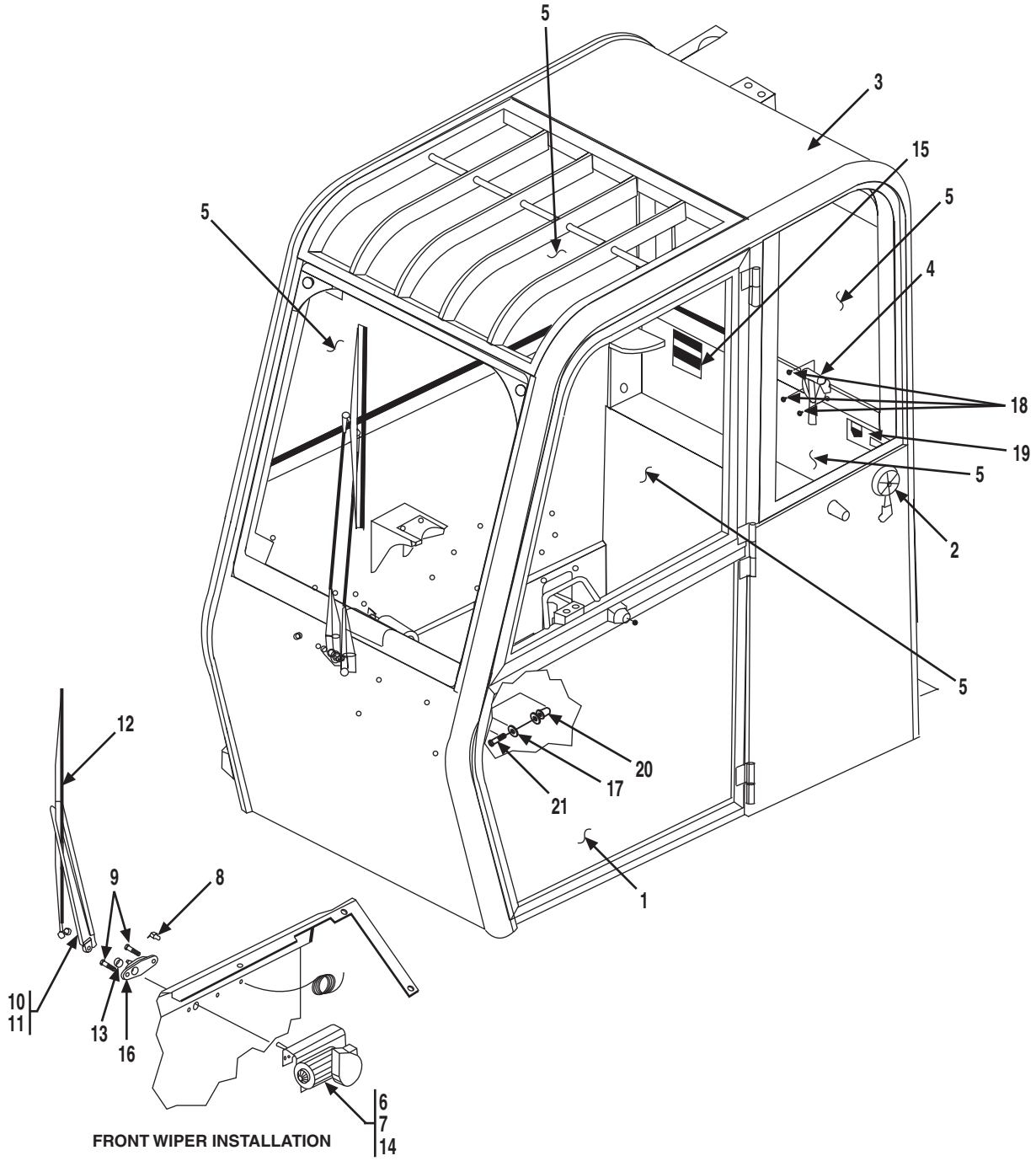

Downloaded from www.Manualslib.com manuals search engine

https://truckmanualshub.com/

Figure 6-2 Cab Enclosure With Heater Option

Item	Part Number	Qty.	Description	Rev.
	91415027	1	CAB ENCLOSURE WITH HEATER OPTION, (includes Cab Enclosure, 91403084, shown below & Heater Option Assy, 91405056, shown on Figure 12-8)	D
	91403084	1	CAB ENCLOSURE, (includes all items on Figures 6-2 thru 6-4)	B
1		Ref	LH SIDE ASSY, (see Figure 6-3 for details)	
2		Ref	DOOR HOLD OPEN ASSY, (see Figure 6-3 for details)	
3	91404295	1	HEADLINER, 1 IN, (inside cab)	
4	91404301	1	EMERGENCY HAMMER WITH CABLE	
5		Ref	CAB GLASS, (see Figure 6-4 for details)	
6	91404293	1	WIPER MOTOR ASSY, (includes items 7 & 14)	
	7029860	1	WIPER MOTOR, 12V	
7	80384215	1	SHAFT & PIVOT ASSY	
8	1001081310	1	WET ARM SPACER	
9	80384207	2	HEX SCREW, 1/4-28X3/4	
10	1001081311	1	WET ARM KIT	
11	1001081308	1	WIPER ARM	
12	80384213	1	WIPER BLADE	
13	91334135	1	SPACER	
14	80384203	1	WIPER DRIVE ARM	
15	NSS	1	SERIAL TAG	
16	1001081307	1	WIPER ARM ADAPTOR	
17	91404297	2	WASHER	
18	91404298	3	RIVET	
19	91404299	1	EMERGENCY EXIT DECAL	
20	80364023	1	STRIKER BOLT	
21	91334024	1	HEX BOLT, 3/8-16X7/8	

Downloaded from www.Manualslib.com manuals search engine

https://truckmanualshub.com/

Figure 6-2 Cab Enclosure With Heater Option

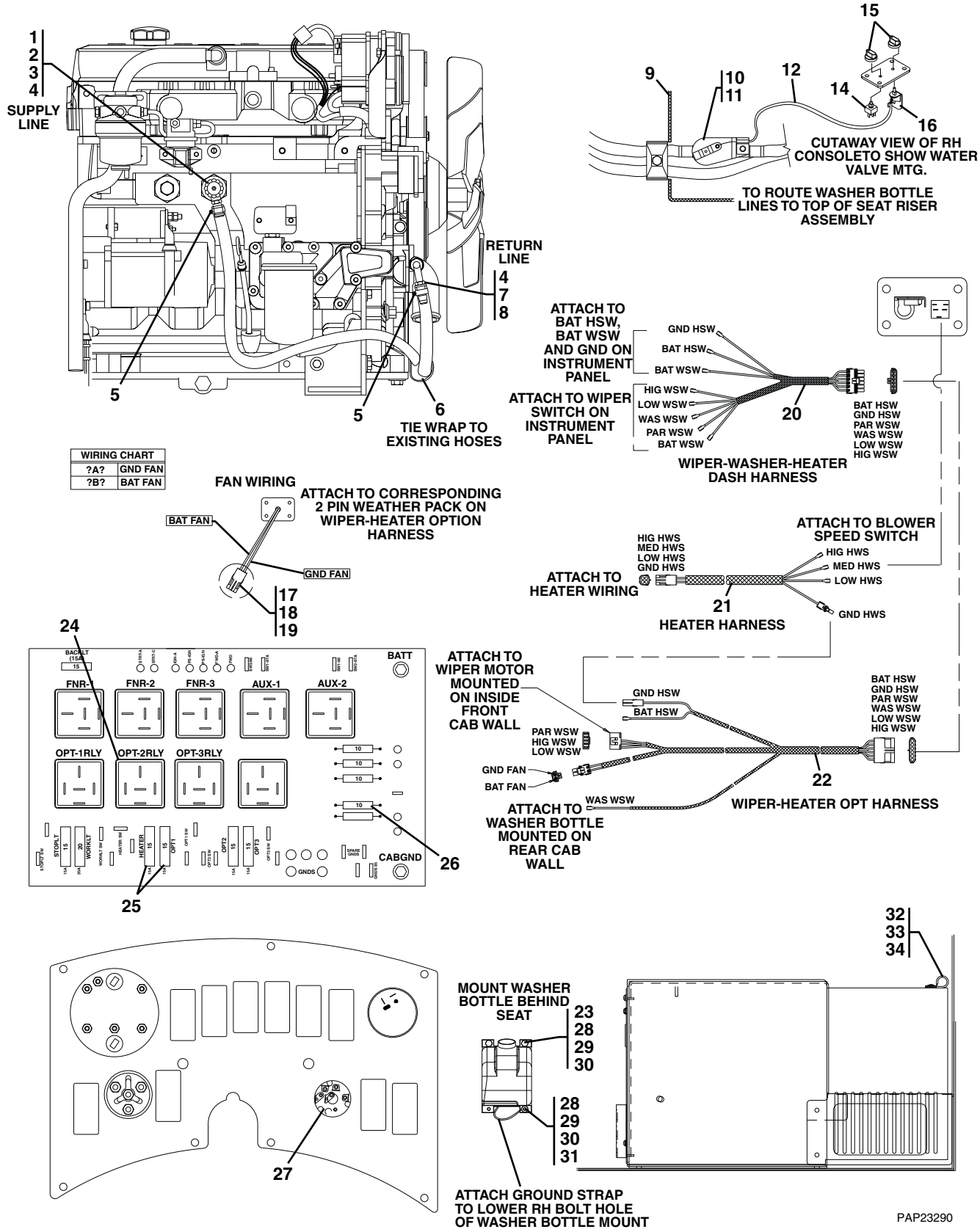

Downloaded from www.Manualslib.com manuals search engine

https://truckmanualshub.com/

Figure 6-2 Cab Enclosure With Heater Option (Continued)

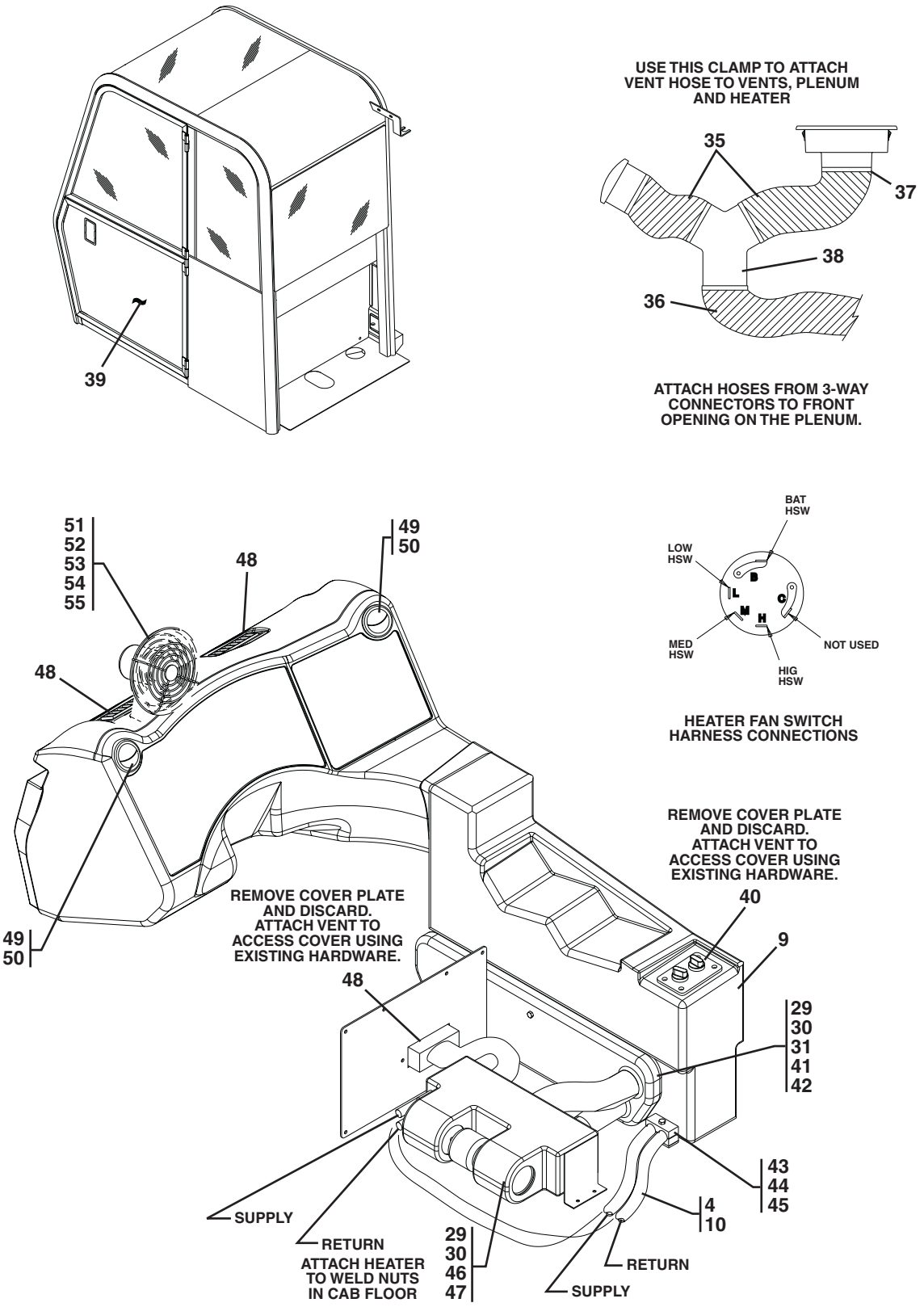

Downloaded from www.Manualslib.com manuals search engine

https://truckmanualshub.com/

Figure 6-2 Cab Enclosure With Heater Option

Item	Part Number	Qty.	Description	Rev.
	91415088	1	CAB ENCLOSURE KIT INSTALLATION, (includes items 1 thru 55)	C
1	80373046	1	FITTING	
2	91083155	1	TRUCK VALVE	
3	77383540	1	COOLANT RESTRICTER ORIFICE	
4	82033995	26 ft	HEATER HOSE, 5/8 IN	
5	86671187	2	HEATER HOSE CLAMP	
6	86683122	1	TIE WRAP	
7	80683073	1	ADAPTER FITTING	
8	91403443	1	BARBED FITTING, 90 DEGREE	
9		Ref	RH CONSOLE, (see Figure 6-6 for details)	
10	86683193	4	HOSE CLAMP	
11	83683182	1	WATER VALVE	
12	91413038	1	HEATER CABLE	
14	80964001	1	BLOWER SWITCH	
15	80363069	2	KNOB, 3/16 SHAFT	
16	80363028	1	ROTARY CONTROL	
17	80963058	1	WEATHER PACK SHROUD	
18	80963069	2	WEATHER PACK PINS	
19	80963065	2	WEATHER PACK SEALS	
20	91403351	1	WIPER/WASHER HARNESS	
21	91403352	1	HEATER HARNESS	
22	91403350	1	WIPER/HEATER HARNESS	
23	1001111112	1	WINDOW WASHER FLUID TANK	
24	77363265	1	RELAY	
25	77363268	2	AUTO FUSE, 15 AMP	
26	77363267	1	AUTO FUSE, 10 AMP	
27	80963101	1	WIPER SWITCH	
28	88201005	3	HEX HD CAPSCREW, 1/4-20X1	
29	88561002	9	FLAT WASHER, 1/4	
30	88551009	8	LOCKWASHER, 1/4	
31	88501004	2	HEX NUT, 1/4-20	
32	91413036	2	SELF-TAPPING SCREW, #6X1/2	
33	24861170	2	CLAMP	
34	88561105	2	FLAT WASHER, #10	
35	71492150	10 ft	VENT HOSE, 2 IN	
36	71492152	10.5 ft	VENT HOSE, 2-1/2 IN	
37	84231107	18	HOSE CLAMP	
38	91403539	2	3 WAY CONNECTOR	
39	91403084	1	CAB ENCLOSURE, (includes all items on Figures 6-2 thru 6-4)	
40	91403445	1	HEATER CONTROL PANEL	
41	91403329	1	HEAT/AC PLENUM	
42	88201011	1	HEX HD CAPSCREW, 1/4-20X2-1/2	
43	77133279	1	CLAMP SET	
44	77133137	1	COVER PLATE	
45	88201023	1	HEX HD CAPSCREW, 5/16-18X1-3/4	
46	91403280	Ref	HEATER UNIT, **(Before S/N 0160037689)**, (no longer available, use 1001114282 for replacement)	
	1001114282	1	HEATER UNIT, 3 SPEED, **(S/N 0160037689 & After)**	
47	88261015	4	BUTTON HD CAPSCREW, 1/4-20X5/8	

Downloaded from www.Manualslib.com manuals search engine

https://truckmanualshub.com/

Figure 6-2 Cab Enclosure With Heater Option (Continued)

Item	Part Number	Qty.	Description	Rev.
48	91413053	3	RECTANGULAR VENT	
49	91403596	2	VENT REDUCER	
50	80363106	2	CIRCULAR VENT	
51	91403608	1	DEFROSTER FAN	
52	91401443	1	FAN BASE PLATE	
53	91033425	1	RUBBER GROMMET	
54	88211030	4	SOCKET HD CAPSCREW, #10-24X3/4	
55	77143017	4	WHIZ-LOCKNUT, #10-24	

Downloaded from www.Manualslib.com manuals search engine

https://truckmanualshub.com/

Figure 6-3 Cab Enclosure

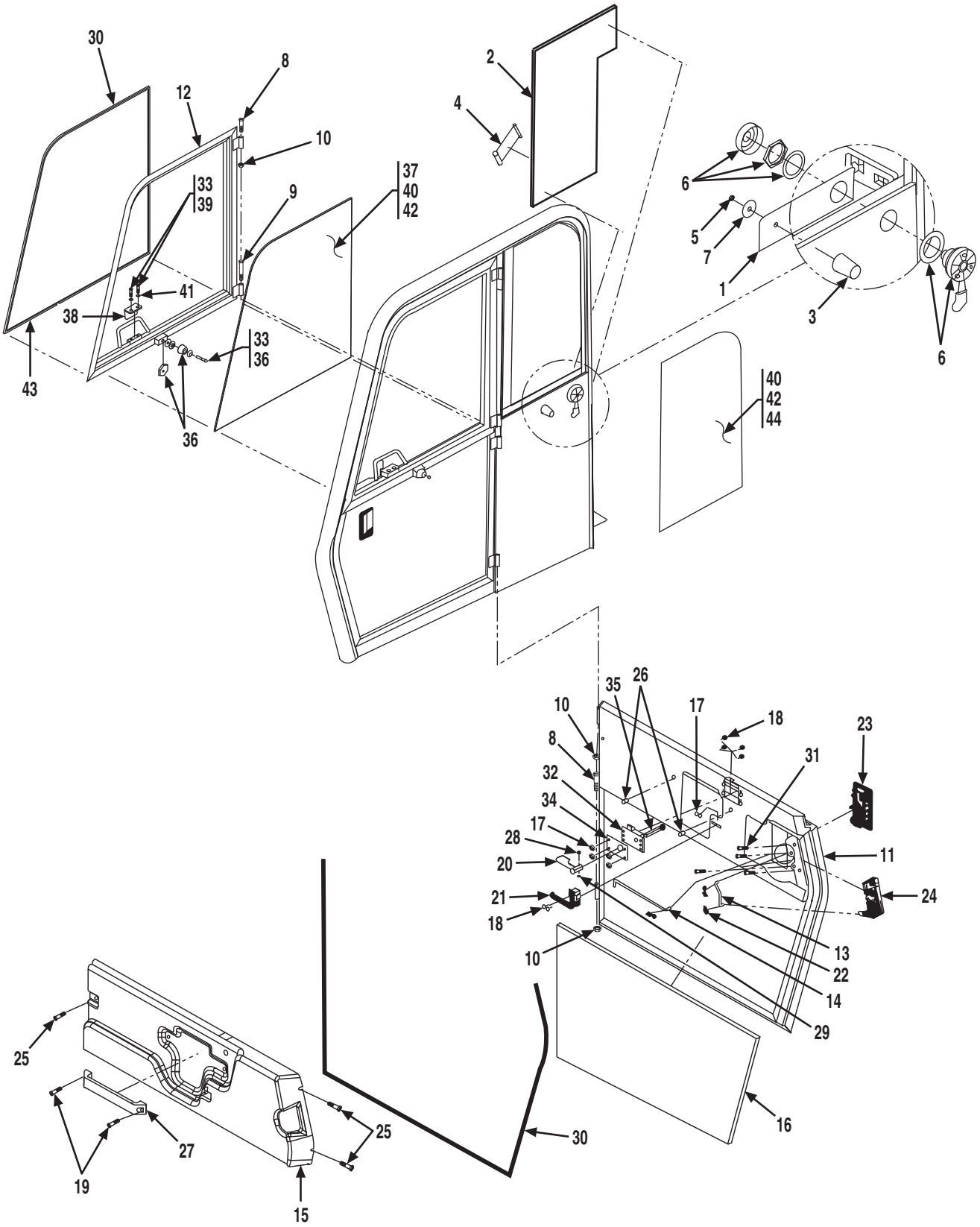

Downloaded from www.Manualslib.com manuals search engine

https://truckmanualshub.com/

Figure 6-3 Cab Enclosure

Item	Part Number	Qty.	Description	Rev.
	91403084	1	CAB ENCLOSURE, (includes all items on Figures 6-2 thru 6-4)	
1	91404292	1	HOLD OPEN PLATE	
2	91404294	1	FOAM, LH SIDE PANEL	
3	91404300	1	RUBBER BUMPER	
4	80384218	1	DOOR STRAP	
5	91334031	1	HEX NUT, 5/16-18	
6	91404303	1	DOOR HOLD OPEN, FEMALE	
7	91404304	1	WASHER	
8	80384205	2	HEX BOLT, 3/8-16X4	
9	91404305	1	HEX BOLT, 3/8-16X5	
10	91404306	3	HEX NUT, 3/8-16	
11	91404307	1	LOWER DOOR ASSY, (includes items 13 thru 29, 8ft. of item 30, items 31, 32, 34 & 35)	
12	91404308	1	UPPER DOOR ASSY, (includes 11ft. of item 30, item 33 & 36 thru 43)	
13	91404309	1	DOOR ROD, EXT. RELEASE	
14	91404310	1	DOOR ROD, INT. RELEASE	
15	91404311	1	PLASTIC DOOR COVER	
16	91404312	1	FOAM, 1/2, LOWER DOOR	
17	91404313	6	LOCKNUT, #10-24	
18	80384191	6	WHIZ-LOCK SCREW, #10-24X1/20	
19	91404314	2	FLAT HD SCREW, 1/4-20X1-1/4	
20	91404315	1	RH WINDOW RELEASE/LH DOOR LEVER	
21	80384192	1	HANDLE	
22	80384187	3	CLIP	
23	80384184	1	PADDLE LATCH	
24	80384186	1	CAM LATCH	
25	80264066	3	SCREW, M5X1X12 THREAD CUTTING	
26	80364088	2	INSERT NUT, 1/4-20	
27	91404316	1	DIE CAST GRAB HANDLE	
28	91404317	1	SCREW, #8-32X1.12	
29	91404318	1	NYLOCK NUT, #8-32	
30	80364001	19ft.	BULB SEAL, P-STEM	
31	80384189	4	HEX SCREW, 1/4-20X3/4	
32	91404319	1	LH SLAM LATCH	
33	91344018	AR	BLUE LOCTITE	
34	91404320	1	SLAM LATCH STIFFENER	
35	91404321	1	LOWER DOOR DRIVE BAR WELDMENT	
36	91474492	1	DOOR HOLD OPEN	
37		Ref	UPPER DOOR GLASS, (see Figure 6-4 for details)	
38	91404323	1	SLAM LATCH STRIKER	
39	91404324	2	HEX BOLT, 5/16-18X5/8	
40	91404302	AR	ACTIVATOR, SIKA	
41	91334032	2	FLAT WASHER, 5/16X3/4X.06	
42	80364009	AR	SEALANT	
43	91344046	AR	SEALANT/ADHESIVE	
44		Ref	LH SIDE GLASS WINDOW, (see Figure 6-4 for details)	

Downloaded from www.Manualslib.com manuals search engine

https://truckmanualshub.com/

Figure 6-4 Cab Enclosure

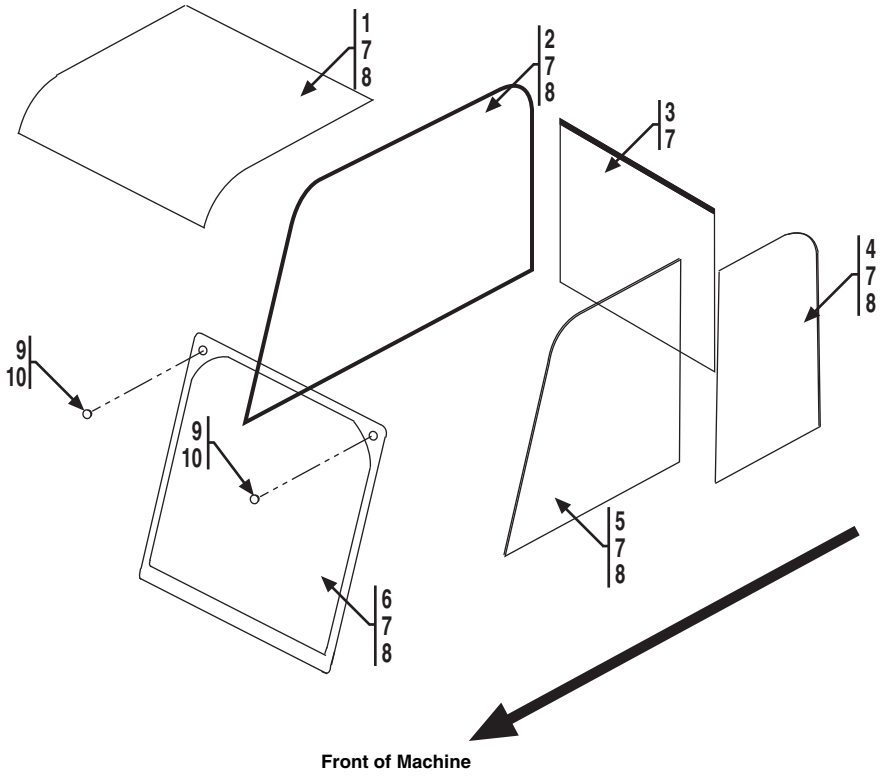

Downloaded from www.Manualslib.com manuals search engine

https://truckmanualshub.com/

Figure 6-4 Cab Enclosure

Item	Part Number	Qty.	Description	Rev.
	91403084	1	CAB ENCLOSURE, (includes all items on Figures 6-2 thru 6-4)	
1	91413142	1	SKYLIGHT WINDOW	
2	91404109	1	RH SIDE WINDOW WITH BORDER	
3	91404110	1	REAR WINDOW WITH BORDER	
4	80364030	1	LH SIDE DOOR WINDOW	
5	91404322	1	UPPER DOOR GLASS	
6	91404291	1	FRONT WINDOW	
7	80364009	AR	SEALANT	
8	91404302	AR	ACTIVATOR	
9	91404296	2	HOLE PLUG, 1-1/4	
10	80364012	AR	CLEAR SEALANT	

Downloaded from www.Manualslib.com manuals search engine

https://truckmanualshub.com/

Figure 6-5 Suspension Seat

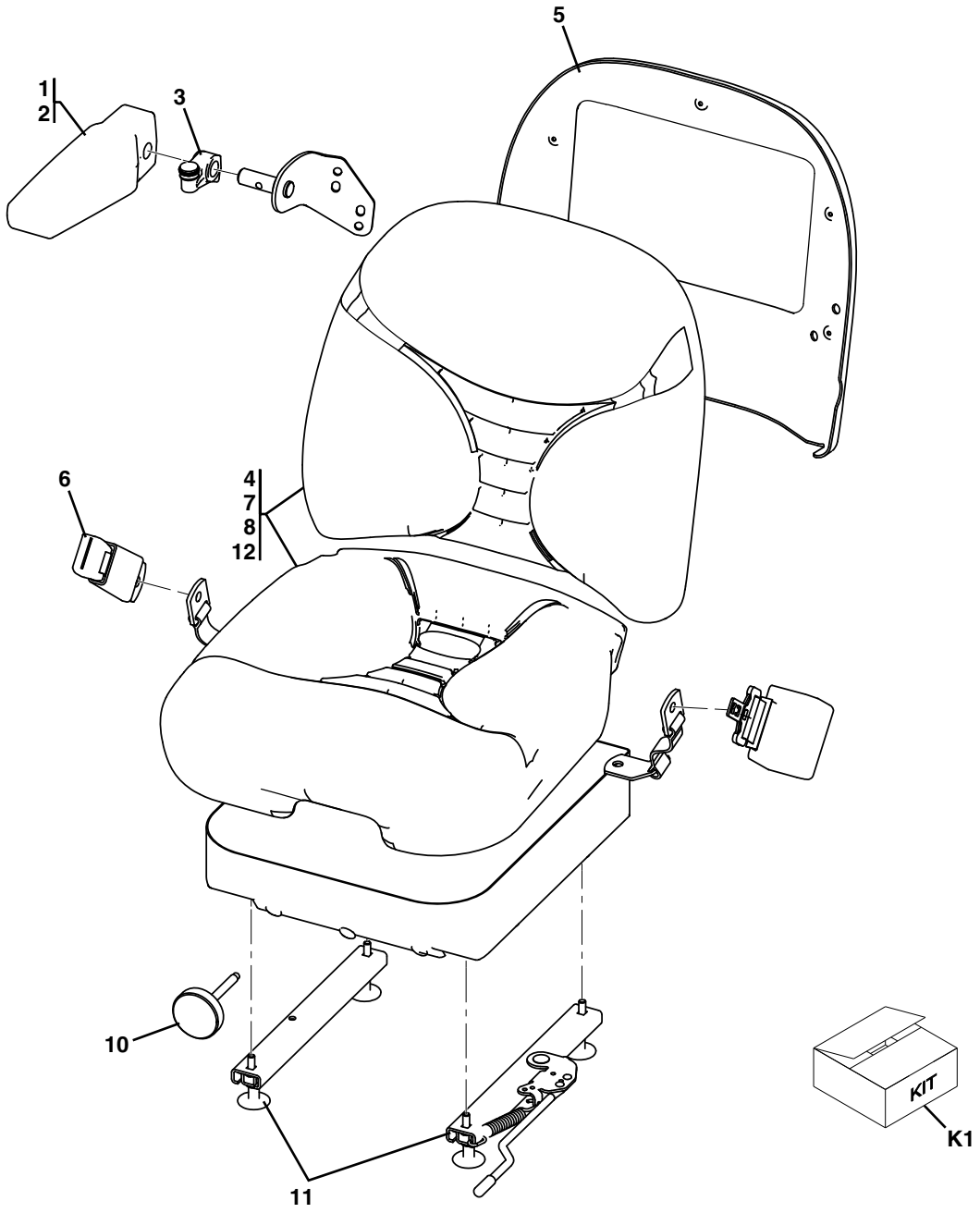

PAP23910

Downloaded from www.Manualslib.com manuals search engine

https://truckmanualshub.com/

Figure 6-5 Suspension Seat

Item	Part Number	Qty.	Description	Rev.
	91563158	1	SUSPENSION SEAT, (includes all items)	F
1	7026904	1	ARMREST ASSY RH KIT, (includes items 2 & 3)	
2	NSS	1	ARMREST, MOLDED KIT	
3	NSS	1	ARMREST STOP ASSY	
4	7026900	1	BACK CUSHION KIT	
5	7026902	1	BACK PANEL KIT	
6	7026905	1	SEAT BELT KIT	
	91563164	1	SEAT BELT, 3 IN, **(California Only)**, (not included with 91563158)	
7	7026906	1	TETHER KIT	
8	7026901	1	SEAT CUSHION KIT	
10	7026799	1	KNOB KIT	
11	7026798	1	SLIDE KIT	
12	1001101085	1	SUSPENSION SEAT WITH 2 IN SEAT BELT	
K1	70023139	1	SEAT BELT KIT, 3 IN, **(California only)**, (includes retractor & female ends)	

Downloaded from www.Manualslib.com manuals search engine

https://truckmanualshub.com/

Figure 6-6 Dash Assembly

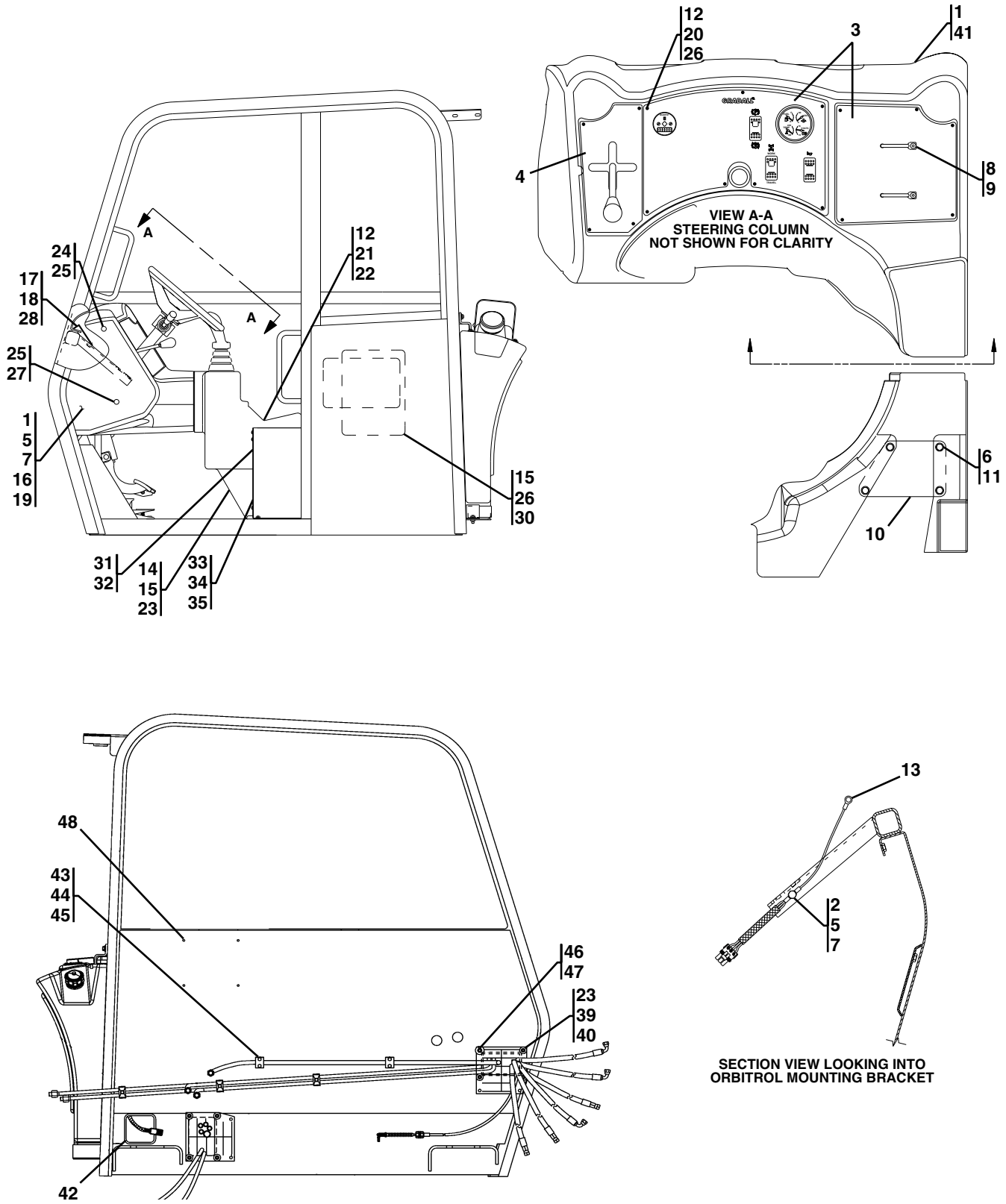

Downloaded from www.Manualslib.com manuals search engine

https://truckmanualshub.com/

Figure 6-6 Dash Assembly

Item	Part Number	Qty.	Description	Rev.
1	91403298	1	DASH, **(open cab)**, **(S/N 0189001 thru 0160001274)**	
	91473211	1	DASH, **(open cab)**, **(S/N 0160001286 & After)**	
2	91403481	1	GROUND HARNESS	
3		Ref	INSTRUMENT PANEL, (see Figure 6-7 for details)	
4	91403289	1	LH TILT/SWAY PANEL	
5	88561003	2	FLAT WASHER, 5/16	
6	88561002	15	FLAT WASHER, 1/4	
7	88201020	1	HEX HD CAPSCREW, 5/16-18X1, GR5	
8	91163087	2	LOAD CHART BRACKET	
9	88302125	2	BUTTON HD CAPSCREW, 1/4-20X5/8	
10	91401516	1	DASH BRACE	
11	88201002	4	HEX HD CAPSCREW, 1/4-20X5/8, GR5	
12	80363034	16	TINNERMAN NUT	
13	91361018	1	JUMPER WIRE	
14	91403620	1	RH CONSOLE, **(S/N 0189001 thru 0160015436)**	
	91403288	1	RH CONSOLE, **(S/N 0160015465 & After)**	
15	88201005	6	HEX HD CAPSCREW, 1/4-20X1, GR5	
16	88201023	1	HEX HD CAPSCREW, 5/16-18X2-1/2, GR5	
17	91401590	1	DASH CLAMP	
18	80973025	2	BOLT WHIZ-LOCK, 3/8-16X1	
19	91083533	2	FENDER WASHER	
20	1001100322	16	PAN HD SCREW, #10	
21	91413110	1	CONTROL PANEL, (blank)	
22	91413051	4	SELF-TAPPING SCREW, #10X3/4	
23	91413050	2	FENDER WASHER	
24	88201018	1	HEX HD CAPSCREW, 5/16-18X3/4	
25	91023098	2	FENDER WASHER	
26	88561002	4	FLAT WASHER, 1/4	
27	88201021	1	HEX HD CAPSCREW, 5/16-18X1-1/4	
28	90200755	32 in	GASKA TAPE	
30	91403230	1	MANUAL CASE	
31	91561200	1	VENT COVER	
32	91413036	2	SELF-TAPPING SCREW, #6	
33	91561150	1	ACCESS COVER PLATE	
34	0630407	6	BUTTON HD CAPSCREW, 1/4-20X5/8	
35	0471140	6	WASHER, 1/4	
36		Ref	SUSPENSION SEAT, (not shown), (see Figure 6-5 for details)	
37		Ref	WHIZ-LOCKNUT, 5/16-18, (not shown), (see Figure 6-5 for details)	
38		Ref	FLAT WASHER, 5/16, (not shown), (see Figure 6-5 for details)	
39	91473163	1	RUBBER GUARD	
40	88521004	7	LOCKNUT, 1/4-20	
41	91473212	1	DASH, **(enclosed cab)**	
42	90206194	54 in	TRIM-LOCK	
43	77133497	2	CLAMP SET	
44	77133498	2	COVER PLATE	
45	88201007	4	HEX HD CAPSCREW, 1/4-20X1-1/2	
46	88521005	1	STOVER LOCKNUT, 5/16-18	
47	91023098	1	FENDER WASHER, 5/16	
48	91413130	4	NYLON HOLE PLUGS	

Downloaded from www.Manualslib.com manuals search engine

https://truckmanualshub.com/

Figure 6-7 Instrument Panel

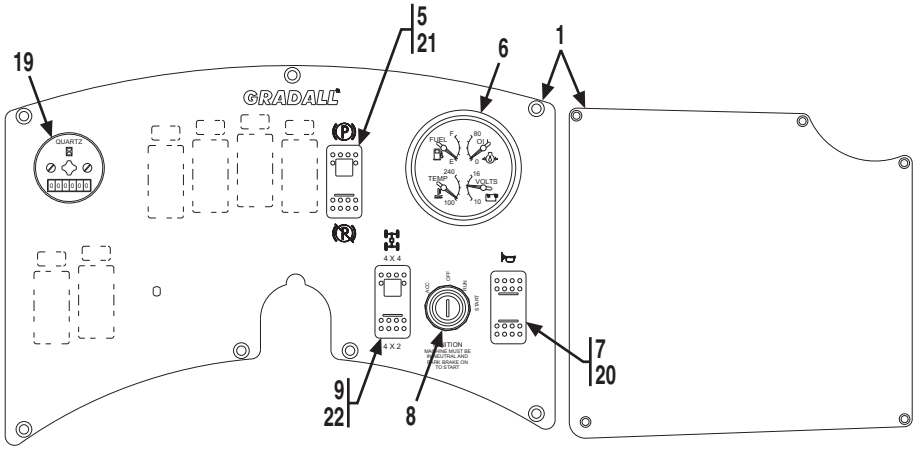

WIRING SPECIFICATIONS

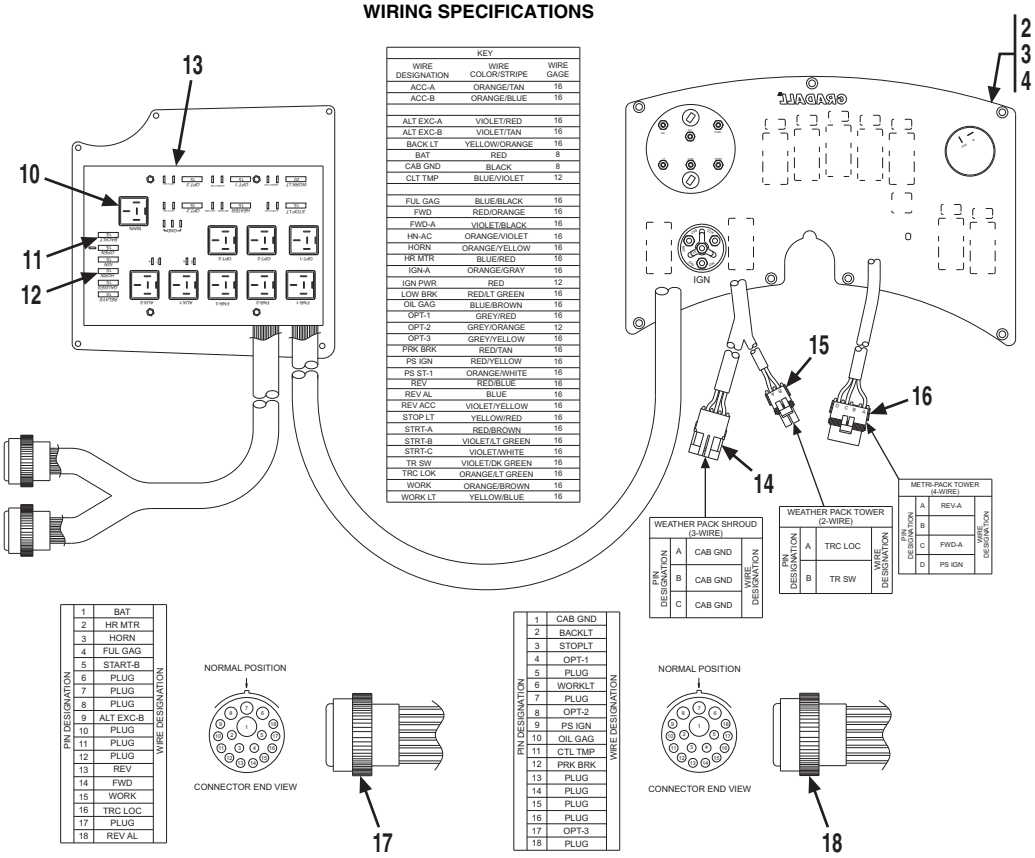

KEY		
WIRE DESIGNATION	WIRE COLOR/STRIPE	WIRE GAGE
ACC-A	ORANGE/TAN	16
ACC-B	ORANGE/BLUE	16
ALT EXC-A	VIOLET/RED	16
ALT EXC-B	VIOLET/TAN	16
BACK LT	YELLOW/ORANGE	16
BAT	RED	8
CAB GND	BLACK	8
CLT TMP	BLUE/VIOLET	12
FUL GAG	BLUE/BLACK	16
FWD	RED/ORANGE	16
FWD-A	VIOLET/BLACK	16
HN-AC	ORANGE/VIOLET	16
HORN	ORANGE/YELLOW	16
HR MTR	BLUE/RED	16
IGN-A	ORANGE/GRAY	16
IGN PWR	RED	12
LOW BRK	RED/LT GREEN	16
OIL GAG	BLUE/BROWN	16
OPT-1	GREY/RED	16
OPT-2	GREY/ORANGE	12
OPT-3	GREY/YELLOW	16
PRK BRK	RED/TAN	16
PS IGN	RED/YELLOW	16
PS ST-1	ORANGE/WHITE	16
REV	RED/BLUE	16
REV AL	BLUE	16
REV ACC	VIOLET/YELLOW	16
STOP LT	YELLOW/RED	16
STRT-A	RED/BROWN	16
STRT-B	VIOLET/LT GREEN	16
STRT-C	VIOLET/WHITE	16
TR SW	VIOLET/DK GREEN	16
TRC LOK	ORANGE/LT GREEN	16
WORK	ORANGE/BROWN	16
WORK LT	YELLOW/BLUE	16

WEATHER PACK SHROUD (3-WIRE)		
PIN DESIGNATION		WIRE DESIGNATION
A	CAB GND	
B	CAB GND	
C	CAB GND	

WEATHER PACK TOWER (2-WIRE)		
PIN DESIGNATION		WIRE DESIGNATION
A	TRC LOC	
B	TR SW	

METR-PACK TOWER (4-WIRE)		
PIN DESIGNATION		WIRE DESIGNATION
A	REV-A	
B		
C	FWD-A	
D	PS IGN	

PIN DESIGNATION	WIRE DESIGNATION
1	BAT
2	HR MTR
3	HORN
4	FUL GAG
5	START-B
6	PLUG
7	PLUG
8	PLUG
9	ALT EXC-B
10	PLUG
11	PLUG
12	PLUG
13	REV
14	FWD
15	WORK
16	TRC LOC
17	PLUG
18	REV AL

PIN DESIGNATION	WIRE DESIGNATION
1	CAB GND
2	BACKLT
3	STOPLT
4	OPT-1
5	PLUG
6	WORKLT
7	PLUG
8	OPT-2
9	PS IGN
10	OIL GAG
11	CTL TMP
12	PRK BRK
13	PLUG
14	PLUG
15	PLUG
16	PLUG
17	OPT-3
18	PLUG

NOTE:

BLACK PLASTIC PANEL NOT AVAILABLE FOR SERVICE. MUST ORDER COMPLETE INSTRUMENT PANEL, 91403461, FOR REPLACEMENT

Downloaded from www.Manualslib.com manuals search engine

https://truckmanualshub.com/

Figure 6-7 Instrument Panel

Item	Part Number	Qty.	Description	Rev.
1	91403461	1	INSTRUMENT PANEL, (includes all items)	M
2	91404332	1	LARGE GAUGE BRACKET	
3	91404334	4	LAMP ASSY, (includes item 4)	
4	91404335	4	BULB	
5	91404329	1	PARK BRAKE SWITCH, (includes item 21)	
6	91404336	1	4-IN-1 GAUGE	
7	91404330	1	HORN SWITCH, (includes item 20)	
8	91033317	1	IGNITION SWITCH	
	77384578	1	KEY	
9	91404328	1	4X4 SWITCH, (includes item 22)	
10	77363265	AR	RELAY	
11	77363268	AR	FUSE, 15 AMP	
12	77363267	AR	FUSE, 10 AMP	
13	91404333	1	SMALL GAUGE BRACKET	
14	80963060	1	CONNECTOR	
15	80963057	1	CONNECTOR	
16	91364013	1	CONNECTOR	
17	91404331	1	CONNECTOR	
18	91334038	1	CONNECTOR	
19	90205688	1	HOURMETER	
20	91404349	1	ACTUATOR	
21	91404350	1	ACTUATOR	
22	91404351	1	ACTUATOR	

Downloaded from www.Manualslib.com manuals search engine

https://truckmanualshub.com/

Figure 6-7 Instrument Panel

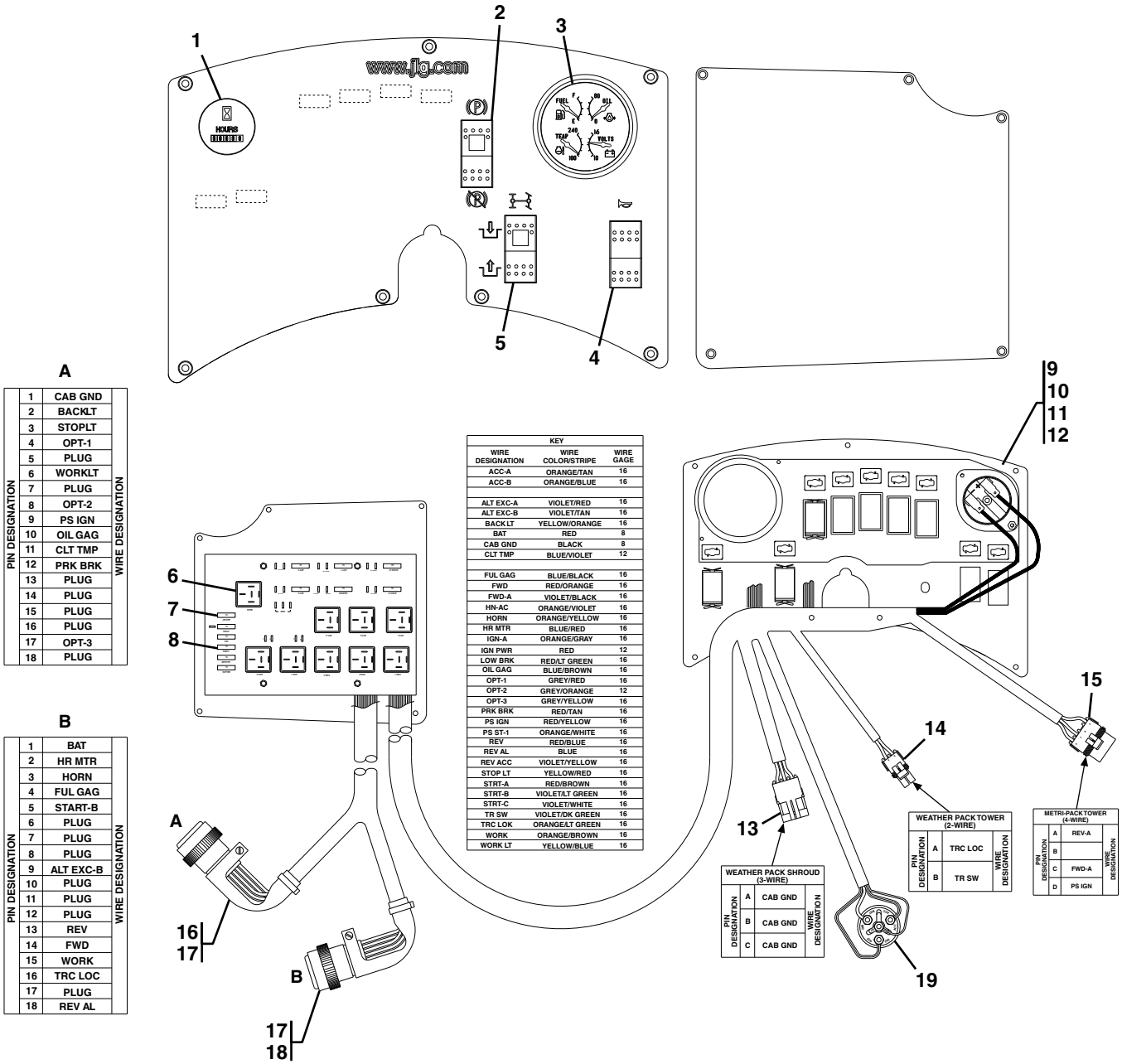

A

PIN DESIGNATION	WIRE DESIGNATION
1	CAB GND
2	BACKLT
3	STOPLT
4	OPT-1
5	PLUG
6	WORKLT
7	PLUG
8	OPT-2
9	PS IGN
10	OIL GAG
11	CLT TMP
12	PRK BRK
13	PLUG
14	PLUG
15	PLUG
16	PLUG
17	OPT-3
18	PLUG

B

PIN DESIGNATION	WIRE DESIGNATION
1	BAT
2	HR MTR
3	HORN
4	FUL GAG
5	START-B
6	PLUG
7	PLUG
8	PLUG
9	ALT EXC-B
10	PLUG
11	PLUG
12	PLUG
13	REV
14	FWD
15	WORK
16	TRC LOC
17	PLUG
18	REV AL

KEY

WIRE DESIGNATION	WIRE COLOR/STRIPE	WIRE GAGE
ACC-A	ORANGE/TAN	16
ACC-B	ORANGE/BLUE	16
ALT EXC-A	VIOLET/RED	16
ALT EXC-B	VIOLET/TAN	16
BACK LT	YELLOW/ORANGE	16
BAT	RED	8
CAB GND	BLACK	8
CLT TMP	BLUE/VIOLET	12
FUL GAG	BLUE/BLACK	16
FWD	RED/ORANGE	16
FWD-A	VIOLET/BLACK	16
HN-AC	ORANGE/VIOLET	16
HORN	ORANGE/YELLOW	16
HR MTR	BLUE/RED	16
IGN-A	ORANGE/GRAY	16
IGN PWR	RED	12
LOW BRK	RED/LT GREEN	16
OIL GAG	BLUE/BROWN	16
OPT-1	GREY/RED	16
OPT-2	GREY/ORANGE	12
OPT-3	GREY/YELLOW	16
PRK BRK	RED/TAN	16
PS IGN	RED/YELLOW	16
PS ST-1	ORANGE/WHITE	16
REV	RED/BLUE	16
REV AL	BLUE	16
REV ACC	VIOLET/YELLOW	16
STOP LT	YELLOW/RED	16
STRT-A	RED/BROWN	16
STRT-B	VIOLET/LT GREEN	16
STRT-C	VIOLET/WHITE	16
TR SW	VIOLET/DK GREEN	16
TRC LOK	ORANGE/LT GREEN	16
WORK	ORANGE/BROWN	16
WORK LT	YELLOW/BLUE	16

WEATHER PACK SHROUD (3-WIRE)

PIN DESIGNATION	WIRE DESIGNATION
A	CAB GND
B	CAB GND
C	CAB GND

WEATHER PACK TOWER (2-WIRE)

PIN DESIGNATION	WIRE DESIGNATION
A	TRC LOC
B	TR SW

METRI-PACK TOWER (4-WIRE)

PIN DESIGNATION	WIRE DESIGNATION
A	REV-A
B	
C	FWD-A
D	PS IGN

Downloaded from www.Manualslib.com manuals search engine

https://truckmanualshub.com/

Figure 6-7 Instrument Panel

Item	Part Number	Qty.	Description	Rev.
	91413060	1	INSTRUMENT PANEL, (includes all items)	F
1	90205688	1	HOURMETER	
2	91404329	1	PARK BRAKE SWITCH, (includes actuator)	
3	91404336	1	4-IN-1 GAUGE	
4	91404330	1	HORN SWITCH, (includes actuator)	
5	91404328	1	4X4 SWITCH, (includes actuator)	
6	77363265	AR	RELAY	
7	77363268	AR	FUSE, 15 AMP	
8	77363267	AR	FUSE, 10 AMP	
9	91404332	1	LARGE GAUGE BRACKET	
10	91404333	1	SMALL GAUGE BRACKET	
11	91404334	4	LAMP ASSY, (includes item 12)	
12	91404335	4	BULB	
13	80963060	1	CONNECTOR	
14	80963057	1	CONNECTOR	
15	91364013	1	CONNECTOR	
16	91334038	1	CONNECTOR	
17	91474463	2	STRAIN RELIEF, 90 DEGREE	
18	91404331	1	CONNECTOR	
19	91033317	1	IGNITION SWITCH	
	77384578	1	KEY	

Downloaded from www.Manualslib.com manuals search engine

https://truckmanualshub.com/

This Page Intentionally Left Blank

Downloaded from www.Manualslib.com manuals search engine

https://truckmanualshub.com/

SECTION 7
CONTROLS

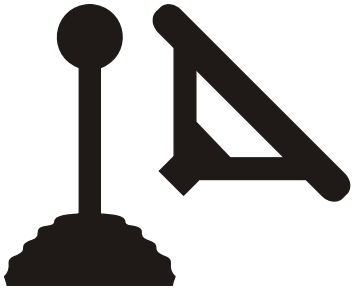

Downloaded from www.Manualslib.com manuals search engine

https://truckmanualshub.com/

Figure 7-1 Tilt & Sway

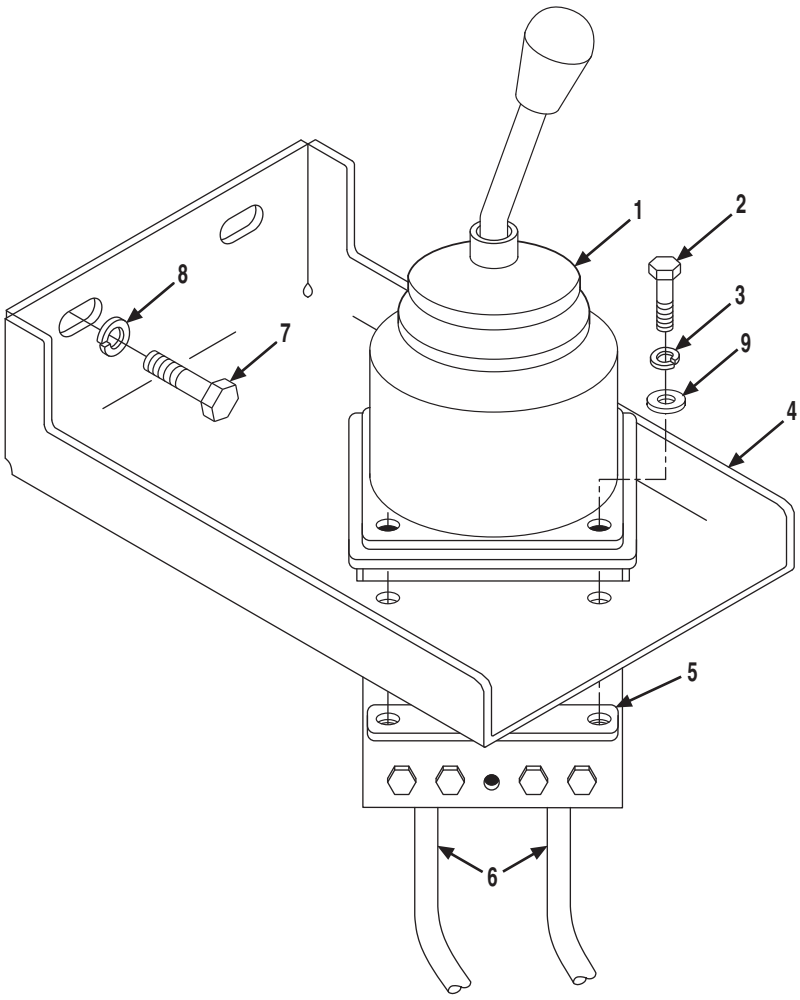

Downloaded from www.Manualslib.com manuals search engine

https://truckmanualshub.com/

Figure 7-1 Tilt & Sway

Item	Part Number	Qty.	Description	Rev.
	91405047	1	TILT & SWAY CONTROL ASSY, (includes items 1 thru 6 & 9)	C
1		Ref	JOYSTICK, (see Figure 7-7 for details)	
2	88201005	4	HEX HD CAPSCREW, 1/4-20X1, GR5	
3	88551009	4	LOCKWASHER, 1/4	
4	91401168	1	LH TILT/SWAY BRACKET	
5	91416006	2	WELD NUT PLATE	
6	91403309	2	CONTROL CABLES	
7	88201065	2	HEX HD CAPSCREW, 1/2-13X1, GR5	
8	88551013	2	LOCKWASHER, 1/2	
9	88561107	4	FLAT WASHER, 1/4	

Downloaded from www.Manualslib.com manuals search engine

https://truckmanualshub.com/

Figure 7-2 Accelerator Pedal Assembly

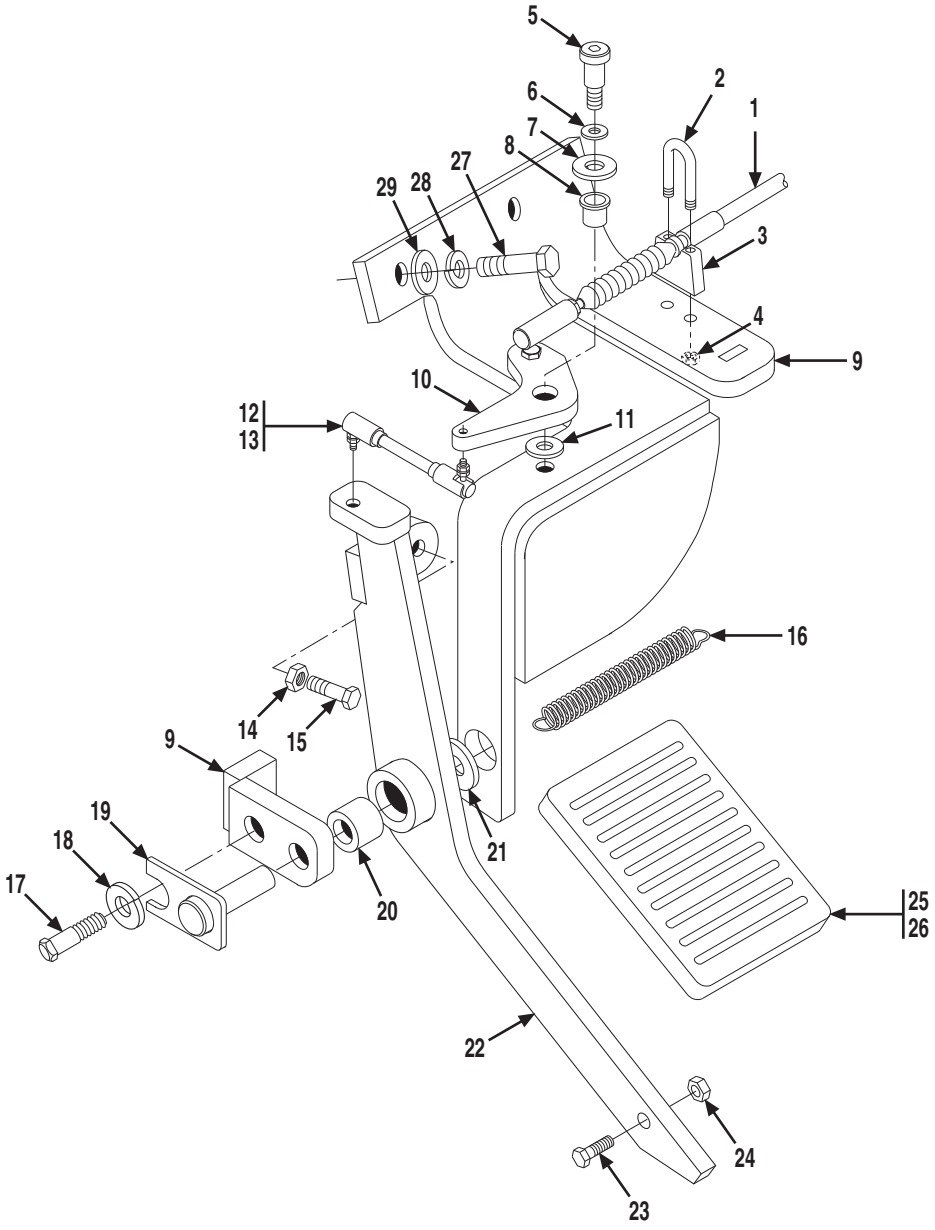

Downloaded from www.Manualslib.com manuals search engine

https://truckmanualshub.com/

Figure 7-2 Accelerator Pedal Assembly

Item	Part Number	Qty.	Description	Rev.
	91405084	1	ACCELERATOR PEDAL ASSY, (includes items 1 thru 26)	M
1	91403307	1	ACCELERATOR CABLE, (includes items 2 thru 4)	
2	91404211	1	U-BOLT	
3	91404212	1	SADDLE	
4	91404213	2	HEX NUT	
5	88251019	1	SOCKET HD SHOULDER SCREW, 3/8X5/8, (5/16-18 thread)	
6	90028946	1	WAVE WASHER, 3/8	
7	88561109	1	FLAT WASHER, 3/8	
8	91403473	1	FLANGE BUSHING	
9	91406027	1	ACCELERATOR PEDAL BRACKET	
10	91406139	1	ACCELERATOR BELL CRANK	
11	91403474	1	TEFLON WASHER	
12	91403476	1	STUD, #10-32X1-1/4	
13	91403521	2	BALL JOINT, 1/4-28	
14	88501006	1	HEX NUT, 3/8-16	
15	88211073	1	SOCKET HD CAPSCREW, 3/8-16X1-1/2, GR8	
16	91413014	1	EXTENSION SPRING	
17	88201018	1	HEX HD CAPSCREW, 5/16-18X3/4, GR5	
18	88551010	1	LOCKWASHER, 5/16	
19	91406148	1	PIVOT PIN	
20	91083136	2	BUSHING	
21	88561108	1	FLAT WASHER, 5/16	
22	91406147	1	ACCELERATOR PEDAL ARM	
23	88201005	1	HEX HD CAPSCREW, 1/4-20X1, GR5	
24	88521304	1	HEX LOCKNUT, 1/4-20	
25	91401423	1	PEDAL	
26	80263108	1	PEDAL PAD	
27	88201020	2	HEX HD CAPSCREW, 5/16-18X1, GR5	
28	88551010	2	LOCKWASHER, 5/16	
29	88561003	2	FLAT WASHER, 5/16	

Downloaded from www.Manualslib.com manuals search engine

https://truckmanualshub.com/

Figure 7-2 Accelerator Pedal Assembly

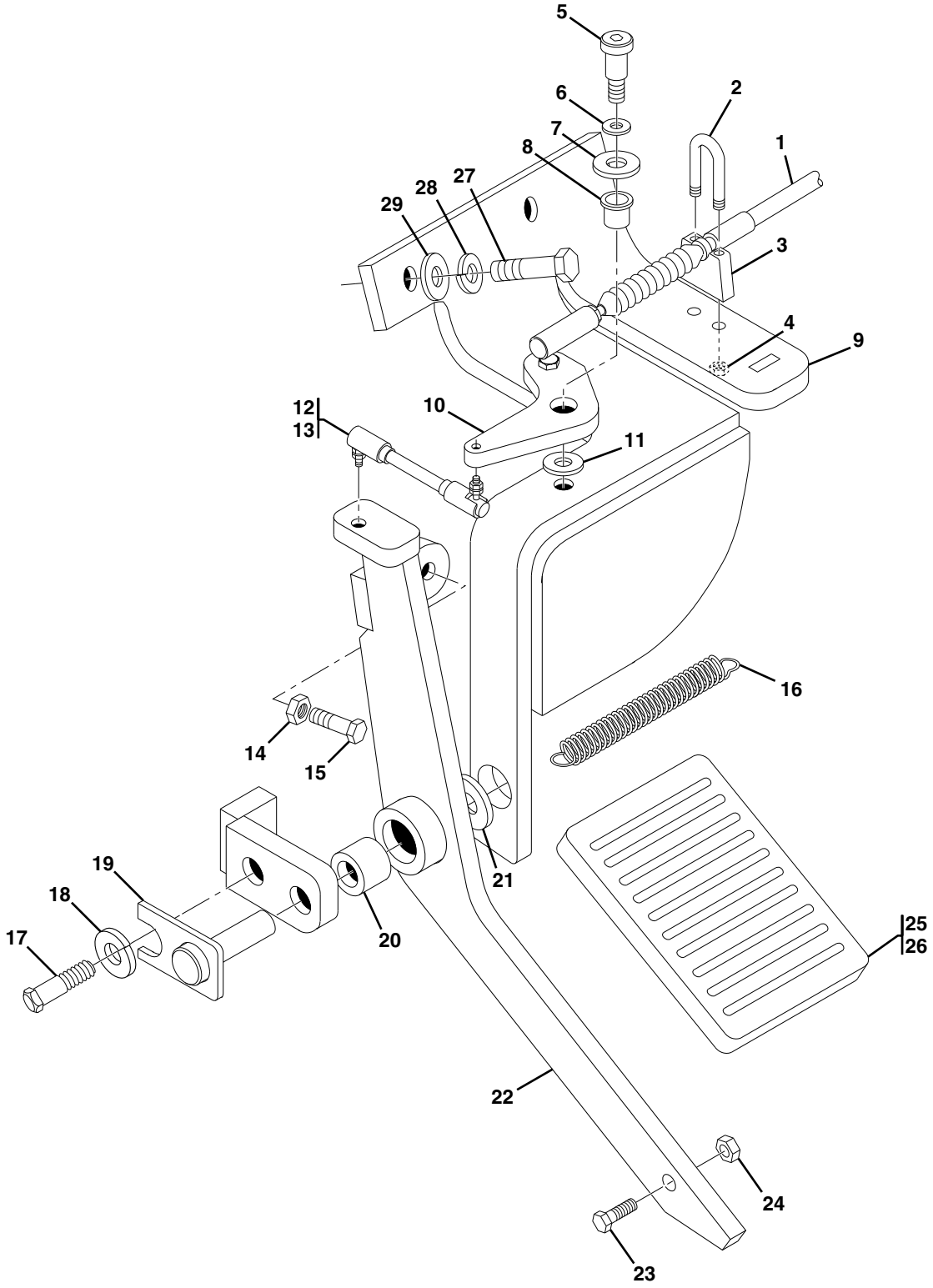

PAP23640

Downloaded from www.Manualslib.com manuals search engine

https://truckmanualshub.com/

Figure 7-2 Accelerator Pedal Assembly

Item	Part Number	Qty.	Description	Rev.
	91415067	Ref	ACCELERATOR PEDAL ASSY, (no longer available, use 1001102560 or see items 1 thru 26)	D
1	91413121	1	ACCELERATOR CABLE, (includes items 2 thru 4)	
2	91404211	1	U-BOLT	
3	91404212	1	SADDLE	
4	91404213	2	HEX NUT	
5	88251019	1	SOCKET HD SHOULDER BOLT, 3/8X5/8	
6	90028946	1	WAVE WASHER, 3/8	
7	88561109	1	FLAT WASHER, 3/8	
8	91403473	1	FLANGE BUSHING	
9	91476053	1	ACCELERATOR PEDAL BRACKET	
10	91406139	1	ACCELERATOR BELL CRANK	
11	91403474	1	TEFLON WASHER	
12	91403476	1	STUD, #10-32X1-1/4	
13	91403521	2	BALL JOINT, 1/4-28	
14	88501006	1	HEX NUT, 3/8-16	
15	88211073	1	SOCKET HD CAPSCREW, 3/8-16X1-1/2, GR8	
16	4160215	1	SPRING	
17	88201018	1	HEX HD CAPSCREW, 5/16-18X3/4, GR5	
18	88551010	1	LOCKWASHER, 5/16	
19	91406148	1	PIVOT PIN	
20	91083136	2	BUSHING	
21	88561108	1	FLAT WASHER, 5/16	
22	91406147	1	ACCELERATOR PEDAL ARM	
23	88201005	1	HEX HD CAPSCREW, 1/4-20X1, GR5	
24	88521304	1	LOCKNUT, 1/4-20	
25	91401423	1	PEDAL	
26	80263108	1	PEDAL PAD	
27	88201020	2	HEX HD CAPSCREW, 5/16-18X1, GR5	
28	88551010	2	LOCKWASHER, 5/16	
29	88561003	2	FLAT WASHER, 5/16	

Downloaded from www.Manualslib.com manuals search engine

https://truckmanualshub.com/

Figure 7-2 Accelerator Pedal Assembly

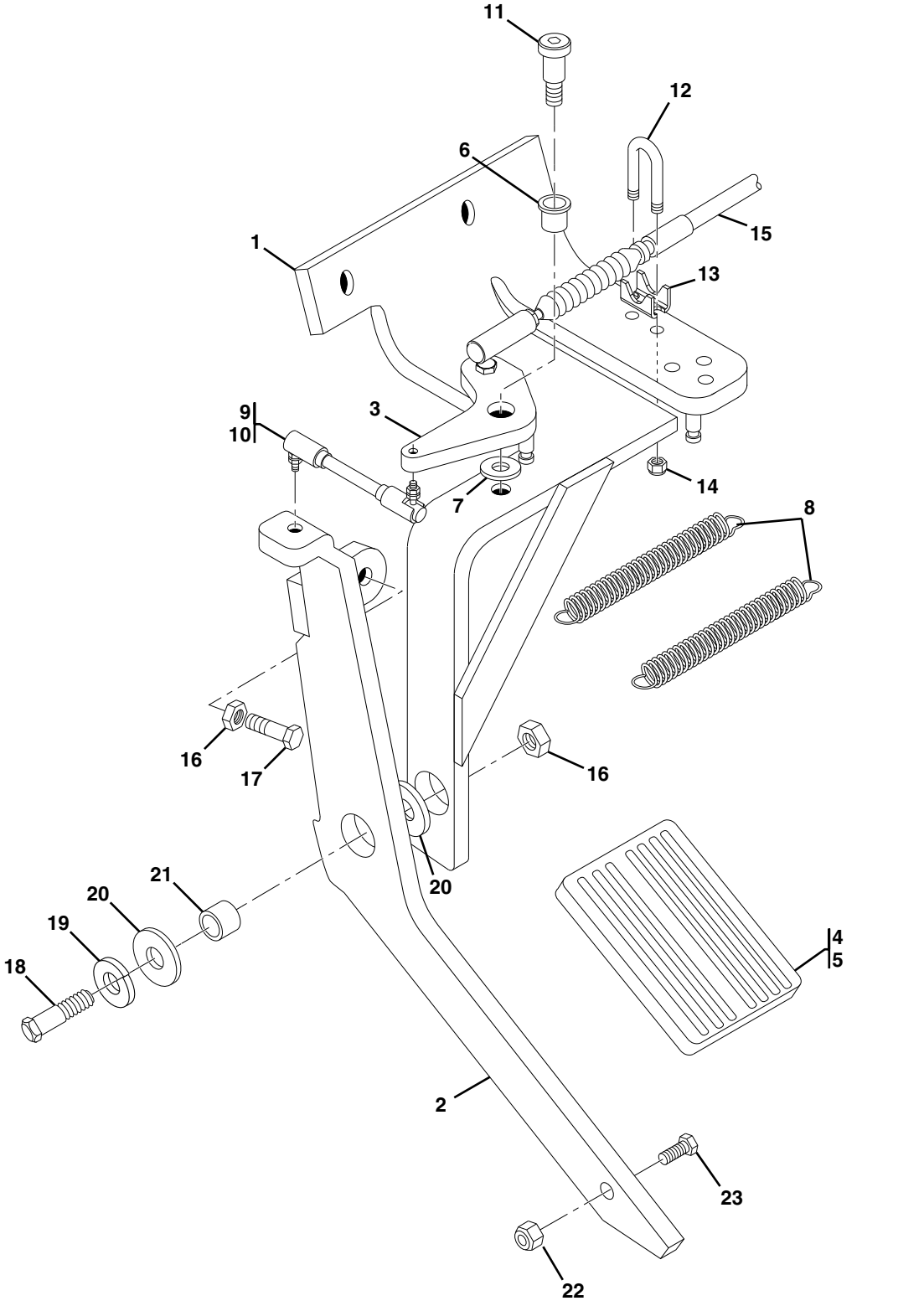

Downloaded from www.Manualslib.com manuals search engine

https://truckmanualshub.com/

Figure 7-2 Accelerator Pedal Assembly

Item	Part Number	Qty.	Description	Rev.
	1001102560	1	ACCELERATOR PEDAL ASSY, (includes items 1 thru 23)	A
1	70023836	1	ACCELERATOR PEDAL BRACKET	
2	70023837	1	ACCELERATOR PEDAL ARM	
3	70023838	1	ACCELERATOR BELL CRANK	
4	91401423	1	PEDAL	
5	80263108	1	PEDAL PAD	
6	70023841	1	FLANGE BUSHING	
7	70023842	1	TEFLON WASHER	
8	70023843	2	EXTENSION SPRING	
9	91403476	1	STUD, 10-32X1-1/4	
10	91403521	2	BALL JOINT, 1/4-28	
11	70023846	1	SOCKET HD SHOULDER SCREW	
12	91404211	1	U-BOLT	
13	91404212	1	SADDLE	
14	91404213	2	STOP HEX NUT	
15	91413121	1	ACCELERATOR CABLE, (includes items 12 thru 14)	
16	88501006	2	HEX NUT, 3/8-16	
17	88211073	1	SOCKET HD CAPSCREW, 3/8-16X1-1/2	
18	70023849	1	SOCKET HD SHOULDER SCREW	
19	70023850	1	MACHINE BUSHING	
20	70023851	2	NYLON WASHER	
21	70023852	1	BUSHING	
22	70023853	1	STOP HEX NUT, 5/16-18	
23	70023854	1	HEX HD CAPSCREW, 5/16-18X7/8	

Downloaded from www.Manualslib.com manuals search engine

https://truckmanualshub.com/

Figure 7-3 Steering Column & Attaching Parts

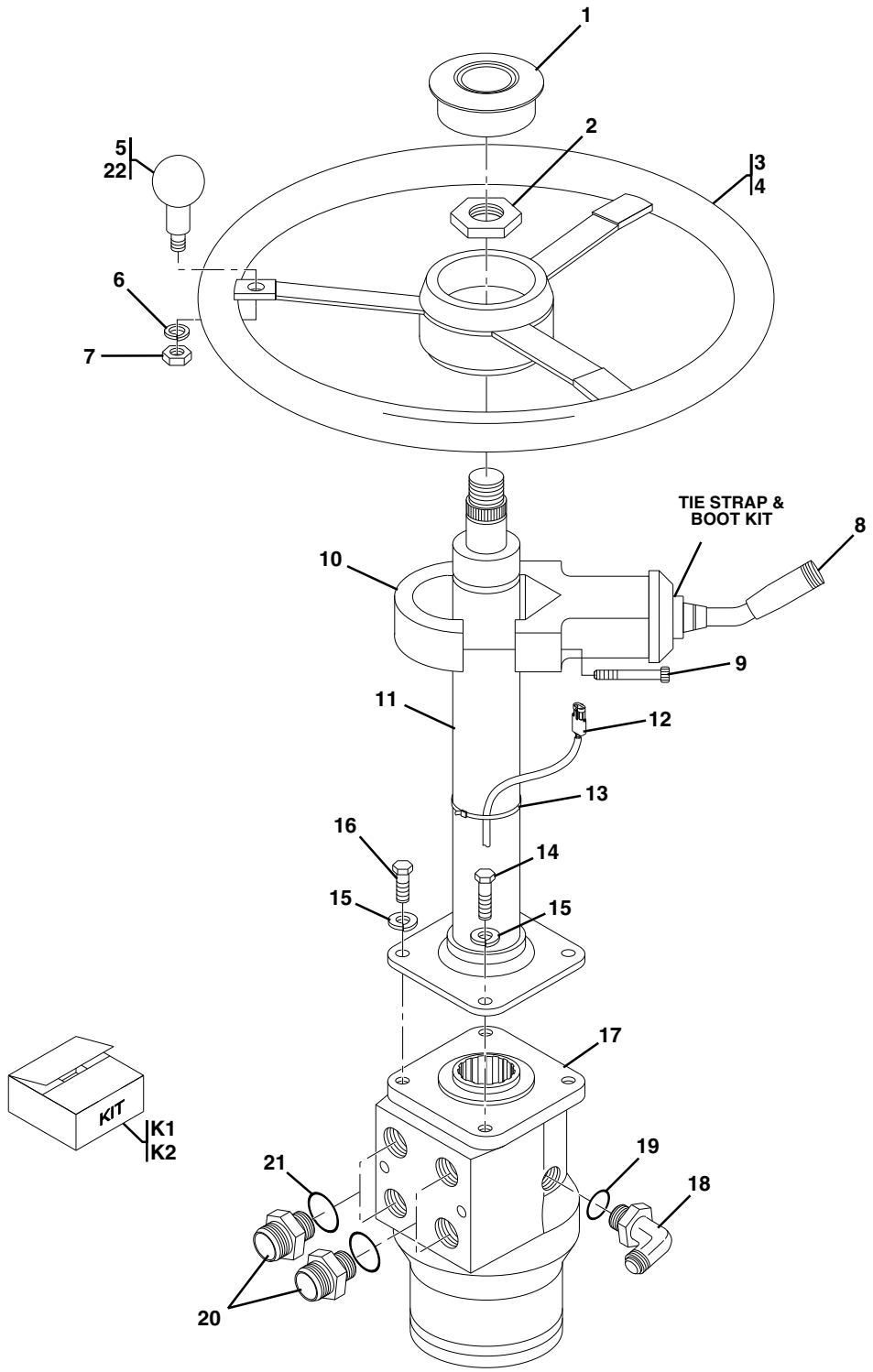

NOTE:

PAP23760

WHEN ITEM 8 IS ORDERED, REPLACE SCREWS PROVIDED FROM VENDOR WITH ITEM 9.

Downloaded from www.Manualslib.com manuals search engine

https://truckmanualshub.com/

Figure 7-3 Steering Column & Attaching Parts

Item	Part Number	Qty.	Description	Rev.
	91405013	1	STEERING CONTROL ASSY, (includes items 11, 16, 17, 18 & 20 & two of item 15)	E
1	7026477	1	HORN CAP	
2	70020923	1	STEERING WHEEL NUT, (torque to 29-34 lb-ft)	
3	91475048	Ref	STEERING WHEEL ASSY, (not available to order, see items 4 & 5 for service)	B
4	91563208	1	STEERING WHEEL, (includes items 1 & 22)	F
5	91413016	1	SPINNER KNOB, (includes items 6 & 7)	
6	91414028	1	LOCKWASHER, 1/2	
7	91414029	1	HEX NUT, 1/2-13	
8	91363025	1	F-N-R SHIFTER, (includes item 10)	
9	83191059	2	HEX HD CAPSCREW, M5X0.8, (torque to 30-35 lb-ft)	
10	91144458	1	CLAMP SET	
11	91403578	1	STEERING COLUMN	
12		Ref	INSTRUMENT PANEL HARNESS, (see Figure 6-7 for details)	
13	86683122	2	TIE WRAP	
14	88201035	2	HEX HD CAPSCREW, 3/8-16X1, GR5	
15	88551011	4	LOCKWASHER, 3/8	
16	88201033	2	HEX HD CAPSCREW, 3/8-16X3/4, GR5	
17	91123126	1	STEERING CONTROL UNIT	
18	2220466	1	ELBOW, 90 DEGREE, (includes item 19)	
19	NSS	1	O-RING	
20	2220373	4	ADAPTER, (includes item 21)	
21	NSS	4	O-RING	
22	7026478	1	SPINNER KNOB	
K1	91144448	1	TIE STRAP & BOOT KIT	
K2	91144190	1	STEERING CONTROL UNIT SEAL KIT	

Downloaded from www.Manualslib.com manuals search engine

https://truckmanualshub.com/

Figure 7-4 Brake Pedal Assembly

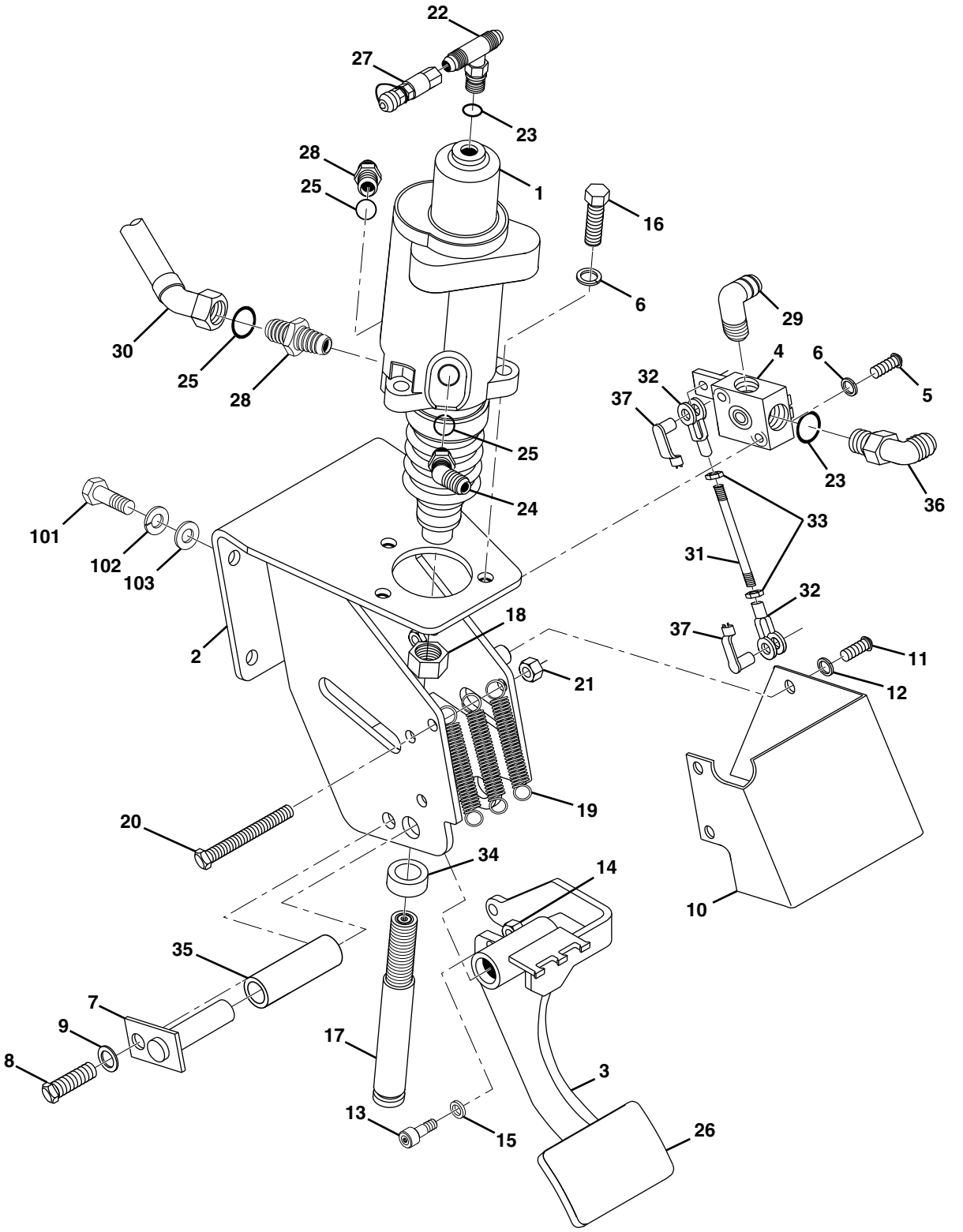

Downloaded from www.Manualslib.com manuals search engine

https://truckmanualshub.com/

Figure 7-4 Brake Pedal Assembly

Item	Part Number	Qty.	Description	Rev.
	91415004	Ref	POWER BRAKE ASSY, (includes item 1 thru 37)	H
1		Ref	POWER BRAKE VALVE, (see Figure 9-16 for details)	
2	91406141	1	BRAKE BRACKET	
3	91406143	1	BRAKE PEDAL	
4		Ref	INCHING VALVE ASSY, (see Figure 9-15 for details)	
5	88212229	2	SOCKET HD CAPSCREW, 5/16-18X1-1/2, GR8	
6	88551010	5	LOCKWASHER, 5/16	
7	91403425	1	ANCHOR PIN	
8	88201034	1	HEX HD CAPSCREW, 3/8-16X7/8, GR5	
9	88551011	1	LOCKWASHER, 3/8	
10	91401567	1	COVER PLATE	
11	88261015	3	SOCKET BUTTON HD CAPSCREW, 1/4-20X5/8	
12	88551009	3	LOCKWASHER, 1/4	
13	91083312	1	CAM ROLLER	
14	88501305	1	HEX NUT, 5/16-24	
15	88551151	1	LOCKWASHER, (hi-collar), 5/16	
16	88201021	3	HEX HD CAPSCREW, 5/16-18X1-1/4, GR5	
17	91081445	1	PUSH ROD	
18	88501408	1	HEX JAM NUT, 1/2-20	
19	91403590	3	SPRING	
20	88201047	1	HEX HD CAPSCREW, 3/8-16X4, GR5	
21	88521306	1	HEX LOCKNUT, 3/8-16	
22	2220899	1	ADAPTER, (includes item 23)	
23	88591204	2	O-RING	
24	2220671	1	ELBOW, 90 DEGREE, (includes item 25)	
25	88591206	3	O-RING	
26	80263108	1	PEDAL PAD	
27	91143172	1	MINI-CHECK	
28	2220374	2	ADAPTER, (includes item 25)	
29	2220819	1	ELBOW, 90 DEGREE, (long)	
30	84719542	1	HOSE ASSY	
31	91401573	1	LINKAGE ROD	
32	88821004	2	YOKE END ADJUSTABLE - S.A.E. STANDARD	
33	88501406	2	HEX JAM NUT, 3/8-24	
34	91083136	1	BUSHING	
35	91403247	2	BUSHING	
36	2220473	1	ELBOW, 90 DEGREE, (includes item 23)	
37	90027987	2	SPRING CLEVIS, 3/8	
101	88201018	4	HEX HD CAPSCREW, 5/16X18X3/4	
102	88551009	4	LOCKWASHER, 5/16	
103	88561003	4	FLAT WASHER, 5/16	
104	90206198	20 in	TRIM-LOCK, (not shown)	

Downloaded from www.Manualslib.com manuals search engine

https://truckmanualshub.com/

Figure 7-5 Foot Switch

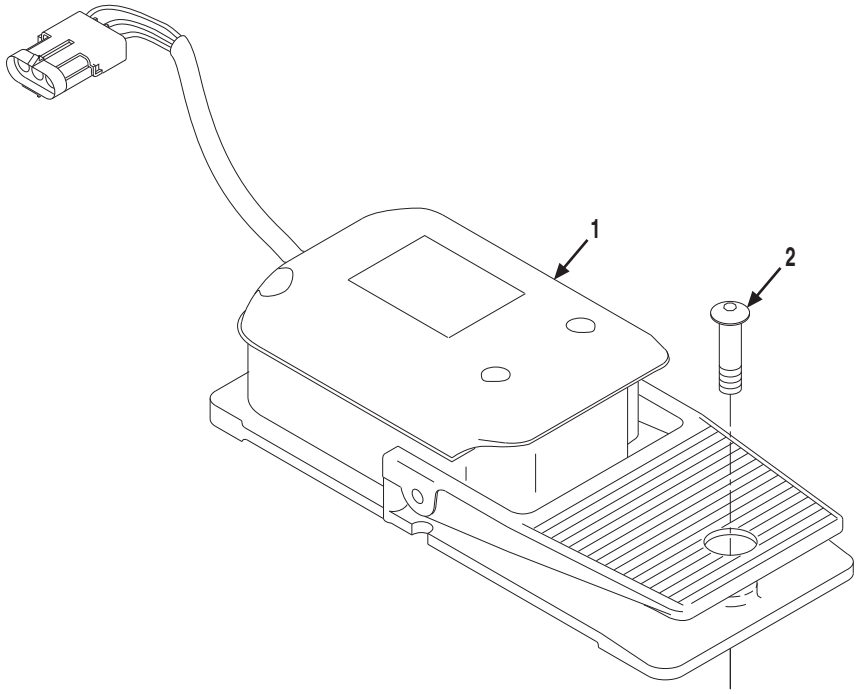

Downloaded from www.Manualslib.com manuals search engine

https://truckmanualshub.com/

Figure 7-5 Foot Switch

Item	Part Number	Qty.	Description	Rev.
1	91403478	1	FOOT SWITCH	
2	88261017	3	SOCKET BUTTON HD CAPSCREW, 1/4-20X3/4	

Downloaded from www.Manualslib.com manuals search engine

https://truckmanualshub.com/

Figure 7-5 Foot Switch

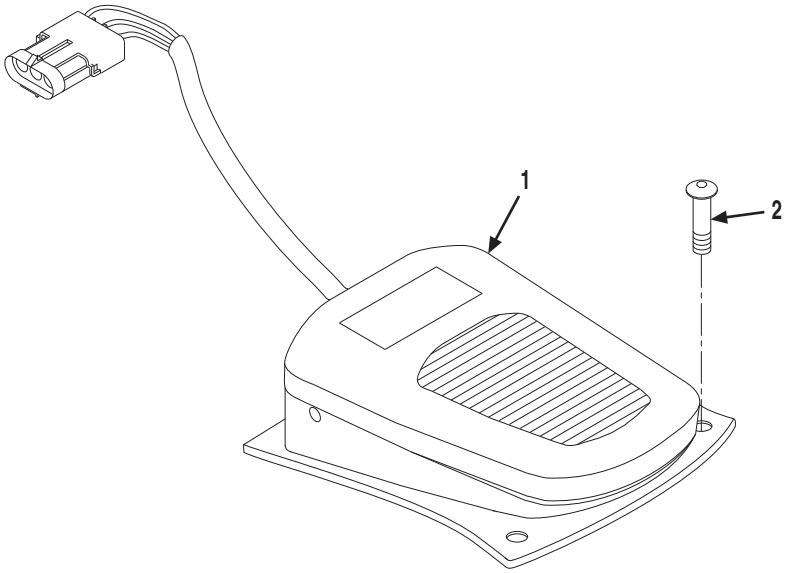

Downloaded from www.Manualslib.com manuals search engine

https://truckmanualshub.com/

Figure 7-5 Foot Switch

Item	Part Number	Qty.	Description	Rev.
1	91343218	1	FOOT SWITCH	
2	88261011	2	SOCKET BUTTON HD CAPSCREW, #10-24X7/8	

Downloaded from www.Manualslib.com manuals search engine

https://truckmanualshub.com/

Figure 7-6 Boom Joystick Assembly

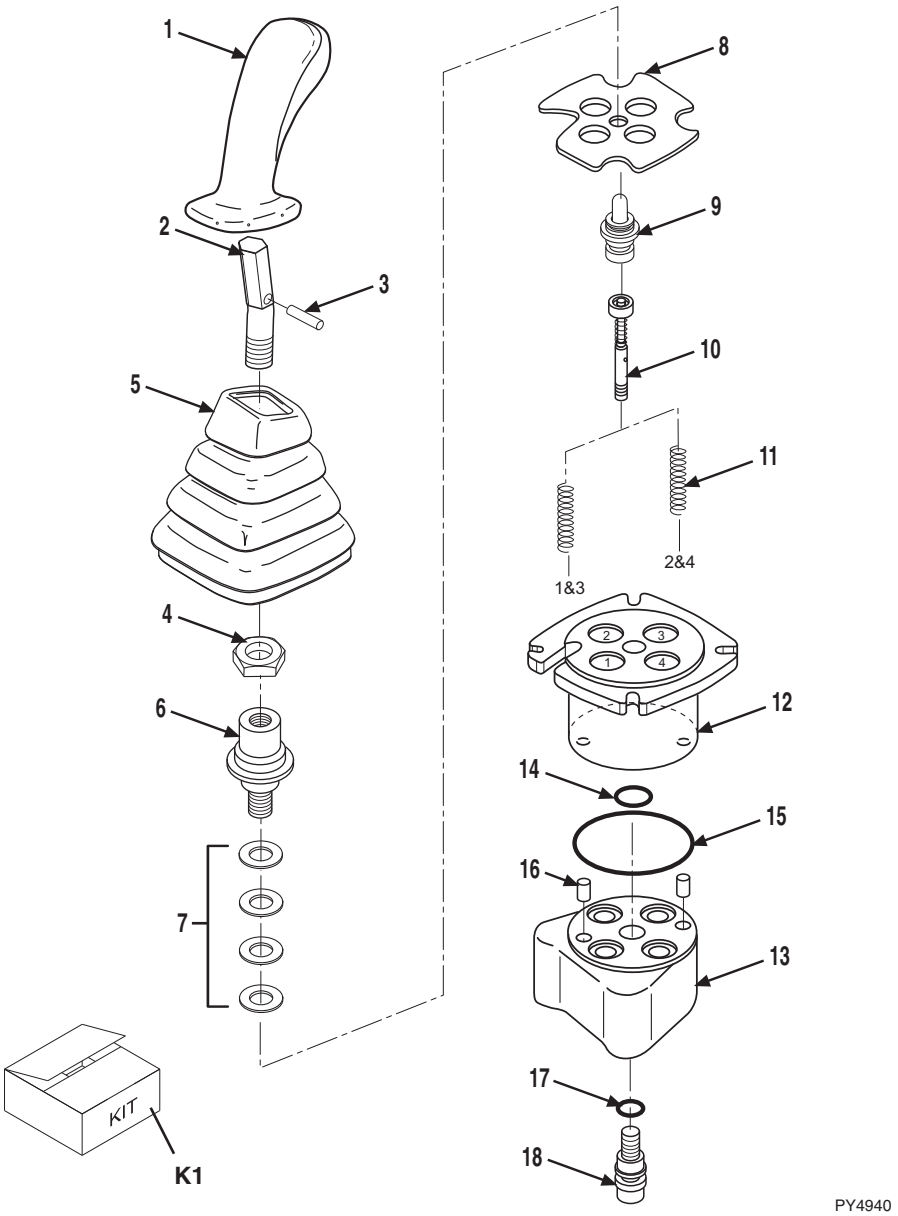

Downloaded from www.Manualslib.com manuals search engine

https://truckmanualshub.com/

Figure 7-6 Boom Joystick Assembly

Item	Part Number	Qty.	Description	Rev.
	91403490	Ref	JOYSTICK ASSY, **(if equipped)**, (includes all items)	A
1	91404010	1	GRIP	
2	91404011	1	BENT LEVER KIT, (includes items 3 & 4)	
3	NSS	1	SPRING PIN	
4	NSS	1	HEX NUT	
5	80364095	1	BOOT	
6	80264138	1	CARDAN KIT, (includes item 7)	
7	NSS	AR	SHIM	
8	91404013	1	RETAINING PLATE	
9	80934498	4	PLUNGER & GUIDE KIT	
10	91404327	4	REGULATING UNIT	
11	91504028	1	SPRING, (ports 1 & 3), (pack of two)	
	91504029	1	SPRING, (ports 2 & 4), (pack of two)	
12	91404016	1	UPPER BODY, (includes item 13)	
13	NSS	1	LOWER BODY	
14	Use Kit K1	1	O-RING	
15	Use Kit K1	1	O-RING	
16	Use Kit K1	2	DOWEL PIN	
17	Use Kit K1	1	O-RING	
18	Use Kit K1	1	SCREW ASSY	
K1	91404326	AR	SEAL KIT, (includes items 14 thru 18)	

Downloaded from www.Manualslib.com manuals search engine

https://truckmanualshub.com/

Figure 7-7 Joystick Assembly

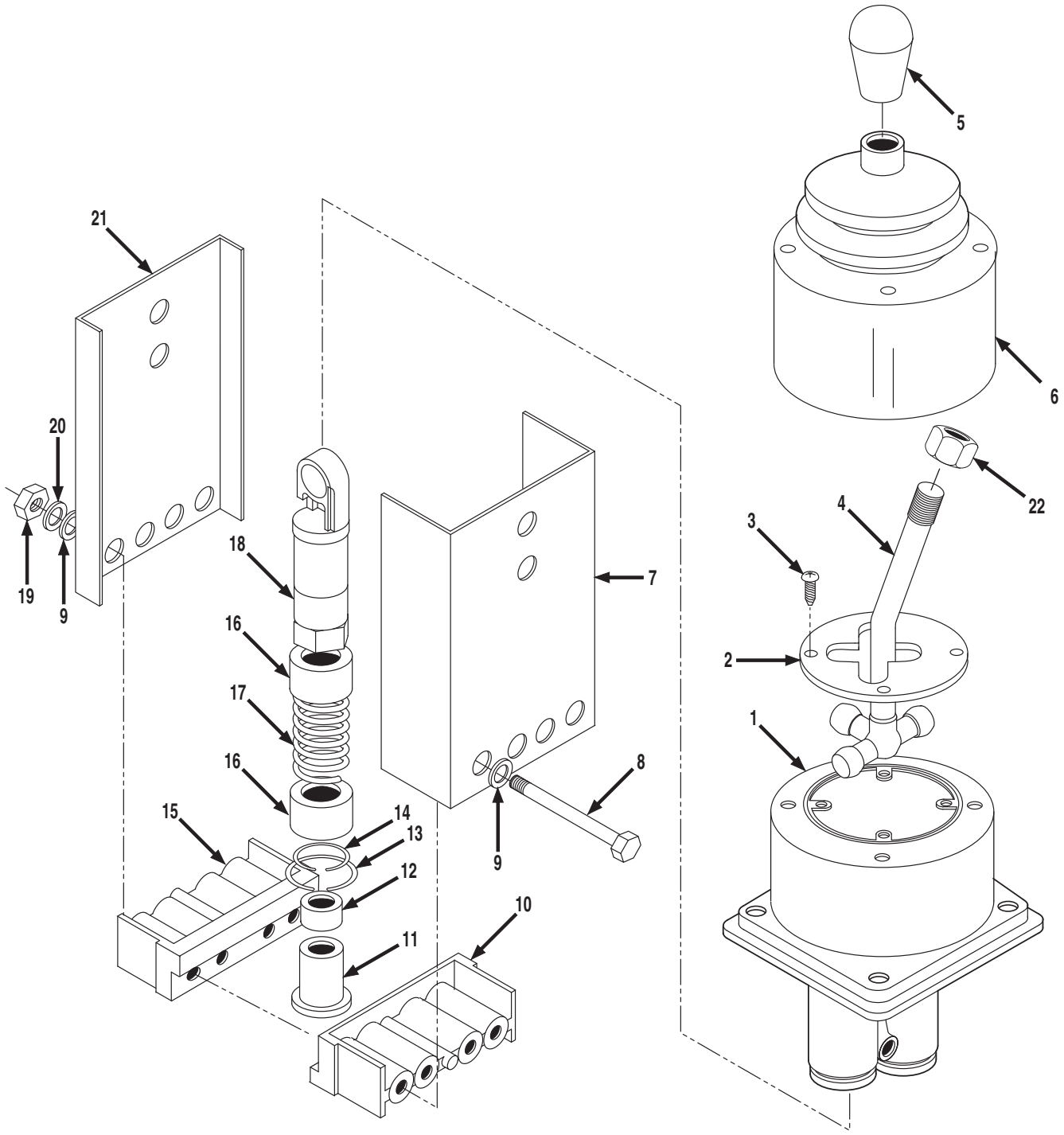

Downloaded from www.Manualslib.com manuals search engine

https://truckmanualshub.com/

Figure 7-7 Joystick Assembly

Item	Part Number	Qty.	Description	Rev.
	91403178	1	JOYSTICK ASSY, **(if equipped)**, (includes all items)	G
1	91404207	1	HOUSING	
2	91404088	1	RESTRICTOR PLATE	
3	91404089	4	SELF-TAPPING SCREW, #10X3/4	
4	91404208	1	INPUT LEVER ASSY	
5	91404091	1	KNOB	
6	8160419	1	BOOT	
7	91404093	1	HOUSING, (outer)	
8	91404094	6	HEX HD CAPSCREW	
9	91404095	12	FLAT WASHER	
10	91404096	1	CABLE ANCHOR, (inner)	
11	91404097	2	CABLE LOCK SCREW	
12	91404098	2	CABLE BUSHING	
13	91404099	2	RETAINING RING	
14	91404100	2	RETAINING RING	
15	91404101	1	CABLE ANCHOR, (outer)	
16	91404102	4	BUSHING	
17	91404103	2	SPRING	
18	91404209	2	SLIDER ASSY	
19	91404105	6	HEX NUT, 1/4-20	
20	91404106	6	LOCK WASHER	
21	91404107	1	HOUSING, (inner)	
22	91404210	1	JAM NUT	

Downloaded from www.Manualslib.com manuals search engine

https://truckmanualshub.com/

Figure 7-8 RH Horizontal Control Assembly

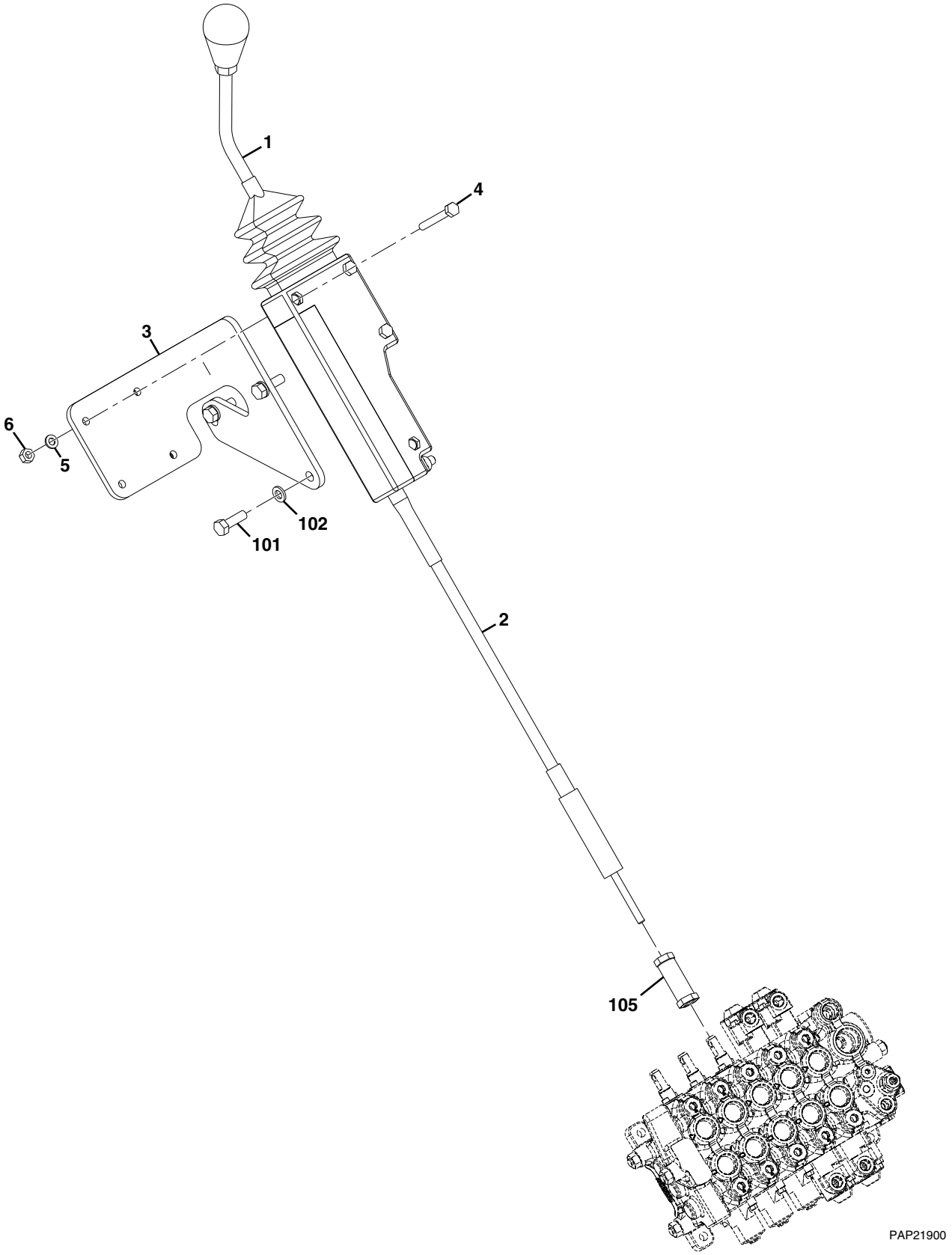

Downloaded from www.Manualslib.com manuals search engine

https://truckmanualshub.com/

Figure 7-8 RH Horizontal Control Assembly

Item	Part Number	Qty.	Description	Rev.
	91415031	1	RH HORIZONTAL CONTROL ASSY, (includes items 1 thru 6)	E
1	91513204	1	SINGLE VALVE CONTROL	
2	91403308	1	CABLE	
3	1001092843	1	BRACKET	
4	88201009	3	HEX HD CAPSCREW, 1/4-20X2	
5	88501004	3	LOCKWASHER, 1/4	
6	88551009	3	HEX NUT, 1/4-20, GR2	
101	0641508	3	HEX HD CAPSCREW, 5/16-18X1, GR5	
102	4761500	3	WASHER, 5/16	
105	91123062	1	CABLE ADAPTER BONNET	

Downloaded from www.Manualslib.com manuals search engine

https://truckmanualshub.com/

This Page Intentionally Left Blank

Downloaded from www.Manualslib.com manuals search engine