https://truckmanualshub.com/ 1

800-428-5655

www.landoll.com/mhp

STANDARD FEATURES

- 6,000 lb. (2722kg) Capacity at 24" (600mm) Load Center
- Four-Wheel Design, Dual Independently Driven Front Wheels
- Solid, Pneumatic-Style Drive and Steer Tires
- LPG Engine, GM 4.3L Tier III and LPG Fuel System (Tank Not Included)
- Integrated Computer Controlled Hydrostatic Drive
- Hydrostatic Power Steering with Tilt Steering Wheel
- Dual Joystick Hydraulic Control Levers
- 23" (584mm) of Shift Includes 2" (51mm) of Reach
- 40" (1016mm) Forks with Standard Bottom Taper and Class III Carriage and Long Load Handling Package
- Dash Display Contains: Engine Coolant Temperature Gauge, Hour Meter, Clock, Warning Icons, and Display Function Buttons
- 91" (2311mm) High Overhead Guard
- 42" (1067mm) High Load Backrest, 48" (1219mm) Wide Fork Carriage
- Neutral Start, Anti Restart, Operator Presence Seat Switch
- Adjustable Steering Column, Key Switch, Rear View Mirror, Horn and Seat Belt
- Comfortable Seated Operation with Vinyl Suspension Seat
- Mast Tilt of 3° Forward and 4° Backward

OPTIONAL FEATURES

- Non-Standard Fork Lengths
- LED Headlights, Flashing Light and Rear Safety Lights
- Integral Fork Positioner
- Single Auxiliary Hydraulics
- Cloth Seat
- Fire Extinguisher
- Steel / Glass Cab with Wipers, Heater and Defroster
- Vinyl Cab Enclosure
- UL 583 LPS Safety Rating

R60i5

4-Wheel Heavy Capacity
LP Gas Side Loader VNA Truck

LANDOLL®

Material Handling Products

https://truckmanualshub.com/ 2

DREXEL R60i5

LP Gas Sideloader | Swing Mast™ VNA Truck

TECHNICAL DATA

MODEL				
Capacity		24" (600mm) Load Center	lbs/kg	6,000 / 2,722
Engine Displacement		LPG	liter	4.3L
Truck Weight		with 3 stage 240" (6096mm)	lbs/kg	17,500 / 7955
Travel Speed		Loaded	mph/kph	8 / 12.9
		Unloaded	mph/kph	8 / 12.9
Lift Speed		Loaded	fpm/mpm	85 / 26
		Unloaded	fpm/mpm	87 / 27
Lowering Speed		Loaded	fpm/mpm	60 / 18
		Unloaded	fpm/mpm	50 / 15
Mast Tilt		Forward / Backward	deg	3 / 4
Lost Load Center	E	with Triple Mast	in/mm	31 / 790
Wheelbase	F		in/mm	77 / 1,940
Rear Overhang	G		in/mm	13 / 340
Overall Length to Face of Forks	H	with Triple Mast	in/mm	122 / 3,100
Underclearance	I		in/mm	6 / 152.4
Seat Clearance	J		in/mm	37 / 930
Overhead Guard Height	K		in/mm	91 / 2,310
Rear Frame Width	L		in/mm	52 / 1,320
Fork Carriage Width	M		in/mm	48 / 1,219
Mast Shift	N		in/mm	23 / 584
Rear Ground Clearance	P		deg	23°
Center Ground Clearance	Q		deg	16°
Side Deck Width	R		in/mm	21 / 530
Load Backrest Height	S		in/mm	42 / 1,070
Turning Radius	T		in/mm	106 / 2,690
Overall Width	U		in/mm	54 / 1,370
Side Deck Height	V		in/mm	52 / 1,320
Fork Size (Standard) ITA CLASS III			in cm	1.75 x 5 x 40 4.5 x 13 x 102
Gradeability		Loaded	%	15
		Unloaded	%	15
Wheel Sizes		Front (Solid Pneumatic in/cm Dia x Face)	in/cm	28 x 12.5 / 71 x 31.75
		Rear (Solid Pneumatic Dia x Face)	in/cm	22.7 x 6.5 / 58 x 16.5
Hydrostatic Transmission		Forward / Reverse		Single Speed

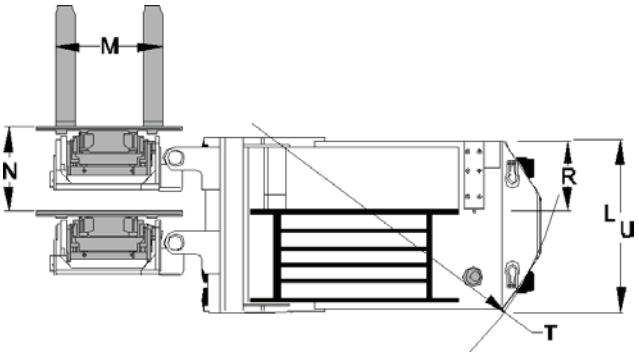

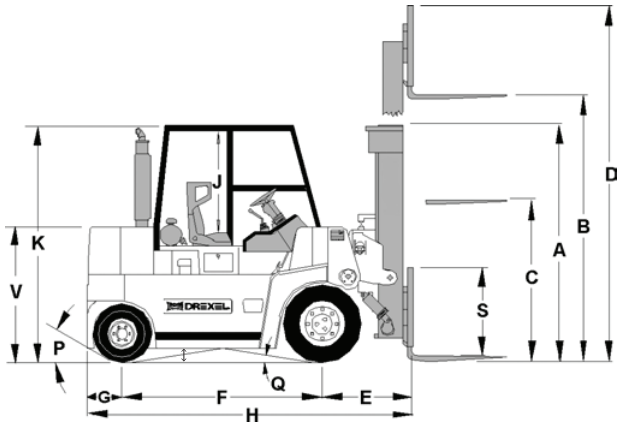

MAST DIMENSIONS

MAX FORK HEIGHT(B)		COLLAPSED HEIGHT (A)		FREE LIFT HEIGHT (C)		MAX OVERALL HEIGHT (D)	
In	M	In	M	In	M	In	M
Triple (3-Stage)							
181	4.60	89	2.26	55	1.40	223	5.66
187	4.75	91	2.31	57	1.45	229	5.82
196	4.98	95	2.41	61	1.55	238	6.05
215	5.46	103	2.62	71	1.80	257	6.53
240	6.10	113	2.87	79	2.01	282	7.16
Above Dimensions are Based on a 9" (23cm) Mast Underclearance							

AISLE DIMENSIONS

LOAD DEPTH X WIDTH	MINIMUM CLEAR AISLE
40" x 48" (1,000 x 1,200mm)	68" (1,727mm)
48" x 40" (1,200 x 1,000mm)	72" (1,829mm)
Minimum Clear Transfer Aisle with Load	176" (447cm)

Landoll continuously improves products. We reserve the right to make any changes in illustrations, specifications, equipment, and prices without prior notice and without changes on previous models.

www.landoll.com/mhp | 1900 North Street | Marysville, KS 66508 | (800) 428-5655

Intertek
YOUR INDUSTRY CONNECTION MHEDA
MATERIAL HANDLING INDUSTRY OF AMERICA Member Company
Member IWLA The Resource for Warehouse Logistics
IARW International Association of Refrigerated Warehouses