https://truckmanualshub.com/

RT45

Tier 4

Operator’s Manual

Issue 3.0

053-2746

https://truckmanualshub.com/

Overview

Chapter Contents

Serial Number Location 2

Intended Use 3

Equipment Modification 3

Unit Components 4

Operator Orientation. 5

About This Manual 5

- Bulleted Lists. 5
- Numbered Lists 5

https://truckmanualshub.com/

Serial Number Location

Record serial numbers and date of purchase in spaces provided. RT45 (2) and engine (1) serial numbers are located as shown.

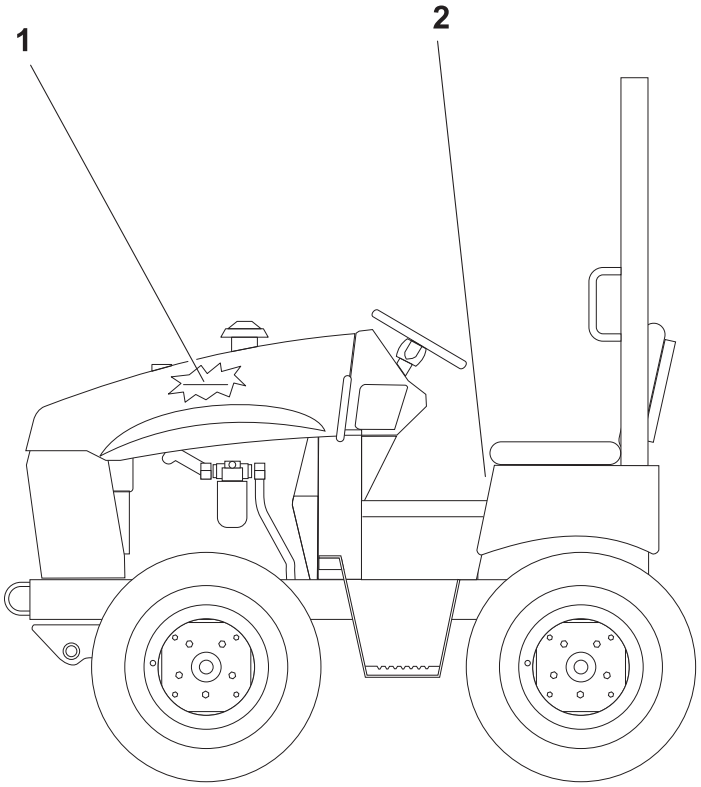

t42om017h.eps

Date of manufacture	
Date of purchase	
RT45 serial number	
Engine serial number	
Front attachment serial number	
Rear attachment serial number	
Trailer serial number	

https://truckmanualshub.com/

Intended Use

The RT45 is a riding trencher designed to install buried service lines of various sizes using a variety of Ditch Witch® attachments.

Attachment		Max. width/diameter	Max. depth
A323 backhoe		18 in (460 mm)	93.2 in (2.4 m)
H313 trencher		12 in (305 mm)	63 in (1.6 m)
H314 trencher, center		12 in (305 mm)	52 in (1.3 m)
H314 trencher, offset		8 in (200 mm)	52 in (1.3 m)
H350 combo			
	trencher	8 in (200 mm)	42 in (1.1 m)
	plow	3 in (76 mm)	24 in (610 mm)
H342 saw		5 in (130 mm)	18 in (455 mm)
H331 plow		3 in (76 mm)	24 in (610 mm)
MT12 MicroTrencher		0.75-1.25 in (19-32 mm)	6-12.5 in (165-318 mm)

The unit is designed for operation in temperatures typically experienced in earth moving and construction work environments. Provisions may be required to operate in extreme temperatures. Contact your Ditch Witch dealer. Use in any other way is considered contrary to the intended use.

The RT45 should be used with genuine Ditch Witch chain, teeth, and sprockets. It should be operated, serviced, and repaired only by persons familiar with its particular characteristics and acquainted with the relevant safety procedures.

Equipment Modification

This equipment was designed and built in accordance with applicable standards and regulations. Modification of equipment could mean that it will no longer meet regulations and may not function properly or in accordance with the operating instructions. Modification of equipment should only be made by competent personnel possessing knowledge of applicable standards, regulations, equipment design functionality/requirements and any required specialized testing.

https://truckmanualshub.com/

Unit Components

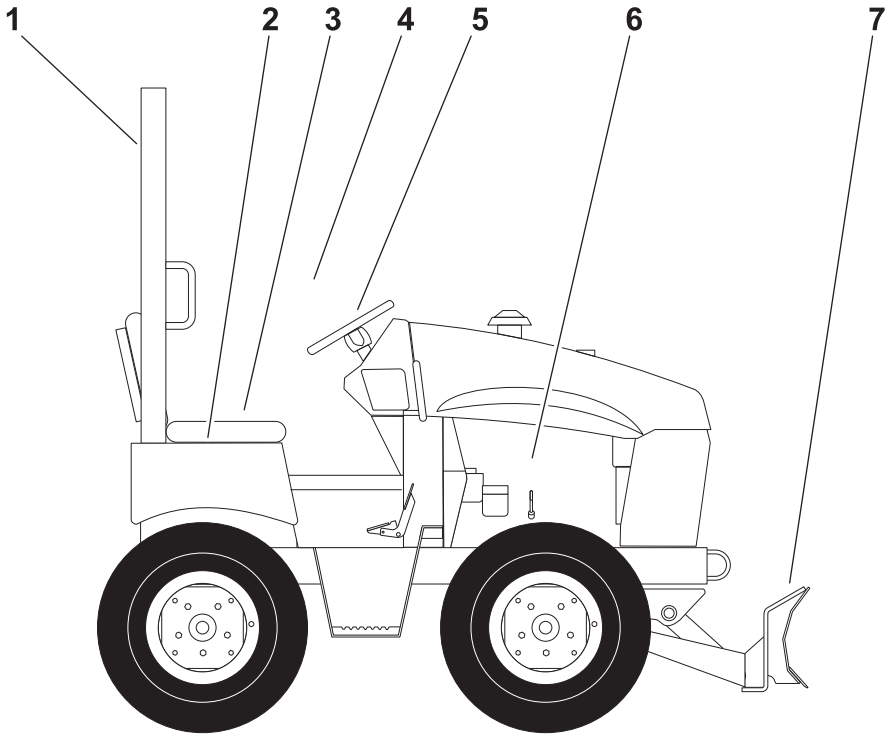

t42om018h.eps

1. Rollover Protective Structure (ROPS)
2. Right console
3. Left console
4. Operator's station
5. Center console
6. Engine compartment
7. Backfill blade

https://truckmanualshub.com/

Operator Orientation

1. Front of unit
2. Right of unit
3. Rear of unit
4. Left of unit

Right and left sides of machine are determined by facing front of unit while seated at the controls.

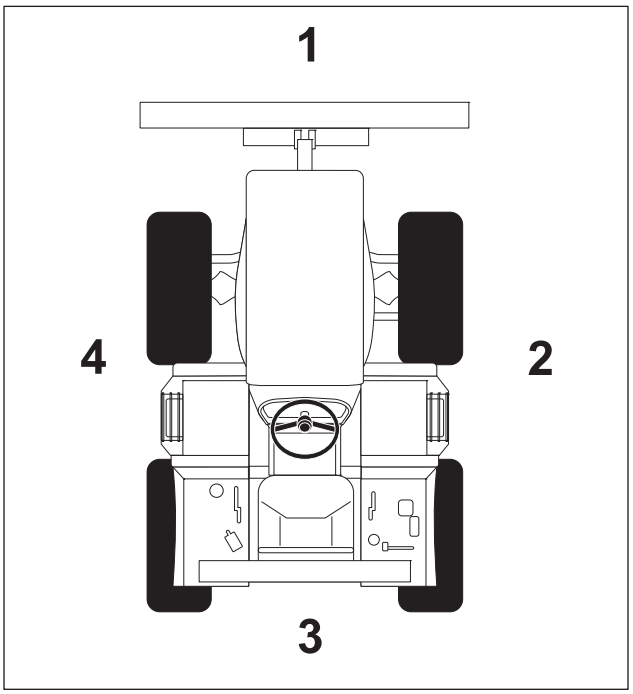

t28om060h.eps

About This Manual

This manual contains information for the proper use of this machine. See **Operation Overview** for basic operating procedures. Cross references such as "See page 50" will direct you to detailed procedures.

Bulleted Lists

Bulleted lists provide helpful or important information or contain procedures that do not have to be performed in a specific order.

Numbered Lists

Numbered lists contain illustration callouts or list steps that must be performed in order.

https://truckmanualshub.com/

https://truckmanualshub.com/

Foreword

This manual is an important part of your equipment. It provides safety information and operation instructions to help you use and maintain your Ditch Witch® equipment.

Read this manual before using your equipment. Keep it with the equipment at all times for future reference. If you sell your equipment, be sure to give this manual to the new owner.

If you need a replacement copy, contact your Ditch Witch dealer. If you need assistance in locating a dealer, visit our website at **www.ditchwitch.com** or write to the following address:

The Charles Machine Works, Inc.
Attn: Marketing Department
PO Box 66
Perry, OK 73077-0066
USA

The descriptions and specifications in this manual are subject to change without notice. The Charles Machine Works, Inc. reserves the right to improve equipment. Some product improvements may have taken place after this manual was published. For the latest information on Ditch Witch equipment, see your Ditch Witch dealer.

Thank you for buying and using Ditch Witch equipment.

https://truckmanualshub.com/

RT45
Operator's Manual

This manual covers the following model: RT45 Tier 4.

Issue number 3.0/OM-06/16
Part number 053-2746

Copyright 2014, 2016
by The Charles Machine Works, Inc.

Ditch Witch® and Ditch Witch are registered trademarks of The Charles Machine Works, Inc.

This product and its use may be covered by one or more patents at http://patents.charlesmachine.works.

https://truckmanualshub.com/

Contents

Overview 1
machine serial number, information about the type of work this machine is designed to perform, basic machine components, and how to use this manual

Foreword 7
part number, revision level, and publication date of this manual, and factory contact information

Safety 11
machine safety alerts and emergency procedures

Controls 29
machine controls, gauges, and indicators and how to use them

Operation Overview 61
an overview for completing a job with this machine: planning, setting up, installing product, and restoring the jobsite; with cross references to detailed procedures

Prepare 65
procedures for inspecting and classifying the jobsite, planning the installation path, and preparing the jobsite for work

Drive 71
procedures for startup, cold start, driving, and shutdown

Transport 77
procedures for lifting, hauling, and towing

Backhoe 87
procedures for digging with backhoe

Trench 95
procedures for trenching

Plow 105
procedures for plowing

Saw 101
procedures for sawing

https://truckmanualshub.com/

Drill 111
procedures for drilling

Microtrench 123
procedures for microtrenching

Systems and Equipment 133
chain, teeth, sprockets, and optional equipment

Complete the Job 139
procedures for backfilling and restoring the jobsite and rinsing and storing equipment

Service 141
service intervals and instructions for this machine including lubrication, replacement of wear items, and basic maintenance

Specifications 187
machine specifications including weights, measurements, power ratings, and fluid capacities

Support 205
the warranty policy for this machine, and procedures for obtaining warranty consideration and training

Service Record 209
a record of major service performed on the machine

https://truckmanualshub.com/

Safety

Chapter Contents

Guidelines 12

California Proposition 65 Warning 12

Emergency Procedures 13

- Electric Strike Description 13
- If an Electric Line is Damaged 14
- If a Gas Line is Damaged 15
- If a Fiber Optic Cable is Damaged 16
- If Machine Catches on Fire 16

Safety Alert Classifications 19

Machine Safety Alerts 20

https://truckmanualshub.com/

Guidelines

When you see this safety alert sign, carefully read and follow all instructions.
YOUR SAFETY IS AT STAKE. Read this entire section before using your equipment.

Follow these guidelines before operating any jobsite equipment:

- Complete proper training and read operator's manual before using equipment.
- Mark proposed path with white paint and have underground utilities located before working. In the US or Canada, call 811 (US) or 888-258-0808 (US and Canada). Also contact any local utilities that do not participate in the One-Call service. In countries that do not have a One-Call service, contact all local utility companies to have underground utilities located.
- Classify jobsite based on its hazards and use correct tools and machinery, safety equipment, and work methods for jobsite.
- Mark jobsite clearly and keep spectators away.
- Wear personal protective equipment.
- Review jobsite hazards, safety and emergency procedures, and individual responsibilities with all personnel before work begins. Safety videos are available from your Ditch Witch® dealer or at www.ditchwitch.com/safe.
- Fully inspect equipment before operating. Repair or replace any worn or damaged parts. Replace missing or damaged safety shields and safety signs. Contact your Ditch Witch dealer for assistance.
- Use equipment carefully. Stop operation and investigate anything that does not look or feel right.
- Do not operate unit where flammable gas may be present.
- Only operate equipment in well-ventilated areas.
- Contact your Ditch Witch dealer if you have any question about operation, maintenance, or equipment use.
- Complete the equipment checklist located at www.ditchwitch.com/safe.

California Proposition 65 Warning

This product may contain chemicals known to the State of California to cause cancer, birth defects, or other reproductive harm.

- battery posts, terminals and related accessories
- engine exhaust
- ethylene glycol

https://truckmanualshub.com/

Emergency Procedures

WARNING Jobsite hazards could cause death or serious injury. Use correct equipment and work methods. Use and maintain proper safety equipment.

Before operating any equipment, review emergency procedures and check that all safety precautions have been taken.

EMERGENCY SHUTDOWN - Turn ignition switch to stop position or push remote engine stop button (if equipped).

Electric Strike Description

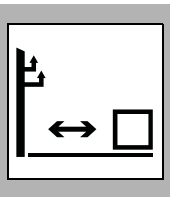

DANGER Electric shock. Contacting electric lines will cause death or serious injury. Know location of lines and stay away.

When working near electric cables, remember the following:

- Electricity follows all paths to ground, not just path of least resistance.
- Pipes, hoses, and cables will conduct electricity back to all equipment.
- Low voltage current can injure or kill. Many work-related electrocutions result from contact with less than 440 volts.

Most electric strikes are not noticeable, but indications of a strike include:

- power outage
- smoke
- explosion
- popping noises
- arcing electricity

If any of these occur, assume an electric strike has occurred.

https://truckmanualshub.com/

If an Electric Line is Damaged

If you suspect an electric line has been damaged and you are on tractor, DO NOT MOVE. Remain on tractor and take the following actions. The order and degree of action will depend upon the situation.

- Warn people nearby that an electric strike has occurred. Instruct them to leave the area and contact utility.
- Raise attachments and drive from immediate area.
- Contact utility company to shut off power.
- Do not return to jobsite or allow anyone into area until given permission by utility company.

If you suspect an electric line has been damaged and you are **off tractor**, DO NOT TOUCH TRACTOR. Take the following actions. The order and degree of action will depend upon the situation.

- LEAVE AREA. The ground surface may be electrified, so take small steps with feet close together to reduce the hazard of being shocked from one foot to the other. For more information, contact your Ditch Witch® dealer.
- Contact utility company to shut off power.
- Do not return to jobsite or allow anyone into area until given permission by utility company.

https://truckmanualshub.com/

If a Gas Line is Damaged

WARNING Fire or explosion possible. Fumes could ignite and cause burns. No smoking, no flame, no spark. 275-419 (2P)

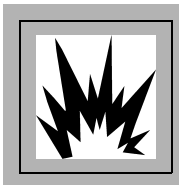

WARNING Explosion possible. Serious injury or equipment damage could occur. Follow directions carefully.

If you suspect a gas line has been damaged, take the following actions. The orders and degree of action will depend on the situation.

- Immediately shut off engine(s), if this can be done safely and quickly.
- Remove any ignition source(s), if this can be done safely and quickly.
- Warn others that a gas line has been cut and that they should leave the area.
- Leave jobsite as quickly as possibSSle.
- Immediately call your local emergency phone number and utility company.
- If jobsite is along street, stop traffic from driving near jobsite.
- Do not return to jobsite until given permission by emergency personnel and utility company.

https://truckmanualshub.com/

If a Fiber Optic Cable is Damaged

Do not look into cut ends of fiber optic or unidentified cable. Vision damage can occur. Contact utility company.

If Machine Catches on Fire

Perform emergency shutdown procedure and then take the following actions. The order and degree of action will depend on the situation.

- Immediately move battery disconnect switch (if equipped and accessible) to disconnect position.
- If fire is small and fire extinguisher is available, attempt to extinguish fire.
- If fire cannot be extinguished, leave area as quickly as possible and contact emergency personnel.

https://truckmanualshub.com/

Safety Alert Classifications

These classifications and the icons defined on the following pages work together to alert you to situations which could be harmful to you, jobsite bystanders or your equipment. When you see these words and icons in the book or on the machine, carefully read and follow all instructions. YOUR SAFETY IS AT STAKE.

Watch for the three safety alert levels: **DANGER**, **WARNING** and **CAUTION**. Learn what each level means.

DANGER indicates a hazardous situation that, if not avoided, will result in death or serious injury. This signal word is to be limited to the most extreme situations.

WARNING indicates a hazardous situation that, if not avoided, could result in death or serious injury.

CAUTION indicates a hazardous situation that, if not avoided, could result in minor or moderate injury.

Watch for two other words: ***NOTICE*** and **IMPORTANT**.

NOTICE indicates information considered important, but not hazard-related (e.g., messages relating to property damage).

IMPORTANT can help you do a better job or make your job easier in some way.

https://truckmanualshub.com/

Machine Safety Alerts

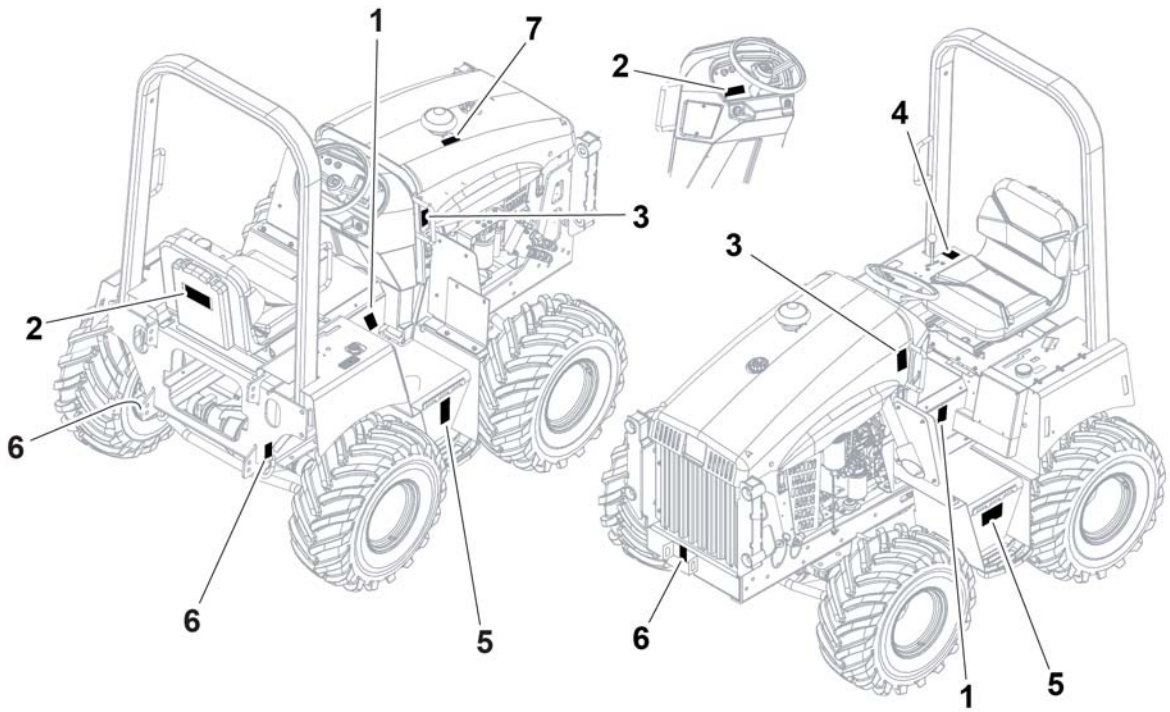

Decal_RT45.png

1		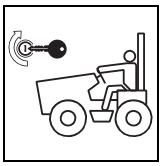	**WARNING** Runaway possible. Start from operator's position only. 275-070
2		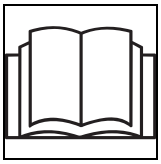	**WARNING** Read operator's manual. Know how to use all controls. Your safety is at stake. 273-475
3		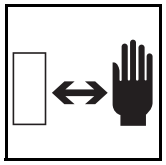	**CAUTION** Hot parts may cause burns. Do not touch until cool or wear gloves. 273-423

https://truckmanualshub.com/

4		**WARNING** Rollover could kill or crush. Wear seat belt. 275-303
5		**WARNING** Fall possible. Riders can fall from machine and be injured or killed. Only operator is allowed on machine. 273-487
6		Tiedown location. See Transport chapter for more information. 274-318
7		**WARNING** Fire or explosion possible. Do not use starter fluid. 273-459

https://truckmanualshub.com/

Attachment Safety Alerts

A323

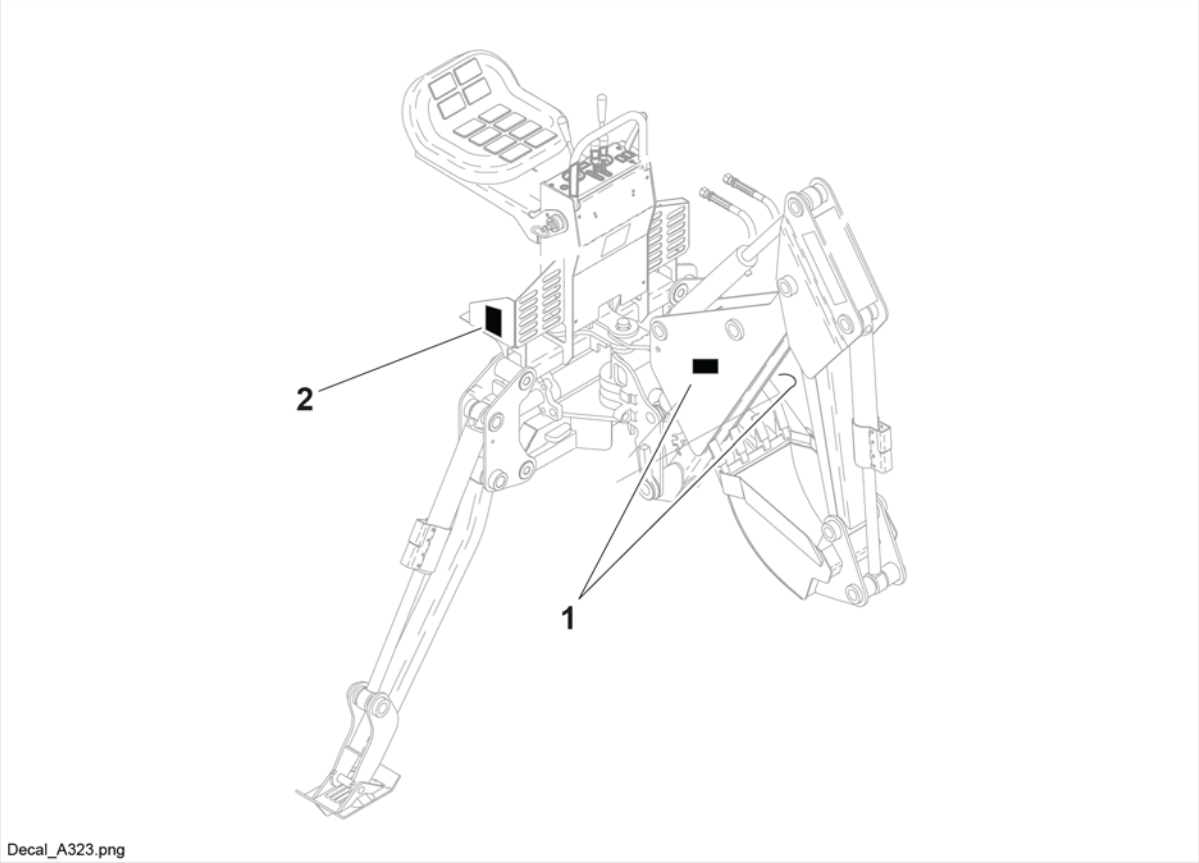

1	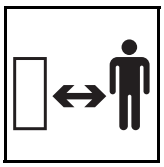	**WARNING** Crushing weight could cause death or serious injury. Use proper procedures and equipment or stay away.
2	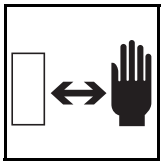	**WARNING** Moving parts could cut off hand. Keep hands away.

https://truckmanualshub.com/

H313

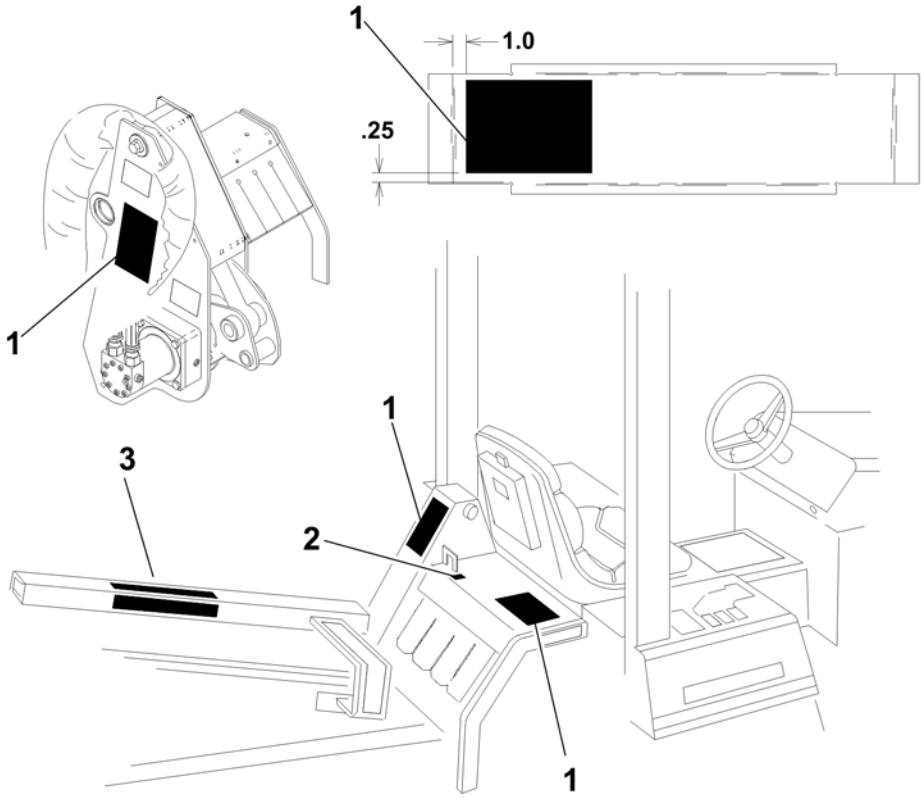

Decal, H313, 3D

1	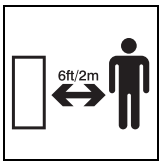	**DANGER** Moving digging teeth will cause death or serious injury. Trench cave-in can cause you to fall. Stay away. 274-002
2		Lift point. See Transport chapter for more information. 274-442
3		**DANGER** Moving digging teeth will cause death or serious injury. Trench cave-in can cause you to fall. Stay away.

https://truckmanualshub.com/

H314

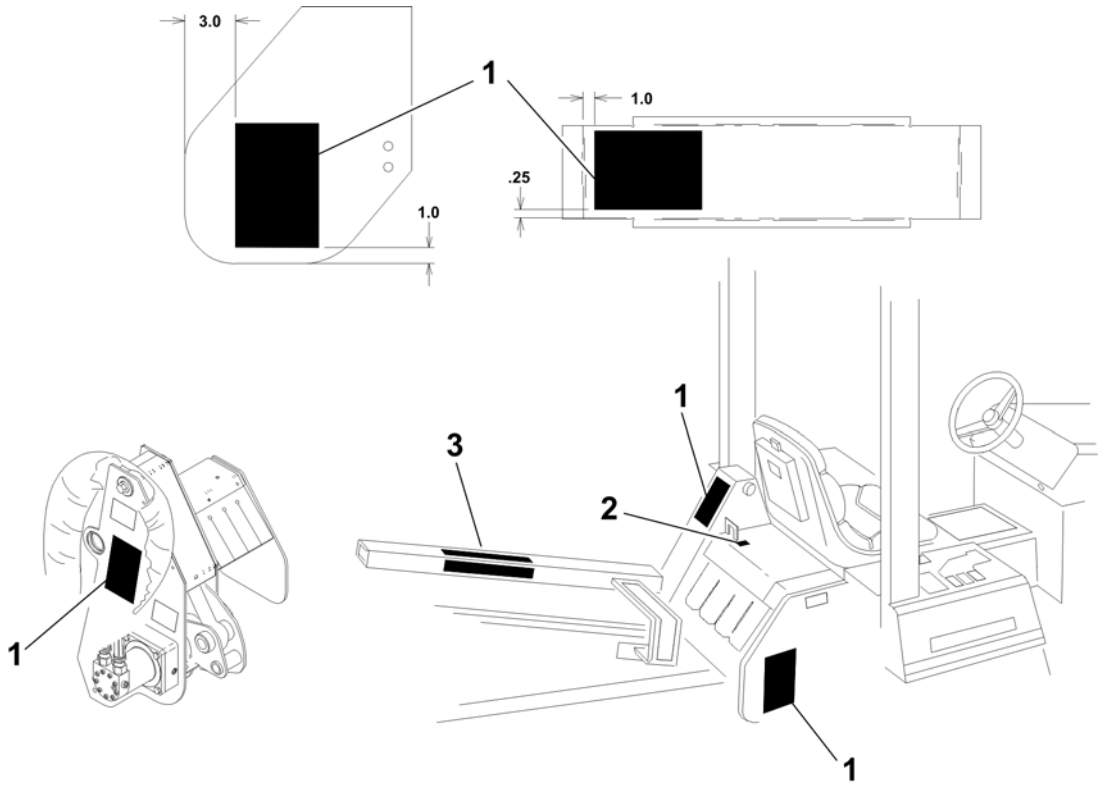

Decal_H314_3D

1	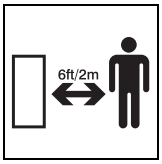	**DANGER** Moving digging teeth will cause death or serious injury. Trench cave-in can cause you to fall. Stay away. 274-002
2		Lift point. See Transport chapter for more information. 274-442
3		**DANGER** Moving digging teeth will cause death or serious injury. Trench cave-in can cause you to fall. Stay away.

https://truckmanualshub.com/

H350

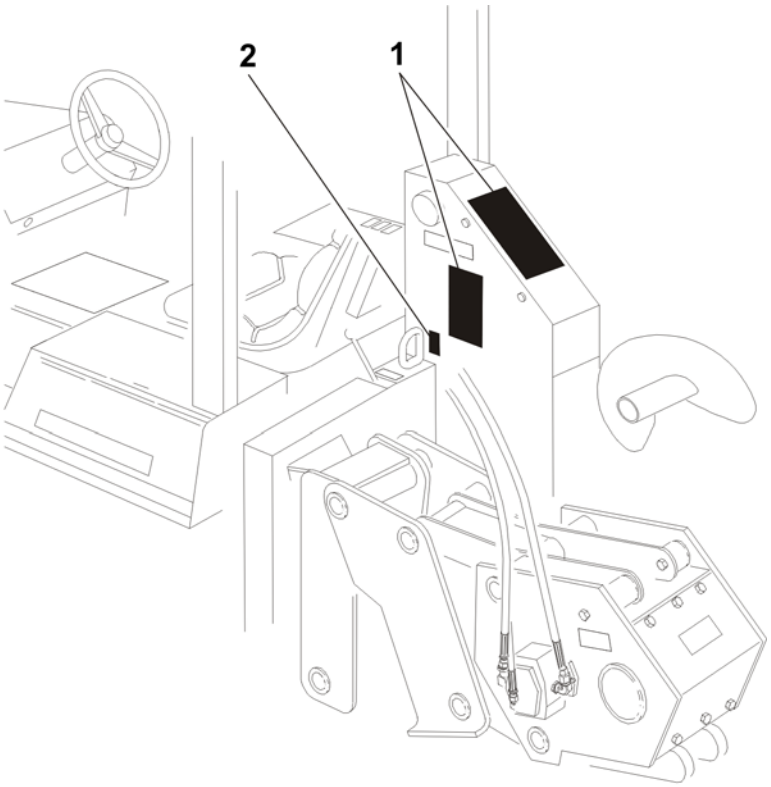

1	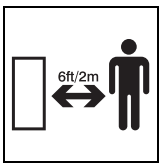	**DANGER** Moving digging teeth will cause death or serious injury. Trench cave-in can cause you to fall. Stay away. 274-002
2		Lift point. See Transport chapter for more information. 274-442

https://truckmanualshub.com/

H342

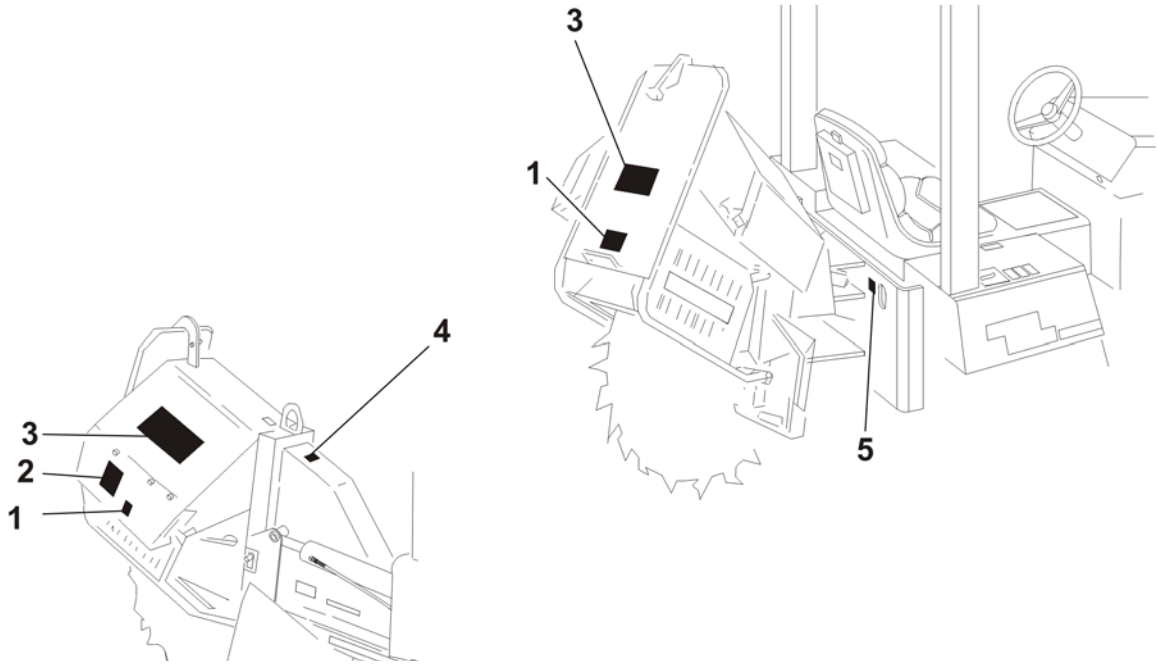

1	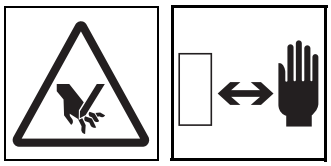	**WARNING** Moving parts could cut off hand. Keep hands away. 275-184
2		**CAUTION** Flying objects thrown by machine may strike people. Wear safety glasses and hard hat. 275-193
3	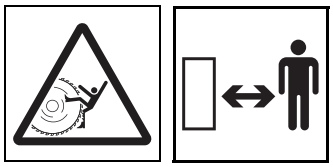	**DANGER** Moving digging teeth will cause serious injury or death. Stay away. 275-443
4	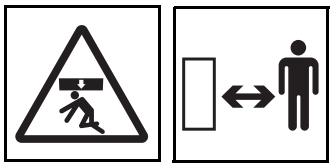	**WARNING** Crushing weight could cause death or serious injury. Use proper procedures and equipment or stay away. 275-326
5		Lift point. See Transport chapter for more information. 274-442

https://truckmanualshub.com/

H331

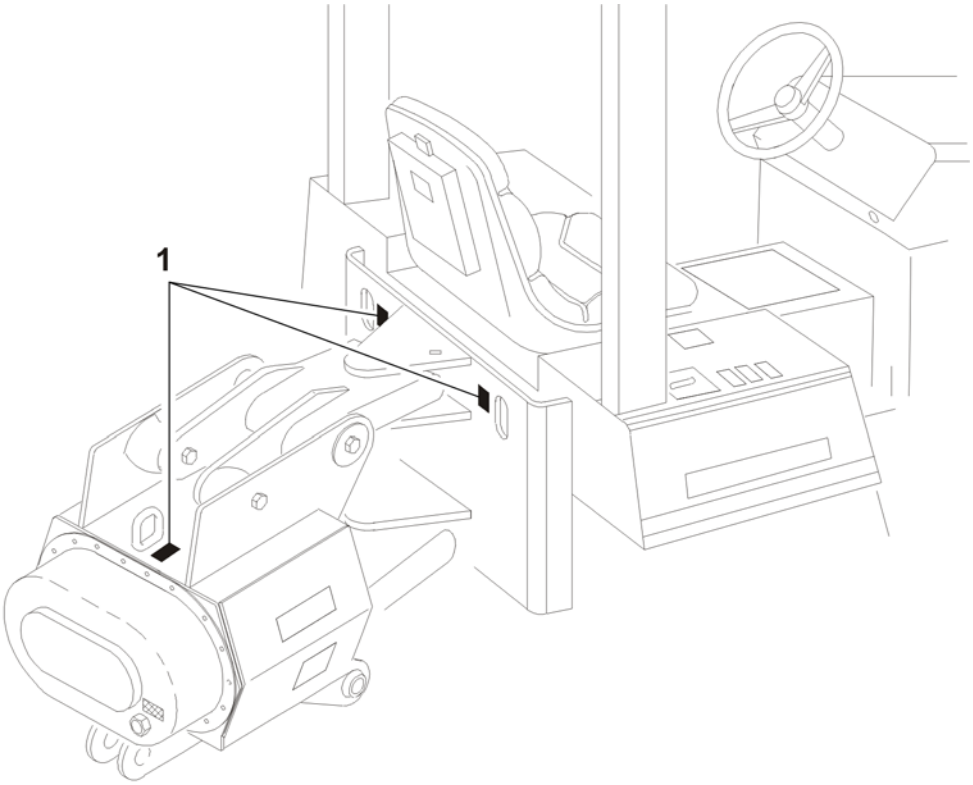

1		Lift point. See Transport chapter for more information.	274-442

https://truckmanualshub.com/

MT12

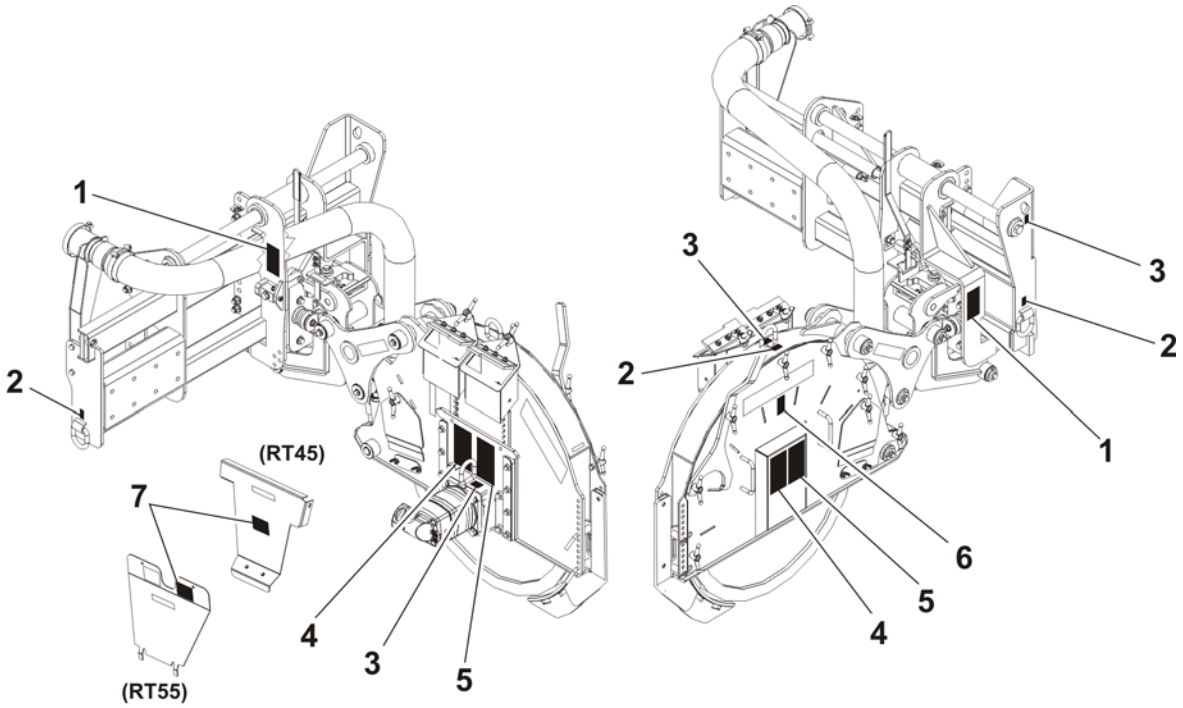

1	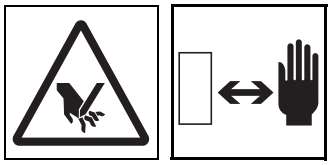	WARNING Moving parts could cut off hand. Keep hands away. 275-184
2		Tiedown location. See Transport chapter for more information. 274-318
3		Lift point. See Transport chapter for more information. 274-442
4		CAUTION Flying objects thrown by machine may strike people. Wear safety glasses and hard hat. 275-193

https://truckmanualshub.com/

5	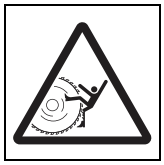 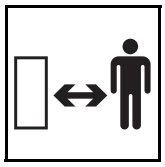	**DANGER** Moving digging teeth will cause serious injury or death. Stay away. 275-443
6	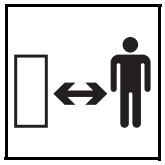	**CAUTION** Hot parts may cause burns. Do not touch until cool or wear gloves. 275-355
7		**WARNING** Fall possible. Riders can fall from machine and be injured or killed. Only operator is allowed on machine. 273-487

RWIII/RWIV

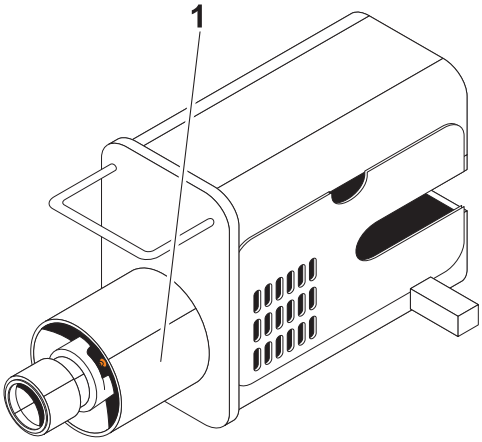

Decal_RW_III

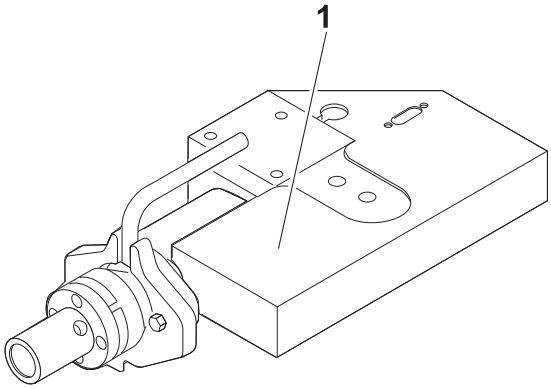

Decal_RW_IV

1	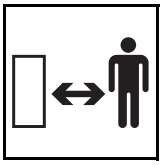	**DANGER** Turning shaft will kill you or crush arm or leg. Stay away. 275-197

https://truckmanualshub.com/

https://truckmanualshub.com/

Controls

Chapter Contents

Center Console 30

- Controls 30
- Graphic Display 33

Right Fender 37

- Tractor Controls 37
- Trencher Controls 40
- Combo Controls 44
- Saw Controls. 44
- Plow Controls 46
- Microtrencher Controls 48

Backhoe Console 52

Left Fender 52

Seat 58

Battery Disconnect 59

https://truckmanualshub.com/

Center Console

Controls

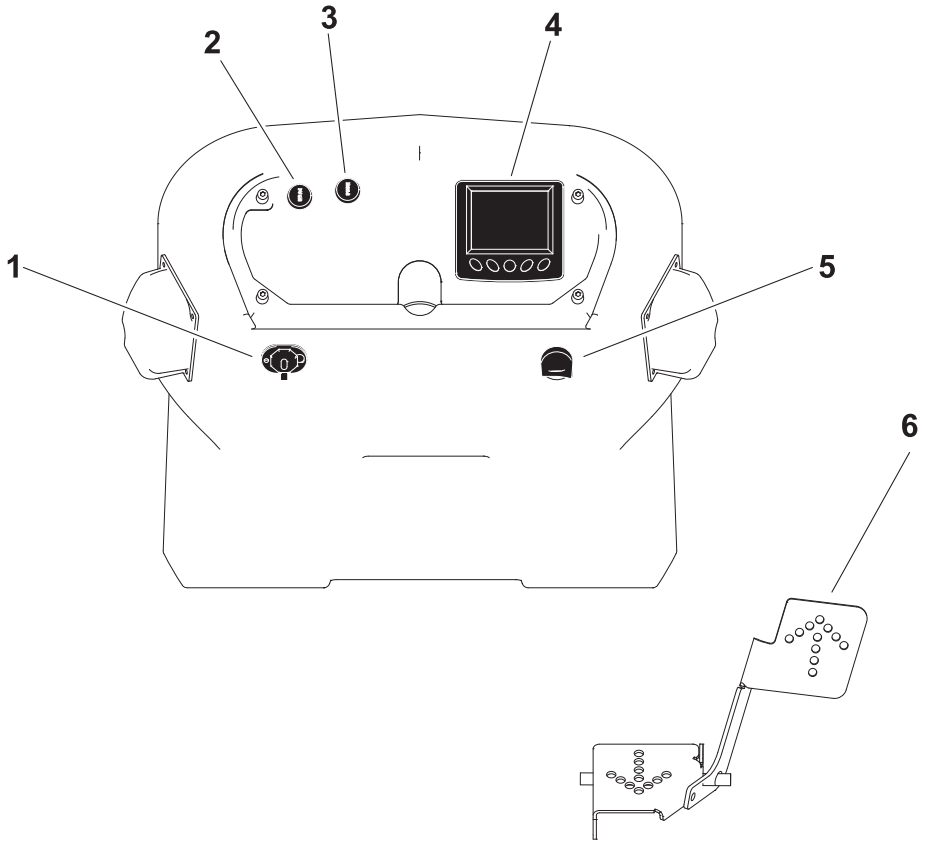

t42om001h.eps

1. Auxiliary power outlet
2. Engine override switch
3. Horn
4. Graphic display
5. Ignition switch
6. Ground drive foot control

https://truckmanualshub.com/

Item	Description	Notes
1. Auxiliary power outlet 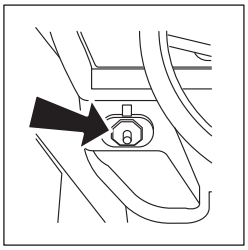 c00ic075c.eps	Provides power for other equipment.	Power output is 12V, 5A.
2. Engine override switch 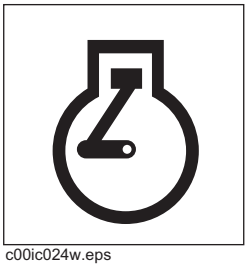 c00ic024w.eps	If engine shutdown indicator comes on, press to delay engine shutdown for 30 seconds.	This control allows a temporary override of engine shutdown. ***NOTICE:*** After 30 seconds, engine will again shut down unless fault condition has been cleared on diagnostic gauge.
3. Horn 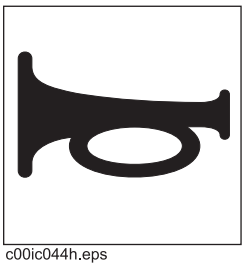 c00ic044h.eps	To sound horn, press.	
4. Graphic display 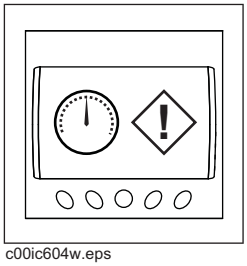 c00ic604w.eps	Graphic symbols are displayed for indicators and conditions previously shown with gauges.	**IMPORTANT:** If error code SPN 190 FMI 8 appears, clear and reset display. Restart engine.
5. Ignition switch 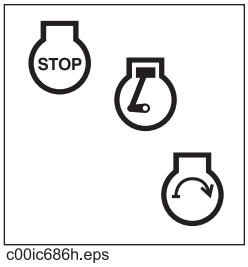 c00ic686h.eps	To start engine, insert key and turn clockwise. To stop engine, turn counterclockwise.	**IMPORTANT:** If engine does not start on first attempt, check that all interlock requirements have been met, return switch to STOP, and try again.

https://truckmanualshub.com/

Item	Description	Notes
6. Ground drive foot control 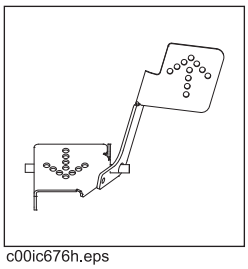 c00ic676h.eps	To move tractor forward, push top of pedal. To move tractor backward, push bottom of pedal. To increase speed in either direction, push pedal farther from center. To reduce speed in either direction, release pedal.	Pedal should automatically return to neutral when released.

https://truckmanualshub.com/

Graphic Display

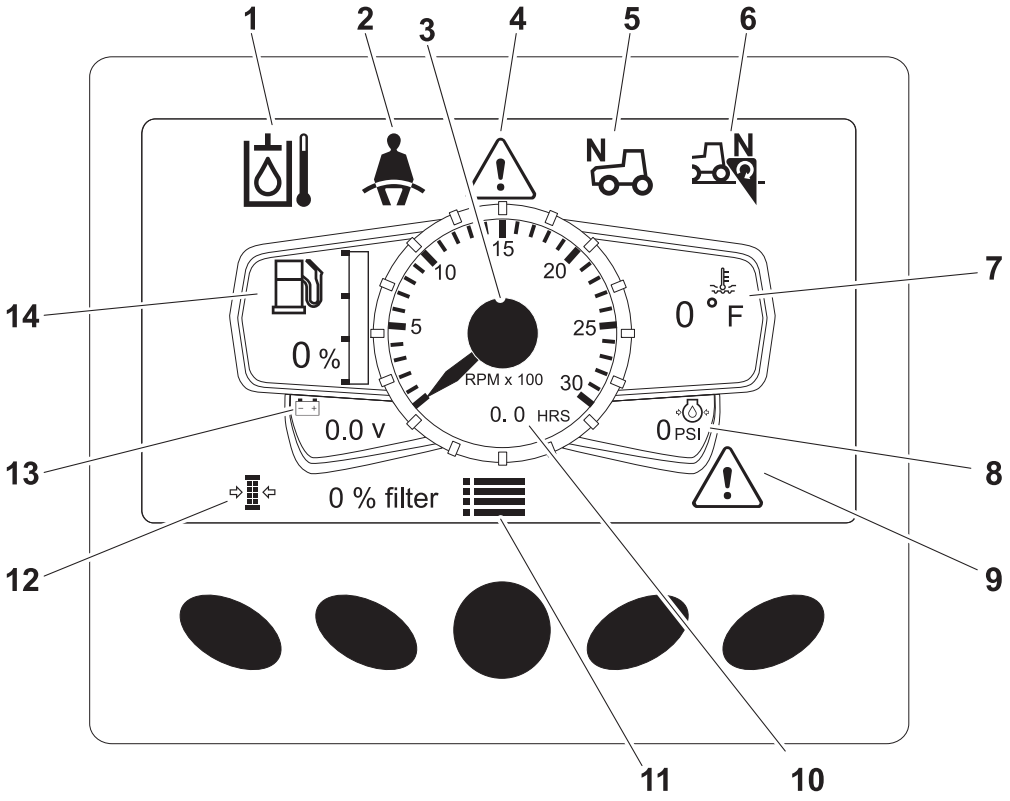

t42om014h.eps

1. Hydraulic fluid temperature indicator
2. Operator presence indicator
3. Engine speed (RPM)
4. Diagnostic message indicator
5. Ground drive neutral indicator
6. Attachment drive neutral indicator
7. Engine coolant temperature
8. Engine oil pressure indicator
9. Diagnostic menu button
10. Hourmeter
11. Settings menu button
12. Air filter restriction indicator
13. Electrical system voltage
14. Fuel level indicator

https://truckmanualshub.com/

Item	Description	Notes
1. Hydraulic fluid temperature indicator 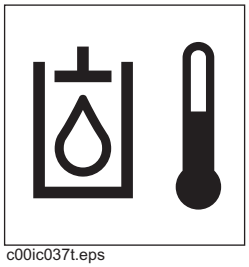 c00ic037t.eps	Lights if hydraulic fluid overheats. Light will come on briefly when engine is started.	If light remains on: • Check that engine fan is turning when engine is running. • Turn off engine and let it cool. • Check hydraulic fluid level. • Check front of hydraulic fluid cooler for debris.
2. Operator presence indicator 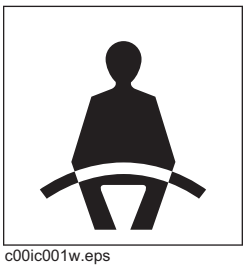 c00ic001w.eps	Lights when operator is in seat.	Part of the start interlock system. To start engine, • operator must be in seat, • attachment drive control must be in neutral, and • ground drive control must be in neutral.
3. Engine speed (RPM)	Displays engine RPM.	
4. Diagnostic message indicator	⚠ indicates a warning code STOP indicates a stop code	
5. Ground drive neutral indicator 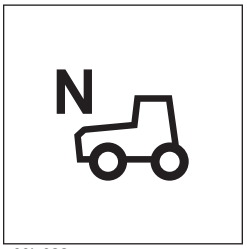 c00ic022w.eps	Lights when ground drive control is in neutral.	Part of the start interlock system. To start engine, • operator must be in seat, • attachment drive control must be in neutral, and • ground drive control must be in neutral.

https://truckmanualshub.com/

Item	Description	Notes
6. Attachment drive neutral indicator c00ic021w.eps	Lights when attachment drive/ direction control is in neutral.	Part of the start interlock system. To start engine, • operator must be in seat, • attachment drive control must be in neutral, and • ground drive control must be in neutral.
7. Engine coolant temperature 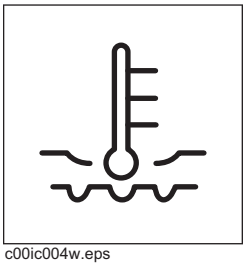 c00ic004w.eps	Will flash if engine coolant temperature rises above 230°F(110°C).	
8. Engine oil pressure indicator 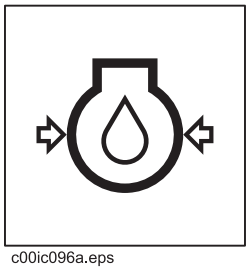 c00ic096a.eps	Will flash if oil pressure falls below 20 psi (1.38 bar). Light will come on briefly when engine is started.	If light remains on: • Turn off engine. • Check oil level. • If pressure is still low, consult engine manual.
9. Diagnostics menu button	Press button below icon to go to the Diagnostics menu.	
10. Hourmeter	Records engine operating time.	Use engine operating times to schedule service.
11. Settings menu button	Press button below icon to go to the Settings menu.	

https://truckmanualshub.com/

Item	Description	Notes
12. Air filter restriction indicator 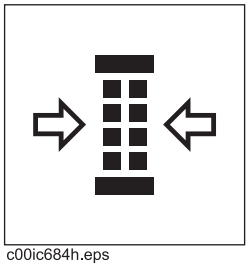 c00ic684h.eps	Indicator will begin flashing once the air filter is 25% unrestricted. Percentage will decrease as air filter becomes more restricted. For best results, replace filter between 25% and 0%. Reset after replacing air filter.	To view the air filter percentage before 25% unrestricted, press the diagnostics menu button at any time.
13. Electrical system voltage	Displays system voltage.	Should show 12-14V with engine running.
14. Fuel level indicator 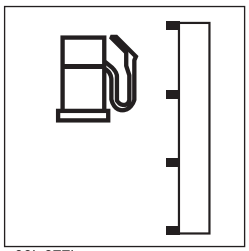 c00ic677h.eps	Displays fuel level in tank. Will flash if fuel level is below 10%.	Fuel tank holds 13 gal (49 L). ***NOTICE:*** Use ultra low sulfur fuel only.

https://truckmanualshub.com/

Right Fender

Tractor Controls

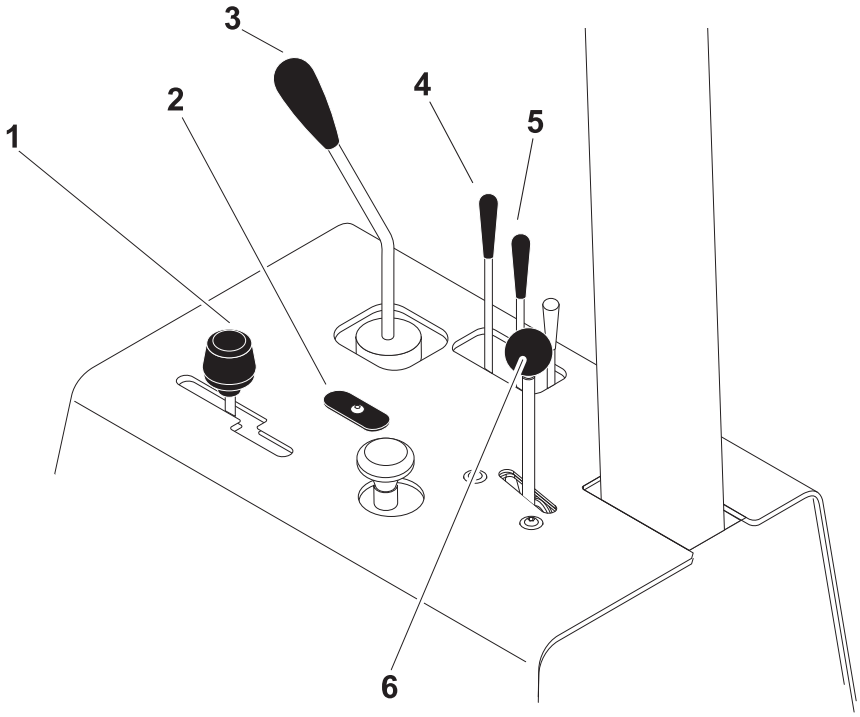

t42om002h.eps

1. Ground drive speed/direction control
2. Rear steer indicator*
3. Backfill blade control
4. Backfill blade tilt control *
5. Rear steer control*
6. Throttle

*optional

https://truckmanualshub.com/

Item	Description	Notes
1. Ground drive speed/ direction control 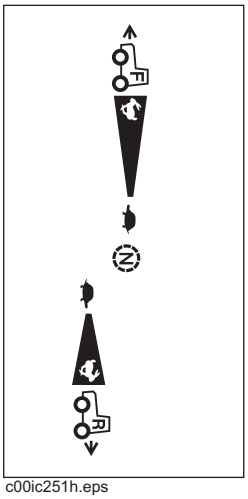 c00ic251h.eps	To go forward, push. To go backward, pull. To go faster in either direction, move farther from center. To stop, move to neutral.	Control does not automatically return to neutral position when released.
2. Rear steer indicator 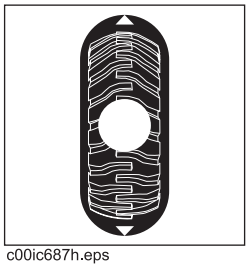 c00ic687h.eps	Rotates to displays position of rear tires.	
3. Backfill blade control 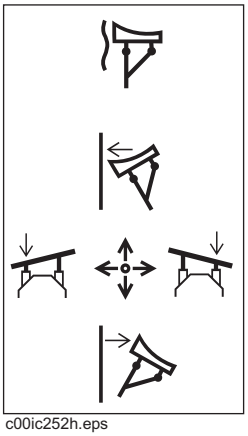 c00ic252h.eps	To lower blade, push. To put blade in float, push fully forward. To raise blade, pull. To swing blade to right, move right. To swing blade to left, move left.	

https://truckmanualshub.com/

Item	Description	Notes
4. Backfill blade tilt control 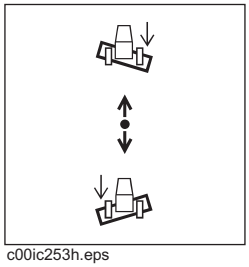 c00ic253h.eps	To tilt right side of blade down, push. To tilt left side of blade down, pull.	
5. Rear steer control 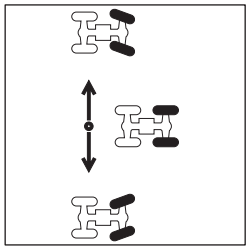 c00ic080c.eps	To turn rear tires right, push until tires reach desired position, then release. To turn rear tires left, pull until tires reach desired position, then release.	
6. Throttle 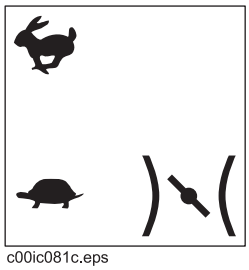 c00ic081c.eps	To increase engine speed, push. To decrease engine speed, pull.	

https://truckmanualshub.com/

Trencher Controls

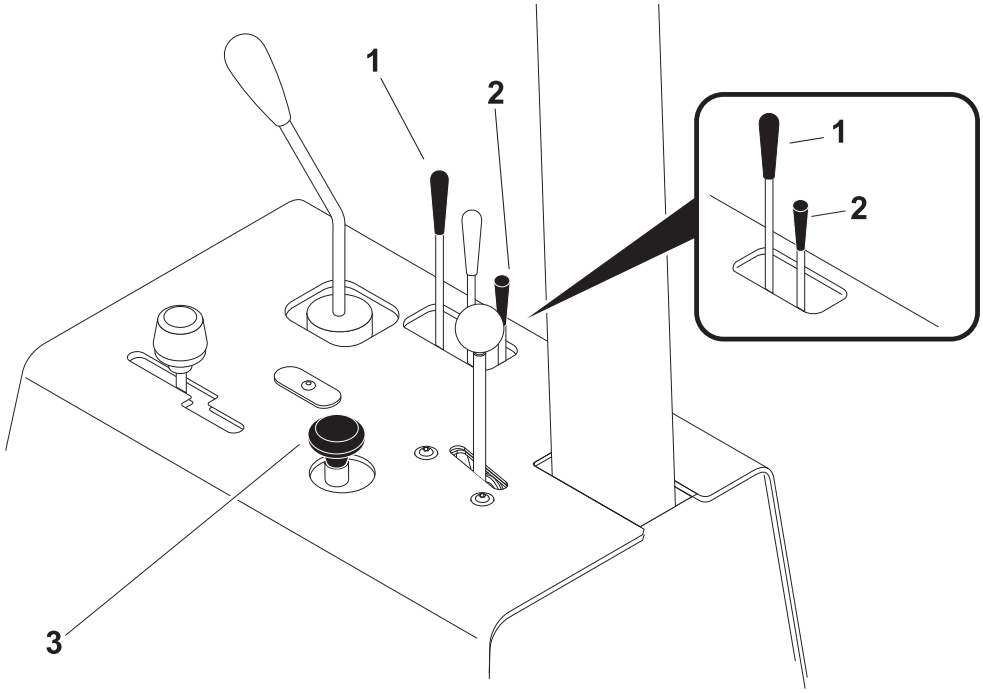

t42om003h.eps

Note: Control configuration with rear steer option is shown in main illustration. Control configuration without rear steer is shown in balloon.

1. Trencher slide control*
2. Boom lift control
3. Backfill blade tilt/trencher slide selector*

*H314 only

Item	Description	Notes
1. Trencher slide control 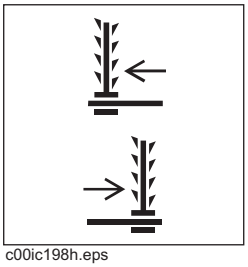 c00ic198h.eps	To slide trencher right, push. To slide trencher left, pull.	

https://truckmanualshub.com/

Item	Description	Notes
2. Boom lift control 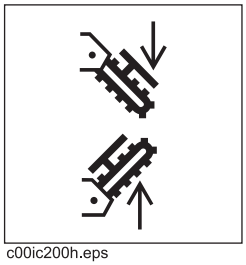 c00ic200h.eps	To lower, push. To raise, pull.	
3. Backfill blade tilt/ trencher slide selector 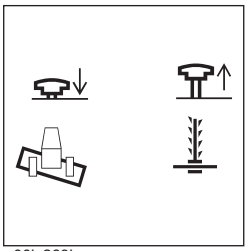 c00ic263h.eps	To control backfill blade tilt, push. To control trencher slide, pull.	

https://truckmanualshub.com/

Combo Controls

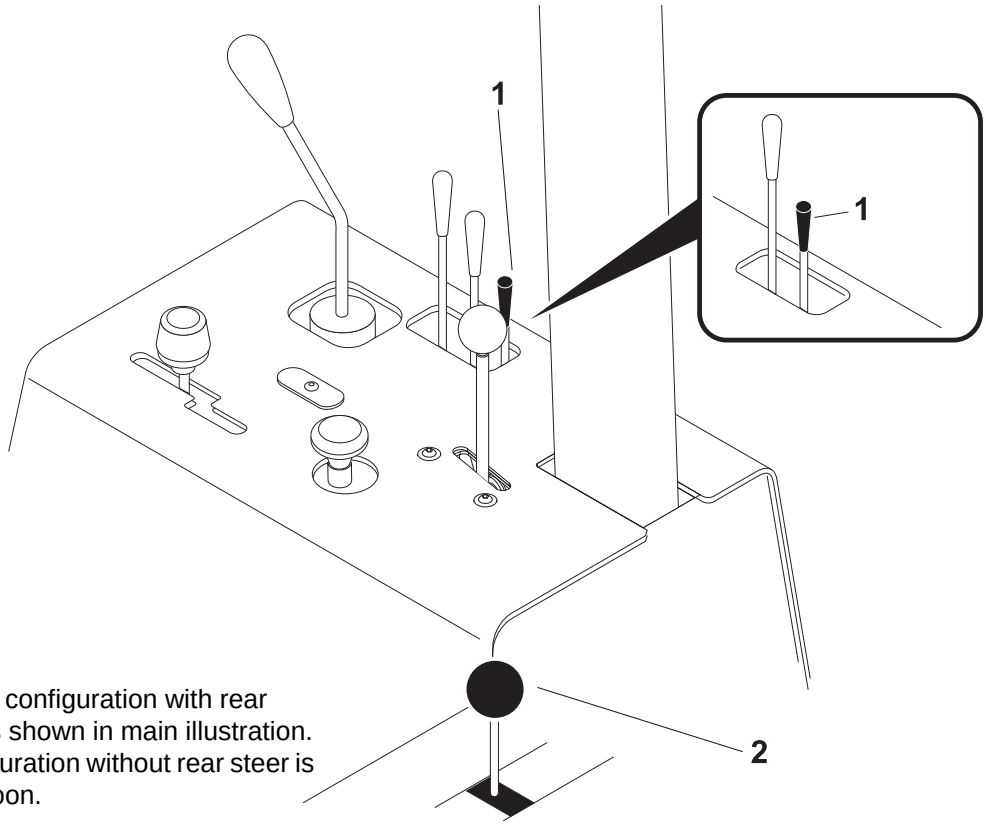

Note: Control configuration with rear steer option is shown in main illustration. Control configuration without rear steer is shown in balloon.

t42om024h.eps

1. Trencher/Plow lift control
2. Trencher/plow select control

Item	Description	Notes
1. Trencher/Plow lift control 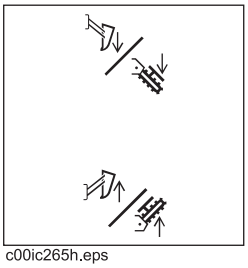 c00ic265h.eps	To raise selected attachment, pull. To lower selected attachment, push.	

https://truckmanualshub.com/

Item	Description	Notes
2. Trencher/plow select control 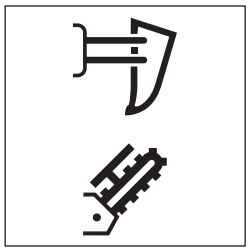 c00ic090c.eps	To select plow, push. To select trencher, pull.	

https://truckmanualshub.com/

Saw Controls

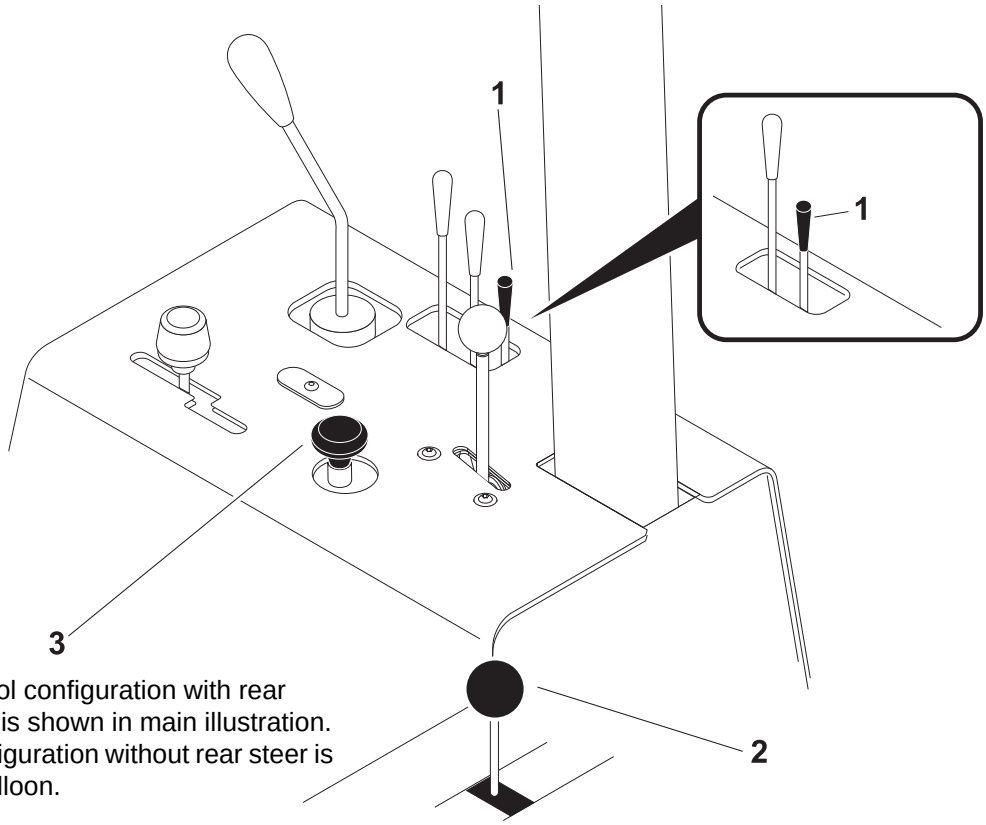

Note: Control configuration with rear steer option is shown in main illustration. Control configuration without rear steer is shown in balloon.

t42om005h.eps

1. Saw swing control
2. Saw lift control
3. Backfill blade tilt/saw swing selector

Item	Description	Notes
1. Saw swing control 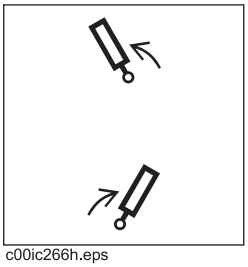 c00ic266h.eps	To swing saw to left, pull. To swing saw to right, push.	

https://truckmanualshub.com/

Item	Description	Notes
2. Saw lift control 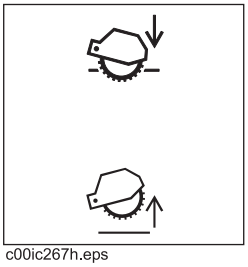 c00ic267h.eps	To lower, push. To raise, pull.	
3. Backfill blade tilt/saw swing selector 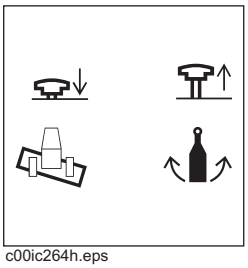 c00ic264h.eps	To control backfill blade tilt, push. To control saw swing, pull.	

https://truckmanualshub.com/

Plow Controls

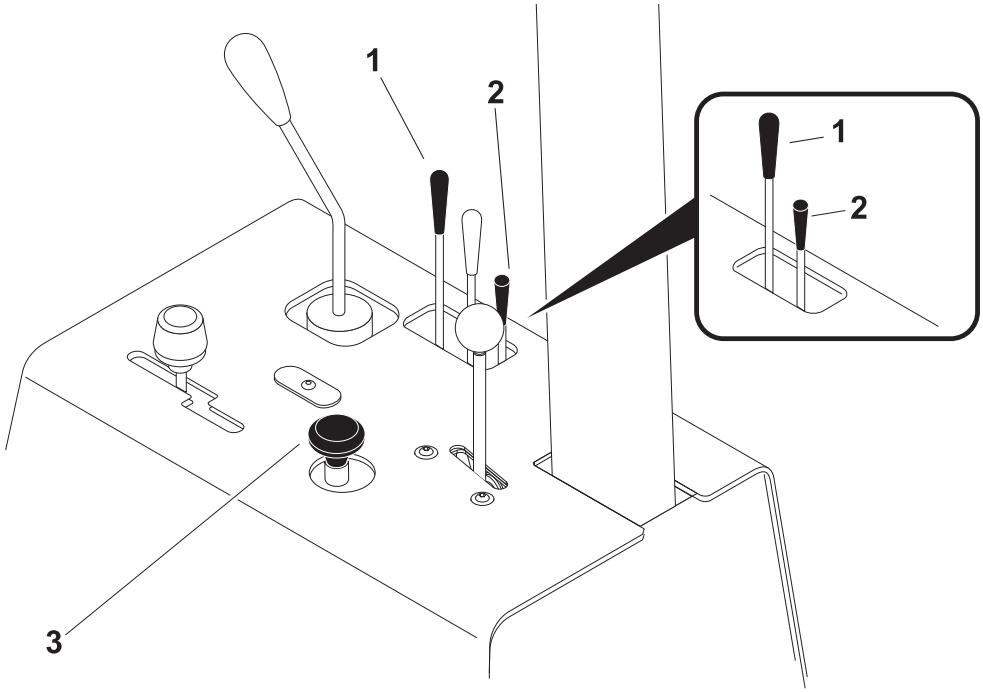

Note: Control configuration with rear steer option is shown in main illustration. Control configuration without rear steer is shown in balloon.

t42om003h.eps

1. Plow swing control
2. Plow lift control
3. Backfill blade tilt/plow swing selector

Item	Description	Notes
1. Plow swing control 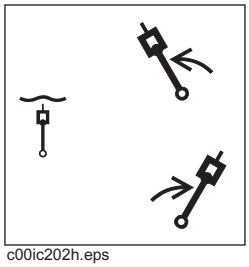 c00ic202h.eps	To swing left, pull. To swing right, push.	

https://truckmanualshub.com/

Item	Description	Notes
2. Plow lift control c00ic204h.eps	To raise, pull. To lower, push.	
3. Backfill blade tilt/plow swing selector 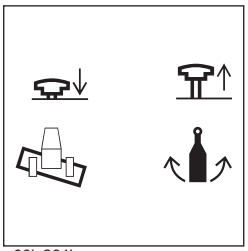 c00ic264h.eps	To control backfill blade tilt, push. To control plow swing, pull.	Use when optional 6-way backfill blade is installed.

https://truckmanualshub.com/

Microtrencher Controls

Tractor

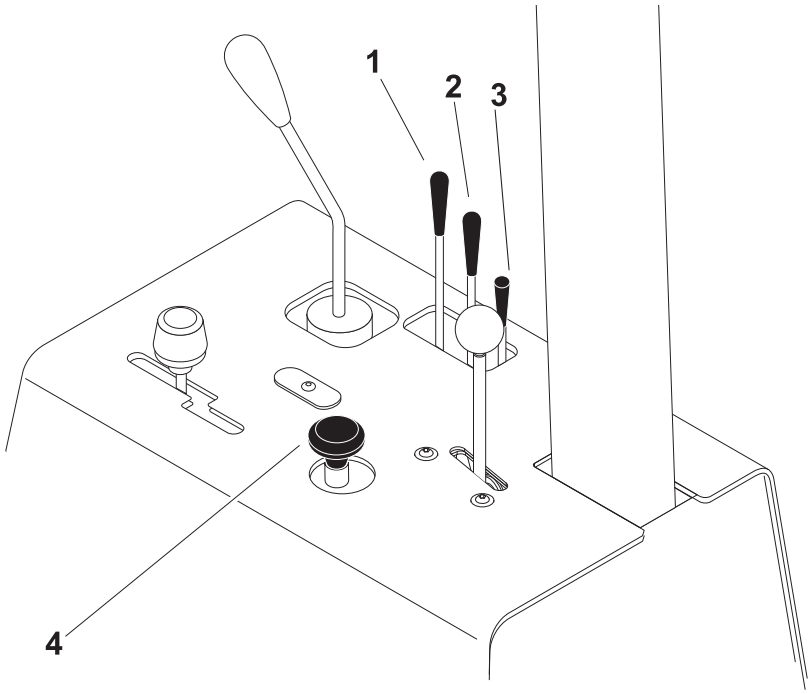

t42om006h.eps

1. Traverse (slide) control
2. Level control
3. Lift control
4. Backfill blade tilt / Traverse selector

Item	Description	Notes
1. Traverse (slide) control 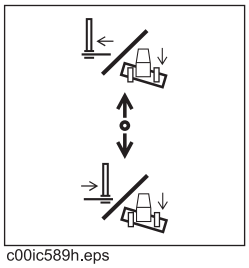 c00ic589h.eps	To slide microtrencher right, push. To slide microtrencher left, pull.	

https://truckmanualshub.com/

Item	Description	Notes
2. Level control 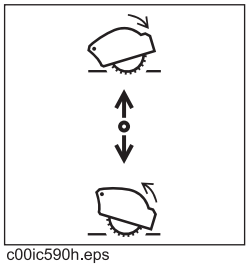 c00ic590h.eps	To lower rear of microtrencher, push. To raise rear of microtrencher, pull.	
3. Lift control 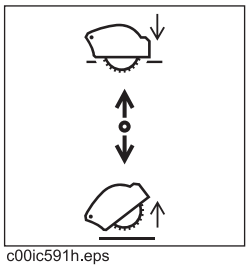 c00ic591h.eps	To lower, push. To raise, pull.	
4. Backfill blade tilt / Traverse selector 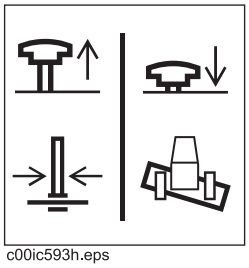 c00ic593h.eps	To control backfill blade tilt, push. To control microtrencher traverse, pull.	Use when optional 6-way backfill blade is installed.

https://truckmanualshub.com/

MT12 MicroTrencher Attachment

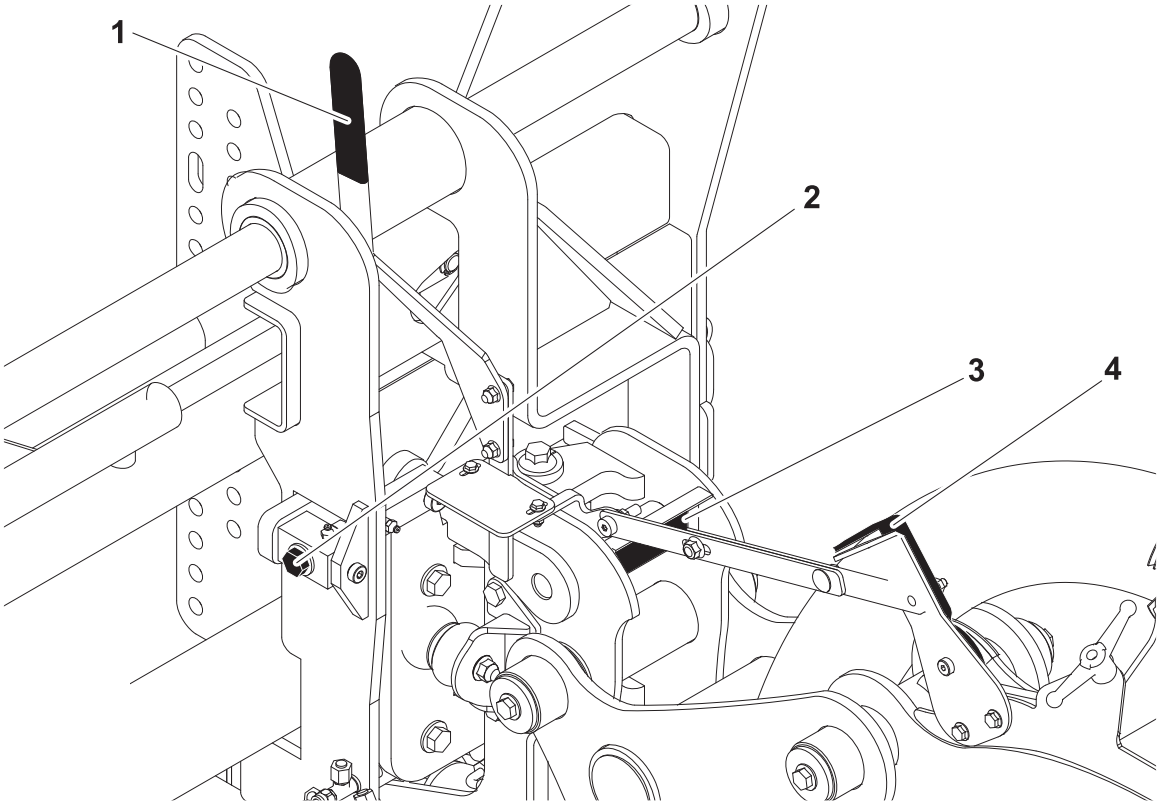

t28om064h.eps

1. Swing lock handle
2. Manual tilt adjustment
3. Bubble level
4. Level indicator

Item	Description	Notes
1. Saw swing lock handle 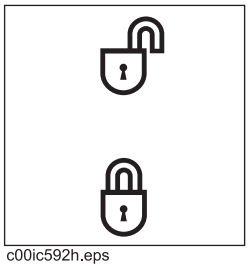 c00ic592h.eps	To lock, move handle toward tractor. To unlock, move handle toward microtrencher.	Operate with microtrencher locked in most situations.
2. Manual tilt adjustment	Turn screw in to adjust angle left. Turn screw out to adjust angle right.	Use manual tilt adjustment and bubble level together to adjust microtrencher to match jobsite conditions. See "Adjust Tilt" on page 126.

https://truckmanualshub.com/

Item	Description	Notes
3. Bubble level	Displays left-to-right microtrencher angle.	Use manual tilt adjustment and bubble level together to adjust microtrencher to match jobsite conditions. See "Adjust Tilt" on page
4. Level indicator	Indicates when base of microtrencher is level with pavement.	Use lift and level controls together to adjust microtrencher base until it is flat on pavement.

https://truckmanualshub.com/

Backhoe Console

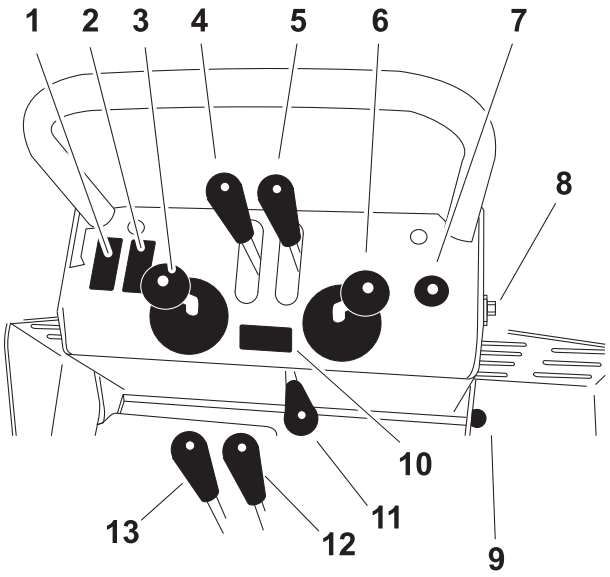

t42om013h.eps

1. Remote throttle on/off
2. Remote throttle increase/decrease
3. Boom/Swing control
4. Left stabilizer control
5. Right stabilizer control
6. Bucket/Dipper control
7. Remote engine stop switch
8. Seat latch
9. Neutral switch*
10. Mechanical stow lock control
11. Work light switch*
12. Backfill blade control*
13. Remote ground drive control*

*optional

NOTICE: Hydraulic functions will be disconnected if operator leaves the backhoe seat.

https://truckmanualshub.com/

Item	Description	Notes
1. Remote throttle on/off 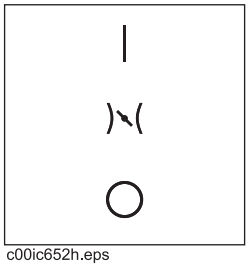 c00ic652h.eps	To turn on, press top. To turn off, press bottom.	
2. Remote throttle increase/decrease 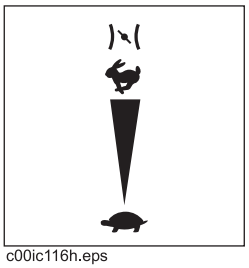 c00ic116h.eps	To increase engine speed, press top. To decrease engine speed, press bottom.	
3. Boom/Swing control 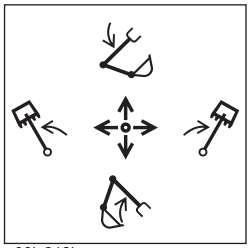 c00ic212h.eps	To swing boom left, move left. To swing boom right, move right. To raise boom, pull. To lower boom, push.	Control can perform more than one action at a time. By "feathering" the control, operator can combine backhoe operations. ***NOTICE:*** Do not operate with backhoe in the stowed (upright) position. Component failure could occur.
4. Left stabilizer control 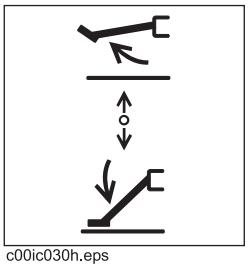 c00ic030h.eps	To lower, pull. To raise, push.	
5. Right stabilizer control 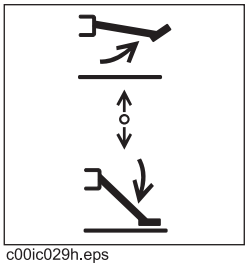 c00ic029h.eps	To lower, pull. To raise, push.	

https://truckmanualshub.com/

Item	Description	Notes
6. Bucket/Dipper control 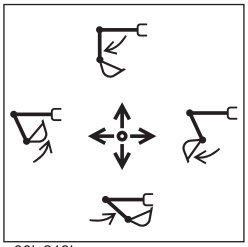 c00ic213h.eps	To open bucket, move right. To close bucket, move left. To move dipper in, pull. To move dipper out, push.	Control can perform more than one action at a time. By "feathering" the control, operator can combine backhoe operations.
7. Remote engine stop switch c00ic085c.eps	Stops engine immediately.	**IMPORTANT:** • Except in an emergency, move throttle to idle before using stop switch. • For normal engine shutdown, use ignition switch. After pressing down to stop engine, the switch must be pulled back up into the run position before the unit can be started.
8. Seat latch	To release backhoe seat, disengage lock by moving hole in latch clear of bolt.	**IMPORTANT:** Ensure seat is latched before driving unit. See "Backhoe" on page 88 for more information.
9. Neutral switch	To move tractor, press switch, use bucket/dipper control to move tractor, and release switch.	
10. Work light switch 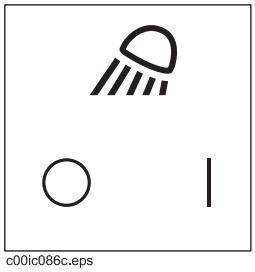 c00ic086c.eps	To turn on, press right. To turn off, press left.	

https://truckmanualshub.com/

Item	Description	Notes
11. Mechanical stow lock control 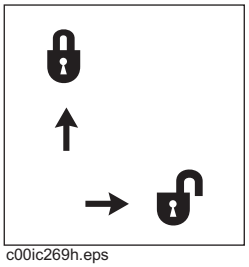 c00ic269h.eps	To lock, push stow lock handle. To unlock, move stow lock handle to right.	Use this control to lock boom in the stowed position. ***NOTICE:*** Always lock boom during transport.
12. Backfill blade control 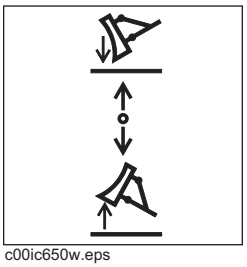 c00ic650w.eps	To lower, push. To raise, push.	
13. Remote ground drive control 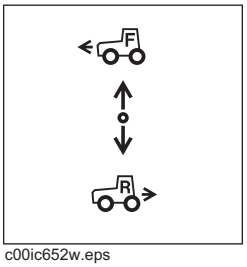 c00ic652w.eps	To move forward, push. To move in reverse, pull.	

https://truckmanualshub.com/

Left Fender

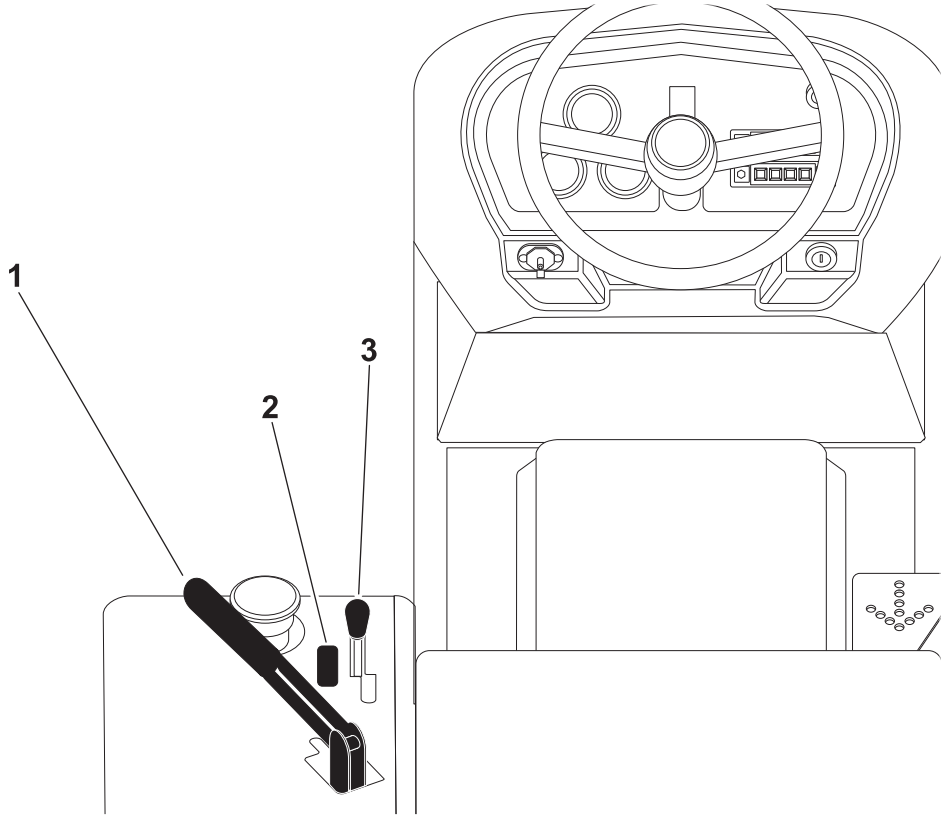

t28om004h.eps

1. Parking brake
2. Work light switch*
3. Attachment speed/direction control

* optional

Item	Description	Notes
1. Parking brake 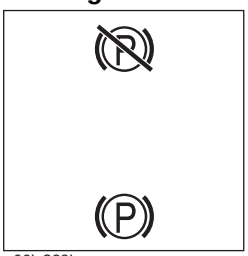 c00ic268h.eps	To set, pull. To release, push.	

https://truckmanualshub.com/

Item	Description	Notes
2. Work light switch 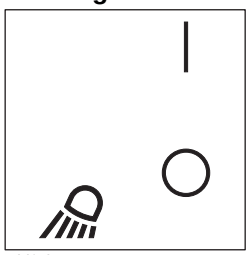 c00ic077c.eps	To turn on, press top. To turn off, press bottom.	
3. Attachment speed/ direction control 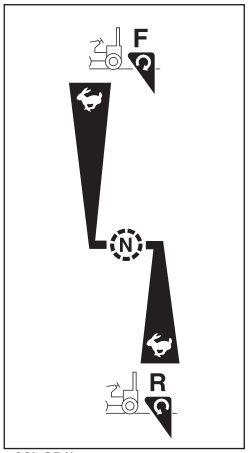 c00ic254h.eps	To rotate attachment forward or to start plow vibrator box, push. To rotate attachment backward, pull. To go faster in either direction, move farther from center. To stop attachment rotation or plow vibrator box, move to neutral.	Control does not return to neutral when released. ***NOTICE:*** When operating plow, do not pull control to reverse. Operating plow in reverse could cause damage to equipment.

https://truckmanualshub.com/

Seat

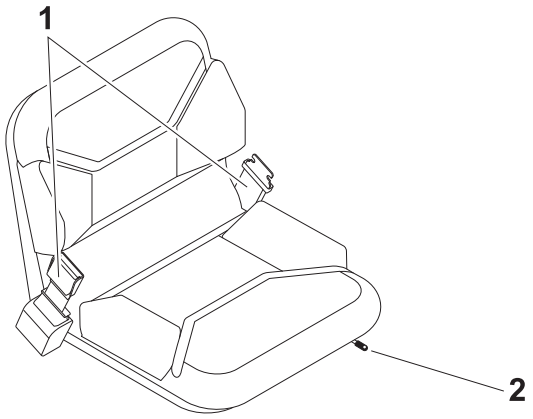

t14om053h.eps

1. Seat belt
2. Seat slide control

Item	Description	Notes
1. Seat belt	To fasten, insert latch into buckle. Adjust until seat belt is low and tight. To release, lift top of buckle.	
2. Seat slide control	To slide seat forward or backward, pull or push left, then adjust seat. To lock seat in place, release.	

https://truckmanualshub.com/

Battery Disconnect

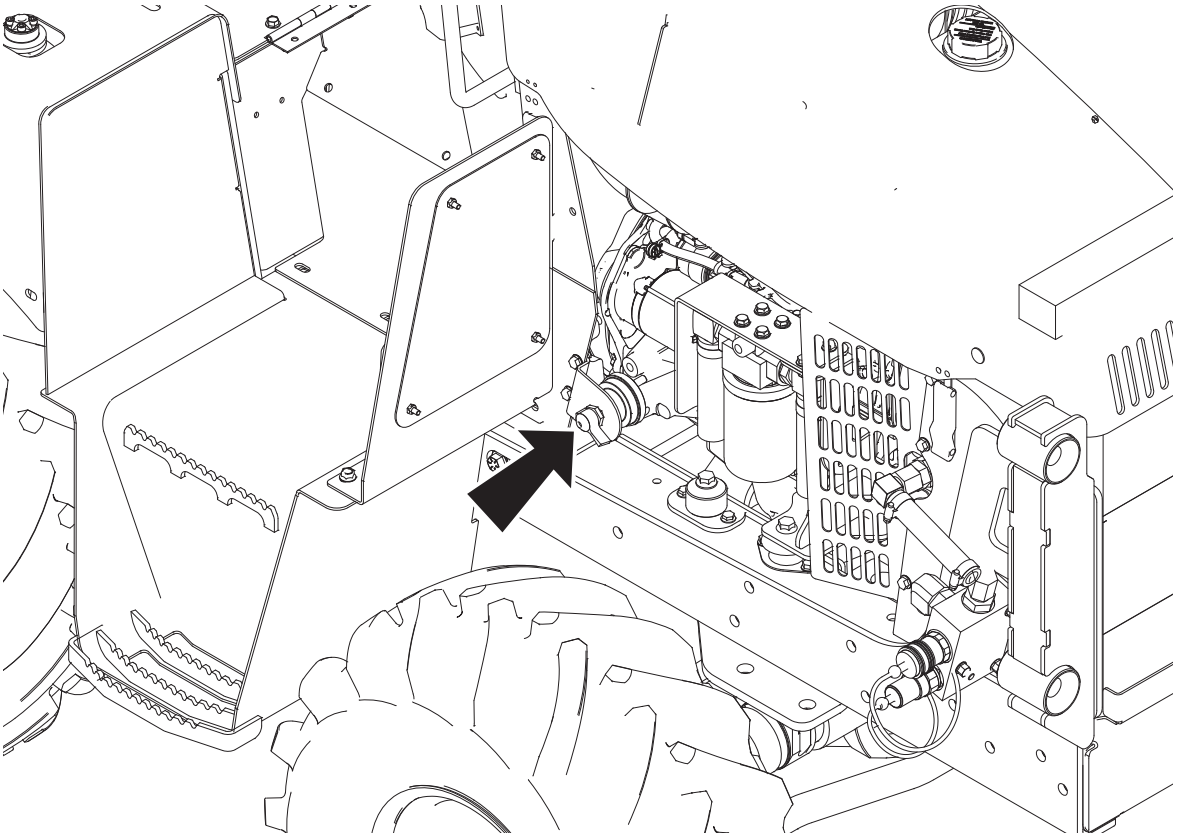

t42om007h.eps

1. Battery disconnect switch

Item	Description	Notes
2. Battery disconnect switch 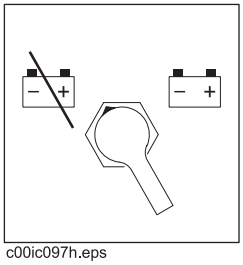 c00ic097h.eps	To disconnect, move switch so that indicator points left. To connect, move switch so that indicator points right.	

https://truckmanualshub.com/

https://truckmanualshub.com/

Operation Overview

Chapter Contents

Planning 62

Digging with Backhoe 62

Trenching 62

Sawing 63

Plowing 63

Drilling 63

Microtrenching 64

Leaving Jobsite 64

https://truckmanualshub.com/

Planning

1. Gather information about jobsite. See page 66.
2. Inspect jobsite. See page 67.
3. Classify jobsite. See page 68.
4. Select chain and teeth to match your soil type, if necessary. See page 134.
5. Check supplies and prepare equipment. See page 70.
6. Haul equipment to jobsite. See page 83.

Digging with Backhoe

1. Start unit. See page 72.
2. Set stabilizers and unstow backhoe. See page 88.
3. Excavate. See page 90.
4. Stow backhoe properly. See page 92.
5. Shut down tractor. See page 75.

Trenching

1. Start unit. See page 72.
2. Position tractor and controls. See page 96.
3. Begin trenching. See page 98.
4. Complete the installation. See page 98.
5. Backfill the trench. See page 140.
6. Shut down tractor. See page 75.

https://truckmanualshub.com/

Sawing

1. Start unit. See page 72.
2. Position tractor and controls. See page 102.
3. Begin sawing. See page 103.
4. Complete the installation. See page 104.
5. Backfill the trench. See page 140.
6. Shut down tractor. See page 75.

Plowing

1. Start unit. See page 72.
2. Position tractor and controls. See page 107.
3. Attach product. See page 107.
4. Begin plowing. See page 109.
5. Complete the installation. See page 110.
6. Shut down tractor. See page 75.

Drilling

1. Start unit. See page 72.
2. Dig approach trench and target trench. See page 112.
3. Assemble drill string and position tractor. See page 112.
4. Begin drilling. See page 115.
5. Use drill string guide as needed. See page 116.
6. Add rod. See page 117.
7. Backream. See page 118.
8. Shut down tractor. See page 75.
9. Disassemble joints. See page 122.

https://truckmanualshub.com/

Microtrenching

1. Start unit. See page 72.
2. Position tractor and controls. See page 124.
3. Begin trenching. See page 128.
4. Complete the installation. See page 131.
5. Backfill the trench. See page 140.
6. Shut down tractor. See page 75.

Leaving Jobsite

1. Backfill if necessary. See page 140.
2. Rinse equipment. See page 140.
3. Stow tools. See page 140.
4. Haul equipment away from jobsite. See page 83.

https://truckmanualshub.com/

Prepare

Chapter Contents

Gather Information 66

- Review Job Plan 66
- Notify One-Call Services 66
- Arrange for Traffic Control 66
- Plan for Emergency Services 66

Inspect Site 67

- Identify Hazards 67

Classify Jobsite. 68

- Select a Classification 68
- Apply Precautions 69

Check Supplies and Prepare Equipment 70

- Supplies 70
- Fluid Levels 70
- Condition and Function 70
- Accessories 70

https://truckmanualshub.com/

Gather Information

A successful job begins before you dig. The first step in planning is reviewing information already available about the job and jobsite.

Review Job Plan

Review blueprints or other plans. Check for information about existing or planned structures, elevations, or proposed work that may be taking place at the same time.

Notify One-Call Services

Mark proposed path with white paint and have underground utilities located before working.

- In the US or Canada, call 811 (US) or 888-258-0808 (US and Canada). Also contact any local utilities that do not participate in the One-Call service.
- In countries that do not have a One-Call service, contact all local utility companies to have underground utilities located.

Arrange for Traffic Control

If working near a road or other traffic area, contact local authorities about safety procedures and regulations.

Plan for Emergency Services

Have the telephone numbers for local emergency and medical facilities on hand. Check that you will have access to a telephone.

https://truckmanualshub.com/

Inspect Site

Identify Hazards

Inspect jobsite before transporting equipment. Check for the following:

- overall grade or slope
- changes in elevation such as hills or other open trenches
- obstacles such as buildings, railroad crossings, or streams
- signs of utilities on jobsite and perimeter, such as:
  - "buried utility" notices
  - utility facilities without overhead lines
  - gas or water meters
  - junction boxes
  - drop boxes
  - light poles
  - manhole covers
  - sunken ground
- traffic
- access
- soil type and condition

Have an experienced locating equipment operator sweep area within 20' (6 m) to each side of bore path to verify previously marked line and cable locations. Mark location of all buried utilities and obstructions.

https://truckmanualshub.com/

Classify Jobsite

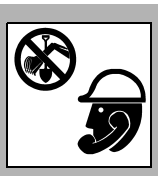

WARNING Jobsite hazards could cause death or serious injury. Use correct equipment and work methods. Use and maintain proper safety equipment.

To help avoid injury:

- Wear personal protective equipment including hard hat, safety eye wear, and hearing protection.
- Do not wear jewelry or loose clothing.
- Notify One-Call and companies which do not subscribe to One-Call.
- Comply with all utility notification regulations before digging or drilling.
- Verify location of previously marked underground hazards.
- Mark jobsite clearly and keep spectators away.

Remember, jobsite is classified by hazards in place -- not by line being installed.

Select a Classification

Jobsites are classified according to underground hazards present.

If working . . .	then classify jobsite as . . .
within 10' (3 m) of a buried electric line	electric
within 10' (3 m) of a natural gas line	natural gas
in sand, granite, or concrete which is capable of producing crystalline silica (quartz) dust	crystalline silica (quartz) dust
within 10' (3 m) of any other hazard	other

IMPORTANT: If you have any doubt about jobsite classification, or if jobsite might contain unmarked hazards, take steps outlined previously to identify hazards and classify jobsite before working.

https://truckmanualshub.com/

Apply Precautions

Once classified, precautions appropriate for jobsite must be taken. Follow U.S. Department of Labor regulations on excavating and trenching (Part 1926, Subpart P) and other similar regulations.

Electric Jobsite Precautions

Use one or both of these methods.

- Expose line by careful hand digging or soft excavation.
- Have service shut down while work is in progress. Have electric company test lines before returning them to service.

Natural Gas Jobsite Precautions

In addition to positioning equipment upwind from gas lines, use one or both of these methods.

- Expose lines by careful hand digging or soft excavation.
- Have gas shut off while work is in progress. Have gas company test lines before returning them to service.

Crystalline Silica (Quartz) Dust Precautions

Crystalline silica dust is a naturally occuring substance found in soil, sand, concrete, granite, and quartz. Breathing silica dust particles while cutting, drilling, or working materials may cause lung disease or cancer. To reduce exposure:

- Use water spray or other means to control dust.
- Refer to U.S. Department of Labor Occupational Safety and Health Administration guidelines to learn more about appropriate breathing protection and permissible exposure limits.

Other Jobsite Precautions

You may need to use different methods to safely avoid other underground hazards. Talk with those knowledgeable about hazards present at each site to determine which precautions should be taken or if job should be attempted.

https://truckmanualshub.com/

Check Supplies and Prepare Equipment

Supplies

- fuel
- keys
- personal protective equipment, such as hard hat and safety glasses

Fluid Levels

- fuel
- hydraulic fluid
- battery charge
- engine oil
- engine coolant

Condition and Function

- digging chain and teeth
- fan belts
- light bulbs
- filters (air, oil, hydraulic)
- tires
- pumps and motors
- hoses and valves
- signs, guards, and shields

Accessories

Fire Extinguisher

If required, mount a fire extinguisher near the power unit but away from possible points of ignition. The fire extinguisher should always be classified for both oil and electric fires. It should meet legal and regulatory requirements.

https://truckmanualshub.com/

Drive

Chapter Contents

Start Unit 72

Drive 74

- Safe Slope Operation 75

Shut Down 75

https://truckmanualshub.com/

Start Unit

Before operating tractor, read engine manufacturer's starting and operating instructions. Follow instructions for new engine break-in.

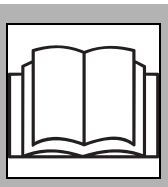

WARNING Read operator's manual. Follow safety rules and know how to use all controls. Your safety is at stake. 273-475

To help avoid injury:

- Read operator's manual before operating equipment. Follow instructions carefully. Contact Ditch Witch® dealership for operation information or demonstration.
- Wear hard hat, safety glasses, and other protective equipment required by job. Do not wear jewelry or loose clothing that can catch on controls.

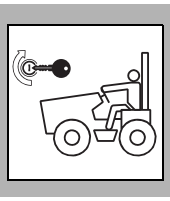

WARNING Runaway possible. Machine could run over you or others. Learn how to use all controls. Start and operate only from operator's position. 275-070

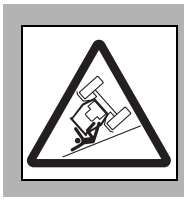

WARNING Rollover possible. If machine rolls over, you could be thrown from seat and killed or crushed. Wear seat belt. 275-303

https://truckmanualshub.com/

1. Fasten and adjust seat belt.
2. Check that ground drive control and attachment speed/direction control are in neutral.
3. Move throttle to low.
4. Verify that parking brake is set.
5. Turn ignition switch to the run position (key on, engine off). Cold start wait indicator will appear.

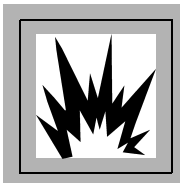

WARNING Explosion possible. Serious injury or equipment damage could occur. Follow directions carefully.

To help avoid injury: Do not use ether or any other type of aerosol starting fluid when unit is equipped with cold start option.

6. When cold start wait indicator goes off, turn ignition switch all the way clockwise to start tractor. Warning alarm will sound. Indicators will light.
   - If engine does not crank, check start interlock display. See page 34 for start interlock information.
   - If engine turns but does not start within 10 seconds, allow starter to cool before trying to start again.

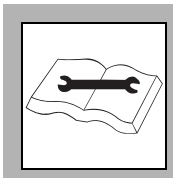

WARNING Improper control function could cause death or serious injury.

To help avoid injury: Stop machine and have it serviced if control does not work as described in instructions.

IMPORTANT: Machine will not start if start interlock requirements are not met. See page 34 for start interlock information.

7. Run engine at half-throttle or less for five minutes before operating tractor. During warmup, check that all controls work properly.

https://truckmanualshub.com/

Drive

WARNING Moving traffic – hazardous situation. Death or serious injury could result. Avoid moving vehicles, wear high visibility clothing, post appropriate warning signs.

To help avoid injury:

- Drive carefully in congested areas. Know machine's clearance and turning radius.
- Keep attachments low when operating on slope. Drive slowly and cautiously.

EMERGENCY SHUTDOWN: Turn ignition switch to STOP.

1. Turn on lights as needed.
2. Raise backfill blade and all attachments.
3. Release parking brake.
4. Adjust throttle.
5. Move ground drive control to forward or reverse or press upper or lower part of foot pedal.

   The ground drive foot pedal and the ground drive speed/direction control lever can override each other. Use the override feature when trenching, plowing or sawing.

   - When driving or backfilling, use only the foot pedal to control speed and direction.
   - When trenching, sawing, or plowing, use hand lever to set travel speed and use the foot pedal to adjust speed temporarily when digging conditions change. For example, if digging conditions become tough, press the lower part of foot pedal to slow digging speed. When original digging condition resumes, release foot pedal to return to original speed.

https://truckmanualshub.com/

Safe Slope Operation

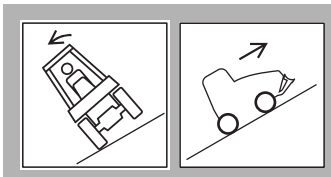

WARNING Tipover possible. Machine can tip over and crush you.

To help avoid injury:

- Always operate with heavy end uphill.
- Drive cautiously at all times.
- Never jerk control levers. Use a steady even motion.
- Do not park unit on slope without lowering digging attachment to the ground, returning all controls to neutral position, shutting down unit, and set parking brake.

Operating safely on a slope depends upon many factors including:

- Distribution of machine weight, including front loading and absence of load
- Height of load
- Even or rough ground conditions
- Potential for ground giving way causing unplanned tilt forward, reverse or sideways
- Nearness of ditches, ruts, stumps or other obstructions and sudden changes in slope
- Speed
- Turning
- Braking performance
- Operator skill

These varying factors make it impractical to specify a maximum safe operating angle in this manual. It is therefore important for the operator to be aware of these conditions and adjust operation accordingly. Maximum engine angle and braking performance are two absolute limits which must never be exceeded. These maximums are stated below since they are design limits. These design limits usually exceed the operating limits and must never be used alone to establish safe operating angle for variable conditions.

Maximum engine lubrication angle – 30°

Maximum service brake retarding force – equal to traction of both tires.

Maximum secondary brake retarding force – equal to traction of one tire.

Maximum park brake holding force – equal to traction of both tires.

https://truckmanualshub.com/

Shut Down

1. When job is complete, move ground drive control to neutral.
2. Set parking brake.
3. Lower all attachments to ground.
4. Move throttle to low for 3 minutes to cool engine.
5. Turn ignition switch to STOP. If leaving machine unattended, remove key.
6. For maintenance or long-term storage, turn battery disconnect switch, if equipped, to the disconnect position.

https://truckmanualshub.com/

Transport

Chapter Contents

Lift 78

- Points 78
- Procedure 79

Tie Down 82

- Points 82
- Procedure 82

Haul 83

- Procedure 83

Tow 86

- Procedure 86

https://truckmanualshub.com/

Lift

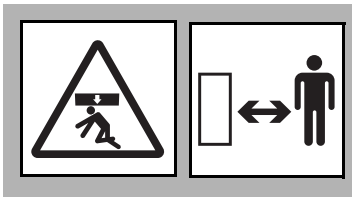

WARNING Crushing weight. If load falls or moves it could kill or crush you. Use proper procedures and equipment or stay away.

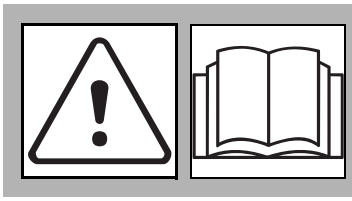

WARNING Read operator's manual. Follow safety rules and know how to use all controls. Your safety is at stake. 273-475

Points

Lifting points are identified by lifting decals. Lifting at other points is unsafe and can damage machinery.

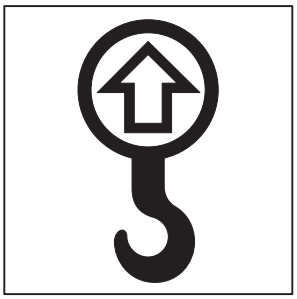

ic1319a.eps

https://truckmanualshub.com/

Procedure

Tractor

This machine is not configured for lifting. If the machine must be lifted, load machine into a container or onto a platform appropriate for lifting. See "Specifications" on page 187 for size and weight of machine.

H313/H314 Trenchers

Use crane capable of supporting the equipment's size and weight. See page 192 or measure and weigh equipment before lifting.

NOTICE: Do not lift tractor with installed attachment.

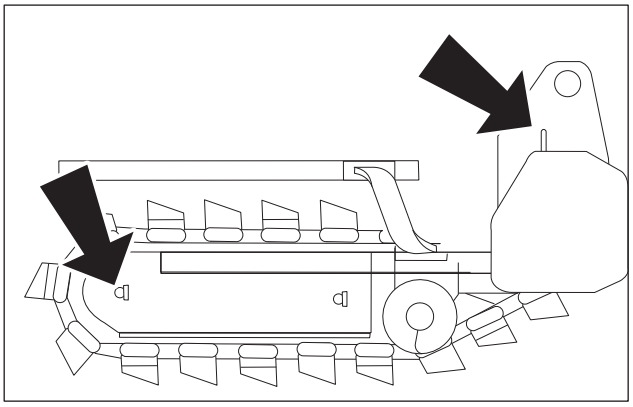

t28om010h.eps

H331 Plow

Use crane capable of supporting the equipment's size and weight. See page 196 or measure and weigh equipment before lifting.

NOTICE: Do not lift tractor with installed attachment.

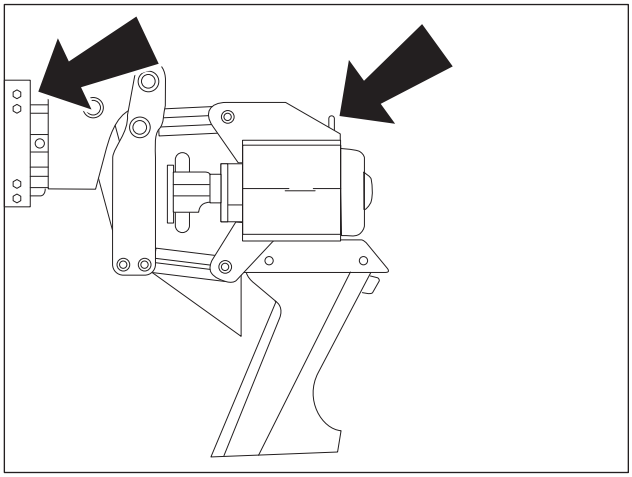

t28om011h.eps

https://truckmanualshub.com/

H350 Combo

Use crane capable of supporting the equipment's size and weight. See page 202 or measure and weigh equipment before lifting.

NOTICE: Do not lift tractor with installed attachment.

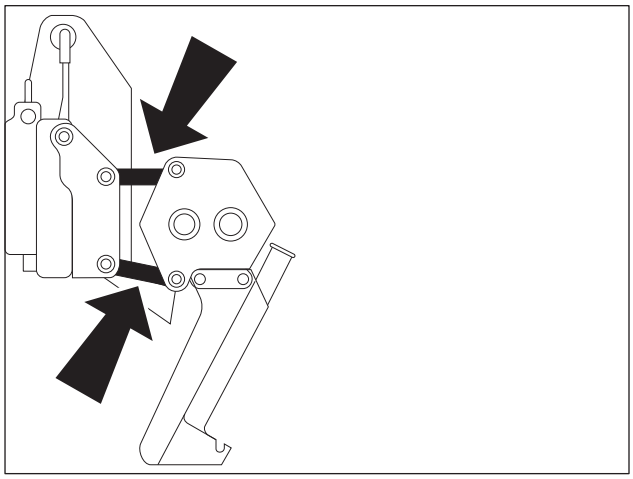

t28om089h.eps

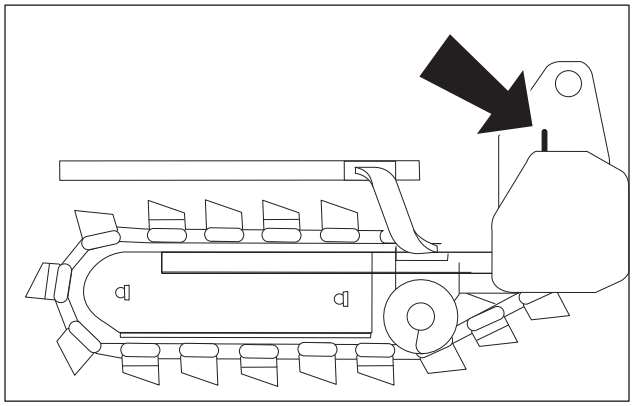

t28om090h.eps

https://truckmanualshub.com/

Reel Carrier

Use crane capable of supporting the equipment's size and weight. See page 187 or measure and weigh equipment before lifting.

NOTICE:

- Do not lift reel carrier with reel installed.
- Do not lift tractor with installed attachment.

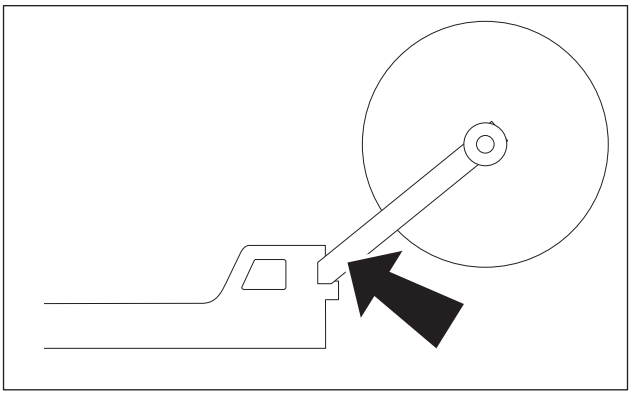

t28om013h.eps

H342 Saw

Use crane capable of supporting the equipment's size and weight. See page 198 or measure and weigh equipment before lifting.

NOTICE: Do not lift tractor with installed attachment.

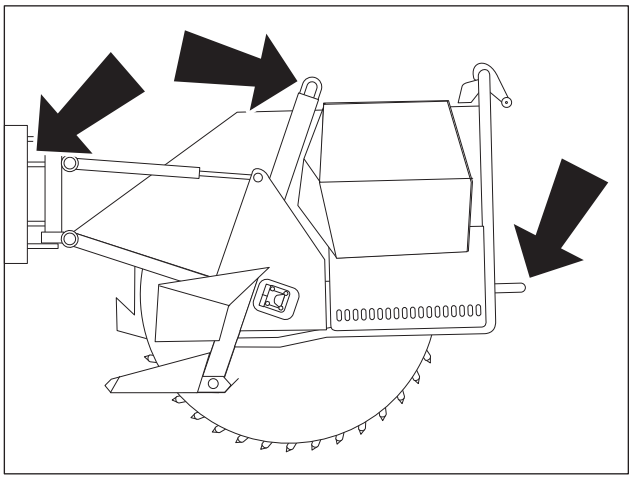

t28om014h.eps

MT12 MicroTrencher

Use crane capable of supporting the equipment's size and weight. See page 202 or measure and weigh equipment before lifting.

NOTICE: Do not lift tractor with installed attachment.

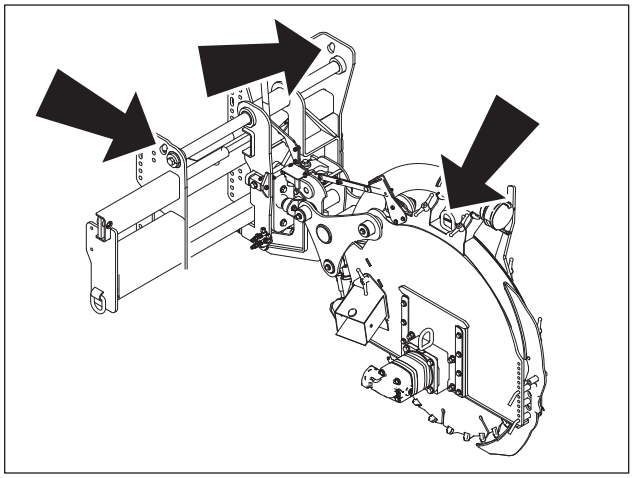

t28om083h.eps

https://truckmanualshub.com/

Tie Down

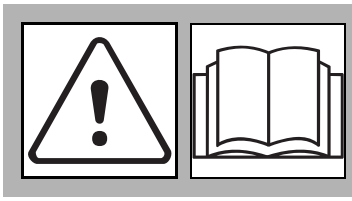

WARNING Read operator's manual. Follow safety rules and know how to use all controls. Your safety is at stake. 273-475

Points

Tiedown points are identified by tiedown decals. Securing to trailer at other points is unsafe and can damage machinery.

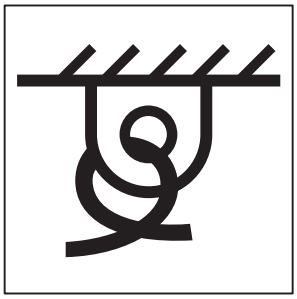

ic1320a.eps

Procedure

Tractor

Attach chains at front and rear tiedown points. Make sure chains are tight before transporting unit.

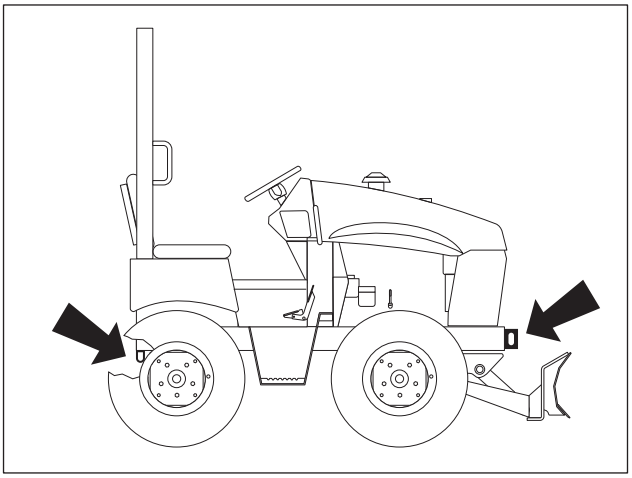

t42om023h.eps

https://truckmanualshub.com/

Haul

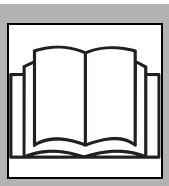

WARNING Read operator's manual. Follow safety rules and know how to use all controls. Your safety is at stake. 273-475

To help avoid injury:

- Read trailer operator's manual before loading or transporting your machine. Incorrectly loaded machine can slip or cause trailer sway.
- Ensure that tow vehicle has proper tow capacity rating.
- Attach trailer to tow vehicle before loading or unloading.
- Park, load, and unload trailer on level ground.
- Check that unit and trailer do not exceed size or weight regulations.
- Load trailer correctly to avoid trailer swaying. Ten to fifteen percent of total vehicle weight (equipment plus trailer) must be on tongue to help prevent trailer sway.
- Connect safety chains to tow vehicle. Attach left chain to right side of tow vehicle and vice versa to cradle hitch. Do not connect to pintle hook or hitch ball.
- Connect breakaway switch cable to tow vehicle. Do not connect to pintle hook or hitch ball.

Procedure

Inspect Trailer

1. Check hitch for wear and cracks. Lubricate if needed.
2. Check battery for 12V charge.
3. Inspect lights for cleanliness and correct operation. Inspect reflectors and replace if needed.
4. Check tire pressure. Check lug nut torque with a torque wrench. Adjust if needed.
5. Ensure trailer brakes are adjusted to come on in synchronization with tow vehicle brakes.
6. Check ramps and trailer bed for cracks.

https://truckmanualshub.com/

Load

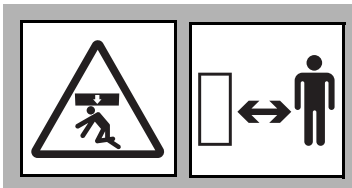

WARNING Crushing weight. If load falls or moves it could kill or crush you. Use proper procedures and equipment or stay away.

To help avoid injury:

- Attach trailer to tow vehicle before loading or unloading.
- Load and unload trailer on level ground.
- Block trailer wheels.

WARNING Rollover possible. If machine rolls over, you could be thrown from seat and killed or crushed. Wear seat belt. 275-303

1. Fasten and adjust seat belt.
2. Start tractor. See page 72 for proper start-up procedures.
3. Raise attachments, but keep them low.
4. Move attachments to center position.
5. Release parking brake.
6. Slowly drive tractor onto trailer.
7. Position tractor on trailer deck for proper weight distribution.
8. Set parking brake.
9. Lower attachments to trailer bed and turn tractor off. See page 75 for proper shutdown procedures.
10. Attach chains to tractor and attachments where tiedown decals are located. See page 82.

https://truckmanualshub.com/

Unload

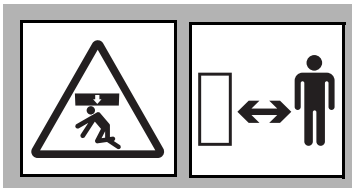

WARNING Crushing weight. If load falls or moves it could kill or crush you. Use proper procedures and equipment or stay away.

To help avoid injury:

- Attach trailer to tow vehicle before loading or unloading.
- Load and unload trailer on level ground.
- Block trailer wheels.

WARNING Rollover possible. If machine rolls over, you could be thrown from seat and killed or crushed. Wear seat belt. 275-303

1. Lower trailer or ramps.
2. Remove chains from tiedowns.
3. Fasten and adjust seat belt.
4. Start tractor. See page 72 for proper start-up procedures.
5. Raise attachments, but keep them low and centered.
6. Release parking brake.
7. Slowly back unit down trailer or ramps.

https://truckmanualshub.com/

Retrieve

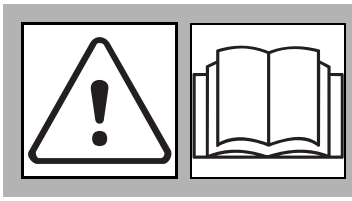

WARNING Read operator's manual. Follow safety rules and know how to use all controls. Your safety is at stake. 273-475

Under normal conditions, tractor should not be towed. If tractor becomes disabled and retrieval is necessary:

- tow for no more than 200 yd (180 m) at less than 1 mph (1.6 km/h),
- use towing chains appropriately rated for maximum towing force,
- steering will be difficult.

Procedure

1. Set parking brake.
2. Block front and rear tires to prevent unit from rolling.
3. Attach tow line to all available tiedown points facing towing vehicle.
4. Bypass hydraulic system.

   Remove tunnel cover and loosen bypass valve two turns. Valve is on right rear of front pump.
5. Remove blocks.
6. Fasten seat belt.
7. Release parking brake.

   NOTICE: While towing, unit will not have brakes.
8. Check that ground drive and attachment speed/direction controls are in neutral position.

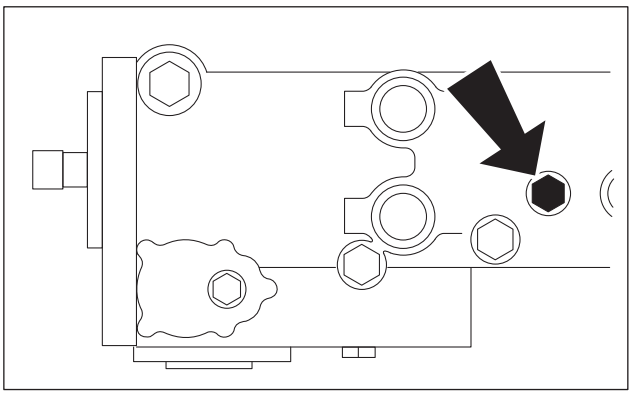

t28om017h.eps

https://truckmanualshub.com/

Backhoe

Chapter Contents

Set Up. 88

- Position Tractor 88
- Prepare Backhoe 89

Operate 90

- Move Unit 91

Finish Job 92

https://truckmanualshub.com/

Set Up

EMERGENCY SHUTDOWN - Turn ignition switch to STOP.

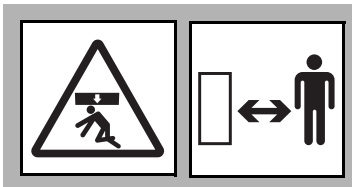

WARNING Crushing weight could cause death or serious injury. Use proper procedures and equipment or stay away.

To help avoid injury: Use attachments or counterweights to make front and rear loads balance when all attachments are raised. Contact your Ditch Witch® dealer about counterweighting for your equipment.

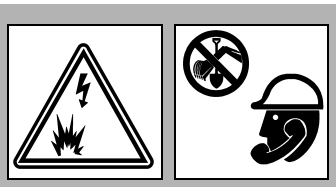

WARNING Jobsite hazards could cause death or serious injury. Use correct equipment and work methods. Use and maintain proper safety equipment.

To help avoid injury: Comply with all utility notification regulations before digging or drilling.

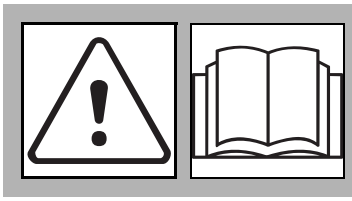

WARNING Read operator's manual. Follow safety rules and know how to use all controls. Your safety is at stake. 273-475

Position Tractor

1. Fasten and adjust seatbelt.
2. Start tractor. See page 72 for start-up procedures.
3. Drive to starting point. Move in line with planned job. See page 74 for driving procedures.
4. Ensure ground drive control is in neutral.
5. Move attachment speed/direction control to neutral position.
6. Lower rear attachment to 6" (150 mm) above ground.
7. Lower backfill blade, if equipped.
8. Decrease engine speed to low throttle.
9. Move to backhoe operator's station.

https://truckmanualshub.com/

Prepare Backhoe

1. Disengage seat lock (shown) and rotate seat out of stowed position.
2. Raise boom to release tension on stow lock.
3. Release stow lock by pushing handle forward. For more information about stow lock, see page 55.

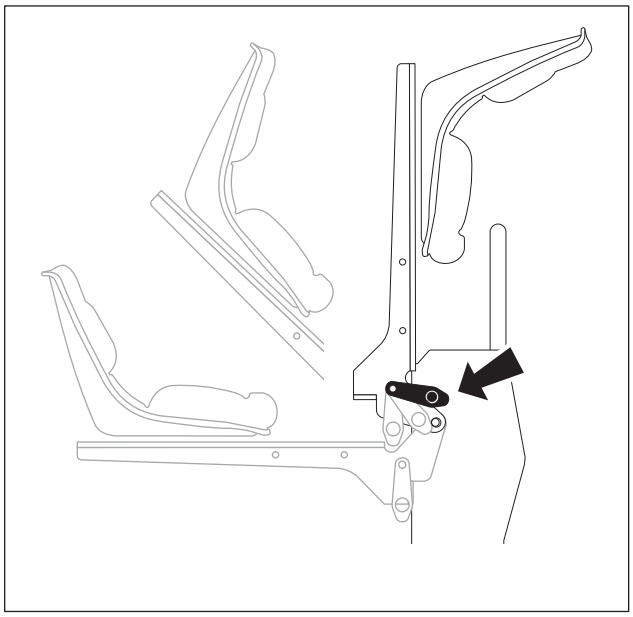

Backhoe_Seat.eps

https://truckmanualshub.com/

Operate

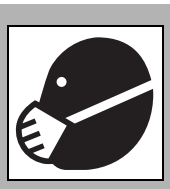

CAUTION Breathing crystalline silica dust may cause lung disease. Cutting, drilling, or working materials such as concrete, sand, or rock containing quartz may result in exposure to silica dust. Use dust control methods or appropriate breathing protection when exposed to silica dust.

To help avoid injury:

- Use water spray or other means to control dust.
- Refer to U.S. Department of Labor Occupational Safety and Health Administration guidelines to learn more about appropriate breathing protection and permissible exposure limits.

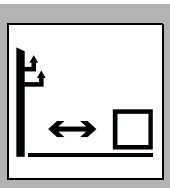

DANGER Electric shock will cause death or serious injury. Stay away. 274-049

To help avoid injury: Expose lines by hand before digging. Cutting high voltage cable can cause electrocution.

WARNING Read operator's manual. Follow safety rules and know how to use all controls. Your safety is at stake. 273-475

NOTICE: Hydraulic functions will be disconnected if operator leaves the backhoe seat.

1. Clear the area around the machine of all bystanders.
2. Lower stabilizers until they touch the ground.
3. Adjust throttle to desired speed.

https://truckmanualshub.com/

4. Use boom/swing control and bucket/dipper control to dig hole or trench. For more information about backhoe controls, see "Backhoe Console" on page 52.

- Keep dipper and boom at right angles as much as possible for maximum power.
- Keep bucket in line with dipper as much as possible.
- Position bucket so teeth cut soil. As soil is cut, curl bucket under dipper.
- Move dipper and bucket together. Increasing engine speed will not increase backhoe force.

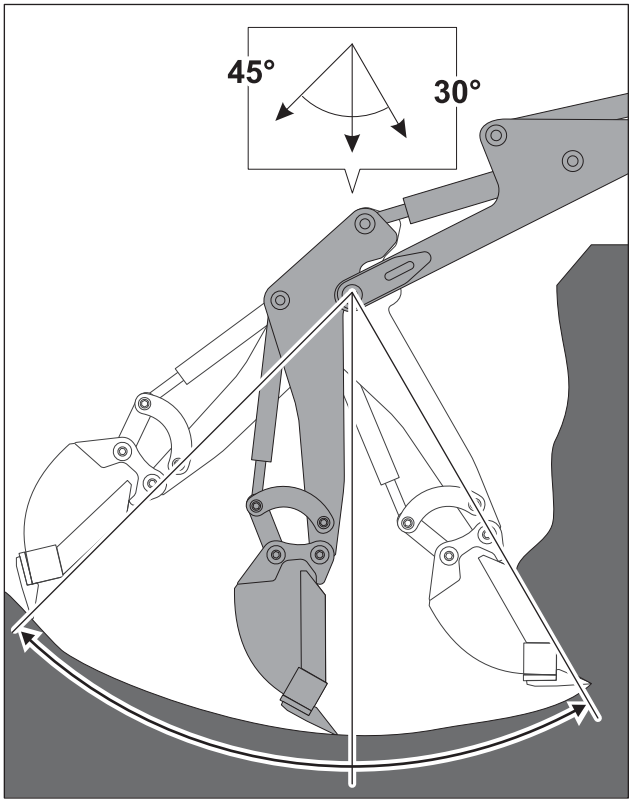

Backhoe_Dig.eps

Move Unit

NOTICE: Only use this method to move unit less than 30' (10 m) at one time.

1. Clear the area around the machine of all bystanders.
2. Raise stabilizers enough to clear ground.
3. Ensure ground drive direction control is in neutral.
4. Move attachment speed/direction control to neutral position.
5. Move ground drive control to neutral position.
6. Use remote ground drive switch to move unit.
7. Lower stabilizers.

https://truckmanualshub.com/

Finish Job

1. Raise stabilizers to fully engage latch.
2. Return remote throttle to low.

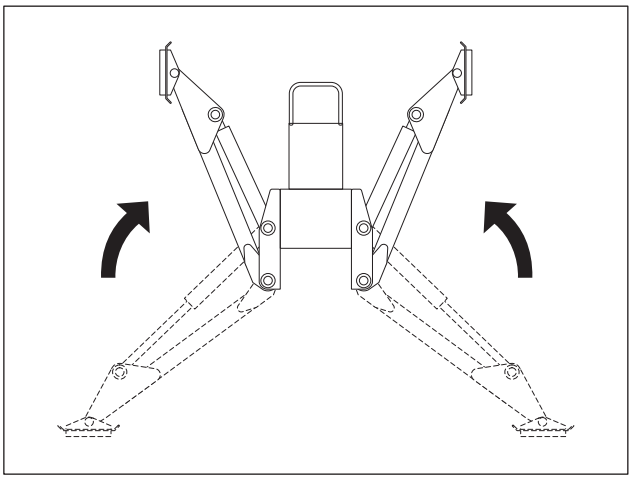

Backhoe_Stow_Stabilizers.eps

3. Lift boom while keeping dipper pointed at ground (shown).

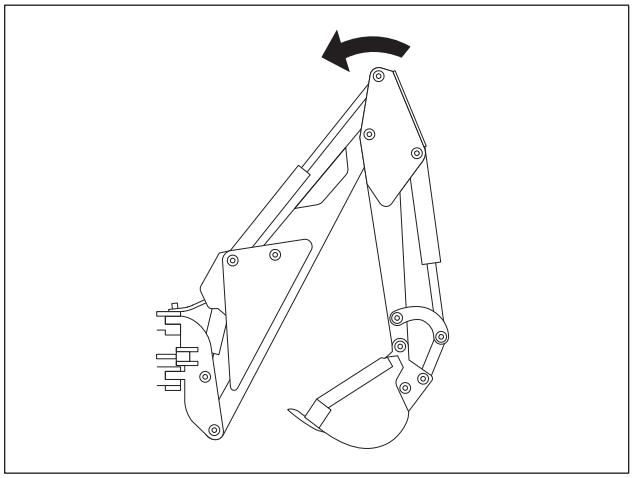

Backhoe_Stow_Boom.eps

4. Curl bucket closed and move dipper fully toward boom (shown).
5. Lift boom to highest position and engage stow lock.
6. Lower boom slightly to engage lock.

IMPORTANT: For tractor to function once operator has returned to operator station, stabilizers must be raised, remote throttle must be set at low, and boom must be stowed and locked.

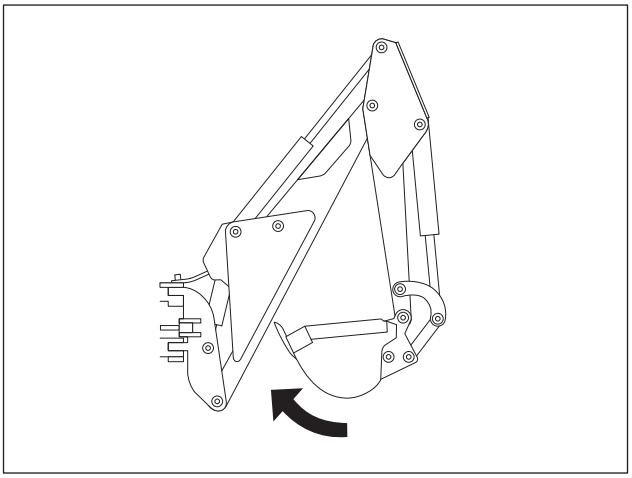

Backhoe_Stow_Bucket.eps

https://truckmanualshub.com/

7. Rotate seat into stowed position and engage seat lock (shown).
8. Drive a short distance away from work site.
9. Shut down tractor. See page 76 for proper shutdown procedures.

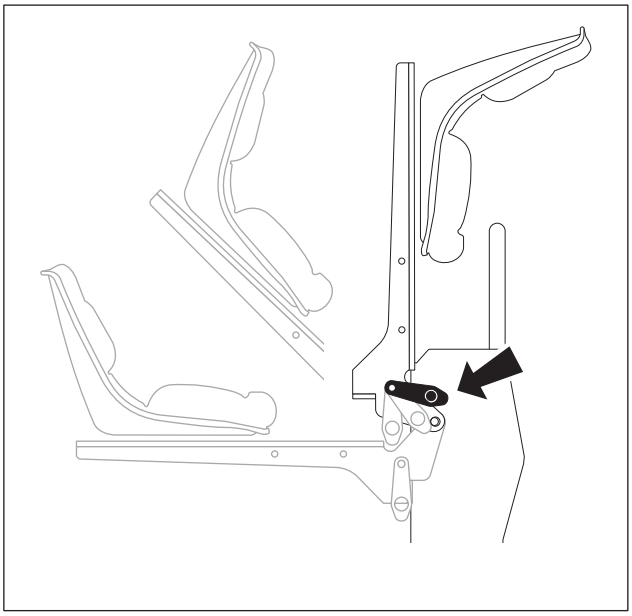

Backhoe_Seat.eps

https://truckmanualshub.com/

https://truckmanualshub.com/

Trench

Chapter Contents

Set Up. 96

Operate 98

Finish Job 100

https://truckmanualshub.com/

Set Up

EMERGENCY SHUTDOWN - Turn ignition switch to STOP.

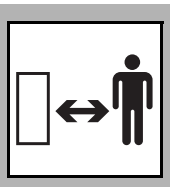

WARNING Crushing weight could cause death or serious injury. Use proper procedures and equipment or stay away.

To help avoid injury: Use attachments or counterweights to make front and rear loads balance when all attachments are raised. Contact your Ditch Witch® dealer about counterweighting for your equipment.

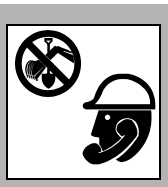

WARNING Jobsite hazards could cause death or serious injury. Use correct equipment and work methods. Use and maintain proper safety equipment.

To help avoid injury: Comply with all utility notification regulations before digging or drilling.

WARNING Read operator's manual. Follow safety rules and know how to use all controls. Your safety is at stake. 273-475

https://truckmanualshub.com/

1. If using optional trench cleaner, remove bolt installed for transport (shown).
2. Fasten and adjust seat belt.
3. Start tractor. See page 72 for start-up procedures.
4. Drive to starting point. Move in line with planned trench. See page 74 for operating procedures.

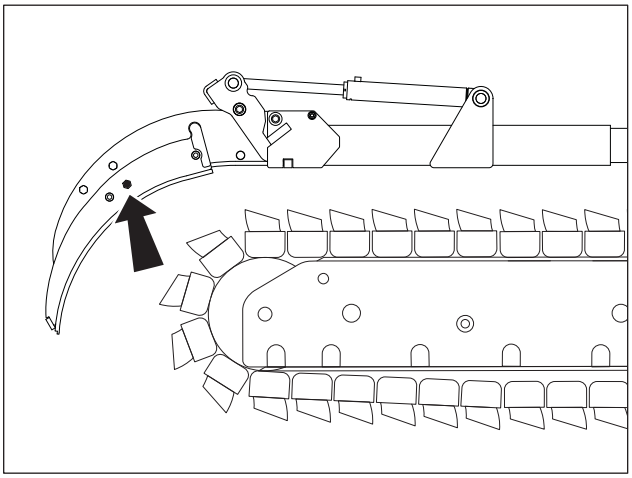

t33om080w.eps

IMPORTANT:

- When cutting asphalt, start trench in soil at edge of road and use shortest possible boom at full depth.
- Sight along center of hood to a stake driven beyond end of trench line for straight trench.
- For optimal spoils delivery, adjust the auger positions forward or backward to accommodate terrain and digging depth.

5. Set parking brake.
6. Lower boom to just above ground.
7. Check that attachment speed/direction control and ground drive controls are in neutral.
8. Check that boom is in line with planned trench.
9. Lower backfill blade, if equipped, to reduce shock when trenching begins.

https://truckmanualshub.com/

Operate

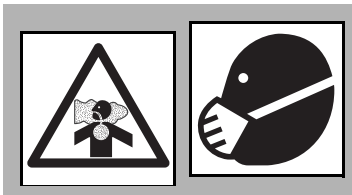

CAUTION Breathing crystalline silica dust may cause lung disease. Cutting, drilling, or working materials such as concrete, sand, or rock containing quartz may result in exposure to silica dust. Use dust control methods or appropriate breathing protection when exposed to silica dust.

To help avoid injury:

- Use water spray or other means to control dust.
- Refer to U.S. Department of Labor Occupational Safety and Health Administration guidelines to learn more about appropriate breathing protection and permissible exposure limits.

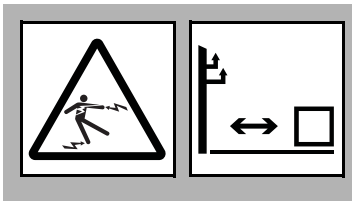

DANGER Electric shock will cause death or serious injury. Stay away. 274-049

To help avoid injury: Expose lines by hand before digging. Cutting high voltage cable can cause electrocution.

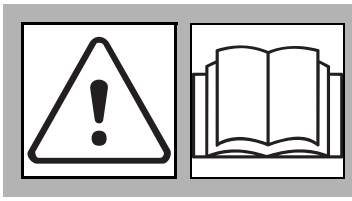

WARNING Read operator's manual. Follow safety rules and know how to use all controls. Your safety is at stake. 273-475

CAUTION Flying objects thrown by machine may strike people. Wear hard hat and safety glasses. 275-193

1. If equipped with combo, set trench/plow switch to the trench position.
2. If equipped with traversing trencher, set at desired offset position.

https://truckmanualshub.com/

3. Move attachment speed/direction control to desired speed. DIGGING CHAIN WILL MOVE.

DANGER Moving digging teeth will cause death or serious injury. Stay away. 275-443

To help avoid injury:

- Ensure parking brake is set.
- Allow 3' (1 m) between digging teeth and obstacle. Machine might jerk when digging starts.
- Keep everyone at least 6' (2 m) from machine, attachments, and their range of movement.

4. Set throttle to full engine speed.
5. Lift trench cleaner, if equipped.
6. Slowly lower digging boom to desired trench depth.
7. Raise backfill blade, if equipped
8. Release parking brake.
9. If using trench cleaner:
   - Use ground drive foot control to move forward about 1' (30 cm), or until there is enough room for trench cleaner to enter trench.
   - Return ground drive control to neutral to stop forward movement.
   - Raise boom slightly, then fully lower trench cleaner to lock it in place.
   - Lower boom to desired trench depth.

   NOTICE:

   - Do not have trench cleaner in working position when starting a trench.
   - Do not back up with trench cleaner in working position.

10. Move ground drive hand control to desired speed. Always start trenching with ground drive speed set at low. Increase ground drive speed only as soil conditions permit.

IMPORTANT: Ground drive speed/direction can be controlled with foot pedal or hand lever. When trenching, set ground drive speed with hand lever. Use foot pedal to temporarily adjust speed if digging conditions change for a short distance.

https://truckmanualshub.com/

11. Operate engine at full throttle when working.

> ***NOTICE:***
>
> - Do not make sharp turns. Lower boom to full depth when turning.
> - If an object becomes lodged in chain, move attachment speed/direction control to neutral and raise boom slightly. Reverse chain direction. If object must be removed manually, turn engine off and set parking brake.

Finish Job

1. When trench is complete, move ground drive hand control to neutral.
2. Adjust throttle to low.
3. Raise boom.
4. As boom clears top of trench, move attachment speed/direction control to neutral.
5. If equipped with traversing trencher, return trencher to center position.
6. Raise trench cleaner, if equipped.
7. Drive a short distance away from work site.
8. Shut down tractor. See page 75 for proper shutdown procedures.
9. Return trench cleaner to the stowed position, if equipped.

https://truckmanualshub.com/

Saw

Chapter Contents

Set Up. 102

Operate 103

Finish Job . . . . . .

https://truckmanualshub.com/

Setup

EMERGENCY SHUTDOWN - Turn ignition switch to STOP.

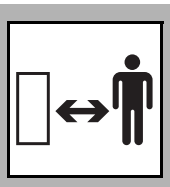

WARNING Crushing weight could cause death or serious injury. Use proper procedures and equipment or stay away.

To help avoid injury: Use attachments or counterweights to make front and rear loads balance when all attachments are raised. Contact your Ditch Witch® dealer about counterweighting for your equipment.

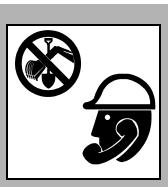

WARNING Jobsite hazards could cause death or serious injury. Use correct equipment and work methods. Use and maintain proper safety equipment.

To help avoid injury: Comply with all utility notification regulations before digging or drilling.

WARNING Read operator's manual. Follow safety rules and know how to use all controls. Your safety is at stake. 273-475

1. Fasten and adjust seatbelt.
2. Start tractor. See page 72 for start-up procedures.
3. Drive to starting point. Move in line with planned job. See page 74 for driving procedures.
4. Set parking brake.
5. Move ground drive control to low.
6. Lower saw to just above ground. See "Saw Controls" on page 44 for information on operating saw.
7. If equipped with traversing saw, set at desired offset position.

https://truckmanualshub.com/

Operate

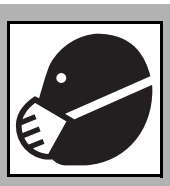

CAUTION Breathing crystalline silica dust may cause lung disease. Cutting, drilling, or working materials such as concrete, sand, or rock containing quartz may result in exposure to silica dust. Use dust control methods or appropriate breathing protection when exposed to silica dust.

To help avoid injury:

- Use water spray or other means to control dust.
- Refer to U.S. Department of Labor Occupational Safety and Health Administration guidelines to learn more about appropriate breathing protection and permissible exposure limits.

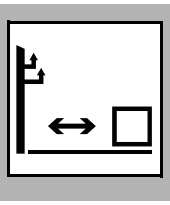

DANGER Electric shock will cause death or serious injury. Stay away. 274-049

To help avoid injury: Expose lines by hand before digging. Cutting high voltage cable can cause electrocution.

WARNING Read operator's manual. Follow safety rules and know how to use all controls. Your safety is at stake. 273-475

CAUTION Flying objects thrown by machine may strike people. Wear hard hat and safety glasses.

1. Lower stabilizer until distance from bottom of skid shoe to bottom of saw bits equals desired trench depth.
2. Ensure that saw is aligned with planned trench and that tires are pointing straight ahead.
3. Adjust throttle to low.

https://truckmanualshub.com/

4. Move attachment speed/direction control to desired speed. SAW WILL TURN.

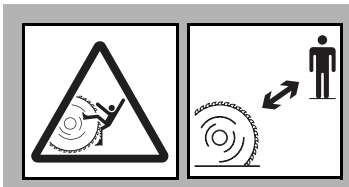

DANGER Moving digging teeth will kill you or cut off arm or leg. Stay away.

To help avoid injury:

- Allow 3' (1 m) between digging teeth and obstacle. Machine might jerk when digging starts.
- Keep everyone at least 10' (3 m) from machine, attachments, and their range of movement.

5. Slowly lower saw to trench depth.
6. Release parking brake.
7. Increase engine speed to full throttle.
8. Move ground drive hand control to desired trenching speed.

NOTICE:

- Lower saw into softer material then move into harder or abrasive material. For example, lower saw into dirt at shoulder before cutting across road.
- If a curved trench must be cut, make a series of straight cuts.

IMPORTANT: If a curved trench must be cut, make a series of straight cuts.

Finish Job

1. When trench is complete, adjust throttle to low.
2. Raise saw.
3. As saw clears top of trench, move attachment speed/direction control to neutral.
4. If equipped with traversing saw, return to center position.
5. Drive a short distance away from work site.
6. Shut down tractor. See page 75 for correct shutdown procedures.
7. Wash bits and mounting blocks with high pressure water before parking unit overnight.

https://truckmanualshub.com/

Plow

Chapter Contents

Set Up. 106

- Position Tractor 107
- Attach Product. 107
- Prepare Tractor 108

Operate 109

Finish Job 110

https://truckmanualshub.com/

Setup

EMERGENCY SHUTDOWN - Turn ignition switch to STOP.

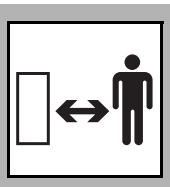

WARNING Crushing weight could cause death or serious injury. Use proper procedures and equipment or stay away.

To help avoid injury: Keep everyone at least 10' (3 m) from machine, attachments, and their range of movement.

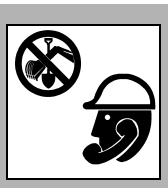

WARNING Jobsite hazards could cause death or serious injury. Use correct equipment and work methods. Use and maintain proper safety equipment.

To help avoid injury: Comply with all utility notification regulations before digging or drilling.

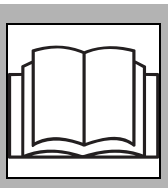

WARNING Read operator's manual. Follow safety rules and know how to use all controls. Your safety is at stake. 273-475

To help avoid injury: Use attachments or counterweights to make front and rear loads balance when all attachments are raised. Contact your Ditch Witch® dealer about counterweighting for your equipment.

https://truckmanualshub.com/

Position Tractor

IMPORTANT: If material must be at a constant depth, dig starting and target trenches.

1. Fasten and adjust seat belt.
2. Start tractor. See page 72 for start-up procedures.
3. Drive to starting point. Move in line with planned trench. See page 74 for driving procedures.
4. Set parking brake.
5. Lower backfill blade, if equipped.
6. Lower plow to starting point of trench.
7. Turn ignition switch to STOP.

Attach Product

Pull Product

1. Insert material into pulling grip.
2. Tape grip with duct tape.

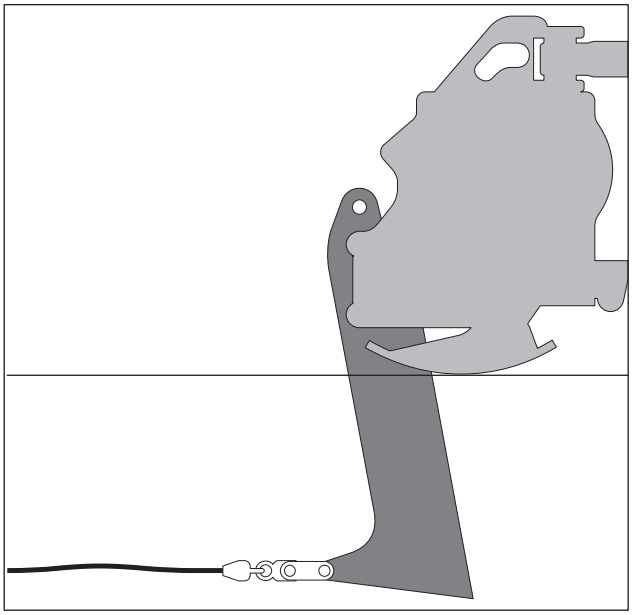

Plow_Pull.eps

https://truckmanualshub.com/

Feed Product

NOTICE: Use only genuine Ditch Witch® cable guide.

1. Remove cable guide.
2. Feed cable through tube from top to bottom.
3. Replace cable guide and tighten fasteners.
4. Secure cable.

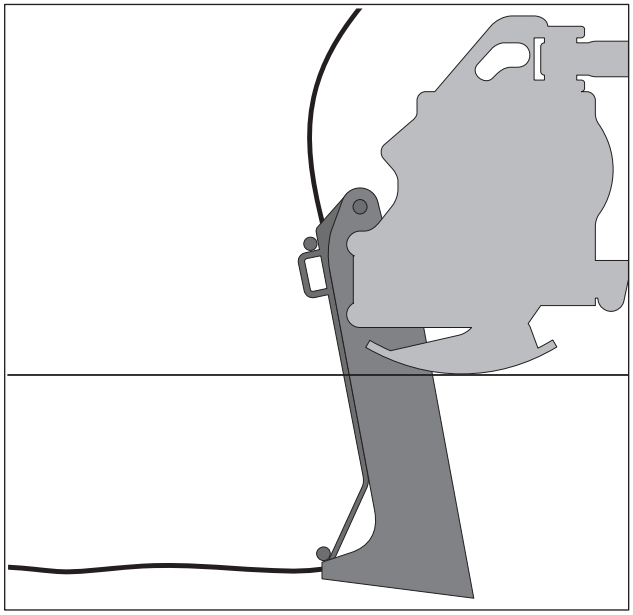

Plow_Feed.eps

Prepare Tractor

1. Fasten and adjust seat belt.
2. Start tractor.
3. Adjust to low throttle.
4. Release parking brake.
5. Move ground drive control to low.
6. Raise backfill blade, if equipped.

https://truckmanualshub.com/

Operate

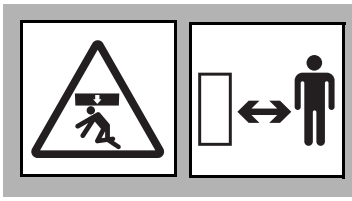

WARNING Crushing weight could cause death or serious injury. Use proper procedures and equipment or stay away.

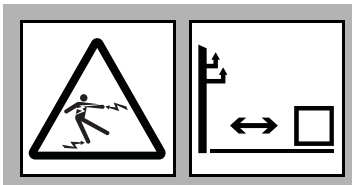

DANGER Electric shock will cause death or serious injury. Stay away. 274-049

To help avoid injury: Expose lines by hand before digging. Cutting high voltage cable can cause electrocution

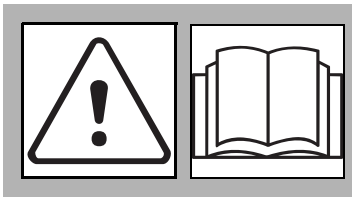

WARNING Read operator's manual. Follow safety rules and know how to use all controls. Your safety is at stake. 273-475

1. If equipped with combo, ensure that the trench/plow switch is in the plow position.
2. Move ground drive hand control forward to plowing speed and lower plow blade into ground.

   NOTICE: Do not drive in reverse with plow blade in the ground.

3. Increase engine speed to full throttle.
4. Move attachment speed/direction control forward to start plow vibration. PLOW WILL VIBRATE.

   NOTICE: Do not operate vibrator unless plow is in the ground.

5. Reduce attachment speed to a point with the least tractor vibration and the highest ground drive speed possible without track slippage. Adjust vibrator speed if ROPS vibrates excessively.
6. Check cable for damage during plowing.

https://truckmanualshub.com/

Finish Job

1. When installation is complete with vibrator running, raise plow to ground level while reducing vibrator speed.

> ***NOTICE:*** Do not operate vibrator when plow is out of the ground.

2. Move attachment speed/direction control to neutral.
3. Set parking brake.
4. Lower backfill blade, if equipped.
5. Turn ignition switch to STOP and remove product from plow.
6. Turn ignition switch to ON.
7. Swing plow to center position and engage swing lock and stow lock.
8. Release parking brake.
9. Drive a short distance away from work site.
10. Shut down tractor. See page 75 for proper shutdown procedures.

https://truckmanualshub.com/

Drill

Chapter Contents

Set Up. 112

- Dig Approach Trench 112
- Dig Target Trench 113
- Install Drill String 113

Operate 114

- Drill 115
- Start Bore with Drill String Guide. 116
- Add Rod 117
- Backream 118
- Install Product 119
- Remove Rod 120

Finish Job 122

- Disassemble Drill String 122
- Remove Drilling Attachment 122

https://truckmanualshub.com/

Set Up

EMERGENCY SHUTDOWN - Turn ignition switch to STOP.

WARNING Jobsite hazards could cause death or serious injury. Use correct equipment and work methods. Use and maintain proper safety equipment.

To help avoid injury:

- Comply with all utility notification regulations before digging or drilling.
- Set up warning barriers and keep people away from machine and jobsite.
- Do not operate drilling attachment if bore path is less than 10' (3 m) from any underground hazard.

WARNING Read operator's manual. Follow safety rules and know how to use all controls. Your safety is at stake. 273-475

Dig Approach Trench

1. Mark path where you intend to drill.
2. Dig an approach trench (1) along the intended bore path.

IMPORTANT: Ensure that approach trench is:

- deep enough for pipe to lay flat and enter soil at correct angle,
- at least 20' (6 m) long, and
- at least 4" (100 mm) wide.

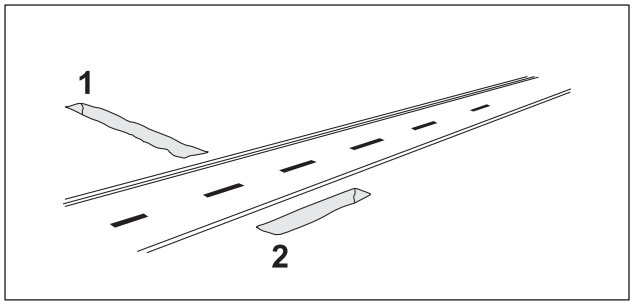

Drill_Attchmnt_Prep_Job.eps

https://truckmanualshub.com/

Dig Target Trench

1. Select a completion point for the bore.
2. Dig a target trench (2) **across** the anticipated completion point.

> **IMPORTANT:** Ensure that target trench is:
>
> - deep enough for drill bit to enter slightly above the trench floor, and
> - long enough to allow for drift of unguided drill string. Accuracy of bore decreases with length and varies with soil conditions.

Install Drill String

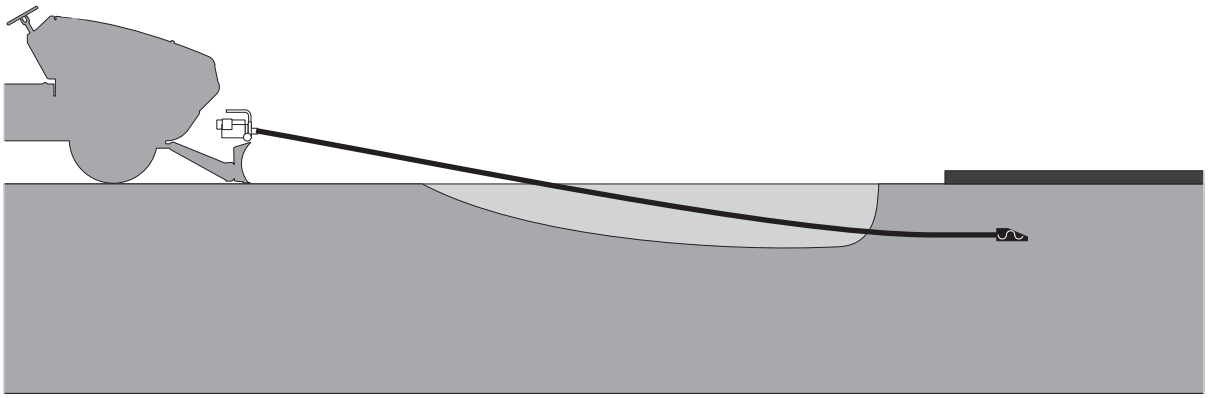

DrillRod_Trencher

1. Assemble at least 20' (6 m), but not more than 30' (9 m), of drill rod sections.
2. Install drill bit to the cutting end of the drill string.
3. Put drill string in approach trench and align with intended bore path.

> ***NOTICE:*** Incorrect installation can cause rod sections to bend.
>
> - Have more than half of drill string length inside trench.
> - If necessary, remove rod sections or increase length of trench.

4. Start engine and set to low throttle. See "Start Unit" on page 72.
5. Lower boom in parallel position to ground.
6. Move machine toward approach trench. See "Drive" on page 74.
7. Show down engine. See "Shut Down" on page 76.
8. Install drilling attachment to backfill blade.
9. Connect hydraulic lines.

https://truckmanualshub.com/

Operate

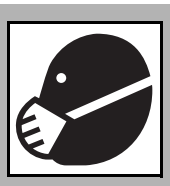

CAUTION Breathing crystalline silica dust may cause lung disease. Cutting, drilling, or working materials such as concrete, sand, or rock containing quartz may result in exposure to silica dust. Use dust control methods or appropriate breathing protection when exposed to silica dust.

To help avoid injury:

- Use water spray or other means to control dust.
- Refer to U.S. Department of Labor Occupational Safety and Health Administration guidelines to learn more about appropriate breathing protection and permissible exposure limits.

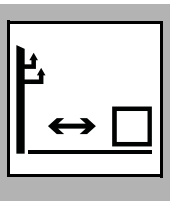

DANGER Electric shock will cause death or serious injury. Stay away. 274-049

To help avoid injury: Expose lines by hand before digging. Cutting high voltage cable can cause electrocution.

WARNING Read operator's manual. Follow safety rules and know how to use all controls. Your safety is at stake. 273-475

CAUTION Flying objects thrown by machine may strike people. Wear hard hat and safety glasses.

https://truckmanualshub.com/

Drill

DANGER Rotating shaft will cause death or serious injury. Stay away. 270-1506, 275-197

To help avoid injury:

- Keep everyone at least 10' (3 m) away from drill string and machine.
- If a person enters the danger zone, use emergency shutdown.
- Wear close-fitting clothing and the applicable personal protective equipment.

1. Evaluate jobsite conditions. If you determine it is necessary, have helper use drill string guide to align drill string as it enters the soil. See "Start Bore with Drill String Guide" on page 116.
2. Start engine and set to low throttle.
3. Operate drilling attachment controls to start clockwise rotation.
4. Slowly move machine forward while maintaining rotation.
   - When length of bore is more than 5' (1.5 m), you may carefully and slowly increase speed.
   - Always use lowest speed necessary.
5. Carefully monitor progress of bore:
   - If rod section starts to bow, stop forward movement of machine and back machine slightly until rod straightens.
   - If drill string becomes blocked, rotate drill string counterclockwise to back up slightly.

   NOTICE: Incorrect drilling will damage drilling equipment.

   - Do not drill too quickly. Drilling bit will drift off course and rod sections may bow or break.
   - Do not drill with bent rod section.

   - When drill bit enters target trench, stop rotation immediately.

   IMPORTANT: After initial bore is complete, choose the next task:

   - Backream to enlarge bore. See "Backream" on page 118.
   - Pull drill string to install product. See "Install Product" on page 119.

https://truckmanualshub.com/

Start Bore with Drill String Guide

If jobsite conditions make it necessary, ask a helper to follow the instructions below to operate the drill string guide at start of bore.

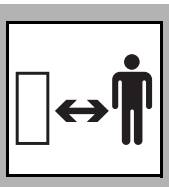

DANGER Rotating shaft will cause death or serious injury. Stay away.

To help avoid injury:

- Use only the approved Ditch Witch® drill string guide (p/n 118-079).
- Do not straddle trench or drill string. Do not enter trench.
- Keep hands and feet away from drill string and drilling attachment.
- Do not use drill string guide during backreaming or when drill string is being pulled back.
- Only use drill string guide on left side of approach trench.

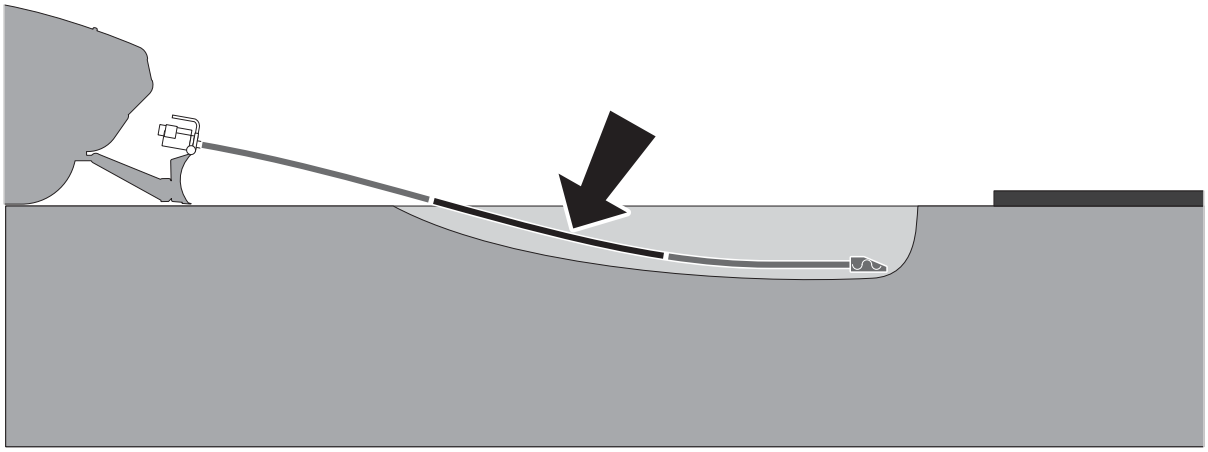

DrillRod_RemoveRod.eps

1. Stand on **left** side of approach trench.
2. Put drill string guide in correct position:
   - at least 3' (1 m) behind drill bit
   - hook side toward bore
   - cradle side toward machine
3. When drill string guide is in correct position, signal machine operator to start bore.
4. Use drill string guide to control the first 5' (1.5 m) of the bore path.
5. When length of bore is 5' (1.5 m), have machine operator stop machine.
6. When drill string has stopped, remove drill string guide and leave danger area.

https://truckmanualshub.com/

Add Rod

If more length is needed, ask a helper to add a rod section.

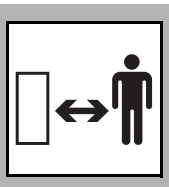

DANGER Rotating shaft will cause death or serious injury. Stay away.

To help avoid injury: Only access drilling attachment with hands when engine is shut down.

Disconnect Drill String from Drilling Attachment

1. Operate controls to stop rotation of drilling attachment.
2. To loosen drill string in ground, operate ground drive controls to move machine rearward 6" (15 cm).
3. Shut down engine.
4. Disconnect drill string from drilling attachment with applicable special tool (p/n 351-272). See "Disassemble Drill String" on page 122.
5. Start engine.
6. Operate ground drive controls to move unit rearward, slightly more than length of rod section.

Add Rod Section

1. Shut down engine.
2. Have helper connect new rod section to drilling attachment.
3. Start engine and set to low throttle.
4. Slowly move machine forward until new rod section and drill string are about 1' (30 cm) apart.
5. Have helper lightly hold new rod section and drill string so that they are aligned.

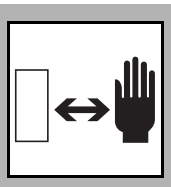

WARNING Pinch point. Crushing will cause serious injury.

To help avoid injury:

- Keep hands at least 6" (15 cm) from ends of rod section and drill string.
- Support rods from underneath with open palms. Do not grip rods.

6. Rotate drilling attachment to align slip latches of new rod section and drill string.
7. Move unit forward slowly. As soon as new rod section engages drill string, have helper move hands clear.
8. Slightly move forward until the slip latch connection is correctly latched.

https://truckmanualshub.com/

Backream

After drill bit enters target trench, the bore hole may be enlarged by changing the drill bit to a reamer and pulling it back through the initial bore.

NOTICE: Incorrect use may damage components and increase wear.

- Do not try to increase hole size too much in one pass. Make several passes using successively larger reamers.
- Keep drill string straight and aligned with drilling attachment. Sharp bends can cause rod failure.
- Never have more than 30' (9 m) of exposed rod outside the bore. Remove rods as necessary.

Single Pass

1. Shut down engine.
2. Remove drill bit and install applicable reamer.
3. Start engine and begin clockwise rotation.

   IMPORTANT: Always rotate clockwise during backreaming. Rotate counterclockwise only if drill bit or reamer is blocked in bore.

4. Slowly back up machine while maintaining rotation.

   IMPORTANT: If length of rod outside the bore reaches 30' (9 m), remove rod section. See "Remove Rod" on page 120.

5. When reamer exits the approach trench, stop rotation immediately.

Multiple Passes

1. Do a single pass.
2. Install drill bit.
3. Push drill string through bore. Do not rotate.
4. Do a single pass. At final pass, install product. See "Install Product" on page 119.

https://truckmanualshub.com/

Install Product

To install product, pull it through the bore after drilling or final pass of backreaming.

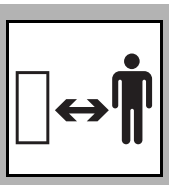

DANGER Rotating shaft will cause death or serious injury. Stay away.

To help avoid injury: Ensure no one is in target trench or near product being installed. If swivel malfunctions, material can rotate.

1. Install applicable swivel (2) to drill string (1) or reamer. Ensure swivel functions correctly.
2. Use shackle (3) to attach pipe pulling adapter (4) or pulling grip (5) to swivel.
3. Attach material to pipe pulling adapter or pulling grip.
4. Set engine to low throttle.
5. Slowly back up machine. If there is a blockage, begin counterclockwise rotation.

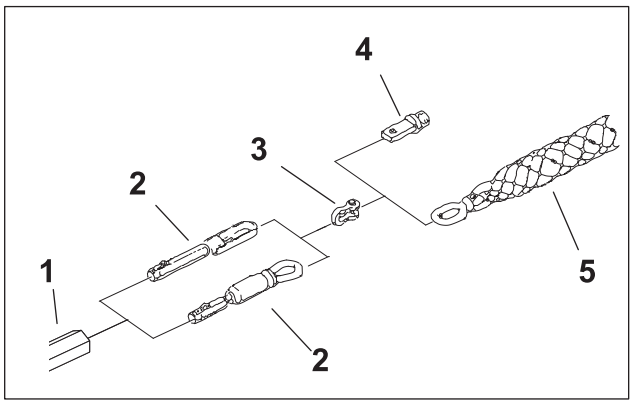

RW_PullingTools.eps

IMPORTANT: If length of rod outside the bore reaches 30' (9 m), remove rod section. See "Remove Rod" on page 120.

6. When product exits approach trench, stop machine immediately.

https://truckmanualshub.com/

Remove Rod

If the length of rod outside the bore reaches 30' (9 m), ask a helper to remove rod sections as needed.

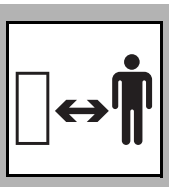

DANGER Rotating shaft will cause death or serious injury. Stay away.

To help avoid injury:

- Only access drill string with hands when engine is shut down.
- Always remove second rod (as shown). Leave first rod section attached to drilling attachment.

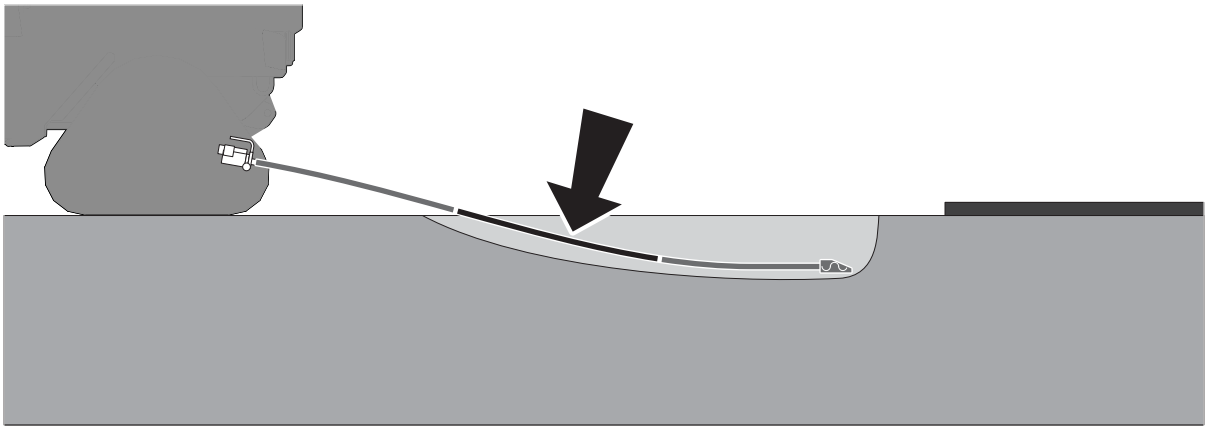

t48om060w.eps

Remove Rod Section

1. Operate controls to stop rotation of drilling attachment.
2. Shut down engine.
3. Disconnect and remove applicable rod section with applicable special tool (p/n 351-272). See "Disassemble Drill String" on page 122.

https://truckmanualshub.com/

Reconnect Drill String

1. Start engine and set to low throttle.
2. Slowly move machine forward until attached rod section and drill string are about 1' (30 cm) apart.
3. Have helper lightly hold attached rod section and drill string so that they are aligned.

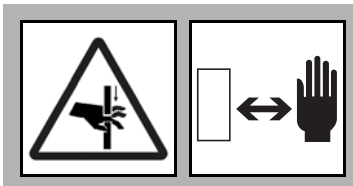

WARNING Pinch point. Crushing will cause serious injury.

To help avoid injury:

- Keep hands at least 6" (15 cm) from ends of rod section and drill string.
- Support rods from underneath with open palms. Do not grip rods.

4. Rotate drilling attachment to align slip latches of new rod section and drill string.
5. Move unit forward slowly. As soon as new rod section engages drill string, have helper move hands clear.
6. Slightly move forward until the slip latch connection is correctly latched.

https://truckmanualshub.com/

Finish Job

Disassemble Drill String

1. Shut down engine.
2. Disconnect drill string from drilling attachment.
3. Remove drill bit.
4. Disconnect sections:
   - Press tab through hole in female side of joint (1) using special tool (p/n 351-272).
   - Pull rod sections apart (2).

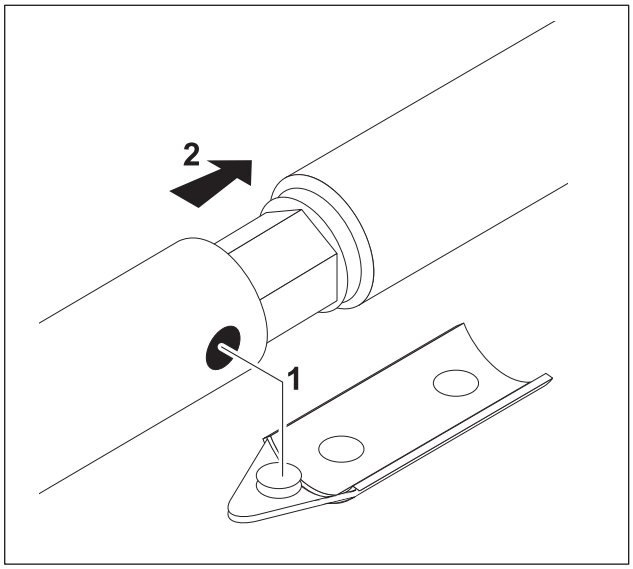

Drill_Attchmnt_RodJoints.eps

Remove Drilling Attachment

1. Disconnect hydraulic hoses if necessary.
2. If desired, remove drilling attachment from backfill blade.

https://truckmanualshub.com/

Microtrenching

Chapter Contents

Set Up. 125

- Adjust Trench Depth 126
- Adjust Tilt 126
- Adjust Level Indicator 126
- Position Alignment Guide 126
- Prepare Spoils Removal 127

Operate 128

- Use Trench Cleaner 130

Finish Job 131

M

https://truckmanualshub.com/

Set Up

EMERGENCY SHUTDOWN - Turn ignition switch to STOP.

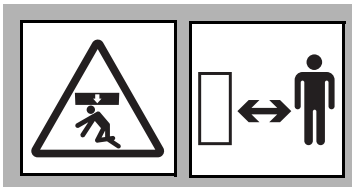

WARNING Crushing weight could cause death or serious injury. Use proper procedures and equipment or stay away.

NOTICE: Use attachments or counterweights to make front and rear loads balance when all attachments are raised. Contact your Ditch Witch® dealer about counterweighting for your equipment.

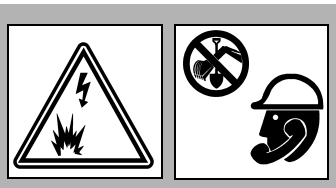

WARNING Jobsite hazards could cause death or serious injury. Use correct equipment and work methods. Use and maintain proper safety equipment.

To help avoid injury: Comply with all utility notification regulations before digging or drilling.

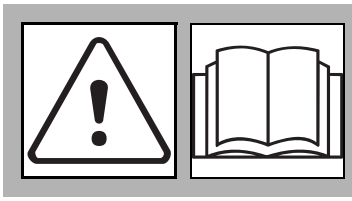

WARNING Read operator's manual. Follow safety rules and know how to use all controls. Your safety is at stake. 273-475

1. Fasten and adjust seat belt.
2. Start tractor. See page 72 for start-up procedures.
3. Drive to starting point. Move in line with planned trench. See page 74 for correct driving procedures.
4. Lower backfill blade, if equipped.
5. Set parking brake.
6. Lower microtrencher to just above ground. See "Microtrencher Controls" on page 48 for information on operating microtrencher.

https://truckmanualshub.com/

Adjust Trench Depth

Blade

1. Shut down tractor and remove blade (see page 184.)
2. Remove 4 bolts (2).
3. Lift or lower blade motor to desired depth. Use the depth decal (1) as a guide.
4. Install bolts and tighten nuts to 200 ft-lb (271 N-m).

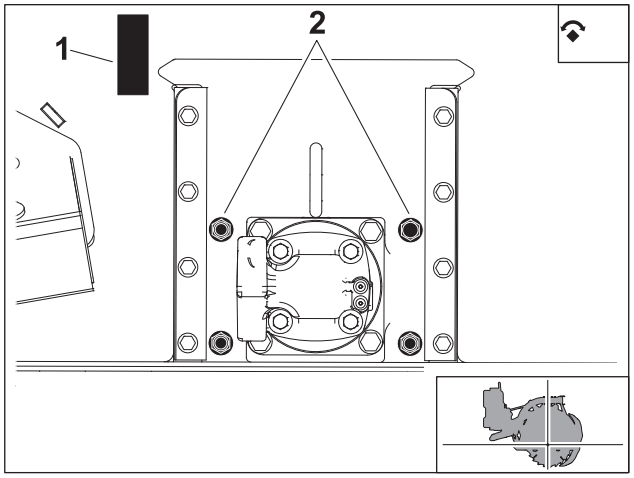

Spoils Deflector

1. Remove blade cover.
2. Remove bolts and nuts that retain the inside spoils deflector.
3. Position spoils deflector.

> **IMPORTANT:** For best spoils removal, set the spoils deflector as close to the blade as possible.

4. Install bolts and tighten nuts firmly.

> ***NOTICE:*** Overtightening nuts will damage deflector.

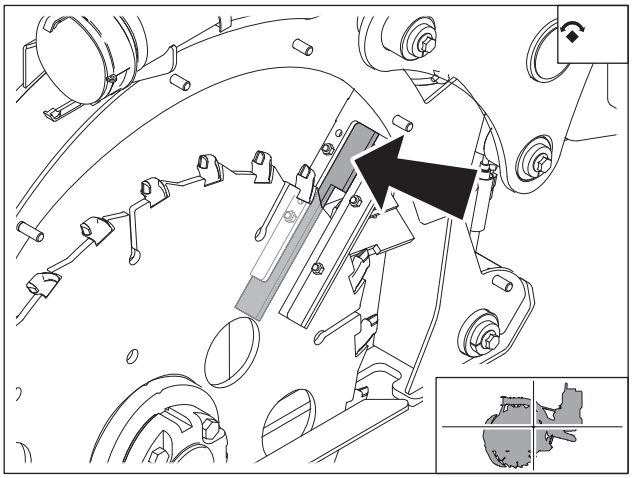

t28om066h.eps

M

https://truckmanualshub.com/

Adjust Tilt

IMPORTANT: Microtrenching requires good contact between the microtrencher frame and the surface being cut. Use lift control, level control, and manual tilt to adjust microtrencher to match jobsite conditions.

1. Lower microtrencher and turn off tractor.
2. Loosen 4 clamp bolts (2, and two on other side of mount).
3. Adjust manual adjustment turn screw (1) and watch bubble level (3) until desired tilt is achieved.
4. Install and tighten clamp bolts.

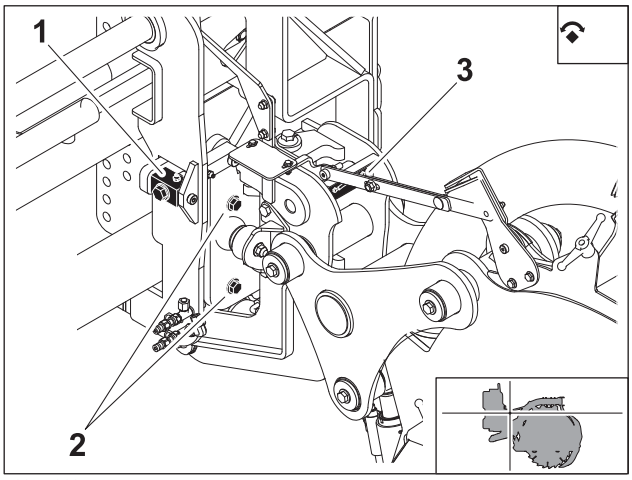

t28om068h.eps

Adjust Level Indicator

1. Shut down tractor and remove blade. (See page 184.)
2. Using lift control and level control, position base of microtrencher flat on pavement.
3. Loosen bolts (1) in adjustable link and align moving pointer (2) with fixed pointer.
4. Tighten bolts.

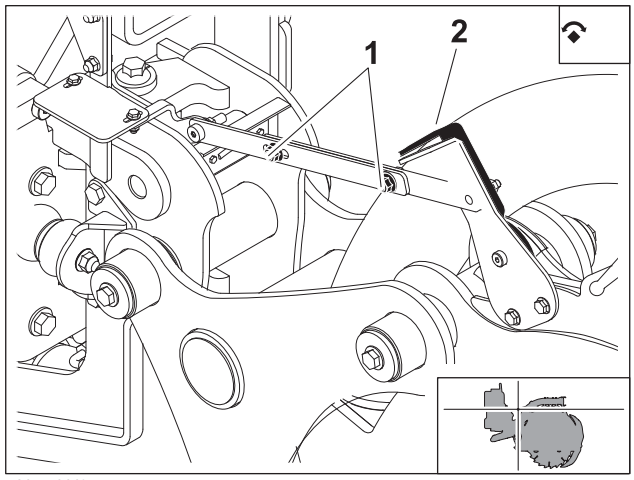

t28om088h.eps

Position Alignment Guide

1. Mark intended trench path with paint.
2. Attach chain to backfill blade.
3. Adjust backfill blade until chain is in line with microtrencher blade.
4. Monitor chain periodically while trenching to ensure chain follows paint line during operation.
5. Remove chain from backfill blade before transporting tractor.

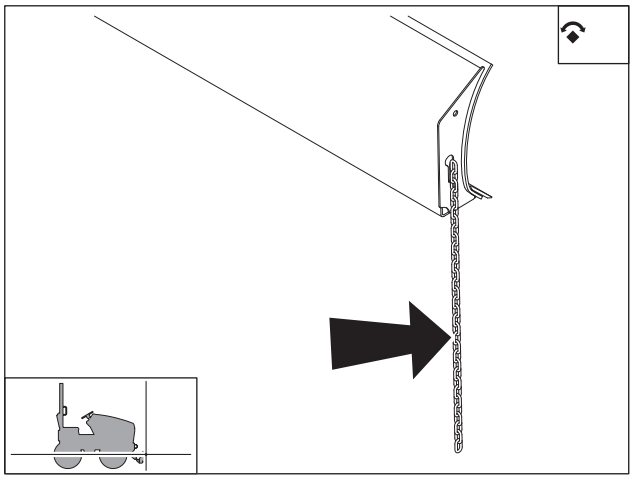
t28om070h.eps

https://truckmanualshub.com/

Prepare Spoils Removal

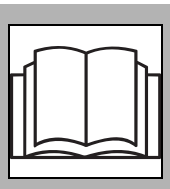

WARNING Read operator's manual. Follow safety rules and know how to use all controls. Your safety is at stake. 273-475

To help avoid injury: Do not operate without blade cover and chutes or chute plates installed.

The MT12 MicroTrencher is designed to operate optimally with an 800 cfm vacuum excavator unit to remove spoils. If vacuum excavator is not available, set up unit to operate without it.

With Vacuum Excavator

1. Connect vacuum hose on excavator to vacuum hose on tractor.
2. Operate vacuum unit at full speed for best results. Full vacuum flow to the microtrencher is necessary for best spoils removal.

IMPORTANT: Ensure that vacuum hoses are clear, vacuum filters are clean, and separator canister is empty prior to operation.

Without Vacuum Excavator

1. Cap vacuum hose on tractor.
2. Remove chute plates (1).
3. Install spoils chutes (2).

IMPORTANT: Note orientation of spoils chute as indicated by decal on chute.

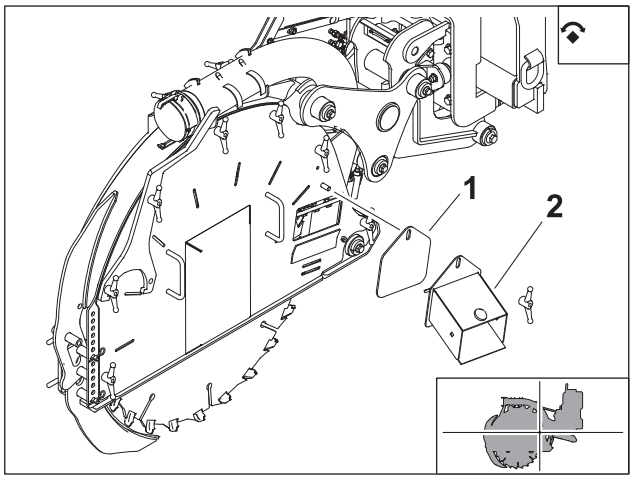

t28om069h.eps

https://truckmanualshub.com/

Operate

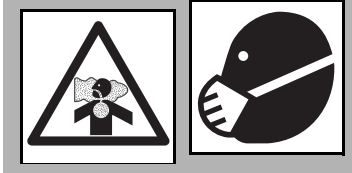

CAUTION Breathing crystalline silica dust may cause lung disease. Cutting, drilling, or working materials such as concrete, sand, or rock containing quartz may result in exposure to silica dust. Use dust control methods or appropriate breathing protection when exposed to silica dust.

To help avoid injury:

- Use water spray or other means to control dust.
- Refer to U.S. Department of Labor Occupational Safety and Health Administration guidelines to learn more about appropriate breathing protection and permissible exposure limits.

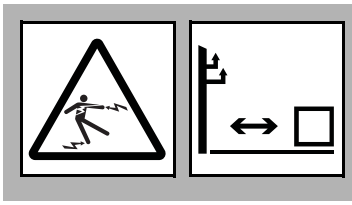

DANGER Electric shock will cause death or serious injury. Stay away. 274-049

To help avoid injury: Expose lines by hand before digging. Cutting high voltage cable can cause electrocution.

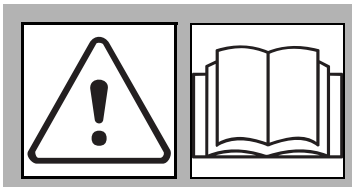

WARNING Read operator's manual. Follow safety rules and know how to use all controls. Your safety is at stake. 273-475

To help avoid injury: Use attachments or counterweights to make front and rear loads balance when all attachments are raised. Contact your Ditch Witch® dealer about counterweighting for your equipment.

CAUTION Flying objects thrown by machine may strike people. Wear hard hat and safety glasses. 275-193

To help avoid injury: Never operate microtrencher without blade cover installed.

1. Ensure that microtrencher is in line with planned trench and that tires are pointing straight ahead.
2. Adjust throttle to low.

https://truckmanualshub.com/

3. Move attachment speed/direction control to desired speed. BLADE WILL TURN.

DANGER Moving digging teeth will cause serious injury or death. Stay away.

To help avoid injury:

- Allow 3' (1 m) between digging teeth and obstacle. Machine may jerk when digging starts.
- Keep everyone at least 10' (3 m) from machine, attachments, and their range of movement.

4. Slowly lower microtrencher to full depth.

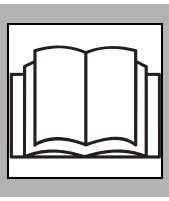

WARNING Read operator's manual. Follow safety rules and know how to use all controls. Your safety is at stake. 273-475

5. Release parking brake.
6. Increase engine speed to full throttle.
7. Move ground drive hand control to desired trenching speed.

NOTICE:

- Lower microtrencher into softer material then move into harder or abrasive material. For example, lower microtrencher into dirt at shoulder before cutting across road.
- Microtrencher is not recommended for soft, wet, or sticky soil conditions.

IMPORTANT: If a curved trench must be cut:

- Release swing lock.
- Make a series of straight cuts for a curved trench smalled than a 40' (12.2 m) radius. .

https://truckmanualshub.com/

Use Trench Cleaner

Use the correct trench cleaner for your blade. Two trench cleaners are available: one for blades 1" (25 mm) or less and one for blades wider than 1" (25 mm).

NOTICE: Do not start trench with trench cleaner in place.

1. Start trench and move forward a short distance.
2. Move ground drive to neutral and set parking brake.
3. Raise microtrencher and stop rotation.
4. Remove trench cleaner from stowed position (shown).

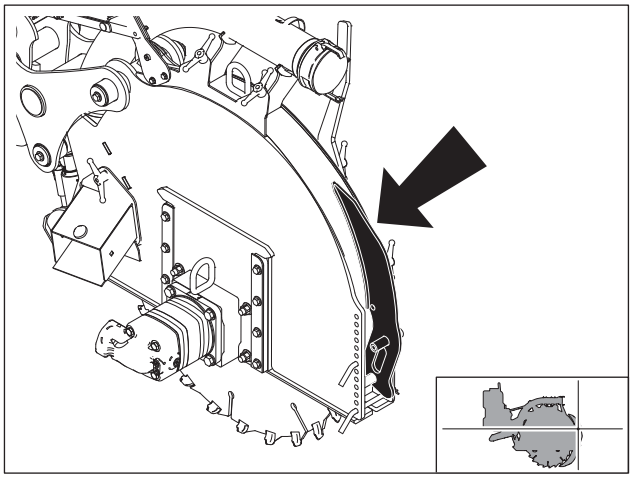

t28om087h.eps

5. Set trench cleaner to desired depth by matching number of holes below trench cleaner mounting pin to number of holes below blade motor, as shown. Trench cleaner should be close to, but not touching, blade.

   NOTICE: Operating microtrencher with trench cleaner in the wrong position can damage trench cleaner or blade.

6. Start blade rotation and slowly lower microtrencher into trench to continue trenching.
7. When finished, stop trenching and return trench cleaner to stowed position.

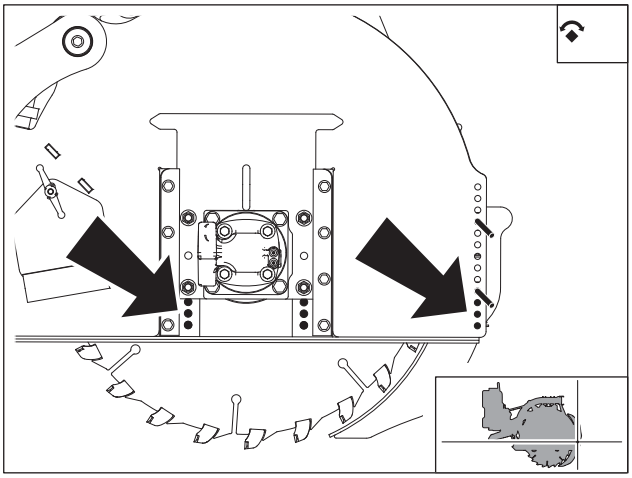

t28om071h.eps

https://truckmanualshub.com/

Finish Job

1. When trench is complete, adjust throttle to low.
2. Raise microtrencher.
3. As blade clears top of trench, move attachment speed/direction control to neutral.
4. Drive a short distance away from work site.
5. Shut down tractor. See page 75 for correct shutdown procedures.
6. Wash bits and mounting blocks with high pressure water before parking unit overnight.

https://truckmanualshub.com/

https://truckmanualshub.com/

Systems and Equipment

Chapter Contents

Chain, Teeth, and Sprockets 134

- Chain and Tooth Maintenance 134
- Chain Types 134
- Chain Selection. 135

Optional Equipment 136

- RT45 Tractor 136
- A323 Backhoe. 136
- H313/H314 Trencher. 136
- H331 Plow. 137
- H342 Saw 137
- MT12 MicroTrencher. 137

Counterweighting 138

https://truckmanualshub.com/

Chain, Teeth, and Sprockets

Chain and Tooth Maintenance

- Always replace sprockets at the same time you replace the digging chain. Sprockets and chain are designed to work together. Replacing one without the other will cause premature wear of the new part.
- Keep digging teeth sharp. Using dull, worn teeth will decrease production and increase shock load to other trencher components. It can also cause chain stretch, which leads to premature chain wear and failure.
- Maintain the proper amount of tension on the digging chain. Overtightening will cause chain stretch and loss of machine performance. For correct tightening procedure, see page 154.
- Use the tooth pattern most appropriate for your digging conditions. If you move to a different soil type, contact your Ditch Witch® dealer for information about the most effective chain type and tooth pattern.

Chain Types

Chain type	Features
4-pitch	standard chain
2-pitch	more teeth for smoother cutting
alternating side bar	prevents spoil compaction on chain
bolt-on adapters	allow easy configuration changes
Shark Chain II	versatile, virtually maintenance-free
combination	provides pick and shovel effect

https://truckmanualshub.com/

Chain Selection

These charts are meant as a guideline only. No one chain type works well in all conditions. See your Ditch Witch® dealer for soil conditions and chain recommendations for your area. Ask for the latest Chain, Teeth, and Sprockets Parts Catalog.

- 1 = best
- 2 = better
- 3 = good
- 4 = not recommended

Chain	Sandy Soil	Soft Soil	Medium Soil	Hard Soil	Rocky Soil	Sticky Soil
4-pitch cup tooth	3	1	2	3	4	1
2-pitch cup tooth	2	3	1	1	3	4
bolt-on adaptor, 2-pitch	4	4	3	2	1	4
bolt-on adaptor/cup tooth combo	4	3	2	1	2	4
Shark Chain II	4	3	2	1	1	4
alternating side bar	4	4	4	4	4	1

Soil	Description
sandy soil	sugar sand, blow sand, or other soils where sand is the predominant component
soft soil	sandy loam
medium soil	loams, loamy clays
hard soil	packed clays, gumbo, all compacted soils
rocky soil	chunk rock, glacial till, cobble, rip rap, gravel
sticky soil	gumbo, sticky clays

https://truckmanualshub.com/

Optional Equipment

See your Ditch Witch® dealer for more information about the following optional equipment.

RT45 Tractor

Equipment	Description
light kits	mount to 2-post ROPS
tires	26" or 29" are available
cold start kit	aids starting in cold weather
rear steer	provides greater maneuverability while working
rear counterweight	required for some backhoe and reel carrier applications
European compliance kit	includes lockable fuel cap

A323 Backhoe

IMPORTANT: A322 backhoe is not configured for the RT45 Tier 4.

Equipment	Description
bucket and bucket teeth	replace as needed to increase efficiency and keep from damaging machine
remote crowd	use to creep tractor forward during digging
light kit	illuminates the backhoe work area

H313/H314 Trencher

Equipment	Description
booms	provide depth options of 3' (1 m) or 4' (1.2 m) or 5' (1.5 m)
mechanical trench cleaner	removes spoils from the trench floor

https://truckmanualshub.com/

H342 Saw

Equipment	Description
bits and bit holders	replace as needed to increase efficiency and keep from damaging machine
block repair jigs	use to repair worn or damaged blocks or plates housing the bit holder; use block repair jig available from your Ditch Witch® dealer and an E7018 or equivalent

H331 Plow

Equipment	Description
blades	provide depth options of 12" (305 mm), 18" (457 mm), and 24" (610 mm)
reel carrier	designed to fit your Ditch Witch equipment and speed cable installation
toe	stabilize the plow for more constant depth
bullet	allow a larger cavity for the material being installed

MT12 MicroTrencher

Equipment	Description
bits and bit holders	replace as needed to increase efficiency and keep from damaging machine
blades	provides options for cutting trenches 0.75" (19 mm), 0.95" (24 mm), or 1.25" (32 mm) wide
vacuum kit	use to connect vacuum hose on trencher to hose on vacuum excavation unit; includes hose guides that mount to side of tractor

https://truckmanualshub.com/

Counterweighting

Attachment	Counterweight required
H313 trencher	one wheel weight per each 26" front tire + 200 lb (91 kg) TBS in each front tire + 400 lb (181 kg) front counterweight
	two wheel weights per each 29" front tire + 200 lb (91 kg) TBS in each front tire + 400 lb (181 kg) front counterweight
H314 trencher	A323 backhoe + one wheel weight per each 26" rear tire + 200 lb (91 kg) TBS in each rear tire
	A323 backhoe + two wheel weights per each 29" rear tire + 200 lb (91 kg) TBS in each rear tire
	800 lb (363 kg) front counterweight
H350 combo	two wheel weights per each 29" front tire + 1100 lb (499 kg) front counterweight
	A323 backhoe + two wheel weights per each 29" rear tire + 200 lb (91 kg) TBS in each rear tire + 100 lb (45 kg) TBS in each front tire
H342 saw	A323 backhoe + one wheel weight per each 26" rear tire + 200 lb (91 kg) TBS in each rear tire
	A323 backhoe + two wheel weights per each 29" rear tire + 200 lb (91 kg) TBS in each rear tire
	800 lb (363 kg) front counterweight
H331 plow	two wheel weights per each 29" front tire + 200 lb (91 kg) TBS in each front tire
	400 lb (181 kg) front counterweight
MT12 MicroTrencher	500 lb (227 kg) front counterweight

https://truckmanualshub.com/

Complete the Job

Chapter Contents

Restore Jobsite 140

- Backfilling 140

Rinse Equipment 140

Stow Tools 140

https://truckmanualshub.com/

Restore Jobsite

After product is installed, return spoils to the trench with backfill blade.

Backfilling

1. Position unit at end of trench, several feet from spoils. Aim tractor at outer edge of spoils.
2. Adjust backfill blade to fit land contour.
3. Move outer edge of spoils toward trench. Take two or more passes at spoils rather than moving all spoils at once.
4. Repeat on other side of trench, if necessary.
5. Engage float and make final pass in reverse over trench.

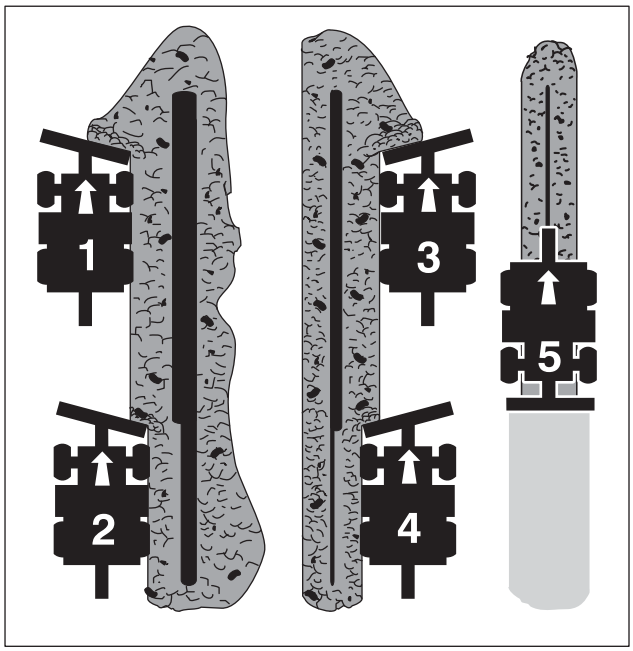

Backfilling.eps

Rinse Equipment

- Wash saw bits and mounting blocks with high pressure water before parking unit overnight.
- Spray water onto equipment to remove dirt and mud.

NOTICE: Do not spray water onto operator's console. Electrical components could be damaged. Wipe down instead.

Stow Tools

Make sure all tools and accessories are loaded and properly secured on trailer.

https://truckmanualshub.com/

Service

Chapter Contents

Service Precautions 142

- Welding Precaution 142
- Washing Precaution 142

Lubrication Overview 143

Recommended Lubricants/Service Key 144

- Engine Oil Temperature Chart. 145
- Approved Coolant 146
- Approved Fuel. 146
- Tier 4 Engine 147

10 Hour 148

100' (30.5 m) 160

50 Hour 162

100 Hour. 166

250 Hour. 167

500 Hour 168

1000 Hour 172

As Needed 174

https://truckmanualshub.com/

Service Precautions

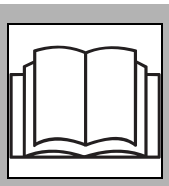

WARNING Read operator's manual. Follow safety rules and know how to use all controls. Your safety is at stake. 273-475

To help avoid injury:

- Unless otherwise instructed, all service should be performed with engine off.
- Refer to engine manufacturer's manual for engine maintenance instructions.
- Lower unstowed attachments to ground before servicing equipment.

Welding Precaution

NOTICE: Welding can damage electronics.

- Disconnect battery at battery disconnect switch, if equipped, or disconnect battery cables before welding to prevent damage to battery.
- Do not turn off battery disconnect switch with engine running or alternator and other electronic devices may be damaged.
- Welding currents can damage electronic components. Always disconnect the ECU ground connection from the frame, harness connections to the ECU, and other electronic components prior to welding on machine or attachments. Connect welder ground close to welding point and ensure no electric components are in the ground path.

Washing Precaution

NOTICE: Water can damage electronics. When cleaning equipment, do not spray electrical components with water.

https://truckmanualshub.com/

Lubrication Overview

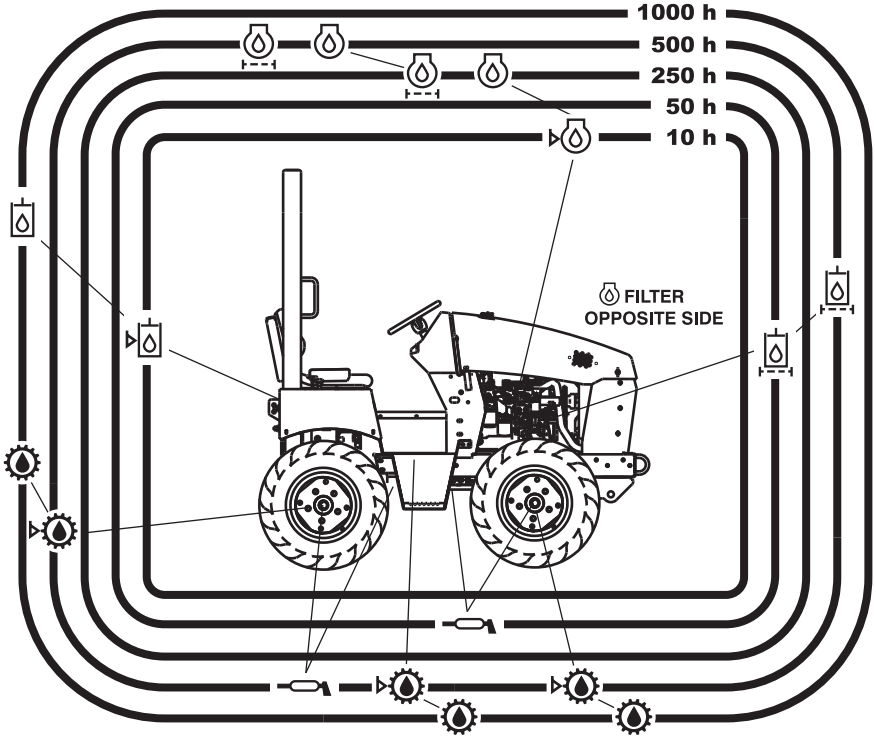

t42om008h.eps

https://truckmanualshub.com/

Recommended Lubricants/Service Key

Item	Description		
DEO	Diesel engine oil meeting or exceeding Deutz specification DQC III- LA. ***NOTICE:*** Shipped from factory with API CJ-4 DEO meeting Deutz specification DQC II-LA. Change oil initially at 250 hours. • Engine must use low sulfated ash, phosphorous, and sulfur (low SAPS) oil. • See viscosity chart. If oils meeting only API CJ-4 or ACEA E6/E9 are used, service interval is reduced to 250 from 500 hours.		
MPG	Multipurpose grease meeting NLGI GC-LB Grade 2		
MPL	Multipurpose gear oil meeting API service classification GL-5 (SAE 80W90)		
DEAC	Low silicate, nitrite free, fully formulated diesel engine antifreeze/coolant meeting Deutz specification DQC CB-14. See "Approved Coolant" on page 146.		
THF	Tractor hydraulic fluid, similar to Phillips 66® HG, Mobilfluid® 423, Chevron® Tractor Hydraulic Fluid, Texaco® TDH Oil, or equivalent		
	Check level of fluid or lubricant		Check condition
	Filter		Change, replace, adjust, service or test

Proper lubrication and maintenance protects Ditch Witch equipment from damage and failure. Service intervals listed are for minimum requirements. In extreme conditions, service machine more frequently. Use only genuine Ditch Witch® parts, filters, approved lubricants, TJC, and approved coolants to maintain warranty. Fill to capacities listed in "Specifications" on page 187.

For more information on engine lubrication and maintenance, see your engine manual.

IMPORTANT: Use the "Service Record" on page 209 to record all required service to your machine.

https://truckmanualshub.com/

Engine Oil Temperature Chart

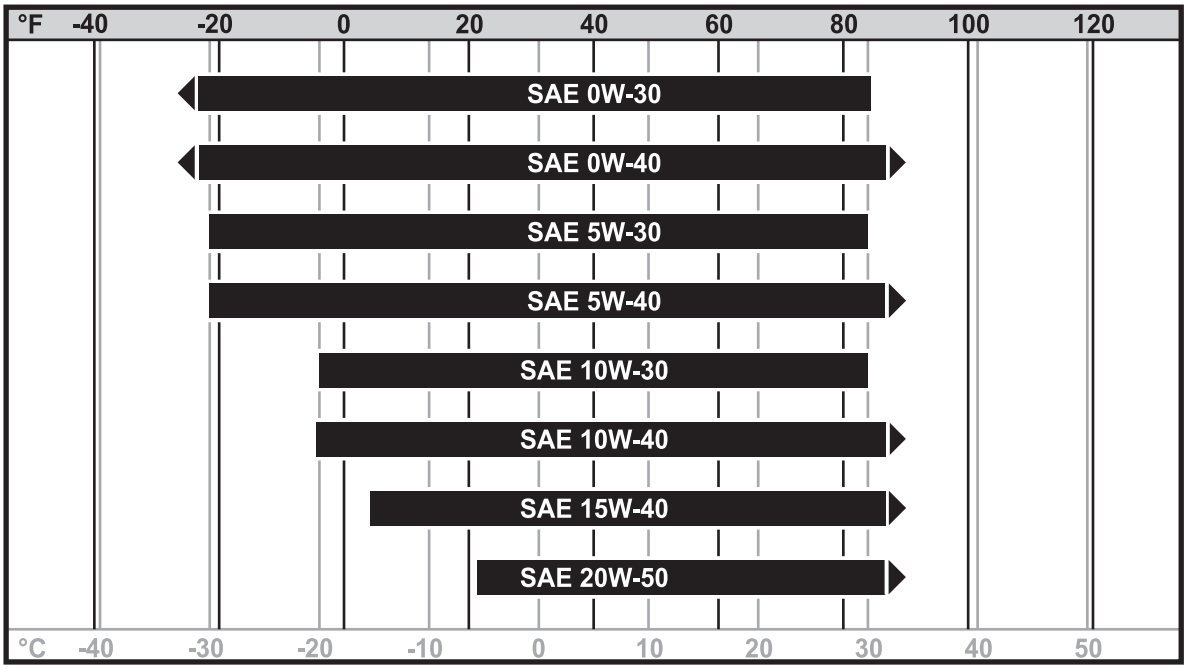

t42om022h.eps

Select oil based on ambient temperature range expected before next oil change.

https://truckmanualshub.com/

Approved Coolant

Beginning March 14, 2016, this unit was filled with **red** coolant meeting Deutz® DQC CB-14 before shipment from factory. Add or replace only with coolant meeting this specification. This coolant is available, pre-diluted, from your Ditch Witch dealer as part number 255-1053. Contact your Deutz service partner for a full list of approved coolants meeting DQC CB-14. In an emergency, non-Deutz approved, heavy duty diesel engine coolant meeting ASTM D6210 may be used. Change to DQC CB-14 coolant as soon as practical.

Prior to March 14, 2016, this unit was filled with **yellow** John Deere® Cool-Gard® coolant before shipment from factory. Add only John Deere Cool-Gard (p/n 255-006) or any fully-formulated, ethylene glycol based, low-silicate, heavy-duty diesel engine coolant meeting ASTM specification D6210. Switch to the new approved **red** coolant described above at the next change interval.

NOTICE:

- Use only pre-diluted or concentrated coolant mixed with distilled water. Do not use tap water.
- Do not use water or high-silicate automotive-type coolant. This will lead to engine damage or premature engine failure.
- Do not mix heavy-duty diesel engine coolant and automotive-type coolant. This will lead to coolant breakdown and engine damage.

Approved Fuel

WARNING Avoid static electricity when fueling. Ultra Low Sulfur Diesel (ULSD) poses a greater static ignition hazard than earlier diesel formulations. Avoid death or serious injury from fire or explosion. Consult with your fuel system supplier to ensure the delivery system is in compliance with fueling standards for proper grounding and bonding practices.

The engine is this unit is designed to run on diesel fuel. Use only high-quality fuel meeting ASTM D975 No. 2D, EN590, or equivalent. At temperatures below 32°F (0°C), winter fuel blends are acceptable. See engine operation manual for more information.

NOTICE: Use only Ultra Low Sulfur Diesel (less than 15 ppm (15 mg/kg) sulfur content) in this unit. Operating with higher sulfur content will damage the engine and after treatment device.

Biodiesel blends up to 5% (B5) are approved for use in this unit. The fuel used must meet the specifications for diesel fuel shown above. Extra attention is needed when using biodiesel, especially when operating in cold weather or storing fuel. Contact your Ditch Witch® dealer or the engine manufacturer for more information.

https://truckmanualshub.com/

Tier 4 Engine

The Deutz Tier 4 D2.9 L4 engine uses a computer-controlled fuel management system and diesel oxidation catalytic converter (DOC).

Diagnostic and maintenance work may only be carried out by authorized personnel using equipment approved by Deutz.

Deutz control units are equipped with self-diagnostics. Active and passive error codes are saved in the error memory. Active errors are displayed on the electronic display panel or error lamp (flash code) CAN bus. If error codes are recorded, contact your Ditch Witch® dealer.

Diesel engines that are equipped with an exhaust after treatment system (EAT) may only be operated with an ultra low sulfur diesel fuel. See "Approved Coolant" on page 146.

https://truckmanualshub.com/

10 Hour

Location	Task	Notes
TRACTOR	Check engine oil level	DEO
	Check hydraulic fluid level and reservoir breather cap	THF
	Check coolant level	DEAC
	Check oil cooler/radiator	
	Check hydraulic hoses	
	Check inflatable tire pressure and lugnuts (if equipped)	20-30 psi (1.4-2.1 bar) 95 ft•lb (129 N•m)
	Check solid rubber tire mounting bolts (if equipped)	350 ft•lb (475 N•m)
TRENCHER	Lube trencher tail roller	MPG
	Lube trencher pivot	MPG
	Lube trencher pivot stub	MPG
	Lube trencher auger bearings	MPG
	Lube auger sleeve	MPG
	Check attachment mounting bolts	200 ft•lb (271 N•m)
	Check digging chain	
	Check digging chain tension	1.5-2.0" (40-50 mm)
COMBO	Complete all service items for trencher and plow	
PLOW	Clean feed tube	
	Check plow arm pins and bushings	
	Check attachment mounting bolts	200 ft•lb (271 N•m)
	Check plow vibrator oil	MPL
SAW	Clean saw	
	Check attachment mounting bolts	200 ft•lb (271 N•m)
	Check bits	
MICRO-TRENCHER	Inspect slide plates on traverse frame	
	Inspect deflectors	
	Check vacuum hoses	
	Check attachment mounting bolts	200 ft•lb (271 N•m)

https://truckmanualshub.com/

Tractor

Check Engine Oil Level

While engine oil is warm, check oil level at dipstick (1) every 10 hours. Add DEO at fill (2) as necessary to keep oil level at highest line on dipstick.

IMPORTANT: See page 144 for DEO specifications.

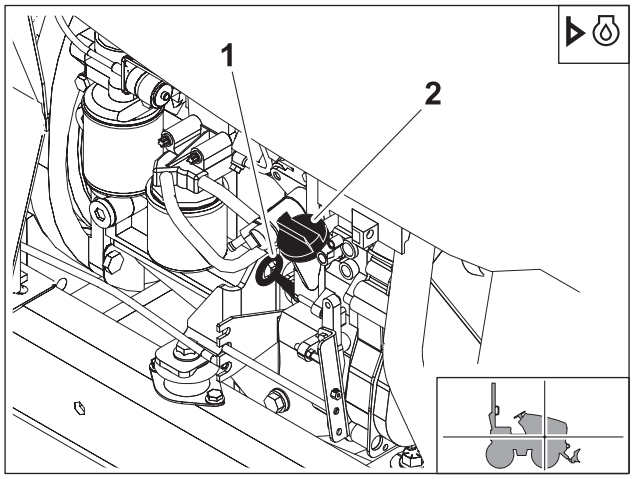

t28om018h.eps

Check Hydraulic Fluid Level and Reservoir Breather Cap

With tractor level, raise seat and check fluid at sight glass (2) every 10 hours. Fluid should be halfway up sight glass. Add THF at fill (1) as necessary.

Check hydraulic reservoir breather cap (1) every 10 hours. Clean as needed.

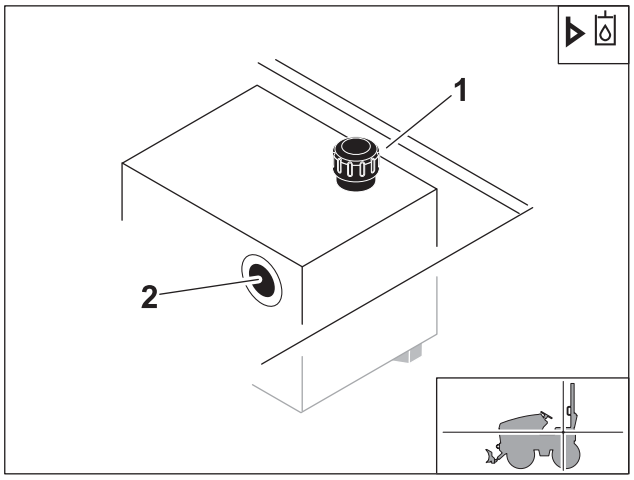

t28om019h.eps

Check Coolant Level

With engine cool, check coolant level in auxiliary tank sight glass every 10 hours. Maintain level so that coolant is visible in sight glass (shown) and no higher than bottom of fill neck. If low, add approved coolant. Do not overfill.

IMPORTANT: See page 146 for information on approved coolants.

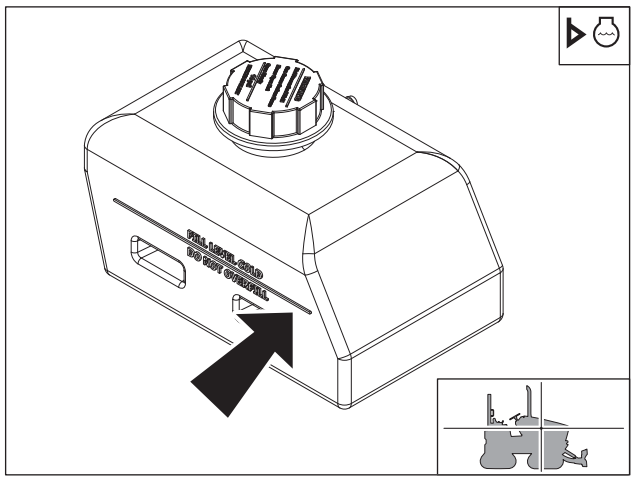

t38om004h.eps

https://truckmanualshub.com/

Check Oil Cooler/Radiator

Check oil cooler/radiator for dirt and debris. Clean with compressed air or spray wash as needed. See "Tractor" on page 162.

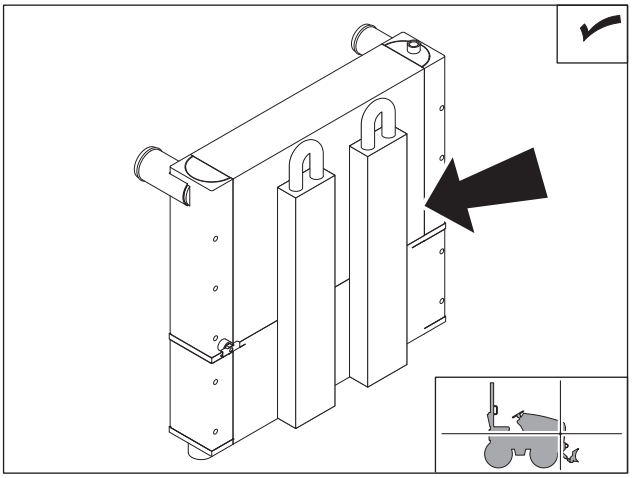

t42om020h.eps

Check Hydraulic Hoses

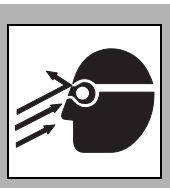

WARNING Fluid or air pressure could pierce skin and cause injury or death. Stay away.

To help avoid injury:

- Before disconnecting a hydraulic line, turn engine off and operate all controls to relieve pressure. Lower, block, or support any raised component with a hoist. Cover connection with heavy cloth and loosen connector nut slightly to relieve residual pressure. Catch all fluid in a container.
- Before using system, check that all connections are tight and all lines are undamaged.
- Use a piece of cardboard or wood, rather than hands, to search for leaks.
- Wear protective clothing, including gloves and eye protection.

If you are injured, seek immediate medical attention from a doctor familiar with this type of injury.

Check all hydraulic hoses every 10 hours.

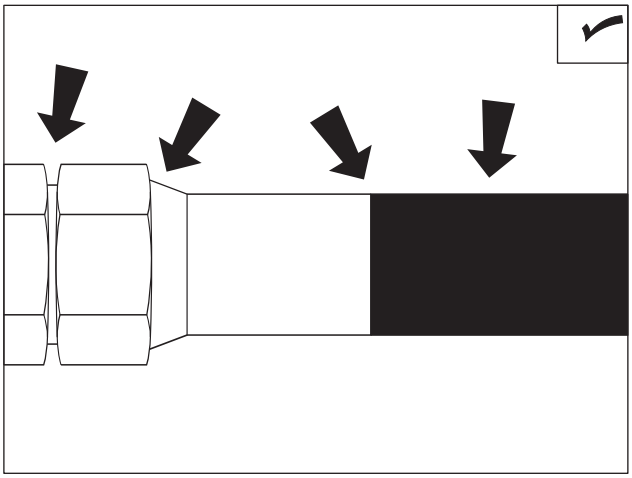

CheckHoses.eps

https://truckmanualshub.com/

Check Tires

Inflatable Tires

Check tire pressure every 10 hours. Use water-rinsable air gauge if tire ballast is used.

Tire option	Maximum pressure
26 x 12.00-12 8-ply bar lug	20 psi (1.4 bar)
29 x 12.50-15 8-ply bar lug	30 psi (2.1 bar)

Tighten lugnuts to 95 ft•lb (129 N•m).

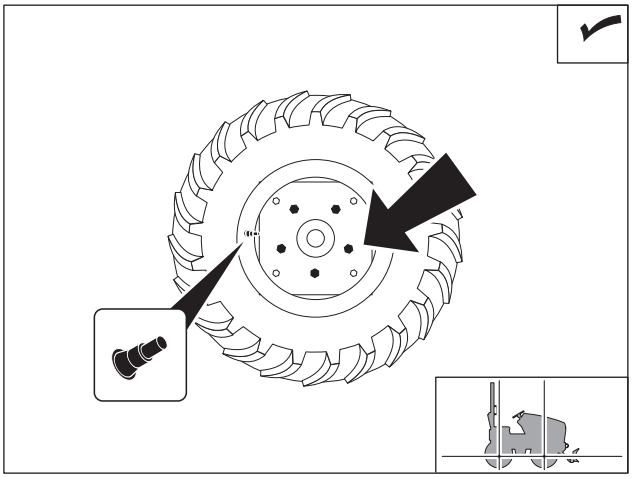

t28om021h.eps

Solid Rubber Tires

Check adapter mounting bolts (shown, if equipped) after first 10 hours. Correct torque is 350 ft•lb (475 N•m).

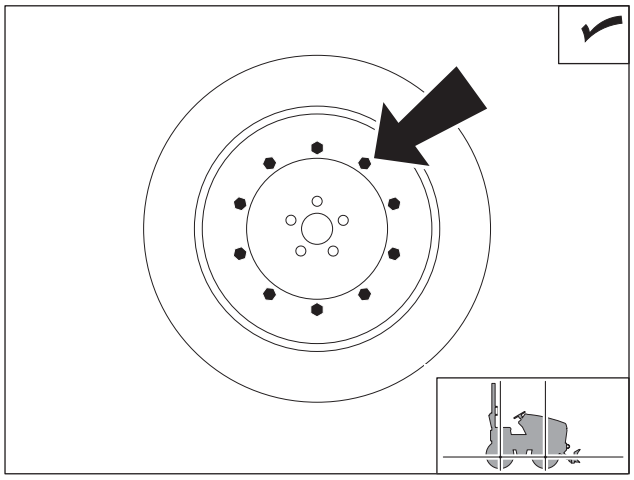

t28om072h.eps

https://truckmanualshub.com/

Trencher

Lube Trencher Tail Roller

Remove plug, wipe zerk clean and lube every 10 hours with MPG.

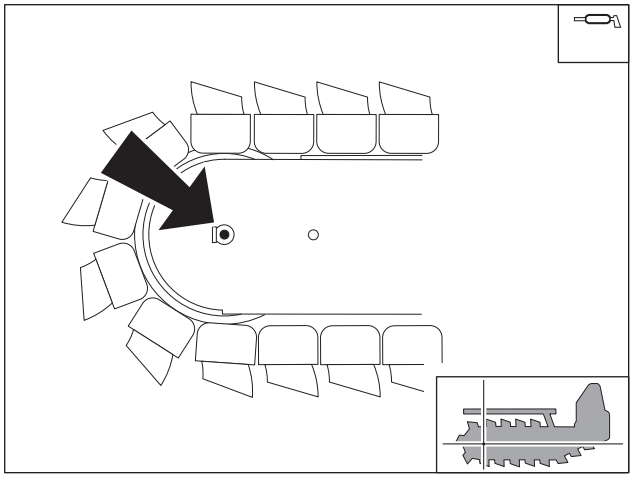

t28om022h.eps

Lube Trencher Pivot

Wipe three zerks clean and lube every 10 hours with MPG.

- Lube zerk (3) until grease appears at headshaft hub.
- Lube zerks (1, 2) with 8-10 pumps of MPG.

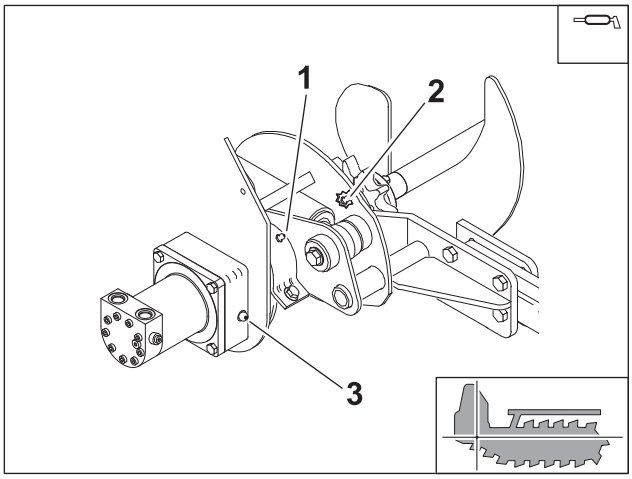

t28om023h.eps

Lube Trencher Pivot Stub

Wipe zerk clean and lube every 10 hours with MPG.

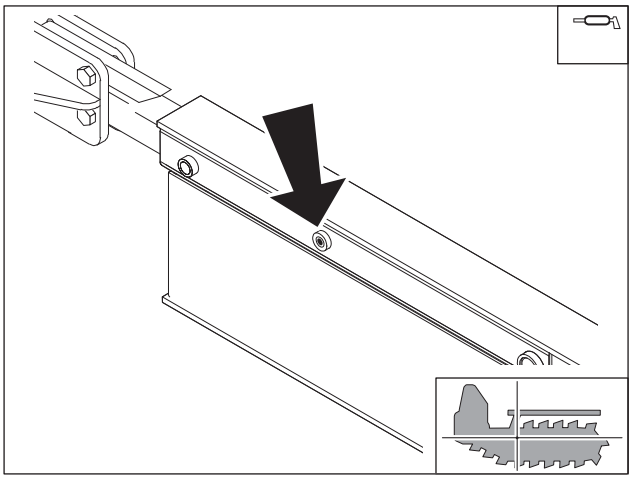

t28om024h.eps

https://truckmanualshub.com/

Lube Trencher Auger Bearings and Sleeve

Wipe four zerks clean and lube every 10 hours with MPG every 10 hours.

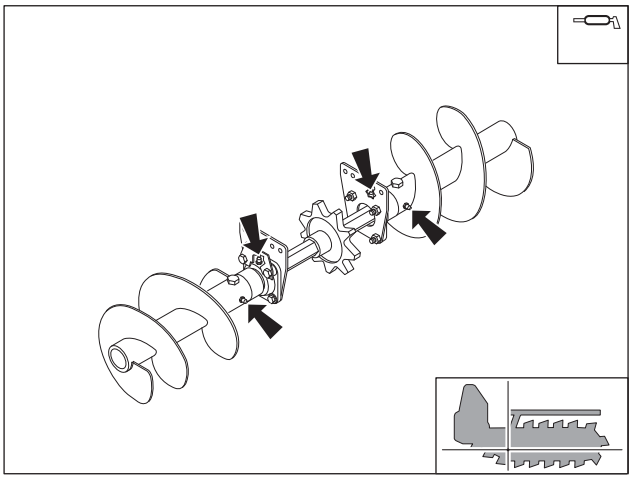

t28om025h.eps

Check Trencher Mounting Bolts

Check bolts every 10 hours. Tighten to 200 ft•lb (271 N•m).

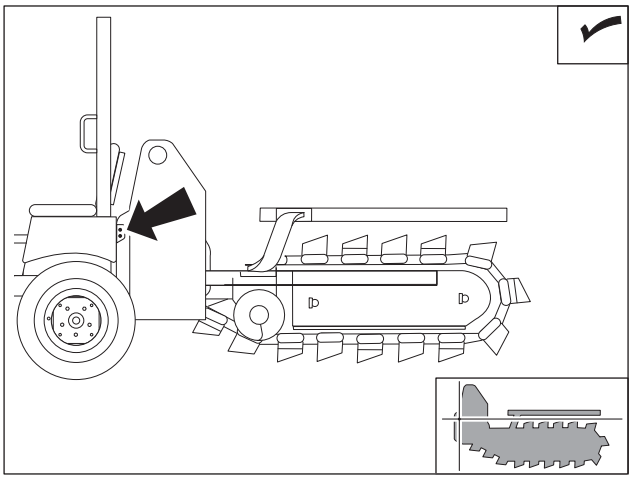

t28om026h.eps

https://truckmanualshub.com/

Check Digging Chain

Check teeth (1) for wear every 10 hours. Replace worn teeth, using Ditch Witch® replacement parts and maintaining original tooth pattern.

Check chain every 10 hours. Replace worn or broken chains. If sidebars (2) are bent or loose on chain pins (3), chain spacers should be used to join sidebars.

For more efficient digging, contact your Ditch Witch dealer for information about the tooth pattern best suited to your jobsite, or see page 134.

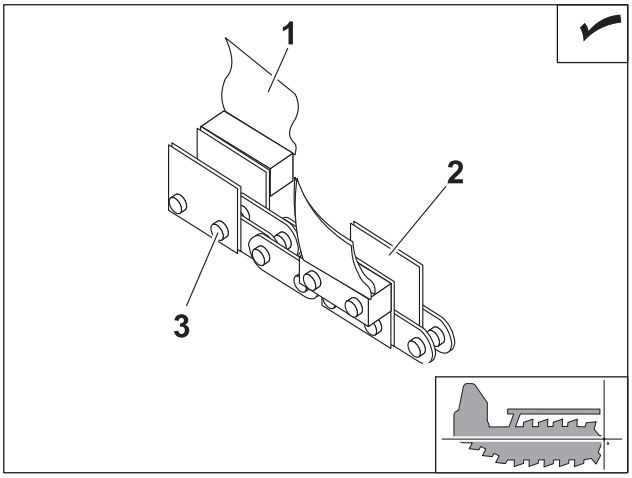

t28om027h.eps

IMPORTANT: If using rock chain bits, check that bits rotate freely. Clean chain and check bits after each use. Replace bit when carbide cap or insert is worn or adapter can be damaged.

Check Digging Chain Tension

Check digging chain tension every 10 hours.

Sprocket Boom

Tension is correct when 2" (50 mm) of slide and stop (3) are exposed. Adjust tension with boom horizontal by tightening or loosening adjustment screws (2) and jam nuts (1).

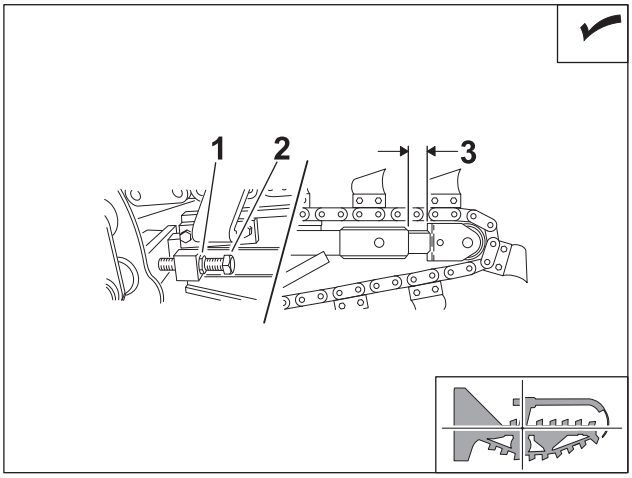

t28om030h.eps

https://truckmanualshub.com/

Roller Boom with Adjusting Screw

With boom horizontal, measure distance from bottom of boom to chain (3). When properly adjusted, distance should be 1.5-2" (40-50 mm). Adjust tension by tightening or loosening adjustment screw (1) and jam nut (2).

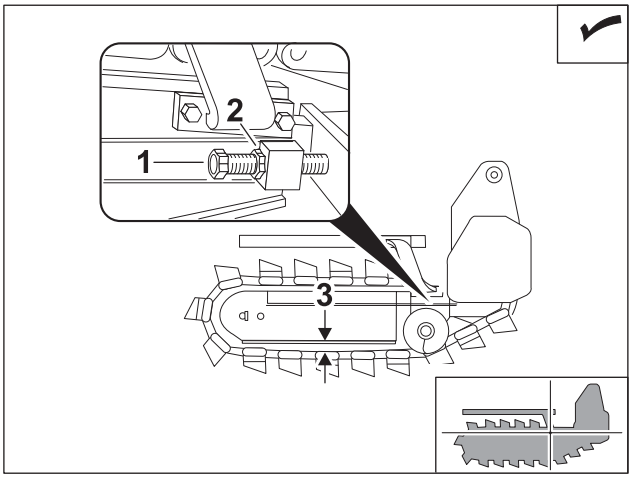

t28om028h.eps

Roller Boom with Grease Cylinder

With boom horizontal, measure distance from bottom of boom to chain (2). When properly adjusted, distance should be 1.5-2.0" (40-50 mm).

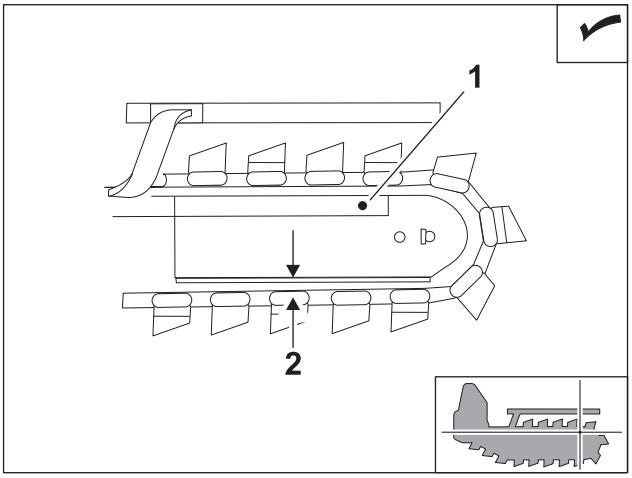

t28om029h.eps

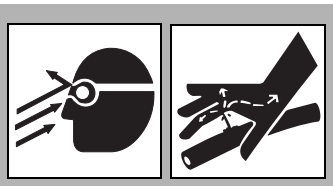

WARNING

Fluid pressure could pierce skin and cause injury or death. Stay away.

To help avoid injury:

- Service digging boom grease cylinder only while standing on opposite side of boom.
- Wear gloves and safety glasses, and cover fitting with cloth when relieving pressure in cylinder.

To tighten chain, remove plug and pump MPG into cylinder (1). To relieve chain tension, loosen plug on grease cylinder.

https://truckmanualshub.com/

Plow

Clean Feed Tube

Clean feed tube every 10 hours. Oil if necessary.

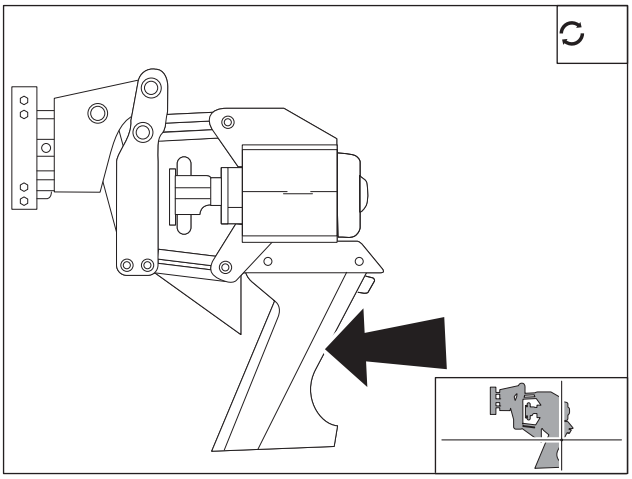

t28om033h.eps

Check Plow Arm Pins and Bushings

Check plow arm pins and bushings every 10 hours. Replace bushings at first sign of wear.

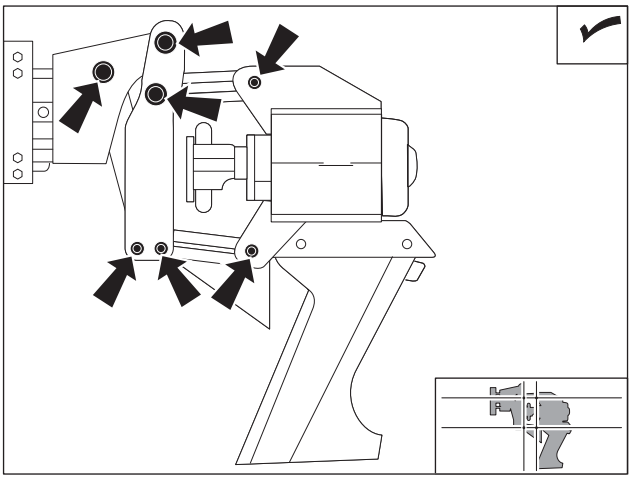

t28om032h.eps

Check Plow Mounting Bolts

Check bolts every 10 hours. Tighten to 200 ft•lb (271 N•m). Check floating cable feed bolts for looseness or wear.

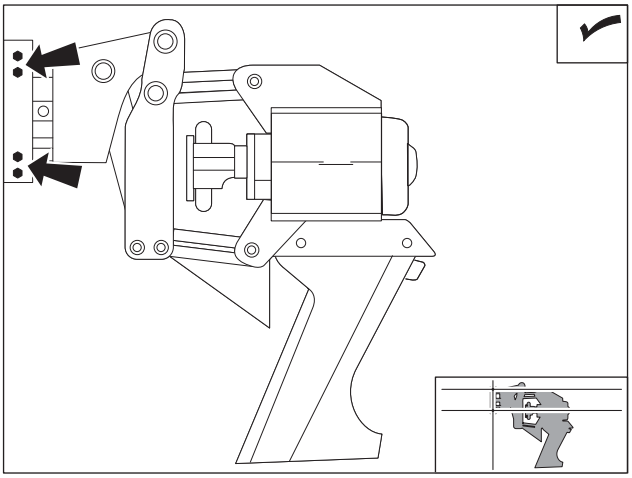

t28om035h.eps

https://truckmanualshub.com/

Check Plow Vibrator Oil Level

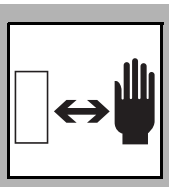

CAUTION

Hot parts may cause burns. Do not touch until cool.

Check plow vibrator oil level every 10 hours. With vibrator horizontal, oil should be halfway up sight glass (2). Add MPL as needed at fill (1).

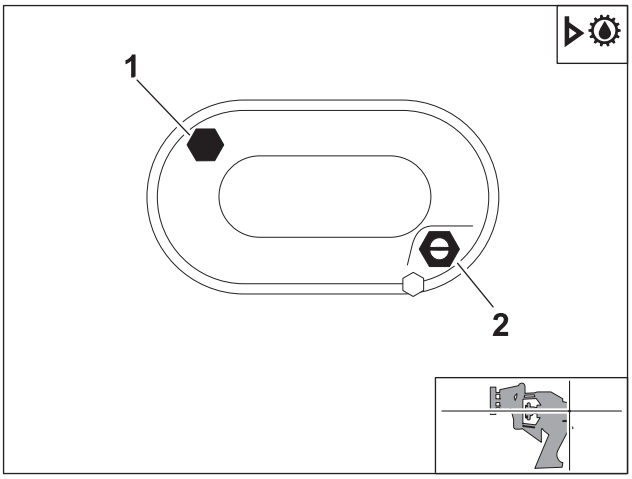

t28om034h.eps

Saw

Clean Saw

Clean saw every 10 hours. Wash bolts and mounting blocks with high-pressure water.

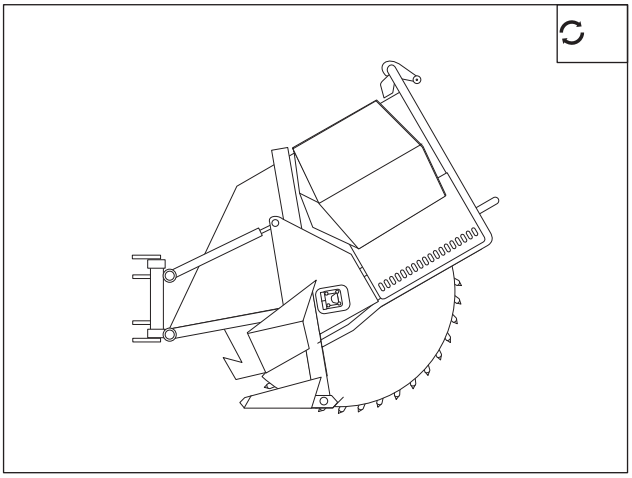

t28om037h.eps

Check Saw Mounting Bolts

Check attachment mounting bolts every 10 hours. Tighten to 200 ft•lb (271 N•m).

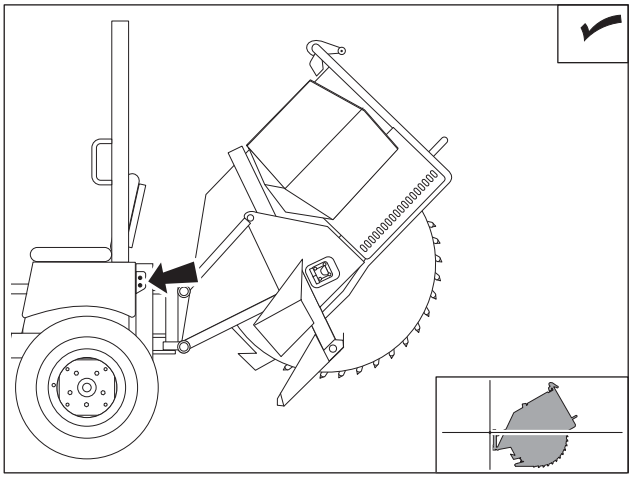

t28om039h.eps

https://truckmanualshub.com/

Check Bits

Check bits every 10 hours. Clean and check bits for free rotation. If bits are stuck, remove and clean packed soil from retaining ring. Replace bit when tungsten cap or insert is worn. See "Replace Bits" on page 183.

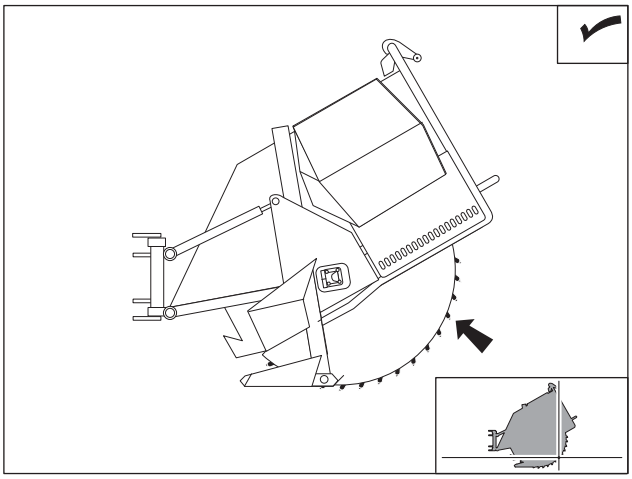

t28om038h.eps

Microtrencher

Inspect Slide Plate

Inspect side plate for wear every 10 hours. Replace as needed.

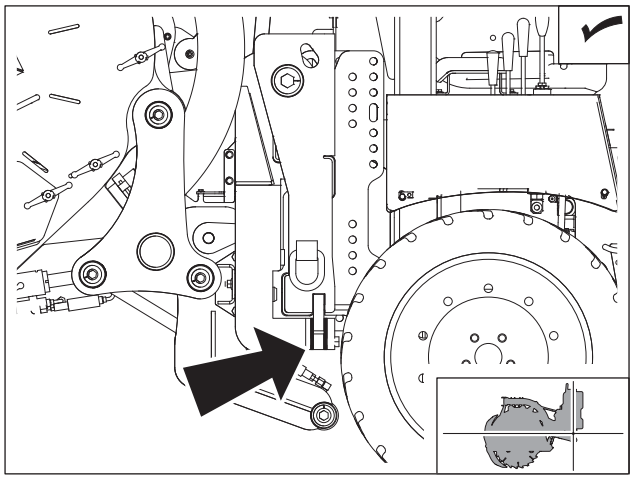

t28om073h.eps

Inspect Spoils Deflectors

If not using a vacuum system for spoils removal, inspect spoils deflectors inside microtrencher frame every 10 hours. Clean vacuum chute and replace deflectors as needed.

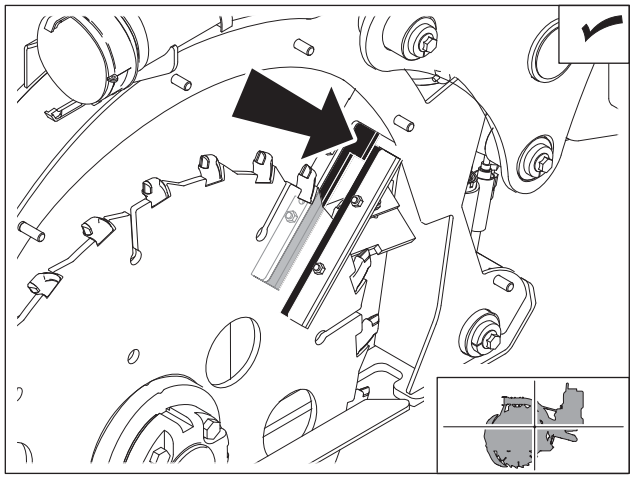

t28om074h.eps

https://truckmanualshub.com/

Check Trencher Vacuum Hoses

If using a vacuum system for spoils removal, check inside of hoses for caked spoils every 10 hours. Clean as needed.

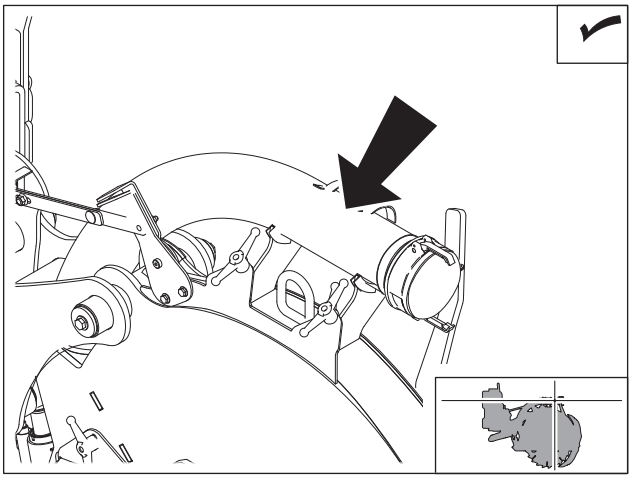

t28om075h.eps

https://truckmanualshub.com/

100’ (30.5 m)

Inspect Microtrencher Blade and Bits

Remove blade cover and inspect blade and bits for wear every 100’ (30.5 m), or when performance declines.

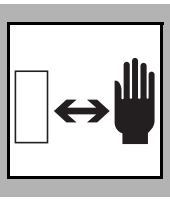

CAUTION Hot parts may cause burns. Do not touch until cool.

To help avoid injury: Do not touch hot blade and bits.

Fixed Bits

Replace blade when bits are worn. See “Change Blade” on page 184.

Rotating Conical Bits

- Check that all bits are rotating freely in bit blocks. If bits are stuck, tap with a brass or rubber mallet.
- Use gauge (shown, p/n 301-1507) to check bit condition. Replace bits when carbide components become dull or excessively worn. Always replace bits and roll pins in complete sets. Do not mix old and new bits. Always use new roll pins.

  A: Bits okay.

  B: Replace bits if outer diameter or length is excessively worn as indicated by gauge.

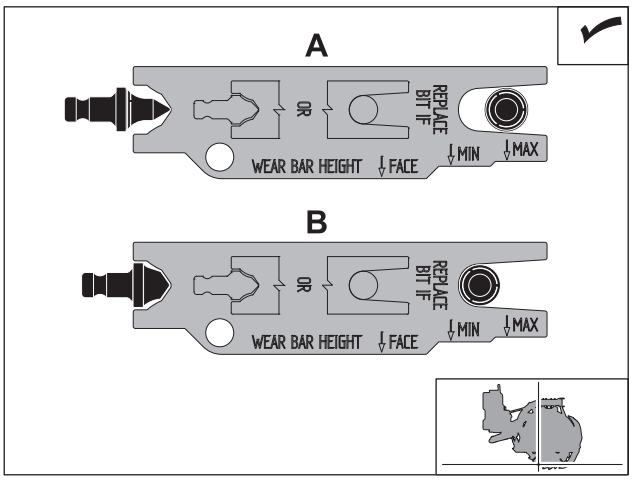

t28om081h.eps

https://truckmanualshub.com/

To replace bits:

1. Drive out roll pin and remove old bit.
2. Install new bit into holder and drive in new roll pin.

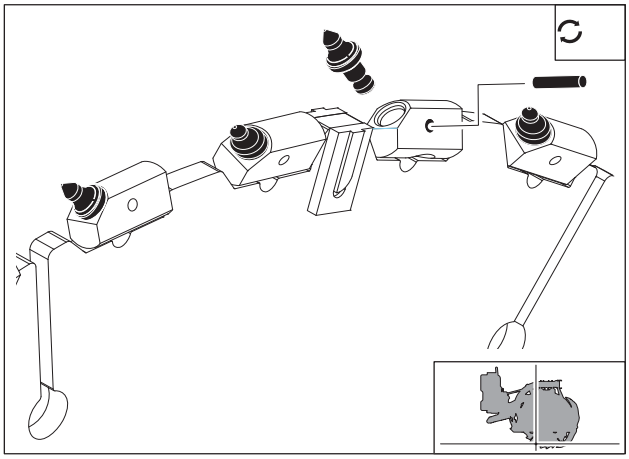

t28om080h.eps

Wear Bars / Hard-Surface Material

Use gauge (shown, p/n 301-1507) to check thickness of wear bars/hard-surface material on blade. Replace wear bars/hard-surface material as needed to protect bit holders.

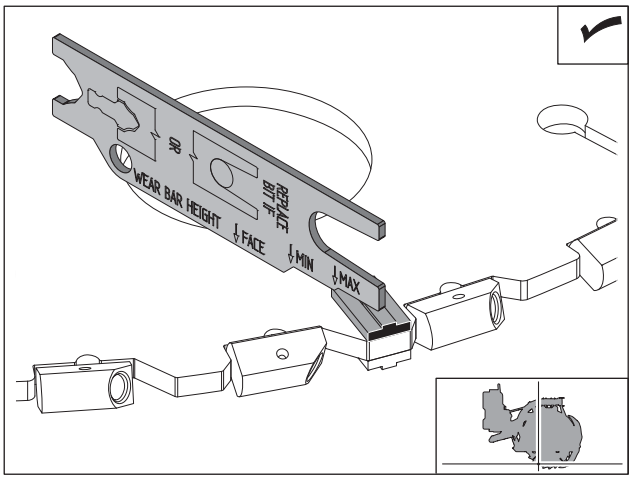

t28om082h.eps

https://truckmanualshub.com/

50 Hour

Location	Task	Notes
TRACTOR	Clean oil cooler/radiator	
	Check belt tension	
	Lube backfill blade swing	MPG
	Change hydraulic filter	Initial service
	Lube cross and bearings	MPG, initial service
	Lube universal joints	MPG, initial service
TRENCHER/ COMBO	Lube frame slide	MPG
SAW	Lube lift cylinders	MPG

Tractor

Clean Oil Cooler/Radiator

Clean oil cooler/radiator with compressed air or spray wash every 50 hours of operation. Clean more often if operating in dusty or grassy conditions. Be careful not to damage fins with high-pressure air or water.

To clean:

1. Clean fins with compressed air or spray wash.
2. Remove grill and spray through cooling fins away from engine.
3. If grease and oil are present on cooling fins, spray with solvent and allow to soak overnight.

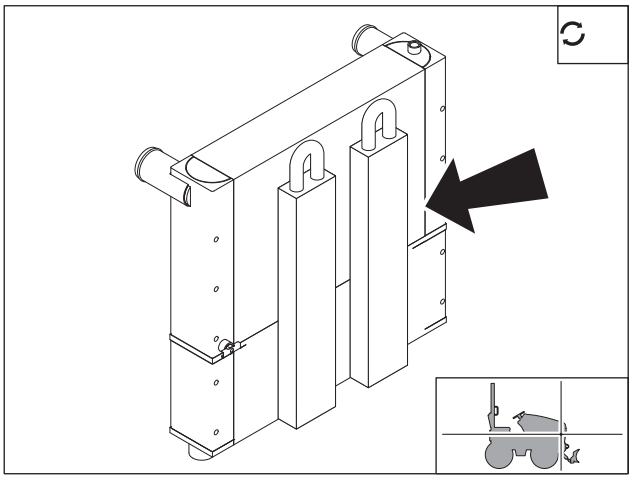

t42om021h.eps

https://truckmanualshub.com/

Check Belt Tension

Check belt tension every 50 hours. Belt is properly tensioned when it moves about 3/8" (10 mm) when pushed. If belt is loose, loosen alternator bolts (1) and adjust alternator. Retighten bolts.

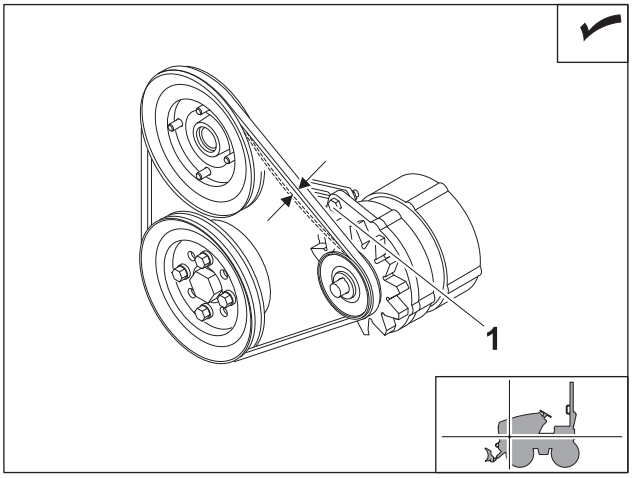

t28om042h.eps

Lube Backfill Blade Swing

Lube zerk with 2-3 shots of MPG every 50 hours.

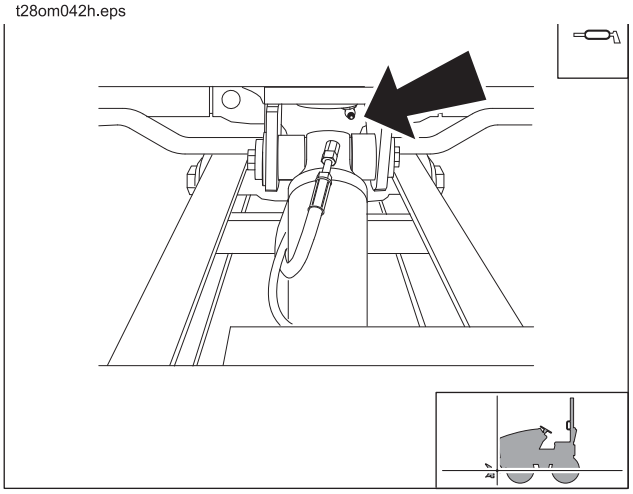

t28om043h.eps

Change Hydraulic Filter (Initial Service)

Change hydraulic filter at 50 hours initially. Change every 500 hours thereafter.

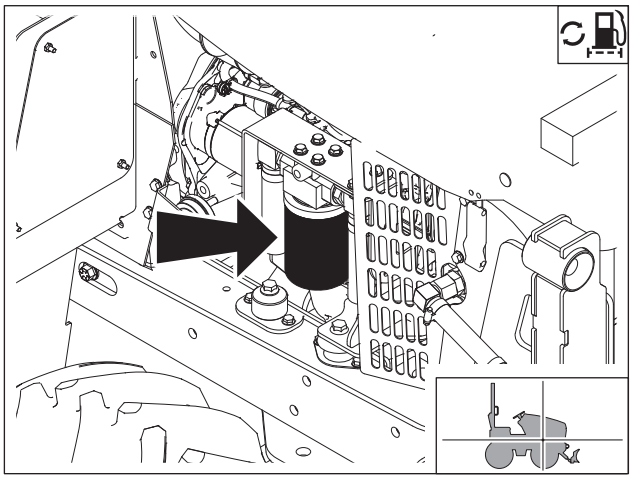

t42om011h.eps

https://truckmanualshub.com/

Lube Cross and Bearings (Initial Service)

Lube zerks with 2-3 shots of MPG at 50 hours initially. Repeat process every 500 hours thereafter.

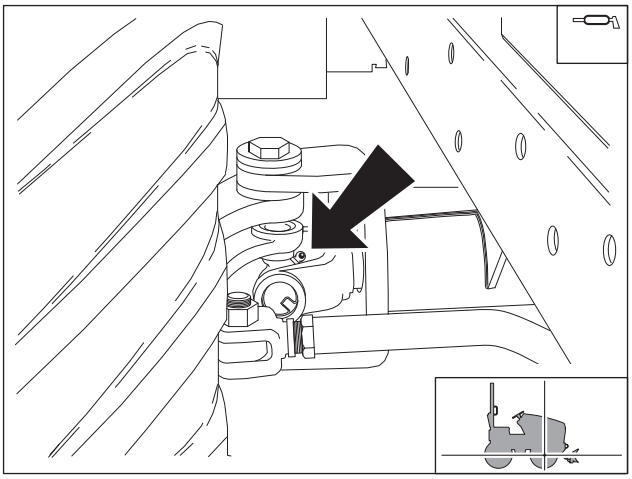

t28om051h.eps

Lube Universal Joints (Initial Service)

Lube zerks with MPG at 50 hours initially. Repeat process every 500 hours thereafter.

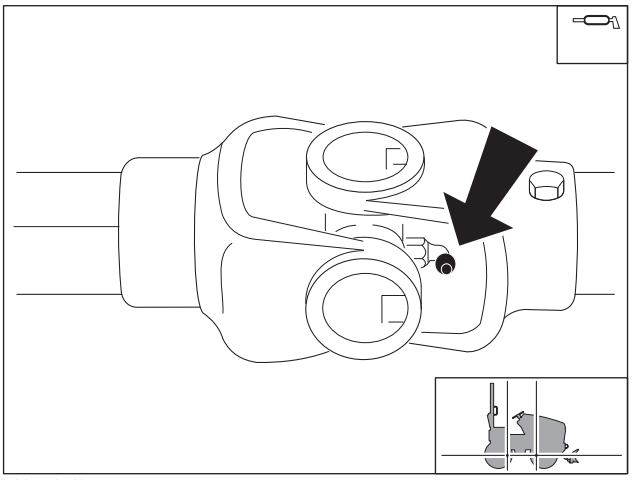

t28om052h.eps

Trencher

Lube Frame Slide

Lube frame slide with MPG every 50 hours.

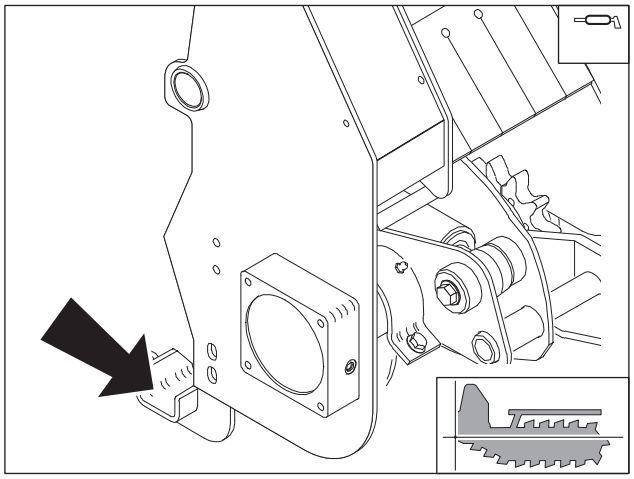

t28om044h.eps

https://truckmanualshub.com/

Saw

Lube Lift Cylinders

Lube lift cylinders with MPG every 50 hours. Lube rod and barrel end of each cylinder.

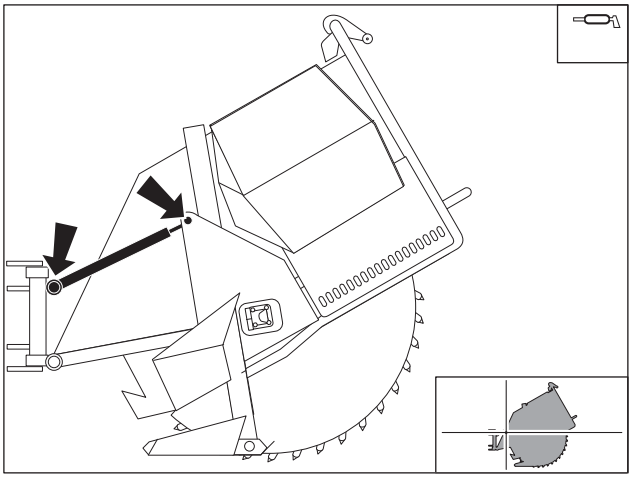

t28om040h.eps

https://truckmanualshub.com/

100 Hour

Location	Task	Notes
MICRO-TRENCHER	Lube manual tilt adjustment.	MPG

Microtrencher

Lube Manual Tilt Adjustment

Lube two zerks on manual tilt adjustment with MPG every 100 hours.

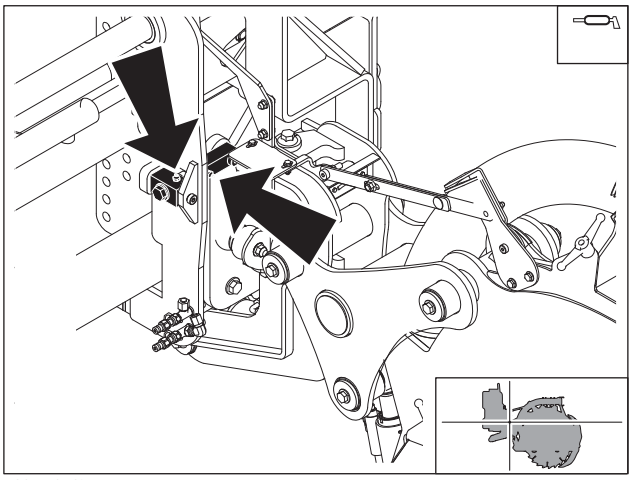

t28om076h.eps

https://truckmanualshub.com/

250 Hour

Location	Task	Notes
TRACTOR	Change engine oil and filter	DEO, **initial** and if using API CJ-4 or ACEA E6/E9 oil

Tractor

Change Engine Oil and Filter (Initial Service)

Change oil and filter after 250 hours and every 250 hours if using oil meeting API CJ-4 or ACEA E6/E9. See page 144 for more information about DEO specifications.

To change:

1. Drain crankcase (1) while oil is warm.
2. Replace filter (4) each time oil is changed.
3. Add DEO at fill neck (3) until oil level is at highest line on dipstick (2). Capacity is 6 qt (5.5 L).

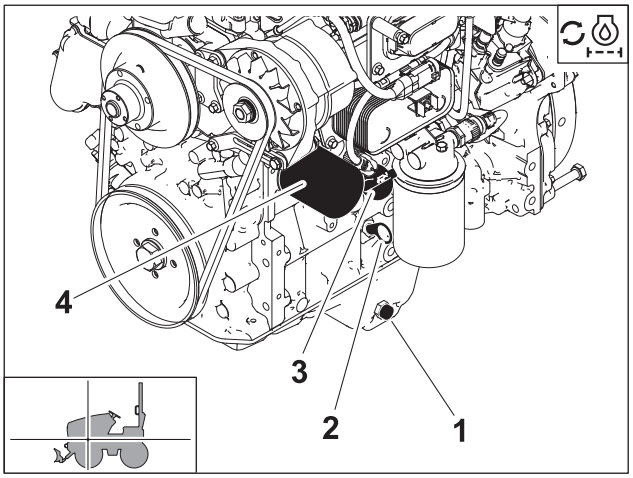

t42om009h.eps

https://truckmanualshub.com/

500 Hour

Location	Task	Notes
TRACTOR	Change engine oil and filter	DEO; ONLY if using DQC III-LA oil
	Change fuel filters	
	Change hydraulic filter	THF
	Check differential oil	MPL
	Check gearbox oil	MPL
	Lube cross and bearings	MPG
	Lube universal joints	MPG
	Test coolant freeze protection level	
PLOW/ COMBO	Change plow vibrator oil	MPL

Tractor

Change Engine Oil and Filter

Change oil and filter every 500 hours ONLY if using oil meeting Deutz DQC III- LA. See page 144 for more information about DEO specifications.

To change:

1. Drain crankcase (1) while oil is warm.
2. Replace filter (4) each time oil is changed.
3. Add DEO at fill neck (3) until oil level is at highest line on dipstick (2). Capacity is 6 qt (5.5 L).

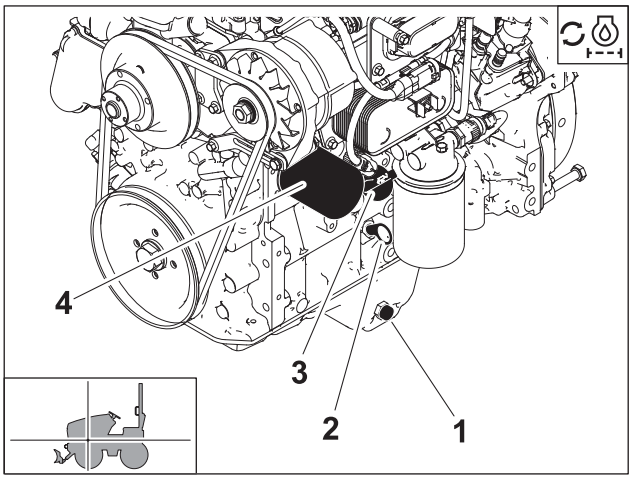

t42om009h.eps

https://truckmanualshub.com/

Change Fuel Filters

Change primary (1) and secondary (2) fuel filters every 500 hours.

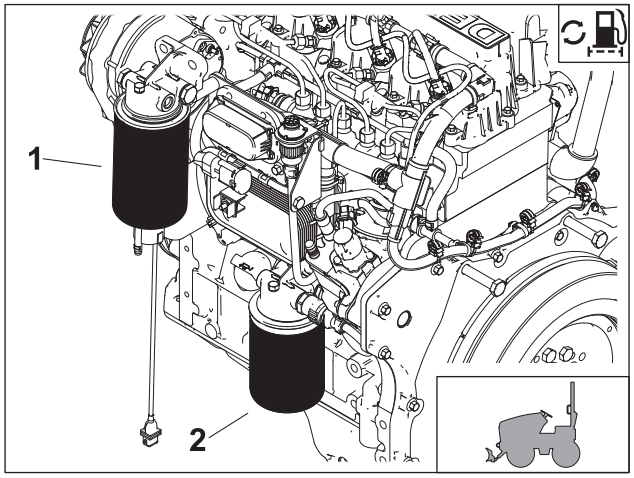

t42om010h.eps

Change Hydraulic Filter

Change hydraulic filter every 500 hours.

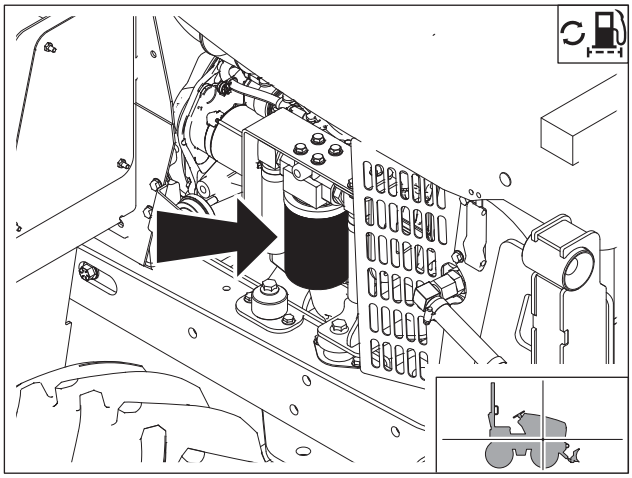

t42om011h.eps

Check Differential Oil Level

Check oil level at fill plug every 500 hours. Add MPL as needed.

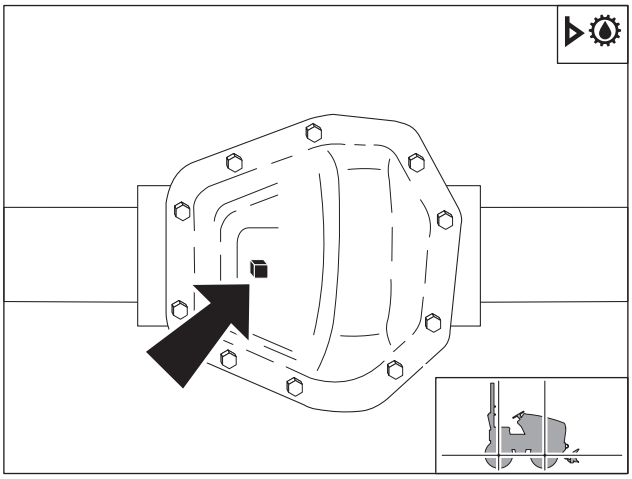

t28om049h.eps

https://truckmanualshub.com/

Check Gearbox Oil Level

Check oil level at check plug (2) every 500 hours. Add MPL at fill (1) as needed.

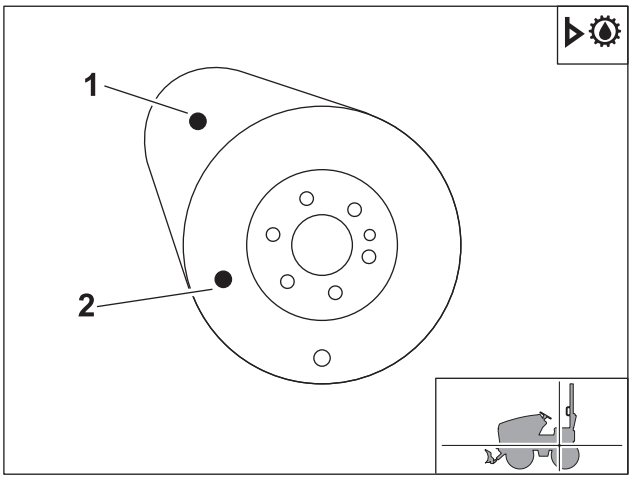

t28om050h.eps

Lube Cross and Bearings

Lube zerks with 2-3 shots of MPG every 500 hours.

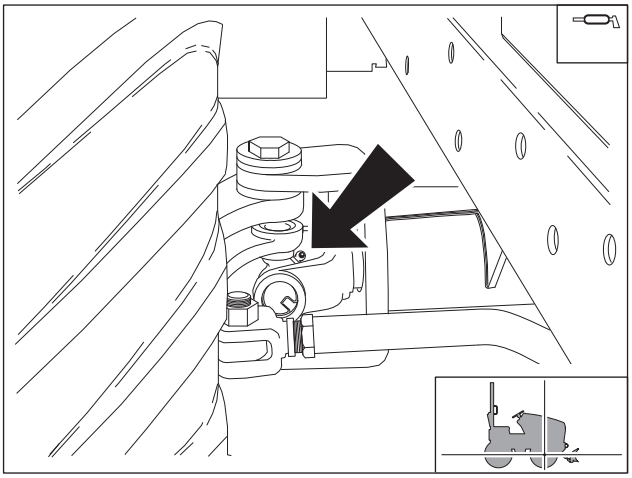

t28om051h.eps

Lube Universal Joints

Lube zerks with MPG every 500 hours.

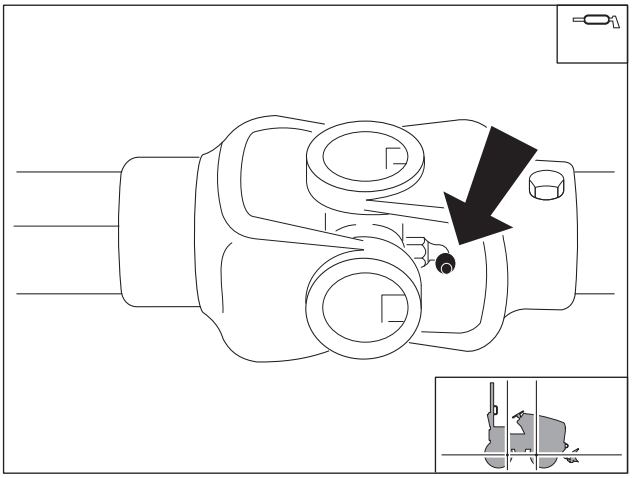

t28om052h.eps

https://truckmanualshub.com/

Test Coolant Freeze Protection Level

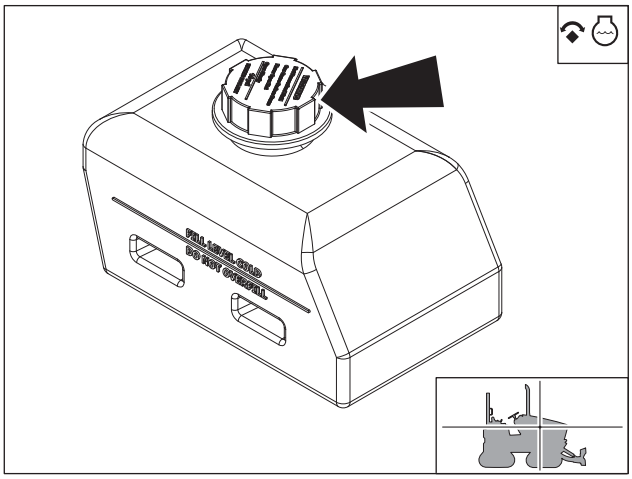

t38om009h.eps

With engine cool, test coolant freeze protection level using a hydrometer or refractometer. Recommended freeze protection level is -34°F (-37°C). Adjust as needed.

If colder temperatures are expected, consult your Ditch witch dealer or coolant supplier.

IMPORTANT: See page 146 for information on approved coolants.

Use pre-dilluted coolant to maintain proper freeze protection.

Plow

Change Plow Vibrator Oil

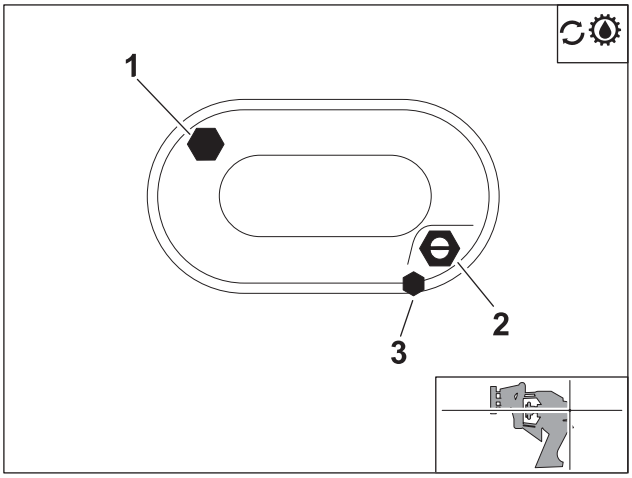

t28om036h.eps

Change plow vibrator oil every 500 hours.

To change:

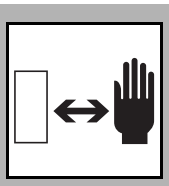

CAUTION
273-423

Hot parts may cause burns. Do not touch until cool.

To help avoid injury: Do not drain oil from plow vibrator when hot. Let vibrator cool before removing drain plug.

1. Open fill (1) to vent vibrator.
2. Drain oil at drain plug (3).
3. Replace plug and move plow vibrator to horizontal position.
4. Add MPL at fill (1) until oil is halfway up sight glass (2).

https://truckmanualshub.com/

1000 Hour

Location	Task	Notes
TRACTOR	Change differential oil	MPL
	Change ground drive gearbox oil	MPL
	Change hydraulic fluid	THF

Tractor

Change Differential Oil

Change differential oil every 1000 hours.

To change:

1. Remove cover and drain oil.
2. Replace cover.
3. Add MPL at fill plug until oil is visible at plug.
   - For model 44 differentials, capacity is 5 pt (2.3 L) for front and 5.5 pt (2.6 L) for rear.
   - For model 60 differentials, capacity is 5.9 pt (2.8 L) for front and rear.

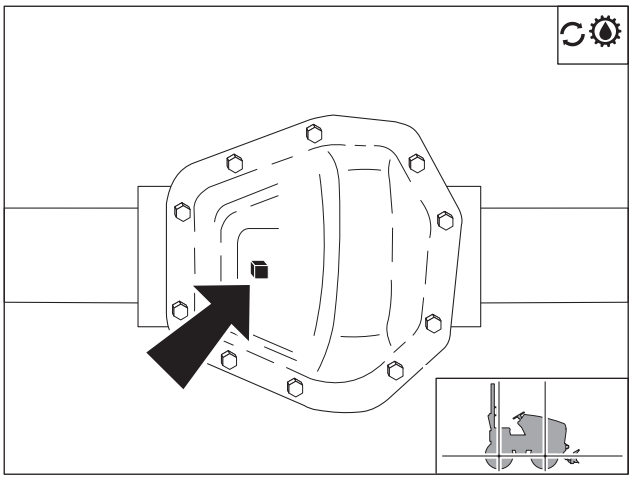

t28om053h.eps

Change Ground Drive Gearbox Oil

Change ground drive gearbox oil every 1000 hours.

To change:

1. Remove drain plug (3).
2. Drain oil and replace plug.
3. Add MPL at fill (1) until oil comes out at check plug (2). Capacity is 2 pt (0.96 L).

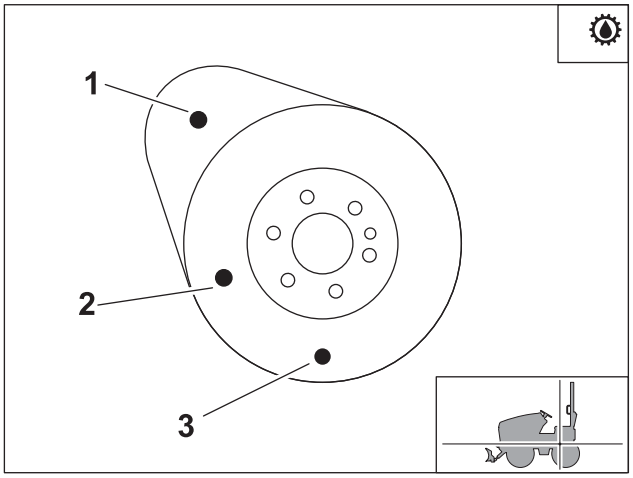

t28om055h.eps

https://truckmanualshub.com/

Change Hydraulic Oil

Change hydraulic oil every 1000 hours.

To change:

1. Remove drain plug (2).
2. Drain fluid and replace plug.page 169
3. Add THF at fill (1). until fluid is at halfway point on sight glass (3). Hydraulic reservoir capacity is 9.5 gal (36 L). Hydraulic system capacity is 13 gal (49 L)

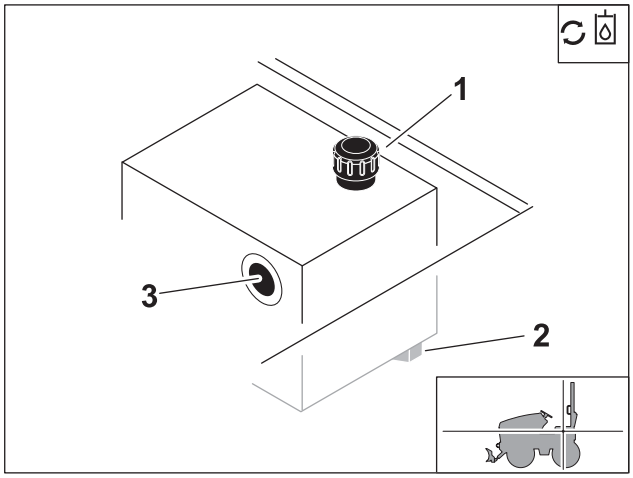

t28om054h.eps

https://truckmanualshub.com/

As Needed

Location	Task	Notes
TRACTOR	Adjust parking brake	
	Change air filter	
	Check battery	
	Charge battery	
BACKHOE	Replace backhoe pins and bushings	
TRENCHER	Replace digging chain and teeth	
COMBO	Complete all service items for trencher and plow	
SAW	Replace bits	
PLOW	Replace sod cutter and blade	
	Replace plow blade pins and bushings	
MICRO-TRENCHER	Change blade	
	Bleed level cylinder	
	Change spoils deflector	

Tractor

Adjust Parking Brake

Adjust parking brake as needed.

To tighten:

1. Release parking brake.
2. Remove orange sleeve.
3. Twist lever clockwise. Set parking brake to test tension.
4. Repeat 1-3 until parking brake is properly adjusted.
5. Replace orange sleeve.

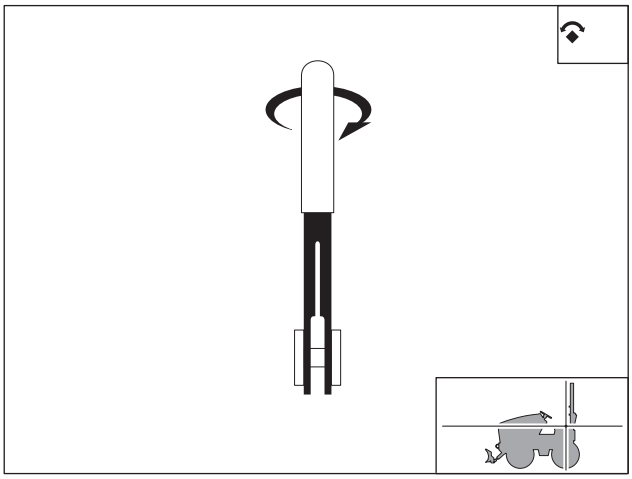

t28om056h.eps

https://truckmanualshub.com/

Change Air Filter

Change air filter when display reads 0%.

To change:

1. Remove air filter cover and remove primary (1) and secondary (2) elements.
2. Wipe inside of housing and wash cover.
3. Insert new secondary element and seat it correctly.
4. Insert new primary element.
5. Replace cover. Ensure arrow on cover points down. If cover does not fit, element is not properly locked into housing. Remove cover and primary element and repeat step 4.

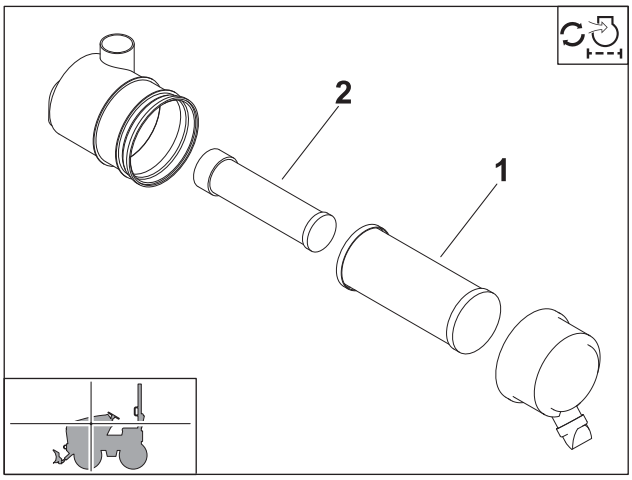

t42om012h.eps

NOTICE: Improperly installed primary element can lead to premature engine failure.

https://truckmanualshub.com/

Check Battery

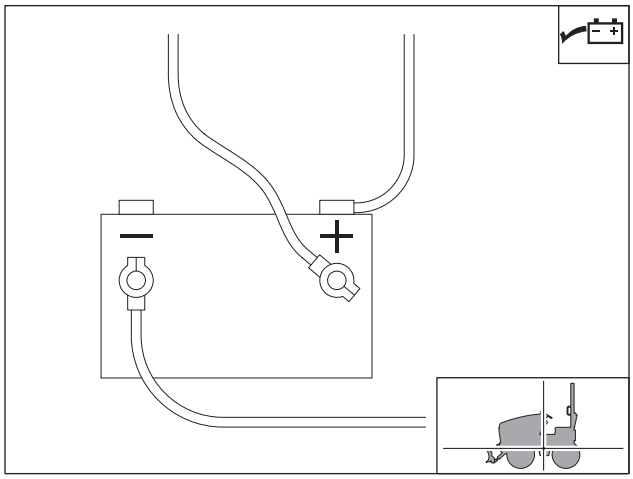

Check battery as needed. Keep battery clean and terminals free of corrosion.

To clean:

1. Turn battery disconnect switch, if equipped, to the off position.
2. Ensure that no ignition sources are near batteries.
3. Loosen and remove battery cable clamps carefully, **negative (-)** cable first.
4. Clean cable clamps and terminals to remove dull glaze.
5. Check for signs of internal corrosion in cables.
6. Apply MPG to terminals after cleaning to reduce corrosion.
7. Connect battery cable clamps, **positive (+)** cable first.
8. Tighten any loose connections.
9. Ensure that battery tiedowns are secure.
10. Turn battery disconnect switch to the on position.

WARNING Explosion possible. Serious injury or equipment damage could occur. Follow directions carefully.

To help avoid injury: Do not create sparks and do not short across battery terminals for any reason.

https://truckmanualshub.com/

Charge Battery

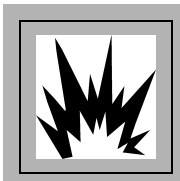

WARNING Explosion possible. Serious injury or equipment damage could occur. Follow directions carefully.

To help avoid injury:

- Use a single 12V maximum source for charging. Do not connect to rapid chargers or dual batteries.
- Use caution and wear personal protective equipment such as safety eyewear, when charging or cleaning battery.
- Keep sparks, flames, and any ignition source away from batteries at all times. Internal contents are extremely hazardous. Leaking fluid is corrosive. Battery may be explosive at higher temperatures.
- NEVER lean over battery when making connections.
- Do not allow vehicles to touch when charging.
- Do not attempt to charge a battery that is leaking, bulging, heavily corroded, frozen, or otherwise damaged.
- NEVER short-circuit battery terminals for any reason or strike battery posts or cable terminals.
- Refer to MSDS for additional information regarding this battery.

Before You Start

Electronic components can be easily damaged by electrical surges. Jump starting can damage electronics and electrical systems, and is not recommended. Try to charge the battery instead. Use quality large diameter jumper cables capable of carrying high currents (400 amps or more). Cheap cables may not allow enough current flow to charge a dead/discharged battery.

Read all steps thoroughly and review illustration before performing procedure.

https://truckmanualshub.com/

Charging Procedure (Engine Off)

1. Park service vehicle close to disabled equipment but do not allow vehicles to touch. Set parking brake in both vehicles.
2. Turn the ignition switch to the OFF position in both vehicles, and turn off all electrical loads. Disconnect the machine controller.

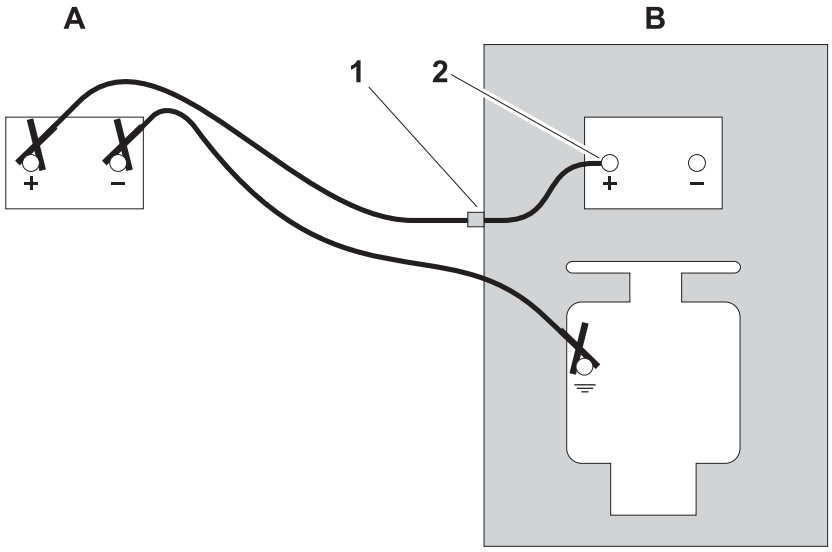

3. Inspect battery in disabled vehicle (B) for signs of cracking, bulging, leaking, or other damage. Connect red positive (+) jumper cable clamp to positive (+) post (2) of battery in disabled vehicle first.

IMPORTANT: Some equipment may have a positive jumper cable terminal (1) located externally. If so equipped, connect red positive (+) jumper cable clamp to terminal.

4. Connect the other red positive (+) jumper cable clamp to positive (+) post of battery (A) in the service vehicle.
5. Connect black negative (-) cable clamp to negative (-) post of battery (A) in service vehicle.
6. Connect the other black negative (-) cable clamp to the engine or frame ground on the disabled vehicle, at least 12" (305 mm) from the failed battery, as shown.
7. Operate service vehicle engine at 1500-2000 rpm for a few minutes to build an electrical charge in the failed battery.
8. Stop engine in service vehicle.
9. Remove jumper cables from the service vehicle, black negative (-) clamp first. Do not allow clamps to touch.
10. Remove black negative (-) cable clamp from the disabled engine or frame ground first.
11. Remove red positive (+) cable clamp from the disabled vehicle positive (+) battery post last.
12. Reconnect machine controller and try to start disabled vehicle.

If the disabled vehicle did not start, check for loose or corroded battery cable connections. Poor connections will prevent current from charging the failed battery. Clean terminals and posts if necessary and repeat steps above.

https://truckmanualshub.com/

Backhoe

Replace Pins and Bushings

Replace pins (1) and bushings (2) when worn or damaged.

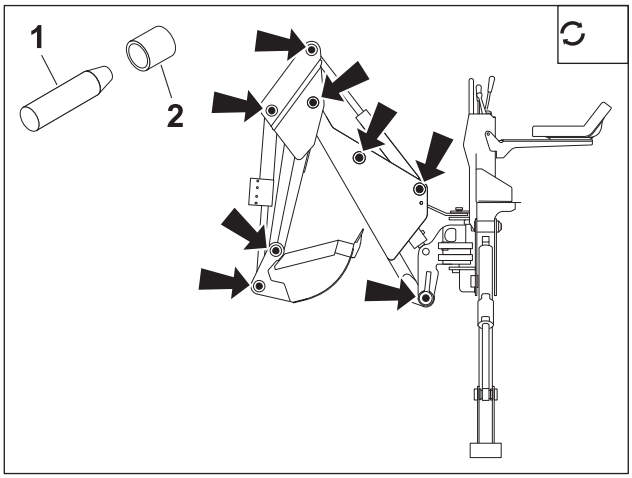

t28om059h.eps

https://truckmanualshub.com/

Trencher

Replace Digging Chain

Visually check digging chains for wear on rollers and sidebars (2). Check pins (3) and bushing wear by measuring distance between chain pins and comparing it with a new chain. Also check digging teeth (1).

NOTICE: Replace sprockets when a new chain is installed.

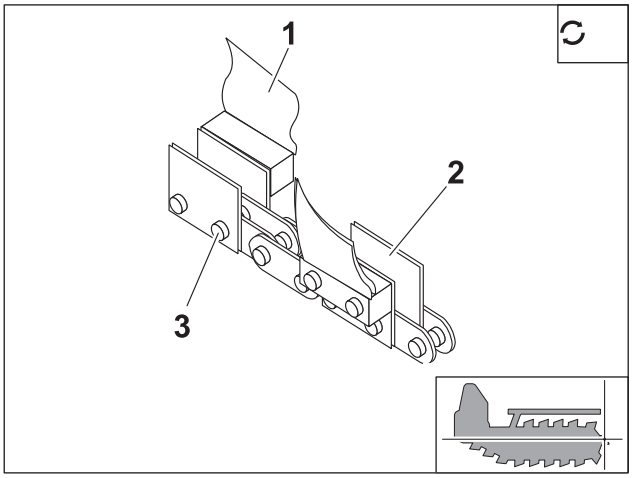

t28om031h.eps

To remove chain:

1. Fasten and adjust seat belt.
2. Start tractor. See page 72 for proper start-up procedures.
3. Move attachment direction/speed control until digging chain connector pin is on top of boom.
4. Lower boom to ground.
5. Set parking brake.
6. Turn ignition switch to STOP.
7. Roller booms: Secure chain by clamping links on either side of connector pin with chain jaws (shown). Squeeze jaws to reduce pressure on connector pin.

   Sprocket booms: Lock rear idler sprocket.

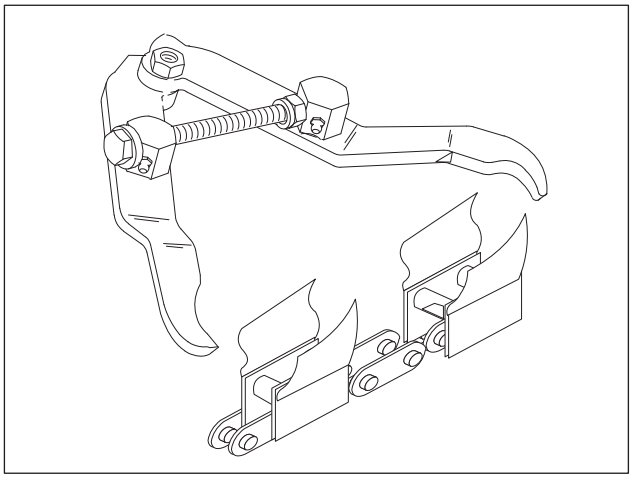

Digging_Chain_Remove_01.eps

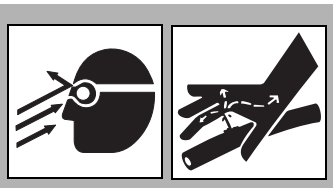

WARNING Fluid pressure could pierce skin and cause injury or death. Stay away.

To help avoid injury:

- Service digging boom grease cylinder only while standing on opposite side of boom.
- Wear gloves and safety glasses, and cover fitting with cloth when relieving pressure in cylinder.

https://truckmanualshub.com/

8. Loop cable through links nearest connector pin.
9. Loosen plug on grease cylinder or turn tension bolts counterclockwise to relieve chain tension.
10. Stand clear of chain and remove lock key from connector pin. Drive connector pin out of link.

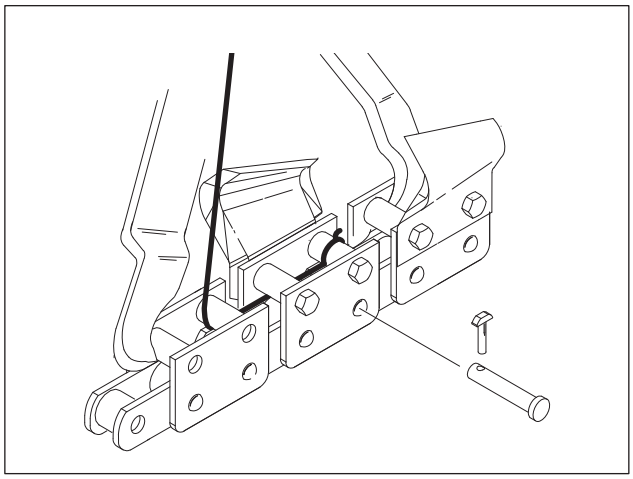

Digging_Chain_Remove_02.eps

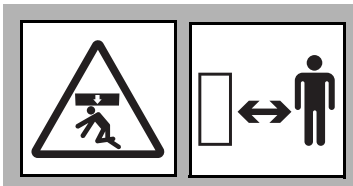

WARNING Crushing weight could cause death or serious injury. Use proper procedures and equipment or stay away.

11. Unclamp links. Slowly release cable and lower chain to ground.
12. Lay chain on ground with teeth down.

To install chain:

1. Lay chain on ground with teeth down and pointed toward unit. Loop cable through end links.
2. Fasten and adjust seatbelt.
3. Start tractor. See page 72 for start-up procedures.
4. Release parking brake.
5. Move ground drive control to reverse.
6. Back unit up until chain extends past head shaft about 1' (305 mm).
7. Move ground drive control to neutral.
8. Lower backfill blade to ground.
9. Lower boom to horizontal position.
10. Set parking brake.
11. Turn ignition switch to STOP.
12. Pull rear end of chain over tail roller or sprocket.
13. Pull until chain is in place on boom.
14. Move chain down boom until chain connector pin and lock key can be installed. Install connector pin and lock key.
15. Tighten chain by pumping EPG into grease cylinder.

https://truckmanualshub.com/

Time Augers

Ensure that augers are balanced, as shown. If auger timing is off, unit will bounce from side to side even in normal digging conditions.

To adjust timing:

1. Remove bolts holding augers to auger shaft and rotate either auger as needed until augers are balanced.
2. Reinstall bolts and tighten securely.

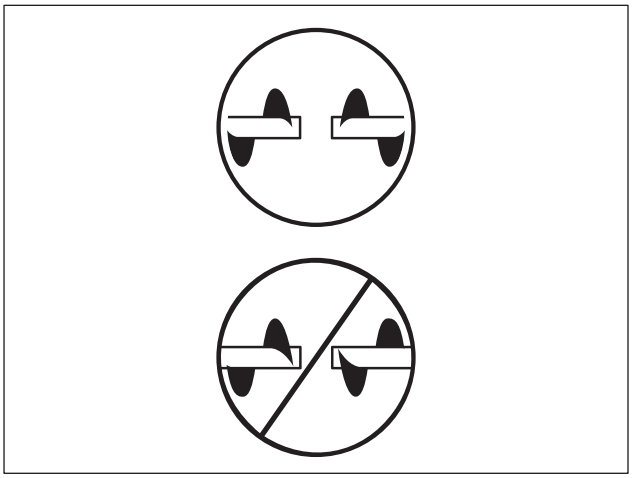

Augers_Adjust.eps

Inspect Seat Belt

Check seat belt and mounting hardware as needed. Inspect the webbing, buckle and latch, retractor, and mounting hardware.

Buckle and Latch

Check that the buckle and latch (1) are not broken or corroded. When inserting the latch into the buckle, the latch should insert smoothly until an audible click is heard. Latch should not release when the seat belt is tugged.

Webbing

Inspect seat belt webbing (2) to ensure that it is not cut, frayed or showing signs of extreme or unusual wear. Check the area near the buckle and latch and anywhere the seat belt has contact with equipment or seat.

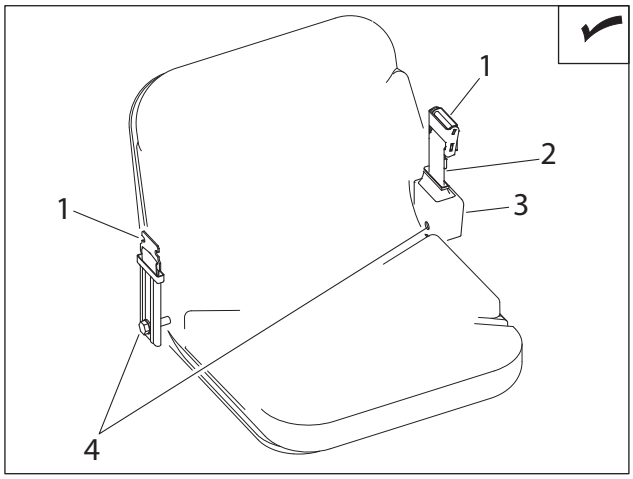

SeatBeltService.eps

Retractor

Check that the retractor (3) operates smoothly when the belt is pulled and released. Retractor should spool belt without locking.

Mounting Hardware

Inspect the seat belt mounting bolts (4) on both sides of the seat to ensure they are tight. Replace missing, damaged, or corroded bolts.

https://truckmanualshub.com/

Saw

Replace Bits

Replace bits when worn or damaged.

1. Slide bit puller tool (p/n 259-002) onto groove in bit (shown).
2. Pull back on weight on bit puller tool to remove bit.
3. Install new bit.
4. Check bit clearance. See "Check Bits" on page 158.

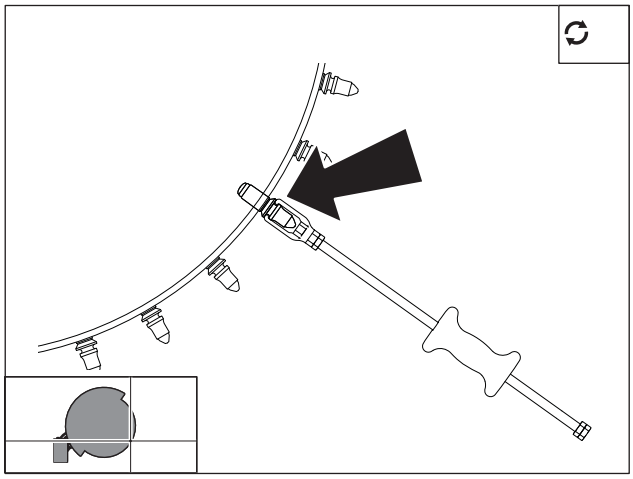

t48om066w.eps

Plow

Replace Sod Cutter and Blade

Replace worn sod cutter and plow blade as needed.

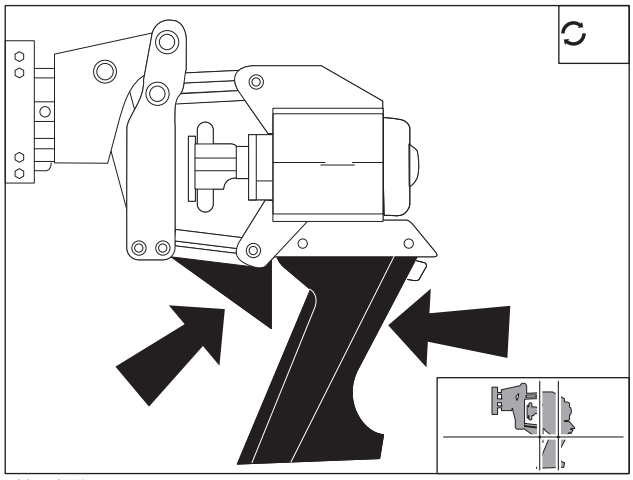

t28om057h.eps

Replace Plow Blade Pins and Bushings

Check plow blade pins and bushings for wear and replace as needed.

NOTICE: Operating plow with worn or missing bushings will damage equipment.

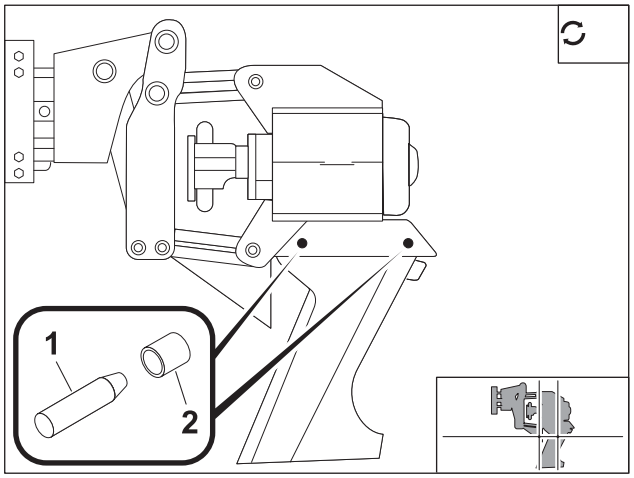

t28om058h.eps

https://truckmanualshub.com/

Microtrencher

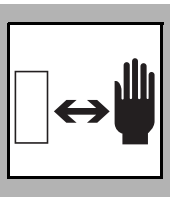

CAUTION Hot parts may cause burns. Do not touch until cool.
273-423

To help avoid injury: Do not touch hot blade and bits.

Change Blade

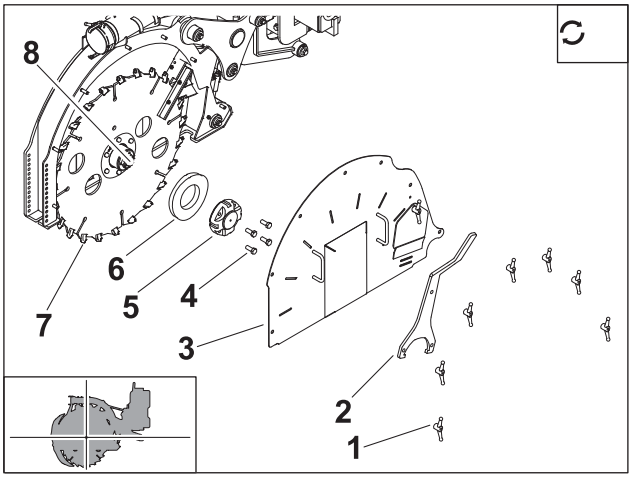

t28om077h.eps

1. Start tractor, position microtrencher slightly above ground, then shut down tractor.
2. Remove 7 wingnuts (1), spanner wrench (2), and cover (3).
3. Loosen clamp bolts (4) and use spanner wrench (2) to remove large nut (5). (Insert a pry bar through cutout in blade to keep blade from turning.)
4. Remove spacer (6) and blade (7).
5. Clean threads on hub (8) and nut (6). If needed, apply a dry lubricant such as graphite or silicone to threads.

NOTICE:

- Do not use petroleum-based lubricant which can attract and hold dust and grit in threads.
- Do not tighten large nut when blade has contact with ground. Blade may not be straight.

6. Install new blade (note direction of rotation), spacer (6), and large nut (5).
7. Use spanner wrench to fully tighten large nut (5).
8. Tighten clamp bolts (4) to 100-120 ft-lb (135-160 N-m).
9. Loosen clamp bolts (4) and repeat steps 7 and 8.
10. Install cover, spanner wrench, and wingnuts.

https://truckmanualshub.com/

Bleed Level Cylinder

Bleed air from level cylinder whenever the hydraulic hoses have been disconnected, or when excessive bounce is noticed.

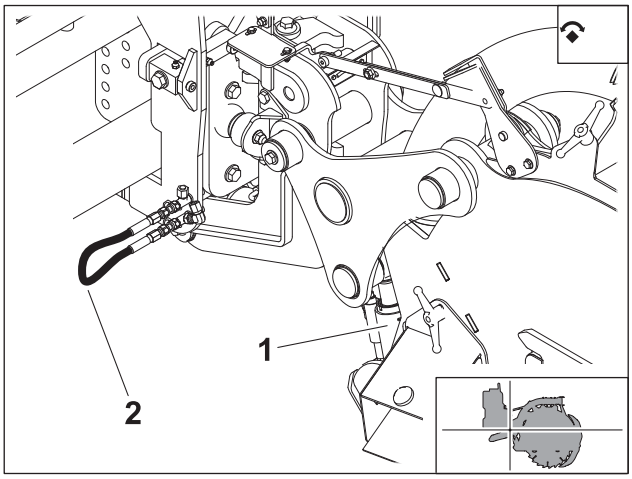

t28om078h.eps

To bleed cylinder:

1. Remove blade (see page 184).
2. Start tractor.
3. Use level control to fully retract level cylinder (1) until it is vertical.
4. Use lift control to lower rear of microtrencher to just above the ground.
5. Shut down tractor and operate controls to relieve residual pressure in the level cylinder circuit.
6. Connect jumper hose (2, p/n 350-2479) to test ports on left side of microtrencher.
7. Start tractor and set throttle to low speed.
8. Push level control to slowly extend cylinder to full length. Hold lever at full range for 10 seconds. Air trapped at top of cylinder will return to tank.
9. Pull control lever to slowly retract cylinder. Hold lever for 10 seconds. Air trapped at bottom of cylinder will return to tank.
10. Repeat steps 7 and 8.
11. Shutdown tractor and remove jumper hose.

Change Spoils Deflector

If not using vacuum system for spoils removal, change spoils deflectors when excessive spoils are left inside trench. Deflector is most effective when it fits next to the blade.

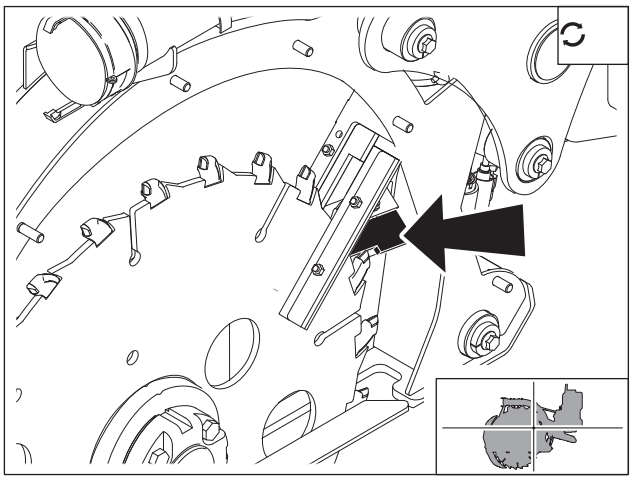
t28om086h.eps

To change:

1. Remove cover.
2. Replace all old spoils deflectors on saw frame, cover, and spoils chutes, noting orientation on decal on spoils chute.
3. Install cover.

https://truckmanualshub.com/

https://truckmanualshub.com/

Specifications

RT45 Tractor with H313 Trencher

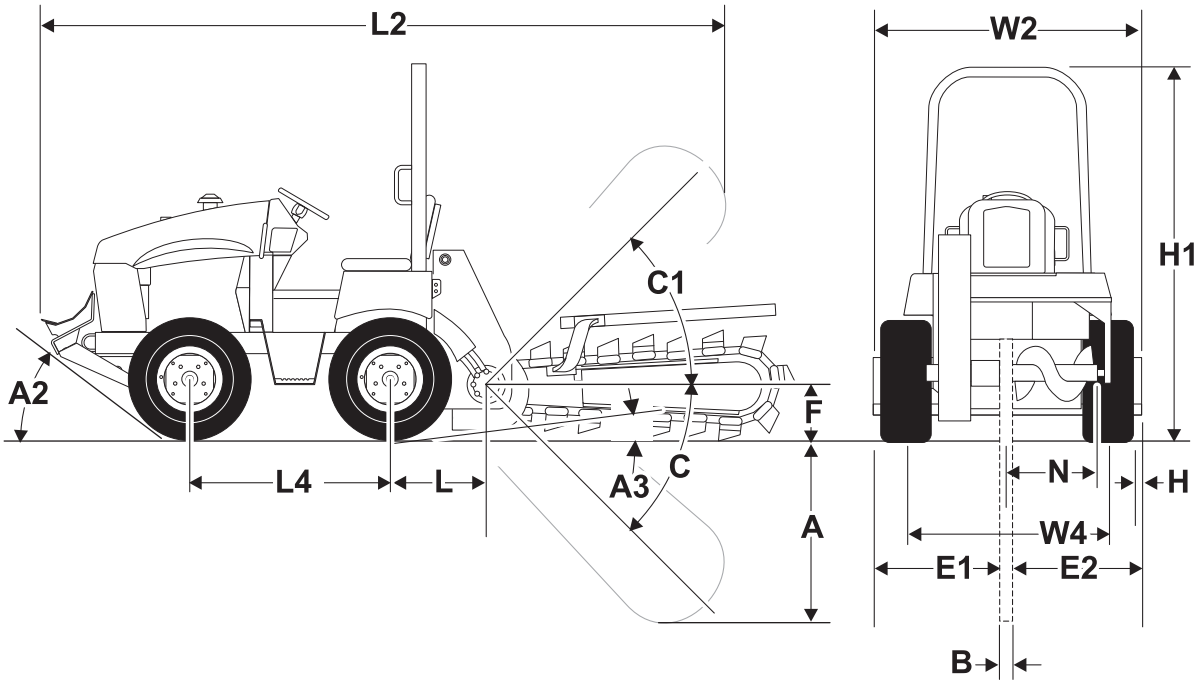

t42om019h.eps

Dimensions *		U.S.	Metric
A	Trench depth, maximum	63 in	1.6 m
A2	Angle of approach	20°	20°
A3	Angle of departure	17°	17°
B	Trench width, minimum to maximum	6-12 in	150-305 mm
C	Boom travel down	58°	58°
C1	Boom travel up	50°	50°
E1	Centerline trench to outside edge of unit, left	35 in	890 mm
E2	Centerline trench to outside edge of unit, right	29 in	740 mm
F	Headshaft height, digging chain	17 in	430 mm
H	Overhang beyond tire	3.5 in	90 mm
H1	Height	86 in	2.2 m
L	Headshaft overhang	24.5 in	620 mm
L2	Length, transport	155 in	3.9 m

https://truckmanualshub.com/

L4	Wheelbase	48 in	1.2 m
N	Spoil discharge reach, minimum to maximum	17-20 in	430-510 mm
W2	Width, transport	64 in	1.6 m
W4	Tread	46 in	1.2 m
	Ground clearance with standard tire, minimum	7 in	180 mm
	Ground clearance with optional tire, minimum	8.5 in	215 mm

* Dimensions are based on H313 attachment and shortest roller boom length, 26 X 12.00-12 standard tire and wheel, and 12" (300-mm) pivot (except references A and B).

General
Ditch Witch® model RT45 tractor, 4-wheel drive, rigid frame, hydrostatic ground drive through rubber tires, conventional 2-wheel power steering, hydrostatic attachment drive, riding tractor

Operation		U.S.	Metric
Forward speed, maximum		4.7 mph	7.6 km/h
Reverse speed, maximum		2.7 mph	4.4 km/h
Digging chain speed @2600 rpm engine speed, maximum		460 fpm	140 m/min
Vehicle clearance circle (SAE) wall to wall with backfill blade			
	With front steering only	28 ft	8.5 m
	With rear steering	20 ft	6.1 m
Operating weight *		5375 lb	2438 kg
Headshaft speed @2600 rpm engine speed, maximum		233 rpm	233 rpm
Auger: single, tapered, with outboard support bearing			
	Diameter, maximum	24 in	610 mm
	Diameter, minimum	18 in	460 mm
	Length	13 in	330 mm

* Operating weight based on H313 attachment with longest roller, heaviest chain, 26 x 12.00-12 tires, and 175-lb (79-kg) operator.

https://truckmanualshub.com/

Backfill Blade	U.S.	Metric
Blade width	64 in	1.6 m
Blade height	14 in	355 mm
Lift height above ground	12 in	300 mm
Blade drop below ground	8 in	200 mm
Maximum swing angle (left/right)	28°	28°
Tilt angle (up/down)	11°	11°

Power		U.S.	Metric
Engine: Deutz® D2.9L4, diesel, EPA Tier 4, EU stage IIIa			
Cooling medium: water			
Injection: direct			
Aspiration: natural			
Number of cylinders: 4			
Displacement		177 in^3	2.9 L
Bore		3.6 in	92 mm
Stroke		4.3 in	110 mm
Engine manufacturer's gross power rating (SAE J1995)		48.8 hp	36.4 kW
Estimated net power rating (SAE J1349)		46 hp	34 kW
Rated speed		2600 rpm	2600 rpm
Maximum engine tilt angles*			
	Longitudinal	30°	30°
	Lateral	30°	30°
*Exceeding these operating angles will cause engine damage. This DOES NOT IMPLY machine is stable to maximum angle of safe engine operation.			

https://truckmanualshub.com/

Power Train			
Ground drive transmission: hydrostatic drive infinitely variable from zero to maximum, foot pedal and hand lever operated speed/direction control			
Differentials: Dana model 44 (Dana model 60 optional)			
Service brake: ground drive speed/direction control brakes machine hydraulically when moved to neutral position			
Parking brake: disc, hand-operated			
Tires: Load rating at 10 mph (16 km/h)			
	standard 26 x 12.00-12 8-ply bar lug inflated to 20 psi (1.4 bar)	2740 lb	1243 kg
	optional 29 x 12.50-15 8-ply bar lug; inflated to 30 psi (2.1 bar)	2150 lb	975 kg
Attachment drive transmission: hydrostatic, lever-operated speed infinitely variable from zero to maximum forward with limited stroke reverse			

Hydraulic System		**U.S.**	**Metric**
Ground drive pump capacity @ 2600 rpm		31.5 gpm	119 L/min
Ground drive pump relief pressure		3650 psi	252 bar
Attachment pump capacity @ 2600 rpm		31.5 gpm	119 L/min
Attachment pump relief pressure			
	trencher	5000 psi	345 bar
	plow, saw	3750 psi	258 bar
Auxiliary pump capacity @ 2600 rpm		11.5 gpm	44 L/min
Auxiliary pump relief pressure		2100 psi	145 bar
Filtration: return/charge full flow; 15 psi (1 bar) bypass, 10 micron nominal			

https://truckmanualshub.com/

Fluid Capacities	U.S.	Metric
Fuel tank	13 gal	49 L
Engine oil	6.4 qt	6.1 L
Hydraulic reservoir	9.5 gal	36 L
Hydraulic system	13 gal	49 L
Engine coolant	3 gal	11 L

Battery
Group 26/26R/70, SAE reserve capacity 165 min., SAE cold crank @ 0° F (-18° C), 850 amps

Noise Levels
Operator ear sound pressure is 96 dBa per ISO 6394
Exterior sound power is 108 dBa per ISO 6393.

Vibration Levels
Average vibration transmitted to the operator's hand during normal trenching operation does not exceed 2.5 m/sec^2. Average vibration transmitted to the operator's whole body during normal trenching operation is 0.8 m/sec^2.
Average vibration transmitted to the operator's hand and whole body during normal sawing operation is 14.8 m/sec^2 and 2.3 m/sec^2 respectively.
Average vibration transmitted to the operator's hand and whole body during normal plowing operation is 13.2 m/sec^2 and 9.9 m/sec^2 respectively.

Unless otherwise specified, all figures are for standard equipment only.

Specifications are called out according to SAE recommended procedures. Specifications are general and subject to change without notice. If exact measurements are required, equipment should be weighed and measured. Due to selected options, delivered equipment may not necessarily match that described.

https://truckmanualshub.com/

A323 Backhoe

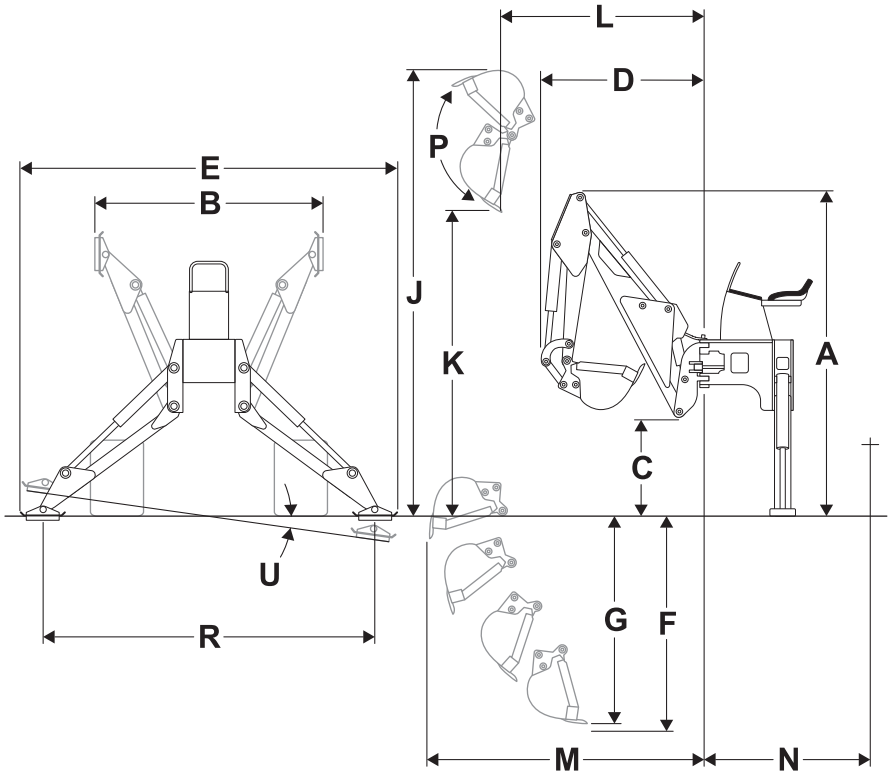

Dimensions		U.S.	Metric
A	Transport height	80.5 in	2.0 m
C	Ground clearance	23 in	584 mm
D	Backhoe length, stowed	60 in	1.5 m
F	Digging depth, maximum	72 in	1.8 m
G	Digging depth, 2' (0.6 m) flat bottom	66 in	1.7 m
J	Operating height, fully raised	97 in	2.5 m
K	Loading height	46 in	1.2 m
L	Loading reach	55 in	1.4 m
M	Reach from swing pivot	102 in	2.6 m
N	Swing pivot to centerline axle	32 in	813 mm
P	Bucket rotation	132°	132°
B	Stabilizer spread, transport	64 in	1.6 m
E	Backhoe or basic unit width	57 in	1.5 m

https://truckmanualshub.com/

R	Stabilizer spread, operating	104 in	2.6 m
U	Leveling angle	10°	10°

General		U.S.	Metric
Bucket			
	Width	12 in	305 mm
	Capacity	1.1 ft^3	0.03 m^3
Backhoe weight with bucket		1125 lb	511 kg
Lift capacity, boom over end and swing arc, SAE*			
	@ 48" (1.2 m)	957 lb	434 kg
	@ ground level	1044 lb	474 kg
	@72" (1.8 m)	783 lb	355 kg
Lift capacity, dipperstick over end and swing arc, SAE*			
	@48" (1.2 m)	1784 lb	809 kg
	@72" (1.8 m)	1500 lb	681 kg
Swing arc		160°	160°
Digging force			
	Using bucket cylinder	5340 lb	23.8 kN
	Using dipperstick cylinder	4050 lb	18 kN

*Lift capacities are for a stationary machine supported by stabilizers.

https://truckmanualshub.com/

H314 Trencher

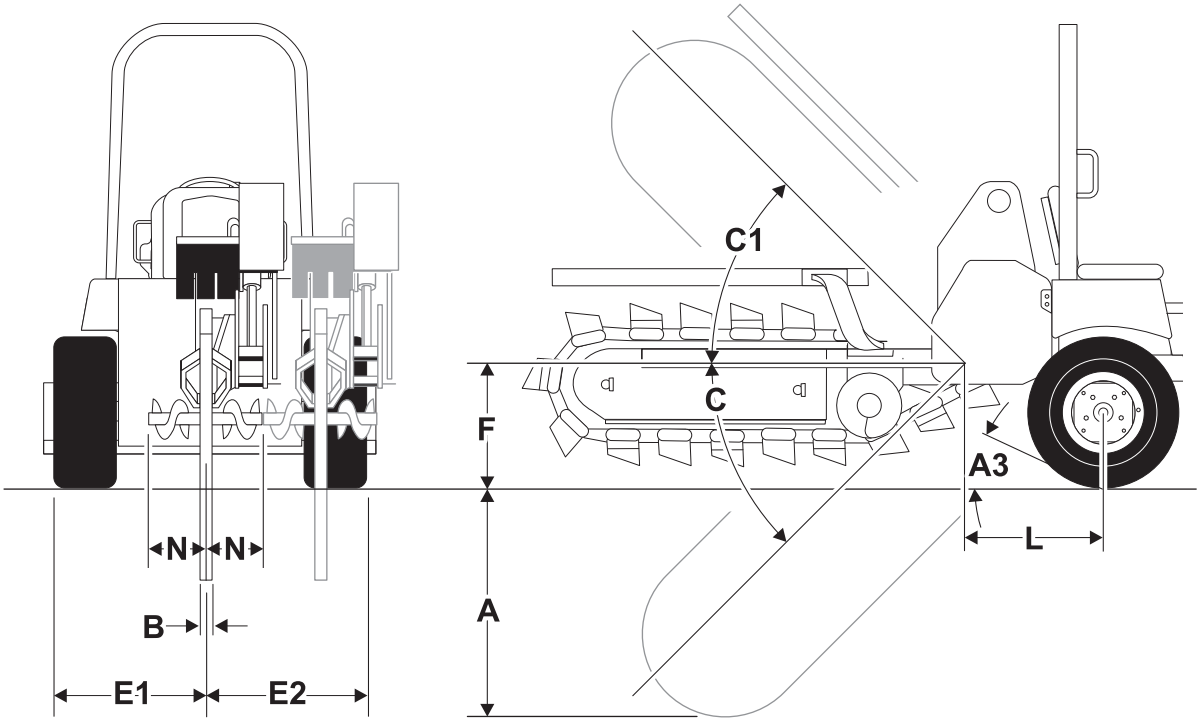

t14om037h.eps

Dimensions *		U.S.	Metric
A	Trench depth, maximum	52 in	1.3 m
A3	Angle of departure	35°	35°
B	Trench width, minimum to maximum		
	Center	6-12 in	150-305 mm
	Offset	6-8 in	150-200 mm
C	Boom travel down	55°	55°
C1	Boom travel up	51°	51°
E1	Centerline of trench to outside edge, left **		
	Center	30.7 in	780 mm
	Offset	52 in	1.3 m
E2	Centerline of trench to outside edge, right **		
	Center	24.3 in	620 mm
	Offset	3 in	75 mm
F	Headshaft height, digging chain	23.3 in	590 mm
	Overhang beyond tire	4.5 in	115 mm

https://truckmanualshub.com/

	Transport height	86 in	2.2 m
L	Headshaft overhang	24.9 in	630 mm
	Soil discharge reach		
	short auger	17 in	430 mm
	long auger	30 in	760 mm

* Dimensions are based on shortest roller boom, 26 X 12.00-12 standard tire and wheel, and 12" (300-mm) pivot (except reference A).
** With 6" (150-mm) chain, right side of trench will be in line with right outside edge of tires.

https://truckmanualshub.com/

H350 Combo

Trencher

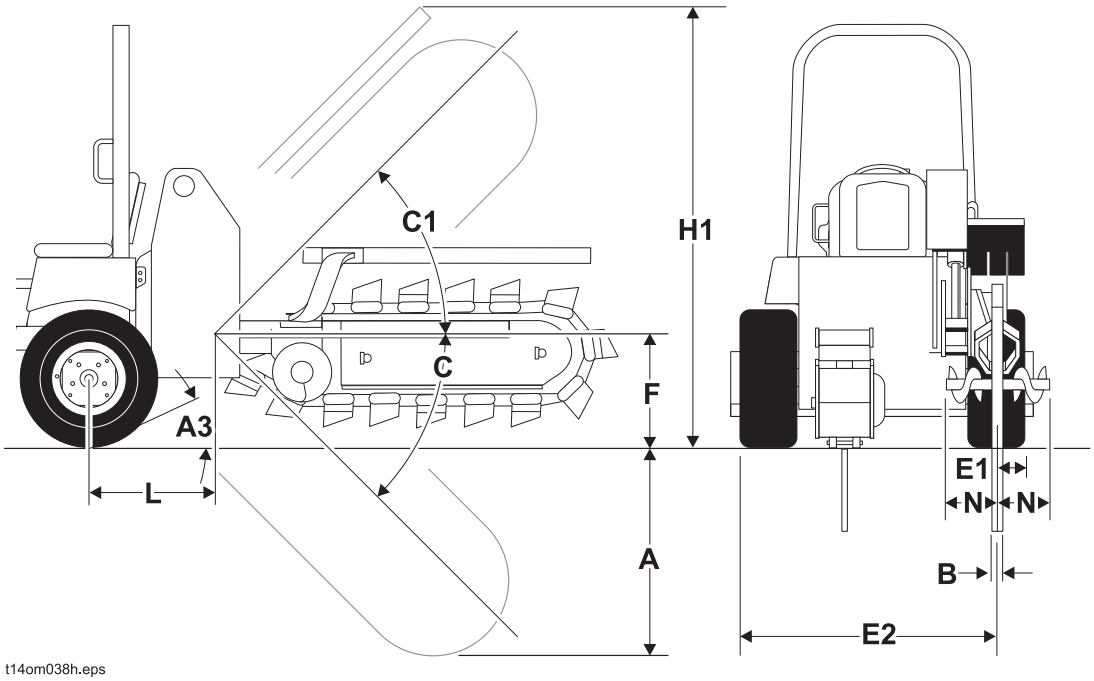

Dimensions *		U.S.	Metric
A	Trench depth, maximum	42 in	1.1 m
A3	Angle of departure	33°	33°
B	Trench width, minimum to maximum	6-8 in	150-200 mm
C	Boom travel down	55°	55°
C1	Boom travel up	51°	51°
E1	Centerline of trench to outside edge, left	52 in	1.3 m
E2	Centerline of trench to outside edge, right **	3 in	80 mm
F	Headshaft height, digging chain	23 in	590 mm
	Overhang beyond tire	4.5 in	115 mm
H1	Transport height	86 in	2.2 m
L	Headshaft overhang	25 in	630 mm
N	Soil discharge reach	17 in	430 mm

* Dimensions are based on shortest roller boom, 26 X 12.00-12 standard tire and wheel.
** With 6" (150-mm) chain, right side of trench will be in line with right outside edge of tires.

https://truckmanualshub.com/

Plow

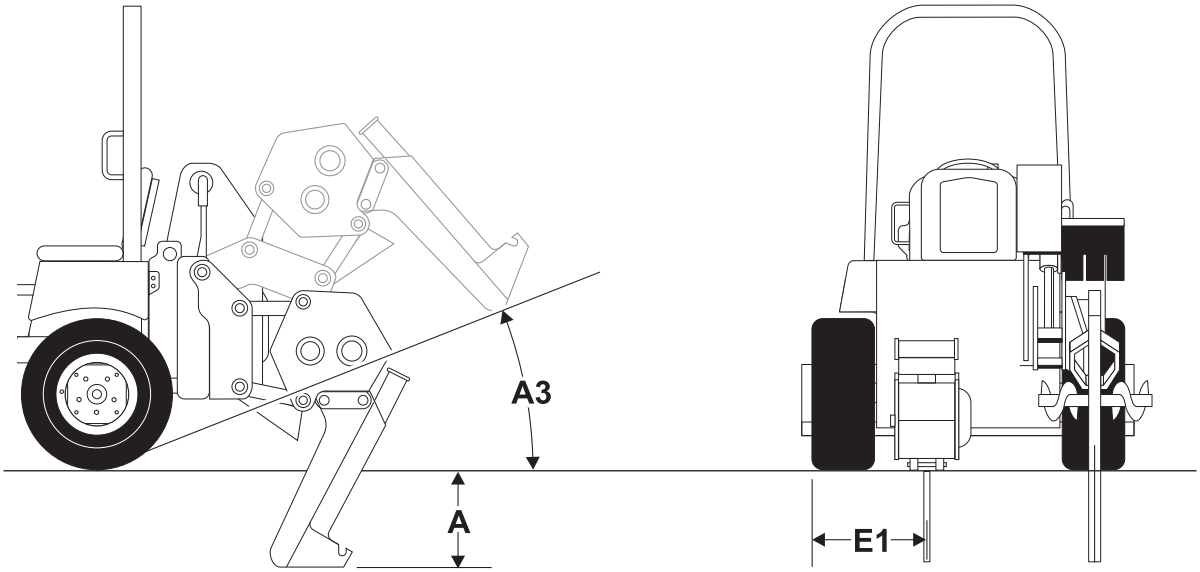

t14om039h.eps

Dimensions		U.S.	Metric
A3	Angle of departure, transport, 18" (457-mm) blade	17°	17°
A	Cover depth, maximum*	24 in	610 mm
	Plow swing angle, left	30°	30°
	Plow swing angle, right	20°	20°
E1	Center of plow to outside edge of unit	20 in	510 mm

*Suggested maximum. Plow blade used will be determined by job requirements and soil conditions.

Operation	U.S.	Metric
Material diameter, pull-in, maximum	2.5 in	65 mm
Material diameter, feed chute, maximum	1.5 in	40 mm

H350 General	U.S.	Metric
Operating weight, without augers, boom, chain, and plow blade	1500 lb	680 kg
Counterweight required, minimum	1100 lb	500 kg
With front-mounted weight rack and A323 backhoe, no rear counterweighting is required.		

https://truckmanualshub.com/

H342 Saw

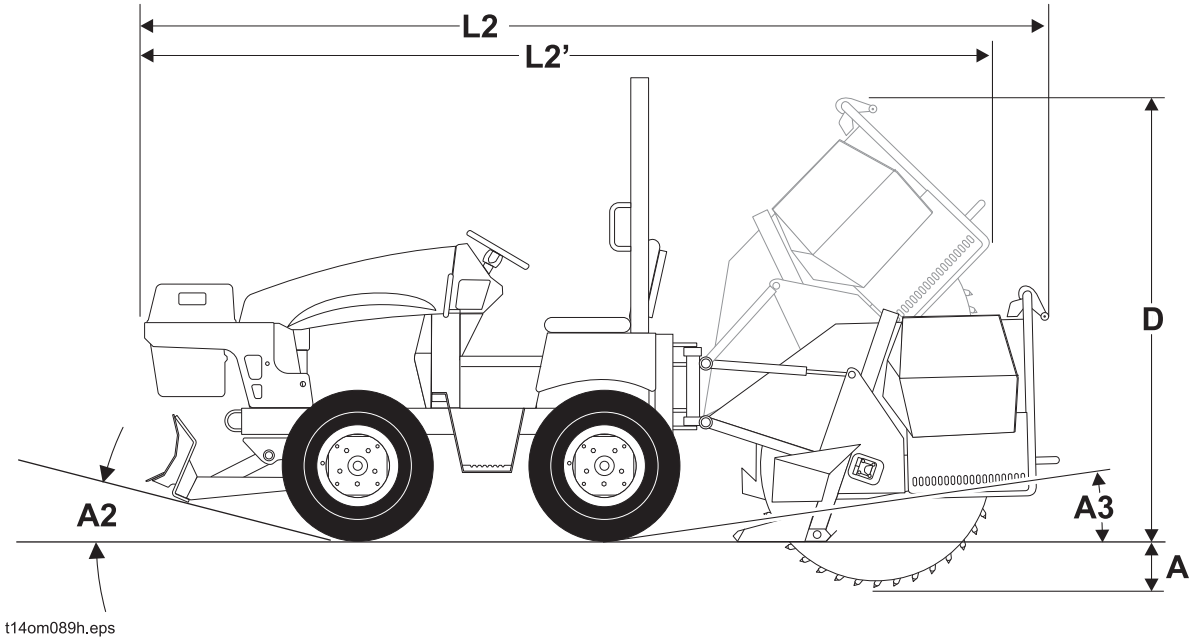

Dimensions		U.S.	Metric
A	Trench depth, maximum	18 in	455 mm
A2	Angle of approach	18°	18°
A3	Angle of departure	14°	14°
D	Transport height, attachment	79 in	2.0 m
L2	Overall length, full depth	177 in	4.5 m
L2'	Overall length, transport	162 in	4.1 m

Operation	U.S.	Metric
Breakover angle at full depth, maximum	38°	38°
Wheelshaft height, full depth	16 in	410 mm
Wheelshaft overhang from rear axle, full depth	54 in	1.4 m
Attachment height, full depth	54 in	1.4 m
Operating height, power unit	86 in	2.2 m

*Lift capacities are for a stationary machine supported by stabilizers.

Not Shown	U.S.	Metric

https://truckmanualshub.com/

Ground clearance at wheel, maximum		11.8 in	300 mm
Centerline trench to outside edge of unit			
	Left	32 in	815 mm
	Right	32 in	815 mm
Attachment width		23 in	580 mm
Number of teeth on saw wheel		36	36
Attachment weight			
	2.5" (65-mm) segments	1550 lb	700 kg
	3.5" (90-mm) segments	1610 lb	730 kg
	5.0" (130-mm) segments	1660 lb	755 kg
Counterweight required		800 lb	360 kg
Wheel speed, variable		0-160 rpm	0-160 rpm

https://truckmanualshub.com/

H331 Plow

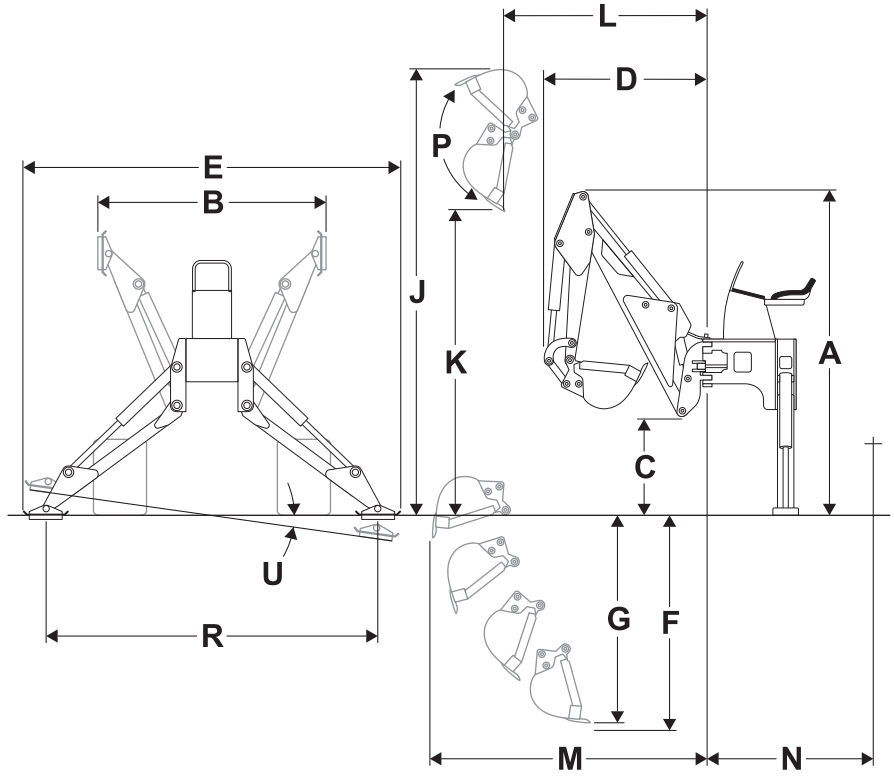

Dimensions		U.S.	Metric
A	Cover depth, feed blade, maximum	24 in	610 mm
	Feed tube inside width, maximum	1 in	25 mm
	Feed tube bend ratio	4:1 or 10:1	4:1 or 10:1
A1	Pull blade depth, maximum	24 in	610 mm
	Pull blade width, maximum	1 in	25 mm
	Pull blade bullet diameter, maximum	3 in	75 mm
	Blade steer angle	15°	15°
H	Angle of depression	3°	3°
I	Angle of departure	22°	22°
J	Blade ground clearance	28.5 in	725 mm
L2	Operating length, plow with blade	145 in	3.9 m
	With A323 backhoe	180 in	4.6 m
	With reel carrier	154 in	3.9 m
	With reel carrier and maximum diameter reel	169 in	4.3 m

https://truckmanualshub.com/

L2'	Transport length, plow with blade	169 in	4.3 m
	With A323 backhoe	203 in	5.2 m
	With reel carrier	177 in	4.5 m
	With reel carrier and maximum diameter reel	192 in	4.9 m

Reel Carrier		U.S.	Metric
	Internal width	25 in	635 mm
N	Reel diameter, maximum	36 in	915 mm
P	Spindle height	39 in	985 mm
Q	Spindle overhang from front axle	42 in	1 m
	Reel capacity, maximum	200 lb	90 kg
	Operating weight, with blade	4200 lb	1910 kg

Plow Blades

Plow blades are available in 12" (305-mm), 18" (460-mm), and 24" (610-mm) blade depths. Select correct blade for the job: blades with feed tubes or pull blades. Feed tube blades are provided with 4:1 or 10:1 bend ratios. Check with your Ditch Witch® dealer for special blade requirements.

https://truckmanualshub.com/

MT12 MicroTrencher

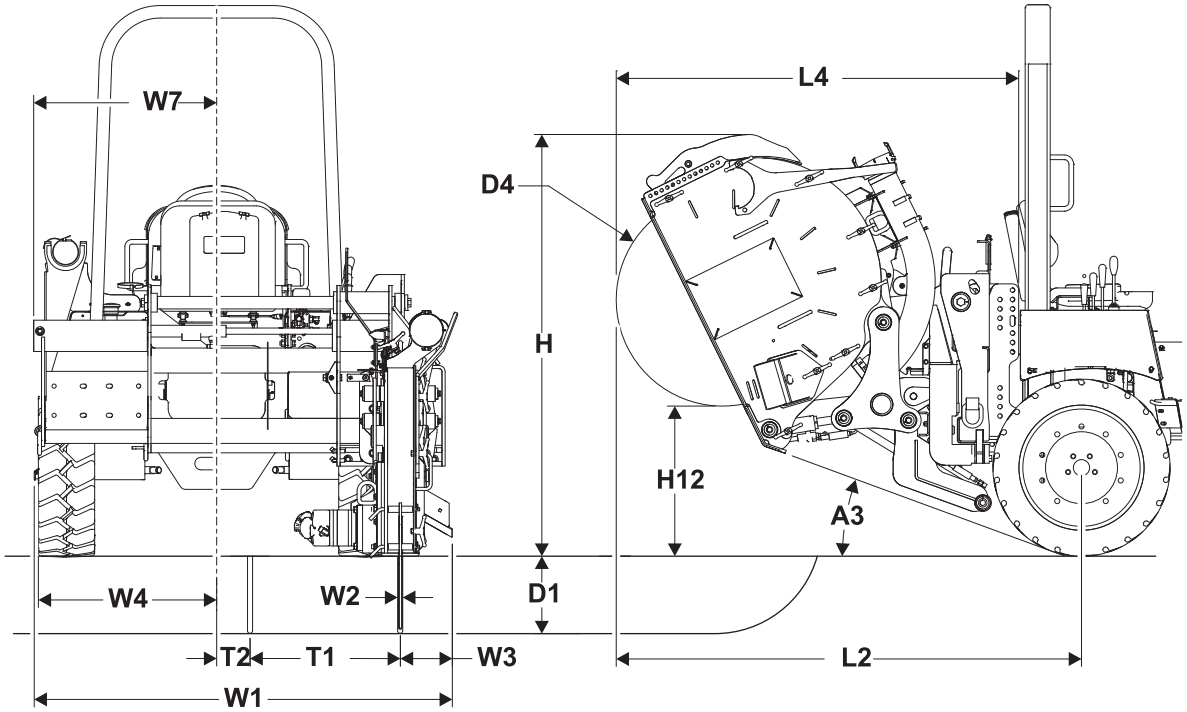

t28om085h.eps

Dimensions		U.S.	Metric
A3	Angle of departure	19°	19°
D1	Trench depth, 1-in (25-mm) increments	6.5-12.5 in	165-318 mm
D4	Blade diameter	34 in	864 mm
H	Attachment height, transport	68 in	1.72 m
H12	Ground clearance at wheel	24 in	610 mm
L2	Length, transport, from centerline of rear axle	75 in	1.90 m
L2'	Working length, from centerline of rear axle (not shown)	81 in	2.06 m
L4	Length, transport, from front of attachment	64 in	1.62 m
T1	Saw offset distance	24 in	610 mm
T2	Centerline of saw to centerline of unit, minimum offset	5.3 in	135 mm
W1	Maximum working width	67 in	1.70 m
W2	Trench Width	0.75-1.25 in	19-32 mm

https://truckmanualshub.com/

W3	Spoils chute extension (same both sides)	8.5 in	216 mm
W4	Centerline of unit to outside left tire (28x9 solid tires)	28.5 in	725 mm
W7	Centerline of unit to end of traverse frame	29.2 in	742 mm
Width, transport		60.5 in	1.53 m
Minimum microtrenching radius*		40 ft	12 m
Attachment weight, including mount kit		1400 lb	636 kg
Microtrencher tilt adjustment		+/- 6°	+/- 6°
Counterweighting: For unit with solid, 28x9 tires, add 500 lb (227 kg) on front weight rack			

Operation	U.S.	Metric
Microtrencher motor displacement	40.55 in^3	664 cc
Blade speed, variable	0-160 rpm	0-160 rpm
Quantity of cutting teeth on saw blade (0.75 in, 0.95 in, 1.25 in)	24, 32, 32	24, 32, 32
Cutting bit types: Rotating: self-sharpening full cap conical bit with pin retainer Fixed: Sharktooth carbide-tipped bits (0.75 in blade width only)		

*Minimum microtrench radius will depend on surface conditions and hardness of material being cut. Cut will be slightly wider in curved sections of the trench.

Specifications are called out according to SAE recommended procedures. Specifications are general and subject to change without notice. If exact measurements are required, equipment should be weighed and measured. Due to selected options, delivered equipment may not necessarily match that described.

https://truckmanualshub.com/

Declaration of Conformity Information

Countries in the European Union should have received a Declaration of Conformity (DOC) with this machine similar to the example below.

The Charles Machine Works, Inc.
PO Box 66
1959 West Fir Avenue
Perry, Oklahoma, USA 73077-0066
Phone: 580 572 3784
FAX: 580 572 3525

Declares that the product:

Model: **Ditch Witch® XXXX**

Type: **(machine type)**

Engine Power: **xxx kW**

Serial Number: **CMWXXXXXXXXXXXXXX**

Conforms to the requirements of:

2006/42/EC Machinery Directive

2004/108/EC Electromagnetic Compatibility Directive

2000/14/EC Noise Emission Directive

Measured sound power level (Annex V): **xxx dBA**
Guaranteed sound power level (Annex V): **xxx dBA**

The Technical Construction File is maintained at the manufacturer's location.

The manufacturer's European representative is:

Ditch Witch Barcelona
International Underground Systems, S.L.
C/EL PLA, 130 * Poligon Industrial El Pla
08980 Sant Feliu De Llobregat * Spain
Phone: +34 93 632 7344
FAX: +34 93 632 7343

https://truckmanualshub.com/

Support

Procedure

Notify your dealer immediately of any malfunction or failure of Ditch Witch® equipment.

Always give model, serial number, and approximate date of your equipment purchase. This information should be recorded and placed on file by the owner at the time of purchase.

Return damaged parts to dealer for inspection and warranty consideration if in warranty time frame.

Order genuine Ditch Witch replacement or repair parts from your authorized Ditch Witch dealer. Use of another manufacturer's parts may void warranty consideration.

Resources

Publications

Contact your Ditch Witch dealer for publications and videos covering safety, operation, service, and repair of your equipment.

Ditch Witch Training

For information about on-site, individualized training, contact your Ditch Witch dealer.

https://truckmanualshub.com/

Warranty

Ditch Witch® Equipment and Replacement Parts Limited Warranty Policy

Subject to the limitation and exclusions herein, free replacement parts will be provided at any authorized Ditch Witch dealership for any Ditch Witch equipment or parts manufactured by The Charles Machine Works, Inc. (CMW) that fail due to a defect in material or workmanship within one (1) year of first commercial use. Free labor will be provided at any authorized Ditch Witch dealership for installation of parts under this warranty during the first year following "initial commercial" use of the serial-numbered Ditch Witch equipment on which it is installed. The customer is responsible for transporting their equipment to an authorized Ditch Witch dealership for all warranty work.

Exclusions from Product Warranty

- All incidental or consequential damages.
- All defects, damages, or injuries caused by misuse, abuse, improper installation, alteration, neglect, or uses other than those for which products were intended.
- All defects, damages, or injuries caused by improper training, operation, or servicing of products in a manner inconsistent with manufacturer's recommendations.
- All engines and engine accessories (these are covered by original manufacturer's warranty).
- Tires, belts, and other parts which may be subject to another manufacturer's warranty (such warranty will be available to purchaser).
- ALL IMPLIED WARRANTIES NOT EXPRESSLY STATED HEREIN, INCLUDING ANY WARRANTY OF FITNESS FOR A PARTICULAR PURPOSE AND MERCHANTABILITY.

IF THE PRODUCTS ARE PURCHASED FOR COMMERCIAL PURPOSES, AS DEFINED BY THE UNIFORM COMMERCIAL CODE, THEN THERE ARE NO WARRANTIES WHICH EXTEND BEYOND THE FACE HEREOF AND THERE ARE NO IMPLIED WARRANTIES OF ANY KIND WHICH EXTEND TO A COMMERCIAL BUYER. ALL OTHER PROVISIONS OF THIS LIMITED WARRANTY APPLY INCLUDING THE DUTIES IMPOSED.

Ditch Witch products have been tested to deliver acceptable performance in most conditions. This does not imply they will deliver acceptable performance in all conditions. Therefore, to assure suitability, products should be operated under anticipated working conditions prior to purchase.

Defects will be determined by an inspection within thirty (30) days of the date of failure of the product or part by CMW or its authorized dealer. CMW will provide the location of its inspection facilities or its nearest authorized dealer upon inquiry. CMW reserves the right to supply remanufactured replacements parts under this warranty as it deems appropriate.

Extended warranties are available upon request from your local Ditch Witch dealer or CMW.

Some states do not allow exclusion or limitation of incidental or consequential damages, so above limitation of exclusion may not apply. Further, some states do not allow exclusion of or limitation of how long an implied warranty lasts, so the above limitation may not apply. This limited warranty gives product owner specific legal rights and the product owner may also have other rights which vary from state to state.

For information regarding this limited warranty, contact CMW's Product Support department, P.O. Box 66, Perry, OK 73077-0066, or contact your local dealer.

First version: 1/91; Latest version: 11/11

A Note To Ditch Witch Equipment Owners:

If your equipment was purchased through a Ditch Witch dealer, there is no need to read further.

However, if you purchased from any other source, please fill out the form on the reverse side and return it to us.

This will enable you to receive updates on this equipment as well as information on new products of interest.

Thanks for using Ditch Witch equipment.

(Please Fold Along This Line And Seal At Bottom With Tape)

NO POSTAGE NECESSARY IF MAILED IN THE UNITED STATES

BUSINESS REPLY MAIL

FIRST CLASS PERMIT NO 23 PERRY OKLAHOMA

POSTAGE WILL BE PAID BY

The Charles Machine Works, Inc.
P.O. Box 66
Perry, Oklahoma 73077-9989

A Note To Ditch Witch Equipment Owners:

If your equipment was purchased through a Ditch Witch dealer, there is no need to read further.

However, if you purchased from any other source, please fill out the form on the reverse side and return it to us.

This will enable you to receive updates on this equipment as well as information on new products of interest.

Thanks for using Ditch Witch equipment.

(Please Fold Along This Line And Seal At Bottom With Tape)

NO POSTAGE NECESSARY IF MAILED IN THE UNITED STATES

BUSINESS REPLY MAIL

FIRST CLASS PERMIT NO 23 PERRY OKLAHOMA

POSTAGE WILL BE PAID BY

The Charles Machine Works, Inc.
P.O. Box 66
Perry, Oklahoma 73077-9989

https://truckmanualshub.com/

Ditch Witch® Registration Card

Please Type or Print All Information

Purchaser's Company Name

Attention

Street Address or P.O. Box

City County

State Zip Nation

( )

Phone Number With Area Code

Model Serial Number

Attachments/Accessories Serial Numbers

Attachments/Accessories Serial Numbers

Attachments/Accessories Serial Numbers

Name of Ditch Witch Dealership

Your Signature

Ditch Witch® Registration Card

Please Type or Print All Information

Purchaser's Company Name

Attention

Street Address or P.O. Box

City County

State Zip Nation

( )

Phone Number With Area Code

Model Serial Number

Attachments/Accessories Serial Numbers

Attachments/Accessories Serial Numbers

Attachments/Accessories Serial Numbers

Name of Ditch Witch Dealership

Your Signature

https://truckmanualshub.com/

https://truckmanualshub.com/

Service Record

Service Performed	Date	Hours

https://truckmanualshub.com/

Service Performed	Date	Hours