https://truckmanualshub.com/

GEOTRAC 114ep/134ep

Power of a new generation

www.lindner-traktoren.at

efficient power program

Lindner

https://truckmanualshub.com/

VOM S14 ZUM GEOTRAC

Over 60 years of Lindner Tractors

Management trio: KR Mag. Hermann Lindner, Ing. Stefan Lindner, Rudolf Lindner

The new technology centre at the production plant in Kundl, Austria

LINDNER-TRACTORS

A family company, Austria's Lindner Tractors and Transporters has been making products for mountain and grassland agricultural as well as forest and urban operations since 1948. Following its experience in building aircraft, Lindner made a name for itself as an all-wheel-drive specialist by manufacturing the first four-wheel-drive tractors in Austria. Just as when it started, Lindner builds specialised vehicles that set themselves apart by their off-road agility, their compact and robust construction and high quality components. „Our grandfathers built this company on the principles innovation and a pioneering spirit, which continue to be the cornerstone of our success. From the start we have striven to keep up with changes in agriculture and to flexibly accommodate the needs of farmers. Modern technology, functional design and innovative ideas as well as the best possible customer service are our core values. Reliability and tradition are our trademarks. Today, excellently trained employees working at our plant in Kundl, Austria build modern vehicles that make the pros work easier with their practical solutions."

KR Mag. Hermann Lindner
CEO

A technology leader steeped in tradition and poised for a successful future:

Lindner's number one goal is customer satisfaction. As a specialist in all-wheel-drive tractors, Lindner has constantly excited its customers with practical and innovative new products for decades.

*Customer-oriented solutions, insistence on the highest quality, international collaboration with leading engine, transmission and hydraulic specialists and a motivated developmental team ensure that our new tractors will be second to none. Our newly established development and technology centre at company headquarters in Kundl supports communication between Lindner and its development partners, suppliers and sales force. Fundamental changes in grassland and mountain agriculture, increased multi-site use through equipment co-ops and the general trend toward greater acreage performance prompted Lindner's development team to create the new „**Series 4**" Geotrac line.*

https://truckmanualshub.com/

GEOTRAC SERIE 4 ep

Efficiency in grassland, on the field and in the forest

Lindner's „efficient power" program continuously optimises the efficiency and fuel consumption.

HIGH PRODUCTIVITY ON YOUR FIELDS

*With its „ep" models, Lindner has improved and optimised all aspects of the successful Series 4. With 32 forward and reverse speeds, the ZF gearbox with 4-step powershifting offers the right speed for every application. Thanks to the automation functions, even long work days are handled with ease. The **4-speed power take-off shaft** allows you to work at a reduced engine speed, which saves fuel.*

AGILE WORKING IN THE FIELD

The small size and tight turning circle ensure agility in the field and when used as a front-end loader. Thanks to use of an axial piston pump, the high-performance Bosch-Rexroth hydraulics can reduce fuel consumption by up to 15%. The pump delivers only what is needed exactly - infinitely variable up to 121 litres/min. The multi-function armrest makes precise control child's play.

A POWERHOUSE FOR FORESTRY APPLICATIONS

*With 560 Nm of torque, **Perkins Power** ensures enormous pulling force in every situation. The particulate filter system means that no additional fluids besides diesel and oil are necessary. With the optional socket for stationary operation, the engine can be controlled via the remote control on the winch. The comfortable panorama cab with **ROPS** and **FOPS** structure provides optimum protection for the operator and every situation.*

IMPRESSIVE IN MUNICIPAL USE

*The **supported front hydraulics** can be converted to a mounting plate for winter service in the blink of an eye. A front PTO with start-up control and the 48/48 speed creeper gearbox make the equipment an ideal snow plough or snow thrower. I**BC monitor** and **inside mirror** with rearview camera, the heated windscreen, as well as the heated panorama rearview mirror ensure perfect all-round visibility. Innovative lighting technology based on the use of **LEDs** and **halogen lamps** guarantees easy work at night.*

efficient power program

https://truckmanualshub.com/

CAB

Optimum visibility with innovative safety concept

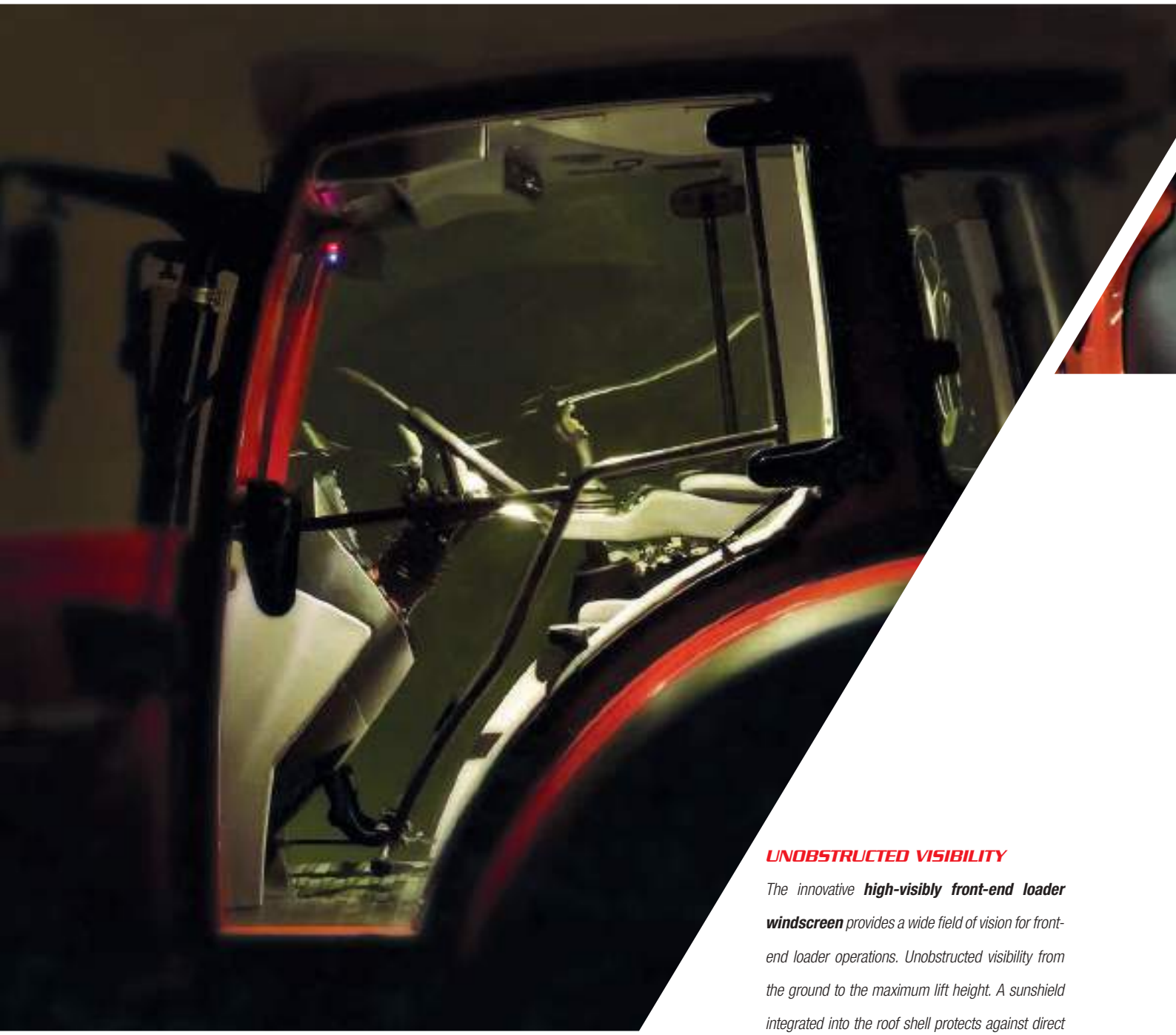

UNOBSTRUCTED VISIBILITY

*The innovative **high-visibly front-end loader windscreen** provides a wide field of vision for front-end loader operations. Unobstructed visibility from the ground to the maximum lift height. A sunshield integrated into the roof shell protects against direct sunlight. The sliding sunshield can also be used to cover the high-visibility window completely. The new **panorama rearview mirrors** with wide-angle field of view are electrically adjustable and have heaters in both sections of the mirror. The image from the **rearview camera** is displayed on the **IBC inside mirror**. Up to 2 heated infrared rearview or side cameras that display on the IBC monitor are available for use by pros in challenging situations.*

PANORAMA COMFORT CAB

*Thanks to the wide safety glass doors, it is easy and comfortable to climb into the panorama comfort cab. **LED-based cab lighting** guarantees safe access to the cab in the dark. Maximum visibility has been achieved by pushing the B-pillar as far back as possible. The design of the cab has been strongly influenced by the optimal visibility offered by a helicopter. The wide-opening rear window, adjustable side windows and the 3-speed fresh-air blower guarantee a pleasant working environment. **Automatic climate control** assures a comfortable room temperature. The filter housing on the cab roof is easily accessed with the aid of the rear hydraulics.*

https://truckmanualshub.com/

COMFORT AND SAFETY

*The high-visibility windows are sealed especially carefully to prevent engine noise from entering the cab. When the windows are frosted over in the winter, the standard **windscreen heater** ensures unobstructed visibility in seconds. In addition, it provides pleasant radiant heat from the front. The standard **ultra-bushed bearings** and the hydro-mechanical cab suspension ensure driver comfort. **Pneumatic cab suspension** that guarantees ideal driver comfort during long work days is optionally available in conjunction with the compressed-air system. A particularly innovative safety concept has been implemented for the cab. The passenger cell is designed as a **ROPS** (Roll Over Protective Structure) and 1 (Falling Object Protective Structure. With this high safety standard, the driver is protected both if the tractor rolls over on a slope and from falling objects, for instance, during use in forestry work. In addition, the entire front glazing is made of **LSG** (Laminated Safety Glass) in order to protect against objects breaking through from the front.*

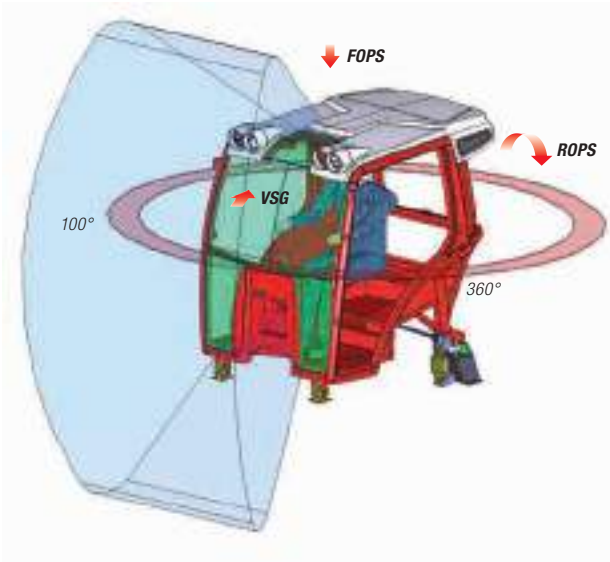

High-visibility window with sliding sunshield

https://truckmanualshub.com/

COCKPIT
Comfortable Ergonomics

EVERYTHING WITHIN REACH

*The **multi-function armrest** with 5-button joystick is used to operate the front-end loader or front hydraulics and to control the hydraulics. Microswitches provide access to various functions such as shuttle or automatic EHR. On request, an expanded **multi-controller joystick** with 9 function buttons is available to operate powershifting as well as comfort shifting at the push of a button. The Pro-Comfort-seat with **low-frequency air suspension** from GRAMMER is a standard feature. The 7-position adjustment of backrest, seating surface, lumbar support as well as headrest and armrests make the seat comfortable for any driver. A practical*

ERGONOMIC WORK ENVIRONMENT

*The cockpit is designed for optimal driver ergonomics. All controls are arranged in islands, softly illuminated and ergonomically arranged around the driver. The **comfort steering wheel** can be adjusted in height and angle. The GEOTRAC can be equipped with an optional hi-fi audio system that includes an integrated **Bluetooth hands-free speaking unit**. The headliner is made from high-quality materials and features integrated reading lights and powerful stereo loudspeakers to underscore the living room-like character of the cab. The always-on ambient **LED lighting** ensures that all important controls can be located quickly at any time, even in the dark – comfort like that found in a luxury limousine. The radio console is located in view of the driver. Several air vents allow the driver to adjust the fresh-air flow to his needs.*

https://truckmanualshub.com/

The rearview camera is displayed on the IBC inside mirror

Standard storage compartment, cup holder and driver sunglasses

document compartment behind the backrest provides an easily reached storage area. The folding passenger seat with recessed seat belt provides adequate seating comfort during longer trips by two individuals. The new seat cover comes from the motorcycle sector, can be washed and withstands harsh use. If the passenger seat is not used, part of the seating surface can be stowed. Access to the hand brake lever is assured under all circumstances. The ***storage compartment*** *on the side provides adequate space for provisions. The readily accessible* ***cup holder*** *behind it can even accommodate a 1.5 litre bottle. Lindner driver sunglasses ensure safe operation even in strong sunlight.*

I.B.C. MONITOR AND INSIDE MIRROR

All vehicle information is displayed clearly on the standard ***Lindner I.B.C. monitor*** *(Intelligent- on-Board Computer). The low-reflection special-glass screen can be read easily even in direct sunlight. Navigating in the computer menu is easy and intuitive thanks to illuminated function buttons and the rotary knob. A variety of functions can be displayed and controlled via the Lindner I.B.C. monitor. What is displayed on the monitor can be changed, depending on the information needed. In addition to basic information such as RPM, vehicle speed, indicators and time, the screen can also display the optional rearview or side camera, be switched to fuel consumption display or to hydraulic settings display. Operation of the most important functions is described step-by-step in the Help menu. Fine adjustment of the EHS hydraulics is made via the* ***Lindner I.B.C. monitor****. All electronics in the vehicle can be checked via the monitor and the most important information messages retrieved at any time. The innovative* ***I.B.C. inside mirror*** *can display the rearview camera as well as GPS data on its integrated screen. Using the integrated hands-free speaking unit, a mobile phone can be used safely during operation.*

https://truckmanualshub.com/

HIGHLIGHTS

REAR LIGHTS

LED reverse lights and control unit operation

The LED rear lights are characterised by good visibility, low power consumption and a very long service life of more than 10,000 operating hours. A control unit on the reverse light housing beside the lifting unit and PTO shaft can also be operated with the touch of a button. Two rear-mounted working lights are fitted as standard.

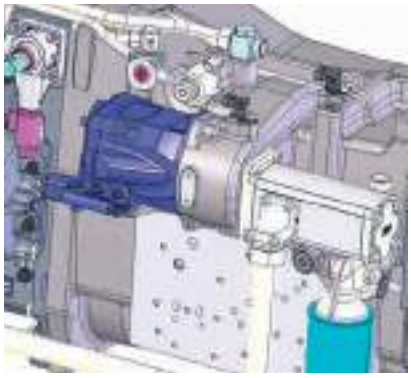

HYDRAULICS

BOSCH axial piston pump reduces fuel consumption by 15%

The high-performance hydraulic system by BOSCH-Rexroth works particularly efficiently with an axial piston pump. The maximum displacement of 121 l/min is adapted continuously to the output requirement. This helps to prevent power losses and save as much as 15% of fuel. Up to 5 dual-action control units are also possible.

CAB

Frontloader clear vision and IBC rear view mirror. *The Panorama Comfort Cab guarantees optimum all-round visibility in all directions and is equipped with a ROPS and FOPS safety structure. The frontloader clear vision windscreen ensures safety when working up to the maximum working radius. The innovative IBC inside mirror displays the image from the backup camera or GPS data and is equipped with a mobile phone hands-free speaker unit.*

COCKPIT

IBC monitor and Multifunctional armrest

All vehicle information is displayed clearly and logically on the IBC monitor. The screen views adapt automatically to the given work situation. Settings for Powershuttle, hydraulics or PTO, camera or digital log: The driver can see everything. The Multifunctional armrest guarantees simple operation of driving and hydraulic functions.

https://truckmanualshub.com/

FRONT LIGHTING

LED daytime running light and halogen headlights

The high luminosity H7 headlights guarantee perfect night vision. In the bi-halogen lights, the beam is switched from high to low beam by means of a mirror - without any loss of brightness. The daytime running light equipped with extra-bright super LEDs ensures outstanding visibility in traffic and consumes very little electrical power.

ENGINE

144 HP and 560 Nm from a 4.4 litre Perkins Turbo

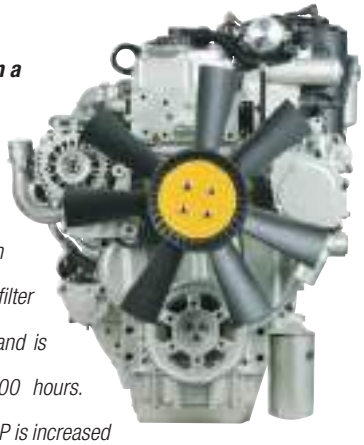

The high-torque 4-cylinder engine with a particulate filter is compliant with emissions stage 3b. The filter system is self-regulating, and is maintenance-free for 8,000 hours. The normal output of 133 HP is increased to 144 HP when the vehicle is used for transporting and the PTO shaft is in operation. The engine's enormous torque of 560 Nm is available even at just 1400 rpm.

FRONT AXLE

Independent wheel suspension with integrated front hydraulics. *The high-performance axle is optionally available with independent wheel suspension and in a 50 km/h version. An integrated front hydraulics system with 3,500 kg lifting force is available with EFH equipment relief. A mounting plate for road-clearing service can be fitted instead of the lifting arms with a very few manual operations. The front PTO shaft with start-up control starts at the press of a button.*

TRANSMISSION

ZF transmission with quad power shift and APS

The 32/32-gear ZF transmission is available with additional crawler gear upon request. The 4 power shift gear levels can be switched manually or automatically via APS. Comfort Shift enables clutch operation at the touch of a button. With the reduced engine speed, the vehicle can travel at 50 km/h with the engine at 2050 rpm, and at 43 km/h with the engine at 1750 rpm. A proportional quad PTO shaft is supplied as standard.

https://truckmanualshub.com/

PERKINS - 4-CYLINDER TURBODIESEL

*The GEOTRAC 114 ep and GEOTRAC 134 ep are powered by a PERKINS 4-cylinder turbodiesel with common-rail injection and charge-air cooling. During transport work or when used in applications requiring only little force, the engine remains in the **ECO mode.** When needed, maximum power is available within a fraction of a second. Power is adjusted dynamically to what is required for the application. As a result, the Series 4 ep models operate with optimised fuel consumption in every power range.*

*The standard output of the **GEOTRAC 114 ep** is 133 HP / 98 kW at 2200 RPM and 530 Nm of torque at 1400 RPM.*

***The Geotrac 134 ep** has a standard output of 133 HP / 98 KW - continuously when performing heavy pulling. During light-duty transport work or when operating in the PTO mode, a maximum output of 144 HP / 106 kW is available. A torque of 560 Nm guarantees enormous pulling force at all times.*

INFO

The 4.4-litre engines are manufactured by PERKINS in Peterborough / England. They comply with the latest exhaust criteria (Stage 3b) and are characterised by an enormous increase in torque. The particulate filter technology used ensures that no additional fluids are necessary.

EPP efficient power program

With the aid of the EP speed limiter, the Geotrac Series 4 ep can store the maximum engine speed. If the limit is set to 1900 RPM, for instance, up to 1 litre of fuel can be saved per operating hour

https://truckmanualshub.com/

POWER CURVE for the Geotrac 134ep

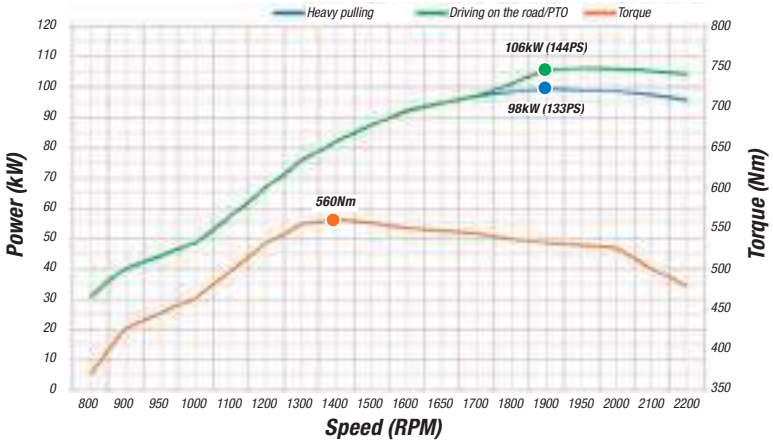

COOLING PACKAGE

The large air grille and air channels ensure optimum cooling. The radiators are sized to allow easy cleaning without having to be swung out. Demand-driven viscous fans are standard. By rotating the fan blades, the air grille is blown clean at regular intervals. Gas springs make opening the one-piece engine bonnet especially easy and safe.

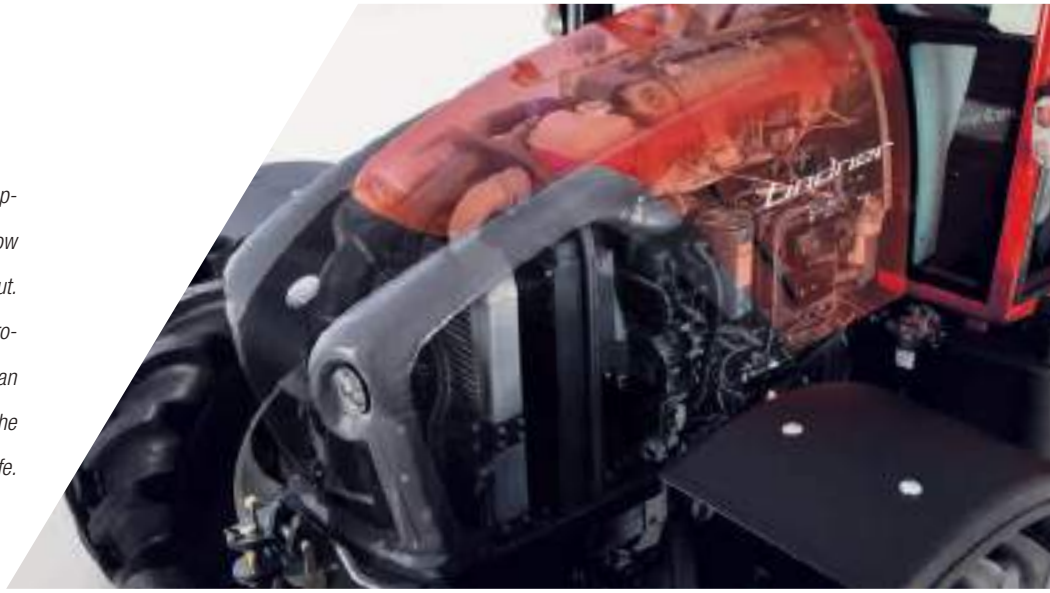

https://truckmanualshub.com/

GEARBOX
Made in Germany

SPEED DIAGRAM

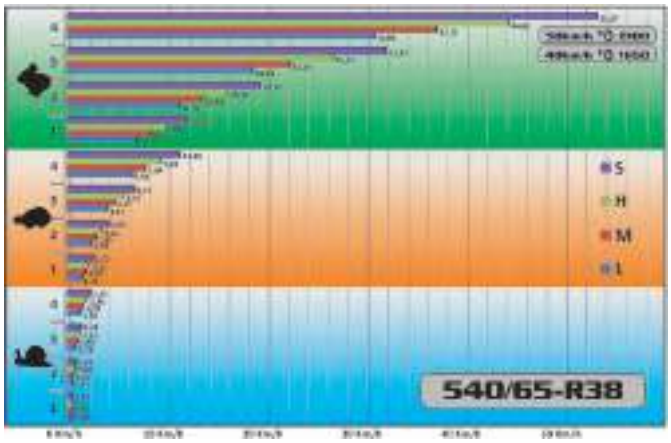

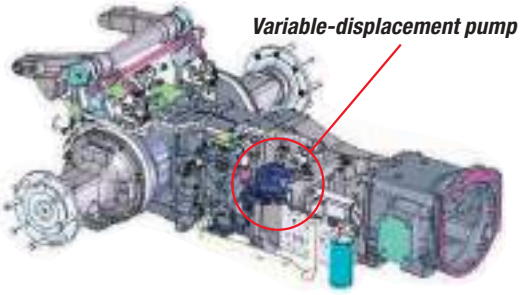

EPP efficient power program

The 4-point power take-off allows the optimum PTO shaft speed to be achieved at low engine speed. This saves fuel, spares the attachments and improves efficiency considerably. 43 km/h is achieved at a reduced speed of 1750 RPM.

ZF HIGH POWER TRANSMISSION

*The ZF 4-stage powershift gearbox provides **32 forward and 32 reverse speeds.** It is possible to select 30, 40 or 50 km/h. In the 40 km/h version, engine speed is limited to 1650 RPM at the highest speed. This provides a maximum speed of 43 km/h at optimum fuel consumption. **Four-stage powershifting** with automation function (APS) is standard. The powershift stages are selected automatically by the vehicle's intelligent electronics. The system also allows manual gear selection. If necessary, the APS can be limited to two or three powershift stages (6 programs are available). For especially heavy-duty jobs, the Lindner engineers have developed the **Speedmatching mode**. In this mode, engine output is used up to the maximum RPM and the optimum powershift stage (with maximum power availability) is selected when shifting gears. Powershift reverse (Power Shuttle) can be operated by means of the driving direction lever on the steering wheel or via the multi-function armrest. **The response of the power shuttle is adjustable** (5 stages) via the IBC monitor: The buttons for the standard **comfort clutch (CS)** and **automatic group shifting (FRRS)** between road and field are located on the gearshift lever. If desired, a 48/48-speed version with creeper mode is available. In this mode, a minimum speed of 290 m/h is possible. An optional travelling PTO shaft is also available. The heavy-duty rear PTO shaft offers 4 PTO speeds (540, 540E, 1000, 1000E). This permits operation at the engine speed with optimum fuel consumption whatever the application. The PTO start-up controller permits selection from among **three start-up curves,** depending on the power required by the attachment. The PTO shaft is operated from the control console in the cab or by means of the **remote control** located at either of the two rear wings.*

https://truckmanualshub.com/

HYDRAULICS

BOSCH-Rexroth technology with Lindner know-how

HIGH-POWER HYDRAULICS

BOSCH-Rexroth high-performance hydraulics *with separate oil supply and an axial piston pump for an output of* ***121 ltr/min*** *with a 45-litre oil supply. The 2-circuit system with a separate pump for gearbox, steering and work hydraulics for especially demanding and economical use is available with the* ***Lindner-Powerlink*** *connection as an option. This load-sensing system is extremely efficient and economical, since only the amount of oil needed at any one time is supplied.*

The GEOTRAC 114 ep *comes standard with two double-acting control units with floating position. These variable-flow load-sensing control units can be supplemented with up to three control units. Up to four electronic proportional control units (EHS) are available as an alternative to the mechanical control units. This is recommended especially for sensitive control of the front-end loader.*

The Geotrac 134 ep *comes standard with two electronic control units on a multi-function armrest and one mechanical control unit with detent. The electronic control units can be adjusted via the Lindner I.B.C. monitor. The driver has infinitely adjustable control of flow rates and can program time intervals, the floating position or blocking. In addition, priorities can be specified for all electric control units. This allows the driver to establish the sequence in which hydraulic power is supplied to the control units. All hydraulic connections are equipped with especially high quality hydraulic couplings. Every connection has its own leakage oil container.*

EPP efficient power program

Separate oil management on the GEOTRAC utilises an efficient 2-circuit system for gearbox and steering + work hydraulics. As a result, it is not possible for contaminated oil to get from attachments into the gearbox. The axial piston pump supplies only the exact amount of oil needed - this reduces fuel consumption by up to 15%

https://truckmanualshub.com/

FRONT MOUNTING AREA

Unbelievably manoeuvrable with 50° steering angle

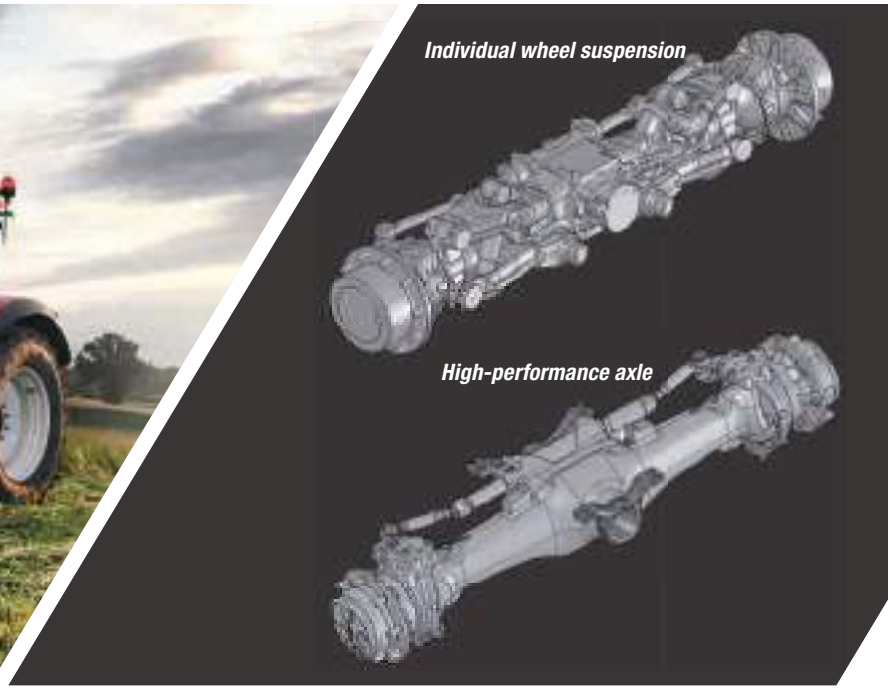

FRONT AXLE

*A high-performance front axle with a maximum permissible axle load of 3800 kg comes standard. A sprung front axle with **individual wheel suspension** is available as an option. At speeds up to 50 km/h, the hydraulic suspension provides optimal stability and a smooth ride. The system ensures maximum comfort during use for heavy-duty transport. Level control permits infinitely adjustable raising or lowering of the front axle by 20 cm. In this way, the ground clearance can be increased when necessary, for instance, during forestry work on almost impassable sunken roads. Coupling attachments with especially low attachment points is not a problem when the hydraulic suspension is lowered.*

FRONT HYDRAULICS

*A powerful **front PTO** is available as an option. The PTO shaft speed is 1000 RPM. **Integrated PTO start-up control** ensures smooth, efficient and safe transmission of power. On request, Lindner can provide front hydraulics with folding lift arms having a lifting capacity of 3500 kg. Remote control with especially sensitive response through use of an electric proportional valve can be integrated into the hydraulic block upon request. Components for the front hydraulics are manufactured from solid castings and can thus withstand extreme loads. A beam bolted to the gearbox block protects the GEOTRAC against high impact from the front. A mounting bracket can be fitted to the Lindner front hydraulics with a few simple motions to permit **attachment of a snow plough**. To protect attachments while retaining optimum driving comfort, **EFH (electr. front lift control)** with load relief and **vibration damping** is available as well. The system is just as easy to operate as the rear hydraulics. Upward and downward reach can be limited from the clearly organized control console. Lift speed is infinitely adjustable. Vibration damping is activated instantaneously at the touch of a button. Attachment load relief can be controlled conveniently from the **multi-function armrest.***

https://truckmanualshub.com/

LIGHT AND VISIBILITY

Pros work for longer

INNOVATIVE LIGHT CONCEPT

The GEOTRAC Series 4 ep features an innovative light concept to meet the demanding requirements of professional users who have equipment in continuous operation beyond normal working hours. The GEOTRAC is the first tractor to be equipped with the most modern ***LED light technology****. Because light-emitting diodes have an extremely long life of approx. 10.000 operating hours,* ***daytime driving lights*** *as well as* ***reverse and brake lights*** *last virtually the entire life of the tractor and are nearly maintenance-free. The GEOTRAC comes standard with powerful* ***H7-bi-halogen*** *and HB3 ellipsoid headlights. 6 front primary headlights plus 2 rear working lights ensure optimum illumination under both dim and dark skies. The 4 front roof-mounted headlights provide reliable illumination when a snow plough or other equipment is attached. Halogen and XENON working lights are available as an option for precision illumination. For winter service and municipal use, rotating beacons and an aerodynamic light bar are available. The optional* ***infrared rearview camera*** *gives the driver the ability to see* ***even in the dark****. The cameras are watertight, shock resistant and heated. This makes them ready to use under any weather conditions and even at freezing temperatures.*

https://truckmanualshub.com/

GEOTRAC SERIES 4ep

STANDARD EQUIPMENT

ENGINE: PERKINS 1204E-E44TA, Common rail, charge air cooling; Cylinder/ capacity: 4 / 4.400 ccm, particulate filter with oxidation catalyser - closed system; battery master switch electrical, hand gas plus with speed control, ep-engine speed limiter

COMFORT CAB: Panorama comfort cab, comfort platform with side shift, panorama glazing tinted screen, front-end loader clear vision screen, safety cell with ROPS and FOPS test, windscreens of composite safety glass (CSG), push-out side windows and rear window, co-driver´s seat, door locks, interior trim, Grammer comfort seat (airsprung), radio kit, LED - interior lighting with door automatic, heating and ventilation system with 3 speed high-performance blowers, starting lock, continuous current socket (3-prong), signal socket, comfort steering wheel adjustable in height and tilt, automatic turn signal resetting, raised exhaust, intermittent windscreen wiper, utility tray rear, beverage holder, adjustable air jets, one- piece engine bonnet with comfort opening, elect. windscreen heater, Lindner I.B.C.-monitor, Cab suspension mechanical, automatic climate control

TRANSMISSION: 32/32 speed ZF-STEYR power shift transmission with quad power shift, automating function (APS), automated group change-over (FRRS), brake lubricating oil shut-off, pressure-circulation lubricated, 30,40 km/h (optional 50 km/h), wet multiple-disc clutch, maintenance-free, power reverse (power shuttle) with adjustable characteristic, comfort clutch via pedal or gear lever, power all-wheel drive – switched on by pressing a button, self-locking differential front

BRAKES: Hydraulically actuated wet multiple disc brakes at the rear with automatic all-wheel activation with every braking operation (Opti-Stop), steering brake, brake booster

PTO SHAFT: Power rear PTO shaft, 540 / 540E / 1000 / 1000E, free step proportional PTO shaft starting control, PTO shaft operated by pressing a button with remote control at the rear left and right

HYDRAULIC SYSTEM: BOSCH-Rexroth high-performance hydraulic system with 3 pump circuits, axial piston pump, load sensing, working pressure: 200 bar max., rate of delivery: 121 litre/min., 45 litres oil household, non-drip plug couplings with separate leakage oil vessels, Electronic position control (EHR) with AHC and vibration damping, Rear lifting power: 6.600 kp

LIGHT:
2 x H7-bi-halogen lights
4 x H7-ellipsoid headlights front (high and low beam),
2 x H3-working lights rear,
2 x LED-daytime running light,
2 x rear- and brake lights in LED-technology with integrated turn signal rear,
2 x turn signal with integrated position light

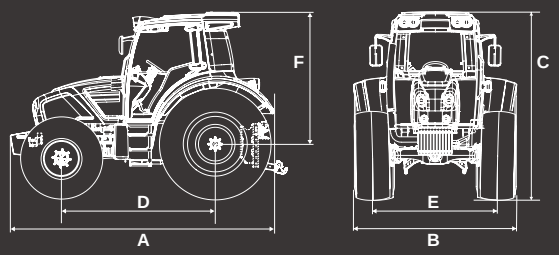

GEOTRAC 114ep

Engine	PERKINS 1204E-E44TA Common-rail, Charge air cooling
Rated power:	**133 HP** / 98 kW
Max. torque:	**530 Nm** at 1400 rpm
Exhaust level:	**emissions level 3b** (particulate filter & oxi. catalyser)
Cylinder / capacity:	4 /4400 ccm
Tank capacity:	145 l

Standard additional equipment: Control units: 2 x double-acting mechanical L-S control unit with flow control / 4 tilt lines + 1 return flow, Management functions for 4-wheel-drive, PTO and differential lock, inside mirror
Standard tyres: 440/65 R24 & 540/65 R34

GEOTRAC 134ep

Engine	PERKINS 1204E-E44TA Common-rail, Charge air cooling
Rated power:	133 HP / 98 kW
Max. Power:	**144 HP** / 106 kW
Max. torque:	**560 Nm** at 1400 rpm
Exhaust level:	**emissions level 3b** (particulate filter & oxi. catalyser)
Cylinder / capacity:	4 /4400 ccm
Tank capacity:	145 l

Standard additional equipment: Control units: 2 x double-acting EHS d-a control unit with joystick control and multi-function armrest, 1 x mechanical L-S control unit with flow control / 6 tilt lines + 1 return flow, Management functions for 4-wheel-drive, PTO and differential lock, Signal-plug, IBC- inside rear view mirror with rear view camera, GPS and Bluetooth
Standard tyres: 480/65-R24 & 540/65-R38

WEIGHTS

Deadweight:	4.850 kg
Max. Permissible gross weight:	9.000 kg
Max. axle weight rear:	6.600 kg
Max. axle weight front:	3.800 kg

DIMENSIONS

Tyres: 440/65 R24 & 540/65 R34		480/65-R24 & 540/65-R38
A) Max. length:	4.130 mm	4.230 mm
B) Max. width:	2.226 mm	2.320 mm
C) Max. height:	2.679 mm	2.769 mm
D) Wheelbase:	2.500 mm	2.500 mm
E) Track:	1.700 mm	1.800 mm
F) Segment height:	1.929 mm	1.929 mm

GEO S4EP/06/13/ENG Photos are for illustration only. Subject to technical modification as the result of further development. Sentence and printing errors excepted.

ACC

www.lindner-traktoren.at

efficient power program

Traktorenwerk Lindner Gesellschaft m.b.H.
Ing.-Hermann-Lindner-Str. 4 | 6250 Kundl/Tirol, Austria
Tel.: +43 5338 7420-0, Fax: +43 5338 7420-333
info@lindner-traktoren.at, **www.lindner-traktoren.at**