https://truckmanualshub.com/

SKID LOADER
TRACKED SKID LOADER

Also available with STAGE 3A engine.

Concrete solutions. Always.

19SK

Operating weight 4.350 kg
Engine power 63,9 kW (86,9 HP)

20TL

Operating weight 5.470 kg
Engine power 63,9 kW (86,9 HP)

EUROCOMACH®

https://truckmanualshub.com/

The 19 SK (skid loader) and 20 TL (tracked skid loader) models, with roll-bar and cabin, offer comfort and visibility at the top of their class, combining excellent manoeuvrability with unequalled versatility.

https://truckmanualshub.com/

DRIVING COMFORT.

CARRIAGE WITH OSCILLATING ROLLERS (20 TL)

The semi-carriages with five oscillating rollers, offer driving comfort combined with unparalleled operative stability.

The skid moves with agility and safely in any terrain, making full use of the rollers thanks to the width of the 450 mm rubber tracks and a ground pressure of 0.34 kg/cm^2.

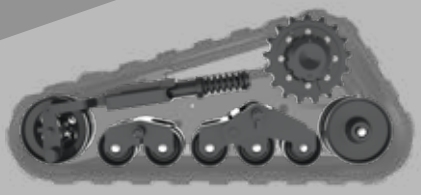

https://truckmanualshub.com/

The cabin conforms to ROPS/FOPS safety regulations, offering ample operative space, making work more comfortable and productive.. It is equipped with a mechanical suspension seat (heated and pneumatic suspension seat optional extra) that can be adjusted length-wise.

The safety bars offer a comfortable support for arms and prevent involuntary activation of the machine. The height regulation improves ergonomics and facilitates the correct use of the joystick.

USB RADIO

The radio has a BLUETOOTH connection with speakerphone, USB socket, SD/SDHC memory card reader.

https://truckmanualshub.com/

CONTROL AND EFFICIENCY.

Driving performance is assured by two well-balanced electronically-commanded ergonomic joysticks, whose response can be regulated in line with the operator's individual sensitivity. The multifunctional display allows the operator to control the vehicle's status and select the usage configurations via simple and intuitive commands.
The practical rubber foot board offers comfort, safety and freedom of movement.

7" TFT ACTIVE MATRIX DISPLAY

The multifunctional display allows the operator to control the vehicle's status and select the usage configurations via simple and intuitive commands.
- Management of time and maintenance
- Engine revs
- Working pressure
- Faults

RADIATOR CLEANING FUNCTION: the Fan Drive can be set to rotate in the opposite direction to remove dirt and dust from the radiator.

DRIVING MODES

The operator's needs are at the centre of the design.
With a simple display command you can choose between three driving modes that reflect the different levels of sensitivity of the driver: a personalised extra to ensure top performance at all times.

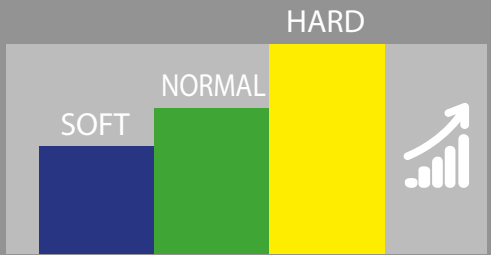

https://truckmanualshub.com/

EVERY CONTROL IS IN YOUR HANDS.

COMMANDS AND CONTROLS

Both models have two travel modes: first gear for reduced speed and greater force and second gear for greater transference speed. Everything is controlled by a practical button on the left hand grip.

The right hand grip controls lifting and the descent of the arm, closing and opening of the device and the capacity of the auxiliary hydraulic system.

The potentiometric commands located on the left dashboard are used to regulate the progress of the vehicle and manage the capacity of the high-flow system (from 0 -160 lt/min).

https://truckmanualshub.com/

Sound comfort and the damping of vibrations is paramount in the design through the isolation of the cabin on four viscoelastic supports.

The heating and air conditioning system assure operative comfort in any climatic condition.

https://truckmanualshub.com/

Passage to the driver seat is easy, fast and obstacle-free due to the large concealed opening front section. In addition, the driver enjoys the benefit of being able to work in complete tranquillity with the door closed or open.

VISIBILITY

The special design of the protection structures and the particularly low positioning of the arms offers a very extensive visual field.

The windscreen and the large side glass means assure that visibility is optimal in the two skids.

Great attention is dedicated to operative lighting: in additional to the street circulation lights positioned on the arms, the vehicles are equipped with four work lights on the cabin (two front and two back).

https://truckmanualshub.com/

MAINTENANCE HAS NEVER BEEN SO EASY.

The tilting of the hydraulic-controlled cabin permits immediate access to the distributor and the main components: just a few actions that can bring added value.

Ease of maintenance and simplicity of intervention, combined with the strategic positioning of the main components reduces operator down time.

ACCESSIBILITY

The cabin can be raised via a special practical hydraulic system, the control for which is positioned on the outside of the machine.

Components related to the three-phase motor are easily reached by opening the rear hood.
All the filters (gas and air), in additional to the dip stick and the tank for the engine and hydraulic oil, can be found in this part of the machine.

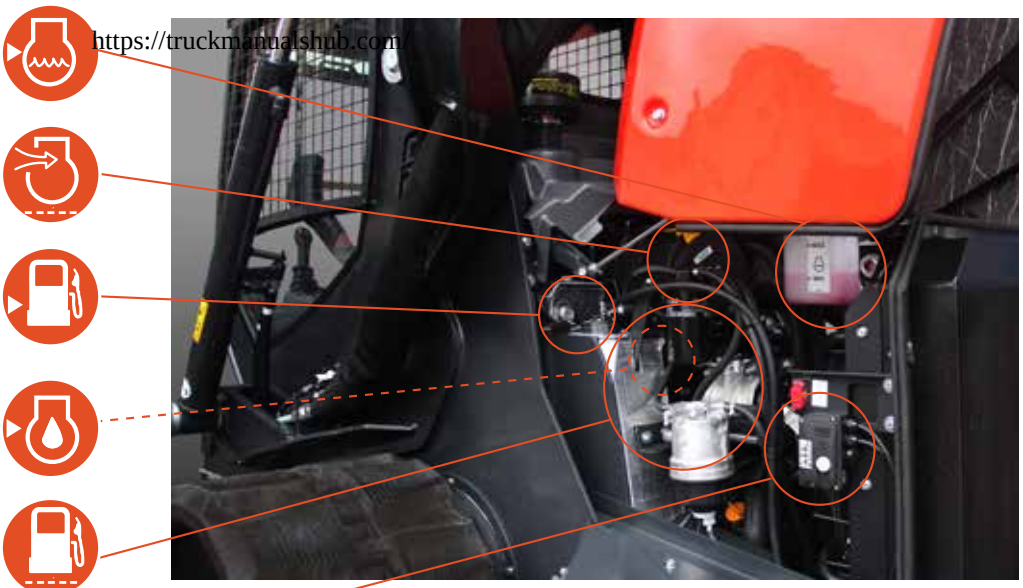

The rear right corner houses the cabin's hydraulic lifting controls.

The driver's foot board has a practical discharge hatch that makes cleaning easy.

The manual and electronic petrol tanks are easily reached on the left side of the machine.

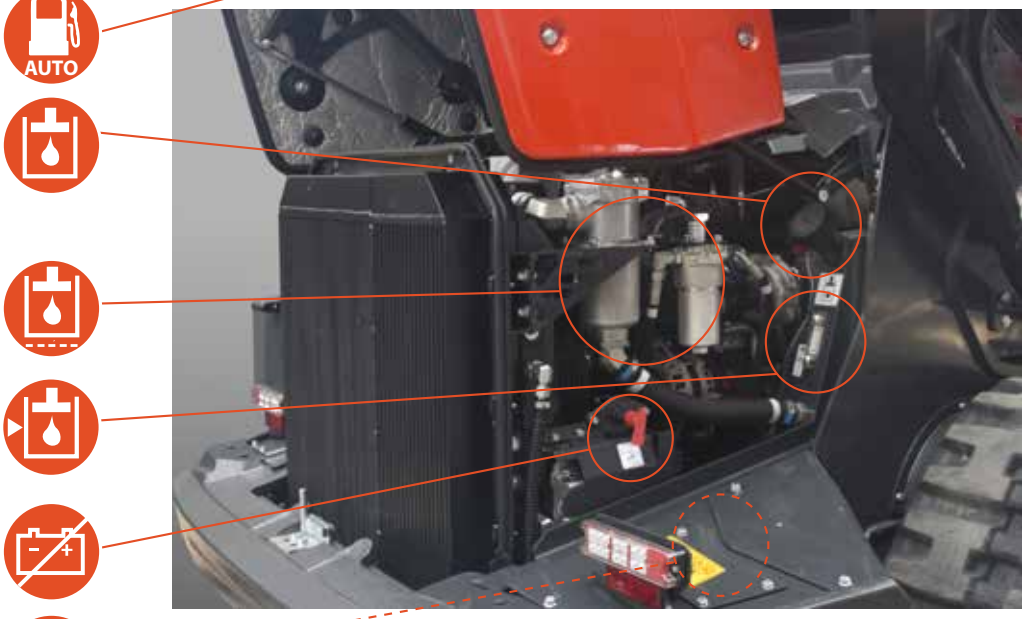

All the access points for daily controls and ordinary maintenance interventions are concentrated in defined areas, making the most of machine stop time.

ACCESSIBILITY

Common or dedicated access areas make every maintenance operation quick and easy.

https://truckmanualshub.com/

SPACE FOR SERVICES.

https://truckmanualshub.com/

VERSATILITY WITHOUT LIMITS.

EARTH MOVEMENT

ROAD MAINTENANCE

FORESTATION

LOADING - UNLOADING

The power engine of the 19 SK and 20 TL compact shovels, in combination with the auxiliary high-flow system with maximum capacity of 160 litres at 280 bars, guarantees considerable versatility of use of all the equipment on the market. Practicality and operative safety are supported by the number of quick connection points and control of unloading pressure.

https://truckmanualshub.com/

FLEXIBILITY, COMPACTNESS, ERGONOMICS.

The rear counterweight ensures excellent stability and solidity and the safety of all the functional parts, protecting them from serious knocks.

EFFICIENCY AND CONSUMPTION

The heart of the skid is the efficient and silent YANMAR 4TNV98TCT - Stage 5 engine, designed and constructed to optimise performance and lower consumption.

The Fan Drive hydraulic cooling fan, that instantaneously regulates the speed of rotation in line with engine requirements, improves engine performance whilst containing noise and temperature.

SAFETY

The safety bars prevent accidental activation of the machine.
Safety belts, cabin structures and roll-bars certified ROPS/TOPS and FOPS level 1 offer all the safety required in the cabin in case of an accident.

https://truckmanualshub.com/

POWER AND PERFORMANCE

PERFORMANCE

Great attention has been paid to the design of the Vertical Lift system that permits a high lifting level maintaining the stability of the machine at every loading position. Operative capacity, at 50% of tilting load, is 2.050 kg for the tracked model and 1.450 kg for the tyre model.

An efficient system of auto-levelling permits the lifting of pallet loads with complete safety and control.

These important features, combined with a travel speed close to 18 km/h, make the shovel suitable to any construction site need.

HYDRAULIC SYSTEM

The efficient Loading Sensing system permits fuel savings (up to 15%) due to an efficient distribution of power.

The power of the hydraulic components is assured by a Load Sensing axial piston pump with variable capacity, of 160 litres/minute and maximum pressure of 280 bars.

Hydrostatic transmission is guaranteed by the combination of a tandem electronically-controlled pump and radial engines. The maximum traction force is 4,450 daN for the tyre model and 5,100 daN for the tracked model.

https://truckmanualshub.com/

THE NEW ENGINE

STAGE V

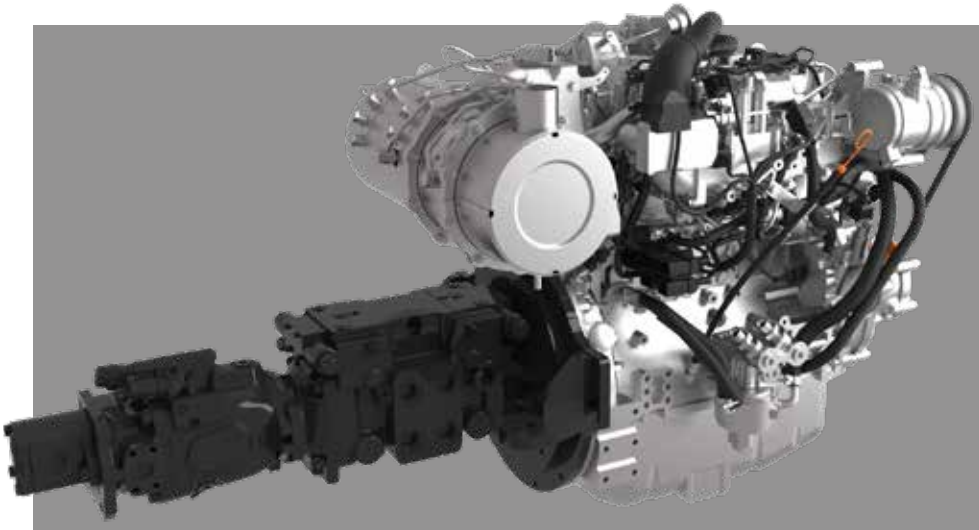

TURBO engine: YANMAR 4TNV98CT - STAGE 5 with EGR, Common Rail and DPF anti-particle filter
Power: 53.7 kw / 73 HP @ 2600 rpm
Cylinders: 3319 cc No. of cylinders: 4

Advantages of rear thermal engine:
- reduced heating (blowing fan)
- reduced cabin noise
- reduced cabin heat
- increased cabin space

In compliance with the current standards for reduction of exhaust emissions, the heat engine is equipped with two exhaust post-treatment systems: DPF particulate filter and DOC oxidation catalyst.

The regeneration system that cleans the DPF starts working automatically but may be disabled during use in areas with a risk of fire.

https://truckmanualshub.com/

STAGE V

The innovative BOSCH-REXROTH electronic system makes the most of all the available power of the STAGE 5 diesel system, bringing the 19 SK and 20 TL models to the top of the class in terms of power and performance.

https://truckmanualshub.com/

THE IMPORTANCE OF BEING RELIABLE.

RELIABLITY

Designed and tested for high performance coupled with constant reliability.
The definition of the materials, selection of parts and design of the structures have ensured that the machine can cope with the most trying and demanding working requirements.
This includes the integral frame, the substantial arm sections, the rear knock-protector and the rear steel aeration hood that improve the efficiency and the lifespan of the product.

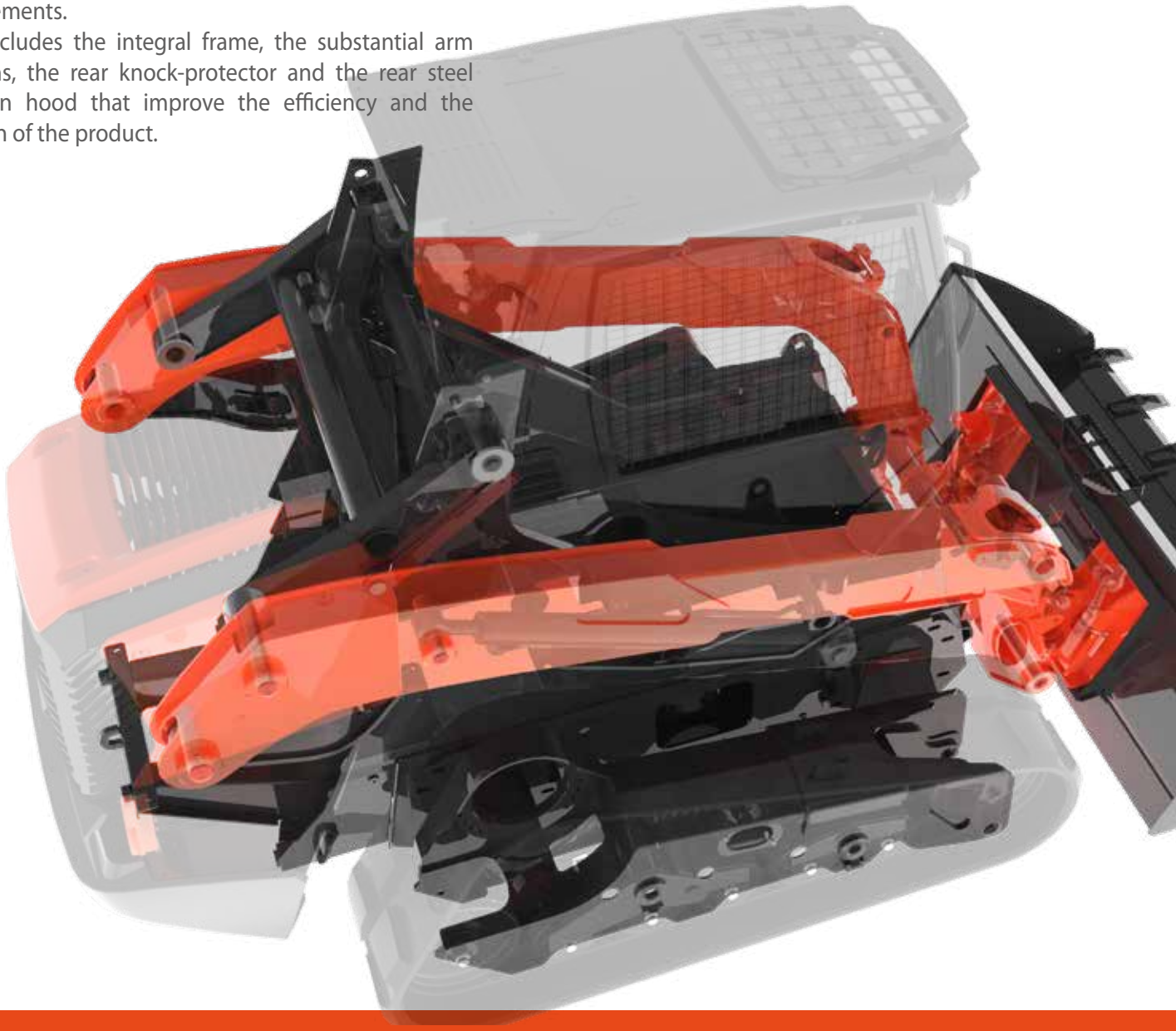

PERFORMANCE

https://truckmanualshub.com/

ECS: ONE CONCEPT, NUMEROUS POSSIBILITIES.

UTILITIES AND SERVICES

We listen to all your needs, so we can propose the best possible machine solution.

We consider our products to be not only simple machines but the best opportunity for our clients.

Among the services provided, the following are available:

- Customized paint
- Various types of tracks
- Auxiliary line hookups customized
- by type and quantity
- Additional equipment

The many configurations available allow you to make the best choice in relation to the work to be performed.

https://truckmanualshub.com/

SATELLITE MONITORING SYSTEM

EUROCOMACH GEOSERVICE

– Precise location of the machine on the Internet

– Antitheft device with alarm and notification via SMS/email

– High water temperature or low engine oil pressure alarm with notification via SMS/email

– Use time monitoring with alarm for service due

https://truckmanualshub.com/

	ETL 200	ESK 190	ETL 200 T4	ESK 190 T4
ENGINE				
Diesel engine, 4 cylinders, cylinders 3319 cc, power 53.7 kW (73.0 HP) Stage 5	/	/	●	●
Diesel engine, 4 cylinders, cylinders 3319 cc, power 63.9 kW (86.9 HP) Stage 3A	●	●	/	/
Electronic accelerator	●	●	●	●
Electric pre-warming	●	●	●	●
"Cyclone" pre-filter air on air intake	●	●	●	●
Dry air filter with discharge valve and indication of filter blockage	●	●	●	●
Double air filter cartridge	●	●	●	●
Engine oil cartridge filter	●	●	●	●
Cartridge fuel filter	●	●	●	●
Fuel filter with water separation tray	●	●	●	●
Fuel tank discharge hatch	●	●	●	●
Auxiliary cooling liquid expansion tray	●	●	●	●
Reversible fan	●	●	●	●

	ETL 200	ESK 190	ETL 200 T4	ESK 190 T4
CABIN				
ROPS/FOPS (Level 1) Cabin	●	●	●	●
Adjustable mechanical suspension seat	●	●	●	●
Adjustable pneumatic suspension seat	○	○	○	○
Adjustable pneumatic heated suspension seat	○	○	○	○
Longitudinal regulation of seat	●	●	●	●
Wrap-around safety belt	●	●	●	●
Arm support elbow with height adjustable elbow	●	●	●	●
Rubber comfort foot board	●	●	●	●
Cabin assembles on 4 elastic vibration-damping supports	●	●	●	●
Air conditioning with automatic regulation	○	○	○	○
Sliding side windows	●	●	●	●
Windscreen with aided opening system (gas springs)	●	●	●	●
Courtesy light	●	●	●	●
On-board computer with multifunctional display	●	●	●	●
Warning light for hydraulic filter and blockage of air engine intake filter	●	●	●	●
Water temperature and fuel level indicators	●	●	●	●
Hour meter	●	●	●	●
Acoustic warning for water temperature	●	●	●	●
Horn	●	●	●	●
AM/FM USM Radio, BLUETOOTH, MEMORY CARD READER	●	●	●	●
Unipolar 12 Volt socket	●	●	●	●
Front and rear wipers with sprayer and speed regulation	●	●	●	●
Glove box	●	●	●	●
Bottle holder	●	●	●	●
SAFETY				
Machine blocking device during exit/access to driving seat	●	●	●	●
Anti-slip boarding plate	●	●	●	●
Boarding and de-boarding handles	●	●	●	●
Emergency water sprinkler	●	●	●	●
Rear view mirrors	●	●	●	●
Rear camera kit	○	○	○	○
Safety valve on lifting arm cylinders and overturn bucket cylinders	○	○	○	○
Pressure accumulator that permits the lowering of the arm in case of engine failure	●	●	●	●
Hydraulic valve that permits the lowering of the arm in case of electric failure	●	●	●	●
4 transport anchorage points	●	●	●	●

https://truckmanualshub.com/

	ESK 190 T4	ETL 200 T4	ESK 190	ETL 200
ELECTRICAL SYSTEM				
Front and rear lights on cabin	●	●	●	●
Front and rear lights for road circulation	●	●	●	●
Rotating head lamp	●	●	●	●
Isolator switch	●	●	●	●
Sealed connectors (IP67)	●	●	●	●
HYDRAULIC SYSTEM				
REXROTH load-sensing hydraulic system with variable capacity pump	●	●	●	●
ISO/H electronic servo-controls	●	●	●	●
Hydraulic oil intake filter	●	●	●	●
Hand brake	●	●	●	●
Two speed travel system	●	●	●	●
Single/double effect hydraulic system (e.g. demolition or auger) with electric cable	●	●	●	●
High-Flow 3 pipe system: max 160 lt/min, max 280 bars	●	●	●	●
AUX 2 system: max 70 lt/min, max 210 bars	●	●	●	●
Hydraulic draining line direct to tank	●	●	●	●
Rapid release hydraulic bucket	○	○	○	○
Floating arms system	●	●	●	●
Hydraulic valve auto-levelling bucket (activated only during arm lifting)	●	●	●	●
Self-leveling deactivation	○	○	○	○
UNDERCARRIAGE (ETL 200 e ETL 200 T4)				
Oscillating roller carriage with rubber tracks	●	/	●	/
Carter final drive motors	●	/	●	/

	ESK 190 T4	ETL 200 T4	ESK 190	ETL 200
UTILITY				
Geo-service system for localisation and remote diagnostics	○	○	○	○
Anti-theft system	○	○	○	○
Personalisation of colour (RAL)	○	○	○	○
4 anchorage points for lifting	●	●	●	●
Visual indicator of on-board fuel level	●	●	●	●
Full supply electro-pump with automatic arrest	○	○	○	○
Document glove box	●	●	●	●
Cabin lift hydraulic pump	●	●	●	●

STANDARD EQUIPMENT	●
OPTIONAL EQUIPMENT	○
NOT AVAILABLE	/

TECHNICALS SPECIFICATIONS

https://truckmanualshub.com/

Operating weight		kg	4.350
ENGINE			
Type			YANMAR 4TNV98T - Stage 3A
Max Power (2.600 rpm)		kW - HP	63,9 - 86,9
Max torque		Nm	296,1 (1.850 rpm)
Displacement		cc	3.319
Number of cylinders		n°	4
Cooling			water
Consumption		lt/h	9
Alternator		V (A)	12 (80)
Battery		V (Ah)	12 (100/850)
HYDRAULIC SYSTEM			
Pump type			N° 1 with variable displacement axial piston pumps with load sensing REXROTH
Pump capacity		lt/min	160
Max. circuit calibration pressure		bar	280
High Flow System (standard):	Max capacity	lt/min	160
	Max pressure	bar	280
TRANSMISSION			
Type			Hydrostatic with electro-hydraulic tandem pump and radial pistons REXROTH gearboxes
Travelling speed		km/h	1ª: 0 ÷ 9,0 / 2ª: 0 ÷ 18,0
Max Traction force		daN	4.450
Dimensions tires			12x16,5
BRAKES			
Service brakes			Hydrostatic
Parking brakes			Negative with multiple disks into oil bath, integrated on the gearboxes at electrohydraulic control
Emergency brakes			Electrohydraulic control, acting on parking brakes (integrated on the gearboxes)
PERFORMANCES			
Upsetting load (ISO 14397)		kg	2.920
Operating load (ISO 14397, no more than 50% of tipping load)		kg	1.450
Teeth breakout force		daN	3.985
Standard bucket capacity		m^3	0,56
Standard bucket width		mm	1.860
Max slope			60% - 30°
FILLINGS			
Fuel tank		lt	110
Hydraulic oil tank		lt	55
Hydraulic circuit capacity		lt	93
Cooling system capacity		lt	12
Engine oil		lt	6
CONTROLS			
Type			Ergonomic joystick with electronic controls and onboard safety lock
Translation			Electro-hydraulic control on left hand joystick
Services			Electric control with right hand joystick for lifting and bucket
Lifting mechanism			Vertical lifting boom with a standard self-levelling system for the bucket (only for boom rising)

TECHNICALS SPECIFICATIONS

https://truckmanualshub.com/

Operating weight with rubber tracks		kg	5.470
ENGINE			
Type		YANMAR 4TNV98T - Stage 3A	
Max Power (2.600 rpm)		kW - HP	63,9 - 86,9
Max torque		Nm	296,1 (1850 rpm)
Displacement		cc	3.319
Number of cylinders		n°	4
Cooling		water	
Consumption		lt/h	9
Alternator		V (A)	12 (80)
Battery		V (Ah)	12 (100/850)
HYDRAULIC SYSTEM			
Pump type		N° 1 with variable displacement axial piston pumps with load sensing REXROTH	
Pump capacity		lt/min	160
Max. circuit calibration pressure		bar	280
High Flow System (standard):	Max capacity	lt/min	160
	Max pressure	bar	280
TRANSMISSION			
Type		Hydrostatic with electro-hydraulic tandem pump and radial pistons REXROTH gearboxes	
Travelling speed		km/h	1ª: 0 ÷ 6,2 / 2ª: 0 ÷ 12,5
Max Traction force		daN	5.100
Tracks width with rubber tracks		mm	450
BRAKES			
Service brakes		Hydrostatic	
Parking brakes		Negative with multiple disks into oil bath, integrated on the gearboxes at electrohydraulic control	
Emergency brakes		Electrohydraulic control, acting on parking brakes (integrated on the gearboxes)	
PERFORMANCES			
Upsetting load (ISO 14397)		kg	5.143
Operating load (no more than 50% of tipping load)		kg	2.572
Operating load (ISO 14397, no more than 35% of tipping load)		kg	1.800
Teeth breakout force		daN	3.985
Standard bucket capacity		m^3	0,64
Standard bucket width		mm	2.110
Ground bearing pressure with rubber tracks		kg/cm^2	0,34
Max slope		60% - 30°	
FILLINGS			
Fuel tank		lt	110
Hydraulic oil tank		lt	55
Hydraulic circuit capacity		lt	93
Cooling system capacity		lt	12
Engine oil		lt	6
CONTROLS			
Type		Ergonomic joystick with electronic controls and onboard safety lock	
Translation		Electro-hydraulic control on left hand joystick	
Services		Electric control with right hand joystick for lifting and bucket	
Lifting mechanism		Vertical lifting boom with a standard self-levelling system for the bucket (only for boom rising)	

TECHNICALS SPECIFICATIONS

https://truckmanualshub.com/

Operating weight		kg	4.350
ENGINE			
Type		YANMAR 4TNV98CT - Stage 5	
Max Power (2.600 rpm)		kW - HP	53,7 - 73,0
Max torque		Nm	291 (1.625 rpm)
Displacement		cc	3.319
Number of cylinders		n°	4
Cooling		water	
Consumption		lt/h	11
Alternator		V (A)	12 (80)
Battery		V (Ah)	12 (100/850)
HYDRAULIC SYSTEM			
Pump type		N° 1 with variable displacement axial piston pumps with load sensing REXROTH	
Pump capacity		lt/min	160
Max. circuit calibration pressure		bar	280
High Flow System (standard):	Max capacity	lt/min	160
	Max pressure	bar	280
TRANSMISSION			
Type		Hydrostatic with electro-hydraulic tandem pump and radial pistons REXROTH gearboxes	
Travelling speed		km/h	1ª: 0 ÷ 9,0 / 2ª: 0 ÷ 18,0
Max Traction force		daN	4.450
Dimensions tires		12x16,5	
BRAKES			
Service brakes		Hydrostatic	
Parking brakes		Negative with multiple disks into oil bath, integrated on the gearboxes at electrohydraulic control	
Emergency brakes		Electrohydraulic control, acting on parking brakes (integrated on the gearboxes)	
PERFORMANCES			
Upsetting load (ISO 14397)		kg	2.920
Operating load (ISO 14397, no more than 50% of tipping load)		kg	1.450
Teeth breakout force		daN	3.985
Standard bucket capacity		m^3	0,56
Standard bucket width		mm	1.860
Max slope		60% - 30°	
FILLINGS			
Fuel tank		lt	100
Hydraulic oil tank		lt	55
Hydraulic circuit capacity		lt	93
Cooling system capacity		lt	12
Engine oil		lt	6
CONTROLS			
Type		Ergonomic joystick with electronic controls and onboard safety lock	
Translation		Electro-hydraulic control on left hand joystick	
Services		Electric control with right hand joystick for lifting and bucket	
Lifting mechanism		Vertical lifting boom with a standard self-levelling system for the bucket (only for boom rising)	

TECHNICALS SPECIFICATIONS

https://truckmanualshub.com/

Operating weight with rubber tracks		kg	5.470
ENGINE			
Type		YANMAR 4TNV98CT - Stage 5	
Max Power (2.600 rpm)		kW - HP	53,7 - 73,0
Max torque		Nm	291 (1.625 rpm)
Displacement		cc	3.319
Number of cylinders		n°	4
Cooling		water	
Consumption		lt/h	11
Alternator		V (A)	12 (80)
Battery		V (Ah)	12 (100/850)
HYDRAULIC SYSTEM			
Pump type		N° 1 with variable displacement axial piston pumps with load sensing REXROTH	
Pump capacity		lt/min	160
Max. circuit calibration pressure		bar	280
High Flow System (standard):	Max capacity	lt/min	160
	Max pressure	bar	280
TRANSMISSION			
Type		Hydrostatic with electro-hydraulic tandem pump and radial pistons REXROTH gearboxes	
Travelling speed		km/h	1ª: 0 ÷ 6,2 / 2ª: 0 ÷ 12,5
Max Traction force		daN	5.100
Tracks width with rubber tracks		mm	450
BRAKES			
Service brakes		Hydrostatic	
Parking brakes		Negative with multiple disks into oil bath, integrated on the gearboxes at electrohydraulic control	
Emergency brakes		Electrohydraulic control, acting on parking brakes (integrated on the gearboxes)	
PERFORMANCES			
Upsetting load (ISO 14397)		kg	5.143
Operating load (no more than 50% of tipping load)		kg	2.572
Operating load (ISO 14397, no more than 35% of tipping load)		kg	1.800
Teeth breakout force		daN	3.985
Standard bucket capacity		m^3	0,64
Standard bucket width		mm	2.110
Ground bearing pressure with rubber tracks		kg/cm^2	0,34
Max slope		60% - 30°	
FILLINGS			
Fuel tank		lt	100
Hydraulic oil tank		lt	55
Hydraulic circuit capacity		lt	93
Cooling system capacity		lt	12
Engine oil		lt	6
CONTROLS			
Type		Ergonomic joystick with electronic controls and onboard safety lock	
Translation		Electro-hydraulic control on left hand joystick	
Services		Electric control with right hand joystick for lifting and bucket	
Lifting mechanism		Vertical lifting boom with a standard self-levelling system for the bucket (only for boom rising)	

https://truckmanualshub.com/

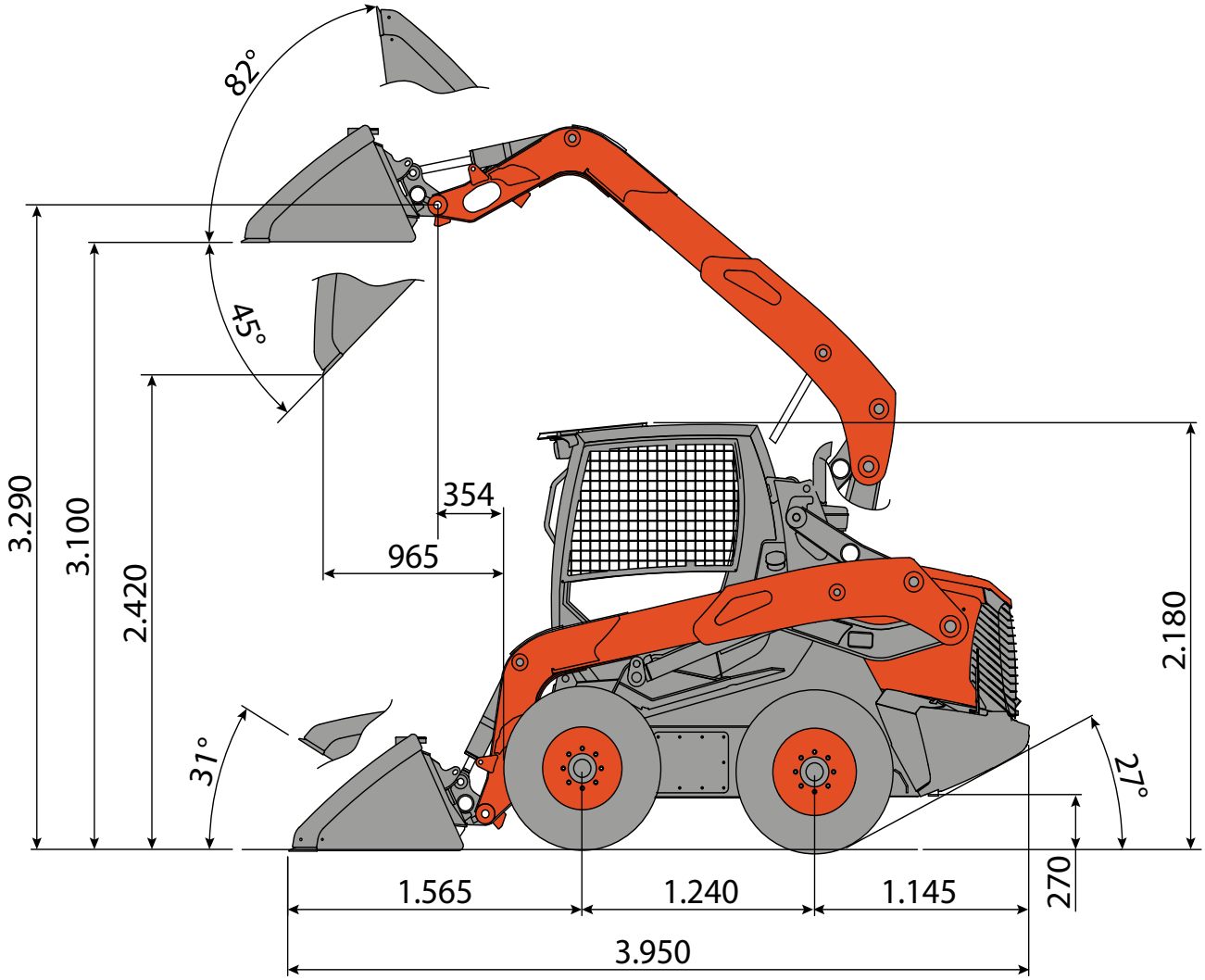

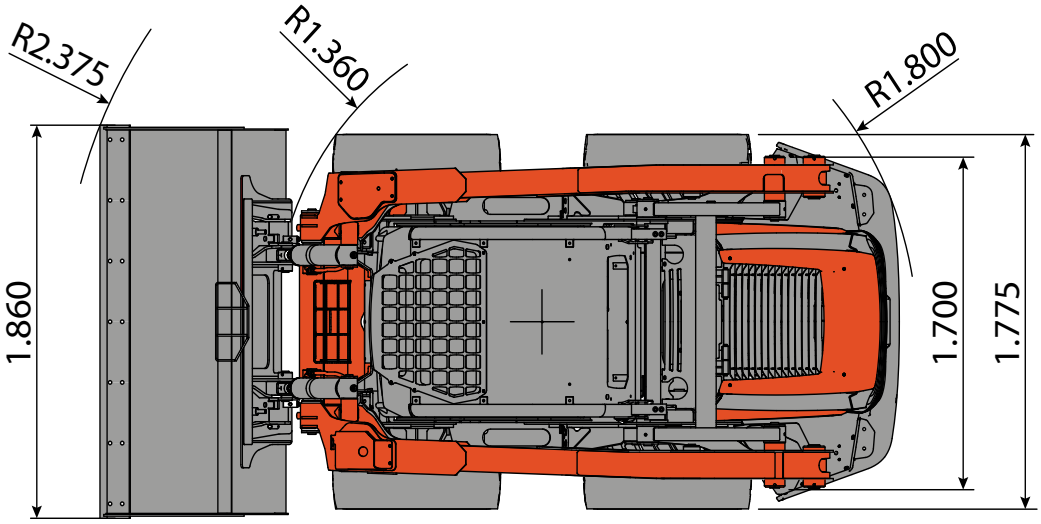

https://truckmanualshub.com/

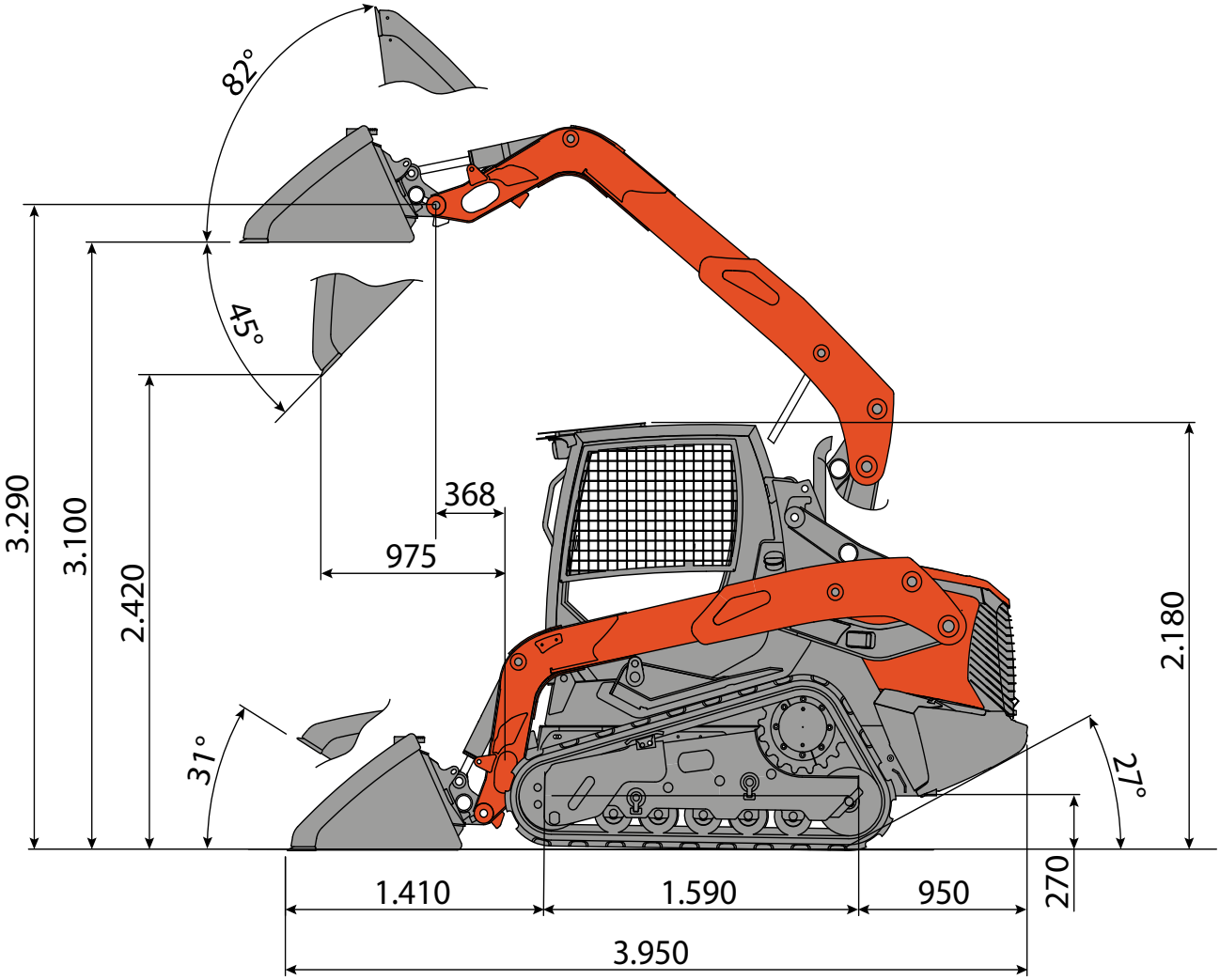

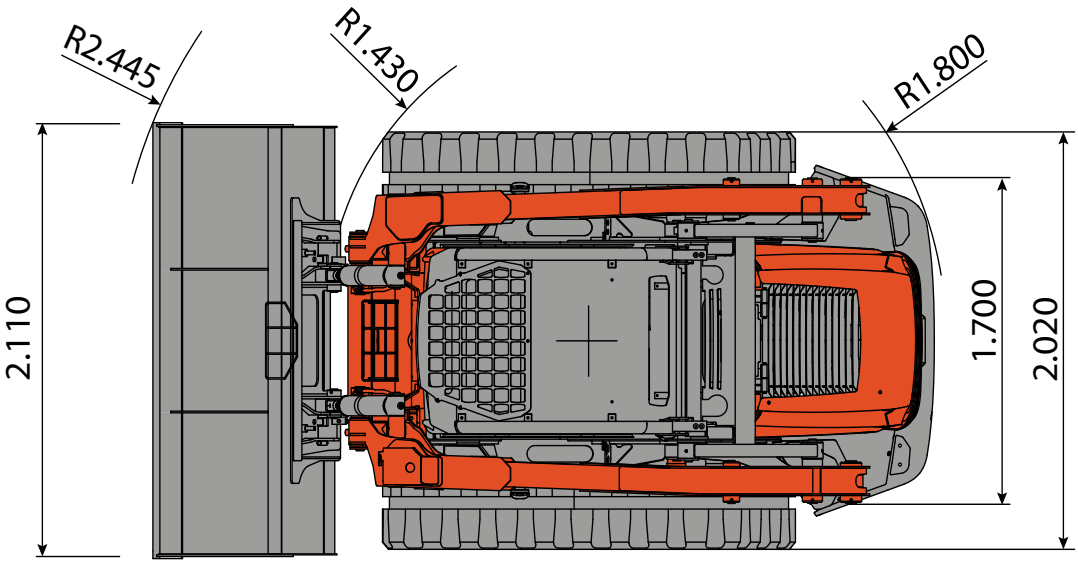

https://truckmanualshub.com/

EUROCOMACH®

Sampierana S.p.A.
Via Leonardo da Vinci, 40 47021
S. Piero in Bagno (FC) - ITALY
Tel +39 0543.904211

www.eurocomach.com

COMPANY WITH
QUALITY SYSTEM
CERTIFIED BY DNV GL
= ISO 9001 =

The information contained in this brochure is of a general nature. Sampierana S.p.A. reserves the right to change the product technical data and characteristics at any time without prior notice. The photographs are for illustrative purposes only and do not necessarily refer to products in standard conditions. For instructions on the correct use of the products, please consult the use and maintenance manual. Sampierana S.p.A. shall not be liable for damages or injuries resulting from failure to follow the instructions contained in the use and maintenance manual.