https://truckmanualshub.com/

Engine	Cummins B5.9
Gross Power	133 kW (178.3 hp) @ 2,000 rpm
Net Power	125 kW (167.6 hp) @ 2,000 rpm
Maximum Digging Depth	6,925 mm
Standard Bucket Capacity	1.2 m^3
Operating Weight	25,500 kg

925E

EXCAVATOR

LIUGONG

TOUGH WORLD. TOUGH EQUIPMENT.

925E SPECIFICATIONS >>>

https://truckmanualshub.com/

ENGINE	
Emission Regulation	Tier 2 / Stage II
Make	Cummins
Model	B5.9
Gross Power	133 kW (178.3 hp) @ 2,000 rpm
Net Power	125 kW (167.6 hp) @ 2,000 rpm
Peak Torque	708 N·m @ 1,500 rpm
Number of Cylinders	6
Displacemen	5.9 L

UNDERCARRIAGE	
Shoe Width	600 mm
Number of Shoes per Side	51
Number of Bottom Rollers per Side	9
Number of Upper Rollers per Side	2

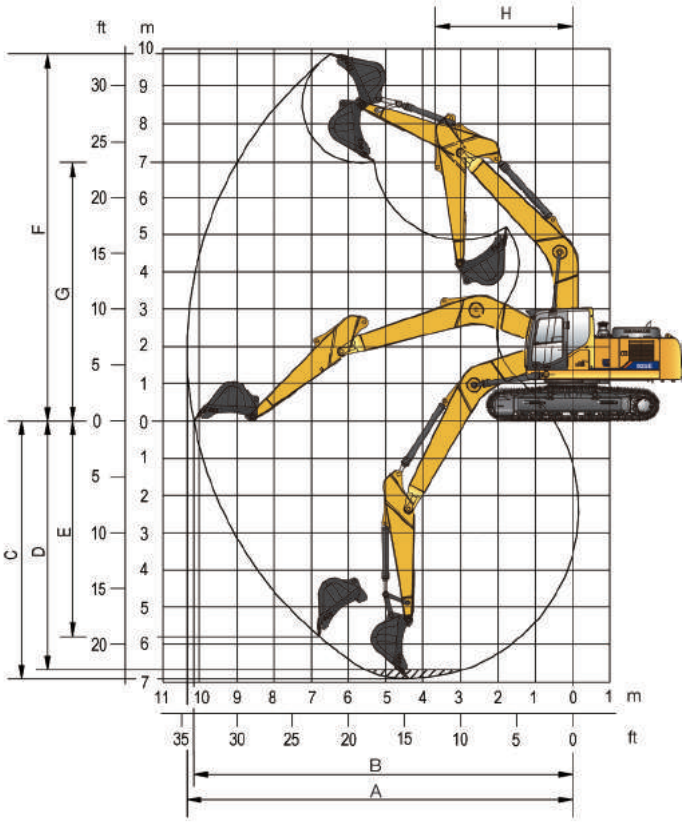

BOOM & ARM	
Boom Length	6,000 mm
Arm Length	2,980 mm

BUCKET PERFORMANCE	
Std. Bucket Heaped Capacity (Referenced)	1.2 m³
Min. Heaped Capacity of Bucket Options	1.0 m³
Max. Heaped Capacity of Bucket Options	1.3 m³

TRACK DRIVE	
Maximum Travel Speed	5.8 km/h
Drawbar Pull	229 kN

SERVICE CAPACITIES	
Fuel Tank	470 L
Engine Oil	25 L
Cooling System	25 L
Hydraulic Reservoir	210 L
Hydraulic System Total	330 L

HYDRAULIC SYSTEM	
Main Pumps Total Flow	480 L/min
Relief Pressure, main	34.3 MPa
Relief Pressure,boost	37.3 MPa

SWING SYSTEM	
Swing Speed	12 rpm

WORKING RANGE	
A. Max. Digging Reach	10,340 mm
B. Max. Digging Reach on Ground	10,150 mm
C. Max. Digging Depth	6,925 mm
D. Max. Digging Depth, 2.44 m (8') level	6,675 mm
E. Max. Vertical Wall Digging Depth	5,795 mm
F. Max. Cutting Height	9,940 mm
G. Max. Dumping Height	6,920 mm
H. Min. Front Swing Radius	3,695 mm
Bucket Digging Force (ISO)	179 kN
Arm Digging Force (ISO)	134 kN
Bucket Capacity	1.2 m³

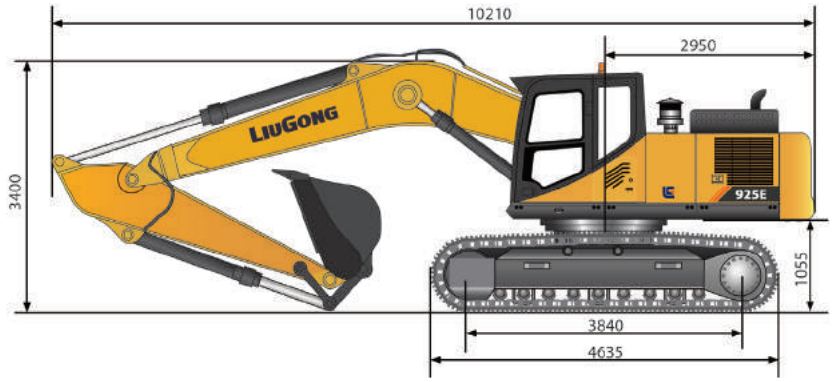

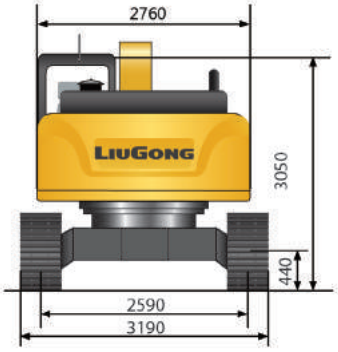

Unit: mm

Guangxi Liugong Machinery Co., Ltd.
No. 1 Liutai Road, Liuzhou, Guangxi, PR China, 545007,
T: +86 772 3886124 E: overseas@liugong.com
www.liugong.com

03/2018 Designed by LiuGong

Specifications and designs are subject to change without notice. Machines shown may include optional equipment. LiuGong standard and optional equipment may vary from region to region. Please consult your LiuGong dealer for information specific to your area.