https://truckmanualshub.com/

STILL

Original instructions

Pallet stacker

EXV 14 / 16 / 20
EXV 14i / 16i / 20i
EXV-SF 14 / 16 / 20
EXV-SF 14i / 16i / 20i
EXP 14 / 16 / 20
EXV 14D / 16D / 20D
EXV-SF 14D / 16D / 20D

0301 0303 0305 0323 0324 0325
0326 0327 0328 0329 0330 0331
0332 0333 0334 0335 0336 0337
0338 0339 0340

first in intralogistics

45758043484 EN - 11/2021 - 08

https://truckmanualshub.com/

https://truckmanualshub.com/

Address of manufacturer and contact details

STILL GmbH
Berzeliusstraße 10
22113 Hamburg, Germany
Tel. +49 (0) 40 7339-0
Fax: +49 (0) 40 7339-1622
Email: info@still.de
Website: http://www.still.de

Rules for the operating company of industrial trucks

In addition to these operating instructions, a code of practice containing additional information for the operating companies of industrial trucks is also available.

This guide provides information for handling industrial trucks:

- Information on how to select suitable industrial trucks for a particular area of application
- Prerequisites for the safe operation of industrial trucks
- Information on the use of industrial trucks
- Information on transport, initial commissioning and storage of industrial trucks

Internet address and QR code

The information can be accessed at any time by pasting the address **https://m.still.de/vdma** in a web browser or by scanning the QR code.

https://truckmanualshub.com/

https://truckmanualshub.com/

1 Introduction

Forklift data 2
General information 2
How to Consult the Manual 2
Date of edition and latest update of this manual 4
Copyright and trademark rights 4
Delivery of the forklift and documentation 4
Spare parts list 5
Conformity marking 5
Declaration that reflects the content of the declaration of conformity 6
Technical service and spare parts 8
Type of use 8
Working conditions 9
Modifications to Forklift 10
Applied equipment 10
User obligations 10
Environmental considerations 11
Disposal of components and batteries 11
Packaging 12

2 Safety

Safety guidelines 14
General Precautions 14
General Safety Rules 14
Flooring requirements 14
Battery connection cables 15
Requirements for the traction-battery charging area 15
Safety Regulations Relative to Forklift Use 15
Safety guidelines relating to operating materials 16
Residual risk 18
Residual dangers, residual risks 18
Electromagnetic radiation 19
Non-ionised radiation 20
Noise 20

https://truckmanualshub.com/

Vibrations 21

Declaration of conformity in accordance with the Radio Equipment Directive 2014/53/EU 21

Safety tests 22
Regular safety inspection of the truck 22

Safety devices 23
Location of safety devices 23
Damage, defects and misuse of safety devices 25

3 Overview

Technical description 28

Overview 30

Instruments and controls 31
Start/stop key 31
Display 32
Emergency shutdown handle 39
Tiller controls 40

Tiller 43
Tiller positions 43
Combi tiller (if present) 45
OptiSpeed tiller (only present on EXV and EXVi versions) 47

Types of lifting masts 48

Side protection 50
Description 50

Platform 52
Description 52

Definition of directions 54

Markings 55
Location of labels 55
Serial number 57
Nominal value designation plate 58
Capacity plate 59
Additional designation plate for the double pallet stacker version (EXV-D) 60
Chassis frame labelling 61

Options and variants 62
List of options and variants 62
Dynamic Load Control (DLC) — Optional 64

https://truckmanualshub.com/

Regulations for using the DLC 3 64
Straddle automatic lowering (optional) 72
Accessories mounting bar with data socket 73
Numeric keypad — Start-up using a PIN (option) 74
Battery electrolyte level indicator LED (optional) 76
Auxiliary hydraulic lines (optional) 77

4 Use

Authorised and safe use 82
Intended use of the trucks 82
Safety instructions relating to use of the truck 82

Transporting and lifting the truck 85
Transporting the truck 85
Transport 85
Climatic Conditions for Transport and Storage 85
Loading and unloading the truck 86

Breaking-In 87

Checks and actions prior to commissioning 88
List of checks before use 88

Ergonomic dimensions 90

Operator position 91
Operator's position for version without platform 91
Operator position for version with platform 93

Using the truck 95
Stopping the truck in emergencies 95
Starting the truck 95
Truck travel 96
Truck steering direction 97
Using the truck with the "Tiller always active — Creep Speed" function (optional) 98
Reversing the direction of travel 99
Truck brake systems 99
Parking and stopping the truck 100
Forklift Use in Cold-Storage Rooms 102

Moving the load 103
Safety guidelines for handling loads 103
Checks to be carried out before lifting a load 105
Adjusting the fork distance (if present) 106
Automatic speed reduction with forks raised above the safety sensors 107
Picking up the load 107

https://truckmanualshub.com/

Transporting loads . . . 111
Depositing a load on the ground . . . 112
Driving on slopes . . . 113
Towing trailers . . . 114

Charging the battery . . . 115
Internal accessibility . . . 115
Charging the lead battery . . . 117
Charging curve selector (only with on-board battery charger) . . . 117
Recharging the battery using the on-board battery charger (optional) . . . 118
Battery type . . . 118
Preparation . . . 119

5 Maintenance

General Information . . . 122

Preliminary maintenance operations . . . 123

Scheduled maintenance . . . 124
Summary table of maintenance operations . . . 124

Maintenance as required . . . 127
Cleaning the Forklift . . . 127
Lubricating and cleaning the lifting chains . . . 127
Fuses . . . 128
Battery replacement with removal from the top . . . 129
Battery replacement with side removal . . . 132

Decommissioning . . . 135
General Information . . . 135
Forklift Towing . . . 136
Temporary Putting Out of Commission . . . 136
Checks and Inspections After a Long Period of Inactivity . . . 136
Permanent Putting Out of Commission (Demolition) . . . 137

6 Technical data

EXV and EXVi overall dimensions . . . 140

EXV-SF and EXVi-SF overall dimensions . . . 141

Datasheet . . . 142

EXP overall dimensions . . . 156

Datasheet . . . 157

Datasheets . . . 161

https://truckmanualshub.com/

Batteries 175
Oil and lubricant table 177
Eco-design requirements for electric motors and variable speed drives 177

https://truckmanualshub.com/

https://truckmanualshub.com/

1

Introduction

https://truckmanualshub.com/

Forklift data

We recommend that you record the principal forklift data in the following table so that they are available if required by the sales network or authorised service centre.

Type	
Serial number	
Date of delivery	

General information

- This manual contains "Original Instructions" provided by the manufacturer.
- The "operator" is defined as the person driving the forklift.
- The "user" is the physical or legal person who has the forklift truck used by the operators.
- For correct use of the truck and in order to avoid accidents, the operator is obliged to read, understand and apply the contents of this manual and the plates and stickers applied to the truck.
- This manual must be stored carefully and remain on board the truck for quick consultation.
- The manufacturer assumes no responsibility for any accidents to persons or damage to things due to failure to observe the contents of this manual and the plates and stickers applied to the truck.
- The forklift may not be put to any use other that than indicated in this manual.
- The forklift must be used by appropriately trained operators only. For the necessary operator training, contact the authorised sales network.
- Persons working near the forklift must also be instructed in the risks associated with use of the forklift.
- In the interests of clear information, some illustrations in this manual show the forklift without the safety equipment (guards, panels, etc.). The forklift may not be used without safety equipment.

How to Consult the Manual

There is a table of contents at the beginning of the manual for ease of use. The manual is divided into chapters with specific topics. The name and title of the chapter are given at the top of each page The following is found at the bottom of each page: the type of manual, the identifying code, the language and the manual version.

Some general information is provided in this manual. Please only consider the information relevant for your specific forklift.

The following symbols have been used to highlight some parts of this manual.

⚠ DANGER

Failure to observe the instructions highlighted with this symbol may jeopardise safety.

⚠ CAUTION

Failure to observe the instructions highlighted with this symbol may cause damage to the forklift and, in some cases, result in warranty invalidity.

https://truckmanualshub.com/

ENVIRONMENT NOTE

Failure to observe the instructions highlighted with this symbol may cause environmental damage.

NOTE

This symbol is used to provide additional information.

https://truckmanualshub.com/

Date of edition and latest update of this manual

The publication date of these operating instructions is printed on the cover sheet.

The manufacturer makes continuous efforts to improve its industrial trucks, and therefore reserves the right to implement changes and to accept no claims concerning the information provided in this manual.

To receive technical assistance, please contact the service centre authorised by your closest manufacturer.

Copyright and trademark rights

These instructions must not be reproduced, translated or made accessible to third parties —including as excerpts—except with the express written approval of the manufacturer.

Delivery of the forklift and documentation

Ensure that the truck has all of the options requested and that it has been delivered with the following documentation:

- Original instructions
- Declaration of conformity

If the truck has been delivered with a traction battery and/or a battery charger, ensure that these products conform to the order and that the corresponding operating and maintenance manuals are included, as well as the declaration of conformity for the battery charger.

If there is applied equipment or other equipment or devices, ensure that these products conform to the order and that the corresponding operating and maintenance manual and the corresponding declaration of conformity (if required by the applicable regulations) are included.

All of the above documentation must be kept for the entire operational life of the truck. In the event that the documentation is lost or damaged, contact the authorised sales network for copies of the original documentation.

https://truckmanualshub.com/

Spare parts list

You can request to download the spare parts list by copying and pasting the address **https://sparepartlist.still.eu** into a web browser or by scanning the QR code shown to the side.

On the web page, enter the following password: **Spareparts24!**

On the next screen, enter your email address and truck serial number to receive an email with the link and download the spare parts list.

2511

Conformity marking

The manufacturer uses the conformity marking to document the conformity of the industrial truck with the relevant directives at the time of placing on the market:

- CE: in the European Union (EU)
- UKCA: in the United Kingdom (UK)
- EAC: in the Eurasian Economic Union

The conformity marking is applied to the nameplate. A declaration of conformity is issued for the EU and UK markets.

An unauthorised structural change or addition to the industrial truck can compromise safety, thus invalidating the declaration of conformity.

conformity symbols

https://truckmanualshub.com/

Declaration that reflects the content of the declaration of conformity

Declaration

STILL GmbH
Berzeliusstraße 10
22113 Hamburg Germany

We declare that the specified machine conforms to the most recent valid version of the directives specified below:

Industrial truck type	**corresponding to these operating instructions**
Model	**corresponding to these operating instructions**

– "Machinery Directive 2006/42/EC" [1)]
– "Supply of Machinery Safety Regulations 2008, 2008 No. 1597" [2)]

Personnel authorised to compile the technical documents:

See declaration of conformity

STILL GmbH

[1)] For the markets of the European Union, the EU candidate countries, the EFTA States and Switzerland.
[2)] For the United Kingdom market.

The declaration of conformity document is supplied with the industrial truck. The declaration shown explains the conformity with the provisions of the EC Machinery Directive and the Supply of Machinery Safety Regulation 2008, 2008 No. 1597.

An unauthorised structural change or addition to the industrial truck can compromise safety, thus invalidating the declaration of conformity.

The declaration of conformity must be carefully stored and made available to the responsible authorities if necessary. It must also be

https://truckmanualshub.com/

handed over to the new owner if the industrial truck is sold on.

https://truckmanualshub.com/

Technical service and spare parts

For scheduled maintenance and any repairs to the forklift, contact only the authorised service network.

The authorised service network has personnel trained by the manufacturer, original spare parts and the tools necessary to carry out maintenance and repairs.

Servicing by the authorised service network and the use of original spare parts maintain the technical characteristics of the forklift over time.

Only original spare parts provided by the manufacturer may be used for forklift maintenance and repairs. The use of non-original spare parts invalidates the warranty and renders the user responsible for any accidents due to the inappropriateness of the non-original parts.

Type of use

"Normal use conditions" of the forklift are understood as:

- lifting and/or transport of loads using forks with weight and load centre within the values provided (see Chapter 6 - Technical Data).
- transport and/or lifting on smooth, flat and compact surfaces;
- transport and/or lifting of stable loads uniformly distributed on the forks;
- transport and/or lifting with the load centre approximately on the forklift's median longitudinal plane.

⚠ DANGER

The forklift must not be used for other purposes.

Any other use renders the user solely responsible for injury/damage to persons and/or objects and voids the warranty.

The following scenarios are examples of incorrect use of the forklift truck:

- Transport on uneven (irregular or non-compact) surfaces
- loads that exceed the weight and/or load centre limits;
- transporting non-stable loads;
- transporting loads not equally distributed on the forks;
- transporting swinging loads;
- transporting loads whose load centre is considerably displaced with respect to the forklift's longitudinal median plane;
- transporting loads of dimensions such as to block the view of the operator when driving;
- transporting loads piled so high that they could fall onto the operator;
- travelling with a load over 300 mm off the ground;
- transporting and/or lifting people;
- Pushing loads
- moving upwards or downwards on a slope with the load facing downwards;
- turning at high speed;
- turning and/or moving sideways on slopes (upwards or downwards);
- colliding with stationary and/or mobile structures;

⚠ DANGER

Improper use of the forklift could cause it and/or at the load to overturn.

https://truckmanualshub.com/

Working conditions

The truck has been designed and built for internal transport.

The truck must not be used outside the climatic conditions indicated below:

- Maximum ambient temperature: +40°C
- Minimum ambient temperature: +5°C
- Altitude up to 2000 m
- Relative humidity between 30% and 95% (without condensation).

⚠ CAUTION

Do not use the truck in dusty environments.

Using the truck in environments with high concentrations of salty air or water could cause problems with the truck and cause corrosion of metallic parts.

If the truck must be used in conditions outside of the limits indicated or, in any case, under extreme conditions (extreme weather, cold-storage rooms, presence of strong magnetic fields etc.), appropriate equipment and/or usage precautions are necessary. Contact the authorised sales network for information.

⚠ DANGER

The truck must not be used in environments where there is a risk of explosion and the truck must not be used to handle explosive loads.

Trucks that must operate in environments where there is a risk of explosion or trucks that must handle explosive loads require the appropriate equipment, which must be accompanied by a specific declaration of conformity that replaces that of the standard truck, and by the corresponding operating and maintenance manual.

Contact the authorised sales network for further information.

https://truckmanualshub.com/

Modifications to Forklift

No modifications may be made to the forklift, otherwise the EC certificate and the warranty will become invalid, with the exception of:

- Assembly of the options, only if provided by the manufacturer
- Assembly of applied equipment, only if provided by the manufacturer

⚠ WARNING

Before installing optional or additional equipment, please exclusively contact the sales network authorised by the manufacturer.

⚠ DANGER

If the forklift is equipped at the factory or later with devices that emit non-ionising radiation (such as radio transmitters, RFID players, data terminals, scanners, etc), the compatibility of such devices must be verified with the presence of operators using medical devices (such as heart pacemakers).

Applied equipment

To apply additional equipment after purchasing, you must contact the sales network authorised by the truck manufacturer, which will:

- verify feasibility
- install the equipment
- add a label with the new residual capacity
- provide documentation on the equipment (operating and maintenance manual and declaration of conformity)

⚠ CAUTION

The truck user must be trained in the operation and correct use of the equipment

The user must check that the equipment is working correctly before use.

User obligations

Users must comply with applicable local legislation governing forklift use and maintenance.

https://truckmanualshub.com/

Environmental considerations

Disposal of components and batteries

The truck is composed of different materials. If components or batteries need to be replaced and disposed of, they must be:

- disposed of,
- treated or
- recycled in accordance with regional and national regulations.

NOTE

The documentation provided by the battery manufacturer must be observed when disposing of batteries.

ENVIRONMENT NOTE

We recommend working with a waste management company for disposal purposes.

https://truckmanualshub.com/

Packaging

During delivery of the truck, certain parts are packaged to provide protection during transport. This packaging must be removed completely prior to initial start-up.

ENVIRONMENT NOTE

The packaging material must be disposed of properly after delivery of the truck.

https://truckmanualshub.com/

2

Safety

https://truckmanualshub.com/

Safety guidelines

General Precautions

NOTE

Some safety regulations to be followed when using the forklift are listed below. These regulations integrate those in the manual "**Rules for approved use of industrial vehicles**".

General Safety Rules

- Only allow qualified, trained and authorized personnel to use the forklift.
- Do not install equipment on the forklift unless supplied or indicated by the manufacturer.
- Maintain the forklift in full working efficiency in order to limit any type of risk to the minimum.
- Do not use the truck with bonnets or doors open or with guards removed.
- The data plates found on the forklift must be kept in good condition and replaced if damaged.
- Carefully read and follow all of the safety indications found on the forklift.
- Make sure that the forklift has sufficient overhead clearance.
- Do not park the forklift in front of fire-fighting devices or fire escapes or anywhere that it blocks traffic.
- If the forklift shows signs of failure or breakage and there is reason to consider it unsafe, stop, park it, and notify the maintenance manager.
- Maintain appropriate distances from high voltage overhead cables. Comply with the safety distances established by the competent authorities.
- Never raise the load using just one fork.
- Place the load on the fork carriage or in such a way that the centre of gravity of the load is as close as possible to the fork carriage.
- The load must be placed on the fork arms so that the centre of gravity falls lengthwise on the mid point between the fork arms.
- Do not drive with loads off-centre laterally with respect to the forklift's median axis. Lack of compliance with this regulation can compromise forklift stability.
- Make sure that the surface on which the load rests is able to support its weight.
- Always use safety clothing compliant with current regulations and any personal protective equipment that may be applicable.
- Do not travel on loose or hilly ground or on steps.
- Do not drive with loads raised more than 300 mm from ground level.
- Do not turn or stack on slopes.
- Reduce speed on slopes.
- Do not overload the forklift beyond the capacity limits indicated on the capacity plates.
- Individuals under the influence of drugs and alcohol are not permitted to use the truck.
- The operator may not use an MP3 player or any electrical device that may distract their attention from the surrounding work environment.

Flooring requirements

The work floor must be even and free of holes or dips, which can be difficult to get around. Any steps must be equipped with ramps to prevent impacts with the wheels, which affect the entire structure of the truck.

https://truckmanualshub.com/

⚠ CAUTION

Passing over cracks or damaged parts of the floor with the truck is prohibited. Dirt and any objects in the work path must be removed immediately. The employer must ensure that the flooring requirements are met. For this reason, the manufacturer cannot be held liable for any damage to the truck (especially to wheels, hubs etc.) caused by use on unsuitable surfaces.

Battery connection cables

⚠ CAUTION

Using sockets with NON-ORIGINAL battery connection cables can be dangerous (see purchase references in the parts catalogue)

Requirements for the traction-battery charging area

When the traction battery is being charged, the area must be sufficiently ventilated in order to dilute or eliminate the gases produced (in compliance with current national regulations).

Safety Regulations Relative to Forklift Use

- The operator must familiarize himself with the forklift to be able to better describe any defects and assist maintenance personnel. The operator, trained and authorized to use the forklift, must be familiar with the controls and performances of the forklift.
- Any defect (squeaking, leaks, etc.) must be promptly reported because, if neglected, it could cause more serious failures/defects.
- Carry out the inspections indicated in the chapter on "Daily Inspections".

ENVIRONMENT NOTE

Report any oil and/or battery fluid leaks: they are dangerous and highly polluting.

⚠ CAUTION

If you notice a burning smell, stop the forklift and turn off the engine, then disconnect the battery.

https://truckmanualshub.com/

Safety guidelines relating to operating materials

Rules for handling and disposing of operating materials

ENVIRONMENT NOTE

Improper use and disposal of operating and cleaning materials can cause serious damage to the environment.

Always use and handle the operating materials in a suitable manner and follow the manufacturer's instructions for the product's use.

Keep the operating materials only in containers intended for this purpose and in a location that satisfies the requirements.

The operating materials may be flammable, so avoid contact with hot objects or open flames.

When topping up the operating materials, only clean containers should be used.

Follow the manufacturer's safety and disposal instructions regarding the operating and cleaning materials.

Do not disperse oils or other operating liquids! Any spilt liquid must be immediately collected and neutralised with a binding material (such as an oil binder) and then disposed of in accordance with current regulations.

Always comply with anti-pollution regulations!

Before carrying out work that involves lubrication, filter replacement or hydraulic equipment interventions, the area in question must be thoroughly cleaned.

The replaced parts must always be disposed of in accordance with the anti-pollution laws.

Oils

- Avoid contact with skin.
- Do not inhale oil vapours.
- Wear appropriate personal protective equipment during truck maintenance operations (gloves, goggles etc.) to prevent the oil from coming into contact with your skin.

ENVIRONMENT NOTE

The used oils and relative filters contain substances that are hazardous to the environment and they must be disposed of according to current regulations. We advise you to contact the authorised service network.

DANGER

The penetration in the skin of hydraulic oil that has leaked under pressure from the forklift's hydraulic system is dangerous. If this type of lesion should occur, contact a doctor immediately.

DANGER

Small high pressure jets of oil can penetrate the skin. Look for any leaks using a piece of cardboard.

Battery acid

- Do not inhale the vapour: it is poisonous.
- Wear appropriate personal protective equipment to prevent contact with the skin.
- Battery acid is corrosive: if it should come into contact with your skin, rinse abundantly with water.
- Explosive gas mixtures can form when charging the battery; therefore, the rooms in which the battery is charged must be in compliance with the specific regulations on the subject (e.g. EN 62485-3 etc.).
- DO NOT smoke or use open flames and lights within a 2-m radius of the charged battery or in the battery charging area.

NOTE

For more information, consult the specific battery manual that comes with the battery.

https://truckmanualshub.com/

ENVIRONMENT NOTE

The batteries contain substances that are hazardous to the environment. The replacement and disposal of the life-expired battery must be carried out as required by law. We advise you to contact the authorised service network that is equipped for eco-friendly disposal in accordance with current regulations.

https://truckmanualshub.com/

Residual risk

Residual dangers, residual risks

Despite careful use and compliance with standards and regulations, the possibility of other risks occurring when using the truck cannot be entirely excluded.

The truck and all other system components comply with current safety requirements. Nevertheless, even when the truck is used for its proper purpose and all instructions are followed, some residual risks cannot be excluded.

Even outside the defined danger areas of the truck, residual risk cannot be excluded. Persons in this area around the truck must exercise a heightened degree of awareness, so that they can react immediately in the event of any malfunction, incident or breakdown etc.

⚠ WARNING

All persons that are in the vicinity of the truck must be instructed regarding the risks that arise through use of the truck.

In addition, we draw your attention to the Safety Guidelines in these operating instructions.

Risks can include:

- Escape of consumables due to leakages, rupture of lines and containers etc.
- Risk of accidents when driving on ramps or in conditions of poor visibility, etc.
- Falling, tripping etc. when moving the truck, especially in wet or icy conditions or when consumables are leaking.
- Fire and explosion risks due to batteries and electrical voltages.
- Human error resulting from failure to observe the safety guidelines.
- Unrepaired damage or defective and worn components.
- Insufficient maintenance and testing
- Use of incorrect consumables
- Maintenance intervals exceeded

The manufacturer shall not be held responsible for accidents involving the truck caused by the failure of the operating company to comply

https://truckmanualshub.com/

with these regulations either intentionally or due to negligence.

Stability

The stability of the truck has been tested in accordance with up-to-date technical regulations and is guaranteed if the truck is used correctly and in line with the intended purpose. These standards only take into account the static and dynamic tipping forces that can arise during use in accordance with the operating standards and intended purpose. In extreme cases there is a risk of exceeding the moment of tilt due to improper use or incorrect operation, which will affect stability.

The risks caused by improper use, and which are therefore prohibited, may include:

- loss of stability due to unstable or sliding loads etc.;
- turns at excessive speeds;
- moving with the load raised;
- moving with a load that is projecting to the side (e.g. side shift);
- turning and driving diagonally across slopes;
- driving on slopes with the load pointing downhill;
- oversized loads;
- swinging loads;
- steps or ramp edges.

⚠ WARNING

These risks are caused by improper use.

Improper use (e.g. swinging loads, transporting liquids etc.) is PROHIBITED unless specifically approved in writing by the manufacturer.

Electromagnetic radiation

The limit values for the truck's electromagnetic emissions and immunity are those set out in the EN 12895 standard.

If an electric and/or electronic device is subsequently attached to the outlet of the product ex-works, this could affect the truck's electromagnetic compatibility and thereby invalidate the original certificate. Any electric and/or electronic attachments must be installed in accordance with technical regulations by specially trained personnel. In any case, the manufacturer CANNOT be held liable for the truck

https://truckmanualshub.com/

malfunctioning or for any injuries and/or damage inflicted on objects and/or persons as a result of modifications made to the original product ex-works.

Non-ionised radiation

If the truck is equipped at the factory or later with devices that emit non-ionising radiation (such as radio transmitters, RFID players, data terminals, scanners, etc.), the compatibility of such devices must be verified with the presence of operators using medical devices (such as heart pacemakers).

Noise

Sound pressure level in driver's seat	L_{pAZ} < 70 dB (A)
Uncertainty factor	K_{pA}=4 dB (A)

The value is determined in a test cycle in accordance with Harmonised European Standard EN 12053 and declared according to EN ISO 4871 with weighted time percentages of the Transport, Lifting and Idling modes.

⚠ CAUTION

The value expressed above can be used to compare forklift trucks of the same category. This cannot be used to determine the noise level in workplaces (daily personal noise exposure). Noise values that are lower or higher than those indicated above can occur during actual truck use, for example following different operating modes, different environmental conditions and additional noise sources.

https://truckmanualshub.com/

Vibrations

Vibrations to which the hands and arms are exposed

The following value is valid for all truck models:

- $\bar{a}_w < 2.5\ m/s^2$

NOTE

It is mandatory to specify the hand-arm vibrations, even where the values do not indicate any danger, as in this case.

Vibrations to which the body (legs) is exposed

The following values to which the body (legs) is exposed only apply to trucks with a folding platform that the operator is standing on.

The following value is valid for trucks with a capacity of 1400 kg and 1600 kg:

- $\bar{a}_{w,zF} = 0.60\ m/s^2$
  Uncertainty K = ± 0.18 m/s^2

The following value is valid for trucks with a capacity of 2000 kg:

- $\bar{a}_{w,zF} = 0.97\ m/s^2$
  Uncertainty K = ± 0.29 m/s^2

The value complies with Harmonised European Standard EN 13059 (Safety of industrial trucks — methods for measuring vibration).

CAUTION

The value expressed above can be used to compare forklift trucks of the same category. It cannot be used to determine the operator's daily exposure to vibrations during real operation of the truck; these vibrations depend on the conditions of use (floor conditions, method of use etc.) and therefore daily exposure must be calculated using data from the place of use.

Declaration of conformity in accordance with the Radio Equipment Directive 2014/53/EU

The manufacturers of the radio equipment installed in the industrial truck declare that the radio equipment corresponds to the Radio Equipment Directive 2014/53/EU. The declarations of conformity can be viewed at the following Internet address:

https://www.still.de/eu-declarations.html

https://truckmanualshub.com/

Safety tests

Regular safety inspection of the truck ▷

Safety inspection based on time and extraordinary incidents

The operating company must ensure that the truck is checked at least once a year, or following noteworthy incidents.

As part of this inspection, a complete check of the technical condition of the truck must be performed with regard to accident safety. In addition, the truck must be thoroughly checked for damage that could potentially have been caused by improper use. A test log must be created. The results from the inspection must be retained until a further two inspections have been carried out.

The inspection date is indicated by an adhesive label on the truck.

– Arrange for the service centre to perform periodic safety inspections on the truck.

– Observe guidelines for checks carried out on the truck in accordance with FEM 4.004.

The operator is responsible for ensuring any defects are remedied without delay.

– Contact your service centre.

NOTE

Observe the national regulations for your country!

https://truckmanualshub.com/

Safety devices

Location of safety devices

Main safety devices on the truck

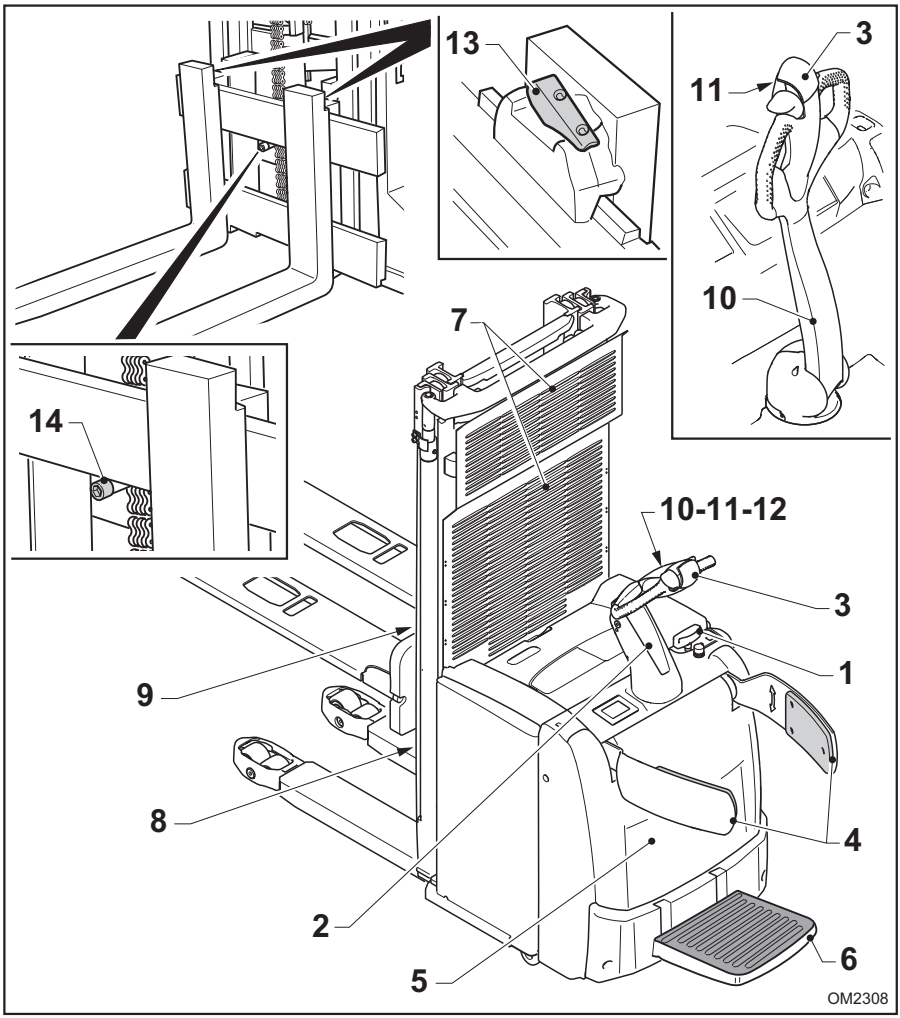

1 Emergency shutdown handle.

2 Tiller position sensor. The truck will not move if the tiller is not in the correct usage position.

3 Operator anti-crush safety button. Protects the operator from potential crushing by braking the truck.

4 Operator side protection. Prevents the operator from falling from the platform during ride-on driving (if present).

https://truckmanualshub.com/

5 Protective covers fastened with screws. Do not use the truck without the protective covers.
6 Operator on the platform presence sensor (if present). Only ride-on driving is allowed with the platform lowered.
7 Anti-shearing protective guard. Available in a metal grille version or a transparent plastic material version.
8 "500-mm" sensor. Automatic speed reduction with forks raised approximately 500 mm above the ground.
9 "1700-mm" sensor. Automatic reduction of driving speed with forks raised approximately 1700 mm above the ground. With straddles raised, the sensor reaches a height of approximately 1800 mm.
10 Automatic truck braking when the tiller is released by the operator
11 Horn. Used to indicate the presence of the truck during travel.
12 Combi tiller clasp closure sensor. If the clasp is not closed properly, the truck will not move.
13 Fork stop latches. Used to adjust the distance between the forks. Do not use the truck with the latches open (EXP only).
14 Screw that acts as a mechanical stop. The screw prevents the unintentional extraction of the forks. Do not unscrew or remove the stop. Do not use the truck if the mechanical stop is missing (EXP only).

https://truckmanualshub.com/

Damage, defects and misuse of safety devices

The driver must report any damage or other defects to the truck or attachment immediately to the supervisory personnel.

Trucks and attachments that are not functional or safe may not be used until they have been properly repaired.

Do not remove or deactivate safety devices and switches.

Fixed set values may only be changed with the approval of the manufacturer.

Work on the electrical system (e.g. connecting a radio, additional headlights etc.) is only permitted with the manufacturer's written approval. All electrical system interventions must be documented.

https://truckmanualshub.com/

https://truckmanualshub.com/

3

Overview

https://truckmanualshub.com/

Technical description

General characteristics

The trucks described in this manual EXV14, EXV16, EXV20, EXV14 i, EXV16i and EXV20i, EXV14-SF, EXV16-SF, EXV20-SF, EXV14i-SF, EXV16i-SF, EXV20i-SF, EXP14, EXP16, EXP20, EXV14D, EXV16D, EXV-SF 14D, EXV-SF 16, EXV20D, EXV-SF 20D are designed to handle and stack pallets inside shops, warehouses and factories.

Versions

- For the basic version (EXV and EXP) the operator always guides the truck in pedestrian mode (operated "from the ground)" as there is no platform.
- The version"SF" is provided with a platform for driving on board the truck. The operator can use the truck both in pedestrian mode (driving "on the ground") and in the mode of "driving on board" by getting up on to the appropriate operator's platform.
- The version"i" is prepared for lifting and lowering the spokes. It is available for both the basic version of the truck and for the version ."SF".
- The "D" version is designed to lift two loads at the same time. A load on the forks and a load on the straddles. This function is called double pallet stacker.

Lift

Nominal load:

- 1400 kg (EXV14, EXV14i, EXV14-SF, EXV14i-SF, EXP14, EXV14D, EXV-SF 14D)
- 1600 kg (EXV16, EXV16i, EXV16-SF, EXV16i-SF, EXP16, EXV16D, EXV-SF 16D)
- 2000 kg (EXV20, EXV20i, EXV20-SF, EXV20i-SF, EXP20, EXV20D, EXV-SF 20D)

Pump unit

- Power rating 3.2 kW

Different types of lift mast:

- Telescopic "post": two-section telescopic post without free lifting and two side cylinders
- "NiHo" post: two-section telescopic post with free lifting, lateral chains and two lateral cylinders plus a central cylinder
- Triplex "post" : three-section telescopic post with free lifting, lateral chains and two lateral cylinders plus a central cylinder

Driving

The 185-W electric steering motor operates the drive wheel using a reduction gear unit.

2.3-kW or 1.5-kW traction motor depending on the truck version.

On EXV, EXVi and EXP versions the operator guides the truck from the ground. A long ergonomic helm together with electric steering allows the operator to drive the truck without effort.

In versions EXV-SF the operator can drive the truck on land or on board. A strong ergonomic helm together with electric steering allows the operator to drive the truck without effort.

The tiller is used to activate the following controls:

- Steering
- Drive control throttle
- Horn
- Fork lifting and lowering buttons
- Anti-crush safety button
- Truck braking when the tiller reaches the upper end position and lower end position (service brake)
- Buttons for raising and lowering spokes (only for versions"i")

For safety reasons, the helm automatically returns to its initial position when released.

Braking system

Regenerative braking

https://truckmanualshub.com/

Braking:

- when the accelerator is released,
- Select the direction of travel
- controlled by the anti-crush safety button
- electromagnetic safety device, controlled by the emergency stop handle
- electromagnetic safety device, controlled by the release of the tiller.
- safety electromagnetic, controlled when the tiller arm reaches the lower end position (service brake)
- Electromagnetic parking device, applied when there is a power cut.

On-board equipment

The on-board equipment includes:

- a glove compartment for storing adhesive tape, gloves,pens etc.,
- A switch for emergency shutdown located on the chassis
- A multifunction display.
- A4 paper spring holder

https://truckmanualshub.com/

Overview

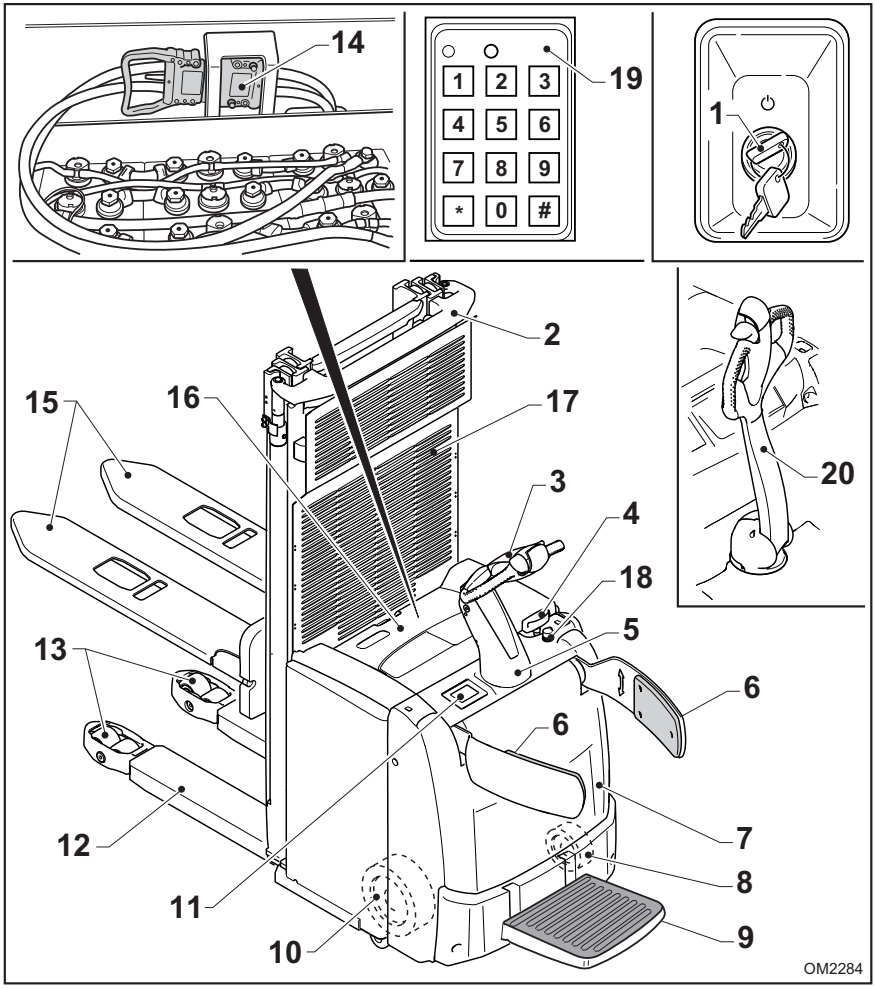

1	On / off key	12	Straddles
2	Lifting post	13	Load rollers
3	Helm head	14	Battery plug/socket
4	Emergency stop handle	15	Forks
5	Helm	16	Battery compartment hood
6	With operator side protective guards	17	Anti-shearing guard
7	Bonnet	18	Diagnostic test socket Service technical assistance
8	Pivoting wheel	19	Digicode- Numeric Keypad
9	Operator's Platform	20	Helm
10	Drive wheel		
11	Display		

https://truckmanualshub.com/

Instruments and controls

Start/stop key

The key has two positions:

0 = Stop. No voltage to the circuit (Key removal position)
I = Start. Circuit powered

https://truckmanualshub.com/

Display

NOTE

The messages shown in the following illustrations are indicative and may vary depending on the language chosen by the operator via the display.

Buttons and indicator lights

– By pressing the button (A), you can select the required performance for the truck. Every time that you press the button, you select a different performance from the three possible options. The three types are as follows:

- (1) Blue-Q symbol: maximum battery consumption optimisation
- (2) Hare symbol: maximum truck performance
- (3) Tortoise symbol: automatically reduced and limited performance

Other indicator lights:

- (4) The light comes on depending on whether the operator is present

  The indicator light flashes when the truck does not detect the presence of the operator through the tiller or the platform. The tiller is not tilted to the working position or the operator is not correctly positioned on the platform.

  The indicator light is lit when the truck starts to detect the presence of the operator through the tiller or the platform. The indicator light remains lit for approximately ten seconds, after which it goes out.

  The indicator light is off after the truck has detected the presence of the operator through the tiller or the platform for more than approximately ten seconds.
- (5) The indicator light comes on when the battery is low
- (6) The indicator light comes on when a truck component overheats
- (7) The indicator light comes on for scheduling truck routine maintenance
- (8) The indicator light comes on when there is a problem inside the truck (CAN etc.)

▷

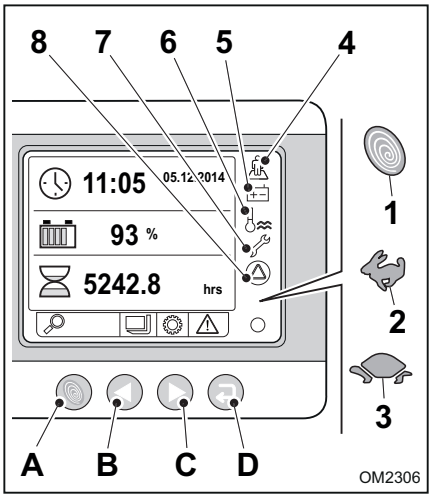

https://truckmanualshub.com/

– By pressing the button (B), you move backwards between the entries for each screen or backwards between one screen and the other.

– By pressing the button (C), you move forwards between the items for each screen or forwards between one screen and the other.

– By pressing the button (D), you confirm your selection of the item of the selected screen.

Status

– The following are displayed on the **Status** screen: ▷

- Clock and date
- Battery charge level
- Hours of work

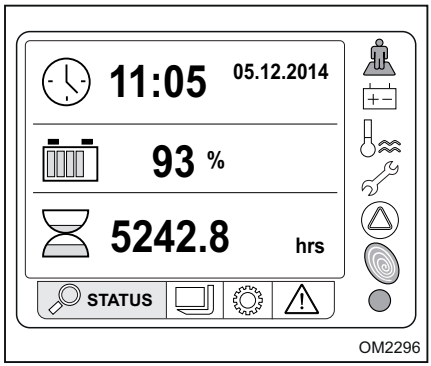

Setting

– The following can be set on the **Setting** screen: ▷

- Language
- Unit of measurement
- Date
- Time
- Brightness
- Contrast
- Date format

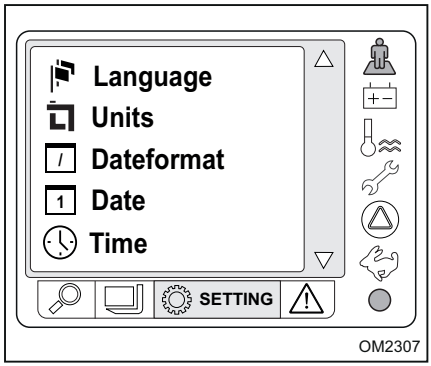

Load

– The **Load** screen is only visible if the optional "Dynamic Load Control "(D.L.C) is fitted

https://truckmanualshub.com/

– Useful information relating to the load transported on the forks is displayed on the **Load** screen for the operator.

– The optional "Dynamic Load Control" is available in different versions. All information relating to the optional "Dynamic Load Control" and to that visible on the **Load** screen can be found in the relevant section ⇒Chapter "Dynamic Load Control (DLC) — Optional", Page 64 .

Error

– Truck blocking errors or warnings for the operator are displayed on the **Error** screen.

– The message warns that the scheduled maintenance is due today. The message is set by the technical service department authorised by the manufacturer according to the agreements with the customer. ▷

– The message informs you of when the next maintenance work is due. The message is set by the technical service department authorised by the manufacturer according to the agreements with the customer. ▷

https://truckmanualshub.com/

– The message is specific to trucks with the fork lifting block option or the DLC 1 - 2 option. The message warns that the maximum height set for the forks has been reached ("height exceeded warning"). The message "OK" appears on the display in the red rectangle (E).

– To delete the message and be able to lift the forks and the load higher, keep the first button on the right on the keypad (D) pressed for around three seconds.

▷

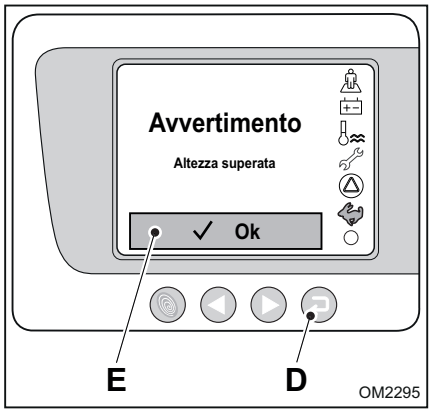

– The rectangle (E) on the display turns yellow and the word "OK" disappears. The warning triangle that warns the operator to pay special attention when moving loads appears in its place.

▷

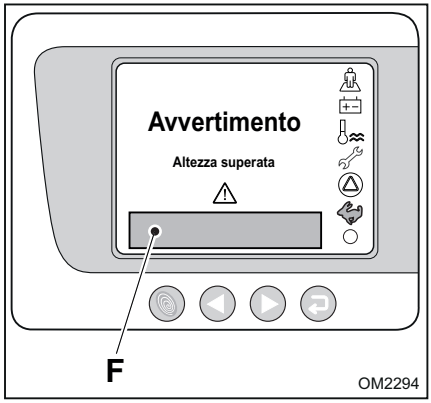

– The message is specific to trucks with the DLC 3 option or lifting block option. The message warns that the first maximum height level set for the forks has been reached ("first block height exceeded warning"). The message "OK" will appear on the display.

– To delete the message and be able to lift the forks and the load higher, keep the first button on the right on the keypad (D) pressed for around three seconds.

▷

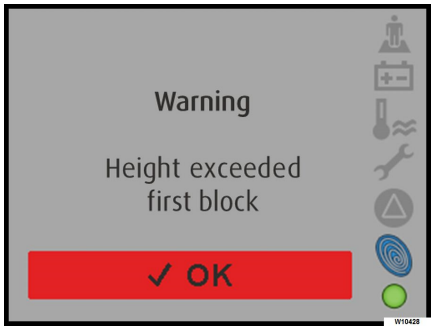

https://truckmanualshub.com/

– The message is specific to trucks with the DLC 3 option or the second lifting block option. The message warns that the second maximum height level set for the forks has been reached ("second block height exceeded warning"). The message "OK" will appear on the display.

– To delete the message and be able to lift the forks and the load higher, keep the first button on the right on the keypad (D) pressed for around three seconds.

▷

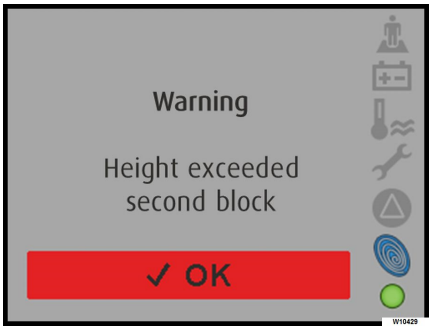

– The message warns that, for safety reasons, the operator must lower the straddles to be able to lift the forks higher.

▷

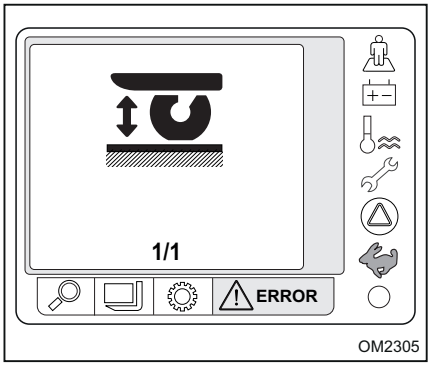

– The message may appear on the display when lifting approximately 1700 mm from the ground (only for trucks with platform and side protection). To remove the message from the display, lower the load or close the operator side protection (for more information, also see ⇒Chapter "Location of labels", Page 55):

▷

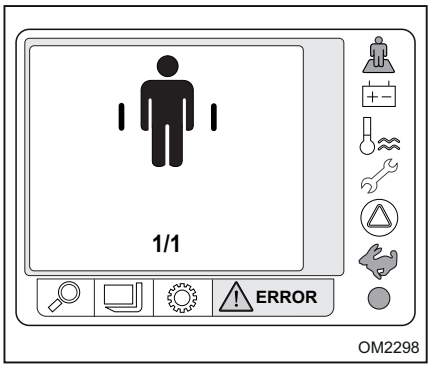

⚠ CAUTION

The operator must assess whether to close the side protection before lifting the forks higher.

https://truckmanualshub.com/

– The message indicates that the battery charge level is low. Charge the battery. ▷

– If you continue to use the truck without recharging the battery, the display shows the message to the side. The battery is low and lift does not work. Immediately recharge the battery. ▷

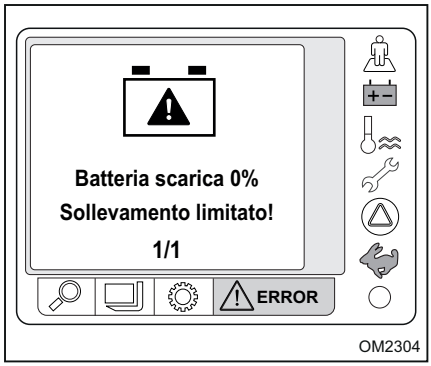

– When the battery is charging, the display shows that battery charging is in progress. ▷

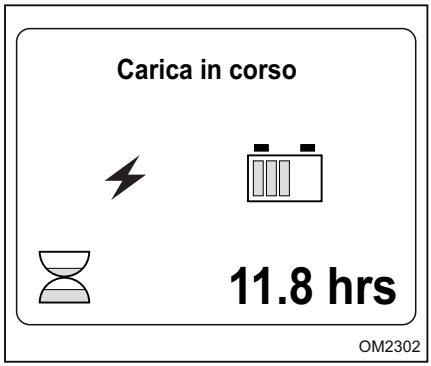

https://truckmanualshub.com/

– The message highlights a problem inside the truck. Switch the truck off and on again. If the message does not disappear, contact the technical service department authorised by the manufacturer. ▷

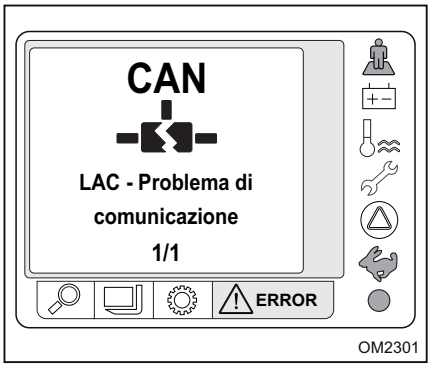

OM2301

– The message highlights that the electronic system has overheated. Shut down the truck and wait for it to cool down. If the message reappears, contact the technical service department authorised by the manufacturer. ▷

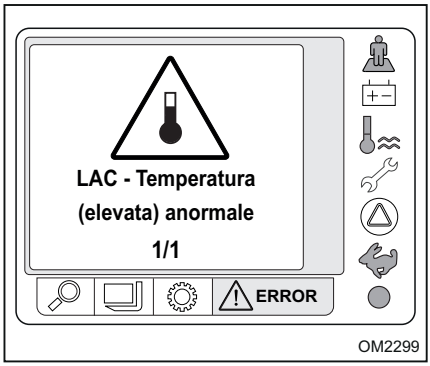

OM2299

– The message highlights that the motor has overheated. Shut down the truck and wait for it to cool down. If the message reappears, contact the technical service department authorised by the manufacturer. ▷

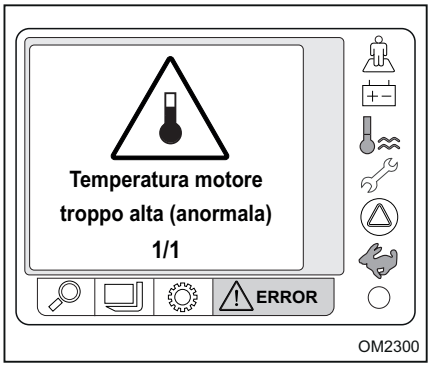

OM2300

⚠ CAUTION

If the **Error** screen displays messages other than those mentioned above, please contact the sales network authorised by the manufacturer.

https://truckmanualshub.com/

Emergency shutdown handle

– Pushing the emergency shutdown handle will lock all of the functions on the truck. ▷

https://truckmanualshub.com/

Tiller controls

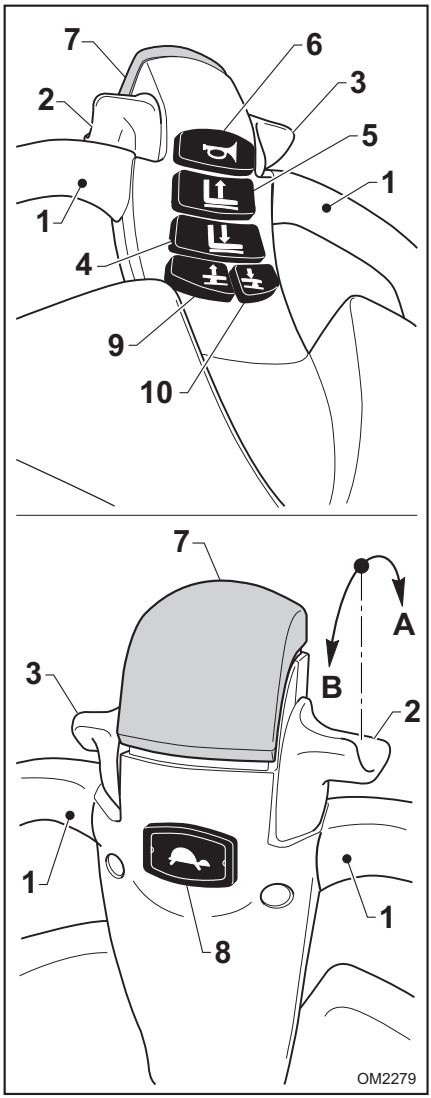

1 — Tiller head handle
2 and 3 — Traction control throttle
4 — Fork lowering button
5 — Fork lifting button
6 — Horn button
7 — Anti-crush button
8 — Slow speed button (optional — Creep Speed)
9 — Straddle lifting button (optional)
10 — Straddle lowering button (optional)

NOTE

The following controls are active with the tiller in the "working position".

Tiller head handle (1)

- Areas designed for holding the tiller head during use.

Traction control throttle (2 – 3)

- When the throttle (2 or 3) is turned in direction (A), the truck starts moving in the direction of the forks.
- When the throttle (2 or 3) is turned in direction (B), the truck starts moving in the direction of the operator.
- The truck speed increases or decreases according to the angular position of the throttle.
- Releasing the throttle causes braking and subsequently the stopping of the truck.

Fork lowering button (4)

- Press the button (4) to lower the forks.
- Fork movement can be stopped at any time by releasing the button (4). The forks will stop in the position attained.
- The fork lowering button (4) is active only when the tiller is angled to the working position.

NOTE

- *The speed of the forks is proportional to how hard the button (4) is pressed*
- *When the forks are fully lowered, a reduction in the fork lowering speed is automatically triggered just before the end of the stroke (soft landing)*

https://truckmanualshub.com/

Fork lifting button (5)

- Press the button (5) to lift the forks and reach the maximum height.
- Fork movement can be stopped at any time by releasing the button (5). The forks will stop in the position attained.
- The fork lifting button (5) is active only when the tiller is angled to the working position.

NOTE

The speed of the forks is proportional to how hard the button (5) is pressed

Horn button (6)

- Press the button (6) to operate the horn. This device allows the driver to signal his presence when necessary.

Anti-crush button (7)

- Press the button (7) while the truck is travelling towards the operator to automatically reverse the direction of travel When reversing, the truck travel speed is reduced for a few seconds

The button (7) is a safety device. Particularly useful in narrow areas, it prevents the operator from being crushed between a wall and the tiller head.

The direction of travel of the truck will be reversed if the button (7) comes into contact with the body of the operator. When the operator moves away and releases the button (7), the truck stops.

NOTE

In "SF" trucks with a platform, the anti-crush button (7) is usually disabled.

Slow-speed button (8) (optional — Creep Speed)

- The button (8) is fitted with the optional "tiller always active" option (Creep Speed).
- Keeping the button (8) pressed while turning the throttle (2 – 3) activates the slow speed, regardless of the tiller position.
- Keeping the button (8) pressed at the same time as the fork lifting button (5) activates fork lifting, regardless of the tiller position

https://truckmanualshub.com/

NOTE

This function is ideal for manoeuvres in confined spaces.

Initial lift (9 and 10) (optional) (not available for EXP version)

The straddle lift function increases the ground clearance, meaning that the truck can be used on uneven ground or slopes.

WARNING

Risk of crushing feet.

Be careful not to put your feet under the straddles while using the initial lift function.

Straddle lifting button (9)

- Press the button (9) to lift the straddles; when the button is released, the straddles will stop in the position attained.
- The straddle lifting button (9) is active only when the tiller is angled to the working position.

Straddle lowering button (10)

- Press the button (10) to lower the straddles; when the button is released, the straddles will stop in the position attained.
- The straddle lowering button (10) is active only when the tiller is angled to the working position.

https://truckmanualshub.com/

Tiller

Tiller positions

Position the tiller in accordance with the truck functions ▷

With the truck stopped, the two following tiller positions are available:

- **Position (1) = working position.**
  In this position, the operator can begin travel using the throttle.
  In this position, the operator can begin lifting or lowering the forks using the appropriate throttle.
  In this position, the operator can raise or lower the straddles; for versions with straddle initial lift only.
- **Position (2) = braking position.**
  In this position, the drive is locked and the parking brake is engaged.

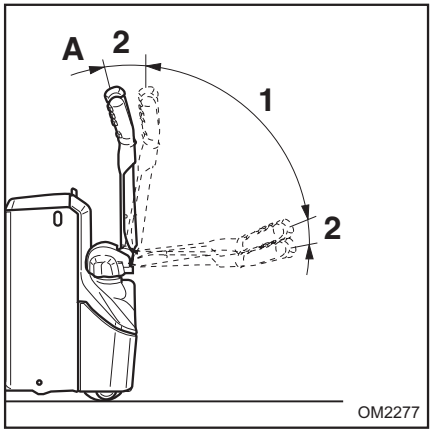

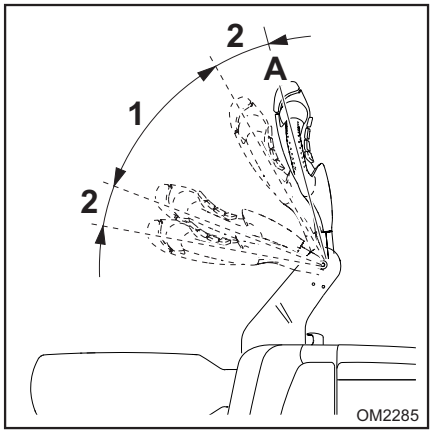

NOTE

- *In this position, lifting and lowering of the forks and straddles, if fitted, is blocked.*

NOTE

When the tiller is released, it automatically returns to position (A), the braking position.

https://truckmanualshub.com/

“Timone sempre attivo” version (optional — Creep Speed) ▷

- **Position (2)** using the "tiller always active" function (optional) = **slow speed position**

  This function is activated by pressing the slow speed button on the tiller (3) and rotating the traction control throttle (4) or by pressing the slow speed button and the fork lifting button. The truck travels at limited speed.

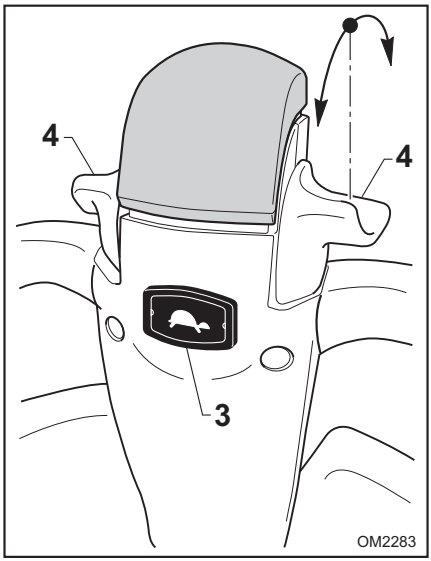

https://truckmanualshub.com/

Combi tiller (if present)

Instructions for opening the combi tiller

⚠ CAUTION

Perform the operation, preferably before starting the truck and only when the truck is stationary.

Carrying out the operation when the truck is moving is prohibited.

NOTE

The preferred means of use with the combi tiller open is in pedestrian mode (operated "from the ground").

– Open the clasp to release the tiller. ▷

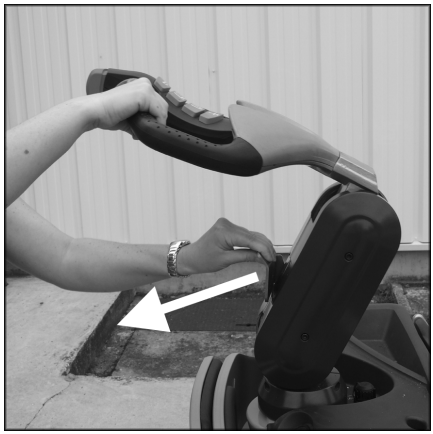

https://truckmanualshub.com/

– Use the handle to pull the tiller to open it. ▷

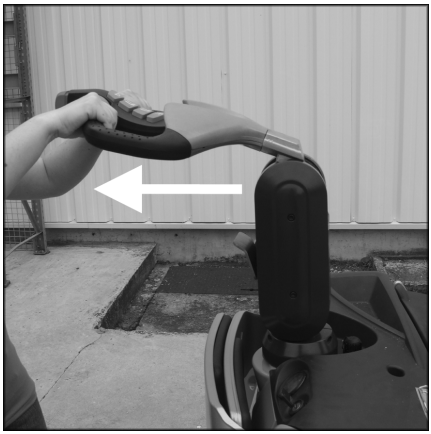

– The tiller is open. ▷

Instructions for closing the combi tiller

⚠ CAUTION

Perform the operation, preferably before starting the truck and only when the truck is stationary.

Carrying out the operation when the truck is moving is prohibited.

NOTE

The preferred means of use with the combi tiller closed is in ride on mode (operated from the platform).

– Use the handle to push the tiller to fold it.

https://truckmanualshub.com/

– The clasp closes automatically to lock the tiller. ▷

⚠ CAUTION

Check that the tiller is locked correctly.

OptiSpeed tiller (only present on EXV and EXVi versions) ▷

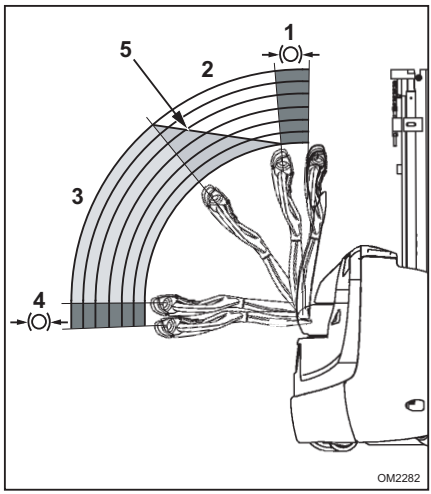

The different work zones of the tiller depending on the tilt are explained below:

- In zone (1), the brake is applied and the truck cannot be moved.
- In zone (2), the maximum authorised speed varies according to the tilt of the tiller. The reference (5) represents the curve of the speed inside zone (2).
- In zone (3), the truck can reach its maximum speed. The traction speed is proportional to the angular position of the throttle.

In zone (4), the brake is applied and the truck cannot be moved.

⚠ WARNING

During use, tilt the tiller and gradually change the speed of the throttle in accordance with the above.

https://truckmanualshub.com/

Types of lifting masts

Your truck may be fitted with one of the following masts:

- Simplex
- Telescopic
- NiHo
- Triplex

Simplex

When the "lift" button is pressed, the fork carriage is raised to the height h3 by the central cylinder via a chain.

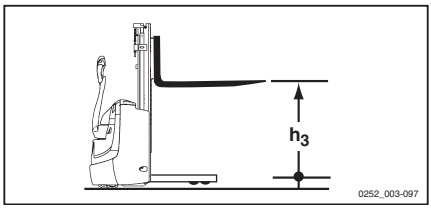

Telescopic

When the "lift" button is pressed, the internal mast is raised by the lateral cylinders and drives the fork carriage (h3) via the chains (the lifting speed of the fork carriage is twice that of the internal mast).

⚠ CAUTION

In locations with a low ceiling, be aware that the load height may be greater than the mast height.

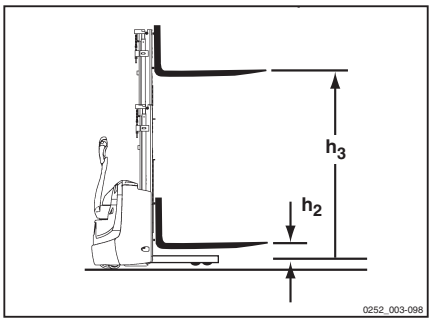

NiHo

When the "lift" button is pressed, the fork carriage is raised to the top of the internal mast (h2') by the central cylinder, then the lateral cylinders raise the internal mast up to the maximum height (h3).

NOTE

During lifting, the internal mast is never higher than the fork carriage.

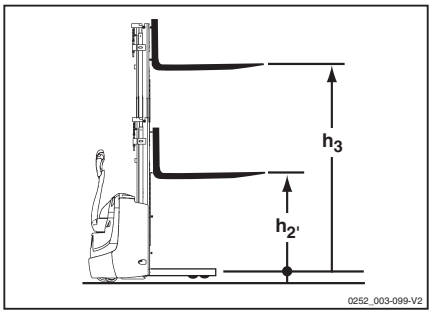

https://truckmanualshub.com/

⚠ CAUTION

In locations with a low ceiling, be aware that the load height may be greater than the mast height.

Triplex

The function is identical to that of the NiHo mast, but has a greater lift height with the same mast height.

⚠ CAUTION

In locations with a low ceiling, be aware that the load height may be greater than the mast height.

▷

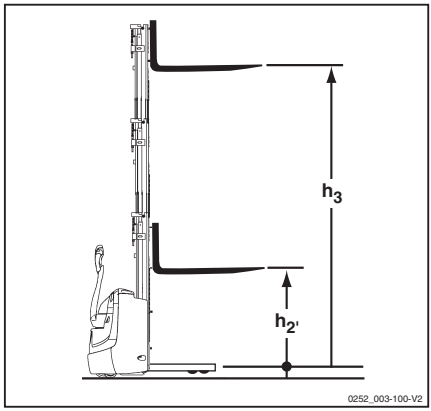

https://truckmanualshub.com/

Side protection

Description

The side protection has been designed to protect the operator when the truck is used in ride on mode.

There are two positions:

– Position "**A**" = side protection closed. Position used when the operator is using the truck in pedestrian mode (operated from the "ground") with the platform closed. ▷

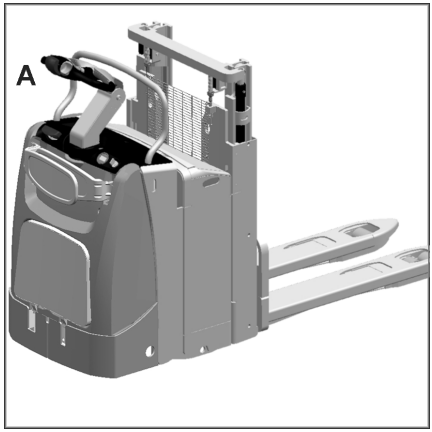

The truck also works with the side protection closed (Position "A") and also with the operator on board the truck. In this case the maximum travel speed of the truck will be automatically limited for safety reasons.

– Position "**B**" = side protection open. Position used with the operator on board the truck, standing on the platform. ▷

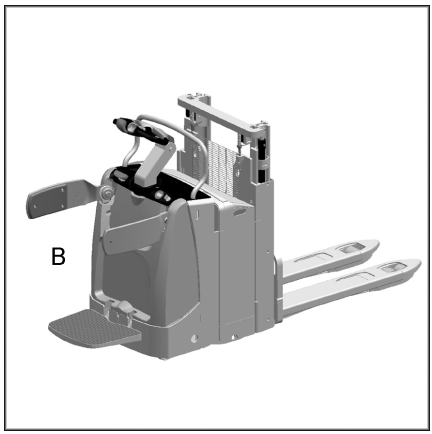

Opening and closing the side protection

– To open, pull the two operator side protective guards outwards.

– To close, push the two operator side protective guards inwards.

Adjusting the height of the side protection

– To adjust the height of the side protective guards according to the height of the operator, open the side protective guards, then manually pull the side protective guards upwards (three positions). To close the side protective guards, push them down until they reach the original, lowest position.

https://truckmanualshub.com/

⚠ CAUTION

Always lower the side protection bars before re-closing them.

Otherwise the side protective guards will not close and this may damage the hoods.

⚠ DANGER

Do not sit on the side protection bars.

⚠ DANGER

Do not climb on the side protection bars.

https://truckmanualshub.com/

Platform

Description

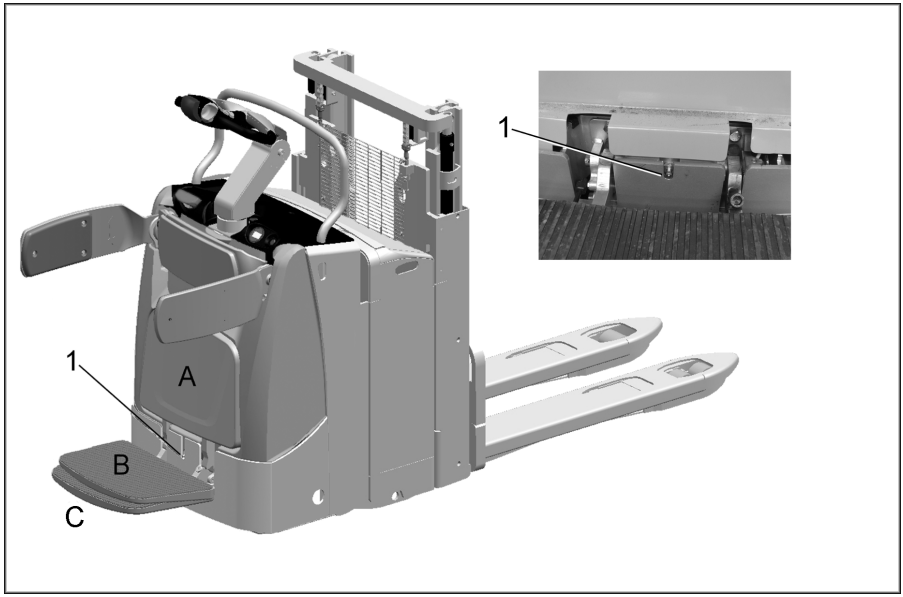

The platform can take up three positions **A, B, C**:

Position "A" = platform closed. This position is used when the truck is in pedestrian mode (operated from the "ground") with the side protection closed.

Position "B" = platform in the intermediate position: in this position, the truck traction is locked.

Position "C" = platform in the operating position in ride on mode: This position is used with the operator on board.

In this position, the traction and truck speed depend on the position of the side protection:

- Side protection open: The truck can reach its maximum speed.
- Side protection closed: The truck speed is limited electronically.

https://truckmanualshub.com/

NOTE

If the platform is closed "**A**" and the side protection is open, the traction is locked.

Moving the platform

To lift or lower the platform, move the platform floor by hand.

CAUTION

Danger of crushing hands.

When closing the platform, do not leave your hands between the platform and the hood.

Adjusting the platform

For improved absorption of vibrations, the platform must be adjusted according to the weight of the operator.

Adjust the pressure of the damping system based on the weight of the operator using the valve (1).

▷

Safety

DANGER

Risk of ejection from the platform.

Position yourself correctly on the platform between the two side protection bars: standing up, facing the forks, with both feet inside the platform.

Turn corners at low speed.

Firmly grip the handle on the tiller head with your hands.

DANGER

It is strictly prohibited to disable protective and safety devices.

https://truckmanualshub.com/

Definition of directions

Definition of directions for EXV, EXVi, EXP, EXV D Directions also valid for EXV-SF, EXVi-SF and EXV-SF D versions with closed platform and pedestrian mode

Direction of movement defined by the regulations:

- Reverse travel (1)
- Left (2)
- Forward travel (3) (Preferred direction of travel)
- Right (4)

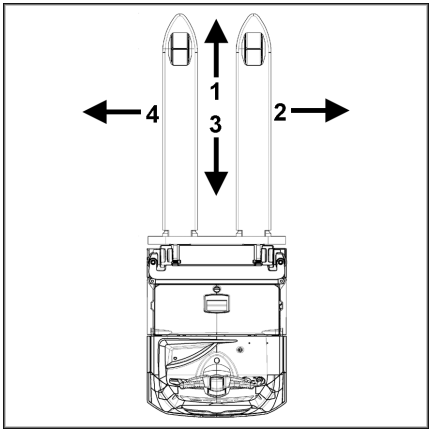

Definition of directions for EXV-SF, EXVi-SF and EXV-SF D versions with platform lowered and when the operator is on board the truck

Direction of movement defined by the regulations:

- Forward travel (1) (Preferred direction of travel)
- Left (4)
- Reverse travel (3)
- Right (2)

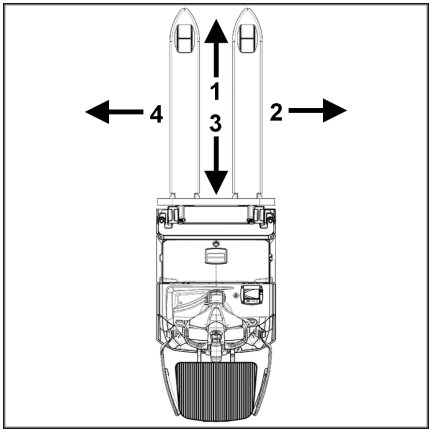

Conclusion

To make it easy for the reader to interpret, the direction of travel will always be defined in the following manner:

- **(1)** Direction of travel towards the forks
- **(3)** Direction of travel towards the operator

https://truckmanualshub.com/

Markings

Location of labels

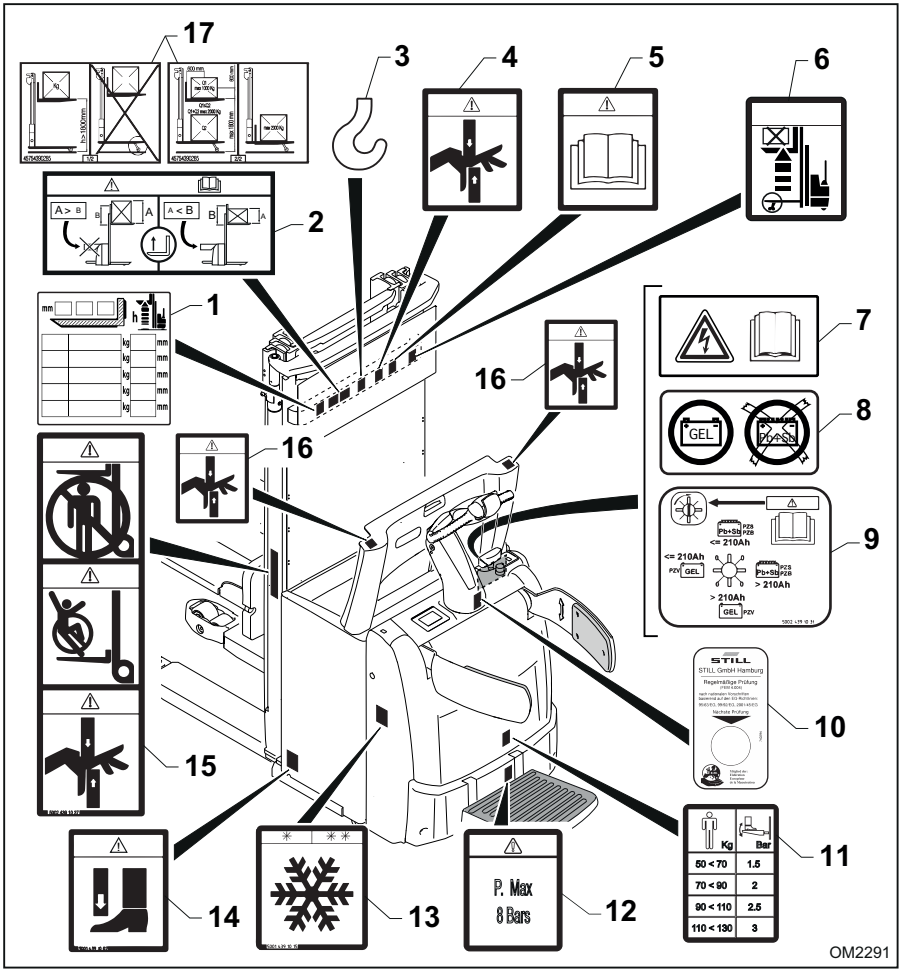

1	"Truck capacity diagram" label
2	"Operator side protection" usage label (for the version with operator platform only)
3	"Hook" symbol
4	"Danger of crushing hands" label
5	"Operating and maintenance manual" label
6	"Lifting danger" label (on initial lift chassis version only)
7	"Operating and maintenance manual" label
8	Version set up for gel batteries
9	"On-board battery charger" label
10	Annual checks label (Germany only)
11	"Operator platform capacity diagram" label
12	"Maximum permissible pressure" label
13	"Cold store" label (on cold store version only)
14	"Danger of crushing feet" label (on initial lift chassis version only)
15	Warning label
16	"Danger of crushing hands" label

https://truckmanualshub.com/

17 "Double pallet stacker" label (for double pallet stacker truck version only)

Description of labels

(1) This label indicates the permissible load on the forks depending on load centre of gravity and lift height.

(2) This symbol, where present, indicates the correct use of the operator side panels with forks raised more than 1700 mm from the ground (approximately 1800 mm with straddles raised). If the height of the load on the forks is **greater** than the height of the load rack, the side panels must be closed (see the left-hand side of the label). If the height of the load on the forks is **less** than the height of the load rack, the side panels can be opened (see the right-hand side of the label).

(3) This label indicates where to attach the truck's lifting hook.

(4) This symbol appears on the lift mast and indicates danger of cutting due to the mast's moving parts.

(5) This label indicates you should consult the use and maintenance manual before using the truck and prior to carrying out any maintenance work.

(6) This label is only present on the version with initial lift (i). The label indicates that it is prohibited to lift a load more than 1800 mm from the ground while the straddles are raised. To lift a load more than 1800 mm from the ground, the straddles must be on the ground (for more information, refer to ⇒Chapter "Location of safety devices", Page 23).

(7) This label indicates that you should consult the specific use and maintenance manual for the on-board battery charger.

(8) This symbol, where present, indicates that the truck is set up for the gel battery version. Do not use other types of battery.

(9) This label is only present on the version with the on-board battery charger. The label highlights the possibility of choosing the charging curve.

(10) This label is only present on trucks sold in Germany. The label indicates the date of the truck's periodic safety inspection.

(11) This label is only present on the version with operator platform and side protection. The label indicates the setting pressure of the operator platform depending on the weight of the operator. 1.5 bar between 50 kg and 70 kg, 2 bar between 70 kg and 90 kg, 2.5 bar between 90 kg and 110 kg, 3 bar between 110 kg and 130 kg.

(12) This label is only present on the version with operator platform and side protection. The label indicates the maximum setting pressure for the operator platform. Caution: Increasing the pressure of the control system to greater than 8 bar is prohibited.

(13) This symbol, where present, indicates that the truck is set up for the "cold-storage" version (optional).

(14) This label is only present on the version with initial lift (i). The label indicates the danger of crushing feet under the straddles.

(15) This symbol appears on the lift mast and indicates danger of cutting due to the mast's moving parts, that carrying people on the truck is prohibited and that standing or passing under the raised forks is prohibited.

(16) This symbol appears on the battery hood and indicates the danger of crushing and/or cutting hands while opening and/or closing the battery hood on the entire perimeter of the hood. Take care when operating.

(17) This symbol is present only on the double pallet stacker version. It provides information on handling loads with the double pallet stacker truck version.⇒Chapter "Additional designation plate for the double pallet stacker version (EXV-D)", Page 60

https://truckmanualshub.com/

Serial number

NOTE

Please quote the truck's serial number for all technical questions.

The serial number contains the following information:

1 Production location

2 Type

3 Year of production

4 Sequential number

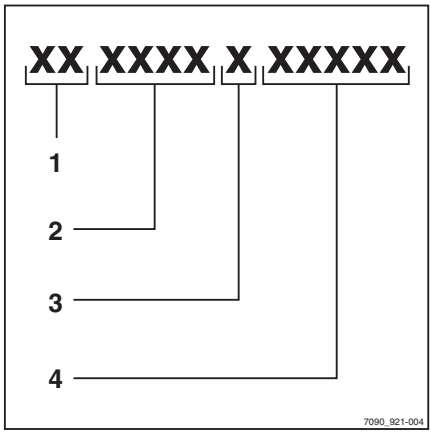

https://truckmanualshub.com/

Nominal value designation plate ▷

⚠ DANGER

Danger! To avoid compromising the stability of the truck, it is strictly forbidden to use batteries that weigh less than the minimum weight (11) indicated on the designation plate.

NOTE

- *Please indicate the serial number for all technical enquiries.*
- *The EAC mark may also be located near to the nameplate.*
- *In addition to the UKCA mark, trucks sold in the United Kingdom will also have a label identifying the importer.*
- *On trucks sold for airports in the United Kingdom, the designation plate will read Aircraft ground support equipment instead of Industrial truck.*

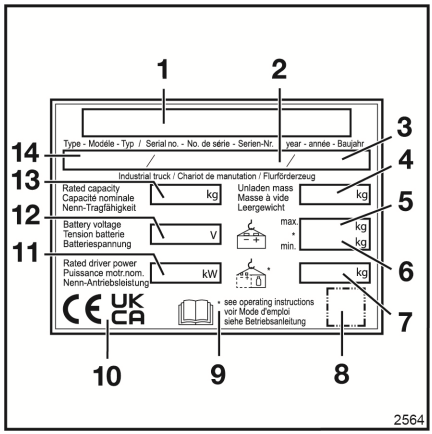

1	Manufacturer
2	Production number
3	Year of manufacture
4	Unladen weight (without battery) in kg
5	Maximum battery weight in kg
6	Minimum battery weight in kg
7	Additional weight (ballast) in kg
8	QR code
9	For more detailed information, please refer to the technical data in the operating manual.
10	In this zone, there may be one or more marks including: the CE mark; the UKCA mark for the United Kingdom market; the EAC mark for the Eurasian Economic Union market.
11	Nominal power in kW
12	Battery voltage in V
13	Rated capacity in kg
14	Model

https://truckmanualshub.com/

Capacity plate

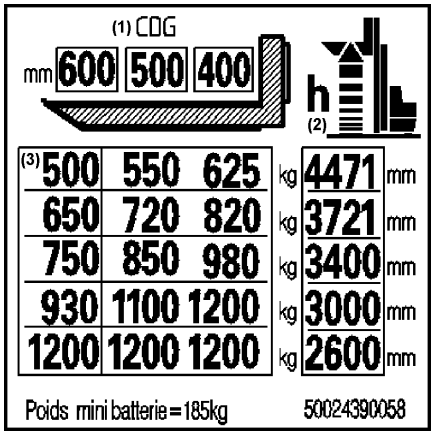

– The identification plate indicates the following data:

- **(1) CDG** = distance "C" from the centre of gravity of the load on the forks to the fork carriage (in mm)
- **(2) h** = lift height of the forks from the ground (in mm)
- **(3)** = maximum permissible loads "Q" (in kg)

⚠ WARNING

The illustrations are only examples.

Only the values stated on your truck's plate should be taken into consideration.

⚠ DANGER

The values indicated on the capacity plate refer to compact and homogeneous loads and must not be exceeded - otherwise the stability of the truck and the load-bearing capacity of the structures may be compromised.

⚠ DANGER

Risk of accident when forks are changed:

If the forks are changed and a different type of forks to the original forks is fitted, the residual load capacity changes.

When forks are changed, a new residual capacity plate must be affixed.

If a truck is supplied without forks, the residual capacity plate for standard forks is affixed (see chapter 6 "Technical Data").

https://truckmanualshub.com/

Additional designation plate for the double pallet stacker version (EXV-D)

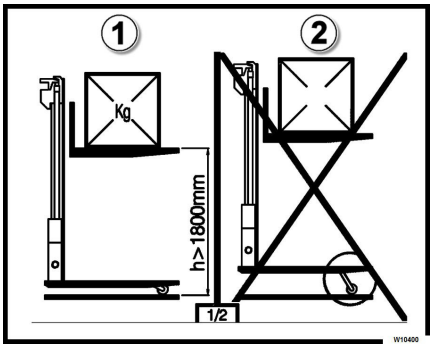

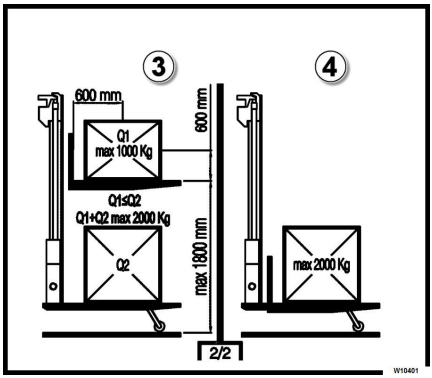

Description of labels

These labels are present only on the double pallet stacker version (EXV-D). They provide information on handling loads with the double pallet stacker truck version.

⚠ DANGER

Read the following information carefully

Strictly adhere to the recommendations and prohibitions.

Notes relating to use of the truck as a pallet stacker (1) and (2):

- When raising the forks, the fork lift stops upon reaching the sensor positioned on the truck mast To raise the forks further, lower the straddles all the way to the ground The fork control will then become active again
- If there is no load on the straddles, you must not carry loads on the forks when they are raised more than approximately 300 mm from the ground
- The residual capacities are indicated on the capacity plate

Notes relating to use of the truck as double pallet stacker (3).

- When using the double pallet stacker, the maximum total permitted load capacity of the truck is 2000 kg This means that the sum of the load on the straddles and the load on the forks must not exceed 2000 kg
- The load on the forks must be less than or equal to the load on the straddles with a maximum of 1000 kg

⚠ CAUTION

When used as a double pallet stacker, do not allow the forks to reach the height of the sensor on the mast.

The sensor will stop the lifting and forces the lowering of the straddles.

⚠ CAUTION

When used as a double pallet stacker, do not crush the load being transported on the straddles by lowering the forks.

There are no automatic safety systems.

Leave a small gap between the top part of the load on the straddles and the bottom part of the forks.

https://truckmanualshub.com/

⚠ CAUTION

The values indicated on the label refer to compact and homogeneous loads and must not be exceeded, otherwise the stability of the truck and the load-bearing capacity of the structures may be compromised. The loads refer to centre of gravity distances up to 600 mm.

Notes relating to use of the truck as platform tractor (4):

- During transport, the maximum load capacity on the forks for the truck is 2000 kg Forks lowered until they are resting on the straddles, and straddles raised using the initial lift control

Chassis frame labelling

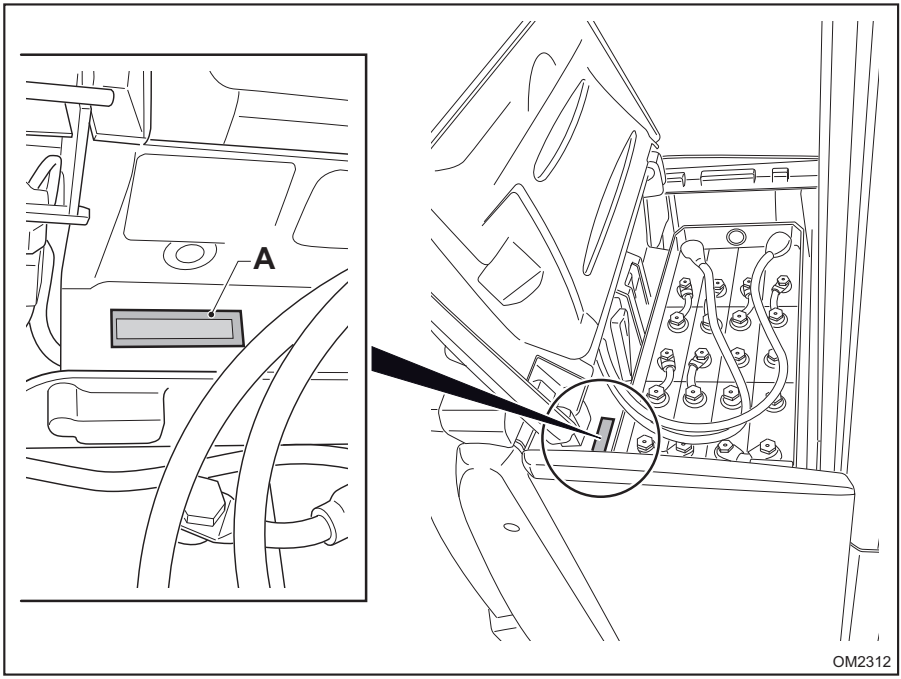

The truck's serial number is marked (A) on the chassis frame.

https://truckmanualshub.com/

Options and variants

List of options and variants

List:

- Various types of tyre for the drive wheel
- Various types of load rollers
- Tiller always active (Creep Speed)
- Various types of battery
- Various lift masts and lift heights
- Various fork gauges and fork lengths
- Various types of load rack
- Version with moving straddles "i"(Initial lift)
- Access authorisation via: key or, alternatively, numeric keypad (Digicode)
- Fleet Manager
- Anti-shearing protective guard plate in transparent polycarbonate, positioned on the mast.
- Cold storage version (Cold store)
- Accessories mounting bar
- Accessories mounting bar with clipboard
- Accessories mounting bar with storage tray
- Accessories mounting bar with storage tray and clipboard
- Accessories mounting bar with data socket
- Pivoting wheel lubrication nipples
- Load roller lubrication nipples
- Various types of cables and plugs
- Various types of cables and additional plugs
- Built-in rectifier
- Battery electrolyte level indicator LED
- Centralised battery top-up with distilled water
- Extraction of the battery
- Automatic lowering of the straddles, when the forks are raised
- Dynamic Load Control (D.L.C.)

⚠ CAUTION

After buying the truck, contact the technical service network authorised by the manufacturer for information on assembly of the optionals.

https://truckmanualshub.com/

NOTE

The above list is only a summary. Some optionals are NOT available on all models. For more information, please refer to the price list and contact the authorised sales network.

https://truckmanualshub.com/

Dynamic Load Control (DLC) — Optional

The **Load** screen on the display shows information relating to the optional "Dynamic Load Control"

This option is available in different versions. Because of this, the information that appears on the display varies depending on the version installed on the truck.

⚠ DANGER

Risk of accidents

The system does not activate any blocks or other safety systems; it only provides visual information for the operator relating to the load moved.

The operator using the truck is the only person responsible for the safety and stability of the truck and/or the load.

The operator must remain constantly vigilant, observe safety guidelines and follow the indications given by the capacity plate of the truck.

⚠ CAUTION

Risk of improper use of the truck.

The operator must be adequately trained on the various features of this function.

"NO DLC" warning

A "NO DLC" warning may appear on the **Load** screen.

The warning indicates that the" Dynamic Load Control" system is not active as it is not able to provide information relating to the load present on the forks.

The warning appears in the following circumstances:

- When straddles are raised (only for "i" version trucks, which are set up with straddles initial lift). To remove the warning from the display, completely lower the initial lift straddles. The display will then show information again relating to the "Dynamic Load Control".
- With the forks at a height above the "1700-mm" sensor positioned on the mast (for more information, refer to ⇒Chapter "Location of safety devices", Page 23) The display will show information again relating to the "Dynamic Load Control", but only after the forks have been lowered to a height below the sensor

Available versions

- "DLC 1" version
- "DLC 2" version
- Version "DLC 3"

The available versions of the optional "Dynamic Load Control" are described below

"DLC 1" version

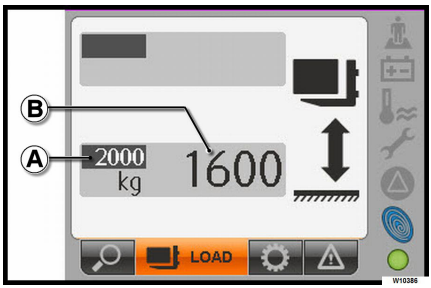

The basic "DLC 1" version informs the operator about:

- (A) Maximum capacity of the truck (nominal load)
- (B) Loading weight present on the forks

https://truckmanualshub.com/

DANGER

The system detects the loading weight present on the forks (B) with a tolerance of ±50 kg.

Consider the aforementioned tolerance during truck manoeuvers.

Never exceed the maximum capacity of the truck (A).

Alarms "DLC 1"

– The yellow warning triangle on the display indicates that the load on the forks is at the limit of the maximum load capacity of the truck.

– The red warning triangle on the display indicates that the load on the forks has exceeded the limit of the maximum load capacity of the truck.

"DLC 2" version

– With the "DLC 2" version, an adhesive string (G) is always present on the column of the truck. The adhesive string has green, yellow and orange sections and is marked to indicate the height of the forks.

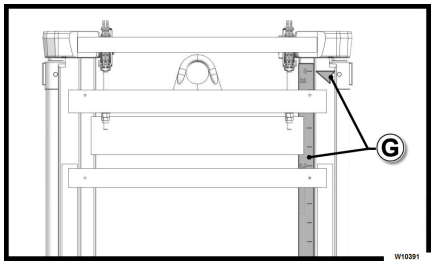

The "DLC 2" version informs the operator about:

- (C) Maximum capacity of the truck (nominal load)
- (D) Loading weight present on the forks
- (E) Maximum permitted fork height with the load (D) without compromising the stability of the truck and/or the load
- (F) In this area of the display, the position of the forks and the load displayed varies according to the maximum permitted fork height (E). In the same area of the display, the coloured column is displayed (this may be displayed in three colours: green only; a section of green and a section of yellow; or a section of green, a section of yellow and a section of orange). The colours of the column shown on the screen correspond to those of the adhesive string (G).

DANGER

The information provided by the option help the operator to identify the maximum permitted fork height with the load (D) without compromising the stability of the truck and/or the load.

Do not exceed the maximum height indicated (E). Risk of tipping and/or overturning.

DANGER

The system detects the loading weight present on the forks (D) with a tolerance of ±50 kg.

Consider the aforementioned tolerance during truck manoeuvers.

Never exceed the maximum capacity of the truck (C).

https://truckmanualshub.com/

To assist with understanding the information on the display with the optional "DLC 2" version, three examples relating to a truck with a nominal load of 1600 kg (C) are given below.

– First example: The load on the forks (D) equal to 800 kg may be raised to a maximum of 4.8 m (E). The area (F) indicates that the 800-kg load may be raised up to the orange area, which can be easily identified on the coloured adhesive string (G).

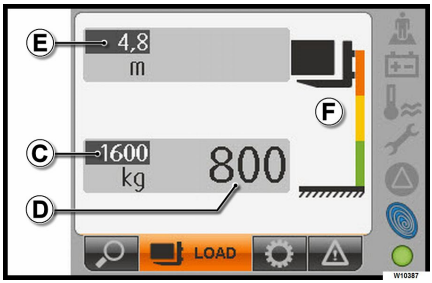

– Second example: The load on the forks (D) equal to 1000 kg may be raised to a maximum of 4.4 m (E). The area (F) indicates that the 1000-kg load may be raised up to the yellow area, which can be easily identified on the coloured adhesive string (G).

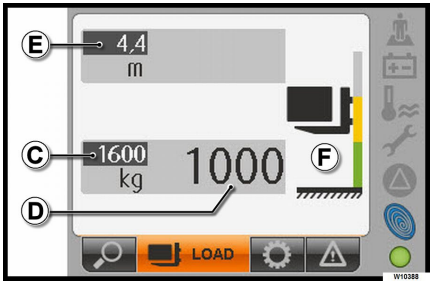

– Third example: The load on the forks (D) equal to 1400 kg may be raised to a maximum of 3.1 m (E). The area (F) indicates that the 1400-kg load may be raised to the green area, which can be easily identified on the coloured adhesive string (G).

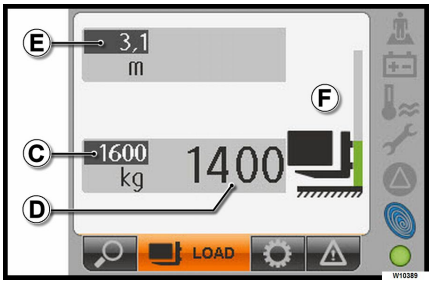

Alarms "DLC 2"

– The yellow warwarning triangle on the display indicates that the load on the forks is at the limit of the maximum load capacity of the truck.

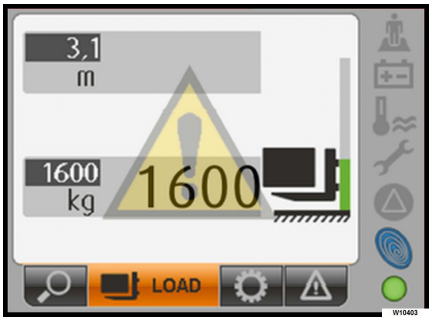

– The red warning triangle on the display indicates that the load on the forks has exceeded the limit of the maximum load capacity of the truck.

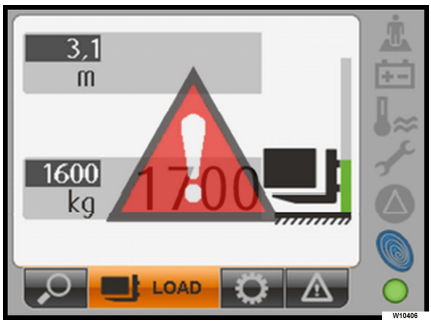

https://truckmanualshub.com/

Version "DLC 3"

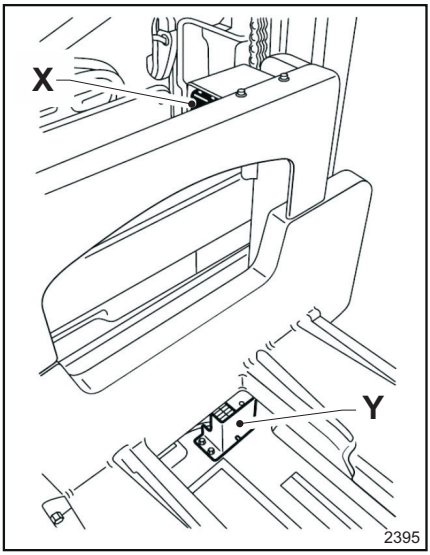

The "DLC 3" option allows you to:

- Manage the residual capacity of the truck in relation to the weight of the load and the height of the mast.
- Manage the truck's performance data.

This option is not compatible with the cold store option.

The "DLC 3" option system is equipped with a height sensor consisting of two distinct components:

- (X), called the slave.
- (Y), called the master.

The components (X) and (Y) communicate with each other using ultrasound.

NOTE

For trucks with a triple mast exceeding 4 metres, the component (Y) moves. The component (Y) is located in the lower crossmember of the mast.

CAUTION

Risk of loss of warranty.

The unit (X) contains a battery. Only a technician authorised by the service centre may replace this battery.

DANGER

The system detects the loading weight present on the forks with a tolerance of ±50 kg.

Consider the aforementioned tolerance during truck manoeuvers.

Never exceed the maximum capacity of the truck.

Managing residual capacity

The "DLC 3" option shows relative values for height and load. This option is, however, only a driving aid and the operator must remain constantly vigilant.

WARNING

There is a risk of hitting a shelf or a load

The values displayed on the screen (height and load) are provided for informational purposes only. Due to the tolerance range, the values cannot be used for precision operations.

The operator must check that the forks are at the correct height for handling loads on a shelf.

First "DLC 3" option example: reading the screen

– The weight of the load on the forks is 1250 kg (± 50 kg).

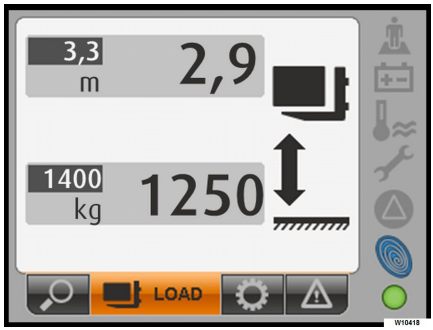

https://truckmanualshub.com/

– The forks are at a height of 2.9 m.

– The maximum permissible height of the forks with a load of 1250 kg is 3.3 m.

NOTE

It may be necessary to update the weight. The update is performed automatically by the software. The screen displays a message about "updating the weight".

Second "DLC 3" option example: The forks have reached a lift height very close to the maximum permissible values.

– The maximum permissible height of the forks is 3.3 m.

– The forks are at a height of 3.2 m.

The following signals will warn the operator that the height of the forks **(3.2 m) is very close to the maximum permissible lift height (3.3 m)**:

- The truck emits a warning sound (once).
- At the same time, a **yellow** warning triangle appears on the display.

– The arrow shown on the display indicates that it is still possible to continue to raise or lower the forks with due caution.

The load capacity values are NOT the cause of the danger and warning signals:

- The weight of the load on the forks is 1250 kg (± 50 kg).
- The maximum permissible load on the forks is 1400 kg.

Third "DLC 3" option example: The weight of the load on the forks is very close to the maximum permissible capacity.

– The weight of the load on the forks is 1350 kg (± 50 kg).

– The maximum permissible load on the forks is 1400 kg.

The following signals will warn the operator that the weight of the load on the forks is **(1350 kg ± 50 kg) and is very close to the maximum permissible load on the forks (1400 kg)**:

- The truck emits a warning sound (once).
- At the same time, a **yellow** warning triangle appears on the display.

– The arrow shown on the display indicates that it is still possible to continue to raise or lower the forks with due caution.

The height of the forks is NOT the cause of the danger and warning signals:

- The maximum permissible height of the forks is 3.3 m.
- The forks are at a height of 2.9 m.

https://truckmanualshub.com/

Fourth "DLC 3" option example: The weight of the load on the forks slightly exceeds the maximum permissible capacity.

– The weight of the load on the forks is 1450 kg (± 50 kg)

– The maximum permissible load on the forks is 1400 kg.

The following signals will warn the operator that the weight of the load on the forks is **(1450 kg ±50 kg) and is just beyond the maximum permissible capacity (1400 kg):**

- The truck emits a warning sound (once).
- At the same time, a **yellow** warning triangle appears on the display.

– The arrow shown on the display is pointing downwards. The operator must lower the forks. The warning triangle will then disappear. The truck does NOT automatically stop the lifting of the forks!

The height of the forks is NOT the cause of the danger and warning signals:

- The maximum permissible height of the forks is 3.3 m.
- The forks are at a height of 2.9 m.

NOTE

When the lift measured is higher than the permissible lift, a similar warning will be displayed.

Fifth "DLC 3" option example: The weight of the load on the forks far exceeds the maximum permissible capacity.

– The weight of the load on the forks is 1550 kg (± 50 kg)

– The maximum permissible load on the forks is 1400 kg.

The following signals will warn the operator that the weight of the load on the forks is **(1550 kg ±50 kg) and is far beyond the maximum permissible capacity (1400 kg):**

- The truck emits a warning sound.
- At the same time, a **red** warning triangle appears on the display.

– The arrow shown on the display is pointing downwards. The operator must lower the forks. The warning triangle will then disappear and the warning sound will stop.

– The truck stops the forks lifting!

– The operator can, however, continue lifting by authorizing the operation as explained below.

– Confirm the warning message." Capacity exceeded." using the Confirm button. The warning sound will not stop until the forks are lowered. When the lift measured is

https://truckmanualshub.com/

higher than the permissible lift, a similar warning will be displayed.

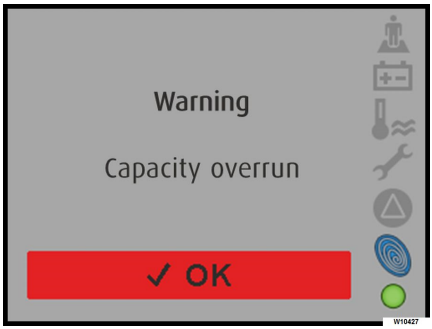

The height of the forks is NOT the cause of the danger and warning signals:

- The maximum permissible height of the forks is 3.3 m.
- The forks are at a height of 2.9 m.

⚠ DANGER

Loss of stability

If the lifting operation continues despite the warning sounds, the operator may lose control of the stability of the truck. The operator will then be liable in the event of an accident.

Regulations for using the DLC 3

⚠ WARNING

There is a risk of hitting a shelf or a load

The values displayed on the screen (height and load) are provided for informational purposes only. Due to the tolerance range, the values cannot be used for precision operations.

The operator must check that the forks are at the correct height for handling loads on a shelf.

⚠ WARNING

Risk of loss of stability.

When driving the truck, the forklift operator must not use MP3 players or any other devices that can distract their attention from the surrounding work environment. The operator must pay particular attention in noisy environments. The operator may not hear the warning sounds.

Managing truck performance data

The "DLC 3" option allows a more linear adaption of truck speed.

This speed is calculated based on three factors:

- Load height
- Load weight
- Steering angle

⚠ DANGER

Risk of accident

It is forbidden to drive with a load in the raised position.

Starting the truck

https://truckmanualshub.com/

NOTE

The forks must be in the lowered position when the truck is started.

If the forks are in a raised position when the truck is started, the DLC 3 icon is displayed.

A yellow triangle appears on the display.

The display indicates that the forks must be lowered. The arrow points downwards.

During work

The forks must be lowered regularly when the truck is in use.

If the forks remain in the raised position for more than four hours:

– A warning sound is emitted.

– The DLC 3 icon is shown on the display.

– A yellow triangle appears on the display.

– On the display, the arrow points downwards only.

– The forks must be lowered immediately.

If the operator does not immediately lower the forks, travel speed and lifting speed are automatically reduced.

CAUTION

The display does not work any more.

Do not continue to operate the truck. Contact your service centre to replace the display.

In the event of error code L354

Error code L354 (1) may be displayed on the screen.

It is therefore necessary to check that:

- There is nothing obstructing the field between the two sensors. The field may be obstructed by an object.
- The sensors are clean.

After these checks, the forklift operator must restart the truck.

If the error code L354 is displayed again after the restart, contact the service centre.

In the event of error code T526

Error code T526 is displayed on the screen to warn the operator that the sensor battery is discharged. Contact a service centre authorised by the manufacturer.

https://truckmanualshub.com/

⚠ CAUTION

Risk of loss of warranty.

Only a technician authorised by the service centre may replace this battery.

Straddle automatic lowering (optional)

This option is available for all trucks with straddle initial lift (excluding the double pallet stacker truck version).

For the standard version, when the straddles are raised off the ground, if the operator tries to raise the forks more than approximately 1800 mm from the ground, a message will appear on the display to warn that the operator must lower the straddles to be able to raise the forks any further (see ⇒Chapter "Display", Page 32). The forks are locked at 1800 mm from the ground until the operator lowers the straddles.

If the truck is equipped with the "Straddle automatic lowering" option, the truck automatically lowers the straddles (if raised off the ground) during the fork lifting operation.

NOTE

On the version with platform, the automatic function is intentionally blocked for safety reasons when the operator guides the truck from the ground in pedestrian mode. In this case, the truck behaves in the same way as the standard version. With ride-on driving, the automatic function operates normally.

https://truckmanualshub.com/

Accessories mounting bar with data socket ▷

The optional data socket (6 and 7) is fitted on the relevant accessories mounting bar (3).

The pre-wired data socket (6) connected to the truck has the following features:

- Voltage 24 V
- Current 5 A

⚠ WARNING

If you are not using the data socket (6), protect it from the weather, dust etc. using the cap (5).

Do not leave the data socket (6) uncovered.

In addition to the optional "accessories mounting bar with data socket" the customer is also provided with a plug (4).

If necessary, wire the plug (4) to be connected to the customer's data terminal as follows:

- Connect the positive to terminal (1)
- Connect the negative to terminal (2)

⚠ DANGER

Always respect the connections mentioned above (1 and 2)

Reversing the polarity is dangerous and strictly prohibited.

⚠ WARNING

The instructions provided are for information only. Installation must be carried out precisely and in accordance with technical regulations. Only the manufacturer's own approved sales network is authorised to assemble and install accessories. The manufacturer will NOT be liable for any personal injury or damage caused by unauthorised third parties. Contact the manufacturer's authorised service network.

⚠ CAUTION

Fix the data terminal used to the relevant support (7) precisely and in accordance with technical regulations.

Do not allow the data terminal used to fall from the support (7).

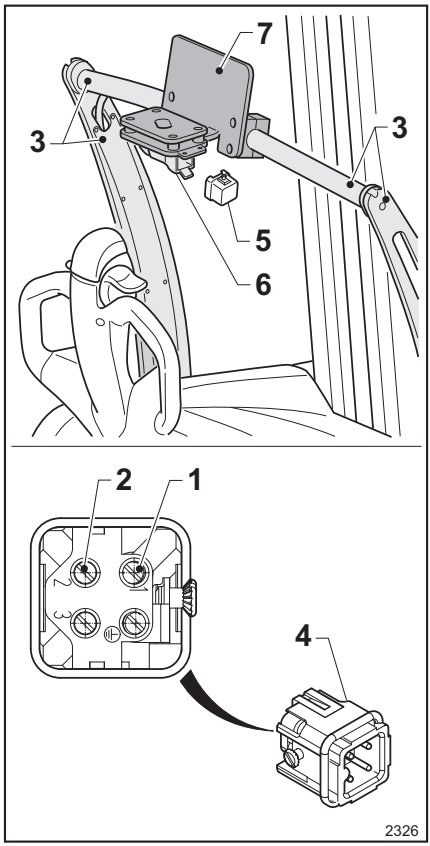

1 Positive
2 Negative
3 Accessories mounting bar
4 Plug to be wired
5 Plug
6 Data socket
7 Data terminal support

https://truckmanualshub.com/

Numeric keypad — Start-up using a PIN (option)

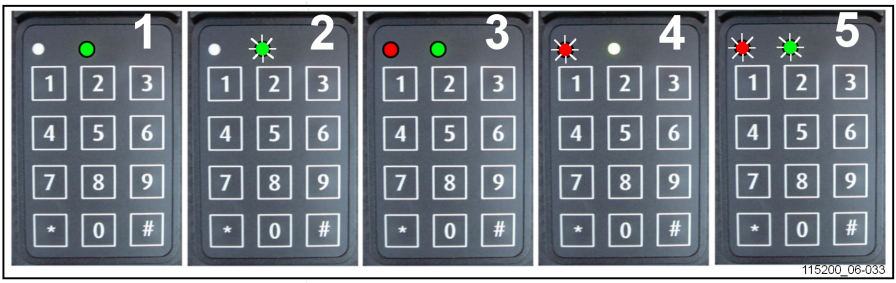

1 SWITCH ON (operating mode)
2 SWITCH OFF and awaiting code
3 Programming mode active
4 Faulty key or incorrect code
5 Delay of automatic switch-off

OPERATING MODE			
Operation	Key	LED	Warning
ON	* 1 2 3 4 5 # (by default)	○ red off ● continuous green (1)(correct PIN) ● red flashing ○ green off (4)(PIN incorrect)	1 2 3 4 5 default PIN code
OFF	# (3 seconds)	○ red off ● green flashing (2)	Turn off the truck

PROGRAMMING MODE — to be carried out with the truck switched off (2)			
Operation	Key in	LED status	Warning
THE ADMINISTRATOR CODE IS IMPORTANT FOR ALL DIGICODE SETTINGS	* 0 0 0 0 0 0 0 0 # (by default)	● continuous red ● continuous green (3)	Once the diodes have been switched off, the electronic key automatically reverts to "operating mode"
New operator code	* 0 * 4 5 6 7 8 #	○ red off ● green flashing (2) (code accepted)	Example of a new operator code: 45678
Allocating operator codes	* 2 * 5 4 3 2 1 #	○ red off ● green flashing (2) (code accepted)	*2*: operator reference 10 options from 0 to 9
Deleting operator codes	* 2 * #	○ red off ● green flashing (2) (deletion accepted)	*2*: operator reference (between 0 and 9)
Modifying administrator codes	* * 9 * 1 2 3 4 5 6 7 8 #	○ red off ● green flashing (2) (code accepted)	

https://truckmanualshub.com/

PROGRAMMING MODE — to be carried out with the truck switched off (2)			
Restoring the initial administrator code			To reactivate the default administrator code (00000000), please contact your agent or nearest dealer.
Activating the automatic switch-off	* * 2 * 1 #	● red flashing ● green flashing (5) (5 s before switch-off)	The power supply switches off automatically after 10 min. (600 s by default) if the truck is not being used.
Setting the delay of the automatic switch-off	* * 3 * 6 0 #	○ red off ● green flashing (2) (value accepted)	Example: automatically switches off after 1 min. (60 s) if not used. Minimum setting = 10 s / maximum = 3000 s
Deactivating the automatic switch-off	* * 2 * 0 #	○ red off ● green flashing (2) (command accepted)	

Stand-by

NOTE

The stand-by function is only available with the Digicode option.

To prolong battery life, the truck can be put into energy-saving mode when it is not in use.

After a certain period of downtime, the truck switches off.

This time period can be configured between 0 and 10 minutes. This function is disabled by default.

Timeout can be adjusted. Contact the Technical Service Department authorised by the manufacturer.

https://truckmanualshub.com/

Battery electrolyte level indicator LED (optional) ▷

There are two versions of the LED:

- 1) Located on the battery
- 2) Located next to the battery plug.

The LED indicates whether it is necessary to top up the distilled water in the battery.

Operation:

- If the LED (1) or (2) is green, there is a sufficient level of electrolyte in the battery. The battery must not be topped up with distilled water.
- If the LED (1) or (2) is red, there is an insufficient level of electrolyte in the battery. The battery must be topped up with distilled water.

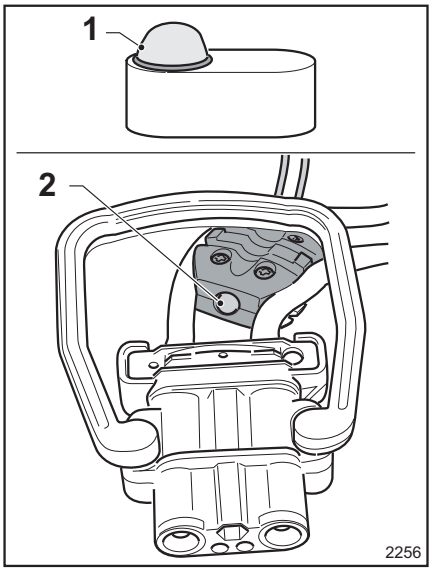

https://truckmanualshub.com/

Auxiliary hydraulic lines (optional)

Notes relating to the application of the equipment

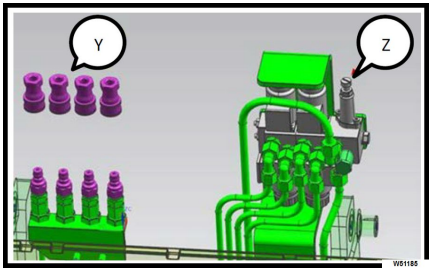

- The theoretical maximum flow that can be supplied to the quick-release couplings is 12 l/min. The theoretical maximum pressure that can be supplied by the pump to the quick-release couplings is approximately 230 bar. Adjust the maximum-pressure valve using the regulator **(Z)** positioned on the distributor valve assembly. Apply suitable hydraulic equipment.
- The additional equipment must have a 1/4" female **(Y)** attachment to connect to the quick-release couplings on the truck (ISO7241-1 Type HP 08).
- In the version with two auxiliary hydraulic lines with clamps, the installer must be careful to connect the clamp to the two dedicated quick-release couplings, which can be identified by a black clip located on the attachment. It is strictly forbidden to connect the clamp anywhere else.
- To ensure safe use of the equipment fitted, please refer to the specific user manual for the equipment (e.g. clamp etc.).
- If you install additional equipment, you must affix to the truck an additional residual capacity plate for the truck with equipment. Observe the capacities and the load centres of gravity indicated on the additional capacity plate for the truck with equipment. The values indicated on the capacity plate refer to compact and homogeneous loads and must not be exceeded, otherwise the stability of the truck and the load-bearing capacity of the structures may be compromised.
- Apply the relevant labels (ISO 7000) to buttons that are not identified by a symbol that illustrates their function. To indicate to the driver the function performed by each button, apply the labels in accordance with the supplementary equipment installed.

Additional equipment control keypad

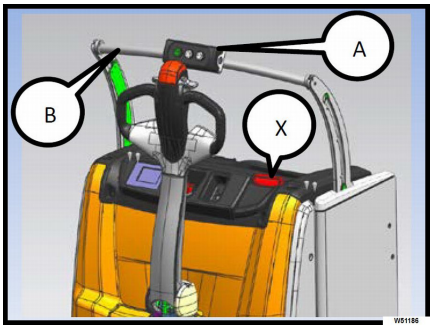

The specific commands for the additional hydraulic equipment are positioned on the keypad **(A)** fixed on the accessories mounting bar **(B)**. In case of emergency, press the relevant button **(X)**

The keypad (A) is available in four versions depending on the set-up requested by the customer:

- An auxiliary hydraulic line without clamp
- An auxiliary hydraulic line with clamp
- Two auxiliary hydraulic lines without clamp
- Two auxiliary hydraulic lines with clamp

Daily checks

- Before starting the shift, check that the keypad is operating correctly. Immediately advise your supervisors if the controls on the keypad are not operating correctly.

Operator position

- The keypad can only be used when the operator is on the tiller side. Use is not permitted in any other position.

Use of the keypad

- The keypad can only be used when the truck is stationary
- Danger of crushing hands! Do not place your hands or other parts of your body between the moving parts of the mast.

https://truckmanualshub.com/

- Standing alongside the mast or the forks is prohibited.
- You must not operate the controls without looking or without having an adequate and full view of the danger area around the truck and of the material to be handled.
- The truck must not be used by more than one person at once.

– The use of controls located on the keypad engages a safety system that locks all other truck functions (driving, lifting, lowering).

– During use, the display may show the following warning, which varies depending on the language set (the image relates to English):

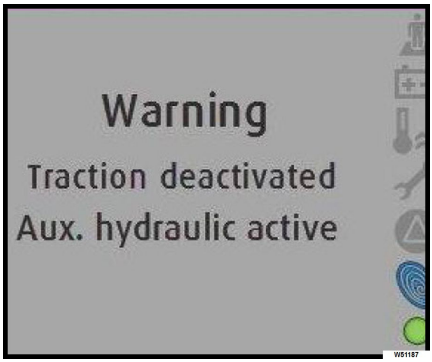

- "Trazione disattivata - Idraulica addizionale attiva"
- "Traction inactive - Hydraulique add. Active"
- "Traction deactivated - Aux. hydraulic active"
- "Antrieb inaktiv - Zusatzhydraulik aktiv"
- "Tracción desactivado - Hidráulica adicional activa"
- "Tractie uitgeschakeld - Aux. hydraulische actief"

Keypad for an auxiliary hydraulic line without clamp

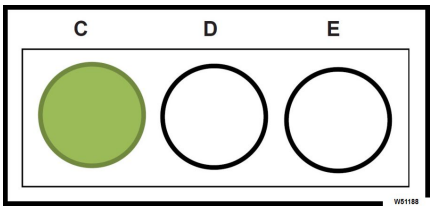

The keypad has three buttons:

- Consent button **C**, green
- Free button **D**, white
- Free button **E**, white
- Buttons **D** and **E** are intended for additional equipment for use by the customer, e.g. side shift or fork synchroniser

To activate one of the two commands **D** or **E**, hold down the green consent button **C** with one hand, and with the other hand press the required command **D** or **E**.

Keypad for an auxiliary hydraulic line with clamp

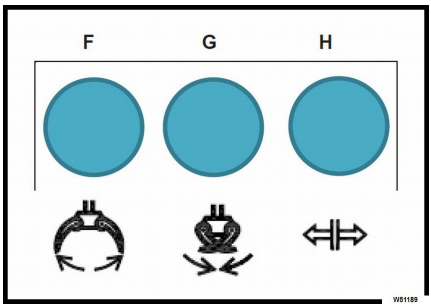

https://truckmanualshub.com/

The keypad has three buttons:

- Button to open the clamp **F**, blue
- Button to close the clamp **G**, blue
- Consent button **H**, blue

Opening the clamp

- To open the clamp, hold down the consent button **H** and with your other hand press the button **F**.

Closing the clamp

- To close the clamp, hold down the consent button **H** and with your other hand press the button **G**.

Keypad for two auxiliary hydraulic lines without clamp

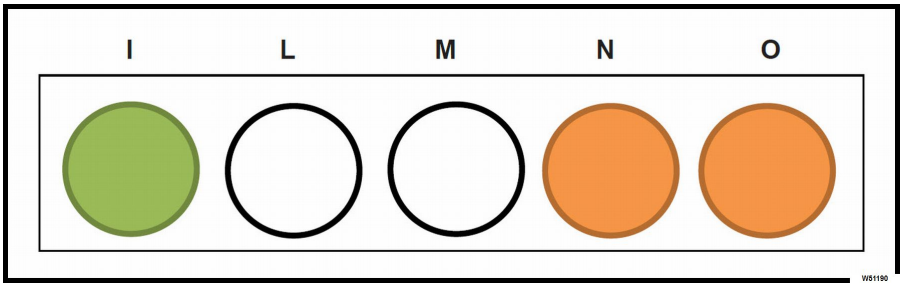

The keypad has five buttons:

- Consent button **I**, green
- Free button **L**, white
- Free button **M**, white
- Free button **N**, yellow
- Free button **O**, yellow
- Buttons **L**, **M**, **N** and **O** are intended for additional equipment, e.g. side shift or fork synchroniser

To activate one of the commands **L**, **M**, **N** or **O**, hold down the green consent button **I** with one hand, and with the other hand press the required command **L**, **M**, **N** or **O**.

Press commands **L**, **M**, **N**, **O** one at a time to avoid locking keypad operation. If the commands become locked, release all the buttons to restore correct operation of the keypad.

https://truckmanualshub.com/

Keypad for two auxiliary hydraulic lines and clamp

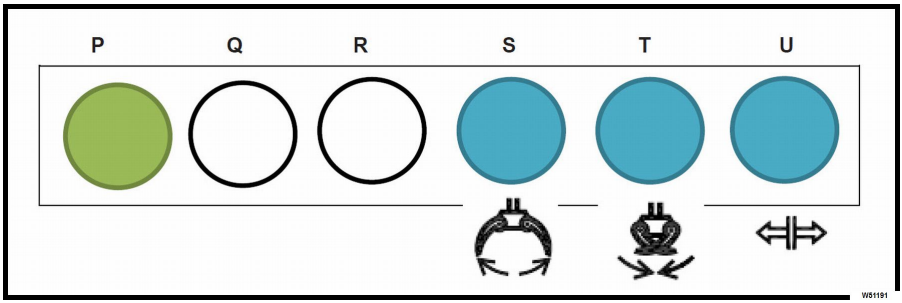

The keypad has six buttons:

- Button **P**, green on/off button To turn on the keypad press button **P**; the button lights up To turn off the keypad press button **P** again; the button turns off
- Free button **Q**, white
- Free button **R**, white
- Button to open the clamp **S**, blue
- Button to close the clamp **T**, blue
- Clamp consent button **U**, blue
- Buttons **Q** and **R** are intended for additional equipment, e.g. side shift or fork synchroniser.

To activate one of the two commands **Q** or **R**:

- Turn on the keypad using the button **P**
- Then press the required command **Q** or **R**

Use of clamp commands:

- Turn on the keypad using the button **P**
- To open the clamp, hold down the consent button **U** and with your other hand press the button **S**
- To close the clamp, hold down the consent button **U** and with your other hand, press the button **T**

Press the button **P** to turn it off, then turn off the truck. The keypad will not work if the button **P** is illuminated (lit) when the truck is started. To restore the correct operation of the keypad, press the button **P** to turn it off, then switch the truck off and on again using the key.

Observe the sequence of commands given above.

Not respecting the sequence of commands will lock the keypad functions

- With button **P** illuminated, if you press one of the two commands **Q** or **R** when the clamp consent button **U** is pressed, the keypad functions will lock.
- With button **P** illuminated, if you press one of the two commands **Q** or **R** and then press one of the buttons **S**, **T** or **U**, the keypad functions will lock.

To restore correct operation of the keypad, release all the buttons and press the button **P** to turn it off.

https://truckmanualshub.com/

4

Use

https://truckmanualshub.com/

Authorised and safe use

Intended use of the trucks

⚠ CAUTION

This machine is intended for the transport of loads packed on pallets or in industrial containers designed for this purpose, as well as for placing pallets into and removing pallets from stock.

The dimensions and capacity of the pallets or containers must be adapted to the load being transported to ensure stability.

The table of characteristics and performance attached to this user manual gives you some of the information you need to check that the equipment is suitable for the work being carried out.

Any specific usage must be authorised by the site manager; an analysis of the potential risks associated with this usage will enable him to put in place any necessary additional safety measures.

Safety instructions relating to use of the truck

Behaviour when driving

The operator must obey the same rules within the plant as on the road. The operator must drive at a speed appropriate for the driving conditions. For example, the operator should drive slowly around corners, when entering and travelling through narrow passageways, when driving through swing doors, at blind spots, or on uneven surfaces. The operator must always maintain a safe braking distance from vehicles and persons in front of him and must always have the truck under control. The operator must avoid sudden stops, making fast U-turns and overtaking other vehicles in potentially dangerous areas or areas with poor visibility.

⚠ WARNING

Driving the truck while sitting down is prohibited.

https://truckmanualshub.com/

Please remember the following:

- Drive the truck as described in the "Operator positions" section.
- The truck must not be used as a stepladder.
- The truck has not been designed to transport anyone other than the operator and must not be used for this purpose.
- The operator must always stay within the truck clearance.
- Stay in the safety area (working area defined by the manufacturer).

NOTE

Using a telephone or radio in the truck is permitted, but avoid using these devices when driving as they may distract you.

People in the danger area

Before starting the truck and while you are working, ensure that no one is in the danger area. If people are in danger, warn them well in advance. Stop working with the truck immediately if the people do not leave the danger area despite the warnings.

DANGER

Risk of injury! There is a risk of physical injury inside the danger area. Danger of death from falling loads!

Do not stand on the forks!

Standing or walking under the forks is strictly forbidden, even when they are not loaded!

Danger area

The danger area is the area in which people are in danger from the forklift truck movements, from its work equipment and from its load lifting devices (e.g. accessories) or from the load. The danger area also includes areas in which a load could fall or in which work equipment could lower or fall.

Traffic route conditions

The surface of traffic routes must be sufficiently level, clean and clear of objects. Drainage

https://truckmanualshub.com/

channels, railway crossings and other similar obstacles must be levelled and, if necessary, fitted with ramps so that the truck can cross without jolting.

There must be sufficient distance between the highest part of the truck or the load and the surrounding fixed installations. The height depends on the lift height and the dimensions of the load. Refer to the technical characteristics.

Regulations regarding the traffic routes and the manoeuvring areas

Only traffic routes authorised by the operator or his agent may be used. Traffic routes must be free of obstacles. Loads may only be unloaded and stored in places designed for this purpose. The operator or his agent must ensure that no unauthorised person approaches the working area.

Hazards

Hazards on the traffic routes must be signalled by standard road signs or possibly by additional warning notices.

https://truckmanualshub.com/

Transporting and lifting the truck

Transporting the truck

The forklift is normally transported by road and rail. If the forklift's dimensions exceed the max. clearance size allowed, it is transported disassembled. The sales network is in charge of the disassembly and reassembly operations. The forklift must be secured to the transport means during transport using appropriate restraint systems. Block the wheels with wedges to prevent even the slightest movement.

Transport

– Disconnect the battery connector.

Chocking the truck

– Secure the truck against rolling and sliding with chocks (1).

Lashing down the truck

– Attach the lashing ropes (2) to the mast.

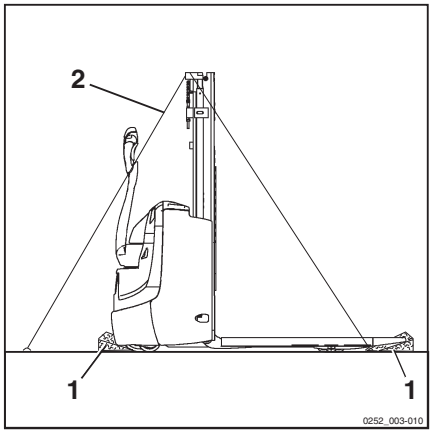

Climatic Conditions for Transport and Storage

The forklift must be protected from atmospheric agents during transport and storage.

https://truckmanualshub.com/

Loading and unloading the truck

To load and unload the truck, use a loading bridge or a lift (with a slope and structural strength compatible with the performance and weight of the truck as stated by the manufacturer, and that is suitably positioned and anchored). See the relevant section. Alternatively, a crane or a bridge crane may be used.

The truck must be suitably protected from the effects of the weather during transport and storage.

Lifting with a crane or a bridge crane ▷

⚠ CAUTION

Always switch off the ignition and disconnect the battery.

Never tie down or sling the truck by the tiller or other points not designed for this.

– Thread the rope sling through the special eyelet on the mast (designed for lifting the truck with its battery). The lifting capacity of the hook and the rope sling must be sufficient to bear the weight of the truck (with its battery). The position is indicated by a hook symbol

⚠ DANGER

Use a crane with a suitable lifting capacity for the weight of the truck, which is indicated on its data plate. Also take into account the weight of the battery fitted (if applicable), referring to the relevant identification plate. Lifting operations must be performed by qualified personnel. DO NOT stand within the crane's radius of action or near the truck. Do not stand in the danger area below suspended loads. Use NON-METALLIC slings. Use safety hooks. Make sure that the lifting capacity of the slings is suitable for the weight of the truck with its battery.

⚠ DANGER

The rope slings should have a suitable length so as to not graze the casings or any additional equipment during lifting. Use a lifting beam if necessary. The rope slings must be pulled vertically.

https://truckmanualshub.com/

Breaking-In

This type of forklift does not require special breaking-in operations.

https://truckmanualshub.com/

Checks and actions prior to commissioning

List of checks before use

⚠ WARNING

Damage or other faults on the truck or attachments (special equipment) can result in accidents.

If damage or other faults are noticed on the truck or attachments (special equipment) during the following checks, do not use the truck until it has been properly repaired. Do not remove or disable the safety systems and switches. Do not change the pre-set values.

⚠ CAUTION

Only use the truck if all of the covers are fitted correctly and the covers and doors are closed correctly.

⚠ CAUTION

Perform checks on a flat surface. Make sure that there are no people or objects in the test area in front of and/or behind the truck.

⚠ CAUTION

Drive very slowly during the operational tests.

⚠ CAUTION

Perform the braking checks in pedestrian mode (operated from the "ground").

Ensure that the vehicle is in good working condition prior to start-up. These checks supplement and do not replace the scheduled maintenance operations.

- Check that there are NO oil leaks in the area under the truck.
- Visually check the uncovered sections of hydraulic hoses and pipes to ensure that they are in good condition and to detect any oil leaks.
- Check that there are no objects (wires of various types, nails, screws, pieces of tape etc.) impeding the operation of the wheels and rollers. The wheels and the load rollers must roll freely.
- The wheels must not show any sign of damage or heavy wear. They must be correctly mounted.
- The roller tracks of the column must be coated in a visible film of grease.
- The chains must be undamaged and must be evenly and adequately tensioned.
- Check that the battery cover is fully and properly closed.
- Test that all of the hoods and protective guards are present and check that they are correctly mounted.
- The mast protective screen must be intact and correctly mounted.
- There must be no objects on the truck that may limit visibility.
- Check that NO stickers are missing or damaged. Replace damaged or missing stickers in compliance with the marking position table.
- Visually check that the forks or other load-carrying equipment show NO obvious damage (e.g. bends, cracks, significant wear).
- Check that the battery male connector and female connector are fully intact and in good condition. Check that they are working correctly.
- Check that the start/stop key works correctly.
- Check the indications on the display.
- Check that the horn works correctly.
- Check that the buttons and the control throttles on the tiller are working correctly.
- One at a time, push the buttons and then release them. Check that the buttons return automatically to their initial positions. The buttons should not remain activated or stuck.
- Turn the drive control throttle and then release it. Check that the throttle automatically returns to the initial position when it is released. The throttle must not remain activated or locked.
- Test that the truck brakes and stops when the throttle is released while driving.

https://truckmanualshub.com/

- Tilt the tiller, then release it. Check that the tiller automatically returns to the vertical position.
- Test that the truck brakes and stops when the tiller is released while driving.
- Check that the truck brakes and stops when the tiller is pushed all the way down while driving.
- Check that the emergency shutdown handle is operating correctly. Carry out the test when travelling towards the forks.
- Check that the anti-crush/operator anti-crush protective device is operating correctly.
- Check that the brake is operating correctly.
- Test that the electromagnetic brake works effectively.
- Check that the battery harness is in good condition.
- Check and test the battery electrolyte level and density as indicated in the battery instructions.
- The operator must be qualified to drive the truck. The operator must be able to reach the controls and operate them (especially the anti-crush protective device). Do not obstruct access to the controls.
- Check that the side protection panels are in good condition and are operating correctly (EXV-SF only).
- Visually check that the operator platform is in good condition and that it is operating correctly (EXV-SF only):

  - Climb onto the operator platform and turn on the truck.

  - Test that the truck goes into forwards/reverse travel using the control throttle.

  - Climb down from the step plate and visually check that the operator platform automatically moves to a rest position, tilted slightly upwards.

  - Stand to the side of the truck and make sure that the area in front of and behind the truck is clear.

  - Using a boom, tilt the tiller without turning and slightly rotate the control throttle towards the forks. Repeat the sequence, turning the throttle in the opposite direction. In both cases, test that the truck remains at a standstill. The truck must NOT move.

  - Push the platform upwards. Push the operator platform slightly to check that it automatically moves into a vertical, fully closed position. Caution: danger of crushing hands!

  - With the platform in a vertical position and the side panels open, check that the truck does NOT function!
- Check that the fork stop latches are in good condition, operating and positioned correctly (EXP only).
- Check that the fork stop latches are properly and completely closed (EXP only).
- Check that the forks are locked and cannot move accidentally (EXP only).
- Check for the presence and the correct positioning of the mechanical stop that prevents the unintentional extraction of forks (EXP only).

https://truckmanualshub.com/

Ergonomic dimensions

From the correct driving position, operators must be able to reach and operate all the controls in the truck and also the safety/emergency devices. Furthermore, they must have good visibility to ensure that loads are picked up correctly, as well as adequate control over the truck while driving.

Consequently, the truck has been designed in accordance with the EN ISO 3411 standard:

- Operator height (including shoes) between 1550 mm and 1905 mm.
- Operator weight between 51.9 kg and 114.1 kg.

Operators whose physical characteristics differ from those specified above may have difficulty using the truck correctly. Driving ergonomics may also be sub-optimal for these operators.

In any case, Directive 2009/104/EC of the European Parliament and of the Council states that "the employer shall take the measures necessary to ensure that the work equipment made available to workers in the undertaking or establishment is suitable for the work to be carried out or properly adapted for that purpose and may be used by workers without impairment to their safety or health".

"In selecting the work equipment which he proposes to use, the employer shall pay attention to the specific working conditions and characteristics and to the hazards which exist in the undertaking or establishment, in particular at the workplace, for the safety and health of the workers, and any additional hazards posed by the use of the work equipment in question".

⚠ WARNING

Trucks with a protective roof (optional): Risk of head injuries.

There must be sufficient space for the tallest operator not to hit their head on the bottom part of the roof.

https://truckmanualshub.com/

Operator position

Operator's position for version without platform

The driving position is in pedestrian version (driving on "the ground"). The operator should drive the truck using the driving and lifting controls located on the helm head.

⚠ DANGER

All other positions should be considered incorrect and dangerous.

⚠ DANGER

Sitting on the truck is strictly prohibited.

⚠ DANGER

Risk of feet being crushed.

Ensure that your feet are sufficiently far away from the truck chassis.

– Recommended position for pick-up and deposit of the load. ▷

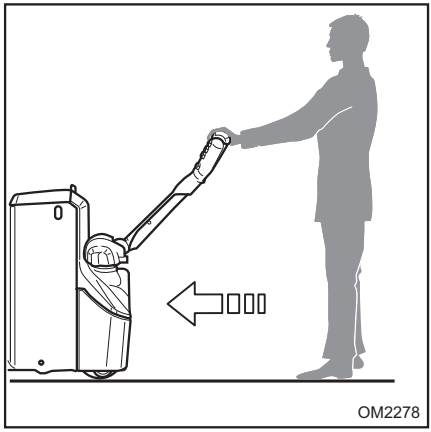

https://truckmanualshub.com/

Operator position

– Recommended position when in gear (preferential gear) ▷

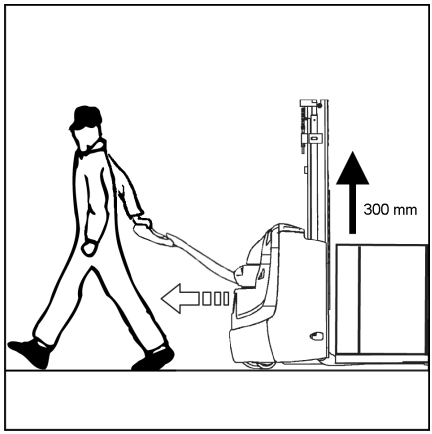

https://truckmanualshub.com/

Operator position for version with platform

There are two driving positions:

- Pedestrian mode driving position — "operated from the ground"
- Ride on mode driving position

Pedestrian mode driving position — "operated from the ground"

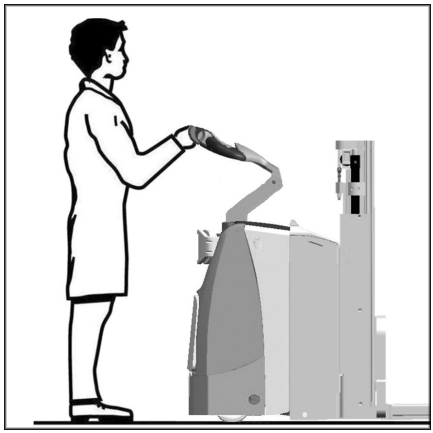

The operator should drive the truck using the driving and lifting controls located on the tiller head.

In this configuration:

- The operator side protection panels are closed completely
- The platform is closed completely
- With standard tiller or combi tiller closed, the maximum speed of travel is limited for safety reasons.
- With combi tiller open, the maximum authorised speed is slightly higher, as the operator moves the truck from a greater safety distance.

⚠ CAUTION

The truck may only be operated in pedestrian mode if the side protection and the side panels are fully closed.

Otherwise the truck will not start.

⚠ CAUTION

Risk of feet being crushed.

Ensure that your feet are placed far enough away from the truck chassis.

⚠ CAUTION

Sitting on the truck is strictly prohibited.

https://truckmanualshub.com/

Ride on mode driving position

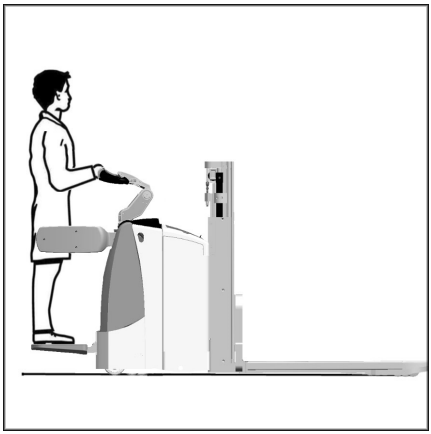

The operator should drive the truck using the driving and lifting controls located on the tiller head.

In this configuration:

- The platform must be fully open
- With the side protection closed, the maximum speed of travel is limited for safety reasons.
- With the side protection open, the maximum authorised speed is slightly higher, as the operator is driving in a safer situation, restrained by the side protection.

⚠ CAUTION

The truck may be operated in ride on mode with the side protection either open or closed.

⚠ CAUTION

In ride on mode, opening the combi tiller is prohibited.

If the clasp to close the tiller is not shut properly, the truck will not start.

⚠ DANGER

Risk of falling from the platform.

Position yourself correctly on the platform between the two operator side protection panels.

Turn corners at low speed.

While driving, firmly grip the handle on the tiller head with your hands.

⚠ DANGER

Do not sit down and do not climb on the side protection panels

https://truckmanualshub.com/

Using the truck

Stopping the truck in emergencies

In an emergency, the power supply to all functions on the truck can be shut down.

– Press the emergency shutdown handle. This blocks all of the truck functions, so the truck will brake and stop.

– Before restoring operating conditions, eliminate the causes of the emergency.

– Release the tiller to the rest position.

– To restart the truck, pull the emergency shutdown handle by lifting it.

⚠ CAUTION

This protective device must be used only in emergencies; the repeated use of this device may cause problems with the electronic equipment or breakdowns.

▷

Starting the truck

Carry out all of the daily checks to be performed by the operator.

Pull the emergency shutdown handle.

Put the tiller in the vertical position.

To start the truck, turn the ignition key. If the truck has a numeric keypad rather than a key, insert the appropriate PIN code.

Check the battery charge status on the indicator and replace or charge the battery if necessary.

https://truckmanualshub.com/

Truck travel

Pedestrian drive mode version (operated from the "ground")

- Grip the tiller head correctly
- Tilt the tiller to the working position
- Select the desired direction of movement using the throttle; the truck speed is proportional to the angular position of the throttle
- Reduce the angle of rotation of the throttle compared to the neutral position to brake the truck electrically.

⚠ CAUTION

If there are difficulties starting the truck, do not persist but look for the cause.

Ride-on drive mode version (only for version with platform)

- Grip the tiller head correctly
- Manually open the platform
- Manually open the operator protective guards
- Mount the platform
- Tilt the tiller to the working position
- Select the desired direction of movement using the throttle; the truck speed is proportional to the angular position of the throttle
- Reduce the angle of rotation of the throttle compared to the neutral position to brake the truck electrically.

⚠ CAUTION

If there are difficulties starting the truck, do not persist but look for the cause.

⚠ CAUTION

Keep both feet inside the platform

https://truckmanualshub.com/

Truck steering direction

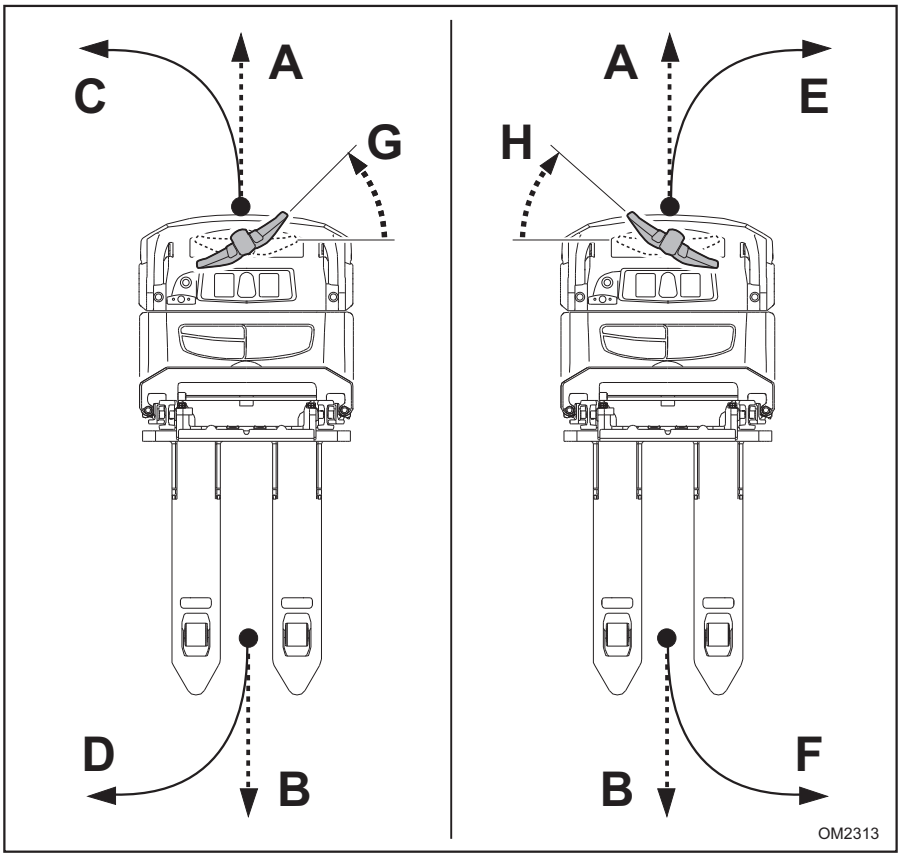

Use the tiller to steer during travel.

- When the tiller is turned anti-clockwise (G) while travelling towards (A), the truck steers towards (C)
- When the tiller is turned anti-clockwise (G) while travelling towards (B), the truck steers towards (D)
- When the tiller is turned clockwise (H) while travelling towards (A), the truck steers towards (E)
- When the tiller is turned clockwise (H) while travelling towards (B), the truck steers towards (F)

https://truckmanualshub.com/

Using the truck with the "Tiller always active — Creep Speed" function (optional)

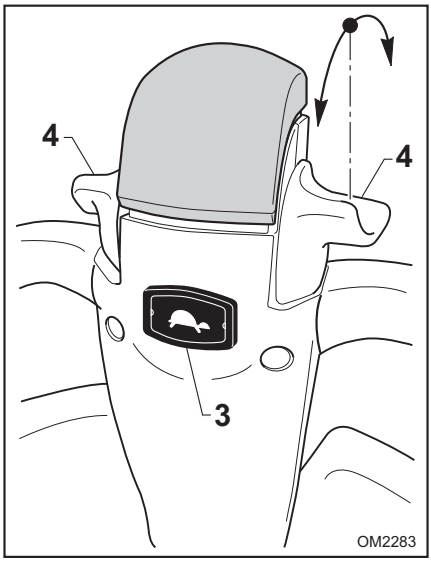

The "tiller always active" function can be enabled when operating the truck in confined spaces.

This function allows the truck to travel and the forks to be lifted with the tiller in any position. Unlike the standard version, by following the instructions below, the truck functions (travel and lifting/lowering of forks) are also active with the tiller in the vertical position.

To enable truck lifting with the tiller in the vertical position:

- Press and hold the button (3)
- Then press the fork lifting button
- Release the button (3) to disable this function.

To enable travel with the tiller in the vertical position:

- Press and hold the button (3)
- Then turn the throttle (4) in the desired direction
- The truck activates creep speed. During travel at creep speed with the tiller in the vertical position and the button (3) pressed, if the operator tilts the tiller to the working position (see ⇒Chapter "Tiller positions", Page 43), creep speed is disabled and the speed of travel of the truck increases in line with the angle of the throttle (4).
- Release the button (3) to disable this function.

NOTE

If the activation sequence is accidentally reversed, i.e. with the tiller in the vertical position, the throttle (4) is turned first and then the button (3) is pressed:

- The truck will move in creep speed as expected in the direction of the forks
- Travel in the direction of the operator is not enabled.

https://truckmanualshub.com/

Reversing the direction of travel

Reverse direction without a load on the forks

- To reverse direction when travelling without a load on the forks, turn the drive control throttle in the opposite direction to the direction of travel. The truck will stop with energetic but gradual braking and will start to move again in the opposite direction.

Reverse direction with a load on the forks

- To reverse direction with a load on the forks, put the drive control throttle in the neutral position and wait for the truck to stop.
- Then turn the drive control throttle in the opposite direction of travel to the previous one.

⚠ CAUTION

The operator must regulate the travel control by adapting truck braking to the type of load being carried in order to avoid losing the load.

Truck brake systems

⚠ WARNING

The condition of the floor surface considerably affects the braking distance of the truck.

The operator must consider this factor while driving.

While driving, braking can be performed in the following ways:

- By turning the travel controls, which allows two different types of braking

  For more gradual deceleration, the operator can manually reduce the angle of rotation of the travel controls compared to the neutral position (service braking).

  For more rapid deceleration, the operator can turn the travel control beyond the neutral position in the opposite direction to the direction of travel.
- Braking using the tiller (service braking)

Braking using the travel controls

Description of decelerating and stopping the truck by manually reducing the angle of rotation of the travel controls compared to the neutral position (service braking)

- While holding the tiller head firmly at the designated points, reduce the angle of rotation (applies to both forward travel and reverse travel) of the travel controls compared to the neutral position. This will gradually reduce the travel speed of the truck. The truck will come to a stop (zero speed) when the travel control is put in the neutral position

Description of braking achieved by turning the travel control beyond the neutral position in the opposite direction to the direction of travel

- When driving the truck, turn the travel control beyond the neutral position in the opposite direction to the truck's direction of travel. The truck will decelerate more forcefully but will come to a gradual stop. When the truck stops (zero speed), put the travel control in the neutral position. Caution: If you do not put the travel control in the neutral position, the truck will resume travel in the opposite direction. For more information, see also the section ⇒Chapter "Reversing the direction of travel", Page 99

https://truckmanualshub.com/

⚠ CAUTION

Risk of load tipping. Do not use braking by reversing when driving **with** a load on the forks.

⚠ CAUTION

The operator must regulate the travel control by adapting truck braking to the type of load being carried in order to avoid losing the load.

⚠ WARNING

To ensure an adequate level of safety when driving the truck, the travel controls must be operated and/or turned manually during both the acceleration phase and the deceleration phase, and when stopping the truck.

The automatic return of the travel controls to the neutral position is not to be considered as a feature of normal driving for the truck. The automatic return of the travel controls is only to ensure that they return to the neutral position in any situation where unintentional operations that fall outside of the truck's proper and intended use may occur.

Braking using the tiller (service braking)

Braking using the tiller can be performed in the following ways:

- During travel, push the tiller to the upper end position. The truck will decelerate very sharply to a stop.
- During travel, push the tiller to the lower end position. The truck will decelerate very sharply to a stop.
- During travel, release the tiller. The tiller will automatically return to the upper end position. The truck will decelerate very sharply to a stop.

⚠ WARNING

The condition of the floor surface considerably affects the braking distance of the truck.

The operator must consider this factor while driving.

⚠ CAUTION

In dangerous situations, always brake using the service brake.

To activate the service brakes, always push the tiller as far as it will go.

Parking brake

- When the traction control throttle is released, the truck stops using the electromagnetic brake when its speed approaches 0 km/h or when the tiller returns to the vertical position

Parking and stopping the truck

- Parking in pre-arranged and designated areas.
- Lower the forks to the ground.
- Release the tiller to activate the parking brake.
- For the version with platform, close the platform and the operator's protective devices.
- Switch off the truck: by turning the key to position " 0" and remove the key from the panel or alternatively, if there is one, switch

https://truckmanualshub.com/

off the truck by means of the numeric keypad (Digicode),

⚠ DANGER

Park the truck in such a way as not to obstruct passageways and/or render unusable the emergency equipment (e.g. , fire extinguishers and fire hydrants).

https://truckmanualshub.com/

Forklift Use in Cold-Storage Rooms.

A truck specifically equipped for cold-storage rooms must be used when working at **temperatures below +5°C**.

A truck equipped for working in cold climates and cold-storage rooms may be used:

- Up to -5°C for **continuous service**
- From -5°C to -32°C for **non-continuous service**

⚠ CAUTION

The truck must always be switched off and parked outside the cold area/cold-storage room.

⚠ CAUTION

If the truck has been working in environments at temperatures below -5°C and it is taken outside the cold-storage room, let it stand either for a sufficiently long time to allow any condensation to evaporate (at least 30 minutes) or a sufficiently short time to prevent the formation of any condensation (less than 10 minutes).

Avoid the formation of ice on the truck!

⚠ CAUTION

Never enter the cold-storage room when condensation has formed on the truck!

https://truckmanualshub.com/

Moving the load

Safety guidelines for handling loads

⚠ WARNING

Closely observe the following instructions before picking up loads. Never touch or stand on moving parts of the truck (e.g. lifting devices, equipment or devices for picking up loads).

⚠ WARNING

Risk of crushing hands and feet when using the lift.

When using the lift, keep hands and feet away from moving parts.

⚠ DANGER

It is not permitted to go under the forks. It is not permitted to transport or lift people on the forks.

If there are people under or on top of the forks, do not move the truck. Do not move the forks and do not drive the truck.

⚠ DANGER

Risk of accident when forks are changed:

If the forks are changed and a different type of forks to the original forks is fitted, the residual load capacity changes.

When forks are changed, a new residual capacity plate must be affixed.

If a truck is supplied without forks, the residual capacity plate for standard forks is affixed (see chapter 6 "Technical Data").

⚠ DANGER

Wear protective footwear. Always keep a suitable distance between your feet and the truck.

Risk of crushing feet when manoeuvring the truck.

⚠ CAUTION

The transport of persons or passengers is strictly prohibited.

⚠ CAUTION

Driving or turning with the forks raised above approximately 300 mm from the ground is prohibited.

It is only allowed at reduced speed when depositing a load and/or picking up a load from shelving.

–

⚠ CAUTION

Pallet condition

Insert the forks into the pallets from the correct side, i.e. the open side, as shown in the illustration (insertion from all sides permitted only with the EXP model).

Ensure that the pallet is in good condition before commencing any operation.

https://truckmanualshub.com/

–

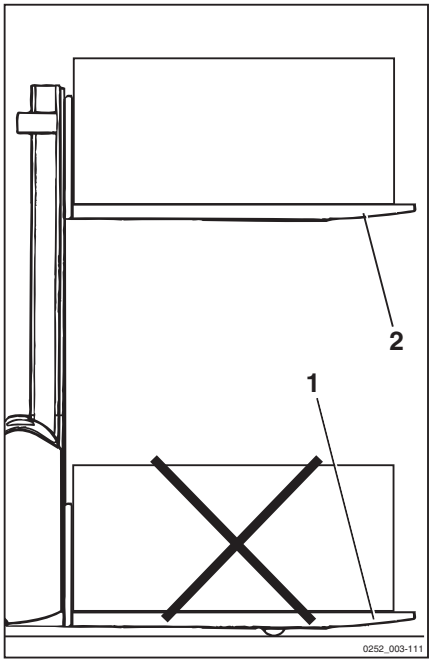

⚠ CAUTION

It is not permitted to transport loads on the straddles (1).

Loads may only be transported on the forks (2).

Carrying loads on the straddles is only permitted for the EXV-D range of trucks, which are designed to perform the double pallet stacker function. ⇒ Chapter "Additional designation plate for the double pallet stacker version (EXV-D)", Page 60

⚠ DANGER

Before picking up the load, make sure that its dimensions and weight fall within the truck specifications, as indicated in the "TECHNICAL DATA" chapter.

⚠ DANGER

The loads must be arranged so that they cannot slip or overturn and fall to the ground. In order to guarantee load stability, make sure that the load is balanced and centred on the forks.

⚠ DANGER

Standing or walking under the raised load is strictly prohibited. Make sure that nobody stands under the raised load and in the truck's area of operation.

⚠ CAUTION

Do not touch nearby loads or loads beside or in front of the load being handled

Arrange loads with a small space between them to prevent them coming into contact with one another.

⚠ DANGER

Never leave the truck with the forks raised whether loaded or not.

⚠ WARNING

When lifting the load pay attention to the dimensions of the column and the load.

Do not strike the ceiling, the shelving, loads or other objects in the vicinity during collection operations.

⚠ CAUTION

Risk of loss of stability.

When removing the load from the shelf, do not use the initial lift control (if the truck has one) in order to maintain maximum stability and avoid any risk of tipping the truck. This operation is prohibited both when picking up and when depositing the load on the shelf.

NOTE

Further information on the general rules of truck use and taking up and depositing loads is provided in the "Safety Regulations for Industrial Forklift Use" manual attached to this manual.

https://truckmanualshub.com/

Checks to be carried out before lifting a load ▷

⚠ WARNING

Never exceed the capacity of the truck. This capacity is based on the centre of gravity and the lift height of the load.

Comply strictly with the load diagram! It is not permitted to increase the capacity by adding extra weight to the truck. Never exceed the maximum loads shown! Otherwise, the stability of the truck can no longer be guaranteed.

Transporting people in order to increase the capacity of the truck is prohibited.

.

Example	
Weight of load to be lifted:	1200 kg (3)
Distance between the load centre of gravity/ fork carriage:	600 mm (1)
Permissible lift height:	2600 mm (2)

⚠ WARNING

The illustrations are only examples.

Only the values stated on your truck's plate should be taken into consideration.

⚠ WARNING

If small items are being transported or if the load exceeds the height of the fork carriage, a load protective guard must be installed to prevent the items from falling on the operator.

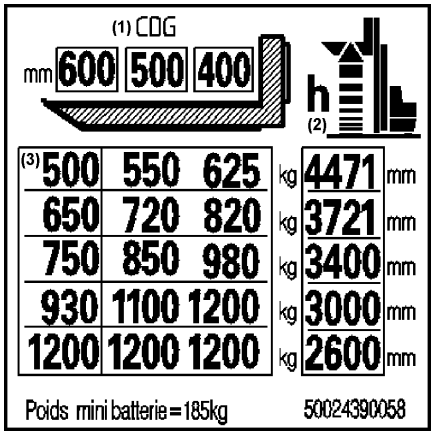

(1) CDG = distance "C" from the centre of gravity of the load on the forks to the fork carriage (in mm)
(2) h = lift height of the forks from the ground (in mm)
(3) Maximum permissible loads "Q" (in kg)

https://truckmanualshub.com/

Adjusting the fork distance (if present)

- Raise the locking lever (1), or raise and rotate the knob (2) by 180° depending on the type of lock, (1) or (2), installed on the forks. ▷
- Move the fork arms (3) in relation to the dimensions of the load to be lifted.
- Lock the forks in position again by moving the lever (1) or knob (2) in the opposite direction and ensuring that the forks are locked in one of the notches on the fork carriage rail.

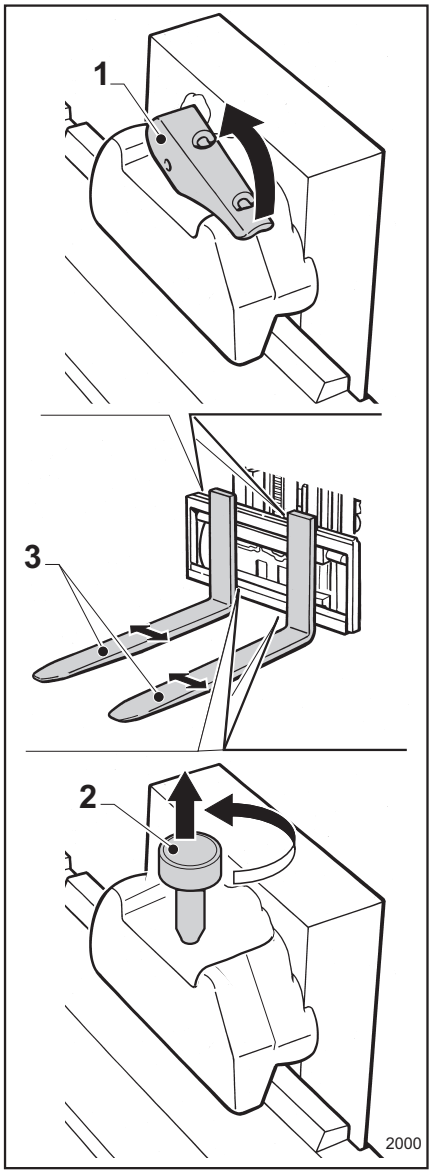

https://truckmanualshub.com/

Automatic speed reduction with forks raised above the safety sensors

As indicated in the safety devices chapter, (see ⇒Chapter "Location of safety devices", Page 23), the truck is equipped with:

- 500-mm sensor Automatic speed reduction with forks raised approximately 500 mm above the ground.
- 1700-mm sensor Automatic reduction of driving speed with forks raised approximately 1700 mm above the ground.

NOTE

Automatic reduction of the truck driving speed remains active if the forks are lowered below the sensor height (500 mm and 1700 mm) during travel (drive throttle turned).

In this case, to eliminate automatic driving speed reduction, fully release the drive throttle after lowering the forks below the sensor height (500 mm and 1700 mm). At this point, if the throttle is turned again the truck will continue without the previous automatic speed reduction.

Picking up the load

Load pick up from the ground

– Approach the load with caution and with as much precision as possible.

– Lower the forks and the straddles so that they can easily be inserted into the pallet.

– Slowly insert the forks at the centre of the load to be lifted.

⚠ CAUTION

Insert the fork without bumping into either the shelving or the load.

– Insert the forks as far as possible below the load. If possible, the forks should be inserted far enough in that the load is resting

https://truckmanualshub.com/

against the fork carriage. The load centre of gravity must be centred between the forks.

⚠ DANGER

Pay attention to the part of the forks protruding from the load to be lifted.

Do not strike the wall, the shelving or other loads and/or objects behind the load to be picked up.

– Lift the load a few centimetres from the ground and read the "Transporting loads" section.

Load pick up from shelving.

– Approach the shelving at moderate speed. Use the drive control throttles to gradually slow down and stop the truck perpendicular to the shelving with the tiller in the braking position.

– Check that there is sufficient space between the forks and the shelving.

▷

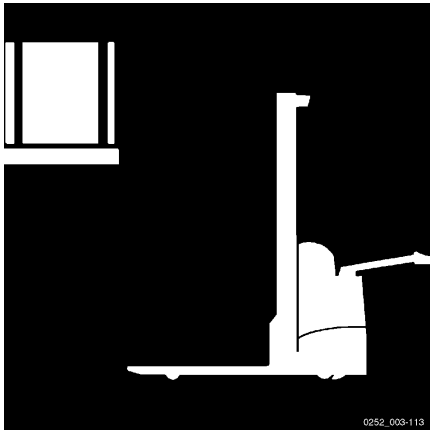

– Raise the forks until you reach the correct fork insertion height.

– Move the truck slowly forwards to insert the forks into the load.

▷

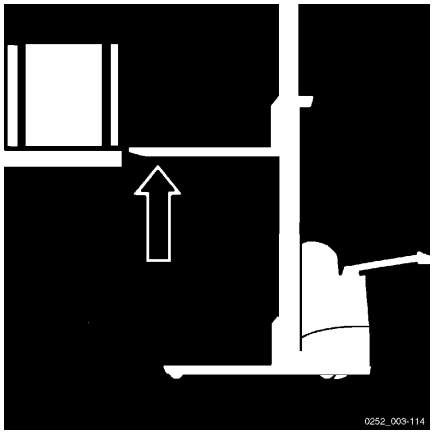

⚠ CAUTION

Insert the fork without bumping into either the shelving or the load.

https://truckmanualshub.com/

– Insert the forks as far as possible below the load. If possible, the forks should be inserted far enough in that the load is resting against the fork carriage. The load centre of gravity must be centred between the forks. ▷

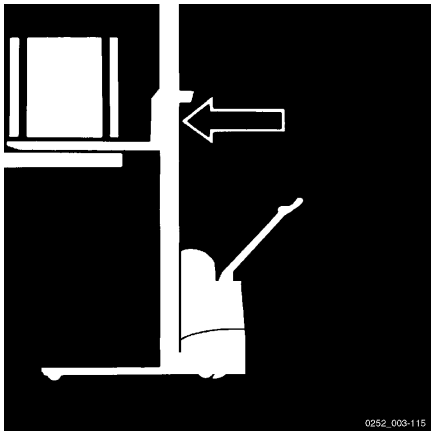

⚠ DANGER

Pay attention to the part of the forks protruding from the load to be lifted.

Do not strike the wall, the shelving or other loads and/or objects behind the load to be picked up.

– Raise the load a few centimetres until it is resting fully on the forks. If the load is stable and secure on the forks, proceed with the following steps. In the event of uncertainty and/or a load that is not properly secure or stable, lower the forks and place the load back on the shelving.

– Put the tiller in the driving position. Look behind to check that the way is clear. Turn the throttle in the direction of travel towards the operator and drive very slowly and carefully in a straight line away from the shelves. Brake gradually. ▷

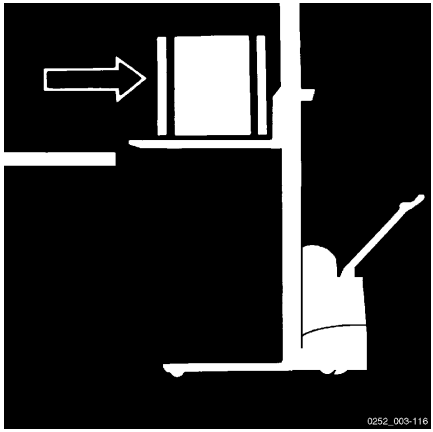

– Check that there is sufficient space between the forks and the shelving.

https://truckmanualshub.com/

– Lower the load to the transport position, approximately 300 mm from the ground, and read the "Transporting loads" section. ▷

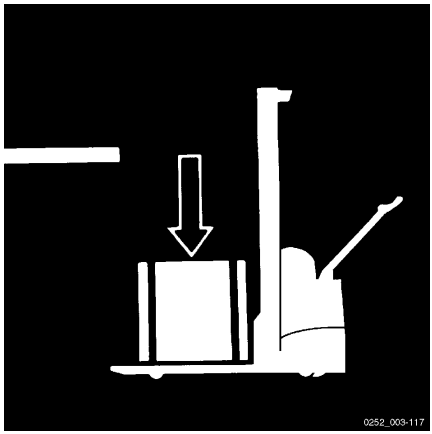

https://truckmanualshub.com/

Transporting loads ▷

As a general rule, loads must be transported one by one (e.g. pallets). Transporting several loads at once is only authorised:

- If the safety requirements are met
- On the orders of the supervisor in charge

The operator must ensure that the load is properly packaged. The operator can only move loads that have been properly packaged and are safe and secure.

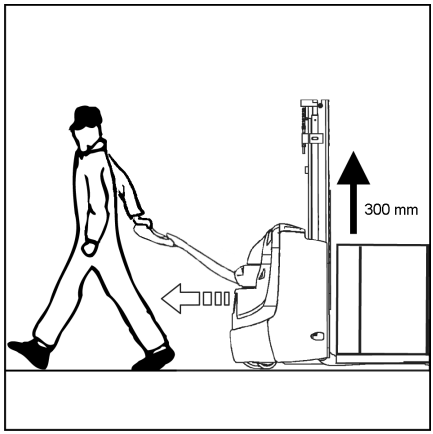

⚠ WARNING

Always drive forwards for optimum visibility.

– Only travel in the direction of the forks when depositing a load, as visibility in this direction is restricted.

If the load height or dimensions are likely to obstruct the operator's view, a second person on foot must assist with manoeuvres in order to warn the driver of any obstacles. In this case, driving is only authorised at walking speed and with the greatest care. Stop the truck immediately if you lose contact with the person accompanying you.

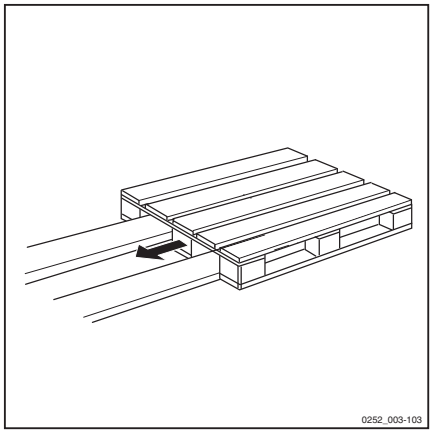

⚠ DANGER

Lower or raise the load until there is sufficient ground clearance (approximately 300 mm).

Never transport loads with forks raised to greater heights as the truck and the load being carried may become unstable.

Do not allow the load, the pallets or the container to trail along the floor.

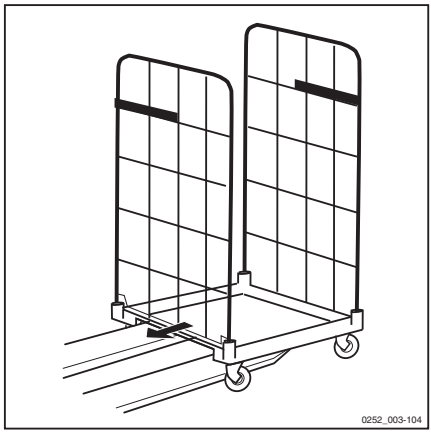

⚠ DANGER

When travelling and transporting the load, be aware of the side clearance of the load, particularly when cornering.

Avoid hitting shelving and objects in your path.

https://truckmanualshub.com/

⚠ DANGER

Danger of load tipping over

Avoid sudden starts and stops.

Approach corners slowly and carefully.

Depositing a load on the ground

- Approach the load deposit area.
- Lower the fork arms until the load is deposited in the required area, then free the forks from any contact with the pallet or container.
- Look behind you before backing up the truck
- Check that the truck's path is free of any objects, people and obstacles of any type
- Look behind you and proceed very slowly to fully extract the forks from the load

⚠ DANGER

Risk of injury and crushing for the operator! Risk of damage to the truck and the goods

During the entire load placement operation, be careful not to hit any obstacles. You must maintain an adequate safety distance from obstacles (e.g. other pallets, protruding objects, shelving etc.).

⚠ DANGER

Never leave the truck with the forks raised, whether loaded or not.

https://truckmanualshub.com/

Driving on slopes

Instructions

Before approaching a slope with the truck, the operator must check and verify the following:

- When driving the truck up or down slopes, you must not exceed the values indicated for slopes in the "Technical data" paragraph. The reported values represent the maximum theoretical slope that the truck can handle with and without a load. The operator must keep in mind that the actual values could be lower depending on the wear on the truck or its parts, the shape of the slope's edges and the traction between the truck's wheels and the surface of the slope
- The surface of the uphill or downhill slope is clear of objects and sufficiently lit
- The surface of the uphill or downhill slope must not be slippery; it must provide adequate grip for the truck. Consider the ambient conditions
- The operator must ensure that the load or parts of the truck do not come into contact with the ground at the upper and lower ends of the slope

⚠ WARNING

Risk of tipping and accident

Reduce speed and drive slowly and carefully on uphill and downhill slopes.

⚠ DANGER

Risk of tipping

When driving up or down slopes, do not turn, reverse and/or travel diagonally.

⚠ WARNING

When travelling on a slope with a load on the forks, the load on the forks must be facing uphill.

⚠ DANGER

Risk of accident and falling

Keep the truck at the required safety distance from the edges of uphill and downhill slopes.

⚠ CAUTION

In certain cases, driving with the forks pointing towards the top of the slope is permitted, even if the truck is not loaded.

In these cases, drive with the utmost care and avoid turning until all of the wheels are on a flat surface.

⚠ DANGER

Risk of accident

Do not park on a slope. If, in an emergency, you have to do so, apply the parking brake and block the wheels with wheel chocks.

Using the truck on a lift

Using the truck on lifts is only allowed if the lift has sufficient capacity (check the maximum weight of the truck including the traction battery), and only with appropriate authorisation.

Slowly drive the truck onto the lift load-first.

Secure the truck in the lift so that no part of the truck comes into contact with the walls of the lift. A minimum distance of 100 mm from the walls of the lift must always be observed.

⚠ WARNING

The truck must be correctly immobilised so that it cannot move inadvertently.

⚠ CAUTION

Personnel accompanying the truck onto the lift may only enter the lift once the truck is secure, and they must exit the lift first after transit.

https://truckmanualshub.com/

Using the truck on the loading bridge and inside a container

⚠ DANGER

Risk of accident

Before driving on to a loading bridge, the operator must check that the bridge has been properly assembled and secured, and that it has sufficient load capacity.

You must drive onto the loading bridge slowly and carefully.

The operator must check that the vehicle to be loaded or unloaded is sufficiently secure so that it will not move and that it is suitable to support the stress created by the truck.

The lorry driver and the forklift operator must agree on the time of departure of the lorry.

Towing trailers

The forklift is not qualified to tow trailers.

https://truckmanualshub.com/

Charging the battery

Internal accessibility

Opening the battery cover

– To access the battery and respective plug/ outlet, raise the battery compartment cover using the appropriate handle. ▷

– If you need to recharge the battery, disconnect the battery plug and socket by means of the appropriate handle. ▷

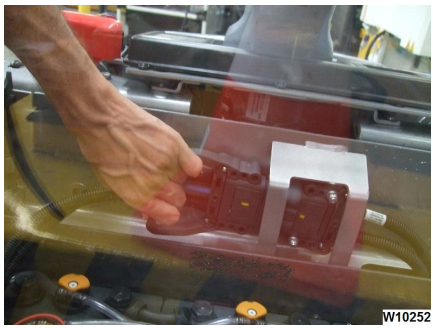

Closing the battery cover

– Close the battery cover.

⚠ WARNING

Danger of crushing.

Be sure not to leave anything between the battery cover and the edge of the chassis when closing the cover.

⚠ DANGER

It is absolutely forbidden to use the truck with the covers open.

In order to use the truck, the covers for access to the inner parts must be closed and secured properly.

https://truckmanualshub.com/

⚠ DANGER

Before accessing the inner parts of the truck, carefully follow the instructions given in Chapter 5, entitled "Maintenance".

Access to the inner parts of the truck by personnel not authorised by the manufacturer is forbidden.

https://truckmanualshub.com/

Charging the lead battery

⚠ CAUTION

Charge the battery with the truck turned off and the battery hood open.

You can only remove the plug from the socket when the truck is switched off.

⚠ DANGER

The battery must be charged in rooms that comply with applicable regulations. Refer to the battery and battery charger manuals to see the charging procedures, level checks etc., checking the battery type (gel, lead etc.) and making sure of the voltage and current delivered. Excessive currents can damage the battery and cause dangerous situations. As regards safety precautions, follow the instructions given in the battery manual and those included in the "Safety guidelines" of this manual. Before recharging, the battery cables and the battery charger cables must be checked for damage and replaced if necessary. Do not place objects on the battery during charging.

- Access the upper part of the battery, open the battery hood and hold the hood open.
- Connect the battery outlet to the battery charger to begin charging
- Turn on the external battery charger
- After the battery charging operation is completed, switch off the battery charger
- Unplug the battery charger
- Plug the battery in again
- Close the battery hood

NOTE

Refer to the battery operating instructions for more information.

Charging curve selector (only with on-board battery charger)

▷

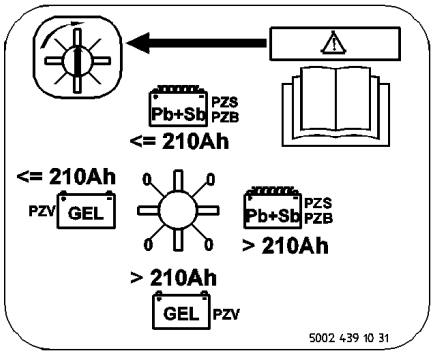

The curve is selected using the selector located on the front face of the charger. The curve selector is protected by a cap.

⚠ CAUTION

Risk of premature damage to the battery!

It is essential to select the correct type of battery on the selector.

The four thin lines indicate neutral positions. The charger does not flow and the two LEDs flash simultaneously to indicate that no curve has been selected.

The four thick lines indicate the four charging curves:

- open lead-acid battery with a capacity below 210 Ah,
- open lead-acid battery with a capacity greater than 210 Ah,

https://truckmanualshub.com/

- gel battery with a capacity below 210 Ah,
- gel battery with a capacity greater than 210 Ah.

Recharging the battery using the on-board battery charger (optional)

⚠ CAUTION

Charge the battery with the engine switched off and the start key removed.

⚠ DANGER

The battery must be charged in rooms that comply with applicable regulations. Refer to the battery and battery charger manual for the charging procedures, level checks etc., checking the type of battery (gel, lead etc.) and the voltage and current delivered. Excessive currents can damage batteries and cause dangerous situations. As regards safety precautions, follow the instructions given in the battery manual and those included in the "Safety Guidelines "of this manual.

⚠ DANGER

If the truck is fitted with an on-board battery charger, it is strictly prohibited to connect the battery to an external battery charger.

⚠ CAUTION

Make sure that the mains supply voltage complies with the battery charger's operating voltage.

⚠ DANGER

The electrical system must comply with the current national regulations.

Battery type

Trucks can be fitted with different types of battery. Observe the instructions on your battery type plate, as well as the specifications defined in the chapter "Technical data".

https://truckmanualshub.com/

⚠ WARNING

The weight and size of the battery influence the stability of the truck.

The new battery must comply with the weight shown on the truck identification plate. Install the battery precisely and in accordance with technical regulations.

⚠ CAUTION

Be careful not to damage any wiring when replacing the battery.

Preparation

Maintenance personnel

The battery may only be changed by specially trained personnel, in accordance with the manufacturer's instructions for the battery, the battery charger and the truck. The maintenance instructions for the battery must be observed.

Fire prevention measures

⚠ WARNING

Do not smoke or use a naked flame when handling batteries. In the area designated for parking the truck to recharge the battery or battery charger, there should be no flammable materials or substances that can cause sparks within a radius of at least 2 metres. The charging area must be well ventilated. Keep a fire extinguisher at hand.

Safe parking

Park the truck securely before carrying out work on the battery. The truck can only be operated when the battery cover is closed and the battery outlet is inserted. If the truck is enabled for side removal of the battery, the truck can only be operated once the battery is fixed in place properly using the battery locking system.

https://truckmanualshub.com/

Servicing the battery

The lids of the battery cells must be kept dry and clean. Any leakage of battery acid must be neutralised immediately. Terminals and soldering lugs must be clean and lightly greased with pole grease.

https://truckmanualshub.com/

5

Maintenance

https://truckmanualshub.com/

General Information

To keep your forklift in good condition, carry out the servicing indicated regularly, within the times indicated and using the consumption materials provided for that purpose, as specified on the following pages. Please make sure that you keep a record of work done; this is the only way for the guarantee to remain valid.

Maintenance is divided into:

- Regular Service (scheduled by the user)
- Planned maintenance (to be performed by the service network authorised by the manufacturer)

DANGER

Planned maintenance and repairs must be performed by the service network authorised by the manufacturer in order to keep the machine in perfect condition and compliant with technical specifications.

NOTE

Contact the authorised service network for a maintenance contract appropriate to your forklift.

CAUTION

Maintenance intervals are defined for standard use. In the following cases, it is necessary to reduce the interval between the various scheduled maintenance operations: in the event of use in dusty or salty environments, extremely high or low ambient temperatures, high levels of air humidity, particularly intense and heavy-duty uses, and specific national regulations for trucks or individual components.

https://truckmanualshub.com/

Preliminary maintenance operations

Do the following before performing maintenance operations:

- Position the truck on a flat surface and make sure that it cannot move accidentally
- Fully lower the forks
- Switch off the truck

⚠ DANGER

Before performing any intervention on the electrical system, disconnect the battery outlet from the relative plug.

https://truckmanualshub.com/

Scheduled maintenance

Summary table of maintenance operations

Servicing work every 1000 hours
Transmission
Reduction gear unit: visually check the mounting
Reduction gear unit: check for any leakage
Traction motor: visually check the mounting
Traction motor: clean the cooling fins
Chassis, bodywork and fittings
Battery hood: check
Battery support: check the side stops and their mountings
Battery support (side access): check the battery lock
Battery support (side access): check the roller frames
Battery support (side access): grease the roller frames
Folding platform and side protection (if present): grease
Load wheels: grease the bearings
Steering and wheels
Electric steering
Steering: visually check the mounting
Steering: visually check the mounting of the tiller and of the head (of the steering unit)
Steering: clean, check and grease the pinion gear and the ring gear
Wheels
Wheels: check for any damage, foreign matter and signs of wear
Wheels: check wheel tightness
Brakes
Brakes: check for signs of wear/adjustment
Brakes: check the truck braking
Truck
Pivoting wheel: check the height adjustment
Controls
Accelerator: check
Electrical system
Battery: check the battery condition and that it is correctly mounted
Battery: check the cables and sockets
On-board charger: clean
On-board charger: check operation
Cables and connectors: check the condition and positioning
Electrical components: clean

https://truckmanualshub.com/

Servicing work every 1000 hours
Pump motor: clean and check the wear of the brushes
Test the insulation between the chassis and the electric motors
Test the insulation between the chassis and the electronic control
Fork lift height sensors: check and clean
On-board charger (if present): earthing and isolation circuit tests
Hydraulic system
Hydraulic system: replace the pressure filter
Pump unit: check mounting
Hydraulic system: check the oil level
Hydraulic system: check for any leaks
Hydraulic system: check the condition of the pipe lines
Load lift system
Mast: lubricate the sliding tracks of the mast and forks
Mast: check the mounting
Lift cylinders, chains, rollers and end stops: check the condition, mounting and operation
Lifting chain: clean, check, adjust and grease the chains▲
Forks: check that the forks are in good condition
Mobile chassis: check
Protective device: check the condition of the anti-shearing protective screen and check that it is correctly mounted
Check the tightness of the mounting bolts of the straddles (EXP only)
Initial lift "i"
Initial lift: grease the rods and levers
Initial lift: check the linkage

Further maintenance operations every 3000 hours
Transmission
Reduction gear unit: check the mounting
Chassis, bodywork and fittings
Folding platform and side protection: check the dampers, the suspension and the safety stop
Hydraulic system
Hydraulic system: check the hydraulic oil
Hydraulic system: replace the controller filters
Electrical system
Ultrasonic height sensor for the DLC 3 system: replace the battery
Load lift system
Mast: service the lift mast and check the lateral clearance of the pins

https://truckmanualshub.com/

Further maintenance operations every 6000 hours
Chassis, bodywork and fittings
Folding platform and side protection: check the dampers, the suspension and the safety stop
Hydraulic system
Hydraulic system: replace the hydraulic oil

Further maintenance operations every 10,000 hours
Transmission
Reduction gear unit: change the oil

1000 [(a)] = To be repeated every 1000 hours (for example at 1000, 2000, 3000, 4000, 5000) or at least every 12 months (whichever comes first).

2000 [(b)] = To be repeated every 2000 hours. For example at 2000, 4000, 6000, 8000, 10,000 .

5000 [(c)] = To be repeated every 5000 hours. For example at 5000, 10,000, 15,000, 20,000 .

▲ = Every 1000 hours or at least every 12 months (whichever comes first), unless local regulations require more frequent intervention.

ENVIRONMENT NOTE

During maintenance operations, follow the instructions provided in the "Safety guidelines relative to operating materials" section in "Chapter 2".

https://truckmanualshub.com/

Maintenance as required

Cleaning the Forklift

Cleaning depends on the type of use and the workplace. Should the truck come into contact with highly aggressive elements such as salt water, fertilizers, chemical products, cement, etc., it should be cleaned as carefully as possible after every work cycle. It is preferable to use cold compressed air and detergents. Use water-dampened rags to clean the parts of the body.

⚠ CAUTION

Do not clean the truck with direct jets of water; DO NOT use solvents and petrols that could damage parts of the truck.

Lubricating and cleaning the lifting chains

NOTE

Turn off the truck and perform the preliminary maintenance operations

Lubricating the lifting chains

To ensure that the chains operate correctly, make sure that they are always sufficiently lubricated.

⚠ WARNING

Lubricant reduces friction and protects the chain from oxidation caused by the environment.

If lubricant is not used or if it is insufficient, the chains will be noisier (squeaking etc.) and performance will be reduced.

- For chain lubricant specifications, see the section "Supply table" in chapter 6. Alternatively, contact the sales network authorised by the manufacturer.
- Using a clean brush, spread a thin layer of lubricant along the entire length of the chain. Lubricate the chain both inside and outside. This will help the lubricant to penetrate the links of the chain.
- If dirt has accumulated on the chain, thoroughly clean the lifting chains before lubricating them (see the following instructions).

Cleaning the lift chains

⚠ WARNING

There is a risk of accident!

Load chains are safety components.

The use of cold/chemical cleaning agents or fluids that are corrosive or contain acid or chlorine can damage the chains and is therefore prohibited.

- Follow the manufacturer's guidelines before using a cleaning agent.

- Place a collection vessel under the lift mast.
- Clean with paraffin derivatives, such as benzine.
- Dry the chain with a clean cloth and then lubricate the chain.

ENVIRONMENT NOTE

Dispose of fluid that has been spilled or collected in the collection vessel in an environmentally-friendly manner. Follow applicable current regulations

https://truckmanualshub.com/

Fuses

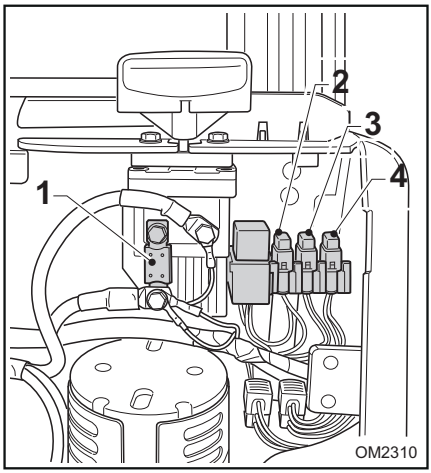

- Turn off the truck and perform the preliminary maintenance operations

⚠ CAUTION

Before carrying out any operations on the electrical system, turn the truck power supply off by disconnecting the battery connector.

⚠ CAUTION

Before changing the fuse, eliminate the cause that led to its blowing. The blown fuse must only be changed with a fuse of the same amperage. Do not tamper with the truck's electrical system.

– Open the battery cover.

– Unplug the battery connector.

– Remove the cover to gain access to the fuse holder.

– The following fuses are found on the fuse holder:

Reference	Name	Description	Value
1	1F1 fuse	Main lifting and traction fuse	300 A
2	3F1 fuse	Electric steering fuse	30 A
3	1F3 fuse	Auxiliary supply fuse	7.5 A
4	1F4 fuse	Pump unit solenoid valve fuse	5 A

https://truckmanualshub.com/

Battery replacement with removal from the top

- Turn off the truck and perform the preliminary maintenance operations.
- To remove the battery hood (3): Open the battery hood, keep it in a vertical position, pull it upwards from one side and then from the other side to remove it from the mounting hooks.
- Disconnect the socket from the battery male connector.
- Insert the sling hooks into the appropriate battery slots. The entire sling must be suitably sized according to the weight of the battery.
- Lift the battery using a hoist that is suitably sized for the weight of the battery.
- Replace the battery and refit it by following the steps in reverse order.

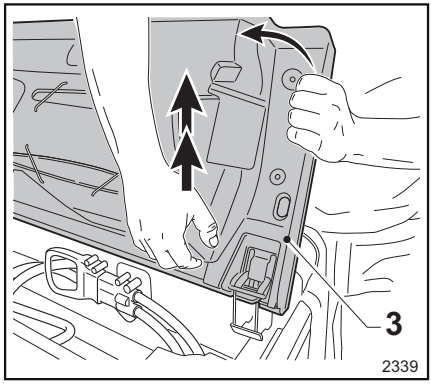

⚠ CAUTION

To decide which type of battery to use, check the battery characteristics provided in the "TECHNICAL DATA" chapter.

⚠ DANGER

Use a crane with a suitable lifting capacity for the weight of the battery. Lifting operations must be performed by qualified personnel. DO NOT stand within the crane's radius of action or near the truck. Do not stand in the danger area beneath suspended loads. Use NON METALLIC slings. Make sure that the lifting capacity of the slings is suitable for the weight of the battery. The slings must be pulled vertically. To prevent short circuits, it is recommended that batteries with polar terminals or unprotected connections be covered with a rubber mat.

https://truckmanualshub.com/

– To refit the battery hood (3): Keep the hood in a vertical position, rest the hood on the mounting hooks, push it downwards from one side and then from the other side to secure it. ▷

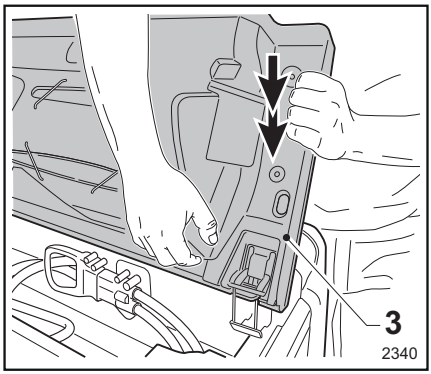

Additional precautions

– For trucks equipped with Duplex mast 1844/1415 and Simplex mast 1844/1415, the protective guard (1) must be removed before inserting and extracting the battery from the top (2). ▷

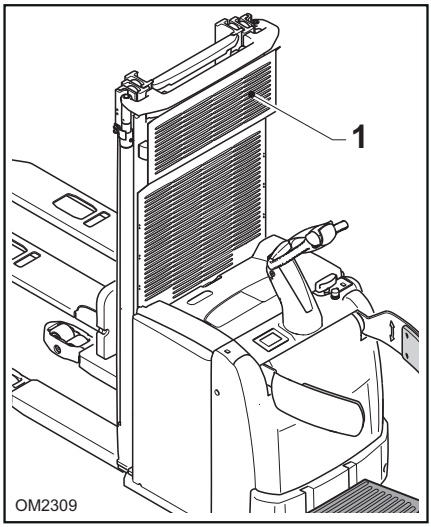

https://truckmanualshub.com/

– When inserting and/or extracting the battery from the top (2), the battery must be tilted as shown. ▷

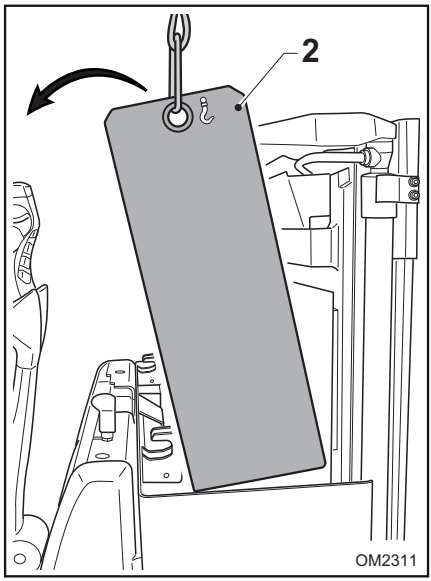

⚠ CAUTION

Before using the truck, refit the protective guard (1).

Using the truck without the anti-shearing protective guards is prohibited.

https://truckmanualshub.com/

Battery replacement with side removal

⚠ DANGER

Before changing the battery, park the truck. Ensure that the truck is on a level surface and cannot move accidentally.

Ensure that the unlocked battery cannot slide off and fall on to the ground. Danger of crushing hands and feet and risk of battery acid spillage.

– Turn off the truck and perform preliminary maintenance operations.

– Lift the battery cover (see the "Internal accessibility" section of the previous chapter).

– Disconnect the plug from the battery male connector (see the "Internal Accessibility" section of the previous chapter).

– Push the lever to release the battery, as indicated by the white arrow in the adjacent picture.

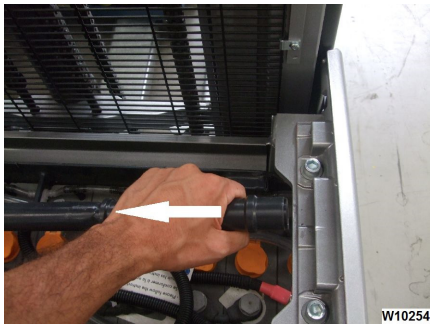
W10254

– Labels written in English on the lever indicate "Lock Battery" i.e. the direction to lock the battery and "Unlock Battery" i.e. the direction to unlock the battery.

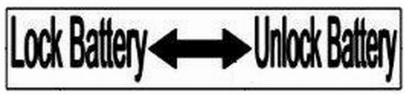

W10272

– The spring of the battery lock lever will push the lever upwards. This will release the battery.

– Place the manufacturer-approved battery side-removal roller unit next to the truck; position it so that it is still and stable; adjust the height of the roller unit so that it is level with the underside of the battery at the battery compartment.

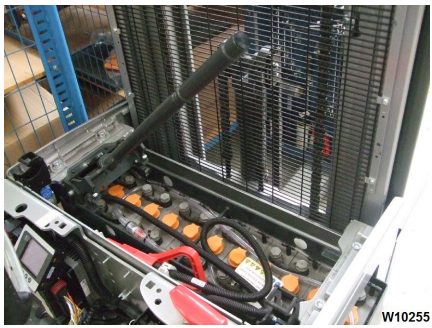
W10255

⚠ DANGER

"Risk of crushing hands!" The battery must be removed by a single operator only. The operator must follow the operating instructions given in this section, positioning himself on the same side as the battery side-removal roller unit.

– Pull the battery outwards, sliding it along the rollers on the truck frame and

https://truckmanualshub.com/

positioning it on the previously prepared external roller unit.

– Hook the battery at the two points (8) with a sling or chain. ▷

– Lift the battery and remove it.

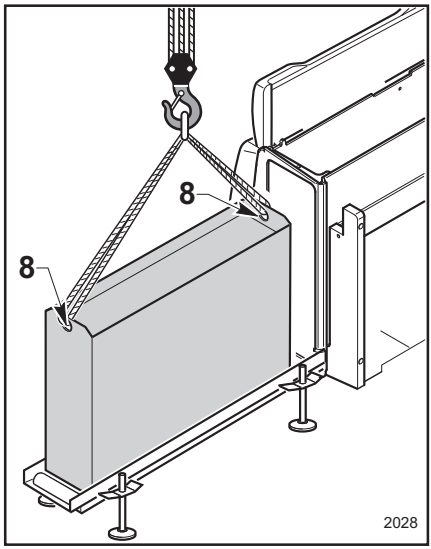

⚠ DANGER

Use a crane with a suitable lifting capacity for the weight of the battery. Lifting operations must be performed by qualified personnel. DO NOT stand within the crane's radius of action or near the truck. Do not stand in the danger area beneath suspended loads. Use NON METALLIC slings. Make sure that the lifting capacity of the slings is suitable for the weight of the battery. The slings must be pulled vertically. To prevent short circuits, it is recommended that batteries with polar terminals or unprotected connections be covered with a rubber mat.

– Change the battery and refit it by following the above steps in reverse order.

– When installing the new battery, be particularly careful during the battery insertion stage. Push the battery inwards, sliding it along the rollers on the truck and positioning it on the previously prepared external roller unit. ▷

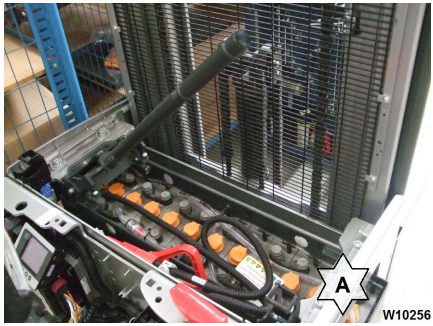

⚠ DANGER

"Danger of crushing hands" between the battery frame and the battery lock lever. Do not put your hands in zone "A" and keep all other parts of the body, such as the head, out of the way when inserting the battery. The operation must be performed by a single operator. The operator must follow the operating instructions given in this section, positioning himself on the same side as the battery side-removal roller unit.

⚠ CAUTION

To decide which type of battery to use, check the battery characteristics provided in the "TECHNICAL DATA" chapter.

https://truckmanualshub.com/

⚠ CAUTION

When closing the battery cover, take care to position the cables of the battery male connector correctly so as not to damage them.

NOTE

After having positioned the battery holddown, check that there is little or no clearance in the battery compartment.

https://truckmanualshub.com/

Decommissioning

General Information

The operations to be performed for "**Temporary decommissioning**" and "**Permanent decommissioning**" are listed in this chapter.

https://truckmanualshub.com/

Forklift Towing

The forklift may not be towed in the case of breakdown.

The forklift must be lifted with due caution, as described on the preceding pages.

Temporary Putting Out of Commission

The following operations must be performed when the forklift is not going to be used for a long time:

- Clean the forklift as indicated in the "**Maintenance**" chapter and put it in a dust-free and dry room. -
- Lower the forks.
- Lightly grease all of the unpainted parts with oil or grease.
- Perform the lubrication operations indicated in the maintenance chapter.
- Remove the battery and put it in a room where there is no danger of freezing. Charge the battery at least once a month.
- Raise the forklift so that the wheels do not touch the ground; otherwise, the wheels will become flat at the point of contact with the floor.
- Cover the forklift with a **NON**-plastic sheet.

Checks and Inspections After a Long Period of Inactivity

⚠ DANGER

Perform the following operations before using the forklift:

- Clean forklift truck thoroughly.
- Check the battery charge level and reassemble it in the forklift, making sure to spread Vaseline on the terminals.
- Lubricate all of the parts provided with lubricating nipples and the chains.
- Carry out the fluid level checks.
- Perform all of the functional maneuvers of the forklift and of its safety devices both loaded and unloaded.

⚠ DANGER

Follow the instructions provided in the maintenance chapter for the operations indicated previously.

https://truckmanualshub.com/

Permanent Putting Out of Commission (Demolition)

The forklift must be demolished in compliance with local legislation. Contact the authorised service network or authorised companies to scrap the forklift according to local legislation.

DANGER

Disassembly of the forklift for scrapping is extremely hazardous.

ENVIRONMENT NOTE

In particular, batteries, fluids (oils, fuels, lubricants, etc, electrical and electronic components and rubber components must be disposed of in compliance with specific local legislation for each type of material.

https://truckmanualshub.com/

https://truckmanualshub.com/

6

Technical data

https://truckmanualshub.com/

EXV and EXVi overall dimensions

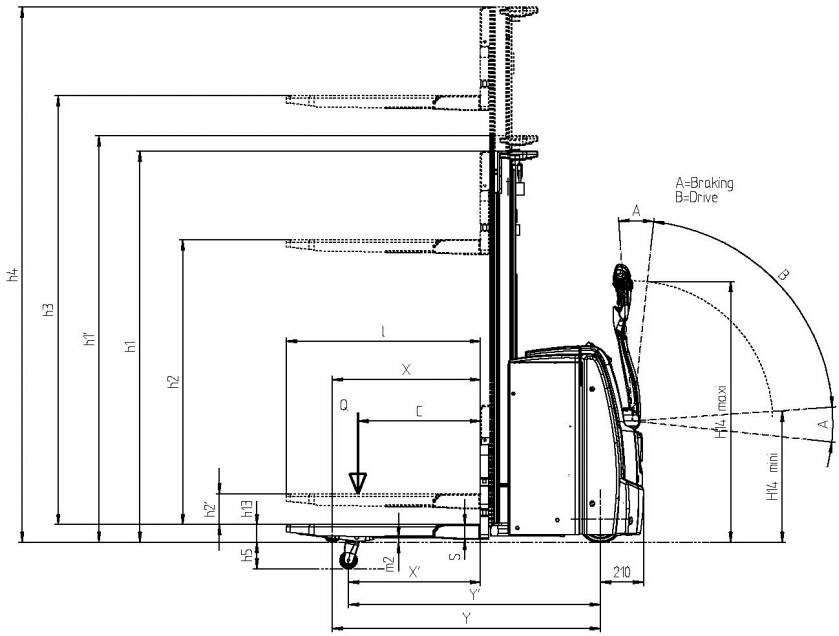

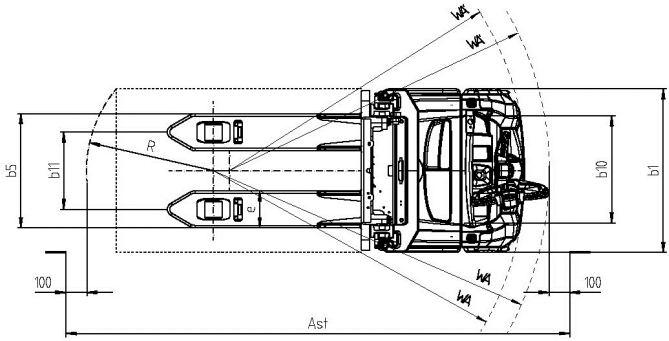

https://truckmanualshub.com/

EXV-SF and EXVi-SF overall dimensions

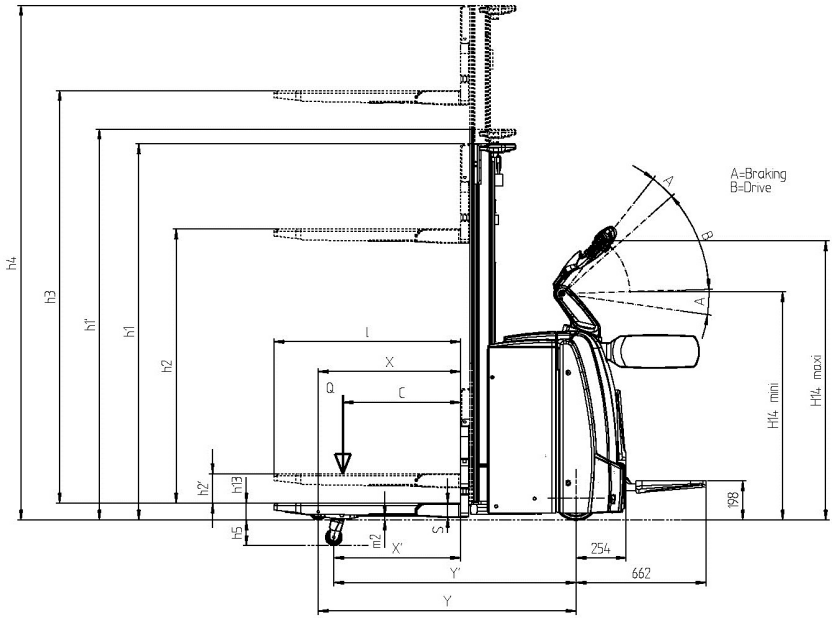

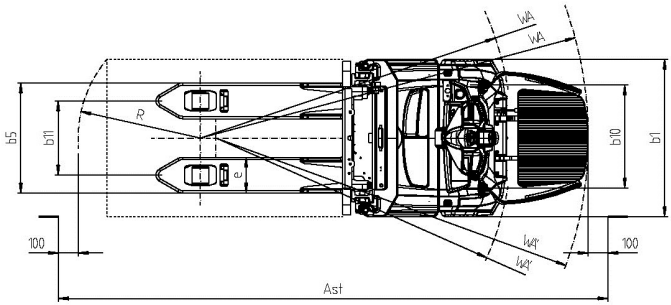

https://truckmanualshub.com/

Datasheet

Datasheet (VDI) EXV 14 / EXV 16 and EXV 14i / EXV 16i

CHARACTERISTICS			EXV 14 / EXV 16	EXV 14i / EXV 16i
1.3	Power unit: electric, diesel, petrol, LPG		Electric	Electric
1.4	Drive type: manual, pedestrian, stand-on, seated, order picker		Pedestrian	Pedestrian
1.5	Load capacity	Q (kg)	1400/1600	1400 (2000)/1600 (2000) (1)
1.6	Load centre	c (mm)	600	600
1.8	Load distance, centre of drive axle to fork	x (mm)	724 (2)	724 (2)/646 (2) (3)
1.9	Wheelbase	y (mm)	1311 (4)	1311 (4)/1233 (3) (4)

WEIGHT			EXV 14 / EXV 16	EXV 14i / EXV 16i
2.1	Service weight (with battery)	kg	1178	1144
2.2	Axle load with load, drive side/load side	kg	964/1614/983/1795	889/1655/896/1847
2.3	Axle load without load, drive side/load side	kg	867/311	836 / 308

WHEELS			EXV 14 / EXV 16	EXV 14i / EXV 16i
3.1	Tyres		Polyurethane	Polyurethane
3.2	Drive wheel sizes	mm	Ø 230 x L90	Ø 230 x L90
3.3	Wheel sizes, load side	mm	Ø 85 x L85 (Ø 85 x L60) (5)	Ø 85 x L85 (Ø 85 x L60) (5)
3.4	Stabiliser wheels (sizes)	mm	Ø 150 x L50	Ø 150 x L50
3.5	Wheels number, drive side/ load side (x = drive wheel)		1x + 1/2 (1x + 1/4) (5)	1x + 1/2 (1x + 1/4) (5)
3.6	Track width, drive side	b10 (mm)	534	534
3.7	Track width, load side	b11 (mm)	380	380

https://truckmanualshub.com/

DIMENSIONS			EXV 14 / EXV 16	EXV 14i / EXV 16i
4.2	Height of mast, lowered	h1 (mm)	1915 (6)	1915 (6)
4.3	Free lift	h2 (mm)	150 (6)	150 (6)
4.4	Lift	h3 (mm)	2844 (6)	2844 (6)
4.5	Height of mast, extended	h4 (mm)	3364 (6)	3364 (6)
4.6		h5 (mm)	/	110
4.9	Height of tiller arm in driving position, min/max	h14 (mm)	865 / 1265	865 / 1265
4.15	Fork height, lowered	h13 (mm)	86	86
4.19	Overall length without load	l1 (mm)	1950(2) (4)	1950 (2) (4)
4.20	Length including fork shoulder	l2 (mm)	800 (2) (4)	800 (2) (4)
4.21	Total width	b1 (mm)	800	800
4.22	Fork dimensions	s/e/l (mm)	55 (8)/182/1150	55 (8)/182/1150
4.24	Fork carriage width	b3 (mm)	780	780
4.25	Fork spread	b5 (mm)	560 / 680	560 / 680
4.26		b4 (mm)	255 / 375	255 / 375
4.32	Ground clearance, centre of wheelbase	m2 (mm)	30 (9)	20 (9) / 150 (3)
4.34	Aisle width with pallets 800 x 1200	Ast (mm)	2465 (4)/2348 (4) (10)	2448 (3) (4) (11)/2333 (3) (4) (10) (11)
4.34.1	Aisle width with pallets 1000 x 1200	Ast (mm)	2503 (4)/2386 (4) (10)	2462 (3) (4) (12)/2347 (3) (4) (10) (12)
4.35	Turning radius	Wa (mm)	1643 (4)/1526 (4) (10)	1565 (3) (4) (13)/1450 (3) (4) (10) (13)

PERFORMANCE			EXV 14 / EXV 16	EXV 14i / EXV 16i
5.1	Travel speed with/without load	km/h	6.0 / 6.0 (15)	6.0 / 6.0 (15)

https://truckmanualshub.com/

5.2	Lifting speed, with/without load	m/s	0.16/0.30/0.15/0.30 (14)	0.16/0.30/0.15/0.30 (14)
5.3	Lowering speed, with/without load	m/s	0.40/0.35/0.40/0.35 (14)	0.40/0.35/0.40/0.35 (14)
5.8	Climbing ability KB 5', with/without load	%	10.0/23.0 (15)	10 (8) (19)/22
5.10	Service brake		Electric	Electric

TRANSMISSION			EXV 14 / EXV 16	EXV 14i / EXV 16i
6.1	Traction motor, S2=60 min	kW	2.3 - 1.5 (20)	2.3 - 1.5 (20)
6.2	Lifting motor, S3=15%	kW	3.2	3.2
6.3	Battery acc. to DIN 43 531/35/36 A, B, C, no		2 PzS	2 PzS
6.4	Voltage/Nominal capacity	V/Ah	24 / 230	24 / 230
6.5	Battery weight (±5%)	kg	212	212
6.6	Energy consumption acc. to VDI cycle	kWh/h	1.14/1.15	1.24/1.25

OTHER			EXV 14 / EXV 16	EXV 14i / EXV 16i
8.1	Type of drive control		AC control	AC control
8.4	Noise level at operator's ear	dB (A)	≤ 66	≤ 66

(1) In brackets: capacity on the forks for the version with fork initial lift (i)

(2) Values for Tele or NiHo mast (x value -26 mm, l_1+ l_2 +26 mm with Triplex mast)

(3) Fork arms raised (see the figure with apostrophe for dimensions)

(4) Value with battery such as 6.3 (+75 mm with 3 PzS and +150 mm with 4PzS)

(5) Truck with tandem rollers

(6) Value with Tele mast h_3 = 2844 mm. For other values see mast table

(7) With load rack, mandatory for -SF

(8) Value with platform lowered

(9) The fork thickness value indicated is for use with GITTER-BOX. A carriage with thickness s = 71 mm is also available

(10) Thickness values with forks fully lowered m_2 = 15 mm

https://truckmanualshub.com/

(11) Values with fender

(12) Value with straddles lowered +17 mm

(13) Value with straddles lowered +42 mm

(14) Value with straddles lowered +78 mm

(15) ±5%

(16) Speed in pedestrian mode - Speed standing without side protection - Speed standing with side protection

(16) On slopes with gentle start and forks raised (geometric limit with start of slope at = 9.2%)

(17) Value with Tele mast h3 = 4644 mm

(18) Rounded edge on the side with forks lowered (geometric limit on slope =9.2%)

(19) In brackets: maximum surmountable gradient with capacity of 2000 kg on the fork side, with the initial lift option.

(20) With "One Wheel Drive" transmission system

Datasheet (VDI) EXV-SF 14 / EXV-SF 16 and EXV-SF 14i / EXV-SF 16i

CHARACTERISTICS			EXV-SF 14 / EXV-SF 16	EXV-SF 14i / EXV-SF 16i
1.3	Power unit: electric, diesel, petrol, LPG		Electric	Electric
1.4	Drive type: manual, pedestrian, stand-on, seated, order picker		Pedestrian/Standing	Pedestrian/Standing
1.5	Load capacity	Q (kg)	1400/1600	1400 (2000)/1600 (2000) (1)
1.6	Load centre	c (mm)	600	600
1.8	Load distance, centre of drive axle to fork	x (mm)	724 (2)	724 (2)/646 (2) (3)
1.9	Wheelbase	y (mm)	1311 (4)	1311 (4)/1233 (3) (4)

https://truckmanualshub.com/

WEIGHT			EXV-SF 14 / EXV-SF 16	EXV-SF 14i / EXV-SF 16i
2.1	Service weight (with battery)	kg	1258	1229
2.2	Axle load with load, drive side/load side	kg	1040/1619/1059/1800	971/1658/979/1850
2.3	Axle load without load, drive side/load side	kg	955 / 304	962 / 268

WHEELS			EXV-SF 14 / EXV-SF 16	EXV-SF 14i / EXV-SF 16i
3.1	Tyres		Polyurethane	Polyurethane
3.2	Drive wheel sizes	mm	Ø 230 x L90	Ø 230 x L90
3.3	Wheel sizes, load side	mm	Ø 85 x L85 (Ø 85 x L60) (5)	Ø 85 x L85 (Ø 85 x L60) (5)
3.4	Stabiliser wheels (sizes)	mm	2x Ø 150 x L50	2x Ø 150 x L50
3.5	Wheels number, drive side/ load side (x = drive wheel)		1x + 2/2 (1x + 1/4) (5)	1x + 2/2 (1x + 1/4) (5)
3.6	Track width, drive side	b10 (mm)	534	534
3.7	Track width, load side	b11 (mm)	380	380

DIMENSIONS			EXV-SF 14 / EXV-SF 16	EXV-SF 14i / EXV-SF 16i
4.2	Height of mast, lowered	h1 (mm)	1915 (6)	1915 (6)
4.3	Free lift	h2 (mm)	150 (6)	150 (6)
4.4	Lift	h3 (mm)	2844 (6)	2844 (6)
4.5	Height of mast, extended	h4 (mm)	3364 (6)	3364 (6)
4.6	Initial lift	h5 (mm)	/	110
4.9	Height of tiller arm in driving position, min/max	h14 (mm)	1175 / 1380	1175 / 1380
4.15	Fork height, lowered	h13 (mm)	86	86
4.19	Overall length without load	l1 (mm)	1993 (2) (4)/2401 (2) (4) (7)	1993 (2) (4)/2401 (2) (4) (7)
4.20	Length including fork shoulder	l2 (mm)	843 (2) (4)/1251 (2) (4) (7)	843 (2) (4)/1251 (2) (4) (7)
4.21	Total width	b1 (mm)	800	800

https://truckmanualshub.com/

4.22	Fork dimensions	s/e/l (mm)	55 (8)/182/1150	55 (8)/182/1150
4.24	Fork carriage width	b3 (mm)	780	780
4.25	Fork spread	b5 (mm)	560 / 680	560 / 680
4.26		b4 (mm)	255 / 375	255 / 375
4.32	Ground clearance, centre of wheelbase	m2 (mm)	30 (9)	20 (9) / 150 (3)
4.34	Aisle width with pallets 800 x 1200	Ast (mm)	2406 (4)/2795 (4) (7)	2390 (3) (4) (11)/2777 (3) (4) (7) (11)
4.34.1	Aisle width with pallets 1000 x 1200	Ast (mm)	2444 (4)/2833 (4) (7)	2404 (3) (4) (13)/2791 (3) (4) (7) (12)
4.35	Turning radius	Wa (mm)	1584 (4)/1973 (4) (7)	1507 (3) (4) (13)/1894 (3) (4) (7) (13)

PERFORMANCE			EXV-SF 14 / EXV-SF 16	EXV-SF 14i / EXV-SF 16i
5.1	Travel speed with/without load	km/h	4.0/4.0 6.0/6.0 8.0/10.0 (15) (16)	4.0/4.0 6.0/6.0 8.0/10.0 (15) (16)
5.2	Lifting speed, with/without load	m/s	0.16/0.30/0.15/0.30 (14)	0.16/0.30/0.15/0.30 (14)
5.3	Lowering speed, with/without load	m/s	0.40/0.35/0.40/0.35 (14)	0.40/0.35/0.40/0.35 (14)
5.8	Climbing ability KB 5', with/without load	%	10 / 23 (15)	10 (8) (19)/22
5.10	Service brake		Electric	Electric

TRANSMISSION			EXV-SF 14 / EXV-SF 16	EXV-SF 14i / EXV-SF 16i
6.1	Traction motor, S2=60 min	kW	2.3	2.3
6.2	Lifting motor, S3=15%	kW	3.2	3.2
6.3	Battery acc. to DIN 43 531/35/36 A, B, C, no		2 PzS	2 PzS
6.4	Voltage/Nominal capacity	V/Ah	24 / 230	24 / 230
6.5	Battery weight (±5%)	kg	212	212
6.6	Energy consumption acc. to VDI cycle	kWh/h	1.18/1.19	1.27/1.29

https://truckmanualshub.com/

OTHER			EXV-SF 14 / EXV-SF 16	EXV-SF 14i / EXV-SF 16i
8.1	Type of drive control		AC control	AC control
8.4	Noise level at operator's ear	dB (A)	≤ 66	≤ 66

(1) In brackets: capacity on the forks for the version with fork initial lift (i)

(2) Values for Tele or NiHo mast (x value -26 mm, l_1+ l_2 +26 mm with Triplex mast)

(3) Fork arms raised (see the figure with apostrophe for dimensions)

(4) Value with battery such as 6.3 (+75 mm with 3 PzS and +150 mm with 4PzS)

(5) Truck with tandem rollers

(6) Value with Tele mast h_3 = 2844 mm. For other values see mast table

(7) With load rack, mandatory for -SF

(8) Value with platform lowered

(9) The fork thickness value indicated is for use with GITTER-BOX. A carriage with thickness s = 71 mm is also available

(10) Thickness values with forks fully lowered m_2 = 15 mm

(11) Values with fender

(12) Value with straddles lowered +17 mm

(13) Value with straddles lowered +42 mm

(14) Value with straddles lowered +78 mm

(15) ±5%

(16) Speed in pedestrian mode - Speed standing without side protection - Speed standing with side protection

(16) On slopes with gentle start and forks raised (geometric limit with start of slope at = 9.2%)

(17) Value with Tele mast h3 = 4644 mm

(18) Rounded edge on the side with forks lowered (geometric limit on slope =9.2%)

(19) In brackets: maximum surmountable gradient with capacity of 2000 kg on the fork side, with the initial lift option.

https://truckmanualshub.com/

Datasheet (VDI) EXV 20 / EXV 20i

CHARACTERISTICS			EXV 20	EXV 20i
1.3	Power unit: electric, diesel, petrol, LPG		Electric	Electric
1.4	Drive type: manual, pedestrian, stand-on, seated, order picker		Pedestrian	Pedestrian
1.5	Load capacity	Q (kg)	2000	2000 (2000) (1)
1.6	Load centre	c (mm)	600	600
1.8	Load distance, centre of drive axle to fork	x (mm)	724 (2)	724 (2)/646 (2) (3)
1.9	Wheelbase	y (mm)	1425	1425 / 1347 (3)

WEIGHT			EXV 20	EXV 20i
2.1	Service weight (with battery)	kg	1505	1439
2.2	Axle load with load, drive side/load side	kg	1307 / 2198	1135 / 2303
2.3	Axle load without load, drive side/load side	kg	1063 / 441	1019 / 420

WHEELS			EXV 20	EXV 20i
3.1	Tyres		Polyurethane	Polyurethane
3.2	Drive wheel sizes	mm	Ø 230 x L90	Ø 230 x L90
3.3	Wheel sizes, load side	mm	Ø 85 x L85 (Ø 85 x L60) (4)	Ø 85 x L105 (Ø 85 x L80) (4)
3.4	Stabiliser wheels (sizes)	mm	Ø 150 x L50	Ø 150 x L50
3.5	Wheels number, drive side/ load side (x = drive wheel)		1x + 1/2 (1x + 1/4) (4)	1x + 1/2 (1x + 1/4) (4)
3.6	Track width, drive side	b10 (mm)	534	534
3.7	Track width, load side	b11 (mm)	370	370

DIMENSIONS			EXV 20	EXV 20i
4.2	Height of mast, lowered	h1 (mm)	1915 (5)	1915 (5)

https://truckmanualshub.com/

4.3	Free lift	h2 (mm)	150 (5)	150 (5)
4.4	Lift	h3 (mm)	2684 (5)	2684 (5)
4.5	Height of mast, extended	h4 (mm)	3284 (5)	3284 (5)
4.6		h5 (mm)	/	110
4.9	Height of tiller arm in driving position, min/max	h14 (mm)	865 / 1265	865 / 1265
4.15	Fork height, lowered	h13 (mm)	86	86
4.19	Overall length without load	l1 (mm)	2065 (2)	2065 (2)
4.20	Length including fork shoulder	l2 (mm)	915 (2)	915 (2)
4.21	Total width	b1 (mm)	810	810
4.22	Fork dimensions	s/e/l (mm)	73/210/1150	73/210/1150
4.24	Fork carriage width	b3 (mm)	780	780
4.25	Fork spread	b5 (mm)	580 / 680	580 / 680
4.26		b4 (mm)	230 / 330	230 / 330
4.32	Ground clearance, centre of wheelbase	m2 (mm)	20 (7)	20 (7) / 150 (2)
4.34	Aisle width with pallets 800 x 1200	Ast (mm)	2579 / 2462 (8)	2562 (3) (9)/2447 (3) (8) (9)
4.34.1	Aisle width with pallets 1000 x 1200	Ast (mm)	2617 / 2500 (8)	2576 (3) (10)/2461 (3) (8) (10)
4.35	Turning radius	Wa (mm)	1757 / 1640 (8)	1679 (3) (11)/1564 (3) (8) (11)

PERFORMANCE			EXV 20	EXV 20i
5.1	Travel speed with/without load	km/h	6.0 / 6.0 (13)	6.0 / 6.0 (13)
5.2	Lifting speed, with/without load	m/s	0.15/0.30 (12)	0.15/0.30 (12)

https://truckmanualshub.com/

5.3	Lowering speed, with/without load	m/s	0.31/0.31 (12)	0.31/0.31 (12)
5.8	Climbing ability KB 5', with/without load	%	8 / 23 (13)	8 / 23
5.10	Service brake		Electric	Electric

TRANSMISSION			EXV 20	EXV 20i
6.1	Traction motor, S2=60 min	kW	2.3 - 1.5 (18)	2.3 - 1.5 (18)
6.2	Lifting motor, S3=15%	kW	3.2	3.2
6.3	Battery acc. to DIN 43 531/35/36 A, B, C, no		3 PzS (14)	3 PzS (14)
6.4	Voltage/Nominal capacity	V/Ah	24 / 345	24 / 345
6.5	Battery weight (±5%)	kg	288	288
6.6	Energy consumption acc. to VDI cycle	kWh/h	1.44	1.57

OTHER			EXV 20	EXV 20i
8.1	Type of drive control		AC control	AC control
8.4	Noise level at operator's ear	dB (A)	≤ 66	≤ 66

(1) In brackets: capacity on the forks for the version with fork initial lift (i)

(2) Values for Tele or NiHo mast (x value -26 mm, l_1+ l_2 +26 mm with Triplex mast)

(3) Fork arms raised (see the figure with apostrophe for dimensions)

(4) In brackets: tandem rollers

(5) Value with Tele mast h_3 = 2684 mm. For other values see mast table

(6) With load rack, mandatory for -SF

(7) Value with platform lowered

(8) With forks fully lowered m_2 = 13 mm

(9) Values with fender

(10) Value with straddles lowered +17 mm

(11) Value with straddles lowered +42 mm

(12) Value with straddles lowered +78 mm

(13) ±5%

https://truckmanualshub.com/

(14) Speed in pedestrian mode - Speed standing without side protection - Speed standing with side protection

(15) Value with Tele mast h3 = 3584 mm

(16) Rounded edge on the side with forks lowered (geometric limit on slope =5.6%)

(17) Battery replaceable using lift

(18) With "One Wheel Drive" transmission system

Datasheet (VDI) EXV-SF 20 / EXV-SF 20i

CHARACTERISTICS			EXV-SF 20	EXV-SF 20i
1.3	Power unit: electric, diesel, petrol, LPG		Electric	Electric
1.4	Drive type: manual, pedestrian, stand-on, seated, order picker		Pedestrian/Standing	Pedestrian/Standing
1.5	Load capacity	Q (kg)	2000	2000 (2000) (1)
1.6	Load centre	c (mm)	600	600
1.8	Load distance, centre of drive axle to fork	x (mm)	724 (2)	724 (2)/646 (2) (3)
1.9	Wheelbase	y (mm)	1425	1425 / 1347 (3)

WEIGHT			EXV-SF 20	EXV-SF 20i
2.1	Service weight (with battery)	kg	1575	1508
2.2	Axle load with load, drive side/load side	kg	1384 / 2191	1213 / 2295
2.3	Axle load without load, drive side/load side	kg	1141 / 434	1096 / 412

WHEELS			EXV-SF 20	EXV-SF 20i
3.1	Tyres		Polyurethane	Polyurethane
3.2	Drive wheel sizes	mm	Ø 230 x L90	Ø 230 x L90
3.3	Wheel sizes, load side	mm	Ø 85 x L85 (Ø 85 x L60) (4)	Ø 85 x L105 (Ø 85 x L80) (4)

https://truckmanualshub.com/

3.4	Stabiliser wheels (sizes)	mm	2x Ø 140 x L50	2x Ø 140 x L50
3.5	Wheels number, drive side/ load side (x = drive wheel)		1x + 2/2 (1x + 1/4) (4)	1x + 2/2 (1x + 1/4) (4)
3.6	Track width, drive side	b10 (mm)	534	534
3.7	Track width, load side	b11 (mm)	370	370

DIMENSIONS			EXV-SF 20	EXV-SF 20i
4.2	Height of mast, lowered	h1 (mm)	1915 (5)	1915 (5)
4.3	Free lift	h2 (mm)	150 (5)	150 (5)
4.4	Lift	h3 (mm)	2684 (5)	2684 (5)
4.5	Height of mast, extended	h4 (mm)	3284 (5)	3284 (5)
4.6		h5 (mm)	/	110
4.9	Height of tiller arm in driving position, min/max	h14 (mm)	1175 / 1380	1175 / 1380
4.15	Fork height, lowered	h13 (mm)	86	86
4.19	Overall length without load	l1 (mm)	2108 (2)/2516 (2) (6)	2108 (2)/2516 (2) (6)
4.20	Length including fork shoulder	l2 (mm)	958 (2)/1366 (2) (6)	958 (2)/1366 (2) (6)
4.21	Total width	b1 (mm)	810	810
4.22	Fork dimensions	s/e/ l (mm)	73/210/1150	73/210/1150
4.24	Fork carriage width	b3 (mm)	780	780
4.25	Fork spread	b5 (mm)	580 / 680	580 / 680
4.26		b4 (mm)	230 / 330	230 / 330
4.32	Ground clearance, centre of wheelbase	m2 (mm)	20 (7)	20 (7) / 150 (2)
4.34	Aisle width with pallets 800 x 1200	Ast (mm)	2519 / 2909 (6)	2503 (3) (9)/2892 (3) (6) (9)

https://truckmanualshub.com/

4.3 4.1	Aisle width with pallets 1000 x 1200	Ast (mm)	2557 / 2947 (6)	2517 (3) (10)/2906 (3) (6) (10)
4.3 5	Turning radius	Wa (mm)	1697 / 2087 (6)	1620 (3) (11)/2009 (3) (6) (11)

PERFORMANCE			EXV-SF 20	EXV-SF 20i
5.1	Travel speed, laden/unladen	km/h	4.0/4.0 6.0/6.0 8.0/10.0 (13) (14)	4.0/4.0 6.0/6.0 8.0/10.0 (13) (14)
5.2	Lifting speed, with/without load	m/s	0.15/0.30 (12)	0.15/0.30 (12)
5.3	Lowering speed, with/without load	m/s	0.31/0.31 (12)	0.31/0.31 (12)
5.8	Climbing ability KB 5', with/without load	%	8 / 23 (13)	8 / 23
5.10	Service brake		Electric	Electric

TRANSMISSION			EXV-SF 20	EXV-SF 20i
6.1	Traction motor, S2=60 min	kW	2.3	2.3
6.2	Lifting motor, S3=15%	kW	3.2	3.2
6.3	Battery acc. to DIN 43 531/35/36 A, B, C, no		3 PzS (14)	3 PzS (14)
6.4	Voltage/Nominal capacity	V/Ah	24 / 345	24 / 345
6.5	Battery weight (±5%)	kg	288	288
6.6	Energy consumption acc. to VDI cycle	kWh/h	1.48	1.62

OTHER			EXV-SF 20	EXV-SF 20i
8.1	Type of drive control		AC control	AC control
8.4	Noise level at operator's ear	dB (A)	≤ 66	≤ 66

(1) In brackets: capacity on the forks for the version with fork initial lift (i)

(2) Values for Tele or NiHo mast (x value -26 mm, l_1+ l_2 +26 mm with Triplex mast)

(3) Fork arms raised (see the figure with apostrophe for dimensions)

(4) In brackets: tandem rollers

(5) Value with Tele mast h_3 = 2684 mm. For other values see mast table

(6) With load rack, mandatory for -SF

https://truckmanualshub.com/

(7) Value with platform lowered

(8) With forks fully lowered m_2 = 13 mm

(9) Values with fender

(10) Value with straddles lowered +17 mm

(11) Value with straddles lowered +42 mm

(12) Value with straddles lowered +78 mm

(13) ±5%

(14) Speed in pedestrian mode - Speed standing without side protection - Speed standing with side protection

(15) Value with Tele mast h3 = 3584 mm

(16) Rounded edge on the side with forks lowered (geometric limit on slope =5.6%)

(17) Battery replaceable using lift

https://truckmanualshub.com/

EXP overall dimensions

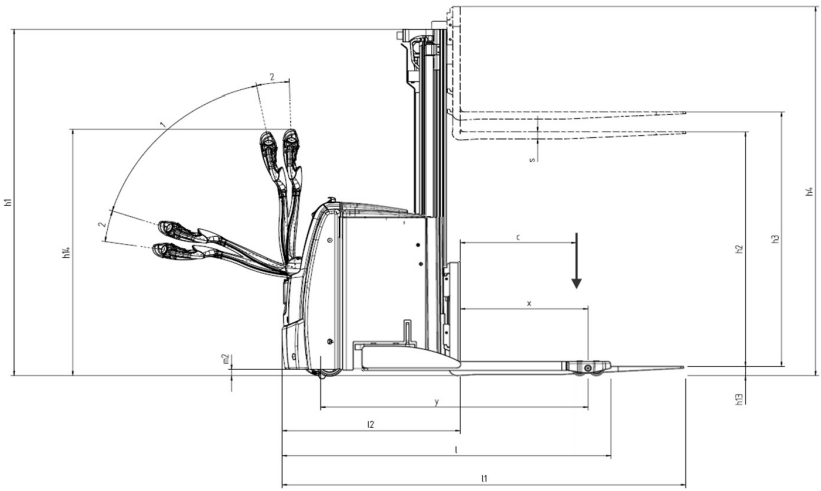

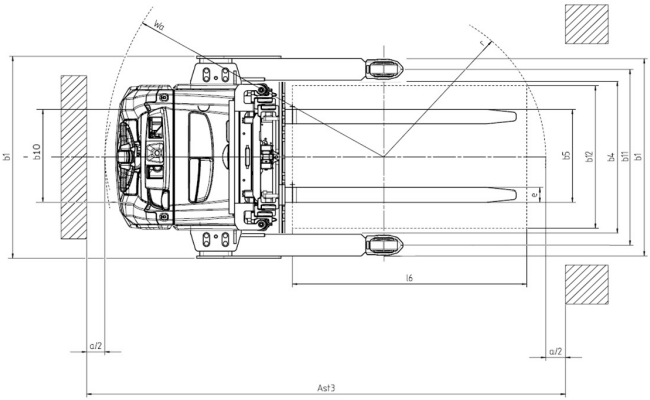

https://truckmanualshub.com/

Datasheet

Datasheet (VDI) EXP 14 / EXP 16 / EXP 20

CHARACTERISTICS			EXP 14	EXP 16	EXP 20
1.3	Power unit: electric, diesel, petrol, LPG		Electric		
1.4	Drive type: manual, pedestrian, stand-on, seated, order picker		Pedestrian		
1.5	Load capacity	Q (kg)	1400	1600	2000
1.6	Load centre	c (mm)	600		
1.8	Load distance, centre of drive axle to fork	x (mm)	696 (1) (4)	689 (1) (4)	660 (1) (4)
1.9	Wheelbase	y (mm)	1406.5		

WEIGHT			EXP 14	EXP 16	EXP 20
2.1	Service weight (with battery)	kg	1516	1556	1605
2.2	Axle load with load, drive side/load side	kg	1146/2374	1160/2400	1187/2422
2.3	Axle load without load, drive side/load side	kg	1072/444	1086/470	1113/492

WHEELS			EXP 14	EXP 16	EXP 20
3.1	Tyres		Polyurethane	Polyurethane	Polyurethane
3.2	Drive wheel sizes	mm	Ø 230 x L90	Ø 230 x L90	Ø 230 x L90
3.3	Wheel sizes, load side	mm	Ø 85 x L85 (Ø 85 x L60) (3)		
3.4	Stabiliser wheels (sizes)	mm	Ø 100 x L40		
3.5	Wheels number, drive side/load side (x = drive wheel)		1x + 1/2 (1x + 1/4) (3)		

https://truckmanualshub.com/

3.6	Track width, drive side	b10 (mm)	534
3.7	Track width, load side	b11 (mm)	1000/1200/1400

DIMENSIONS			EXP 14	EXP 16	EXP 20
4.2	Height of mast, lowered	h1 (mm)	1912(4)		1912(5)
4.3	Free lift	h2 (mm)	1276(5)	1286(5)	1286(5)
4.4	Lift	h3 (mm)	4266(4)		4026(5)
4.5	Height of mast, extended	h4 (mm)	4892(4)	4902(4)	4652(5)
4.6		h5 (mm)	/		
4.9	Height of tiller arm in driving position, min/max	h14 (mm)	865 / 1265		
4.15	Fork height, lowered	h13 (mm)	50		
4.19	Overall length without load	l1 (mm)	2071(2)	2107(2)	
4.20	Length including fork shoulder	l2 (mm)	921 (2) (6) (4)	957 (2) (6) (4)	
4.21	Total width	b1 (mm)	1170/1370/1570		
4.22	Fork dimensions	s/e/l (mm)	35x100x1150	45x120x1150	
4.24	Fork carriage width	b3 (mm)	820		
4.25	Fork spread	b5 (mm)	400 / 720	430 / 750	
4.26		b4 (mm)	860/1060/1260		
4.32	Ground clearance, centre of wheelbase	m2 (mm)	30		

https://truckmanualshub.com/

4.34	Aisle width with pallets 800 x 1200	Ast (mm)	2588 (6)	2592 (6)	2605 (6)
4.34.1	Aisle width with pallets 1000 x 1200	Ast (mm)	2559 (6)	2566 (6)	2587 (6)
4.35	Turning radius	Wa (mm)	1715 (6)		

PERFORMANCE			EXP 14	EXP 16	EXP 20
5.1	Travel speed with/without load	km/h	6.0 / 6.0		
5.2	Lifting speed, with/without load	m/s	0.16/0.30 (8)	0.15/0.30 (8)	0.15/0.30 (7)
5.3	Lowering speed, with/without load	m/s	0.40/0.35 (8)	0.40/0.35 (8)	0.31/0.31 (7)
5.8	Climbing ability KB 5', with/without load	%	8 / 23 (9) (10)		
5.10	Service brake		Electromagnetic		

TRANSMISSION			EXP 14-16-20
6.1	Traction motor, S2=60 min	kW	2.3
6.2	Lifting motor, S3=15%	kW	3.2
6.3	Battery acc. to DIN 43 531/35/36 A, B, C, no		3 PzS (10)
6.4	Voltage/Nominal capacity	V/Ah	24/345
6.5	Battery weight (±5%)	kg	288

OTHER			EXP 14-16-20
8.1	Type of drive control		AC control
8.4	Noise level at operator's ear	dB (A)	≤ 66

(1) With Tele and NiHo mast +26 mm

(2) With Tele and NiHo mast -26 mm

(3) In brackets (truck with tandem rollers)

(4) Value with Triplex mast h3 = 4266 mm

(5) Value with Triplex mast h3 = 4026 mm

(6) Without creep speed +12 mm

(7) Value with Tele mast h3 = 3584 mm

(8) Value with Tele mast h3 = 4644 mm

https://truckmanualshub.com/

(9) On edges on a slope with forks raised, geometric limit = 8%

(10) Battery replaceable using a hoist

https://truckmanualshub.com/

Datasheets

Datasheet (VDI) EXV 14 D / EXV 16 D / EXV 20 D

CHARACTERISTICS			EXV 14 D / EXV 16 D	EXV 20 D
1.3	Power unit: electric, diesel, petrol, LPG		Electric	Electric
1.4	Drive type: manual, pedestrian, stand-on, seated, order picker		Pedestrian	Pedestrian
1.5	Load capacity	Q (kg)	1400/1000+1000 (2000)// 1600/1000+1000 (2000)	2000/1000+1000 (2000)(1)
1.6	Load centre of gravity	c (mm)	600	600
1.8	Load distance, centre of drive axle to fork	x (mm)	924 (2)/846 (2) (3)	924 (2)/846 (2) (3)
1.9	Wheelbase	y (mm)	1511 (4)/1433 (3) (4)	1625 (4)/1547 (3) (4)

WEIGHT			EXV 14 D / EXV 16 D	EXV 20 D
2.1	Service weight (with battery)	kg	1173	1466
2.2	Axle load with load, drive side/load side	kg	1109/1464//1144/1629	1452/2014
2.3	Axle load without load, drive side/load side	kg	885/288	1076/390

WHEELS			EXV 14 D / EXV 16 D	EXV 20 D
3.1	Tyres		Polyurethane	Polyurethane
3.2	Drive wheel sizes	mm	Ø 230 x L90	Ø 230 x L90
3.3	Wheel sizes, load side	mm	Ø 85 x L85 (Ø 85 x L60) (5)	Ø 85 x L105 (Ø 85 x L80) (5)
3.4	Stabiliser wheels (sizes)	mm	Ø 150 x L50	2x Ø 140 x L50
3.5	Wheels number, drive side/ load side (x = drive wheel)		1x + 1/2 (1x + 1/4) (5)	1x + 2/2 (1x + 1/4) (5)

https://truckmanualshub.com/

3.6	Track width, drive side	b10 (mm)	534	534
3.7	Track width, load side	b11 (mm)	370	370

DIMENSIONS			EXV 14 D / EXV 16 D	EXV 20 D
4.2	Height of mast, lowered	h1 (mm)	1915 (6)	1915 (6)
4.3	Free lift	h2 (mm)	150 (6)	150 (6)
4.4	Lifting	h3 (mm)	2684 (6)	2684 (6)
4.5	Height of mast, extended	h4 (mm)	3284 (6)	3284 (6)
4.6		h5 (mm)	/	110
4.9	Height of tiller arm in driving position, min/max	h14 (mm)	865 / 1265	800/1250
4.15	Fork height, lowered	h13 (mm)	86	86
4.19	Overall length without load	l1 (mm)	2065 (2)	2065 (2)
4.20	Length including fork shoulder	l2 (mm)	915 (2)	915 (2)
4.21	Total width	b1 (mm)	810	810
4.22	Fork dimensions	s/e/l (mm)	55/182/1150	61/201/1150
4.24	Fork carriage width	b3 (mm)	780	780
4.25	Fork spread	b5 (mm)	560	570
4.26		b4 (mm)	255	230
4.32	Ground clearance, centre of wheelbase	m2 (mm)	20 (9)/130 (3)	20 (9)/130 (3)
4.34	Working aisle with pallet 800 x 1200	Ast (mm)	2499 (3) (4) (10) (12)/2384 (3) (4) (11) (12)	2613 (3) (10) (12)/2498 (3) (11) (12)

https://truckmanualshub.com/

4.3 4.1	Working aisle with pallet 1000 x 1200	Ast (mm)	2584 (3) (4) (10) (13)/2469 (3) (4) (11) (13)	2698 (3) (10) (13)/2583 (3) (10) (13)
4.3 5	Turning radius	Wa (mm)	1765 (3) (4) (10) (14)/1650 (3) (4) (11) (14)	1879 (3) (10) (14)/1764 (3) (10) (14)

PERFORMANCE			EXV 14 D / EXV 16 D	EXV 20 D
5.1	Travel speed with/without load	km/h	6.0/6.0 (15)	6.0/6.0 (15)
5.2	Lifting speed, with/without load	m/s	0.16/0.30//0.15/0.30 (16)	0.15/0.30 (16)
5.3	Lowering speed, with/without load	m/s	0.40/0.35//0.40/0.35 (16)	0.31/0.31 (16)
5.8	Climbing ability KB 5', with/without load	%	10 (8) (18)/22	8/23
5.10	Service brake		Electric	Electric

TRANSMISSION			EXV 14 D / EXV 16 D	EXV 20 D
6.1	Traction motor, S2=60 min	kW	2.3	2.3
6.2	Lifting motor, S3=15%	kW	3.2	3.2
6.3	Battery acc. to DIN 43 531/35/36 A, B, C, no		3 PzS	3 PzS
6.4	Voltage/Nominal capacity	V/Ah	24/345	24/345
6.5	Battery weight (±5%)	kg	288	288
6.6	Energy consumption acc. to VDI cycle	kWh/h	1.24//1.25	1.62

OTHER			EXV 14 D / EXV 16 D	EXV 20 D
8.1	Type of drive control		AC control	AC control
8.4	Noise level at operator's ear	dB (A)	≤ 66	≤ 66

(1) In brackets: capacity on the forks for the version with fork initial lift (i)

(2) Values for Tele or NiHo mast (x value -26 mm, l_1+ l_2 +26 mm with Triplex mast)

(3) Fork arms raised (see the figure with apostrophe for dimensions)

(4) Value with battery such as 6.3 (+75 mm with 3 PzS and +150 mm with 4PzS)

(5) Truck with tandem rollers

(6) Value with Tele mast h_3 = 2844 mm. For other values see mast table

https://truckmanualshub.com/

(7) With load rack, mandatory for -SF

(8) Value with platform lowered

(9) The fork thickness value indicated is for use with GITTER-BOX. A carriage with thickness s = 71 mm is also available

(10) Thickness values with forks fully lowered m_2 = 15 mm

(11) Values with fender

(12) Value with straddles lowered +17 mm

(13) Value with straddles lowered +42 mm

(14) Value with straddles lowered +78 mm

(15) ±5%

(16) Speed in pedestrian mode - Speed when standing without side protection - Speed when standing with side protection

(16) On slopes with gentle start and forks raised (geometric limit with start of slope at = -9.2%)

(17) Value with Tele mast h3 = 4644 mm

(18) Rounded edge on the side with forks lowered (geometric limit on slope =9.2%)

(19) In brackets: maximum surmountable gradient with capacity of 2000 kg on the fork side, with the initial lift option.

Datasheet (VDI) EXV-SF 14 / EXV-SF 16 and EXV-SF 14i / EXV-SF 16i

CHARACTERISTICS			EXV-SF 14 / EXV-SF 16	EXV-SF 14i / EXV-SF 16i
1.3	Power unit: electric, diesel, petrol, LPG		Electric	Electric
1.4	Drive type: manual, pedestrian, stand-on, seated, order picker		Pedestrian/Standing	Pedestrian/Standing
1.5	Load capacity	Q (kg)	1400//1600	1400 (2000)//1600 (2000) (1)
1.6	Load centre of gravity	c (mm)	600	600

https://truckmanualshub.com/

1.8	Load distance, centre of drive axle to fork	x (mm)	724 (2)	724 (2)/646 (2) (3)
1.9	Wheelbase	y (mm)	1311 (4)	1311 (4)/1233 (3) (4)

WEIGHT			EXV-SF 14 / EXV-SF 16	EXV-SF 14i / EXV-SF 16i
2.1	Service weight (with battery)	kg	1258	1229
2.2	Axle load with load, drive side/load side	kg	1040/1619//1059/1800	971/1658//979/1850
2.3	Axle load without load, drive side/load side	kg	955/304	962/268

WHEELS			EXV-SF 14 / EXV-SF 16	EXV-SF 14i / EXV-SF 16i
3.1	Tyres		Polyurethane	Polyurethane
3.2	Drive wheel sizes	mm	Ø 230 x L90	Ø 230 x L90
3.3	Wheel sizes, load side	mm	Ø 85 x L85 (Ø 85 x L60) (5)	Ø 85 x L85 (Ø 85 x L60) (5)
3.4	Stabiliser wheels (sizes)	mm	2x Ø 150 x L50	2x Ø 150 x L50
3.5	Wheels number, drive side/ load side (x = drive wheel)		1x + 2/2 (1x + 1/4) (5)	1x + 2/2 (1x + 1/4) (5)
3.6	Track width, drive side	b10 (mm)	534	534
3.7	Track width, load side	b11 (mm)	380	380

DIMENSIONS			EXV-SF 14 / EXV-SF 16	EXV-SF 14i / EXV-SF 16i
4.2	Height of mast, lowered	h1 (mm)	1915 (6)	1915 (6)
4.3	Free lift	h2 (mm)	150 (6)	150 (6)
4.4	Lifting	h3 (mm)	2844 (6)	2844 (6)
4.5	Height of mast, extended	h4 (mm)	3364 (6)	3364 (6)
4.6	Initial lift	h5 (mm)	/	110
4.9	Height of tiller arm in driving position, min/max	h14 (mm)	1175/1380	1175/1380
4.15	Fork height, lowered	h13 (mm)	86	86
4.19	Overall length without load	l1 (mm)	1993 (2) (4)/2401 (2) (4) (7)	1993 (2) (4)/2401 (2) (4) (7)

https://truckmanualshub.com/

4.20	Length including fork shoulder	l2 (mm)	843 (2) (4)/1251 (2) (4) (7)	843 (2) (4)/1251 (2) (4) (7)
4.21	Total width	b1 (mm)	800	800
4.22	Fork dimensions	s/e/l (mm)	55 (8)/182/1150	55 (8)/182/1150
4.24	Fork carriage width	b3 (mm)	780	780
4.25	Fork spread	b5 (mm)	560/680	560/680
4.26		b4 (mm)	255/375	255/375
4.32	Ground clearance, centre of wheelbase	m2 (mm)	30 (9)	20 (9)/150 (3)
4.34	Working aisle with pallet 800 x 1200	Ast (mm)	2406 (4)/2795 (4) (7)	2390 (3) (4) (11)/2777 (3) (4) (7) (11)
4.34.1	Working aisle with pallet 1000 x 1200	Ast (mm)	2444 (4)/2833 (4) (7)	2404 (3) (4) (13)/2791 (3) (4) (7) (12)
4.35	Turning radius	Wa (mm)	1584 (4)/1973 (4) (7)	1507 (3) (4) (13)/1894 (3) (4) (7) (13)

PERFORMANCE			EXV-SF 14 / EXV-SF 16	EXV-SF 14i / EXV-SF 16i
5.1	Travel speed with/without load	km/h	4.0/4.0 6.0/6.0 8.0/10.0 (15) (16)	4.0/4.0 6.0/6.0 8.0/10.0 (15) (16)
5.2	Lifting speed, with/without load	m/s	0.16/0.30//0.15/0.30 (14)	0.16/0.30/0.15/0.30 (14)
5.3	Lowering speed, with/without load	m/s	0.40/0.35//0.40/0.35 (14)	0.40/0.35//0.40/0.35 (14)
5.8	Climbing ability KB 5', with/without load	%	10/23 (15)	10 (8) (19)/22
5.10	Service brake		Electric	Electric

TRANSMISSION			EXV-SF 14 / EXV-SF 16	EXV-SF 14i / EXV-SF 16i
6.1	Traction motor, S2=60 min	kW	2.3	2.3
6.2	Lifting motor, S3=15%	kW	3.2	3.2
6.3	Battery acc. to DIN 43 531/35/36 A, B, C, no		2 PzS	2 PzS
6.4	Voltage/Nominal capacity	V/Ah	24/230	24/230

https://truckmanualshub.com/

6.5	Battery weight (±5%)	kg	212	212
6.6	Energy consumption acc. to VDI cycle	kWh/h	1.18/1.19	1.27/1.29

OTHER			EXV-SF 14 / EXV-SF 16	EXV-SF 14i / EXV-SF 16i
8.1	Type of drive control		AC control	AC control
8.4	Noise level at operator's ear	dB (A)	≤ 66	≤ 66

(1) In brackets: capacity on the forks for the version with fork initial lift (i)

(2) Values for Tele or NiHo mast (x value -26 mm, l_1+ l_2 +26 mm with Triplex mast)

(3) Fork arms raised (see the figure with apostrophe for dimensions)

(4) Value with battery such as 6.3 (+75 mm with 3 PzS and +150 mm with 4PzS)

(5) Truck with tandem rollers

(6) Value with Tele mast h_3 = 2844 mm. For other values see mast table

(7) With load rack, mandatory for -SF

(8) Value with platform lowered

(9) The fork thickness value indicated is for use with GITTER-BOX. A carriage with thickness s = 71 mm is also available

(10) Thickness values with forks fully lowered m_2 = 15 mm

(11) Values with fender

(12) Value with straddles lowered +17 mm

(13) Value with straddles lowered +42 mm

(14) Value with straddles lowered +78 mm

(15) ±5%

(16) Speed in pedestrian mode - Speed when standing without side protection - Speed when standing with side protection

(16) On slopes with gentle start and forks raised (geometric limit with start of slope at = -9.2%)

(17) Value with Tele mast h3 = 4644 mm

https://truckmanualshub.com/

(18) Rounded edge on the side with forks lowered (geometric limit on slope =9.2%)

(19) In brackets: maximum surmountable gradient with capacity of 2000 kg on the fork side, with the initial lift option.

Datasheet (VDI) EXV 20 / EXV 20i

CHARACTERISTICS			EXV 20	EXV 20i
1.3	Power unit: electric, diesel, petrol, LPG		Electric	Electric
1.4	Drive type: manual, pedestrian, stand-on, seated, order picker		Pedestrian	Pedestrian
1.5	Load capacity	Q (kg)	2000	2000 (2000) (1)
1.6	Load centre of gravity	c (mm)	600	600
1.8	Load distance, centre of drive axle to fork	x (mm)	724 (2)	724 (2)/646 (2) (3)
1.9	Wheelbase	y (mm)	1425	1425/1347 (3)

WEIGHT			EXV 20	EXV 20i
2.1	Service weight (with battery)	kg	1505	1439
2.2	Axle load with load, drive side/load side	kg	1307/2198	1135/2303
2.3	Axle load without load, drive side/load side	kg	1063/441	1019/420

WHEELS			EXV 20	EXV 20i
3.1	Tyres		Polyurethane	Polyurethane
3.2	Drive wheel sizes	mm	Ø 230 x L90	Ø 230 x L90
3.3	Wheel sizes, load side	mm	Ø 85 x L85 (Ø 85 x L60) (4)	Ø 85 x L105 (Ø 85 x L80) (4)
3.4	Stabiliser wheels (sizes)	mm	Ø 150 x L50	Ø 150 x L50
3.5	Wheels number, drive side/ load side (x = drive wheel)		1x + 1/2 (1x + 1/4) (4)	1x + 1/2 (1x + 1/4) (4)

https://truckmanualshub.com/

3.6	Track width, drive side	b10 (mm)	534	534
3.7	Track width, load side	b11 (mm)	370	370

DIMENSIONS			EXV 20	EXV 20i
4.2	Height of mast, lowered	h1 (mm)	1915 (5)	1915 (5)
4.3	Free lift	h2 (mm)	150 (5)	150 (5)
4.4	Lifting	h3 (mm)	2684 (5)	2684 (5)
4.5	Height of mast, extended	h4 (mm)	3284 (5)	3284 (5)
4.6		h5 (mm)	/	110
4.9	Height of tiller arm in driving position, min/max	h14 (mm)	865/1265	865/1265
4.15	Fork height, lowered	h13 (mm)	86	86
4.19	Overall length without load	l1 (mm)	2065 (2)	2065 (2)
4.20	Length including fork shoulder	l2 (mm)	915 (2)	915 (2)
4.21	Total width	b1 (mm)	810	810
4.22	Fork dimensions	s/e/l (mm)	73/210/1150	73/210/1150
4.24	Fork carriage width	b3 (mm)	780	780
4.25	Fork spread	b5 (mm)	580/680	580/680
4.26		b4 (mm)	230/330	230/330
4.32	Ground clearance, centre of wheelbase	m2 (mm)	20 (7)	20 (7)/150 (2)
4.34	Working aisle with pallet 800 x 1200	Ast (mm)	2579/2462 (8)	2562 (3) (9)/2447 (3) (8) (9)

https://truckmanualshub.com/

4.3 4.1	Working aisle with pallet 1000 x 1200	Ast (mm)	2617/2500 (8)	2576 (3) (10)/2461 (3) (8) (10)
4.3 5	Turning radius	Wa (mm)	1757/1640 (8)	1679 (3) (11)/1564 (3) (8) (11)

PERFORMANCE			EXV 20	EXV 20i
5.1	Travel speed with/without load	km/h	6.0/6.0 (13)	6.0/6.0 (13)
5.2	Lifting speed, with/without load	m/s	0.15/0.30 (12)	0.15/0.30 (12)
5.3	Lowering speed, with/without load	m/s	0.31/0.31 (12)	0.31/0.31 (12)
5.8	Climbing ability KB 5', with/without load	%	8/23 (13)	8/23
5.10	Service brake		Electric	Electric

TRANSMISSION			EXV 20	EXV 20i
6.1	Traction motor, S2=60 min	kW	2.3	2.3
6.2	Lifting motor, S3=15%	kW	3.2	3.2
6.3	Battery acc. to DIN 43 531/35/36 A, B, C, no		3 PzS (14)	3 PzS (14)
6.4	Voltage/Nominal capacity	V/Ah	24/345	24/345
6.5	Battery weight (±5%)	kg	288	288
6.6	Energy consumption acc. to VDI cycle	kWh/h	1.44	1.57

OTHER			EXV 20	EXV 20i
8.1	Type of drive control		AC control	AC control
8.4	Noise level at operator's ear	dB (A)	≤ 66	≤ 66

(1) In brackets: capacity on the forks for the version with fork initial lift (i)

(2) Values for Tele or NiHo mast (x value -26 mm, l_1+ l_2 +26 mm with Triplex mast)

(3) Fork arms raised (see the figure with apostrophe for dimensions)

(4) In brackets: tandem rollers

(5) Value with Tele mast h_3 = 2684 mm. For other values see mast table

(6) With load rack, mandatory for -SF

https://truckmanualshub.com/

(7) Value with platform lowered

(8) With forks fully lowered m_2 = 13 mm

(9) Values with fender

(10) Value with straddles lowered +17 mm

(11) Value with straddles lowered +42 mm

(12) Value with straddles lowered +78 mm

(13) ±5%

(14) Speed in pedestrian mode - Speed when standing without side protection - Speed when standing with side protection

(15) Value with Tele mast h3 = 3584 mm

(16) Rounded edge on the side with forks lowered (geometric limit on slope =5.6%)

(17) Battery replaceable using lift

Datasheet (VDI) EXV-SF 20 / EXV-SF 20i

CHARACTERISTICS			EXV-SF 20	EXV-SF 20i
1.3	Power unit: electric, diesel, petrol, LPG		Electric	Electric
1.4	Drive type: manual, pedestrian, stand-on, seated, order picker		Pedestrian/Standing	Pedestrian/Standing
1.5	Load capacity	Q (kg)	2000	2000 (2000) (1)
1.6	Load centre of gravity	c (mm)	600	600
1.8	Load distance, centre of drive axle to fork	x (mm)	724 (2)	724 (2)/646 (2) (3)
1.9	Wheelbase	y (mm)	1425	1425/1347 (3)

WEIGHT			EXV-SF 20	EXV-SF 20i
2.1	Service weight (with battery)	kg	1575	1508

https://truckmanualshub.com/

2.2	Axle load with load, drive side/load side	kg	1384/2191	1213/2295
2.3	Axle load without load, drive side/load side	kg	1141/434	1096/412

WHEELS			EXV-SF 20	EXV-SF 20i
3.1	Tyres		Polyurethane	Polyurethane
3.2	Drive wheel sizes	mm	Ø 230 x L90	Ø 230 x L90
3.3	Wheel sizes, load side	mm	Ø 85 x L85 (Ø 85 x L60) (4)	Ø 85 x L105 (Ø 85 x L80) (4)
3.4	Stabiliser wheels (sizes)	mm	2x Ø 140 x L50	2x Ø 140 x L50
3.5	Wheels number, drive side/ load side (x = drive wheel)		1x + 2/2 (1x + 1/4) (4)	1x + 2/2 (1x + 1/4) (4)
3.6	Track width, drive side	b10 (mm)	534	534
3.7	Track width, load side	b11 (mm)	370	370

DIMENSIONS			EXV-SF 20	EXV-SF 20i
4.2	Height of mast, lowered	h1 (mm)	1915 (5)	1915 (5)
4.3	Free lift	h2 (mm)	150 (5)	150 (5)
4.4	Lifting	h3 (mm)	2684 (5)	2684 (5)
4.5	Height of mast, extended	h4 (mm)	3284 (5)	3284 (5)
4.6		h5 (mm)	/	110
4.9	Height of tiller arm in driving position, min/max	h14 (mm)	1175/1380	1175/1380
4.15	Fork height, lowered	h13 (mm)	86	86
4.19	Overall length without load	l1 (mm)	2108 (2)/2516 (2) (6)	2108 (2)/2516 (2) (6)
4.20	Length including fork shoulder	l2 (mm)	958 (2)/1366 (2) (6)	958 (2)/1366 (2) (6)
4.21	Total width	b1 (mm)	810	810
4.22	Fork dimensions	s/e/l (mm)	73/210/1150	73/210/1150
4.24	Fork carriage width	b3 (mm)	780	780

https://truckmanualshub.com/

4.25	Fork spread	b5 (mm)	580/680	580/680
4.26		b4 (mm)	230/330	230/330
4.32	Ground clearance, centre of wheelbase	m2 (mm)	20 (7)	20 (7) /150 (2)
4.34	Working aisle with pallet 800 x 1200	Ast (mm)	2519/2909 (6)	2503 (3) (9)/2892 (3) (6) (9)
4.34.1	Working aisle with pallet 1000 x 1200	Ast (mm)	2557/2947 (6)	2517 (3) (10)/2906 (3) (6) (10)
4.35	Turning radius	Wa (mm)	1697/2087 (6)	1620 (3) (11)/2009 (3) (6) (11)

PERFORMANCE			EXV-SF 20	EXV-SF 20i
5.1	Travel speed, laden/unladen	km/h	4.0/4.0 6.0/6.0 8.0/10.0 (13) (14)	4.0/4.0 6.0/6.0 8.0/10.0 (13) (14)
5.2	Lifting speed, with/without load	m/s	0.15/0.30 (12)	0.15/0.30 (12)
5.3	Lowering speed, with/without load	m/s	0.31/0.31 (12)	0.31/0.31 (12)
5.8	Climbing ability KB 5', with/without load	%	8/23 (13)	8/23
5.10	Service brake		Electric	Electric

TRANSMISSION			EXV-SF 20	EXV-SF 20i
6.1	Traction motor, S2=60 min	kW	2.3	2.3
6.2	Lifting motor, S3=15%	kW	3.2	3.2
6.3	Battery acc. to DIN 43 531/35/36 A, B, C, no		3 PzS (14)	3 PzS (14)
6.4	Voltage/Nominal capacity	V/Ah	24/345	24/345
6.5	Battery weight (±5%)	kg	288	288
6.6	Energy consumption acc. to VDI cycle	kWh/h	1.48	1.62

OTHER			EXV-SF 20	EXV-SF 20i
8.1	Type of drive control		AC control	AC control
8.4	Noise level at operator's ear	dB (A)	≤ 66	≤ 66

(1) In brackets: capacity on the forks for the version with fork initial lift (i)

https://truckmanualshub.com/

(2) Values for Tele or NiHo mast (x value -26 mm, l_1+ l_2 +26 mm with Triplex mast)

(3) Fork arms raised (see the figure with apostrophe for dimensions)

(4) In brackets: tandem rollers

(5) Value with Tele mast h_3 = 2684 mm. For other values see mast table

(6) With load rack, mandatory for -SF

(7) Value with platform lowered

(8) With forks fully lowered m_2 = 13 mm

(9) Values with fender

(10) Value with straddles lowered +17 mm

(11) Value with straddles lowered +42 mm

(12) Value with straddles lowered +78 mm

(13) ±5%

(14) Speed in pedestrian mode - Speed when standing without side protection - Speed when standing with side protection

(15) Value with Tele mast h3 = 3584 mm

(16) Rounded edge on the side with forks lowered (geometric limit on slope =5.6%)

(17) Battery replaceable using lift

https://truckmanualshub.com/

Batteries

Battery extraction type	TROG (mm) dimension	TROG	Voltage (V)	Battery capacity (Ah)	Battery type	Element height (mm)	TROG colour
Vertical extraction	624 x 212 x 627	112	24 V	200	2 PzV (gel)	585	RAL 7021
				220	2 PzV (gel)	600	
				230	2 PzS (lead)	570–575	
				250	2 PzS (lead)	600–605	
	624 x 284 x 627	113	24 V	300	3 PzV (gel)	585	RAL 7021
				330	3 PzV (gel)	600	
				345	3 PzS (lead)	570–575	
				375	3 PzS (lead)	600–605	
Side extraction	786 x 211 x 630	63	24 V	300	3 PzV (gel)	585	Silver metallic
				330	3 PzV (gel)	600	
				345	3 PzS (lead)	570–575	
				375	3 PzS (lead)	600–605	
	786 x 310 x 630	67	24 V	400	4 PzV (gel)	585	Silver metallic
				440	4 PzV (gel)	600	
				500	4 PzS (lead)	600–605	

https://truckmanualshub.com/

Battery extraction type	TROG	Battery capacity (Ah)	Battery type	Batteries per model of truck (I = STANDARD — O = OPTIONAL)				
				EXV 14–16 EXV 14i–16i	EXV 20 EXV 20i	EXV-SF 14–16 EXV-SF 14i–16i	EXV-SF 20 EXV-SF 20i	EXP 14-16-20
Vertical extraction	112	200	2 PzV (gel)	I		I		
		220	2 PzV (gel)	I		I		
		230	2 PzS (lead)	I		I		
		250	2 PzS (lead)	I		I		
	113	300	3 PzV (gel)	O	I	O	I	I
		330	3 PzV (gel)	O	I	O	I	I
		345	3 PzS (lead)	O	I	O	I	I
		375	3 PzS (lead)	O	I	O	I	I
Side extraction	63	300	3 PzV (gel)	O		O		
		330	3 PzV (gel)	O		O		
		345	3 PzS (lead)	O		O		
		375	3 PzS (lead)	O		O		
	67	400	4 PzV (gel)			O		
		440	4 PzV (gel)			O		
		500	4 PzS (lead)			O		

https://truckmanualshub.com/

Oil and lubricant table

CAUTION

Use only the oils and lubricants specified in the table as they are approved by the manufacturer. Using oils and lubricants other than those indicated in the table may cause damage to the truck or cause the truck to malfunction. Contact your service centre for more information.

ENVIRONMENT NOTE

Oils and lubricants are toxic products. Refer to the safety guidelines for operating materials in the chapter on page "V".

	Volume [l]	Type		
		Standard	Cold store	Food industry
Hydraulic system	9	HLF 32	EQUIVIS XV32	NEVASTANE SH / SL 32
Reduction gear unit	1.1	ARAL DEGOL GS 220 FUCHS RENOLIN PG 220 SHELL OMALA S4 WE 220		MOBIL SHC 150 CIBUS
Generic lubricant	/	TUTELA MP02	STATERMELF EP2	MOBIL FM 222
Chain lubricant	/	STRUCTOVIS EHD	STRUCTOVIS FHD	

Eco-design requirements for electric motors and variable speed drives

All motors in this industrial truck are exempt from Regulation (EU) 2019/1781 because these motors do not meet the description given in Article 2 "Scope", Item (1) (a) and because of the provisions in Article 2 (2) (h) "Motors in cordless or battery-operated equipment" and Article 2 (2) (o) "Motors designed specifically for the traction of electric vehicles".

All variable speed drives in this industrial truck are exempt from Regulation (EU) 2019/1781 because these variable speed drives do not

https://truckmanualshub.com/

meet the description given in Article 2
"Scope", Item (1) (b).

https://truckmanualshub.com/

A

Address of manufacturer. I

B

Battery
- Disposal. 11
- Type. 118

before use. 88

C

Capacity plate. 59
Checks before use. 88
Checks to be carried out before lifting a load. 105
Chocking the truck. 85
Combi tiller. 45
Conformity marking. 5
Contact details. I
Copyright and trademark rights. 4

D

Danger area. 83
Date of edition of this manual. 4
Declaration of conformity. 6
Definition of directions. 54
Disposal
- Battery. 11
- Components. 11

Driving
- Safety instructions. 82

During work. 71

E

EC declaration of conformity in accordance with the Machinery Directive. 6
Emergency shutdown handle. 39
Ergonomic dimensions. 90

F

Fuses. 128

I

Intended use of the trucks. 82
In the event of error code L354. 71
In the event of error code T526. 71

L

Lashing down the truck. 85
Location of labels. 55
Lubricating and cleaning the lifting chains. 127

M

Managing residual capacity. 67
Managing truck performance data. 70
Markings. 55

O

Operator position. 93
Options and variants. 62
OptiSpeed. 47
Overall dimensions. 140, 141, 156
Overview. . . . . 0 , 30

P

Packaging. 12
Platform. 52
Preparation. 119

R

Regulations for using the DLC 3. 70
Residual dangers. 18
Residual risks. 18

S

Safety. 0
- Emergencies. 95

Safety devices. 23
- Misuse. 25

Safety guidelines for handling loads. . . . 103
Safety Inspection. 22
Serial number. 57
Side protection. 50
Spare parts list. 5
Stability. 19
Starting the truck. 70

T

Technical description. 28
- Braking system. 28
- Driving. 28
- General characteristics. 28
- Lift. 28
- On-board equipment. 29

Transport. 85
Transporting loads. 111

https://truckmanualshub.com/

Types of lifting masts. 48
Triplex. 49
Types of lift mast
NiHo. 48
Simplex. 48
Telescopic. 48

U

Update of this manual. 4

https://truckmanualshub.com/

https://truckmanualshub.com/

STILL GmbH

45758043484 EN - 11/2021 - 08