STEERING

TABLE OF CONTENTS

	page
STEERING	
DESCRIPTION	1
OPERATION	1
DIAGNOSIS AND TESTING	
DIAGNOSIS AND TESTING - POWER STEERING SYSTEM	2
DIAGNOSIS AND TESTING - POWER STEERING FLOW AND PRESSURE	4
COLUMN	6
GEAR	16
PUMP	33
LINKAGE - 2WD	40
LINKAGE - 4WD	42

STEERING

DESCRIPTION

The power steering system consist of a steering column, steering gear and hydraulic pump. The gear is mounted to the frame rail and attaches to the steering linkage. The pump is a constant flow rate and displacement vane-type pump. The pump supplies hydraulic fluid pressure to the power steering gear (Fig. 1).

Vehicles equipped with trailer tow option have a power steering pump oil cooler.

OPERATION

The gear acts as a rolling thread between the worm shaft and rack piston. The worm shaft is supported by a thrust bearing at the lower end and a bearing assembly at the upper end. When the worm shaft is turned from input from the steering column the rack piston moves. The rack piston teeth mesh with the pitman shaft. Turning the worm shaft, turns the pitman shaft, which turns the steering linkage.

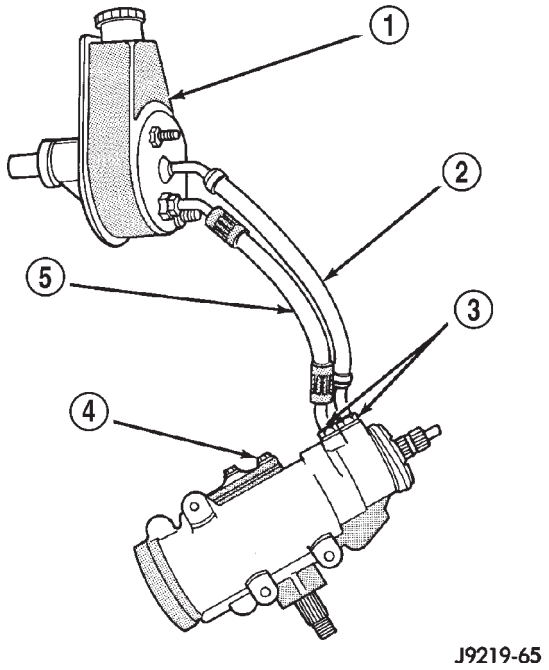

Fig. 1 Power Steering Gear & Pump

1 - HYDRAULIC PUMP ASSEMBLY
2 - RETURN LINE HOSE ASSEMBLY
3 - FITTINGS
4 - STEERING GEAR ASSEMBLY (RECIRCULATING BALL GEAR SHOWN)
5 - PRESSURE HOSE ASSEMBLY

STEERING (Continued)

DIAGNOSIS AND TESTING

DIAGNOSIS AND TESTING - POWER STEERING SYSTEM

STEERING NOISE

There is some noise in all power steering systems. One of the most common is a hissing sound evident at a standstill parking. Or when the steering wheel is at the end of it's travel. Hiss is a high frequency noise similar to that of a water tap being closed slowly. The noise is present in all valves that have a high velocity fluid passing through an orifice. There is no relationship between this noise and steering performance.

CONDITION	POSSIBLE CAUSES	CORRECTION
OBJECTIONAL HISS OR WHISTLE	1. Steering intermediate shaft to dash panel seal.	1. Check and repair seal at dash panel.
	2. Noisy valve in power steering gear.	2. Repair steering gear.
RATTLE OR CLUNK	1. Gear mounting bolts loose.	1. Tighten bolts to specification.
	2. Loose or damaged suspension components.	2. Inspect and repair suspension.
	3. Loose or damaged steering linkage.	3. Inspect and repair steering linkage.
	4. Internal gear noise.	4. Repair steering gear.
	5. Pressure hose in contact with other components.	5. Reposition hose.
	6. Loose or damaged intermediate shaft or column.	6. Inspect and repair or replace.
CHIRP OR SQUEAL	1. Loose belt.	1. Adjust or replace.
WHINE OR GROWL	1. Low fluid level.	1. Fill to proper level.
	2. Pressure hose in contact with other components.	2. Reposition hose.
	3. Internal pump noise.	3. Replace pump.
SUCKING AIR SOUND	1. Loose return line clamp.	1. Replace clamp.
	2. O-ring missing or damaged on hose fitting.	2. Replace o-ring.
	3. Low fluid level.	3. Fill to proper level.
	4. Air leak between pump and reservoir.	4. Repair as necessary.
	5. Reservoir cap not installed correctly.	5. Install reservoir cap correctly.
SCRUBBING OR KNOCKING	1. Wrong tire size.	1. Verify tire size.
	2. Wrong gear.	2. Verify gear.

STEERING (Continued)

BINDING AND STICKING

CONDITION	POSSIBLE CAUSE	CORRECTION
DIFFICULT TO TURN WHEEL STICKS OR BINDS	1. Low fluid level.	1. Fill to proper level.
	2. Tire pressure.	2. Adjust tire pressure.
	3. Steering components (ball joints/tie rod ends).	3. Lube, inspect and repair as necessary.
	4. Loose belt.	4. Adjust or replace.
	5. Low pump pressure.	5. Pressure test and replace if necessary.
	6. Column shaft coupler binding.	6. Replace coupler.
	7. Steering gear worn or out of adjustment.	7. Repair or replace gear.

INSUFFICIENT ASST. OR POOR RETURN TO CENTER

CONDITION	POSSIBLE CAUSE	CORRECTION
HARD TURNING OR MOMENTARY INCREASE IN TURNING EFFORT	1. Tire pressure.	1. Adjust tire pressure.
	2. Low fluid level.	2. Fill to proper level.
	3. Loose belt.	3. Adjust or replace.
	4. Lack of lubrication.	4. Inspect and lubricate steering and suspension compnents.
	5. Low pump pressure.	5. Pressure test and repair as necessary.
	6. Internal gear leak.	6. Pressure and flow test, and repair as necessary.
STEERING WHEEL DOES NOT WANT TO RETURN TO CENTER POSITION	1. Tire pressure.	1. Adjust tire pressure.
	2. Wheel alignment.	2. Align front end.
	3. Lack of lubrication.	3. Inspect and lubricate steering and suspension compnents.
	4. High friction in steering gear.	4. Test and adjust gear as necessary.

STEERING (Continued)

LOOSE STEERING AND VEHICLE LEAD

CONDITION	POSSIBLE CAUSE	CORRECTION
EXCESSIVE PLAY IN STEERING WHEEL	1. Worn or loose suspension or steering components.	1. Inspect and repair as necessary.
	2. Worn or loose wheel bearings.	2. Inspect and repair or adjust bearings.
	3. Steering gear mounting.	3. Tighten gear mounting bolts to specification.
	4. Gear out of adjustment.	4. Adjust gear to specification.
	5. Worn or loose steering coupler.	5. Inspect and replace as necessary.
VEHICLE PULLS OR LEADS TO ONE SIDE.	1. Tire Pressure.	1. Adjust tire pressure.
	2. Radial tire lead.	2. Rotate tires.
	3. Brakes dragging.	3. Repair as necessary.
	4. Wheel alignment.	4. Align front end.

DIAGNOSIS AND TESTING - POWER STEERING FLOW AND PRESSURE

The following procedure is used to test the operation of the power steering system on the vehicle. This test will provide the flow rate of the power steering pump along with the maximum relief pressure. Perform test any time a power steering system problem is present. This test will determine if the power steering pump or power steering gear is not functioning properly. The following pressure and flow test is performed using Power Steering Analyzer Tool kit 6815 (Fig. 2) and Adapter Kit 6893.

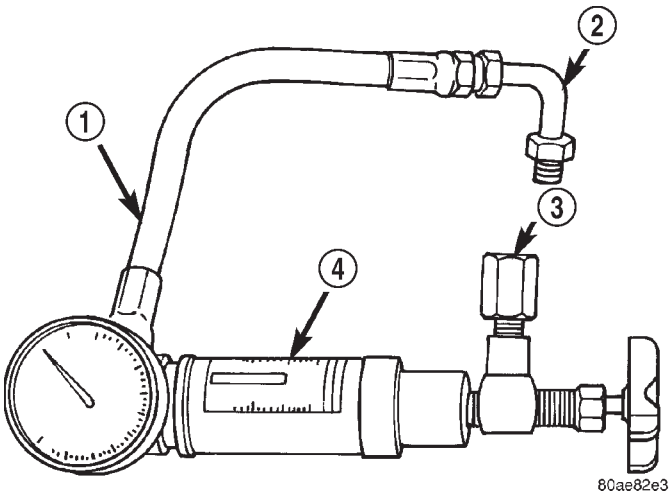

Fig. 2 Pressure Test Gauge

1 - GAUGE HOSE
2 - TUBE
3 - ADAPTER FITTINGS
4 - ANALYZER

POWER STEERING ANALYZER INSTALLATION

WITHOUT HYDRAULIC BOOSTER

(1) Remove the high pressure hose from the power steering pump.

(2) Connect Tube 6844 into the pump hose fitting.

(3) Connect pressure gauge hose from the Power Steering Analyzer to Tube 6844.

(4) Connect Adapter 6826 to Power Steering Analyzer test valve end.

(5) Connect the power steering hose from the steering gear to Adapter 6826.

WITH HYDRAULIC BOOSTER

(1) Remove high pressure hose which goes to the steering gear from the tube coming out of the booster.

(2) Connect Adapter 6826 to the Power Steering Analyzer pressure gauge hose.

(3) Connect pressure gauge hose to the tube coming out of the booster.

(4) Connect Tube 6844 to the steering gear hose and Power Steering Analyzer test valve end.

FLOW AND PRESSURE TEST

(1) Check belt condition and tension.

(2) Open the test valve completely.

(3) Start engine and let idle long enough to circulate power steering fluid through flow/pressure test gauge and to get air out of the fluid. Then shut off engine.

(4) Check fluid level, add fluid as necessary. Start engine again and let idle.

(5) Gauge should read below 1034 kPa (150 psi), if above, inspect the hoses for restrictions and repair as

STEERING (Continued)

necessary. The initial pressure reading should be in the range of 345-552 kPa (50-80 psi).

(6) Increase the engine speed to 1500 RPM and read the flow meter. If the flow rate (GPM) is below specification (Refer to pump specification chart for GPM) the pump should be replaced.

CAUTION: The following test procedure involves testing maximum pump pressure output and flow control valve operation. Do not leave valve closed for more than three seconds as the pump could be damaged.

(7) Close valve fully three times and record highest pressure indicated each time. **All three readings must be above specifications and within 345 kPa (50 psi) of each other.**

- Pressures above specifications but not within 345 kPa (50 psi) of each other, replace pump.
- Pressures within 345 kPa (50 psi) of each other but below specifications, replace pump.

(8) Open the test valve and turn the steering wheel to the extreme left and right positions three times against the stops. Record the highest pressure reading at each position. Compare the readings to the pump specifications chart. If pressures readings are not within 50 psi of each other, the gear is leaking internally and must be repaired.

CAUTION: Do not force the pump to operate against the stops for more than 2 to 3 seconds at a time because, pump damage will result.

PUMP SPECIFICATION

ENGINE	RELIEF PRESSURE (P.S.I.)	FLOW (G.P.M.) at 1500 RPM
3.9L	1450 to 1550	2.7 to 3.1
5.2L	1450 to 1550	2.7 to 3.1
5.9L	1450 to 1550	2.7 to 3.1
8.0L	1450 to 1550	2.7 to 3.1
5.9L Diesel	1450 to 1550	3.1 to 3.5
All With Hydraulic Booster	1450 to 1550	3.1 to 3.5

NOTE: After preforming test and removing Power Steering Analyzer, check power steering fluid level.

COLUMN

TABLE OF CONTENTS

	page
COLUMN	
DESCRIPTION	6
OPERATION	
SERVICE PRECAUTIONS	6
REMOVAL	6
INSTALLATION	8
SPECIFICATIONS	
TORQUE CHART	9
KEY-IN IGNITION SWITCH	
DESCRIPTION	9
DIAGNOSIS AND TESTING - IGNITION SWITCH AND KEY LOCK CYLINDER	9
LOCK CYLINDER	
REMOVAL	10
INSTALLATION	10
IGNITION SWITCH	
DESCRIPTION	11
OPERATION	11
DIAGNOSIS AND TESTING - IGNITION SWITCH	11
REMOVAL	12
INSTALLATION	12
GEAR SHIFT LEVER	
REMOVAL	14
INSTALLATION	15
STEERING WHEEL	
REMOVAL	15
INSTALLATION	15

COLUMN

DESCRIPTION

The tilt and standard column (Fig. 1) has been designed to be serviced as an assembly; less wiring, switches, shrouds, steering wheel, etc. Most steering column components can be serviced without removing the steering column from the vehicle.

OPERATION

SERVICE PRECAUTIONS

Safety goggles should be worn at all times when working on steering columns.

To service the steering wheel, switches or the airbag, refer to the WARNINGS and CAUTIONS below.

WARNING: THE AIRBAG SYSTEM IS A SENSITIVE, COMPLEX ELECTRO-MECHANICAL UNIT. BEFORE ATTEMPTING TO DIAGNOSE, REMOVE OR INSTALL THE AIRBAG SYSTEM COMPONENTS YOU MUST FIRST DISCONNECT AND ISOLATE THE BATTERY NEGATIVE (GROUND) CABLE. THEN WAIT TWO MINUTES FOR THE SYSTEM CAPACITOR TO DISCHARGE. FAILURE TO DO SO COULD RESULT IN ACCIDENTAL DEPLOYMENT OF THE AIRBAG AND POSSIBLE PERSONAL INJURY. THE FASTENERS, SCREWS, AND BOLTS, ORIGINALLY USED FOR THE AIRBAG COMPONENTS, HAVE SPECIAL COATINGS AND ARE SPECIFICALLY DESIGNED FOR THE AIRBAG SYSTEM. THEY MUST NEVER BE REPLACED WITH ANY SUBSTITUTES. ANYTIME A NEW FASTENER IS NEEDED, REPLACE WITH THE CORRECT FASTENERS PROVIDED IN THE SERVICE PACKAGE OR FASTENERS LISTED IN THE PARTS BOOKS.

CAUTION: Do not hammer on steering column shaft or shift tube. This may cause the shaft/shift tube to collapse or damage the bearing.

CAUTION: Do not attempt to remove the pivot pins to disassemble the tilting mechanism. Do not remove shaft lock plate, plate retainer, park lock link or slider. This will damage the column (Fig. 2) and (Fig. 3).

REMOVAL

(1) Position the front wheels straight ahead.

(2) Disconnect the negative (ground) cable from the battery.

(3) Remove the airbag, (Refer to 8 - ELECTRICAL/RESTRAINTS/DRIVER AIRBAG - REMOVAL).

(4) Remove the steering wheel with an appropriate puller,(Refer to 19 - STEERING/COLUMN/STEERING WHEEL - REMOVAL).

COLUMN (Continued)

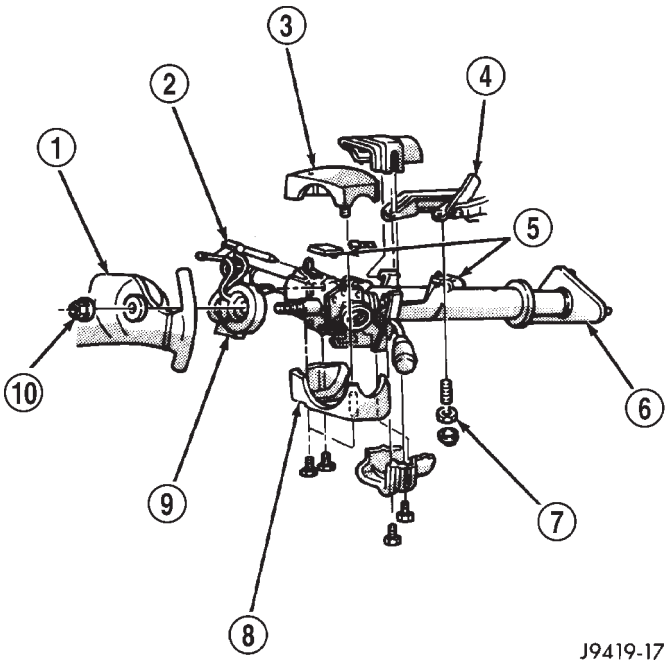

Fig. 1 Steering Column

1 - STEERING WHEEL
2 - TILT LEVER
3 - UPPER SHROUD
4 - PANEL BRACKET
5 - SPACER
6 - TOE PLATE
7 - NUT
8 - LOWER SHROUD
9 - CLOCK SPRING
10 - NUT

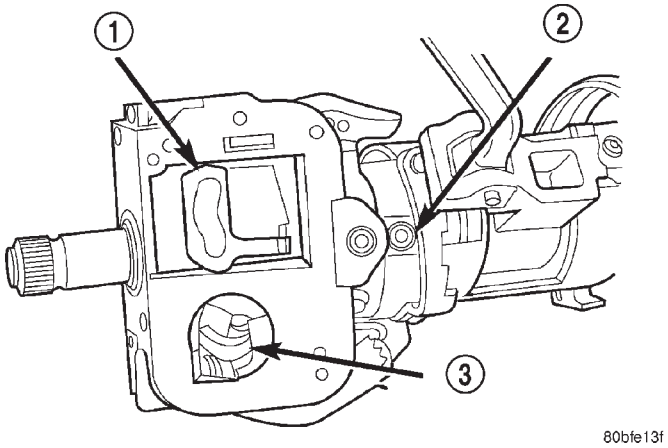

Fig. 2 Observe Cautions

1 - CAUTION: NEVER REMOVE IGNITION LOCKING LINK
2 - CAUTION: NEVER REMOVE PARK LOCK SLIDER
3 - CAUTION: NEVER REMOVE SHAFT LOCK PLATE

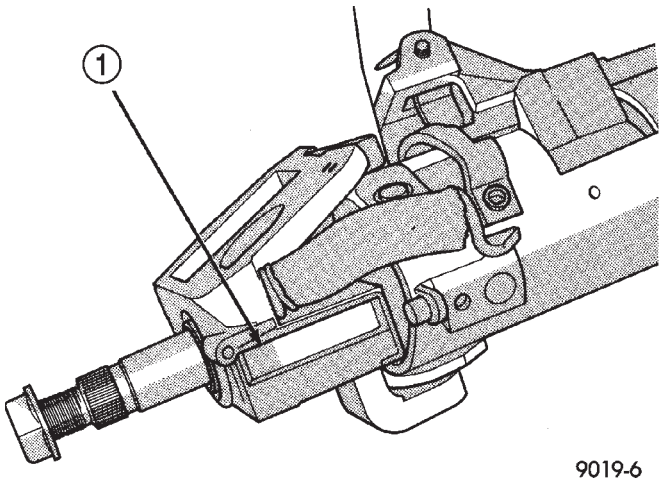

Fig. 3 Observe Cautions

1 - CAUTION: NEVER REMOVE SHAFT LOCK PLATE RETAINER

CAUTION: Ensure the puller bolts are fully engaged into the steering wheel and not into the clockspring, before attempting to remove the wheel. Failure to do so may damage the steering wheel.

(5) Remove the shift link rod in the engine compartment (if equipped). Pry the rod out from the grommet in the shift lever.

(6) Scribe or paint reference mark on the column shaft-to-coupler. This will aid in column shaft installation alignment. Remove the steering column shaft-to-coupler bolt (Fig. 4).

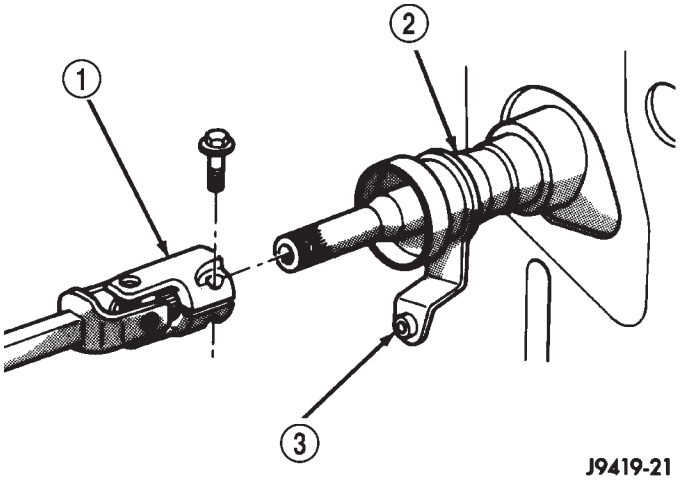

Fig. 4 Steering Coupler-Typical

1 - STEERING COUPLER
2 - STEERING COLUMN
3 - SHIFT LEVER

(7) Remove the steering column opening cover/knee blocker, (Refer to 23 - BODY/INSTRUMENT PANEL/STEERING COLUMN OPENING COVER - REMOVAL).

COLUMN (Continued)

(8) Remove the PRNDL cable on column shift vehicles. Put the shift lever in **Park** position. Pull the cable and twist to remove from the position arm. Push the tab up on bottom of the cable retainer, then squeeze sides to remove retainer from the column (Fig. 5).

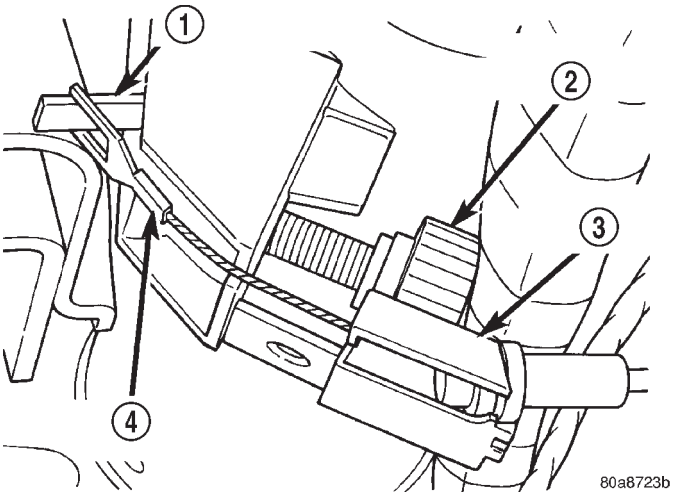

Fig. 5 PRNDL Drive

1 - PRNDL LEVER
2 - THUMB SCREW
3 - CABLE RETAINER
4 - PRNDL CABLE

(9) Remove the tilt lever (if equipped) from the column.

(10) Remove the upper and lower lock housing shroud and remove the lower fixed shroud.

(11) Remove the turn signal multi-function switch connector with a 7mm socket (Fig. 6).

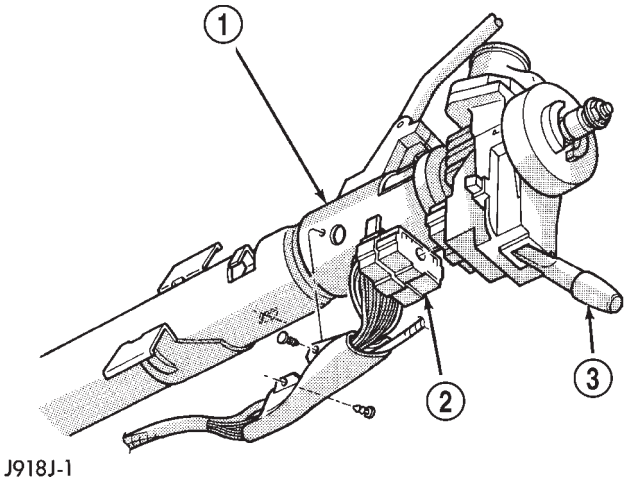

Fig. 6 Multi-function Switch

1 - STEERING COLUMN ASSY.
2 - MULTI-FUNCTION SWITCH CONNECTOR
3 - TURN SIGNAL SWITCH AND LEVER

(12) Loosen the upper Support Bracket nuts to allow some slack. This will aid in removal of the upper fixed shroud.

(13) Remove the electrical connections from Key-in light, Ignition Switch, Horn, Overdrive Switch and Clock Spring (Speed Control) (Fig. 7).

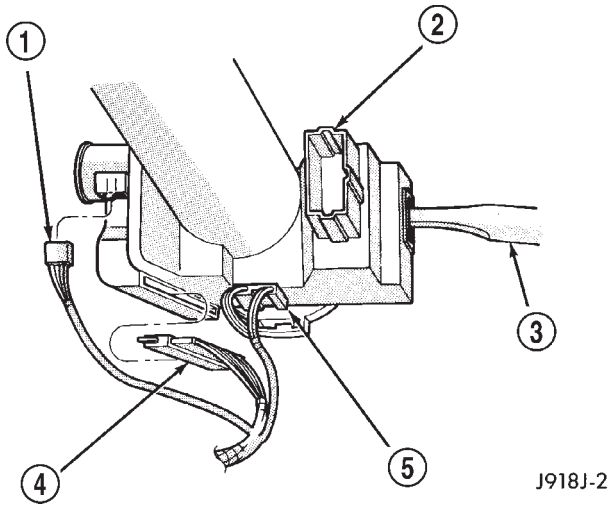

Fig. 7 Steering Column Wiring

1 - KEY-IN SWITCH & HALO LIGHT
2 - MULTI-FUNCTION SWITCH
3 - TURN SIGNAL SWITCH & LEVER
4 - IGNITION SWITCH
5 - SPEED CONTROL

(14) Remove the wiring harness from the column by prying out the plastic retainer buttons.

(15) Remove the toe plate fasteners.

(16) Remove the column from vehicle.

(17) Remove the Ignition and Multi-Function Switch, then remove the Clock Spring and tape the Clock Spring to prevent it from turning, (Refer to 8 - ELECTRICAL/RESTRAINTS/CLOCKSPRING - REMOVAL).

INSTALLATION

(1) Install the clock spring and switches, (Refer to 8 - ELECTRICAL/RESTRAINTS/CLOCKSPRING - INSTALLATION).

NOTE: Turn the Ignition Switch to the on position and verify the gear shifter moves. If the shifter does not move ensure the Ignition Switch is installed properly.

(2) Column shift vehicles, install a new grommet. Use multi-purpose lubricant, or equivalent, to aid installation of the grommet.

NOTE: A new grommet should be used when ever the rod is disconnected from the lever.

COLUMN (Continued)

(3) Remove the shipping lock pin if necessary.

(4) Install the column through the floor pan.

(5) Position the column bracket breakaway capsules on the mounting studs. Install, but **loose assemble** the two upper bracket nuts.

(6) With the front wheels in the straight-ahead position. Align steering column shaft to the coupler. Install a **new** pinch bolt and tighten to 49 N·m (36 ft. lbs.).

(7) Clip the wiring harness on the steering column. Connect the multi- function switch wiring and tighten with 7mm socket.

(8) Install the upper fixed shroud.

(9) Be sure both breakaway capsules are fully seated in the slots in the column support bracket. Pull the column rearward then tighten upper bracket nuts to 12 N·m (105 in. lbs.).

(10) Tighten the toe plate to floor pan attaching nuts to 22.5 N·m (200 in. lbs.).

(11) Install the wiring connections to the column. Install the lower fixed shroud.

(12) Column shift vehicles, install the PRNDL driver cable. Place shifter in Park position. If indicator needs adjusting, turn thumb screw on cable retainer to adjust cable.

(13) Install the lock housing shrouds. Install the tilt lever (if equipped).

(14) Install the knee blocker and steering column opening cover, (Refer to 23 - BODY/INSTRUMENT PANEL/STEERING COLUMN OPENING COVER - INSTALLATION).

(15) Install steering wheel and tighten nut to 61 N·m (45 ft. lbs.), (Refer to 19 - STEERING/COLUMN/STEERING WHEEL - INSTALLATION).

(16) Install the airbag, (Refer to 8 - ELECTRICAL/RESTRAINTS/DRIVER AIRBAG - INSTALLATION).

(17) Column shift vehicles, connect the shift link rod to the transmission shift lever. Use multi-purpose lubricant, or an equivalent product, to aid the installation.

(18) Install the battery ground (negative) cable.

(19) Verify operation of the automatic transmission shift linkage and adjust as necessary, (Refer to 21 - TRANSMISSION/TRANSAXLE/AUTOMATIC - 44RE/GEAR SHIFT CABLE - ADJUSTMENTS).

SPECIFICATIONS

TORQUE CHART

TORQUE SPECIFICATIONS

DESCRIPTION	N·m	Ft. Lbs.	In. Lbs.
Steering Wheel Nut	61	45	—
Steering Coupler Bolt	49	36	—
Steering Column Upper Bracket	12	—	105
Steering Column Toe Plate	23	—	200

KEY-IN IGNITION SWITCH

DESCRIPTION

The key-in ignition switch is integral to the ignition switch, which is mounted on the left side of the steering column. It closes a path to ground for the Central Timer Module (CTM) when the ignition key is inserted in the ignition lock cylinder and the driver door ajar switch is closed (driver door is open). The key-in ignition switch opens the ground path when the key is removed from the ignition lock cylinder. The ground path is also opened when the driver door ajar switch is open (driver door is closed).

The key-in ignition switch cannot be repaired and, if faulty or damaged, the entire ignition switch must be replaced, (Refer to 19 - STEERING/COLUMN/IGNITION SWITCH - REMOVAL).

DIAGNOSIS AND TESTING - IGNITION SWITCH AND KEY LOCK CYLINDER

ELECTRICAL DIAGNOSIS

For ignition switch electrical schematics, refer to Ignition Switch in the appropriate section of Electrical Wiring Diagrams.

KEY-IN IGNITION SWITCH (Continued)

MECHANICAL DIAGNOSIS (KEY DIFFICULT TO ROTATE)

Vehicles equipped with an automatic transmission and a floor mounted shifter: a cable is used to connect the interlock device in the steering column assembly, to the transmission floor shift lever. This interlock device is used to lock the transmission shifter in the PARK position when the key lock cylinder is rotated to the LOCKED or ACCESSORY position. The interlock device within the steering column is not serviceable. If repair is necessary, the steering column assembly must be replaced. (Refer to 19 - STEERING/COLUMN - REMOVAL).

If the ignition key is difficult to rotate to or from the LOCK or ACCESSORY position, it may not be the fault of the key cylinder or the steering column components. The brake transmission shift interlock cable may be out of adjustment. Refer to Brake Transmission Shift Interlock Cable Adjustment in Transmissions for adjustment procedures.

Vehicles equipped with an automatic transmission and a steering column mounted shifter: an interlock device is located within the steering column. This interlock device is used to lock the transmission shifter in the PARK position when the key lock cylinder is in the LOCKED or ACCESSORY position. If it is difficult to rotate the key to or from the LOCK or ACCESSORY position, the interlock device within the steering column may be defective. This device is not serviceable. If repair is necessary, the steering column assembly must be replaced. (Refer to 19 - STEERING/COLUMN - REMOVAL).

Vehicles equipped with a manual transmission and a floor mounted shifter: on certain models, a lever is located on the steering column behind the ignition key lock cylinder. The lever must be manually operated to allow rotation of the ignition key lock cylinder to the LOCK or ACCESSORY position. If it is difficult to rotate the key to the LOCK or ACCESSORY position, the lever mechanism may be defective. This mechanism is not serviceable. If repair is necessary, the steering column assembly must be replaced. (Refer to 19 - STEERING/COLUMN - REMOVAL).

On other models, the ignition key cylinder must be depressed to allow it to be rotated into the LOCK or ACCESSORY position. If it is difficult to rotate the key to the LOCK or ACCESSORY position, the lock mechanism within the steering column may be defective. This mechanism is not serviceable. If repair is necessary, the steering column assembly must be replaced. (Refer to 19 - STEERING/COLUMN - REMOVAL).

LOCK CYLINDER

REMOVAL

The ignition key must be in the key cylinder for cylinder removal.

(1) Disconnect negative cable from battery.

(2) If equipped with tilt column, remove tilt lever by turning it counterclockwise.

(3) Remove upper and lower covers (shrouds) from steering column (Fig. 8).

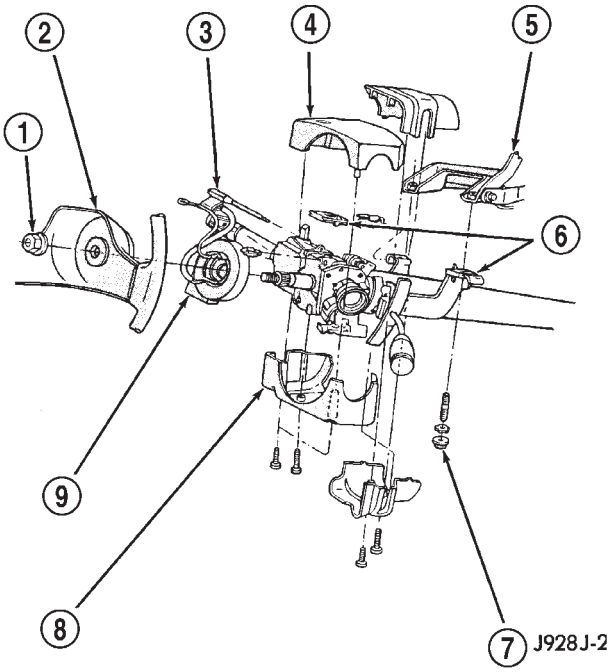

Fig. 8 Shroud Removal/Installation—Typical

1 - NUT
2 - STEERING WHEEL
3 - TILT LEVER
4 - UPPER SHROUD
5 - PANEL BRACKET
6 - SPACER
7 - NUT
8 - LOWER SHROUD
9 - CLOCK SPRING

(4) If equipped with automatic transmission, place shifter in PARK position.

(5) A retaining pin (Fig. 9) is located at side of key cylinder assembly.

(a) Rotate key to RUN position.

(b) Press in on retaining pin while pulling key cylinder from ignition switch.

INSTALLATION

The ignition key must be in the key cylinder and turned clockwise to the RUN position for cylinder installation.

LOCK CYLINDER (Continued)

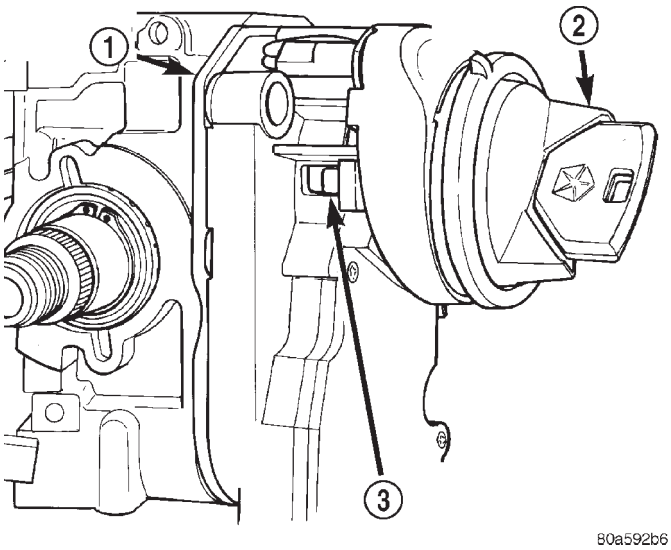

Fig. 9 Retaining Pin

1 - IGNITION SWITCH
2 - KEY/KEY CYLINDER (RUN POSITION)
3 - RETAINING PIN

(1) Install the lock cylinder into the housing using care to align the end of the lock cylinder with the ignition switch.

(2) Push the lock cylinder in until it clicks.

IGNITION SWITCH

DESCRIPTION

The electrical ignition switch is located on the steering column. It is used as the main on/off switching device for most electrical components. The mechanical key lock cylinder is used to engage/disengage the electrical ignition switch.

OPERATION

Vehicles equipped with an automatic transmission and a steering column mounted shifter: an interlock device is located within the steering column. This interlock device is used to lock the transmission shifter in the PARK position when the key lock cylinder is in the LOCKED or ACCESSORY position. If it is difficult to rotate the key to or from the LOCK or ACCESSORY position, the interlock device within the steering column may be defective. This device is not serviceable. If repair is necessary, the steering column assembly must be replaced. (Refer to 19 - STEERING/COLUMN - REMOVAL).

Vehicles equipped with a manual transmission and a floor mounted shifter: on certain models, a lever is located on the steering column behind the ignition key lock cylinder. The lever must be manually operated to allow rotation of the ignition key lock cylinder to the LOCK or ACCESSORY position. If it is difficult to rotate the key to the LOCK or ACCESSORY position, the lever mechanism may be defective. This mechanism is not serviceable. If repair is necessary, the steering column assembly must be replaced. (Refer to 19 - STEERING/COLUMN - REMOVAL).

On other models, the ignition key cylinder must be depressed to allow it to be rotated into the LOCK or ACCESSORY position. If it is difficult to rotate the key to the LOCK or ACCESSORY position, the lock mechanism within the steering column may be defective. This mechanism is not serviceable. If repair is necessary, the steering column assembly must be replaced. (Refer to 19 - STEERING/COLUMN - REMOVAL).

DIAGNOSIS AND TESTING - IGNITION SWITCH

TEST AND REPAIR

If the key removal effort is excessive on a vehicle with a automatic transmission first adjust the shift linkage, (Refer to 21 - TRANSMISSION/TRANSAXLE/AUTOMATIC - 42RE/GEAR SHIFT CABLE - ADJUSTMENTS).

If the ignition switch effort is excessive remove the ignition key cylinder from the steering column. (Refer to 19 - STEERING/COLUMN/LOCK CYLINDER HOUSING - INSTALLATION). Check the turning effort of the key cylinder. If the ignition key cylinder effort is excessive replace the key cylinder. If the ignition key cylinder operates properly look for the following conditions.

(1) Look for rough areas or flash in the casting and if found remove with a file (Fig. 10).

(2) Grease the lock plate actuator, lock plate, slider and locking link.

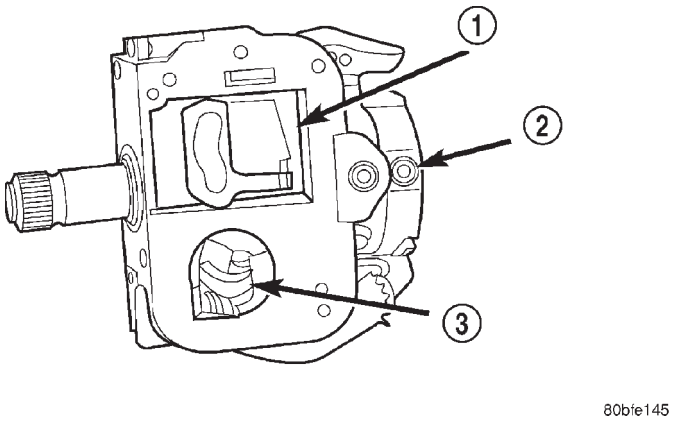

Fig. 10 Steering Column Flash Removal

1 - FILE THIS AREA TO REMOVE FLASHING AND PROVIDE CLEARANCE TO ELIMINATE BINDING
2 - PARK LOCK SLIDER
3 - CAUTION: NEVER REMOVE SHAFT LOCK PLATE

IGNITION SWITCH (Continued)

REMOVAL

(1) Remove the key lock cylinder.

(2) Remove the three ignition mounting screws (Fig. 11).

(3) Gently pull the switch away from the column. Disconnect the electrical connector (Fig. 12).

(4) Disconnect the halo lamp wiring connector (Fig. 12).

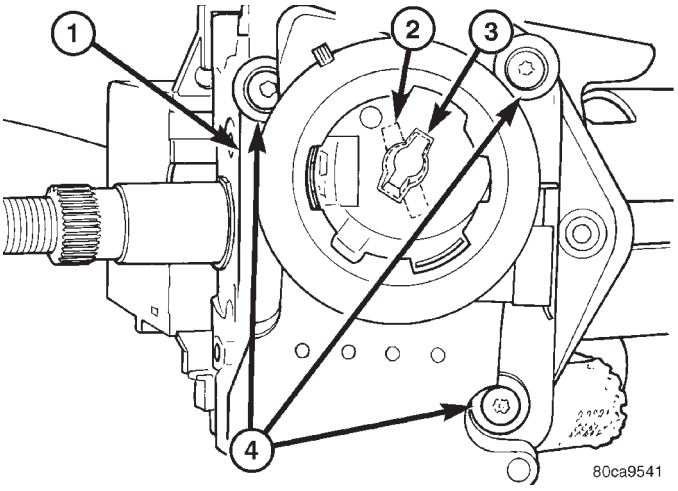

Fig. 11 SWITCH MOUNTING SCREWS

1 - IGNITION SWITCH
2 - SLOTS NOT ALIGNED
3 - SLOTS ALIGNED
4 - IGNITION SWITCH MOUNTING SCREWS

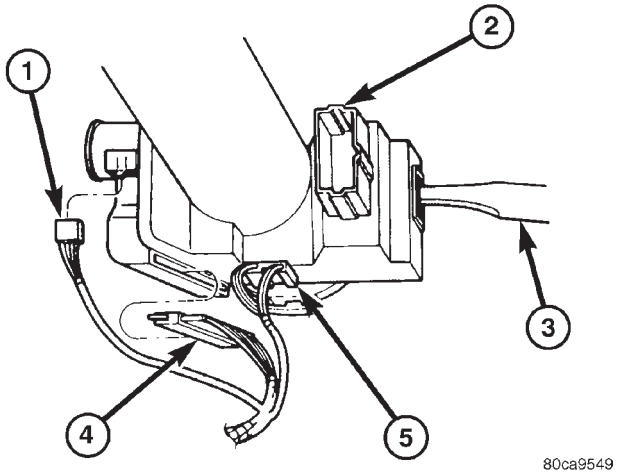

Fig. 12 IGNITION SWITCH AND HALO CONNECTORS

1 - KEY-IN SWITCH & HALO LIGHT
2 - MULTI-FUNCTION SWITCH
3 - TURN SIGNAL SWITCH & LEVER
4 - IGNITION SWITCH
5 - SPEED CONTROL

INSTALLATION

(1) Rotate the flag on the rear of the ignition switch to the RUN position (Fig. 13). This step must be done to allow the tang (Fig. 14) on the key cylinder to fit into the slots (Fig. 11)within the ignition switch.

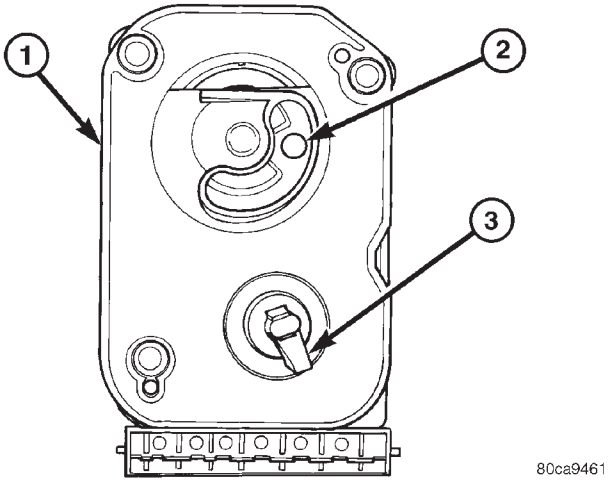

Fig. 13 FLAG IN RUN POSITION

1 - REAR OF IGNITION SWITCH
2 - PARK LOCK DOWEL PIN (RUN POSITION)
3 - FLAG (RUN POSITION)

(2) With the key into the key lock cylinder, rotate the key clockwise until the retaining pin can be depressed (Fig. 14) or (Fig. 15).

(3) Install the key cylinder into the ignition switch by aligning the retaining pin slot. Push the key cylinder into the switch until the retaining pin engages. After the pin engages, rotate the key to the OFF or LOCK position.

(4) Check for proper retention of the key cylinder by attempting to pull the cylinder from the switch.

(5) Automatic Transmission Only: Before attaching the ignition switch to the steering column, the transmission shifter must be in the PARK position. The park lock dowel pin on the rear of the ignition switch (Fig. 16) must also be properly indexed into the park lock linkage (Fig. 17) before installing the switch.

(6) The flag at the rear of the ignition switch must be properly indexed into the steering column before installing the switch. This flag is used to operate the steering wheel lock lever in the steering column (Fig. 18). This lever allows the steering wheel position to be locked when the key is in the LOCK position.

(7) Place the ignition switch in the LOCK position. The switch is in the LOCK position when the column lock flag is parallel to the ignition switch terminals (Fig. 16).

IGNITION SWITCH (Continued)

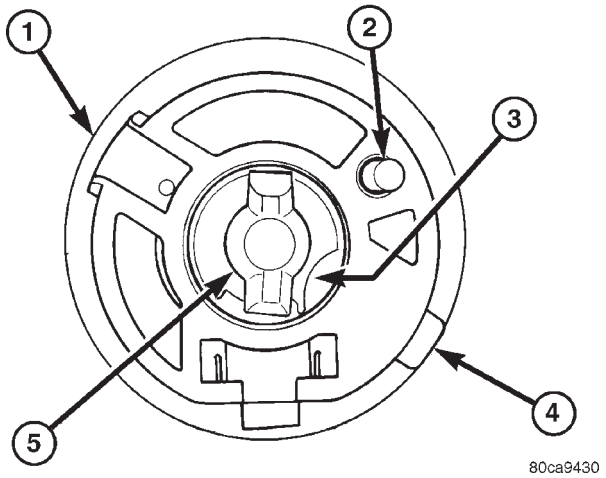

Fig. 14 KEY CYLINDER --- REAR VIEW

1 - IGNITION KEY LOCK CYLINDER
2 - PUSH PIN
3 - RETAINING PIN SLOT
4 - RETAINING PIN
5 - DRIVER

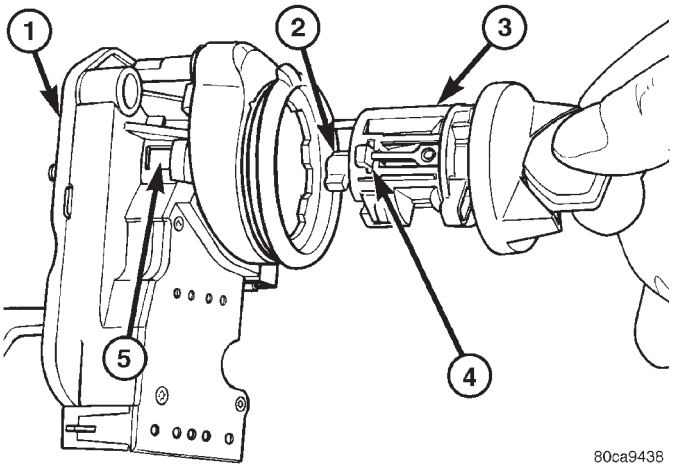

Fig. 15 INSTALLING KEY CYLINDER INTO SWITCH

1 - IGNITION SWITCH
2 - DRIVER
3 - IGNITION KEY LOCK CYLINDER
4 - RETAINING PIN
5 - RETAINING PIN SLOT

(8) Automatic Transmissions Only: Apply a light coating of grease to the park lock dowel pin and park lock slider linkage. Before installing the switch, push the park lock slider linkage (Fig. 17)forward until it bottoms. Do a final positioning by pulling it rearwards about one-quarter inch.

(9) Apply a light coating of grease to both the column lock flag and shaft at the end of the flag.

(10) Place the ignition switch into the openings on the steering column

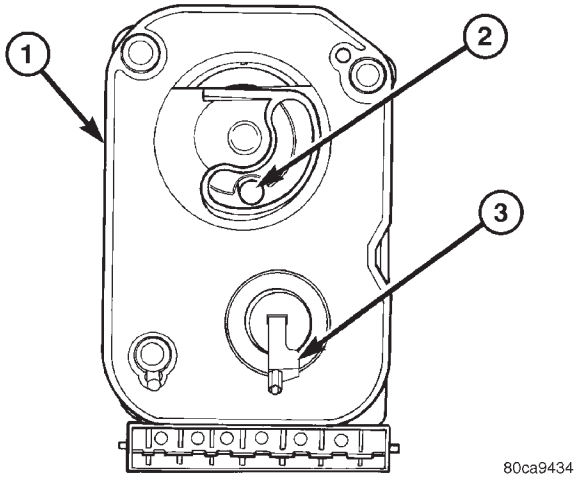

Fig. 16 IGNITION SWITCH VIEW FROM COLUMN

1 - REAR OF IGNITION SWITCH
2 - PARK LOCK DOWEL PIN (LOCK POSITION)
3 - FLAG (LOCK POSITION)

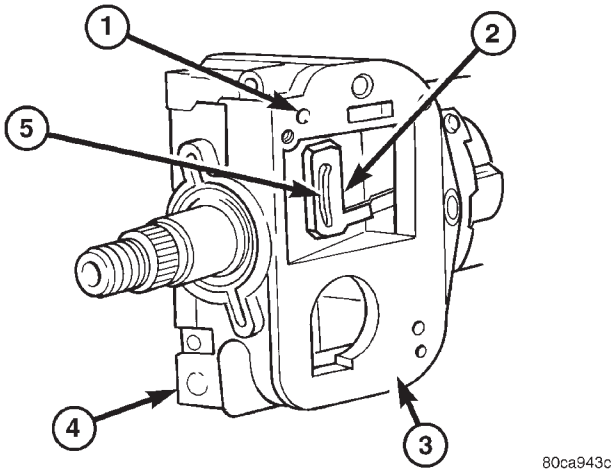

Fig. 17 PARK LOCK LINKAGE -- AUTOMATIC TRANSMISSION -- TYPICAL

1 - DOWEL LOCATING HOLES (2)
2 - PARK LOCK SLIDER LINKAGE
3 - IGNITION SWITCH MOUNTING PAD
4 - STEERING COLUMN
5 - SLOT

(a) Automatic Transmissions Only: Be sure the park lock dowel pin on the rear of the ignition switch enters the slot in the park lock slider linkage (Fig. 17).

(b) Be sure the flag on the rear of the switch is positioned above the steering wheel lock lever (Fig. 18).

(c) Align the dowel pins on the rear of the switch into the holes on the side of the steering column.

(d) Install the three ignition mounting screws. Tighten the screws to 2 N·m (17 in. lbs.).

IGNITION SWITCH (Continued)

(e) After installing the ignition switch rotate the ignition key from the LOCK to the ON position. Verify that the park lock slider moves in the slider slot, allowing the gear shift lever to be moved out of PARK (automatic transmissions only). If the slider does not move , and the gear shift lever is locked in PARK, the ignition switch park lock dowel pin, on the rear of the ignition switch, is not properly installed in the slot of the park lock slider linkage. Remove the ignition switch and reinstall.

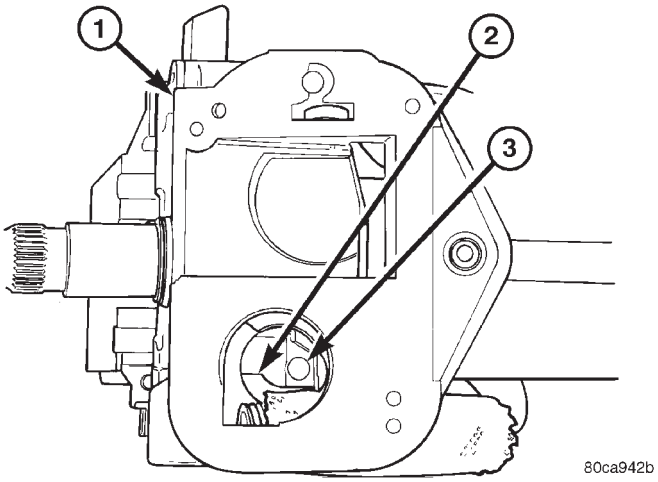

Fig. 18 STEERING WHEEL LOCK LEVER

1 - STEERING COLUMN
2 - STEERING WHEEL LOCK LEVER
3 - LOCATER (SHAFT AT END OF FLAG)

(11) Connect the electrical connectors for the ignition switch and halo lamp.

(12) Install the steering column shrouds. Tighten the screws to 2 N·m (17 in. lbs.).

(13) Install the tilt column lever. (if equipped).

(14) Connect the battery.

(15) Automatic Transmissions Only: The shifter should lock in the PARK position when the key is in the LOCK position (if equipped with a shift lock device). The shifter should unlock when the key is rotated to the ON position.

(16) Check for proper operation of the ignition switch in ACCESSARY, LOCK, OFF, ON, RUN and start positions.

(17) The steering wheel should lock when the key is in the LOCK position. Rotate the steering wheel at least 180° to verify. The steering wheel should unlock when the key is rotated to the ON position.

GEAR SHIFT LEVER

REMOVAL

(1) Remove the tilt lever.

(2) Remove the upper and lower shrouds.

(3) Remove the steering column opening cover (Refer to 23 - BODY/INSTRUMENT PANEL/STEERING COLUMN OPENING COVER - REMOVAL).

(4) Remove the steering column mounting nuts.

(5) Lower the steering column to remove the secondary shrouds.

(6) Raise the steering column back on the mounting bolts and finger tighten the nuts.

(7) Disconnect over drive switch wiring.

(8) Using a drift of the appropriate size drive the knurled pin out of the steering column and gear shift lever. Remove the gear shift lever from the steering column assembly.

CAUTION: The pin can only be removed from the direction shown (Fig. 19).

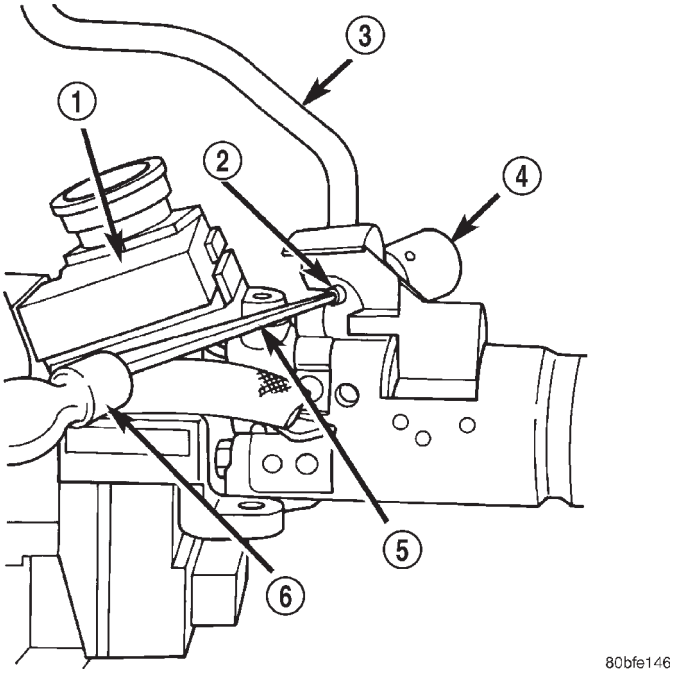

Fig. 19 Gear Shift Lever Removal

1 - IGNITION SWITCH
2 - KNURLED PIN
3 - GEARSHIFT LEVER
4 - SOCKET
5 - DRIFT
6 - HAMMER

GEAR SHIFT LEVER (Continued)

INSTALLATION

(1) Install the gear shift lever into the steering column assembly. Align the pin holes in the gear shift lever and the steering column assembly.

CAUTION: The pin must be installed in the original direction.

(2) Carefully Install the pin into the steering column assembly and through the shift lever. If the pin binds check the alignment on the holes. Be sure pin is fully installed into the steering column assembly.

(3) Connect over drive switch wiring.

(4) Lower the steering column to install the secondary shrouds.

(5) Install the steering column mounting nuts. Tighten the nuts to 12 N·m (105 in. lbs.).

(6) Install the steering column opening cover (Refer to 23 - BODY/INSTRUMENT PANEL/STEERING COLUMN OPENING COVER - INSTALLATION).

(7) Install the upper and lower shrouds.

(8) Install the tilt lever.

STEERING WHEEL

REMOVAL

For steering wheel removal procedure,(Refer to 8 - ELECTRICAL/RESTRAINTS/CLOCKSPRING - REMOVAL).

INSTALLATION

For steering wheel installation procedure,(Refer to 8 - ELECTRICAL/RESTRAINTS/CLOCKSPRING - INSTALLATION).

GEAR

TABLE OF CONTENTS

page

GEAR
DESCRIPTION 16
OPERATION 16
DIAGNOSIS AND TESTING - POWER STEERING GEAR LEAKAGE 16
REMOVAL 18
INSTALLATION 18
ADJUSTMENTS 18
SPECIFICATIONS
POWER STEERING GEAR 21
TORQUE CHART 21
SPECIAL TOOLS
POWER STEERING GEAR 22
PITMAN BEARING
REMOVAL 22
INSTALLATION 23
PITMAN SHAFT
REMOVAL 24
INSTALLATION 25
PITMAN SHAFT SEAL
REMOVAL 25
INSTALLATION 26
SPOOL VALVE
REMOVAL 26
INSTALLATION 28
STEERING GEAR HOUSING PLUG
REMOVAL 29
INSTALLATION 30
WORM SHAFT
REMOVAL 30
INSTALLATION 31

GEAR

DESCRIPTION

The power steering gear is a recirculating ball type gear (Fig. 1). The gear ratio's used are 17.5:1 and 14:1.

OPERATION

The gear acts as a rolling thread between the worm shaft and rack piston. The worm shaft is supported by a thrust bearing at the lower end and a bearing assembly at the upper end. When the worm shaft is turned from input from the steering column the rack piston moves. The rack piston teeth mesh with the pitman shaft. Turning the worm shaft, turns the pitman shaft, which turns the steering linkage.

DIAGNOSIS AND TESTING - POWER STEERING GEAR LEAKAGE

(1) Possible power steering gear leakage areas. (Fig. 2).

GEAR (Continued)

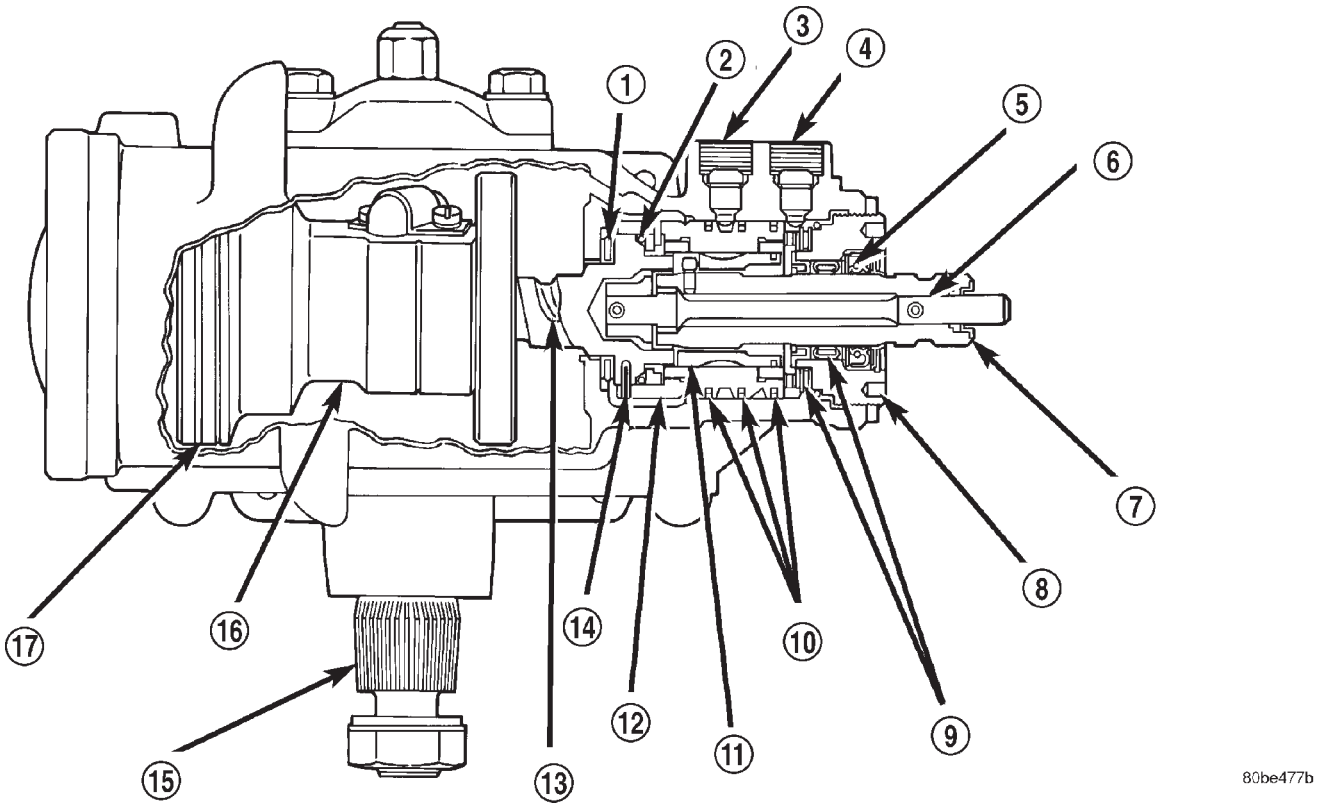

Fig. 1 Power Steering Gear

1 - THRUST BEARING
2 - O-RING SEAL
3 - INLET
4 - OUTLET
5 - SEAL
6 - TORSION BAR
7 - STUB SHAFT
8 - ADJUSTER PLUG
9 - THRUST BEARING
10 - TEFLON SEALS
11 - SPOOL VALVE
12 - VALVE BODY
13 - WORMSHAFT
14 - PIN
15 - PITMAN SHAFT
16 - RACK PISTON
17 - TEFLON RING

GEAR (Continued)

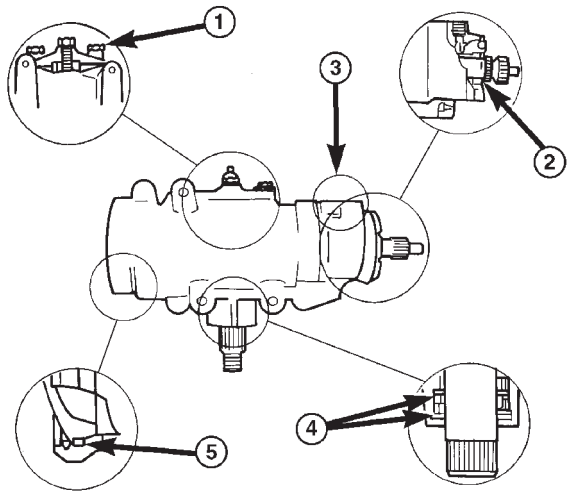

1. SIDE COVER LEAK - TORQUE SIDE COVER BOLTS TO SPECIFICATION. REPLACE THE SIDE COVER SEAL IF THE LEAKAGE PERSISTS.
2. ADJUSTER PLUG SEAL - REPLACE THE ADJUSTER PLUG SEALS.
3. PRESSURE LINE FITTING - TORQUE THE HOSE FITTING NUT TO SPECIFICATIONS. IF LEAKAGE PERSISTS, REPLACE THE SEAL.
4. PITMAN SHAFT SEALS - REPLACE THE SEALS.
5. TOP COVER SEAL - REPLACE THE SEAL.

80a1c3c2

Fig. 2 STEERING GEAR

REMOVAL

(1) Place the front wheels in a straight-ahead position.

(2) Disconnect and cap the fluid hoses from steering gear.

(3) Remove coupler pinch bolt at the steering gear and slide shaft off gear (Fig. 3).

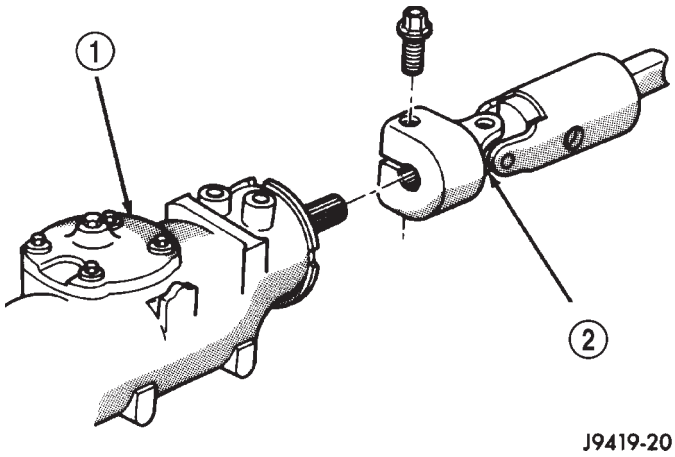

Fig. 3 Column Shaft

1 - STEERING GEAR
2 - STEERING COUPLER

(4) Mark the pitman shaft and pitman arm for installation reference. Remove the pitman arm from the shaft with Puller C-4150A (Fig. 4).

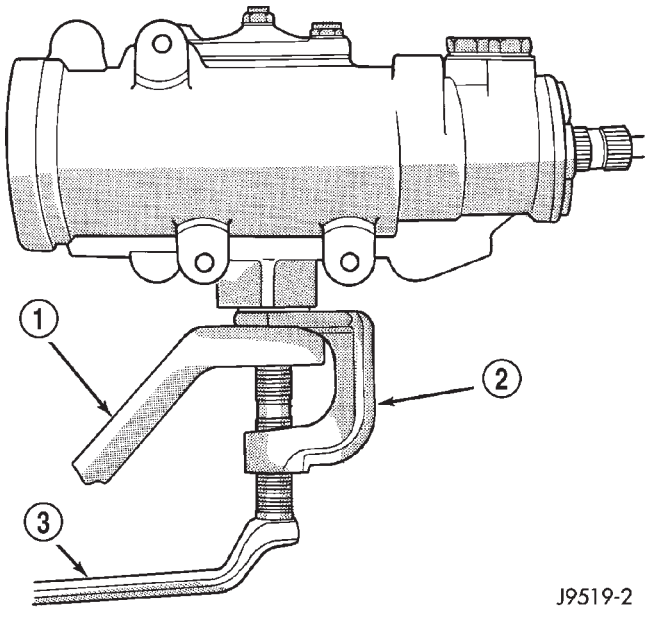

Fig. 4 Pitman Arm

1 - PITMAN ARM
2 - SPECIAL TOOL C-4150-A
3 - WRENCH

(5) Remove steering gear retaining bolts and nuts. Remove the steering gear from the vehicle.

INSTALLATION

(1) Position the steering gear on the frame rail and install the bolts. Tighten mounting bolts to specifications.

(2) Align steering coupler on gear shaft. Install pinch bolt and tighten to 49 N·m (36 ft. lbs.) torque.

(3) Align and install the pitman arm.

(4) Install the washer and retaining nut on the pitman shaft. Tighten the nut to 251 N·m (185 ft. lbs.).

(5) Connect fluid hoses to steering gear, tighten to 31 N·m (23 ft. lbs.). Add fluid, (Refer to 19 - STEERING/PUMP - STANDARD PROCEDURE).

ADJUSTMENTS

CAUTION: Steering gear must be adjusted in the proper order. If adjustments are not performed in order, gear damage and improper steering response may result.

NOTE: Adjusting the steering gear in the vehicle is not recommended. Remove gear from the vehicle and drain the fluid. Then mount gear in a vise to perform adjustments.

GEAR (Continued)

WORM THRUST BEARING PRELOAD

(1) Mount the gear carefully into a vise.

CAUTION: Do not overtighten the vise on the gear case. This may affect the adjustment

(2) Remove adjuster plug locknut (Fig. 5).

(3) Rotate the stub shaft back and forth with a 12 point socket to drain the remaining fluid.

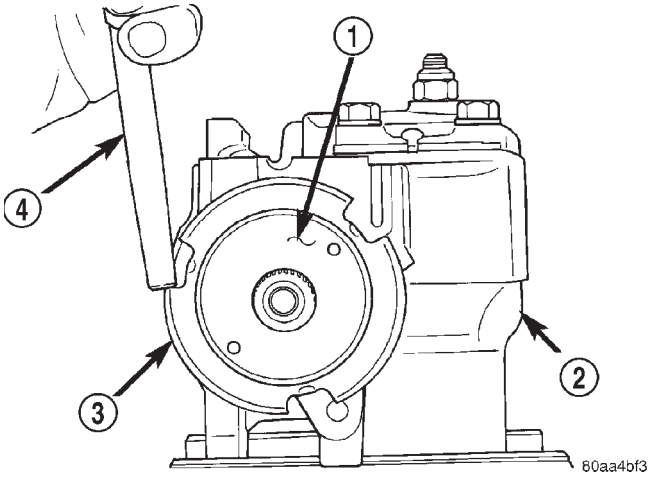

Fig. 5 Adjuster Lock Nut

1 - ADJUSTER NUT
2 - STEERING GEAR
3 - LOCK NUT
4 - PUNCH

(4) Turn the adjuster in with Spanner Wrench C-4381. Tighten the plug and thrust bearing in the housing until firmly bottomed in the housing about 28-31 N·m (20-23 ft. lbs.).

(5) Place an index mark on the housing even with one of the holes in adjuster plug (Fig. 6).

(6) Measure back (counterclockwise) 18 mm (0.70 in) and mark the housing (Fig. 7).

(7) Rotate adjustment cap back (counterclockwise) with spanner wrench until hole is aligned with the second mark (Fig. 8).

(8) Install and tighten lock nut to 108 N·m (80 ft. lbs.). Be sure adjustment cap does not turn while tightening the lock nut.

PITMAN SHAFT OVER-CENTER PRELOAD

NOTE: Before performing this procedure, the worm bearing preload adjustment must be performed.

(1) Rotate the stub shaft with a 12 point socket from stop to stop and count the number of turns.

(2) Starting at either stop, turn the stub shaft back 1/2 the total number of turns. This is the center of the gear travel (Fig. 9).

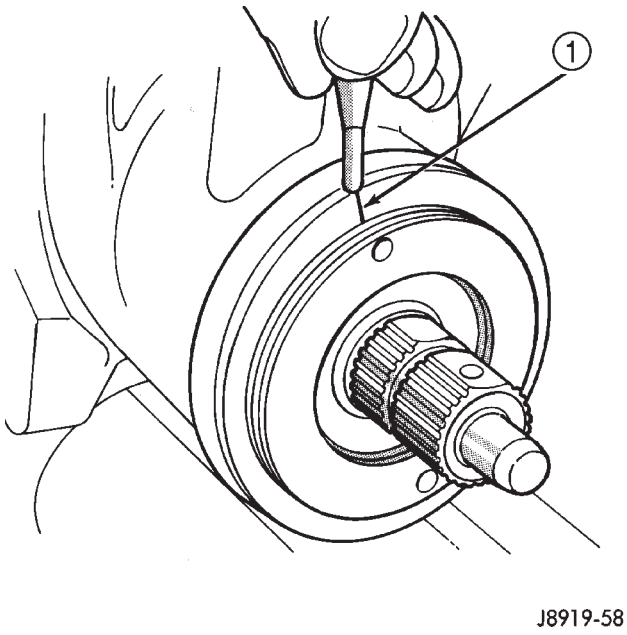

Fig. 6 Alignment Marking On Housing

1 - INDEX

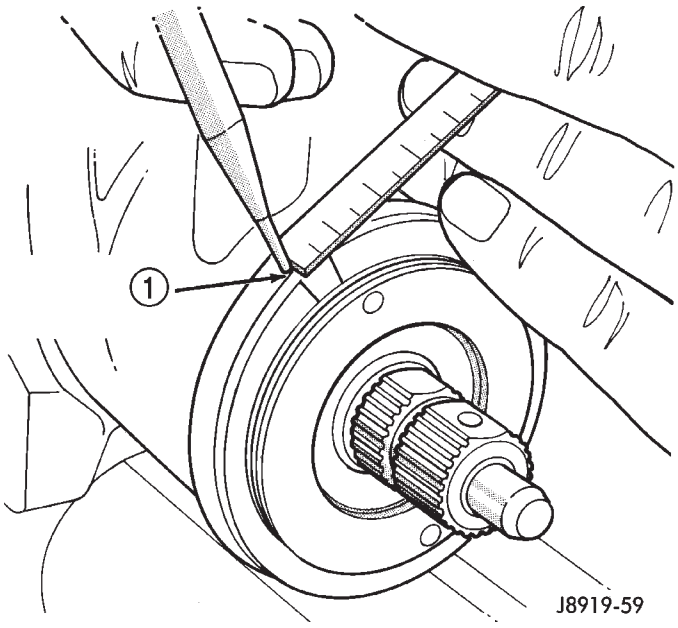

Fig. 7 Second Marking On Housing

1 - REFERENCE MARK

(3) Place the torque wrench in the vertical position on the stub shaft. Rotate the wrench 45 degrees each side of the center and record the highest rotational torque in this range (Fig. 10). This is the Over-Center Rotating Torque.

NOTE: The stub shaft must rotate smoothly without sticking or binding.

GEAR (Continued)

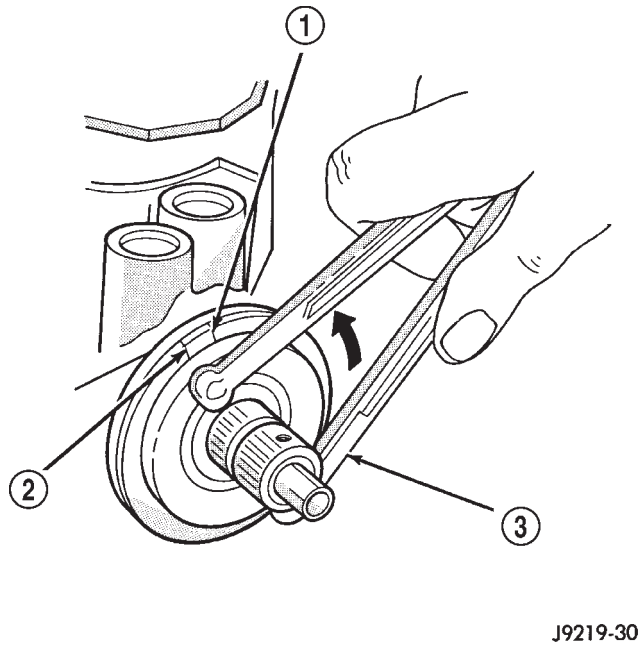

Fig. 8 Aligning To The Second Mark

1 - FIRST MARK
2 - SECOND MARK
3 - SPANNER WRENCH

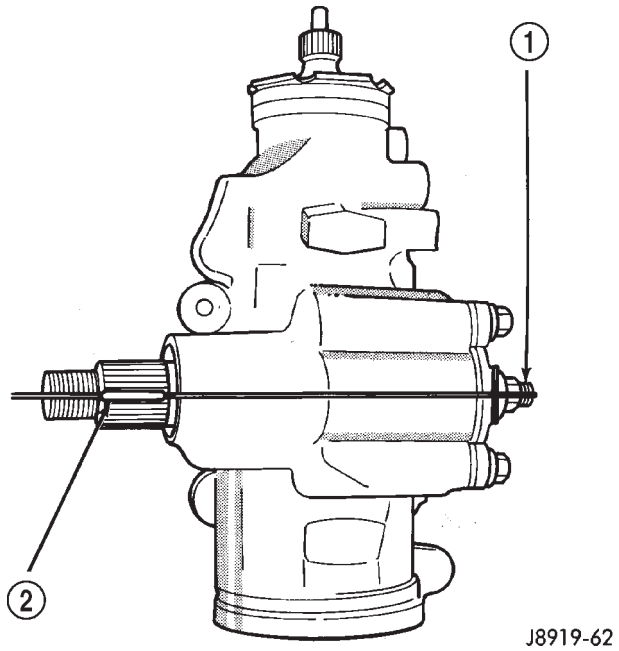

Fig. 9 Steering Gear Centered

1 - ADJUSTMENT SCREW
2 - MASTER SPLINE

(4) Rotate the stud shaft between 180° and 270° to the left of center and record the left off-center preload. Repeat this to the right of center and record the right off-center preload. The average of these two recorded readings is the Preload Rotating Torque.

(5) The Over-Center Rotating Torque should be 0.23-0.68 N·m (2-6 in. lbs.) **higher** than the Preload Rotating Torque.

(6) If an adjustment to the Over-Center Rotating Torque is necessary, first loosen the adjuster lock nut. Then turn the pitman shaft adjuster screw back (COUNTERCLOCKWISE) until fully extended, then turn back in (CLOCKWISE) one full turn.

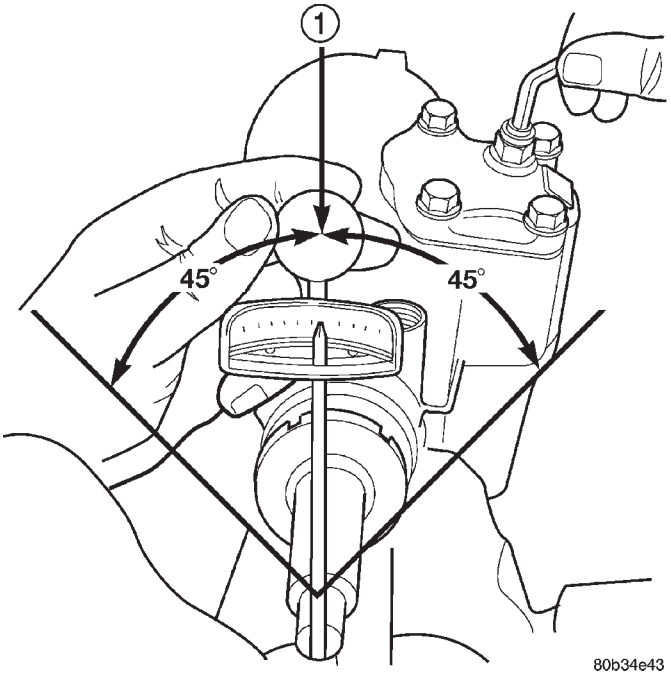

Fig. 10 Checking Over-center Rotation Torque

1 - CENTER

(7) Remeasure Over-Center Rotating Torque. If necessary turn the adjuster screw and repeat measurement until correct Over-Center Rotating Torque is reached.

NOTE: To increase the Over-Center Rotating Torque turn the screw CLOCKWISE.

(8) Prevent the adjuster screw from turning while tightening adjuster lock nut. Tighten the adjuster lock nut to 49 N·m (36 ft. lbs.).

GEAR (Continued)

SPECIFICATIONS

POWER STEERING GEAR

SPECIFICATIONS

DESCRIPTION	SPECIFICATION
Steering Gear Type	Recirculating Ball

DESCRIPTION	SPECIFICATION
Gear Code & Ratio AM	17.5:1
Gear Code & Ratio HC/FW	14:1
Gear Code & Ratio JZ	16-13:1

TORQUE SPECIFICATIONS

DESCRIPTION	N·m	Ft. Lbs.	In. Lbs.
Wormshaft Bearing Preload	0.85-1.64	—	7.5-14.5
Pitman Shaft Overcenter Drag New Gear (under 400 miles)	0.23-0.68	—	2-6 + Wormshaft Preload

TORQUE CHART

TORQUE SPECIFICATIONS

DESCRIPTION	N·m	Ft. Lbs.	In. Lbs.
Steering Gear Mounting Frame Bolts	176	130	—
Line Fittings Pressure	31	23	—
Line Fittings Return	31	23	—
Steering Gear Adjustment Cap Locknut	108	80	—
Steering Gear Adjustment Screw Locknut	49	36	—
Steering Gear Pitman Shaft Nut	251	185	—
Steering Gear Rack Piston Plug	150	111	—
Steering Gear Side Cover Bolts	60	44	—
Steering Gear Return Guide Clamp Bolt	4.8	—	43

GEAR (Continued)

SPECIAL TOOLS

POWER STEERING GEAR

Remover/Installer, Steering Plug C-4381

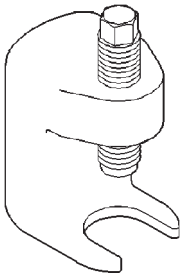

Remover, Pitman Arm C-4150A

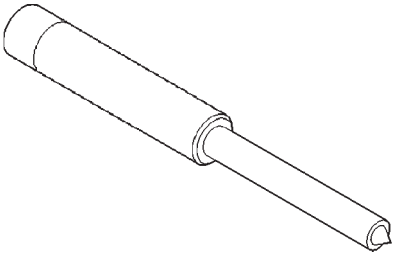

Remover/Installer Steering Rack Piston C-4175

PITMAN BEARING

REMOVAL

(1) Clean exposed end of pitman shaft and housing with a wire brush.

(2) Remove preload adjuster nut (Fig. 11).

(3) Rotate the stub shaft with a 12 point socket from stop to stop and count the number of turns.

(4) Center the stub shaft by rotating it from the stop 1/2 of the total amount of turns.

(5) Remove side cover bolts and remove side cover, gasket and pitman shaft as an assembly (Fig. 11).

NOTE: The pitman shaft will not clear the housing if it is not centered.

(6) Remove pitman shaft from the side cover.

(7) Remove dust seal from the housing with a seal pick (Fig. 12).

CAUTION: Use care not to score the housing bore when prying out seals and washer.

(8) Remove retaining ring with snap ring pliers.

(9) Remove washer from the housing.

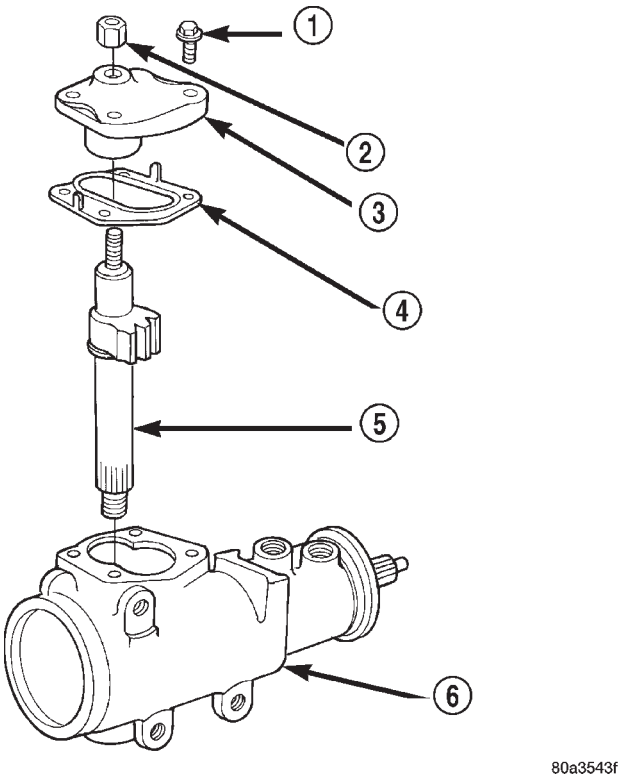

Fig. 11 Side Cover and Pitman Shaft

1 - SIDE COVER BOLTS
2 - PRELOAD ADJUSTER NUT
3 - SIDE COVER
4 - GASKET SEAL
5 - PITMAN SHAFT GEAR
6 - HOUSING ASSEMBLY

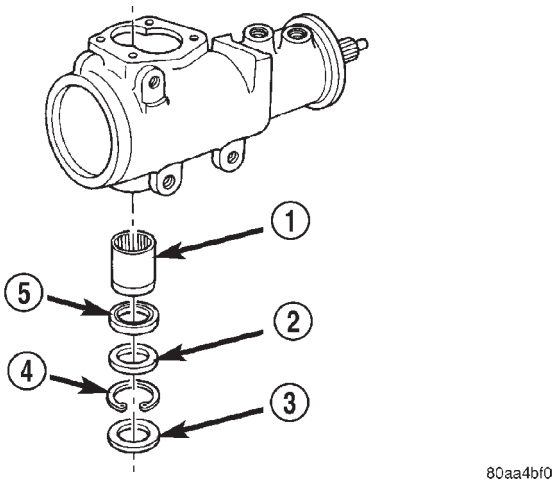

Fig. 12 Pitman Shaft Seals & Bearing

1 - BEARING
2 - WASHER
3 - DUST SEAL
4 - RETAINER
5 - OIL SEAL

PITMAN BEARING (Continued)

(10) Remove oil seal from the housing with a seal pick.

(11) Remove pitman shaft bearing from housing with a bearing driver and handle (Fig. 13).

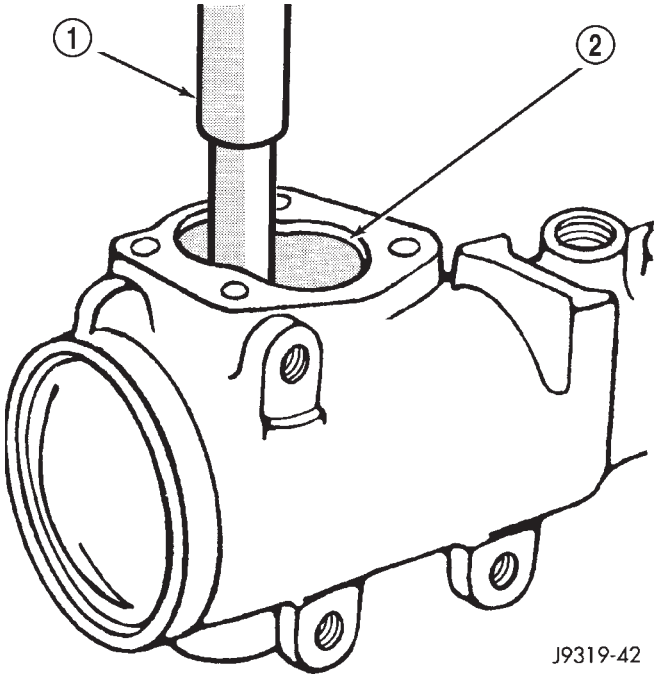

Fig. 13 Needle Bearing Removal

1 - REMOVER
2 - SIDE COVER AREA

INSTALLATION

(1) Install upper pitman shaft bearing, with Driver 8294 and Handle C-4171 (Fig. 14). Drive bearing into housing until the driver bottoms out.

NOTE: Install upper pitman shaft bearing with the part number/letters facing the driver.

(2) Install lower pitman shaft bearing with the other side Driver 8294 and Handle C-4171 (Fig. 15). Drive bearing into housing until the bearing shoulder is seated against the housing.

(3) Coat the oil seal and backup washers with **special grease**supplied with the new seal.

(4) Install the oil seal with Driver 8294 and Handle C-4171.

(5) Install plastic backup washer.

NOTE: The plastic backup washer has a lip on the inside diameter that faces down towards the oil seal.

(6) Install metal backup washer.

(7) Install the retainer ring with snap ring pliers.

(8) Coat the dust seal with **special grease** supplied with the new seal.

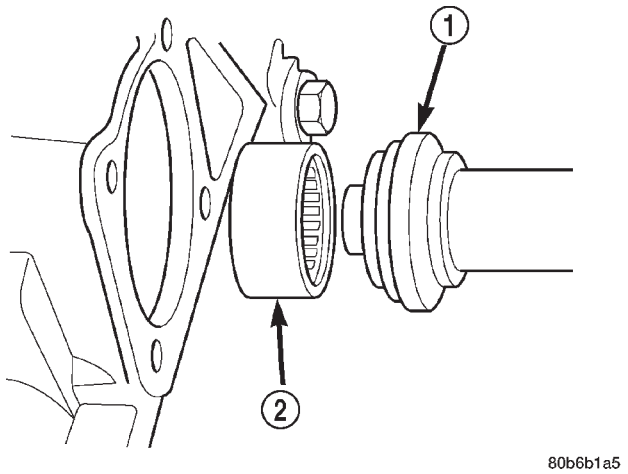

Fig. 14 Upper Pitman

1 - DRIVER
2 - UPPER BEARING

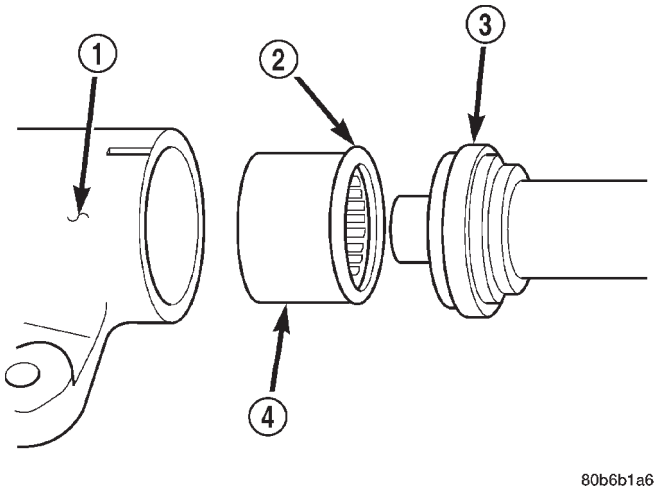

Fig. 15 Lower Pitman Shaft Bearing

1 - STEERING GEAR
2 - BEARING SHOULDER
3 - DRIVER
4 - LOWER BEARING

(9) Install dust seal with Driver 8294 and Handle C-4171.

(10) Install new pitman shaft cover o-ring.

(11) Install pitman shaft assembly into the housing.

(12) Install cover bolts and tighten to 62 N·m (46 ft. lbs.).

(13) Perform over-center rotation torque adjustment, (Refer to 19 - STEERING/GEAR - DIAGNOSIS AND TESTING).

PITMAN SHAFT

REMOVAL

(1) Clean exposed end of pitman shaft and housing with a wire brush.

(2) Remove preload adjuster nut (Fig. 16).

(3) Rotate the stub shaft with a 12 point socket from stop to stop and count the number of turns.

(4) Center the stub shaft by rotating it from the stop 1/2 of the total amount of turns.

(5) Remove side cover bolts and remove side cover, gasket and pitman shaft as an assembly (Fig. 16).

NOTE: The pitman shaft will not clear the housing if it is not centered.

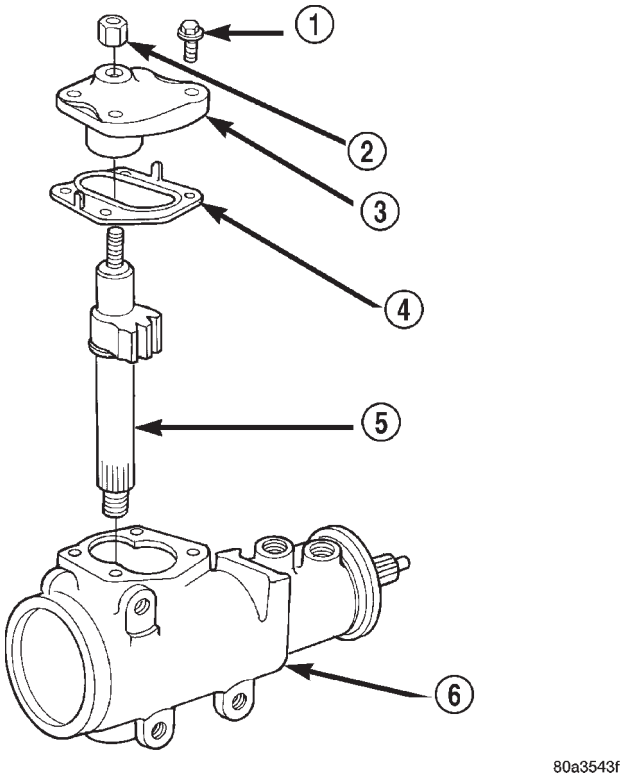

Fig. 16 Side Cover and Pitman Shaft

1 - SIDE COVER BOLTS
2 - PRELOAD ADJUSTER NUT
3 - SIDE COVER
4 - GASKET SEAL
5 - PITMAN SHAFT GEAR
6 - HOUSING ASSEMBLY

(6) Remove pitman shaft from the side cover.

(7) Remove dust seal from the housing with a seal pick (Fig. 17).

CAUTION: Use care not to score the housing bore when prying out seals and washer.

(8) Remove retaining ring with snap ring pliers.

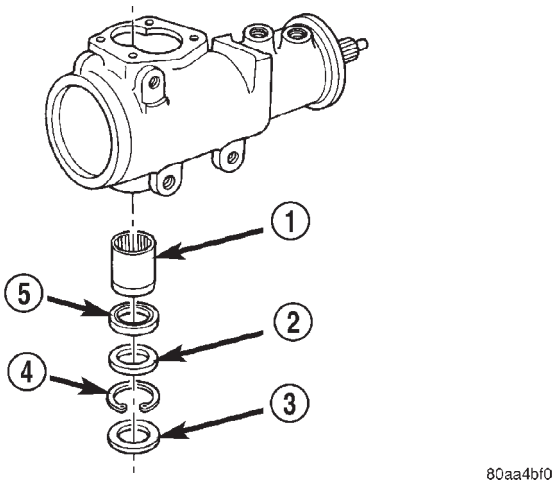

Fig. 17 Pitman Shaft Seals & Bearing

1 - BEARING
2 - WASHER
3 - DUST SEAL
4 - RETAINER
5 - OIL SEAL

(9) Remove washer from the housing.

(10) Remove oil seal from the housing with a seal pick.

(11) Remove pitman shaft bearing from housing with a bearing driver and handle (Fig. 18).

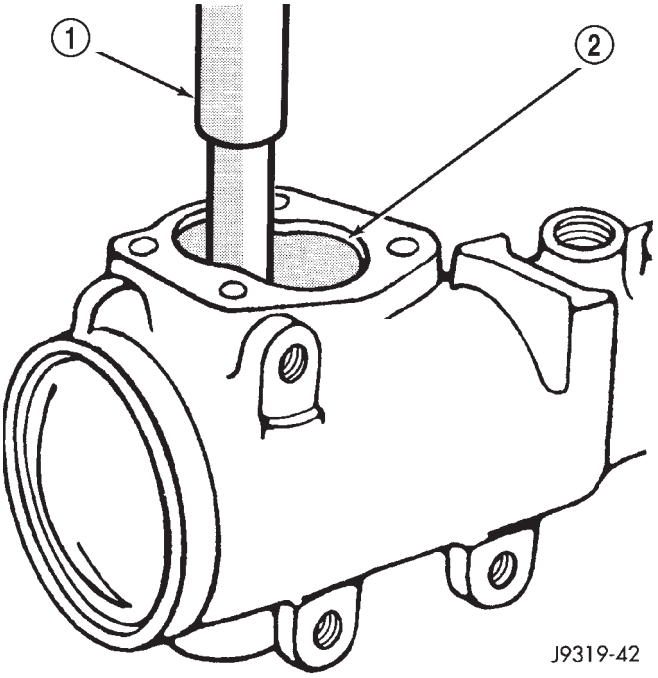

Fig. 18 Needle Bearing Removal

1 - REMOVER
2 - SIDE COVER AREA

PITMAN SHAFT (Continued)

INSTALLATION

(1) Install pitman shaft bearing into housing with a bearing driver and handle.

(2) Coat the oil seal and washer with **special grease** supplied with the new seal.

(3) Install the oil seal with a driver and handle.

(4) Install backup washer.

(5) Install the retainer ring with snap ring pliers.

(6) Coat the dust seal with **special grease** supplied with the new seal.

(7) Install dust seal with a driver and handle.

(8) Install pitman shaft to side cover by screwing shaft in until it fully seats to side cover.

(9) Install preload adjuster nut. **Do not tighten nut until after Over-Center Rotation Torque adjustment has been made.**

(10) Install gasket to side cover and bend tabs around edges of side cover (Fig. 11).

(11) Install pitman shaft assembly and side cover to housing.

(12) Install side cover bolts and tighten to 60 N·m (44 ft. lbs.).

(13) Perform over-center rotation torque adjustment, (Refer to 19 - STEERING/GEAR - ADJUSTMENTS).

PITMAN SHAFT SEAL

REMOVAL

(1) Clean exposed end of pitman shaft and housing with a wire brush.

(2) Remove preload adjuster nut (Fig. 19).

(3) Rotate the stub shaft with a 12 point socket from stop to stop and count the number of turns.

(4) Center the stub shaft by rotating it from the stop 1/2 of the total amount of turns.

(5) Remove side cover bolts and remove side cover, gasket and pitman shaft as an assembly (Fig. 19).

NOTE: The pitman shaft will not clear the housing if it is not centered.

(6) Remove pitman shaft from the side cover.

(7) Remove dust seal from the housing with a seal pick (Fig. 20).

CAUTION: Use care not to score the housing bore when prying out seals and washer.

(8) Remove retaining ring with snap ring pliers.

(9) Remove washer from the housing.

(10) Remove oil seal from the housing with a seal pick.

(11) Remove pitman shaft bearing from housing with a bearing driver and handle (Fig. 21).

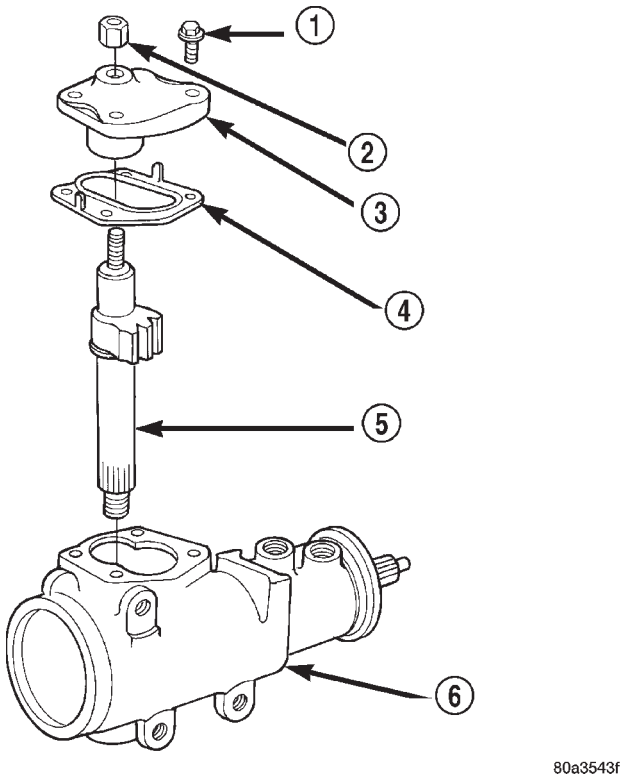

Fig. 19 Side Cover and Pitman Shaft

1 - SIDE COVER BOLTS
2 - PRELOAD ADJUSTER NUT
3 - SIDE COVER
4 - GASKET SEAL
5 - PITMAN SHAFT GEAR
6 - HOUSING ASSEMBLY

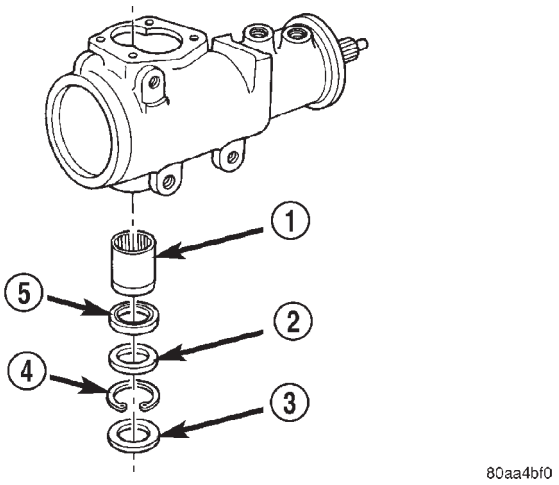

Fig. 20 Pitman Shaft Seals & Bearing

1 - BEARING
2 - WASHER
3 - DUST SEAL
4 - RETAINER
5 - OIL SEAL

PITMAN SHAFT SEAL (Continued)

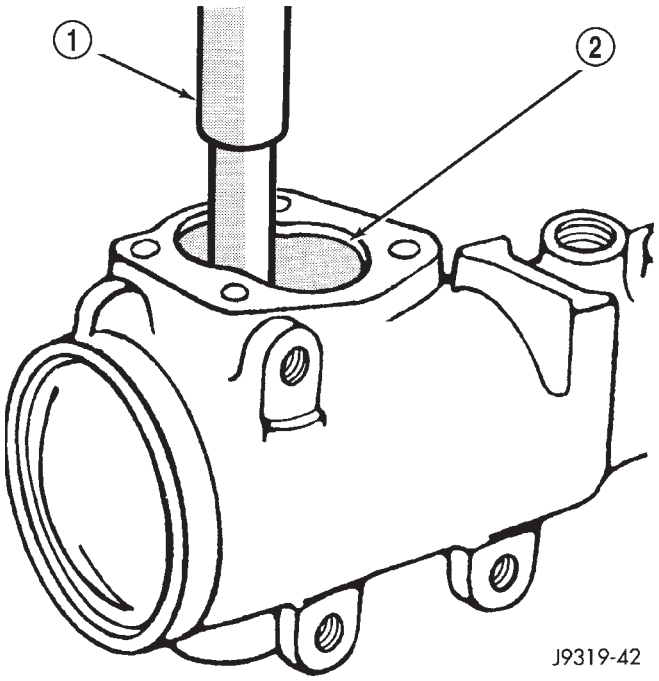

Fig. 21 Needle Bearing Removal

1 - REMOVER
2 - SIDE COVER AREA

INSTALLATION

(1) Install upper pitman shaft bearing, with Driver 8294 and Handle C-4171 (Fig. 22). Drive bearing into housing until the driver bottoms out.

NOTE: Install upper pitman shaft bearing with the part number/letters facing the driver.

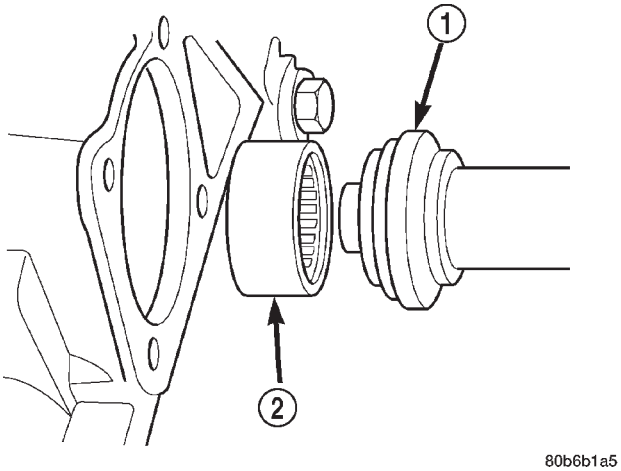

Fig. 22 Upper Pitman Shaft Bearing

1 - DRIVER
2 - UPPER BEARING

(2) Install lower pitman shaft bearing with the other side Driver 8294 and Handle C-4171 (Fig. 23). Drive bearing into housing until the bearing shoulder is seated against the housing.

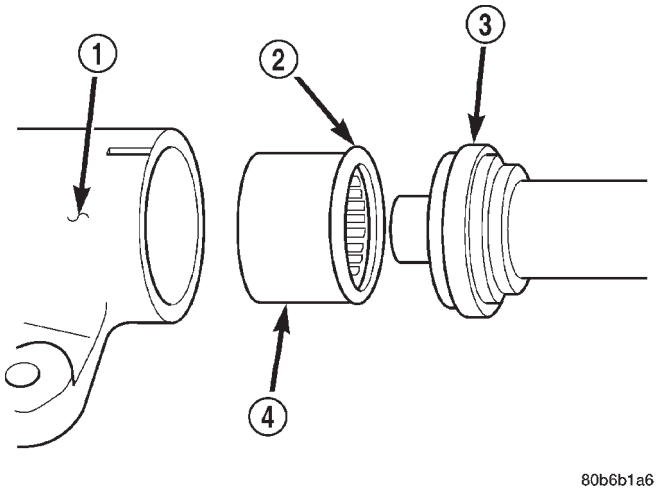

Fig. 23 Lower Pitman Shaft Bearing

1 - STEERING GEAR
2 - BEARING SHOULDER
3 - DRIVER
4 - LOWER BEARING

(3) Coat the oil seal and backup washers with **special grease**supplied with the new seal.

(4) Install the oil seal with Driver 8294 and Handle C-4171.

(5) Install plastic backup washer.

NOTE: The plastic backup washer has a lip on the inside diameter that faces down towards the oil seal.

(6) Install metal backup washer.

(7) Install the retainer ring with snap ring pliers.

(8) Coat the dust seal with **special grease** supplied with the new seal.

(9) Install dust seal with Driver 8294 and Handle C-4171.

(10) Install new pitman shaft cover o-ring.

(11) Install pitman shaft assembly into the housing.

(12) Install cover bolts and tighten to 62 N·m (46 ft. lbs.).

(13) Perform over-center rotation torque adjustment, (Refer to 19 - STEERING/GEAR - ADJUSTMENTS).

SPOOL VALVE

REMOVAL

(1) Remove lock nut (Fig. 24).

(2) Remove adjuster nut with Spanner Wrench C-4381.

SPOOL VALVE (Continued)

(3) Remove thrust support assembly out of the housing (Fig. 25).

(4) Pull stub shaft and valve assembly from the housing (Fig. 26).

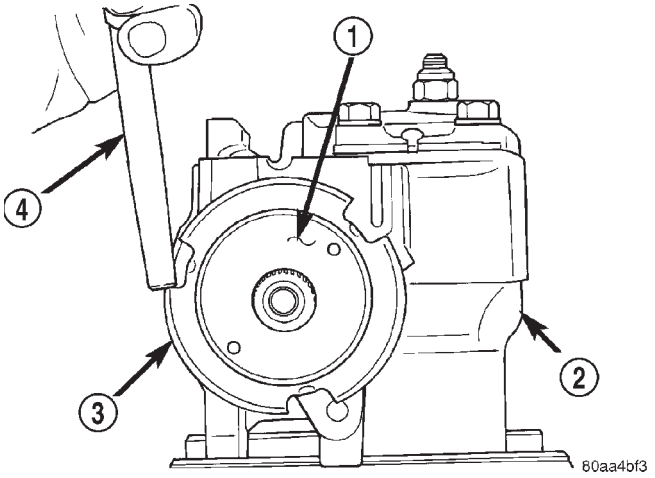

Fig. 24 Lock Nut and Adjuster Nut

1 - ADJUSTER NUT
2 - STEERING GEAR
3 - LOCK NUT
4 - PUNCH

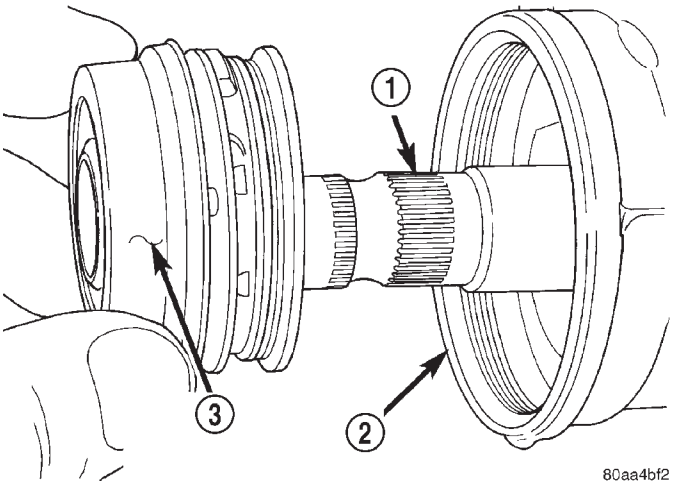

Fig. 25 Thrust Support Assembly

1 - STUB SHAFT
2 - HOUSING
3 - THRUST SUPPORT ASSEMBLY

(5) Remove stub shaft from valve assembly by lightly tapping shaft on a block of wood to loosen shaft. Then disengage stub shaft pin from hole in spool valve and separate the valve assembly from stub shaft (Fig. 27).

(6) Remove spool valve from valve body by pulling and rotating the spool valve from the valve body (Fig. 28).

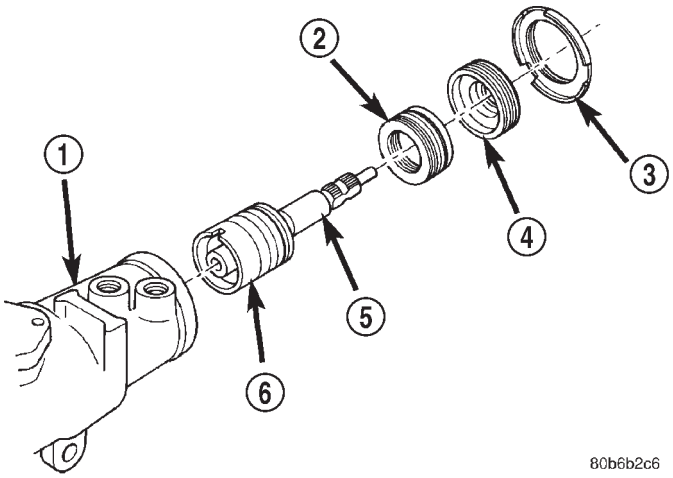

Fig. 26 Valve Assembly With Stub Shaft

1 - GEAR
2 - THRUST SUPPORT
3 - LOCK NUT
4 - ADJUSTER NUT
5 - STUB SHAFT
6 - VALVE ASSEMBLY

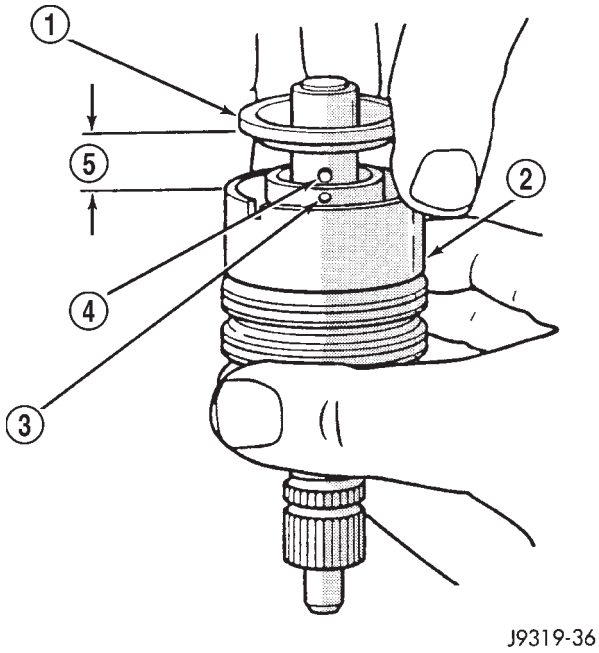

Fig. 27 Stub Shaft

1 - STUB SHAFT
2 - VALVE BODY
3 - HOLE IN SPOOL
4 - SHAFT PIN
5 - 6mm (1/4″)

SPOOL VALVE (Continued)

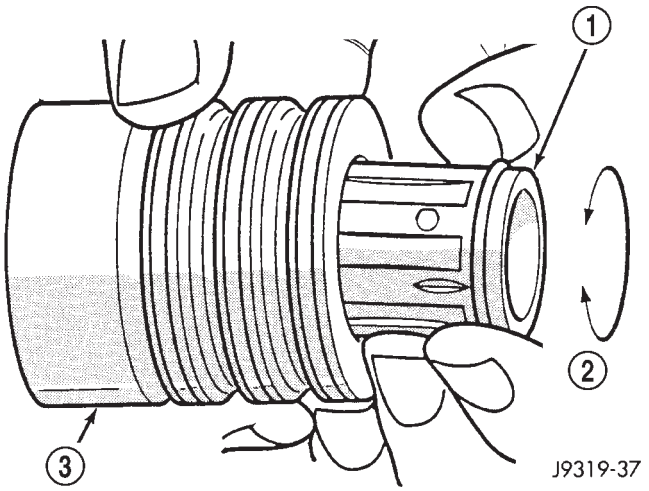

Fig. 28 Spool Valve

1 - SPOOL VALVE
2 - ROTATE VALVE TO REMOVE
3 - VALVE BODY

(7) Remove spool valve O-ring and valve body teflon rings and O-rings underneath the teflon rings (Fig. 29).

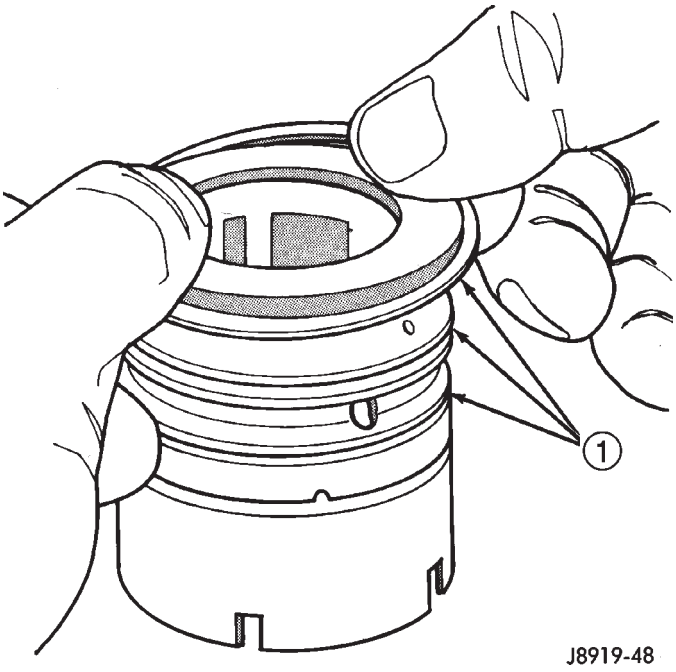

Fig. 29 Valve Seals

1 - O-RING SEALS

(8) Remove the O-ring between the worm shaft and the stub shaft.

INSTALLATION

NOTE: Clean and dry all components, then lubricate with power steering fluid.

(1) Install spool valve spool O-ring.

(2) Install spool valve in valve body by pushing and rotating. Hole in spool valve for stub shaft pin must be accessible from opposite end of valve body.

(3) Install stub shaft in valve spool and engage locating pin on stub shaft into spool valve hole (Fig. 30).

NOTE: Notch in stub shaft cap must fully engage valve body pin and seat against valve body shoulder.

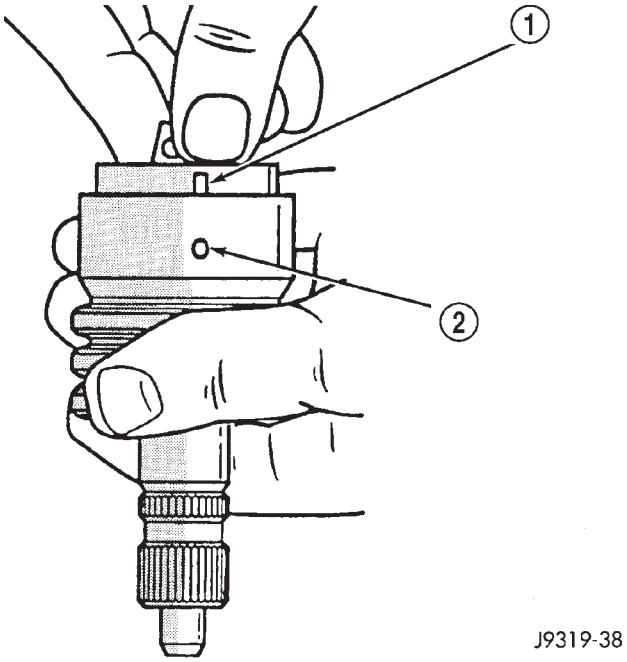

Fig. 30 Stub Shaft Installation

1 - NOTCH IN CAP
2 - VALVE BODY PIN

(4) Install O-rings and teflon rings over the O-rings on valve body.

(5) Install O-ring into the back of the stub shaft cap (Fig. 31).

(6) Install stub shaft and valve assembly in the housing. Line up worm shaft to slots in the valve assembly.

(7) Install thrust support assembly.

NOTE: The thrust support is serviced as an assembly. If any component of the thrust support is damaged the assembly must be replaced.

SPOOL VALVE (Continued)

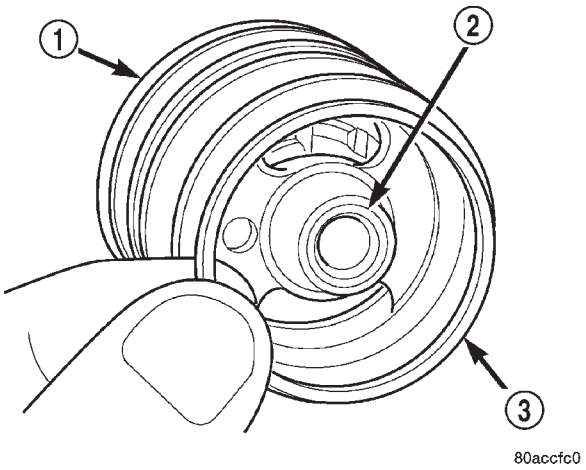

Fig. 31 Stub Shaft Cap O-Ring

1 - VALVE BODY
2 - STUB SHAFT CAP
3 - O-RING

(8) Install adjuster nut and lock nut.

(9) Adjust Thrust Bearing Preload and Over-Center Rotating Torque, (Refer to 19 - STEERING/GEAR - ADJUSTMENTS).

STEERING GEAR HOUSING PLUG

REMOVAL

(1) Unseat and remove retaining ring from groove with a punch through the hole in the end of the housing (Fig. 32).

(2) Slowly rotate stub shaft with 12 point socket COUNTER-CLOCKWISE to force the end plug out from housing.

CAUTION: Do not turn stub shaft any further than necessary. The rack piston balls will drop out of the rack piston circuit if the stub shaft is turned too far.

(3) Remove O-ring from the housing (Fig. 33).

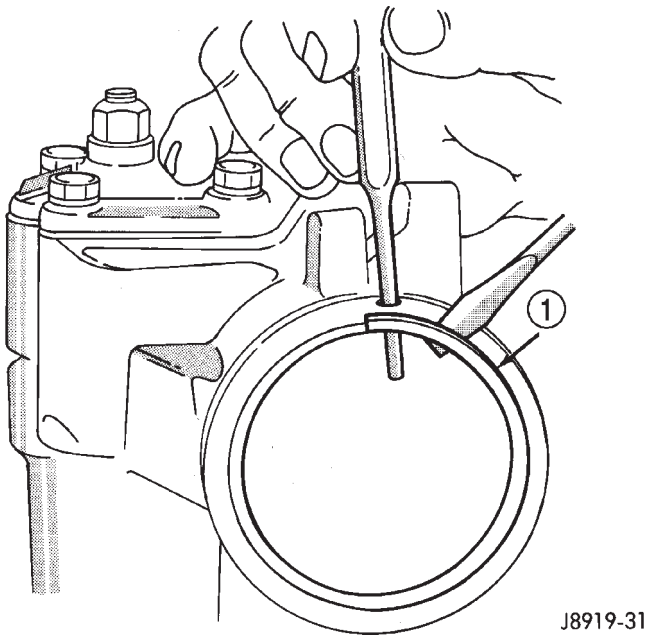

Fig. 32 End Plug Retaining Ring

1 - RETAINING RING

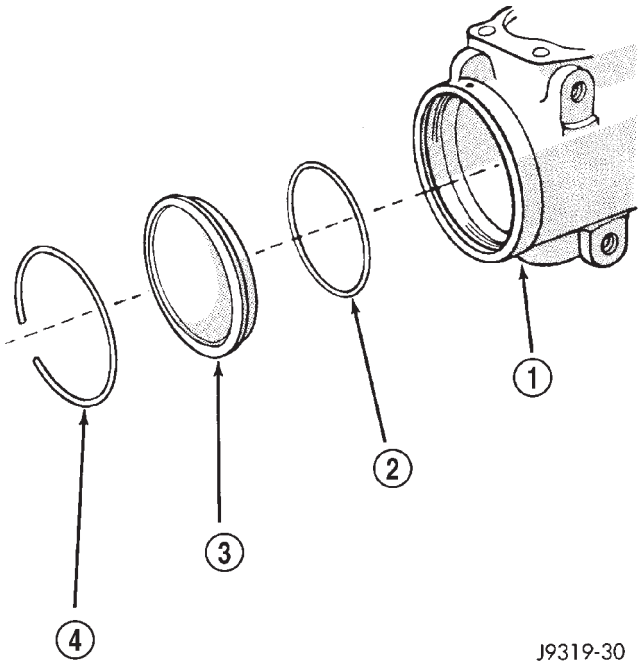

Fig. 33 End Plug Components

1 - HOUSING ASSEMBLY
2 - HOUSING END PLUG O-RING SEAL
3 - HOUSING END PLUG
4 - RETAINING RING

STEERING GEAR HOUSING PLUG (Continued)

INSTALLATION

(1) Lubricate O-ring with power steering fluid and install into the housing.

(2) Install end plug by tapping the plug lightly with a plastic mallet into the housing.

(3) Install retaining ring so one end of the ring covers the housing access hole (Fig. 34).

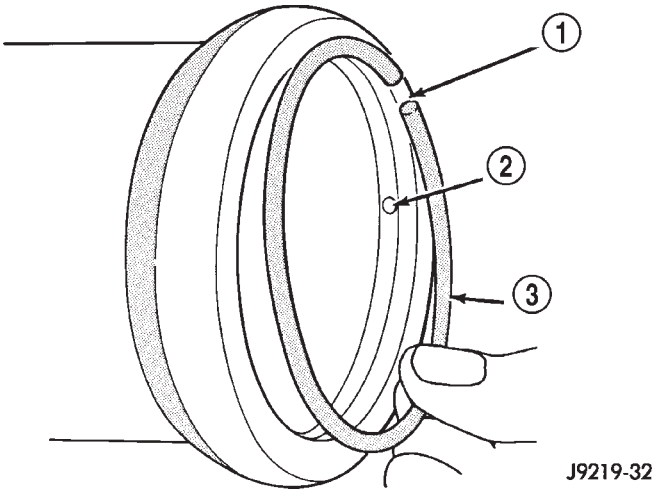

Fig. 34 Installing The

1 - RING CAP
2 - PUNCH ACCESS HOLE
3 - RETAINER RING

WORM SHAFT

REMOVAL

(1) Remove housing end plug, (Refer to 19 - STEERING/GEAR/STEERING GEAR HOUSING PLUG - REMOVAL).

(2) Remove rack piston plug (Fig. 35).

(3) Remove side cover and pitman shaft.

(4) Turn stub shaft COUNTERCLOCKWISE until the rack piston begins to come out of the housing.

(5) Insert Arbor C-4175 into bore of rack piston (Fig. 36) and hold tool tightly against worm shaft.

(6) Turn the stub shaft with a 12 point socket COUNTERCLOCKWISE, this will force the rack piston onto the tool and hold the rack piston balls in place.

(7) Remove the rack piston and tool together from housing.

(8) Remove tool from rack piston.

(9) Remove rack piston balls.

(10) Remove clamp bolts, clamp and ball guide (Fig. 37).

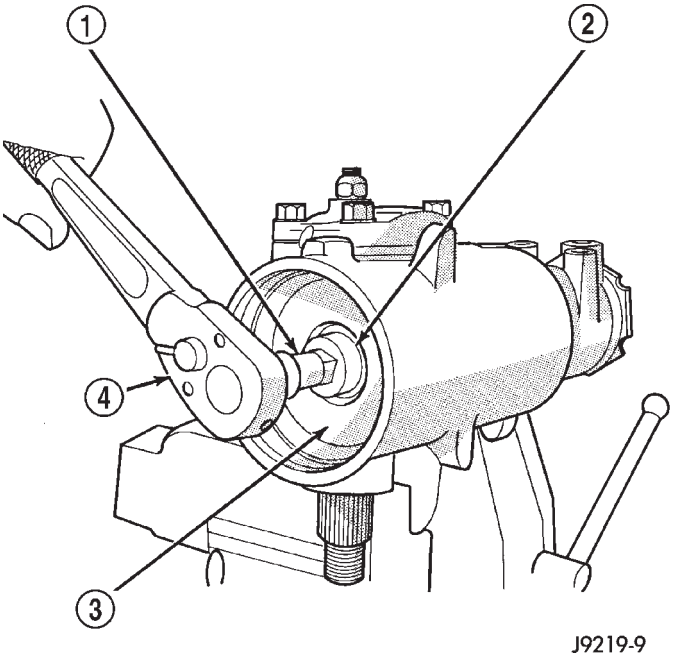

Fig. 35 Rack Piston End Plug

1 - EXTENSION
2 - END PLUG
3 - RACK PISTON
4 - RATCHET

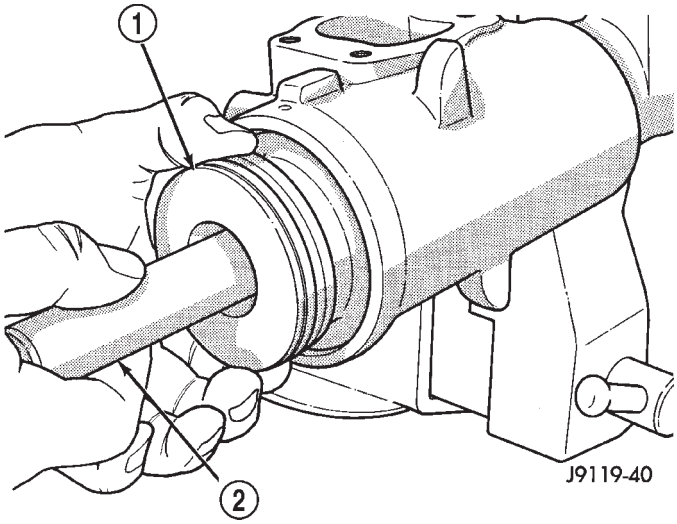

Fig. 36 Rack Piston with Arbor

1 - RACK PISTON
2 - SPECIAL TOOL C-4175

WORM SHAFT (Continued)

(11) Remove teflon ring and O-ring from the rack piston (Fig. 38).

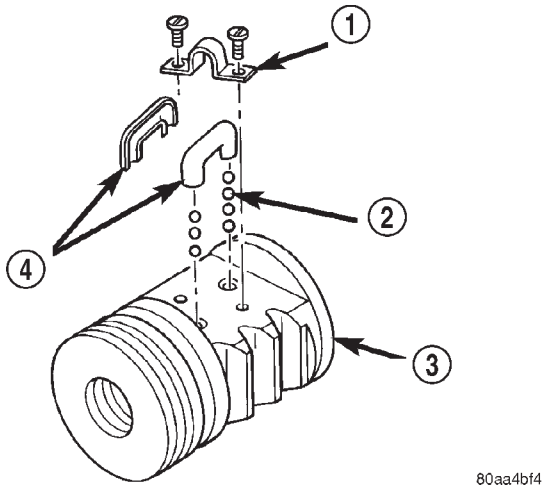

Fig. 37 Rack Piston

1 - CLAMP
2 - BALLS
3 - RACK PISTON
4 - BALL GUIDE

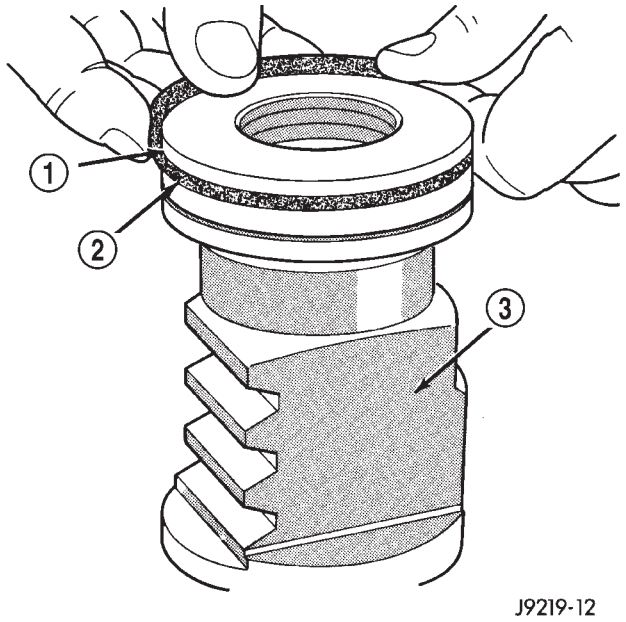

Fig. 38 Rack Piston Teflon Ring and O-Ring

1 - TEFLON SEAL
2 - BACK-UP O-RING MUST BE INSTALLED UNDER PISTON RING
3 - RACK PISTON NUT

(12) Remove the adjuster lock nut and adjuster nut from the stub shaft.

(13) Pull the stub shaft with the spool valve and thrust support assembly out of the housing.

(14) Remove the worm shaft from the housing (Fig. 39).

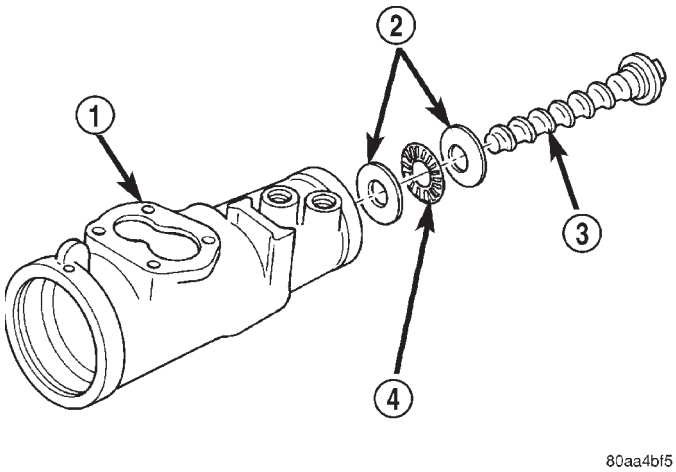

Fig. 39 Worm Shaft

1 - GEAR HOUSING
2 - BEARING RACE
3 - WORM SHAFT
4 - BEARING

INSTALLATION

NOTE: Clean and dry all components and lubricate with power steering fluid.

(1) Check for scores, nicks or burrs on the rack piston finished surface. Slight wear is normal on the worm gear surfaces.

(2) Install O-ring and teflon ring on the rack piston.

(3) Install worm shaft in the rack piston and align worm shaft spiral groove with rack piston ball guide hole (Fig. 40).

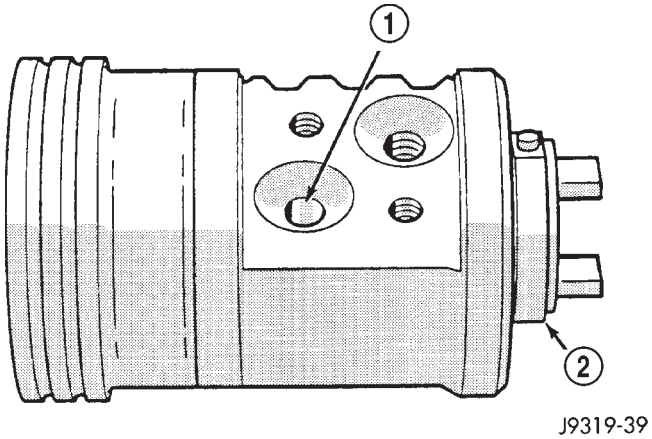

Fig. 40 Installing Balls in Rack Piston

1 - INSTALL BALLS IN THIS HOLE WHILE SLOWLY ROTATING WORM COUNTER CLOCKWISE
2 - WORM FLANGE

WORM SHAFT (Continued)

CAUTION: The rack piston balls must be installed alternately into the rack piston and ball guide. This maintains worm shaft preload. There are 12 black balls and 12 silver (Chrome) balls. The black balls are smaller than the silver balls.

(4) Lubricate and install rack piston balls through return guide hole while turning worm shaft COUNTERCLOCKWISE (Fig. 40).

(5) Install remaining balls in guide using grease to hold the balls in place (Fig. 41).

(6) Install the guide onto rack piston and install clamp and clamp bolts. Tighten bolts to 4.8 N·m (43 in. lbs.).

(7) Insert Arbor C-4175 into bore of rack piston and hold tool tightly against worm shaft.

(8) Turn the worm shaft COUNTERCLOCKWISE while pushing on the arbor. This will force the rack piston onto the arbor and hold the rack piston balls in place.

(9) Install the races and thrust bearing on the worm shaft and install shaft in the housing (Fig. 39).

(10) Install the stub shaft with spool valve, thrust support assembly and adjuster nut in the housing.

(11) Install the rack piston and arbor tool into the housing.

(12) Hold arbor tightly against worm shaft and turn stub shaft CLOCKWISE until rack piston is seated on worm shaft.

(13) Install pitman shaft and side cover in the housing.

(14) Install rack piston plug and tighten to 150 N·m (111 ft. lbs.).

(15) Install housing end plug, (Refer to 19 - STEERING/GEAR/STEERING GEAR HOUSING PLUG - INSTALLATION).

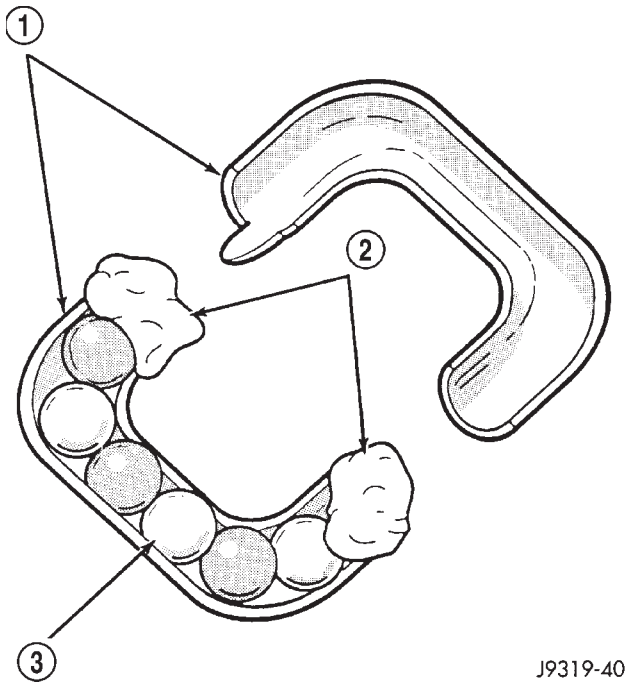

Fig. 41 Balls in the Return Guide

1 - GUIDE
2 - PETROLEUM JELLY
3 - BALLS

(16) Adjust worm shaft thrust bearing preload and over-center rotating torque, (Refer to 19 - STEERING/GEAR - ADJUSTMENTS).

PUMP

TABLE OF CONTENTS

page

PUMP
DESCRIPTION 33
OPERATION 33
DIAGNOSIS AND TESTING - PUMP LEAKAGE . 33
STANDARD PROCEDURE
STANDARD PROCEDURE - POWER STEERING PUMP - INITIAL OPERATION 33
STANDARD PROCEDURE - FLUSHING POWER STEERING SYSTEM 34
REMOVAL
REMOVAL - GASOLINE ENGINE 35
REMOVAL - DIESEL ENGINE 36
INSTALLATION
INSTALLATION - GASOLINE ENGINE 37
INSTALLATION - DIESEL ENGINE 37
SPECIAL TOOLS
POWER STEERING PUMP 38
PULLEY
REMOVAL 38
INSTALLATION 39
HOSES - PRESSURE
DESCRIPTION 39
OPERATION 39
HOSES - RETURN
DESCRIPTION 39
OPERATION 39

PUMP

DESCRIPTION

The P-Series pump is used on these vehicles (Fig. 1). The pump shaft has a pressed-on pulley that is belt driven by the crankshaft pulley on gasoline engines. The pump is driven off the back of the vacuum pump on the diesel engine.

Trailer tow option vehicles are equipped with a power steering pump oil cooler. The oil cooler is mounted to the front crossmember.

NOTE: Power steering pumps are not interchangeable with pumps installed on other vehicles.

OPERATION

Hydraulic pressure is provided by the pump for the power steering gear. The power steering pump is a constant flow rate and displacement, vane-type pump. The pump is connected to the steering gear via the pressure hose and the return hose. On vehicles equipped with a hydraulic booster, the pump supplies the hydraulic pressure for the booster.

DIAGNOSIS AND TESTING - PUMP LEAKAGE

(1) Possible pump leakage areas. (Fig. 2).

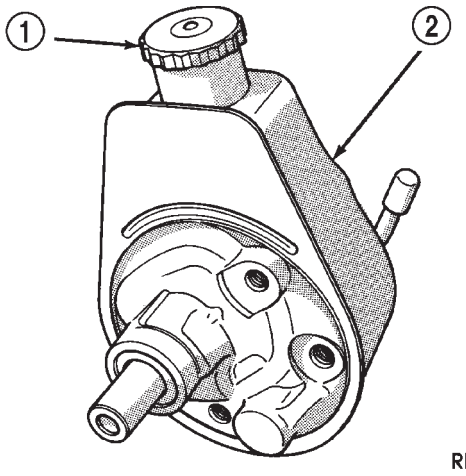

Fig. 1 P-Series—Pump

1 - RESERVOIR CAP AND DIPSTICK
2 - RESERVOIR

STANDARD PROCEDURE

STANDARD PROCEDURE - POWER STEERING PUMP - INITIAL OPERATION

WARNING: THE FLUID LEVEL SHOULD BE CHECKED WITH ENGINE OFF TO PREVENT INJURY FROM MOVING COMPONENTS.

CAUTION: Use MOPAR Power Steering Fluid or equivalent. Do not use automatic transmission fluid and do not overfill.

PUMP (Continued)

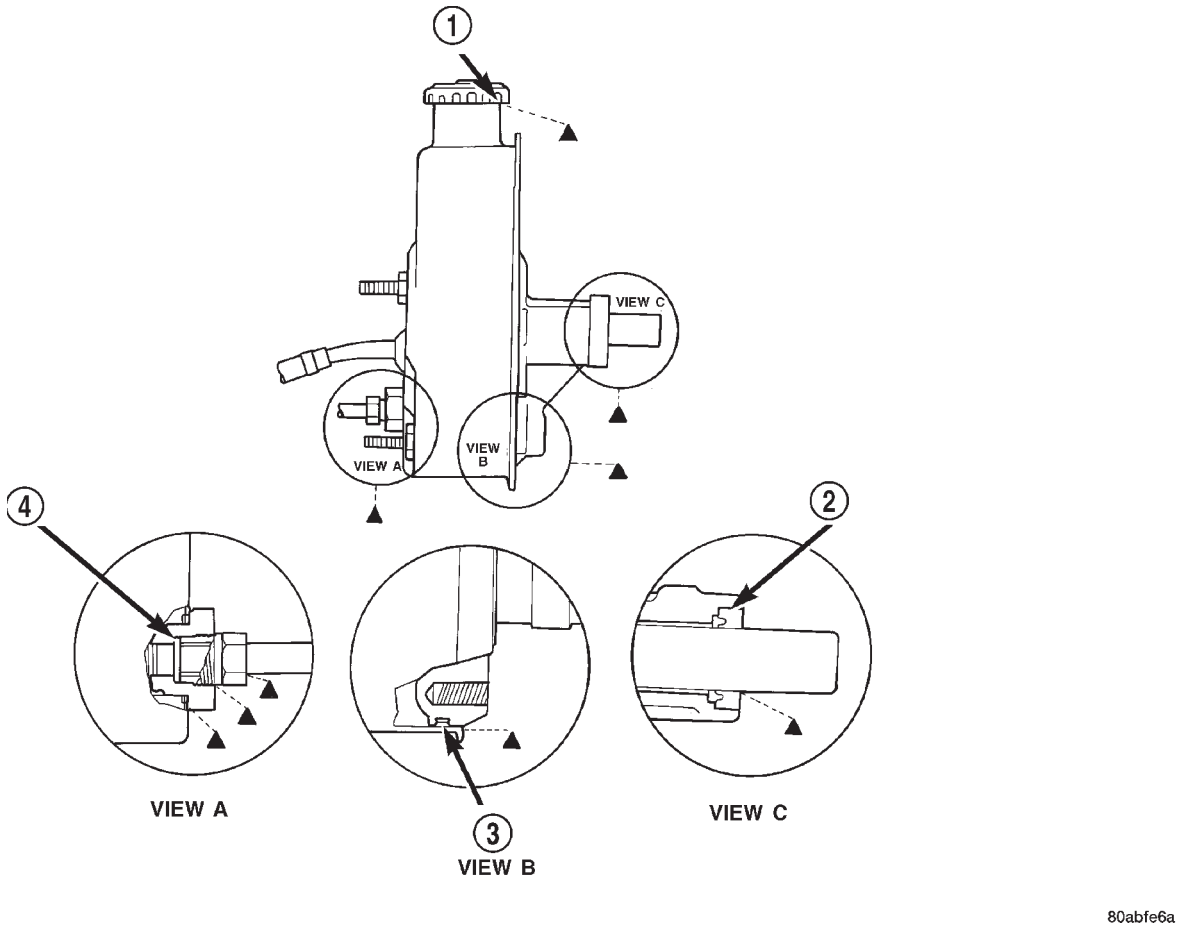

Fig. 2 POWER STEERING PUMP

1 - CHECK OIL LEVEL; IF LEAKAGE PERSISTS WITH THE CORRECT LEVEL AND CAP TIGHT, REPLACE THE CAP
2 - SHAFT SEAL
3 - RESERVOIR O-RING
4 - O-RING SEAL

Wipe filler cap clean, then check the fluid level. The dipstick should indicate **COLD** when the fluid is at normal temperature.

(1) Turn steering wheel all the way to the left

(2) Fill the pump fluid reservoir to the proper level and let the fluid settle for at least two (2) minutes.

(3) Raise the front wheels off the ground.

(4) Slowly turn the steering wheel lock-to-lock 20 times with the engine off while checking the fluid level.

NOTE: Vehicles with long return lines or oil coolers turn wheel 40 times.

(5) Start the engine. With the engine idling maintain the fluid level.

(6) Lower the front wheels and let the engine idle for two minutes.

(7) Turn the steering wheel in both direction and verify power assist and quit operation of the pump.

If the fluid is extremely foamy or milky looking, allow the vehicle to stand a few minutes and repeat the procedure.

CAUTION: Do not run a vehicle with foamy fluid for an extended period. This may cause pump damage.

STANDARD PROCEDURE - FLUSHING POWER STEERING SYSTEM

Flushing is required when the power steering/hydraulic booster system fluid has become contaminated. Contaminated fluid in the steering/booster system can cause seal deterioration and affect steering gear/booster spool valve operation.

(1) Raise the front end of the vehicle off the ground until the wheels are free to turn.

(2) Remove the return line from the pump.

NOTE: If vehicle is equipped with a hydraulic booster remove both return lines from the pump.

PUMP (Continued)

(3) Plug the return line port/ports at the pump.
(4) Position the return line/lines into a large container to catch the fluid.
(5) While an assistant is filling the pump reservoir start the engine.
(6) With the engine running at idle turn the wheel back and forth.

NOTE: Do not contact or hold the wheel against the steering stops.

(7) Run a quart of fluid through the system then stop the engine and install the return line/lines.
(8) Fill the system with fluid and perform Steering Pump Initial Operation, (Refer to 19 - STEERING/PUMP - STANDARD PROCEDURE).
(9) Start the engine and run it for fifteen minutes then stop the engine.
(10) Remove the return line/lines from the pump and plug the pump port/ports.
(11) Pour fresh fluid into the reservoir and check the draining fluid for contamination. If the fluid is still contaminated, disassemble and clean the steering gear and flush the system again.
(12) Install the return line/lines and perform Steering Pump Initial Operation, (Refer to 19 - STEERING/PUMP - STANDARD PROCEDURE).

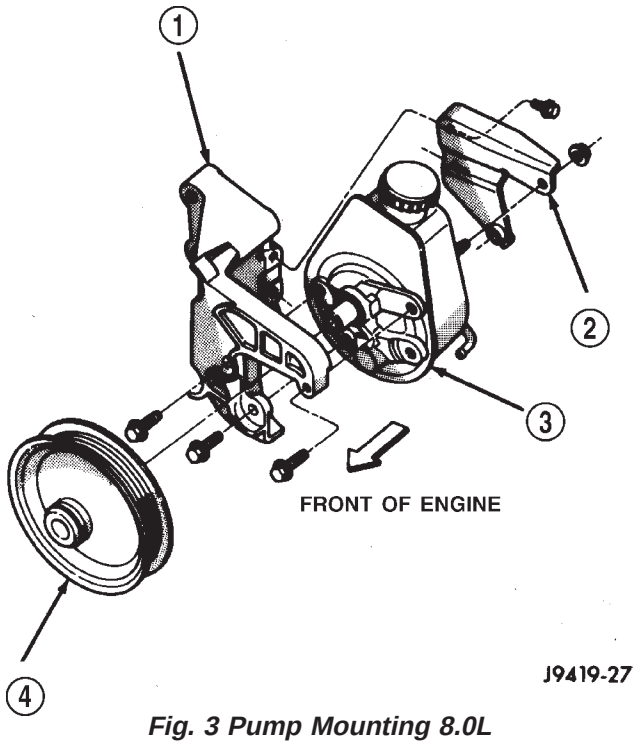

Fig. 3 Pump Mounting 8.0L

1 - FRONT BRACKET
2 - REAR BRACKET
3 - STEERING PUMP
4 - PULLEY

REMOVAL

REMOVAL - GASOLINE ENGINE

(1) Remove the serpentine drive belt, (Refer to 7 - COOLING/ACCESSORY DRIVE/DRIVE BELTS - REMOVAL) OR (Refer to 7 - COOLING/ACCESSORY DRIVE/DRIVE BELTS - REMOVAL).
(2) Remove the hoses from the power steering pump and cap the fittings.
(3) Remove battery ground cable and unthread stud from cylinder head, do not remove from bracket.
(4) Loosen upper bracket bolt and remove the lower bracket to engine block bolts.
(5) Pivot the pump assembly past the coolant tube.
(6) Remove the upper stud and remove upper bolt from cylinder head.
(7) Remove steering pump and mounting bracket from engine as an assembly.
(8) Remove the pump pulley with Puller C-4333, to access pump attaching bolts, (Refer to 19 - STEERING/PUMP/PULLEY - REMOVAL).
(9) Remove the front pump bracket (Fig. 3). On 8.0L engine remove rear pump bracket (Fig. 4).

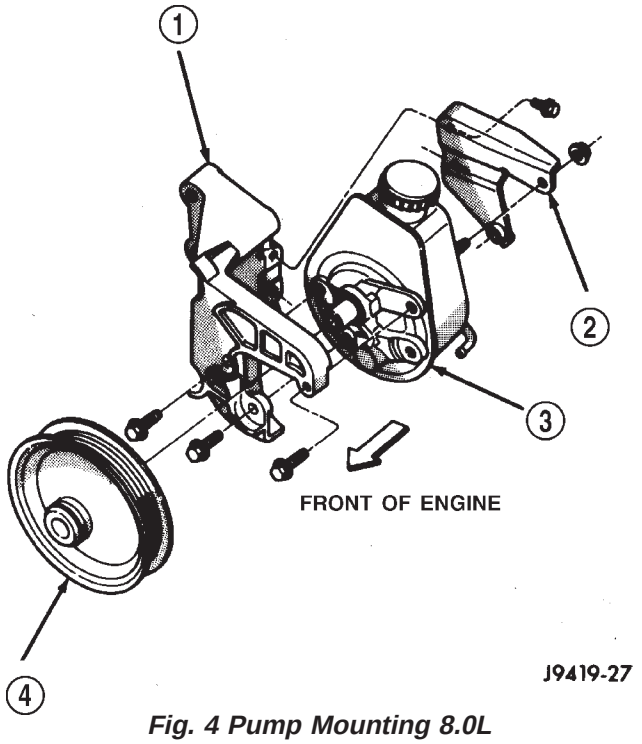

Fig. 4 Pump Mounting 8.0L

1 - FRONT BRACKET
2 - REAR BRACKET
3 - STEERING PUMP
4 - PULLEY

PUMP (Continued)

REMOVAL - DIESEL ENGINE

(1) Remove and cap steering pump hoses and vacuum pump vacuum line.

(2) Remove the sender unit from engine block and plug hole in block (Fig. 5).

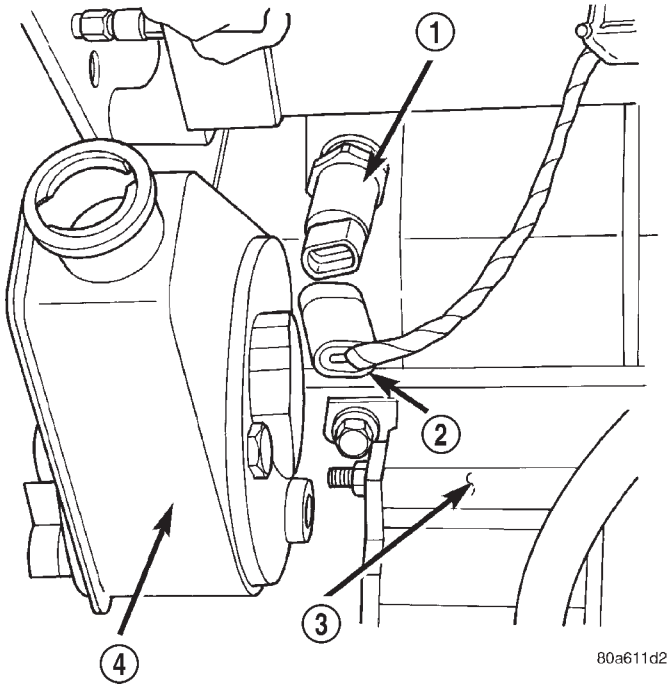

Fig. 5 Oil Pressure Sending Unit

1 - OIL PRESSURE SENDER UNIT
2 - ELECTRICAL CONNECTOR
3 - ENGINE BLOCK
4 - STEERING PUMP

(3) Remove the serpentine belt, (Refer to 7 - COOLING/ACCESSORY DRIVE/DRIVE BELTS - REMOVAL).

(4) Remove and cap the oil feed line from the bottom of the vacuum pump (Fig. 6).

(5) Remove the lower bolt that attaches the vacuum/steering pump assembly to the engine block. Remove the nut from the steering pump attaching bracket (Fig. 6).

(6) Remove upper bolt from the pump assembly (Fig. 7) and remove the assembly.

(7) Remove the mounting gasket.

(8) Remove the steering pump to vacuum pump bracket attaching nuts (Fig. 8).

(9) Slide the steering pump from the bracket. Use care not to damage the internal oil seal in the vacuum pump (Fig. 9).

(10) Remove the two pump body spacers.

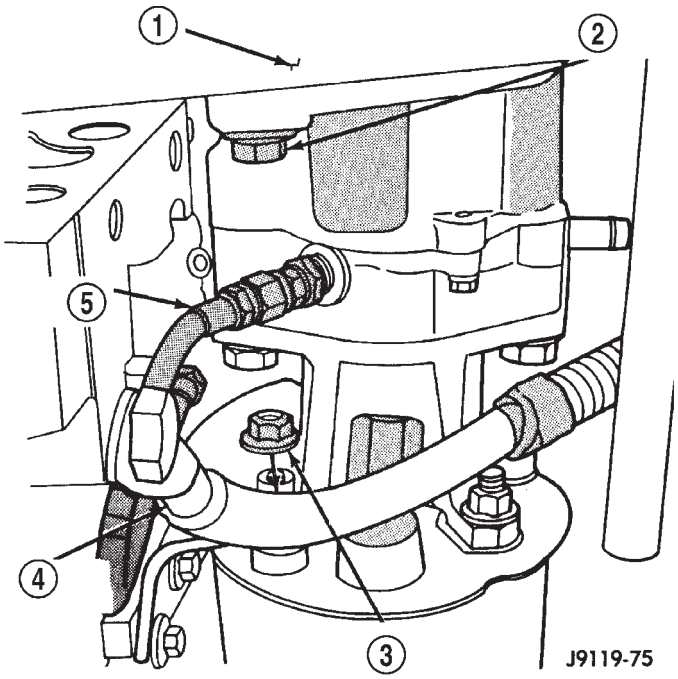

Fig. 6 Oil

1 - ENGINE BLOCK
2 - LOWER PUMP ASSEMBLY BOLT
3 - STEERING PUMP BRACKET ATTACHING NUT
4 - BATTERY GROUND CABLE
5 - OIL FEED LINE

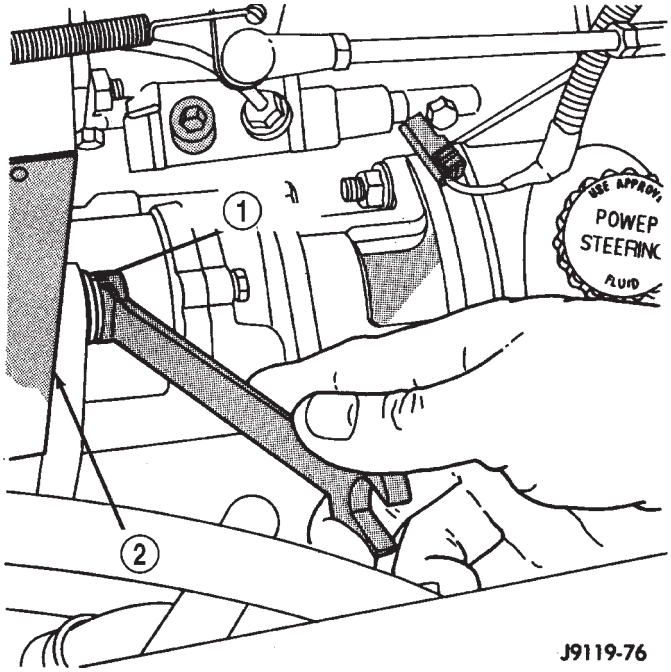

Fig. 7 Pump Assembly Upper Bolt

1 - PUMP UPPER BOLT
2 - DRIVE COVER

PUMP (Continued)

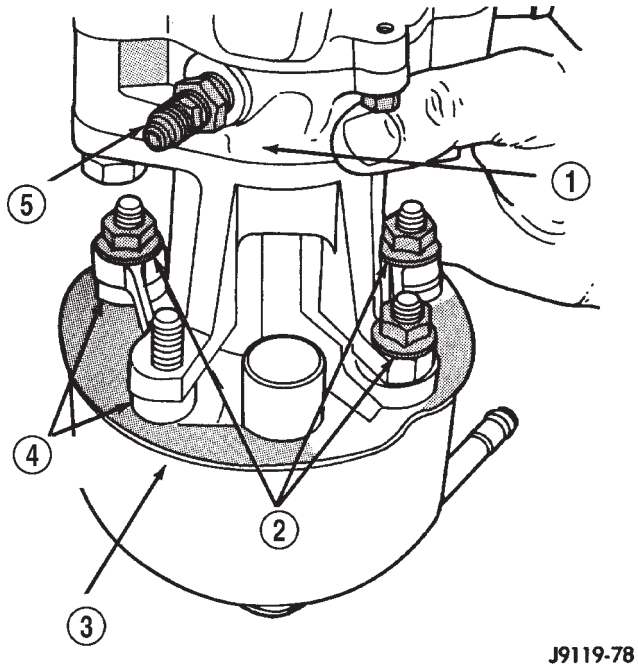

Fig. 8 Bracket Mounting Nuts

1 - VACUUM PUMP
2 - ATTACHING NUTS
3 - STEERING PUMP
4 - PUMP SPACERS
5 - OIL FEED FITTING

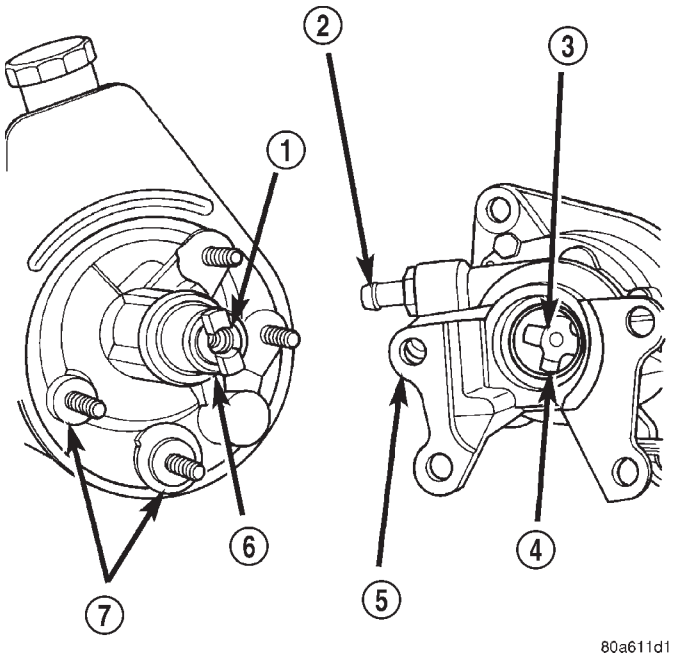

Fig. 9 Steering Pump & Vacuum Pump

1 - PUMP SHAFT
2 - VACUUM FITTING
3 - VACUUM PUMP DRIVE
4 - OIL SEAL
5 - MOUNTING BRACKET
6 - DRIVE DOG
7 - PUMP SPACERS

INSTALLATION

INSTALLATION - GASOLINE ENGINE

(1) Install the front pump bracket and tighten bolts to 47 N·m (35 ft. lbs.). On 8.0L engine install rear pump bracket and tighten nut to 47 N·m (35 ft. lbs.), tighten bolts to 24 N·m (18 ft. lbs.).

(2) Install the pump pulley with Installer C-4063–B, (Refer to 19 - STEERING/PUMP/PULLEY - INSTALLATION).

(3) Install steering pump assembly on the engine block. Install the upper stud and bolt in bracket.

(4) Pivot the pump down past the coolant tube and install the lower bolts in bracket.

(5) Tighten the bolts and nut to 41 N·m (30 ft. lbs.).

(6) Connect the hoses to the pump.

(7) Install the serpentine drive belt, (Refer to 7 - COOLING/ACCESSORY DRIVE/DRIVE BELTS - INSTALLATION), (Refer to 7 - COOLING/ACCESSORY DRIVE/DRIVE BELTS - INSTALLATION).

(8) Fill the reservoir with power steering fluid, (Refer to 19 - STEERING/PUMP - STANDARD PROCEDURE).

INSTALLATION - DIESEL ENGINE

(1) Install the two pump body spacers.

(2) Rotate the drive gear until the steering pump and vacuum pump drive dogs align. Install the steering pump onto the vacuum pump bracket. Use care to avoid damaging the oil seal in the vacuum pump during installation. **The steering pump housing and spacers must mate completely with the vacuum pump bracket.**

(3) Install the vacuum pump bracket to steering pump nuts and tighten to 24 N·m (18 ft. lbs.).

(4) Position new gasket on vacuum pump assembly. Use sealer if necessary to retain the gasket.

(5) Align and install the pump assembly on the engine. Ensure the steering pump stud is inserted into the block bracket. Tighten the pump- to-engine block attaching bolts to 77 N·m (57 ft. lbs.).

(6) Install the steering pump to attaching bracket nut and tighten to 24 N·m (18 ft. lbs.).

(7) Remove plug and install the oil pressure sending unit and electrical connector.

(8) Install the oil feed line to the vacuum pump. Tighten the oil line connection to 7 N·m (60 in. lbs./ 5 ft. lbs.).

PUMP (Continued)

(9) Install the fluid hoses to the power steering pump. Tighten the pressure fitting at the pump to 31 N·m (23 ft. lbs.).

(10) Install and clamp the hose on the vacuum pump.

(11) Install the serpentine belt, (Refer to 7 - COOLING/ACCESSORY DRIVE/DRIVE BELTS - INSTALLATION).

(12) Fill the reservoir with power steering fluid, (Refer to 19 - STEERING/PUMP - STANDARD PROCEDURE).

(13) Start the engine and check the operation of the brakes.

SPECIAL TOOLS

POWER STEERING PUMP

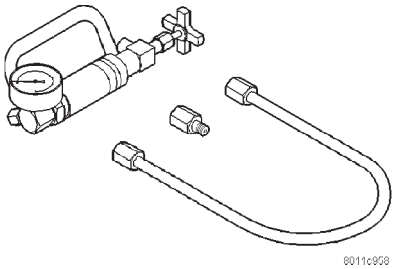

Analyzer Set, Power Steering Flow/Pressure 6815

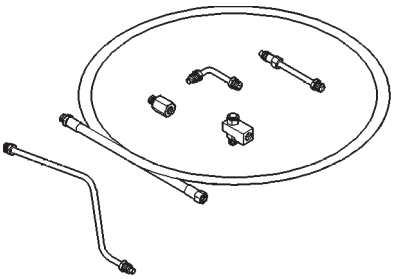

Adapters, Power Steering Flow/Pressure Tester 6893

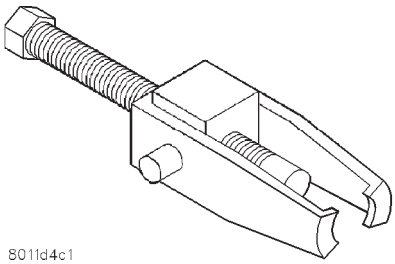

Puller C-4333

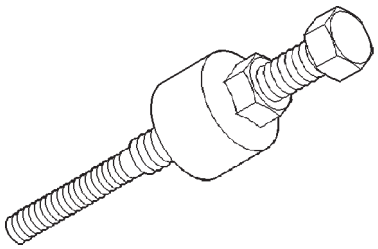

Installer, Power Steering Pulley C-4063–B

PULLEY

REMOVAL

(1) Remove pump assembly.

(2) Remove pulley from pump with Puller C-4333 (Fig. 10).

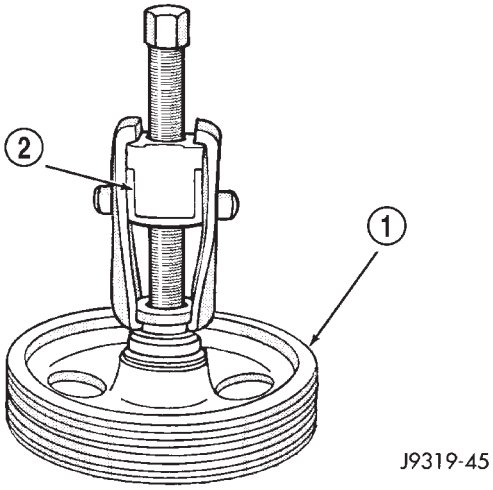

Fig. 10 Pulley Removal

1 - POWER STEERING PUMP DRIVE PULLEY
2 - SPECIAL TOOL C-4333

PULLEY (Continued)

INSTALLATION

(1) Replace pulley if bent, cracked, or loose.

(2) Install pulley on pump with Installer C-4063-B (Fig. 11) flush with the end of the shaft. Ensure the tool and pulley remain aligned with the pump shaft.

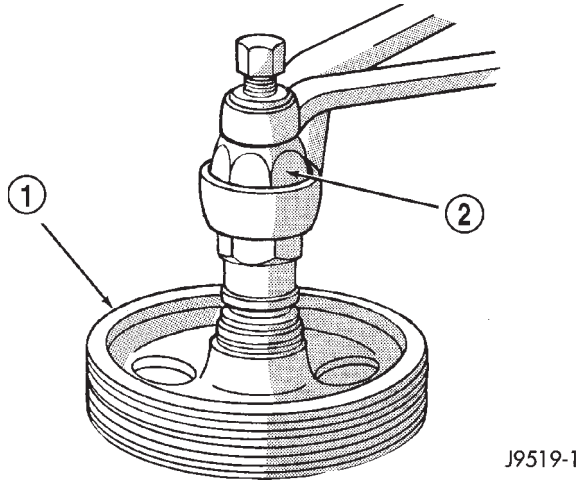

Fig. 11 Pulley Installation

1 - POWER STEERING PUMP DRIVE PULLEY
2 - SPECIAL TOOL C-4063–B

(3) Install pump assembly.

(4) With Serpentine Belts; Run engine until warm (5 min.) and note any belt chirp. If chirp exists, move pulley outward approximately 0.5 mm (0.020 in.). If noise increases, press on 1.0 mm (0.040 in.). **Be careful that pulley does not contact mounting bolts.**

HOSES - PRESSURE

DESCRIPTION

The hose consists of two metal ends and rubber center section that contains a tuning cable.

OPERATION

Power steering pressure line, is used to transfer high pressure power steering fluid, from the power steering pump to the power steering gear.

HOSES - RETURN

DESCRIPTION

Power steering return line is a hose which is clamped at the pump and the gear.

OPERATION

Power steering return line, is used to transfer low pressure power steering fluid, from the power steering gear to the power steering pump.

LINKAGE - 2WD

TABLE OF CONTENTS

	page
LINKAGE - 2WD	
DESCRIPTION	40
STANDARD PROCEDURE - LUBRICATION	40
REMOVAL	40
INSTALLATION	41
SPECIFICATIONS	
TORQUE CHART	41
SPECIAL TOOLS	
STEERING LINKAGE	41

LINKAGE - 2WD

DESCRIPTION

Light duty (LD) and heavy duty (HD) steering linkage is used with IFS suspensions. The linkage is comprised of a idler arm, pitman arm, center link and tie rod ends. Heavy duty linkage is used on 8800 and 10500 lb. GVW vehicles.

CAUTION: If any steering components are replaced or serviced an alignment must be performed.

NOTE: When servicing the steering linkage, use care to avoid damaging ball stud seals. Use Puller C-3894–A or an appropriate puller to remove tie rod ends (Fig. 1).

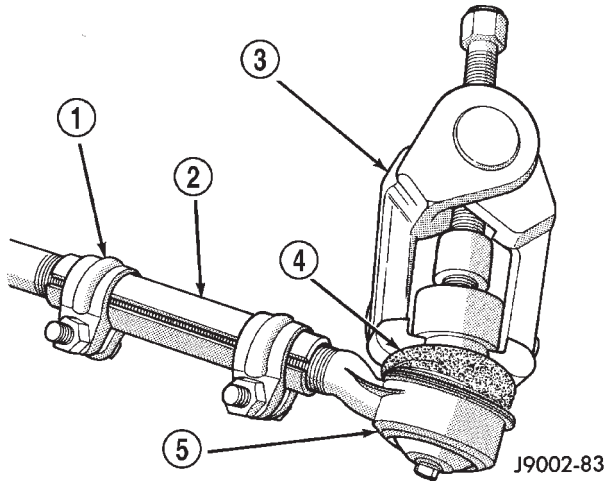

Fig. 1 Tie Rod End

1 - CLAMP
2 - ADJUSTMENT SLEEVE
3 - PULLER TOOL C-3894–A
4 - SEAL
5 - TIE-ROD END

STANDARD PROCEDURE - LUBRICATION

Periodic lubrication of the idler arm is required. Refer to Lubrication And Maintenance for the recommended maintenance schedule.

REMOVAL

(1) Remove the nut from the tie-rod.

(2) Remove the tie-rod end ball studs from the steering knuckles with an appropriate puller.

(3) Remove inner tie-rod ends from center link.

(4) Remove idler arm stud from center link with an appropriate puller. Remove the idler arm bolt from frame bracket.

(5) Remove pitman arm ball stud from center link.

(6) Mark the pitman arm and shaft positions for installation reference. Remove pitman arm with Puller C-4150A (Fig. 2).

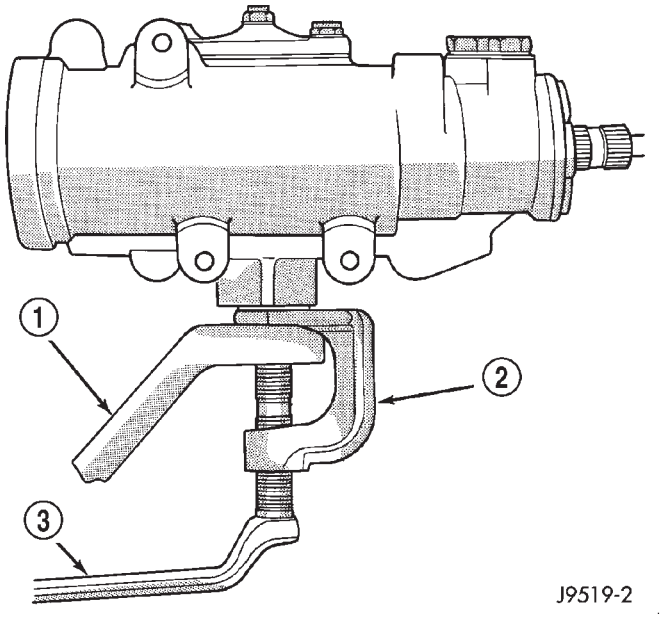

Fig. 2 Pitman Arm

1 - PITMAN ARM
2 - SPECIAL TOOL C-4150-A
3 - WRENCH

LINKAGE - 2WD (Continued)

INSTALLATION

(1) Position idler arm on the frame bracket and tighten the bolt to specification.

(2) Center steering gear to alignment marks and install pitman arm.

(3) Install the lock washer and retaining nut on the pitman shaft. Tighten the nut to 251 N·m (185 ft. lbs.).

(4) Install center link to ball studs and tighten retaining nuts to specification.

(5) Install tie-rod ends into center link and tighten the nuts to 88 N·m (65 ft. lbs.). Install new nuts.

(6) Install tie-rod ends into steering knuckles and tighten nuts to 108 N·m (80 ft. lbs.).

(7) Remove the supports and lower the vehicle to the surface. Center steering wheel and adjust toe, (Refer to 2 - SUSPENSION/WHEEL ALIGNMENT - STANDARD PROCEDURE).

NOTE: Position the clamp on the sleeve so retaining bolt is located on the bottom side of the sleeve.

(8) After adjustment, tighten the tie-rod adjustment sleeve clamp bolt to 61 N·m (45 ft. lbs.).

SPECIFICATIONS

TORQUE CHART

TORQUE SPECIFICATIONS

DESCRIPTION	N·m	Ft. Lbs.	In. Lbs.
Pitman Arm Gear Nut	250	185	—
Pitman Arm Center Link Nut	115	85	—
Idler Arm Mounting Bolts	271	200	—
Idler Arm Center Link Nut	88	65	—
Tie Rod Knuckle Nut	108	80	—
Tie Rod Center Link Nut	88	65	—
Tie Rod Adjuster Clamp	61	45	—

SPECIAL TOOLS

STEERING LINKAGE

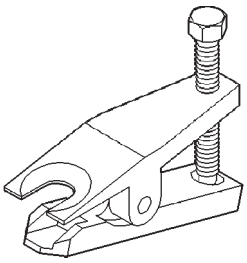

Remover Ball Stud MB-991113

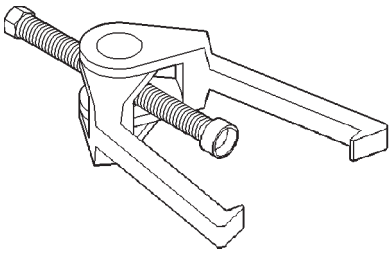

Puller Tie Rod C-3894-A

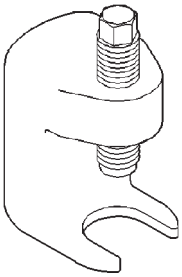

Remover Pitman C-4150A

LINKAGE - 4WD

TABLE OF CONTENTS

	page
LINKAGE - 4WD	
DESCRIPTION	42
STANDARD PROCEDURE - LUBRICATION	42
REMOVAL	42
INSTALLATION	43
SPECIFICATIONS	
TORQUE CHART	43
SPECIAL TOOLS	
STEERING LINKAGE	44

LINKAGE - 4WD

DESCRIPTION

The steering linkage is comprised of a tie rod end, tie rod, drag link, steering damper and pitman arm (Fig. 1).

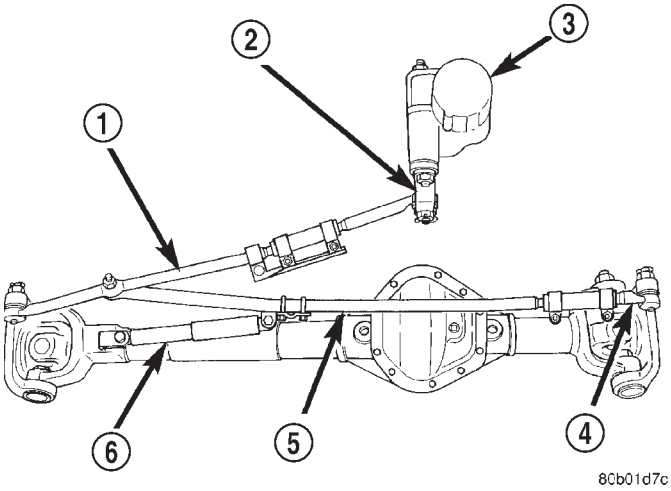

Fig. 1 Steering Linkage

1 - DRAG LINK
2 - PITMAN ARM
3 - STEERING GEAR
4 - TIE ROD END
5 - TIE ROD
6 - DAMPER

CAUTION: If any steering components are replaced or serviced an alignment must be performed.

NOTE: To avoid damaging ball stud seals, use Puller C-3894–A or an appropriate puller to remove tie rod ends (Fig. 2).

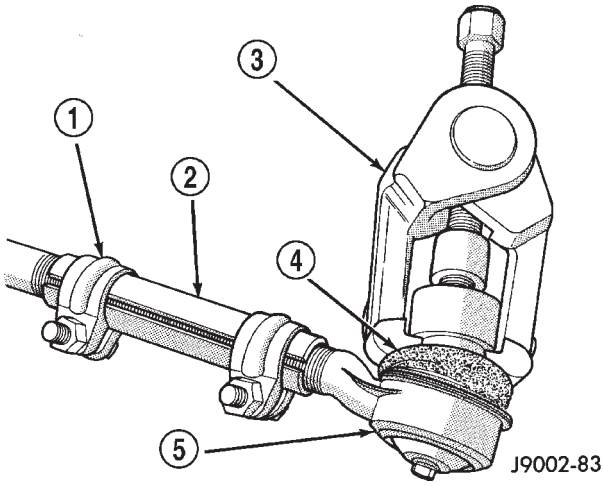

Fig. 2 Tie Rod End

1 - CLAMP
2 - ADJUSTMENT SLEEVE
3 - PULLER TOOL C-3894–A
4 - SEAL
5 - TIE-ROD END

STANDARD PROCEDURE - LUBRICATION

Periodic lubrication of the steering system components is required. Refer to Lubrication And Maintenance for the recommended maintenance schedule.

The following components must be lubricated:

- Tie rod
- Tie rod end
- Drag link

REMOVAL

(1) Remove steering damper mounting nuts and bolts and remove damper.

(2) Remove tie rod nuts.

(3) Remove tie rod from drag link and left knuckle with Puller C-4150A.

(4) Remove drag and nuts.

(5) Remove drag link from right knuckle and pitman arm with Puller C-4150A.

LINKAGE - 4WD (Continued)

(6) Mark the pitman arm and shaft positions for installation reference. Remove the nut and washer from the pitman arm. Remove the pitman arm with Puller C-4150A.

INSTALLATION

(1) Align reference marks and install pitman arm.

(2) Install the lock washer and retaining nut on the pitman shaft and tighten nut to 251 N·m (185 ft. lbs.).

(3) Install drag link to the pitman arm. Install the nut and tighten to 108 N·m (80 ft. lbs.).

(4) Install drag link to the right steering knuckle. Install the nut and tighten to 88 N·m (65 ft. lbs.).

(5) Install tie rod to the left steering knuckle and drag link. Install the nuts and tighten to 108 N·m (80 ft. lbs.).

(6) Install steering damper on the axle. Tighten nut to 95 N·m (75 ft. lbs.).

(7) Install steering damper on the tie rod. Tighten nut to 81 N·m (60 ft. lbs.).

(8) Remove the supports and lower the vehicle to the surface. Center steering wheel and adjust toe, refer to Group 2 Suspension.

(9) After adjustment tighten tie rod adjustment sleeve clamp bolts to 61 N·m (45 ft. lbs.).

NOTE: Position the clamp on the sleeve so retaining bolt is located on the bottom side of the sleeve.

SPECIFICATIONS

TORQUE CHART

TORQUE SPECIFICATIONS

DESCRIPTION	N·m	Ft. Lbs.	In. Lbs.
Pitman Arm Gear Shaft	251	185	—
Drag Link Pitman Arm	108	80	—
Drag Link Tie Rod	88	65	—
Drag Link Adjuster Clamp	61	45	—
Tie Rod End Knuckle	108	80	—
Tie Rod End Adjuster Clamp	61	45	—
Steering Damper Axle	95	70	—
Steering Damper Tie Rod	81	60	—

LINKAGE - 4WD (Continued)

SPECIAL TOOLS

STEERING LINKAGE

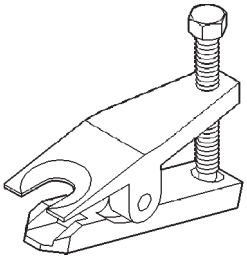

Remover Ball Stud MB-991113

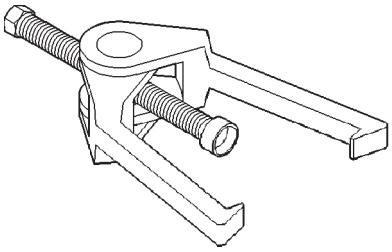

Puller Tie Rod C-3894-A

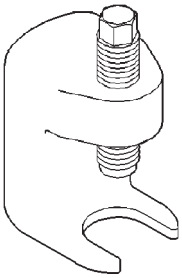

Remover Pitman C-4150A