SERVICE & PARTS MANUAL

Snorkel

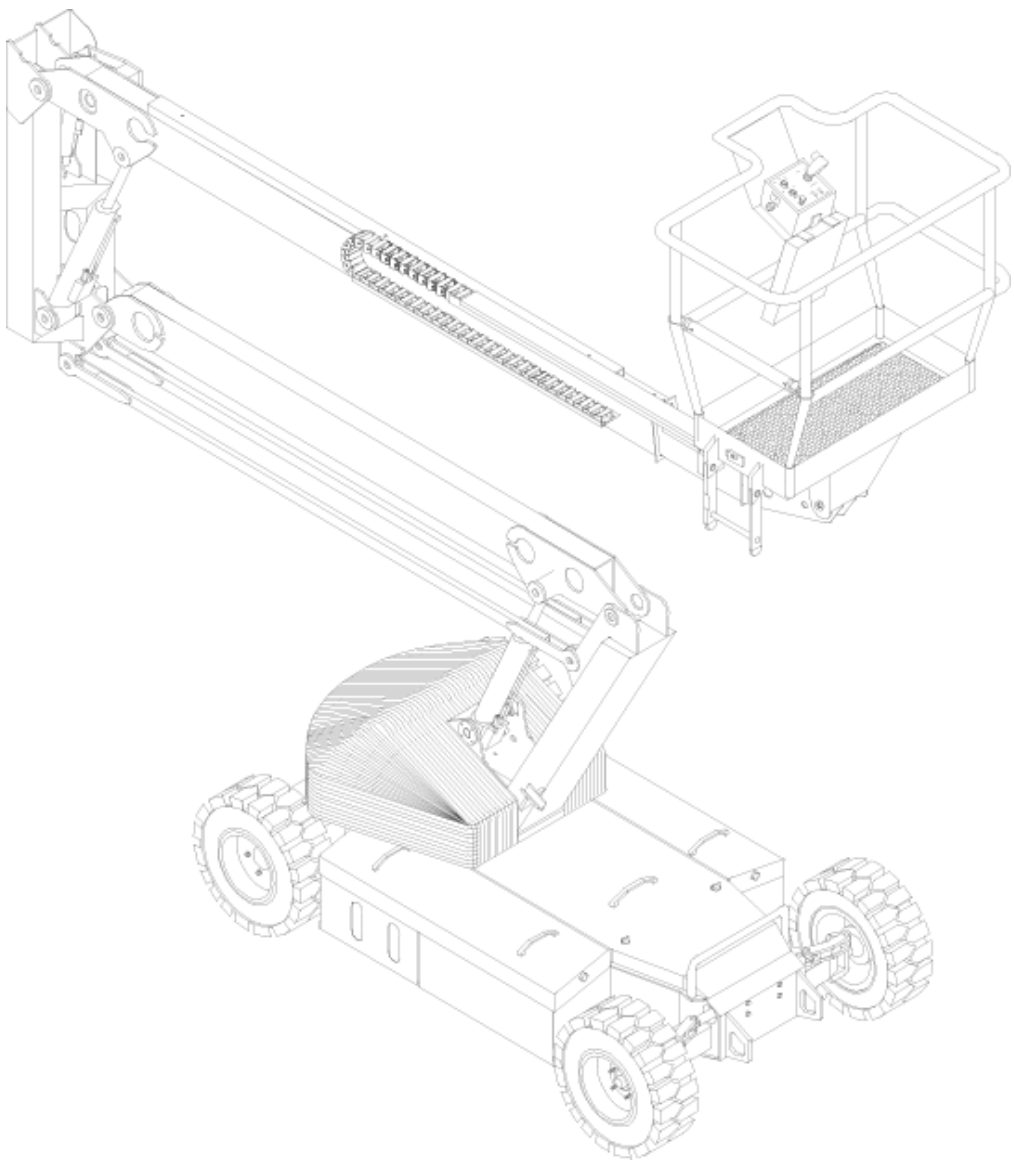

AB38

WORK PLATFORM

Manual Serial Number 500422-102

https://truckmanualshub.com/

https://truckmanualshub.com/

Please note:

Any reference to **UpRight** in this manual also applies to **Snorkel**

UpRight Powered Access HQ
Vigo Centre
Birtley Road
Washington
Tyne & Wear
NE38 9DA
U.K.

Snorkel International,
2009 Roseport Road,
Elwood,
Kansas 66024,
USA.

Europe

TEL:+44 (0) 845 1550 058

Snorkel

www.snorkelusa.com

USA

TEL: +1 (785) 989 3000
FAX: +1 (785) 989 3070

https://truckmanualshub.com/

SERVICE & PARTS MANUAL

AB38

Aerial Work Platform

This manual (500422-102) covers serial Numbers 2890 to Current

When contacting UpRight Powered Access for service or parts information, be sure to include the MODEL and SERIAL NUMBERS from the equipment nameplate (nameplate types shown below). The AB38 Work Platform meets and exceeds the requirements of both ***prEN280*** and ***ANSI A92.5 (1992)***.

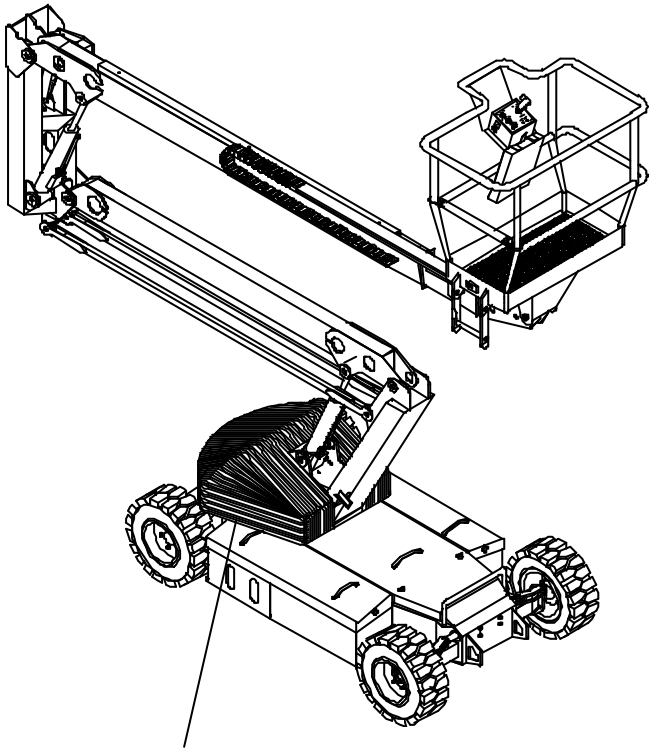

Nameplate

The Serial Number of the Work Platform is also stamped on the inside of the Chassis, close to the Steering Cylinder.

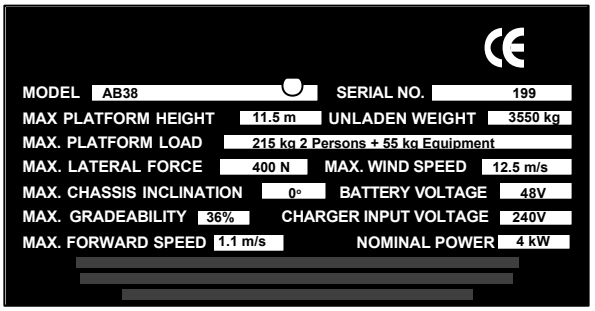

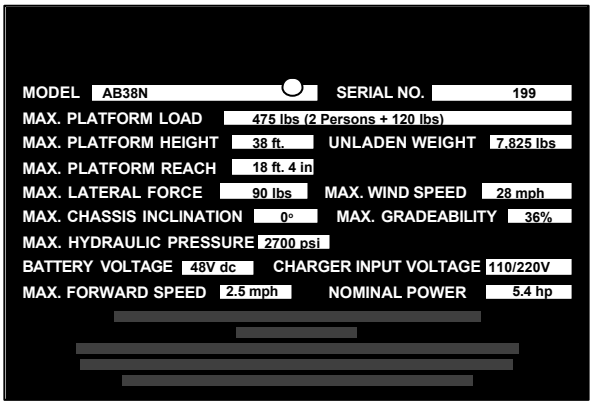

500422-102

01/05

https://truckmanualshub.com/

Foreword

Introduction

HOW TO USE THIS MANUAL

This manual is divided into 7 Sections, one of which is in a loose leaf format. The right hand pages of each Section is marked with a black tab that line up with one of the thumb index tabs on the right side of this page. You can quickly find each Section without looking up the Table of Contents which follows this page. The section number printed at the top corner of each page can also be used as a quick guide.

SPECIAL INFORMATION

DANGER

Indicates the hazard or unsafe practice ***will*** result in severe injury or death.

WARNING

Indicates the hazard or unsafe practice ***could*** result in severe injury or death.

CAUTION

Indicates the hazard or unsafe practice could result in ***minor*** injury or property damage.

Notes: Give helpful information.

WORKSHOP PROCEDURES

CAUTION: Detailed descriptions of standard workshop procedures, safety principles and service operations are not included. Please note that this manual does contain warnings and cautions against some specific service methods which could cause personal injury, or could damage a machine and make it unsafe. Please understand that these warnings cannot cover all conceivable ways in which service, whether or not recommended by *UpRight*, can be done, or the possible hazardous consequences of each conceivable way, nor could *UpRight* investigate all ways. Anyone using service procedures or tools, whether or not recommended by *UpRight*, must satisfy themselves thoroughly that neither personal safety nor machine safety will be jeopardised.

All information contained in this manual is based on the latest product information available at the time of printing. We reserve the right to make changes at any time without notice. No part of this publication may be reproduced, stored in retrieval system, or transmitted, in any form by any means, electronic, mechanical, photocopying, recording, or otherwise, without prior written permission of the publisher. This includes text, figures and tables.

Introduction & Specifications — General Description & Machine Specifications. — **1.0**

Machine Preparation — Information on the preparation for use, shipment, forklifting, transporting and storage. — **2.0**

Operation — Operating Instructions & Safety Rules. — **3.0**

Maintenance — Preventative Maintenance & Service Intervals. — **4.0**

Troubleshooting — Causes of and Solutions to typical problems. — **5.0**

Schematics — Schematics and Valve Block Diagram with description and location of components. — **6.0**

Illustrated Parts Breakdown — Complete parts lists with illustrations. — **7.0**

https://truckmanualshub.com/

Foreword

NOTES:

https://truckmanualshub.com/

Table of Contents

Section No. | Page No.

1.0 Introduction & Specifications

1.0 Introduction 1-1
Purpose 1-1
Scope 1-1
1.1 General Information 1-1
Platform 1-1
Control Box 1-1
Elevating Assembly 1-1
Rotation Gear 1-1
Drive & Steer Systems 1-2
Power System 1-2
Control System 1-2
Chassis 1-2
AB38 Purpose & Limitations 1-2
1.2 Specifications 1-3
1.3 Notes 1-4

2.0 Machine Preparation

2.1 Preparation For Use 2-1
2.2 Preparation For Shipment 2-1
2.3 Forklifting The Work Platform 2-1
2.4 Lifting The Work Platform 2-1
2.5 Transport by Truck 2-1
2.6 Manual Brake Release 2-2
2.7 Storage 2-2
2.8 Notes 2-3

3.0 Operation

3.0 Introduction 3-1
General Functioning 3-1
Driving 3-1
Steering 3-1
Operating the Booms 3-1
Design Features 3-2
3.1 Safety Rules & Precautions 3-3
3.2 Controls & Indicators 3-4
3.3 Pre-Operation Inspection 3-6
System Function Inspection 3-6
3.4 Opertaion 3-7
Elevating & Lowering The AB38 Work Platform 3-7
Travel With The Work Platform Lowered 3-7
Travel With The Work Platform Elevated 3-8
Levelling 3-8
Emergency Situations & Emergency Override 3-8
Emergency Lowering 3-8
Control From Ground Level 3-9
After Use Each Day 3-9
Manual Rotation 3-9
Manual Telescopic Retraction 3-9
3.5 Notes 3-11

4.0 Maintenance

4.0 Introduction 4-1
Tools Required 4-1
4.1 Preventative Maintenance 4-1
Preventative Maintenance Table Key 4-2
Preventative Maintenance Report 4-2
4.2 Battery Maintenance 4-3
Battery Inspection & Cleaning 4-3
Battery Charging 4-3
Battery Cell Equalization 4-4
4.3 Temperature Correction For Electrolyte Readings 4-4
4.4 Lubrication 4-5
Grease Fittings 4-5
Slew Ring 4-5
Pivot Pins 4-5
Hydraulic Oil Tank & Filter 4-5
4.5 Setting Hydraulic Pressures 4-6
Main Relief Valve 4-6
Slew Cross-Line Relief Valve 4-7
4.6 Maintenance on Elevating Assembly 4-7
Installation of Elevating Assembly Support 4-7
Removal of Elevating Assembly Support 4-7
4.7 Switch Adjustments 4-8
Tilt Sensor 4-8
Boom Rest Limit Switch 4-8
4.8 Hydraulic Manifold 4-10
Removal 4-10
Disassembly 4-10
Cleaning & Inspection 4-10
Assembly 4-10
Installation 4-10
4.9 Hydraulic Pump 4-12
Removal 4-12
Installation 4-12
4.10 Traction Motor Maintenance 4-12
Inspecting the Drive Motor 4-12
4.11 Electric Motor 4-14
Troubleshooting 4-14
Disassembley 4-14
Inspection 4-14
Reassembley 4-14
Maintenance Intervals & Procedures 4-15
4.12 Drive Reduction Gearbox 4-17
Changing the Oil 4-18
4.13 Torque Specifications 4-18
4.14 Lower Lift Cylinder 4-19
Removal 4-19
Disassembly 4-19
Cleaning & Inspection 4-19
Reassembly/Seal Replacement 4-20

https://truckmanualshub.com/

Table of Contents

Section No. | Page No.

Installation 4-20
4.15 *Upper Lift Cylinder* 4-21
Removal 4-21
Disassembly 4-21
Cleaning & Inspection 4-21
Reassembly/Seal Replacement 4-21
Installation 4-22
4.16 *Telescopic Cylinder* 4-22
Removal 4-22
Disassembly 4-23
Cleaning & Inspection 4-23
Reassembly/Seal Replacement 4-23
Installation 4-23
4.17 *Steering Cylinder* 4-23
Removal 4-23
Disassembly 4-23
Cleaning & Inspection 4-24
Reassembly/Seal Replacement 4-24
Installation 4-24
4.18 *Master Levelling Cylinder* 4-25
Removal 4-25
Disassembly 4-25
Cleaning & Inspection 4-25
Reassembly/Seal Replacement 4-25
Installation 4-25
4.19 *Slave Levelling Cylinder* 4-26
Removal 4-26
Disassembly 4-26
Cleaning & Inspection 4-26
Reassembly/Seal Replacement 4-26
Installation 4-27
Bleeding the Master/Slave Levelling Circuit 4-27
4.20 *Adjustment Of Overcentre Valves* 4-28
4.21 *Notes* 4-29

5.0 Troubleshooting

5.0 *Introduction* 5-1
General Procedure 5-1
5.1 *Troubleshooting Guides* 5-2
5.2 *Fault Codes* 5-4

6.0 Schematics

6.0 *Introduction* 6-1
6.1 *Electrical Schematics* 6-3
6.2 *Hydraulic Schematics* 6-9

Section No. | Page No.

7.0 Illustrated Parts Breakdown

7.0 *Introduction* 7-1
7.1 *Index* 7-1
7.2 *Illustrated Parts Breakdown* 7-2

Final Assembly AB38 7-2
Chassis Assembly 7-4
Booms and Posts Assembly 7-6
Cage and Cradle Assembly 7-8
Cage and Cradle Assembly (Rotator) 7-10
Wheel Hub Assembly 7-12
Drive Reduction Gearbox Assembly 7-14
Traction Motor Assembly 7-16
Motor / Pump Assembly 7-18
Rear & Front Wheel Kit 7-20
Worm Drive Unit & Slew Bearing Assembly 7-22
Manifold Block Assembly 7-24
Lower Lift Cylinder Assembly 7-26
Upper Lift Cylinder Assembly 7-28
Telescopic Cylinder Assembly 7-30
Steering Cylinder Assembly 7-32
Master / Slave Cylinder Assembly 7-34
Pump & Traction Motor Control Unit Assembly 7-36
Lower Control Box Assembly 7-38
Upper Control Box Assembly 7-40
Cables & Electrical Components 7-42
Hose Assembly 7-44
Decal Kit - ANSI Version 7-46
Decal Kit - CE Version 7-48
Decal Kit - French/German Versions 7-50
Options List 7-52

https://truckmanualshub.com/

Contents

List of Illustrations

Figure No.	Title	Page No.
1-1	AB38 Work Platform	1-1
2-1	Forklifting & Lifting The AB38	2-1
2-2	Manual Brake Release	2-2
3-1	Controls & Indicators	3-5
3-2	Emergency Lowering	3-9
3-3	Manual Rotation	3-9
3-4	Manual Telescopic Retraction	3-10
4-1	Lubrication Points	4-5
4-2	Oil & Filter Replacement	4-6
4-3	Main Manifold Block	4-6
4-4	Setting Main Relief Pressure	4-6
4-5	Setting Slew Cross-Line Relief Pressure	4-7
4-6	Supporting The Elevating Assembly	4-7
4-7	Tilt Sensor	4-9
4-8	Boom Rest Limit Switch	4-9
4-9	Manifold Block Components	4-11
4-10	Hydraulic Pump	4-12
4-11	Traction Motor Maintenance	4-13
4-12	Èlectrical Test Circuit	4-14
4-13	Electric Motor Assembly	4-16
4-14	Drive Reduction Gearbox	4-17
4-15	Lower Lift Cylinder	4-19
4-16	Hydraulic Cylinder Component Breakdown	4-20
4-17	Upper Lift Cylinder	4-21
4-18	Telescopic Cylinder	4-22
4-19	Steering Cylinder	4-24
4-20	Master Levelling Cylinder	4-24
4-21	Slave Levelling Cylinder	4-26
4-22	Adjustment Of Overcentre Valves	4-27
5-1	MOS90 Calibrator	5-9
6-1	Electrical Schematic	6-9
6-2	Hydraulic Schematic & Manifolds	6-15

List of Tables

Table No.	Title	Page No.
1-1	AB38 Work Platform Specifications	1-3
3-1	Controls & Indicators	3-4
4-1	Preventative Maintenance	4-2
4-2	Temperature Correction For Electrolyte Readings	4-4
4-3	Bolt Torques	4-18
5-1	Troubleshooting Guide	5-2
5-2	Fault Codes	5-4
6-1	Electrical Schematic Legend	6-3
6-2	Hydraulic Schematic Legend	6-13

https://truckmanualshub.com/

Contents

NOTES:

https://truckmanualshub.com/

1.0 Introduction

PURPOSE

The purpose of this Service & Parts Manual is to provide instructions and illustrations for the operation and maintenance of the AB38 Work Platform manufactured by ***Ui***, Ireland. (See Figure 1-1).

For US Domestic Machines this Work Platform is more correctly referred to as the AB38N Work Platform. There is however little difference between these machines, as regards electrical or hydraulic operation, and from herein the Work Platform will be simply referred to as the AB38 Work Platform.

SCOPE

The manual includes the procedures and responsibilities which must be strictly adhered to for proper operation, maintenance, adjustment, and repair of this product. The Maintenance Section further covers preventative maintenance and trouble shooting.

1.1 General Information

The AB38 is a quickly deployable self propelled aerial work platform, designed to raise two operators with hand tools to a work height of up to 13.45 m (44.12 ft.) i.e. a platform floor height of 11.45 m (37.56 ft.). It is designed to provide mobility with the Platform in the raised or lowered position, although travel with the Platform raised is limited to a low speed. The boom assembly and telescope functions are operated by a hydraulic pump driven by a DC electric motor. Two DC electric traction motors coupled to two braked gearboxes regulate the drive function.

PLATFORM

The platform is large enough for two operators and has a free-draining perforated floor with 150 mm (5.9 inches) toeboards. Hand rails are constructed from aluminium tubing and a safety drop-bar is provided at the entrance. Safety harness anchor points are also fitted in the floor of the platform. The primary Control Box is fitted permanently within this platform.

⚠ WARNING ⚠

DO NOT begin using the machine until the platform entrance drop bar is in the fully lowered position.

CONTROL BOX

The control box is permanently fitted at the front centre of the platform. It features a Joystick which will provide proportional control for raising or lowering either of the two booms, extending or retracting the Telescopic Boom, rotating (slewing) the entire Booms & Posts Assembly or driving.
A safety feature which is incorporated into the Joystick's operation is the Interlock Switch. This must be activated at all times while operation is required. This allows for one-handed operation. A complete explanation of control functions can be found in Section 3.

ELEVATING ASSEMBLY

The platform is raised and lowered by a combination of two steel lift booms and one telescopic boom, each of which is operated by a hydraulic cylinder which in turn is actuated by hydraulic power from the motor driven pump. Solenoid operated valves control to which cylinder the hydraulic oil is directed. Each cylinder features an integral holding valve to prevent uncontrolled descent in the case of a hose burst.

ROTATION GEAR

The Booms & Posts Assembly can be rotated to provide up to 5.6 m (18.4 ft.) of side outreach, measured from the centreline of rotation to the front of the Platform. This is done by means of an integral hydraulic motor driving a Worm Drive Unit, around a large diameter Slew Gear.

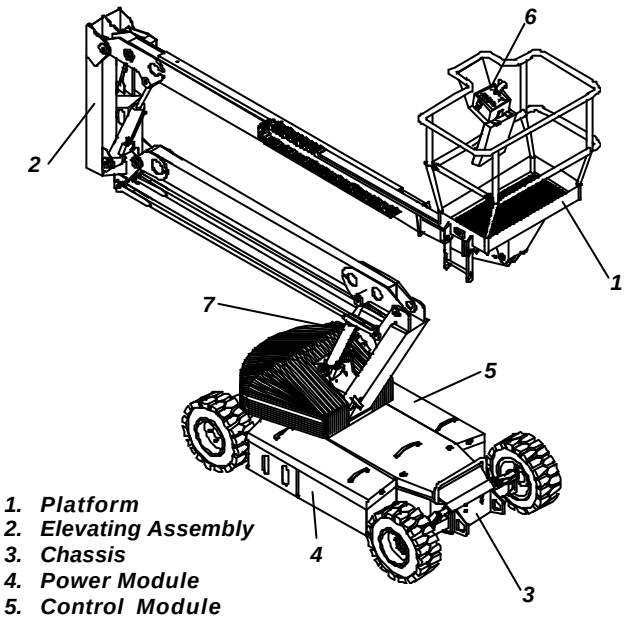

1. Platform
2. Elevating Assembly
3. Chassis
4. Power Module
5. Control Module
6. Platform Control Box
7. Lower Control Box

Figure 1-1: AB38 Work Platform

https://truckmanualshub.com/

DRIVE & STEER SYSTEMS

The AB38 Work Platform is restricted to low speed drive when the Platform is raised above the Boom Rest Limit Switch. The Traction controller controls the application of drive from the Joystick by means of two Traction Motors, which are assembled to the drive wheels via a Drive Reduction Gearbox.

Steering of the AB38 Work Platform is controlled by the ECU, which controls the signals activating a double acting cylinder. An Operator can Steer left or right by depressing the Rocker Switches on top of the Joystick, while activating the Interlock Switch.

POWER SYSTEM

The power system incorporates eight 6V batteries driving the drive traction motors, or the 4kW (5.4HP) electric motor which in turn drives the hydraulic pump. The application of this hydraulic pressure is performed by the Control System.

CONTROL SYSTEM

The machine is provided with fully proportional controls by means of the interaction between an ECU, electronic motor controller and a proportional joystick. The ECU and motor controller regulate the drive motor/pump speed and hence the flow of oil reaching the cylinders, the Worm Drive Unit or the Drive Reduction Gearbox. It regulates the direction of flow of the hydraulic oil via the solenoid valves located on the manifold block, and it also monitors the operation of all switches on the machine via the machine harness system.
The motor control units are located, in the left hand chassis module. The manifold block is located on the hydraulic tank. This is accessible by removing the main cover.

CHASSIS

The chassis is a structural frame designed to support all the components of the AB38 Work Platform.

AB38 PURPOSE & LIMITATIONS

The purpose of the AB38 work platform is to provide a quickly deployable variable height work platform. It is capable of lifting two people with work tools up to an upper limit of 215 kg (475 lbs) in total. The unit will provide the ability to reach over obstacles but must be used on firm level ground.
The platform must **only** be used on firm level or slightly uneven ground capable of supporting the maximum load generated under the four wheels. **Do not** use on soft or severely sloping ground.

DANGER

NOTE: It should be recognised that if the tilt switch senses a degree of slope greater than 3° the elevating circuits will lockout and sound a warning alarm. The Emergency Override should then be used, to lower the Elevating Assembly.

https://truckmanualshub.com/

1.2 Specifications

Table 1-1: Specifications

ITEM	METRIC	IMPERIAL
Duty Cycle	45% of 8 hour shift	45% of 8 hour shift
Platform Size	0.7 m x 1.3 m (inside gaurdrails)	2.3 ft x 4.3 ft (inside gaurdrails)
Max. Platform Capacity	215 kg	475 lbs
	2 People	2 People
Min. Platform Floor Height	13.45 m 11.45 m 0.65 m	44.12 ft 37.56 ft 2.13ft
	6.10 m	20.00 ft
Platform Height At Maximum Outreach	5.40 m	17.72 ft
Stowed Dimensions Length Width Height	 4.04 m 1.50 m 2.00 m	 13.25 ft 4.92 ft 6.56 ft
Ground Clearance	0.13 m	0.43 ft
Wheel Base x Gauge	2.00 m x 1.27 m	6.56 ft x 4.16 ft
Rotation	362 degrees non-continuous	362 degrees non-continuous
	3,550 kg	7,826 lbs
	4,010 kg	8,840 lbs
Drive Speed Stowed	0 - 4 km/h	0 - 2.49 mph
Drive Speed Elevated	0 - 0.72 km/h	0 - 0.45 mph
Maximum Gradeability	36%	36%
Inside Turning Radius	0.40 m	1.31 ft
Outside Turning Radius	2.40 m	7.87 ft
Power Source	48V DC 4kW, 8 X 6V 220Ah Batteries	48V DC 5.4HP, 8 X 6V 220Ah Batteries
System Voltage	48V	48V
Battery Charger	48V 25A 220/110VAC 50/60 Hz	48V 25A 220/110VAC 50/60 Hz
	25 Litres	6.5 Gallons US
Max. Hydraulic Pressure	145 bar	2105 psi
	ISO #46	ISO #46
	2 Double Acting Lift Cylinders With Lock Valves And Manual Emergency Lowering Facility. 1 Double ActingTelescopic Cylinder	2 Double Acting Lift Cylinders With Lock Valves And Manual Emergency Lowering Facility. 1 Double ActingTelescopic Cylinder
	Refer to Section 5 of the Service & Parts Manual	Refer to Section 5 of the Service & Parts Manual
Control System	One handed Proportional Joystick Operating Energy Efficient Motor Control System (MOS90)	One handed Proportional Joystick Operating Energy Efficient Motor Control System (MOS90)
Wheels/Tyres	400 mm Diameter Steel Disc Wheel With Solid All Surface Tyres	15.75 inch Diameter Steel Disc Wheel With Solid All Surface Tyres
Braking	Automatic Spring Applied Hydraulic Release	Automatic Spring Applied Hydraulic Release
	69.5 dB(A)	69.5 dB(A)

https://truckmanualshub.com/

NOTES:

https://truckmanualshub.com/

2.1 Preparation for use

CAUTION

Read, understand and follow all operating instructions before attempting to operate the machine.

2.2 Preparation for Shipment

1. Lubricate machine per lubrication instructions in Section 4.4, Maintenance.
2. Fully lower the platform and make sure the machine is stowed securely.
3. Check that the hydraulic oil level is adequate and that it is not over filled.

Check that the batteries are charged and disconnect the batteries using the Battery Disconnect Plug. This prevents excessive power drain prior to next using the machine.

2.3 Forklifting the Work Platform

CAUTION

The AB38 is not designed to be consistently forklifted. This operation can be used for very short distances only.

Forklift from the side by lifting under the chassis modules as per Figure 2-1. When lifting the AB38 with a forklift, great care should be taken not to damage the right or left hand modules as these contain sensitive equipment.

2.4 Lifting the Work Platform

CAUTION

See specifications (Section 1.2) for the weight of the work platform and be certain that lifting apparatus is of adequate capacity to lift the platform.

The AB38 may be lifted by an overhead hoist/crane in the following manner:
Four lifting straps capable of safely supporting the total weight of the AB38 ((3,550 Kg /7,826 lbs CE

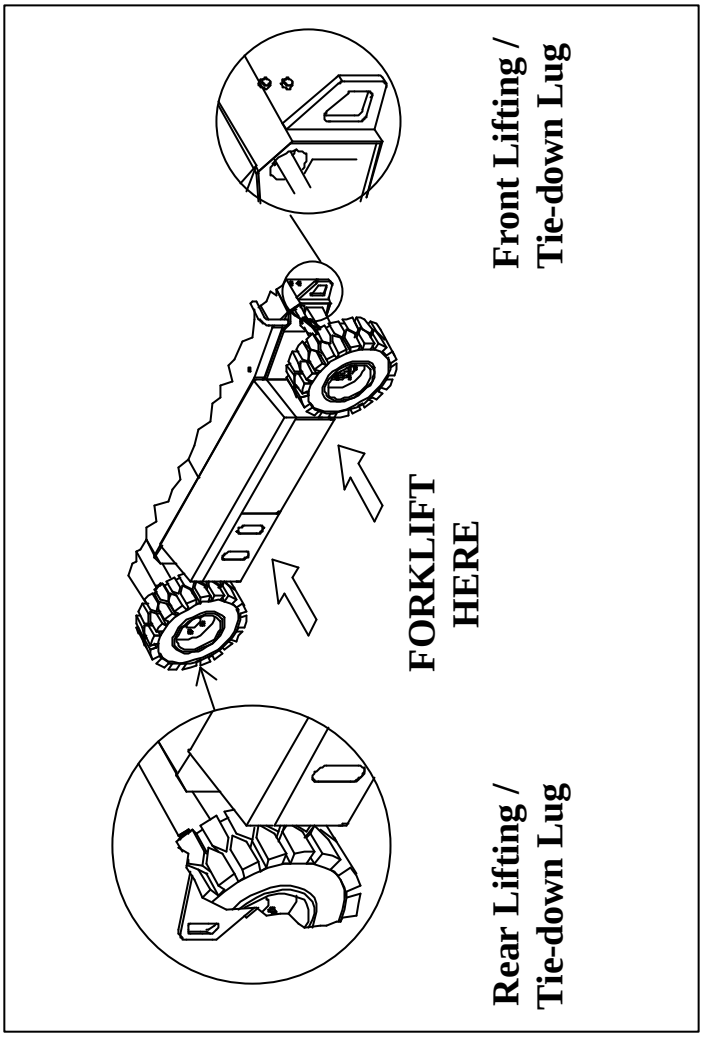

Figure 2-1: Forklifting & Lifting the AB38

Version & 4,010 Kg /8,840 lbs ANSI Version) and at least 250 cm (8 ft.) long are required. This minimum length is important to ensure the correct lifting angle. The straps should be positioned at the Lifting/Tie Down Lugs as shown in Figure 2-1. Great care must be taken to avoid damage to any of the components of the machine.

2.5 Transport by Truck

The AB38 is normally carried upon a suitably rated transportation vehicle. Because of the high gradeability of the AB38 it will be capable of driving directly on to most vehicles. If however the loading slope is greater than the gradeability or the batteries have been depleted sufficiently a winch should be used. The procedure when using a winch is to disengage the gearbox from the drive wheels using the Allen key release, and then winch the machine on to the vehicle in its freewheel state.

Refer to Section 2.6 which follows.

https://truckmanualshub.com/

When the AB38 is on the Truck it should then be made secure.

1. Chock the wheels of the AB38.
2. Secure the work platform to the transport vehicle with chains or straps of adequate load capacity attached to the lifting lugs on the chassis.

CAUTION

Overtightening of the chains or straps through tie down lugs may result in damage to the Work Platform.

2.6 Manual Brake Release

CAUTION

Preform this operation only when the machine will not operate under its own power and it is necessary to move the machine, or for winching onto a trailer for transportation.
Ensure the machine is on level ground before commencing this operation and use wheel chocks as appropriate to prevent the machine from rolling inadvertently.
Do not exceed 3 mph. Faster speeds will damage drive components and void warranty.

1. Ensure that the Platform is fully lowered and that the Elevating Assembly is slewed (rotated) such that the platform is stowed above the drive wheels. Turn the Upper Control Box to the **OFF** position and remove the key.
2. Attach a chain/cable of sufficient capacity for towing the machine to the front or rear lifting/tie down lugs. Take up the slack in the chain/cable.
3. Locate the Allen head socket screws located in the centre of the two drive (rear) wheels and using a 6 mm Allen key, turn each one clockwise to its full extent. The machine is now in freewheel mode.

WARNING

DO NOT leave the machine unattended or attempt to operate the AB38 Work Platform until the Brake Release Screws have been re-engaged.

4. When towing is completed, turn both Allen head socket screws in a counter clockwise direction until they rest firmly against the locking circlip.

Figure 2-2 : Manual Brake Release

2.7 Storage

No preparation is required for storage when the Work Platform is in regular use. Regular maintenance per *Table 4-1* should be performed.
If the work platform is to be placed in long term storage (dead storage) use the following preservation procedure.

PRESERVATION

1. Clean painted surfaces. If the painted surface is damaged, repaint.
2. Fill the hydraulic tank to operating level **with the platform fully lowered.** Fluid should be visible on the Dip Stick. It is not recommended that the hydraulic fluid be drained.
3. Coat exposed portions of cylinder rods with a preservative such as multipurpose grease and wrap with barrier material.
4. Coat all exposed unpainted metal surfaces with preservative.

BATTERIES

1. Disconnect the batteries.
2. Disconnect the battery leads and secure to the chassis.

WARNING

Care should be taken, while disconnecting the battery leads, that a short circuit does not occur. i.e. grounding to the chassis with a spanner.

3. Remove the batteries and place in alternate service. Battery efficiencies are best realised when used consistently.

https://truckmanualshub.com/

NOTES:

https://truckmanualshub.com/

NOTES:

https://truckmanualshub.com/

3.0 Introduction

GENERAL FUNCTIONING

WARNING

To understand the properties of the AB38 Work Platform it is recommended that you refer to the Hydraulic and Electrical Schematics in Section 6. All the information within this Service & Parts Manual should be read thoroughly and fully understood. Before beginning to operate the machine it is also a mandatory requirement to read, fully understand and follow the Operators Manual.

The AB38 Lift and Steer functions are operated by utilising a battery powered electric motor which drives a hydraulic pump. The pump supplies oil under pressure to the various platform functions. The oil flow is directed to the different functions by electrically activated solenoid valves. The control of which solenoid valves activate and the rate at which the hydraulic fluid flows is carried by the application of the electrical circuit, and its components, to an ECU.

The Drive function is operated by utilising two drive motors which are controlled by a Electronic Traction Motor Controller.

NOTE:

An Interlock Trigger Switch is an integral part of the Joystick. This must be depressed for the functions to operate. This will energise the Line Contactor and enable electrical control. (This safety feature prevents inadvertent activation of all powered functions, in the case of accidental movement of the Joystick.)

DRIVING

Platform controls provide variable speeds for the drive function through the use of a Joystick. This is achieved using a motor control unit which varies the speed of the two DC electric traction motors. To drive the AB38 there are a number of steps which need be taken. First the operator should ensure that neither of the Emergency Stop Buttons are pressed, then while in the platform the Keyswitch should be turned to the 'ON' position. Depress the drive function button and the AB38 will be able to drive. The machine will then drive at a speed proportional to the angle of the Joystick from the neutral (centre) position, while the Joystick Interlock Switch is depressed. The speed range within which the machine will drive is determined by whether or not the booms are raised. If a boom is raised off the Boom Rest Limit Switch the current to the drive motors will be reduced leading to a significantly slower drive speed. This is a safety feature.
The drive wheels are driven by two DC electric traction motors coupled to two braked gearboxes. When the Joystick is in the neutral position the brake chamber is free of oil and the internal spring within the gearbox maintains the braking pressure. Upon moving the Joystick the brake chambers will receive a flow of pressurised oil which will release the brakes.

STEERING

Platform controls also provide a steering function through the use of 'Rocker' activated Steering Switches in the Joystick. This is achieved by using the ECU which varies the hydraulic flow by altering the voltage to the pump. To steer the AB38 there are a number of steps which need be taken.
First the operator should ensure that neither of the Emergency Stop Buttons are pressed, then while in the platform the Keyswitch should be turned to the 'ON' position. Depress the drive function button to drive and the AB38 will also be able to steer. To steer the machine the Rocker should be pushed to the left or the right, while the Joystick Interlock Switch is depressed. Steering left or right will energise the steering coils and allow oil to enter the full bore side or annular side of the steering cylinder, thereby turning the wheels in the chosen direction.

NOTE:

Steering is not self-centring. The wheels must be returned to the straight ahead position by operating the Steering Switch.

OPERATING THE BOOMS

Boom functions, including the telescopic and slewing functions, can be operated either from the Platform Controls or the Chassis Controls.
The Platform controls provide variable speeds for the boom functions through the use of a Joystick. This is achieved using an ECU unit which varies the speed of the motor/pump unit and increases or decreases the flow of oil to the different functions. This control unit receives a control signal from the Joystick on the upper controls, the speed of the motor will increase as the Joystick is pushed further away from the neutral (centre) position.

https://truckmanualshub.com/

It will be noticed that on the Upper Control Box a set of buttons are used to alternate functions. Each function will have it's corresponding graphic. This selector switch indicates to the Controller which function is required and by using the Joystick the speed of this selected function can be adjusted.

The boom functions on the chassis controls provide proportional control for each function by way of an analog rocker switch, the desired function can be activated by depressing one of four buttons on the controls and then holding the "enable" button and operating the analog rocker.

The use of these functions is further explained throughout this Section.

DESIGN FEATURES

The AB38 Series Work Platform has the following features:

- The drive speed is limited to a 'creep speed' when operating the Work Platform while the machine is elevated.
- The energy-efficient motor control units provides long battery life and smooth proportional control of the boom and drive functions.
- All cylinders are fitted with hydraulic hose-burst protection interlocks.
- The on-board charger is fully automatic and charges the batteries efficiently and economically.
- If the work platform starts to become unstable and the Tilt Sensor is activated an alarm will sound in the upper control box. In this situation power is partially cut to the upper controls to prevent any boom movements (i.e. UP, TELE OUT) that might increase instability. An emergency override switch is fitted to allow the booms to be lowered at a controlled speed to bring the machine back to a stable position.
- In the event of a power loss the two Boom Lift Cylinders are fitted with emergency lowering valves which allow the booms to be lowered at a controlled speed by an operator on the ground.
- A Master Cylinder/Slave Cylinder levelling system ensures that the Platform remains level throughout the entire working cycle of the machine.
- A manual rotation facility is fitted to allow rotation of the Elevating Assembly in the event of power loss.

HOUR METER

The AB38 Series Work Platform is equiped with an hourmeter as standard.

To access the hour meter function follow the following steps.
(with the machine powered up)
1. Push the platform emergency stop button.

2. Hold down the following buttons, horn, telescope and upper boom.

3. While holding the buttons twist the emergency stop button to return power to the machine.

4. "hr" will now be displayed on the readout, Pressing the right turn button will scroll through the accumulated hours two digits at a time. For example, if pressing the right turn button once displays "20", pressing it a 2nd time displays "58", and pressing it a 3rd time displays "hr", the elapsed time of operation is 2058 hours.

LOAD SENCING

The AB38 is fitted with a load sensing system designed to comply with the requirements of :
BS EN 280 : 2001

If a load equivelent to 90% of safe working load is lifted a fault code "03" will be displayed on the digital display on the platform control box. If a load which is greater than the safe working load is present in the basket all machine functions will cease to operate and an acoustic warning will sound. In order to return to normal operation a load equal to or less than the safe working load must be present in the basket and the power must be re-cycled, power can be re-cycled by pushing the emergency stop button and releasing it again.

https://truckmanualshub.com/

3.1 Safety Rules and Precautions

WARNING

Before using the AB38 Work Platform it is imperative to read, understand and follow the following Safety Rules and Precautions.

NEVER operate the machine unless you have been fully trained in its safe use, are medically fit and have read and fully understood these instructions.

NEVER leave the AB38 unattended with the Platform in the raised position.

ALWAYS position the machine on firm level ground with a minimum bearing capacity of 550 kN/m^2 (80 psi).

CHECK that no overhead obstructions exist within the machines range of movement.

DO NOT work within 3 metres (10 feet) of live overhead cables. Set up warning tape barrier at the safe distance.
(THIS MACHINE IS NOT INSULATED).

DO NOT exceed the safe working load of 215 kg (475 lbs), (max. 2 persons plus 55 kg (120 lbs) equipment)

NEVER sit, stand or climb on guard rail or midrail of the platform.

NEVER use ladders or scaffolding on the platform.

DO NOT use the machine as a crane or for any other application involving additional loads or forces. The maximum side force **must not exceed 400 N (90 ft. lbs).**

DO NOT increase wind loadings by fitting items such as sign boards, flags etc. to the cage or boom.

DISTRIBUTE all loads evenly on the platform. See Table 1-1 for maximum platform load.

NEVER use damaged equipment. (Contact UpRight Ireland Ltd. for instructions).

NEVER attach overhanging loads or increase the size of the working platform.

DO NOT use in winds exceeding 12.5 m/s (28 mph - Beaufort Force 6)

NEVER change or modify operating or safety systems.

INSPECT the machine thoroughly for cracked welds, loose hardware, hydraulic leaks, damaged control cable, loose wire connections and wheel bolts.

NEVER climb down an elevating assembly with platform elevated.

NEVER perform service on or in the elevating assembly while the platform is elevated without first blocking the elevating assembly.

NEVER recharge batteries near sparks or open flame; batteries under charge emit highly explosive hydrogen gas.

SECURE the work platform against unauthorised use by turning Keyswitch off and removing key from switch.

NEVER replace any component or part with anything other than original UpRight replacement parts without the UpRight's consent.

NEVER leave the machine unattended while the Gearbox Drive is disengaged.

https://truckmanualshub.com/

3.2 Controls and Indicators

The controls and indicators for operation of the AB38 Work Platform are shown in Figures 3-1 & 3-2. The name and function of each control and indicator are listed in Tables 3-1. The index numbers in the figure correspond to the index numbers in the table. **The operator should know the location of each control and indicator and have a thorough knowledge of the function and operation of each before attempting to operate the unit.**

Table 3-1: Controls and Indicators

*Platform Controller**

INDEX NO.	NAME	FUNCTION
1	Emergency Stop	Cuts all machine functions when pushed, twist to release.
2	Platform Level	Depress button and hold while using joystick to level the platform.
3	Upper Boom	Depress button to engage Upper Boom lift functions (Up & Down)
4	Lower Boom	Depress button to engage Lower Boom lift functions (Up & Down)
5	Drive	Depress button to engage Drive functions (Forward & Reverse)
6	Horn	Depress button and hold to sound the horn.
7	Slew (Rotate)	Depress button to engage Slew functions (Clockwise & Counter Clockwise)
8	Display	Shows battery status during normal operation and fault codes outside of normal operation.
9	Telescope	Depress button to engage Telescope functions (Extend & Retract)
10	Joystick	Depress deadman switch and select joystick forward or reverse to enable a selected function.
11	Key Switch	Provides power to the lif

Chassis Control

INDEX NO.	NAME	FUNCTION
1	Emergency Stop	Cuts all machine functions
2	Upper Boom	Depress Button to engage Upper Boom lift functions (up & down)
3	Lower Boom	Depress Button to engage Lower Boom lift functions (up & down)
4	Slew (Rotate)	Depress Button to engage Slew functions (clockwise & counter clockwise)
5	Telescope	Depress Button to engage Telescope functions (extend & retract)
6	Enable	Depress Button and hold to enable selected function
7	Rocker Switch	Use with “enable” button to activate the selected function

https://truckmanualshub.com/

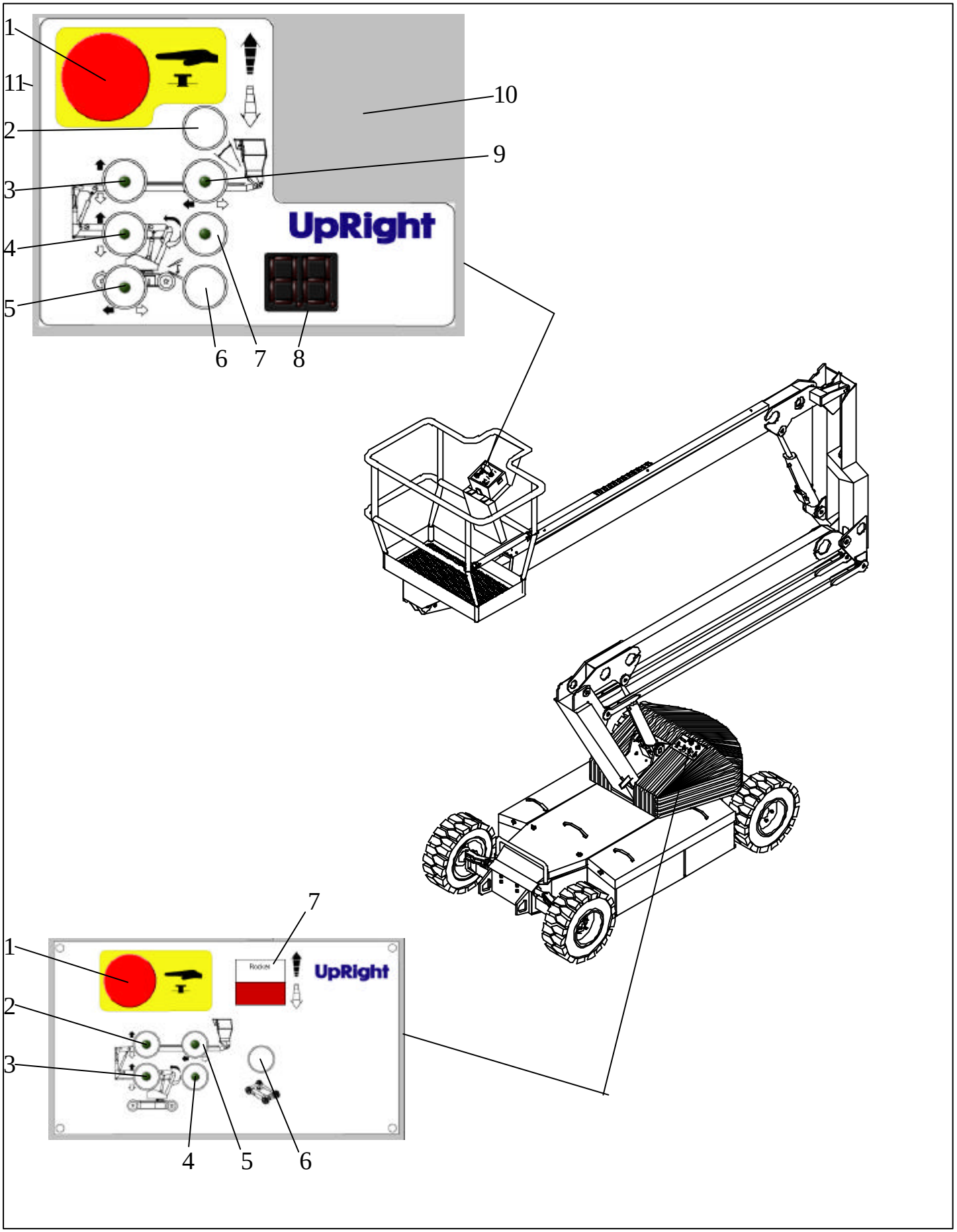

Figure 3-1: Controls & Indicators

https://truckmanualshub.com/

3.3 Pre-Operation Inspection

WARNING

Carefully read, understand and follow all safety rules and operating instructions. Perform the following steps each day before use. DO NOT perform service on Work Platform with the platform elevated unless the elevating assembly is properly supported.

1. Remove module covers and inspect for damage, oil leaks or missing parts.
2. Check the level of the hydraulic oil with the platform fully lowered and the Telescopic Boom fully retracted. Oil should be visible on the filler cap dip stick. If necessary top-up using ISO No. 46 hydraulic oil.
3. Check that the electrolyte level in the batteries is correct. (Battery Maintenance, Section 4.3)
4. Verify batteries are charged.
5. Check that the A.C. extension cord has been disconnected from charger.
6. Carefully inspect the entire machine for damage such as cracked welds or structural members, loose or missing parts, oil leaks, damaged cables or hoses, loose connections and tyre damage.
7. Move machine, if necessary, to unobstructed area where machine can be fully elevated.
8. Visually inspect the cylinders, hoses and cables for damage. Check for missing or loose parts.

SYSTEM FUNCTION INSPECTION

9. Turn both Chassis and Platform Emergency Stop switches **ON** (rotate clockwise).
10. Turn Keyswitch on the Upper Control box to the **ON** position (anticlockwise position).
11. Using the chassis control switches, fully **ELEVATE** Booms no. 1 & 2 and **EXTEND** the Telescope.
12. **SLEW** the Elevating Assembly through 180 degrees in both directions.
13. Visually inspect the elevating assembly and cage mounting/structure, lift cylinders, cables and hoses for leaks, damage or erratic operation. Check for missing or loose parts such as nuts, bolts and circlips.
14. Test that the Emergency Lowering Valves on each of the Lift Cylinders is operating correctly as detailed in *Section 3.4*. **PUSH** the Emergency Stop Button to identify that functions will indeed cease when depressed.
15. Operate the manual telescopic retraction system using the Handpump to test that it will work. (Not required on ANSI machines).
16. **LOWER** each boom until the Elevating Assembly is fully stowed. Climb into the Platform and check that the Platform is level. If not adjust as shown in the Platform Levelling Section of this manual. Repeat all the above tests from the Platform Controls. Push the Emergency Stop Button to identify that functions will indeed cease when depressed. Bring the machine back to the stowed position and retract the Telescopic Cylinder.
17. **PRESS** the Service Horn to see that it is operational. Select the **DRIVE** function. While pressing the Joystick Interlock Switch slowly **PUSH** the Joystick to **DRIVE FORWARD**, and then **PULL** to **DRIVE REVERSE**, to check for speed and proportional control. The farther you push or pull the Joystick the faster the machine will travel.
18. **PUSH** the Steering Switch **RIGHT** and then **LEFT** to check for steering control.
19. **RAISE** the Elevating Assembly until the Boom Rest Limit Switch is no longer activated and then repeat the Drive Function test. Only low speed ('**CREEP SPEED**') should be available.

The System Function Inspection is then complete.

WARNING

If there are any concerns about the safe use or operation of the AB38 following this Pre-Operation Inspection **DO NOT USE THE AB38 WORK PLATFORM**. Contact your supplier or UpRight's Product Support Department.

https://truckmanualshub.com/

3.4 Operation

NOTE: Before operating the AB38 Work Platform it is imperative that the Pre-Operation Inspection (Section 3.3) has been completed and any deficiencies have been corrected. The operator must also understand the functions of all the controls before operating the machine.

ELEVATING & LOWERING THE AB38 WORK PLATFORM

Before beginning any operation involving the Elevating Assembly the following checks should be carried out. When the AB38 has been thoroughly inspected the elevating assembly can then be used.

WARNING

LOOK up and around for obstructions before performing the lift function.
ENSURE that the Elevating Assembly is clear of the Chassis before engaging the Slew operation.
DO NOT overload the platform
DO NOT operate within 3 metres (10 feet) of any electrical power cables. THIS WORK PLATFORM IS NOT INSULATED.
Cordon off the area within the platform's working area to keep passers-by clear of the booms.

NOTE: Chassis controls are for service use only.

1. Enter Platform through the entrance at the side of the AB38 and ensure that the drop bar is in the lowered position. Lock the Entry Step in the raised position.
2. Before using the machine all local Safety Regulations involving helmets and restraining devices should be observed. Safety harness lanyards, not exceeding 1 m (3 ft.) in length, should be attached to anchor points in cage floor.
3. Ensure the '**ON/OFF**' switch on the Upper Control Box switch is turned to the "**ON**" position and both emergency stop buttons are released (twisted clock-wise).
4. Select "**BOOM 1**" on function selector switch. Check for overhead obstructions and when satisfied squeeze the red Interlock control on the Joystick. Slowly move the Joystick forward to **ELEVATE** Boom 1. The further the joystick is moved, the faster the boom will move. Pressure must be applied to the Interlock at all times while operation is required.
5. Select "**BOOM 2**", "**TELESCOPE**" or "**ROTATE**" as required using the 'Function Selector Buttons' and operate as described above. For boom functions the controls will again be forward for **UP** and backward for **DOWN**.
6. To rotate (**SLEW**) **RIGHT** the Controller Joystick should be moved forward. Conversely to rotate (**SLEW**) **LEFT** move the Controller Joystick backward.
7. To "**TELESCOPE**" **IN** the Controller Joystick should be moved forward. Conversely to "**TELESCOPE**" **OUT** move the Controller Joystick backward.
8. Before lowering, check beneath the cage floor for obstructions, operate as described above, moving the Joystick back to lower the Booms.

TRAVEL WITH WORK PLATFORM LOWERED

1. Verify that the chassis Emergency Stop Button is in the 'ON' position (turn clockwise).
2. Climb into the Platform and check that the Platform Emergency Stop Button is in the '**ON**' position, that the Keyswitch is turned to the '**ON**' position and that the Drive function button is depressed. Ensure that the drop bar is in the lowered position.
3. Check that the route is clear of persons, obstructions, pot holes or ledges and is capable of supporting the wheel loads. Also, check that the clearances above, below and to the side of the Work Platform are sufficient.
4. Grasp the Joystick so that the Interlock Switch is depressed (releasing this Interlock Switch will cut power to the Joystick). Slowly push or pull the Joystick to **FORWARD** or **REVERSE** to travel in the desired direction. The farther you push or pull the Joystick from the centre the faster the machine will travel.

5. To "**STEER**" the AB38 activate the Interlock Switch while pushing the Steering Switch **LEFT** or **RIGHT** to turn the wheels. Observe the tyres while manoeuvring to ensure proper direction.

NOTE:
Steering is not self-centring. The wheels must be returned to the straight ahead position by operating the Steering Switch.

TRAVEL WITH WORK PLATFORM ELEVATED

WARNING

Travel with platform elevated **ONLY** on firm and level surfaces. Platform motion is exaggerated while travelling on uneven surfaces.

NOTE:
The Work Platform will travel at reduced speed when in the elevated position.

1. Check that the route is clear of persons, obstructions, pot holes or ledges and is capable of supporting the wheel loads. Also, check that the clearances above, below and to the side of the Work Platform are sufficient.
2. Depress the Drive function button.
3. Grasp the Joystick so that the Interlock Switch is depressed (releasing this Interlock Switch will cut power to the Joystick). Slowly push or pull the Joystick to **FORWARD** or **REVERSE** to travel in the desired direction. The farther you push or pull the Joystick from the center the faster the machine will travel.

CAUTION

If the machine comes to a halt and the Tilt Alarm sounds, immediately lower the Platform and move the machine to a level location before re-elevating the Platform.

PLATFORM LEVELLING

NOTE:
The Levelling function will only work when the Boom Rest Limit Switch has been activated i.e. when the Booms are stowed.

The platform can be levelled from the Upper controls using the levelling function, depress and hold the levelling button on the upper control box (see fig3-1) while moving the joystick forward or back to level the platform. The switch should be operated in short bursts to level the platform **slowly.**

EMERGENCY SITUATIONS & EMERGENCY OVERRIDE

In any emergency situation, the first action to be taken should be to hit the red "Emergency Stop" button for instant cutout of all functions. It will then be required to twist the button clockwise, this releases the cutout and the machine can be operated again.
If the audible Tilt warning alarm sounds, normal control functions will cease to operate. This will be due to the following problem ;

- the machine is out of level i.e. Tilt Sensor has been activated.

In this situation the only machine functions that will operate are descent functions, descend to the ground in a controlled manner and cycle the power (push and release the emergency stop) to restore all functions, move the machine to a level surface and continue with normal operation.
Note that during emergency operation, controls will operate at a fixed, slow speed and will not allow the raising or extending of the Booms. The Booms can be lowered or retracted.

Emergency Lowering

CAUTION

When operating this function, extreme care must be taken to ensure that the person carrying out the task does not become trapped by the structure. **DO NOT** climb down the Elevating Assembly to operate these valves.

Should the machine become inoperable when elevated, request a person on the ground to lower the platform using the emergency lowering valves.
These are red knobs (push type) mounted at the base of the 2 Main Hydraulic Lift Cylinders (See Figure 3-2).
Operate the lower boom first by pushing slowly.
The boom will descend slowly. The speed of descent is controlled by retaining pressure on the valve -

https://truckmanualshub.com/

ensure a slow controlled rate of descent at all times. Descent can be halted at any time by removing pressure from the red knob.
Repeat the operation if necessary for the upper boom when cylinder is in reach of the ground.
With both main booms lowered fully it should then be possible to leave the platform safely.

Before operating the Emergency Lowering Valves the surrounding area should first be cleared of any potential obstructions. It is also important that when the valve is pushed, it is initially done slowly. This is so that sudden movement will not occur in the Elevating Assembly, leading to a potentially unstable machine.

Figure 3-2: Emergency Lowering

CONTROL FROM GROUND LEVEL

1. Chassis Controls are fitted at the base of the Elevating Assembly. These should be used when no operator is in the platform (for maintenance/ service or inspection purposes), or if the operator has become incapacitated. For further information see Table 3-1.
2. Use the appropriate switch to raise or lower Boom 1, Boom 2, Telescope or rotate as required.

AFTER USE EACH DAY

1. Ensure that the platform is fully lowered.
2. Park the machine on level ground, preferably undercover, secure against vandals, children or unauthorised operation.
3. Turn key switch to **OFF** and remove key to prevent unauthorised operation.
4. Recharge batteries in accordance with the instructions in section 4.2.

MANUAL ROTATION

1. Ensure booms are lowered as far as possible using the emergency lowering valves, and that the Emergency Stop Button is pressed to prevent any accidental powered operation.
2. Apply a 7/8” socket wrench to shaft and turn to rotate elevating assembly.
3. Remove wrench.

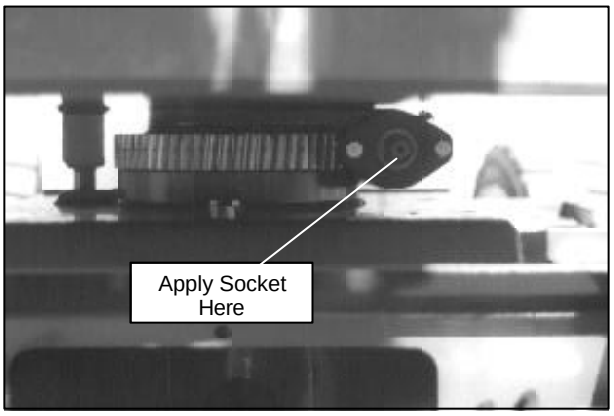

To rotate the Elevating Assembly first apply a 7/8” socket wrench to the shaft and turn to rotate the Elevating Assembly. When finished remove the wrench.

Figure 3-3: Manual Rotation

MANUAL TELESCOPIC RETRACTION (SEE FIGURE 3-4)

NOTE:
Manual Tele Retraction is not required, and hence is not provided for ANSI machines.

In the event of loss of electrical power the Telescopic Cylinder can be retracted as follows:
1. Remove the cover from the chassis body.
2. The Handpump is attached to the Main Manifold Block. Remove the Handpump Handle from the clips on the side of the Chassis and insert into the Handpump Valve as shown in Figure 3-4.
3. Operate handpump to retract the tele cylinder.
4. After use replace the Handpump Handle in the clips provided.
5. Reposition the cover on Chassis.

https://truckmanualshub.com/

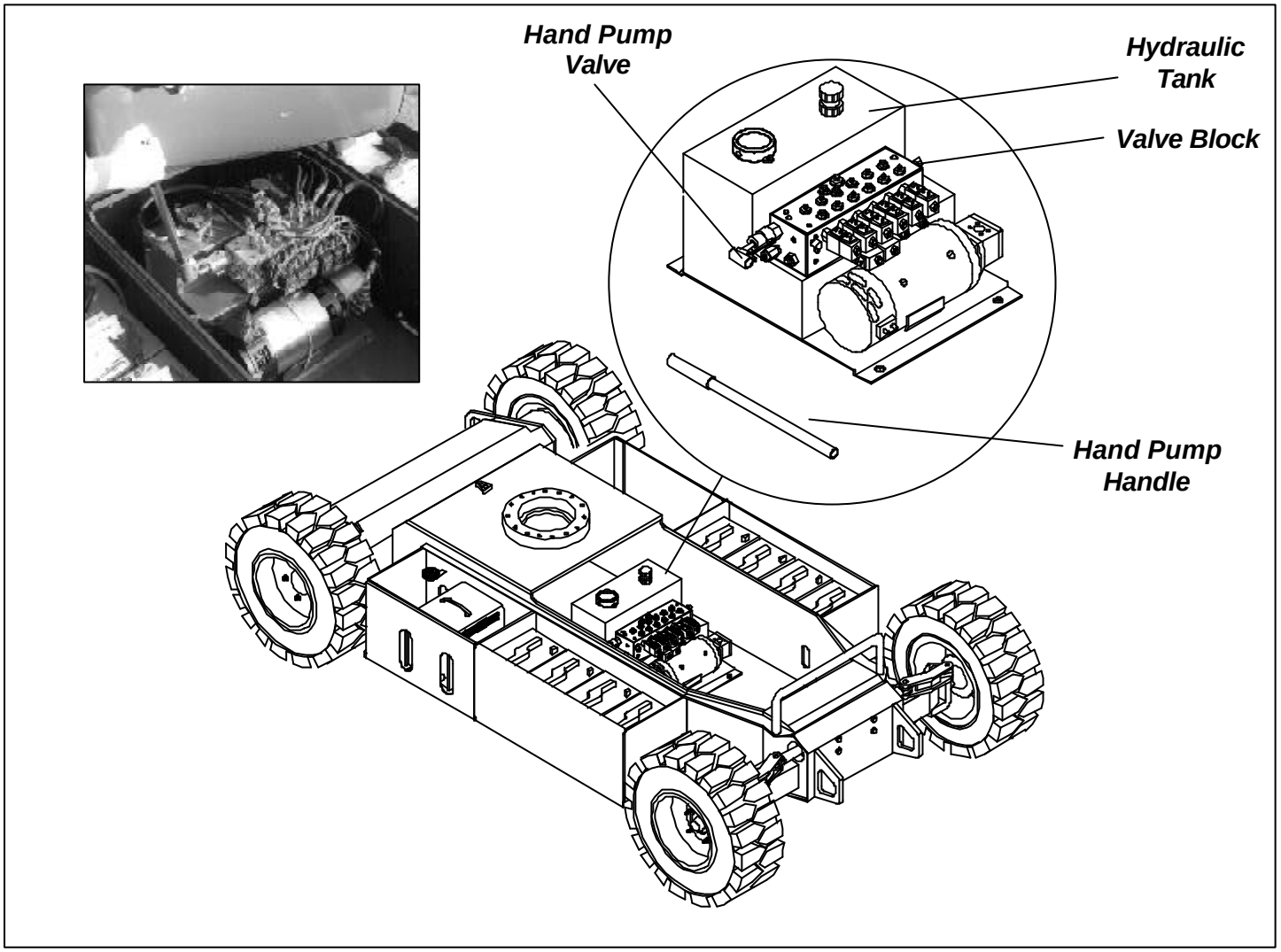

Figure 3-4: Manual Telescopic Retraction

https://truckmanualshub.com/

NOTES:

https://truckmanualshub.com/

NOTES:

https://truckmanualshub.com/

4.0 Introduction

WARNING

Be sure to read, understand and follow all information in the ***Operation Section*** of this manual before attempting to operate or perform service on any AB38 Work Platform.

This section contains instructions for the maintenance of the AB38 Series Work Platform. Procedures for scheduled maintenance and repair/ removal are included.

Referring to *Section 3.0 and Section 6.0* will aid in understanding the operation and function of the various components and systems of the AB38 Work Platform and help in diagnosing and repair of the machine.

Refer to Table 4-1, the Preventative Maintenance Checklist for the recommended Maintenance intervals.

TOOLS REQUIRED

The following is a list of items which may be required to perform certain maintenance & repair procedures on the AB38 Work Platform.

1 x Multi-meter capable of reading Voltage, Ohms and Amps.

1 x Hydraulic Pressure Gauge
- Range (0 - 3000 PSI)

4.1 Preventative Maintenance (Table 4-1)

The complete inspection consists of periodic visual and operational checks, together with all necessary minor adjustments to assure proper performance. Daily inspection will prevent abnormal wear and prolong the life of all systems. The inspection and maintenance schedule is to be performed at regular intervals.
Inspection and maintenance shall be performed by personnel who are trained and familiar with mechanical and electrical procedures. Complete descriptions of the procedures are in the text following the table.

WARNING

Before performing preventative maintenance familiarise yourself with the operation of the machine.
Never perform maintenance on a machine when it is in the elevated position.

The Preventative Maintenance table has been designed primarily to be used for machine service and maintenance repair.

Please copy the following page and use this table as a checklist when inspecting a machine for service.

https://truckmanualshub.com/

Maintenance

Preventative Maintenance Table Key

Interval

Daily	=	each shift or every day
10h/7d	=	every 10 hours or 7 days
50h/30d	=	every 50 hours or 30 days
250h/6m	=	every 250 hours or 6 months
500h/1y	=	every 500 hours or 1 year
1000h/2y	=	every 1000 hours or 2 years

Y=Yes/Acceptable
N=No/Not Acceptable
R=Repaired/Acceptable

Preventative Maintenance Report

Date : _____
Owner : _____
Model No : _____
V.I.N No : _____
Serial No :_____
Serviced By :_____
Service Interval :_____

COMPONENT	INSPECTION OR SERVICES	INTERVAL	Y	N	R
Battery System	Check electrolyte level.	Daily			
	Check battery cable condition.	Daily			
	Charge batteries.	Daily			
	Check Charger condition & operation.	Daily			
	Check specific gravity.	50h/30d			
	Clean exterior.	250h/6m			
	Clean terminals.	250h/6m			
Hydraulic Oil	Check oil level.	Daily			
	Drain and replace oil. (ISO #46).	500h/1y			
Hydraulic Pump	Wipe clean.	50h/30d			
	Check for hose fitting leaks.	50h/30d			
	Check for leaks at mating surfaces.	50h/30d			
	Check mounting bolts for proper torque.	50h/30d			
Hydraulic System	Check for leaks.	Daily			
	Check hose connections.	50h/30d			
	Check for exterior wear.	50h/30d			
	Change filter.	250h/6m			
Emer. Hydraulic System	Open the emergency lowering valves and check for proper operation.	Daily			
Control Cable	Check switch operation.	Daily			
	Check the exterior of cable for pinching, binding or cable wear.	Daily			
Tyres / Wheels	Check for damage.	Daily			
	Check/torque nuts - Front: 200 Nm (150 ft. lbs) Rear: 130 Nm (95 ft. lbs)	50h/30d			
Steering Assembly	Check Steering Cylinder for leaks.	50h/30d			
	Lubricate all pivot pins.	250h/6m			
	Check Links and Hubs.	250h/6m			
Drive Motors	Check for operation.	Daily			
	Check for any foreign bodies.	Daily			
	Check for wear of brushes.	500h/1y			
	Check that commutator or springs are undamaged.	500h/1y			
	Check bearings for operation.	1000h/2y			
Platform Deck and Guardrails	Check welds for cracks.	Daily			
	Check condition of floor.	Daily			
	Check that securing bolts are tightened.	Daily			
	Check drop bar on cage entrance.	Daily			
Slew System	Grease slew gear.	10h/7d			
	Check slew motor for leaks and mounting bolts for proper torque.	50h/30d			
	Check hardware and fittings for proper torque.	250h/6m			
Slew System/ First Post	Check torque on all bolts, 15 outer ring and 20 inner ring. Retorque to 220 Nm (160 ft. lbs).	50h/30d			
Elevating Assembly	Inspect for structural cracks.	Daily			
	Check hoses for pinch or rubbing points.	Daily			
	Check pivot pins for damage.	50h/30d			
	Check pivot pin retaining rings.	50h/30d			
	Check elevating assembly for bending.	250h/6m			
	Check component mounting for proper torque.	250h/6m			
	Check fasteners for proper torque.	250h/6m			
Lift Cylinders	Check cylinder rod for wear.	50h/30d			
	Check pivot pin retaining rings.	50h/30d			
	Grease all fittings as section 4.4.	50h/30d			
Chassis Assembly	Inspect for structural cracks.	Daily			
	Check hoses for pinch or rubbing points.	Daily			
Entire Unit	Function check Emergency stop switches at control boxes.	Daily			
	Perform pre-operation inspection.	Daily			
	Check for and repair collision damage.	Daily			
	Check for peeling, missing or unreadable decals. Replace.	Daily			
	Lubricate.	50h/30d			
	Grease all fittings.	50h/30d			
	Check for corrosion - Remove and repaint.	250h/6m			

NOTE:
Recommend Bolt Torques are shown in Table 4-3, ***Section 4.13***.

Signature of Service Engineer

_____

https://truckmanualshub.com/

4.2 Battery Maintenance

Electrical energy for the motor is supplied by eight 6 volt batteries wired in series to give a 48 volts DC supply. Each of these batteries consist of three cells which can supply a maximum voltage of 2.1V ea =>6.3V per battery =>50.4V per battery pack. Proper care and maintenance of the batteries and motor will ensure maximum performance from the work platform.

WARNING

Hazard of explosive gas mixture. Keep sparks, flames and smoking materials away from batteries
Always wear safety glasses when working with batteries.
Battery fluid is highly corrosive. Rinse away any spilled fluid thoroughly with clean water.

BATTERY INSPECTION AND CLEANING

Check battery fluid level daily, especially if work platform is being used in a warm, dry climate. If required, add distilled water; use of tap water with a high mineral content will shorten battery life.

WARNING

If battery water level is not maintained, batteries will not fully charge, creating a low discharge rate which will damage Motor/Pump unit and void warranty.

Batteries should be inspected periodically for signs of cracks in the cases, electrolyte leakage and corrosion of the terminals. Inspect cables for worn spots or breaks in the insulation and for broken cable terminals.

Clean batteries that show signs of corrosion at the terminals or onto which electrolyte has overflowed during charging. Use a baking soda solution to clean the batteries, taking care not to get the solution inside the cells. Rinse thoroughly with clean, warm water. Clean battery and cable contact surfaces to a bright metal finish whenever a cable is removed.

Basic Rule for maximum duty cycle of deep cycle traction batteries

- Use the machine until it shows signs of weak / slow performance.
- Allow the charger to charge the batteries until it automatically shuts off.
- Avoid intermittent charging as the batteries develop a memory effect similar to Nicad batteries.

BATTERY CHARGING

Batteries do not reach ***full*** potential until they have been through 50 charge/discharge cycles (however the rate at which the potential increases is exponential, and the batteries will normally have 95% potential after 15 charge/discharge cycles). Hence do not use a new battery in a battery pack that already has more than 15 cycles Charge batteries at the end of each work shift or sooner if batteries have been discharged. A battery is considered to have a faulty cell if it has less than 80% of the potential of the other batteries in the pack while measured under load.

WARNING

DO charge batteries in a well-ventilated area.
DO NOT charge batteries in the vicinity of sparks or flames.
NEVER leave charger operating unattended for more than two days.
NEVER disconnect cables from batteries when charger is operating.
Permanent damage to batteries will result if they are not immediately recharged after discharging.
Keep charger dry.

To ensure a proper charge several items must first be checked.

1. Correct voltage and current are available to the charger.
2. Extension cord in good condition, is no longer than 8 m (26 ft.) and is 1.5 mm (12g a) or larger.
3. Charger will have an adequate time to allow a full charge i.e. ensure that power supply will not be switched off overnight.
4. AC Voltage Selector Switch (110/220V) is in the correct position.

All ***UpRight*** battery operated Work Platforms, including the AB38 can operate at ambient temperatures to a value of -20ºC (-4ºF). However for this there are two provisions which must be met.

- The ISO#46 grade of hydraulic oil normally used in UpRight Work Platforms must be replaced with a grade suitable for these low temperature conditions.
- When ambient temperatures fall below 18ºC (65ºF) batteries cannot deliver 220 Ampere hours and so should be placed on charge as soon after use as possible. Under such conditions a 4 hour equalize charge once a week in the early afternoon will improve state of charge and battery life.

Charging

1. Check battery fluid level. If electrolyte level is lower than 10 mm (3/8 in) above plates add distilled water only.
2. Connect battery charger lead to properly earthed outlet of correct voltage and frequency.
3. The Charger will turn on automatically after going through a self test sequence. LED's will indicate the status of charging.
4. The Charger indicates that the charge is complete when the batteries are fully charged.

BATTERY CELL EQUALIZATION

Specific Gravity is a measurement of the strength of the electrolyte in a battery and is measured using a hydrometer. For a fully charged battery the temperature corrected reading should be about 1.28. The specific gravity of the electrolyte in the battery cells should be equalized monthly, or weekly when used in low temperature conditions. To do this, charge batteries as described above. After this initial charge, check the electrolyte level in all cells and add distilled water as necessary, and turn the charger on until a full charge is again indicated. During this time, the charging current will be low (four Amps) as cells are equalizing.

After equalization, the specific gravity of each cell should be checked with a hydrometer. The **temperature corrected** specific gravity in this state should be **1.28**. If any corrected readings are below **1.23**, the batteries contain bad cells and therefore the battery should be replaced.

Do not check the specific gravity in a cell to which water has just been added. If there is not enough electrolyte in a fully charged cell to obtain a sample for the hydrometer, add water and continue charging for one to two hours before checking again.

4.3 Temperature correction for Electrolyte readings

SPECIFIC GRAVITY CONVERSION CHART

Electrolyte Temperature		Temperature Corrected Specific Gravity, Fully Charged	
Fahrenheit	**Celsius**	**USA**	**Euro**
120	48.9	1291	1.29
110	43.3	1287	1.29
100	37.8	1283	1.28
90	32.2	1275	1.28
80	26.7	1275	1.28
70	21.1	1275	1.28
60	15.6	1267	1.27
50	10.0	1263	1.26
40	4.4	1259	1.26
30	-1.1	1255	1.26
20	-6.7	1251	1.25
10	-12.2	1247	1.25
5	-15.0	1245	1.25
0	-17.8	1243	1.24
-5	-20.6	1241	1.24
-10	-23.3	1239	1.24
-15	-26.1	1237	1.24
-20	-28.9	1235	1.24
-25	-31.7	1233	1.23
-30	-34.4	1231	1.23

Table 4-2: Specific Gravity Conversion Chart

https://truckmanualshub.com/

4.4 Lubrication

Refer to Table 4-1 and Figure 4-1 for location and lubrication intervals required for the items that necessitate lubrication service. Refer to the appropriate sections for lubrication information on the Hydraulic Oil Tank and Filter.

PIVOT PINS

Apply grease liberally to the Pivot Pin and Pin Lock Plate locations using a brush or cloth. Force as much grease as possible between the Pins & Pin Lock Plates and the Weldments. Wipe away all excess grease.

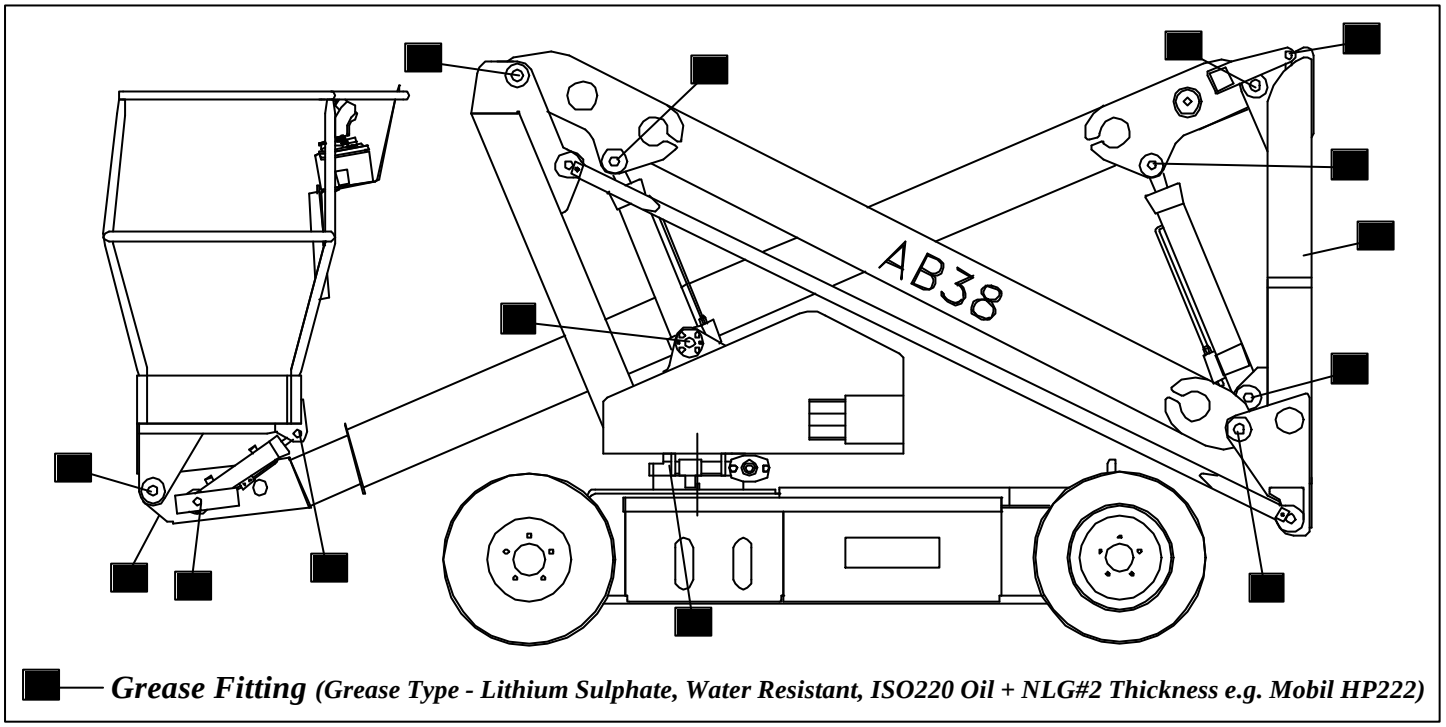

Figure 4-1: Lubrication Points

GREASE FITTINGS

Wipe each grease fitting before and after greasing. Using multipurpose grease in a grease gun, pump the grease into the fitting until grease just begins to appear at the edges of the pivot, then wipe of any excess grease.

Grease Fitting Locations

Lower Boom	2
Upper Boom	1
Telescopic Boom	1
Lower Cylinder (including Trunnions)	3
Upper Cylinder	2
Telescopic Cylinder	1
Master Cylinder	2
Slave Cylinder	2
Steering Cylinder	2
Torque Arms	4
Pinion Gearbox & Slew Bearing Assembly	2
Total	***22***

SLEW RING

Grease Slew Ring evenly and sparingly every 10 hours or 7 days as per the intervals in Table 4-1. **DO NOT** subject this area to powerwashing.

HYDRAULIC OIL TANK AND FILTER *(Figure 4-2)*

Fluid Level

With platform fully lowered i.e. stowed, oil should be visible on the dipstick. If the oil is NOT visible, fill the tank until oil (ISO#46) is then visible on the dipstick. **DO NOT** fill above the upper line on the dipstick or when the platform is elevated.

Oil and Filter Replacement

1. Operate the platform for 10-15 minutes to bring the hydraulic oil up to normal operating temperature.

⚠ CAUTION ⚠

Wear safety gloves and safety glasses when handling hot oil (hydraulic oil can be a skin irritant). The hydraulic oil may be of sufficient temperature to cause burns.

2. Provide a suitable container to catch the drained oil. Hydraulic tank has a capacity of 25 Litres (6.5 Gallons US).
3. Remove the drain plug on the lower side and allow all oil to drain.
4. Clean the magnetic drain plug and reinstall.
5. Disconnect the return hose and hose fitting from inlet port of the hydraulic return filter. Loosen and remove the filter cover retaining bolts. Remove filter (10 micron) assembly. Replace with a new filter.
6. Fill the hydraulic reservoir with hydraulic oil (see Section 1-2) checking level with dipstick.
7. Recycle used oil as per local environmental regulations.

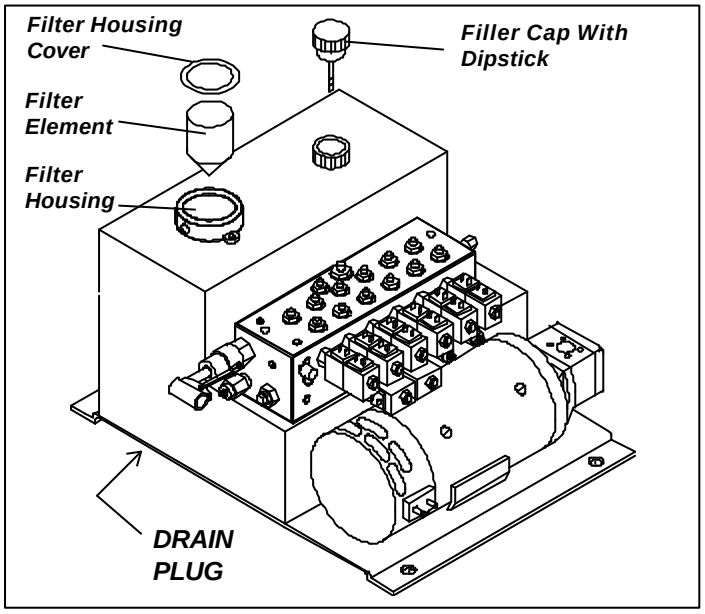

Figure 4-2: Oil and Filter Replacement

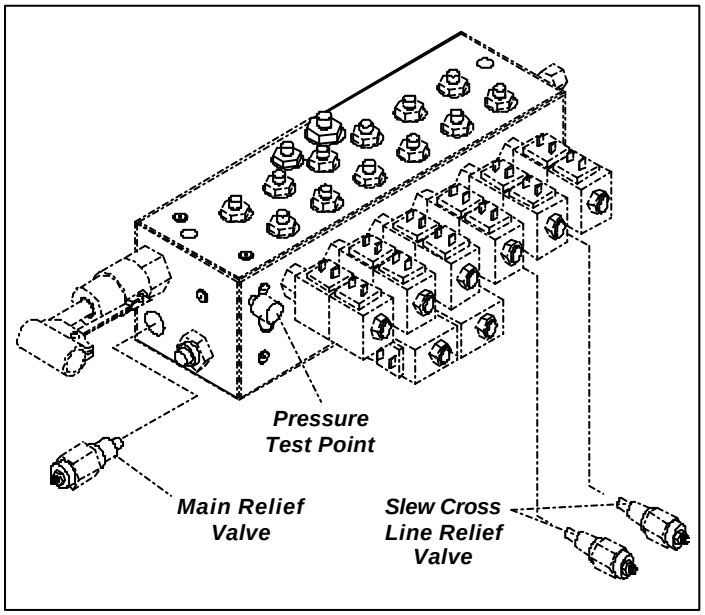

Figure 4-3: Manifold Block

4.5 Setting Hydraulic Pressures (Figure 4-3)

Check the hydraulic pressures whenever the pump, manifold or relief valve have been serviced or replaced.

WARNING

The hydraulic oil may be of sufficient temperature to cause burns. Wear safety gloves and safety glasses when handling hot oil. The oil in the hydraulic system is under very high pressure which can easily cause severe cuts. Obtain medical assistance immediately if cut by hydraulic oil.

MAIN RELIEF VALVE *(Figure 4-3,4)*

1. Operate the hydraulic system for 10-15 minutes to warm the oil.
2. Remove the cover from the Chassis body.
3. Insert pressure gauge into the high pressure gauge port (TP) on the Manifold Block.
4. Loosen locknut on main relief valve and turn adjusting screw anticlockwise two full turns using a 4 mm Allen key.
5. Operate the Telescope RETRACT function switch from lower controls and keep it activated.
6. Slowly turn the main relief valve adjusting screw clockwise until the pressure gauge reads 145 Bar (2105 p.s.i.) pressure.
7. Release the Telescope RETRACT switch.
8. Tighten locknut on main relief valve while holding the adjusting screw in position.

Figure 4-4: Setting Main Relief Pressures

https://truckmanualshub.com/

SLEW CROSS-LINE RELIEF VALVES

1. Repeat steps 1-3 as outlined above
2. Loosen Locknuts on both cross-line relief valves and turn adjusting screws anticlockwise two full turns.
3. Operate slew function from lower controls and rotate the Elevating Assembly until the slew stop prevents further rotation.
4. Slowly turn the cross-line relief valve adjusting screw clockwise using a 4 mm Allen key until the pressure gauge reads 50 Bar (725 p.s.i.) pressure.
5. Now operate the slew function in the opposite direction through approximately 360º until the Slew Stop prevents further rotation.
6. Slowly turn the remaining cross-line relief valve adjusting screw clockwise until the pressure gauge reads 50 Bar (725 p.s.i.) pressure.
7. Tighten the locknuts on both cross-line relief valves while holding the adjusting screws in position.

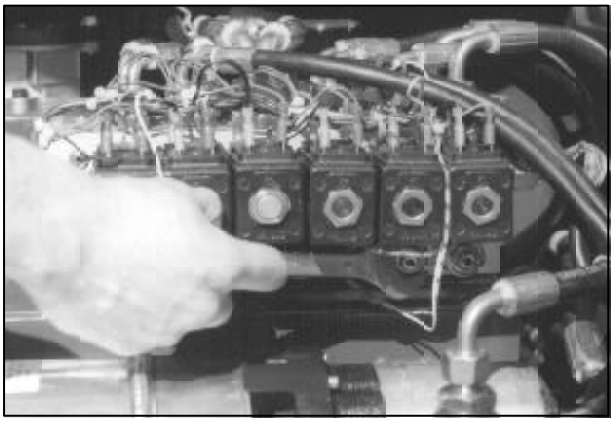

Figure 4-5: Setting Cross-Line Relief Pressures

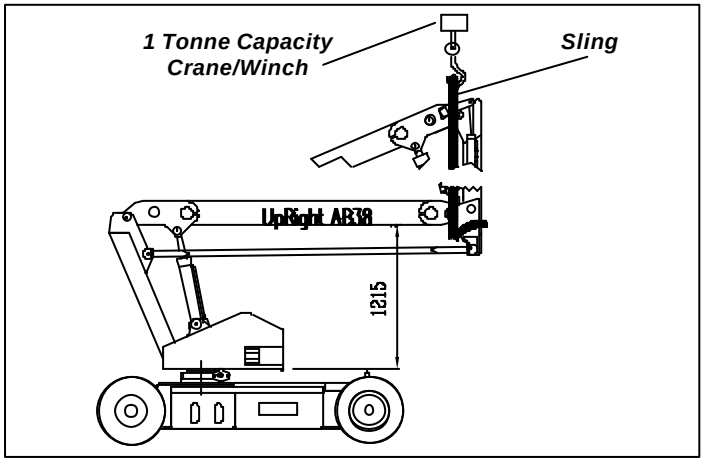

Figure 4-6: Supporting Elevating Assy.

4.6 Maintenance on Elevating Assembly (Figure 4-6)

The only time the Elevating Assembly needs to be elevated is to allow service work to be carried out on the lower parts of the Elevating Assembly, the Lower Lift Cylinder or the Slewing mechanisms.
All other work (Bearings, Cylinders, Booms & Tension Bars) can and must be performed with the Elevating Assembly in the stowed position.

⚠ WARNING ⚠

BEFORE entering Elevating Assembly, to perform maintenance on the Work Platform while elevated, ensure that Elevating Assembly is properly supported by suitable cranage of adequate capacity.
(Recommended 1 tonne capacity crane and sling.)

INSTALLATION OF ELEVATING ASSEMBLY SUPPORT

1. Park the work platform on firm level ground.
2. Verify Platform Emergency Stop Switch is ON.
3. Hold the Chassis/Platform Selector Switch on the Lower Control Box to the ‘Chassis’ position.
4. Position Lower Control Boom 1 Switch to “UP” and elevate until the lower boom is slightly above horizontal.
5. Place a sling of 1 Tonne load capacity at the end of the lower boom and second post. Ensure sling is secured so that it will not slip up along the boom.
6. Push Lower Control Boom 1 Switch to “DOWN” and gradually lower the platform until Lower Boom is supported by the sling.

REMOVAL OF ELEVATING ASSEMBLY SUPPORT

1. Push Lower Control Boom 1 Switch to “UP” position and gradually raise the platform until the sling can be removed.
2. Remove the sling.
3. Push Lower Control Boom 1 Switch to “DOWN” and completely lower platform.
4. Turn Key Switch to “OFF”

https://truckmanualshub.com/

4.7 Switch Adjustments (Figure 4-7 & 4-8)

TILT SENSOR

Function: This limit switch is activated when the internal sensor in the 'Tilt Sensor' is tilted 3° or more (factory set at this value). When the Tilt Sensor activates the elevating and telescope extend functions will be locked out and an audible warning alarm will sound. It will activate if the Chassis tilts 3° in any direction. The Tilt Sensor has three wires; red-power (48V in), black-ground and white-output (48V out).

Location: The Tilt Sensor is fitted in the rear Chassis alcove and is a vital part of the electrical equipment.

Adjustment: To verify the sensor is working properly there are two LED's under the sensor; green indicates the sensor is on (has power), red indicates the sensor is level and that the white wire is 'hot' (48V out).
To adjust the mechanism of the Tilt Sensor, (but not the value of tilt allowed), the following procedure can be followed:

1. Place the machine on firm level surface ± 0.25°.
2. Use Inclinometer to ensure that the front and rear of the Chassis are level to within ± 0.25°.
3. Using a bubble level adjust the three levelling locknuts on the Tilt Sensor, until the bubble is centred.
4. Elevate the platform until the Boom Rest Switch opens and depress the Interlock Switch on the Joystick. Ask a colleague to push the tilt sensor base to test the alarm circuit. The alarm should sound. If the alarm does not sound readjust the Tilt Sensor until the alarm does sound.

BOOM REST LIMIT SWITCH

Function: This limit switch is activated when the Elevating Assembly is fully stowed and the upper boom is sitting in the boom rest. The Boom Rest is located on the side of the First Post on the AB38 Work Platform. The high speed drive can only be operated when this switch is activated. When the boom leaves the boom rest the Normally Open contacts of the limit switch open and power is cut to the high speed drive function.

Location: The switch is located on the side of the First Post on the Boom Rest Weldment.

Adjustment: The switch should be activated when the boom sits in the boom rest. The lever is adjustable and should be adjusted so that the switch's activation/deactivation point occurs just as Boom 2 leaves the Boom Rest. To adjust the switch loosen the lever clamping nut and rotate the lever. Tighten the lever clamping nut. The switch should periodically be checked for freedom of movement and be kept clean from dirt and other contaminants that might affect its free movement.

https://truckmanualshub.com/

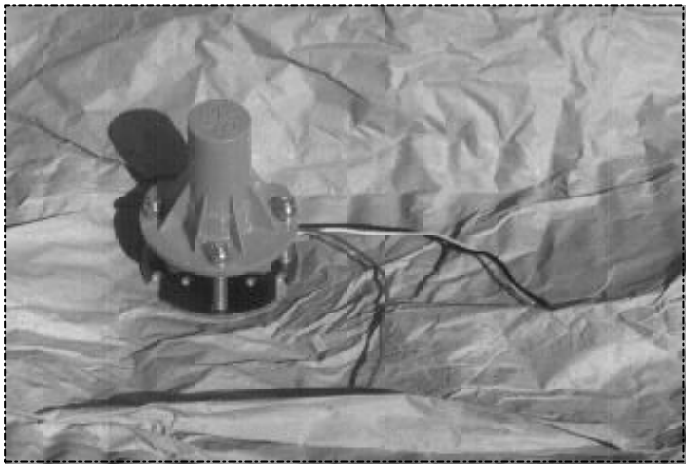

Figure 4-7: Tilt Sensor

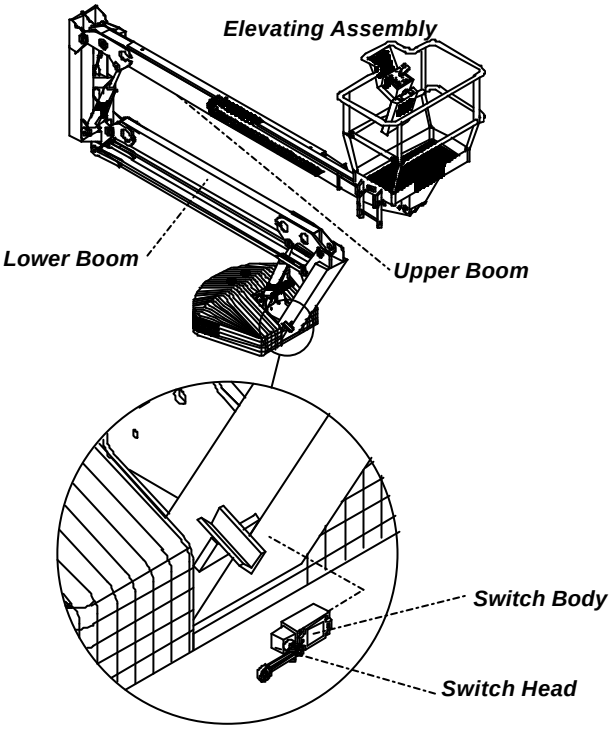

Figure 4-8: Boom Rest Limit Switch

4.8 Hydraulic Manifold (Figure 4-9)

Though it is not necessary to remove the manifold to perform all maintenance procedures, a determination should be made as to whether or not the manifold should be removed before maintenance procedures begin.

REMOVAL

1. Disconnect the Battery Disconnect Plug.
2. Remove the cover from the Chassis body.
3. Tag and disconnect the solenoid valve leads from the solenoids.
4. Tag, disconnect and plug hydraulic hoses.
5. Remove securing bolts that hold manifold block to hydraulic resevoir.
6. Remove the manifold block.

DISASSEMBLY

CAUTION

NOTE: Mark all components as they are removed so as not to confuse their location during assembly. Refer to Figure 4-9 often to aid in disassembly and assembly.

1. Remove coils from solenoid valves.
2. Remove solenoid valves and the relief valves.
3. Remove fittings and bonded washers.

CLEANING AND INSPECTION

1. Wash the manifold in cleaning solvent to remove built up contaminants and then blow out all passages with **clean** compressed air.
2. Inspect the manifold for cracks, thread damage and scoring where O-rings seal against internal and external surfaces.
3. Wash and dry each component and check for thread damage, torn or cracked O-rings and proper operation.
4. Replace parts and O-rings found unserviceable.

ASSEMBLY

CAUTION

Note: Lubricate all O-rings before installation to prevent damage to O-rings.

1. Install fittings, plugs and bonded seals.
2. Install the solenoid valves and tighten the coils on to the valves.
3. Install the Main Relief Valve and the Slew Cross- Line Relief Valves .

Note: Torque relief valves to 45 Nm (33 ft. lbs).
Torque solenoid spool cartridges to 20 Nm (14.75 ft. lbs)
Torque coil retaining nuts to 3.4 Nm (2.5 ft. lbs)

INSTALLATION

1. Attach manifold assembly to the Hydraulic Tank with bolts and washers.
2. Connect hydraulic hoses to their destinations on the manifold block.
3. Connect solenoid leads to their correct coils.
4. Operate each hydraulic function and check for proper function and leaks.
5. Re-secure cover to Chassis body.

https://truckmanualshub.com/

1. Valve Block
2. Solenoid Valve
3. Coil
4. Locking Nut
5. Fitting, straight
6. Bonded Washer
7. Pressure Reduction Valve
8. Main Relief Valve
9. Pressure Test Point
10. Telescopic Retraction Valve
11. Cross Line Relief Valves

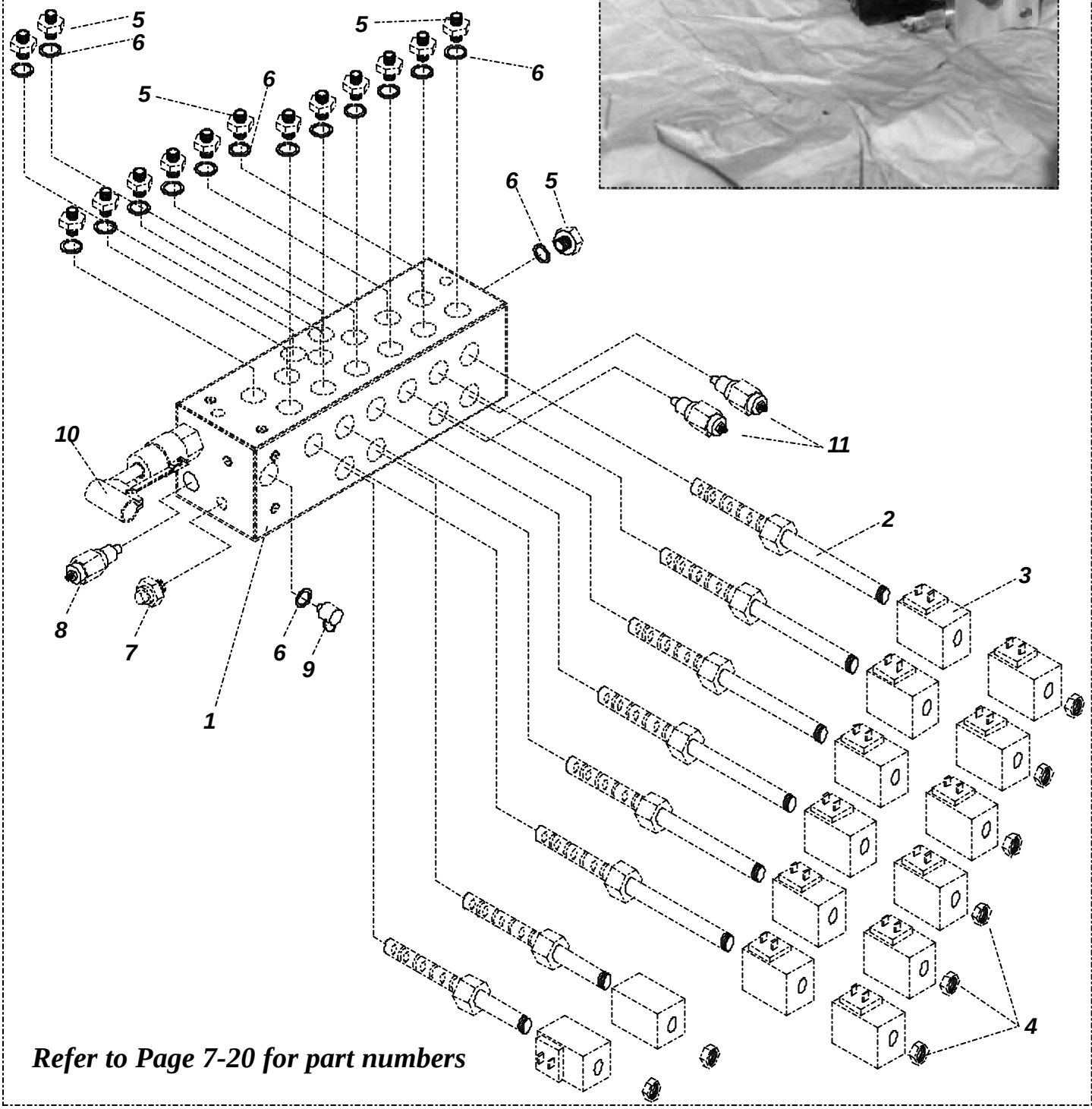

Refer to Page 7-20 for part numbers

Figure 4-9: Manifold Block Components

https://truckmanualshub.com/

4.9 Hydraulic Pump (Figure 4-10)

CAUTION

If the hydraulic reservoir has not been drained, suitable means for plugging the hoses should be provided to prevent excessive fluid loss.

REMOVAL

1. Mark, disconnect and plug hose assemblies.
2. Loosen the capscrews and remove the pump assembly from the motor.

INSTALLATION

1. Lubricate the pump shaft with general purpose grease and attach the pump to the motor with the capscrews.
2. Using a crisscross pattern torque each capscrew a little at a time until all the capscrews are torqued to 27 Nm (20 ft. lbs).
3. Unplug and reconnect the hydraulic hoses.
4. Check the oil level in the hydraulic tank before operating the work platform.

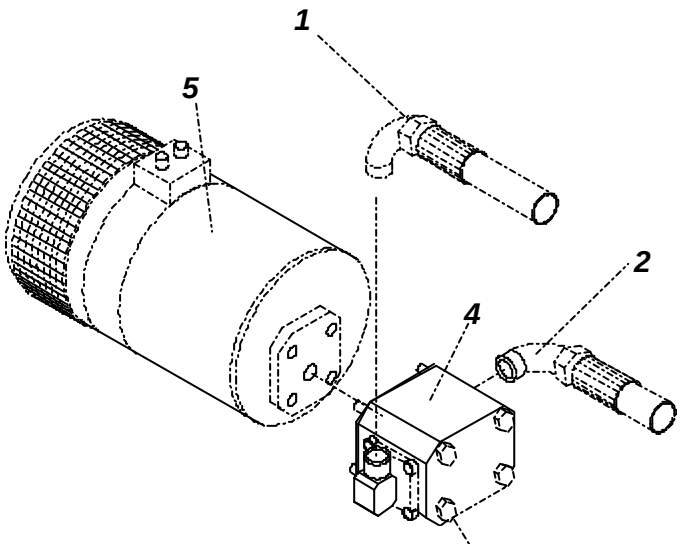

1. *Pressure Hose*
2. *Suction Hose*
3. *Capscrew*
4. *Pump Assembly*
5. *Electric Motor*

Figure 4-10: Hydraulic Pump

4.10 Traction Motor Maintenance (Figure 4-11)

CAUTION

Before carrying out any maintenance procedures on the Drive Motors ensure that the electric circuit is disconnected i.e. disconnect the batteries and unplug the charger. It is also important that when dealing with batteries the proper safety precautions are adhered to. There is always a hazard of sparks or explosive gas.

INSPECTING THE DRIVE MOTORS

Remove the inspection covers (Item 6) from the rear section of the motor and examine the brushes for excessive wear.
If required the brushes may need to be changed as follows:

1. Lift the spring (Item 3)
2. Release the brushes and unscrew the bolts (Item 2) from the brush box (Item 5)
3. Remove the brushes by pulling the electric leads.

WARNING

During these operations take care that screws, washers or other materials do not fall inside the motor.

4. After thoroughly cleaning the brush boxes, insert the new brushes and check that they slide correctly inside the seat (Item 5).
5. Tighten and lock the bolts (Item 2).
6. Push the springs back in place. Check the constant pressure on all the brushes, and the correct contact with the commutator.
7. Replace the inspection/ventilation covers.

https://truckmanualshub.com/

Every **500** working hours, or annually

Brushes - Check the wear, the correct seating, and the regularity of the working surface.

Springs - They should not be burned or damaged, and they must apply a constant and equal pressure on the brushes.

Commutator - The surface must be clean and regular without grooving or burning.

Every **1000** working hours, or every two years

Bearings- All the bearings are fitted with a double shield and lubricated with high temperature grease.
Check for leaks, vibration and noise.
If necessary replace with bearings of identical type.

Screws - Check that all nuts, particularly the cable nuts and screws are tight.

General - Check that foreign bodies or dirt have not entered the motor.
Check that the ventilation holes are clean and not obstructed.

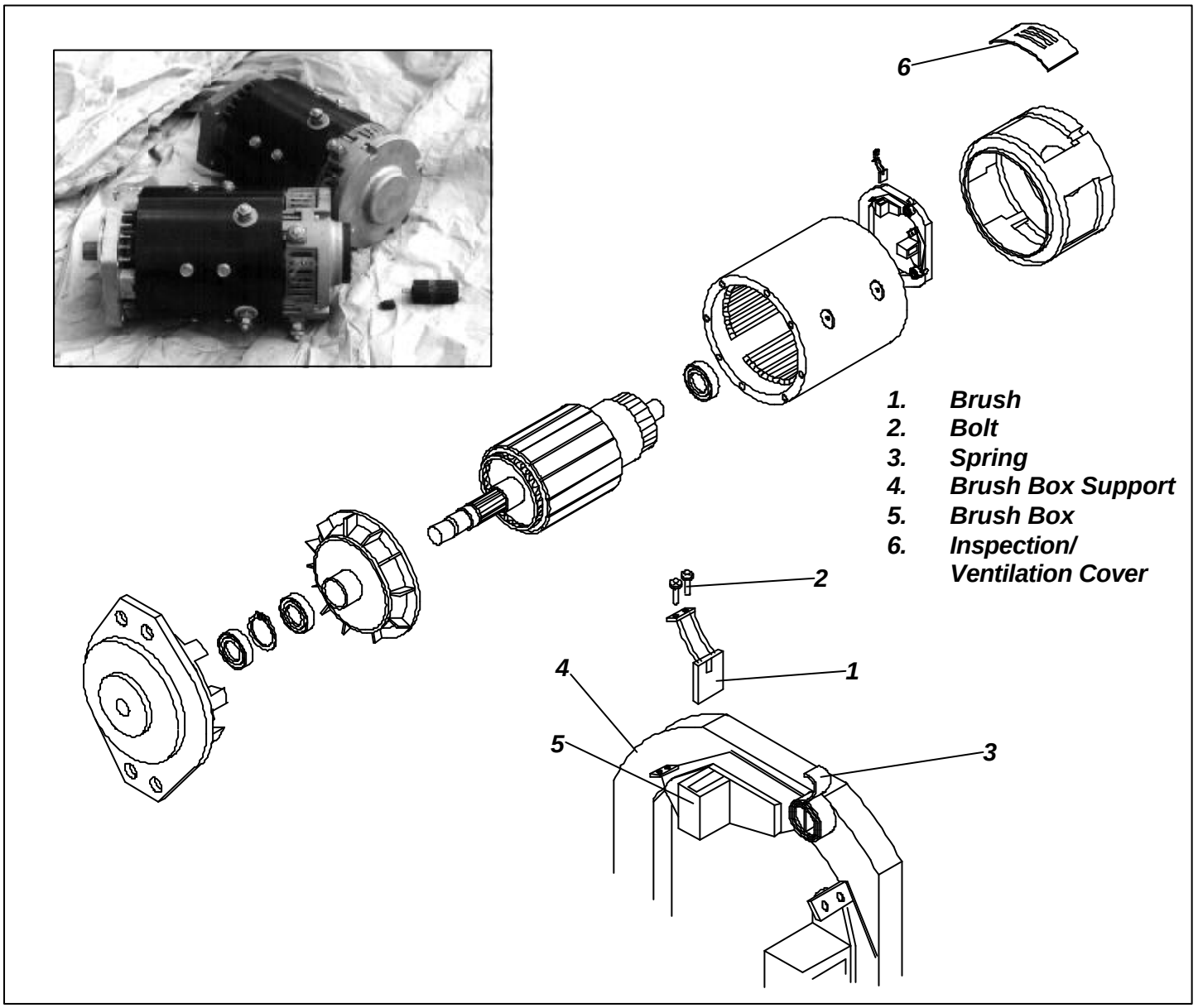

Figure 4-11: Traction Motor Maintenance

4.11 Electric Motor (Figure 4-13)

WARNING

Before carrying out any maintenance procedures on the electric motor ensure that the electric circuit is disconnected i.e. disconnect the batteries and unplug the charger. It is also important that when dealing with batteries the proper safety precautions are adhered to. There is always a hazard of sparks or explosive gas.

TROUBLESHOOTING

1. Read the nameplate to become familiar with the motor, especially the rated voltage.
2. Try to turn the shaft by hand. Keep motor leads separated while doing this. **If the shaft turns freely go to step 3. If the shaft won't turn, proceed to step 2A.**

2A. The shaft could be tight for a number of reasons , this check is to determine if the tightness is of a temporary nature only. Obtain power to produce the nameplate voltage. Do not make a permanent connection.
First touch the motor leads quickly to the power supply just long enough to observe if the shaft runs. If it does turn, then hold the motor leads on the power supply for a longer time. If the motor sounds normal , go to step 3.
If the motor is noisy it should be taken apart as described in the **DISASSEMBLY** section.

3. If the motor turned freely, connect an ammeter in the circuit as shown in Figure 4-12. With rated voltage applied and the shaft running free, the ammeter should read less than 20% of the nameplate full load current. If the motor meets the above conditions then it can be assumed that the original problem is external to the motor.

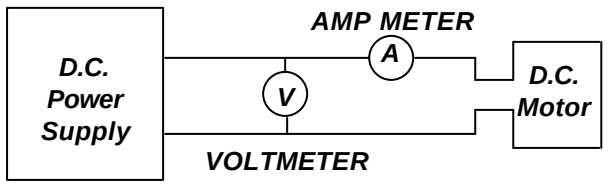

Figure 4-12: Electrical Test Circuit

DISASSEMBLY

1. Remove through bolts.
2. Remove pulley end cover
3. Pull the armature out of the assembly in one swift motion.
4. Remove commutator end cover.

CAUTION

NOTE: Do not place the stator ring in any mechanical holding device during the disassembly or assembly operation. Permanent distortion or other damage will result.

INSPECTION

Once the motor has been disassembled, go through the following check list steps to determine where the problem lies.

1. Bearings should spin smoothly and easily and have ample lubrication and be free of corrosion.
2. Armature should be checked for grounds and shorted Windings. Refinish commutator surface if pitted or excessively worn.
3. Brushes should be checked for wear and to ensure that they are free in the brush holders.
NOTE: Observe how the brushes are assembled in brush holders and position of brush lead. New brushes must be installed in same manner. Brushes should be removed as follows:
   - Remove brush spring clip from its mounting on brush assembly.
   - Lift brush assembly from the brush holder
   - Disconnect brush assembly lead.
   - New brush assembly to be installed by reversing the above procedure.
4. Inspect wire harness and all connections for signs of damage due to overheating.
5. Check stator to see if it is securely mounted.

REASSEMBLY

1. Install new brushes and be sure they are free in the holder. Install brush with the lead wires positioned as when received.
2. Place commutator cover on a work bench with brush assembly facing upward.

https://truckmanualshub.com/

3. Place the bearing spring into the bearing bore.
4. Take a complete armature assembly, including bearings, and insert commutator end bearing into the bearing bore.
   Note: Do not reuse bearings which have been removed from armature shaft. Keep assembly in a vertical position. Use extreme care not to damage armature with bearing pullers. New bearings should be installed by pressing inner race of bearing onto proper position on armature shaft.
5. Set the brushes to final position and lock with springs.
6. Place the complete stator down over the vertical armature, and into position on the commutator cover.
7. The stator assembly must be placed in a definite relationship with the commutator covers in order to obtain a neutral brush setting. There is a match-mark on both items. These two marks must line up exactly.
   Rotate until they do.
8. Assemble the pulley end cover in the proper relationship. Insert mounting bolts and tighten alternately to ensure a good mechanical alignment.
9. Spin the shaft by hand to see if it is free. Be sure motor leads (if used) are not touching together. If the leads are touching, a generator action will give the effect of friction in the motor. A no-load test can now be performed. At rated voltage, observe the no-load current. It should be less than 20% of the nameplate full load current. Anything higher will indicate:
   - Brushes are not on neutral setting (check matchmarks for exact alignment)
   - Faulty armature.

NOTE: Following assembly, the electric motor may turn in the wrong direction. The cause of this will be that the brush holder assembly has been connected the wrong way. To solve this disassemble and reconnect in the proper way. Reversing the polarity will not solve this problem as this is a series wound motor.

MAINTENANCE INTERVALS & PROCEDURES

Every **500** working hours, or annually

Brushes - Check the wear, the correct seating, and the regularity of the working surface.

Springs - They should not be burned or damaged, and they must apply a constant and equal pressure on the brushes.

Commutator - The surface must be clean and regular without grooving or burning.

Every **1000** working hours, every two years

Bearings- All the bearings are fitted with a double shield and lubricated with high temperature grease.
Check for leaks, vibration and noise.
If necessary replace with bearings of Identical type.

Seals - Check that hydraulic seals are in perfect condition.

Screws - Check that all nuts, particularly the cable nuts and screws are tight.

General - Check that foreign bodies or dirt have not entered the motor.
Check that the ventilation holes are clean and not obstructed.

https://truckmanualshub.com/

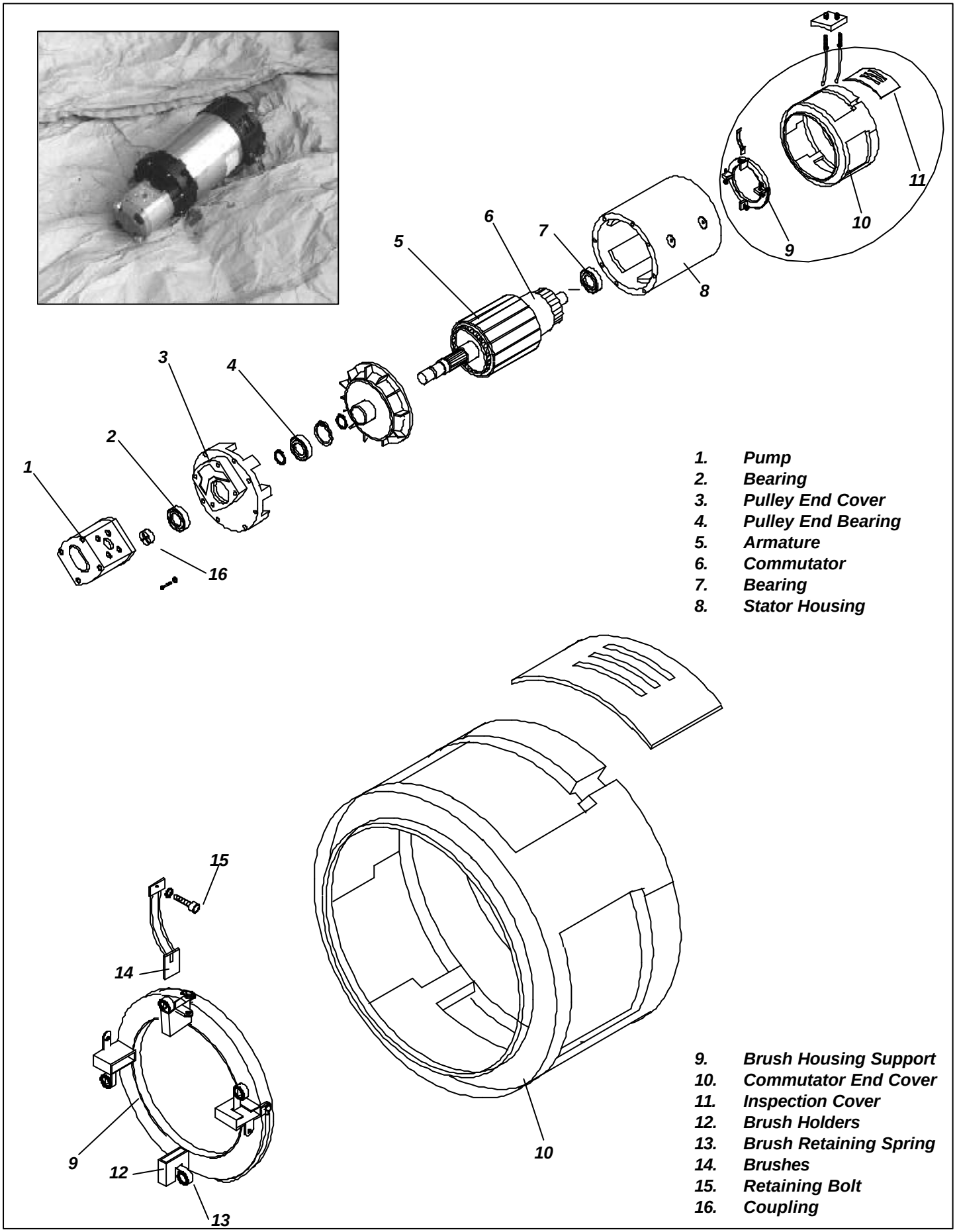

Figure 4-13: Electric Motor Assembly

https://truckmanualshub.com/

4.12 Drive Reduction Gearbox (Figure 4-14)

As with most gearboxes oil changes must be carried out at regular intervals. Initially this should be done after the first 50/100 working hours and then subsequently every 2500 working hours or at least every 12 months.

For this gearbox the **minimum** recommended viscosity index is 95. Depending on the ambient temperature of the work place the viscosity index should vary as follows:

Ambient Temperature	Viscosity Index (ISO 3448)
-20°C (-4°F) / 5°C (41°F)	VG 100
5°C (41°F) / 30°C (86°F)	VG 150
30°C (86°F) / 50°C (122°F)	VG 320

During oil change, we recommend that the inside of the Gearcase is flushed out with flushing fluid recommended by the lubricant manufacturer.
Oil should be changed when hot to prevent a build up of sludge deposit. It is advisable to check the oil level at least once per month. If more than 10% of total oil capacity has to be added, check for oil leaks.
Do not mix oils of different types even of the same make.
Never mix mineral and synthetic oils.

CAUTION

Service Engineers must be aware of the dangers during an oil change involving hot oil i.e. scalding. The Service Engineer must also be responsible when disposing of the discarded oil. This should be done in accordance with local regulations.

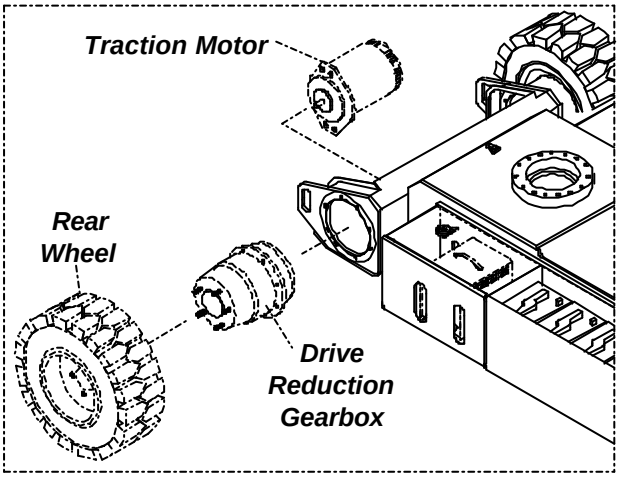

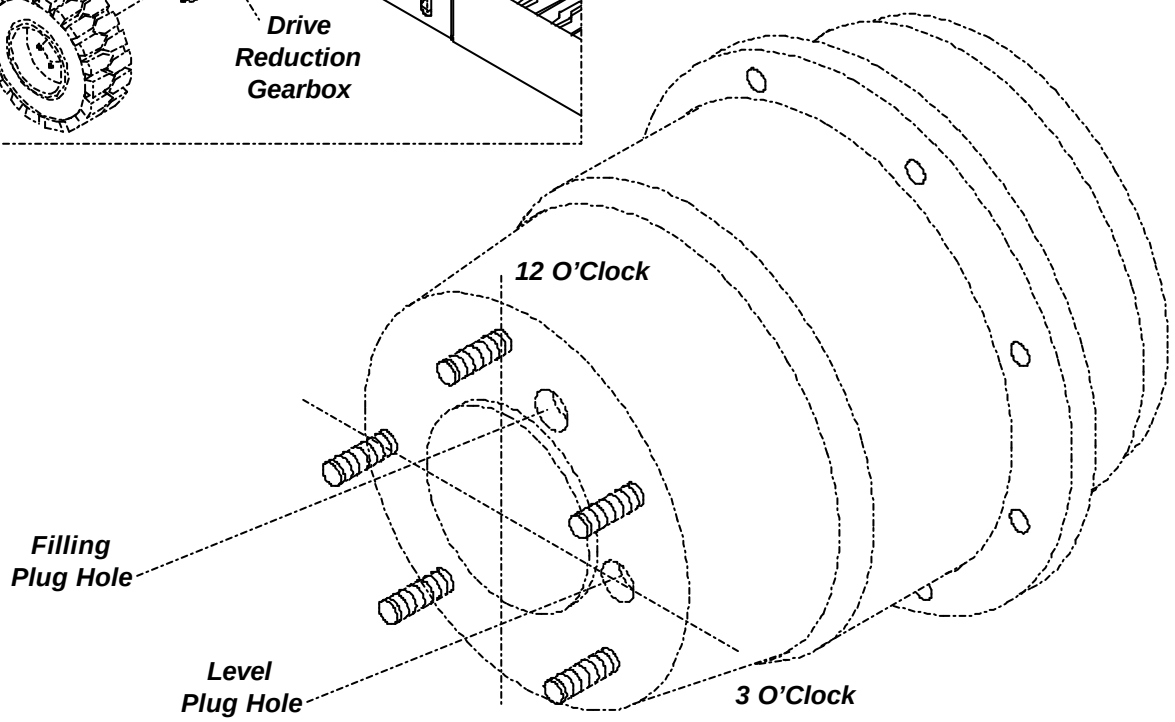

Figure 4-14: Drive Reduction Gearbox

https://truckmanualshub.com/

CHANGING THE OIL

Unless an oil suction system can be used, it is necessary to remove the gearbox to fully drain the oil.

1. The AB38 should be driven for five minutes in order to bring the oil up to working temperature.
2. The Electric Traction Motor must be disconnected from the Gearbox.

WARNING

Disconnect the batteries when working near the traction motors.

3. Unscrew the four bolts that hold the traction motor to the Gearbox and pull the Motor away from the rear face of the Gearbox.
4. Disconnect the brake hose from the brake port on the Gearbox and plug to avoid excessive oil spillage.
5. Loosen the five wheel nuts securing the Wheel Assembly to the Gearbox studs.
6. Jack up the rear of the AB38 and chock the front wheels to prevent the machine from moving during the service.
7. Remove the Wheel Assembly by unscrewing the five wheel nuts
8. Unscrew the eight securing bolts that hold the Gearbox to the Chassis, and remove the Gearbox, noting its orientation on the chassis before removal.
9. Remove the oil filler and drain plugs from the front (stud) face of the Gearbox.
10. Stand the Gearbox vertically (studs facing down) in a suitable oil disposal container and allow the oil to drain fully.
11. The Gearbox needs to be half filled which requires approximately 0.9 Litres (0.23 Gallons US) of oil. To check this level, rotate the Gearbox into the horizontal position with one of the filler/drain plug holes in the 3 O' Clock position and the other plug hole above it (See fig 4-14). When the Gearbox is half full oil will just start to trickle out the plug hole in the 3 O'Clock position.
12. Insert and tighten both plugs and clean the surfaces of the gearbox.
13. Reattach the Gearbox to the Chassis in its original position with the eight securing bolts.

CAUTION

The Gearbox Securing Bolts must be torqued to 130 Nm (96 ft. lbs).

14. Reattach the brake hose to the brake port.
15. Reattach the Wheel Assembly to the Gearbox using the five M14 nuts.

CAUTION

The Wheel Assembly Nuts must be torqued as per values given in Table 4-1.

16. Reattach the Electric Traction Motor to the Gearbox.

CAUTION

The Electric Traction Motor Bolts must be torqued to 74 Nm (55 ft. lbs).

Repeat this procedure for the other Drive Gearbox.

4.13 Torque Specifications

RETAINING BOLTS

Use the following values to torque bolts used on ***Ui*** AB38 Work Platform unless a specific torque value is called out for the part being installed.

Thread Size	Location	Torque	
		Metric	Imperial
M4	SPIRIT LEVEL	3 Nm	2 Ft/Lbs
M6	VARIOUS	10 Nm	7 Ft/Lbs
M8	TRUNNION	25 Nm	18 Ft/Lbs
M10	PIN LOCK PLATES	45 Nm	33 Ft/Lbs
M12	TORQUE ARMS	90 Nm	67 Ft/Lbs
5/8" -11 UNC x 3 1/2" (ISO 10.9) (US Grade 8)	SLEW BEARING	220 Nm	165 Ft/Lbs

Table 4-3: Bolt Torques

NOTE: All Bolts are ISO Grade 8.8 unless otherwise stated

https://truckmanualshub.com/

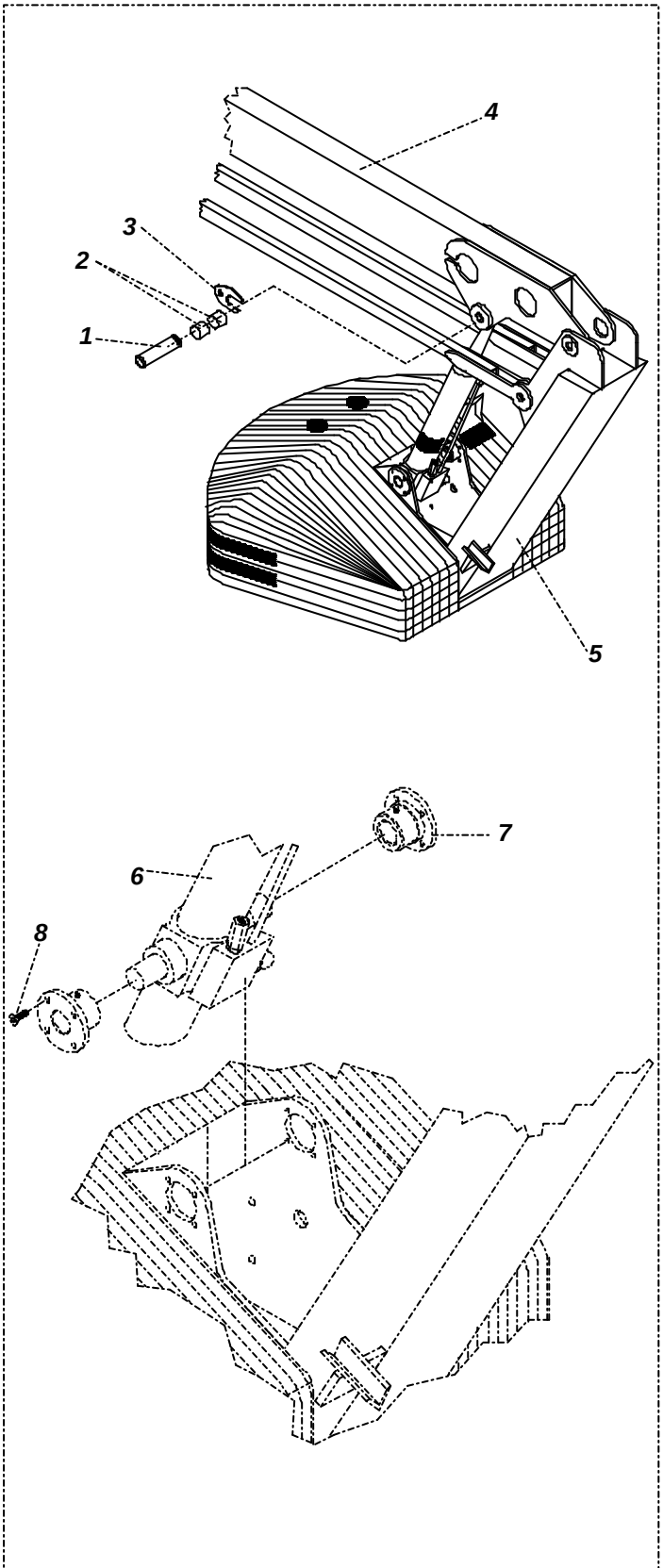

1.	*Rod End Pivot Pin*	*5.*	*First Post*
2.	*Bushings*	*6.*	*Lower Lift Cylinder*
3.	*Pin Lock Plate*	*7.*	*Trunnion*
4.	*Lower Boom*	*8.*	*Trunnion Screw*

Figure 4-15: Lower Lift Cylinder

4.14 Lower Lift Cylinder (Figure 4-15)

REMOVAL

CAUTION

The Lower Lift Cylinder is heavy, so utilise appropriate lifting equipment to support the unit before removing pins.

1. Ensure that the AB38 is on firm level ground, the Elevating Assembly is completely stowed, the Keyswitch is to the 'OFF' position and the Emergency Stop Button is pressed.
2. Provide a suitable container to collect the hydraulic fluid, then disconnect the hydraulic hoses. Immediately plug hoses to prevent foreign material from entering.
3. Remove securing bolts and pin lock plates from the cylinder pins.
4. Support rod end of cylinder and remove rod end pivot pin. Move cylinder backwards to rest against the first post.
5. Support the cylinder so that the Trunnion Pivot bushings can be removed. This is done by releasing the eight 8 mm Allen head bolts. Remove the cylinder from the machine.
6. Move the cylinder to a prepared work area. It is important that clean assembly practices are observed, as seals and other hydraulic cylinder components are sensitive to contamination.

DISASSEMBLY

1. Unscrew the headcap and withdraw the rod and piston assembly from the barrel tube.
2. Unscrew the piston nut and remove piston and headcap from the cylinder rod.
3. Remove the piston static O-ring from the cylinder rod.
4. Remove the piston seal from the piston.
5. Remove the rod seal, rod wiper and static seal from the headcap.
6. Care should be taken to save the O-ring and all other seals for reassembly, if they have been deemed serviceable following the cleaning and inspection phase of maintenance.

CLEANING AND INSPECTION

1. Clean all metal parts in solvent and blow dry

with filtered compressed air.

2. Check all threaded parts for stripped or damaged threads.
3. Check the bearing surfaces inside of the headcap, outer edge surface of the piston, inside of the cylinder barrel and the shaft for signs of scoring, pits, excessive wear or polishing. Scratches or pits deep enough to catch a fingernail are unacceptable. Polishing is a sign of uneven loading and if sufficiently polished the affected parts should be replaced.
4. Replace any parts or seals found to be unserviceable.

REASSEMBLY/SEAL REPLACEMENT

Note: During seal replacement do not use sharp edged tools to avoid cutting the seals, and allow at least one hour for the seals to elastically restore to their original shape before assembly.

1. Lubricate and install new rod seal, rod wiper and static seal on the headcap.
   NOTE: Multi-purpose lubricant should be used.
2. Install a new piston seal on the piston.
3. Install the headcap on the cylinder from the piston end.
4. Install the piston, piston nut and a new piston static O-ring on the cylinder rod. Screw nut to end of thread and secure with circlip.
5. Lubricate the piston seal and install the piston and rod assembly in the barrel tube.
6. Thread headcap onto barrel tube and hand tighten, then turn 1/4 turn further.
7. Install the lower cylinder Overcentre Valve.

INSTALLATION

NOTE: Before installing Lift Cylinder check cylinder pins, bearings and Trunnion Pivot for wear and replace if necessary.

1. Locate the Trunnion Pivot on the cylinder and place the lift cylinder against the first post.
2. Maintaining the Trunnion Pivot in place put the first Allen Bolt in one turn. Repeat for all of the bolts. When all bolts are in place tighten fully.
   NOTE: Take care in aligning the holes so that the bolts can be made turn by hand. If holes are not properly aligned the Trunnion Pivot will be positioned incorrectly.
3. Install rod end bearings (if removed).
4. Lift rod end of cylinder into place and insert pin. Install pin lock plate. Fix pin lock plate with bolt.
5. Test with weight at rated platform load to check system operation.

Note: Diagram below shoes a sample cylinder breakdown for the Upper Lift Cylinder. Component Breakdowns of the other cylinders are shown in the Illustrated Parts Breakdown.

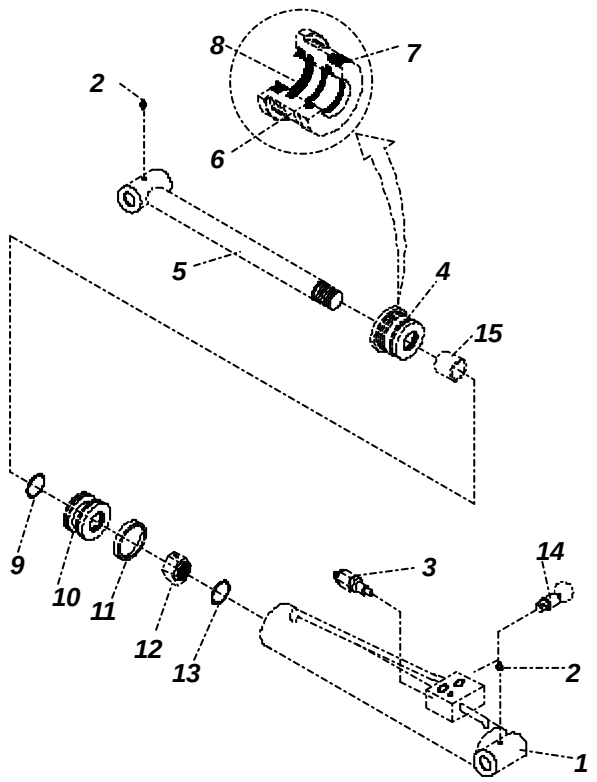

1.	***Cylinder Body***	***9.***	***Piston O-Ring***
2.	***Grease Nipple***	***10.***	***Piston Head***
3.	***Overcentre Cartridge***	***11.***	***Piston Seal***
4.	***End Cap***	***12.***	***Piston Locknut***
5.	***Rod And Pivot***	***13.***	***Washer***
6.	***Rod Seal***	***14.***	***Emergency Lowering Valve***
7.	***O-Ring***		
8.	***Wiper***	***15.***	***Spacer***

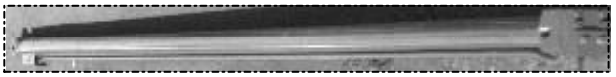

Figure 4-16: Hydraulic Cylinder Component Breakdown

https://truckmanualshub.com/

4.15 Upper Lift Cylinder (Figure 4-17)

REMOVAL

CAUTION

The Upper Lift Cylinder is heavy, so utilise appropriate lifting equipment to support the unit before removing pins.

1. Ensure that the AB38 is on firm level ground, the Elevating Assembly is completely stowed, the Keyswitch is to the 'OFF' position and the Emergency Stop Button is pressed.
2. Provide a suitable container to collect the hydraulic fluid, then disconnect the hydraulic hoses. Immediately plug hoses to prevent foreign material from entering.
3. Remove securing bolts and the pin lock plates from the cylinder pins.
4. Support rod end of cylinder and remove rod end pivot pin. Let cylinder down to hang freely.
5. Support the cylinder so that the barrel end cylinder pin can be removed, then remove the cylinder from the machine.
6. Move the cylinder to a prepared work area. It is important that clean assembly practices are observed as seals and other hydraulic cylinder components are highly sensitive to contamination.

DISASSEMBLY (Refer to Figure 4-16)

1. Unscrew the headcap and withdraw the rod and piston assembly from the barrel tube.
2. Unscrew the piston nut and remove piston and headcap from the cylinder rod.
3. Remove the piston static O-ring from the cylinder rod.
4. Remove the piston seal from the piston.
5. Remove the rod seal, rod wiper and static seal from the headcap.
6. Care should be taken to save the O-ring and all other seals for reassembly, if they have been deemed serviceable following the cleaning and inspection phase of maintenance.

CLEANING AND INSPECTION

1. Clean all metal parts in solvent and blow dry with filtered compressed air.
2. Check all threaded parts for stripped or damaged threads.
3. Check the bearing surfaces inside of the headcap, outer edge surface of the piston, inside of the cylinder barrel and the shaft for signs of scoring, pits, excessive wear or polishing. Scratches or pits deep enough to catch a fingernail are unacceptable. Polishing is a sign of uneven loading and if sufficiently polished the affected parts should be replaced.
4. Replace any parts or seals found to be unserviceable.

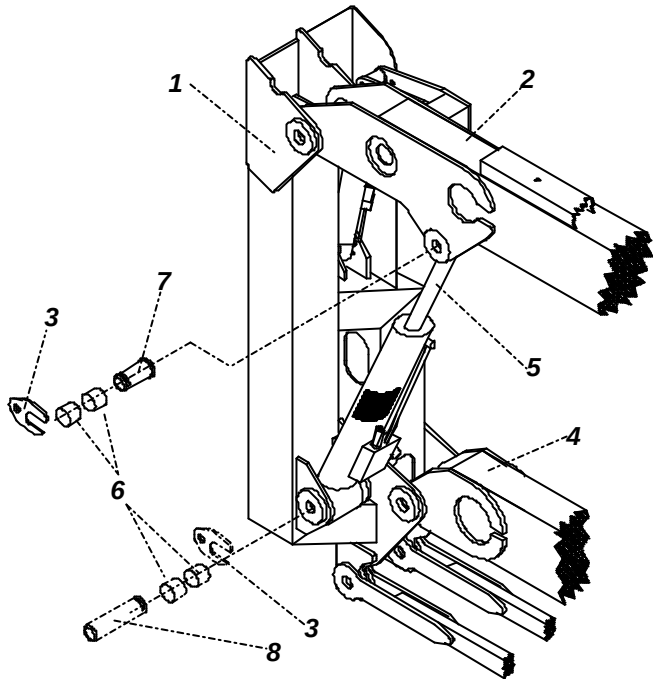

1.	*Second Post*	*5.*	*Upper Lift Cylinder*
2.	*Upper Boom*	*6.*	*Bushings*
3.	*Pin Lock Plate*	*7.*	*Rod End Pivot Pin*
4.	*Lower Boom*	*8.*	*Barrel End Pivot Pin*

Figure 4-17: Upper Lift Cylinder

REASSEMBLY/SEAL REPLACEMENT

Note: During seal replacement do not use sharp edged tools to avoid cutting the seals, and allow at least one hour for the seals to elastically restore to their original shape before assembly.

1. Lubricate and install new rod seal, rod wiper and static seal on the headcap.
   NOTE: Multi-purpose lubricant should be used.
2. Install a new piston seal on the piston.
3. Install the headcap on the cylinder from the piston end.
4. Install the piston, piston nut and a new piston static O-ring on the cylinder rod. Screw nut to

end of thread and secure with circlip.
5. Lubricate the piston seal and install the piston and rod assembly in the barrel tube.
6. Thread headcap onto barrel tube and hand tighten, then turn 1/4 turn further.
7. Install the upper cylinder Overcentre valve.

INSTALLATION

NOTE: Before installing Lift Cylinder check cylinder pins and bearings for wear and replace if necessary.
1. Install barrel end bearing (if removed)
2. Lift the barrel end of the cylinder into place and push the cylinder pin in.

NOTE: Take care in aligning the holes so that the pin can be pushed in by hand. Bearings will be damaged if holes are not properly aligned and the pin is forced.
3. Align pin lock plate on cylinder pin with hole in the mast and push the cylinder pin completely in. Fix pin lock plate with bolt.
4. Install rod end bearings (if removed).
5. Lift rod end of cylinder into place and insert pin. Install pin lock plate. Fix pin lock plate with bolt.
6. Test with weight at rated platform load to check system operation.

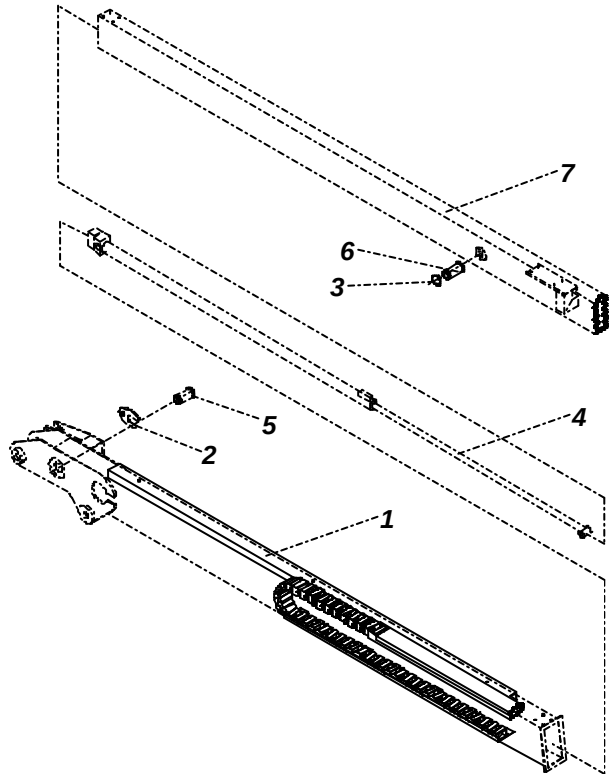

1.	*Upper Boom*	*5.*	*Barrel End Pivot Pin*
2.	*Pin Lock Plate*	*6.*	*Rod End Pivot Pin*
3.	*Circlip*	*7.*	*Telescopic Boom*
4.	*Telescopic Cylinder*		

Figure 4-18: Telescopic Cylinder

4.16 Telescopic Cylinder (Figure 4-18)

REMOVAL

1. Ensure that the AB38 is on firm level ground, the Elevating Assembly is completely stowed, the Keyswitch is to the 'OFF' position and the Emergency Stop Button is pressed.
2. From Chassis Controls extend the Telescope until the Rod End Pin is just visible. This will leave a small amount of clearance between the ground and the Telescopic Boom.
3. Support the Telescopic Boom & Platform Assembly to avoid any damage while removing the Telescopic Cylinder.
4. Provide a suitable container to collect the hydraulic fluid, then disconnect the hydraulic hoses. Immediately plug hoses to prevent foreign material from entering.
5. Remove securing bolts and pin lock plates from the barrel end cylinder pin.
6. Remove the Telescopic Cylinder rod end circlip and then push the rod end pin out.
7. Support the cylinder so that the barrel end cylinder pin can be removed, then remove the cylinder from the machine. This is done by pulling the cylinder forward through the gap provided in Boom 2 at the 2nd post end.
8. Move the cylinder to a prepared work area. It is important that clean assembly practices are observed. Seals and other cylinder components are highly sensitive to contamination.

DISASSEMBLY (Refer to Figure 4-16)

1. Unscrew the headcap and withdraw the rod and piston assembly from the barrel tube.
2. Unscrew the piston nut and remove piston and headcap from the cylinder rod.
3. Remove the piston static O-ring from the cylinder rod.
4. Remove the piston seal from the piston.
5. Remove the rod seal, rod wiper and static seal from the headcap.
6. Care should be taken to save the O-ring and all other seals for reassembly, if they have been deemed serviceable following the cleaning and inspection phase of maintenance.

https://truckmanualshub.com/

CLEANING AND INSPECTION

1. Clean all metal parts in solvent and blow dry with filtered compressed air.
2. Check all threaded parts for stripped or damaged threads.
3. Check the bearing surfaces inside of the headcap, outer edge surface of the piston, inside of the cylinder barrel and the shaft for signs of scoring, pits, excessive wear or polishing. Scratches or pits deep enough to catch a fingernail are unacceptable. Polishing is a sign of uneven loading and if sufficiently polished the affected parts should be replaced.
4. Replace any parts or seals found to be unserviceable.

REASSEMBLY/SEAL REPLACEMENT

Note: During seal replacement do not use sharp edged tools to avoid cutting the seals, and allow at least one hour for the seals to elastically restore to their original shape before assembly.

1. Lubricate and install new rod seal, rod wiper and static seal on the headcap.
   NOTE: Multi-purpose lubricant should be used.
2. Install a new piston seal on the piston.
3. Install the headcap on the cylinder from the piston end.
4. Install the piston, piston nut and a new piston static O-ring on the cylinder rod. Screw nut to end of thread and secure with circlip.
5. Lubricate the piston seal and install the piston and rod assembly in the barrel tube.
6. Thread headcap onto barrel tube and hand tighten, then turn 1/4 turn further.
7. Install the telescopic cylinder's Overcentre and Check Valves.

INSTALLATION

NOTE: Before installing Telescopic Cylinder check cylinder pins and bearings for wear and replace if necessary.

1. Lift the Telescopic Cylinder so that it will be able to slide down Boom 2.
2. While maintaining a positive hold on the cylinder position the barrel end of the cylinder into place. Push the cylinder pin in.
   NOTE: Take care in aligning the holes so that the pin can be pushed in by hand. If holes are not properly aligned and the pin is forced in, the bearings will be damaged.
3. Align pin lock plate on cylinder pin with hole in Boom 2 and push the cylinder pin completely in and fix pin lock plate with bolt.
4. Position the rod end of cylinder into place and insert the pin until the circlip groove is exposed. Replace the circlip.
5. From the Chassis Controls retract the Telescopic Cylinder fully.
7. Test with weight at rated platform load to check system operation.

4.17 Steering Cylinder (Figure 4-19)

REMOVAL

1. Ensure that the AB38 is on firm level ground, the Elevating Assembly is completely stowed but slewed away from centre, the Keyswitch is to the 'OFF' position and the Emergency Stop Button is pressed.
2. Straighten the drive wheels.
3. Provide a suitable container to collect the hydraulic fluid, then disconnect the hydraulic hoses. Immediately plug hoses to prevent foreign material from entering.
4. Remove the circlips from each steering pivot pin. Push the steering pivot pins out and rotate the steering link arm away from the rod.
5. While supporting the cylinder remove the four bolts from the front panel of the AB38's chassis.
6. Move the cylinder to a prepared work area. It is important that clean assembly practices are observed as seals and other hydraulic cylinder components are highly sensitive to contamination.

DISASSEMBLY (Refer to Figure 4-16)

1. Unscrew both of the headcaps and withdraw the rod piston assembly (this is one unit) from the barrel tube.
2. Remove the piston static O-ring from the cylinder rod.
3. Remove the piston seal from the piston.
4. Remove the rod seal, rod wiper and static seal from the headcap.
5. Care should be taken to save the O-ring and all other seals for reassembly, if they have been deemed serviceable following the cleaning and inspection phase of maintenance.

CLEANING AND INSPECTION

1. Clean all metal parts in solvent and blow dry with filtered compressed air.
2. Check all threaded parts for stripped or damaged threads.
3. Check the bearing surfaces inside of the headcap, outer edge surface of the rod &piston assembly or inside of the cylinder barrel and the shaft for signs of scoring, pits, excessive wear or polishing. Scratches or pits deep enough to catch a fingernail are unacceptable. Polishing is a sign of uneven loading and if sufficiently polished the affected parts should be replaced.
4. Replace any parts or seals found to be unserviceable.

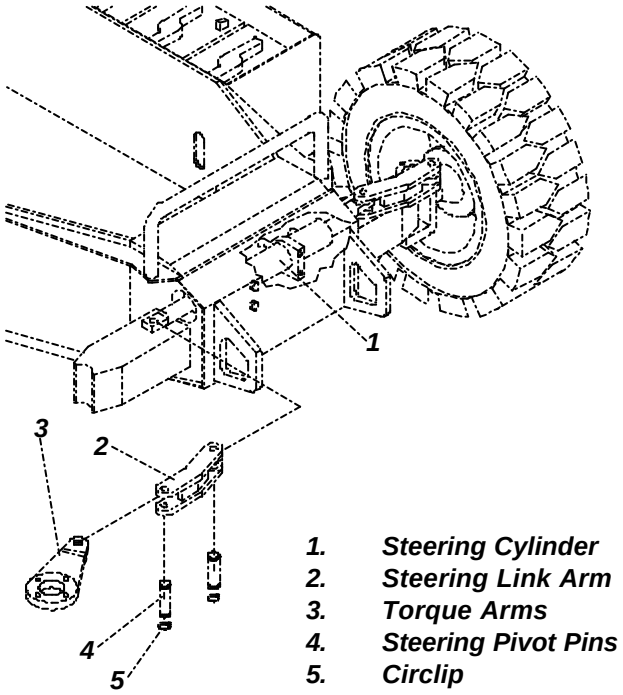

Figure 4-19: Steer Cylinder

REASSEMBLY/SEAL REPLACEMENT

Note: During seal replacement do not use sharp edged tools to avoid cutting the seals, and allow at least one hour for the seals to elastically restore to their original shape before assembly.

1. Lubricate and install new rod seal, rod wiper and static seal on the headcap.
   NOTE: Multi-purpose lubricant should be used.
2. Install a new piston seal on the piston.
3. Install the headcap on one end of the cylinder barrel.
4. Lubricate the piston seal and install the rod & piston assembly in the barrel tube.
6. Thread the headcap onto the free end of the barrel tube and hand tighten, then turn 1/4 turn further.

INSTALLATION

NOTE: Before installing the Steering Cylinder check cylinder pins and bearings for wear and replace if necessary.

1. While supporting the cylinder replace the four washers and bolts at the front panel of the AB38's chassis.
2. Move the steering arm so that the holes for positioning the pins are correct. Install each of the steering pivot pins and ensure that the circlips are attached properly.
   NOTE: Take care in aligning the holes so that the pin can be pushed in by hand. If holes are not properly aligned and the pin is forced in, the bearings will be damaged.
   Torque these four bolts to 70 Nm (52 ft. lbs).
3. Reconnect the hydraulic hoses.
4. Test system operation by carrying out a 'figure of eight' driving pattern for 5 cycles. This should be sufficient to prove proper function.

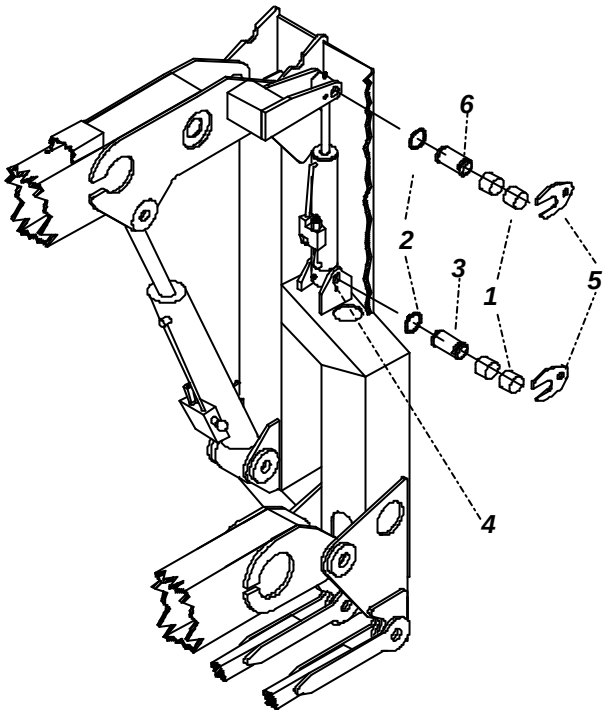

Figure 4-20: Master Levelling Cylinder

https://truckmanualshub.com/

4.18 Master Levelling Cylinder (Figure 4-20)

REMOVAL

1. Ensure that the AB38 is on firm level ground, the Elevating Assembly is completely stowed, the Keyswitch is to the 'OFF' position and the Emergency Stop Button is pressed.
2. Provide a suitable container to collect the hydraulic fluid, then disconnect the hydraulic hoses. Immediately plug hoses to prevent foreign material from entering.
3. Remove securing bolts and pin lock plates from the rod end cylinder pin. Remove the circlip from the barrel end of the cylinder
4. Support barrel end of cylinder and remove rod end pivot pin. Move cylinder backwards and allow to hang freely.
5. Support the cylinder so that the barrel end cylinder pin can be removed, then remove the cylinder from the machine.
6. Move the cylinder to a prepared work area. It is important that clean assembly practices are observed as seals and other hydraulic cylinder components are highly sensitive to contamination.

DISASSEMBLY (Refer to Figure 4-16)

1. Unscrew the headcap and withdraw the rod and piston assembly from the barrel tube.
2. Unscrew the piston nut and remove piston and headcap from the cylinder rod.
3. Remove the piston static O-ring from the cylinder rod.
4. Remove the piston seal from the piston.
5. Remove the rod seal, rod wiper and static seal from the headcap.
6. Care should be taken to save the O-ring and all other seals for reassembly, if they have been deemed serviceable following the cleaning and inspection phase of maintenance.

CLEANING AND INSPECTION

1. Clean all metal parts in solvent and blow dry with filtered compressed air.
2. Check all threaded parts for stripped or damaged threads.
3. Check the bearing surfaces inside of the headcap, outer edge surface of the piston, inside of the cylinder barrel and the shaft for signs of scoring, pits, excessive wear or polishing. Scratches or pits deep enough to catch a fingernail are unacceptable. Polishing is a sign of uneven loading and if sufficiently polished the affected parts should be replaced.
4. Replace any parts or seals found to be unserviceable.

REASSEMBLY/SEAL REPLACEMENT

Note: During seal replacement do not use sharp edged tools to avoid cutting the seals, and allow at least one hour for the seals to elastically restore to their original shape before assembly.

1. Lubricate and install new rod seal, rod wiper and static seal on the headcap.
   NOTE: Multi-purpose lubricant should be used.
2. Install a new piston seal on the piston.
3. Install the headcap on the cylinder from the piston end.
4. Install the piston, piston nut and a new piston static O-ring on the cylinder rod. Screw nut to end of thread and secure with circlip.
5. Lubricate the piston seal and install the piston and rod assembly in the barrel tube.
6. Thread headcap onto barrel tube and hand tighten, then turn 1/4 turn further.
7. Install the Master Cylinders Overcentre Valves.

INSTALLATION

NOTE: Before installing the Master Cylinder check cylinder pins and bearings for wear and replace if necessary.

1. Install barrel end bearing (if removed).
2. Lift the barrel end of the cylinder into place and push the barrel end pivot pin in until the circlip grooves are exposed, then attach the circlip.
   NOTE: Take care in aligning the holes so that the pin can be pushed in by hand. If holes are not properly aligned and the pin is forced in, the bearings will be damaged.
3. Align pin lock plate on cylinder pin with hole in the 2nd Post and push the cylinder pin completely in and fix pin lock plate with bolt.
4. Install rod end bearings (if removed).
5. Lift rod end of cylinder into place and insert the rod end pivot pin until the circlip grooves are exposed, then attach the circlip. Install the pin lock plate.
6. Fix pin lock plate with bolt.
7. Test with weight at rated platform load to check system operation.

4.19 Slave Levelling Cylinder (Figure 4-21)

REMOVAL

1. Ensure that the AB38 is on firm level ground, the Elevating Assembly is completely stowed, the Keyswitch is to the 'OFF' position and the Emergency Stop Button is pressed.
2. Provide a suitable container to collect the hydraulic fluid, then disconnect the hydraulic hoses. Immediately plug hoses to prevent foreign material from entering. Support the Platform
3. Remove securing bolts and pin lock plates from the cylinder pins.
4. Support barrel end of cylinder and remove rod end pivot pin. Move cylinder backwards allowing it to hang freely. Rotate the cylinder backwards.
5. Support the cylinder so that the barrel end cylinder pin can be removed, then remove the cylinder from the machine.
6. Move the cylinder to a prepared work area. It is important that clean assembly practices are observed as seals and other hydraulic cylinder components are highly sensitive to contamination.

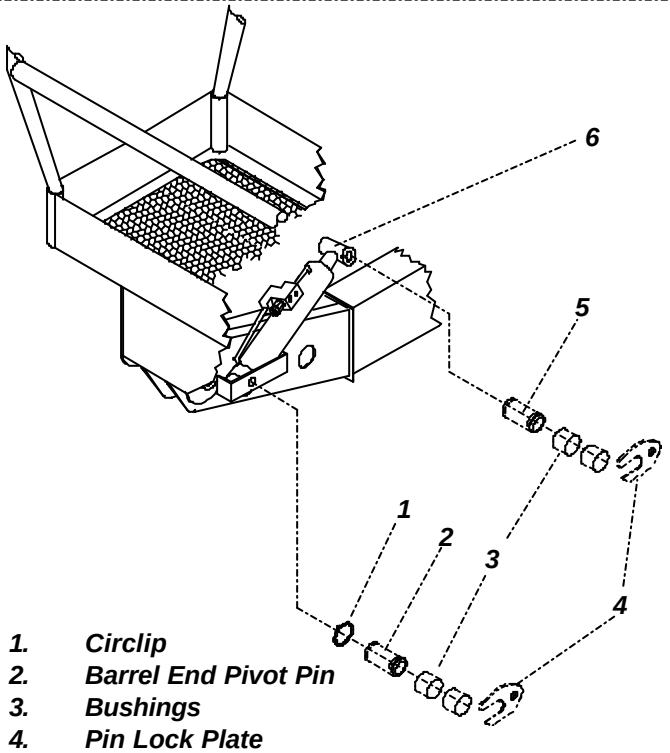

1. *Circlip*
2. *Barrel End Pivot Pin*
3. *Bushings*
4. *Pin Lock Plate*
5. *Rod End Pivot Pin*
6. *Slave Levelling Cylinder*

Figure 4-21: Slave Levelling Cylinder

DISASSEMBLY (Refer to Figure 4-16)

1. Unscrew the headcap and withdraw the rod and piston assembly from the barrel tube.
2. Unscrew the piston nut and remove piston and headcap from the cylinder rod.
3. Remove the piston static O-ring from the cylinder rod.
4. Remove the piston seal from the piston.
5. Remove the rod seal, rod wiper and static seal from the headcap.
6. Care should be taken to save the O-ring and all other seals for reassembly, if they have been deemed serviceable following the cleaning and inspection phase of maintenance.

CLEANING AND INSPECTION

1. Clean all metal parts in solvent and blow dry with filtered compressed air.
2. Check all threaded parts for stripped or damaged threads.
3. Check the bearing surfaces inside of the headcap, outer edge surface of the piston, inside of the cylinder barrel and the shaft for signs of scoring, pits, excessive wear or polishing. Scratches or pits deep enough to catch a fingernail are unacceptable. Polishing is a sign of uneven loading and if sufficiently polished the affected parts should be replaced.
4. Replace any parts or seals found to be unserviceable.

REASSEMBLY/SEAL REPLACEMENT

Note: During seal replacement do not use sharp edged tools to avoid cutting the seals, and allow at least one hour for the seals to elastically restore to their original shape before assembly.

1. Lubricate and install new rod seal, rod wiper and static seal on the headcap.
   NOTE: Multi-purpose lubricant should be used.
2. Install a new piston seal on the piston.
3. Install the headcap on the cylinder from the piston end.
4. Install the piston, piston nut and a new piston static O-ring on the cylinder rod. Screw nut to end of thread and secure with circlip.
5. Lubricate the piston seal and install the piston and rod assembly in the barrel tube.
6. Thread headcap onto barrel tube and hand tighten, then turn 1/4 turn further.
7. Install the upper cylinder valve block. Check O-rings.

https://truckmanualshub.com/

INSTALLATION

NOTE: Before installing the Slave Cylinder check cylinder pins and bearings for wear and replace if necessary.

1. Install barrel end bearing (if removed)
2. Lift the barrel end of the cylinder into place.
   NOTE: Take care in aligning the holes so that the barrel end pivot pin can be pushed in by hand. If holes are not properly aligned and the pin is forced in, the bearings will be damaged.
3. Align pin lock plate on cylinder pin with hole in the bracket, push the cylinder pin completely in and fix pin lock plate with bolt. Attach the circlip inside the Telescopic Boom.
4. Install rod end bearings (if removed).
5. Lift rod end of cylinder into place and insert rod end pivot pin. Install pin lock plate.
6. Fix pin lock plate with bolt.
7. Test with weight at rated platform load to check system operation.

BLEEDING THE MASTER/SLAVE LEVELLING CIRCUIT

When air enters the Master/Slave Levelling circuit the Slave Levelling Cylinder is prevented from following the master cylinder precisely. If it seems there may be air in the system the following procedures should be followed.

1. While outside the Platform activate the Levelling Switch function and level the cage in the forward direction. Continue this until, and for 30 seconds after, the Platform comes to a stop.
2. Activate the Levelling function in the backward direction. Continue this until, and for 30 seconds after, the Platform comes to a stop. Care must be taken that the Platform Cage does not impact on the ground.

The above two procedures have the effect of 'Priming' the Levelling Circuit. Test to see if the Slave Cylinder is operating correctly. If not follow the procedures below.

3. Ensure the Elevating Assembly is fully stowed and the booms are in their rest position.
4. Remove securing bolts and pin lock plates from the rod end cylinder pin of the Master Cylinder.
5. Remove the rod end pivot pin. Move cylinder backwards and allow to hang freely.
6. Loosen, but do not fully disconnect, the hose fitting at 'B'. Prepare to activate the Levelling Switch while a colleague holds a cloth at the fitting 'B'. Air will be expelled through this fitting.
7. Activate the Switch slowly in both directions until all air is expelled and hydraulic fluid begins to appear.
8. Repeat the above procedure for fitting 'A'. Lift the rod end of the cylinder into place and insert the pin until the circlip grooves are exposed, then attach the circlip. Install the pin lock plate.
9. Fix the pin lock plate with the bolt.
10. Support the Platform before removing the securing bolts and pin lock plates from the Slave Cylinders rod end pivot pin.
11. Remove the rod end pivot pin. Move the cylinder backwards allowing it to hang freely. Rotate the cylinder backwards.
12. Repeat the procedures outlined in Items 6, 7 & 8 for the Slave Cylinder.
13. Lift rod end of cylinder into place and insert pin. Install pin lock plate.
14. Fix pin lock plate with bolt.

4.20 Adjustment of Overcentre Valves on AB38 Lift Cylinders (Figure 4-22)

The valve supplier delivers the Overcentre valve preset to specification and **SHOULD NOT** be adjusted by the user.
In the event of the valve having been tampered with the advisable course of action is to fit a replacement cartridge.

A **short term** solution is to temporarily adjust the valve as follows :-

a) Place the max. SWL (Safe Working Load), evenly distributed, in the cage.
b) Raise the boom to 50 mm stroke on the cylinder.
c) First loosen the Locknut, then using an Allen Key adjust the spring setting screw on the valve cartridge. Turning the screw clockwise increases the pressure setting. Turning the screw anticlockwise reduces the setting and allows the boom to creep downwards. Adjust the spring setting until the boom just begins to creep downwards.
d) Screw the adjuster **1 (one)** further turn **clockwise** and secure Locknut.

This operation should only be carried out by suitably qualified and/or experienced personnel.

CAUTION

<u>An incorrectly adjusted valve may cause one of the following:-</u>
Cylinder drifts down under load less than the SWL (Safe Working Load).
Jerky motion in cylinder & boom when lowering.
Pump under high load when lowering.
Valve does not hold load if hose connections are loosened or broken.
Damaged seals in cylinders due to high ambient temperature rise.
High pitched sound from hydraulic system when lowering.

The Overcentre Valves are located towards the Rod End of the Lower Lift and Upper Lift Cylinders.

Figure 4-22: Overcentre Valve

https://truckmanualshub.com/

NOTES:

https://truckmanualshub.com/

NOTES:

https://truckmanualshub.com/

5.0 Introduction

The following section on troubleshooting provides guidelines on the types of problems users may encounter in the field, helps determine the cause of problems, and suggests proper corrective action.

Careful inspection and accurate analysis of the symptoms listed in the *Troubleshooting Guide 5.1* will help localise the trouble quickly than.
This manual cannot cover all possible problems that may occur. If a Service Engineer finds a specific problem that is not covered in this manual, they should contact their local distributor and if warranted the ***UpRight*** **Product Support** at:

@ **Tel: +44 (0) 845 1550 058**
Fax: +44 (0) 1952 299 948

Referring to *Section 3.0* and *Section 6.0* will aid in understanding the operation and function of the various components and systems of the *AB38 Work Platform* and help in diagnosing and repair of the machine.

WARNING

When troubleshooting, ensure that the work platform is resting on a firm, level surface. Disconnect the batteries when replacing or testing the continuity of any electrical component.
When performing any service on or in the elevating assembly area, which requires the platform to be raised, the elevating assembly must be securely supported by overhead cranes, or equivalent, of suitable capacity.

GENERAL PROCEDURE

As all problems which require troubleshooting will to some extent be unique, the Service Engineer will need to evaluate the steps to follow for each individual case. Troubleshooting, however, should be carried out in a logical thoughtful manner.
The procedure which ***UpRiight*** recommend is as follows:

1. The Service Engineer must be familiar with the machine and its functions. i.e.
   - which functions are supposed to work?
   - when are they supposed to work?
2. Know the symptoms, and write them down. If possible talk to the person, operator, who initially experienced the problem.
3. Thoroughly study both the hydraulic and electric schematics for possible causes.
4. Test all functions to determine what works and what does not. Although the operators information is valuable it may be inaccurate.
5. Re-evaluate the schematics and check all suspect components electrically, hydraulically and mechanically to determine if they are at fault. Check to see if there is a ‘Flash Fault’, and if necessary refer to Section 5.2.
6. Correct the problem.
7. Test, Test, & Test the machine again to see that the problem does not recur. Recreate the original problem to see if the same symptoms will repeat. Recorrect the problem and again test the machine for a prolonged period of time.

https://truckmanualshub.com/

Troubleshooting

PROBLEM	PROBABLE CAUSE	REMEDY
All functions inoperable. Electric motor does not start.	1. Blown Electric Fuse.	Check fuses, Replace if blown.
	2. Faulty Battery Charger.	Check the voltage output of battery charger. If less than 24 VDC, repair or replace.
	3. Faulty Battery or Batteries.	After completely charging batteries test each battery. Replace as required.
	4. Loose or broken Battery Lead.	Check continuity of all battery and motor leads. Replace if necessary.
	5. Emergency Stop Switch(es) upper & lower failed open.	With emergency stop switch in the ON position, check continuity across contacts. If none, replace.
	6. Connecting Plug at Upper Control Box loose.	Check connection and retry.
	7. Battery Line Disconnect plug loose.	Check for security of connection and retry.
All functions inoperable. Electric motor starts when control is actuated.	1. Oil level in Hydraulic Reservoir is low.	Check hydraulic fluid level, as required.
	2. Faulty Hydraulic Pump.	Check pressure and delivery of the hydraulic pump. Replace if required.
	3. Faulty Controller.	Check operation. Replace if required.
Electric motor continues to run after functions have ceased.	1. Line Contactor (LC1) contacts fused together.	Replace Line Contactor.
Platform will not elevate or elevates slowly.	1. Emergency Lowering valve leaking.	Remove and inspect the valve. Replace if necessary.
	2. Platform Overloaded.	Observe maximum load rating. (See Table 1-1).
	3. Faulty Lift Valve Solenoid. (Fault code : 51 or 53)	Test Lift Solenoid, if proper voltage is present and coil unmagnetized - Replace the Solenoid.
	4. Faulty Controller at upper controls.	Check functionality of controller. Replace the Controller if faulty.
	5. Battery Voltage.	Check Battery Voltage. Charge if necessary. Voltage must be greater than 14V.
Booms drift down after being elevated.	1. Emergency Lowering Valve is leaking.	Remove and inspect the valve. Replace if necessary.
	2. Leaking piston seals in Lift Cylinders (CYL1, CYL2 & Telescope).	Check for leakage at cylinder return line, replace the seal kit if necessary.
	3. Overcentre Valve leaking internally or needs adjusting.	Check for contamination and clean. Check that O-Rings are intact. Adjust or replace.

PROBLEM	PROBABLE CAUSE	REMEDY
	4. Platform Overloaded.	Remove excess weight.
Machine will not slew when Booms are elevated.	1. The Elevating Assembly is not clear of the wheels.	Raise the Elevating Assembly.
	2. Faulty Controller	Test Controller for continuity during Slew function. Replace if defective.
	3. Faulty Slew Solenoid. (Fault code : 57 or 58)	Test Slew Solenoid, if proper voltage is present and coil is not magnetized - Replace
	4. Mechanical Damage.	Inspect all slewing components. Replace damaged parts.
	5. Slew Valve stuck.	Inspect slew valve. If spool is sticking - Replace.
	6. Faulty function select Switch.	Replace switch.
Platform will not lower.	1. Faulty Down Valve Coil (Fault code : 52 or 54)	Test Down Valve Coil. If proper voltage is present and coil is not magnetised - Replace
	2. Faulty function Selector Switch.	Replace switch.
	3. Faulty Controller	Replace if required.
	4. Down Valve stuck.	Check and see if spool is stuck. - Replace if necessary.
Telescopic cylinder will not extend.	1. Faulty Tele-Out Valve Coil. (Fault code : 55 or 56)	Test Tele-out Valve Coil. If proper voltage is present and coil is not magnetised - Replace.
	2. Faulty function Selector Switch.	Replace switch.
	3. Faulty Controller.	Replace if required.
	4. Tele-Out Valve stuck.	Check and see if spool is stuck. - Replace if necessary.
	5. Platform is overloaded.	Reduce the load
Machine will not drive.	1. Fuses blown.	Check fuses and replace if necessary
	2. Loose electrical connection on drive motor or motor control units.	Check all electrical connections relating to the drive system for security.
	3. Brakes engaged Brake solenoid V2 (CT12) has become de-energised or the spool is stuck in the open position.	Check that coil of V2 is energised when drive is selected. Remove cartridge and check for contamination and freedom of movement of the spool. Replace if necessary.
	4. Brakes engaged Brake solenoid V1 (CT11) is not energising to	Check that the coil of V1 is energised for approximately 4 seconds, by a delay module, when

https://truckmanualshub.com/

PROBLEM	PROBABLE CAUSE	REMEDY
	prime the brake lines.	drive is selected. If no current is being fed to this coil then replace the cable feeding the coil or replace the P.C.B.
	5. Drive Reduction Gearbox has seized due to lack of oil.	Replace gearbox and ensure proper oil level is maintained.
	6. Brake Valves out of adjustment.	Adjust Brake Pressure Reduction Valve to 100 Bar.
	7. Joystick damaged or faulty.	Check for voltage signal on pin 8 or 11 on the traction motor control unit when forward or reverse is selected using the joystick.
Cage levelling is erratic or irregular throughout the lift cycle.	1. Air in cage levelling closed circuit.	Reprime or bleed as required. See Section 4.19.
	2. Cage damaged, hole centres are out of position.	Replace.
	3. Damaged Overcentre valves on master /slave cylinders.	Remove and inspect O-Rings and seals. Replace if necessary.
Machine will not steer.	1. Faulty Steering Switch on Joystick.	Replace if necessary.
	2. Loose connection on steer solenoid valve V5.	Reconnect if necessary.
	3. Faulty steering valve coil. (Fault code : 59 or 61)	Test steering valve coil. If proper voltage is present and coil is not magnetised -Replace.
	4. Steering valve V5 stuck.	Replace valve.
	5. Mechanical Damage.	Replace damaged parts.
Machine drives in reverse but not forward.	1. Faulty drive switch.	Test and replace if necessary.
	2. Loose connection or continuity lost to reverse contactor coil.	Check continuity and cable connections. Repair or replace as necessary.
	3. Reverse contactor coil faulty.	Check that coil is receiving 48v. If it is and contacts are not closing then replace the contactor.
	4. Tacho faulty.	Repair or replace.
Machine drives forward but not in reverse.	1. Faulty drive switch.	Test and replace if necessary.
	2. Loose connection or continuity lost to forward contactor coil.	Check continuity and cable connections. Repair or replace as necessary.
	3. Forward contactor coil faulty.	Check that coil is receiving 48V. If it is and contacts are not closing then replace the contactor.

PROBLEM	PROBABLE CAUSE	REMEDY
	4. Tacho faulty.	Repair or replace.
Machine will not drive in high speed.	1. The AB38 is not in the stowed position.	Lower the Elevating Assembly.
	2. Faulty boom rest switch.	Test and replace switch if necessary.
	3. Loss of continuity along boom rest switch cable.	Check continuity and repair if necessary.
	4. Machine is not level.	Drive to level ground.
	5. Tilt Sensor is faulty.	Adjust Tilt Sensor or replace.
Machine will not drive while elevated.	1. Machine is not level.	Lower the Platform and drive to level ground.
	2. Tilt Sensor is faulty.	Adjust Tilt Sensor or replace.

https://truckmanualshub.com/

5.2 Fault Codes.

The AB38 is equipped with a fault detection system, if you have a faulty component, bad electrical connection or start up error a fault code will be displayed on the read out located on the upper control box.

For fault codes 01 - 39 the following procedure should be followed.

Ensure that no selector buttons are depressed.

Ensure that the deadman switch on the joystick is not held.

Ensure that the joystick is in neutral.

Ensure that the steer rocker is not activated.

Ensure that analog rocker is in neutral.

Then re-cycle power, do this by pushing and releasing the emergency stop button. If the fault code is still displayed you may have a faulty upper or lower control box, consult the error code list to identify the problem component and replace if necessary.

For fault codes 51 - 69 the following procedure should be followed.

1. Check the fault code list to identify the problem component.

2. Ensure that the wiring harness is connected, secure, in good condition and fully intact.

3. Ensure that the problem component is receiving electrical signal, consult the schematics in section 6 of this manual to identify the ECU output and harness test points.

4. If no ECU output is present replace the ECU.

5. If ECU output is present but no signal is reaching the component replace the wiring harness.

6. If signal is reaching the component but the component is not functioning replace the component (refer to section 7 of this manual for part number information).

https://truckmanualshub.com/

CODE	FAULT
01	SYSTEM INITIALIZATION ERROR
02	SYSTEM COMMUNICATION ERROR
22	Platform STEER left switch ON at power-up (rocker switch on top of joystick)
23	Platform STEER right switch ON at power-up (rocker switch on top of joystick)
24	Platform SLEW switch ON at power-up (rotate function)
25	Platform DRIVE switch ON at power-up
26	Platform TELESCOPE switch ON at power-up
27	Platform LOWER BOOM switch ON at power-up
28	Platform UPPER BOOM switch ON at power-up
29	Platform Joystick Enable ON at power-up
31	Platform Joystick not in neutral at power-up
32	Lower Control Analog Rocker not in neutral at power-up
34	Lower Control Slew Switch ON at power-up
36	Lower Control Telescope Switch ON at power-up
37	Lower Control Lower Boom Switch ON at power-up
38	Lower Control Upper Boom Switch ON at power-up
39	Lower Control Enable Switch ON at power-up
51	Lower Boom, Up Coil fault
52	Lower Boom, Down Coil fault
53	Upper Boom, Up Coil fault
54	Upper Boom, Down Coil fault
55	Telescope Boom, Extend Coil fault
56	Telescope Boom, Retract Coil fault
57	Slew Clockwise Coil fault
58	Slew Counter Clockwise Coil fault
59	Steer Right, Coil fault
61	Steer Left, Coil fault
62	Level Platform Up, Coil fault
63	Level Platform Down, Coil fault
64	Brake Chamber Fill, Coil fault
65	Brake Chamber Empty, Coil fault
66	Forward Contactor, Coil Fault
67	Reverse Contactor, Coil fault
68	Low Battery fault
69	Pump Contactor, Coil fault

https://truckmanualshub.com/

NOTES:

https://truckmanualshub.com/

6.0 Introduction

This section contains electrical and hydraulic power schematics and associated information for maintenance purposes.

INDEX

	Page
Electrical Assy, J1 Harness	6.3
Electrical Assy, J2 Harness	6.4
Electrical Assy, J1 Harness & Connections	6.5
Hydraulic Legend	6.9
Hydraulic Schematic	6.11

https://truckmanualshub.com/

NOTES:

https://truckmanualshub.com/

6.1. Electrical Schematics

J1 Harness

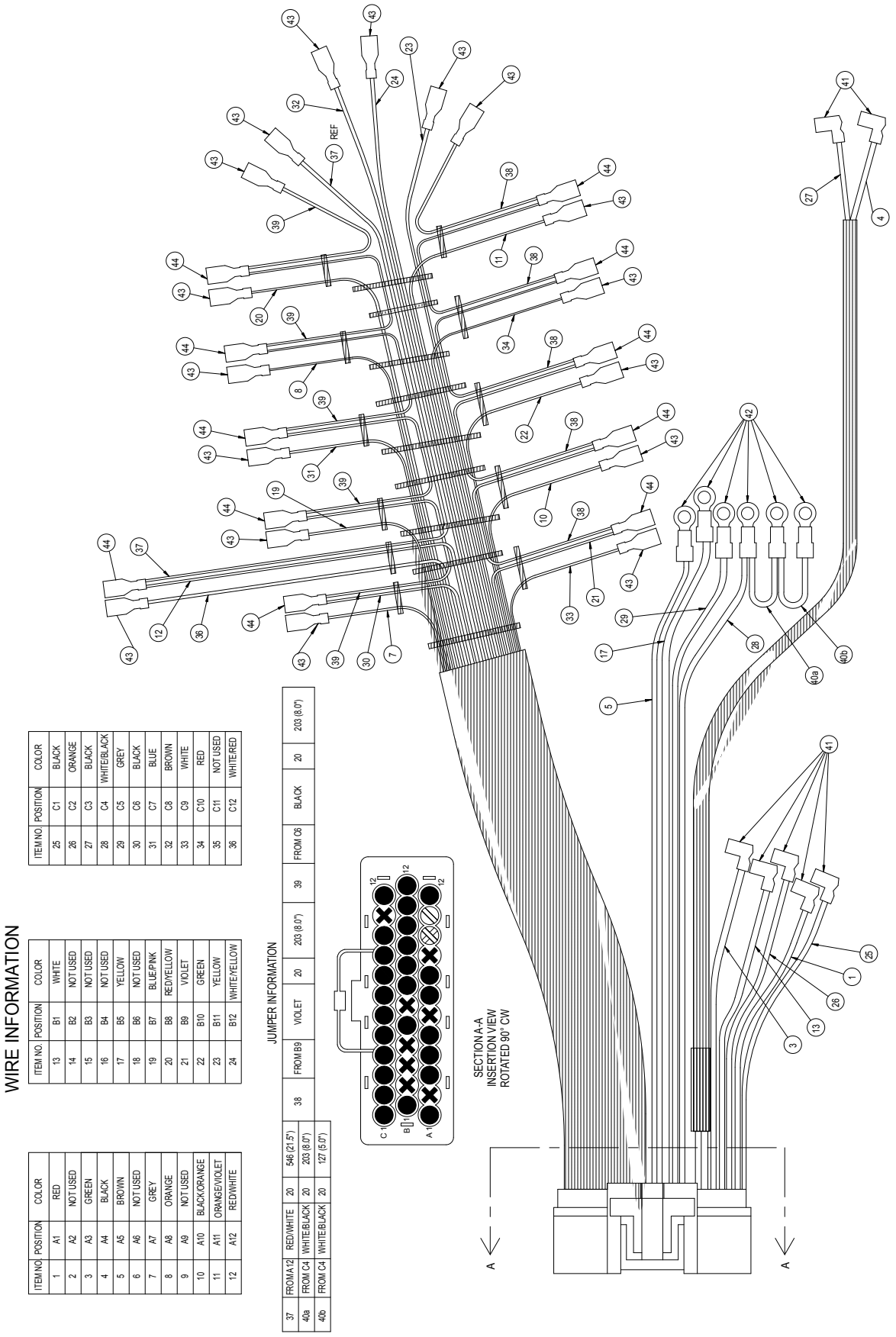

WIRE INFORMATION

ITEM NO.	POSITION	COLOR
1	A1	RED
2	A2	NOT USED
3	A3	GREEN
4	A4	BLACK
5	A5	BROWN
6	A6	NOT USED
7	A7	GREY
8	A8	ORANGE
9	A9	NOT USED
10	A10	BLACK/ORANGE
11	A11	ORANGE/VIOLET
12	A12	RED/WHITE
13	B1	WHITE
14	B2	NOT USED
15	B3	NOT USED
16	B4	NOT USED
17	B5	YELLOW
18	B6	NOT USED
19	B7	BLUE/PINK
20	B8	RED/YELLOW
21	B9	VIOLET
22	B10	GREEN
23	B11	YELLOW
24	B12	WHITE/YELLOW
25	C1	BLACK
26	C2	ORANGE
27	C3	BLACK
28	C4	WHITE/BLACK
29	C5	GREY
30	C6	BLACK
31	C7	BLUE
32	C8	BROWN
33	C9	WHITE
34	C10	RED
35	C11	NOT USED
36	C12	WHITE/RED

JUMPER INFORMATION

37	FROM A12	RED/WHITE	20	546 (21.5")	38	FROM B9	VIOLET	20	203 (8.0")	39	FROM C6	BLACK	20	203 (8.0")
40a	FROM C4	WHITE/BLACK	20	203 (8.0")										
40b	FROM C4	WHITE/BLACK	20	127 (5.0")										

https://truckmanualshub.com/

6.1. Electrical Schematics

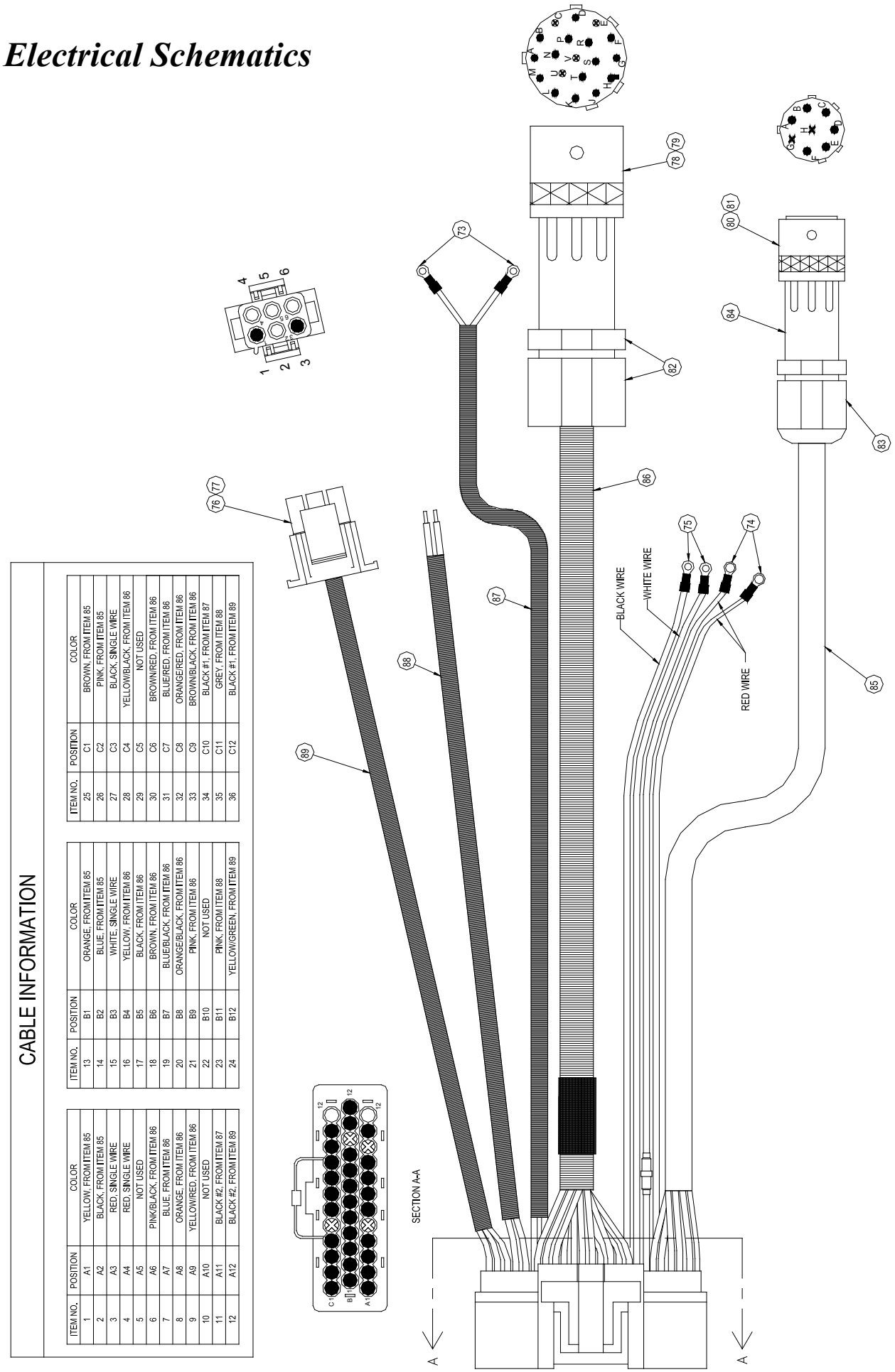

CABLE INFORMATION

ITEM NO.	POSITION	COLOR
1	A1	YELLOW, FROM ITEM 85
2	A2	BLACK, FROM ITEM 85
3	A3	RED, SINGLE WIRE
4	A4	RED, SINGLE WIRE
5	A5	NOT USED
6	A6	PINK/BLACK, FROM ITEM 86
7	A7	BLUE, FROM ITEM 86
8	A8	ORANGE, FROM ITEM 86
9	A9	YELLOW/RED, FROM ITEM 86
10	A10	NOT USED
11	A11	BLACK #2, FROM ITEM 87
12	A12	BLACK #2, FROM ITEM 89

ITEM NO.	POSITION	COLOR
13	B1	ORANGE, FROM ITEM 85
14	B2	BLUE, FROM ITEM 85
15	B3	WHITE, SINGLE WIRE
16	B4	YELLOW, FROM ITEM 86
17	B5	BLACK, FROM ITEM 86
18	B6	BROWN, FROM ITEM 86
19	B7	BLUE/BLACK, FROM ITEM 86
20	B8	ORANGE/BLACK, FROM ITEM 86
21	B9	PINK, FROM ITEM 86
22	B10	NOT USED
23	B11	PINK, FROM ITEM 88
24	B12	YELLOW/GREEN, FROM ITEM 89

ITEM NO.	POSITION	COLOR
25	C1	BROWN, FROM ITEM 85
26	C2	PINK, FROM ITEM 85
27	C3	BLACK, SINGLE WIRE
28	C4	YELLOW/BLACK, FROM ITEM 86
29	C5	NOT USED
30	C6	BROWN/RED, FROM ITEM 86
31	C7	BLUE/RED, FROM ITEM 86
32	C8	ORANGE/RED, FROM ITEM 86
33	C9	BROWN/BLACK, FROM ITEM 86
34	C10	BLACK #1, FROM ITEM 87
35	C11	GREY, FROM ITEM 88
36	C12	BLACK #1, FROM ITEM 89

https://truckmanualshub.com/

6.1. Electrical Schematics

J1 Harness & Connections

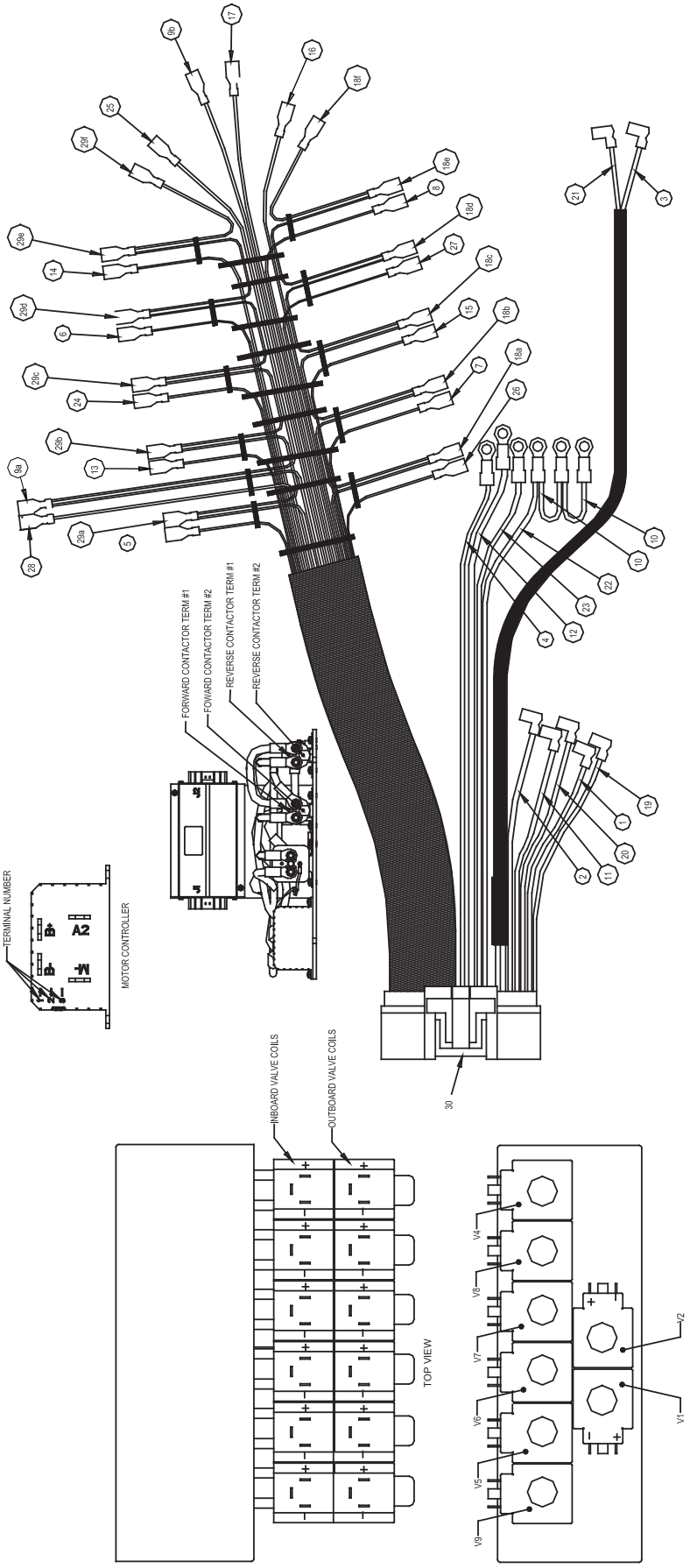

TERMINATION POINTS

ITEM	COLOR	DESCRIPTION	ITEM	COLOR	DESCRIPTION	ITEM	COLOR	DESCRIPTION
1	RED	MOTOR CONTROLLER, TERM 2	11	WHITE	MOTOR CONTROLLER, TERM 3	21	BLACK #1	TO HORN (POSITIVE)
2	GREEN	TO ALARM (NEGATIVE)	12	YELLOW	REVERSE CONTACTOR, TERM 1	22	WHITE/BLACK	PUMP CONTACTOR, TERM 2 SEE SHEET 2 FOR IDENTIFICATION
3	BLACK #2	TO HORN (NEGATIVE)	13	BLUE/PINK	V8, OUTBOARD, POSITIVE	23	GREY	PUMP CONTACTOR, TERM 1 SEE SHEET 2 FOR IDENTIFICATION
4	BROWN	FORWARD CONTACTOR, TERM 1	14	RED/YELLOW	V5, OUTBOARD, POSITIVE	24	BLUE	V7, OUTBOARD, POSITIVE
5	GREY	V4, OUTBOARD, POSITIVE	15	GREEN	V7, INBOARD, POSITIVE	25	BROWN	V9, OUTBOARD, POSITIVE
6	ORANGE	V6, OUTBOARD, POSITIVE	16	YELLOW	V9, INBOARD, POSITIVE	26	WHITE	V4, INBOARD, POSITIVE
7	BLACK/ORANGE	V8, INBOARD, POSITIVE	17	WHITE/YELLOW	V1, POSITIVE	27	RED	V6, INBOARD, POSITIVE
8	ORANGE/VIOLET	V5, INBOARD, POSITIVE	18	VIOLET	(18a - V4, INBOARD, NEG) (18b - V8, INBOARD, NEG) (18c - V7, INBOARD, NEG) (18d - V6, INBOARD, NEG) (18e - V5, INBOARD, NEG) (18f - V9, INBOARD, NEG)	28	WHITE/RED	V2, POSITIVE
9	RED/WHITE	9a, V2 NEGATIVE 9b, V1 NEGATIVE	19	BLACK	MTR CONTROLLER, TERM 1	29	BLACK	(29a - V4, OUTBOARD, NEG) (29b - V8, OUTBOARD, NEG) (29c - V7, OUTBOARD, NEG) (29d - V6, OUTBOARD, NEG) (29e - V5, OUTBOARD, NEG) (29f - V9, OUTBOARD, NEG)
10	WHITE/BLACK	FWD & REV CONTACTORS, TERM 2	20	ORANGE	ALARM (POSITIVE)	30	AMP TERMINAL	PLUGS INTO LEFT SIDE (J1 SIDE) OF ECU

HYDRAULIC VALVE FUNCTIONS

REFERENCE	NAME	FUNCTION	LOCATION
V1	BRAKE OIL SUPPLY VALVE	ALLOWS OIL INTO BRAKE RELEASE CHAMBER	ON MAIN MANIFOLD BLOCK
V2	BRAKE VALVE	VENTS OIL BACK TO TANK WHEN DE-ENERGIZED	ON MAIN MANIFOLD BLOCK
V3	PRESSURE REDUCTION VALVE	PREVENTS PRESSURES OVER 100 BAR ENTERING BRAKE CHAMBER	ON MAIN MANIFOLD BLOCK
V4	SLEW DIRECTIONAL CONTROL VALVE	OIL SENT TO LEFT OR RIGHT SLEW MOTOR	ON MAIN MANIFOLD BLOCK
V5	STEER DIRECTIONAL CONTROL VALVE	OIL SENT TO STEERING	ON MAIN MANIFOLD BLOCK
V6	TELE DIRECTIONAL CONTROL VALVE	OIL SENT TO TELESCOPIC CYLINDER	ON MAIN MANIFOLD BLOCK
V7	BOOM 2 DIRECTIONAL CONTROL VALVE	OIL SENT TO BOOM 1 CYLINDER	ON MAIN MANIFOLD BLOCK
V8	BOOM 1 DIRECTIONAL CONTROL VALVE	OIL SENT TO BOOM 1 CYLINDER	ON MAIN MANIFOLD BLOCK
V9	LEVELING DIRECTIONAL CONTROL VALVE	OIL SENT TO LEVELING CYLINDERS	ON MAIN MANIFOLD BLOCK

https://truckmanualshub.com/

NOTES:

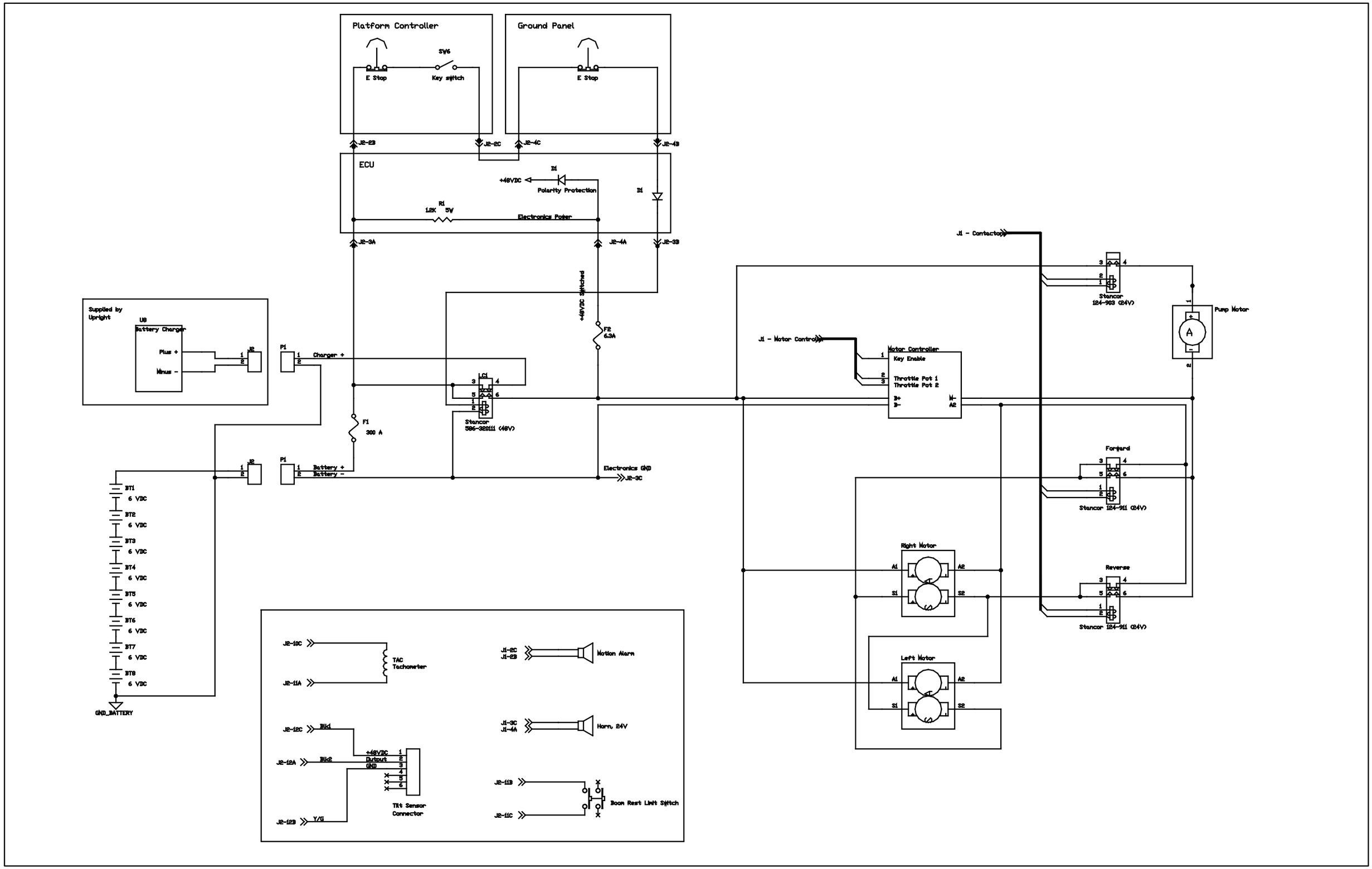
Platform Controller
SW6
E Stop
Key switch
Ground Panel
E Stop
J2-2B
J2-2C
J2-4C
J2-4B
ECU
D1
+48VDC
Polarity Protection
D1
R1
1.2K 5W
Electronics Power
J2-3A
J2-4A
J2-3B
+48VDC Switched
F2
6.3A
J1 - Contactor
Supplied by Upright
UB
Battery Charger
Plus +
Minus -
J2
P1
Charger +
F1
300 A
LC1
Stancor
586-320111 (48V)
J1 - Motor Control
Motor Controller
Key Enable
Throttle Pot 1
Throttle Pot 2
B+
B-
M-
A2
Stancor
124-903 (24V)
Pump Motor
A
Forward
Stancor 124-911 (24V)
Reverse
Stancor 124-911 (24V)
Right Motor
A1
A2
S1
S2
Left Motor
A1
A2
S1
S2
P1
Battery +
Battery -
Electronics GND
J2-3C
BT1
BT2
BT3
BT4
BT5
BT6
BT7
BT8
6 VDC
GND_BATTERY
J2-10C
TAC
Tachometer
J2-11A
J2-12C
Blk1
J2-12A
Blk2
J2-12B
Y/G
+48VDC Output
GND
Tilt Sensor Connector
J1-2C
J1-2B
Motion Alarm
J1-3C
J1-4A
Horn, 24V
J2-11B
J2-11C
Boom Rest Limit Switch

https://truckmanualshub.com/

HYDRAULIC VALVE FUNCTIONS

REFERENCE	NAME	FUNCTION	LOCATION
V1	BRAKE OIL SUPPLY VALVE	ALLOWS OIL INTO BRAKE RELEASE CHAMBER	ON MAIN MANIFOLD BLOCK
V2	BRAKE VALVE	VENTS OIL BACK TO TANK WHEN DE-ENERGIZED	ON MAIN MANIFOLD BLOCK
V3	PRESSURE REDUCTION VALVE	PREVENTS PRESSURES OVER 100 BAR ENTERING BRAKE CHAMBER	ON MAIN MANIFOLD BLOCK
V4	SLEW DIRECTIONAL CONTROL VALVE	OIL SENT TO LEFT OR RIGHT SLEW MOTOR	ON MAIN MANIFOLD BLOCK
V5	STEER DIRECTIONAL CONTROL VALVE	OIL SENT TO STEERING	ON MAIN MANIFOLD BLOCK
V6	TELE DIRECTIONAL CONTROL VALVE	OIL SENT TO TELESCOPIC CYLINDER	ON MAIN MANIFOLD BLOCK
V7	BOOM 2 DIRECTIONAL CONTROL VALVE	OIL SENT TO BOOM 1 CYLINDER	ON MAIN MANIFOLD BLOCK
V8	BOOM 1 DIRECTIONAL CONTROL VALVE	OIL SENT TO BOOM 1 CYLINDER	ON MAIN MANIFOLD BLOCK
V9	LEVELING DIRECTIONAL CONTROL VALVE	OIL SENT TO LEVELING CYLINDERS	ON MAIN MANIFOLD BLOCK

TERMINATION POINTS

ITEM	COLOR	DESCRIPTION	ITEM	COLOR	DESCRIPTION	ITEM	COLOR	DESCRIPTION
1	RED	MOTOR CONTROLLER, TERM 2	11	WHITE	MOTOR CONTROLLER, TERM 3	21	BLACK #1	TO HORN (POSITIVE)
2	GREEN	TO ALARM (NEGATIVE)	12	YELLOW	REVERSE CONTACTOR, TERM 1	22	WHITE/BLACK	PUMP CONTACTOR, TERM 2 SEE SHEET 2 FOR IDENTIFICATION
3	BLACK #2	TO HORN (NEGATIVE)	13	BLUE/PINK	V8, OUTBOARD, POSITIVE	23	GREY	PUMP CONTACTOR, TERM 1 SEE SHEET 2 FOR IDENTIFICATION
4	BROWN	FORWARD CONTACTOR, TERM 1	14	RED/YELLOW	V5, OUTBOARD, POSITIVE	24	BLUE	V7, OUTBOARD, POSITIVE
5	GREY	V4, OUTBOARD, POSITIVE	15	GREEN	V7, INBOARD, POSITVE	25	BROWN	V9, OUTBOARD, POSITIVE
6	ORANGE	V6, OUTBOARD, POSITIVE	16	YELLOW	V9, INBOARD, POSITIVE	26	WHITE	V4, INBOARD, POSITIVE
7	BLACK/ORANGE	V8, INBOARD, POSITIVE	17	WHITE/YELLOW	V1, POSITIVE	27	RED	V6, INBOARD, POSITIVE
8	ORANGE/VIOLET	V5, INBOARD, POSITIVE	18	VIOLET	(18a - V4, INBOARD, NEG) (18b - V8, INBOARD, NEG) (18c - V7, INBOARD, NEG) (18d - V6, INBOARD, NEG) (18e - V5, INBOARD, NEG) (18f - V9, INBOARD, NEG)	28	WHITE/RED	V2, POSITIVE
9	RED/WHITE	9a, V2 NEGATIVE 9b, V1 NEGATIVE	19	BLACK	MTR CONTROLLER, TERM 1	29	BLACK	(29a - V4, OUTBOARD, NEG) (29b - V8, OUTBOARD, NEG) (29c - V7, OUTBOARD, NEG) (29d - V6, OUTBOARD, NEG) (29e - V5, OUTBOARD, NEG) (29f - V9, OUTBOARD, NEG)
10	WHITE/BLACK	FWD & REV CONTACTORS, TERM 2	20	ORANGE	ALARM (POSITIVE)	30	AMP TERMINAL	PLUGS INTO LEFT SIDE (J1 SIDE) OF ECU

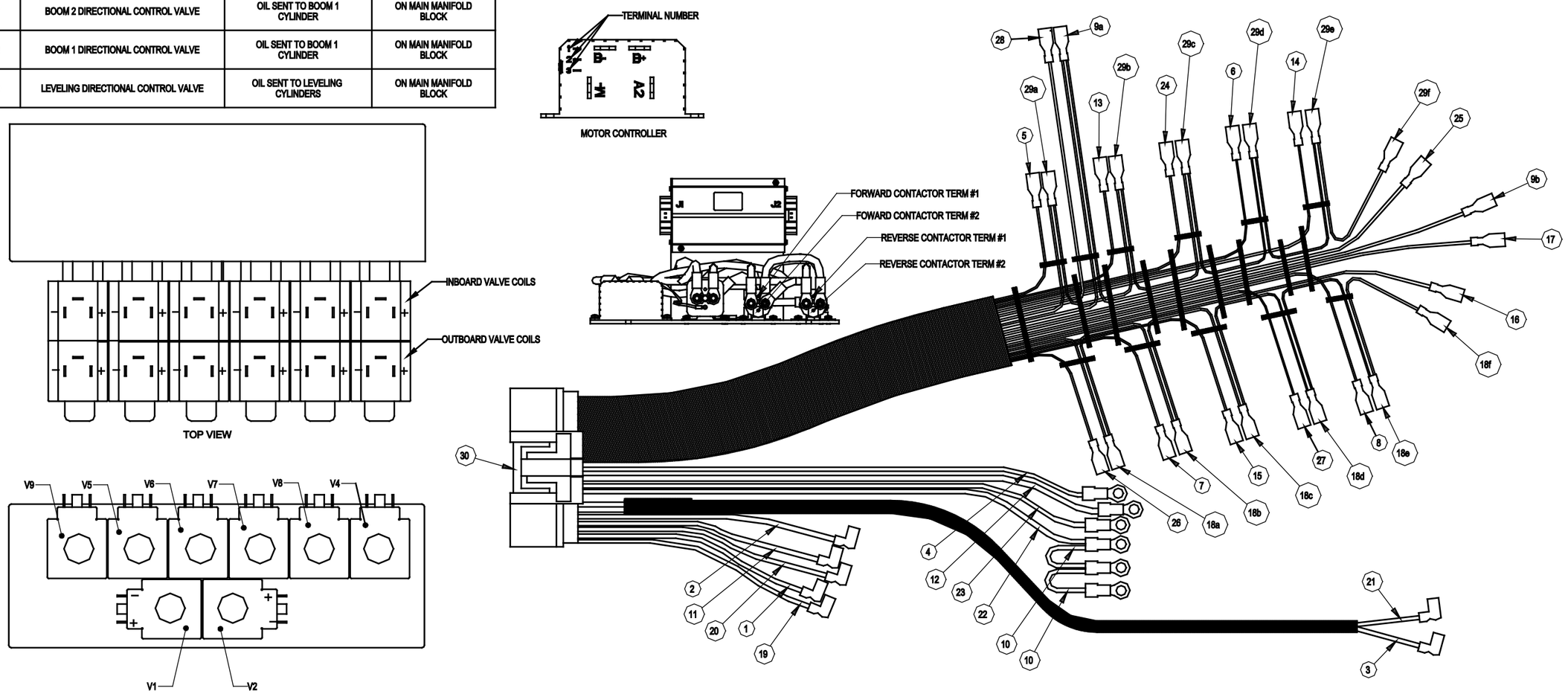

https://truckmanualshub.com/

6.2. Hydraulic Schematics

Table 6-2: Hydraulic Schematic Legend

REFERENCE	NAME	FUNCTION	LOCATION
BRK	Brake.	Spring applied - hydraulically released brakes to stop rotation of drive wheels. (Set at 100 Bar).	On front end of wheel drive motors on chassis.
CLRV	Cross-line relief valve.	To limit the max. operating pressure of the slew motor. (Set at 50 Bar).	On main manifold block.
CV	Check Valve.	To prevent oil pressure in the brake line from being lost through the main pressure line.	On main manifold block.
CYL1	Lower boom lift cylinder.	Provides the force to lift the lower boom - Boom1.	Foward of first post
CYL2	Upper boom lift cylinder.	Provide the force to lift the upper boom - Boom2.	Behind second post
CYL3	Tlelscopic cylinder.	Provides the force to push/pull the tele-boom - Boom3.	Inside Boom2 & Tele boom.
CYL4	Steering cylinder.	Provides the force to push/pull the steering torque arms.	Inside front of chassis.
CYL5	Master levelling cylinder.	Provides the pressure to the slave cylinder for cage levelling.	Behind the second post
CYL6	Slave levelling cylinder.	Provides the force to level the cage up/down.	Close to cage pivot at inner Tele boom.
FL1	Return line filter. (10 Micron)	Continuously filters hydraulic return oil.	On top of the hydraulic reservoir.
HP	Handpump.	Used for retraction of tele boom in the case of power failure. Delivers 15cc/stroke.	On side of manifold block.
MMB	Main manifold block.	Contains the directional control valves and relief valves that distribute oil to the various functions and control the operating pressures.	On hydraulic reservoir in chassis.
MOT1	Slew Motor.	Drives slew bearings drive pinion.	Connected to drive pinion.
MP	Motor/Pump set.	Gear pump close coupled to D.C electric motor. Provides pressurised oil flow for all hydraulic functions.	On chassis.
V1	Brake oil supply valve.	This valve is energised to allow oil into the brake release chamber.	On main manifold block
V2	Brake valve.	When energised this valve prevents the pressurised brake oil from venting back to tank. When the machine is stationary this valve de-energises and the brake oil vents to tank and the brake springs apply themselves and keep the machine stationary.	On main manifold block.
V3	Pressure reduction valve.	Prevents pressures in excess of 100 Bar entering the brake chambers.	On main manifold block.
V4	Slew Directional Control Valve.	Send oil to the left or right side of the slew motor.	On main manifold block.
V5	Steer Directional Control Valve.	Send oil to the annular or full-bore side of the steering cylinder.	On main manifold block.
V6	Tele Directional Control Valve.	Send oil to the annular or full-bore side of the telescopic cylinder.	On main manifold block.
V7	Boom2 Directional Control Valve.	Send oil to the annular or full-bore side of the Boom2 cylinder.	On main manifold block.
V8	Boom1 Directional Control Valve.	Send oil to the annular or full-bore side of the Boom1 cylinder.	On main manifold block.
V9	Levelling Directional Control Valve.	Send oil to the annular or full-bore side of the levelling cylinders.	On main manifold block.
V10 (RV)	Main relief valve.	Sets max system pressure to 145 Bar	On main manifold block.
V11	Single Overcentre valve.	Prevents back flow and provides a hydraulic lock on the cylinder.	On base of upper, lower & tele cylinders.
V12	Emergency lowering valve.	Allows upper and lower boom to be manually lowered.	On base of upper and lower cylinders.
V13	Pilot operated check valve.	Holds tele cylinder in position after controls are released	On base of tele cylinder.
V14	Dual Overcentre valve.	Holds pressure in master/slave closed circuit and provides host burst protection. (Set 160 Bar).	On base of master cylinder.
V15	Dual Overcentre valve.	Holds pressure in slave cylinder and provides host burst protection. (Set 120 Bar).	On base of slave cylinder.

Notes:

1. All of the Overcentre Valves represented within this schematic have a 5:1 Pilot Ratio.
2. The P/O Check Valve represented has a 3:1 Pilot Ratio.
3. The maximum flow rate of the Pump/Motor Unit is limited to 15 L/min @ 100% speed. Although it should be noted that the actual flow rate will depend on the applied load and the D.C. Motor speed.
4. The maximum 'Return' flow rates for each of the functions are restricted to the following values;

- Slew... 4 L/min
- Boom1... 8 L/min
- Boom2... 5 L/min
- Tele... 5 L/min
- Steering... 6 L/min.

https://truckmanualshub.com/

NOTES:

https://truckmanualshub.com/

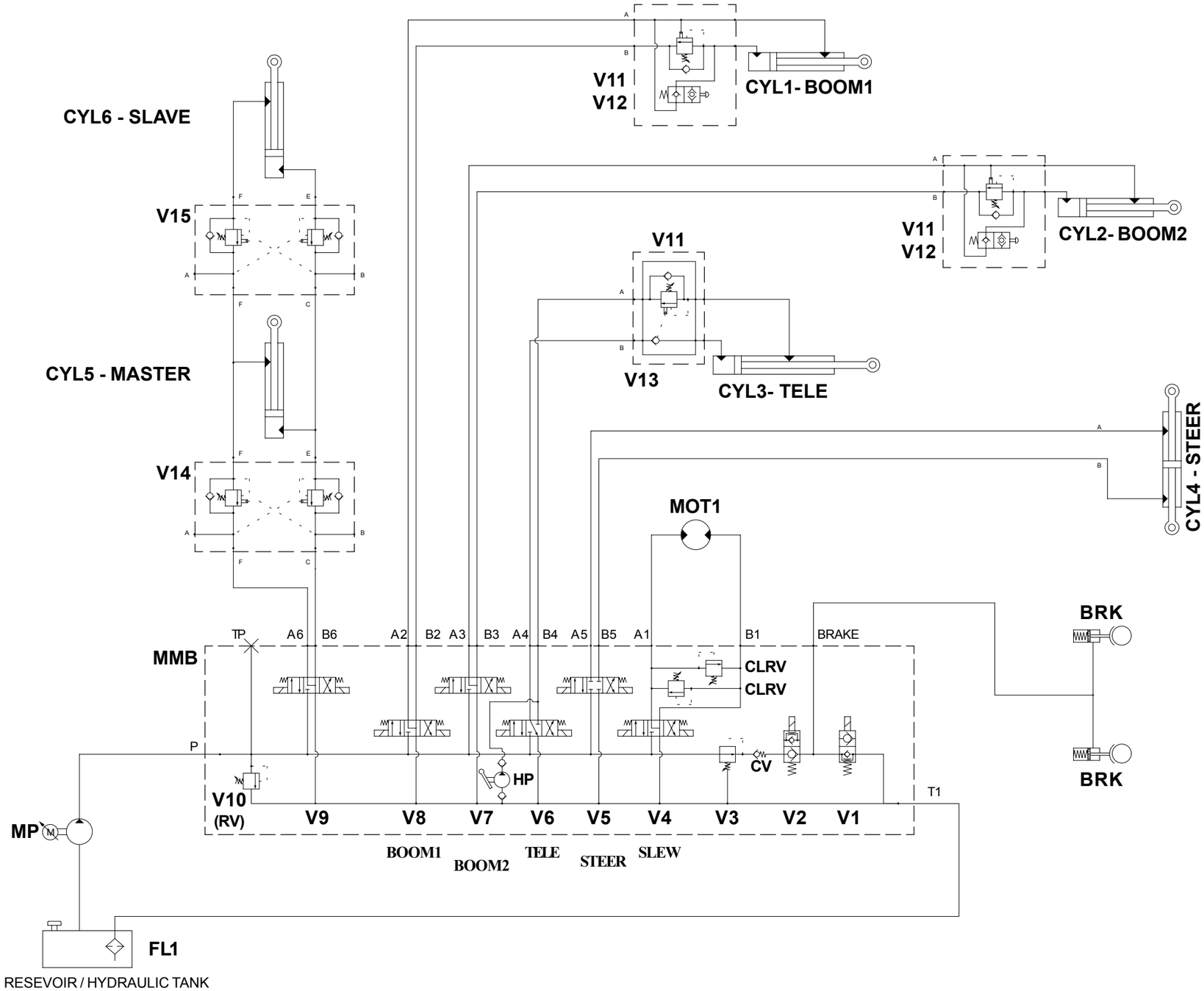

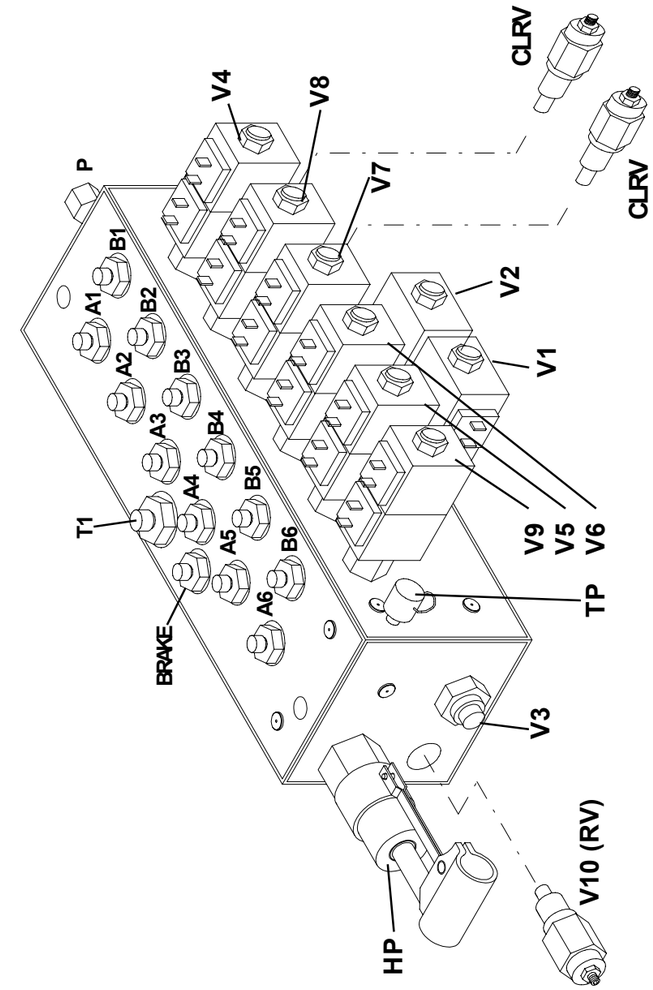

MMB - **Main Manifold Block**

https://truckmanualshub.com/
Schematics

NOTES:

https://truckmanualshub.com/

7.0 Introduction

This section lists and illustrates the replaceable assemblies and parts of the AB38 Work Platform as manufactured by ***UpRight UK.***

Each parts list contains the component parts for that assembly indented to show relationship where applicable.

7.1 Index

Assembly **Page**

Final Assembly AB38 7-2
Chassis Assembly 7-4
Booms and Posts Assembly 7-6
Cage and Cradle Assembly 7-8
Cage and Cradle Assembly (Rotator) 7-10
Wheel Hub Assembly 7-12
Drive Reduction Gearbox Assembly 7-14
Traction Motor Assembly 7-16
Motor / Pump Assembly 7-18
Rear & Front Wheel Kit 7-20
Worm Drive Unit & Slew Bearing Assembly 7-22
Manifold Block Assembly 7-24
Lower Lift Cylinder Assembly 7-26
Upper Lift Cylinder Assembly 7-28
Telescopic Cylinder Assembly 7-30
Steering Cylinder Assembly 7-32
Master / Slave Cylinder Assembly 7-34
Pump & Traction Motor Control Unit Assembly 7-36
Lower Control Box Assembly 7-38
Upper Control Box Assembly 7-40
Cables & Electrical Components 7-42
Hose Assembly 7-44
Decal Kit - ANSI Version 7-46
Decal Kit - CE Version 7-48
Decal Kit - French/German Versions 7-50
Options List 7-52

https://truckmanualshub.com/

FINAL ASSEMBLY AB38 -

500200-001 (ANSI Version)
500200-000 (CE Version)

ITEM	PART NO.	DESCRIPTION	QTY.
-	500202-000	Chassis Assembly	-
-	500201-000	Booms and Posts Assembly	-
-	057603-000	Cage and Cradle Assembly	-
-	057580-000	Drive Reduction Gearbox Assembly	-
-	057568-000	Traction Motor Assembly - Right Hand	-
	058834-000	Traction Motor Assembly - Left Hand	-
-	057530-000	Motor / Pump Assembly	-
-	500494-000	Rear & Front Wheel Assembly	-
-	500284-001	Pinion Gearbox & Slew Bearing Assy.	-
-	500261-000	Manifold Block Assembly	-
-	058460-000	Lower Lift Cylinder Assembly	-
-	058462-000	Upper Lift Cylinder Assembly	-
-	058461-000	Telescopic Cylinder Assembly	-
-	058463-000	Steering Cylinder Assembly	-
-	058734-000	Master Cylinder Assembly	-
	058735-000	Slave Cylinder Assembly	-
-	500483-000	Pump Motor Control Unit Assembly	-
-	500490-000	Lower Control Box Assembly	-
-	500491-000	Upper Control Box Assembly	-
-	500482-000	Circuit Board Box & Harnesses	-
-	-	Cables & Electrical Components	-
-	500360-000	Hose Assembly	-
-	-	Decal Kit	-

https://truckmanualshub.com/

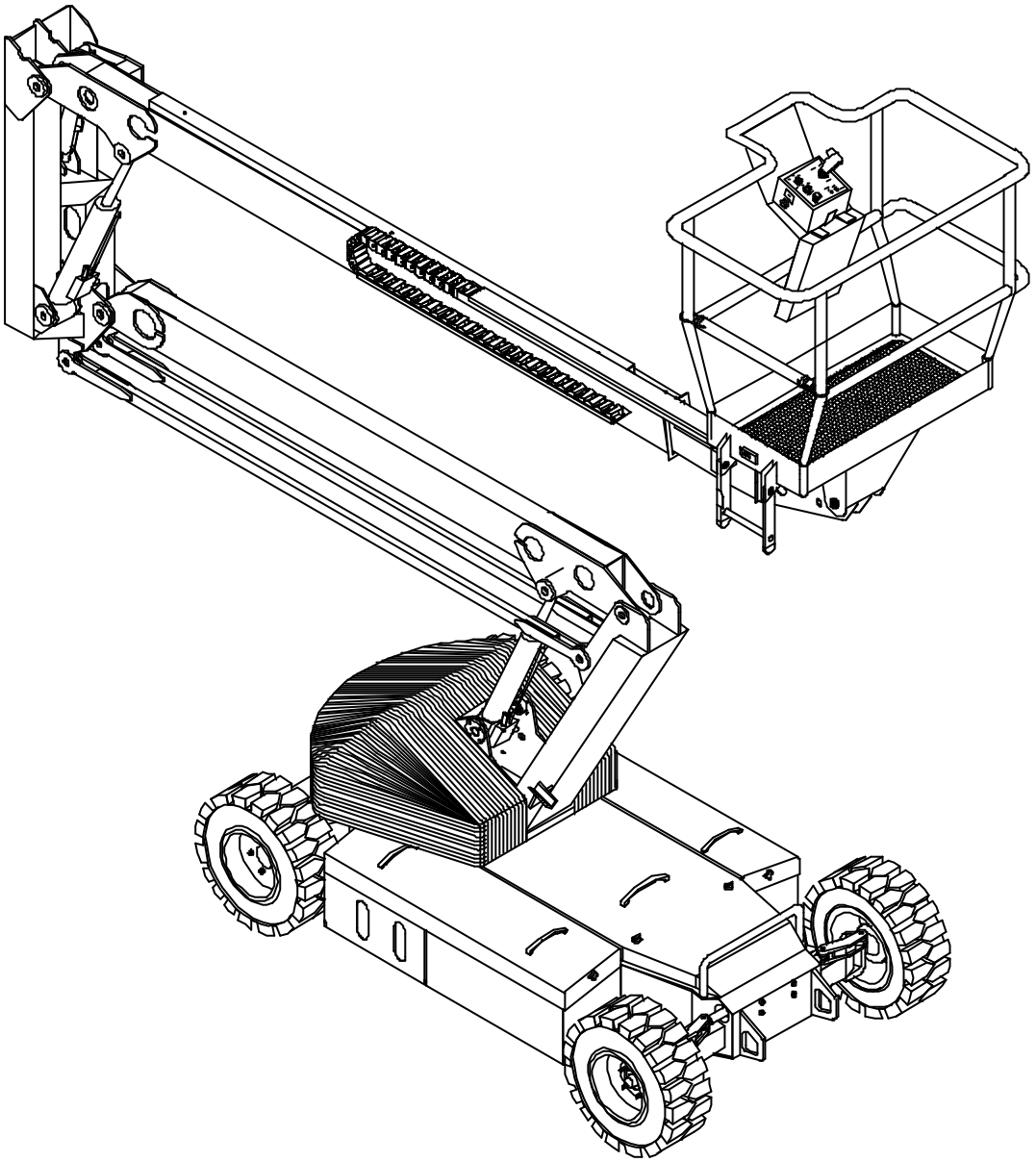

https://truckmanualshub.com/

CHASSIS ASSEMBLY AB38 -

500202-000

ITEM	PART NO.	DESCRIPTION	QTY.
1	500210-000	AB38 CHASSIS WELDMENT	1
2	500232-000	AB38 DRIVE MOTOR COVER	1
3	500233-000	AB38 CHASSIS BODY COVER	1
4	500231-000	AB38 MODULE COVER	2
5	500052-000	GRAB HANDLE	6
6	057727-000	TWIST SCREW FASTENER	4
7	500259-000	AB38 COVER GRIP LATCH	4
8	500261-000	AB38 MANIFOLD BLOCK	1
9	500260-000	AB38 HYDRAULIC RESERVOIR ASSY.	1
10	057532-000	RESERVOIR RETURN LINE FILTER	1
11	058074-000	FILTER ELEMENT ASSEMBLY	1
12	058834-000	DRIVE MOTOR, LEFT HAND SIDE	1
13	057569-001	TACHOMETER ADAPTOR KIT	1
14	057569-000	TACHOMETER	1
*	057570-000	TACHO COUPLING	1
15	057568-000	DRIVE MOTOR, RIGHT HAND SIDE	1
16	057281-000	TILT SENSOR	1
17	057530-000	MOTOR/PUMP ASSEMBLY	1
18	057578-000	REAR WHEEL NUT - M14	10
19	057668-001	REAR WHEEL TYRE & RIM ASSY.	2
20	057667-003	FRONT WHEEL TYRE & RIM ASSY.	2
21	057666-000	FRONT WHEEL NUT - M16	10
22	057669-000	STEERING STUB AXLE ASSY.	2
23	058427-000	AB38 TORQUE ARMS	2
24	500253-001	AB38 STEERING LINKAGE PIN	4
*	500252-000	CIRCLIP 16 mm	4
*	500408-000	BUSHINGS	2
25	500250-000	AB38 STEERING LINK ARM	2
26	058463-000	AB38 STEERING CYLINDER	1
*	056065-035	MOUNTING BOLTS M12	4
*	056021-012	SPRING WASHER	4
27	057573-000	CHARGER 220/110VAC 50/60Hz	1
28	057586-000	HORN	1
29	500234-002	AB38 CHASSIS SIDE DROP PANEL - WITH SLOTS	1
*	500410-001	DROP PANEL LOCK (Complete)	1
30	501074-000	BATTERY 6V 220AH	8
*	010154-000	TERMINAL COVERS	18
31	-	-	-
32	501862-000	MOTOR CONTROLLER ASSEMBLY	1
33	500234-001	AB38 CHASSIS SIDE DROP PANEL - WITHOUT SLOTS	1
*	500410-001	DROP PANEL LOCK (Complete)	1
34	057580-000	DRIVE GEARBOX	1
35	057045-000	SPIRIT LEVEL	1

https://truckmanualshub.com/

Illustrated Parts Breakdown

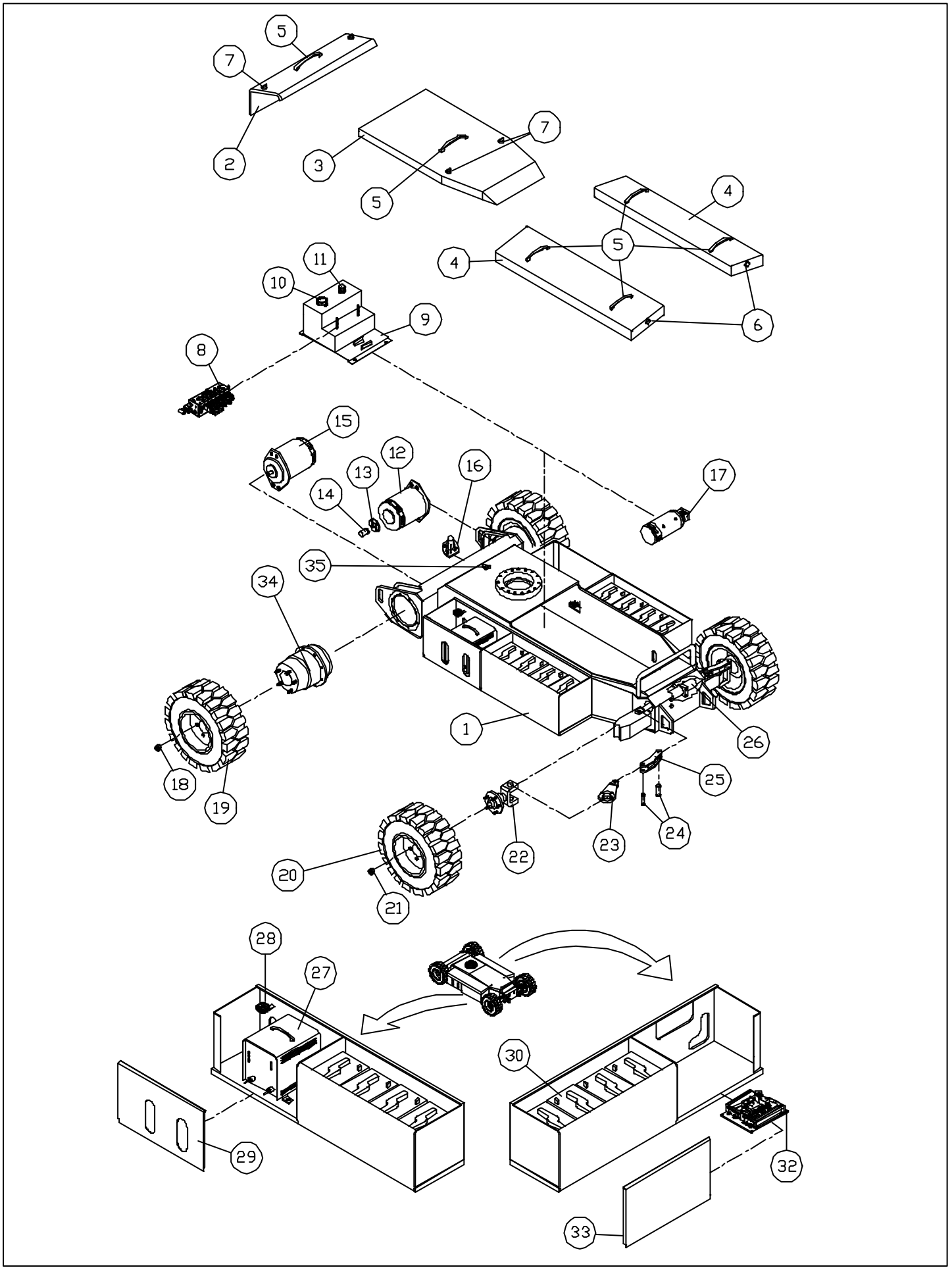

https://truckmanualshub.com/

BOOMS & POSTS ASSEMBLY

500201-000

ITEM	PART NO.	DESCRIPTION	QTY.
1	058412-000	AB38 FIRST POST WELDMENT	1
2	058431-001	BALLAST COVER (ANSI / Wide Only)	1
	See manufacturer	BALLAST (Inc Cover)CE Narrow ONLY	1
3	058417-000	AB38 TENSION BAR WELDMENT	2
4	058416-000	AB38 SECOND POST WELDMENT	1
5	058413-000	AB38 LOWER BOOM WELDMENT	1
6	058414-001	OUTER TELE BOOM WELDMENT	1
7	058415-001	INNER TELESCOPIC BOOM WELDMENT	1
8	500245-000	AB38 HOSE & CABLE COVER	1
9	500265-000	COVER FOR ENERGY CHAIN CHANNEL	1
*	057727-000	TWIST SCREW FASTENER	2
10	500266-000	ENERGY CHAIN SUPPORT CHANNEL	1
11	500468-000	ENERGY CHAIN - COMPLETE	1
	500468-002	ENERGY CHAIN (1 UNIT OF 24)	24
	500468-001	MOUNTING ELEMENTS	1
12	057976-000	INNER TELESCOPIC BOOM WEAR PAD	2
*	058510-010	BOLT M8 x 10 mm	8
13	500275-001	OUTER TELESCOPIC BOOM WEAR PAD	2
*	056058-015	BOLT M6 x 15 mm	8
*	056069-006	WASHER M6	8
*	056069-008	WASHER M8	8
14	504504-000	AB38 LOWER LIFT CYLINDER	1
15	504505-000	AB38 UPPER LIFT CYLINDER	1
16	058734-000	AB38 MASTER LEVELLING CYLINDER	1
17	058735-000	AB38 SLAVE LEVELLING CYLINDER	1
18	058461-000	AB38 TELESCOPIC CYLINDER	1
19	058056-000	PIN LOCK PLATE	14
*	056060-020	BOLT M10 x 20 mm	14
*	056021-010	SPRING WASHER 10 mm	14
20	058055-006	PIN - LOWER & UPPER BOOM TO FIRST & SECOND POST	3
21	058054-002	PIN - TENSION BARS	4
22	058066-005	PIN - LIFT CYLINDERS ROD END	2
23	058066-007	PIN - UPPER LIFT CYLINDER BODY END	1
24	058053-004	PIN - MASTER CYLINDER ROD END	1
25	058053-005	PIN - MASTER CYLINDER BODY END	1
26	058065-006	PIN - TELE CYLINDER BODY END	1
27	500254-000	PIN - TELE CYLINDER ROD END	1
28	058053-001	PIN - SLAVE CYLINDER BODY END	1
29	058065-005	PIN - SLAVE CYLINDER ROD END	1
30	058066-001	PIN - TELESCOPIC BOOM TO CAGE	1
31	057033-000	CIRCLIP 30 mm	4
32	057047-000	BUSHING STRAIGHT 25 mm	12
33	057054-000	BUSHING FLANGED 30 mm	12
34	057046-000	BUSHING FLANGED 35 mm	6
35	057034-000	CIRCLIP 25 mm	4
36	501085-000	BOOM REST (BOLT ON)	1

NOTE : Item 14 & 15 serial break information

Item 14
Serial 2890 - 3144 : Part number 058460-000
Serial 3145 - Current : Part number 504504-000

Item 15
Serial 2890 - 3144 : Part number 058462-000
Serial 3145 - Current : Part number 504505-000

https://truckmanualshub.com/

Illustrated Parts Breakdown

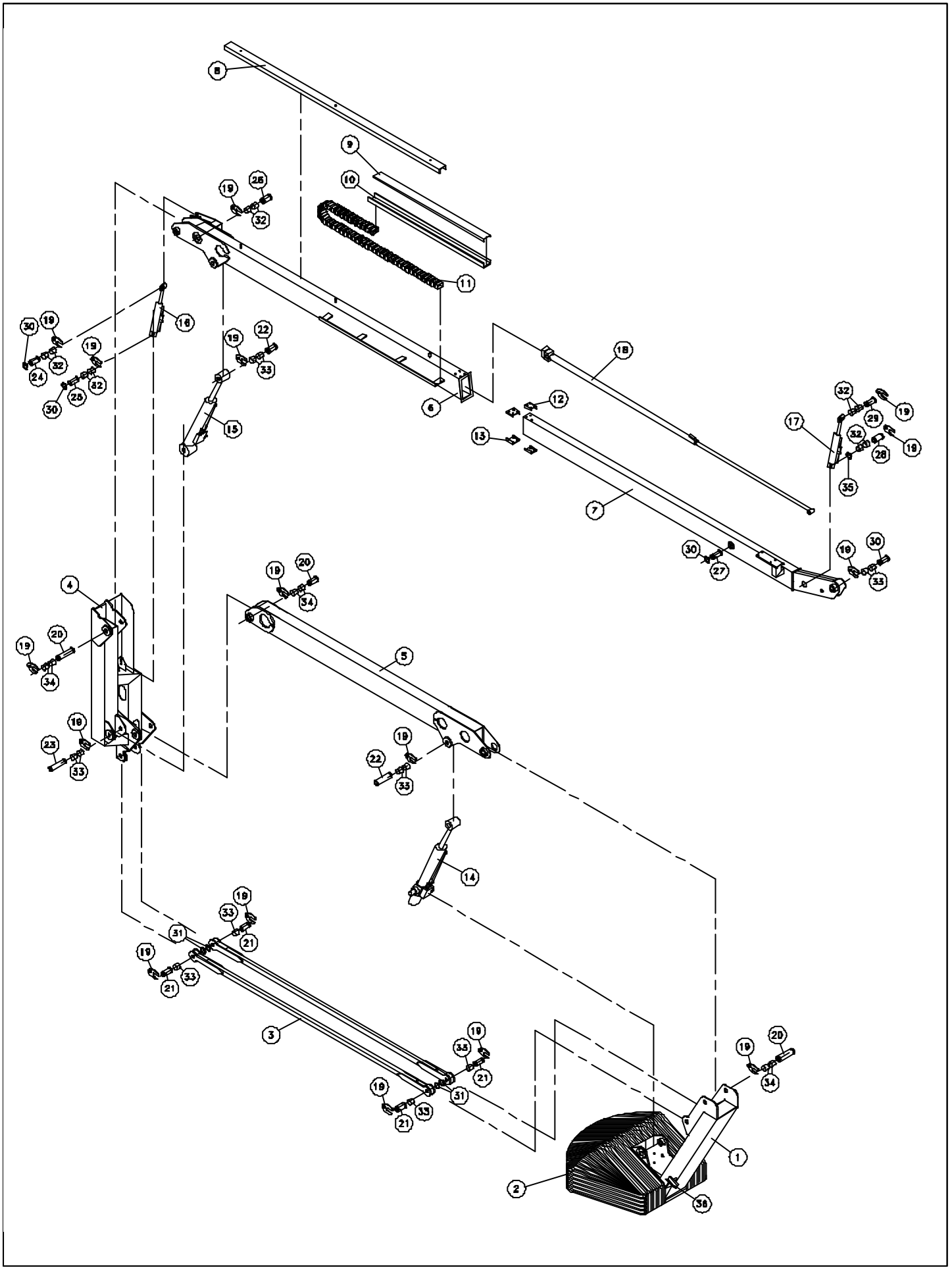

https://truckmanualshub.com/

CAGE & CRADLE ASSEMBLY(STANDARD)

057603-000 (501864-000 is not included as part of this assembly)
(ANSI is Without Overload)

ITEM	PART NO.	DESCRIPTION	QTY.
1	057521-003	CAGE RAIL ASSY.	1
2	508930-000	DROP BAR ASSY.	1
3	057523-000	CONTROL BOX MOUNTING PLATE	1
4	501864-000	AB38 UPPER CONTROL BOX	1
5	010076-000	MANUAL HOLDER	1
6	501970-000	AB38 CAGE FLOOR WELDMENT	1
7	058251-000	LADDER LOCKING LATCH	1
8	057348-000	LADDER	1
9	501886-000	OVERLOAD UNIT(Ansi 509791-000)	1
10	056066-012	M12 NYLOCK NUT	2
11	056069-016	M16 WASHER	8
12	503101-045	M16 X 45 HEX HEAD SCREW	8
13	056069-012	M12 WASHER	4
14	058494-040	M12 X 40 HEX HEAD SCREW	2
15	501971-000	CAGE CRADLE WELDMENT	1

Note : Ensure that items 10 and 14 (M12 screw and drilled nut with pin) remain loose, these are safety bolts.

https://truckmanualshub.com/

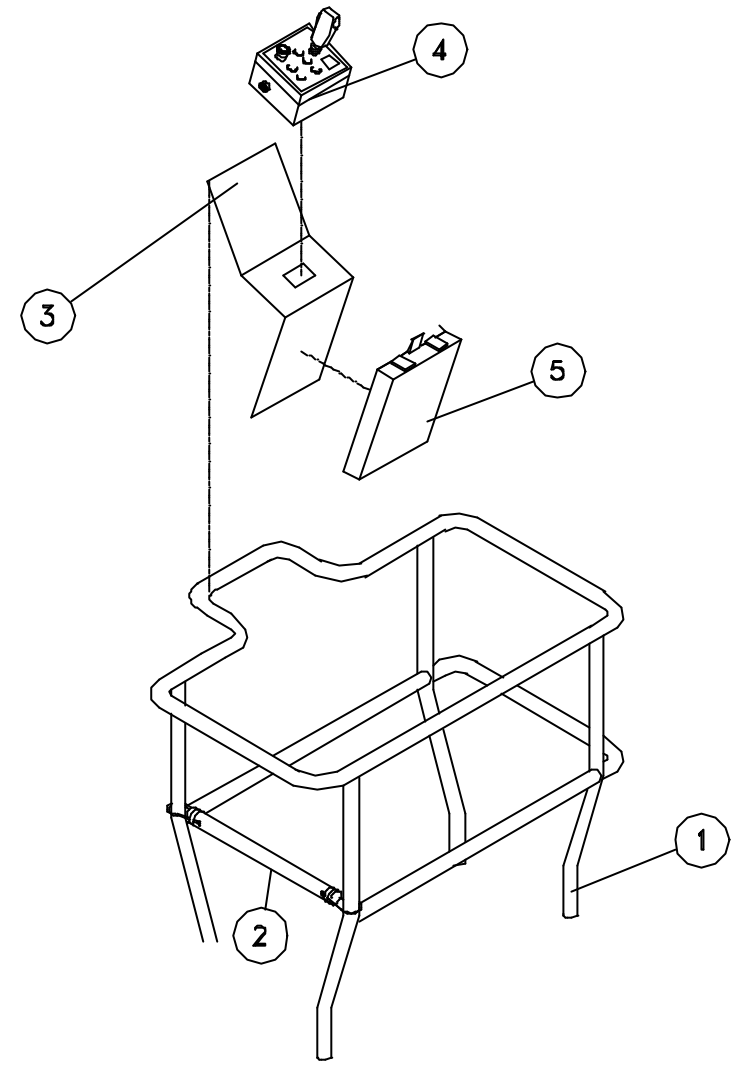

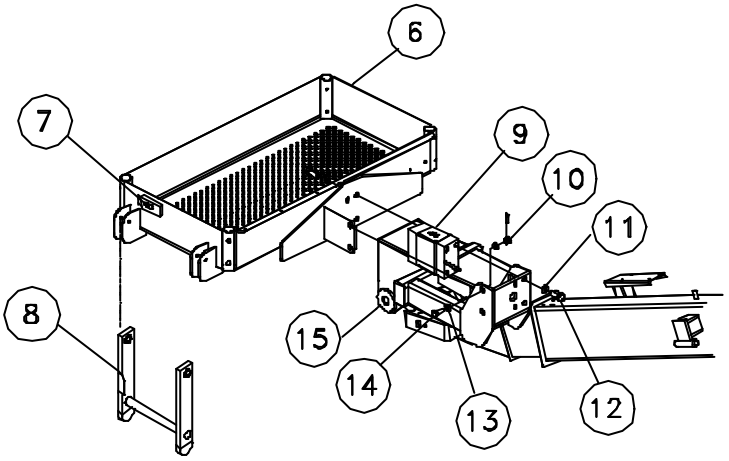

https://truckmanualshub.com/

CAGE ROTATOR ASSEMBLY(OPTION)

500905-000 (501864-000 is not included as part of this assembly)
(ANSI is Without Overload)

ITEM	PART NO.	DESCRIPTION	QTY.
1	501864-000	UPPER CONTROL BOX.	1
2	500973-000	MOUNTING PLATE.	1
3	500985-000	ROTATING HANDLE	1
4	500922-000	GEARBOX	1
5	500905-034	HANDLE	1
6	500905-030	DRIVE SHAFT	1
7	508930-000	DROP BAR ASSY	1
8	057521-001	CAGE RAIL ASSY	1
9	501970-000	WELDMENT, CAGE BASE	1
10	501886-000	OVERLOAD UNIT (Ansi 509791-000)	1
11	058494-040	M12 X 40 HEX HEAD SCREW	2
12	056069-016	M16 WASHER	8
13	503101-040	M16 X 40 HEX HEAD SCREW	8
14	500924-000	48mm THRUST WASHER	1
15	501971-001	CAGE CRADLE WELDMENT	1
16	500993-000	45mm BUSHING X 30mm LONG	2
17	501972-000	WELDMENT, CAGE LINK	1
18	058066-012	M12 NYLOCK NUT	2
19	057347-001	LADDER	1
20	058251-000	LOCKING CATCH	1
21	057405-000	LADDER BUSHING	2
22	509466-000	ROLL PIN ROTATE LINK	1

Note : Ensure that items 11 and 18 (M12 screw and drilled nut with pin) remain loose, these are safety bolts.

https://truckmanualshub.com/

Illustrated Parts Breakdown

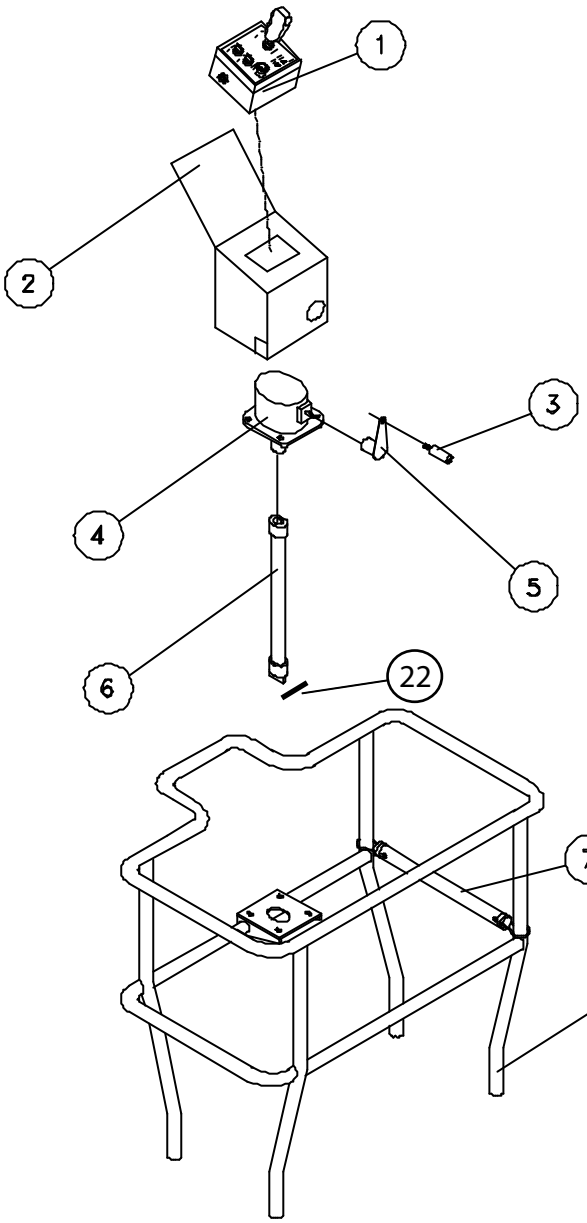

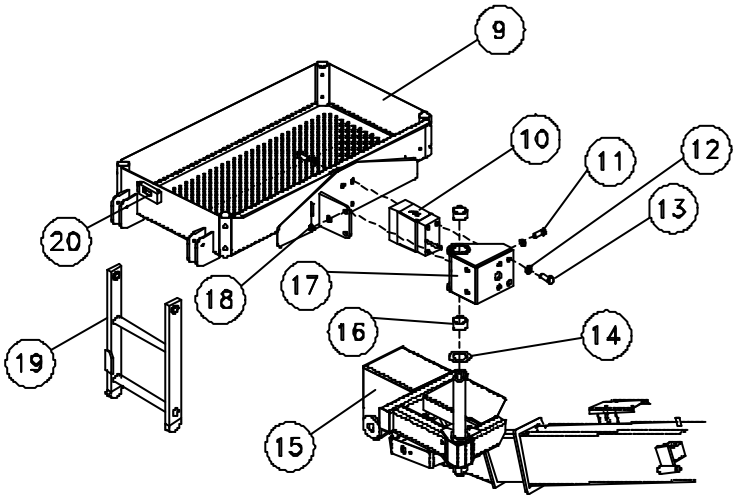

https://truckmanualshub.com/

CAGE ROTATOR ASSEMBLY

057669-000

ITEM	PART NO.	DESCRIPTION	QTY.
1	057665-000	WHEEL HUB	1
2	057664-000	THRUST BEARING	1
3	057662-000	PIVOT BOSS	1
4	057663-000	PIVOT PIN	1
5	057585-000	COVER PLATE	1
6	057584-000	OUTER HUB BEARING	1
7	057583-000	INNER HUB BEARING	1
8	057582-000	STUD	1
9	057669-002	PLASTIC BUSHING	1

https://truckmanualshub.com/

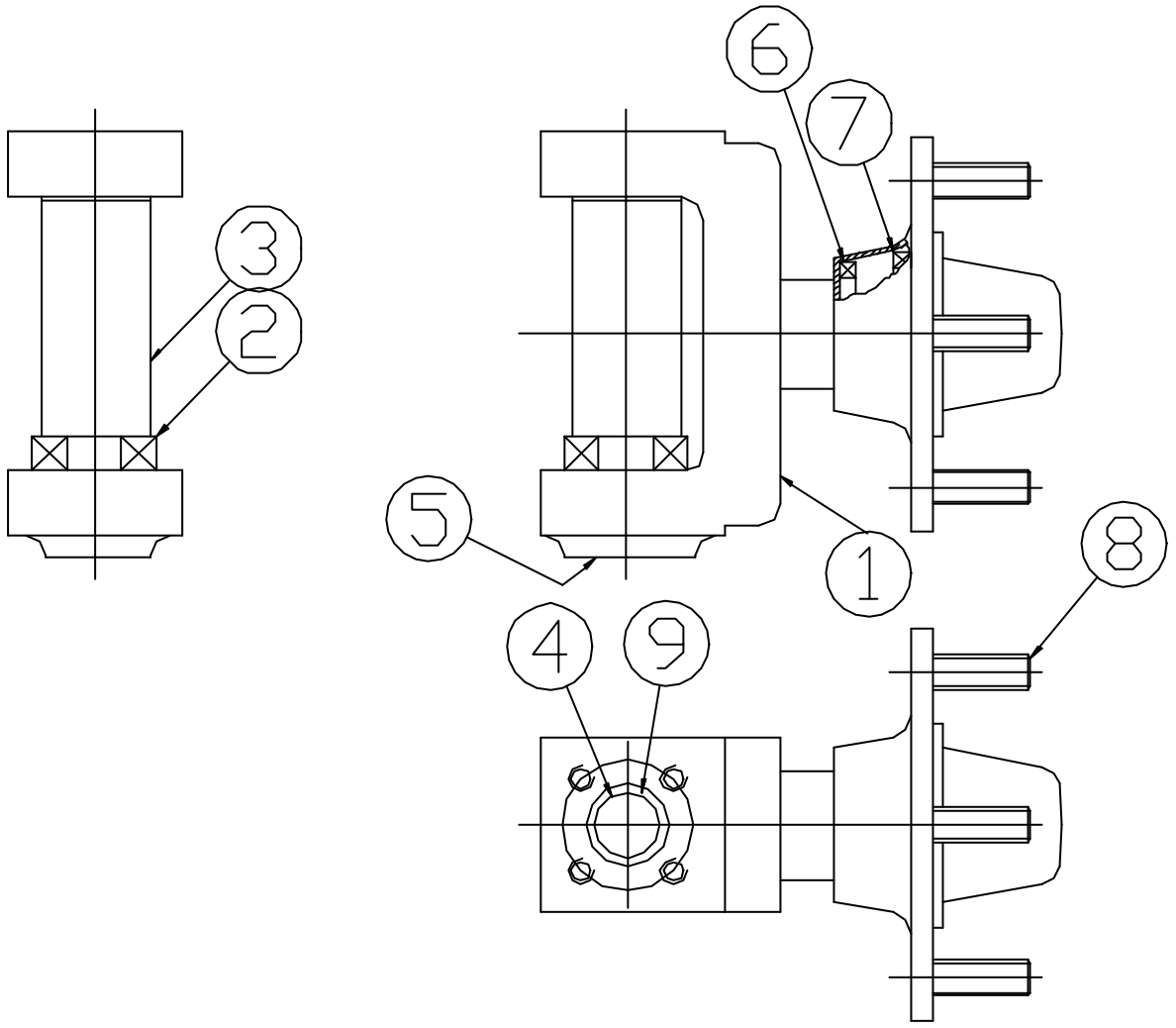

https://truckmanualshub.com/

DRIVE REDUCTION GEARBOX ASSEMBLY

057580-000

ITEM	PART NO.	DESCRIPTION	QTY.
1	-	COUPLING	1
2	-	EXPANSION PLUG	1
3	-	STEEL DISC	1
4	-	BRONZE DISC	1
5	-	O-RING	1
6	-	SPACER	1
7	-	O-RING	1
8	-	ANTI-EXTRUS. RING	1
9	-	PISTON	1
10	-	SPRING	12
11	-	O-RING	1
12	-	ANTI-EXTRUS. RING	1
13	-	OIL SEAL	1
14	-	END PLATE	1
15	-	O-RING	1
16	-	CIRCLIP	1
17	-	HUB	1
18	-	BEARING	1
19	-	CIRCLIP	1
20	-	PLANET SHAFT	1
21	-	PLANET CARRIER	1
22	-	CIRCLIP	1
23	-	THRUST WASHER	3
24	-	NEEDLE ROLLER	84
25	-	PLANET GEAR	3
26	-	THRUST WASHER	3
27	-	CIRCLIP	3
28	-	SUN PINION	1
29	-	O-RING	1
30	-	BEARING	1
31	-	RETAINING RING	1
32	-	RETAINING RING	1

ITEM	PART NO.	DESCRIPTION	QTY.
33	-	INPUT FLANGE	1
34	-	SCREW	8
35	-	SPACER	1
36	-	CIRCLIP	1
37	-	BEARING	1
38	-	COUPLING	1
39	-	BEARING	1
40	-	PIN	1
41	-	SPRING	1
42	-	SUN PINION	1
43	-	CIRCLIP	1
44	-	O-RING	1
45	-	THRUST WASHER	1
46	-	O-RING	1
47	-	RING + BEARING	1
48	-	PLANET SHAFT	3
49	-	SPINDLE	1
50	-	THRUST WASHER	3
51	-	THRUST WASHER	3
52	-	NEEDLE ROLLER	75
53	-	SPACER	3
54	-	PLANET GEAR	3
55	-	NEEDLE ROLLER	75
56	-	THRUST WASHER	3
57	-	THRUST WASHER	3
58	-	WASHER	2
59	-	PLUG	2
60	O57580-002	STUD M15 X 1.5	5
61	-	PIN	1
62	-	SCREW	1
63	-	CIRCLIP	1

NOTE: ITEMS 5,7,8,11,12,13,15,29,44 & 46 FORM THE SEAL KIT FOR THE DRIVE REDUCTION GEARBOX ASSEMBLY. THE PART NUMBER FOR THE COMPLETE SEAL KIT IS ***057580-010***

https://truckmanualshub.com/

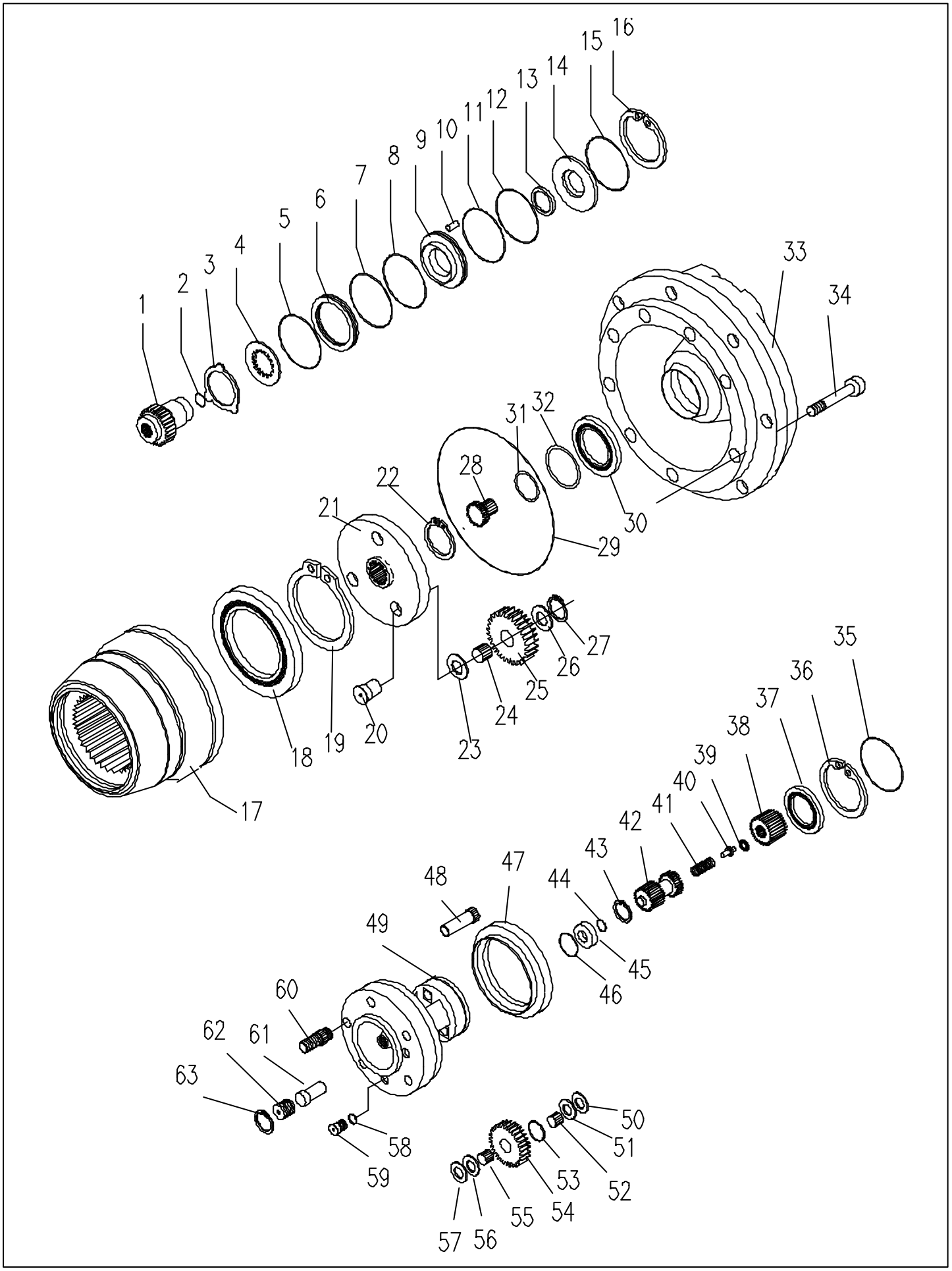

https://truckmanualshub.com/

TRACTION MOTOR ASSEMBLY

057568-000 : RIGHT HAND MOTOR
058834-000 : LEFT HAND MOTOR

ITEM	PART NO.	DESCRIPTION	QTY.
1	-	MOTOR MOUNTING FACE	1
2	-	SEAL	1
3	-	CIRCLIP	1
4	-	BEARING	1
5	-	COOLING FAN	1
6	-	COMMUTATOR	1
7	-	BEARING	1
8	-	FIELD WINDINGS	1
9	-	COMMUTATOR COVER	1
10	-	BRUSH BOXES SUPPORT	1
11	-	END FACE	1
12	-	VENT / INSPECTION CAP	4
13	057698-000	BRUSH	4
14	057699-000	BRUSH SPRINGS	4
15	057569-001	TACHO ADAPTOR KIT	1
16	057569-000	TACHO	1

https://truckmanualshub.com/

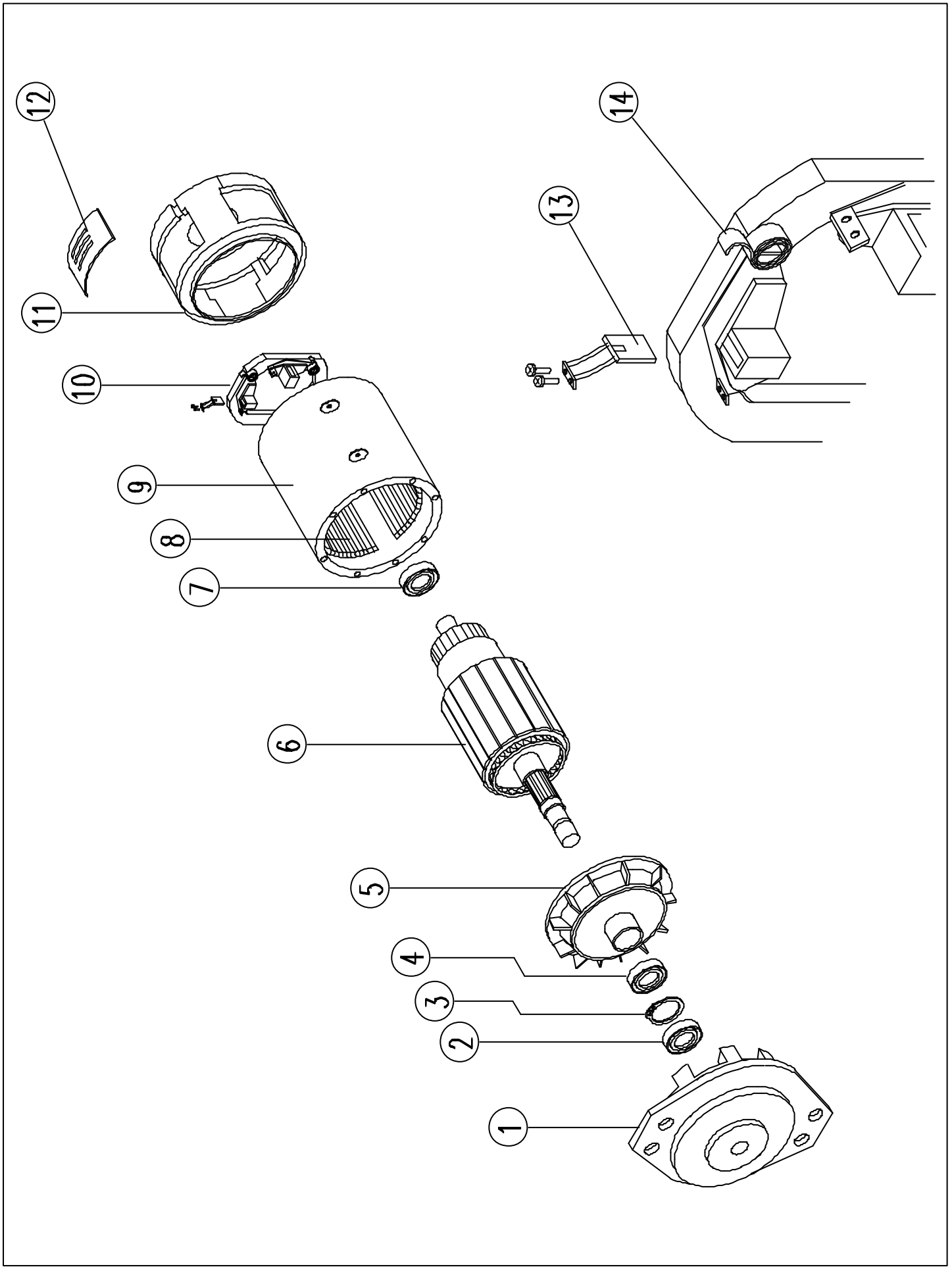

https://truckmanualshub.com/

MOTOR/PUMP ASSEMBLY

057530-000

ITEM	PART NO.	DESCRIPTION	QTY.
1	058862-000	HYDRAULIC PUMP	1
*	058862-001	SEAL KIT	1
2	058847-000	COUPLING	1
3	-	OIL SEAL	1
4	-	PUMP MOUNTING FACE	1
5	-	CIRCLIP	1
6	-	BEARING	1
7	-	CIRCLIP	1
8	-	CIRCLIP	1
9	-	COOLING FAN	1
10	-	COMMUTATOR	1
11	-	BEARING	1
12	-	COMMUTATOR COVER	1
13	-	BRUSH HOUSING SUPPORT	1
14	058863-000	BRUSH	4
15	-	END HOUSING	1
16	-	TERMINAL BLOCK	1
17	-	VENT / INSPECTION CAP	4

NOTE: THE PART NUMBER FOR THE MOTOR ASSEMBLY (ALL ITEMS FROM 2 TO 17) IS ***058861-000***

https://truckmanualshub.com/

Illustrated Parts Breakdown

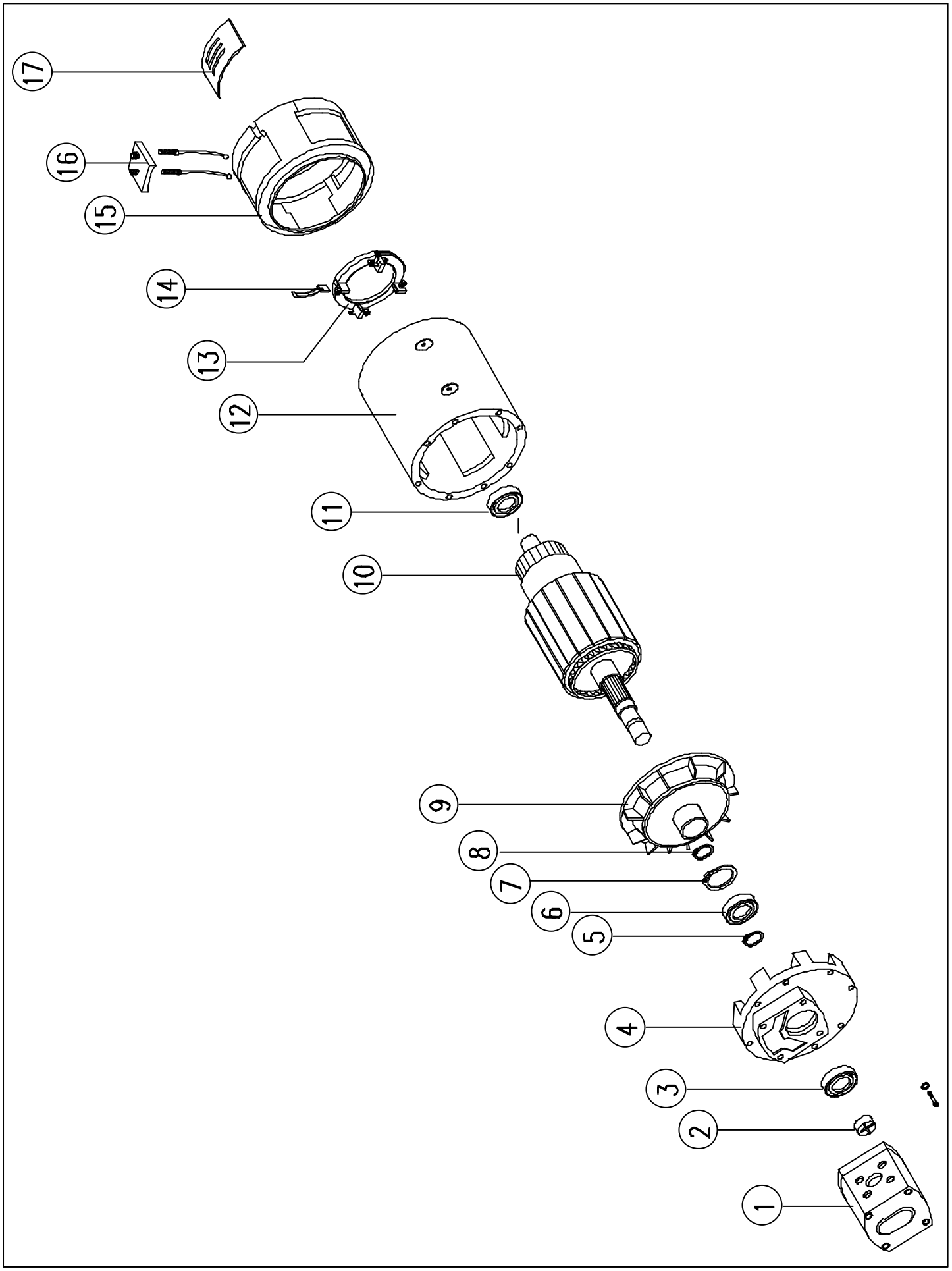

https://truckmanualshub.com/

REAR & FRONT WHEEL KIT (WHITE - NON MARKING) SERIAL 1297 TO CURRENT 500494-000

ITEM	PART NO.	DESCRIPTION	QTY.
1	057578-000	WHEEL NUT - M14	10
2	057668-001	REAR WHEEL TYRE & RIM ASSY.	2
3	057666-000	WHEEL NUT - M16	10
4	057667-003	FRONT WHEEL TYRE & RIM ASSY.	2

REAR & FRONT WHEEL KIT (NON MARKING)

ITEM	PART NO.	DESCRIPTION	QTY.
1	057578-000	WHEEL NUT - M14	10
2	058971-000	REAR WHEEL TYRE & RIM ASSY.	2
3	057666-000	WHEEL NUT - M16	10
4	058970-000	FRONT WHEEL TYRE & RIM ASSY.	2

REAR & FRONT WHEEL KIT (BLACK)

ITEM	PART NO.	DESCRIPTION	QTY.
1	057578-000	WHEEL NUT - M14	10
2	057668-000	REAR WHEEL TYRE & RIM ASSY.	2
3	057666-000	WHEEL NUT - M16	10
4	057667-001	FRONT WHEEL TYRE & RIM ASSY.	2

https://truckmanualshub.com/

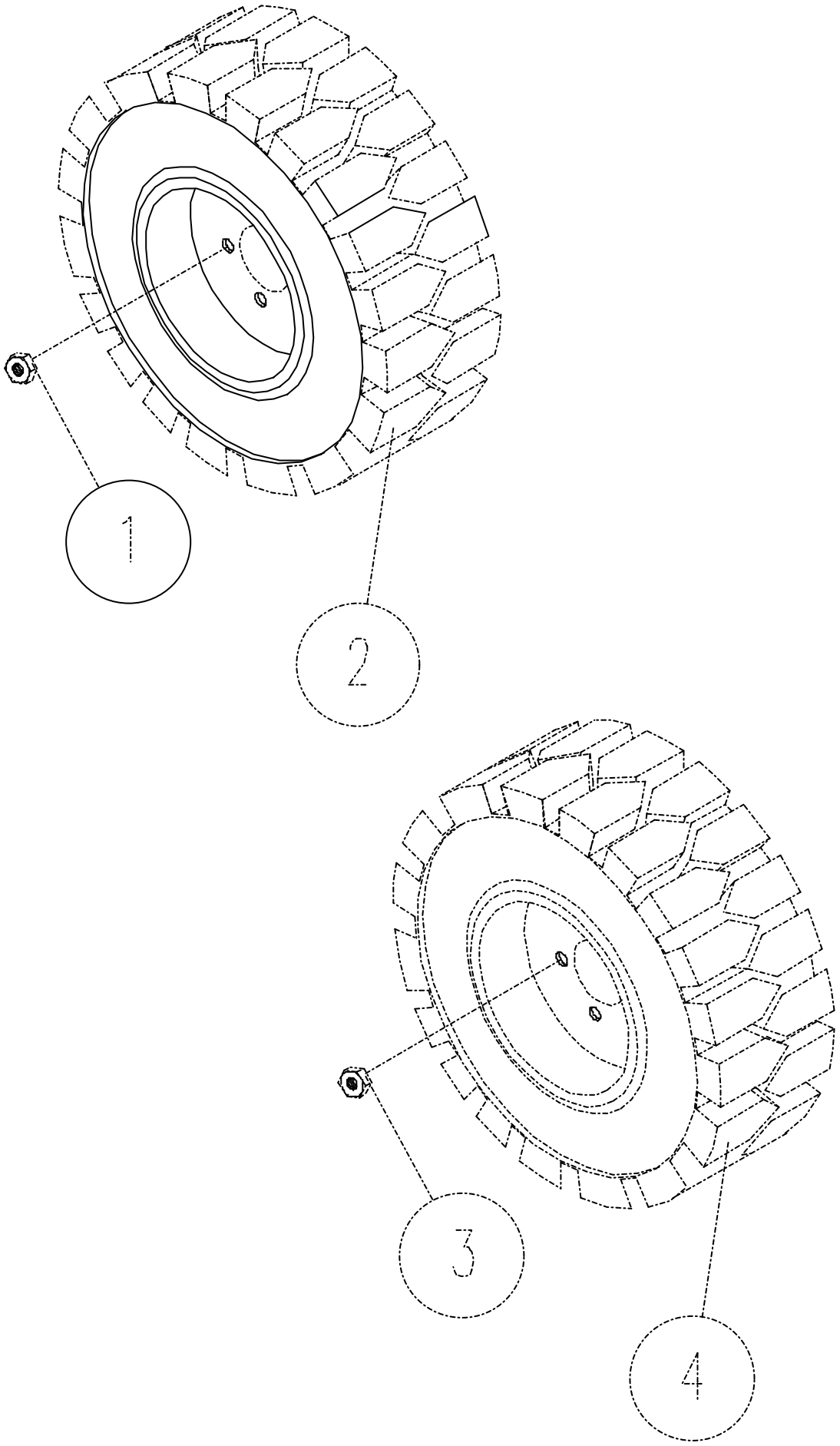

https://truckmanualshub.com/

SLEW MOTOR, WORM DRIVE UNIT & SLEW BEARING ASSEMBLY 500284-001

ITEM	PART NO.	DESCRIPTION	QTY.
1	500284-000	AB38 WORM DRIVE UNIT & SLEW BEARING ASSEMBLY	1
*	500280-000	BOLT 5/8” -11 UNC x 3 1/2”	16
*	500281-000	WASHER M16 HARDENED	16
2	500285-000	AB38 SLEW MOTOR	1
*	500285-001	SEAL KIT	1
*	500282-000	BOLT 1/2” -13 UNC x 1 1/2”	2
*	056021-012	WASHER M12 SPRING	2

https://truckmanualshub.com/

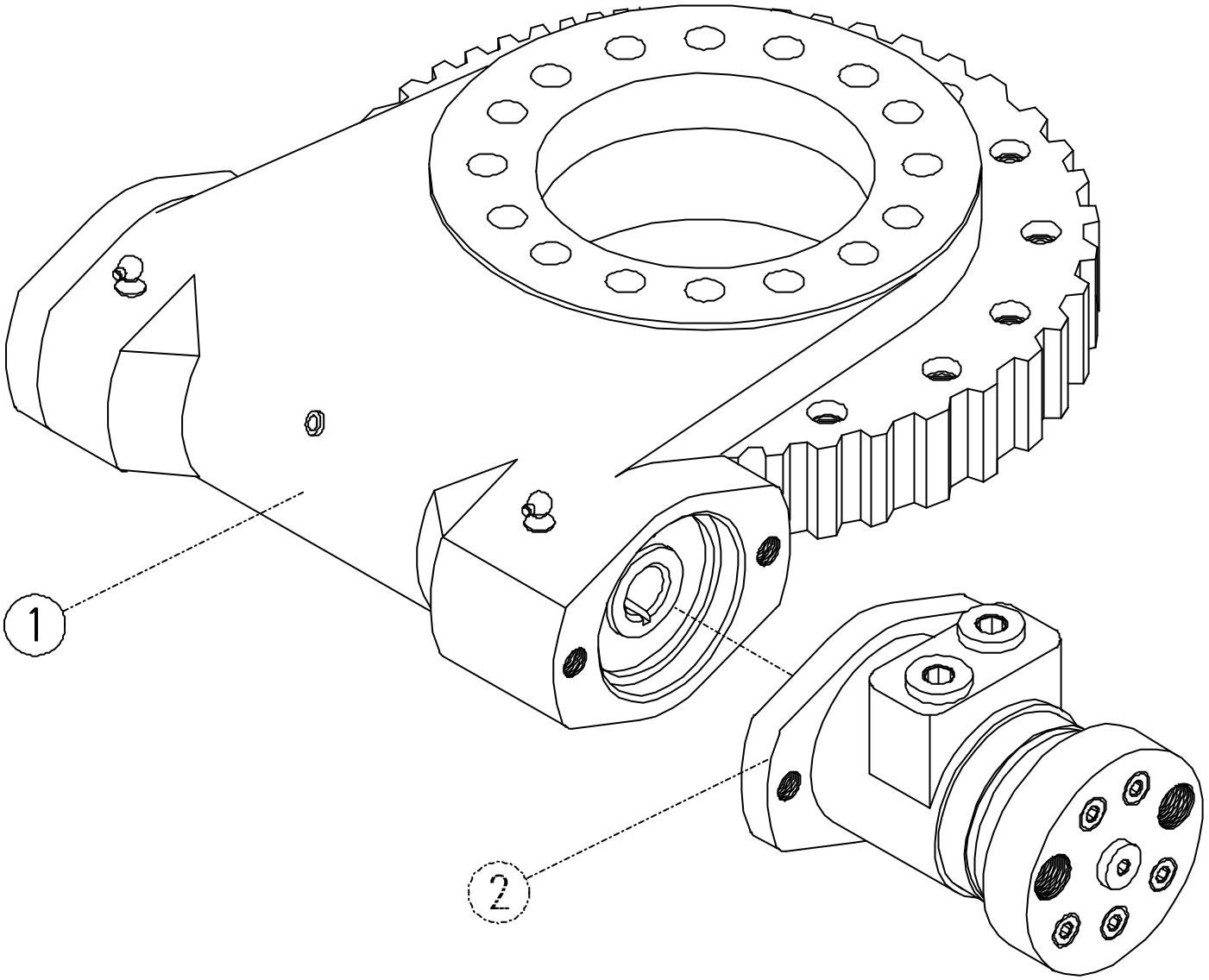

https://truckmanualshub.com/

MANIFOLD BLOCK ASSEMBLY

500261-000

ITEM	PART NO.	DESCRIPTION	QTY.
1	-	MAIN MANIFOLD BLOCK ONLY	1
2	501960-000	SOLENOID VALVE & COILS	1
3	501961-000	SOLENOID VALVE & COILS	5
4	501962-000	SOLENOID VALVE & COILS	1
5	501963-000	SOLENOID VALVE & COILS	1
6	057106-000	PRESSURE TEST POINT FITTING	1
7	057540-000	PRESSURE REDUCING VALVE	1
8	057536-000	MAIN RELIEF VALVE	1
9	500261-002	MANUAL TELE RETRACTION VALVE	1
10	500261-004	TELE RETRACTION VALVE LEVER	1
11	057539-000	CROSS LINE RELIEF VALVE	2
12	-	BONDED SEAL, VARIOUS	12
13	057358-000	ADAPTOR 1/4” x 1/4”	9
14	057122-000	ADAPTOR 3/8” x 3/8”	2
15	057121-000	ADAPTOR 1/4” x 3/8”	4
16	501964-000	SOLENOID VALVE & COILS (STEER)	1

NOTE: ITEMS NUMBER 9 (MANUAL TELE RETRACTION VALVE) OR 10 (TELE RETRACTION VALVE LEVER) ARE NOT REQUIRED FOR MACHINES MANUFACTURED TO COMPLY WITH THE ANSI STANDARD.

THEREFORE THE PORT INDICATED BY ITEM 9 ON THE HYDRAULIC MANIFOLD IS BLANKED. THE PART NUMBER FOR THIS BLANK IS ***500261-003***

https://truckmanualshub.com/

Illustrated Parts Breakdown

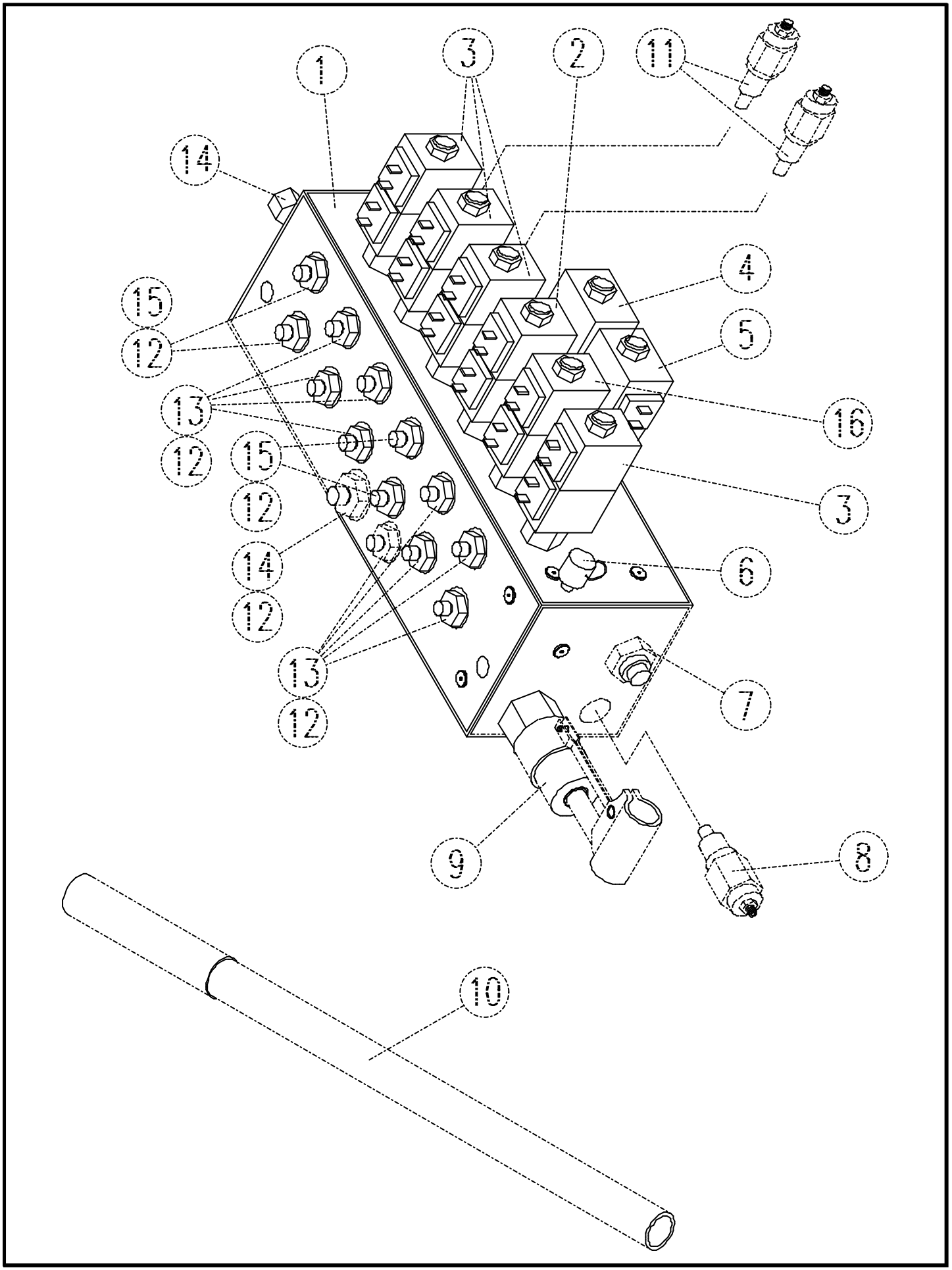

https://truckmanualshub.com/

LOWER LIFT CYLINDER ASSEMBLY

058460-000

ITEM	PART NO.	DESCRIPTION	QTY.
1	-	CYLINDER BODY	1
2	058887-000 500397-000	EMERGENCY LOWERING VALVE SERIAL NUMBERS #1501-1522 EMERGENCY LOWERING VALVE SERIAL NUMBERS #1523-CURRENT	1 1
3	058728-000	SINGLE OVERCENTRE VALVE	1
4	-	END CAP	1
5	-	ROD AND END PIVOT	1
6	SEE NOTE	U-RING ROD SEAL	1
7	SEE NOTE	ROD SEAL	1
8	SEE NOTE	WIPER	1
9	SEE NOTE	BACK UP 0-RING	1
10	SEE NOTE	O-RING	1
11	-	SPACER	1
12	SEE NOTE	PISTON O-RING	1
13	-	PISTON HEAD	1
14	SEE NOTE	PISTON SEAL	1
15	-	PISTON LOCKNUT	1
16	-	WASHER	1
17	058447-000	AB38 LOWER LIFT CYLINDER BOSS	2
18	057048-000	GREASE NIPPLE	3
19	058516-000	AB38 BOSS CAPHEAD SCREW M8	8

NOTE: ITEMS 6 TO 10 INCLUSIVE, 12 & 14 FORM THE SEAL KIT FOR THE AB38 LOWER LIFT CYLINDER. THE PART NUMBER FOR THIS SEAL KIT IS ***500457-000***

NOTE: ITEMS 17, 18 & 19 ARE NOT INCLUDED AS PART OF THE CYLINDER ASSEMBLY.

https://truckmanualshub.com/

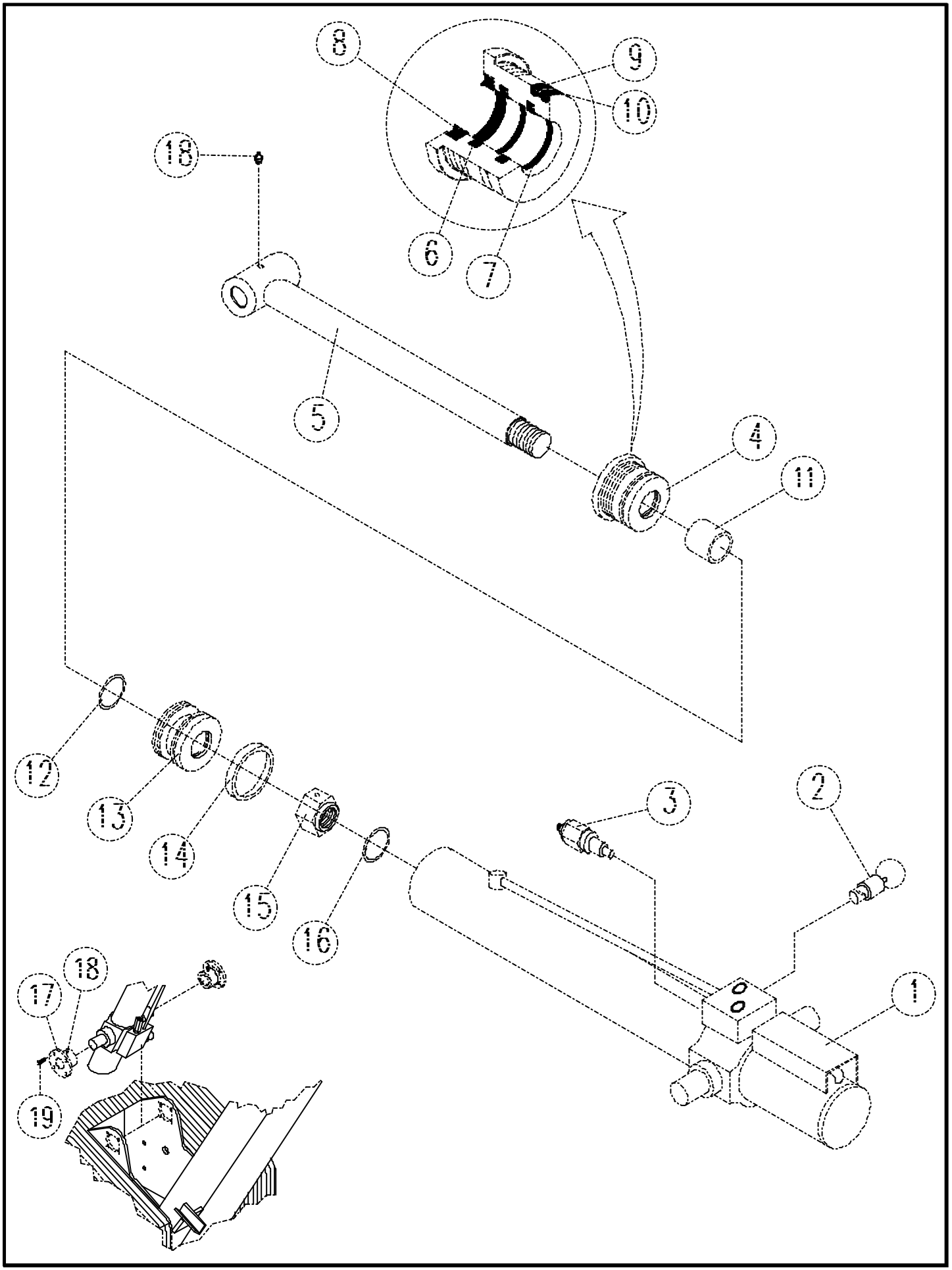

https://truckmanualshub.com/

UPPER LIFT CYLINDER ASSEMBLY

058462-000

ITEM	PART NO.	DESCRIPTION	QTY.
1	-	CYLINDER BODY	1
2	058887-000 500397-000	EMERGENCY LOWERING VALVE SERIAL NUMBERS #1501-1522 EMERGENCY LOWERING VALVE SERIAL NUMBERS #1523-CURRENT	1 1
3	058728-000	SINGLE OVERCENTRE VALVE	1
4	-	END CAP	1
5	-	ROD AND END PIVOT	1
6	SEE NOTE	U-RING ROD SEAL	1
7	SEE NOTE	ROD SEAL	1
8	SEE NOTE	WIPER	1
9	SEE NOTE	BACK UP 0-RING	1
10	SEE NOTE	O-RING	1
11	-	SPACER	1
12	SEE NOTE	PISTON O-RING	1
13	-	PISTON HEAD	1
14	SEE NOTE	PISTON SEAL	1
15	-	PISTON LOCKNUT	1
16	-	WASHER	1
17	057048-000	GREASE NIPPLE	2

NOTE: ITEMS 6 TO 10 INCLUSIVE, 12 & 14 FORM THE SEAL KIT FOR THE AB38 UPPER LIFT CYLINDER. THE PART NUMBER FOR THIS SEAL KIT IS ***500458-000***

https://truckmanualshub.com/

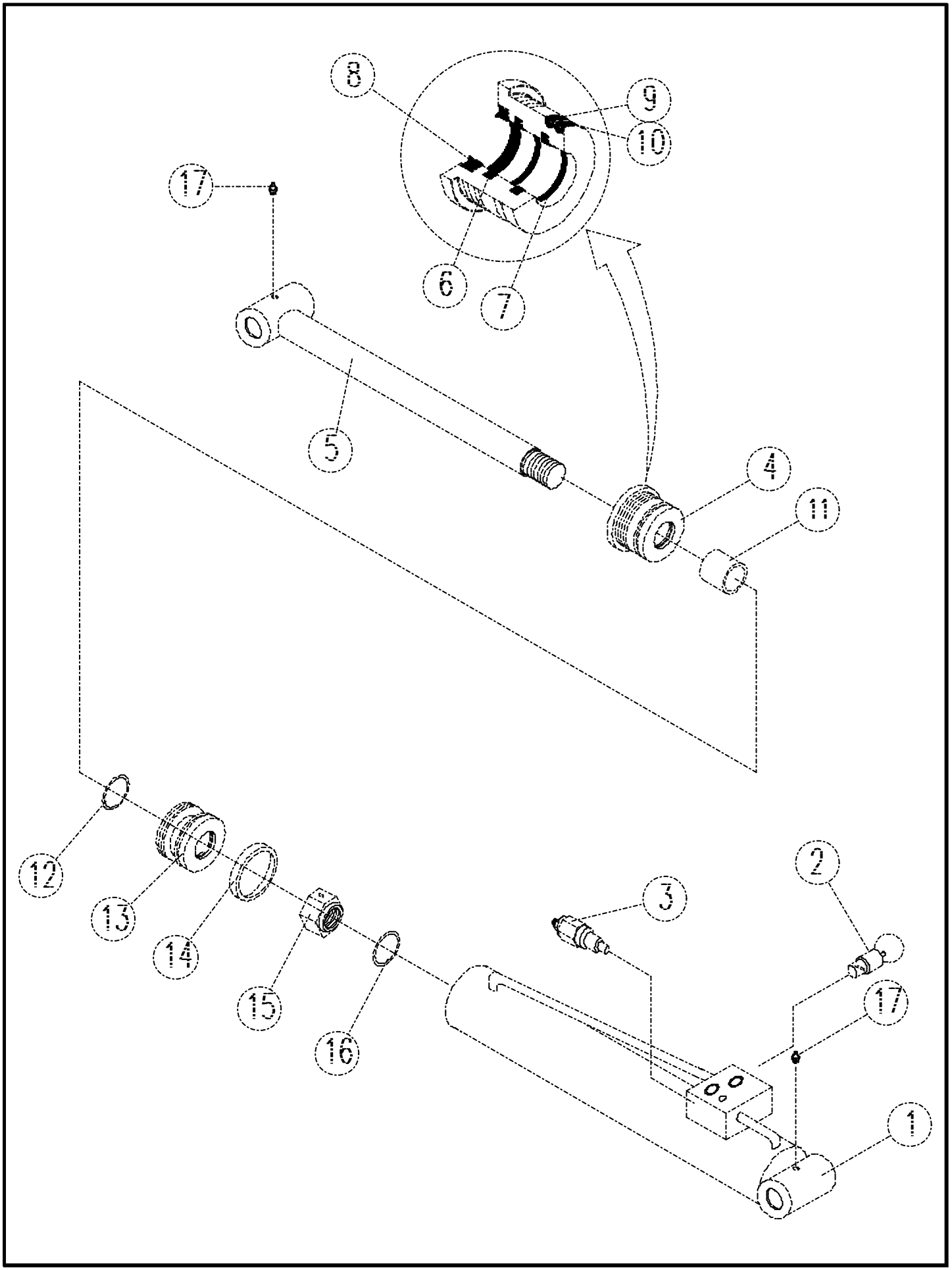

https://truckmanualshub.com/

TELESCOPIC CYLINDER ASSEMBLY

058461-000

ITEM	PART NO.	DESCRIPTION	QTY.
1	-	CYLINDER BODY	1
2	058728-000	SINGLE OVERCENTRE VALVE	1
3	058714-000	SINGLE P.O. CHECK VALVE	1
4	-	END CAP	1
5	-	ROD AND END PIVOT	1
6	SEE NOTE	U-RING ROD SEAL	1
7	SEE NOTE	ROD SEAL	1
8	SEE NOTE	WIPER	1
9	SEE NOTE	0-RING	1
10	057048-000	GREASE NIPPLE	1
11	-	SPACER	1
12	SEE NOTE	PISTON O-RING	1
13	-	PISTON HEAD	1
14	SEE NOTE	PISTON SEAL	1
15	-	PISTON LOCKNUT	1
16	-	WASHER	1

NOTE: ITEMS 6 TO 9 INCLUSIVE, 12 & 14 FORM THE SEAL KIT FOR THE AB38 TELESCOPIC CYLINDER. THE PART NUMBER FOR THIS SEAL KIT IS ***500459-000***

https://truckmanualshub.com/

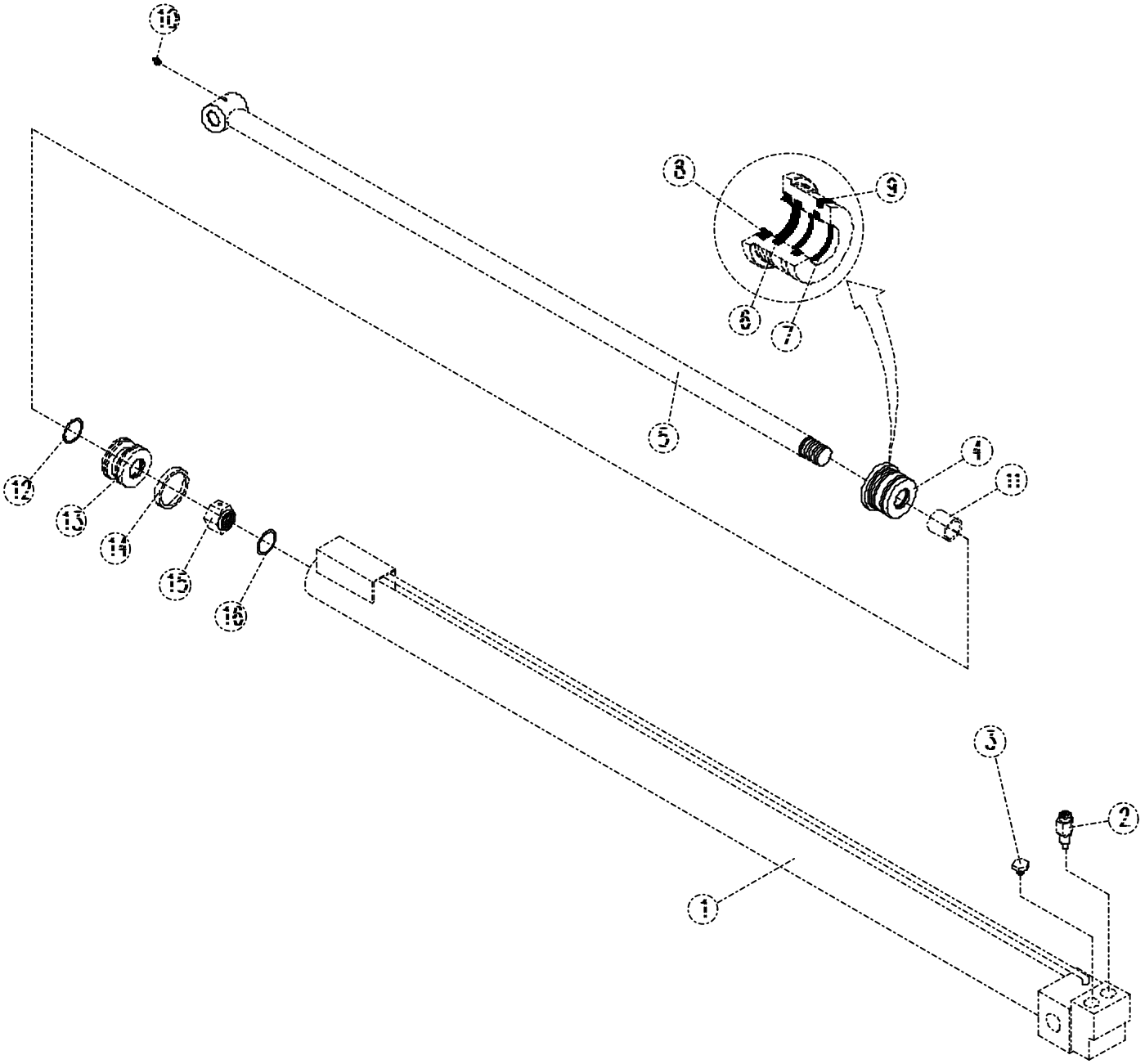

https://truckmanualshub.com/

STEERING CYLINDER ASSEMBLY

058463-000

ITEM	PART NO.	DESCRIPTION	QTY.
1	-	CYLINDER BODY	1
2	-	CYLINDER ROD	1
3	SEE NOTE	PISTON SEAL	1
4	-	END CAP	1
5	SEE NOTE	WIPER	1
6	SEE NOTE	ROD SEAL	1
7	SEE NOTE	O-RING	1
8	057048-000	GREASE NIPPLE	2

NOTE:ITEMS 3, 5, 6 & 7 FORM THE SEAL KIT FOR THE AB38 STEERING CYLINDER. THE PART NUMBER FOR THIS SEAL KIT IS ***500460-000***

https://truckmanualshub.com/

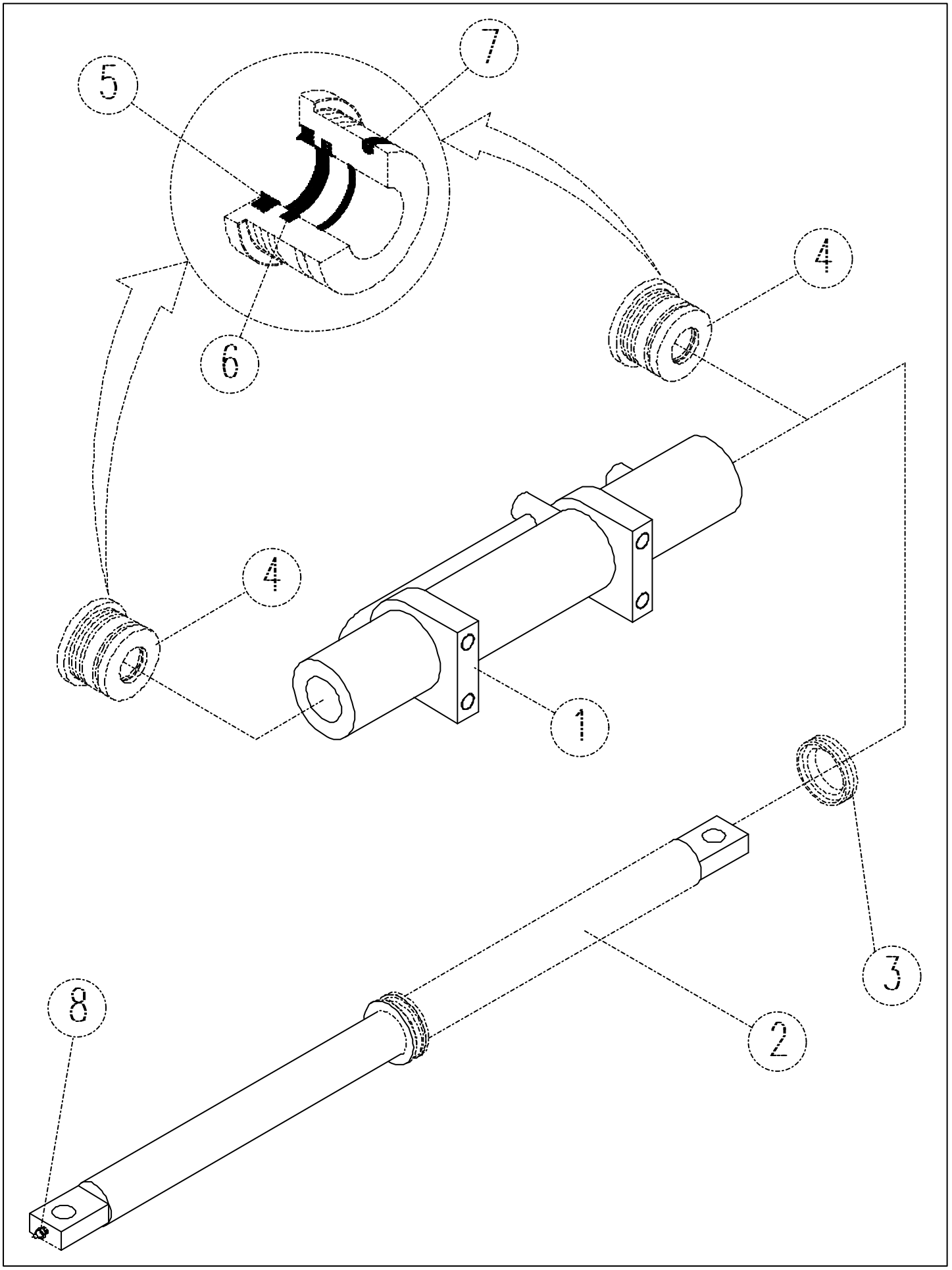

https://truckmanualshub.com/

MASTER/SLAVE CYLINDER ASSEMBLY

MASTER CYLINDER 058734-000
SLAVE CYLINDER 058735-000

ITEM	PART NO.	DESCRIPTION	QTY.
1	-	CYLINDER BODY	1
2	-	VALVE BLOCK BODY	1
3	058728-000	SINGLE OVERCENTRE VALVE	1
4	-	END CAP	1
5	-	ROD AND END PIVOT	1
6	SEE NOTE	U-RING ROD SEAL	1
7	SEE NOTE	ROD SEAL	1
8	SEE NOTE	WIPER	1
9	SEE NOTE	BACK UP 0-RING	1
10	SEE NOTE	0-RING	1
11	-	SPACER	1
12	SEE NOTE	PISTON O-RING	1
13	-	PISTON HEAD	1
14	SEE NOTE	PISTON SEAL	1
15	-	PISTON LOCKNUT	1
16	-	WASHER	1
17	057048-000	GREASE NIPPLE	2

NOTE: ITEMS 6 TO 10 INCLUSIVE, 12 & 14 FORM THE SEAL KIT FOR THE AB38 MASTER OR SLAVE CYLINDER. THE PART NUMBER FOR THIS SEAL KIT IS ***058750-000***

https://truckmanualshub.com/

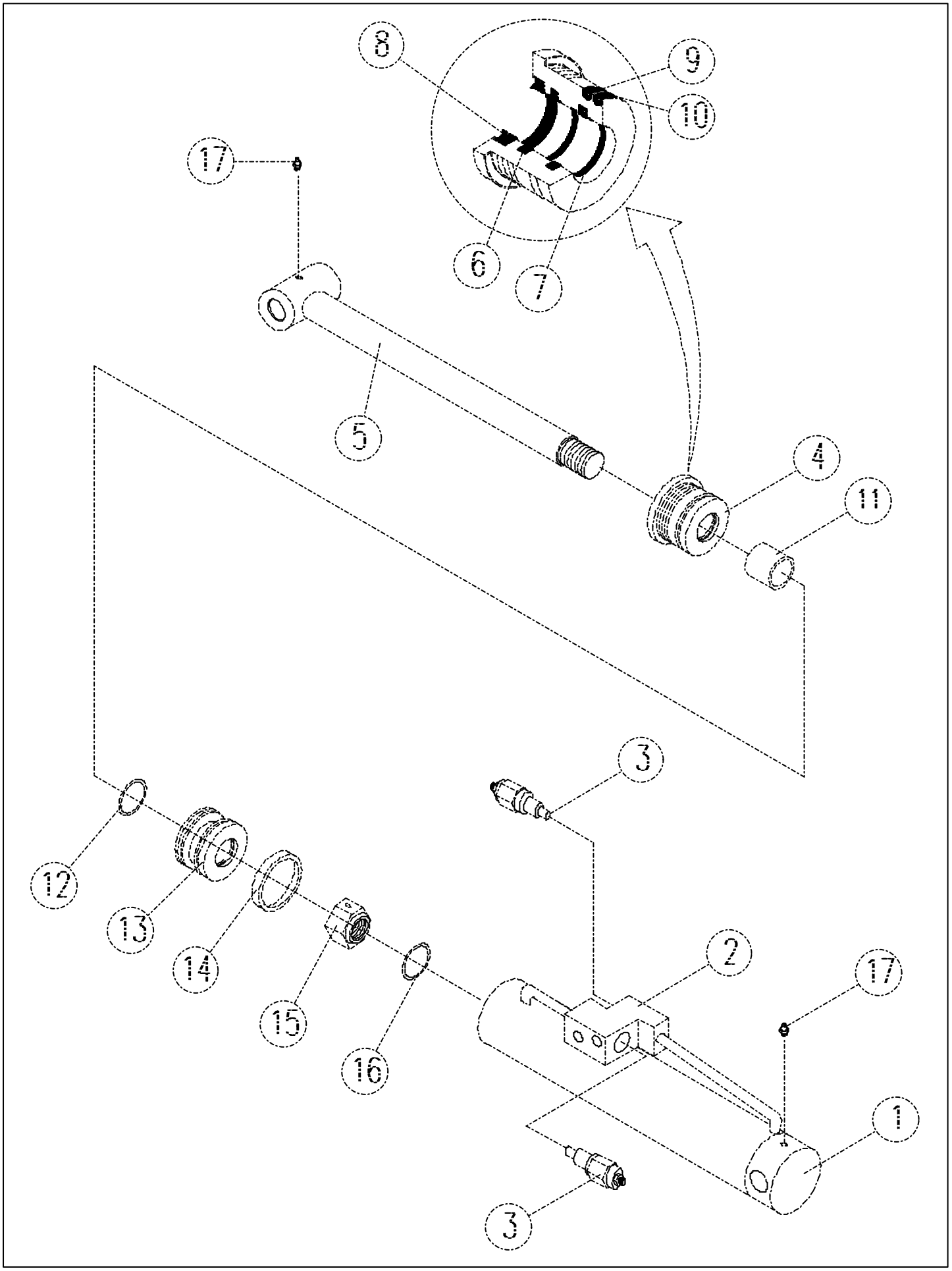

https://truckmanualshub.com/

PUMP & TRACTION MOTOR CONTROL UNIT ASSEMBLY

501862-000

ITEM	PART NO.	DESCRIPTION	QTY.
1	501863-000	ECU BOX WITH PC BOARD	1
2	501873-000	LINE CONTACTOR	1
3	501874-000	PUMP CONTACTOR	1
4	501875-000	MOTOR CONTACTOR	1
5	501876-000	MOTOR CONTROLLER	1
6	501877-000	FUSE BLOCK	1
7	501878-000	FUSE	1

HARNESSES

ITEM	PART NO.	DESCRIPTION	QTY.
1	501894-000	HARNESS, LC2 TO MTR CNTRL B-	1
2	501895-000	HARNESS, FWD 3 TO FWD 5	1
3	501895-000	HARNESS, REV 3 TO REV 5	1
4	501895-000	HARNESS, LC 3 TO LC 5	1
5	501895-000	HARNESS, FWD 4 TO REV 4	1
6	501895-000	HARNESS, FWD 6 TO REV 6	1
7	501895-000	HARNESS, LC 3 TO FUSE	1
8	501896-000	HARNESS, MTR CNTRL A2 TO FWD 4	1
9	501897-000	HARNESS, MTR CNTRL B+ TO LC 6	1
10	501897-000	HARNESS,MTR CNTRL M- TO FWD 6	1
11	501897-000	HARNESS,MTR CNTRL B+ TO PC 3	1

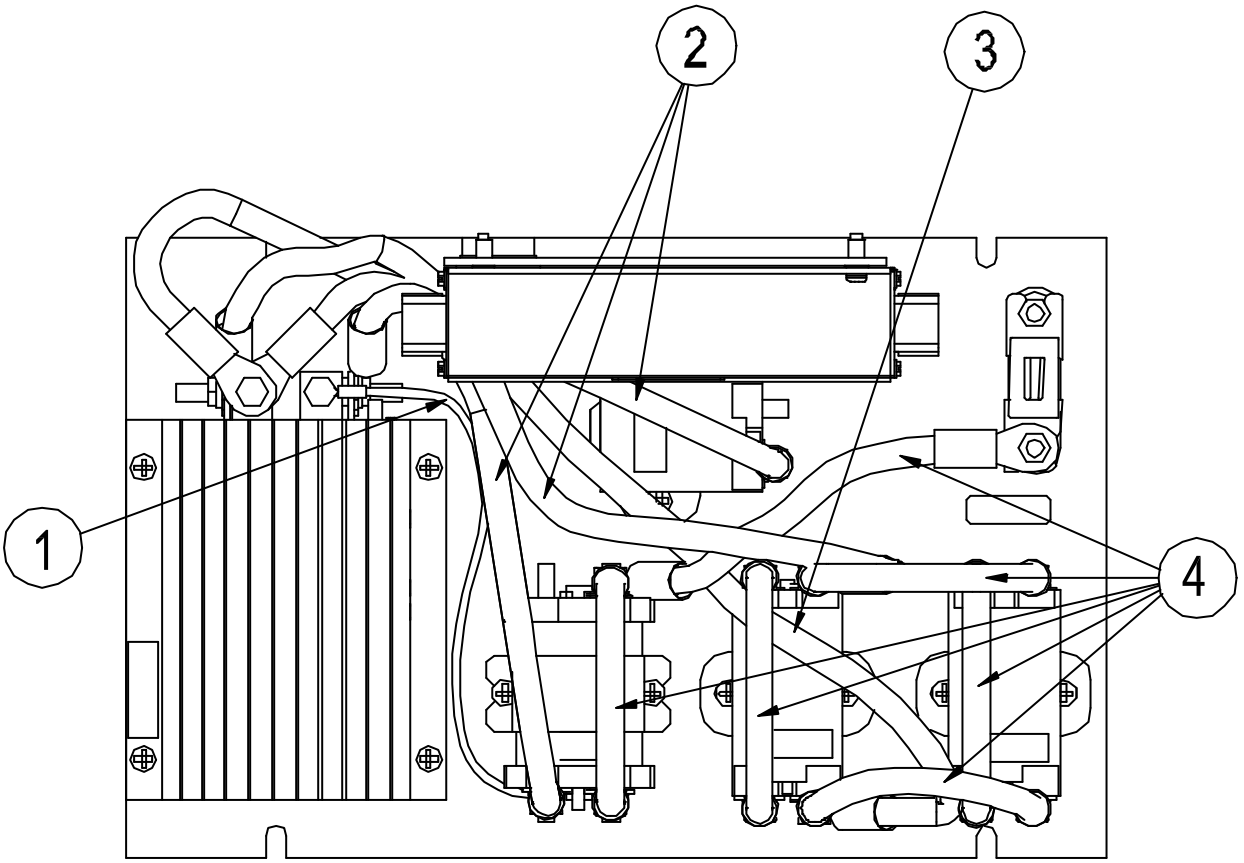

https://truckmanualshub.com/

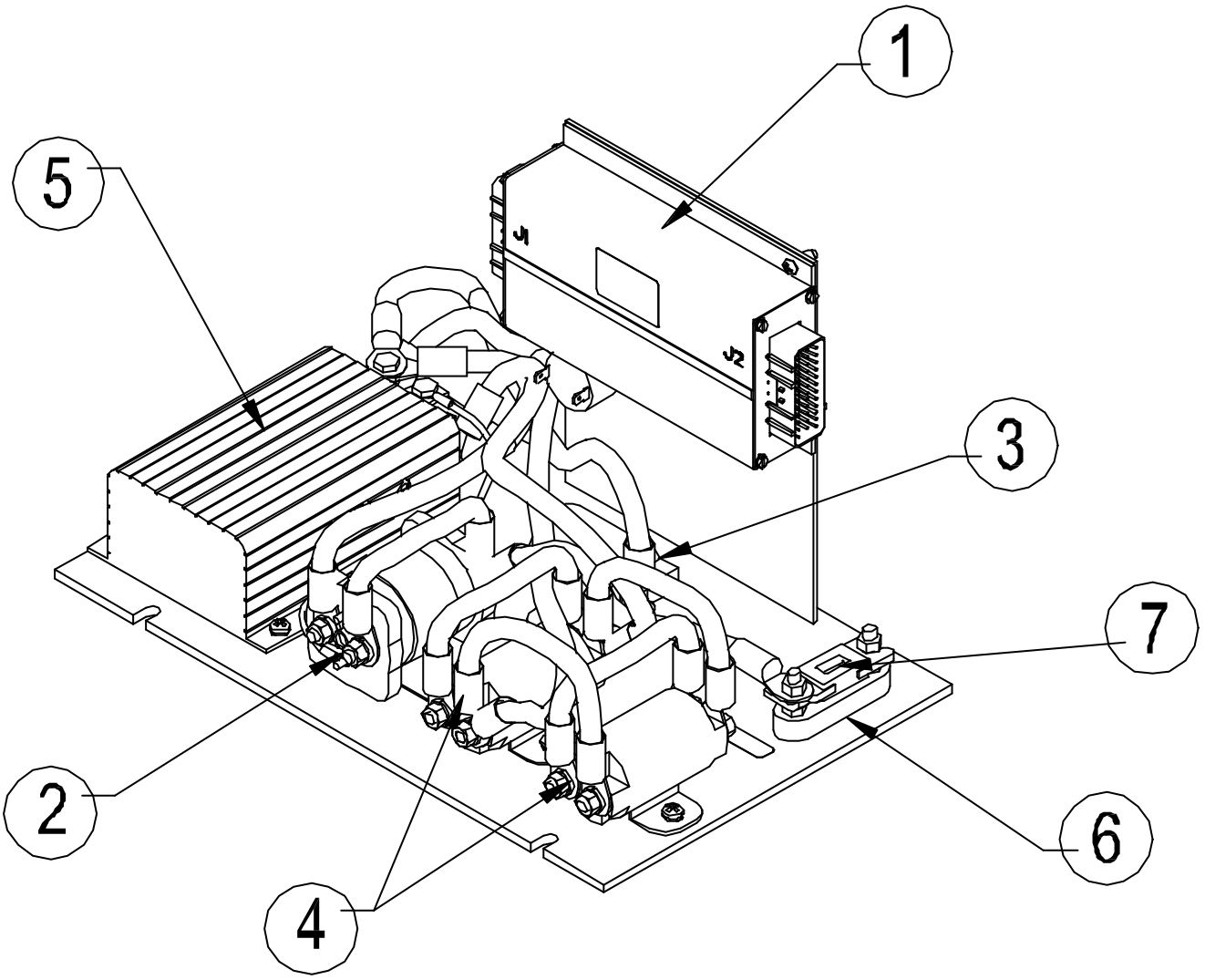

https://truckmanualshub.com/

AB38 LOWER CONTROL BOX ASSEMBLY

500490-000 (Harnesses are not part of this assembly)

ITEM	PART NO.	DESCRIPTION	QTY.
1	501867-000	E-STOP SWITCH C/W CONTACT BLOCK	1
2	501872-000	ANALOG ROCKER	1
3	501870-000	OVERLAY (DECAL)	1

NOTE: THE PART NUMBER FOR THE CABLE-BOX CONNECTOR IS ***501880-000***

https://truckmanualshub.com/

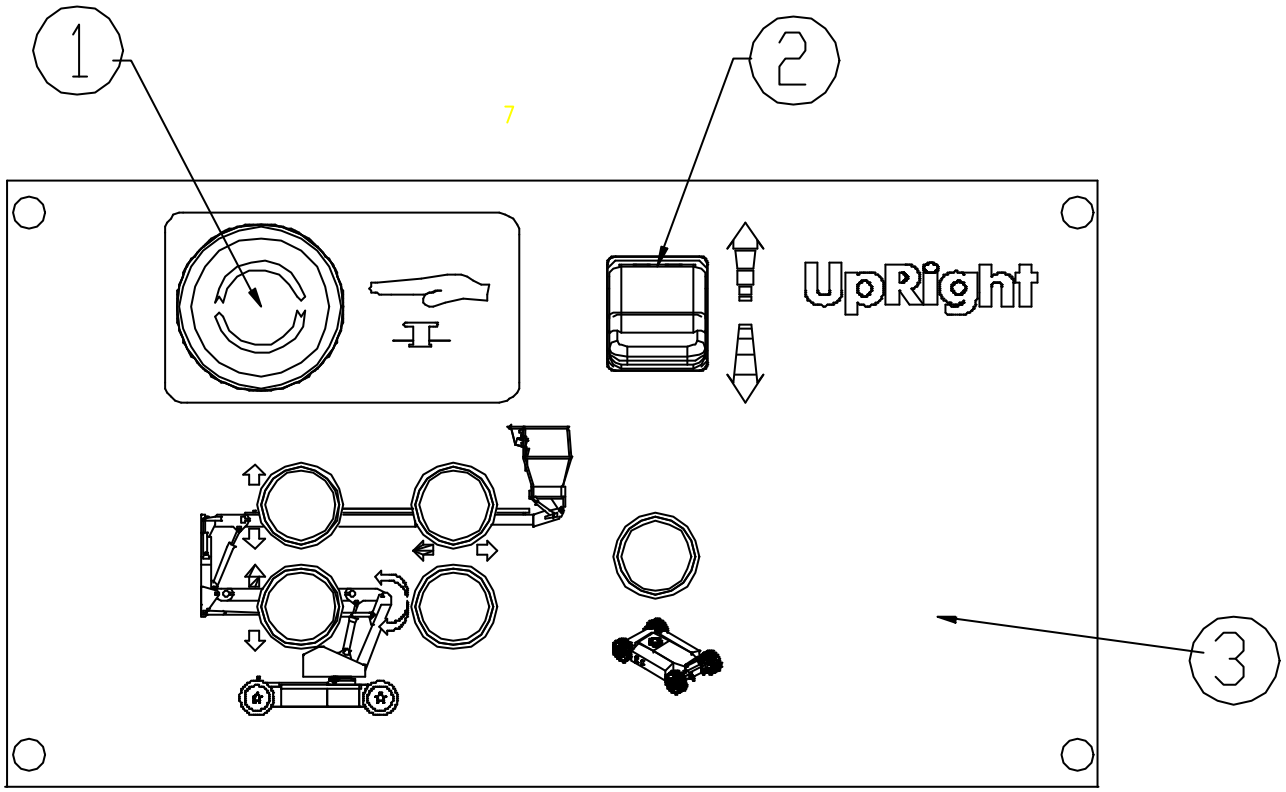

https://truckmanualshub.com/

UPPER CONTROL BOX ASSEMBLY

501864-000

ITEM	PART NO.	DESCRIPTION	QTY.
1	501864-000	PLATFORM CONTROLLER	1
2	501865-000	PC BOARD ASSY	1
3	501866-000	KEY SWITCH	1
4	501867-000	E-STOP SWITCH C/W CONTACT BLOCK	1
5	501869-000	OVERLAY (DECAL)	1
6	501881-000	UPPER CONTROL BOX (BOX ONLY)	1
7	501882-000	JOYSTICK	1
8	501882-001	JOYSTICK, RUBBER STEERING BOOT	1
9	501882-000	JOYSTICK, RUBBER BOOT	1

https://truckmanualshub.com/

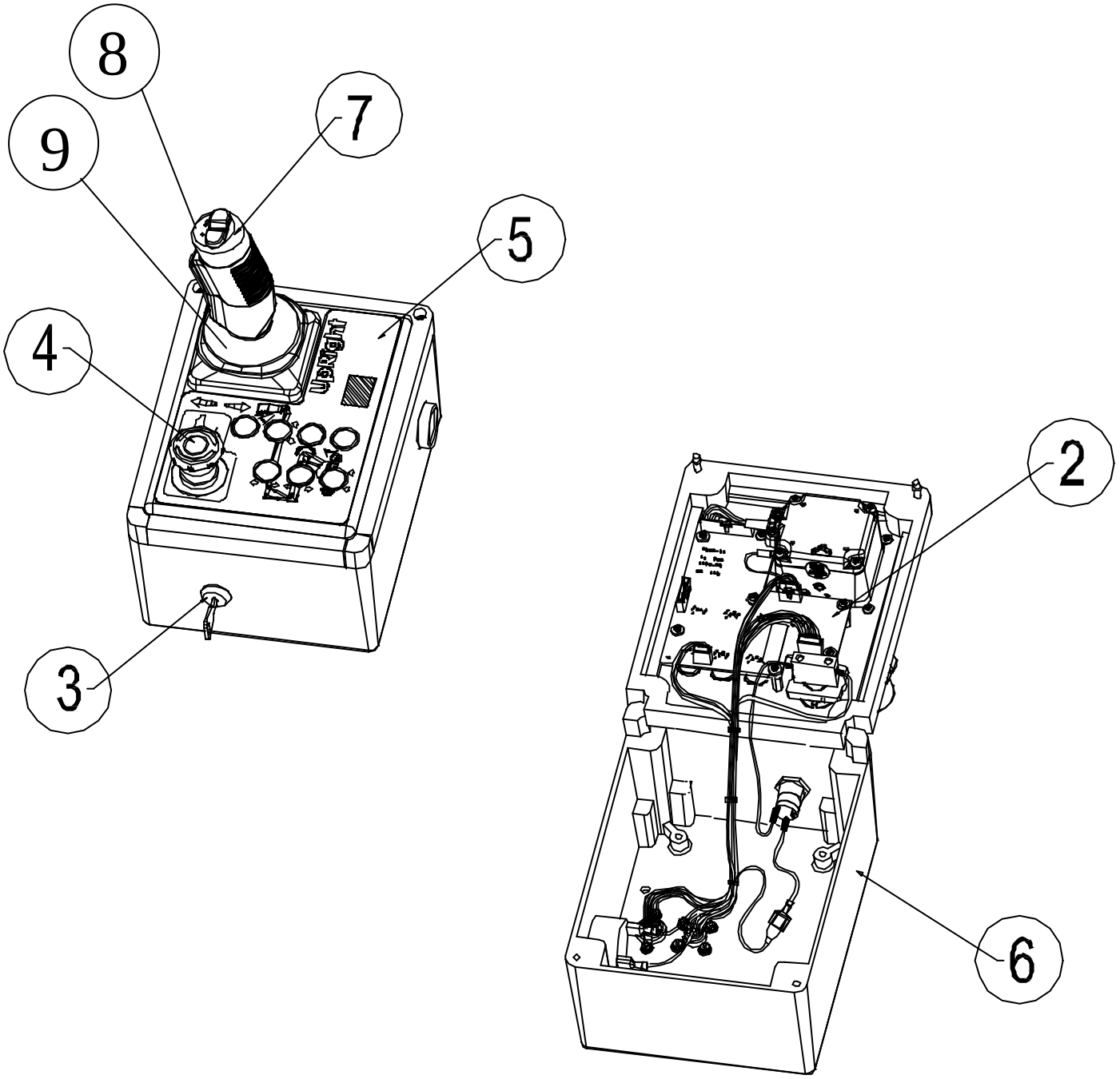

https://truckmanualshub.com/

CABLES & ELECTRICAL COMPONENT LEGEND

ITEM	PART NO.	DESCRIPTION	QTY.
1	058834-000	DRIVE MOTOR, LH	1
2	057568-000	DRIVE MOTOR, RH	1
3	501864-000	UPPER CONTROL BOX ASSY.	1
4	502597-000	LOWER CONTROL PANEL	1
5	501074-000	BATTERY	8
6	057573-000	CHARGER	1
7	057530-000	PUMP MOTOR	1
8	501879-000	HARNESS - J1	
9	501880-000	HARNESS - J2	1
10	502588-000	HARNESS - PUMP - LINE CONTACTOR	
*		HARNESS - PUMP - MOTOR CONTROLLER	
11	502589-000	HARNESS - LH MOTOR - MOTOR CONTROLLER B+	1
*		HARNESS - LH MOTOR - REVERSE CONTACTOR	1
*		HARNESS - LH MOTOR - MOTOR CONTROLLER A2	1
*		HARNESS - LH MOTOR - FORWARD CONTACTOR	1
12	502590-000	HARNESS - LH MOTOR A1 - RH MOTOR A1	1
*		HARNESS - LH MOTOR S1 - RH MOTOR S2	1
*		HARNESS - LH MOTOR A2 - RH MOTOR A2	1
*		HARNESS - LH MOTOR S2 - RH MOTOR S1	1
13			
14	502592-000	HARNESS - BATTERY - BATTERY (SHORT)	6
15	502593-000	HARNESS - BATTERY - BATTERY (LONG)	1
16	502594-000	HARNESS - BATTERY DISCONNECT - BATTERY	1
*		POSITIVE AND NEGATIVE.	
17	502595-000	HARNESS - BATTERY DISCONNECT - FUSE AND	1
*		MOTOR CONTROLLER B-	
18	502596-000	HARNESS - BATGTERY CHARGER - LINE	1
*		CONTACTOR AND BETTERY NEG	

https://truckmanualshub.com/

Illustrated Parts Breakdown

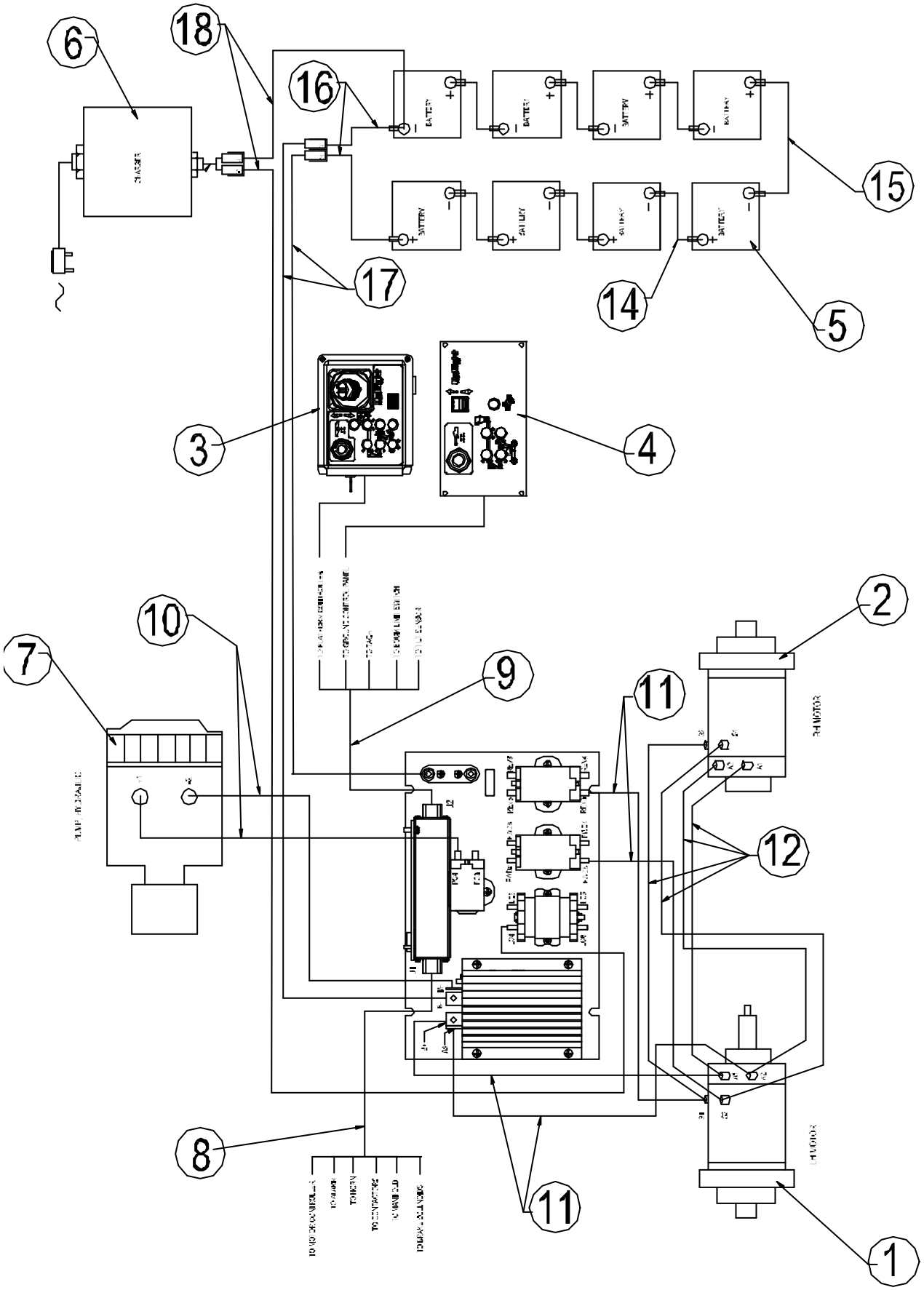

https://truckmanualshub.com/

HOSE ASSEMBLY

500262-000

ITEM	PART NO.	DESCRIPTION	QTY.
1	500357-000	HOSE ASSY, 1/2” M1T 267 mm B90-B90 PUMP TO MANIFOLD	1
2	500353-000	HOSE ASSY, 1/4” M1T 6630 mm B90-B90 MANIFOLD TO MASTER CYLINDER	1
3	500353-000	HOSE ASSY, 1/4” M1T 6630 mm B90-B90 MANIFOLD TO MASTER CYLINDER	1
4	500228-000	HOSE ASSY, 1/4” M1T 8900 mm B90-B90 MASTER TO SLAVE CYLINDER	1
5	500228-000	HOSE ASSY, 1/4” M1T 8900 mm B90-B90 MASTER TO SLAVE CYLINDER	1
6	500358-000	HOSE ASSY, 3/8” M1T 190 mm B90-B90 PUMP TO MANIFOLD	1
7	500354-000	HOSE ASSY, 1/4” M1T 1280 mm B90-B90 MANIFOLD TO STEERING CYLINDER	1
8	500354-000	HOSE ASSY, 1/4” M1T 1280 mm B90-B90 MANIFOLD TO STEERING CYLINDER	1
9	500226-000	HOSE ASSY, 3/8” M1T 1700 mm B90-B90 MANIFOLD TO SLEW MOTOR	1
10	500226-000	HOSE ASSY, 3/8” M1T 1700 mm B90-B90 MANIFOLD TO SLEW MOTOR	1
11	500351-000	HOSE ASSY, 1/4” M1T 1750 mm B90-B90 MANIFOLD TO LOWER LIFT CYLINDER	1
12	500351-000	HOSE ASSY, 1/4” M1T 1750 mm B90-B90 MANIFOLD TO LOWER LIFT CYLINDER	1
13	500352-000	HOSE ASSY, 1/4” M1T 6650 mm B90-B90 MANIFOLD TO UPPER LIFT CYLINDER	1
14	500352-000	HOSE ASSY, 1/4” M1T 6650 mm B90-B90 MANIFOLD TO UPPER LIFT CYLINDER	1
15	500227-000	HOSE ASSY, 3/8” M1T 7200 mm B90-BF MANIFOLD TO TELESCOPIC CYLINDER	1
16	500227-000	HOSE ASSY, 3/8” M1T 7200 mm B90-BF MANIFOLD TO TELESCOPIC CYLINDER	1
17	500356-000	HOSE ASSY, 1/4” M1T 1270 mm BF-B90 MANIFOLD TO BRAKE T PIECE	1
18	500355-000	HOSE ASSY, 1/4” M1T 430 mm BF-B90 T PIECE TO BRAKE	1
19	500355-000	HOSE ASSY, 1/4” M1T 430 mm BF-B90 T PIECE TO BRAKE	1
20	058352-000	T PIECE	1

EXPLANATION OF HYDRAULIC TERMINOLOGY

BF	STRAIGHT FEMALE FITTING
B90	SWEPT 90º FITTING
M1T	MEGAFLEX HOSE

EXAMPLE:

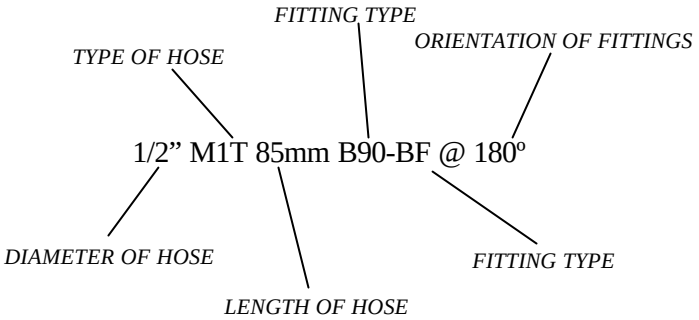

https://truckmanualshub.com/

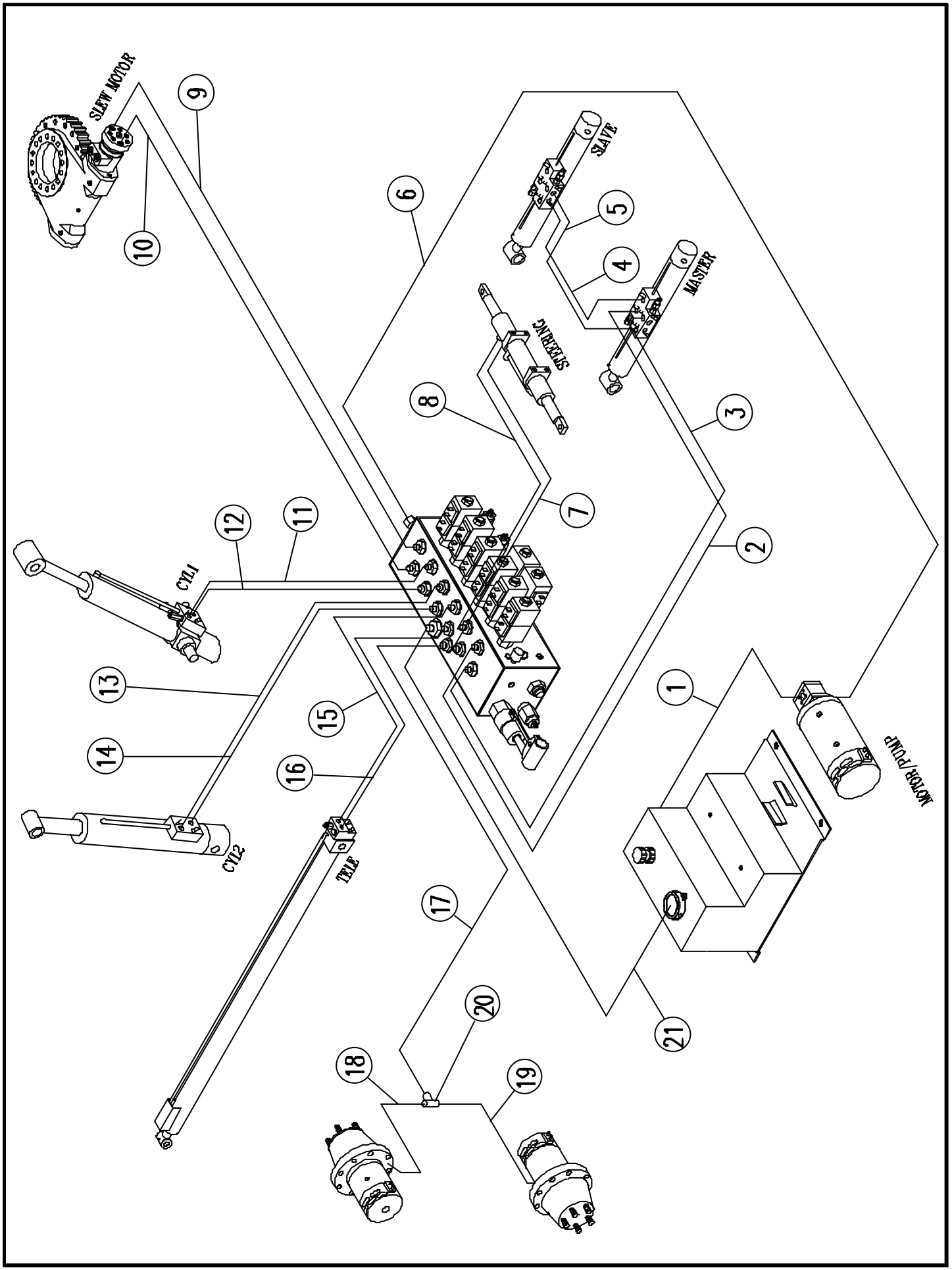

https://truckmanualshub.com/

DECAL KIT
American English (ANSI)
500206-001

ITEM	PART NO.	DESCRIPTION	QTY.
1	8210013	DECAL - 'AB38N' BOOM + 0074908	2
2	501870-000	DECAL - LOWER CONTROL BOX	1
3	8210014	DECAL - AB38N LOGO	1
4	8210014	DECAL - AB38N LOGO	1
5	502480-000	DECAL - EMERGENCY LOWERING	2
6	569295	DECAL - 'Snorkel' LOGO small	2
7	057429-000	DECAL - BATTERY FLUID LEVEL	2
8	057430-000	DECAL - EXPLOSION HAZARD	2
9	-	-	-
10	-	-	-
11	-	-	-
12	058881-001	DECAL - HAZARD TAPE	2
13	058080-000	DECAL - CAGE LEVELLING	1
14	058186-000	DECAL - ON/OFF UPPER CONTROL	1
15	-	-	-
16	501869-000	DECAL - UPPER CONTROL BOX	1
17	058538-000	DECAL - DANGER/HAZARDS/INSTR.	1
18	058530-000	DECAL - MEETS ANSI REQUIREMENTS	1
19	058534-000	DECAL - BATTERIES ARE COUNTERWEIGHT	2
20	058533-000	DECAL - DO NOT ADJUST SWITCHES	2
21	058761-000	DECAL - S.W.L. LARGE ANSI	1
22	057434-000	DECAL - GENUINE REPLACEMENTS	2
23	057424-001	DECAL - CRUSH HAZARD	4
24	058535-000	DECAL - CAUTION BEFORE OPERATING	1
25	058536-000	DECAL - IMPACT FROM DESCENDING	1
26	058531-000	DECAL - TIE DOWN / LIFT POINT	4
27	500438-000	DECAL - LOWER CONTROL BOX	1
28	058539-000	DECAL - ALL PERSONNEL SHALL BE	1
29	058537-000	DECAL - PINCH POINT	2
30	058471-001	NAME PLATE - ANSI	1
31	058532-000	DECAL - HYDRAULIC FLUID	1
32	500424-000	ANSI OPERATORS MANUAL	1
33	500422-001	SERVICE & PARTS MANUAL	1
34	057425-001	DECAL - INSTRUCTIONS INSIDE	1
34	057425-001	DECAL - INSTRUCTIONS INSIDE	1

https://truckmanualshub.com/

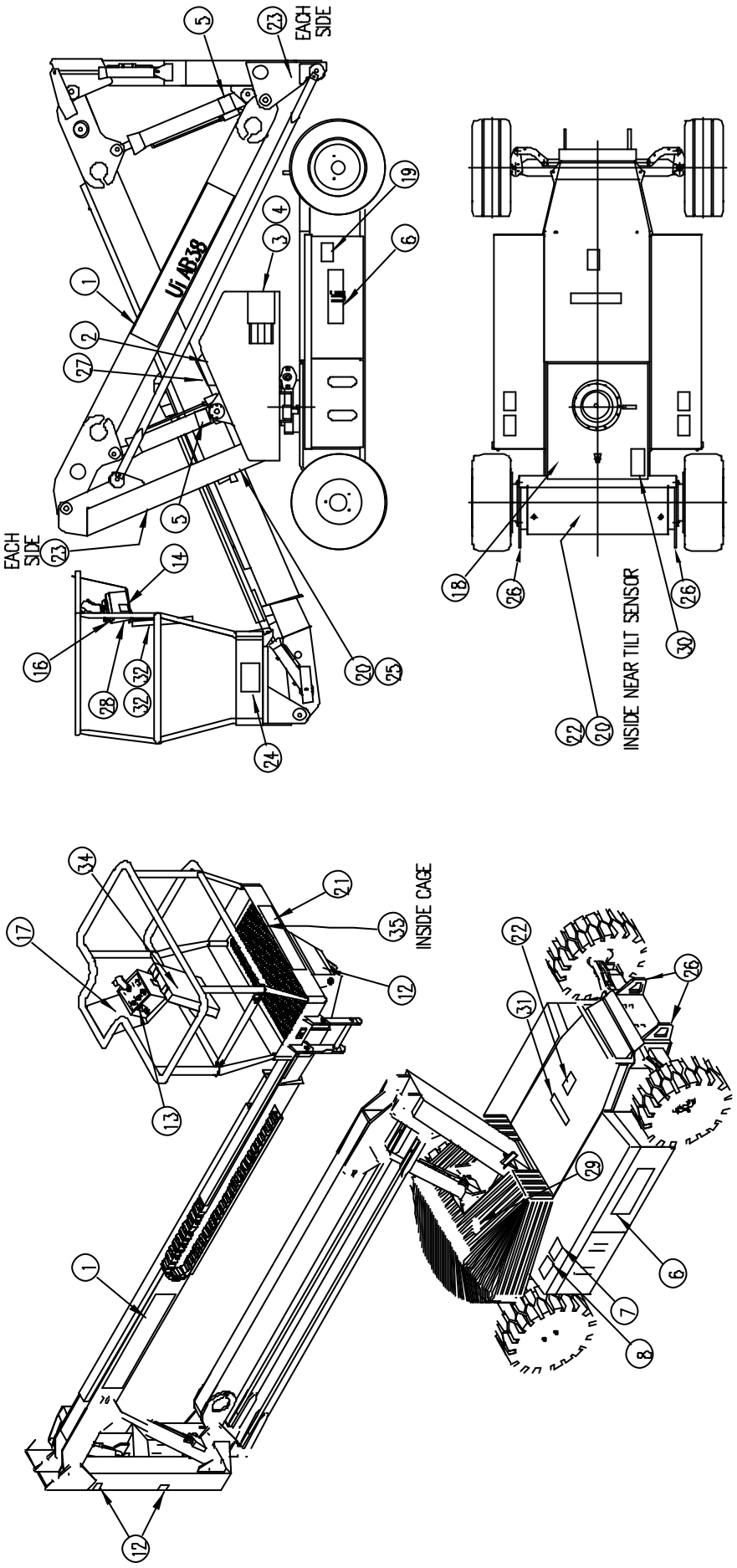

https://truckmanualshub.com/

DECAL KIT
International English (CE)
500206-000

ITEM	PART NO.	DESCRIPTION	QTY.
1	8210013	DECAL - 'AB38N' BOOM + 0074908	2
2	501870-000	DECAL - LOWER CONTROL BOX	1
3	8210014	DECAL - AB38N LOGO	1
4	8210014	DECAL - AB38N LOGO	1
5	502480-000	DECAL - EMERGENCY LOWERING	2
6	569295	DECAL - 'Snorkel' LOGO small	2
7	057429-000	DECAL - BATTERY FLUID LEVEL	2
8	057430-000	DECAL - EXPLOSION HAZARD	2
9	057692-000	DECAL - IMPORTANT BEFORE USING	1
10	058472-000	NAMEPLATE	1
11	500467-000	DECAL - HANDPUMP	1
12	058881-001	DECAL - HAZARD TAPE	2
13	058080-000	DECAL - CAGE LEVELLING	1
14	058186-000	DECAL - ON/OFF UPPER CONTROL	1
15	500423-000	INSTRUCTION MANUAL CE	1
16	501869-000	DECAL - UPPER CONTROL BOX LEGEND	1
17	058181-000	DECAL - 3 POINT	1
18	057392-000	DECAL - S.W.L. LARGE	1
19	058860-000	DECAL - PINCH POINT	2
20	500438-000	DECAL - LOWER CONTROL COVER	1
21	500422-001	SERVICE & PARTS MANUAL	1

https://truckmanualshub.com/

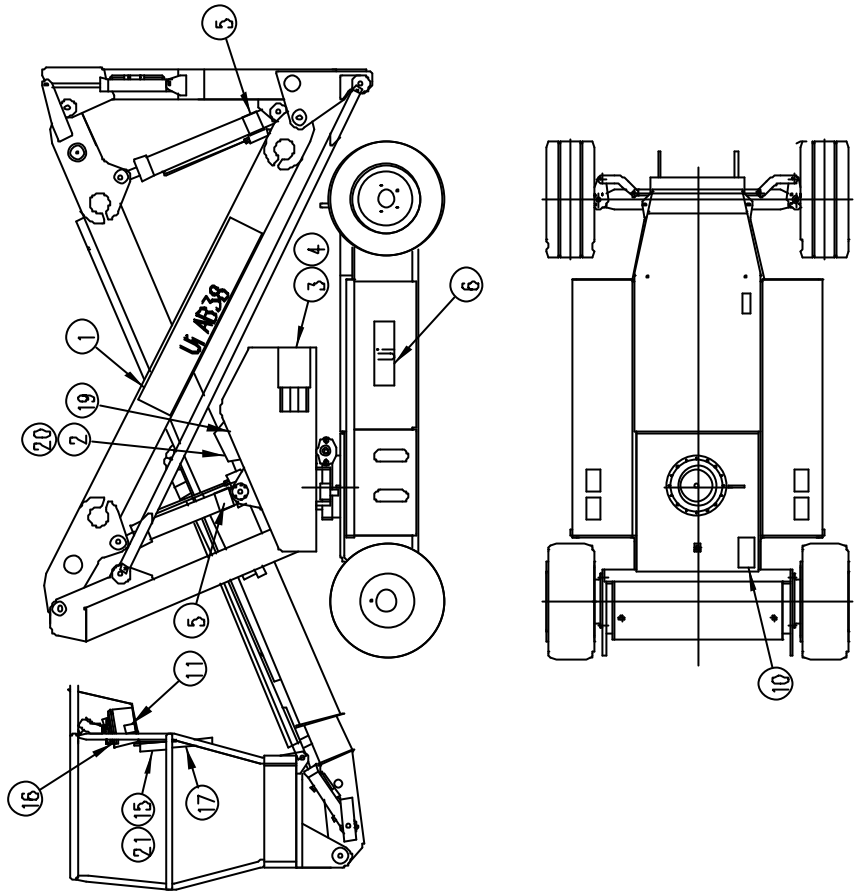

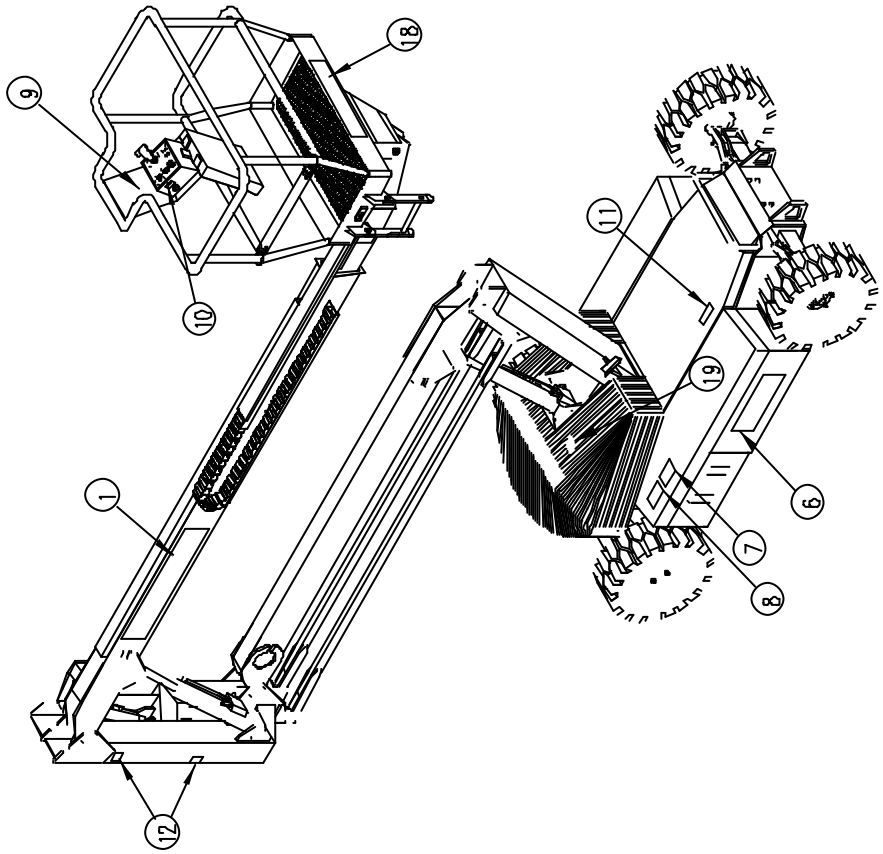

https://truckmanualshub.com/

DECAL KIT
French (CE)
500206-003

ITEM	PART NO.	DESCRIPTION	QTY.
1	8210013	DECAL - 'AB38N' BOOM + 0074908	2
2	501870-000	DECAL - LOWER CONTROL BOX	1
3	8210014	DECAL - AB38N LOGO	1
4	8210014	DECAL - AB38N LOGO	1
5	502480-000	DECAL - EMERGENCY LOWERING	2
6	569295	DECAL - 'Snorkel' LOGO small	2
7	057429-001	DECAL - BATTERY FLUID LEVEL	2
8	057430-001	DECAL - EXPLOSION HAZARD	2
9	057692-001	DECAL - IMPORTANT BEFORE USING	1
10	058472-000	NAMEPLATE	1
11	500467-001	DECAL - HANDPUMP	1
12	058881-001	DECAL - HAZARD TAPE	2
13	058080-000	DECAL - CAGE LEVELLING	1
14	058186-001	DECAL - ON/OFF UPPER CONTROL	1
15	500423-000	INSTRUCTION MANUAL CE	1
16	501869-000	DECAL - UPPER CONTROL BOX LEGEND	1
17	058181-001	DECAL - 3 POINT	1
18	057392-000	DECAL - S.W.L. LARGE	1
19	058860-000	DECAL - PINCH POINT	2
20	500438-001	DECAL - LOWER CONTROL COVER	1
21	500422-001	SERVICE & PARTS MANUAL	1

DECAL KIT
German (CE)
500206-002

ITEM	PART NO.	DESCRIPTION	QTY.
1	8210013	DECAL - 'AB38N' BOOM + 0074908	2
2	501870-000	DECAL - LOWER CONTROL BOX	1
3	8210014	DECAL - AB38N LOGO	1
4	8210014	DECAL - AB38N LOGO	1
5	502480-000	DECAL - EMERGENCY LOWERING	2
6	569295	DECAL - 'Snorkel' LOGO small	2
7	057507-024	DECAL - BATTERY FLUID LEVEL	2
8	057507-026	DECAL - EXPLOSION HAZARD	2
9	057507-025	DECAL - MACHINE GENERAL INSTR.	1
10	058472-000	NAMEPLATE	1
11	057507-027	DECAL - THIS MACHINE IS NOT INSULATED	1
12	058881-001	DECAL - HAZARD TAPE	2
13	057507-030	DECAL - CAGE LEVELLING	1
14	058186-002	DECAL - ON/OFF UPPER CONTROL	1
15	058990-000	INSTRUCTION MANUAL CE	1
16	501869-000	DECAL - UPPER CONTROL BOX LEGEND	1
17	058181-002	DECAL - 3 POINT	1
18	057507-031	DECAL - S.W.L. LARGE	1
19	058860-000	DECAL - PINCH POINT	2
20	500422-001	SERVICE & PARTS MANUAL	1
21	058013-000	DECAL - BEFORE DRIVING	1
22	500438-002	DECAL - LOWER CONTROL COVER	1

https://truckmanualshub.com/

DECAL KIT
German (CE)
500206-002

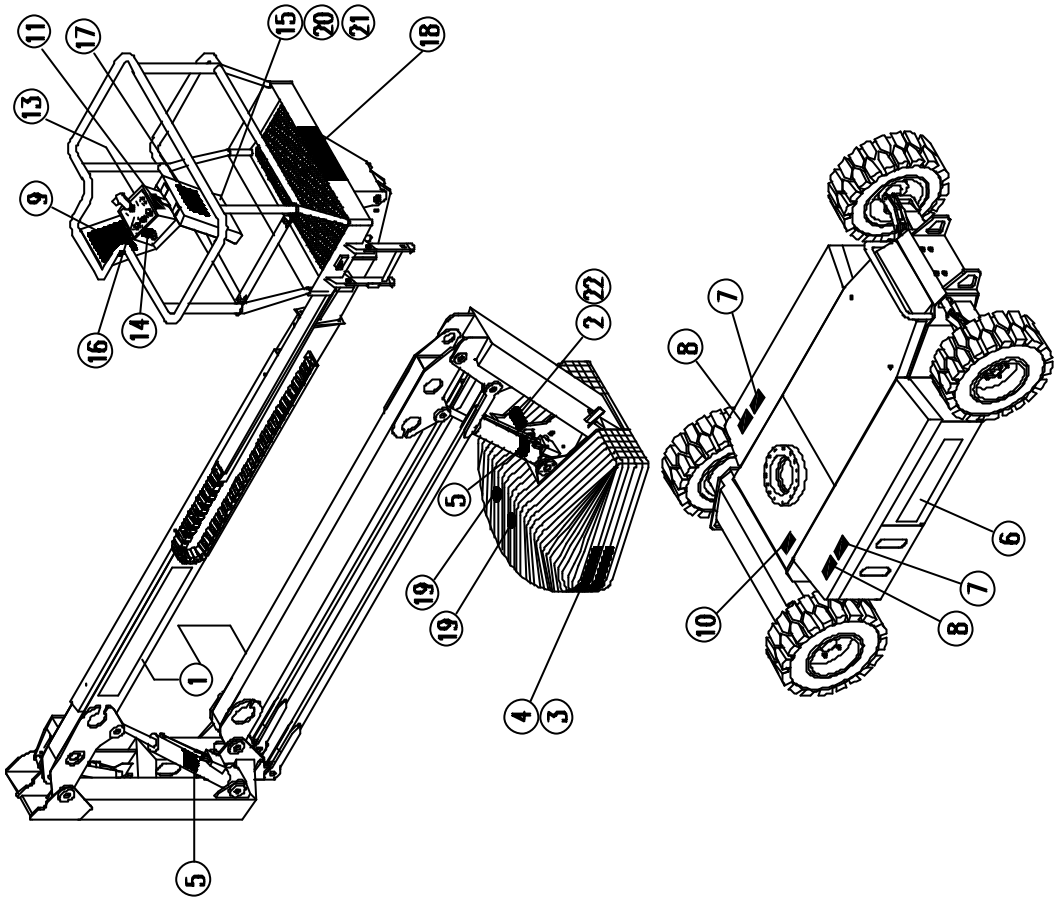

DECAL KIT
French (CE)
500206-003

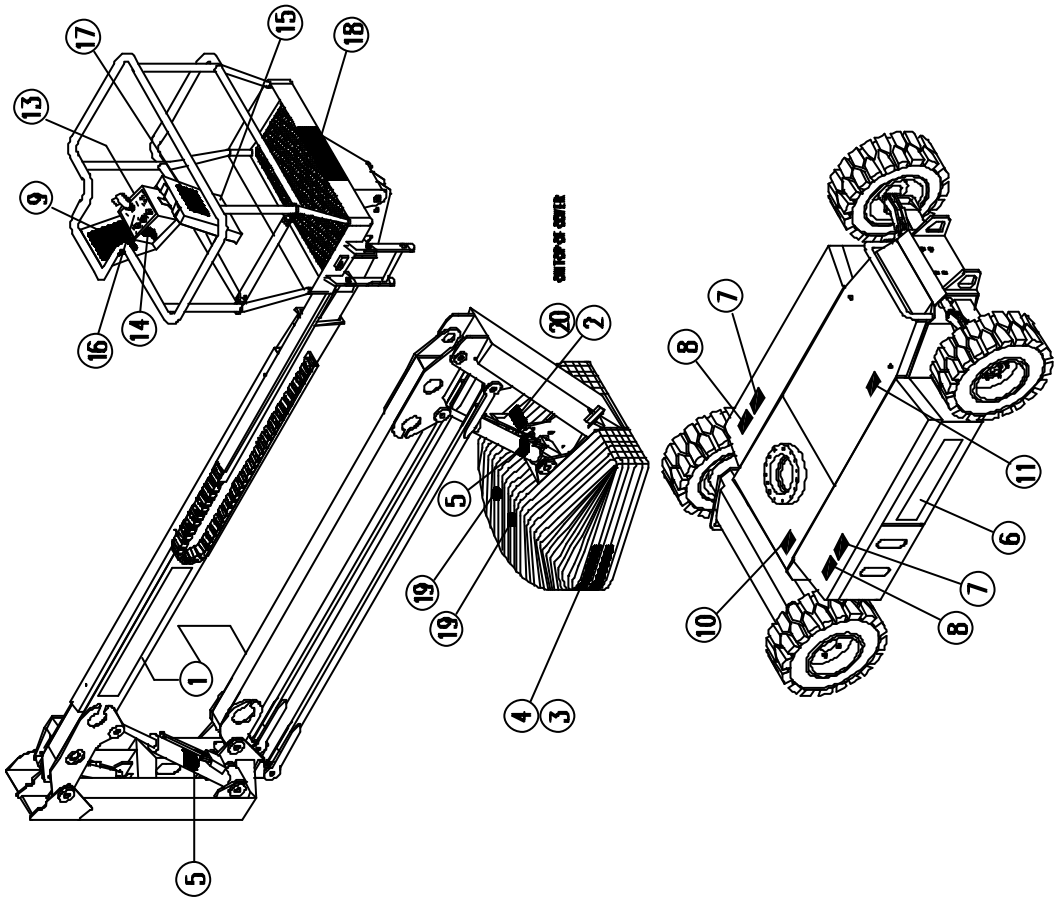

https://truckmanualshub.com/

OPTION LIST

ITEM	PART NO.	DESCRIPTION
1	058191-000	AB38 OPTION, POWER TO PLATFORM 110V
2	058191-001	AB38 OPTION, POWER TO PLATFORM 220V
3	500123-000	AB38 OPTION, DESCENT ALARM
4	058286-001	AB38 OPTION, HOURMETER
5	058275-000	AB38 OPTION, FLASHING BEACON
6	058284-000	AB38 OPTION, SPOTLIGHT IN PLATFORM
7	058259-003	AB38 OPTION, GENERATOR - PETROL
7	058259-004	AB38 OPTION, GENERATOR - DIESEL
8	500494-001	AB38 OPTION, NON MARKING WHEELS (WHITE TYRES)

The options outlined opposite are available from UpRight when ordering a new machine or as a spare part to be retrofitted to an existing machine. However, because the Options are not considered a normal spare part, the standard parts delivery policy may not always apply.

When required as a Spare Part please contact UpRight Product Support for more information.

When required with new machine please contact UpRight Sales & Marketing prior to placing machine order.

https://truckmanualshub.com/

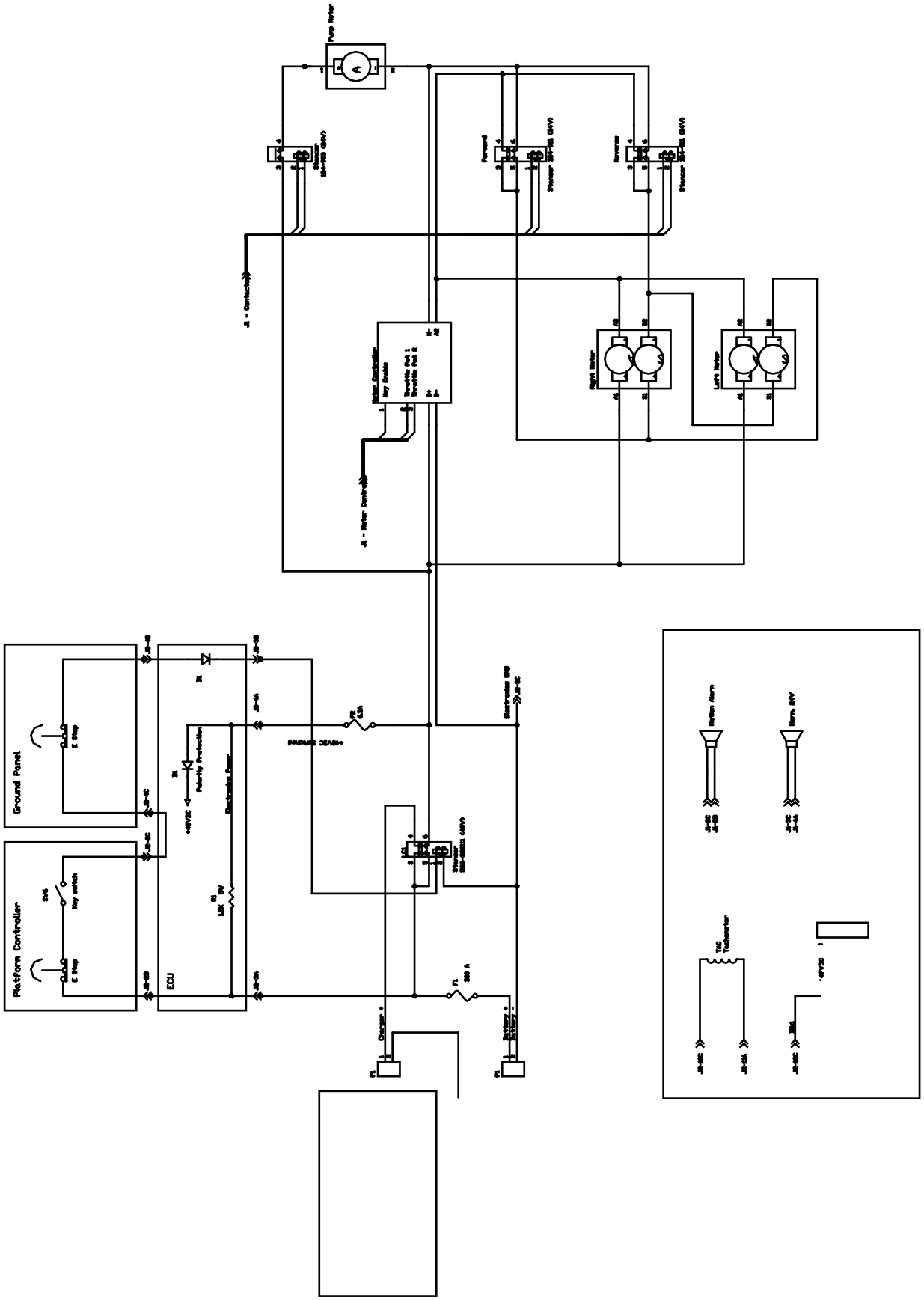

Technician's Print

AB38 Work Platform Electrical Schematic

https://truckmanualshub.com/

https://truckmanualshub.com/

https://truckmanualshub.com/

UpRight Powered Access HQ
Vigo Centre
Birtley Road
Washington
Tyne & Wear
NE38 9DA
U.K.

Snorkel International,
2009 Roseport Road,
Elwood,
Kansas 66024,
USA.

Europe

TEL:+44 (0) 845 1550 058

Snorkel

www.snorkelusa.com

USA

TEL: +1 (785) 989 3000
FAX: +1 (785) 989 3070