https://truckmanualshub.com/

SERVICE REPAIR

MANUAL

Hyster B274 (H50CT) Internal Combustion Engine Trucks Service Repair Manual

HYSTER

https://truckmanualshub.com/

ELECTRICAL SYSTEM

S50CT [B267];
H2.0-2.5CT (H50CT) [B274]

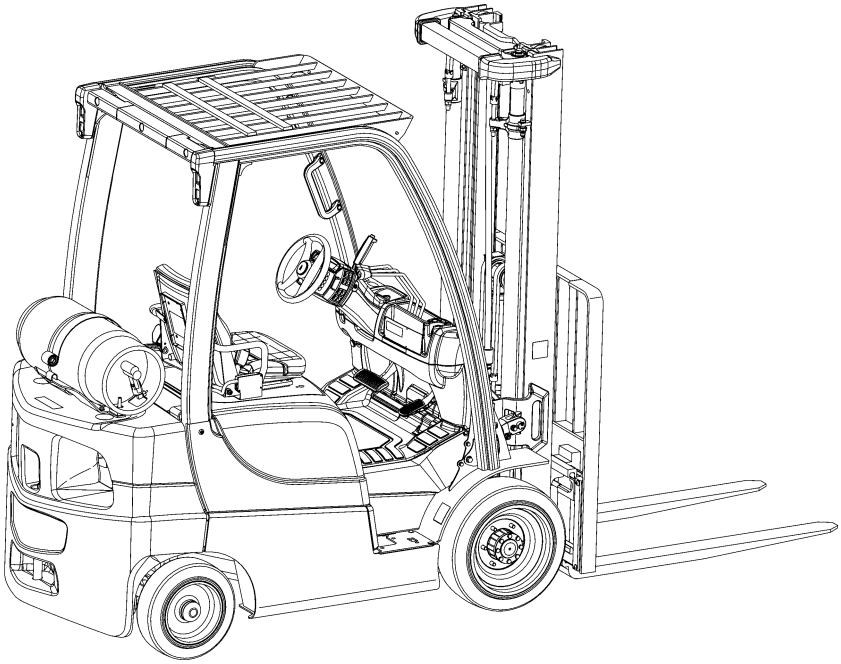

HYSTER

PART NO. 4120745

2200 SRM 1771

https://truckmanualshub.com/

SAFETY PRECAUTIONS
MAINTENANCE AND REPAIR

- The Service Manuals are updated on a regular basis, but may not reflect recent design changes to the product. Updated technical service information may be available from your local authorized Hyster® dealer. Service Manuals provide general guidelines for maintenance and service and are intended for use by trained and experienced technicians. Failure to properly maintain equipment or to follow instructions contained in the Service Manual could result in damage to the products, personal injury, property damage or death.
- When lifting parts or assemblies, make sure all slings, chains, or cables are correctly fastened, and that the load being lifted is balanced. Make sure the crane, cables, and chains have the capacity to support the weight of the load.
- Do not lift heavy parts by hand, use a lifting mechanism.
- Wear safety glasses.
- DISCONNECT THE BATTERY CONNECTOR before doing any maintenance or repair on electric lift trucks. Disconnect the battery ground cable on internal combustion lift trucks.
- Always use correct blocks to prevent the unit from rolling or falling. See HOW TO PUT THE LIFT TRUCK ON BLOCKS in the **Operating Manual** or the **Periodic Maintenance** section.
- Keep the unit clean and the working area clean and orderly.
- Use the correct tools for the job.
- Keep the tools clean and in good condition.
- Always use **HYSTER APPROVED** parts when making repairs. Replacement parts must meet or exceed the specifications of the original equipment manufacturer.
- Make sure all nuts, bolts, snap rings, and other fastening devices are removed before using force to remove parts.
- Always fasten a DO NOT OPERATE tag to the controls of the unit when making repairs, or if the unit needs repairs.
- Be sure to follow the **WARNING** and **CAUTION** notes in the instructions.
- Gasoline, Liquid Petroleum Gas (LPG), Compressed Natural Gas (CNG), and Diesel fuel are flammable. Be sure to follow the necessary safety precautions when handling these fuels and when working on these fuel systems.
- Batteries generate flammable gas when they are being charged. Keep fire and sparks away from the area. Make sure the area is well ventilated.

NOTE: The following symbols and words indicate safety information in this manual:

WARNING

Indicates a hazardous situation which, if not avoided, could result in death or serious injury.

CAUTION

Indicates a hazardous situation which, if not avoided, could result in minor or moderate injury and property damage.

On the lift truck, the WARNING symbol and word are on orange background. The CAUTION symbol and word are on yellow background.

https://truckmanualshub.com/

TABLE OF CONTENTS

General 1
Engine Control Module (ECM), Yanmar Diesel Engine 2
Remove 2
Install 2
Display Switch Cluster 3
Remove 3
Install 5
Direction Control Lever 5
Remove 5
Install 6
Key Switch 6
Remove 6
Install 7
Display Switch Cluster Panel Bezel and Overlay 7
Remove 7
Install 7
Steering Column Repair 8
Remove 8
Disassemble 9
Assemble 10
Install 10
Sensors and Switches 10
General 10
Dash Panel, Kick Panel, and Seal Plate, Remove and Install 10
Remove 10
Install 11
Accelerator Pedal Position Sensor 12
Remove 12
Install 13
Brake Fluid Level Switch 13
Remove 13
Install 14
Brake Pedal Position Sensor 14
Remove 14
Install 15
Parking Brake Position Sensor 16
Remove 16
Install 16
Seat Sensor (Operator Presence System) 16
Non-Suspension Seat 16
Remove 16
Install 18
Full Suspension Seats 18
Remove 18
Install 18
Transmission Pressure Sensors (Transducers) 19
Remove 19
Install 19
Transmission Temperature Sensor 19
Remove 19

©2014 HYSTER COMPANY

https://truckmanualshub.com/

TABLE OF CONTENTS (Continued)

Install 20
Rear Horn Button Switch 20
Remove 20
Install 20
Engine and Fuel Sensors and Switches, PSI 2.4L Dual Fuel Trucks 21
Engine and Fuel Sensors, Yanmar 2.6L Diesel Trucks 21
Engine Speed Sensor 21
Remove 21
Install 22
Oil Pressure Sensor 22
Remove 22
Install 22
Engine Coolant Temperature (ECT) Sensor 22
Remove 22
Install 22
Fuel/Water Separator Sensor 22
Remove 22
Install 23
Glow Plug Relay 23
Remove 23
Install 26
Power Distribution Module (PDM) and Component Parts 26
Power Distribution Module (PDM) as a Unit 26
Remove 26
Install 27
Power Distribution Module (PDM) Components 28
Remove and Install 28
Battery 28
Remove 28
Install 28
Lights 29
Work Lights (Front and Rear) 29
Remove 29
Install 29
Strobe Light 29
Remove 29
Install 30
LED Tail, Backup, and Brake Lights 30
Remove 30
Install 31
Reflectors 31
Remove 31
Install 31

This section is for the following models:

(S50CT) [B267];
H2.0-2.5CT (H50CT) [B274]

https://truckmanualshub.com/

Thanks very much for your reading,

Want to get more information,

Please click here, Then get the complete manual

JustClickHere

NOTE:

If there is no response to click on the link above, please download the PDF document first, and then click on it.

Have any questions please write to me:
admin@servicemanualperfect.com

https://truckmanualshub.com/

General

The removal and replacement procedures for the following electrical components are covered in this manual:

- Display Switch Cluster
- Power Distribution Module (PDM)
- Lights
- Sensors and switches
- Battery

Some of the components used are made of plastic. When using screws to replace and install plastic components, the screws should be rotated counterclockwise until the screw thread turns over the last thread in the plastic part. The screw can then be turned clockwise to make a connection. This prevents "cutting" new threads and damaging the existing thread in the plastic part.

If any welding must be done, obtain proper authorization from a Resident Service Engineer. If authorization is given, be sure to follow the procedures in the **CAUTION** below.

CAUTION

When welding, always disconnect the negative battery cable from battery and disconnect the ground wire from the ground stud on the frame. See Figure 1. To prevent damage to the Electronic Control Unit (ECU), remove it from the lift truck.

For lift trucks equipped with LPG engine see **Fuel System PSI 2.4L** 0900SRM1757 for procedure to remove ECU from lift truck.

For lift trucks equipped with diesel engines see section Engine Control Module (ECM), Yanmar Diesel Engine in this manual for procedure to remove ECM from lift truck.

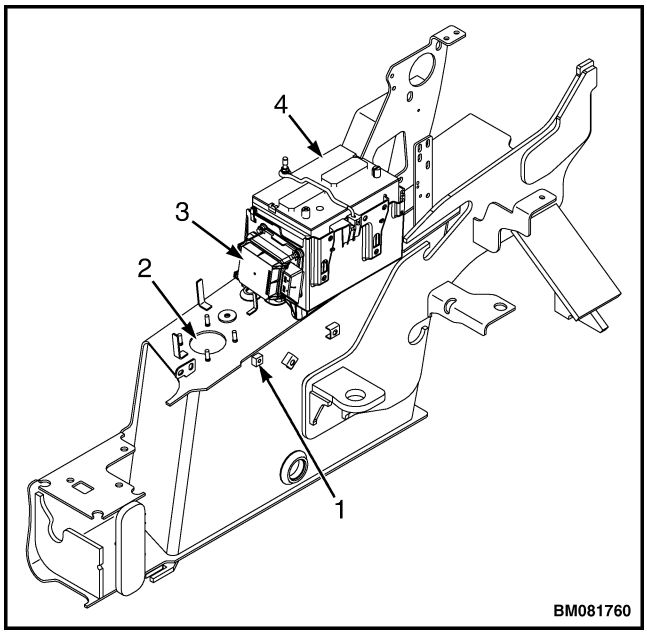

NOTE: VIEW SHOWN IS FROM THE LEFT SIDE. MAJOR COMPONENTS AND ELECTRICAL CONNECTIONS NOT SHOWN FOR CLARITY.

1. GROUND STUD
2. TANK OPENING FOR HYDRAULIC FILTER
3. POWER DISTRIBUTION MODULE (PDM)
4. BATTERY

Figure 1. Welding Preparation

For more information on how to perform welding repairs to lift truck and overhead guard, see **Periodic Maintenance** 8000SRM1774.

https://truckmanualshub.com/

Engine Control Module (ECM), Yanmar Diesel Engine

REMOVE

NOTE: ECM for Yanmar engine is located on left-hand side of frame.

1. Disconnect negative battery cable.
2. Remove two conduit clips from wire harness and bracket. See Figure 2.
3. Disconnect ECM connector from ECM. See Figure 2.
4. Remove four capscrews and ECM from bracket. See Figure 2.
5. Remove capscrew and bracket from frame. See Figure 2.

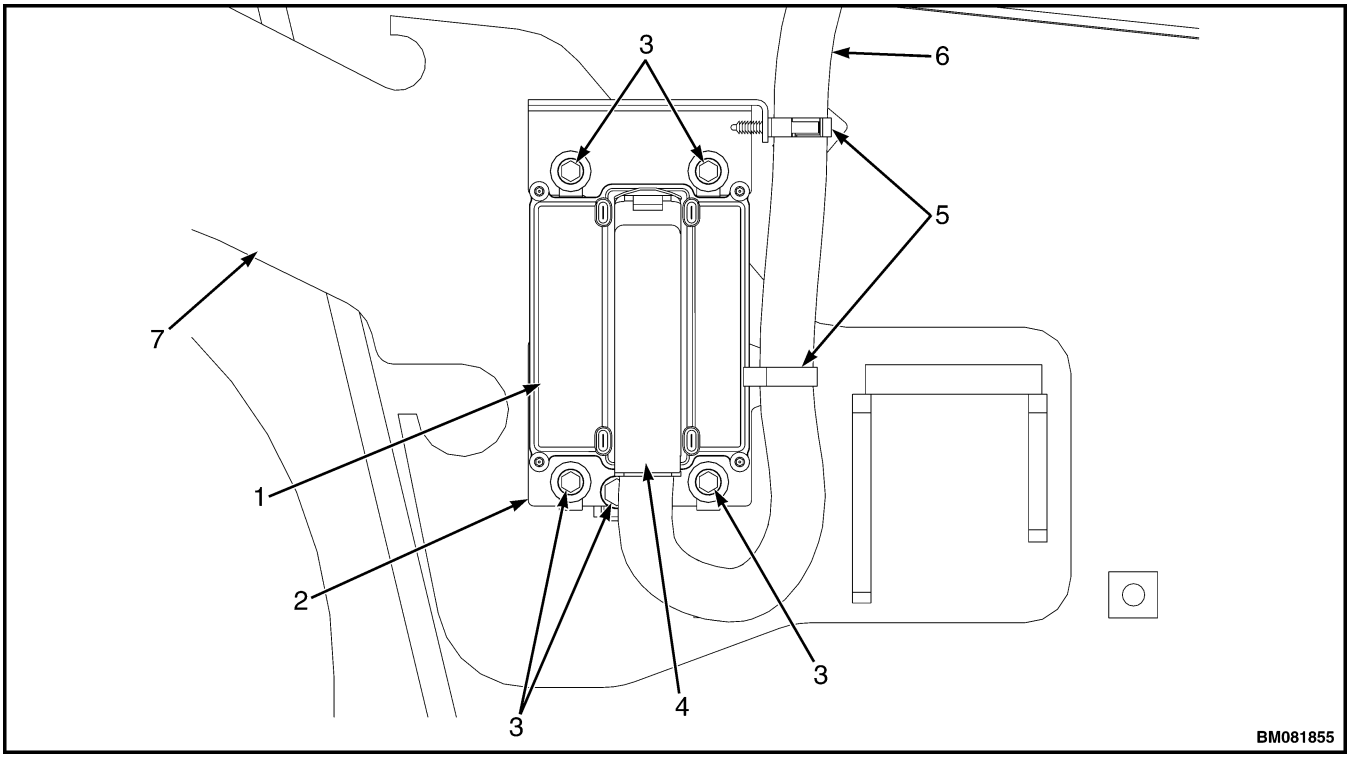

1. ECM
2. BRACKET
3. CAPSCREW
4. ECM CONNECTOR
5. CONDUIT CLIP
6. WIRE HARNESS
7. FRAME

Figure 2. ECM, Yanmar Diesel Engine

INSTALL

1. Install bracket and capscrew on frame. See Figure 2.
2. Install ECM and four capscrews on bracket. See Figure 2.
3. Connect ECM connector to ECM. See Figure 2.
4. Install two conduit clips to wire harness and bracket. See Figure 2.
5. Connect negative battery cable.

https://truckmanualshub.com/

Display Switch Cluster

REMOVE

NOTE: The Display Switch Cluster is a non-repairable part. See **Parts Manual** for replacement part number.

1. Disconnect ground wire.
2. Lift up on the steering wheel slightly and pull up on the tilt lever. Fully lower the steering column.
3. Remove upper steering column cover by pulling up on upper steering column cover to release the latches (one on either side), and pulling cover away from steering column. See Figure 3.

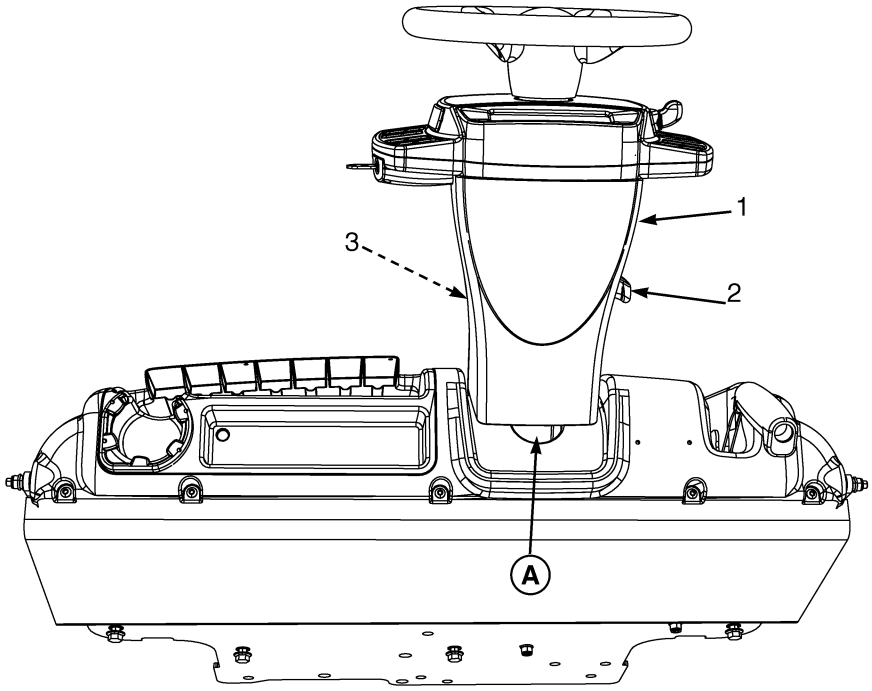

NOTE: TOP VIEW OF DASH SHOWN.

A. INDICATES TO PULL UP TO UNLATCH

1. UPPER STEERING COLUMN COVER
2. STEERING COLUMN TILT LEVER
3. LOWER STEERING COLUMN COVER

Figure 3. Upper Steering Column Cover Removal

4. Remove the horn button and disconnect the horn wires.

NOTE: A puller tool may be required to remove the steering wheel.

5. Remove the lock nut securing the steering wheel and remove steering wheel from steering column. Take care to not damage the horn wires. See Figure 4.

https://truckmanualshub.com/

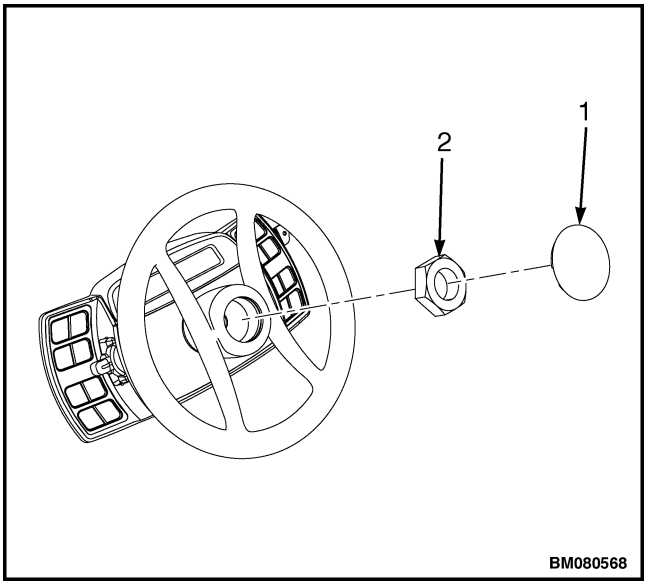

Figure 4. Steering Wheel Removal

Legend for Figure 4

1. HORN BUTTON
2. LOCK NUT

6. Disconnect the Display Switch Cluster harness from the Display Switch Cluster. Remove the four bolts securing the Display Switch Cluster. Slide the display panel off of the steering column. See Figure 5.

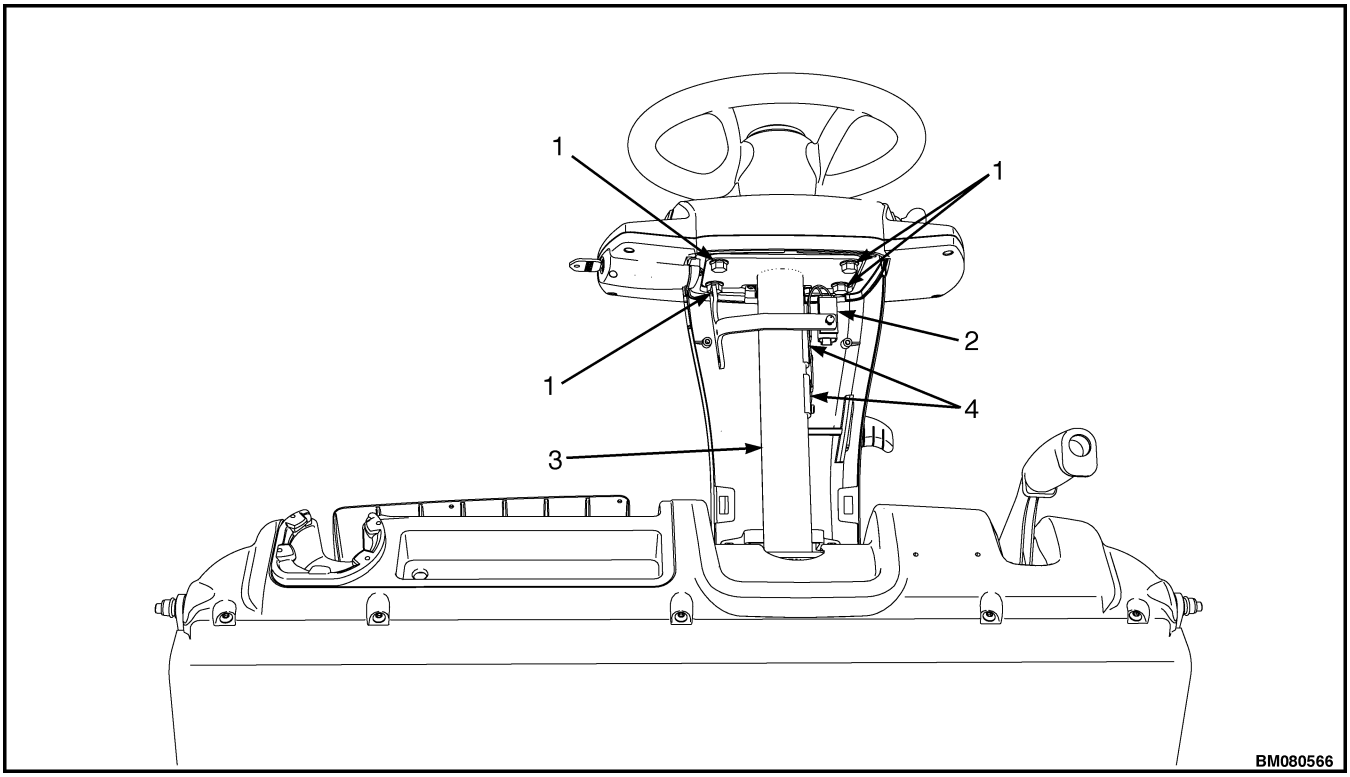

NOTE: TOP DOWN VIEW SHOWN.

1. BOLTS
2. DISPLAY SWITCH CLUSTER HARNESS
3. STEERING COLUMN
4. HORN WIRES (CONTACT PADS)

Figure 5. Display Switch Cluster Removal

https://truckmanualshub.com/

INSTALL

1. Install Display Switch Cluster onto steering column. Install four bolts to secure panel to steering column and tighten bolts to 19 N•m (168 lbf in). See Figure 5.
2. Connect the Display Switch Cluster to the display harness.
3. Install steering wheel onto steering shaft and tighten the lock nut until steering wheel is fully seated. The final torque for the lock nut is 40 to 54 N•m (30 to 40 lbf ft). See Figure 4.
4. Connect horn wires to horn button. Install horn lock nut and horn button into steering wheel.
5. Install upper steering column cover by aligning the two latches and pushing down until latched. See Figure 3.

DIRECTION CONTROL LEVER

Remove

NOTE: The direction control lever is located on left side of Display Switch Cluster. The direction control lever is non-repairable and must be replaced as an assembly. See the **Parts Manual** for replacement part number.

1. Insert two small, flat-blade or Phillips screwdrivers, with a 3.175 mm (0.125 in.) or less, wide blade or die end, into the opening on the Display Switch Cluster on an outward angle enough to compress the spring tab on the direction control lever. See **A**, Figure 6.

https://truckmanualshub.com/

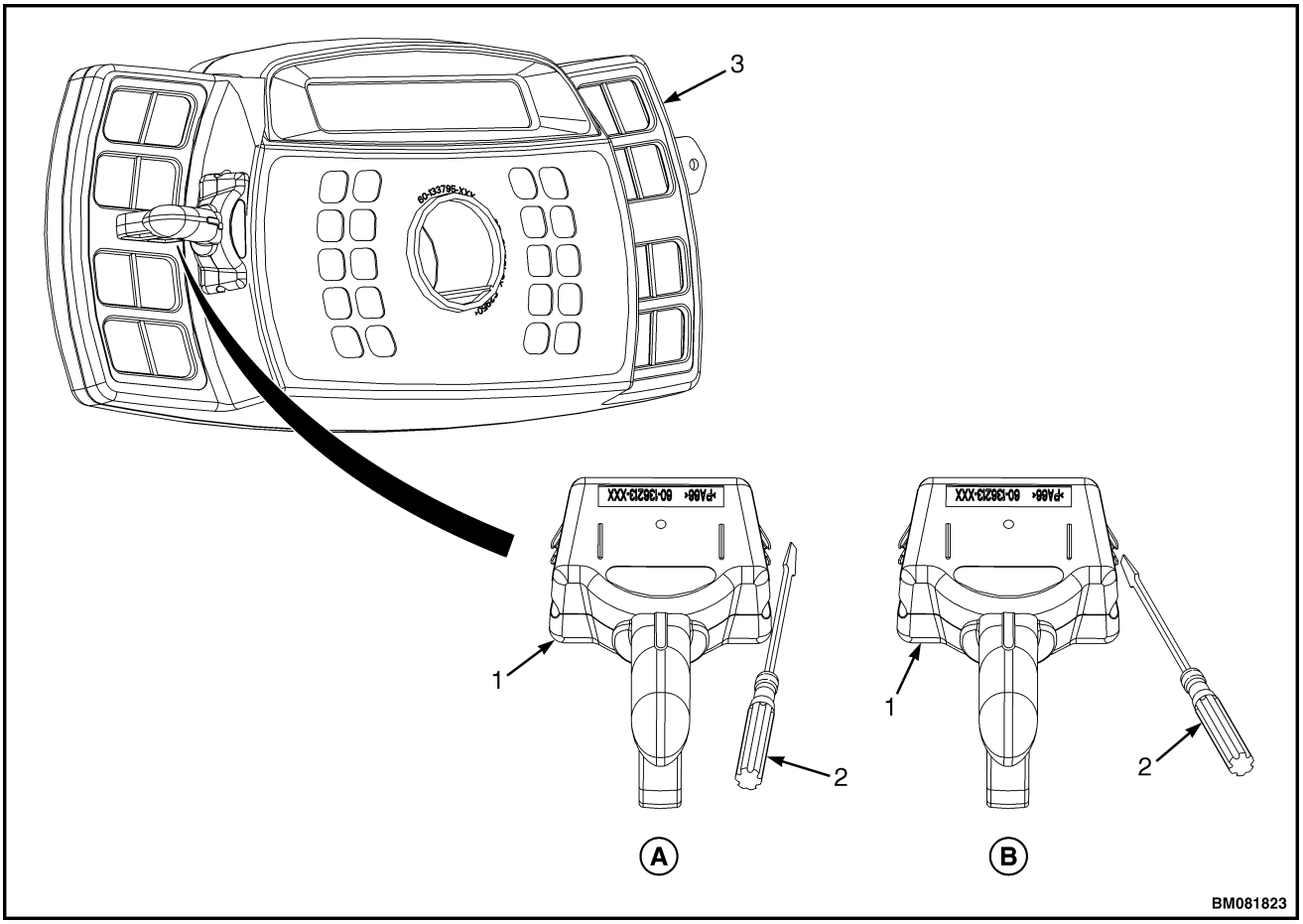

NOTE: DISPLAY SWITCH CLUSTER SHOWN OUTSIDE OF LIFT TRUCK FOR CLARITY. FLAT-BLADE SCREWDRIVERS SHOWN.

A. STEP 1

1. DIRECTION CONTROL LEVER
2. FLAT-BLADE SCREWDRIVER

B. STEP 2

3. DISPLAY SWITCH CLUSTER

Figure 6. Direction Control and Turn Signal Removal

2. Pry the spring tab toward the body of the direction control lever or turn signal lever and, at the same time, pull on the handle of the lever enough to free the tab of the interior lock of the Display Switch Cluster. See **B**, Figure 6.

3. Repeat the previous steps on the opposite side of the direction control lever. Remove the direction control lever from the Display Switch Cluster.

Install

Install the direction control lever into the opening of the Display Switch Cluster until the locking tabs are engaged in the Display Switch Cluster.

KEY SWITCH

Remove

1. Fully lower the steering column and remove the upper steering column cover by pushing in on both sides of the cover to release the latches (one on either side), and pulling cover away from steering column. See Figure 3.

2. Remove torx head capscrews. See Figure 7.

https://truckmanualshub.com/

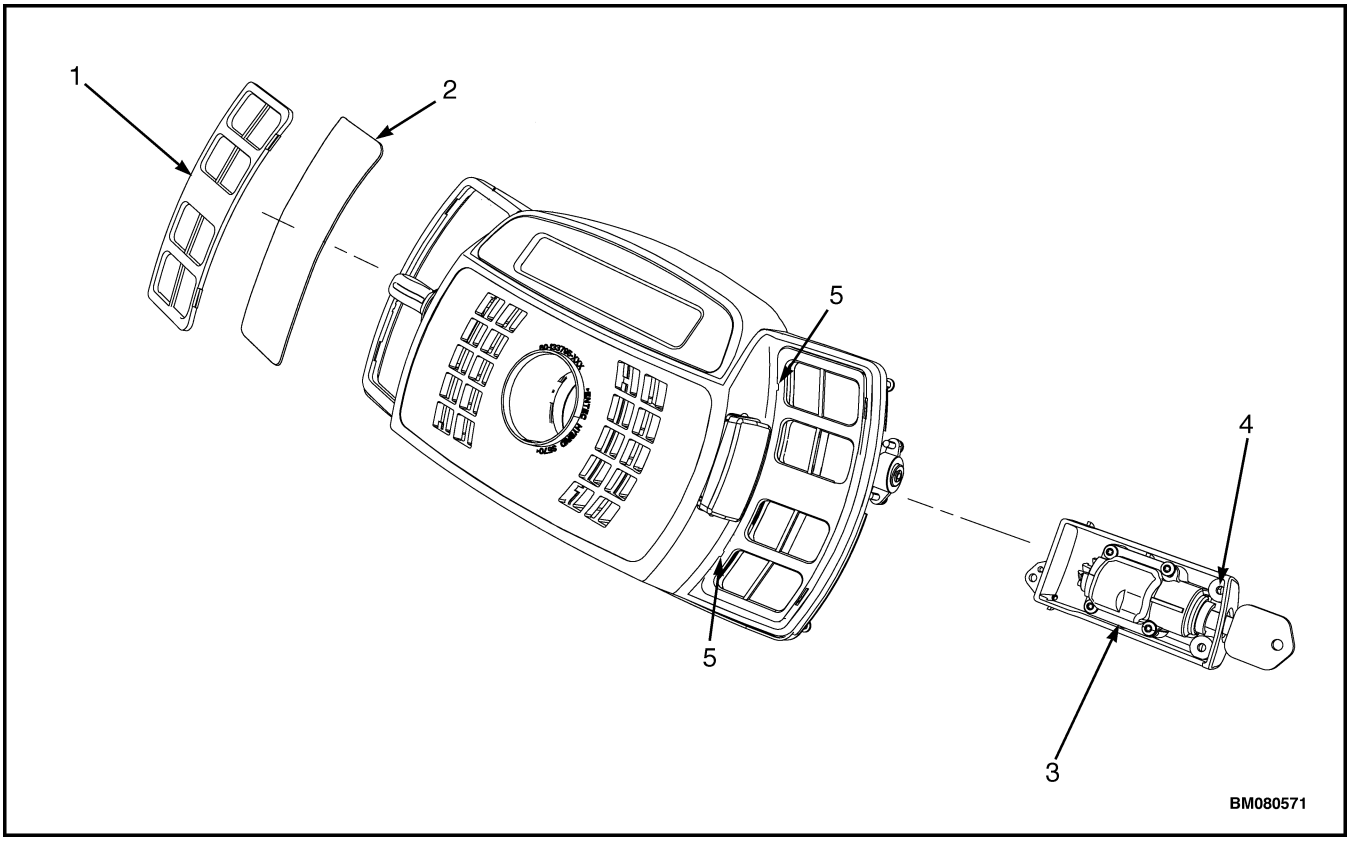

1. BEZEL
2. OVERLAY
3. KEY SWITCH
4. TORX HEAD SCREW
5. INSERT SCREWDRIVER IN SLOT AT THIS LOCATION

Figure 7. Display Switch Cluster Panel Bezel, Grid, and Key Switch Removal

3. Slide key switch assembly out of Display Switch Cluster. See Figure 7.

Install

1. Install new key switch assembly into Display Switch Cluster. Install torx head capscrews (T-15) to secure key switch to Display Switch Cluster. Tighten torx head capscrews to 1.1 N•m (9.7 lbf in). See Figure 7.

2. Install upper steering cover on steering column. Align latches on upper steering cover to holes on steering column and push upper steering cover into place on steering column.

DISPLAY SWITCH CLUSTER PANEL BEZEL AND OVERLAY

Remove

1. Insert a small, flat-bladed screwdriver into the top slot on the inner edge of the bezel and pry outward. Repeat procedure at the lower slot on the bezel. Be careful to not damage bezel and overlay when removing bezel. Lift bezel off of Display Switch Cluster. See Figure 7.

2. Remove overlay from Display Switch Cluster.

Install

Place new overlay on display panel and install a new bezel by inserting the outer edge in the display and then pressing down the inner edge.

https://truckmanualshub.com/

Steering Column Repair

REMOVE

1. Raise hood. Disconnect battery.
2. Remove floor mat and floor plate. See **Frame** 0100SRM1766 for removal procedure. Remove kick panel, dash panel, and seal plate. See Dash Panel, Kick Panel, and Seal Plate, Remove and Install for procedures.
3. Lower steering column to its lowest position.
4. Remove upper steering column cover by pulling up on base of upper steering column cover to release latches (one on either side), and pulling cover away from steering column. See Figure 3.
5. Remove steering wheel and instrument display panel. See section Display Switch Cluster for removal procedures.
6. Remove two screws and remove lower steering column cover. See Figure 8.

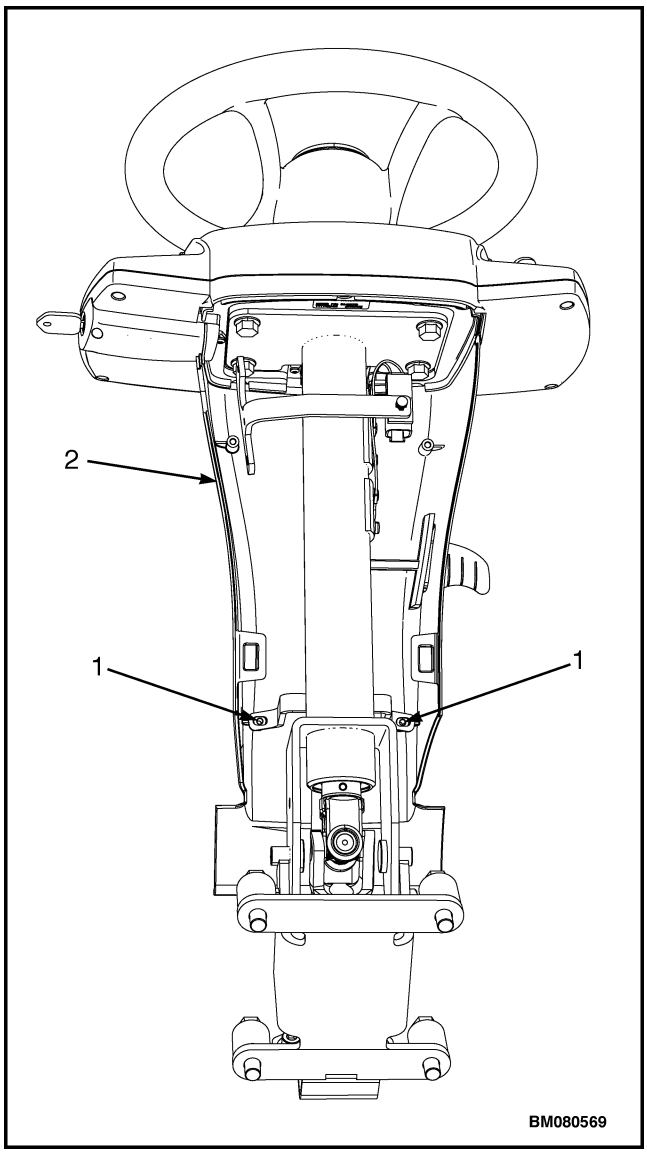

1. SCREWS
2. LOWER STEERING COLUMN COVER

Figure 8. Lower Steering Column Cover

https://truckmanualshub.com/

7. Disconnect Display Switch Cluster harness from display panel. Remove harness from steering column.

8. Remove four bolts (1, Figure 9) holding steering column to cowl.

9. Raise steering column to disengage steering shaft from steering control unit.

DISASSEMBLE

1. Remove steering shaft retention clip. See Figure 9.

2. Remove horn contact pads. See Figure 9.

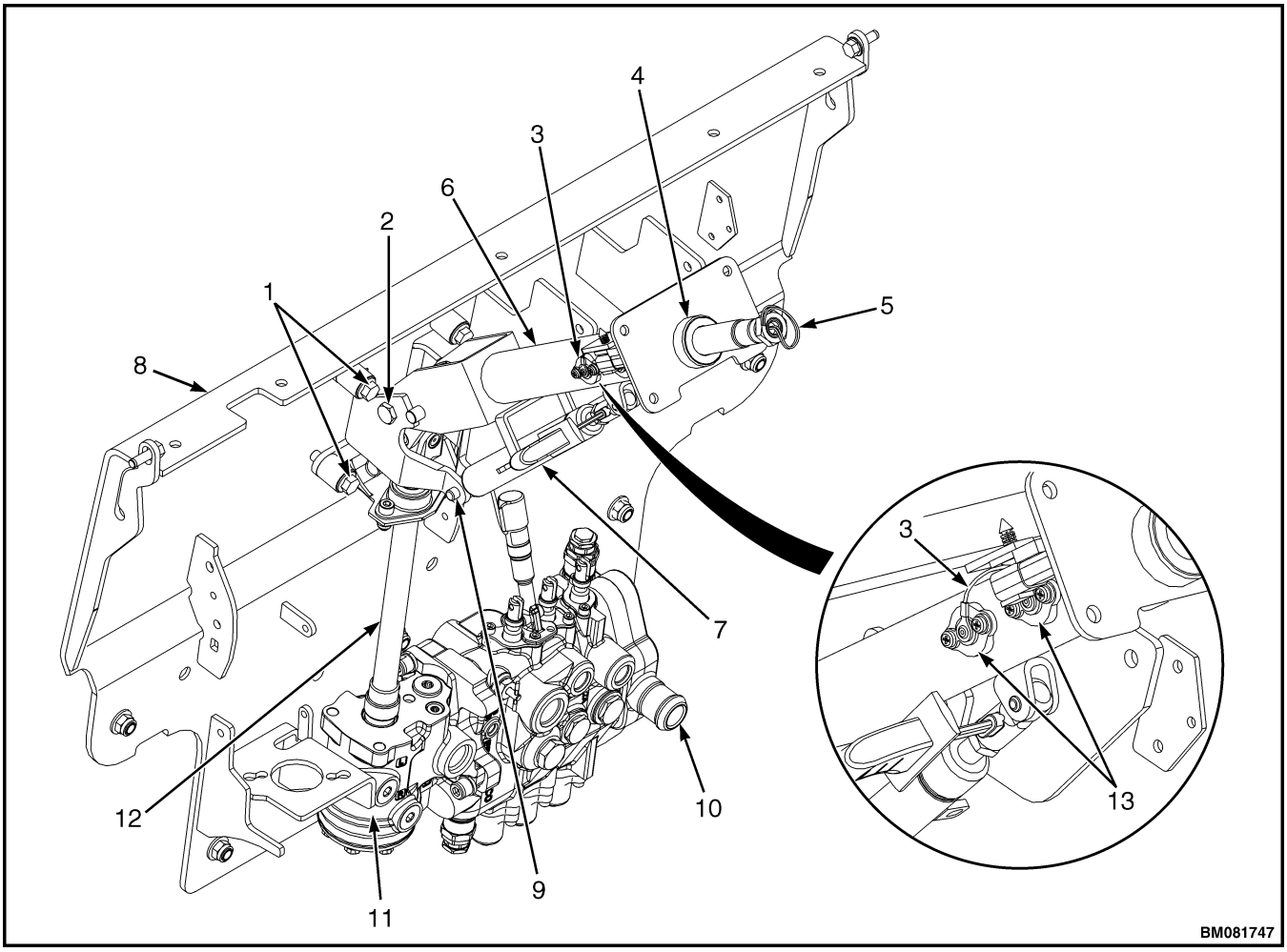

1. BOLTS
2. PIVOT BOLTS
3. HORN WIRES
4. STEERING SHAFT RETENTION CLIP
5. HORN HARNESS
6. STEERING COLUMN
7. GAS CYLINDER
8. COWL
9. LOWER STRUT PIVOT PIN
10. HYDRAULIC CONTROL VALVE
11. STEERING CONTROL UNIT (SCU)
12. STEERING SHAFT
13. HORN CONTACT PADS

Figure 9. Steering Column

3. Remove lower strut pivot pin from gas cylinder. See Figure 9.

4. Remove steering column pivot bolts and steering shaft. See Figure 9.

https://truckmanualshub.com/

ASSEMBLE

1. Install steering shaft and install steering column pivot bolts. See Figure 9.
2. Install lower strut pivot pin in the gas cylinder. See Figure 9.
3. Install horn contact pads. See Figure 9.
4. Install steering shaft retention clip. See Figure 9.

INSTALL

1. Lubricate end of steering shaft with multipurpose grease. Install end of steering shaft into steering control unit.
2. Using four bolts, install steering column to cowl. Tighten bolts to 38 N•m (28 lbf ft). See Figure 9.
3. Connect Display Switch Cluster harness to Display Switch Cluster panel. Install Display Switch Cluster harness onto steering column.
4. Install lower steering column cover and two screws onto steering column. See Figure 8.
5. Install instrument display panel and steering wheel. See section Display Switch Cluster for procedures.
6. Move steering column to it lowest position. Install upper steering column cover by aligning two latches and pushing down until latched. See Figure 3.
7. Install floor plate, floor mat, and seal plate. See **Frame** 0100SRM1766 for procedures.
8. Install kick panel and dash panel. See Dash Panel, Kick Panel, and Seal Plate, Remove and Install for procedures.
9. Connect battery and lower hood.

Sensors and Switches

GENERAL

CAUTION

Before removing and replacing any sensors or switches, ALWAYS disconnect the battery. Failure to disconnect the battery can cause damage to the sensor or switch and other electrical components. Always cover or protect the sensor or switch connector from contamination after disconnecting the harness mating part.

DO NOT use solvent-based cleaners to clean area around sensors or switches.

All sensors and switches used on these trucks are non-repairable parts. Replace with new sensors or switches whenever a sensor or switch malfunctions and is not operating correctly. See **Parts Manual** for replacement part numbers. Before installing new sensors or switches, use a clean cloth and make sure the area around the sensor or switch is clean and free of oils and contaminates.

When removing and replacing sensors or switches, be sure to tag connectors to aid in correct reconnecting.

Dash Panel, Kick Panel, and Seal Plate, Remove and Install

Remove dash panel, kick panel, and seal plate before removing and replacing the following sensors and switches:

- Accelerator pedal position sensor
- Brake fluid level switch
- Service brake pedal position sensor
- Park brake sensor

After replacement of sensors and switches the dash and kick panels need to be installed on lift truck.

Remove

1. Lower the steering column to its lowest position.

https://truckmanualshub.com/

2. Remove upper steering column cover. See section Steering Column Repair for procedures.
3. Remove five Allen Head screws securing the dash panel to the top of the cowl. See Figure 10.
4. Pull kick panel up from bottom and out to remove kick panel from seal plate and clips on dash.
5. Remove dash panel from cowl.
6. Remove three capscrews from seal plate and remove seal plate. See Figure 10.

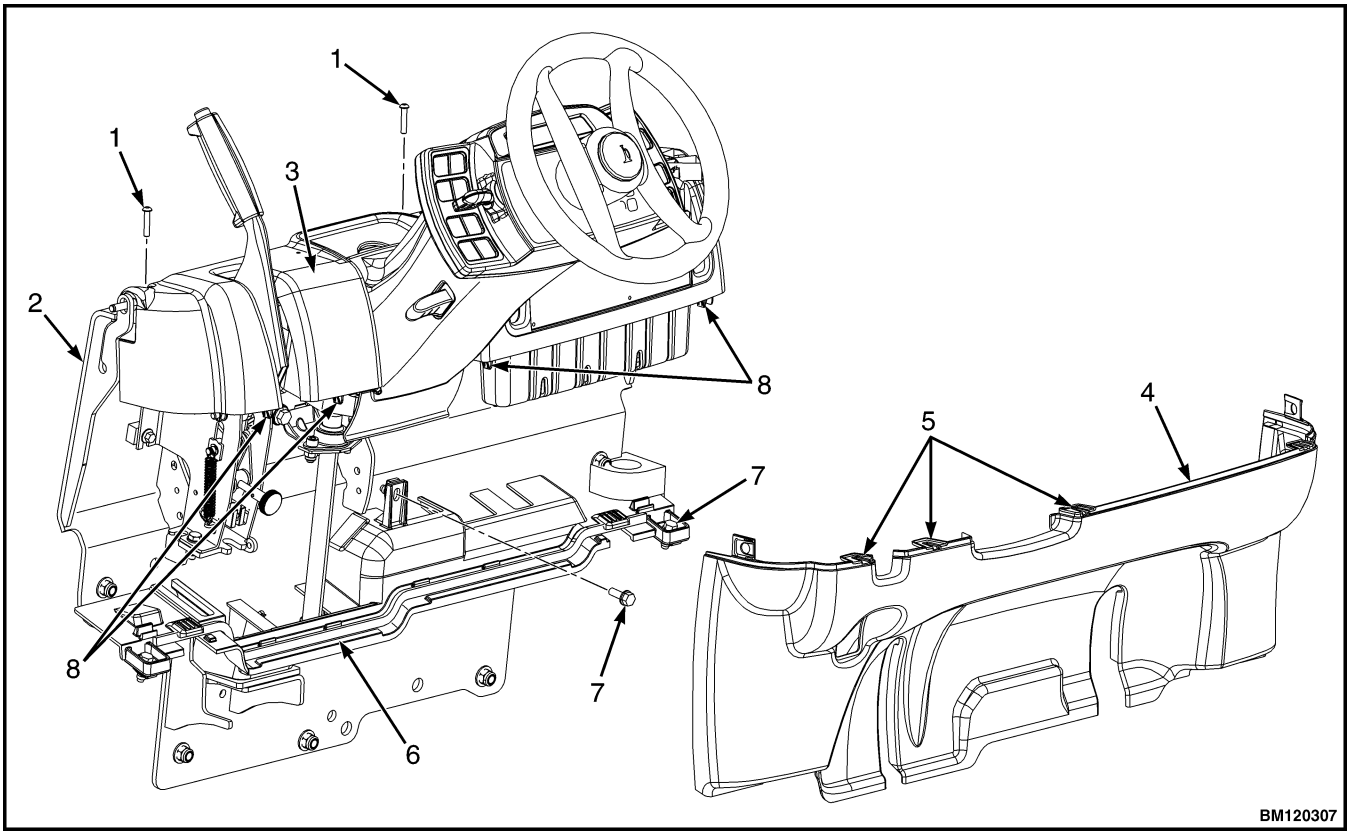

1. ALLEN HEAD SCREWS
2. COWL
3. DASH PANEL
4. KICK PANEL
5. KICK PANEL NOTCHES
6. SEAL PLATE
7. CAPSCREWS
8. CLIPS

Figure 10. Dash Panel, Kick Panel, and Seal Plate Removal

Install

1. Using three capscrews, install seal plate. Tighten capscrews to 10.8 N•m (95.6 lbf in). See Figure 10.
2. Place dash panel on cowl and secure dash to cowl using five Allen Head screws. Tighten Allen Head screws to 3.5 N•m (31 lbf in).
3. Align notches on kick panel to clips on dash and push kick panel into place on seal plate. See Figure 10.
4. Install upper steering column cover. See section Steering Column Repair for procedures.

https://truckmanualshub.com/

ACCELERATOR PEDAL POSITION SENSOR

Remove

1. To access the battery, raise the hood. Disconnect the battery.
2. Remove upper steering column cover (see Display Switch Cluster) and the dash and kick panel. See Dash Panel, Kick Panel, and Seal Plate, Remove and Install.
3. Remove lever bracket capscrews and move hydraulic lever assembly toward operator seat. See Figure 11.

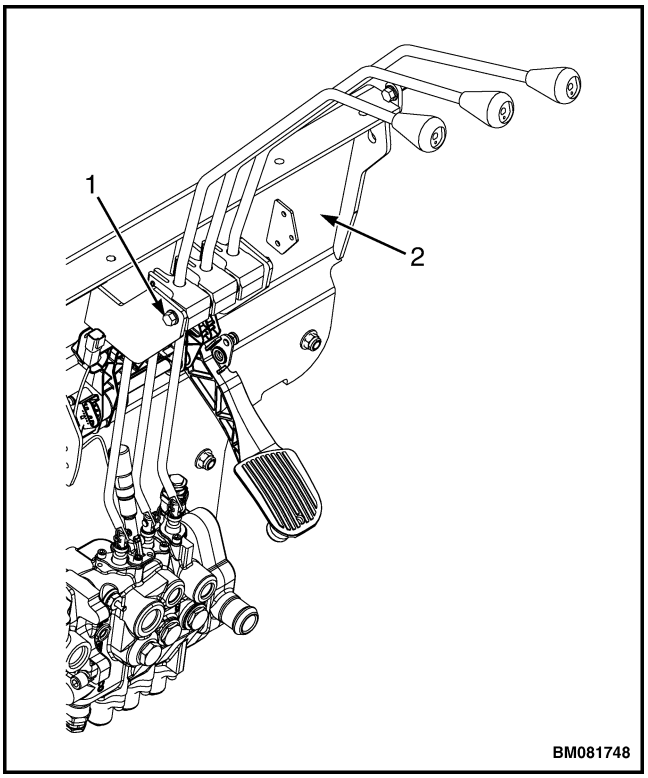

1. LEVER BRACKET CAPSCREWS
2. COWL

Figure 11. Hydraulic Control Valve Removal

NOTE: Tag electrical connectors prior to disconnect to aid in correct reconnect.

4. Disconnect throttle position sensor from wiring harness.
5. Remove three bolts, throttle base, and pedal assembly from cowl. See Figure 12.

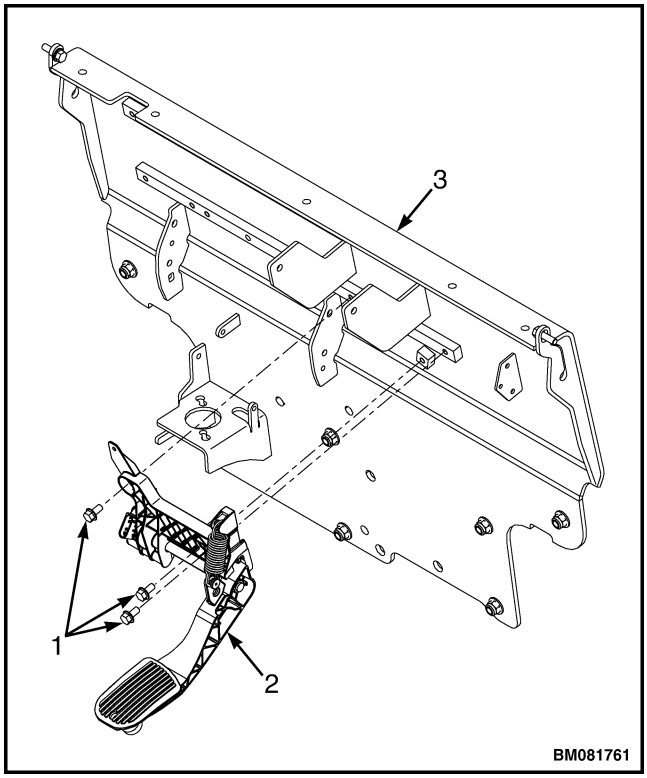

1. BOLTS
2. PEDAL ASSEMBLY
3. COWL

Figure 12. Accelerator Pedal and Throttle Base Removal

6. Remove two pan head screws, two lockwashers, and throttle position sensor from throttle base. See Figure 13.

https://truckmanualshub.com/

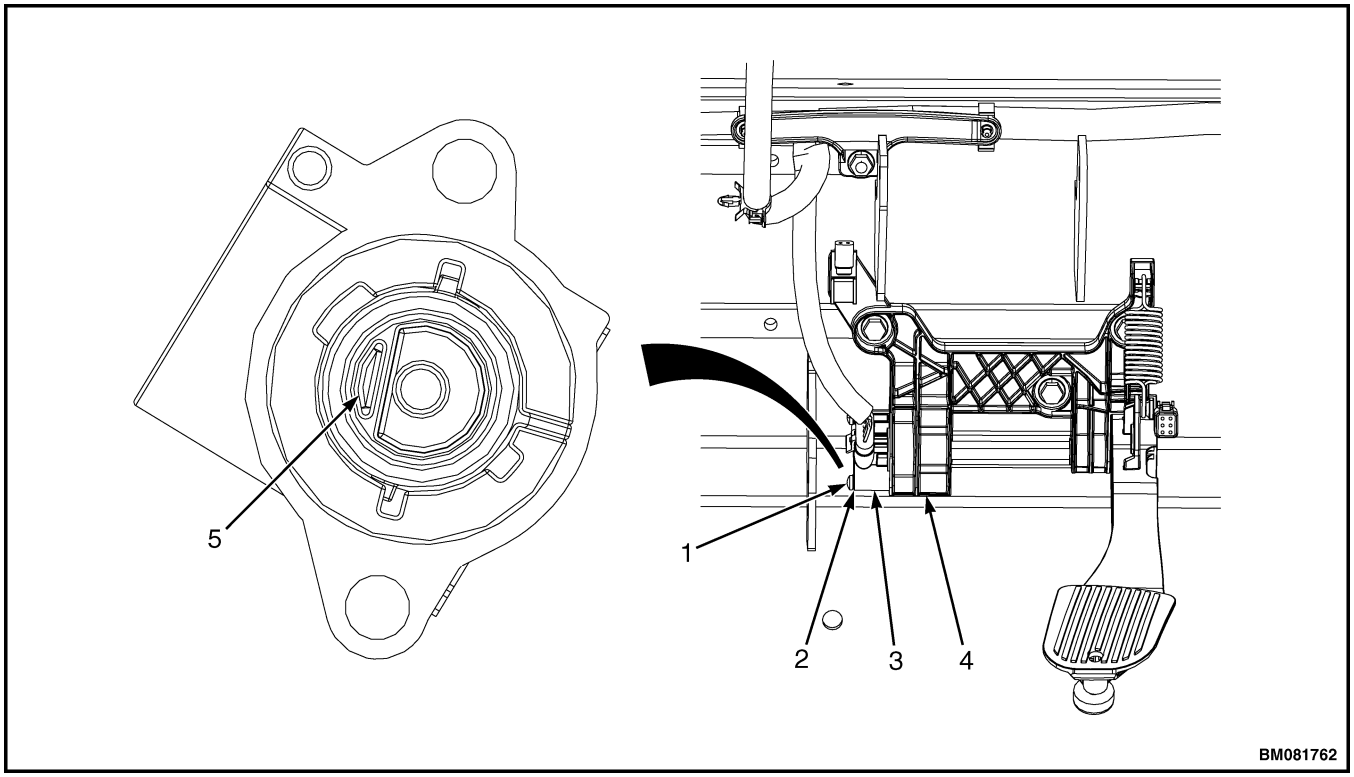

1. PAN-HEAD SCREW
2. LOCKWASHER
3. THROTTLE POSITION SENSOR
4. THROTTLE BASE
5. **D** SHAPED THROTTLE SHAFT END

Figure 13. Throttle Position Sensor

Install

1. Insert new throttle position sensor into opening on throttle base plate. See Figure 13.

2. Rotate sensor so that the **D** shaped throttle shaft end slides into throttle position sensor. See Figure 13.

3. Rotate sensor counterclockwise until locating pin on sensor lines up with hole in throttle base plate.

4. Install throttle position sensor onto throttle base using two lockwashers and two pan head screws. Tighten screws to 2.25 N•m (20 lbf in).

5. Install throttle base plate, pedal assembly, and three bolts onto cowl. Tighten bolts to 19 to 25 N•m (168 to 221 lbf in). See Figure 12.

6. Connect throttle position sensor connector to wiring harness as tagged during removal.

7. Install lever bracket onto cowl. Install clevis and retention pins, and connect levers to control valve. See Figure 11.

8. Install kick panel and dash. See Dash Panel, Kick Panel, and Seal Plate, Remove and Install for installation procedures.

9. Install upper steering column cover. See Display Switch Cluster.

10. Connect battery and lower the hood.

11. Adjust throttle pedal stop, see **Frame** 0100SRM1766 for adjustment procedure.

BRAKE FLUID LEVEL SWITCH

Remove

NOTE: The brake fluid level switch is a component of the brake fluid reservoir, located inside the reservoir. When the switch is replaced, the reservoir must be replaced as well.

https://truckmanualshub.com/

1. Raise the hood. Disconnect the battery.

2. Lower steering column to lowest position and remove upper steering column cover (see Display Switch Cluster) and the dash and kick panel). See Dash Panel, Kick Panel, and Seal Plate, Remove and Install.

NOTE: Tag electrical connector prior to disconnecting to aid in correct reconnect.

3. Disconnect brake fluid level switch from cowl harness.

CAUTION

Disposal of lubricants and fluids must meet local environmental regulations.

NOTE: Tag and plug hose during removal to aid in installation.

4. Remove reservoir from bracket and drain fluid from reservoir. Disconnect reservoir supply hose from reservoir. Plug hose to prevent air from getting into hose. See Figure 14.

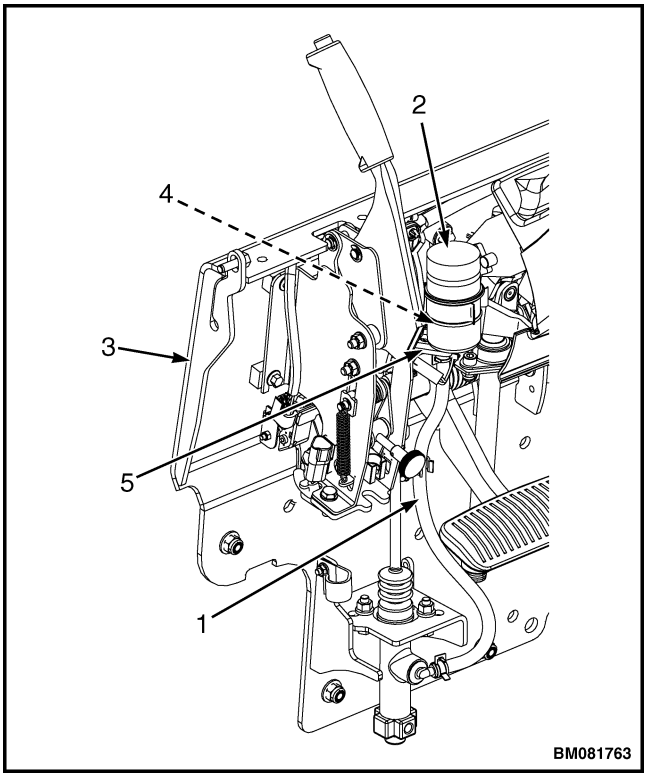

Figure 14. Brake Fluid Level Switch

Legend for Figure 14

1. RESERVOIR SUPPLY HOSE
2. BRAKE FLUID RESERVOIR
3. COWL
4. BRAKE FLUID LEVEL SWITCH (INSIDE RESERVOIR)
5. BRAKE FLUID RESERVOIR MOUNTING BRACKET

Install

1. Connect reservoir supply hose to a new reservoir. See Figure 14.

2. Install new reservoir onto bracket and fill with new brake fluid. See **Periodic Maintenance** 8000SRM1774 for brake fluid specifications.

3. Connect brake fluid level switch to cowl harness.

4. Install kick panel and dash. See Dash Panel, Kick Panel, and Seal Plate, Remove and Install for procedures. Install upper steering column cover. See Display Switch Cluster for procedures.

5. Connect the battery and lower the hood.

BRAKE PEDAL POSITION SENSOR

Remove

1. Raise the hood. Disconnect the battery.

2. Remove upper steering column cover (see Display Switch Cluster) and the dash and kick panel. See Dash Panel, Kick Panel, and Seal Plate, Remove and Install.

NOTE: Tag electrical connector prior to disconnect to aid in correct reconnect.

3. Disconnect brake pedal position sensor from cowl harness. See Figure 15.

https://truckmanualshub.com/

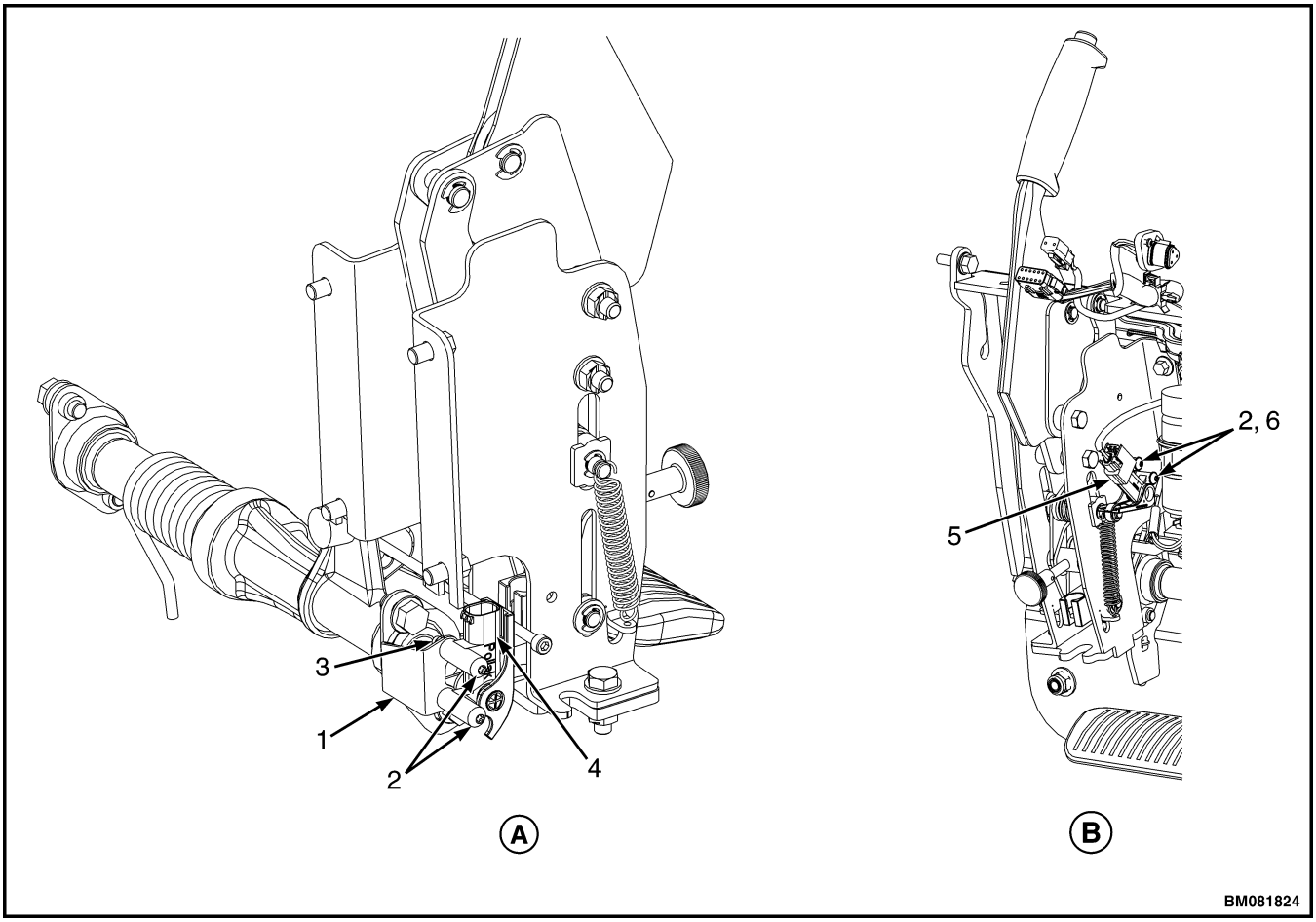

A. BRAKE PEDAL POSITION SENSOR (LEFT SIDE)

1. BRAKE PEDAL POSITION SENSOR MOUNTING BRACKET
2. TORX SCREW
3. NUT

B. PARKING BRAKE POSITION SENSOR (RIGHT SIDE)

4. BRAKE PEDAL POSITION SENSOR
5. PARKING BRAKE POSITION SENSOR
6. LOCKWASHER

Figure 15. Brake Pedal Position and Parking Brake Position Sensors

4. Remove two nuts, two torx screws, and brake pedal position sensor from brake pedal position sensor mounting bracket. See Figure 15.

Install

1. Install new brake pedal position sensor, two torx screws, and two nuts onto brake pedal position sensor mounting bracket. See Figure 15. Tighten nuts to 2.25 N•m (20 lbf in).

2. Connect brake pedal position sensor connector to cowl harness as tagged during removal.

3. After new service brake pedal position sensor has been installed, check the gap between the sensor arm and tab. See **Brake System** 1800SRM1743 for the procedure.

4. Install kick panel and dash. See Dash Panel, Kick Panel, and Seal Plate, Remove and Install. Install upper steering column cover. See Display Switch Cluster.

5. Connect the battery and lower the hood.

https://truckmanualshub.com/

PARKING BRAKE POSITION SENSOR

Remove

1. Raise the hood. Disconnect the battery.
2. Remove upper steering column cover, see Display Switch Cluster for procedures. Remove dash and kick panels. See Dash Panel, Kick Panel, and Seal Plate, Remove and Install for removal procedures.

NOTE: Tag electrical connector prior to disconnect to aid in correct reconnect.

3. Disconnect parking brake position sensor connector from cowl harness. See Figure 16.
4. Remove two torx screws, lockwashers, and parking brake position sensor from parking brake assembly. See Figure 15 and Figure 16.

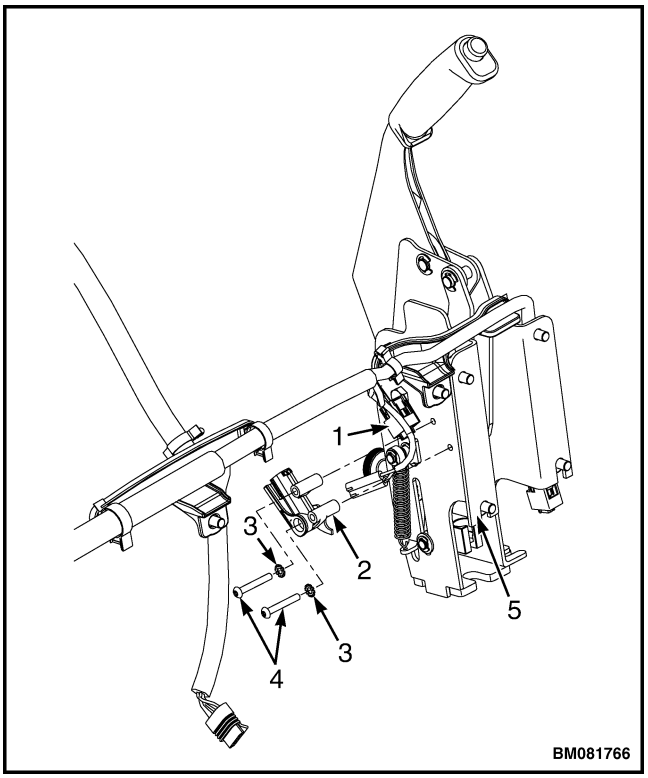

1. PARKING BRAKE SENSOR CONNECTOR
2. PARKING BRAKE POSITION SENSOR
3. LOCKWASHER
4. TORX SCREW
5. PARKING BRAKE ASSEMBLY

Figure 16. Parking Brake Sensor

Install

1. Install new parking brake position sensor and two torx screws and lockwashers onto parking brake assembly. See Figure 15 and Figure 16. Tighten torx screws to 2.25 N•m (20 lbf in).
2. Visually inspect sensor to ensure sensor arm and parking brake lever maintain continuous contact throughout full range of lever operation.
3. Connect parking brake position sensor connector to cowl harness as tagged during removal. See Figure 15 and Figure 16.
4. Install kick panel and dash. See Dash Panel, Kick Panel, and Seal Plate, Remove and Install for installation procedures. Install upper steering column cover. See Display Switch Cluster for procedures.
5. Connect the battery and lower the hood.

SEAT SENSOR (OPERATOR PRESENCE SYSTEM)

Non-Suspension Seat

Remove

1. Tilt steering column all the way up.
2. Raise the hood and disconnect the battery.

NOTE: Tag electrical connector prior to disconnect to aid in correct reconnect.

3. Remove two capscrews and washers from cover plate and remove electrical cover. See Figure 17.

https://truckmanualshub.com/

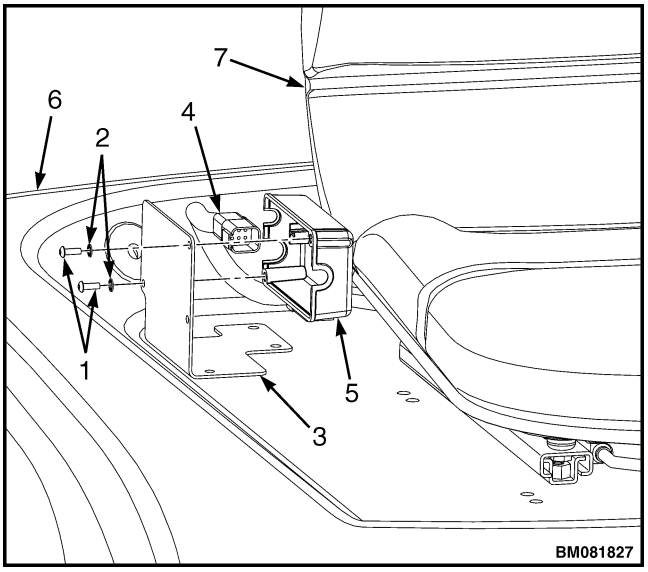

NOTE: RIGHT SIDE SEAT HANDLE REMOVED FOR CLARITY.

1. CAPSCREWS
2. WASHER
3. COVER PLATE
4. ELECTRICAL CONNECTOR (SEAT HARNESS)
5. ELECTRICAL COVER
6. HOOD
7. SEAT

Figure 17. Seat Removal, Non-Suspension Seat

4. Disconnect seat harness from chassis harness.

NOTE: Before removing seat from hood, tag or mark the holes that mount the seat to the hood. This will aid in correctly installing seat to hood. See Figure 18.

5. Remove the four capscrews and washers holding the seat to the hood. Remove seat from the hood.

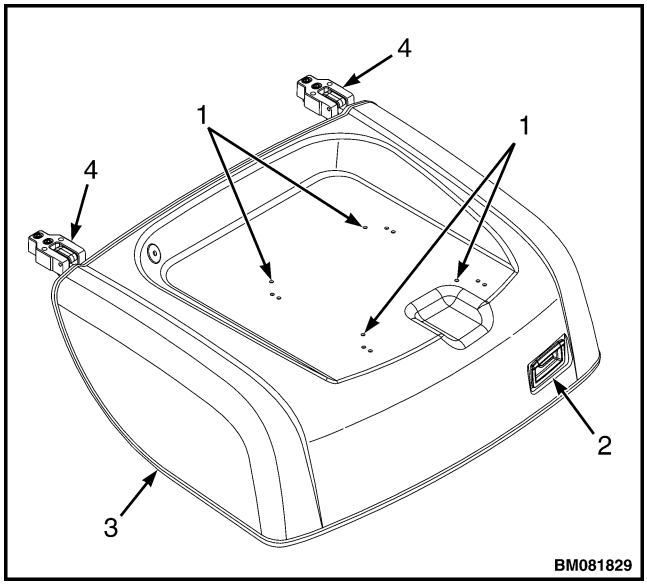

NOTE: TOP VIEW OF HOOD SHOWN.

1. MOUNTING HOLES, NON-SUSPENSION SEAT
2. HOOD LATCH HANDLE
3. HOOD
4. HOOD HINGE ASSEMBLY

Figure 18. Seat Mounting Holes, Non-Suspension Seat

NOTE: Tag electrical connector prior to disconnect to aid in correct reconnect.

6. Disconnect the seat sensor electrical connector form wire harness. See Figure 19.

7. Remove two capscrews and seat sensor from the seat.

https://truckmanualshub.com/

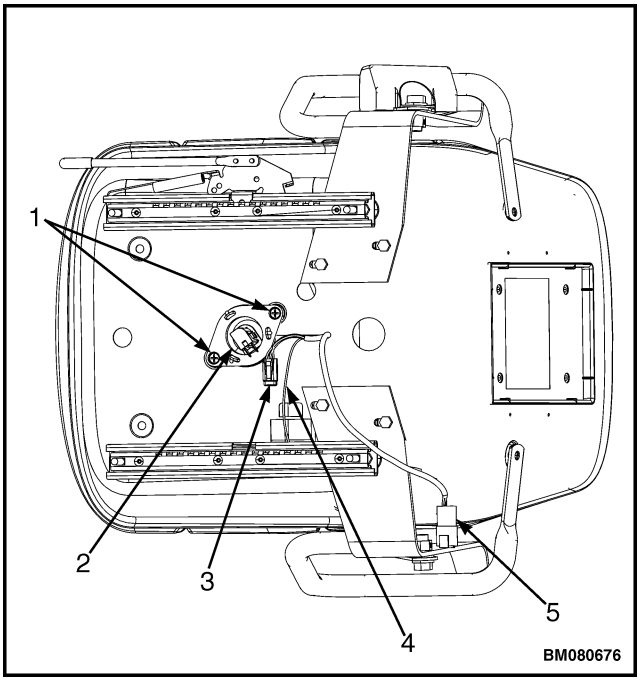

1. CAPSCREWS
2. SEAT SENSOR
3. SEAT SENSOR ELECTRICAL CONNECTOR
4. SEAT GROUND WIRE
5. SEAT HARNESS

Figure 19. Seat Sensor, Non-Suspension Seat

Install

1. Insert two capscrews and install sensor to seat. See Figure 19.
2. Connect new seat sensor connector to seat harness as tagged during removal.
3. Install seat onto hood using four capscrews and washers in the correct holes as marked during removal (see Figure 18). Tighten capscrews to 18 N•m (156 lbf in). See Figure 17.
4. Connect seat harness to wire harness as tagged during removal.
5. Install electrical cover to cover plate using two capscrews and washers. See Figure 17.
6. Connect the battery and close the hood.

Full Suspension Seats

Remove

1. Disconnect the battery.
2. Pull out two pins that secure bottom seat cushion to seat base.
3. Lift bottom seat cushion up and disconnect the seat harness from seat sensor. See Figure 20.
4. Use a small, flat-bladed screwdriver and remove the seat sensor from seat base.

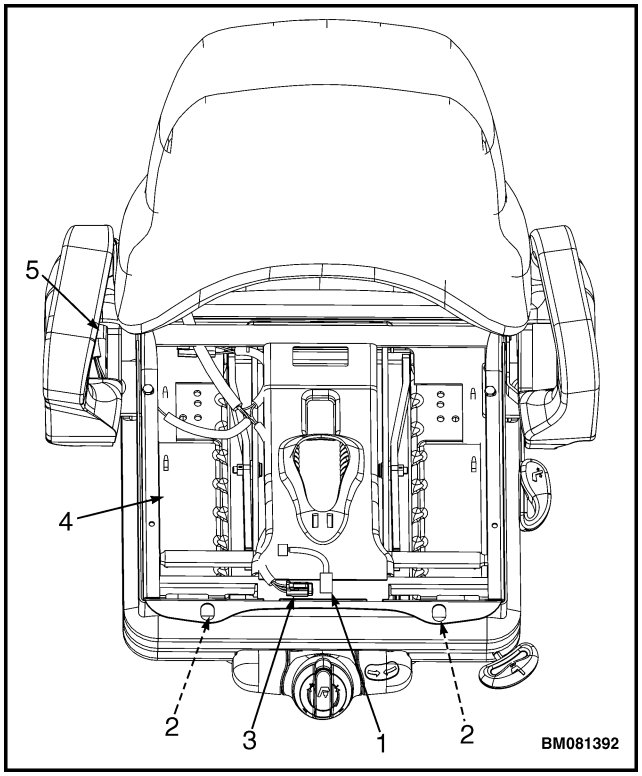

1. SEAT SENSOR
2. CUSHION PINS
3. SEAT HARNESS
4. SEAT BASE
5. TO CHASSIS HARNESS

Figure 20. Seat Sensor, Full-Suspension Seat

Install

1. Install new seat sensor into seat base.
2. Connect seat harness to seat sensor. See Figure 20.
3. Place bottom seat cushion onto seat base and attach cushion to seat base with pins.
4. Connect the battery.

https://truckmanualshub.com/

TRANSMISSION PRESSURE SENSORS (TRANSDUCERS)

Remove

1. Raise the hood. Disconnect the battery.

NOTE: Tag electrical connector prior to disconnect to aid in correct reconnect.

2. Disconnect transmission wire harness from transmission pressure sensor connectors.

3. Remove transmission pressure sensors from transmission. See Figure 21.

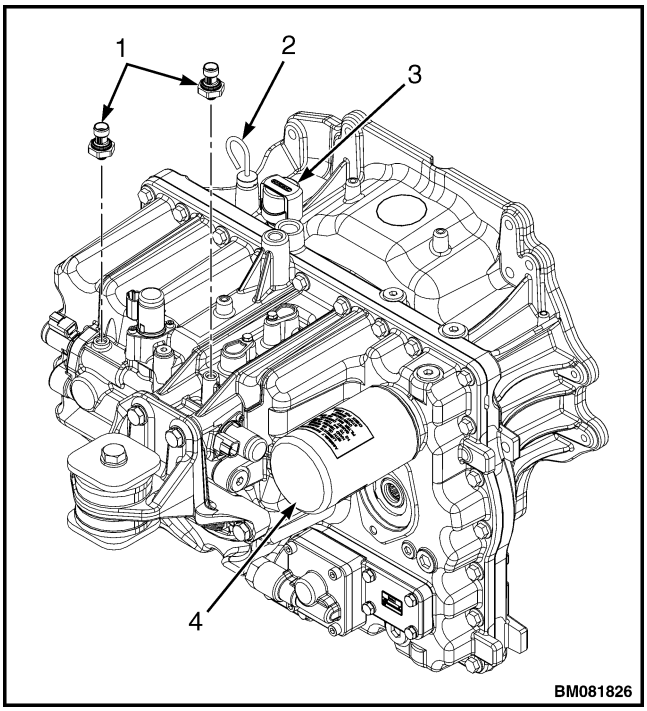

1. TRANSMISSION PRESSURE SENSORS (TRANSDUCERS)
2. TRANSMISSION OIL DIPSTICK
3. TRANSMISSION BREATHER
4. TRANSMISSION OIL FILTER

Figure 21. Transmission Pressure Sensors (Transducers), Replace

Install

1. Install new transmission pressure sensors onto transmission. See Figure 21.

2. Connect transmission pressure sensor connector to transmission wire harness as tagged during removal.

3. Connect the battery and close the hood.

TRANSMISSION TEMPERATURE SENSOR

Remove

1. Raise the hood. Disconnect the battery.

2. Put the lift truck on blocks. See the **Operating Manual** or section **Periodic Maintenance** 8000SRM1774 for procedures.

WARNING

At operating temperature, the transmission oil is HOT. DO NOT permit the hot oil to touch the skin and cause a burn. Make sure oil is cool before draining.

CAUTION

Disposal of lubricants and fluids must meet local environmental regulations.

3. Drain transmission oil. See section **Periodic Maintenance** 8000SRM1774 for procedures.

NOTE: Tag electrical connector prior to disconnect to aid in correct reconnect.

4. Disconnect transmission harness from transmission temperature sensor connector.

5. Remove transmission temperature sensor from transmission. See Figure 22.