https://truckmanualshub.com/

Maintenance Manual Contents

Group No.	Group Title
00	General Information
01	Engine
09	Air Intake
13	Air Compressor
15	Alternators and Starters
20	Engine Cooling/Radiator
25	Clutch
26	Transmission
31	Frame and Frame Components
32	Suspension
33	Front Axle
35	Rear Axle
40	Wheels and Tires
41	Driveline
42	Brakes
46	Steering
47	Fuel
49	Exhaust
54	Electrical, Instruments, and Controls
60	Cab
72	Doors
83	Heater and Air Conditioner

https://truckmanualshub.com/

FREIGHTLINER® LLC
A DaimlerChrysler Company

CARGO MAINTENANCE MANUAL

4/05P

Published by
Freightliner LLC
4747 N. Channel Ave.
Portland, OR 97217
Printed in U.S.A.

https://truckmanualshub.com/

Foreword

When performed on a regular basis, lubricating the parts of your vehicle is the least costly way of obtaining safe and reliable vehicle operation. Added benefits and savings occur when you check that the engine, undercarriage, and noise emission control parts are in good working order during lubrication.

This maintenance manual explains when you should lubricate parts and what to look for when checking for wear or damage. For daily and weekly checks, see the vehicle driver's/operator's manual.

IMPORTANT: Descriptions and specifications in this manual were in effect at the time of printing. Freightliner LLC reserves the right to discontinue models and to change specifications or design at any time without notice and without incurring obligation. Descriptions and specifications contained in this publication provide no warranty, expressed or implied, and are subject to revision and editions without notice.

For additional information, please contact Freightliner LLC, Service Systems and Documentation, P.O. Box 3849, Portland, OR 97208-3849, U.S.A. or refer to http://www.Freightliner.com, http://www.FreightlinerTrucks.com, or http://www.SterlingTrucks.com.

Environmental Concerns and Recommendations

Whenever you see instructions in this manual to discard materials, you should attempt to reclaim and recycle them. To preserve our environment, follow appropriate environmental rules and regulations when disposing of materials.

NOTICE: Parts Replacement Considerations

Do not replace suspension, axle, or steering parts (such as springs, wheels, hubs, and steering gears) with used parts. Used parts may have been subjected to collisions or improper use and have undetected structural damage.

© 1998-2005 Freightliner LLC

All rights reserved. No part of this publication, in whole or in part, may be translated, reproduced, stored in a retrieval system, or transmitted in any form by any means, electronic, mechanical, photocopying, recording, or otherwise, without the prior written permission of Freightliner LLC.

Freightliner LLC
Service Systems and Documentation (POC-SSD)
P.O. Box 3849
Portland, OR 97208–3849

https://truckmanualshub.com/

Descriptions of Service Publications

Freightliner LLC distributes the following major service publications.

Workshop/Service Manual

Workshop/service manuals contain service and repair information for all vehicle systems and components, except for major components such as engines, transmissions, and rear axles. Each workshop/service manual section is divided into subjects that can include general information, principles of operation, removal, disassembly, assembly, installation, specifications, and troubleshooting.

Maintenance Manual

Maintenance manuals contain routine maintenance procedures and intervals for vehicle components and systems. They have information such as lubrication procedures and tables, fluid replacement procedures, fluid capacities, specifications, procedures for adjustments and for checking the tightness of fasteners. Maintenance manuals do not contain detailed repair or service information.

Driver's/Operator's Manual

Driver's/operator's manuals contain information needed to enhance the driver's understanding of how to operate and care for the vehicle and its components. Each manual contains a chapter that covers scheduled inspection and maintenance of vehicle components. Driver's/operator's manuals do not contain detailed repair or service information.

Parts Technical Manual

Freightliner LLC publishes this manual to aid in the identification of serviceable replacement vehicle parts. This manual is used in conjunction with the parts book and the service parts catalog microfiche.

Service Bulletins

Service bulletins provide the latest service tips, field repairs, product improvements, and related information. Some service bulletins are updates to information in the workshop/service manual. These bulletins take precedence over workshop/service manual information, until the latter is updated; at that time, the bulletin is usually canceled. The service bulletins manual is available only to dealers. When doing service work on a vehicle system or part, check for a valid service bulletin for the latest information on the subject.

IMPORTANT: Before using a particular service bulletin, check the current service bulletin validity list to be sure the bulletin is valid.

Recall Bulletins

These bulletins pertain to special situations that involve service work or replacement of parts in connection with a recall notice. Recall bulletins pertain to matters of vehicle safety. All bulletins are distributed to dealers; customers receive notices that apply to their vehicles.

Field Service Modifications

This publication is concerned with non-safety-related service work or replacement of parts. All field service modifications are distributed to dealers; customers receive notices that apply to their vehicles.

https://truckmanualshub.com/

Index, Alphabetical

Title of Maintenance Operation (MOP)	MOP Number
Initial Maintenance (IM) Operations Table	00–09
Lubrication Tables	00–17
Lubrication and Fluid Level Check (M1, schedules I, II, and III)	00–15
Lubrication and Fluid Level Check (M2, schedules I, II, and III	00–16
M1 Maintenance Interval Operations Table	00–10
M2 Maintenance Interval Operations Table	00–11
M3 Maintenance Interval Operations Table	00–12
M4 Maintenance Interval Operations Table	00–13
M5 Maintenance Interval Operations Table	00–14
Maintenance Interval Tables	00–07
Maintenance Operation Sets Table	00–08
Maintenance Schedule Table	00–06
Metric/U.S. Customary Conversion Table	00–04
Noise Emission Control Systems Maintenance	00–01
Scheduled Maintenance Intervals, Description and Use	00–05
Torque Specifications Tables	00–03
Verification of Inspections Log	00–02

https://truckmanualshub.com/

General Information

Federal Law, Part 205: Transportation Equipment Noise Emission Controls

Part 205, Transportation Equipment Noise Emission Controls, requires the vehicle manufacturer to furnish, with each new vehicle, such written instructions for the proper maintenance, use, and repair of the vehicle by the ultimate purchaser to provide reasonable assurance of the elimination or minimization of noise emission degradation throughout the life of the vehicle. In compliance with the law, the Noise Emission Control Systems maintenance located in each applicable group within this manual, in conjunction with the vehicle workshop manual, provides these instructions to owners.

Normal Vehicle Use

The maintenance instructions contained in this manual are based on average vehicle use and normal operating conditions. Unusual vehicle operating conditions may require service at more frequent intervals.

Recommendations for Replacement Parts

Replacement parts used for maintenance or for the repair of noise emission control systems should be genuine OEM parts. If other than genuine OEM parts are used for replacements or for the repair of components affecting noise emission control, the owner should be sure that such parts are warranted by their manufacturer to be equivalent to genuine OEM parts in performance and durability.

Noise Emissions Warranty

Refer to the vehicle owner's warranty information book for warranty information concerning noise emission control systems.

Tampering With the Noise Control System is Prohibited

Federal law prohibits the following acts or the causing thereof: (1) the removal or rendering inoperative by any person other than for purposes of maintenance, repair, or replacement, of any device or element of design incorporated into any new vehicle for the purpose of noise control prior to its sale or delivery to the ultimate purchaser or while it is in use, or (2) the use of the vehicle after such device or element of design has been removed or rendered inoperative by any person. Among those acts presumed to constitute tampering are the acts listed below:

A. Removal of engine noise-deadening panels.

B. Removal of or rendering the engine speed governor inoperative so as to allow engine speed to exceed manufacturer's specifications.

C. Removal of or rendering inoperative the fan clutch, including by-passing the control on any thermostatic fan drive to cause it to operate continuously.

D. Removal of the fan shroud.

E. Removal of or rendering inoperative exhaust system components, including exhaust pipe clamping.

F. Removal of air intake system components.

G. Removal of hood liners (noise-deadening panels).

Maintenance Instructions

Scheduled intervals are in the maintenance tables in Group 00 of this manual. A "Verification of Inspections Log" is contained in the following table, and should be filled in each time the noise emission controls on the vehicle are maintained or repaired.

https://truckmanualshub.com/

Verification of Inspections Log

Verification of Inspections Log, Groups 01 and 49				
Date	Mileage	Repair Description	Cost	Repair Facility
Group 01—Engine				
Group 49—Exhaust				

https://truckmanualshub.com/

Torque Specifications Tables: 00–03

Torque Values for U.S. Customary Thread Fasteners With Lubricated* or Plated Threads†								
Thread Diameter–Pitch	Regular Hex				Flanged			
	Grade 5 Bolt	Grade 5 or B Nut	Grade 8 or 8.2 Bolt	Grade 8 or C Nut	Grade 5 Bolt	Grade B Nut	Grade 8 or 8.2 Bolt	Grade G Nut
	Torque: lbf·ft (N·m)		Torque: lbf·ft (N·m)		Torque: lbf·ft (N·m)		Torque: lbf·ft (N·m)	
	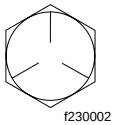 f230002	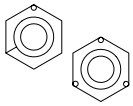 f230003	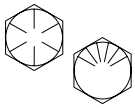 f230004	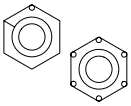 f230005	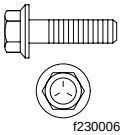 f230006	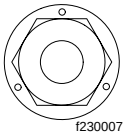 f230007	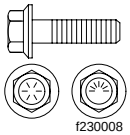 f230008	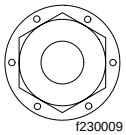 f230009
1/4–20	7 (9)		8 (11)		6 (8)		10 (14)	
1/4–28	8 (11)		9 (12)		7 (9)		12 (16)	
5/16–18	15 (20)		16 (22)		13 (18)		21 (28)	
5/16–24	16 (22)		17 (23)		14 (19)		23 (31)	
3/8–16	26 (35)		28 (38)		23 (31)		37 (50)	
3/8–24	30 (41)		32 (43)		25 (34)		42 (57)	
7/16–14	42 (57)		45 (61)		35 (47)		60 (81)	
7/16–20	47 (64)		50 (68)		40 (54)		66 (89)	
1/2–13	64 (87)		68 (92)		55 (75)		91 (123)	
1/2–20	72 (98)		77 (104)		65 (88)		102 (138)	
9/16–12	92 (125)		98 (133)		80 (108)		130 (176)	
9/16–18	103 (140)		110 (149)		90 (122)		146 (198)	
5/8–11	128 (173)		136 (184)		110 (149)		180 (244)	
5/8–18	145 (197)		154 (209)		130 (176)		204 (277)	
3/4–10	226 (306)		241 (327)		200 (271)		320 (434)	
3/4–16	253 (343)		269 (365)		220 (298)		357 (484)	
7/8–9	365 (495)		388 (526)		320 (434)		515 (698)	
7/8–14	402 (545)		427 (579)		350 (475)		568 (770)	
1–8	—		582 (789)		—		—	
1–12	—		637 (863)		—		—	
1–14	—		652 (884)		—		—	

* Freightliner recommends that all plated and unplated fasteners be coated with oil before installation.

† Use these torque values if either the bolt or nut is lubricated or plated (zinc-phosphate conversion-coated, cadmium-plated, or waxed).

Table 1, Torque Values for U.S. Customary Thread Fasteners With Lubricated or Plated Threads

https://truckmanualshub.com/

Torque Specifications Tables: 00–03

Torque Values for U.S. Customary Thread Fasteners With Dry (Unlubricated)* Plain (Unplated) Threads†						
Thread Diameter–Pitch	Regular Hex				Flanged	
	Grade 5 Bolt	Grade 5 or B Nut	Grade 8 or 8.2 Bolt	Grade 8 or C Nut	Grade 8 or 8.2 Bolt	Grade G Nut
	Torque: lbf·ft (N·m)		Torque: lbf·ft (N·m)		Torque: lbf·ft (N·m)	
	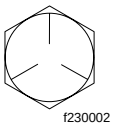 f230002	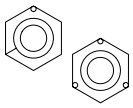 f230003	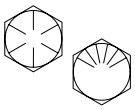 f230004	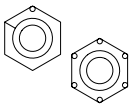 f230005	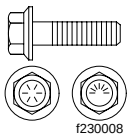 f230008	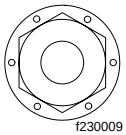 f230009
1/4–20	8 (11)		10 (14)		—	
1/4–28	9 (12)		12 (16)		—	
5/16–18	15 (20)		22 (30)		22 (30)	
5/16–24	17 (23)		25 (34)		—	
3/8–16	28 (38)		40 (54)		40 (54)	
3/8–24	31 (42)		45 (61)		—	
7/16–14	45 (61)		65 (88)		65 (88)	
7/16–20	50 (68)		70 (95)		—	
1/2–13	70 (95)		95 (129)		95 (129)	
1/2–20	75 (102)		110 (149)		—	
9/16–12	100 (136)		140 (190)		140 (190)	
9/16–18	110 (149)		155 (210)		—	
5/8–11	135 (183)		190 (258)		190 (258)	
5/8–18	155 (210)		215 (292)		—	
3/4–10	240 (325)		340 (461)		340 (461)	
3/4–16	270 (366)		380 (515)		—	
7/8–9	385 (522)		540 (732)		—	
7/8–14	425 (576)		600 (813)		—	
1–8	580 (786)		820 (1112)		—	
1–12	635 (861)		900 (1220)		—	
1–14	650 (881)		915 (1241)		—	

* Threads may have residual oil, but will be dry to the touch.

† Male and female threads (bolt and nut) must both be unlubricated and unplated; if either is plated or lubricated, use **Table 1**. Freightliner recommends that all plated and unplated fasteners be coated with oil before installation.

Table 2, Torque Values for U.S. Customary Thread Fasteners With Dry (Unlubricated) Plain (Unplated) Threads

https://truckmanualshub.com/

Torque Values for Metric Thread Fasteners With Lubricated* or Plated Threads†				
Thread Diameter–Pitch	Class 8.8 Bolt	Class 8 Nut	Class 10.9 Bolt	Class 10 Nut
	Torque: lbf·ft (N·m)		Torque: lbf·ft (N·m)	
	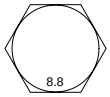 f230010	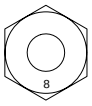 f230011	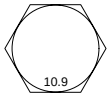 f230012	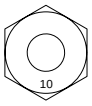 f230013
M6	5 (7)		7 (9)	
M8	12 (16)		17 (23)	
M8 x 1	13 (18)		18 (24)	
M10	24 (33)		34 (46)	
M10 x 1.25	27 (37)		38 (52)	
M12	42 (57)		60 (81)	
M12 x 1.5	43 (58)		62 (84)	
M14	66 (89)		95 (129)	
M14 x 1.5	72 (98)		103 (140)	
M16	103 (140)		148 (201)	
M16 x 1.5	110 (149)		157 (213)	
M18	147 (199)		203 (275)	
M18 x 1.5	165 (224)		229 (310)	
M20	208 (282)		288 (390)	
M20 x 1.5	213 (313)		320 (434)	
M22	283 (384)		392 (531)	
M22 x 1.5	315 (427)		431 (584)	
M24	360 (488)		498 (675)	
M24 x 2	392 (531)		542 (735)	
M27	527 (715)		729 (988)	
M27 x 2	569 (771)		788 (1068)	
M30	715 (969)		990 (1342)	
M30 x 2	792 (1074)		1096 (1486)	

* Freightliner recommends that all plated and unplated fasteners be coated with oil before installation.

† Use these torque values if either the bolt or nut is lubricated or plated (zinc-phosphate conversion-coated, cadmium-plated, or waxed).

Table 3, Torque Values for Metric Thread Fasteners With Lubricated or Plated Threads

https://truckmanualshub.com/

Metric/U.S. Customary Conversion Table: 00–04

When You Know U.S. Customary	Multiply By	To Get Metric	When You Know Metric	Multiply By	To Get U.S. Customary
Length					
inches (in)	25.4	millimeters (mm)		0.03937	inches (in)
inches (in)	2.54	centimeters (cm)		0.3937	inches (in)
feet (ft)	0.3048	meters (m)		3.281	feet (ft)
yards (yd)	0.9144	meters (m)		1.094	yards (yd)
miles (mi)	1.609	kilometers (km)		0.6215	miles (mi)
Area					
square inches (in^2)	645.16	square millimeters (mm^2)		0.00155	square inches (in^2)
square inches (in^2)	6.452	square centimeters (cm^2)		0.155	square inches (in^2)
square feet (ft^2)	0.0929	square meters (m^2)		10.764	square feet (ft^2)
Volume					
cubic inches (in^3)	16387.0	cubic millimeter (mm^3)		0.000061	cubic inches (in^3)
cubic inches (in^3)	16.387	cubic centimeters (cm^3)		0.06102	cubic inches (in^3)
cubic inches (in^3)	0.01639	liters (L)		61.024	cubic inches (in^3)
fluid ounces (fl oz)	29.54	milliliters (mL)		0.03381	fluid ounces (fl oz)
pints (pt)	0.47318	liters (L)		2.1134	pints (pt)
quarts (qt)	0.94635	liters (L)		1.0567	quarts (qt)
gallons (gal)	3.7854	liters (L)		0.2642	gallons (gal)
cubic feet (ft^3)	28.317	liters (L)		0.03531	cubic feet (ft^3)
cubic feet (ft^3)	0.02832	cubic meters (m^3)		35.315	cubic feet (ft^3)
Weight/Force					
ounces (av) (oz)	28.35	grams (g)		0.03527	ounces (av) (oz)
pounds (av) (lb)	0.454	kilograms (kg)		2.205	pounds (av) (lb)
U.S. tons (t)	907.18	kilograms (kg)		0.001102	U.S. tons (t)
U.S. tons (t)	0.90718	metric tons (t)		1.1023	U.S. tons (t)
Torque/Work Force					
inch–pounds (lbf·in)	11.298	Newton–centimeters (N·cm)		0.08851	inch–pounds (lbf·in)
foot–pounds (lbf·ft)	1.3558	Newton–meters (N·m)		0.7376	foot–pounds (lbf·ft)
Pressure/Vacuum					
inches of mercury (inHg)	3.37685	kilo Pascals (kPa)		0.29613	inches of mercury (inHg)
pounds per square inch (psi)	6.895	kilo Pascals (kPa)		0.14503	pounds per square inch (psi)

Table 4, Metric/U.S. Customary Conversion

https://truckmanualshub.com/

Scheduled Maintenance Intervals, Description and Use: 00–05

Description

Schedule I (severe service) applies to vehicles that annually travel up to 6000 miles (10 000 kilometers) *or* that operate under severe conditions. Examples of Schedule I usage include: operation on extremely poor roads or where there is heavy dust accumulation; constant exposure to extreme hot, cold, salt-air, or other extreme climates; frequent short-distance travel; construction-site operation; city operation (fire truck, garbage truck); or farm operation.

Schedule II (short-haul transport) applies to vehicles that annually travel *up to* 60,000 miles (100 000 kilometers) and operate under normal conditions. Examples of Schedule II usage are: operation primarily in cities and densely populated areas; local transport with infrequent freeway travel; or high percentage of stop-and-go travel.

Schedule III (long-haul transport) is for vehicles that annually travel *more than* 60,000 miles (100 000 kilometers), with minimal city or stop-and-go operation. Examples of Schedule III usage are: regional delivery that is mostly freeway miles; interstate transport; or any road operation with high annual mileage.

The table under "Maintenance Schedule Table" shows the three different schedules of vehicle usage. For each schedule the appropriate distance interval is given for performing Initial Maintenance and for repeating each maintenance operation set (M1 through M5). For Schedule I, the appropriate time interval is also given.

The tables under "Maintenance Interval Tables" show which maintenance operation set must be performed at the actual distances (miles and kilometers) for each maintenance schedule (or the actual hours of operation for Schedule I). The schedule of actual distances (and hours) is based on the intervals given in the Maintenance Schedule Table.

The table under "Maintenance Operation Sets Table" lists, in numerical order, the text reference numbers and descriptions of *all* maintenance operations, and indicates all maintenance operation sets at which each operation must be performed.

Each Maintenance Interval Operations Table (IM through M5) lists the appropriate text reference numbers and descriptions of only those maintenance operations that must be performed at that maintenance operation set. Each maintenance operation set is listed in a separate Maintenance Operations Table.

Use

Before placing your new vehicle in service, determine the correct maintenance intervals that apply to your intended use of the vehicle. Refer to the Maintenance Schedule Table to determine the distance (or hour) interval at which each Maintenance Operation Set must be performed to comply with your vehicle's schedule. For Schedule I vehicles equipped with an hourmeter, use hours to determine maintenance intervals, rather than distance traveled.

When the vehicle reaches the actual distance (or hours) given for an interval, refer to the Maintenance Interval Tables to find the Maintenance Operation Set that applies to that interval. Then perform the maintenance operations listed in the applicable Maintenance Interval Operation Table. Use the maintenance operation reference numbers to find instructions in the manual for completion of each operation.

Complete each Maintenance Operation Set at the required interval. Then, when you have completed Maintenance Operation Set M5 under the 32nd Maintenance Number listed in the Maintenance Interval Table, repeat the pattern. The 33rd Maintenance Number will begin at Maintenance Operation Set M1, under the 1st Maintenance Number listed in the Maintenance Interval Table.

NOTE: When performing operations for the 33rd Maintenance Number, complete the M1 operations only, not the Initial Maintenance operations.

To determine the distance/hours for the 33rd Maintenance Number, add your schedule's distance/hours for the 1st Maintenance Number to the distance/hours for the 32nd Maintenance Number, then perform the operations listed in the applicable table in the Maintenance Operations Tables. For the 34th Maintenance Number, add the distance/hours for the 2nd to the distance/hours for the 32nd; continue this pattern for each successive Maintenance Number.

https://truckmanualshub.com/

Maintenance Schedule Table: 00–06

Maintenance Schedule Table

Maintenance Schedule Table						
Maintenance Schedule	**Models**	**Maintenance Interval Operation**	**Maintenance Intervals**			
			Frequency	**Miles**	**km**	**Hours**
Schedule I* (Severe Service) vehicles that annually travel up to 6000 miles (10 000 km)	All	Initial Maintenance (IM)	first	1000	1600	100
		Maintenance 1 (M1)	every	1000	1600	100
		Maintenance 2 (M2)	every	4000	6400	400
		Maintenance 3 (M3)	every	8000	12,800	800
		Maintenance 4 (M4)	every	16,000	25 600	1600
		Maintenance 5 (M5)	every	32,000	51,200	3200
Schedule II (Short-Haul Transport) vehicles that annually travel up to 60,000 miles (100 000 km)	All	Initial Maintenance (IM)	first	8000	12 000	—
		Maintenance 1 (M1)	every	8000	12 000	
		Maintenance 2 (M2)	every	16,000	24 000	
		Maintenance 3 (M3)	every	32,000	48 000	
		Maintenance 4 (M4)	every	64,000	96 000	
		Maintenance 5 (M5)	every	128,000	192 000	
Schedule III (Long-Haul Transport) vehicles that annually travel over 60,000 miles (100 000 km)	All	Initial Maintenance (IM)	first	10,000	16 000	—
		Maintenance 1 (M1)	every	10,000	16 000	
		Maintenance 2 (M2)	every	20,000	32 000	
		Maintenance 3 (M3)	every	40,000	64 000	
		Maintenance 4 (M4)	every	80,000	128 000	
		Maintenance 5 (M5)	every	160,000	256 000	

* For Schedule I (severe service) vehicles (equipped with an hourmeter), use maintenance intervals based on hours of operation rather than distance traveled.

https://truckmanualshub.com/

Maintenance Intervals for Schedule I				
Maint. No.	**Maintenance Interval**	**Miles**	**km**	**Hours**
1	IM and M1	1000	1600	100
2	M1	2000	3200	200
3	M1	3000	4800	300
4	M1 and M2	4000	6400	400
5	M1	5000	8000	500
6	M1	6000	9600	600
7	M1	7000	11 200	700
8	M1, M2, and M3	8000	12 800	800
9	M1	9000	14 400	900
10	M1	10,000	16 000	1000
11	M1	11,000	17 600	1100
12	M1 and M2	12,000	19 200	1200
13	M1	13,000	20 800	1300
14	M1	14,000	22 400	1400
15	M1	15,000	24 000	1500
16	M1, M2, M3, and M4	16,000	25 600	1600
17	M1	17,000	27 200	1700
18	M1	18,000	28 800	1800
19	M1	19,000	30 400	1900
20	M1 and M2	20,000	32 000	2000
21	M1	21,000	33 600	2100
22	M1	22,000	35 200	2200
23	M1	23,000	36 800	2300
24	M1, M2, and M3	24,000	38 400	2400
25	M1	25,000	40 000	2500
26	M1	26,000	41 600	2600
27	M1	27,000	43 200	2700
28	M1 and M2	28,000	44 800	2800
29	M1	29,000	46 400	2900
30	M1	30,000	48 000	3000
31	M1	31,000	49 600	3100
32	M1, M2, M3, M4, and M5	32,000	51 200	3200

Table 5, Maintenance Intervals for Schedule I

https://truckmanualshub.com/

Maintenance Interval Tables: 00–07

Maintenance Intervals for Schedules II and III					
Maint. No.	Maintenance Interval	Schedule II		Schedule III	
		Miles	km	Miles	km
1	IM and M1	8000	12 000	10,000	16 000
2	M1 and M2	16,000	24 000	20,000	32 000
3	M1	24,000	36 000	30,000	48 000
4	M1, M2, and M3	32,000	48 000	40,000	64 000
5	M1	40,000	60 000	50,000	80 000
6	M1 and M2	48,000	72 000	60,000	96 000
7	M1	56,000	84 000	70,000	112 000
8	M1, M2, M3, and M4	64,000	96 000	80,000	128 000
9	M1	72,000	108 000	90,000	144 000
10	M1 and M2	80,000	120 000	100,000	160 000
11	M1	88,000	132 000	110,000	176 000
12	M1, M2, and M3	96,000	144 000	120,000	192 000
13	M1	104,000	156 000	130,000	208 000
14	M1, and M2	112,000	168 000	140,000	224 000
15	M1	120,000	180 000	150,000	240 000
16	M1, M2, M3, M4, and M5	128,000	192 000	160,000	256 000
17	M1	136,000	204 000	170,000	272 000
18	M1 and M2	144,000	216 000	180,000	288 000
19	M1	152,000	228 000	190,000	304 000
20	M1, M2, and M3	160,000	240 000	200,000	320 000
21	M1	168,000	252 000	210,000	336 000
22	M1 and M2	176,000	264 000	220,000	352 000
23	M1	184,000	276 000	230,000	368 000
24	M1, M2, M3, and M4	192,000	288 000	240,000	384 000
25	M1	200,000	300 000	250,000	400 000
26	M1 and M2	208,000	312 000	260,000	416 000
27	M1	216,000	324 000	270,000	432 000
28	M1, M2, and M3	224,000	336,000	280,000	448 000
29	M1	232,000	348 000	290,000	464 000
30	M1 and M2	240,000	360 000	300,000	480 000
31	M1	248,000	372 000	310,000	496 000
32	M1, M2, M3, M4, and M5	256,000	384 000	320,000	512 000

Table 6, Maintenance Intervals for Schedules II and III

https://truckmanualshub.com/

Maintenance Operation Sets Table: 00–08

IMPORTANT: At each Maintenance Operation Set, in addition to the maintenance operations listed in this table, perform all daily and weekly maintenance operations listed in the "Pretrip Inspection and Daily Maintenance" chapter of the *Cargo Driver's Manual*.

NOTE: Maintenance operations appearing in italics in this table are for noise emission control components. Numbers in this table are maintenance operation reference numbers matching those in the text of this manual.

Maintenance Operation Sets Table

Required Maintenance Operation Set		IM	M1	M2	M3	M4	M5
Maintenance Operation Reference Number and Maintenance Operation							
00–15	Lubrication and Fluid Level Check		•	•	•	•	•
00–16	Lubrication and Fluid Level Check			•	•	•	•
01–01	*Engine-Support Fasteners Checking*					•	•
01–02	Engine Drive Belt Inspection				•	•	•
09–01	Air Cleaner Element Inspecting and Replacing				•	•	•
13–01	Air Compressor Inspecting, Holset			•	•	•	•
15–01	Alternator and Starter Checking	•			•	•	•
20–01	Radiator Cap Checking			•	•	•	•
20–02	Radiator Pressure Flushing and Coolant Changing					•	•
25–01	Clutch Release Bearing and Release Cross-Shaft Lubricating	•	•	•	•	•	•
25–02	Clutch Inspecting and Adjusting	•		•	•	•	•
25–03	Clutch Master Cylinder Fluid Level Checking	•	•	•	•	•	•
26–01	Manual Transmission Oil Level Checking		•	•	•	•	•
26–02	Manual Transmission Oil Changing and Magnetic Plug Cleaning	•				•	•
26–03	Allison and Fuller Transmission Breather Checking			•	•	•	•
26–04	Eaton/Fuller Transmission Air Filter/Regulator Element Cleaning			•	•	•	•
26–05	Allison Transmission Fluid and Filter Changing				•	•	•
31–01	Frame Fastener Torque Checking	•				•	•
32–01	Suspension Inspecting (including cab shocks)	•	•	•	•	•	•
32–02	Suspension Lubricating	•	•	•	•	•	•
32–03	U-Bolt Torque Checking	•			•	•	•
33–01	Knuckle Pin Lubricating	•	•	•	•	•	•
33–02	Tie-Rod End Inspecting	•	•	•	•	•	•
33–03	Tie-Rod End Lubricating	•	•	•	•	•	•
33–04	All-Axle Alignment Checking	•				•	•
35–01	Axle Lubricant Level Checking	•	•	•	•	•	•
35–02	Axle Breather Checking	•	•	•	•	•	•
35–03	Axle Lubricant Changing and Magnetic Plug Cleaning	•				•	•
40–01	Wheel Nut and Rim Nut Checking				•	•	•
41–01	Driveline Inspecting	•	•	•	•	•	•
41–02	Driveline Lubricating	•	•	•	•	•	•

https://truckmanualshub.com/

Maintenance Operation Sets Table: 00–08

Required Maintenance Operation Set		IM	M1	M2	M3	M4	M5
Maintenance Operation Reference Number and Maintenance Operation							
42–01	Air Dryer Inspecting, Bendix AD–9	•	•	•	•	•	•
42–02	Foot Brake Valve Actuator Lubricating	•	•	•	•	•	•
42–03	Air Brake Valve Operation Checking	•	•	•	•	•	•
42–04	Relay Valve Checking	•	•	•	•	•	•
42–05	Quick Release and Flipper Valves Checking	•	•	•	•	•	•
42–06	Brake Chamber Inspecting (All Models)	•	•	•	•	•	•
42–07	Camshaft Bracket Bushing Lubricating			•	•	•	•
42–08	Automatic Slack Adjuster Checking	•	•	•	•	•	•
42–09	Automatic Slack Adjuster Lubricating	•	•	•	•	•	•
42–10	Automatic Slack Adjuster Inspecting	•	•	•	•	•	•
42–11	Air Dryer Checking, Bendix AD–9				•	•	•
42–12	Air Dryer Desiccant Replacing, Bendix AD–9						•
42–13	Air Reservoir Automatic Drain Valve Disassembly, Cleaning, Inspecting, and Lubricating, Bendix AD–9			•	•	•	•
42–14	Air Brake Valve Disassembly, Cleaning, and Inspecting, Bendix E–6, QR–1, and ST–3						•
46–01	Steering Driveline Lubricating			•	•	•	•
46–02	Drag Link Lubricating	•	•	•	•	•	•
46–03	Power Steering Reservoir Fluid Level Checking	•	•	•	•	•	•
46–04	Power Steering Reservoir Fluid and Filter Changing					•	•
46–05	Steering Gear Lubricating (Ross TAS Series)	•	•	•	•	•	•
47–01	Fuel Tank Draining and Vent Checking				•	•	•
49–01	*Exhaust System Inspecting*			•	•	•	•
54–01	Electrical System Checking				•	•	•
54–02	Battery, Battery Box, and Cable Checking and Cleaning	•	•	•	•	•	•
54–03	Ground Cables Checking and Cleaning	•	•	•	•	•	•
60–01	Cab Mounting Bolts Torque Checking				•	•	•
60–02	Cab Mounts Lubricating	•	•	•	•	•	•
60–03	Cab Roof Vent Lubricating	•	•	•	•	•	•
72–01	Weatherstrip, Door Hinge, and Door Latch Lubricating	•	•	•	•	•	•
83–01	Air Conditioner Checking, R–134a Refrigerant Systems	•	•	•	•	•	•
83–02	Air Filter Replacement*						

* Replace the HVAC air filter every three months regardless of mileage.

https://truckmanualshub.com/

Initial Maintenance (IM) Operations Table: 00–09

IMPORTANT: After performing all operations in this table, perform all daily and weekly maintenance operations listed in the "Pretrip Inspection and Daily Maintenance" chapter of the *Cargo Driver's Manual*. Also, perform all M1 Maintenance Interval Operations at the Initial Maintenance (IM).

NOTE: Numbers in this table are maintenance operation reference numbers matching those in the text of this manual. The Initial Maintenance consists of all M1 Operations plus the other operations listed below.

Initial Maintenance (IM) Operations

Maint. Oper. No.	Initial Maintenance (IM) Operations
00–10	Perform All M1 Operations
15–01	Alternator and Starter Checking
25–02	Clutch Inspecting and Adjusting Pedal Free Play
26–02	Manual Transmission Oil Changing and Magnetic Plug Cleaning
31–01	Frame Fastener Torque Checking
32–03	U-Bolt Torque Checking
33–04	All-Axle Alignment
35–03	Axle Lubricant Changing and Magnetic Plug Cleaning

https://truckmanualshub.com/

M1 Maintenance Interval Operations Table: 00–10

IMPORTANT: After performing all operations in this table, perform all daily and weekly maintenance operations listed in the "Pretrip Inspection and Daily Maintenance" chapter of the *Cargo Driver's Manual*.

NOTE: Numbers in this table are maintenance operation reference numbers matching those in the text of this manual.

M1 Maintenance Interval Operations

Maint. Oper. No.	M1 Maintenance Interval Operations
00–15	Lubrication and Fluid Level Check (includes the following): • Clutch Release Bearing and Cross-Shaft Lubricating • Clutch Linkage Components Lubricating • Manual Transmission Oil Level Checking • Suspension Lubricating • Knuckle Pin Lubricating • Tie-Rod End Lubricating • Axle Lubricant Level Checking • Driveline Lubricating • Foot Brake Valve Actuator Lubricating • Automatic Slack Adjuster Lubricating • Drag Link Lubricating • Power Steering Reservoir Fluid Level Checking • Steering Gear Lubricating (Ross TAS Series) • Cab Mounts Lubricating • Cab Roof Vent Lubricating • Weatherstrip, Door Hinge, and Door Latch Lubricating
32–01	Suspension Inspecting (including cab shocks)
33–02	Tie-Rod End Inspecting
35–02	Axle Breather Checking
41–01	Driveline Inspecting
42–01	Air Dryer Inspecting, Bendix AD–9
42–03	Air Brake Valve Operation Checking
42–04	Relay Valve Checking
42–05	Quick Release and Flipper Valves Checking
42–06	Brake Chamber Inspecting (All Models)
42–08	Automatic Slack Adjuster Checking
54–02	Battery, Battery Box, and Cable Checking and Cleaning
54–03	Ground Cables Checking and Cleaning
83–01	Air Conditioner Checking, R–134a Refrigerant Systems

https://truckmanualshub.com/

M2 Maintenance Interval Operations Table: 00–11

IMPORTANT: After performing all operations in this table, perform all daily and weekly maintenance operations listed in the "Pretrip Inspection and Daily Maintenance" chapter of the *Cargo Driver's Manual*. Also, perform all M1 Maintenance Interval Operations at the M2 Maintenance Interval.

NOTE: Maintenance operations appearing in italics in this table are for noise emission control components.

Numbers in this table are maintenance operation reference numbers matching those in the text of this manual. The M2 Maintenance consists of all M1 Interval Operations plus the other operations listed below.

M2 Maintenance Interval Operations

Maint. Oper. No.	M2 Maintenance Interval Operations
00–10	Perform All M1 Operations
00–16	Lubrication and Fluid Level Check (includes the following): • Camshaft Bracket Bushing Lubricating • Air Reservoir Automatic Drain Valve Disassembly, Cleaning, Inspecting, and Lubricating, Bendix AD–9 • Steering Driveline Lubricating
20–01	Radiator Cap Checking
26–03	Allison, Eaton/Fuller, and Meritor Transmission Breather Checking
26–04	Eaton/Fuller Transmission Air Filter/Regulator Element Cleaning
42–10	Automatic Slack Adjuster Inspecting
49–01	*Exhaust System Inspecting*
83–02	Air Filter Replacement*

* Replace the HVAC air filter every three months regardless of mileage.

https://truckmanualshub.com/

M3 Maintenance Interval Operations Table: 00–12

IMPORTANT: After performing all operations in this table, perform all daily and weekly maintenance operations listed in the "Pretrip Inspection and Daily Maintenance" chapter of the *Cargo Driver's Manual*. Also, perform all M1 and M2 Maintenance Interval Operations at the M3 Maintenance Interval.

NOTE: Numbers in this table are maintenance operation reference numbers matching those in the text of this manual. The M3 Maintenance consists of all M1 and M2 Interval Operations plus the other operations listed below.

M3 Maintenance Interval Operations

Maint. Oper. No.	M3 Maintenance Interval Operations
00–10	Perform All M1 Operations
00–11	Perform All M2 Operations
01–02	Engine Drive Belt Inspection
09–01	Air Cleaner Element Inspecting and Replacing
15–01	Alternator and Starter Checking
25–02	Clutch Inspecting and Adjusting
26–05	Allison Transmission Fluid and Filter Changing
32–03	U-Bolt Torque Checking
40–01	Wheel Nut and Rim Nut Checking
42–11	Air Dryer Checking, Bendix AD–9
47–01	Fuel Tank Draining and Vent Checking
54–01	Electrical System Checking

https://truckmanualshub.com/

M4 Maintenance Interval Operations Table: 00–13

IMPORTANT: After performing all operations in this table, perform all daily and weekly maintenance operations listed in the "Pretrip Inspection and Daily Maintenance" chapter of the *Cargo Driver's Manual*. Also, perform all M1, M2, and M3 Maintenance Interval Operations at the M4 Maintenance Interval.

NOTE: Maintenance operations appearing in italics in this table are for noise emission control components.

Numbers in this table are maintenance operation reference numbers matching those in the text of this manual. The M4 Maintenance consists of all M1, M2, and M3 Interval Operations plus the other operations listed below.

M4 Maintenance Interval Operations

Maint. Oper. No.	M4 Maintenance Interval Operations
00–10	Perform All M1 Operations
00–11	Perform All M2 Operations
00–12	Perform All M3 Operations
01–01	*Engine-Support Fasteners Checking*
20–02	Radiator Pressure Flushing and Coolant Changing
26–02	Manual Transmission Oil Changing and Magnetic Plug Cleaning
31–01	Frame Fastener Torque Checking
33–04	All-Axle Alignment Checking
35–03	Axle Lubricant Changing and Magnetic Plug Cleaning
46–04	Power Steering Reservoir Fluid and Filter Changing

https://truckmanualshub.com/

M5 Maintenance Interval Operations Table: 00–14

IMPORTANT: After performing all operations in this table, perform all daily and weekly maintenance operations listed in the "Pretrip Inspection and Daily Maintenance" chapter of the *Cargo Driver's Manual*. Also, perform all M1, M2, M3, and M4 Maintenance Interval Operations at the M5 Maintenance Interval.

NOTE: Numbers in this table are maintenance operation reference numbers matching those in the text of this manual. The M5 Maintenance consists of all M1, M2, M3, and M4 Interval Operations plus the other operations listed below.

M5 Maintenance Interval Operations

Maint. Oper. No.	M5 Maintenance Interval Operations
00–10	Perform All M1 Operations
00–11	Perform All M2 Operations
00–12	Perform All M3 Operations
00–13	Perform All M4 Operations
42–12	Air Dryer Desiccant Replacing, Bendix AD–9
42–14	Air Brake Valve Disassembly, Cleaning, and Inspecting, Bendix E–6, QR–1, and ST–3

https://truckmanualshub.com/

Lubrication and Fluid Level Check (M1, schedules I, II, and III): 00–15

Maintenance Operation 00–15 (**Table 7**), summarizes all Lubrication and Fluid Level Check operations that must be performed at the M1 Maintenance Interval for Schedules I, II, and III.

Maintenance operation numbers given in the table are reference numbers used to help you find detailed instructions in the manual on the lubrication or fluid check. Lubrication and Fluid Level Check Locations **00–17** can be used as a guide by those who do not need to consult the detailed lubrication and fluid check instructions given elsewhere in the manual.

Maintenance Operation 00–15 M1 Lubrication and Fluid Level Check for Schedules I, II, and III	
Maint. Operation Number	**Operation Description**
25–01	Clutch Release Bearing and Cross-Shaft Lubricating
25–03	Clutch Master Cylinder Fluid Level Checking
26–01	Manual Transmission Oil Level Checking
32–02	Suspension Lubricating
33–01	Knuckle Pin Lubricating
33–03	Tie-Rod End Lubricating
35–01	Axle Lubricant Level Checking
41–02	Driveline Lubricating
42–02	Foot Brake Valve Actuator Lubricating
42–09	Automatic Slack Adjuster Lubricating
46–02	Drag Link Lubricating
46–03	Power Steering Reservoir Fluid Level Checking
46–05	Steering Gear Lubricating (Ross TAS Series)
60–02	Cab Mounts Lubricating
60–03	Cab Roof Vent Lubricating
72–01	Weatherstrip, Door Hinge, and Door Latch Lubricating

Table 7, Maintenance Operation 00-15, M1 Lubrication and Fluid Level Check for Schedules I, II, and III

https://truckmanualshub.com/

Lubrication and Fluid Level Check (M2, schedules I, II, and III: 00–16

Maintenance Operation 00–16 (**Table 8**), summarizes all Lubrication and Fluid Level Check operations that must be performed at the M2 Maintenance Interval for Schedules I, II, and III.

Maintenance operation numbers given in the table are reference numbers used to help you find detailed instructions in the manual on the lubrication or fluid check. Lubrication and Fluid Level Check Locations **00–17** can be used as a guide by those who do not need to consult the detailed lubrication and fluid check instructions given elsewhere in the manual.

Maintenance Operation 00–16 M2 Lubrication and Fluid Level Check for Schedules I, II, and III	
Maint. Operation Number	**Operation Description**
42–07	Camshaft Bracket Bushing Lubricating
42–13	Air Reservoir Automatic Drain Valve Disassembly, Cleaning, Inspecting, and Lubricating, Bendix AD–9
46–01	Steering Driveline Lubricating

Table 8, Maintenance Operation 00-16, M2 Lubrication and Fluid Level Check for Schedules I, II, and III

https://truckmanualshub.com/

Lubrication Table

Lubrication Table			
No.	**Text Ref. Nos.**	**Components**	**Remarks***
1	32–02	Front Suspension, Spring Pins†, and Shackle Pins†	Lube on both sides of vehicle; one grease fitting for each spring pin; two grease fittings for each shackle.
2	46–02	Drag Link	Two grease fittings; one on each end.
3	46–03 46–04 46–05	Power Steering	Check fluid level in the reservoir (46–03). Change fluid and filter (46–04), when required. Lubricate the steering gear (46–05).
4	46–01	Steering Driveline	Three grease fittings; lubricate both universal joints and the slip-joint splines.
5	42–09	Slack Adjusters, Front Axle	Lubricate both sides of axle; one grease fitting for each slack adjuster.
6	42–07	Camshaft Brackets, Front Axle	Lubricate both sides of axle; one grease fitting for each camshaft bracket.
7	33–03	Tie Rod	Two grease fittings; one on each end of tie rod.
8	33–01	Knuckle Pins	Two grease fittings; one on top and one on bottom of knuckle pin. Lubricate both sides of the axle.
9	25–01	Clutch Release Bearing and Release Cross-Shaft	One grease fitting on bottom of the release bearing. Two grease fittings on the release cross-shaft.
10	26–01 26–02 26–05	Transmission	Check fluid level; add fluid, if low (26–01). Change fluid (26–02, or 26–05), when required.
11	41–02	Driveline U-Joints and Slip-Joints	One grease fitting for each U-joint. One grease fitting for each slip-joint.
12	72–01	Door Hinges, Latches, and Weatherstrips	Lubricate all door hinges, latches, and weatherstrips on the cab.
13	54–02	Batteries	Clean and lubricate if corrosion is present.

Lubrication Table			
No.	**Text Ref. Nos.**	**Components**	**Remarks***
14	42–13	Air Reservoir Automatic Drain Valves	Disassemble, clean, inspect, and lubricate the automatic drain valves.
15	32–02	Suspension Spring Pin	Lubricate on both sides of vehicle; one grease fitting for each spring pin.
16	32–02	Equalizer†	One grease fitting on each equalizer; lubricate on both sides of the vehicle.
17	35–01 35–03	Rear Axle	Check fluid level; add fluid, if low (35–01). Change fluid, when required (35–03).
18	42–09	Slack Adjusters, Rear Axle	Lubricate slack adjusters on both sides of each rear axle, one grease fitting for each slack adjuster.
19	42–07	Camshaft Brackets, Rear Axle	Lubricate camshafts on both sides of each rear axle; one grease fitting for each camshaft bracket.
20	42–14	Air Valves‡	Disassemble, clean, and lubricate the air valves.
21	60–03	Cab Roof Vent Lubricating	Spray light oil on hinges and piston shafts.

* Intervals and procedures are included in the "Maintenance Operations Tables" and the specific groups.

† Not shown in the illustration.

‡ Air valves are located throughout the vehicle; inside the cab and on the chassis.

https://truckmanualshub.com/

Lubrication Tables: 00–17

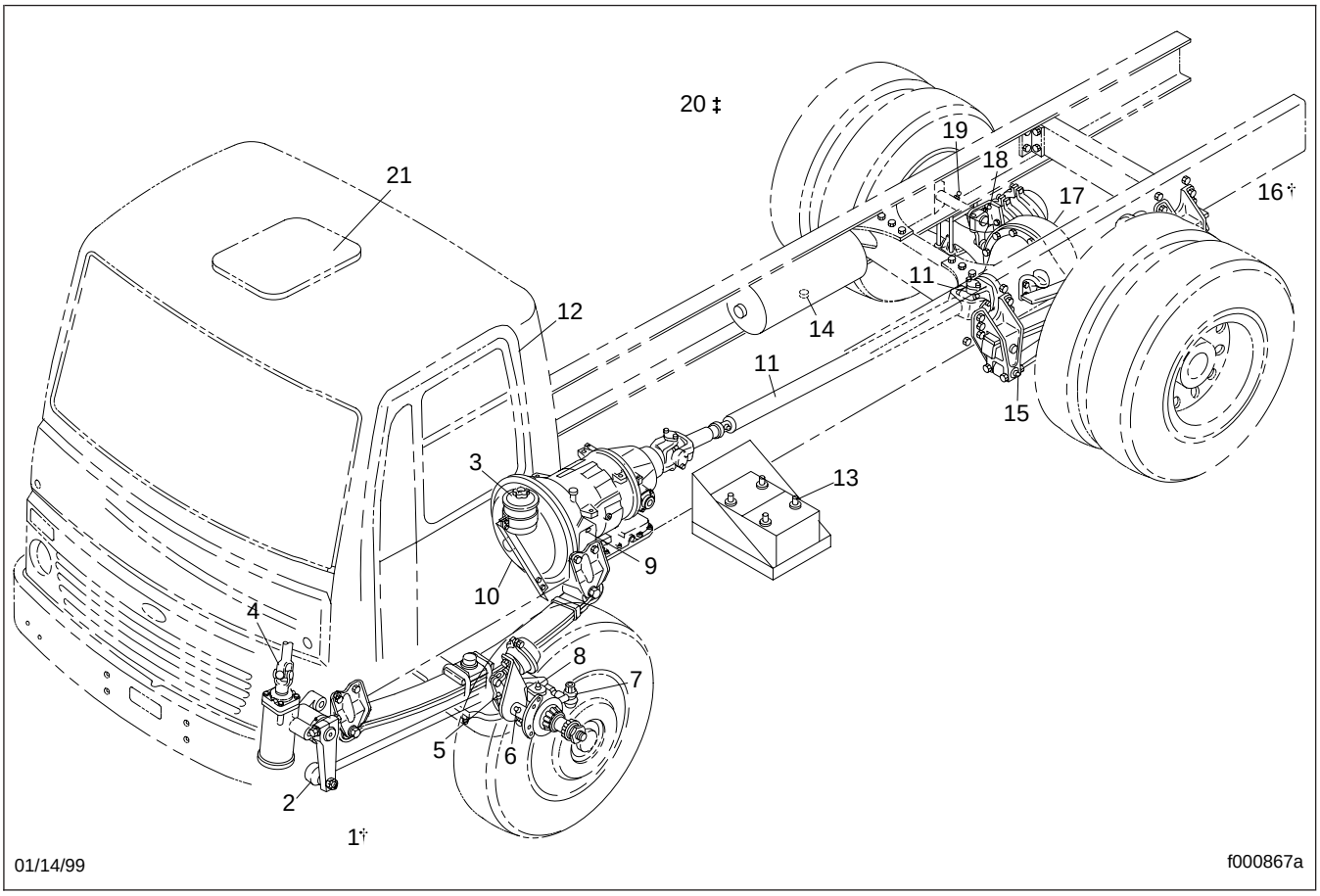

Fig. 1, Lubrication Points

https://truckmanualshub.com/

Index, Alphabetical

Title of Maintenance Operation (MOP)	MOP Number
Engine Drive Belt Inspection	01–02
Engine-Support Fasteners Check	01–01

https://truckmanualshub.com/

01–01 Engine-Support Fasteners Check

Check the rear engine-support fasteners (**Fig. 1**, Ref. 4) for tightness. Tighten the 3/4-inch fasteners 215 to 265 lbf·ft (292 to 359 N·m).

Check the front engine-support fasteners for tightness. Tighten the 5/8-inch fasteners 125 lbf·ft (170 N·m).

NOTE: With Allison automatic transmissions, it is necessary to remove the four fasteners holding the transmission oil cooler. Lower the cooler out of the way to provide access to the front engine mount.

NOTE: At engine overhaul, and whenever the engine has been removed, inspect the lower and upper isolators (**Fig. 1**, Refs. 1 and 6), and replace them if they are worn. See **Group 01** of the *Cargo Workshop Manual* for procedures.

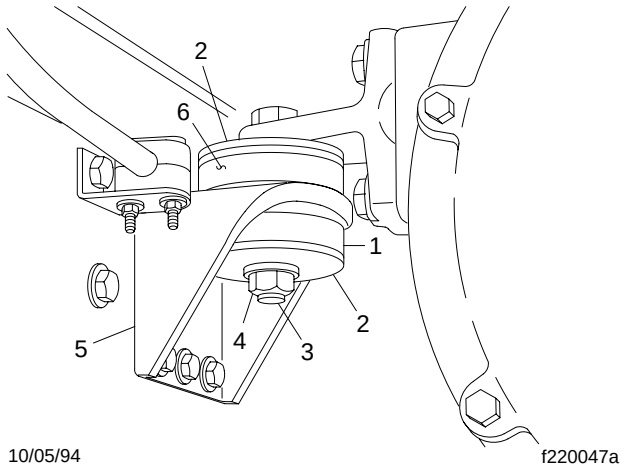

1. Lower Isolator
2. Engine Support Washer
3. 3/4 x 10 Capscrew
4. 3/4 x 10 Hexnut
5. Engine Mount
6. Upper Isolator

Fig. 1, Engine Rear Mount

01–02 Engine Drive Belt Inspection

Worn or loose drive belts may cause premature bearing failure or engine overheating. Excessive tension, or too little tension on the belt may result in excessive and premature belt wear. Poly-V belts, or serpentine belts are retrained by a belt tensioner that requires no tension adjustment. Replace the engine drive belt if any conditions described in the visual description are found. V-belts are installed as individual belts, and as matched sets. When replacing a matched set of belts, always replace both belts at the same time. Matched belts must be from the same manufacturer. To inspect a belt, gently twist the belt to view the belt sidewalls and bottom. Visually inspect all belts for the following conditions, then perform the belt tension inspection:

Visual Inspection

1. Inspect the belt for glazing. See **Fig 2**, Ref. A. Glazing is represented by shiny sidewalls, and is caused by friction created when a loose belt slips in the pulleys. It can also be caused by oil or grease contamination on the pulleys.
2. Check the belt for ply separation. See **Fig. 2**, Ref B. Oil, grease, or belt dressing can cause the belt to fall apart in layers. Repair any oil or coolant leaks that are affecting the belts before replacing the drive belts. Do not use belt dressing on any belt.
3. Check the belt for a jagged or streaked sidewall. See **Fig. 2**, Ref C. Jagged or streaked sidewalls are the result of foreign objects, such as sand or gravel in the pulley, or a rough pulley surface.
4. Check for tensile breaks; breaks in the cord body. See **Fig. 2**, Ref D. Cuts in a belt are usually caused by foreign objects in the pulley, or by prying or forcing the belt during removal or installation.
5. Check for uneven ribs on serpentine (poly-V) belts. See **Fig. 2**, Ref E. Foreign objects in the pulley will erode the undercord ribs, causing the belt to lose its gripping power.
6. Check the drive belts for cracks. See **Fig. 2**, Ref F. Small irregular cracks are usually the signs of an old belt.

https://truckmanualshub.com/

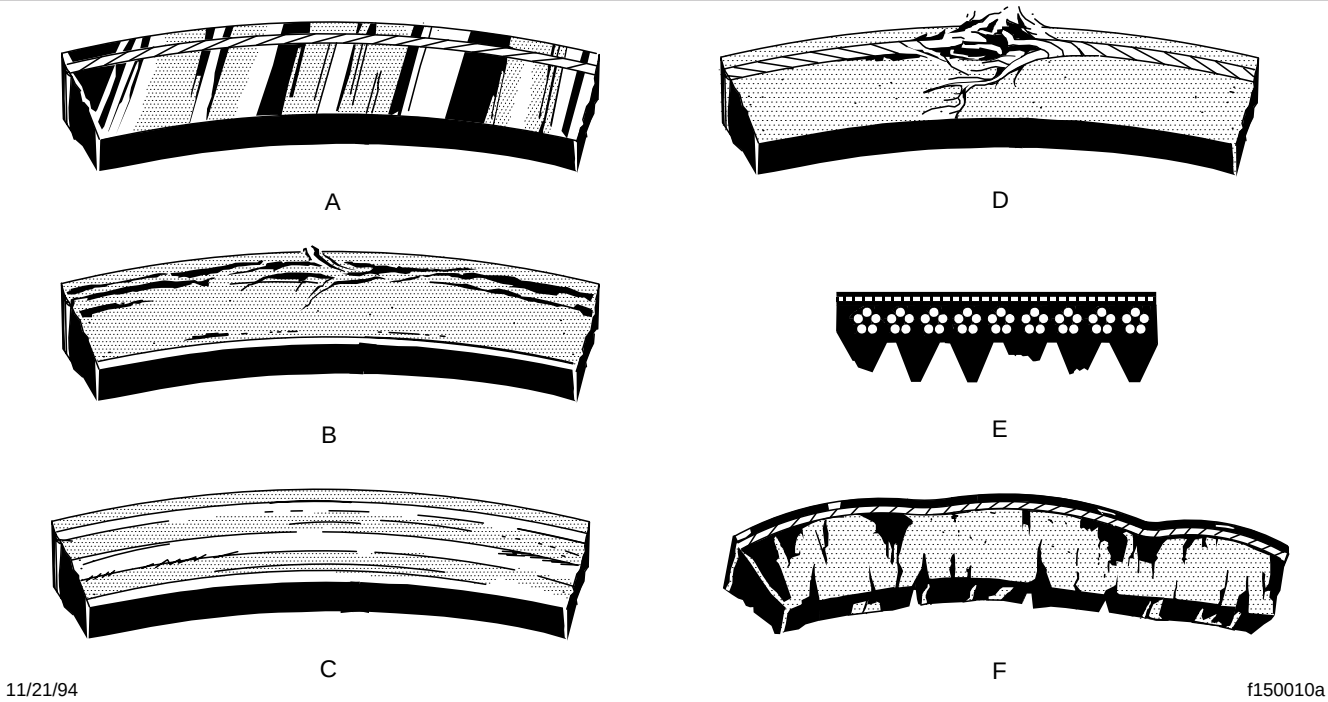

A. Glazing
B. Separating Layers
C. Streaked Sidewalls
D. Tensile Break
E. Uneven Ribs
F. Cracks

Fig. 2, Drive Belt Replacement Conditions

7. Visually inspect the pulleys for excessive play or wobble. Excessive play or wobble indicates a failure of the pulley bearing. Check for belt squealing or squeaking. Replace the bearings as necessary.

NOTE: If it is difficult to distinguish the locations of a supposed bearing noise, place a stethoscope on the component being checked, not the pulley, to isolate the area from outside interference.

8. Inspect all pulleys for foreign objects, oil, or grease in the grooves.

Belt Tension Inspection

NOTE: If engine drive belts require adjustment, refer to **Group 01** in the *Cargo Workshop Manual*.

On belts equipped with a spring tensioner, the belt tension is automatically adjusted. Check that the tensioner is holding tension on the belt by inserting the end of a breaker bar in the 1/2 inch square hole on the forward face of the tensioner, and rotating the tensioner down, away from the belt. When the breaker bar is slowly released, the tensioner should return to its original position. If not, refer to **Group 01** in the *Cargo Workshop Manual* for replacement instructions.

https://truckmanualshub.com/

Index, Alphabetical

Title of Maintenance Operation (MOP) **MOP Number**

Air Cleaner Element Inspecting and Replacing 09–01

https://truckmanualshub.com/

09–01 Air Cleaner Element Inspecting and Replacing

Method 1

Replace the air cleaner element at the recommended interval or when the air restriction indicator reaches 25 inH_2O, if equipped with an air restriction indicator. For removal and installation instructions, see **Group 09** of the *Cargo Workshop Manual*. Reset the air restriction indicator.

If the maximum restriction is not reached, record the air restriction value. If the value is higher than the previous recording, reset the air restriction indicator. If the value is lower than the previous recording, inspect the air cleaner and air cleaner element for cracks, leaks, or any other damage.

If the air cleaner or air cleaner element is damaged, replace it and reset the air restriction indicator.

Method 2

Replace the air cleaner element at the recommended interval or when the air restriction indicator reaches 25 inH_2O, if equipped with an air restriction indicator. For removal and installation instructions, see **Group 09** of the *Cargo Workshop Manual*. Reset the air restriction indicator.

If the maximum restriction is not reached, inspect the air cleaner and air cleaner element for cracks, leaks, or any other damage. If the air cleaner or air cleaner element is damaged, replace it and reset the air restriction indicator.

https://truckmanualshub.com/

Index, Alphabetical

Title of Maintenance Operation (MOP) **MOP Number**

Air Compressor Inspection, Holset 13–01

https://truckmanualshub.com/

13–01 Air Compressor Inspection, Holset

Inspect the air intake line, oil supply and return lines, and coolant supply and return hoses for tight connections and general condition. Tighten the connections, and replace the lines and hoses, as needed. If the compressor air-intake adapter is loose, remove the adapter, replace its gaskets, and securely install it.

Check the cooling fins on the compressor crankcase. Clean the fins if they are clogged with debris.

https://truckmanualshub.com/

Index, Alphabetical

Title of Maintenance Operation (MOP) **MOP Number**

Alternator and Starter Check. 15–01

https://truckmanualshub.com/

15–01 Alternator and Starter Check

1. Check the tightness of the alternator bracket fasteners; tighten the fasteners as needed. For torque values, see **Group 15** of the *Cargo Workshop Manual*.
2. Clean and tighten all charging system electrical connections as needed.
3. Check the alternator wiring for missing insulation, kinks, and heat damage. Replace or repair as needed.
4. Check the battery cable connections to and from the starter solenoid and cranking motor for tightness. Check the tightness of all ground straps and cable fasteners. Make sure they are free of corrosion.
5. Make sure that the starter mounting bolts are tight. If loose, tighten them 38 lbf·ft (52 N·m).
6. Check the alternator charging voltage.

   NOTE: Batteries must be fully charged in order to check alternator charging voltage.

   6.1 Check the charge level of the batteries; for instructions, see **Group 54** in the *Cargo Workshop Manual*. Charge the batteries as needed.

   6.2 Turn off all vehicle loads (such as the lights, heater, and air conditioner), and connect an accurate voltmeter across the batteries. Run the engine at fast idle, approximately 1000 rpm, for about two minutes to stabilize voltage output.
7. If the voltmeter reading rises above 15.0 volts and cannot be lowered, replace the alternator.

   If the output voltage does not rise above 12.8 volts, and cannot be increased when the engine is running, see **Group 15** of the *Cargo Workshop Manual* for troubleshooting and replacement instructions.

https://truckmanualshub.com/

Index, Alphabetical

Title of Maintenance Operation (MOP)	MOP Number
Radiator Cap Check	20–01
Radiator Pressure Flush and Coolant Change	20–02

https://truckmanualshub.com/

20–01 Radiator Cap Check

WARNING

Do not remove or loosen the radiator cap until the engine and cooling system have completely cooled. Use extreme care when removing the cap. A sudden release of pressure from removing the cap prior to the system cooling can result in a surge of scalding coolant that could cause serious personal injury.

CAUTION

The radiator cap currently installed may not be the same one installed when the vehicle was built. If the radiator cap must be replaced, make sure that it is the correct cap for the cooling system of the vehicle. Because the radiator cap pressure rating affects the operating temperature of the engine, installing an improperly rated radiator cap may have adverse effects on the cooling system, and engine operating temperatures. This could cause premature engine wear or damage.

1. Using a radiator-cap tester, check the pressure cap to see if it maintains pressure to within 10% of the pressure rating marked on the cap. If it doesn't, replace the cap. Make sure that the replacement radiator cap is correctly rated for the cooling system of the vehicle.
2. There is a second valve in the radiator cap that opens under vacuum. This prevents the collapse of hoses and other parts that are not internally supported when the system cools. Inspect the vacuum-relief valve to be sure it is not stuck.
3. Make sure that the cap seals properly on the coolant filler neck seat, and that the radiator cap gasket is not damaged. On vehicles with screw on caps with O-rings, make sure that the O-ring is not cracked or deteriorated. Replace the cap if the gasket shows deterioration or damage.

20–02 Radiator Pressure Flush and Coolant Change

NOTE: For additional instructions on cleaning and flushing the cooling system, see the engine manufacturer's maintenance and operation manual.

1. Drain the radiator.
   - 1.1 Remove the surge tank cap.
   - 1.2 Open the petcock at the bottom of the radiator to drain the engine coolant.
2. Disconnect the radiator inlet and outlet hose connections.
3. Flush the radiator.
   - 3.1 Attach a flushing gun nozzle to the radiator outlet.
   - 3.2 Run water in until the radiator is full.
   - 3.3 Apply no more than 20 psi (138 kPa) air pressure intermittently to help dislodge sediment buildup in the core.

CAUTION

When flushing the radiator, do not apply more than 20 psi (138 kPa) air pressure. Excessive pressure can damage the radiator or heater core.

4. Drain the radiator, and flush the radiator until clean water flows from the radiator. Remove the flushing gun.
5. Close the petcock at the bottom of the radiator.
6. Connect the hoses. The hose clamps can be either T-bolt clamps (**Fig. 1**) or Breeze Constant-Torque clamps (**Fig. 2**).

   When working with T-bolt type hose clamps, tighten the clamps 55 lbf·in (620 N·cm). These clamps are now standard on hoses with an inside diameter greater than 2 inches (51 mm).

   When installing the Breeze Constant-Torque hose clamps, the clamps must be tightened to the correct torque. The screw tip of the clamp must extend about 1/4 inch (6 mm) from the clamp housing, and the Belleville washer stacks must be collapsed almost flat. Use a torque

https://truckmanualshub.com/

wrench to install these hose clamps correctly. The correct installation torque for Breeze Constant-Torque hose clamps is as follows:

For Breeze Constant-Torque hose clamps with a 5/16-inch tightening screw hex: 55 lbf·in (620 N·cm).

For Breeze Constant-Torque hose clamps with a 3/8-inch tightening screw hex: 90 lbf·in (1020 N·cm).

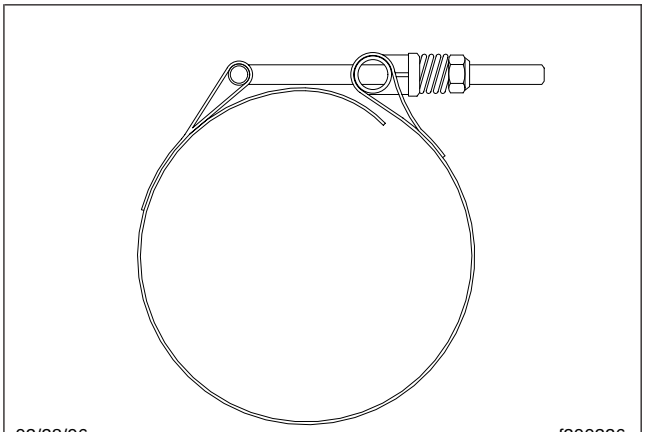

Fig. 1, T-Bolt Type Hose Clamp

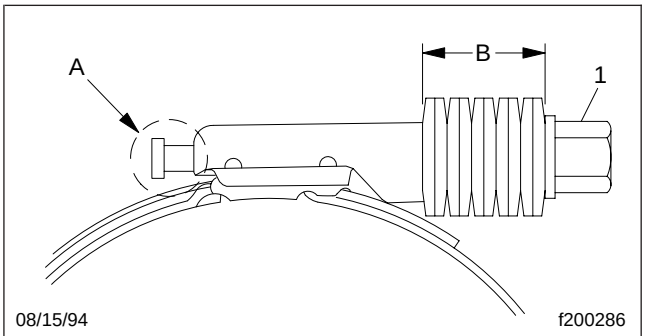

A. The screw tip must extend about 1/4 inch (6 mm).
B. The Belleville washer stacks must be collapsed almost flat.
1. Tightening Screw Hex

Fig. 2, Breeze Constant-Torque Hose Clamp Installation

NOTE: All hose clamps will lose torque after installation due to "compression set." However, when correctly installed, Breeze Constant-Torque clamps will hold enough torque to automatically adjust and keep consistent sealing pressure. During vehicle operation and shutdown, the screw tip may adjust according to temperature and pressure changes. The torque may need to be adjusted for individual applications.

7. Fill the radiator with coolant. Use a mixture of 50 percent water and 50 percent corrosion-inhibiting antifreeze to protect the engine to –34°F (–37°C) year round.

   See **Table 1** for engine cooling system capacity and **Table 2** for approved antifreezes.

Coolant Capacities		
Engine Make and Model	**Radiator Core and System Capacity***	
	2 Row quarts (liters)	**3 Row quarts (liters)**
Cummins ISB	30.5 (28.9)	31.0 (29.3)

* System capacity includes all hoses, fittings, and the heater core.

Table 1, Coolant Capacities

Approved Coolants		
Engine Type	**Coolant Manufacturer**	**Coolant Designation***
Diesel	Texaco	JC04 Antifreeze
	Van Waters and Rogers Ltd. (Canada)	Diesel Antifreeze No. 6038

* Freightliner-approved antifreeze must meet one of the following conditions: A. Ethylene glycol solution that meets GM 6038–M Engineering Standards. B. Ethylene glycol solution that has less than 0.1% anhydrous sodium metasilicate, and meets either GM 1825–M or GM 1899–M Engineering Standards.

Table 2, Approved Coolants

NOTE: You can mix purple-pink coolant (precharged with a borate/nitrate-based additive) with the common green coolant, although some color change will be apparent.

https://truckmanualshub.com/

Index, Alphabetical

Title of Maintenance Operation (MOP)	MOP Number
Clutch Inspection and Adjustment	25–02
Clutch Master Cylinder Fluid Level Check	25–03
Clutch Release Bearing and Release Cross-Shaft Lubrication	25–01

https://truckmanualshub.com/

25–01 Clutch Release Bearing and Release Cross-Shaft Lubrication

Clutch Release Bearing

CAUTION

Do not over-lubricate the release bearing. Over-lubricating could contaminate the clutch internally, causing clutch slippage and eventual clutch failure.

On clutches with a grease-type release bearing (**Fig. 1**), wipe the dirt from the grease fitting. Using a pressure gun and high-temperature grease only, lubricate the release bearing at the grease fitting until the grease starts coming out of the fitting. Use only a lithium-based grease that meets NLGI grade 1 or 2 specifications.

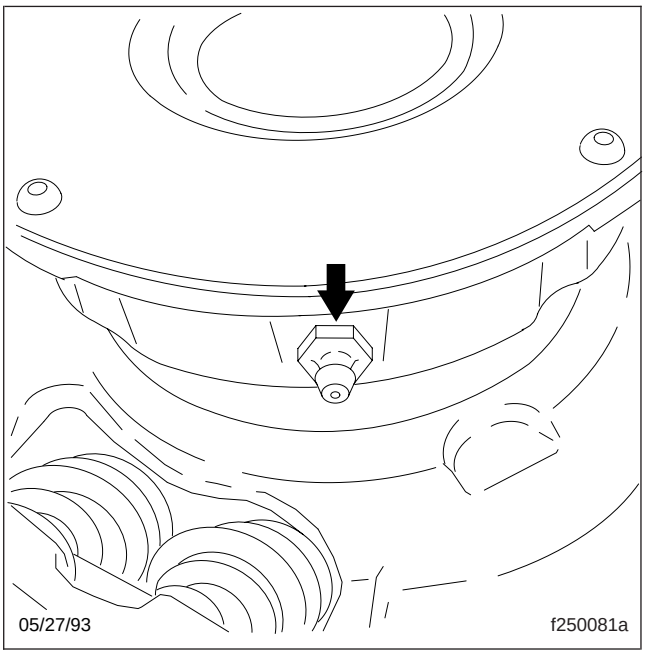

Fig. 1, Release Bearing Grease Fitting

NOTE: On clutches with a sealed release bearing, the release bearing is lubricated at the time of manufacture and requires no additional grease for the life of the bearing. This type of release bearing is not equipped with a grease fitting.

Clutch Release Cross-Shaft

The clutch release cross-shaft is equipped with two grease fittings; one at each side of the transmission clutch housing. Wipe the dirt from the grease fittings. Using a pressure gun, lubricate the cross-shaft with multipurpose chassis grease.

25–02 Clutch Inspection and Adjustment

See **Group 25** of the *Cargo Workshop Manual* for clutch inspection and adjustment.

25–03 Clutch Master Cylinder Fluid Level Check

The reservoir is full when the fluid level is up to the "max" mark. The fluid level must always be above the "min" mark. Use only heavy-duty brake fluid, DOT 3, in the hydraulic-clutch system.

https://truckmanualshub.com/

Index, Alphabetical

Title of Maintenance Operation (MOP)	MOP Number
Allison Transmission Fluid and Filter Change	26–05
Allison and Eaton/Fuller Transmission Breather Check	26–03
Eaton/Fuller Transmission Air Filter/Regulator Element Clean	26–04
Manual Transmission Oil Change and Magnetic Plug Clean	26–02
Manual Transmission Oil Level Check	26–01

https://truckmanualshub.com/

26–01 Manual Transmission Oil Level Check

1. With the transmission at operating temperature, and the vehicle on a level surface, check the oil level in the transmission.
   1.1 Clean the area around the fill plug. Remove the plug from the side of the case.
   1.2 Using your finger or a bent pipe cleaner, see if the oil is level with the lower edge of the fill opening. See **Fig. 1**.
2. If needed, fill the transmission with oil until level with the lower edge of the fill opening.

   See **Table 1** for approved lubricants.

Approved Transmission Lubricants		
Lubricant Type	**Temperature: °F (°C)**	**SAE Viscosity**
Eaton/Fuller Transmissions*		
Heavy-Duty Engine Oil API Service Classification SF or CD	Above 10 (–12)	40 or 50
	Below 10 (–12)	30
Allison AT and MD Series Transmissions†		
Dexron II	–25 to +120 (–32 to +48)	—
Allison MT Series Transmissions		
Dexron® IIE	–10 to +120 (–23 to +48)	—
Dexron® III	–10 to +120 (–23 to +48)	—
Type C4	10 to 120 (–12 to +48)	SAE 10W
Type C4	32 to 120 (0 to 48)	SAE 30W

* Lubricants listed in order of preference. Do not mix types of oil.

† Factory filled with Dexron II. For off-highway operation or where ambient temperature is consistently above 86°F (30°C) or below –25°F (–32°C), refer to the manufacturer's fluid recommendations.

Table 1, Approved Transmission Lubricants

CAUTION

Operating an Eaton/Fuller transmission with the oil level higher or lower than recommended can result in transmission damage. Do not overfill the transmission. Overfilling the transmission will force oil out of the case through the main shaft openings. Oil overflow may also drain onto the clutch or clutch brake causing additional problems.

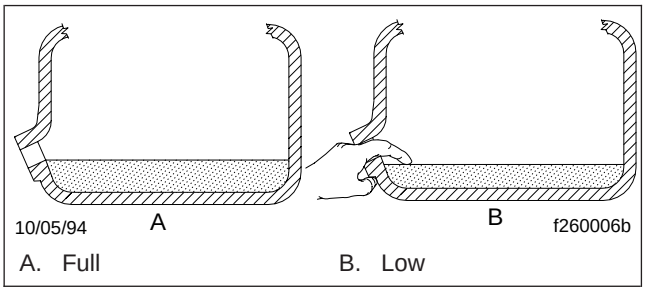

Fig. 1, Transmission Oil Level Checking

IMPORTANT: Do not mix types of oil, because of possible incompatibility. Do not use oil additives, friction modifiers, or synthetic lubricants.

3. Clean the fill plug. Install the fill plug in the transmission. Tighten the plug:
   - 20 to 25 lbf·ft (27 to 34 N·m) for a 3/4-inch plug;
   - 60 to 75 lbf·ft (81 to 102 N·m) for a 1-1/4-inch plug.

26–02 Manual Transmission Oil Change and Magnetic Plug Clean

Draining

1. Clean the area around the fill plug.
2. Remove the fill plug from the side of the case. Remove the drain plug(s) from the bottom of the transmission case.
3. Drain the oil while the transmission is warm.
4. Clean the magnetic plug(s) before installing it. (Use a piece of key stock, or any other convenient steel slug, to short the two magnetic poles and divert the magnetic field.) Install and tighten the drain plug(s) 20 lbf·ft (27 N·m).

https://truckmanualshub.com/

Filling

1. Add oil until it is level with the lower edge of the fill opening. See **Fig. 1**. If the transmission has two fill openings, add oil to the level of both fill openings.

   See **Table 1** for approved transmission lubricants, and **Table 2** for lubricant capacities.

Transmission Lubricant Capacities	
Transmission	**Refill Capacity* quarts (liters)**
Eaton/Fuller Models	
FS-4205A/B	4.75 (4.5)
FS-5205A/B	5.25 (5.0)
FS-6305A/B	9.5 (9.0)
FS-5306A	9.0 (8.5)
FS-6306A	9.0 (8.5)
FS-8206A	10.0 (9.5)
RT-6609A	6.0 (5.7)
Allison Models	
AT-545	16.0 (15.0)
MD	17.5 (16.5)
MT-643 MT-653	15 (14)

* Quantities listed are approximate. Fill the transmission until the lubricant is level with the bottom of the fill hole (on Eaton/Fuller transmissions) with the vehicle in normal operating position. On Allison transmissions, add the recommended amount of fluid as listed under refill capacity. Perform a "hot check" and add fluid as needed. Do not overfill.

Table 2, Transmission Lubricant Capacities

CAUTION

Operating a Eaton/Fuller transmission with the oil level higher or lower than recommended can result in transmission damage. Do not overfill the transmission. Overfilling the transmission will force oil out of the case through the main shaft openings. Oil overflow may also drain onto the clutch or clutch brake causing additional problems.

IMPORTANT: Do not mix types of oil, because of possible incompatibility. Do not use oil additives, friction modifiers, or synthetic lubricants.

NOTE: The correct oil capacity is established by the fill plug opening.

2. Clean the fill plug. Install the fill plug. Tighten the plug:
   - 20 to 25 lbf·ft (27 to 34 N·m) for a 3/4-inch plug;
   - 60 to 75 lbf·ft (81 to 102 N·m) for a 1-1/4-inch plug.

26–03 Allison and Eaton/Fuller Transmission Breather Check

Transmission housing breathers must remain clear. A plugged breather could result in pressure build-up which could cause oil leakage.

If the breather is plugged, clean or replace it. See **Fig. 2**. Check more often if the vehicle is operating under very dusty conditions.

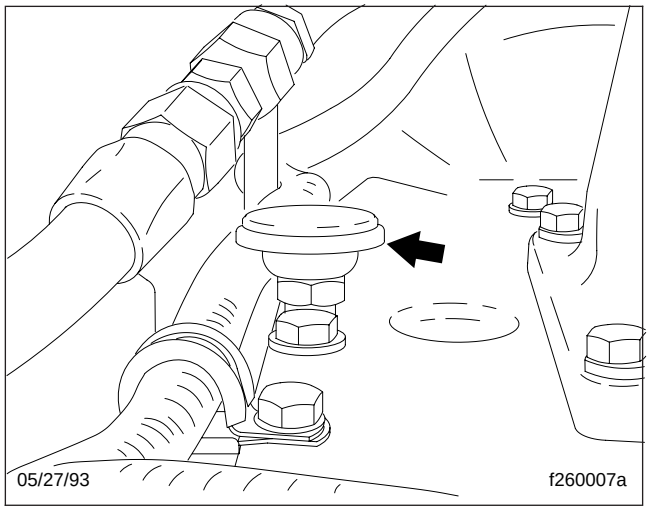

Fig. 2, Transmission Breather (Eaton/Fuller shown)

26–04 Eaton/Fuller Transmission Air Filter/ Regulator Element Clean

1. Exhaust the air from the air reservoirs.

https://truckmanualshub.com/

⚠ WARNING

Exhaust the air supply before servicing the air filter/regulator; otherwise, serious personal injury and component damage could result.

2. Clean the outside of the air filter/regulator with cleaning solvent. Let it air dry. See **Fig. 3**.

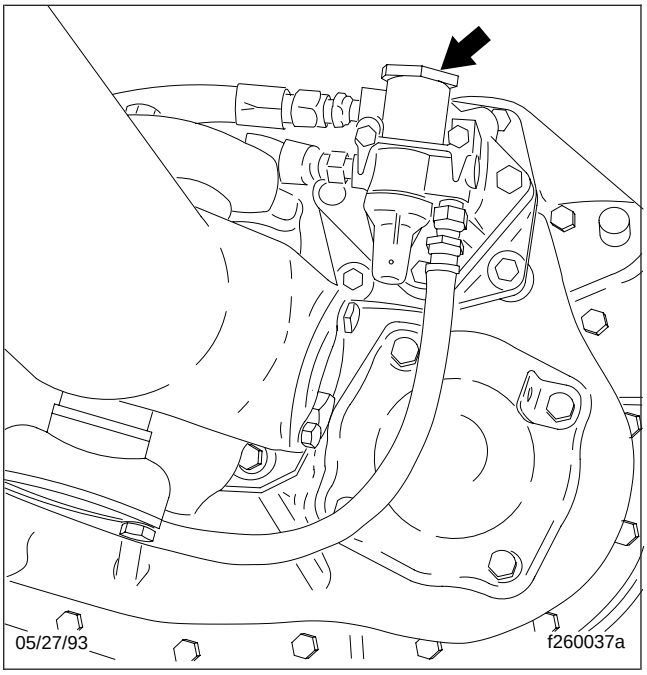

Fig. 3, Eaton/Fuller Transmission Air Filter/Regulator Location

3. Remove the end cap, large O-ring, and filter element from the filter housing. See **Fig. 4**. Remove the small O-ring from the end cap.

NOTE: Do not remove, disassemble, or adjust the air regulator. If the air regulator is not keeping the air pressure between 57 to 62 psi (396 to 431 kPa), replace the air filter/regulator, which is not serviceable.

4. Clean the filter element.

   4.1 Dip the filter element in alcohol or other cleaning solvent. Blow compressed air through the filter element (inside to outside) to loosen surface dirt and to dry the element. The sintered metallic filter element will last the life of the vehicle, provided it is not damaged.

   4.2 Wipe out the filter housing with a clean, dry, lint-free rag.

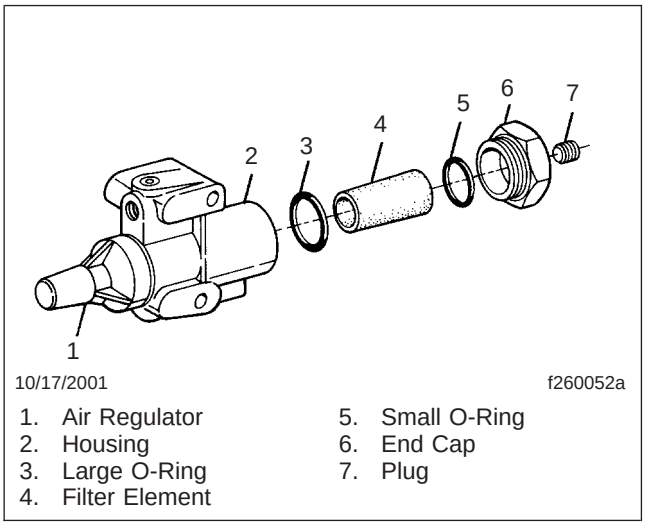

1. Air Regulator
2. Housing
3. Large O-Ring
4. Filter Element
5. Small O-Ring
6. End Cap
7. Plug

Fig. 4, Eaton/Fuller Transmission Air Filter/Regulator Components

5. Clean and inspect the O-rings and the end cap. Replace any parts that are damaged.
6. Install the large O-ring into the filter housing.
7. Install the filter element (small end first) into the filter housing.
8. Install the small O-ring into the end cap. Install the end cap on the filter housing. Tighten the end cap 8 to 12 lbf·ft (11 to 16 N·m).
9. Start the engine and build up pressure in the air system. Check for air leaks at the filter housing and air line connections and repair any leaks.

⚠ CAUTION

Repair any air leaks. A leaking air filter or air lines can cause slow or hard shifting of the transmission and eventual transmission damage.

https://truckmanualshub.com/

26–05 Allison Transmission Fluid and Filter Change

AT Series (Fig. 5)

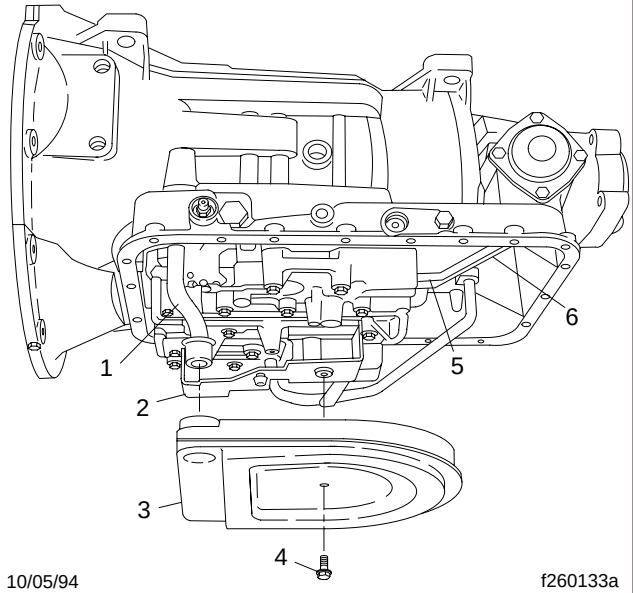

1. Fluid Intake Tube
2. Filter Spacer
3. Internal Fluid Filter
4. Washer-Head Screw
5. Governor Pressure Tube
6. Governor Feed Tube

Fig. 5, Allison AT Series Transmission Filter

1. Park the vehicle on a level surface and apply the parking brakes.
2. Run the engine until the transmission fluid reaches the operating temperature of 160° to 200°F (71° to 93°C). Shift the transmission to neutral (N) and shut down the engine.

CAUTION

To prevent dirt from entering the transmission, use only clean containers and fillers for the transmission fluid. Do not use fillers or containers that have been used for water or antifreeze. Dirt, water, or antifreeze could damage the transmission.

3. Clean the area around the drain plug. While the transmission fluid is warm, remove the drain plug and drain the fluid. Disconnect the fill tube from the oil pan.

IMPORTANT: Examine the used transmission fluid for dirt, coolant or water, and metal particles. If any of these contaminants are present, a problem may exist within the transmission system.

4. Remove the modulator retainer bolt and retainer from the side of the transmission case. See **Fig. 6**. Remove the modulator. Remove the sealring from the modulator and discard the sealring.

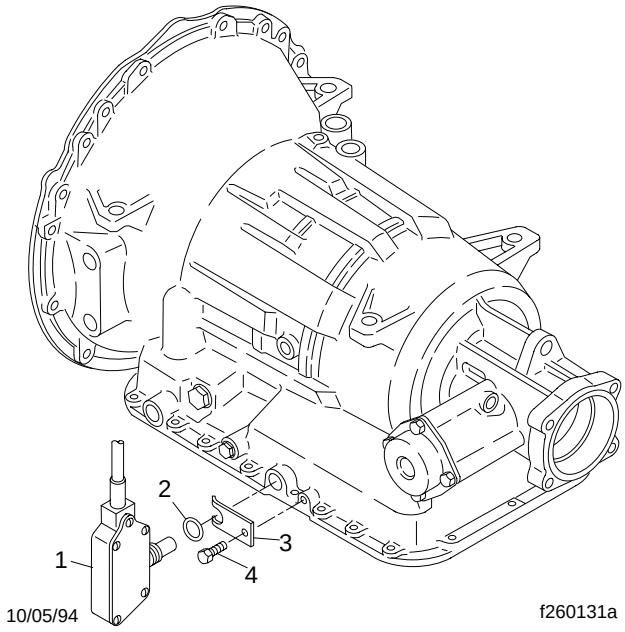

1. Modulator
2. Modulator Sealring
3. Retainer
4. Retainer Bolt

Fig. 6, Allison AT Series Transmission Modulator

5. Support the oil pan. Remove the twenty-one washer-head screws that attach the oil pan to the transmission case. Remove the pan and discard the pan gasket.
6. Clean the oil pan with mineral spirits.
7. Remove the washer-head screw that attaches the internal fluid filter to the filter spacer. Remove the filter and the fluid intake tube. See **Fig. 5**. Remove the sealring from the intake tube and discard the sealring.

https://truckmanualshub.com/

8. Clean or replace the governor oil screen located in the governor feed tube bore. See **Fig. 7**.

   8.1 Remove the bolt that attaches the detent spring to the control valve body. Remove the spring.

   8.2 Remove the two 3-inch bolts that retain the first/reverse clutch feed tube. Remove the tube.

   8.3 Remove two of the bolts near the outer edge of the valve body, and replace them with the two 3-inch bolts to hold the valve body to the transmission while checking the governor oil screen.

   8.4 Remove the remaining bolts and allow the valve body to drop down. Remove the governor feed tube and the governor pressure tube.

   8.5 Remove the governor oil screen from the governor feed tube bore. If the screen is damaged, replace it; if it is not damaged, clean it with mineral spirits.

   8.6 Install the governor oil screen, closed end first, into the valve body at the governor feed tube opening. Install the governor feed tube and the governor pressure tube.

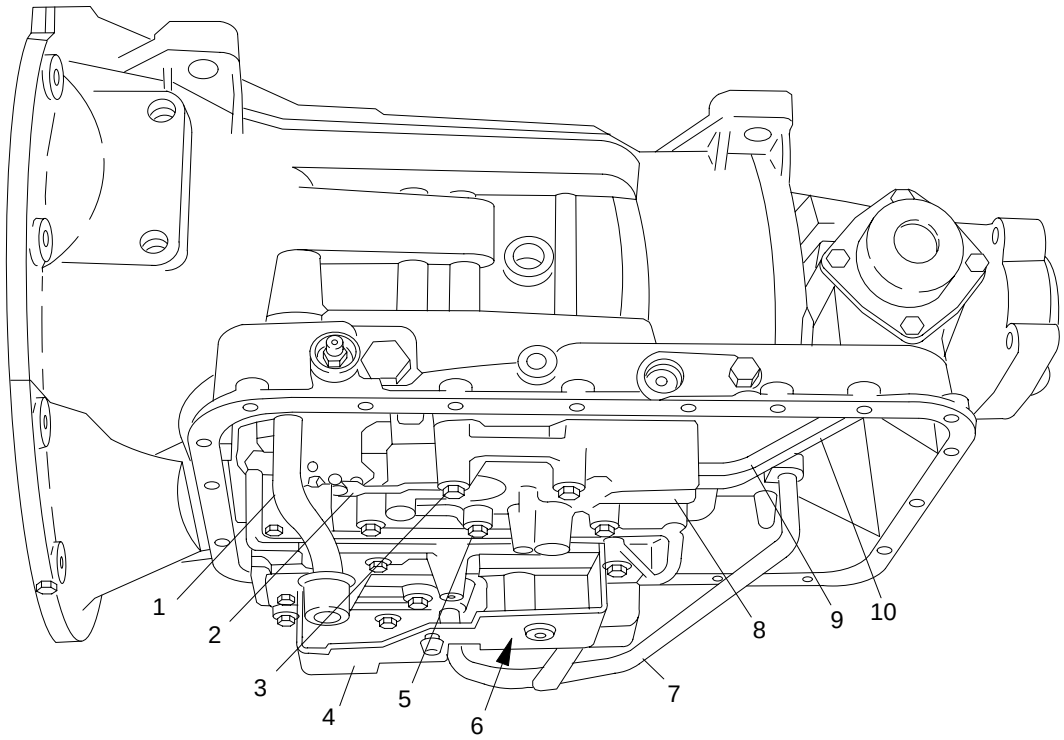

10/05/94 f260132a

1. Fluid Intake Tube
2. Detent Spring
3. Detent Spring 1-3/4 Inch Bolt
4. Filter Spacer
5. 2-1/4 Inch Bolt (16 qty.)
6. First/Reverse Clutch Feed Tube 3 Inch Bolt (2 qty., behind)
7. First/Reverse Clutch Feed Tube
8. Governor Oil Screen (in governor feed tube bore)
9. Governor Pressure Tube
10. Governor Feed Tube

Fig. 7, Allison AT Series Transmission Governor

https://truckmanualshub.com/

IMPORTANT: If the governor feed and pressure tubes are installed wrong end first, they will not align properly when the control valve is bolted in place.

8.7 Lift the valve body and swing the two tubes into position to enter their holes in the transmission case. Raise the valve body onto the case while engaging the rear ends of the tubes in the case, and engaging the selector valve on the selector lever.

8.8 Install fourteen valve body retaining bolts. Remove the two 3-inch bolts used to hold the valve body while checking the governor oil screen; replace them with two bolts of the correct size.

8.9 Install the filter spacer and the first/reverse clutch long-braced feed tube; use the two 3-inch bolts to retain them.

8.10 Install the detent spring, with its roller over the selector lever, and its tab in the hole directly behind the bolt hole.

Install a 1/4–20 x 1-3/4-inch bolt in the detent spring and valve body.

NOTE: The detent spring must be held in alignment over the selector lever while the 1-3/4-inch bolt is tightened.

8.11 Tighten all of the bolts evenly 8 to 12 lbf·ft (11 to 16 N·m).

9. Install a new sealring on the straighter end of the fluid intake tube. Lubricate the sealring with oil-soluble grease.

IMPORTANT: Avoid twisting the intake tube when installing the internal fluid filter, intake tube, and sealring; the sealring could be pinched, cut, or deformed. An air-tight seal must be maintained.

10. Install the intake tube and sealring. Install the internal fluid filter on the intake tube, making sure the grommet in the filter fits the intake tube snugly.

11. Install the washer-head screw to retain the fluid filter, and tighten it 10 to 15 lbf·ft (14 to 20 N·m).

12. Submerge a new oil pan gasket in transmission fluid for five minutes. Then place the oil pan gasket on the oil pan; do not use any substance as a gasket retainer.

IMPORTANT: Do not use gasket-sealing compounds any place inside the transmission or where they might get washed into the transmission. Also, nonsoluble vegetable-based cooking compounds or fibrous greases must not be used inside the transmission.

13. Install the oil pan and gasket.

13.1 Guide the pan and gasket carefully into place. Guard against dirt or foreign material entering the pan. Retain the pan with four 5/16–18 washer-head screws. Install the screw by hand into the corners of the pan.

13.2 Install the remaining seventeen washer-head screws by hand, carefully threading each through the gasket and into the transmission. Bottom all of the screws before tightening any of them.

13.3 Tighten all twenty-one screws evenly 10 to 15 lbf·ft (14 to 20 N·m). Check the gasket fit while the screws are being tightened.

IMPORTANT: The oil pan bolts must maintain a minimum torque of 60 lbf·in (700 N·cm) after the oil pan gasket has taken a set.

14. Install the fill tube at the side of the pan. Tighten the tube fitting 90 to 100 lbf·ft (122 to 136 N·m).

15. Install a new sealring on the modulator, then install the modulator and sealring in the side of the transmission case. Install the modulator retainer and retainer bolt, and tighten the retainer bolt 13 to 16 lbf·ft (18 to 22 N·m).

16. Install the drain plug and gasket, and tighten the plug 15 to 20 lbf·ft (20 to 27 N·m).

17. Replace the external (auxiliary) fluid filter.

18. Clean the area around the fill tube and remove the dipstick. Using a clean funnel in the fill tube, add transmission fluid.

https://truckmanualshub.com/

See **Table 1** for approved transmission lubricants, and **Table 2** for lubricant capacities.

19. Check and adjust the fluid level using the procedure under "CHECKING THE FLUID LEVEL."

MD Series (Fig. 8)

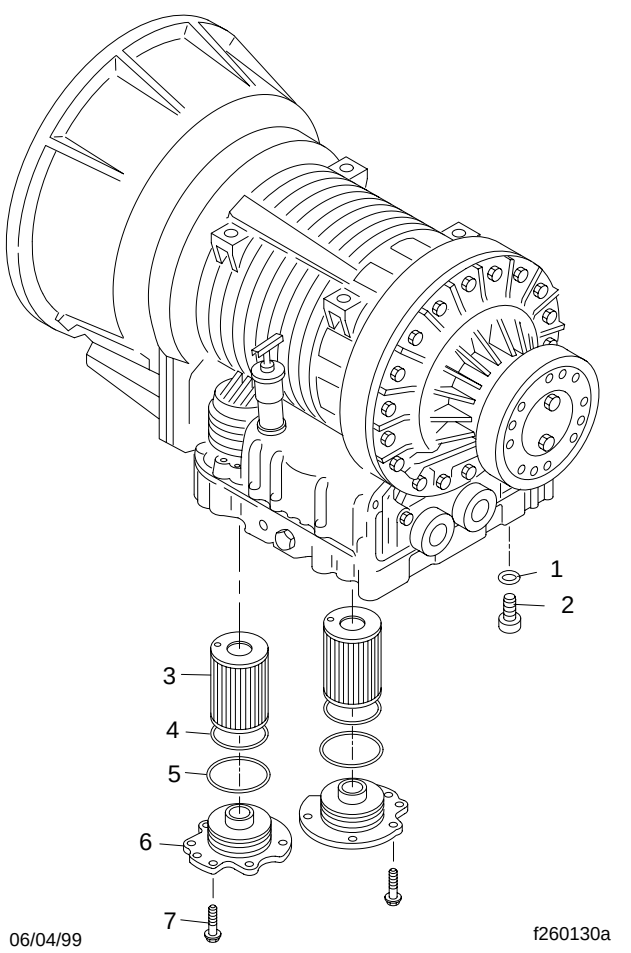

1. O-Ring
2. Drain Plug
3. Filter
4. O-Ring
5. Seal
6. Filter Cover
7. M10 Bolt

Fig. 8, Allison MD Series Transmission

1. Park the vehicle on a level surface and apply the parking brakes.
2. Run the engine until the transmission fluid reaches the operating temperature of 160° to 200°F (71° to 93°C). Shift the transmission to neutral (N) and shut down the engine.

CAUTION

To prevent dirt from entering the transmission, use only clean containers and fillers for the transmission fluid. Do not use containers or fillers that have been used for water or antifreeze. Dirt, water, or antifreeze could damage the transmission.

3. Clean the area around the drain plug. While the transmission fluid is warm, remove the drain plug, and drain the fluid.

IMPORTANT: Examine the used transmission fluid for dirt, coolant or water, and metal particles. If any of these contaminants are present, a problem within the transmission system may exist.

4. Remove the bolts from each filter cover at the bottom of the transmission control module. Remove the filter covers, O-rings, seals, and the two cartridge-type filters.
5. Coat the O-rings lightly with clean transmission fluid. Place the O-rings, seals, and filters on the filter covers. Push each cover assembly into the bottom of the transmission to seat the seals. Install and tighten the bolts 38 to 45 lbf·ft (52 to 61 N·m). Install and tighten the drain plug 18 to 24 lbf·ft (24 to 33 N·m).
6. Clean the area around the fill tube and remove the dipstick. Using a clean funnel in the fill tube, add transmission fluid.

   See **Table 1** for approved transmission lubricants, and **Table 2** for lubricant capacities.
7. Check and adjust the fluid level using the procedures under "CHECKING THE FLUID LEVEL."

MT Series (Fig. 9)

1. Park the vehicle on a level surface. Apply the parking brakes and chock the tires.
2. Start the engine and check that the transmission fluid temperature is 160° to 200°F (71° to 93°C) before draining the fluid. Shift the gear selector to neutral and shut down the engine.

https://truckmanualshub.com/

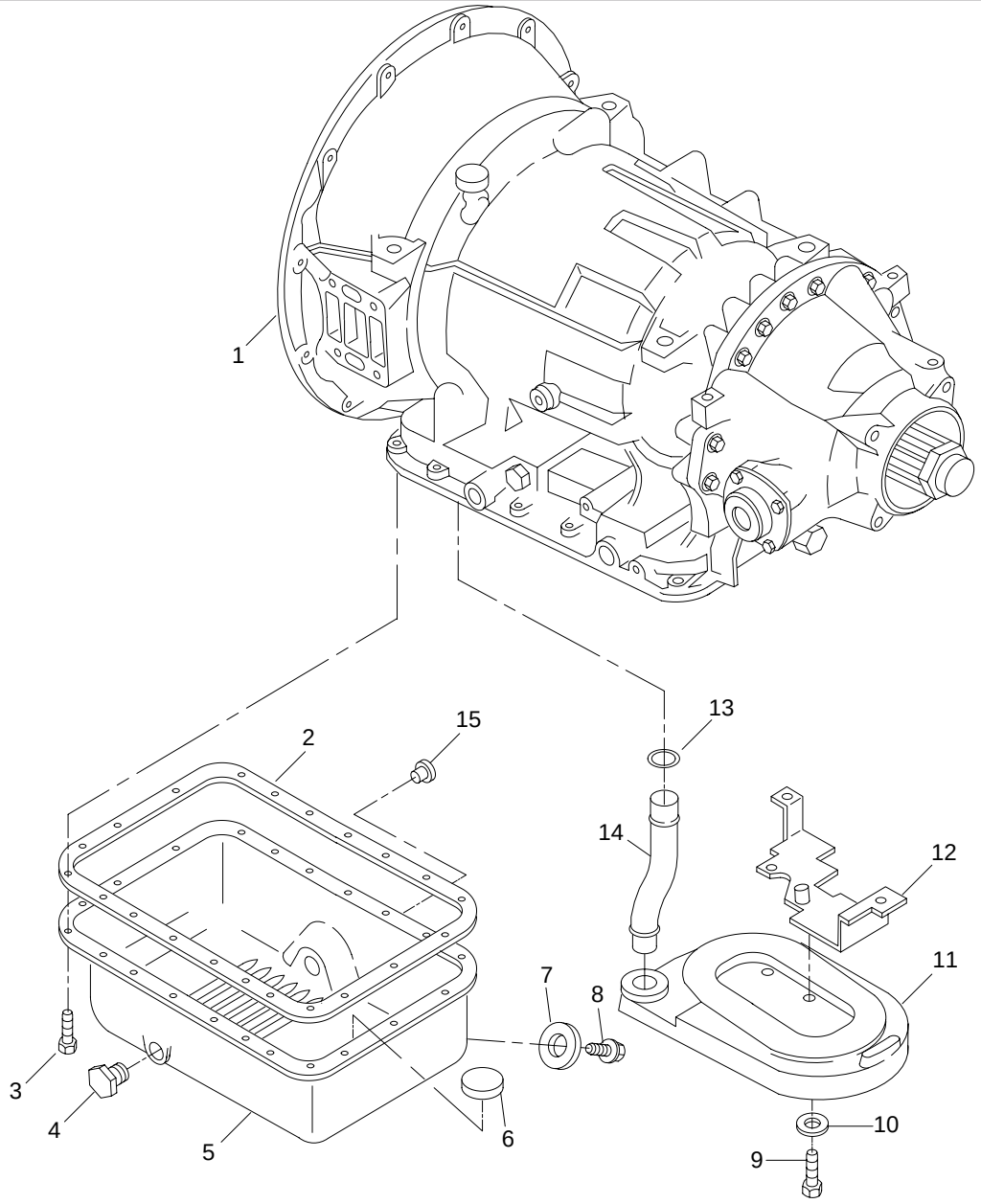

1. Transmission Housing
2. Transmission Oil Pan Gasket
3. 5/16–18 Washer-Head Capscrew
4. Plug
5. Transmission Oil Pan
6. Magnet
7. Drain Plug Gasket
8. Drain Plug
9. 5/16–18 x 5/8 Capscrew
10. Flatwasher
11. Transmission Oil Filter
12. Oil-Filter Spacer
13. O-Ring
14. Oil-Filter Tube
15. Plug

Fig. 9, Allison MT Series Transmission, Filter Removal

https://truckmanualshub.com/

3. Place a suitable container under the transmission. Remove the drain plug and gasket from the transmission oil pan. Allow the fluid to drain.
4. Remove the nut that secures the oil filler tube to the transmission pan.
5. Remove the 21 capscrews that secure the transmission oil pan to the transmission housing. Remove the transmission oil pan and gasket from the transmission. Discard the gasket.
6. Clean the oil pan of any debris and residual fluid in an approved cleaning tank.
7. Remove the washer-head capscrew that secures the filter to the transmission. Remove the filter and the filter intake pipe from the transmission.
8. Separate the filter intake pipe from the filter. Discard the O-ring. Clean the tube.
9. Install the filter intake pipe on the new filter. Install a new O-ring on the filter intake tube. Lubricate the O-ring with a light coat of transmission fluid.
10. Insert the filter intake pipe into the orifice on the bottom of the transmission. Secure the filter with the 5/16–18 x 5/8-inch washer-head capscrew. Tighten the capscrew 10 to 15 lbf·ft (14 to 20 N·m).
11. Place a new oil pan gasket on the oil pan. If desired, a sealant may be used on the gasket, but it must be applied carefully. Sealant must be prevented from contacting areas of the oil pan flange that are inside the raised bead of the flange.

NOTE: Do not use gasket-type sealing compounds or cement anywhere inside the transmission or where they might get washed into the transmission. Non-soluble vegetable-base cooking compounds or fibrous grease must not be used inside the transmission.

12. Install the oil pan and gasket onto the transmission. Check that no dirt or debris enters the pan. Secure the pan to the transmission housing with four 5/16–18 washer-head capscrews installed into the corners of the oil pan, but do not tighten.
13. Install the remaining 17 washer-head capscrews by hand. Check that all of the capscrews are hand tight.
14. Tighten each capscrew with a click-type torque wrench 60 lbf·in (700 N·cm). Use the torque pattern shown in **Fig. 10** to distribute the torque evenly. Repeat this procedure and torque the capscrews with a click-type torque wrench 15 to 20 lbf·ft (20 to 27 N·m).

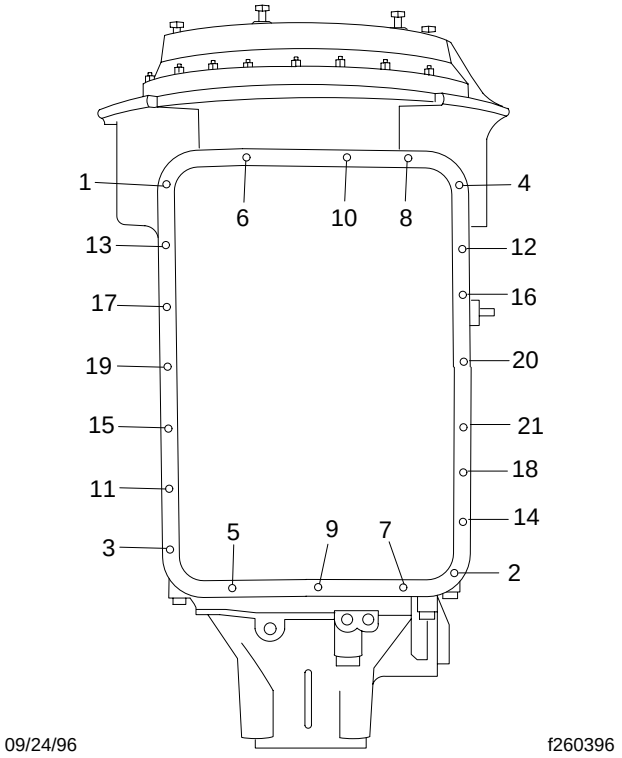

NOTE: Torque the oil pan bolts with a click-type torque wrench following this torque pattern. Tighten the bolts 60 lbf·in (700 N·cm). Repeat the torque pattern with a click-type torque wrench 15 to 20 lbf·ft (20 to 27 N·m).

Fig. 10, Allison MT Series Transmssion, Oil Pan Torque Pattern

15. Install the oil filler tube on the oil pan. Tighten the tube fitting 90 to 100 lbf·ft (122 to 136 N·m). Install the drain plug and gasket. Tighten the drain plug 15 to 20 lbf·ft (20 to 27 N·m).
16. Pour approximately 15 quarts (14 liters) of Dexron® IIE transmission fluid into the transmission. Start the engine and allow the transmission fluid to circulate. With the transmission in NEUTRAL, check the fluid level. Check for fluid leaks. Correct any leak with the engine OFF.

https://truckmanualshub.com/

Checking the Fluid Level

Cold Check

Clean all dirt away from around the end of the fluid fill tube before removing the dipstick.

CAUTION

Do not allow foreign matter to enter the transmission. Dirt or foreign matter in the hydraulic system may cause undue wear of transmission parts, make valves stick, and clog passages.

It is important to check the fluid level cold to determine if the transmission has a sufficient amount of fluid to be safely operated until a hot check can be performed.

1. Park the vehicle on a flat surface.
2. Apply the parking brake and chock the tires.
3. Run the engine for at least one minute.
4. Shift from DRIVE to NEUTRAL, and then shift to REVERSE to fill the hydraulic system.
5. Shift to NEUTRAL and allow the engine to idle at 500 to 800 rpm.
6. With the engine running at idle, remove the dipstick from the tube and wipe clean.
7. Insert the dipstick into the tube and remove the dipstick.
8. Check the fluid level reading and repeat the check procedure to verify the reading.

   If the fluid level is within the COLD RUN band, the transmission may be operated until the fluid is hot enough to perform a HOT RUN check.

   If the fluid level is not within the COLD RUN band, add or drain fluid as needed to adjust the fluid level to the middle of the COLD RUN band. See **Fig. 11** for the AT and MD Series, and **Fig. 12** for the MT Series.

CAUTION

Do not fill above the COLD RUN band if the transmission fluid is below normal operating temperature. As fluid temperature increases, so does the fluid level. Filling above the COLD RUN band when the transmission is below normal operating temperature may result in an overfilled transmission, which causes fluid foaming and aeration. Fluid foaming and aeration cause transmission overheating and erratic shifting.

NOTE: Perform a hot check at the first opportunity after the normal operating temperature, 160° to 200°F (71° to 93°C) has been reached.

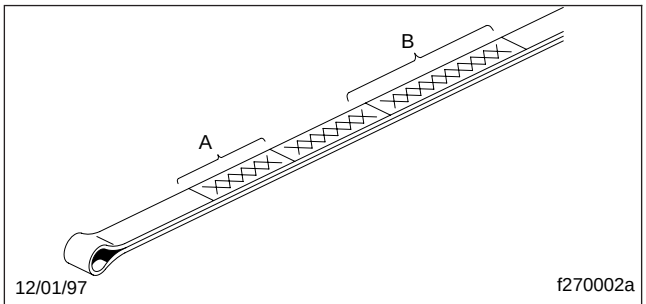

A. Cold Run Band B. Hot Run Band

Fig. 11, AT and MD Series Dipstick Markings

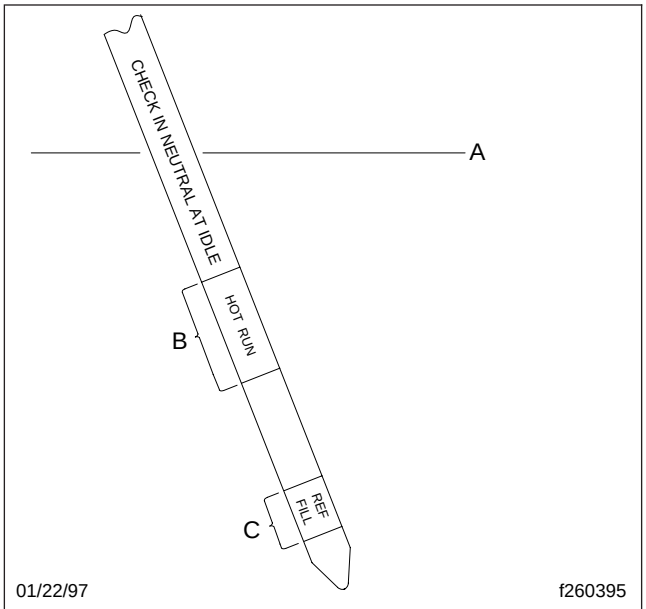

A. Transmission Housing/Oil Pan Split Line
B. Hot Run Band
C. Cold Run Band

Fig. 12, MT Series Dipstick Markings, 5.1-Inch Depth Oil Pan

https://truckmanualshub.com/

Hot Check

1. Park the vehicle on a flat, level surface. Apply the parking brake and chock the tires.
2. Shift the transmission to NEUTRAL.
3. Operate the engine at idle (500–800 rpm) until normal operating temperature is reached. Check that the sump temperature is 160° to 200°F (71° to 93°C). Check that the converter-out temperature is 180° to 220°F (82° to 104°C).
4. With the engine idling, remove the dipstick from the tube and wipe it clean.
5. Insert the dipstick into the tube and remove it.
6. Check the fluid level reading and repeat the check procedure to verify the reading. Safe operating level is within the HOT RUN band on the dipstick. The HOT RUN band is between the HOT FULL and HOT ADD marks.

   If the fluid level is not within the HOT RUN band, add or drain fluid as needed to bring the fluid level within the HOT RUN band. See **Fig. 11** for the AT and MD Series, and **Fig. 12** for the MT Series.

https://truckmanualshub.com/

Index, Alphabetical

Title of Maintenance Operation (MOP)	MOP Number
Fifth Wheel Inspection	31–02
Fifth Wheel Lubrication	31–03
Frame Fastener Torque Check	31–01

https://truckmanualshub.com/

31–01 Frame Fastener Torque Check

Because of "bedding in" (or seating), the frame fasteners must be torqued at the recommended intervals. These intervals apply to new vehicles, and to frame fasteners that have been removed and installed.

NOTE: For off-highway operations, retorque the frame fasteners the first 1000 miles (1600 km), then periodically, depending on the operating conditions.

CAUTION

Do not operate the vehicle with the frame fasteners improperly tightened. Continued vehicle operation with insufficiently tightened fasteners could result in bracket or frame damage.

Typical frame fastener applications include front frame brackets, suspension brackets, fuel tank, exhaust and engine supports, and frame crossmembers and gussets.

See **Group 00** of this manual for additional information on fasteners and torque values.

31–02 Fifth Wheel Inspection

WARNING

All fifth wheel maintenance, adjustment, and rebuilding must be done only by a qualified mechanic. Improper or incomplete procedures could result in possible disengagement of the trailer from the tractor, which could result in personal injury or property damage.

Fontaine

1. Disconnect the tractor from the trailer. For instructions, see **Chapter 11** of the *Cargo Driver's Manual*.
2. Thoroughly steam clean the fifth wheel.
3. Look for cracks in the fifth wheel assembly, mounting brackets, and mounting parts.
4. Check for loose nuts or bolts on the fifth wheel and on the mounting.
5. Check that all springs are securely fastened and not deformed.

WARNING

Do not disassemble the fifth wheel to inspect the springs. The springs are under extreme pressure and could eject, which could cause serious personal injury.

6. Check wedge adjustment.
   - 6.1 Open the kingpin lock, and vertically insert a 2-inch (51-mm) diameter shaft.
   - 6.2 Release the lock by tripping the release latch at the bottom of the throat.
   - 6.3 Adjust the wedge stop at the end of the wedge to approximately 1/4-inch (6-mm) clearance.
7. If you observe any problems doing the previous steps, correct them immediately. For instructions, see **Group 31** of the *Cargo Workshop Manual*.

WARNING

Wear safety goggles during removal, installation, and rebuilding. Failure to do so can result in personal injury, due to parts ejecting under spring compression.

8. Replace cracked, worn, or damaged parts with new parts. Replace all loose mounting bolts with 5/8–11 SAE grade 8 bolts, grade C locknuts, and hardened washers. *Do not* re-use bolts, nuts, and washers on fifth wheel mountings.

Holland

1. Disconnect the tractor from the trailer. For instructions, see **Chapter 11** in the *Cargo Driver's Manual*.
2. Thoroughly steam clean the fifth wheel.
3. Check for loose nuts or broken bolts on the fifth wheel assembly.
4. Inspect for cracks or wear on the mounting bolts.
5. Inspect for improper locking action and for cracks or wear on the jaw locking mechanism.
6. Inspect for gouges or wear on the fifth wheel top plate.

https://truckmanualshub.com/

7. Inspect for fatigue or cracked welds.
8. If you observe any problems doing the previous steps, correct them immediately. For instructions, see **Group 31** of the *Cargo Workshop Manual*.

⚠ WARNING

Wear safety goggles during removal, installation, and rebuilding. Failure to do so can result in personal injury, due to parts ejecting under spring compression.

9. Replace cracked, worn, or damaged parts with new parts. Replace all loose mounting bolts with 5/8–11 SAE grade 8 bolts, grade C locknuts, and hardened washers. *Do not* re-use bolts, nuts, and washers on fifth wheel mountings.

31–03 Fifth Wheel Lubrication

Fontaine

Oil all moving parts on the fifth wheel and grease the top plate and the two zerk fittings for the bracket bearing area.

Holland

Lubricate all moving parts with oil or a light grease. Lubricate the fifth wheel top plate with a waterproof or multipurpose chassis grease.

https://truckmanualshub.com/

Index, Alphabetical

Title of Maintenance Operation (MOP)	MOP Number
Suspension Inspection (Including Cab Shocks)	32–01
Suspension Lubrication	32–02
U-Bolt Torque Check	32–03

https://truckmanualshub.com/

32–01 Suspension Inspection (Including Cab Shocks)

Freightliner Spring Front and Rear Suspension Spring Assemblies Inspection

Inspect the front and rear suspension spring assemblies for pitted, cracked, broken, or abnormally bent leaves and extreme rust. If any of these conditions exist, replace the spring assembly. See **Group 32** of the *Cargo Workshop Manual* for instructions.

WARNING

Do not replace individual leaves of a damaged leaf spring assembly; replace the complete spring assembly. Visible damage (cracks or breaks) to one leaf causes hidden damage to other leaves. Replacement of only the visibly damaged part(s) is no assurance that the spring is safe. On front spring assemblies, if cracks or breaks exist in the two top leaves, a loss of vehicle control could occur. Failure to replace a damaged spring assembly could cause an accident resulting in serious personal injury or property damage.

IMPORTANT: On multi-leaf suspensions, closely inspect each component of the leaf spring assemblies, including the brackets, U-bolts, and related parts.

Freightliner Spring Rear Suspension Spring Brackets and Equalizer Brackets Inspection

Inspect the forward and rear spring brackets, equalizer brackets, and the wear pads, for wear, cracks, and other damage. If any of these conditions exist, replace the damaged bracket(s) and wear pad(s). See **Group 32** of the *Cargo Workshop Manual* for instructions.

WARNING

Failure to replace the forward spring brackets, equalizer brackets, or rear spring brackets if they are worn, cracked, or otherwise damaged could result in progressive damage to, and eventual breakage of, the bracket. This could cause a loss of vehicle control, resulting in injury or property damage.

Freightliner Spring Shock Absorber Check

Make sure that the shock absorber brackets are tight, and that the shock absorber is not striking or rubbing on the frame or some other part of the chassis. Check the rubber mounting bushings and replace if worn. Inspect the shock absorber for oil leakage.

If the shock absorber is worn or damaged, replace it with a new one.

Freightliner AirLiner Component Clearance Check

Check that the air line support brackets are positioned so the air lines do not rub against anything. Reposition any configurations that could contact and result in friction and wear. There must be at least 1 inch (25 mm) clearance around the rubber air spring when inflated. If the clearance is less than 1 inch (25 mm), relocate the obstructing parts.

CAUTION

Failure to relocate obstructing parts could result in damage to the air spring.

Freightliner AirLiner Component Inspection and Operation Check

WARNING

Inspect the components and check their operation as described below. Failure to perform these inspections and checks could result in separation of worn suspension components and loss of vehicle control, possibly causing personal injury and property damage.

1. Chock the front tires. Raise the rear of the vehicle so the tires just clear the ground and the suspension is fully extended. Place safety stands under the vehicle frame.
2. Squeeze all air springs to check for complete deflation. If any air springs remain partially or

https://truckmanualshub.com/

fully inflated, see **Group 32** of the *Cargo Workshop Manual*.

3. Inspect each air spring for wear at its connection to its pedestal. Replace any worn air springs; for instructions, see **Group 32** of the *Cargo Workshop Manual*.
4. Check the axle connection welds (beam-seat to equalizing-beam) and axle-adapter to axle for cracks. If welds are cracked, grind them out and reweld the parts.
5. Move the axle up and down while checking for signs of looseness due to worn parts at the front pivot connections. Replace any worn parts by following the procedures in **Group 32** of the *Cargo Workshop Manual*.
6. Inspect the shock absorbers for oil leaks and worn rubber bushings. Replace the shock absorbers and/or rubber bushings if wear or damage is noted. For instructions, see **Group 32** of the *Cargo Workshop Manual*.
7. Remove the safety stands and lower the rear of the vehicle to the ground. Run the engine until air pressure of at least 100 psi (689 kPa) is maintained throughout the system.
8. Check that all air springs are inflated. If the air springs do not inflate, see **Group 32** of the *Cargo Workshop Manual* for possible causes and corrections.

Freightliner AirLiner Control Rod Check

1. Without disconnecting the control rods, attempt to move (by hand) each of the control rod ends up, down, in, and out. If there is any movement, examine the control rods for wear or damage. Replace if necessary.
2. Inspect the rubber bushings for cracks or cuts.
3. Check for any shifting of the barpin.
4. Check for cracks in the metal components and welds.

Cab Mount Shock Absorber Check

Make sure that the shock absorber brackets are tight, and that the shock absorber is not striking or rubbing on the frame or some other part of the chassis. Check the rubber mounting bushings and replace if worn. Inspect the shock absorber for oil leakage.

If the shock absorber is worn or damaged, replace it with a new one.

32–02 Suspension Lubrication

Freightliner Spring Front Suspension

Wipe all dirt from the grease fittings at the forward spring pin and the spring shackle pins; then apply multipurpose chassis grease with a pressure gun until the old grease is forced out.

Freightliner Spring Rear Suspension

Lubricate the spring pin by applying multipurpose chassis grease at the grease fitting. See **Fig. 1**. Lubricate with a grease gun until grease appears at the base of the fitting.

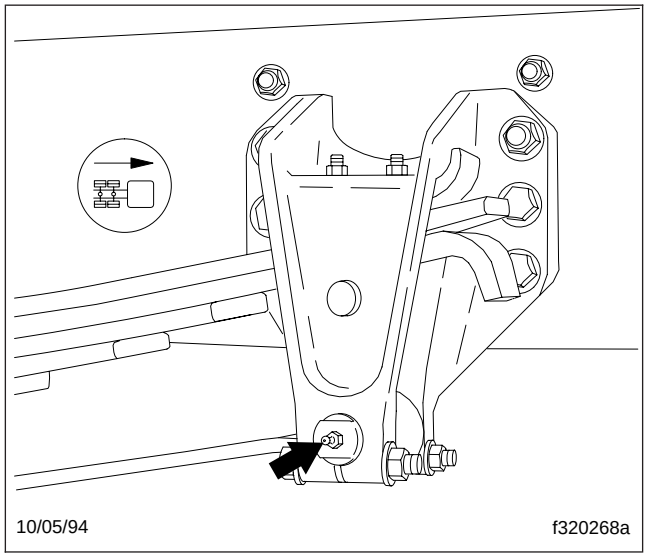

Fig. 1, Forward Spring Bracket Spring Pin Grease Fitting

Hendrickson Equalizer Beam End Bushings and Rubber Center Bushings

No lubrication is required for the equalizer beam end bushings or equalizer beam rubber center bushings.

https://truckmanualshub.com/

32–03 U-Bolt Torque Check

Check the U-bolt torque of both the front and rear axles (where applicable).

CAUTION

Failure to retorque the U-bolt nuts could result in spring breakage and abnormal tire wear.

In a diagonal pattern, tighten the U-bolt nuts:

- 5/8–18, 205 lbf·ft (278 N·m);
- 3/4–16, 300 lbf·ft (407 N·m);
- 7/8–14, 460 lbf·ft (624 N·m).

https://truckmanualshub.com/

Index, Alphabetical

Title of Maintenance Operation (MOP)	MOP Number
All-Axle Alignment Checking	33–04
Knuckle Pin Lubrication	33–01
Tie-Rod End Inspection	33–02
Tie-Rod End Lubrication	33–03

https://truckmanualshub.com/

33–01 Knuckle Pin Lubrication

Hold a pressure gun on each fitting until fresh grease appears. See **Fig. 1**. This will ensure that all the old contaminated grease has been forced out. It is not necessary to exceed 4000 psi (27 560 kPa). The best distribution of new lubricant and the best purging of old lubricant occurs when about 4000 psi (27 560 kPa) pressure is applied at the grease gun nozzle. Using a 40 to 1 booster, the air should be limited to 100 psi (689 kPa); using a 50 to 1 booster, the air should be limited to 80 psi (551 kPa). Higher or lower pressures are not recommended.

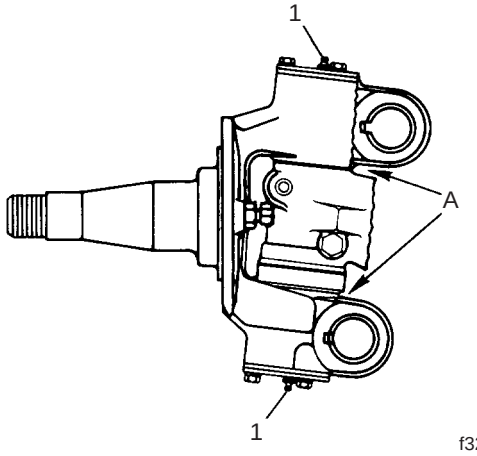

A. Pump lubricant into each grease fitting until fresh grease comes out here.
1. Grease Fitting

Fig. 1, Meritor Front Axle

When lubricating knuckle pin bushings for initial maintenance, raise the front axle until the front tires are off the ground. Wipe the lube fittings clean, and slowly feed multipurpose chassis grease (NLGI grade 1 or 2) into each bushing area while turning the wheels from extreme right to left and back again (lock to lock). This will eliminate small air pockets and improve grease distribution.

Lower the tires to the ground, and regrease both top and bottom bushings until new grease is seen at the seal on the bushing opposite the fittings. The grease seal will accept the grease pressure without damaging the seal, and is designed to have grease pumped out through it during lubrication. Even if grease leaks out around the top or bottom plate gasket, continue pumping until new grease is seen at the seal on the bushing opposite the grease fitting.

When lubricating knuckle pin bushings at M1 through M5, do not raise the front axle. Wipe the lube fittings clean, and apply multipurpose chassis grease until new grease is seen at the grease seal on the bushing opposite the fittings. The grease seal will accept the grease pressure without damaging the seal, and is designed to have grease pumped out through it during lubrication. Even if grease leaks out around the top or bottom plate gasket, continue pumping until new grease is seen at the seal on the bushing opposite the grease fitting.

33–02 Tie-Rod End Inspection

1. Shake the cross-tube. Movement or looseness between the tapered shaft of the ball and the cross-tube socket members means that the tie-rod end assembly must be replaced.
2. The threaded portion of the tie-rod end assembly must be inserted all the way into the cross-tube split, for adequate clamping. See **Fig. 2**. Replace the parts if this cannot be done. For instructions, see the axle manufacturer's service manual.
3. Check the tie-rod end nut and clamp nut torques. Tighten the tie-rod end nut 100 lbf·ft (136 N·m), and tighten the clamp nut 40 to 55 lbf·ft (54 to 75 N·m).

33–03 Tie-Rod End Lubrication

Wipe the tie-rod end grease fittings clean, then pump multipurpose chassis grease (NLGI grade 1 or 2) to the tie-rod ends until all used grease is forced out and new grease appears at the ball stud neck.

33–04 All-Axle Alignment Checking

Drive Axle Alignment Checking

Check the axle alignment, parallelism, and thrust angle measurements for the rear drive axles. Use the applicable procedure and specifications in **Group 35** of the *Cargo Workshop Manual*.

https://truckmanualshub.com/

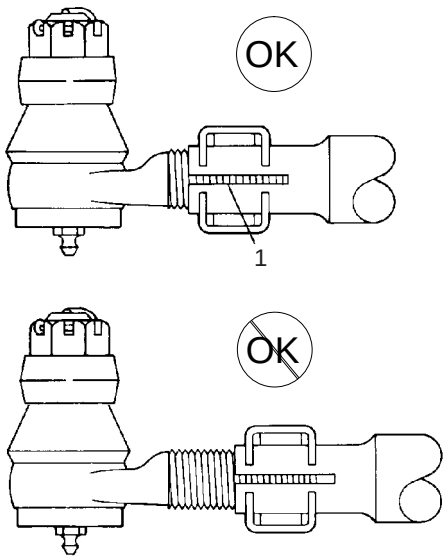

10/20/93 f320033a

NOTE: Pinch bolt not shown to provide clarity.

1. Cross-Tube Split

Fig. 2, Tie-Rod End Adjustment

Front Axle Toe-in Checking

For vehicle alignment to be accurate, the shop floor must be level in every direction. The turn plates for the front wheels must rotate freely without friction, and the alignment equipment must be calibrated every three months by a qualified technician from the equipment manufacturer. Freightliner dealers must have proof of this calibration history.

1. Apply the parking brakes and chock the rear tires.
2. Raise the front of the vehicle until the tires clear the ground. Check that the safety stands will support the combined weight of the cab, axle, and frame. Place safety stands under the axle.
3. Using spray paint or a piece of chalk, mark the entire center rib of each front tire.
4. Place a scribe or pointed instrument against the marked center rib of each tire, and turn the tires. The scribe must be held firmly in place so that a single straight line is scribed all the way around each front tire.
5. Place a turn-plate or turntable under both front tires. Raise the front of the vehicle, remove the safety stands from under the axle, then lower the vehicle. Remove the lock-pins from the gauges; make sure the tires are exactly straight ahead.

NOTE: If turn-plates or turntables are not available, lower the vehicle. Remove the chocks from the rear tires and release the parking brakes. Move the vehicle backward and then forward about six feet (two meters).

6. Place a trammel bar at the rear of the front tires; locate the trammel pointers at spindle height, and adjust the pointers to line up with the scribe lines on the center ribs of the front tires. See **Fig. 3**. Lock in place. Check that the scale is set on zero.

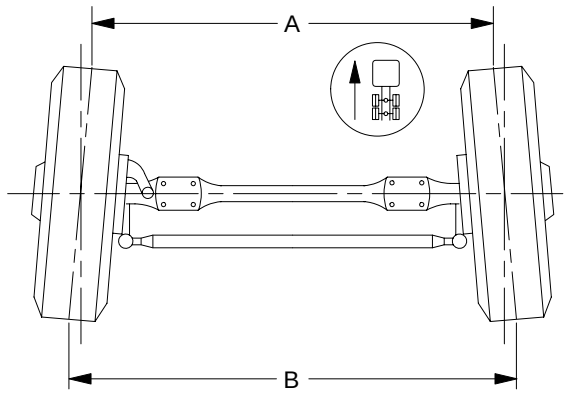

08/29/94 f330082a

NOTE: B minus A equals toe-in.

Fig. 3, Wheel Toe-In (Overhead View)

7. Move the trammel bar to the front of the tires (**Fig. 4**), and adjust the scale end so that the pointers line up with the scribe lines. See **Fig. 5**.
8. Read the toe-in from the scale, and compare it to the toe-in specification in **Group 33** of the *Cargo Workshop Manual*. If corrections are needed, see **Group 33** of the *Cargo Workshop Manual* for instructions on adjusting the toe-in.

https://truckmanualshub.com/

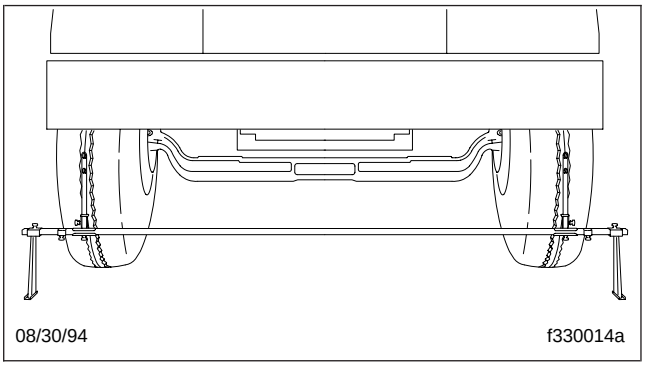

Fig. 4, Trammel Bar Positioning

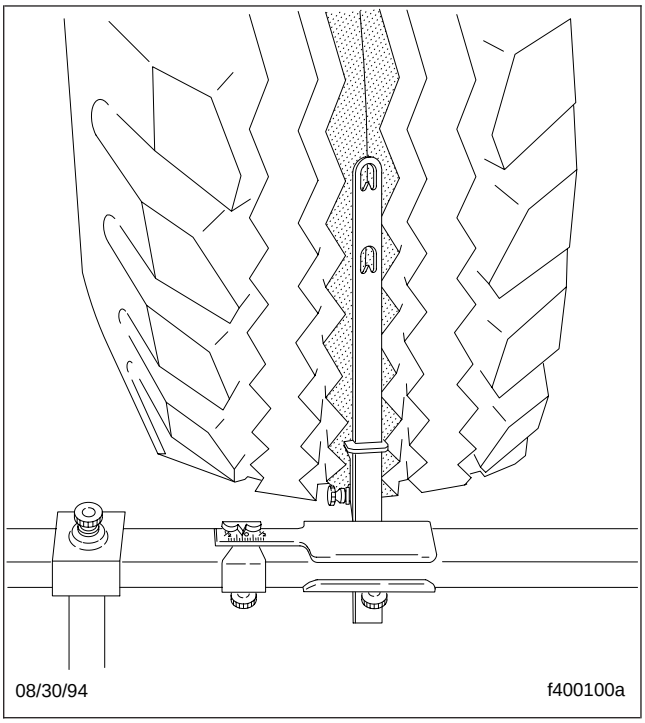

Fig. 5, Setting the Trammel Bar Pointers

https://truckmanualshub.com/

Index, Alphabetical

Title of Maintenance Operation (MOP)	MOP Number
Axle Breather Check	35–02
Axle Lubricant Change and Magnetic Plug Clean	35–03
Axle Lubricant Level Check	35–01

https://truckmanualshub.com/

35–01 Axle Lubricant Level Check

CAUTION

Failure to keep the rear axle filled to the proper level with the recommended lubricant can result in rear axle damage.

1. Clean the oil fill hole plug, located in the carrier or the side of the axle housing, and the area surrounding it. Remove the plug.

NOTE: Some Meritor axles have a small tapped and plugged hole located near and below the housing oil fill hole. This smaller hole is for the lubricant temperature sensor only, and must not be used as a fill or level hole.

2. With the vehicle on level ground, lubricant must be level with the bottom of the oil fill hole.

   If low, add lubricant. See **Table 1** for approved axle lubricants and see **Table 2** for axle capacities.

3. Install the fill hole plug, and tighten it 35 lbf·ft (47 N·m).

Meritor Drive Axle Recommended Lubricant			
Recommended Lubricant Type	**Ambient Temperature**	**Lubricant SAE Viscosity Grade**	**Meritor Specification**
Hypoid Gear Oil API Service Classification GL-5	+10°F (–12.2°C) and up *	85W–140	0-76-A
	–15°F (–26.1°C) and up *	80W–140	0-76-B
	–15°F (–26.1°C) and up *	80W–90	0-76-D
	–40°F (–40°C) and up *	75W–90	0-76-E
	–40°F (–40°C) to +35°F (+2°C)	75W	0-76-J
	–40°F (–40°C) and up *	75W–140	0-76-L
Synthetic Gear Oil	–40°F (–40°C) and up *	75W–90	0-76-N
	–40°F (–40°C) and up *	75W–140	0-76-M

* There is no upper limit on these ambient temperatures, but axle sump temperature must never exceed 250°F (121°C).

Table 1, Meritor Drive Axle Recommended Lubricant

Meritor Drive Axle Lubricant Capacities, Single Axles					
Axle Type	**Axle Model**	**Capacity * pints (liters)**	**Axle Type**	**Axle Model**	**Capacity * pints (liters)**
Single †	RS-17-145	33.6 (15.9)	Single †	RS-21-230	39 (18.5)
	RS-17-220	31 (14.7)		RS-23-160	42 (19.9)
	RS-19-145	34.4 (16.3)		RS-23-161	37.2 (17.6)
	RS-19-220	31 (14.7)		RS-23-186	45 (21.3)
	RS-21-145	32 (15.1)		RS-23-240	
	RS-21-160	39.5 (18.7)		RS-26-185	

* Quantities listed are approximate and include 1 pint (0.5 liter) for each wheel end and with the drive pinion at 3 degrees.

† Single drive axles equipped with traction equalizers may require a "friction modifier" to correct a slip-stick condition. Meritor's experience shows that the following additives perform adequately: Add Elco No. 2 Friction Modifier (1 ounce [30 mL] of additive for each 1 pint [0.5 liter] of lube capacity) or Lubrizol No. 797 or 762 (one ounce [30 mL] of additive for each 1 pint [0.5 liter] of lube capacity).

Table 2, Meritor Drive Axle Lubricant Capacities, Single Axles

https://truckmanualshub.com/

35–02 Axle Breather Check

The axle housing breather must remain clean. Whenever the axle lubricant level is checked, check that the axle breather is open. Check more often under poor operating conditions. If the breather is plugged, clean or replace it as needed.

35–03 Axle Lubricant Change and Magnetic Plug Clean

A regular schedule for changing the axle lubricant in a particular vehicle and operation can be accurately determined by analyzing oil samples taken from the axle at specified intervals or mileages. Lubricant suppliers frequently make their laboratory facilities available for determining the useful life of their product under actual service conditions. The final schedule that is recommended may, for economic reasons, be correlated with lubricant changes that are governed by climatic conditions and magnetic plug maintenance. Change lubricant type and viscosity as climatic temperatures demand, regardless of vehicle mileage or established change schedule.

The normal operating temperature of compounded lubricants during the summer season is about 160° to 220°F (71° to 104°C). The chemicals and additives that give these lubricants increased load-carrying capacity, oxidize faster at temperatures above 220°F (104°C), contributing to more rapid lubricant deterioration. For this reason, lubricants of this type, that operate continuously at high temperatures, must be changed more frequently.

CAUTION

Failure to change the axle lubricant at more frequent intervals, when adverse operating conditions require, could result in axle damage.

Axle Drain and Flush

1. Remove the plug at the bottom of the housing and drain the lubricant while the unit is warm. Allow enough time for all the old lubricant to drain completely.
2. Flush the unit with clean flushing oil, then drain it completely.

IMPORTANT: Do not flush axles with solvent, such as kerosene.

3. Clean the drain plugs. For magnetic drain plugs, a piece of key stock or any other convenient steel slug may be used to short the two magnetic poles and divert the magnetic field.

NOTE: Meritor recommends using magnetic plugs with elements having a minimum pickup capacity of 2 pounds (1 kg) of low-carbon steel, in plate or bar form. Magnets will rapidly lose effectiveness as collected material bridges the gap between the two poles. Clean or change the plugs before this occurs. It may be necessary to clean or change the plugs one or more times between lubrication change intervals.

4. After cleaning the drain plugs, install and tighten them 35 lbf·ft (47 N·m).

Axle Fill

1. With the vehicle on a level surface, fill the axle housings to the bottom of the oil fill hole (in the carrier or housing) with lubricant. See **Table 1** for approved axle lubricants and see **Table 2** for axle capacities.

NOTE: Meritor axles have a small tapped and plugged hole located near and below the housing oil fill hole. This smaller hole is for the lubricant temperature sensor only, and must not be used as a fill or level hole.

2. Install the fill hole plug, and tighten it 35 lbf·ft (47 N·m).
3. After filling the carrier and housing assembly with lubricant, drive the vehicle, unloaded, for 1 or 2 miles (2 or 3 kilometers) at speeds not to exceed 25 mph (40 km/h), to thoroughly circulate the lubricant throughout the assembly.

https://truckmanualshub.com/

Index, Alphabetical

Title of Maintenance Operation (MOP) **MOP Number**

Wheel Nut and Rim Nut Check 40–01

https://truckmanualshub.com/

40–01 Wheel Nut and Rim Nut Check

IMPORTANT: In addition to the maintenance interval in this manual, check the wheel nut torque the first 50 to 100 miles (80 to 160 km) of operation after a wheel has been removed and installed.

When checking wheel nuts on a dual disc assembly, remove one outer nut at a time, tighten the inner nut, then reinstall the outer nut. Repeat this procedure for all of the inner wheel nuts in the sequence shown in **Fig. 1**, then tighten all of the outer wheel nuts in the same sequence.

CAUTION

Too little wheel nut torque can cause wheel shimmy, resulting in wheel damage, stud breakage, and extreme tire tread wear. Too much wheel nut torque can break studs, damage threads, and crack discs in the stud hole area.

See **Table 1**, **Table 2**, or **Table 3** for wheel nut torque specifications, and see **Fig. 1** for the tightening sequence.

Fastener Torque for 10-Hole Disc Wheel With Inner and Outer Locknuts			
Description	**Nut Size**	**Wheel Manufacturer**	**Torque (dry threads) lbf·ft (N·m)**
Front Wheel Nut	3/4–16, 1-1/8–16	Accuride	450–500 (610–680)
Rear Wheel Inner Nut	3/4–16	Accuride	450–500 (610–680)
Rear Wheel Outer Nut	1-1/8–16	Accuride	450–500 (610–680)
Wheel Stud Retainer Nut	3/4–16	Accuride	175–200 (235–270)

Table 1, Fastener Torque for 10-Hole Disc Wheel With Inner and Outer Locknuts

Fastener Torque for 8-Hole Disc Wheel With Cone Locknuts		
Description	**Nut Size**	**Torque (lubricated threads) lbf·ft (N·m)**
Front and Rear Wheel Nuts	M20	280–310 (380–420)

Table 2, Fastener Torque for 8-Hole Disc Wheel With Cone Locknuts

Spoke-Type Wheel Fastener Torque			
Description	**Size**	**Wheel Manufacturer**	**Torque (dry threads) lbf·ft (N·m)**
Front Wheel Nut, 5- and 6-Spoke	3/4–10	Gunite	200–225 (270–305) *
Rear Wheel Nut, 5- and 6-Spoke With Channel Spacer (**Fig. 2**)	3/4–10	Gunite	200–225 (270–305)
Rear Wheel Nut, 5- and 6-Spoke With Corrugated Channel Spacer (**Fig. 3**)	3/4–10	Gunite	240–260 (325–350)

* On front axles with over 12,000 lbs (5448 kg) capacity, tighten the wheel nuts 240 to 265 lbf·ft (325 to 359 N·m). Gunite part number W-854 nut with a phosphate and oil coating must be used.

Table 3, Spoke-Type Wheel Fastener Torque

https://truckmanualshub.com/

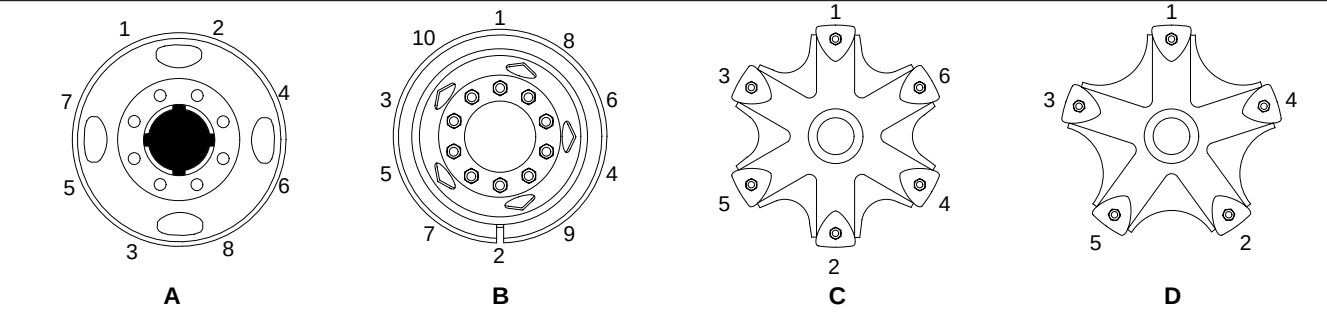

A. 8-Stud Disc Wheel
B. 10-Stud Disc Wheel
C. 6-Spoke Wheel
D. 5-Spoke Wheel

Fig. 1, Wheel Nut and Rim Nut Tightening Sequence

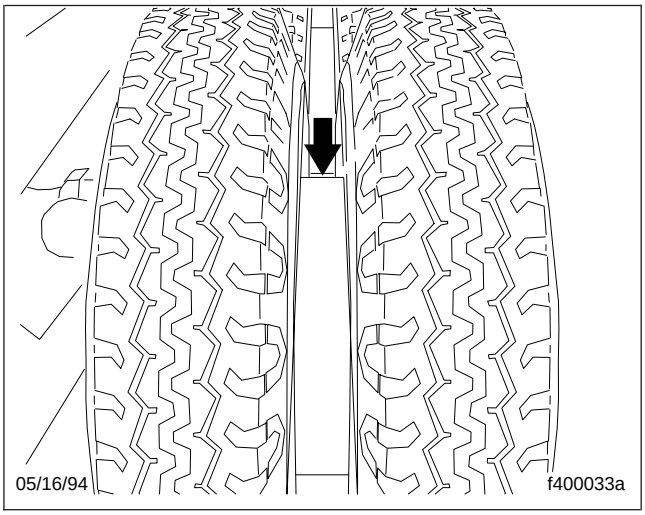

Fig. 2, Non-Corrugated Channel Spacer

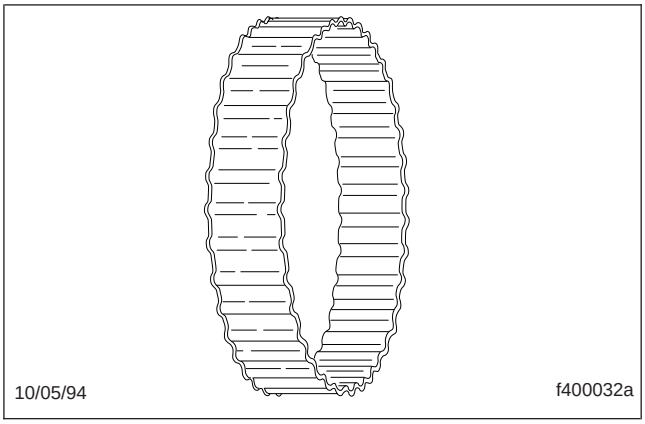

Fig. 3, Corrugated Channel Spacer

https://truckmanualshub.com/

Index, Alphabetical

Title of Maintenance Operation (MOP)	MOP Number
Driveline Inspection	41–01
Driveline Lubrication	41–02

https://truckmanualshub.com/

41–01 Driveline Inspection

Before lubricating the driveline U-joints and slip-joints, make the following checks:

1. Check that the yoke-strap capscrews (**Fig. 1**, Ref. 4) are tightened as follows:
   - Spicer 1590 and 1610: 50 to 60 lbf·ft (68 to 81 N·m)
   - Spicer 1710: 125 to 135 lbf·ft (170 to 183 N·m)

CAUTION

Do not overtighten the yoke-strap capscrews, due to the extreme load occurring at high-speed rotation. A loose or broken capscrew at any point in the driveline weakens the driveline connection, which could eventually result in serious vehicle damage.

2. Check each of the output and input end yokes (**Fig. 1**, Refs. 2 and 11) for cracks and looseness. Replace cracked yokes. If any end yoke can be moved in or out on its shaft, or can be rocked on its shaft, disconnect the driveshaft and U-joint from the end yoke. Check the drive component's shaft seal for leakage or other visible damage that may have been caused by the loose yoke. Replace the seal if needed. Tighten the end-yoke nut to the value in **Table 1**. If the end yoke is still loose after tightening the yoke nut, install a new yoke and yoke nut.

NOTE: If the end-yoke locknut was removed for any reason, install a new one.

3. Check the U-joint assemblies for wear by attempting to move the driveshaft up and down, and from side to side. If movement of the U-joint trunnion in the bearings is greater than 0.006 inch (0.15 mm), replace the U-joint assembly.
4. Check the midship bearing and bracket for looseness and deterioration by attempting to move the driveshaft up and down, and from side to side. If the bearing is loose on its shaft, or rattles, replace it. If the bearing bracket is loose on the frame, or the bearing mount is loose on the bracket, tighten the mounting bolt nuts 91 lbf·ft (123 N·m). Replace the midship bearing assembly if the rubber cushion is worn or oil-soaked.

End-Yoke Nut Torque Specifications		
Description	**Thread Size**	**Torque: lbf·ft (N·m)**
Transmissions		
Eaton/Fuller FS-4205, 5205, 5306, 6305, 6306, and 8206	1-1/4–18	300–350 (405–475)
Fuller RT-6609	1-1/2–18	400–450 (540–610)
Allison AT-545	1/2–20*	100–120 (140–160)
Allison MD Series	2–16	600–800 (815–1085)
Single Axle Input Shaft		
Meritor RS-17-145, RS-19-145, RS-19-220, RS-21-145 and RS-21-230	M32 x 1.5	740–920 (1000–1250)
Meritor RS-23-160	M45 x 1.5	1000–1230 (1355–1670)
Meritor RS-23-240	M39 x 1.5	920–1130 (1250–1530)
Coupling Shaft (Midship Bearings)		
Spicer 1590, 1610, and 1710	1-1/4–18	475–525 (644–712)

* The Allison AT-545 transmission output shaft end-yoke is retained by a 1/2-20 x 1-1/2-inch bolt and a 1-1/16-inch washer. Both the bolt and the washer must be replaced each time they are removed.

Table 1, End-Yoke Nut Torque Specifications

5. Check the slip-joints for spline wear by trying to bend the sleeve-yoke and splined shaft back and forth (**Fig. 2**). If looseness is greater than 0.007 inch (0.18 mm), replace both the sleeve-yoke and the splined shaft.
6. Check the driveshaft tubes for dents, bends, twists, or other damage. If any tube appears to be damaged, remove the driveshaft and check the runout on the tube. If the tube is not straight (and cannot be straightened) within 0.015 inch (0.38 mm) on the slip-joint seal surface of the splined shaft, 0.020 inch (0.51 mm) on the tube 3 inches (76 mm) from the front and rear welds, and 0.025 inch (0.635 mm) at the center of the tube, replace the tube. See **Fig. 3**.

   If the driveshaft tube requires straightening or replacement, balance the repaired driveshaft before installing it. See **Group 41** of the *Cargo Workshop Manual*.

https://truckmanualshub.com/

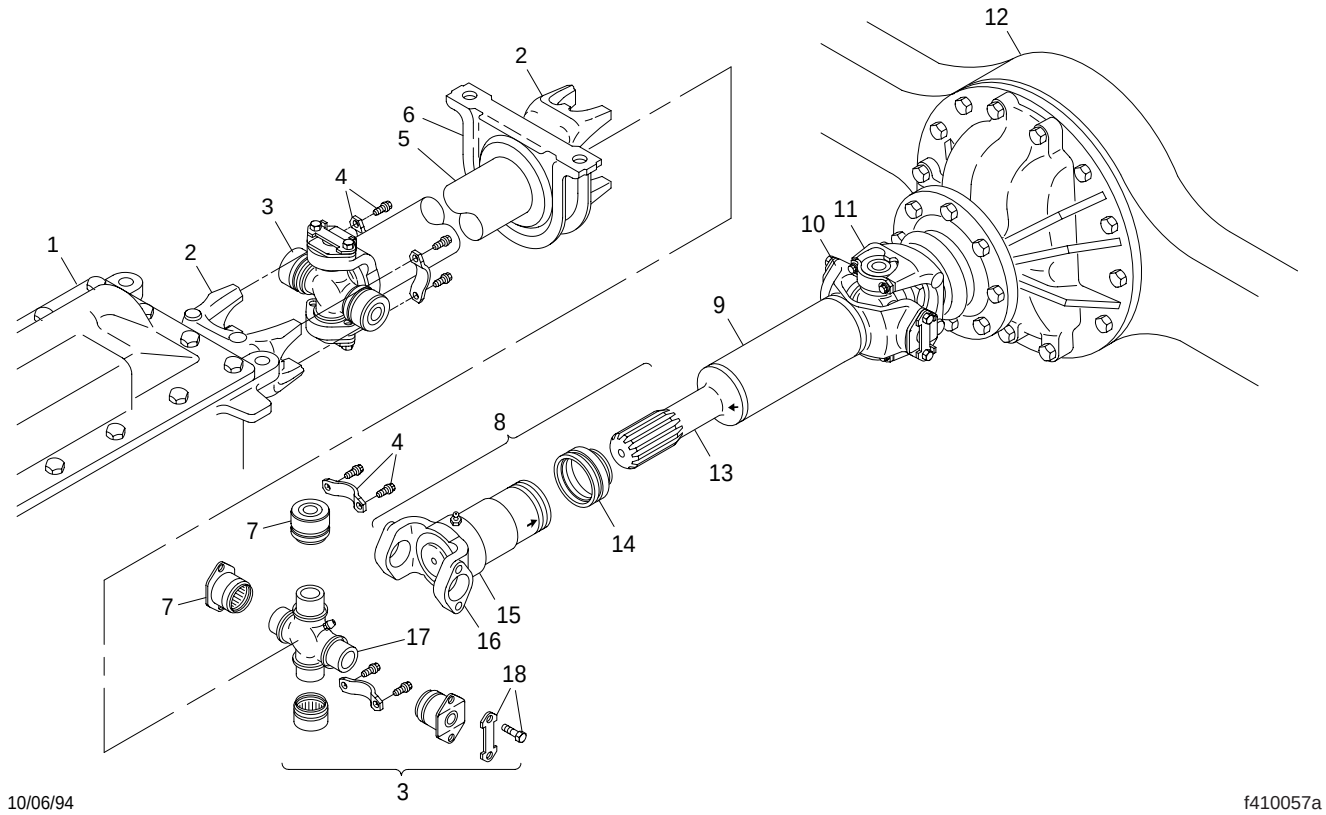

NOTE: Not all fasteners are shown.

1. Transmission
2. Half-Round End Yoke
3. U-Joint Assembly
4. Yoke Strap and Capscrew
5. Coupling Shaft
6. Midship Bearing and Mount
7. Bearing Cup
8. Slip-Joint Assembly
9. Driveshaft Tube
10. Driveshaft Yoke
11. Input Shaft Half-Round End Yoke
12. Rear Axle
13. Splined Shaft
14. Dust Seal
15. Sleeve Yoke
16. Full-Round-Yoke Lug
17. U-Joint Cross
18. Lockplate and Capscrew

Fig. 1, Driveline Assembly With Midship Bearing for Single-Axle Installation

7. Check the driveshaft for missing balance weights, and for debris build-up. Remove any build-up. If any balance weights are missing, remove the driveshaft and have it balanced; see **Group 41** of the *Cargo Workshop Manual*.
8. For driveshafts with slip-joints, check that the yoke plug is not loose or missing. See **Fig. 4**, Ref. 2. Replace the yoke plug if needed. If the yoke plug is missing, the splined shaft may be hitting the yoke plug and knocking it out; check the driveshaft for proper length.

41–02 Driveline Lubrication

U-Joint Lubrication

1. Wipe all old grease and dirt from each U-joint grease fitting. See **Fig. 4**, Ref. 8.
2. Use a hand-type grease gun, or a high-pressure gun with a low-pressure adaptor, to lubricate the U-joints.

NOTE: If a low-pressure adapter is not used with the high-pressure gun, the U-joints may not receive enough lubricant.

https://truckmanualshub.com/

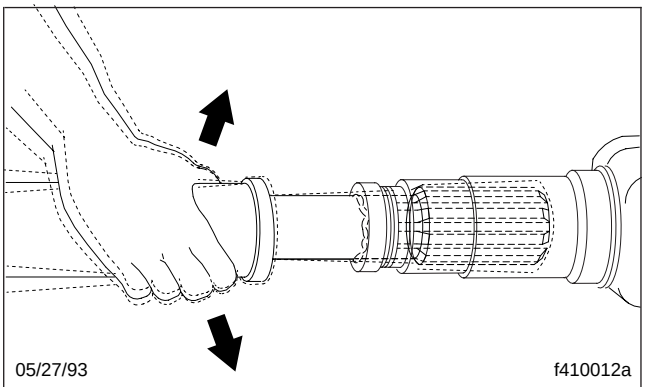

Attempt to bend the sleeve yoke and splined shaft back and forth.

Fig. 2, Slip-Joint Spline Wear Check

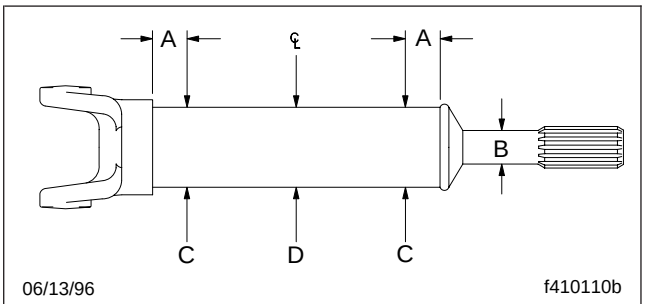

A. Measurement: 3" (76 mm)
B. Measurement: 0.005" (0.127 mm)
C. Measurement: 0.010" (0.254 mm)
D. Measurement: 0.015" (0.381 mm)

Fig. 3, Driveshaft Runout Specifications

3. Using lithium 12 hydroxy stearate grease (NLGI grade 1 or 2, with EP additives), lubricate until new grease can be seen at all four U-joint seals.

IMPORTANT: Fresh lubricant must be seen escaping from *all four* bearing cup seals of each U-joint.

On full-round yokes, if most of the grease being added to a U-joint can be seen escaping from just one of the U-joint seals, bend the tabs of the lockstrap away from the heads of the bearing cup capscrews, then check the torque on the bearing cup capscrews at that seal. Tighten the bearing cup capscrews as follows:

- 5/16–24 capscrews: 24 lbf·ft (32 N·m)
- 3/8–24 capscrews: 37 lbf·ft (50 N·m)

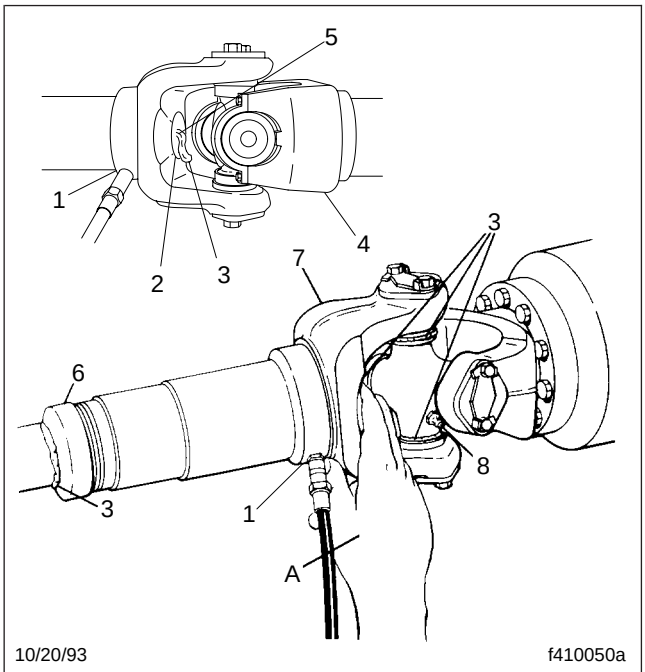

A. After grease appears, cover the pressure-relief hole while continuing to lubricate.
1. Slip-Joint Grease Fitting (with grease gun attached)
2. Yoke Plug
3. Grease
4. Half-Round Yoke
5. Yoke Plug Pressure-Relief Hole
6. Slip-Joint Seal
7. Full-Round Yoke
8. U-Joint Grease Fitting

Fig. 4, Slip-Joint and U-Joint Lubricating

Bend the lockstrap tabs up, against a flat side of each capscrew. If the capscrews were already tight, or all of the U-joint seals still do not purge, remove the bearing cup at that seal, and examine the seal for damage. If the seal is damaged, replace the complete U-joint assembly.

If grease does not appear at one of the seals, use a screwdriver to pry the U-joint trunnion away from the non-purging seal, or tap the driveshaft or yoke with a plastic or rawhide mallet (on the side opposite the dry seal), while continuing to apply gun pressure. If grease still does not appear, bend the tabs of the lockstrap away from the heads of the bearing cup capscrews, then loosen the bearing cup capscrews (at the bearing with the dry seal) to relieve seal

https://truckmanualshub.com/

tension. Lubricate the U-joint until the old grease is purged, then tighten the capscrews to the above specifications, and bend the tabs of the lockstrap against a flat side of each capscrew. If the bearing will not take grease, replace the U-joint assembly; see **Group 41** of the *Cargo Workshop Manual*.

4. Check the old grease. If it appears rusty, gritty, or burned, replace the U-joint assembly. See **Group 41** of the *Cargo Workshop Manual*.
5. Wipe any excess grease from the seals and grease fittings.

Slip-Joint Spline Lubrication

1. Wipe all old grease and dirt from the slip-joint grease fitting. See **Fig. 4**, Ref. 1.
2. Use a hand-type grease gun or a high-pressure gun with a low-pressure adaptor, to lubricate the slip-joint. Using lithium 12 hydroxy stearate grease (NLGI grade 1 or 2, with EP additives), lubricate until fresh grease appears at the pressure-relief hole in the yoke plug. Then cover the relief hole with your finger, while continuing to lubricate until fresh grease appears at the slip-joint seal (**Fig. 4**, Ref. 6). This ensures complete lubrication of the splines.
3. Wipe any excess grease from the pressure-relief hole, slip-joint seal, and grease fitting.

https://truckmanualshub.com/

Index, Alphabetical

Title of Maintenance Operation (MOP)	MOP Number
Air Brake Valve Disassembly, Clean, and Inspection, Bendix E–6, QR–1, and ST–3	42–14
Air Brake Valve Operation Check	42–03
Air Dryer Check, Bendix AD–9	42–11
Air Dryer Desiccant Replacement, Bendix AD–9	42–12
Air Dryer Inspection, Bendix AD–9	42–01
Air Reservoir Automatic Drain Valve Disassembly, Clean, Inspection, and Lubrication, Bendix AD–9	42–13
Automatic Slack Adjuster Check	42–08
Automatic Slack Adjuster Inspection	42–10
Automatic Slack Adjuster Lubrication	42–09
Brake Chamber Inspection (All Models)	42–06
Camshaft Bracket Bushing Lubrication	42–07
Foot Brake Valve Actuator Lubrication	42–02
Quick Release and Flipper Valves Check	42–05
Relay Valve Check	42–04

https://truckmanualshub.com/

42–01 Air Dryer Inspection, Bendix AD–9

1. Check the reservoirs for moisture. A small amount (teaspoon or less) is normal. Larger amounts may mean that the desiccant needs to be replaced. Check the mounting and connecting lines.
2. Tighten the fasteners attaching the air dryer to the vehicle. Use the following torque values:
   - 28 lbf·ft (38 N·m) for SAE grade 5, 3/8–16 fasteners
   - 135 lbf·ft (183 N·m) for SAE grade 5, 5/8–11 fasteners
3. Check all air lines, fittings, and electrical connections for damage, leakage, or looseness.
4. Replace damaged or leaking parts, and tighten loose fittings or electrical connections.

42–02 Foot Brake Valve Actuator Lubrication

1. Clean any dirt, gravel, and other foreign debris from the plunger boot and brake base bracket.
2. Check the brake plunger boot for cracks, holes, or deterioration. Replace if necessary.
3. Lift up the edge of the brake plunger boot and check the plunger for existing lubrication. If the plunger is dry, remove it by removing the cotter pin from the clevis pin and pulling the clevis pin out. Remove the piston rod and boot. Lift out the plunger. Lubricate the plunger and the tip of the piston rod with barium grease part number BW 246671, or Penzoil Adhezoplex EP 2. Install the piston rod, boot, clevis pin, and cotter pin.

   If the plunger has grease on it, lift the edge of the brake plunger boot enough to apply 2 to 4 drops of light oil around the brake plunger. Do not over-oil. Install the plunger boot.
4. Lubricate the clevis pin with light oil.
5. Check for leakage; see **Group 42** of the *Cargo Workshop Manual* for instructions.

42–03 Air Brake Valve Operation Check

Check for proper operation; see **Group 42** of the *Cargo Workshop Manual*.

42–04 Relay Valve Check

Chock the tires. Start the engine and run it long enough to pressurize the air system to at least 80 psi (550 kPa), then turn off the engine.

Repeat as necessary, to maintain 80 psi (550 kPa) pressure during this check.

Clean off road grime from the relay valve, and any debris from the valve exhaust port. Listen for air leakage around the fittings or exhaust port. Tighten the fittings as necessary. Use two wrenches to avoid twisting the tubing.

If the valve fails this check, or is damaged, repair or replace it; see **Group 42** of the *Cargo Workshop Manual* for instructions. Remove the chocks from the tires.

42–05 Quick Release and Flipper Valves Check

Chock the tires. Start the engine and run it long enough to pressurize the air system to at least 80 psi (550 kPa), then turn off the engine.

Repeat as necessary, to maintain 80 psi (550 kPa) pressure during these checks.

Clean off road grime from the valves, and any material from the valves' exhaust ports. Listen for air leakage around the fittings and exhaust ports. Tighten the fittings, as necessary. Use two wrenches to avoid twisting the tubing.

If any valve fails this check, or is damaged, repair or replace it; see **Group 42** of the *Cargo Workshop Manual* for instructions. Remove the chocks from the tires.

https://truckmanualshub.com/

42–06 Brake Chamber Inspection (All Models)

DANGER

Do not loosen or remove the parking brake clamp ring for any purpose at any time. The parking/emergency brake section is not intended to be serviced. Serious injury or death may result from sudden release of the power spring.

Before doing any repairs or adjustments on a service/parking brake chamber, read the applicable warnings and instructions in the applicable brake chamber section in Group 42 of the *Cargo Workshop Manual*.

WARNING

Do not operate the vehicle with the front brakes backed off or disconnected. Backing off or disconnecting the front brakes will not improve vehicle handling and may lead to loss of vehicle control resulting in property damage or personal injury.

NOTE: Vehicles operating under severe or adverse conditions should be checked more frequently. If the brake chamber requires disassembly, see **Group 42** of the *Cargo Workshop Manual* for instructions.

1. With the slack adjuster properly adjusted, check the angle formed by the centerline of the piston rod and slack adjuster. This angle should be greater than 90 degrees in the released position and approach 90 degrees in the applied position. See **Fig. 1**.

   At angles less than 90 degrees, brake chamber force is reduced, which reduces braking efficiency.

2. Check each brake chamber for correct installation.

   2.1 Check each mounting stud for the presence of prevailing torque locknuts and hardened flatwashers. Make sure that the hardened flatwashers are installed between the mounting bracket and the locknuts. Do not install flatwashers touching the service (non-pressure) chamber.

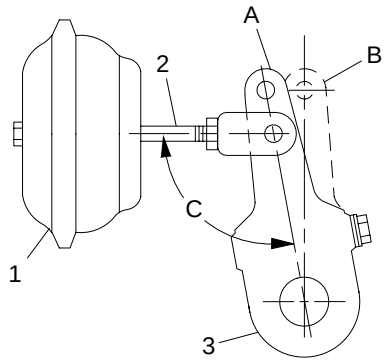

07/27/94 f420009a

A. Brakes Released
B. Brakes Applied
C. Greater than 90 degree angle
1. Brake Chamber
2. Piston Rod
3. Slack Adjuster

Fig. 1, Angle Between Piston Rod and Slack Adjuster

   2.2 If the locknuts are loose, tighten them. For correct torque values, see the applicable brake chamber section in **Group 42** of the *Cargo Workshop Manual*.

3. Observe the piston rod engagement with the clevis. Engagement of at least 7 threads is required; there should be 1 inch (25 mm) clearance from the centerline of the clevis pin hole to the end of the piston rod. See **Fig. 2**. Adjust if needed.

4. Check the tightness of the piston rod nut. Tighten if needed.

5. See if the chamber piston rod is in line with the slack adjuster. Misalignment can cause the piston rod to rub on the non-pressure chamber and cause a dragging brake. Reposition the brake chamber on the mounting bracket, if necessary.

6. Inspect the condition of the hose(s) to the brake chamber. Check carefully for chafing, restrictions such as kinking or bending, and make sure the hoses are properly supported. Replace a damaged hose with the same size hose. With the service brakes applied, check for leaks at the hose-to-chamber connections. Any leaks are probably caused by loose connections or by a damaged hose fitting. Eliminate all leaks.

   On chambers equipped with an external breather tube, make sure that the flexible elbows are in place and that the connector tube is inserted into each elbow 1/2 inch (13 mm).

https://truckmanualshub.com/

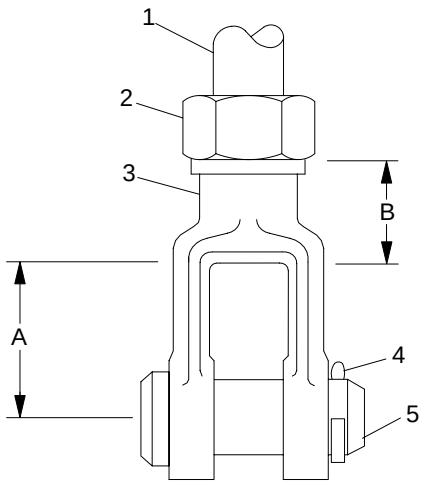

08/20/93 f420225a

A. Minimum of 1 inch (25 mm) clearance between centerline of clevis pin hole and piston rod end.
B. Minimum of 7 threads engagement.

1. Piston Rod
2. Piston Rod Nut
3. Clevis
4. Cotter Pin
5. Clevis Pin

Fig. 2, Piston Rod Engagement With the Clevis

DANGER

Read and follow all applicable warnings and instructions in Group 42 of the *Cargo Workshop Manual* for repairs to the service/parking brake chambers. These chambers contain a power spring, which if released, could cause serious injury or death.

7. Inspect the exterior surfaces of the chamber for damage. Make sure the breather holes in the non-pressure section(s) are open and free of debris. Using the instructions in **Group 42** of the *Cargo Workshop Manual*, replace any damaged parts.
8. On parking brake chambers equipped with integral release bolts, lubricate the bolt with thread anti-seize compound. Check the tightness of the bolt. For torque values, see the applicable brake chamber section in **Group 42** of the *Cargo Workshop Manual*.

CAUTION

If the external breather tube is missing or incorrectly installed, road dirt and debris can adversely affect the operation of the brake chamber. Once inside the chamber, dirt and debris cause the internal parts to deteriorate and shorten their lives.

9. On brake chambers equipped with an external breather tube, make sure the flexible elbows are in place and the connector tube is inserted into each elbow 1/2 inch (13 mm).
10. On all parking brake installations, check for presence of an end cover cap or dust plug and make sure the cap or plug is securely snapped into place.

Service Brake Operation and Leakage Check

DANGER

Do not loosen or remove the parking brake clamp ring for any purpose at any time. The parking/emergency brake section is not intended to be serviced. Serious injury or death may result from sudden release of the power spring.

Before doing any repairs or adjustments on a service/parking brake chamber, read the applicable warnings and instructions in the applicable brake chamber section in Group 42 of the *Cargo Workshop Manual*.

1. Apply the service brakes and check that the piston rods move out promptly, without binding.
2. Release the service brakes and check that the piston rods return to the released positions promptly, without binding.

DANGER

Read and follow all applicable warnings and instructions in Group 42 of the *Cargo Workshop Manual* for repairs to the service/parking brake chambers. These chambers contain a power spring, which if released, could cause serious injury or death.

3. Check the service brake chambers for leakage.

https://truckmanualshub.com/

3.1 Apply the service brakes and hold them on full line pressure of at least 80 psi (550 kPa).

CAUTION

Do not overtighten the clamp ring. This can distort the flange sealing surface, or the clamp ring itself.

3.2 Using soapy water, coat the service chamber clamp ring. Leakage is excessive if it produces a 1-inch (25-mm) bubble within 5 seconds.

If leakage is detected, tighten the clamp ring; but do not exceed the maximum torque limits in **Group 42** of the *Cargo Workshop Manual*.

3.3 If leakage persists, use the instructions in **Group 42** of the *Cargo Workshop Manual* to replace the service brake diaphragm.

3.4 Using soapy water, coat the area around the piston-rod bore. No leakage is permitted. If there is leakage, use the instructions in the applicable brake chamber section in **Group 42** of the *Cargo Workshop Manual* and replace the service brake diaphragm.

Parking Brake Operation and Leakage Check

DANGER

Do not loosen or remove the parking brake clamp ring for any purpose at any time. The parking/emergency brake section is not intended to be serviced. Serious injury or death may result from sudden release of the power spring.

Before doing any repairs or adjustments on a service/parking brake chamber, read the applicable warnings and instructions in the applicable brake chamber section in Group 42 of the *Cargo Workshop Manual*.

1. Chock the tires.
2. Build the air pressure in the system to at least 100 psi (690 kPa), and shut off the engine.
3. Place the park control valve in the park position. The brake should apply immediately. Then, place the park control valve in the released position. The brake should release immediately.

   If the brakes do not apply or release as required, see the air brake system troubleshooting guide in the applicable brake chamber section in **Group 42** of the *Cargo Workshop Manual* for possible causes and corrections.

WARNING

Do not disconnect the pressurized parking brake hose. If disconnected under pressure, the parking brake hose will whip as air escapes from the line, and the air stream can direct dirt or sludge toward persons in the area, which could result in injury.

4. Check the parking brake chambers for leakage.

   4.1 With the park control valve released, apply soapy water around the parking brake diaphragm clamp ring and at the drain slots and exhaust breather on the body. Disconnect the service brake hose at the service port, and apply soapy water to check for piston O-ring leakage.

DANGER

Read and follow all applicable warnings and instructions in the applicable brake chamber section in Group 42 of the *Cargo Workshop Manual* for repairs to the service/parking brake chambers. These chambers contain a power spring, which if released, could cause serious injury or death.

   4.2 If leakage is detected at either the clamp ring or the drain slots, replace the parking brake section. Slight leakage is permitted at the service port. Any other leakage is not acceptable. Using the instructions in the applicable brake chamber section in **Group 42** of the *Cargo Workshop Manual*, replace the parking brake section (*do not attempt to service the parking brake section*).

5. Connect the air hose to the brake chamber, making sure that the fittings are clean and free of debris. Finger-tighten the nut. Using a wrench, further tighten the nut until you feel resistance. Tighten the nut one-sixth turn more.

https://truckmanualshub.com/

6. Repeat the above steps for each parking brake chamber.
7. Apply the parking brakes. Remove the chocks from the tires.

42–07 Camshaft Bracket Bushing Lubrication

Pump multipurpose chassis grease (NLGI grade 1 or 2) into the chamber bracket until it appears at the slack adjuster end of the bracket. See **Fig. 3.** Use care that no grease enters the drum cavity. If grease leaks out under the camhead, the camshaft grease seal is worn or damaged, or is installed backwards.

NOTE: The use of meter-type fittings, having a maximum 40 psi (275 kPa) pressure relief at shutoff, is recommended.

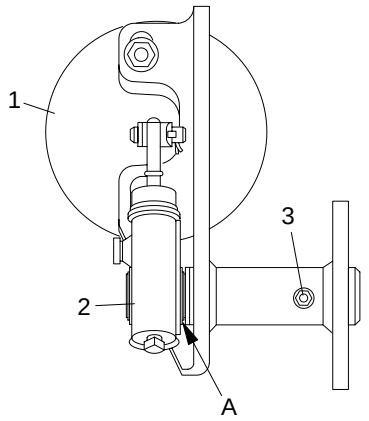

05/28/93 f420011a

A. Grease Exit
1. Brake Chamber
2. Slack Adjuster
3. Grease Fitting

Fig. 3, Camshaft Bracket Bushing Lubrication

42–08 Automatic Slack Adjuster Check

1. Check the boot for cuts, tears, etc. (**Fig. 4**), and replace it if necessary.
2. Check the brake shoe lining wear to determine the proper reline time.
3. Check the free-stroke. If the vehicle has new brakes or brakes with new linings, you must check the free-stroke. If the vehicle is in for routine maintenance and the brakes or linings are not new, go to the next step and check the brake chamber stroke.

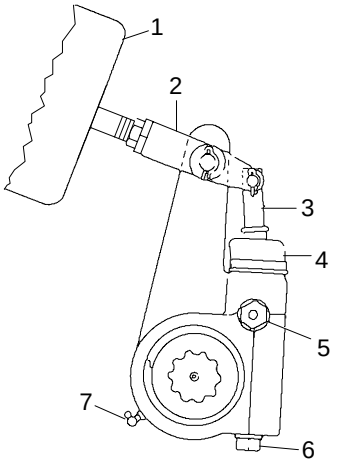

10/20/93 f420012a

1. Brake Chamber
2. Clevis
3. Actuator Rod
4. Boot
5. Pressure-Relief Capscrew, Gasket, Pawl Spring, and Pawl
6. Manual Adjusting Nut
7. Grease Fitting (or lube plug)

Fig. 4, Meritor Automatic Slack Adjuster

IMPORTANT: Do not use installation templates to check the slack adjuster angles. Installation templates are used only when installing a new slack adjuster or reinstalling the existing slack adjuster.

3.1 With the brakes fully released, measure the distance from the bottom of the brake chamber to the center of the large clevis pin. See **Fig. 5**, Ref. A.

3.2 Use a pry bar to move the slack adjuster, applying the brakes. Again, measure the distance from the bottom of the brake chamber to the center of the large clevis pin. See **Fig. 5**, Ref. B.

The difference between the two measurements is the initial free-stroke, and sets the clearance between the linings and the drum. The free-stroke must be:

https://truckmanualshub.com/

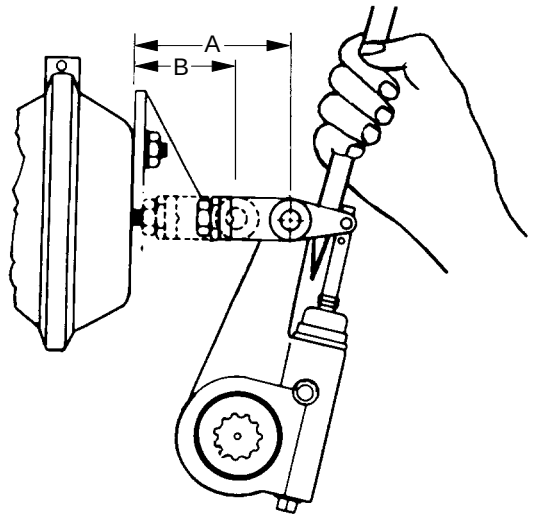

09/27/94 f420180a

NOTE: For a drum brake, A minus B must equal 5/8 to 3/4 inch (16 to 19 mm). For a disc brake, A minus B must equal 7/8 to 1-1/8 inch (22 to 29 mm).

A. With the brakes applied, measure this distance.
B. With the brakes released, measure this distance.

Fig. 5, Measuring Free-Stroke

- drum brakes—5/8 to 3/4 inch (16 to 19 mm);
- disc brakes—7/8 to 1-1/8 inch (22 to 29 mm).

3.3 If the free-stroke is incorrect, remove the pressure-relief capscrew, gasket, pawl spring, and pawl (**Fig. 4**, Ref. 5) from the slack adjuster housing. If equipped with a pull-pawl assembly (**Fig. 6**), carefully insert a screwdriver and raise the relief cap about 1/8 inch (3.2 mm).

⚠ CAUTION

Before turning the adjusting nut, remove the pressure-relief capscrew, gasket, pawl spring, and pawl. If equipped with a pull-pawl assembly, raise the relief cap as instructed. Failure to do so could strip the teeth on the pawl.

3.4 Turn the adjusting nut one-eighth turn, as shown in **Fig. 7**. Measure the stroke again, and adjust until correct.

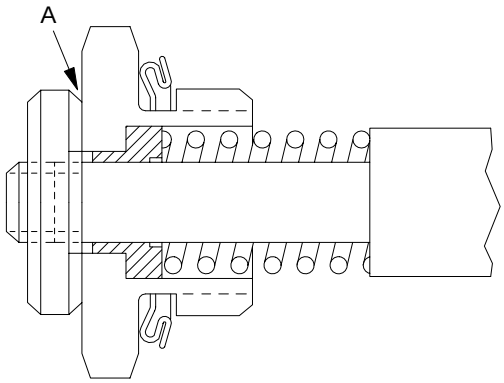

09/27/94 f420693a

A. Insert screwdriver here.

Fig. 6, Pull-Pawl Assembly (sectional view)

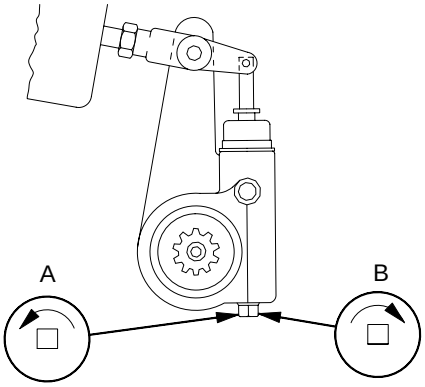

07/05/95 f420181a

A. Shorten stroke. B. Lengthen stroke.

Fig. 7, Brake Stroke Adjusting

⚠ CAUTION

Do not make the adjusted chamber stroke too short. The free-stroke must not be less than the measurements given previously. If the chamber stroke is too short, the linings can drag, which could damage the brake.

3.5 If removed, install the pawl, pawl spring, gasket, and pressure-relief capscrew. Tighten the capscrew 15 to 20 lbf·ft (20 to 27 N·m). Or, remove the screwdriver from the pull-pawl assembly (if equipped).

4. Check for correct brake chamber stroke.

https://truckmanualshub.com/

4.1 With the brakes fully released, measure the distance from the bottom of the brake chamber to the center of the large clevis pin. See **Fig. 5**, Ref. A.

4.2 Build air pressure to 100 psi (690 kPa). Shut down the engine. Fully apply the brakes, then measure the distance from the bottom of the brake chamber to the center of the large clevis pin. See **Fig. 5**, Ref. B. The difference between the measurements is the brake chamber stroke.

4.3 The brake chamber stroke must be less than the measurements shown in **Table 1**. If the brake chamber stroke is incorrect, remove the pressure-relief capscrew, gasket, pawl spring, and pawl (**Fig. 4**, Ref. 5) from the slack adjuster housing. If equipped with a pull-pawl assembly (**Fig. 6**), carefully insert a screwdriver and raise the relief cap about 1/8 inch (3.2 mm).

Maximum Allowable Brake Chamber Stroke With Meritor Automatic Slack Adjusters	
Chamber Size Effective Area, square inches	**Maximum Allowable Stroke* inches (mm) (B minus A)**
12	Less than 1–3/8 (35)
16	Less than 1–3/4 (44)
20	Less than 1–3/4 (44)
24	Less than 1–3/4 (44)
24 Long Stroke	Less than 2 (51)
30	Less than 2 (51)

* Adjust the brakes whenever the applied stroke exceeds the maximum.

Table 1, Maximum Allowable Brake Chamber Stroke With Meritor Automatic Slack Adjusters

CAUTION

Before turning the adjusting nut, remove the pressure-relief capscrew, gasket, pawl spring, and pawl. If equipped with a pull-pawl assembly, raise the relief cap as instructed. Failure to do so could strip the teeth on the pawl.

4.4 Turn the adjusting nut one-eighth turn, as shown in **Fig. 7**. Measure the stroke again, and adjust until correct.

If the stroke varies or remains greater than the specified range, check the brake components, including the camshafts, camshaft bushings, anchor pins, rollers, chamber brackets, clevis, and clevis pins. For instructions, see **Group 42** of the *Cargo Workshop Manual*.

4.5 If removed, install the pawl, pawl spring, gasket, and pressure-relief capscrew. Tighten the capscrew 15 to 20 lbf·ft (20 to 27 N·m). Or, remove the screwdriver from the pull-pawl assembly (if equipped).

42–09 Automatic Slack Adjuster Lubrication

Lubricate the slack adjuster using high-temperature, water-proof grease NLGI grade 1, Texaco Thermotex EP 1, Shell Darina No. 1, Marathon 528 heavy-duty, Sunaplex No. 1 EP, Amdex No. 1 EP, or Philube B No. 1. It should be smooth-textured, corrosion-resistant grease, free of fillers and abrasives.

42–10 Automatic Slack Adjuster Inspection

1. Remove the pressure-relief capscrew, gasket, pawl spring, and pawl. See **Fig. 4**, Ref. 5.
2. Examine the pawl for grease retention and condition. If the grease is in good condition, install the pressure-relief capscrew, gasket, pawl spring, and pawl. Tighten the capscrew 15 to 20 lbf·ft (20 to 27 N·m). Lube the slack adjuster through the grease fitting until lubricant is forced out through the pressure-relief fitting (or pawl slot). If a hollow capscrew is used, install and tighten it 15 to 20 lbf·ft (20 to 27 N·m).

   If the grease is hardened, or the pawl is dry and shows extreme wear, remove the slack adjuster. Disassemble and clean it. Inspect the internal parts. Install new seals and a new boot when assembling. Install and lubricate the slack adjuster. See **Group 42** of the *Cargo Workshop Manual*.

https://truckmanualshub.com/

42–11 Air Dryer Check, Bendix AD–9

During cold-weather operation, check the operation of the end cover heater and thermostat assembly.

1. With the ignition on, check for voltage to the heater and thermostat assembly. Unplug the electrical connector at the air dryer, and place the test leads of a voltmeter on each of the pins of the male connector. If there is no voltage, look for a blown fuse, broken wires, or corrosion in the vehicle wiring harness. Check that a good ground path exists.
2. Check the thermostat and heater operation. Turn off the ignition switch and cool the end cover assembly to below 40°F (4°C). Using an ohmmeter, check the resistance between the electrical pins in the female connector. The resistance should be 1.5 to 3.0 ohms for the 12-volt heater assembly.

   Warm the end cover assembly to over 90°F (32°C) and again check the resistance. It should exceed 1000 ohms. If it does, the thermostat and heater assembly is operating properly. If it does not, replace the purge-valve housing assembly, which includes the heater and thermostat assembly.

42–12 Air Dryer Desiccant Replacement, Bendix AD–9

The desiccant change interval may vary from vehicle to vehicle. Although typical desiccant cartridge life is three years, many will perform adequately for a longer period of time. To take maximum advantage of desiccant life and ensure that replacement occurs only when necessary, disassemble, clean, and inspect the air dryer. Replace the desiccant cartridge. See **Group 42** of the *Cargo Workshop Manual* for instructions.

42–13 Air Reservoir Automatic Drain Valve Disassembly, Clean, Inspection, and Lubrication, Bendix AD–9

Disassemble the drain valve, clean the parts with mineral spirits, and inspect the parts. Replace all rubber parts and any worn or damaged parts; use only genuine Bendix replacement parts or kits. Assemble and install the valve, then check for proper operation and leakage. See **Group 42** of the *Cargo Workshop Manual* for instructions.

42–14 Air Brake Valve Disassembly, Clean, and Inspection, Bendix E–6, QR–1, and ST–3

Disassemble each brake valve, clean the parts with mineral spirits, and inspect the parts. Replace all rubber parts and any worn or damaged parts; use only genuine Bendix replacement parts or kits. Assemble and install the valves, then check for proper operation and leakage. See **Group 42** of the *Cargo Workshop Manual* for instructions.

https://truckmanualshub.com/

Index, Alphabetical

Title of Maintenance Operation (MOP)	MOP Number
Drag Link Lubrication	46–02
Power Steering Reservoir Fluid Level Check	46–03
Power Steering Reservoir Fluid and Filter Change	46–04
Steering Driveline Lubrication	46–01
Steering Gear Lubrication	46–05

https://truckmanualshub.com/

46–01 Steering Driveline Lubrication

Wipe the grease fittings clean. Using a pressure gun, apply a lithium-based grease (NLGI grade 2) sparingly to the universal joints and slip-joint splines.

46–02 Drag Link Lubrication

1. Using a clean rag, wipe the dirt from the grease fitting on the drag link.
2. Using a pressure gun, apply multipurpose chassis grease at the grease fitting until old grease is forced out of the socket.

NOTE: Use multipurpose chassis grease NLGI grade 1 (6% 12-hydroxy lithium stearate grease) or NLGI grade 2 (8% 12-hydroxy lithium stearate grease). The grade 2 chassis grease is preferred.

46–03 Power Steering Reservoir Fluid Level Check

1. Turn the engine OFF.
2. Check the fluid level in the power steering reservoir.
   - Use the COLD markings on the dipstick if the engine is at room temperature, 70°F (20°C).
   - Use the HOT markings on the dipstick if the engine is at normal operating temperatures, 175°F (80°C).
3. The fluid level must show between the ADD and FULL markings on the dipstick. If the fluid level is below the ADD mark, add Motorcraft MERCON® ATF XT-2-WDX or MERCON® equivalent.

NOTE: After any major power steering system or component overhaul, the system should be purged of old fluid and the filter discarded. New fluid and a new filter should be installed.

46–04 Power Steering Reservoir Fluid and Filter Change

1. Using a suction gun, remove fluid from the reservoir through the filler opening or remove the return hose to drain the reservoir
2. Remove the cover from the reservoir by removing the clamp.
3. Take out the spring, filter cap and filter.
4. Thoroughly clean the reservoir with a lint-free cloth.
5. Install the replacement filter, filter cap and spring.
6. Install the gasket, cover, and clamp.
7. Fill the reservoir to the cold mark with Motorcraft MERCON® ATF XT-2-QDX or MERCON® equivalent.

⚠ WARNING

Fill only with approved clean fluid. Do not mix fluid types. Any mixture or any unapproved fluid could lead to seal deterioration and leaks. Fluid leakage could cause loss of power steering assist.

8. Place the front wheels in straight-ahead position and engage the parking brake. Do not turn the steering wheel during the initial fill procedure.
9. Fill the reservoir with fluid and allow the fluid to gravity feed the system. Crack the pressure line fittings at the pump and steering gear. Tighten the fittings when fluid is visible. Keep adding fluid to the reservoir as required.
10. Start the engine and let it idle. Turn the steering wheel from lock to lock until no bubbles are seen in the reservoir. Turn off the engine.
11. When the fluid level in the reservoir no longer goes down, start the engine. Continue to add fluid to the reservoir as required. Do not exceed the FULL mark.
12. Continue the process until the fluid level no longer changes. The fluid level is correct when it is in the full range on the dipstick.

https://truckmanualshub.com/

46–05 Steering Gear Lubrication

1. Wipe off debris from the grease fitting.
2. Using a hand-type grease gun, apply multipurpose chassis grease until the grease starts coming out of the sector shaft dirt and water seal.

https://truckmanualshub.com/

Index, Alphabetical

Title of Maintenance Operation (MOP) **MOP Number**

Fuel Tank Drain and Vent Check. 47–01

https://truckmanualshub.com/

47–01 Fuel Tank Drain and Vent Check

1. Remove the plug or open the drain valve at the bottom of the fuel tank, and allow the tank to drain until all traces of water and sediment have disappeared.
2. Install the plug or close the drain valve.
3. Remove the fuel cap and clean it with solvent. Make sure the fuel cap vent is open.
4. Install the cap.

https://truckmanualshub.com/

Index, Alphabetical

Title of Maintenance Operation (MOP) **MOP Number**

Exhaust System Inspection (Noise Emission Controls). 49–01

https://truckmanualshub.com/

49–01 Exhaust System Inspection (Noise Emission Controls)

NOTE: In addition to the maintenance interval in this manual, inspect the exhaust system if the vehicle has a noticeable increase in noise level at any time. Replace parts that show leakage, wear, or damage.

1. Check the muffler body, muffler outlet stack, muffler shield, and inlet tubes, for leakage, dents, corrosion, or holes in the muffler.
2. Inspect the exhaust pipe for leakage, wear, or damage; replace with new parts, if needed. Do not reuse wide-band clamps. Once a clamp is removed, it must be replaced.
3. Check for leakage at the V-type clamp that attaches the exhaust pipe to the turbocharger exhaust outlet. If leakage exists, tighten the nut on the V-type clamp 50 lbf·in (560 N·cm). Using a plastic hammer, tap around the clamp, then tighten again to 50 lbf·in (560 N·cm). If leakage persists, replace the clamp.
4. Check for leakage at each wide-band exhaust clamp (**Fig. 1**). If leakage exists, tighten the nuts on Torca "Torctite" exhaust clamps 40 to 60 lbf·ft (54 to 81 N·m). If leakage persists, install a new wide-band exhaust clamp. See **Group 49** of the *Cargo Workshop Manual* for procedures.

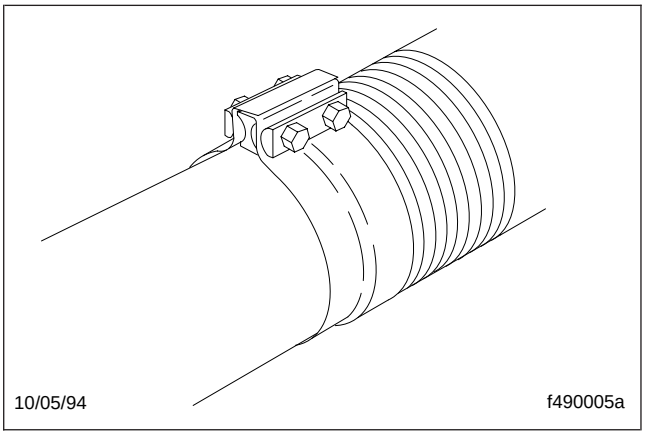

Fig. 1, Wide-Band Exhaust Clamp

https://truckmanualshub.com/

Index, Alphabetical

Title of Maintenance Operation (MOP)	MOP Number
Battery, Battery Box, and Cable Check and Clean	54–02
Electrical System Check	54–01
Ground Cables Check and Clean	54–03

https://truckmanualshub.com/

54–01 Electrical System Check

Cab

1. Uncover the electrical panel on the right side of the dash by removing the fasteners.
2. Check the wiring harness for movement that could strain the electrical connections. Install more clamps on the harness, if needed.
3. Check all the wiring for chafing, kinks, and discolored insulation. Find the cause of any problems, then repair, replace, or reroute the wires, as needed.
4. Check that all the relays are firmly seated in their mounting plates.
5. Check the turn-signal flasher (if so equipped). Make sure that the two male and female connectors are firmly connected. Check that the flasher fuse is firmly seated in its holder.
6. Remove the instrument and control panels and check all the wiring behind them for kinks, chafing, heat damage, and discolored insulation. Reroute, repair, or replace the wires as needed.
7. Check the tightness of all the electrical connections behind the panels. Make sure that all male and female connectors are firmly connected.
8. Check that all the instrument and gauge light bulbs are firmly seated in their sockets.
9. Check the cigarette lighter. Look inside the socket for signs of overheating (discoloration, melting) caused by misuse of the lighter socket.
10. Test the electric horn. If it does not work, check the wiring to it. If the wiring checks out okay, replace the horn.
11. Check connectors. Check the terminals for tightness, damage, and corrosion or dirt.

Chassis

1. Check the main wiring harnesses. Check the wiring insulation for damage from chafing or heat. Also check for kinks. Reroute, repair, or replace the wires as needed.
2. Check all the tie straps for breakage or damage. Replace any broken or cracked tie straps.

CAUTION

Do not use flat-strip aluminum tie straps for holding electrical wiring. The sharp edges on these tie straps may cause breaks in the wire insulation, allowing the aluminum tie strap to make contact with the wire. This could cause a short circuit and damage to the wiring.

3. Check all clamps, plastic connectors, and grommets. Replace any that are damaged. Make sure all grommets are fully seated.
4. Check the magnetic switch terminals and connections for tightness.
5. Check the wires of all sensors mounted on or near the engine. Make sure no wires are closer than 6 inches (15 cm) to hot surfaces. If any are, and they cannot be rerouted, make sure they are protected by heat shields. Check the sensor connectors. Make sure they are tight, clean, and undamaged.
6. Check the temperature sending units on the axles and transmission. Check for damaged wires and loose connectors.
7. Check the connections on the speedometer sensor. Remove the sensor, and check it for moisture. See **Group 54** in the *Cargo Workshop Manual* for removal and installation procedures.
8. Check the connections on the tachometer. Remove the sensor, and check it for moisture. See **Group 54** in the *Cargo Workshop Manual* for removal and installation procedures.

54–02 Battery, Battery Box, and Cable Check and Clean

WARNING

Batteries release a gas mixture that is explosive. Do not smoke when working around batteries. Put out all flames, and remove any source of sparks or intense heat. Make sure the battery compartment has been completely vented before disconnecting or connecting battery cables.

https://truckmanualshub.com/

Battery acid is extremely harmful if splashed in the eyes or on the skin. Always wear safety glasses when working around batteries.

1. Remove any corrosion from the battery box and the top of the battery.

   Use distilled ammonia or a soda solution to neutralize any acid present. Flush off the ammonia or soda solution with clear water.

2. Check the battery cases for cracks. Replace a battery if its case is cracked.

3. Disconnect the battery cables from the battery posts, and check for corrosion.

   If corrosion is found, clean the terminals and posts, using a wire brush and a solution of baking soda and water. Use the solution sparingly. Connect the cables to the batteries, and tighten them 70 lbf·in (800 N·cm). Spray each connection with dielectric red enamel. See **Table 1** for approved brands.

Approved Dielectric Grease and Spray Sealants	
Material	**Approved Brand(s)**
Dielectric Grease	Lubriplate® FLP DS-ES
Dielectric Red Enamel Spray	3-M® 1602
	IVI® Spray-Sealer
	Spray-On® B-6-665

Table 1, Approved Dielectric Grease and Spray Sealants

4. Check the battery-to-starter cables. Look for kinking, corrosion, breaks in the insulation, and heat damage. Check that the cable clamps are not bent, damaged, or stripped of insulation.

IMPORTANT: If a battery cable is damaged, replace the entire cable. Never splice a battery cable.

5. Check the terminals on the battery shut-off switch, if so equipped. Make sure they are clean and tight.

6. Check the mounting fasteners for tightness. The battery box must be kept in good condition to support the batteries securely and to keep them level.

CAUTION

Failure to keep the batteries held securely in place could result in battery damage, such as loose plates or posts.

54–03 Ground Cables Check and Clean

Check that the ground cables are clean, undamaged, and tight. If needed, disconnect them, clean the mating surfaces with a soda solution, then connect them securely. Spray the ground cable connections with dielectric red enamel. See **Table 1** for approved brands.

https://truckmanualshub.com/

Index, Alphabetical

Title of Maintenance Operation (MOP)	MOP Number
Cab Mounting Bolts Torque Check	60–01
Cab Mounts Lubrication	60–02
Cab Roof Vent Lubrication	60–03

https://truckmanualshub.com/

60–01 Cab Mounting Bolts Torque Check

Check the torque of the cab mounting bolts. The shock absorber to bracket mounting nut must be 50 to 65 lbf·ft (68 to 88 N·m). The cab pivot lower bracket nut must be 44 to 59 lbf·ft (60 to 80 N·m).

60–02 Cab Mounts Lubrication

Lubricate the mounts on both sides of the vehicle.

60–03 Cab Roof Vent Lubrication

Spray light oil on the hinges and piston shafts.

https://truckmanualshub.com/

Index, Alphabetical

Title of Maintenance Operation (MOP) **MOP Number**

Weatherstrip, Door Latch, and Door Hinge Lubrication. 72–01

https://truckmanualshub.com/

72–01 Weatherstrip, Door Latch, and Door Hinge Lubrication

Lightly coat the door weatherstrips with a lubricant that is safe (as recommended by the lubricant manufacturer) on rubber.

Apply a few drops of light engine oil, or spray a light coating of silicone lubricant (such as WD-40® or an equivalent) on the door latch mechanism. This will help reduce noise and wear. Wipe off any excess oil or silicone lubricant.

Lubricate the door hinges and the door stop by spraying them with a light coating of silicone lubricant (such as WD-40 or an equivalent).

Always lubricate new cab-door hinges at installation.

https://truckmanualshub.com/

Index, Alphabetical

Title of Maintenance Operation (MOP)	MOP Number
Air Conditioner Check, R–134a Refrigerant Systems	83–01
Air Filter Replacement	83–02

https://truckmanualshub.com/

83–01 Air Conditioner Check, R–134a Refrigerant Systems

Preliminary Checks

1. Apply the parking brakes and chock the tires.
2. Make sure the refrigerant compressor drive belt is not damaged, and is correctly tensioned. Also check the tightness of the compressor mounting fasteners. For instructions and torque values, see **Group 01** of the *Cargo Workshop Manual*.
3. Using a feeler gauge, check for correct clutch clearance. For instructions, see **Group 83** of the *Cargo Workshop Manual*.
4. Inspect the compressor clutch coil wire. Check the connector for damage or looseness. Replace the wire if it is damaged.
5. Check for broken, burst, or cut hoses. Also check for loose fittings on all parts.

⚠ WARNING

Wear eye protection when using compressed air or high-pressure water to clean parts, as permanent harm to eyes could result from flying debris.

6. Check for a build-up of road debris on the condenser fins. Using a whiskbroom and air pressure, or a spray of soapy water, carefully clean off the condenser; be careful not to bend the fins.

Cooling Check

1. Start the engine, and set engine speed at 1500 rpm. Close the doors and windows.

IMPORTANT: When outside temperature and humidity are high, it will take longer to cool the cab, especially if fresh-air vents are left open.

2. Turn on the air conditioner; set the controls at maximum cooling and blower speed.
3. Allow the system to run for at least 10 minutes (longer on hot and humid days).
4. Check air flow from the vents. If there is not enough air flow, check the air intake vent for blockage, and the blower motor for proper operation.

   If the air flow is not cold enough, see **Group 83** of the *Cargo Workshop Manual*.
5. Carefully feel the system lines.
   - The compressor discharge line should feel hot.
   - The condenser inlet line should be noticeably warmer than the outlet line.
   - The line from the condenser should feel warm.
   - The inlet and outlet lines of the receiver-drier should be about the same temperature.
   - The line from the receiver-drier to the evaporator should feel warm.
   - The line from the evaporator to the compressor should feel cold.

NOTE: Oily spots on the lines or at the fittings could indicate a system leak.

Refrigerant Check

If equipped with a moisture indicator sight glass, check the color of the moisture indicator.

If the indicator is a deep cobalt blue, the refrigerant charge is dry.

If the indicator is *not* blue, the system is contaminated with water; recover the refrigerant, replace the receiver-drier, evacuate the system, and add a full refrigerant charge.

83–02 Air Filter Replacement

The air filter must be replaced every three months, regardless of mileage, to permit proper operation of the HVAC system.

⚠ WARNING

The parking brake must be fully set before opening the front access panel. Failure to do so could result in serious injury.

https://truckmanualshub.com/

1. Open the front access panel by turning the fasteners at each end of the panel one-quarter turn counterclockwise.
2. Prop the access panel open using the support rod.
3. Open the two spring-loaded clamps that secure the air filter to the HVAC assembly and remove the air filter. See **Fig. 1**.
4. Install a new air filter on the HVAC assembly and secure it by closing the two spring-loaded clamps over the air filter.
5. Lift the access panel and release the support rod.
6. Secure the support rod and press the access panel down until it locks.

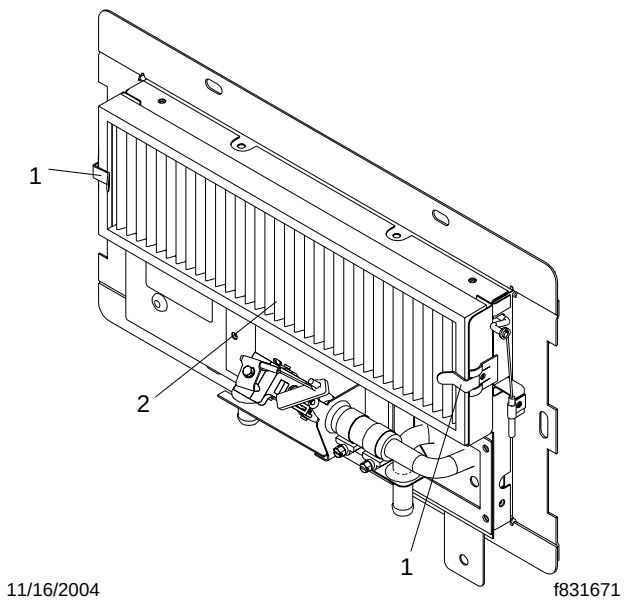

1. Spring-loaded Clamp 2. Air Filter

Fig. 1, Air Filter Replacement