https://truckmanualshub.com/

VP 7000-9000

EQUAL-WHEELED TRACTORS WITH REVERSIBLE DRIVING POSITION IS - AR

ENGLISH

6636973A1 - 07/2019

VALPADANA

https://truckmanualshub.com/

VP 7000 AND VP 9000 SERIES: THE TOP OF THE LINE

The VP 7000 AND VP 9000 Series complete Valpadana's range of compact, equal-wheeled specialty tractors in the 70 to 102 hp power segment. Available in both platform and cab versions, these tractors offer high levels of performance, safety and reliability combined with ergonomic design for superior operator comfort.

Both series come standard with equal-sized wheels and reversible driving position and are offered in two versions: IS with two-wheel steering, and AR with articulated steering. All models in the range are powered by new Deutz AG TCD L4 2.9L, 4-cylinder turbo engines that comply with the Stage 3B/Tier 4 Interim emission regulations.

Specifically designed to meet the demands of professional farmers, the VP 7000 tractors are ideally suited for vegetable and specialty crops. The 7075 and 7085 models deliver 70 and 76 hp, respectively. The VP 9000 Series sets the benchmark for high-end equal-wheel tractors. Developed to offer farmers a highly professional, specialized solution, this tractor range is ideally suited to address the needs of the specialty tractor market. The 90105 and 90115 models offer power ratings of 95 and 102 hp.

https://truckmanualshub.com/

7075-7085 / 90105-90115 IS models with reversible driving position and two-wheel steering

The IS version features four equal-sized wheels, a two-wheel steering system and a reversible driving position, making it ideal for operating in reverse with push-type implements such as fork lifts, shredders and front mowing bars. Combining outstanding traction and excellent visibility, this version is perfect for shallow tillage operations in vineyards and orchards. In addition, its ultra-low centre of gravity allows this tractor to work on steep slopes, such as terraced fields and hillside cultivations, in complete safety. The driving position with rotating platform and suspended pedals can be easily reversed in a few seconds. The ergonomic arrangement of all controls, combined with the comfort of the reversible driving position and the joystick control of the auxiliary hydraulic system, converts these tractors into true multi-functional implement carriers for all-season use.

7075-7085 / 90105-90115 AR models with reversible driving position and articulated steering

The AR version features four equal-sized wheels, an articulated steering system and a reversible driving position that make these tractors ideally suited for operations in reverse-drive mode within narrow rows. This version has a single cardan shaft connecting engine to transmission, resulting in an ultra tight inside turning radius. The driving position with rotating platform and suspended pedals can be easily reversed in a few seconds. The ergonomic arrangement of all controls and the comfort of the optional air-conditioned cab, combined with the joystick control of the auxiliary hydraulic system, make these tractors unbeatable for vineyard and orchard operations.

https://truckmanualshub.com/

DEUTZ AG STAGE 3B/TIER 4I ENGINES

All engines powering the VP 7000 and VP 9000 tractors provide high power and torque levels combined with excellent fuel economy and outstanding application flexibility.

★ *All tractor models feature new, cutting-edge Deutz AG TCD L4 2.9L, 4-cylinder turbo engines with multivalve technology, intercooler and electronic common rail injection system. The hood matching Valpadana's family styling opens wide to provide easy access to the engine compartment for routine maintenance and radiator cleaning.*

https://truckmanualshub.com/

16/16 Transmission

All versions in the VP 7000 and VP 9000 Series feature a transmission with four synchronized gears and four creep speed ranges. Incorporated is a synchro shuttle that provides 16 forward and 16 reverse gears and provides working speeds from 800 m/h to 40 km/h.

The synchro shuttle features a De-Clutch button (D) that allows the operator to automatically shift from forward to reverse without use of the clutch pedal. A shuttle modulation control integrated into the dashboard allows adjustment of power shuttle response to suit working conditions for improved operator comfort.

All gear levers are located in the middle of the rotating platform for a comfortable and intuitive control of the tractor in both forward and reverse direction.

The differential lock and the four-wheel drive are controlled electro-hydraulically via pushbuttons located on the dashboard. The VP 7000 and VP 9000 tractors feature as standard a 1-3/8-inch rear PTO with two speeds 540/540E rpm plus a ground speed PTO. A clutch controlled electro-hydraulically via a pushbutton on the dashboard enables smooth and modulated engagement of the PTO, ensuring a soft start-up of the implement.

DASHBOARD

Fully redesigned, the digital instrument panel keeps the operator constantly informed on the tractor's performance. Also, the Engine Memo Switch device allows the operator to store and recall the engine rpm best suited for the implement attached.

CUSTOM-MADE REAR HITCH

Specially designed to meet a wide range of application needs, the rear hitch provides a maximum lift capacity of 2300 Kg and allows user to select between a variety of functions: raise/lower control, draft and position control, electronic joystick control.

★ *The 3-point hitch Category II can be equipped with various types of lower links: fixed or extendable, with fixed or adjustable quick-release couplings, with side shift. A hydraulic top link and a hydraulic right lifting rod are available on request.*

KEY FEATURES AND BENEFITS

https://truckmanualshub.com/

- ★ *High-performance engines with excellent fuel economy and low noise*
- ★ *Transmission with 16FWD+16REV gears and speed range from 800 m/h to 40 km/h*
- ★ *Synchro shuttle with De-Clutch button for quick shifting from forward to reverse*
- ★ *Wide angle of oscillation between front and rear axle for greater traction and improved stability*
- ★ *Ultra tight turning circles for easy manoeuvring in confined spaces*
- ★ *Easy and quick reversing of driving position*
- ★ *Controller to operate hitch and remote valves*
- ★ *Spacious and comfortable cab with ergonomic controls in both drive ways.*

AUXILIARY HYDRAULIC SYSTEM WITH UP TO 50 L/MIN FLOW RATE AND HEAT EXCHANGER

The steering and the auxiliary hydraulic system are operated by two separate pumps with flow rates of 25 l/min and 50 l/min respectively. This avoids interference between the two systems.

- ★ *The wide variety of customization options available, the large capacity of the hydraulic oil reservoir and the efficiency of the heat exchanger make these tractors ideal for the use of hydraulically-operated implements.*
- ★ *To improve performance and efficiency, the tractors can be equipped with up to four double-acting remote valves and two single-acting remote valves, including one with variable flow for the use of hydraulic motors. All remotes are controlled electronically through a proportional controller (L) ideal to operate implements such as hydraulic forklifts and vine trimmers.*

BRAKING SYSTEM: SAFETY COMES FIRST!

All models in the range feature hydraulically-operated wet disc brakes ensuring efficient braking on all four wheels for maximum safety in the field and on road.

- ★ *The emergency and service brake located beside the dashboard operates directly on the transmission pinion through a cable device.*

https://truckmanualshub.com/

Highly precise steering system

Thanks to a high steering axis inclination and a pair of double-acting cylinders connected by a tie bar, which provide differential steering angles between inner and outer wheel, the IS version offers an inside turning radius of only 2.8 m, which can be further reduced by disconnecting the front-wheel drive and/or using the steering brakes. The AR articulated version features a single cardan shaft between engine and transmission.
This increases the tilt angle of the chassis, allowing an inside turning radius of only 1.65 m to be achieved without additional noise or soil damage.
Both steering systems are hydraulically assisted by a servo unit fed by a pump with 31 l/min flow rate which does not interfere with other hydraulic functions.

OSCILLATING CHASSIS FOR MAXIMUM UPTIME AND SAFETY

The special configuration of the chassis with front engine overhang ensures perfect balance of the tractor-implement system and allows both the wheelbase and turning radius to be reduced. This enables the front and rear axles to oscillate independently of each other by 15 degrees upwards and downwards to always keep the wheels in contact with the ground.
This design makes for a low centre of gravity and lowered driving position, allowing the tractor to work under overhead trellis systems with the operator in standing position, as well as to operate on steep slopes in complete safety.

★ ***The rollover index of the VP 7000 and VP 9000 tractors exceeds by far the tyre side grip, ensuring perfect balance and total safety under all conditions.***

https://truckmanualshub.com/

Reversible driving position with iso-mounted platform

Featuring a rotating platform, suspended pedals and a seat with piston support, the driving position can be changed from forward to reverse in a few seconds.
Driving the tractor backwards when using rear implements improves visibility and reduces wrong manoeuvres, resulting in increased average working speed. This makes reverse drive indispensable for the use of implements such as hydraulic forklifts, vine trimmers and mowing bars.
The driving position is iso-mounted and perfectly sealed to ensure the operator a clean and quiet working environment.
To simplify extraordinary maintenance operations, all connections between the driver's platform and the tractor frame have been designed to make platform removal quick and easy.

https://truckmanualshub.com/

Optional cab

All VP 7000 and VP 9000 tractor models can be optionally equipped with cab. Featuring a one-piece frame, the cab offers the operator a modern and spacious working environment both in forward and reverse drive modes.

The comfortable and quiet cab interior and the driver seat with air suspension system ensure safe and stress-free operation during long working days.

In addition, four roof-mounted work lights provide excellent illumination for night work.

A highly-efficient ventilation and air-conditioning system provides a safe and clean environment and maintains the desired cab temperature whatever the outdoor weather conditions.

https://truckmanualshub.com/

		7075 IS - AR	7085 IS - AR	90105 IS - AR	90115 IS - AR
ENGINE					
DEUTZ STAGE 3B/TIER 4 INTERIM		2.9 TCD L4	2.9 TCD L4	2.9 TCD L4	2.9 TCD L4
MAXIMUM POWER ISO	HP/KW	70/52	76/56	95/70	102/75
RATED SPEED	RPM	2200	2200	2200	2200
MAXIMUM TORQUE	NM	272	375	400	410
DISPLACEMENT / CYLINDERS / VALVES	CM^3	2900/4 TA/16	2900/4 TA/16	2900/4 TA/16	2900/4 TA/16
ENGINE MEMO SWITCH		●	●	●	●
FUEL TANK CAPACITY	L	58	58	58	58
CLUTCH					
MECHANICAL ENGAGEMENT		●	●	●	●
WET MULTI-DISC CLUTCH		●	●	●	●
TRANSMISSION					
SYNCHRO SHUTTLE WITH DE-CLUTCH BUTTON		●	●	●	●
MECHANICAL TRANSMISSION WITH 16FWD+16REV SPEEDS		●	●	●	●
MAXIMUM SPEED 40 KM/H		●	●	●	●
POWER TAKE-OFF					
ELECTROHYDRAULIC PTO ENGAGEMENT		●	●	●	●
2 SPEEDS 540/540E RPM		●	●	●	●
GROUND SPEED PTO		●	●	●	●
FRONT AXLE					
ELECTROHYDRAULIC 4WD ENGAGEMENT		●	●	●	●
MAXIMUM OSCILLATION ANGLE		± 15°	± 15°	± 15°	± 15°
ELECTROHYDRAULIC DIFFERENTIAL LOCK		●	●	●	●
BRAKES					
HYDRAULIC CONTROL		●	●	●	●
REAR WET DISC BRAKES		●	●	●	●
FRONT WET DISC BRAKES		●	●	●	●
HYDRAULIC SYSTEM/REAR HITCH					
MECHANICALLY-CONTROLLED REAR HITCH		●	●	●	●
RAISE/LOWER/FLOAT CONTROL		●	●	●	●
DRAFT/POSITION CONTROL		○	○	○	○
LIFT CAPACITY	KG	2300	2300	2300	2300
HYDRAULIC RIGHT LIFT ROD ADJUSTMENT		○	○	○	○
HYDRAULIC TOP LINK ADJUSTMENT		○	○	○	○
HYDRAULIC PUMP FLOW (HITCH+ STEERING SYSTEM)	L/MIN	50 + 25	50 + 25	50 + 25	50 + 25
STANDARD 3-POINT HITCH WITH QUICK COUPLINGS		CAT 2	CAT 2	CAT 2	CAT 2
TWO-WAY ADJUSTABLE 3-POINT HITCH WITH QUICK COUPLINGS		○	○	○	○
NO. 2 REAR REMOTE VALVES (1 STD + 1 W/FLOAT FUNCTION)		●	●	●	●
NO. 4 REAR REMOTE VALVES (2 STD + 2 W/FLOAT FUNCTION)		○	○	○	○
JOYSTICK FOR PROPORTIONAL CONTROL OF HYDRAULIC SYSTEM		○	○	○	○
CAB AND DRIVING POSITION					
ISO-MOUNTED PLATFORM		●	●	●	●
REVERSIBLE DRIVING POSITION		●	●	●	●
AIR SUSPENSION SEAT		●	●	●	●
DIGITAL INSTRUMENT PANEL		●	●	●	●
CLOSED HEATED CAB		○	○	○	○
AIR CONDITIONING		○	○	○	○

https://truckmanualshub.com/

		7075 IS - AR	7085 IS - AR	90105 IS - AR	90115 IS - AR
DIMENSIONS AND WEIGHTS					
TOTAL WEIGHT (IS)	KG	2285	2285	2285	2285
TOTAL WEIGHT (AR)	KG	2205	2205	2205	2205
A-HEIGHT TO FRONT ROPS (WITHOUT ROTATING BEACON) - MIN/MAX	MM	2337/2456	2337/2456	2337/2456	2337/2456
B-HEIGHT TO STEERING WHEEL	MM	1260	1260	1260	1260
C-HEIGHT TO REAR ROPS - MIN/MAX	MM	1302/1421	1302/1421	1302/1421	1302/1421
D-HEIGHT OVER CAB - MIN/MAX	MM	2129/2248	2129/2248	2129/2248	2129/2248
E-WHEELBASE	MM	1495	1495	1495	1495
F-MAXIMUM LENGTH	MM	3737	3737	3737	3737
G-GROUND CLEARANCE	MM	160/279	160/279	160/279	160/279
H-WIDTH (IS) - MIN/MAX	MM	1351/1748	1351/1748	1351/1748	1351/1748
H-WIDTH (AR) - MIN/MAX	MM	1253/1573	1253/1573	1253/1573	1253/1573

Key: ● = standard; ○ = option; — = not available

TURNING RADIUS		IS	AR
WITH FRONT TYRES		320/70R20	11.2R20
WITH REAR TYRES		320/70R20	11.2R20
INNER RADIUS	M	1.48	1.73
OUTER RADIUS	M	3.76	3.13
WITH TRACKS	MM	1296	1008

IS – ADJUSTABLE WHEEL RIM FRONT /REAR
11.2 R20
280/70 R18
300/70 R20
320/65 R18
320/70 R20

AAR – ADJUSTABLE WHEEL RIM FRONT /REAR
11.2 R20
280/70 R18
300/70 R20
320/65 R18
320/70 R20

IS / AR - FIXED RIM FRONT /REAR
31X15.50-15 GARDEN
33X15.50-15 GARDEN
440/50 R17

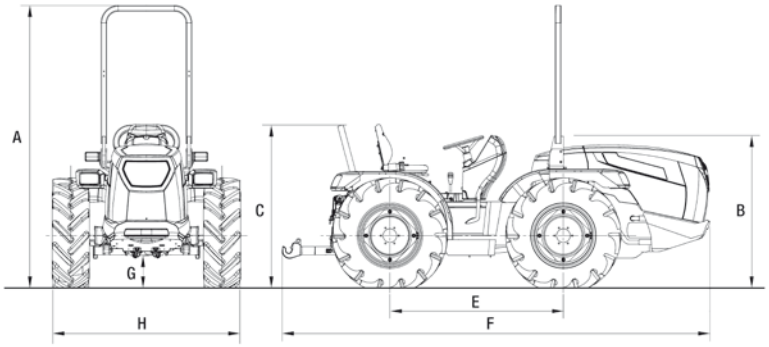

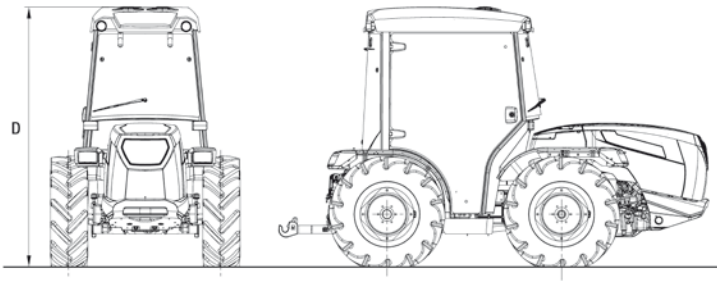

ARGOTRACTORS
via G. Matteotti, 7 | 42042 Fabbrico [RE] Italia
t. +39.0522.656.111 | f. +39.0522.656.476
webmaster@argotractors.com | www.argotractors.com

AgroLube
graphic design: gruppo saldatori | bzzbzz@grupposaldatori.com
All data and illustrations provided in this brochure are for information purposes only and can be changed without notice.

https://truckmanualshub.com/

https://truckmanualshub.com/