https://truckmanualshub.com/

STC1300C

STC1300C TRUCK CRANE
130 TONS LIFTING CAPACITY

Quality Changes the World

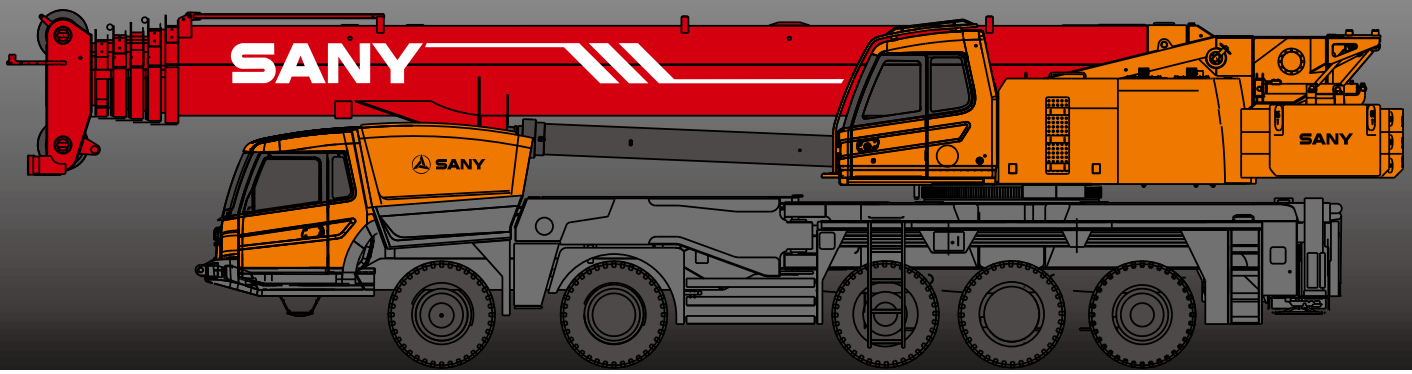

SANY

https://truckmanualshub.com/

SANY Automobile Hoisting Machinery is one of the core business unit of Sany Heavy Industry, mainly engaged in the research and development of high end, mid to large tonnage crane series, including mobile crane, crawler crane, tower crane and loader crane. It has two industrial parks in Ningxiang and Huzhou, since entering the market, the products of Sany Automobile Hoisting Machinery have received worldwide recognition with advanced technology, lean manufacturing, high reliability and excellent service.

https://truckmanualshub.com/

SANY TRUCK CRANE

CONTENT

04 Icon
05 Selling Points
06 Introduction
09 Dimension
10 Technical Parameter
11 Operation Condition
12 Load Chart
41 Counterweight Sketch Map
42 Wheel Crane Family Map

- Cab
- Carrier frame
- Suspension system
- Hydraulic system
- Outriggers
- Telescopic boom
- Control system
- Engine
- Lattice jibs
- Telescopic system
- Transmission system
- Superlift devices
- Luffing system
- Drive/Steer
- Luffing lattice jib
- Slewing
- Axles
- winch mechanism:
- Counterweight
- Tyres
- Safety system
- Brakes system
- Hoist system
- Electrical system

Creative counterweight pushing technology

With full-counterweight weight of 40T, when counterweight is pushed backwards for 860mm, stability of the boom can be improved by up to 25%, thus improving lifting capacity and stability.

Highly efficient and innovative chassis performance / chassis system

The use of innovative 5-axle chassis design and multi braking modes provide more reliable traveling performance for chassis. With topping over early-warning technology, high stable overall operation and high safety can be achieved.

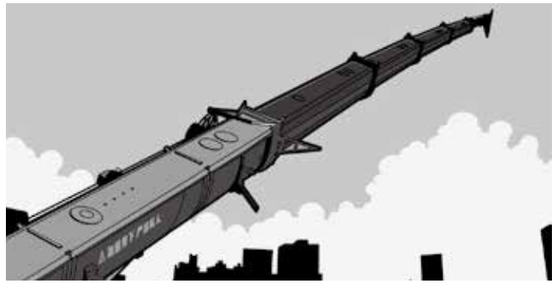

Safe and stable lifting performance / boom system

Six-section boom of high strength steel structure and optimized U-shaped cross reduces weight significantly with higher safety rates. Jib mounting angles are 0°, 15°and 30°, which ensures fast and convenient change-over between different operating conditions so as to improving working efficiency of the machine.

Highly efficient, energy-saving and unique hydraulic control technology

Self-developed dual-pump converging / diversion main valve is used. Converging flow of the single-action dual-pump ensures fast operation and high work efficiency, combined-action dual-pump diversion system is applied to ensure stable controllability, electric proportional variable displacement piston pump is used to ensure high-accurate flow control and higher efficiency and energy saving.

Safe, stable, advanced and intelligent electronic control technology / electronic control system

Self-developed controller SYMC, specially made for engineering machinery is adopted. The adoption of CAN-bus full-digital network control technology ensures stable control signal, simple harness and high reliability. Timely feedback of data information can achieve the monitoring of the overall working status in real-time. The load moment limiter equipped with the comprehensive intelligent protection system is used with accuracy within 3% to provide a comprehensive logic and interlock control, thus ensuring more safe and reliable operation.

https://truckmanualshub.com/

Superstructure

Cab

- The self-made cab adopts ergonomic design with sliding door, safety glass, anti-corrosion steel, soft interior decoration, large interior space, panoramic sunroof and adjustable seats, air conditioner and electric window wiper etc., providing easier and more comfortable operation. Load moment limiter display is configured to achieve the combination of main console and operating display system, making all operating condition data of lifting operation clear at a glance.

Hydraulic system

- Through the adoption of electric proportional variable displacement piston pump, pump displacement can be adjusted in real-time, achieving high-precision flow control with no energy loss during operation.
- Self-developed dual-pump converging / diversion main valve is used enabling stable and convenient control of single action and combined action under different operation conditions.
- Main winch adopts electric proportional variable motor to ensure high operation efficiency. Max. single line speeds of main winch is up to 135m/min, and the auxiliary winch is 123m/min.
- Closed slewing system with free slipping function is equipped to ensure more stable starting and control of the slewing operation as well as excellent micro-mobility.

Control system

- CAN-bus instrument: CAN-bus instrument with a combined intelligent control electrical system is used for easy reading of the traveling parameters at any time. The engine fault warning function is applied, to ensure convenient and fast troubleshooting.
- Automatic outrigger system: Electrically controlled outrigger with automatic leveling and fault diagnosis warning function is adopted, which is flexible and flexible to operate.
- With fully security protection system, main and auxiliary winches are equipped with over-roll out limiter and height limiters to prevent over-rolling out and over-hoisting of steel rope, including tip-over and limit angle protection.
- Load moment limiter: The adoption of high intelligent load moment limiter system can comprehensively protect lifting operation, ensuring accurate, stable and comfort operation.
- The fault diagnosis system can detect superstructure electricity, hydraulic action, chassis (for major safety failure), engine and gearbox for fault to ensure reliable operation of the crane.

Luffing system

- The use of dead-weight luffing system with compensation control of the system ensures good luffing speed controllability, micro-mobility and excellent stability.
- Luffing angle : -2°~ 82°.

Telescopic system

- With single-cylinder pin technology, inserting and pulling actions of the cylinder pin and boom pin can be achieved through electrohydraulic control system.
- Telescopic action of the lifting boom can be applied with a single telescopic cylinder. The use of multi-stage pressure control, multiple telescopic balance valve element and mechanical hydraulic double-interlock mechanism of the cylinder pin and boom pin ensure safe and reliable operation of the telescopic system.
- Six-section boom is applied with basic boom length of 13.30m, full-extended boom length of 60m, jib length of 18.1m and fully extended boom lifting height of 60m respectively. Max. lifting height is 78.1m including jib. It is made of fine grain high-strength steel with U-shaped cross section .

Slewing system

- With 360° rotation and with Max slewing speed of 1.6r/min applied. The use of electric proportional closed double slewing system ensures perfect operation and stable slewing.

Engine

- Type: L-type six-cylinder diesel engine
- Emission: Stage 3A
- Capacity of fuel tank: 350L

Superstructure

Hoisting system

- The adoption of pump and motor double variable speed control ensures high efficiency and excellent energy saving functionality. With perfect combination of winch balance valve and unique anti-slip technology, heavy load can be lifted and lowered smoothly. Closed winch brake and winch balance valve effectively prevent imbalance of the hook.
- Wire rope of main winch: right-handed wire rope 35W×7-Φ22-2160UZZ 280m. Wire rope of auxiliary winch: right-handed wire rope 35W×7-Φ22-2160UZZ 190m.

Safety system

- Load moment limiter:Load detection is achieved through the establishment of accurate and concise load model, which significantly increases the overall system precision of load moment limiter. Online empty load marking effectively prevent inaccurate lifting caused by discrepancy in boom structure specification, increasing system accuracy to ±5%.
- Hydraulic system is configured with the balance valve, overflow valve and two-way hydraulic lock etc. components, thus achieving the stable and reliable operation of the hydraulic system.
- Main and auxiliary winches are equipped with over roll-out limiter to prevent over rolling-out of wire rope.
- Boom and jib ends are equipped with height limiters respectively to prevent over-hoisting of wire rope.
- Boom head is equipped with anemometer to detect whether the high-altitude wind speed is within the allowable range.
- Equipped with length sensor, angle sensor and press sensor to indicate the working condition of whole crane in real-time, giving an alarm and cutting off the dangerous action automatically.

Counterweight

- 40t movable counterweight can be moved backward 860mm.
- There are five counterweight combinations, 0t, 12t, 20t, 27t, 40t, which is easy to install.
- Rotary radius is 4744 mm, and 5604 mm after translation movement.

Chassis

Cab

- Cab is made of new steel structure self-developed by SANY, featuring excellent shock absorption and tightness, which is configured with swing-out doors at both sides, pneumatically suspended driver's seat and passenger's seat, adjustable steering wheel, large rearview mirror, comfortable driver's chair having a headrest, anti-fog fan, air conditioner, stereo radio and complete control instruments and meters, providing more comfortable, safe and humanized operation experience.

Carrier frame

- Designed and manufactured by SANY, anti-torsion box structure is welded by fine-grain high-strength steel plate to provide lighter weight and strong load bearing capacity. With bending strength increased by 46.8% and with torsional strength increased by 68% compared with original concave structure.

Axles

- Axles 3,4 and5 are drive axles and axles 1,2 and 5 are steering axles, axle and wheel differentials are installed in axle 3,4, and wheel differential is installed in axle5. The use of welding process for axle housing provides stronger load bearing capacity.

https://truckmanualshub.com/

Chassis

Engine

- Type: V-type eight-cylinder, water cooled, supercharged and inter-cooling diesel engine
- Rated power: 350kw/1800r/min
- Emission: EuroIII
- Capacity of fuel tank: 450L

Transmission system

- Gearbox: Manual / Automatic gearbox is adopted with 12 forward gears, 2 backward gears and large speed ratio range applied, which meets the requirements of low gradeability speed and high traveling speed.
- Transmission shaft: With optimized arrangement of the transmission shaft, the transmission is stable and reliable. For most optimized transmission, face-tooth coupling transmission shaft is used with large transmission torque.

Brakes system

- Brakes system includes traveling brake, parking brake, emergency brake and auxiliary brake.
- Traveling brake: All wheels use the air servo brakes and dual-circuit brake system and are equipped with drum brakes.
- Parking brake: Force driven by accumulator is applied on the third to fifth axle.
- For emergency brake, accumulator is used not only for cutting-off brake but also for emergency brake.
- Auxiliary brake consists of engine brake and exhaust brake. Engine is equipped with dual brake with brake safety ensured while travelling.

Suspension system

- All axles adopt the plate spring suspension systems with plate spring passed 100,000 fatigue tests and with optimization of performance parameters of the front and rear plate springs applied to ensure strength and also to provide comfort ridding.

Steering system

- Single-circuit hydraulic power steering system equipped with mechanical steering limit is used, with emergency steering device driven by emergency pump applied.

Outriggers

- Made of fine-grain high-strength steel sheet, outriggers can be controlled through control panel with automatic leveling function. Front swing outriggers and rear telescopic outriggers are arranged. Four-point supporting ensures easy operation and strong stability with Max. span up to 7. 6m×7.6m.

Tyres

- 14*12.00R24 20PR

Electrical system

- With 2*12V maintenance-free batteries, the crane power can be cut off manually via a mechanical master power switch. The use of CAN-bus control system can achieve information interaction between superstructure and undercarriage.

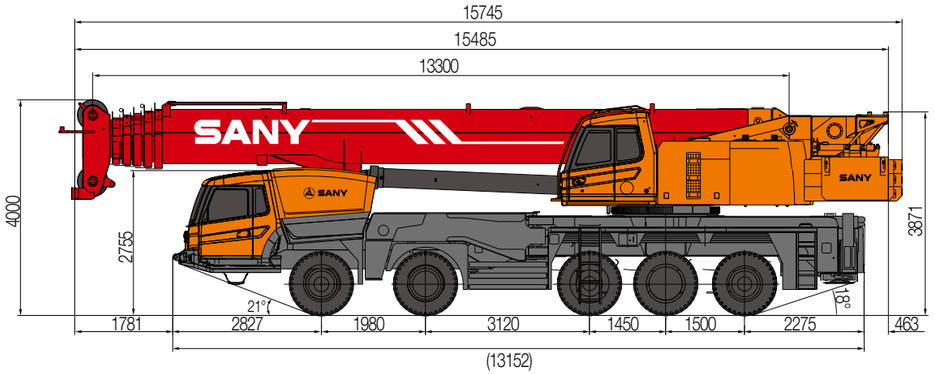

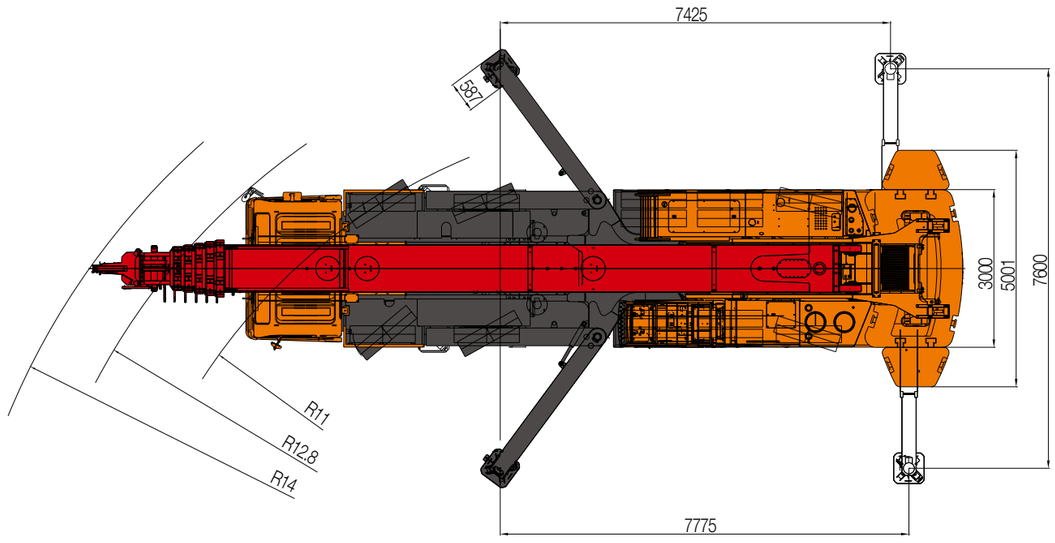

https://truckmanualshub.com/

Type	Item		Parameter
Capacity	Max. lifting capacity		130t
Dimensions	Overall length		15485 mm
	Overall width		3000 mm
	Overall height		4000 mm
	Axle distance	Axle-1,2	1980 mm
		Axle-2,3	3120 mm
		Axle-3,4	1450 mm
		Axle-4,5	1500 mm
Weight	Overall weight		54950 kg
	Axle load	Axle load-1,2	9475/9475 kg
		Axle load-3,4	13000/13000/10000 kg
Power (Chassis)	Engine model		BENZ OM502LA.III/1
	Max. engine power	kW/rpm	350/1800
	Max. engine torque	N·m/rpm	2300/1080
Power (Superstructure)	Engine model		BENZ OM906LA.E2/5
	Max. engine power	kW/rpm	150/2200
	Max. engine torque	N·m/rpm	750/1200-1600
Traveling	Max.traveling speed		85 km/h
	Turning radius	Min.turning radius	11 m
		Min.turning radius of boom head	14 m
	Wheel formula		10×6 ×6
	Min.ground clearance		310 mm
	Approach angle		21 °
	Departure angle		18 °
	Max.gradeability		40%
	Fuel consumption per 100km		≤ 80 L
Main Performance Data	Temperature range		– 20 °C ~+ 40 °C
	Min.rated range		3 m
	Tail slewing radius of swingtable		4.57m
	Boom section		6
	Boom shape		U-shaped
	Max.lifting moment	Base boom	5160 kN·m
		Full-extend boom	2156 kN·m
		Full-extend boom+jib	1320kN·m
	Boom length	Base boom	13.3 m
		Full-extend boom	60 m
		Full-extend boom+jib	78.1 m
	Outrigger span (Longitudinal×Transversal)		7.6 × 7.6 m
	Jib offset		0 °, 15 °, 30 °
Working speed	Max.single rope lifting speed of main winch (no load)		135 m/min
	Max.single rope lifting speed of auxiliary winch (no load)		123 m/min
	Full extension/retraction time of boom		480 / 500 s
	Full lifting/descending time of boom		60 / 110 s
	Slewing speed		1.6 r/min
Air condition	Superstructure		Cooling/Heating
	Chassis		Cooling/Heating

STC1300C Working Ranges

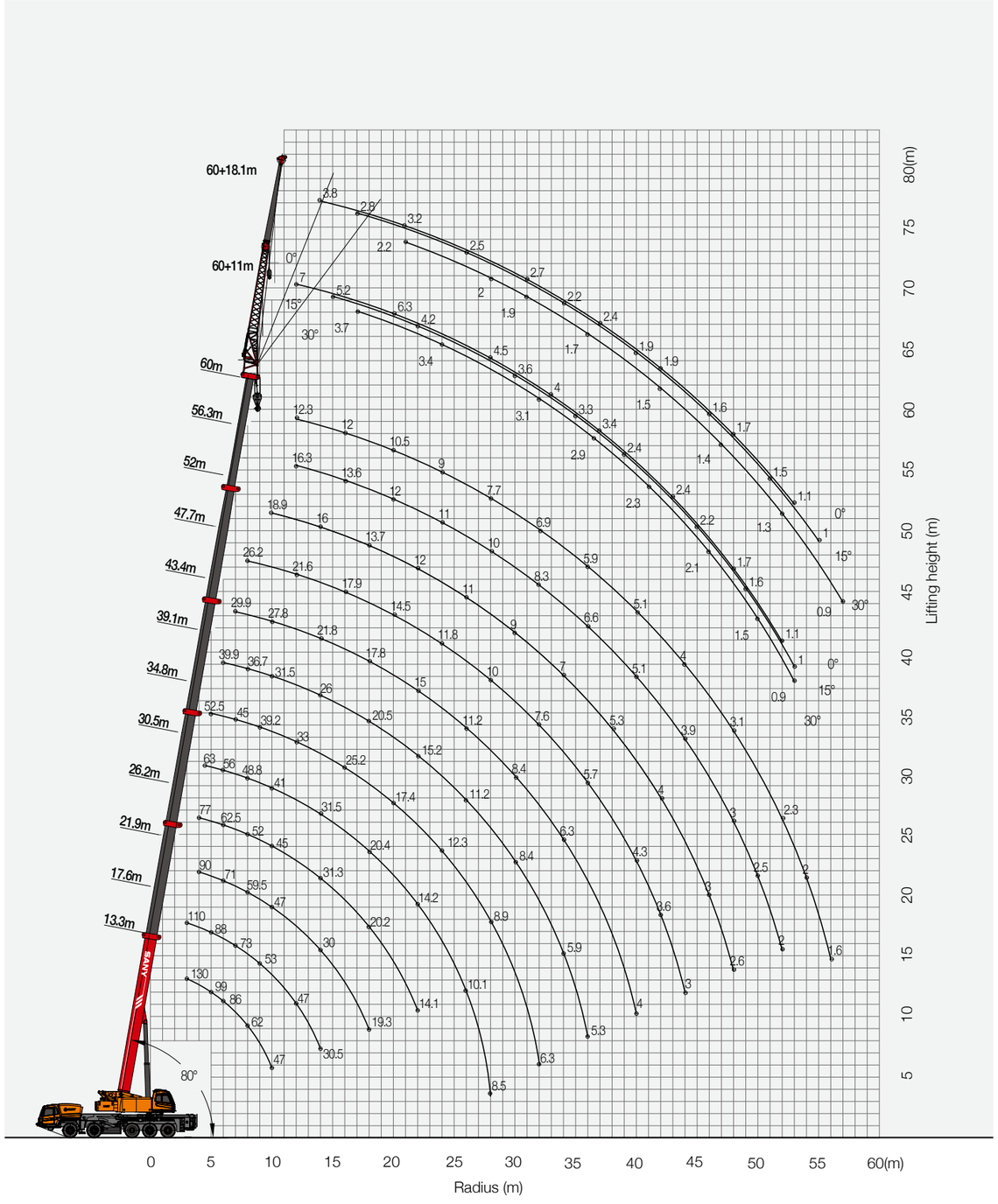

https://truckmanualshub.com/

Prerequisites:
① Boom operating conditions(fully extended boom length),min. length is 13.3m and max.length is 60m
② The span of outriggers is 7.6m×7.6m
③ Side and rear are applied
④ Counterweight is 0T

Radius（m）	Main boom (m)														Radius（m）
	13.3	17.6	17.6	17.6	21.9	21.9	21.9	26	26	26	30.5	30.5	30.5	34.8	
3.0	125.0	110.0	91.0	68.0											3
3.5	125.0	103.0	88.0	66.0											3.5
4.0	116.0	99.0	85.0	65.0	90.0	68.0	49.0	77.0	57.5	46.0					4
4.5	108.0	93.0	82.0	63.0	88.0	65.0	47.0	73.0	55.0	44.0	63.0	57.7	45.0		4.5
5.0	99.0	88.0	76.0	61.0	78.0	63.0	45.0	69.0	52.5	42.0	57.7	52.5	43.0	52.5	5.0
6.0	63.2	64.1	65.6	55.5	63.4	57.5	40.0	62.5	48.0	39.5	56.0	49.2	40.3	47.2	6.0
7.0	43.5	44.4	45.7	46.5	43.8	46.0	37.0	45.3	43.0	37.0	45.6	46.8	36.7	45.0	7.0
8.0	31.9	33.1	34.2	35.0	32.6	34.5	34.0	33.9	34.8	34.0	34.2	35.2	33.6	34.7	8.0
9.0	24.2	25.5	26.7	27.4	25.1	27.0	29.5	26.4	27.3	30.0	26.7	27.7	29.8	27.2	9.0
10.0	18.9	20.0	21.1	21.5	19.6	21.4	23.9	20.8	21.6	24.4	21.0	22.0	23.8	21.5	10.0
12.0		12.9	13.9	14.5	12.6	14.2	16.4	13.7	14.4	16.9	13.9	14.8	16.0	14.3	12.0
14.0		8.6	9.5	10.1	8.3	9.8	11.0	9.3	10.0	12.3	9.6	10.4	11.4	10.0	14.0
16.0					5.4	6.9	8.9	6.5	7.1	9.3	6.6	7.4	8.3	7.0	16.0
18.0					3.3	4.8	6.7	4.3	5.0	7.1	4.5	5.3	6.2	4.9	18.0
20.0								2.7	3.3	5.4	3.0	3.7	4.5	3.3	20.0
22.0								1.5	2.1	4.1	1.7	2.5	3.3	2.1	22.0
24.0												1.4	2.3	1.1	24.0
26.0													1.5		26.0
28.0															28.0
30.0															30.0
32.0															32.0
34.0															34.0
36.0															36.0
Number of lines	12	12	10	8	10	8	5	8	6	5	6	6	5	5	Number of lines

Prerequisites:
① Boom operating conditions(fully extended boom length),min. length is 13.3m and max.length is 60m
② The span of outriggers is 7.6m×7.6m
③ Side and rear are applied
④ Counterweight is 0T

Radius（m）	Main boom (m)															Radius（m）
	34.8	34.8	39.1	39.1	39.1	43.4	43.4	43.4	47.7	47.7	47.7	52	52	56.3	60	
3.0																3
3.5																3.5
4.0																4
4.5																4.5
5.0	47.1	44.0														5.0
6.0	45.1	42.5	39.9	36.5	34.0											6.0
7.0	43.0	40.3	38.3	35.1	31.5	29.9	26.7	24.6								7.0
8.0	36.6	36.8	35.9	33.6	29.6	29.4	26.2	23.1	26.2	23.6	21.0					8.0
9.0	29.0	29.6	28.4	28.9	27.0	28.3	25.5	22.1	25.2	22.5	20.4					9.0
10.0	23.3	23.9	22.7	23.2	23.9	22.7	23.6	20.4	22.7	20.7	19.4	18.9	16.8			10.0
12.0	15.9	16.5	15.4	15.9	16.8	15.4	16.2	17.3	15.7	16.7	17.5	16.2	15.7	16.3	12.3	12.0
14.0	11.5	12.0	10.9	11.4	12.3	10.9	11.7	12.7	11.3	12.2	12.9	11.7	12.7	12.3	12.0	14.0
16.0	8.4	8.9	8.0	8.4	9.2	8.0	8.7	9.6	8.3	9.1	9.8	8.7	9.6	9.2	9.3	16.0
18.0	6.3	6.7	5.8	6.2	7.0	5.8	6.5	7.4	6.1	6.9	7.6	6.5	7.4	7.0	7.1	18.0
20.0	4.7	5.1	4.2	4.6	5.4	4.2	4.9	5.8	4.5	5.3	5.9	4.9	5.8	5.4	5.4	20.0
22.0	3.4	3.8	2.9	3.3	4.1	2.9	3.6	4.5	3.2	4.0	4.6	3.6	4.5	4.1	4.1	22.0
24.0	2.4	2.8	1.9	2.3	3.1	1.9	2.6	3.4	2.2	3.0	3.6	2.6	3.4	3.0	3.1	24.0
26.0	1.5	1.9	1.1	1.5	2.2	1.1	1.7	2.6	1.4	2.1	2.7	1.7	2.6	2.2	2.3	26.0
28.0		1.2			1.5		1.0	1.9		1.4	2.0	1.0	1.9	1.5	1.6	28.0
30.0					1.0			1.3			1.4		1.3	1.0	1.0	30.0
32.0											1.0					32.0
34.0																34.0
36.0																36.0
Number of lines	5	5	4	4	4	3	3	3	3	3	2	2	2	2	2	Number of lines

https://truckmanualshub.com/

Prerequisites:
① Boom operating conditions(fully extended boom length),min. length is 13.3m and max.length is 60m
② The span of outriggers is 7.6m×7.6m
③ Side and rear are applied
④ Counterweight is 12T

Radius（m）	Main boom (m)															Radius（m）
	13.3	17.6	17.6	17.6	21.9	21.9	21.9	26	26	26	30.5	30.5	30.5	34.8	34.8	
3.0	130.0	110.0	91.0	68.0												3.0
3.5	125.0	103.0	86.0	66.0												3.5
4.0	116.0	99.0	85.0	65.0	90.0	68.0	49.0	77.0	57.5	46.0						4.0
4.5	108.0	93.0	82.0	63.0	88.0	65.0	47.0	73.0	54.5	44.0	63.0	57.7	45.0			4.5
5.0	99.0	88.0	76.0	61.0	78.0	63.0	45.0	69.0	52.5	42.0	57.7	52.5	43.0	52.5	47.1	5.0
6.0	86.0	80.0	70.5	55.5	71.0	57.5	40.0	62.5	48.0	39.5	56.0	49.2	40.3	47.2	45.1	6.0
7.0	61.6	62.4	63.7	48.0	61.9	52.5	37.0	58.0	43.0	37.0	53.0	47.1	36.7	45.0	43.0	7.0
8.0	46.1	47.3	48.4	43.0	46.8	47.0	34.0	48.1	40.0	34.0	48.4	45.1	33.6	42.4	39.7	8.0
9.0	36.4	37.4	38.5	39.2	37.0	38.8	31.5	38.2	35.0	32.0	38.4	39.4	30.6	38.9	36.5	9.0
10.0	29.5	30.5	31.5	32.1	30.1	31.8	29.0	31.2	32.0	29.2	31.5	32.4	28.2	31.9	33.5	10.0
12.0		21.4	22.3	22.9	21.1	22.6	24.7	22.1	22.8	25.2	22.3	23.2	24.9	22.7	24.3	12.0
14.0		15.6	16.5	17.1	15.3	16.8	18.9	16.4	17.0	19.3	16.6	17.4	19.1	17.0	18.4	14.0
16.0					11.3	12.7	14.7	12.3	13.0	15.2	12.5	13.3	14.9	12.9	14.3	16.0
18.0					8.4	9.8	11.7	9.4	10.0	12.1	9.6	10.4	11.9	9.9	11.3	18.0
20.0								7.2	7.8	9.8	7.4	8.1	9.7	7.7	9.1	20.0
22.0								5.4	6.0	8.1	5.7	6.4	7.9	6.0	7.3	22.0
24.0											4.3	5.0	6.5	4.6	5.9	24.0
26.0											3.1	3.8	5.3	3.5	4.7	26.0
28.0														2.5	3.8	28.0
30.0														1.7	2.9	30.0
32.0																32.0
34.0																34.0
36.0																36.0
38.0																38.0
40.0																40.0
42.0																42.0
44.0																44.0
46.0																46.0
48.0																48.0
50.0																50.0
Number of lines	12	12	10	8	10	8	5	8	6	5	6	6	5	5	5	Number of lines

Prerequisites:
① Boom operating conditions(fully extended boom length),min. length is 13.3m and max.length is 60m
② The span of outriggers is 7.6m×7.6m
③ Side and rear are applied
④ Counterweight is 12T

Radius（m）	Main boom (m)														Radius（m）
	34.8	39.1	39.1	39.1	43.4	43.4	43.4	47.7	47.7	47.7	52	52	56.3	60	
3.0															3.0
3.5															3.5
4.0															4.0
4.5															4.5
5.0	44.0														5.0
6.0	42.5	39.9	36.5	34.0											6.0
7.0	40.3	38.3	35.1	31.5	29.9	26.7	24.6								7.0
8.0	36.8	36.7	33.6	29.6	29.4	26.2	23.1	26.2	23.6	21.0					8.0
9.0	33.6	34.1	31.5	27.0	28.8	25.5	22.1	25.2	22.5	20.4					9.0
10.0	29.8	31.5	28.8	23.9	27.8	24.1	20.4	23.1	20.7	19.4	18.9	16.8			10.0
12.0	24.8	23.7	24.2	21.8	23.7	22.5	18.9	21.6	19.4	17.8	17.3	15.7	16.3	12.3	12.0
14.0	18.9	18.0	18.4	19.2	17.9	18.7	17.6	18.2	17.8	16.3	16.0	14.7	14.1	12.3	14.0
16.0	14.8	13.8	14.2	15.1	13.8	14.5	15.5	14.1	15.0	15.1	14.5	14.1	13.6	12.0	16.0
18.0	11.8	10.9	11.3	12.1	10.8	11.5	12.5	11.1	12.0	12.6	11.5	12.5	12.0	10.9	18.0
20.0	9.5	8.6	9.0	9.8	8.6	9.3	10.2	8.9	9.7	10.3	9.3	10.2	9.8	9.8	20.0
22.0	7.7	6.9	7.3	8.0	6.9	7.5	8.4	7.1	7.9	8.5	7.5	8.4	8.0	8.1	22.0
24.0	6.3	5.5	5.9	6.6	5.5	6.1	7.0	5.7	6.5	7.1	6.1	7.0	6.6	6.7	24.0
26.0	5.2	4.3	4.7	5.4	4.3	4.9	5.8	4.6	5.3	5.9	5.0	5.8	5.4	5.5	26.0
28.0	4.2	3.4	3.7	4.5	3.3	4.0	4.8	3.6	4.4	5.0	4.0	4.8	4.4	4.5	28.0
30.0	3.4	2.5	2.9	3.6	2.5	3.2	4.0	2.8	3.5	4.1	3.2	4.0	3.6	3.7	30.0
32.0		1.8	2.2	2.9	1.8	2.5	3.3	2.1	2.8	3.4	2.5	3.3	2.9	3.0	32.0
34.0		1.2	1.6	2.3	1.2	1.8	2.7	1.5	2.2	2.8	1.9	2.7	2.3	2.4	34.0
36.0			1.0	1.8		1.3	2.1	1.0	1.7	2.2	1.3	2.1	1.8	1.8	36.0
38.0							1.6		1.2	1.8		1.6	1.3	1.3	38.0
40.0							1.2			1.3		1.2	1.0	1.0	40.0
42.0										1.0					42.0
44.0															44.0
46.0															46.0
48.0															48.0
50.0															50.0
Number of lines	5	4	4	4	3	3	3	3	3	2	2	2	2	2	Number of lines

https://truckmanualshub.com/

Prerequisites:
① Boom operating conditions(fully extended boom length),min. length is 13.3m and max.length is 60m
② The span of outriggers is 7.6m×7.6m
③ Side and rear are applied
④ Counterweight is 12T slideing counterweight

Radius（m）	Main boom (m)															Radius（m）
	13.3	17.6	17.6	17.6	21.9	21.9	21.9	26	26	26	30.5	30.5	30.5	34.8	34.8	
3.0	130.0	110.0	91.0	68.0												3.0
3.5	125.0	103.0	86.0	66.0												3.5
4.0	116.0	99.0	85.0	65.0	90.0	68.0	49.0	77.0	57.5	46.0						4.0
4.5	108.0	93.0	82.0	63.0	88.0	65.0	47.0	73.0	54.5	44.0	63.0	57.7	45.0			4.5
5.0	99.0	88.0	76.0	61.0	78.0	63.0	45.0	69.0	52.5	42.0	57.7	52.5	43.0	52.5	47.1	5.0
6.0	86.0	80.0	70.5	55.5	71.0	57.5	40.0	62.5	48.0	39.5	56.0	49.2	40.3	47.2	45.1	6.0
7.0	63.8	64.6	65.9	48.0	64.1	52.5	37.0	58.0	43.0	37.0	53.0	47.1	36.7	45.0	43.0	7.0
8.0	47.9	49.0	50.2	43.0	48.5	47.0	34.0	49.8	40.0	34.0	48.8	45.1	33.6	42.4	39.7	8.0
9.0	37.8	38.9	39.9	40.5	38.4	40.2	31.5	39.6	35.0	32.0	39.9	40.9	30.6	39.2	36.5	9.0
10.0	30.7	31.7	32.7	33.4	31.3	33.0	29.0	32.5	32.0	29.2	32.7	33.6	28.2	33.1	33.5	10.0
12.0		22.4	23.3	23.9	22.0	23.6	25.5	23.1	23.8	26.0	23.3	24.1	25.9	23.7	25.2	12.0
14.0		16.4	17.3	17.9	16.1	17.7	19.6	17.2	17.8	20.0	17.4	18.2	19.8	17.8	19.2	14.0
16.0					12.0	13.4	15.4	13.0	13.6	15.8	13.2	14.0	15.6	13.6	15.0	16.0
18.0					9.0	10.4	12.3	9.9	10.6	12.7	10.2	10.9	12.5	10.5	11.9	18.0
20.0								7.7	8.3	10.3	7.9	8.6	10.2	8.2	9.6	20.0
22.0								5.9	6.5	8.5	6.1	6.8	8.3	6.5	7.8	22.0
24.0											4.7	5.4	6.9	5.0	6.3	24.0
26.0											3.5	4.2	5.7	3.8	5.1	26.0
28.0														2.9	4.1	28.0
30.0														2.0	3.3	30.0
32.0																32.0
34.0																34.0
36.0																36.0
38.0																38.0
40.0																40.0
42.0																42.0
44.0																44.0
46.0																46.0
48.0																48.0
50.0																50.0
Number of lines	12	12	10	8	10	8	5	8	6	5	6	6	5	5	5	Number of lines

Prerequisites:
① Boom operating conditions(fully extended boom length),min. length is 13.3m and max.length is 60m
② The span of outriggers is 7.6m×7.6m
③ Side and rear are applied
④ Counterweight is 12T slideing counterweight

Radius（m）	Main boom (m)														Radius（m）
	34.8	39.1	39.1	39.1	43.4	43.4	43.4	47.7	47.7	47.7	52	52	56.3	60	
3.0															3.0
3.5															3.5
4.0															4.0
4.5															4.5
5.0	44.0														5.0
6.0	42.5	39.9	36.5	34.0											6.0
7.0	40.3	38.3	35.1	31.5	29.9	26.7	24.6								7.0
8.0	36.8	36.7	33.6	29.6	29.4	26.2	23.1	26.2	23.6	21.0					8.0
9.0	33.6	34.1	31.5	27.0	28.8	25.5	22.1	25.2	22.5	20.4					9.0
10.0	29.8	31.5	28.8	23.9	27.8	24.1	20.4	23.1	20.7	19.4	18.9	16.8			10.0
12.0	25.7	24.7	25.2	21.8	24.7	22.5	18.9	21.6	19.4	17.8	17.3	15.7	16.3	12.3	12.0
14.0	19.7	18.7	19.2	19.7	18.7	19.4	17.6	19.0	17.8	16.3	16.0	14.7	14.1	12.3	14.0
16.0	15.5	14.5	14.9	15.8	14.5	15.2	16.2	14.8	15.6	15.1	14.7	14.1	13.6	12.0	16.0
18.0	12.4	11.4	11.8	12.7	11.4	12.1	13.1	11.7	12.5	13.2	12.1	13.0	12.6	10.9	18.0
20.0	10.0	9.1	9.5	10.3	9.1	9.8	10.7	9.4	10.2	10.8	9.8	10.7	10.3	10.4	20.0
22.0	8.2	7.3	7.7	8.5	7.3	8.0	8.9	7.6	8.4	9.0	8.0	8.9	8.5	8.5	22.0
24.0	6.7	5.9	6.3	7.0	5.9	6.5	7.4	6.1	6.9	7.5	6.5	7.4	7.0	7.1	24.0
26.0	5.5	4.7	5.1	5.8	4.7	5.3	6.2	4.9	5.7	6.3	5.3	6.2	5.8	5.9	26.0
28.0	4.5	3.7	4.1	4.8	3.7	4.3	5.2	4.0	4.7	5.3	4.3	5.2	4.8	4.9	28.0
30.0	3.7	2.9	3.2	3.9	2.9	3.5	4.3	3.1	3.9	4.4	3.5	4.3	3.9	4.0	30.0
32.0		2.1	2.5	3.2	2.1	2.7	3.6	2.4	3.1	3.7	2.8	3.6	3.2	3.3	32.0
34.0		1.5	1.9	2.6	1.5	2.1	2.9	1.8	2.5	3.1	2.1	2.9	2.6	2.6	34.0
36.0		1.0	1.3	2.0	1.0	1.6	2.4	1.2	1.9	2.5	1.6	2.4	2.0	2.1	36.0
38.0						1.1	1.9		1.4	2.0	1.1	1.9	1.5	1.6	38.0
40.0							1.4		1.0	1.6		1.4	1.1	1.2	40.0
42.0										1.2		1.0			42.0
44.0															44.0
46.0															46.0
48.0															48.0
50.0															50.0
Number of lines	5	4	4	4	3	3	3	3	3	2	2	2	2	2	Number of lines

https://truckmanualshub.com/

Prerequisites:
① Boom operating conditions(fully extended boom length),min. length is 13.3m and max.length is 60m
② The span of outriggers is 7.6m×7.6m
③ 360°rotation is applied
④ Counterweight is 20T

Radius（m）	Main boom (m)															Radius（m）
	13.3	17.6	17.6	17.6	21.9	21.9	21.9	26	26	26	30.5	30.5	30.5	34.8	34.8	
3.0	130.0	110.0	91.0	68.0												3.0
3.5	125.0	103.0	88.0	66.0												3.5
4.0	116.0	99.0	85.0	65.0	90.0	68.0	49.0	77.0	57.5	46.0						4.0
4.5	108.0	93.0	82.0	63.0	88.0	65.0	47.0	73.0	55.0	44.0	63.0	57.7	45.0			4.5
5.0	99.0	88.0	76.0	61.0	78.0	63.0	45.0	69.0	52.5	42.0	57.7	52.5	43.0	52.5	47.1	5.0
6.0	86.0	80.0	70.5	55.5	71.0	57.5	40.0	62.5	48.0	39.5	56.0	49.2	40.3	47.2	45.1	6.0
7.0	72.0	73.0	66.0	48.0	65.0	52.5	37.0	58.0	43.0	37.0	53.0	47.1	36.7	45.0	43.0	7.0
8.0	55.6	56.7	57.9	43.0	56.2	47.0	34.0	52.0	40.0	34.0	48.8	45.1	33.6	42.4	39.7	8.0
9.0	44.2	45.2	46.3	40.5	44.8	42.0	31.5	46.0	35.0	32.0	45.7	42.0	30.6	39.2	36.5	9.0
10.0	36.2	37.1	38.1	36.3	36.7	38.0	29.0	37.9	32.0	29.2	38.1	38.5	28.2	37.4	33.5	10.0
12.0		26.5	27.4	28.0	26.2	27.7	25.5	27.2	27.9	26.0	27.5	28.3	26.4	27.9	29.3	12.0
14.0		19.9	20.7	21.3	19.6	21.0	23.0	20.6	21.2	23.4	20.8	21.6	23.2	21.2	22.6	14.0
16.0					15.0	16.4	18.4	16.0	16.6	18.7	16.2	17.0	18.6	16.6	18.0	16.0
18.0					11.7	13.1	14.9	12.7	13.3	15.3	12.9	13.6	15.2	13.2	14.6	18.0
20.0								10.1	10.7	12.7	10.3	11.1	12.6	10.7	12.0	20.0
22.0								8.0	8.6	10.7	8.2	8.9	10.5	8.6	9.9	22.0
24.0											6.5	7.3	8.8	6.9	8.2	24.0
26.0											5.1	5.9	7.4	5.5	6.8	26.0
28.0														4.4	5.6	28.0
30.0														3.4	4.6	30.0
32.0																32.0
34.0																34.0
36.0																36.0
38.0																38.0
40.0																40.0
42.0																42.0
44.0																44.0
46.0																46.0
48.0																48.0
50.0																50.0
52.0																52.0
Number of lines	12	12	10	8	10	8	5	8	6	5	6	6	5	5	5	Number of lines

Prerequisites:
① Boom operating conditions(fully extended boom length),min. length is 13.3m and max.length is 60m
② The span of outriggers is 7.6m×7.6m
③ 360°rotation is applied
④ Counterweight is 20T

Radius（m）	Main boom (m)														Radius（m）
	34.8	39.1	39.1	39.1	43.4	43.4	43.4	47.7	47.7	47.7	52	52	56.3	60	
3.0															3.0
3.5															3.5
4.0															4.0
4.5															4.5
5.0	44.0														5.0
6.0	42.5	39.9	36.5	34.0											6.0
7.0	40.3	38.3	35.1	31.5	29.9	26.7	24.6								7.0
8.0	36.8	36.7	33.6	29.6	29.4	26.2	23.1	26.2	23.6	21.0					8.0
9.0	33.6	34.1	31.5	27.0	28.8	25.5	22.1	25.2	22.5	20.4					9.0
10.0	29.8	31.5	28.8	23.9	27.8	24.1	20.4	23.1	20.7	19.4	18.9	16.8			10.0
12.0	26.5	28.2	25.7	21.8	24.8	22.5	18.9	21.6	19.4	17.8	17.3	15.7	16.3	12.3	12.0
14.0	23.1	22.1	22.5	19.7	21.8	20.5	17.6	19.7	17.8	16.3	16.0	14.7	14.1	12.3	14.0
16.0	18.4	17.5	17.9	18.2	17.5	18.2	16.2	17.8	16.2	15.1	14.7	14.1	13.6	12.0	16.0
18.0	15.0	14.1	14.5	15.3	14.1	14.8	15.0	14.4	14.6	13.7	13.7	13.1	12.6	10.9	18.0
20.0	12.4	11.6	11.9	12.7	11.5	12.2	13.1	11.8	12.6	13.0	12.2	12.0	12.0	10.5	20.0
22.0	10.3	9.4	9.8	10.6	9.4	10.1	11.0	9.7	10.5	11.2	10.1	11.0	10.6	9.7	22.0
24.0	8.6	7.8	8.1	8.9	7.7	8.4	9.3	8.0	8.8	9.4	8.4	9.3	8.9	9.0	24.0
26.0	7.2	6.4	6.7	7.5	6.4	7.0	7.9	6.6	7.4	8.0	7.0	7.9	7.5	7.6	26.0
28.0	6.1	5.2	5.6	6.3	5.2	5.8	6.7	5.5	6.2	6.8	5.9	6.7	6.3	6.4	28.0
30.0	5.1	4.2	4.6	5.3	4.2	4.9	5.7	4.5	5.3	5.9	4.9	5.7	5.3	5.4	30.0
32.0		3.4	3.8	4.5	3.4	4.0	4.9	3.7	4.4	5.0	4.0	4.9	4.5	4.6	32.0
34.0		2.7	3.0	3.8	2.7	3.3	4.1	2.9	3.7	4.3	3.3	4.1	3.8	3.8	34.0
36.0		2.0	2.4	3.1	2.0	2.7	3.5	2.3	3.0	3.6	2.7	3.5	3.1	3.2	36.0
38.0					1.5	2.1	2.9	1.7	2.5	3.0	2.1	2.9	2.6	2.6	38.0
40.0					1.0	1.6	2.4	1.2	2.0	2.5	1.6	2.4	2.1	2.1	40.0
42.0									1.5	2.1	1.2	2.0	1.6	1.7	42.0
44.0									1.1	1.7		1.6	1.2	1.3	44.0
46.0												1.2		1.0	46.0
48.0															48.0
50.0															50.0
52.0															52.0
Number of lines	5	4	4	4	3	3	3	3	3	2	2	2	2	2	Number of lines

https://truckmanualshub.com/

Prerequisites:
① Boom operating conditions(fully extended boom length),min. length is 13.3m and max.length is 60m
② The span of outriggers is 7.6m×7.6m
③ 360°rotation is applied
④ Counterweight is 20T sliding counterweight

Radius（m）	Main boom (m)															Radius（m）
	13.3	17.6	17.6	17.6	21.9	21.9	21.9	26	26	26	30.5	30.5	30.5	34.8	34.8	
3.0	130.0	110.0	91.0	68.0												3.0
3.5	125.0	103.0	88.0	66.0												3.5
4.0	116.0	99.0	85.0	65.0	90.0	68.0	49.0	77.0	57.5	46.0						4.0
4.5	108.0	93.0	82.0	63.0	88.0	65.0	47.0	73.0	55.0	44.0	63.0	57.7	45.0			4.5
5.0	99.0	88.0	76.0	61.0	78.0	63.0	45.0	69.0	52.5	42.0	57.7	52.5	43.0	52.5	47.1	5.0
6.0	86.0	80.0	70.5	55.5	71.0	57.5	40.0	62.5	48.0	39.5	56.0	49.2	40.3	47.2	45.1	6.0
7.0	72.0	73.0	66.0	48.0	65.0	52.5	37.0	58.0	43.0	37.0	53.0	47.1	36.7	45.0	43.0	7.0
8.0	58.5	59.6	58.5	43.0	59.2	47.0	34.0	52.0	40.0	34.0	48.8	45.1	33.6	42.4	39.7	8.0
9.0	46.6	47.6	48.7	40.5	47.2	42.0	31.5	48.0	35.0	32.0	45.7	42.0	30.6	39.2	36.5	9.0
10.0	38.2	39.2	40.2	36.3	38.8	38.0	29.0	39.9	32.0	29.2	40.2	38.5	28.2	37.4	33.5	10.0
12.0		28.1	29.0	29.6	27.8	29.3	25.5	28.8	29.5	26.0	29.0	29.9	26.4	29.4	29.3	12.0
14.0		21.2	22.0	22.6	20.9	22.3	23.0	21.9	22.5	23.5	22.1	22.9	23.2	22.5	23.9	14.0
16.0					16.1	17.5	19.4	17.1	17.7	19.8	17.3	18.1	19.6	17.7	19.0	16.0
18.0					12.7	14.0	15.9	13.6	14.2	16.3	13.8	14.6	16.1	14.2	15.5	18.0
20.0								11.0	11.6	13.6	11.2	11.9	13.4	11.5	12.8	20.0
22.0								8.7	9.4	11.4	9.0	9.7	11.3	9.3	10.7	22.0
24.0											7.2	8.0	9.5	7.6	8.9	24.0
26.0											5.8	6.5	8.0	6.1	7.4	26.0
28.0														4.9	6.2	28.0
30.0														3.9	5.2	30.0
32.0																32.0
34.0																34.0
36.0																36.0
38.0																38.0
40.0																40.0
42.0																42.0
44.0																44.0
46.0																46.0
48.0																48.0
50.0																50.0
52.0																52.0
Number of lines	12	12	10	8	10	8	5	8	6	5	6	6	5	5	5	Number of lines

Prerequisites:
① Boom operating conditions(fully extended boom length),min. length is 13.3m and max.length is 60m
② The span of outriggers is 7.6m×7.6m
③ 360°rotation is applied
④ Counterweight is 20T sliding counterweight

Radius（m）	Main boom (m)														Radius（m）
	34.8	39.1	39.1	39.1	43.4	43.4	43.4	47.7	47.7	47.7	52	52	56.3	60	
3.0															3.0
3.5															3.5
4.0															4.0
4.5															4.5
5.0	44.0														5.0
6.0	42.5	39.9	36.5	34.0											6.0
7.0	40.3	38.3	35.1	31.5	29.9	26.7	24.6								7.0
8.0	36.8	36.7	33.6	29.6	29.4	26.2	23.1	26.2	23.6	21.0					8.0
9.0	33.6	34.1	31.5	27.0	28.8	25.5	22.1	25.2	22.5	20.4					9.0
10.0	29.8	31.5	28.8	23.9	27.8	24.1	20.4	23.1	20.7	19.4	18.9	16.8			10.0
12.0	26.5	28.2	25.7	21.8	24.8	22.5	18.9	21.6	19.4	17.8	17.3	15.7	16.3	12.3	12.0
14.0	23.1	23.4	23.1	19.7	21.8	20.5	17.6	19.7	17.8	16.3	16.0	14.7	14.1	12.3	14.0
16.0	19.2	18.6	19.0	18.2	18.6	18.6	16.2	17.9	16.2	15.1	14.7	14.1	13.6	12.0	16.0
18.0	16.0	15.0	15.4	16.2	15.0	15.7	15.0	15.3	14.6	13.7	13.7	13.1	12.6	10.9	18.0
20.0	13.3	12.4	12.8	13.5	12.4	13.0	13.6	12.6	13.4	13.0	13.0	12.0	12.0	10.5	20.0
22.0	11.1	10.2	10.6	11.4	10.2	10.9	11.8	10.5	11.3	11.9	10.9	11.3	11.4	9.7	22.0
24.0	9.3	8.5	8.8	9.6	8.4	9.1	10.0	8.7	9.5	10.1	9.1	10.0	9.6	9.0	24.0
26.0	7.9	7.0	7.4	8.1	7.0	7.6	8.5	7.3	8.0	8.6	7.6	8.5	8.1	8.2	26.0
28.0	6.6	5.8	6.2	6.9	5.8	6.4	7.3	6.0	6.8	7.4	6.4	7.3	6.9	7.0	28.0
30.0	5.6	4.8	5.1	5.9	4.8	5.4	6.3	5.0	5.8	6.4	5.4	6.2	5.9	5.9	30.0
32.0		3.9	4.3	5.0	3.9	4.5	5.4	4.2	4.9	5.5	4.5	5.4	5.0	5.0	32.0
34.0		3.1	3.5	4.2	3.1	3.8	4.6	3.4	4.1	4.7	3.8	4.6	4.2	4.3	34.0
36.0		2.5	2.8	3.6	2.5	3.1	3.9	2.7	3.5	4.0	3.1	3.9	3.6	3.6	36.0
38.0					1.9	2.5	3.3	2.2	2.9	3.5	2.5	3.3	3.0	3.0	38.0
40.0					1.4	2.0	2.8	1.6	2.4	2.9	2.0	2.8	2.4	2.5	40.0
42.0								1.2	1.9	2.5	1.5	2.3	2.0	2.0	42.0
44.0									1.5	2.0	1.1	1.9	1.5	1.6	44.0
46.0												1.5	1.2	1.2	46.0
48.0												1.2		1.0	48.0
50.0															50.0
52.0															52.0
Number of lines	5	4	4	4	3	3	3	3	3	2	2	2	2	2	Number of lines

https://truckmanualshub.com/

Prerequisites:
① Boom operating conditions(fully extended boom length),min. length is 13.3m and max.length is 60m
② The span of outriggers is 7.6m×7.6m
③ 360°rotation is applied
④ Counterweight is 27T

Radius（m）	Main boom (m)															Radius（m）
	13.3	17.6	17.6	17.6	21.9	21.9	21.9	26	26	26	30.5	30.5	30.5	34.8	34.8	
3.0	130.0	110.0	91.0	68.0												3.0
3.5	125.0	103.0	88.0	66.0												3.5
4.0	116.0	99.0	85.0	65.0	90.0	68.0	49.0	77.0	57.5	46.0						4.0
4.5	108.0	93.0	82.0	63.0	88.0	65.0	47.0	73.0	55.0	44.0	63.0	57.7	45.0			4.5
5.0	99.0	88.0	76.0	61.0	78.0	63.0	45.0	69.0	52.5	42.0	57.7	52.5	43.0	52.5	47.1	5.0
6.0	86.0	80.0	70.5	55.5	71.0	57.5	40.0	62.5	48.0	39.5	56.0	49.2	40.3	47.2	45.1	6.0
7.0	72.0	73.0	66.0	48.0	65.0	52.5	37.0	58.0	43.0	37.0	53.0	47.1	36.7	45.0	43.0	7.0
8.0	62.0	62.0	58.5	43.0	59.5	47.0	34.0	52.0	40.0	34.0	48.8	45.1	33.6	42.4	39.7	8.0
9.0	54.0	52.0	51.0	40.5	51.6	42.0	31.5	48.0	35.0	32.0	45.7	42.0	30.6	39.2	36.5	9.0
10.0	42.0	42.9	43.9	36.3	42.5	38.0	29.0	43.7	32.0	29.2	41.0	38.5	28.2	37.4	33.5	10.0
12.0		31.0	31.9	32.5	30.7	32.2	25.5	31.7	29.5	26.0	31.9	31.5	26.4	32.3	29.3	12.0
14.0		23.5	24.4	24.9	23.2	24.7	23.0	24.2	24.9	23.5	24.4	25.2	23.2	24.8	26.0	14.0
16.0					18.1	19.5	21.0	19.1	19.7	21.0	19.3	20.0	21.6	19.6	21.0	16.0
18.0					14.4	15.7	17.6	15.3	15.9	18.0	15.5	16.3	17.8	15.9	17.2	18.0
20.0								12.5	13.1	15.1	12.7	13.4	14.9	13.0	14.3	20.0
22.0								10.2	10.8	12.8	10.4	11.1	12.6	10.8	12.1	22.0
24.0											8.6	9.3	10.8	9.0	10.2	24.0
26.0											7.1	7.8	9.2	7.5	8.7	26.0
28.0														6.2	7.4	28.0
30.0														5.1	6.4	30.0
32.0																32.0
34.0																34.0
36.0																36.0
38.0																38.0
40.0																40.0
42.0																42.0
44.0																44.0
46.0																46.0
48.0																48.0
50.0																50.0
52.0																52.0
54.0																54.0
56.0																56.0
Number of lines	12	12	10	8	10	8	5	8	6	5	6	6	5	5	5	Number of lines

Prerequisites:
① Boom operating conditions(fully extended boom length),min. length is 13.3m and max.length is 60m
② The span of outriggers is 7.6m×7.6m
③ 360°rotation is applied
④ Counterweight is 27T

Radius（m）	Main boom (m)														Radius（m）
	34.8	39.1	39.1	39.1	43.4	43.4	43.4	47.7	47.7	47.7	52	52	56.3	60	
3.0															3.0
3.5															3.5
4.0															4.0
4.5															4.5
5.0	44.0														5.0
6.0	42.5	39.9	36.5	34.0											6.0
7.0	40.3	38.3	35.1	31.5	29.9	26.7	24.6								7.0
8.0	36.8	36.7	33.6	29.6	29.4	26.2	23.1	26.2	23.6	21.0					8.0
9.0	33.6	34.1	31.5	27.0	28.8	25.5	22.1	25.2	22.5	20.4					9.0
10.0	29.8	31.5	28.8	23.9	27.8	24.1	20.4	23.1	20.7	19.4	18.9	16.8			10.0
12.0	26.5	28.2	25.7	21.8	24.8	22.5	18.9	21.6	19.4	17.8	17.3	15.7	16.3	12.3	12.0
14.0	23.1	25.7	23.1	19.7	21.8	20.5	17.6	19.7	17.8	16.3	16.0	14.7	14.1	12.3	14.0
16.0	19.2	20.5	20.5	18.2	19.5	18.6	16.2	17.9	16.2	15.1	14.7	14.1	13.6	12.0	16.0
18.0	17.7	16.8	17.2	16.8	16.8	16.9	15.0	16.2	14.6	13.7	13.7	13.1	12.6	10.9	18.0
20.0	14.8	13.9	14.3	15.0	13.9	14.5	13.6	14.1	13.5	13.0	13.0	12.0	12.0	10.5	20.0
22.0	12.5	11.6	12.0	12.7	11.6	12.3	12.9	11.9	12.5	12.0	12.0	11.3	11.5	9.7	22.0
24.0	10.6	9.8	10.2	10.9	9.8	10.4	11.3	10.0	10.8	10.9	10.4	10.6	10.9	9.0	24.0
26.0	9.1	8.3	8.7	9.4	8.3	8.9	9.7	8.5	9.3	9.9	8.9	9.7	9.4	8.2	26.0
28.0	7.8	7.0	7.4	8.1	7.0	7.6	8.5	7.3	8.0	8.6	7.6	8.5	8.1	7.7	28.0
30.0	6.8	5.9	6.3	7.0	5.9	6.6	7.4	6.2	6.9	7.5	6.6	7.4	7.0	7.1	30.0
32.0		5.0	5.4	6.1	5.0	5.6	6.4	5.3	6.0	6.6	5.6	6.4	6.1	6.1	32.0
34.0		4.2	4.5	5.3	4.2	4.8	5.6	4.4	5.2	5.8	4.8	5.6	5.3	5.3	34.0
36.0		3.4	3.8	4.5	3.4	4.1	4.9	3.7	4.4	5.0	4.1	4.9	4.5	4.6	36.0
38.0					2.8	3.4	4.2	3.1	3.8	4.4	3.4	4.2	3.9	3.9	38.0
40.0					2.2	2.8	3.7	2.5	3.2	3.8	2.9	3.7	3.3	3.4	40.0
42.0								2.0	2.7	3.3	2.4	3.1	2.8	2.9	42.0
44.0								1.5	2.2	2.8	1.9	2.7	2.3	2.4	44.0
46.0											1.5	2.3	1.9	2.0	46.0
48.0											1.1	1.9	1.5	1.6	48.0
50.0													1.2	1.2	50.0
52.0													1.0	1.0	52.0
54.0															54.0
56.0															56.0
Number of lines	5	4	4	4	3	3	3	3	3	2	2	2	2	2	Number of lines

https://truckmanualshub.com/

Prerequisites:
① Boom operating conditions(fully extended boom length),min. length is 13.3m and max.length is 60m
② The span of outriggers is 7.6m×7.6m
③ 360°rotation is applied
④ Counterweight is 27T sliding counterweight

Radius（m）	Main boom (m)															Radius（m）
	13.3	17.6	17.6	17.6	21.9	21.9	21.9	26	26	26	30.5	30.5	30.5	34.8	34.8	
3.0	130.0	110.0	91.0	68.0												3.0
3.5	125.0	103.0	88.0	66.0												3.5
4.0	116.0	99.0	85.0	65.0	90.0	68.0	49.0	77.0	57.5	46.0						4.0
4.5	108.0	93.0	82.0	63.0	88.0	65.0	47.0	73.0	55.0	44.0	63.0	57.7	45.0			4.5
5.0	99.0	88.0	76.0	61.0	78.0	63.0	45.0	69.0	52.5	42.0	57.7	52.5	43.0	52.5	47.1	5.0
6.0	86.0	80.0	70.5	55.5	71.0	57.5	40.0	62.5	48.0	39.5	56.0	49.2	40.3	47.2	45.1	6.0
7.0	72.0	73.0	66.0	48.0	65.0	52.5	37.0	58.0	43.0	37.0	53.0	47.1	36.7	45.0	43.0	7.0
8.0	62.0	62.0	58.5	43.0	59.5	47.0	34.0	52.0	40.0	34.0	48.8	45.1	33.6	42.4	39.7	8.0
9.0	54.0	53.0	51.0	40.5	52.5	42.0	31.5	48.0	35.0	32.0	45.7	42.0	30.6	39.2	36.5	9.0
10.0	44.7	45.7	46.0	36.3	45.3	38.0	29.0	45.0	32.0	29.2	41.0	38.5	28.2	37.4	33.5	10.0
12.0		33.1	34.1	34.2	32.8	33.0	25.5	33.8	29.5	26.0	34.1	31.5	26.4	33.0	29.3	12.0
14.0		25.2	26.1	26.7	25.0	26.4	23.0	25.9	26.2	23.5	26.2	27.0	23.2	26.5	26.0	14.0
16.0					19.6	21.0	21.0	20.5	21.2	21.0	20.7	21.5	21.7	21.1	21.4	16.0
18.0					15.6	17.0	18.9	16.6	17.2	18.3	16.8	17.5	19.1	17.1	18.5	18.0
20.0								13.6	14.2	16.2	13.8	14.5	16.0	14.1	15.4	20.0
22.0								11.2	11.8	13.8	11.4	12.1	13.6	11.8	13.0	22.0
24.0											9.5	10.2	11.7	9.9	11.1	24.0
26.0											7.9	8.6	10.1	8.3	9.5	26.0
28.0														7.0	8.2	28.0
30.0														5.8	7.0	30.0
32.0																32.0
34.0																34.0
36.0																36.0
38.0																38.0
40.0																40.0
42.0																42.0
44.0																44.0
46.0																46.0
48.0																48.0
50.0																50.0
52.0																52.0
54.0																54.0
56.0																56.0
Number of lines	12	12	10	8	10	8	5	8	6	5	6	6	5	5	5	Number of lines

Prerequisites:
① Boom operating conditions(fully extended boom length),min. length is 13.3m and max.length is 60m
② The span of outriggers is 7.6m×7.6m
③ 360°rotation is applied
④ Counterweight is 27T sliding counterweight

Radius（m）	Main boom (m)														Radius（m）
	34.8	39.1	39.1	39.1	43.4	43.4	43.4	47.7	47.7	47.7	52	52	56.3	60	
3.0															3.0
3.5															3.5
4.0															4.0
4.5															4.5
5.0	44.0														5.0
6.0	42.5	39.9	36.5	34.0											6.0
7.0	40.3	38.3	35.1	31.5	29.9	26.7	24.6								7.0
8.0	36.8	36.7	33.6	29.6	29.4	26.2	23.1	26.2	23.6	21.0					8.0
9.0	33.6	34.1	31.5	27.0	28.8	25.5	22.1	25.2	22.5	20.4					9.0
10.0	29.8	31.5	28.8	23.9	27.8	24.1	20.4	23.1	20.7	19.4	18.9	16.8			10.0
12.0	26.5	28.2	25.7	21.8	24.8	22.5	18.9	21.6	19.4	17.8	17.3	15.7	16.3	12.3	12.0
14.0	23.1	26.0	23.1	19.7	21.8	20.5	17.6	19.7	17.8	16.3	16.0	14.7	14.1	12.3	14.0
16.0	19.2	22.0	20.5	18.2	19.5	18.6	16.2	17.9	16.2	15.1	14.7	14.1	13.6	12.0	16.0
18.0	17.8	18.0	18.4	16.8	17.8	16.9	15.0	16.2	14.6	13.7	13.7	13.1	12.6	10.9	18.0
20.0	15.9	15.0	15.4	15.2	15.0	15.3	13.6	14.5	13.5	13.0	13.0	12.0	12.0	10.5	20.0
22.0	13.5	12.6	13.0	13.7	12.6	13.2	12.9	12.9	12.5	12.0	12.0	11.3	11.5	9.7	22.0
24.0	11.5	10.7	11.1	11.8	10.7	11.3	12.1	10.9	11.4	10.9	11.3	10.6	11.0	9.0	24.0
26.0	9.9	9.1	9.5	10.2	9.1	9.7	10.6	9.4	10.1	10.5	9.7	9.9	10.2	8.2	26.0
28.0	8.6	7.8	8.1	8.9	7.8	8.4	9.2	8.0	8.8	9.3	8.4	9.2	8.8	7.7	28.0
30.0	7.5	6.6	7.0	7.7	6.6	7.3	8.1	6.9	7.6	8.2	7.3	8.1	7.7	7.2	30.0
32.0		5.7	6.0	6.7	5.7	6.3	7.1	5.9	6.6	7.2	6.3	7.1	6.7	6.8	32.0
34.0		4.8	5.2	5.9	4.8	5.4	6.2	5.1	5.8	6.4	5.4	6.2	5.9	5.9	34.0
36.0		4.0	4.4	5.1	4.0	4.6	5.5	4.3	5.0	5.6	4.7	5.5	5.1	5.2	36.0
38.0					3.4	4.0	4.8	3.6	4.3	4.9	4.0	4.8	4.4	4.5	38.0
40.0					2.7	3.4	4.2	3.0	3.7	4.3	3.4	4.2	3.8	3.9	40.0
42.0								2.5	3.2	3.8	2.8	3.6	3.3	3.3	42.0
44.0								2.0	2.7	3.3	2.4	3.1	2.8	2.9	44.0
46.0											1.9	2.7	2.4	2.4	46.0
48.0											1.5	2.3	2.0	2.0	48.0
50.0													1.6	1.7	50.0
52.0													1.3	1.3	52.0
54.0														1.0	54.0
56.0															56.0
Number of lines	5	4	4	4	3	3	3	3	3	2	2	2	2	2	Number of lines

https://truckmanualshub.com/

Prerequisites:
① Boom operating conditions(fully extended boom length),min. length is 13.3m and max.length is 60m
② The span of outriggers is 7.6m×7.6m
③ 360°rotation is applied
④ Counterweight is 40T

Radius（m）	Main boom (m)															Radius（m）
	13.3	17.6	17.6	17.6	21.9	21.9	21.9	26	26	26	30.5	30.5	30.5	34.8	34.8	
3.0	130.0	110.0	91.0	68.0												3.0
3.5	125.0	103.0	88.0	66.0												3.5
4.0	116.0	99.0	85.0	65.0	90.0	68.0	49.0	77.0	57.5	46.0						4.0
4.5	108.0	93.0	82.0	63.0	88.0	65.0	47.0	73.0	55.0	44.0	63.0	57.7	45.0			4.5
5.0	99.0	88.0	76.0	61.0	78.0	63.0	45.0	69.0	52.5	42.0	57.7	52.5	43.0	52.5	47.1	5.0
6.0	86.0	80.0	70.5	55.5	71.0	57.5	40.0	62.5	48.0	39.5	56.0	49.2	40.3	47.2	45.1	6.0
7.0	72.0	73.0	66.0	48.0	65.0	52.5	37.0	58.0	43.0	37.0	53.0	47.1	36.7	45.0	43.0	7.0
8.0	62.0	62.0	58.5	43.0	59.5	47.0	34.0	52.0	40.0	34.0	48.8	45.1	33.6	42.4	39.7	8.0
9.0	54.0	53.0	51.0	40.5	52.5	42.0	31.5	48.0	35.0	32.0	45.7	42.0	30.6	39.2	36.5	9.0
10.0	47.0	47.0	46.0	36.3	47.0	38.0	29.0	45.0	32.0	29.2	41.0	38.5	28.2	37.4	33.5	10.0
12.0		40.0	40.2	34.2	39.0	33.0	25.5	39.0	29.5	26.0	36.0	31.5	26.4	33.0	29.3	12.0
14.0		30.5		29.0	30.0	28.0	23.0	31.3	26.2	23.5	31.5	28.5	23.2	28.2	26.0	14.0
16.0					23.8	25.2	21.0	24.5	23.0	21.0	25.0	25.5	21.7	25.2	21.4	16.0
18.0					19.3	20.7	19.5	20.2	20.8	18.3	20.4	21.2	19.5	20.7	18.6	18.0
20.0								16.8	17.4	16.8	17.0	17.7	17.8	17.4	17.0	20.0
22.0								14.1	14.5	14.8	14.2	15.0	16.5	14.6	15.9	22.0
24.0											11.9	12.8	14.3	12.3	13.5	24.0
26.0											10.1	10.8	12.4	10.5	11.7	26.0
28.0														8.9	10.1	28.0
30.0														7.6	8.8	30.0
32.0																32.0
34.0																34.0
36.0																36.0
38.0																38.0
40.0																40.0
42.0																42.0
44.0																44.0
46.0																46.0
48.0																48.0
50.0																50.0
52.0																52.0
54.0	1.0															54.0
56.0																56.0
Number of lines	12	12	10	8.0	10	8	5	8	6	5	6	6	5	5	5	Number of lines

Prerequisites:
① Boom operating conditions(fully extended boom length),min. length is 13.3m and max.length is 60m
② The span of outriggers is 7.6m×7.6m
③ 360°rotation is applied
④ Counterweight is 40T

Radius（m）	Main boom (m)														Radius（m）
	34.8	39.1	39.1	39.1	43.4	43.4	43.4	47.7	47.7	47.7	52	52	56.3	60	
3.0															3.0
3.5															3.5
4.0															4.0
4.5															4.5
5.0	44.0														5.0
6.0	42.5	39.9	36.5	34.0											6.0
7.0	40.3	38.3	35.1	31.5	29.9	26.7	24.6								7.0
8.0	36.8	36.7	33.6	29.6	29.4	26.2	23.1	26.2	23.6	21.0					8.0
9.0	33.6	34.1	31.5	27.0	28.8	25.5	22.1	25.2	22.5	20.4					9.0
10.0	29.8	31.5	28.8	23.9	27.8	24.1	20.4	23.1	20.7	19.4	18.9	16.8			10.0
12.0	26.5	28.2	25.7	21.8	24.8	22.5	18.9	21.6	19.4	17.8	17.3	15.7	16.3	12.3	12.0
14.0	23.1	26.0	23.1	19.7	21.8	20.5	17.6	19.7	17.8	16.3	16.0	14.7	14.1	12.3	14.0
16.0	19.2	23.0	20.5	18.2	19.5	18.6	16.2	17.9	16.2	15.1	14.7	14.1	13.6	12.0	16.0
18.0	17.8	20.5	18.5	16.8	17.8	16.9	15.0	16.2	14.6	13.7	13.7	13.1	12.6	10.9	18.0
20.0	16.0	17.5	16.5	15.2	17.0	15.3	13.6	14.5	13.5	13.0	13.0	12.0	12.0	10.5	20.0
22.0	14.8	15.2	15.5	14.0	15.0	13.8	12.9	12.8	12.5	12.0	12.0	11.3	11.5	9.7	22.0
24.0	13.4	13.0	13.0	13.0	13.0	13.0	12.1	11.8	11.4	10.9	11.6	10.6	11.0	9.0	24.0
26.0	12.1	11.2	11.5	12.0	11.2	11.8	11.3	11.1	10.4	10.5	11.0	9.9	10.5	8.2	26.0
28.0	10.5	9.7	10.0	10.8	9.7	10.3	10.3	10.0	10.0	9.3	10.0	9.3	10.0	7.7	28.0
30.0	9.3	8.4	8.8	9.5	8.4	9.0	9.8	8.6	9.0	8.8	9.0	8.7	9.2	7.2	30.0
32.0		7.3	7.7	8.2	7.4	7.8	8.7	7.6	8.2	8.0	7.9	8.3	8.3	6.9	32.0
34.0		6.3	6.6	7.4	6.3	6.9	7.8	6.5	7.3	7.5	7.0	7.6	7.4	6.5	34.0
36.0		5.3	5.6	6.4	5.5	6.0	6.9	5.7	6.4	6.9	6.1	6.9	6.6	5.9	36.0
38.0					4.8	5.2	6.0	5.0	5.7	6.2	5.3	6.1	5.7	5.6	38.0
40.0					4.0	4.5	5.4	4.3	5.0	5.6	4.6	5.4	5.1	5.1	40.0
42.0								3.6	4.2	5.0	4.0	4.9	4.5	4.6	42.0
44.0								3.0	3.6	4.4	3.5	4.3	3.9	4.0	44.0
46.0											3.0	3.8	3.4	3.5	46.0
48.0											2.6	3.4	3.0	3.1	48.0
50.0													2.5	2.7	50.0
52.0													2.0	2.3	52.0
54.0														2.0	54.0
56.0														1.6	56.0
Number of lines	5	4	4	4	3	3	3	3	3	2	2	2	2	2	Number of lines

https://truckmanualshub.com/

Prerequisites:
① Boom operating conditions(fully extended boom length),min. length is 13.3m and max.length is 60m
② The span of outriggers is 7.6m×7.6m
③ 360°rotation is applied
④ Counterweight is 40T sliding counterweight

Radius（m）	Main boom (m)															Radius（m）
	13.3	17.6	17.6	17.6	21.9	21.9	21.9	26	26	26	30.5	30.5	30.5	34.8	34.8	
3.0	130.0	110.0	91.0	68.0												3.0
3.5	125.0	103.0	88.0	66.0												3.5
4.0	116.0	99.0	85.0	65.0	90.0	68.0	49.0	77.0	57.5	46.0						4.0
4.5	108.0	93.0	82.0	63.0	88.0	65.0	47.0	73.0	55.0	44.0	63.0	57.7	45.0			4.5
5.0	99.0	88.0	76.0	61.0	78.0	63.0	45.0	69.0	52.5	42.0	57.7	52.5	43.0	52.5	47.1	5.0
6.0	86.0	80.0	70.5	55.5	71.0	57.5	40.0	62.5	48.0	39.5	56.0	49.2	40.3	47.2	45.1	6.0
7.0	72.0	73.0	66.0	48.0	65.0	52.5	37.0	58.0	43.0	37.0	53.0	47.1	36.7	45.0	43.0	7.0
8.0	62.0	62.0	58.5	43.0	59.5	47.0	34.0	52.0	40.0	34.0	48.8	45.1	33.6	42.4	39.7	8.0
9.0	54.0	53.0	51.0	40.5	52.5	42.0	31.5	48.0	35.0	32.0	45.7	42.0	30.6	39.2	36.5	9.0
10.0	47.0	47.0	46.0	36.3	47.0	38.0	29.0	45.0	32.0	29.2	41.0	38.5	28.2	37.4	33.5	10.0
12.0		40.4	41.0	34.2	40.0	33.0	25.5	39.0	29.5	26.0	36.0	31.5	26.4	33.0	29.3	12.0
14.0		31.2	32.0	32.0	30.5	28.0	23.0	31.3	26.2	23.5	31.5	28.5	23.2	28.2	26.0	14.0
16.0					24.3	25.7	21.0	24.5	23.0	21.0	25.0	25.5	21.7	25.2	21.4	16.0
18.0					19.7	21.4	19.5	20.7	21.0	18.3	21.2	21.9	19.5	20.7	18.6	18.0
20.0								17.3	17.8	17.0	17.5	18.4	17.8	18.0	17.0	20.0
22.0								14.5	15.0	16.2	14.8	15.5	16.7	15.0	16.0	22.0
24.0											12.5	13.2	14.6	12.8	14.0	24.0
26.0											10.6	11.3	12.8	11.0	12.2	26.0
28.0														9.4	10.6	28.0
30.0														8.1	9.3	30.0
32.0																32.0
34.0																34.0
36.0																36.0
38.0																38.0
40.0																40.0
42.0																42.0
44.0																44.0
46.0																46.0
48.0																48.0
50.0																50.0
52.0																52.0
54.0	1.0															54.0
56.0																56.0
Number of lines	12	12	10	8.0	10	8	5	8	6	5	6	6	5	5	5	Number of lines

Prerequisites:
① Boom operating conditions(fully extended boom length),min. length is 13.3m and max.length is 60m
② The span of outriggers is 7.6m×7.6m
③ 360°rotation is applied
④ Counterweight is 40T sliding counterweight

Radius（m）	Main boom (m)														Radius（m）
	34.8	39.1	39.1	39.1	43.4	43.4	43.4	47.7	47.7	47.7	52	52	56.3	60	
3.0															3.0
3.5															3.5
4.0															4.0
4.5															4.5
5.0	44.0														5.0
6.0	42.5	39.9	36.5	34.0											6.0
7.0	40.3	38.3	35.1	31.5	29.9	26.7	24.6								7.0
8.0	36.8	36.7	33.6	29.6	29.4	26.2	23.1	26.2	23.6	21.0					8.0
9.0	33.6	34.1	31.5	27.0	28.8	25.5	22.1	25.2	22.5	20.4					9.0
10.0	29.8	31.5	28.8	23.9	27.8	24.1	20.4	23.1	20.7	19.4	18.9	16.8			10.0
12.0	26.5	28.2	25.7	21.8	24.8	22.5	18.9	21.6	19.4	17.8	17.3	15.7	16.3	12.3	12.0
14.0	23.1	26.0	23.1	19.7	21.8	20.5	17.6	19.7	17.8	16.3	16.0	14.7	14.1	12.3	14.0
16.0	19.2	23.0	20.5	18.2	19.5	18.6	16.2	17.9	16.2	15.1	14.7	14.1	13.6	12.0	16.0
18.0	17.8	20.5	18.5	16.8	17.8	16.9	15.0	16.2	14.6	13.7	13.7	13.1	12.6	10.9	18.0
20.0	16.0	17.5	16.5	15.2	17.3	15.3	13.6	14.5	13.5	13.0	13.0	12.0	12.0	10.5	20.0
22.0	14.8	15.8	16.0	14.0	15.4	13.8	12.9	13.8	12.5	12.0	12.0	11.3	11.5	9.7	22.0
24.0	13.4	13.6	14.0	13.0	13.5	13.3	12.1	13.0	11.4	10.9	11.6	10.6	11.0	9.0	24.0
26.0	12.5	11.7	12.1	12.7	11.7	12.4	11.3	11.8	10.4	10.5	11.0	9.9	10.5	8.2	26.0
28.0	11.0	10.3	10.6	11.2	10.2	10.8	10.3	10.5	10.0	9.3	10.7	9.3	10.2	7.7	28.0
30.0	9.7	8.9	9.3	10.0	8.9	9.6	9.8	9.2	9.7	8.8	9.6	8.7	9.5	7.2	30.0
32.0		7.8	8.1	8.8	7.8	8.4	9.2	8.0	8.8	8.0	8.4	8.3	8.8	6.9	32.0
34.0		6.8	7.1	7.8	6.8	7.4	8.2	7.0	7.8	7.7	7.4	8.0	7.8	6.5	34.0
36.0		5.8	6.3	7.0	5.9	6.6	7.4	6.2	6.9	7.3	6.5	7.4	7.0	6.2	36.0
38.0					5.2	5.8	6.6	5.4	6.1	6.7	5.8	6.6	6.2	5.9	38.0
40.0					4.5	5.1	5.9	4.7	5.4	6.0	5.1	5.9	5.5	5.4	40.0
42.0								4.1	4.8	5.4	4.5	5.3	5.0	5.0	42.0
44.0								3.6	4.2	4.9	4.0	4.7	4.4	4.5	44.0
46.0											3.5	4.2	3.9	4.0	46.0
48.0											3.0	3.8	3.4	3.5	48.0
50.0													3.0	3.1	50.0
52.0													2.6	2.7	52.0
54.0														2.3	54.0
56.0														2.0	56.0
Number of lines	5	4	4	4	3	3	3	3	3	2	2	2	2	2	Number of lines

https://truckmanualshub.com/

Prerequisites:
① Boom operating conditions(fully extended boom length),min. length is 13.3m and max.length is 60m
② The span of outriggers is 8.5m×5.3m
③ Side and rear are applied
④ Counterweight is 0T

Radius（m）	Main boom (m)															Radius（m）
	13.3	17.6	17.6	17.6	21.9	21.9	21.9	26.0	26.0	26.0	30.5	30.5	30.5	34.8	34.8	
3.0	90.00	80	70.00	62.00												3.0
3.5	80.00	70	70	62												3.5
4.0	65.00	65	65	62.00	60	60	57.5	62	58	55.7						4.0
4.5	47.71	37.47	39.20	39.87	38.00	39.39	41.61	38.88	37.72	41.89	38.51	39.89	39.00			4.5
5.0	36.58	28.66	30.16	30.73	29.13	30.32	32.24	29.88	28.88	32.48	29.56	30.75	32.27	30.37	31.69	5.0
6.0	28.00	18.82	20.05	20.53	19.21	20.19	21.76	19.83	19.01	21.96	19.57	20.54	21.79	20.22	21.31	6.0
7.0	20.00	13.46	14.54	14.96	13.79	14.66	16.05	14.34	13.62	16.22	14.11	14.97	16.07	14.69	15.65	7.0
8.0	15.00	10.07	11.07	11.45	10.39	11.18	12.45	10.89	10.22	12.61	10.68	11.46	12.47	11.21	12.09	8.0
9.0	11.00	7.75	8.68	9.04	8.04	8.79	9.98	8.51	7.89	10.13	8.32	9.05	10.00	8.81	9.64	9.0
10.0	9.00	6.05	6.94	7.28	6.33	7.04	8.18	6.78	6.19	8.32	6.59	7.29	8.19	7.07	7.85	10.0
12.0		3.73	4.57	4.89	4.00	4.66	5.72	4.42	3.87	5.85	4.24	4.90	5.73	4.68	5.41	12.0
14.0		1.85	2.52	2.77	2.07	2.60	3.44	2.40	1.97	3.54	2.27	2.78	3.45	2.62	3.19	14.0
16.0					1.18	1.69	2.51	1.51	1.09	2.60	1.38	1.88	2.51	1.71	2.27	16.0
18.0							1.82			1.91		1.20	1.82	1.04	1.59	18.0
20.0										1.38			1.29		1.06	20.0
22.0										1.55			1.34			22.0
24.0																24.0
26.0																26.0
28.0																28.0
30.0																30.0
32.0																32.0
34.0																34.0
36.0																36.0
38.0																38.0
40.0																40.0
42.0																42.0
44.0																44.0
46.0																46.0
48.0																48.0
50.0																50.0
52.0																52.0
54.0																54.0
56.0																56.0
Telescopiing mode																
II	0.00	46.00	0.00	0.00	46.00	0.00	0.00	46.00	92.00	0.00	46.00	92.00	0.00	92.00	46.00	II
III	0.00	0.00	0.00	0.00	46.00	46.00	0.00	46.00	46.00	0.00	46.00	46.00	46.00	46.00	46.00	III
IV	0.00	0.00	46.00	0.00	0.00	46.00	0.00	46.00	0.00	46.00	46.00	46.00	46.00	46.00	46.00	IV
V	0.00	0.00	0.00	46.00	0.00	0.00	46.00	0.00	0.00	46.00	46.00	0.00	46.00	46.00	46.00	V
VI	0.00	0.00	0.00	0.00	0.00	0.00	46.00	0.00	0.00	46.00	0.00	0.00	46.00	0.00	46.00	VI

Prerequisites:
① Boom operating conditions(fully extended boom length),min. length is 13.3m and max.length is 60m
② The span of outriggers is 8.5m×5.3m
③ Side and rear are applied
④ Counterweight is 0T

Radius（m）	Main boom (m)														Radius（m）
	34.8	39.1	39.1	39.1	43.4	43.4	43.4	47.7	47.7	47.7	52.0	52.0	56.3	60.0	
3.0															3.0
3.5															3.5
4.0															4.0
4.5															4.5
5.0	32.11														5.0
6.0	21.66	20.95	21.25	21.92											6.0
7.0	15.95	15.33	15.60	16.18											7.0
8.0	12.36	11.79	12.04	12.57	11.77	12.17	12.81								8.0
9.0	9.90	9.36	9.59	10.09	9.34	9.72	10.31	9.48	9.95	10.36					9.0
10.0	8.10	7.58	7.80	8.28	7.57	7.92	8.49	7.70	8.15	8.54	7.92	8.45	8.22	8.26	10.0
12.0	5.64	5.17	5.37	5.82	5.15	5.48	6.01	5.28	5.69	6.06	5.48	5.97	5.76	5.79	12.0
14.0	3.38	3.00	3.16	3.51	2.99	3.25	3.67	3.08	3.41	3.70	3.25	3.64	3.47	3.49	14.0
16.0	2.45	2.08	2.24	2.58	2.07	2.32	2.73	2.16	2.48	2.76	2.32	2.70	2.53	2.56	16.0
18.0	1.76	1.40	1.55	1.89	1.39	1.64	2.03	1.48	1.79	2.06	1.64	2.00	1.84	1.87	18.0
20.0	1.23		1.03	1.35		1.11	1.49		1.26	1.53	1.11	1.46	1.31	1.33	20.0
22.0	1.24						1.07			1.10		1.04			22.0
24.0															24.0
26.0															26.0
28.0															28.0
30.0															30.0
32.0															32.0
34.0															34.0
36.0															36.0
38.0															38.0
40.0															40.0
42.0															42.0
44.0															44.0
46.0															46.0
48.0															48.0
50.0															50.0
52.0															52.0
54.0															54.0
56.0															56.0
Telescopiing mode															
II	0.00	92.00	46.00	46.00	92.00	46.00	46.00	92.00	46.00	46.00	92.00	46.00	92.00	100.00	II
III	92.00	46.00	92.00	46.00	92.00	92.00	46.00	92.00	92.00	46.00	92.00	92.00	92.00	100.00	III
IV	46.00	46.00	46.00	46.00	46.00	92.00	46.00	92.00	92.00	92.00	92.00	92.00	92.00	100.00	IV
V	46.00	46.00	46.00	46.00	46.00	46.00	92.00	46.00	92.00	92.00	92.00	92.00	92.00	100.00	V
VI	46.00	46.00	46.00	92.00	46.00	46.00	92.00	46.00	46.00	92.00	46.00	92.00	92.00	100.00	VI

https://truckmanualshub.com/

Prerequisites:
① Boom operating conditions(fully extended boom length),min. length is 13.3m and max.length is 60m
② The span of outriggers is 8.5m×5.3m
③ Side and rear are applied
④ Counterweight is 12T

Radius（m）	Main boom (m)															Radius（m）
	13.3	17.6	17.6	17.6	21.9	21.9	21.9	26.0	26.0	26.0	30.5	30.5	30.5	34.8	34.8	
3.0	100.0	88.0	72.8	54.4												3.0
3.5	100.0	82.4	68.8	52.8												3.5
4.0	92.8	79.2	68.0	52.0	72.0	54.4	39.2	61.6	46.0	36.8						4.0
4.5	73.6	74.4	65.6	50.4	70.4	52.0	37.6	58.4	43.6	35.2	50.4	46.2	36.0			4.5
5.0	56.8	57.5	58.7	48.8	57.0	50.4	36.0	55.2	42.0	33.6	46.2	42.0	34.4	42.0	37.7	5.0
6.0	37.9	38.5	39.5	40.1	38.1	39.8	32.0	39.2	38.4	31.6	39.4	39.4	32.2	37.8	36.1	6.0
7.0	27.6	28.1	29.0	29.6	27.8	29.3	29.6	28.8	29.4	29.6	29.0	29.8	29.4	29.4	30.8	7.0
8.0	20.9	21.6	22.4	23.0	21.3	22.7	24.5	22.2	22.8	24.9	22.4	23.2	24.7	22.7	24.1	8.0
9.0	16.4	17.1	17.9	18.4	16.8	18.1	19.9	17.7	18.3	20.2	17.9	18.6	20.0	18.2	19.5	9.0
10.0	13.2	13.9	14.6	15.1	13.6	14.8	16.5	14.4	14.9	16.8	14.6	15.2	16.6	14.9	16.1	10.0
12.0		9.4	10.1	10.5	9.1	10.3	11.8	9.9	10.4	12.2	10.1	10.7	12.0	10.4	11.5	12.0
14.0		6.5	7.1	7.5	6.2	7.3	8.8	7.0	7.5	9.1	7.1	7.8	9.0	7.4	8.5	14.0
16.0					4.2	5.3	6.7	5.0	5.4	7.0	5.1	5.7	6.9	5.4	6.4	16.0
18.0					2.7	3.7	5.2	3.4	3.9	5.5	3.6	4.1	5.3	3.8	4.9	18.0
20.0								2.2	2.7	4.2	2.4	3.0	4.1	2.7	3.7	20.0
22.0								1.3	1.7	3.3	1.5	2.0	3.1	1.7	2.7	22.0
24.0												1.3	2.4	1.0	1.9	24.0
26.0													1.7		1.3	26.0
28.0																28.0
30.0																30.0
32.0																32.0
34.0																34.0
36.0																36.0
38.0																38.0
40.0																40.0
42.0																42.0
44.0																44.0
46.0																46.0
48.0																48.0
50.0																50.0
52.0																52.0
54.0																54.0
56.0																56.0
Telescopiing mode																
II	0.0	0.0	0.0	0.0	46.0	0.0	0.0	46.0	0.0	0.0	46.0	46.0	0.0	92.0	46.0	II
III	0.0	46.0	0.0	0.0	46.0	46.0	0.0	46.0	92.0	0.0	92.0	46.0	46.0	46.0	46.0	III
IV	0.0	0.0	46.0	0.0	0.0	46.0	0.0	46.0	46.0	46.0	46.0	46.0	46.0	46.0	46.0	IV
V	0.0	0.0	0.0	46.0	0.0	0.0	46.0	0.0	0.0	46.0	0.0	46.0	46.0	46.0	46.0	V
VI	0.0	0.0	0.0	0.0	0.0	0.0	46.0	0.0	0.0	46.0	0.0	0.0	46.0	0.0	46.0	VI

Prerequisites:
① Boom operating conditions(fully extended boom length),min. length is 13.3m and max.length is 60m
② The span of outriggers is 8.5m×5.3m
③ Side and rear are applied
④ Counterweight is 12T

Radius（m）	Main boom (m)														Radius（m）
	34.8	39.1	39.1	39.1	43.4	43.4	43.4	47.7	47.7	47.7	52.0	52.0	56.3	60.0	
3.0															3.0
3.5															3.5
4.0															4.0
4.5															4.5
5.0	35.2														5.0
6.0	34.0	31.9	29.2	27.2											6.0
7.0	31.3	30.3	28.1	25.2	23.9	21.4	19.7								7.0
8.0	24.6	23.6	24.0	23.7	23.5	21.0	18.5	21.0	18.9	16.8					8.0
9.0	19.9	19.0	19.4	20.2	19.0	19.7	17.7	19.3	18.0	16.3					9.0
10.0	16.5	15.7	16.0	16.8	15.7	16.3	16.3	15.9	16.6	15.5	15.1	13.4			10.0
12.0	11.9	11.1	11.4	12.1	11.1	11.7	12.5	11.3	12.0	12.6	11.7	12.4	12.1	9.8	12.0
14.0	8.9	8.1	8.5	9.1	8.1	8.7	9.4	8.4	9.0	9.5	8.7	9.4	9.1	9.1	14.0
16.0	6.8	6.1	6.4	7.0	6.1	6.6	7.3	6.3	6.9	7.4	6.6	7.3	7.0	7.0	16.0
18.0	5.2	4.5	4.8	5.4	4.5	5.0	5.7	4.7	5.3	5.8	5.0	5.7	5.4	5.5	18.0
20.0	4.0	3.3	3.6	4.2	3.3	3.8	4.5	3.5	4.1	4.6	3.8	4.5	4.2	4.3	20.0
22.0	3.0	2.4	2.7	3.3	2.4	2.9	3.5	2.6	3.2	3.6	2.9	3.5	3.2	3.3	22.0
24.0	2.3	1.6	1.9	2.5	1.6	2.1	2.8	1.8	2.4	2.9	2.1	2.8	2.5	2.5	24.0
26.0	1.6	1.0	1.3	1.8	1.0	1.5	2.1	1.2	1.8	2.2	1.5	2.1	1.8	1.9	26.0
28.0	1.1			1.3			1.6		1.2	1.7		1.6	1.3	1.3	28.0
30.0							1.1			1.2		1.1			30.0
32.0															32.0
34.0															34.0
36.0															36.0
38.0															38.0
40.0															40.0
42.0															42.0
44.0															44.0
46.0															46.0
48.0															48.0
50.0															50.0
52.0															52.0
54.0															54.0
56.0															56.0
Telescopiing mode															
II	0.0	92.0	46.0	46.0	92.0	46.0	46.0	92.0	46.0	46.0	92.0	46.0	92.0	100.0	II
III	92.0	46.0	92.0	46.0	92.0	92.0	46.0	92.0	92.0	46.0	92.0	92.0	92.0	100.0	III
IV	46.0	46.0	46.0	46.0	46.0	92.0	46.0	92.0	92.0	92.0	92.0	92.0	92.0	100.0	IV
V	46.0	46.0	46.0	46.0	46.0	46.0	92.0	46.0	92.0	92.0	92.0	92.0	92.0	100.0	V
VI	46.0	46.0	46.0	92.0	46.0	46.0	92.0	46.0	46.0	92.0	46.0	92.0	92.0	100.0	VI

https://truckmanualshub.com/

Prerequisites:
① Boom operating conditions(fully extended boom length),min. length is 13.3m and max.length is 60m
② The span of outriggers is 8.5m×5.3m
③ Side and rear are applied
④ Counterweight is 20T

Radius（m）	Main boom (m)															Radius（m）
	13.3	17.6	17.6	17.6	21.9	21.9	21.9	26.0	26.0	26.0	30.5	30.5	30.5	34.8	34.8	
3.0	100.0	88.0	72.8	54.4												3.0
3.5	100.0	82.4	70.4	52.8												3.5
4.0	92.8	79.2	68.0	52.0	72.0	54.4	39.2	61.6	46.0	36.8						4.0
4.5	86.4	74.4	65.6	50.4	70.4	52.0	37.6	58.4	44.0	35.2	50.4	46.2	36.0			4.5
5.0	79.2	70.4	60.8	48.8	62.4	50.4	36.0	55.2	42.0	33.6	46.2	42.0	34.4	42.0	37.7	5.0
6.0	56.1	56.3	56.4	44.4	56.8	46.0	32.0	50.0	38.4	31.6	44.8	39.4	32.2	37.8	36.1	6.0
7.0	37.9	38.3	39.1	38.4	38.0	42.0	29.6	38.9	34.4	29.6	42.4	37.7	29.4	36.0	34.4	7.0
8.0	27.9	28.3	29.0	34.4	28.0	29.2	27.2	28.8	32.0	27.2	29.0	36.1	26.9	33.9	31.8	8.0
9.0	21.4	22.0	22.7	23.1	21.8	22.9	25.2	22.5	28.0	25.6	22.7	23.3	24.5	22.9	29.2	9.0
10.0	17.1	17.7	18.3	18.7	17.5	18.5	23.2	18.2	18.6	23.4	18.3	18.9	22.6	18.6	19.6	10.0
12.0		14.6	15.1	15.5	14.3	15.3	16.6	15.0	15.4	16.9	15.1	15.7	16.8	15.4	16.3	12.0
14.0		10.2	10.8	11.1	10.0	10.9	12.2	10.6	11.1	12.5	10.8	11.3	12.3	11.0	11.9	14.0
16.0					7.2	8.1	9.3	7.8	8.2	9.6	8.0	8.4	9.4	8.2	9.1	16.0
18.0					5.3	6.1	7.3	5.9	6.3	7.5	6.0	6.5	7.4	6.2	7.0	18.0
20.0								4.4	4.8	6.0	4.5	5.0	5.9	4.7	5.6	20.0
22.0								3.3	3.6	4.9	3.4	3.8	4.8	3.6	4.4	22.0
24.0											2.5	2.9	3.8	2.7	3.5	24.0
26.0											1.8	2.2	3.1	2.0	2.8	26.0
28.0														1.4	2.1	28.0
30.0															1.6	30.0
32.0																32.0
34.0																34.0
36.0																36.0
38.0																38.0
40.0																40.0
42.0																42.0
44.0																44.0
46.0																46.0
48.0																48.0
50.0																50.0
52.0																52.0
54.0																54.0
56.0																56.0
Telescopiing mode																
II	0.0	0.0	0.0	0.0	46.0	0.0	0.0	46.0	0.0	0.0	46.0	46.0	0.0	92.0	46.0	II
III	0.0	46.0	0.0	0.0	46.0	46.0	0.0	46.0	92.0	0.0	92.0	46.0	46.0	46.0	46.0	III
IV	0.0	0.0	46.0	0.0	0.0	46.0	0.0	46.0	46.0	46.0	46.0	46.0	46.0	46.0	46.0	IV
V	0.0	0.0	0.0	46.0	0.0	0.0	46.0	0.0	0.0	46.0	0.0	46.0	46.0	46.0	46.0	V
VI	0.0	0.0	0.0	0.0	0.0	0.0	46.0	0.0	0.0	46.0	0.0	0.0	46.0	0.0	46.0	VI

Prerequisites:
① Boom operating conditions(fully extended boom length),min. length is 13.3m and max.length is 60m
② The span of outriggers is 8.5m×5.3m
③ Side and rear are applied
④ Counterweight is 20T

Radius（m）	Main boom (m)														Radius（m）
	34.8	39.1	39.1	39.1	43.4	43.4	43.4	47.7	47.7	47.7	52.0	52.0	56.3	60.0	
3.0															3.0
3.5															3.5
4.0															4.0
4.5															4.5
5.0	35.2														5.0
6.0	34.0	31.9	29.2	27.2											6.0
7.0	32.2	30.6	28.1	25.2	23.9	21.4	19.7								7.0
8.0	29.4	29.4	26.9	23.7	23.5	21.0	18.5	21.0	18.9	16.8					8.0
9.0	26.9	27.3	25.2	21.6	23.0	20.4	17.7	20.2	18.0	16.3					9.0
10.0	23.8	19.2	23.0	19.1	22.2	19.3	16.3	18.5	16.6	15.5	15.1	13.4			10.0
12.0	16.7	16.0	16.3	17.4	16.0	18.0	15.1	17.3	15.5	14.2	13.8	12.6	13.0	9.8	12.0
14.0	12.2	11.6	11.9	12.4	11.6	12.1	14.1	11.8	14.2	13.0	12.8	11.8	11.3	9.8	14.0
16.0	9.3	8.8	9.0	9.5	8.8	9.2	9.8	8.9	9.5	12.1	9.2	11.3	10.9	9.6	16.0
18.0	7.3	6.8	7.0	7.5	6.8	7.2	7.7	6.9	7.4	7.8	7.2	7.7	7.5	8.7	18.0
20.0	5.8	5.3	5.5	6.0	5.3	5.7	6.2	5.4	5.9	6.3	5.7	6.2	6.0	6.0	20.0
22.0	4.7	4.1	4.4	4.8	4.1	4.5	5.1	4.3	4.8	5.2	4.5	5.1	4.8	4.9	22.0
24.0	3.8	3.2	3.5	3.9	3.2	3.6	4.2	3.4	3.9	4.2	3.6	4.2	3.9	4.0	24.0
26.0	3.0	2.5	2.7	3.2	2.5	2.9	3.4	2.6	3.1	3.5	2.9	3.4	3.2	3.2	26.0
28.0	2.4	1.9	2.1	2.6	1.9	2.3	2.8	2.0	2.5	2.9	2.3	2.8	2.5	2.6	28.0
30.0	1.9	1.4	1.6	2.0	1.4	1.7	2.3	1.5	2.0	2.3	1.8	2.3	2.0	2.1	30.0
32.0			1.1	1.6		1.3	1.8		1.5	1.9	1.3	1.8	1.6	1.6	32.0
34.0				1.2			1.4		1.1	1.5		1.4	1.2	1.2	34.0
36.0							1.1			1.2		1.1			36.0
38.0															38.0
40.0															40.0
42.0															42.0
44.0															44.0
46.0															46.0
48.0															48.0
50.0															50.0
52.0															52.0
54.0															54.0
56.0															56.0
Telescopiing mode															
II	0.0	92.0	46.0	46.0	92.0	46.0	46.0	92.0	46.0	46.0	92.0	46.0	92.0	100.0	II
III	92.0	46.0	92.0	46.0	92.0	92.0	46.0	92.0	92.0	46.0	92.0	92.0	92.0	100.0	III
IV	46.0	46.0	46.0	46.0	46.0	92.0	46.0	92.0	92.0	92.0	92.0	92.0	92.0	100.0	IV
V	46.0	46.0	46.0	46.0	46.0	46.0	92.0	46.0	92.0	92.0	92.0	92.0	92.0	100.0	V
VI	46.0	46.0	46.0	92.0	46.0	46.0	92.0	46.0	46.0	92.0	46.0	92.0	92.0	100.0	VI

https://truckmanualshub.com/

Prerequisites:
① Boom operating conditions(fully extended boom length),min. length is 13.3m and max.length is 60m
② The span of outriggers is 8.5m×5.3m
③ Side and rear are applied
④ Counterweight is 27T

Radius（m）	Main boom (m)															Radius（m）
	13.3	17.6	17.6	17.6	21.9	21.9	21.9	26.0	26.0	26.0	30.5	30.5	30.5	34.8	34.8	
3.0	100.0	88.0	72.8	54.4												3.0
3.5	100.0	82.4	70.4	52.8												3.5
4.0	92.8	79.2	68.0	52.0	72.0	54.4	39.2	61.6	46.0	36.8						4.0
4.5	86.4	74.4	65.6	50.4	70.4	52.0	37.6	58.4	44.0	35.2	50.4	46.2	36.0			4.5
5.0	79.2	70.4	60.8	48.8	62.4	50.4	36.0	55.2	42.0	33.6	46.2	42.0	34.4	42.0	37.7	5.0
6.0	55.6	56.1	56.4	44.4	55.7	46.0	32.0	50.0	38.4	31.6	44.8	39.4	32.2	37.8	36.1	6.0
7.0	41.2	41.8	42.7	38.4	41.4	42.0	29.6	42.4	34.4	29.6	42.4	37.7	29.4	36.0	34.4	7.0
8.0	32.0	32.7	33.5	34.1	32.4	33.8	27.2	33.3	32.0	27.2	33.5	34.3	26.9	33.9	31.8	8.0
9.0	25.8	26.5	27.3	27.8	26.2	27.5	25.2	27.1	27.6	25.6	27.2	28.0	24.5	27.6	28.9	9.0
10.0	21.3	22.0	22.7	23.2	21.7	22.9	23.2	22.5	23.0	23.4	22.7	23.4	22.6	23.0	24.2	10.0
12.0		15.8	16.4	16.9	15.5	16.7	18.2	16.3	16.8	18.5	16.5	17.1	18.4	16.7	17.9	12.0
14.0		11.7	12.4	12.8	11.5	12.6	14.1	12.2	12.7	14.4	12.4	13.0	14.3	12.7	13.8	14.0
16.0					8.7	9.7	11.2	9.4	9.9	11.5	9.6	10.2	11.4	9.8	10.9	16.0
18.0					6.6	7.6	9.1	7.3	7.8	9.3	7.5	8.0	9.2	7.7	8.8	18.0
20.0								5.7	6.1	7.7	5.8	6.4	7.6	6.1	7.1	20.0
22.0								4.4	4.8	6.4	4.6	5.1	6.2	4.8	5.8	22.0
24.0											3.5	4.1	5.2	3.8	4.7	24.0
26.0											2.6	3.2	4.3	2.9	3.9	26.0
28.0														2.2	3.1	28.0
30.0														1.5	2.5	30.0
32.0																32.0
34.0																34.0
36.0																36.0
38.0																38.0
40.0																40.0
42.0																42.0
44.0																44.0
46.0																46.0
48.0																48.0
50.0																50.0
52.0																52.0
54.0																54.0
56.0																56.0
Telescopiing mode																
II	0.0	0.0	0.0	0.0	46.0	0.0	0.0	46.0	0.0	0.0	46.0	46.0	0.0	92.0	46.0	II
III	0.0	46.0	0.0	0.0	46.0	46.0	0.0	46.0	92.0	0.0	92.0	46.0	46.0	46.0	46.0	III
IV	0.0	0.0	46.0	0.0	0.0	46.0	0.0	46.0	46.0	46.0	46.0	46.0	46.0	46.0	46.0	IV
V	0.0	0.0	0.0	46.0	0.0	0.0	46.0	0.0	0.0	46.0	0.0	46.0	46.0	46.0	46.0	V
VI	0.0	0.0	0.0	0.0	0.0	0.0	46.0	0.0	0.0	46.0	0.0	0.0	46.0	0.0	46.0	VI

Prerequisites:
① Boom operating conditions(fully extended boom length),min. length is 13.3m and max.length is 60m
② The span of outriggers is 8.5m×5.3m
③ Side and rear are applied
④ Counterweight is 27T

Radius（m）	Main boom (m)														Radius（m）
	34.8	39.1	39.1	39.1	43.4	43.4	43.4	47.7	47.7	47.7	52.0	52.0	56.3	60.0	
3.0															3.0
3.5															3.5
4.0															4.0
4.5															4.5
5.0	35.2														5.0
6.0	34.0	31.9	29.2	27.2											6.0
7.0	32.2	30.6	28.1	25.2	23.9	21.4	19.7								7.0
8.0	29.4	29.4	26.9	23.7	23.5	21.0	18.5	21.0	18.9	16.8					8.0
9.0	26.9	27.3	25.2	21.6	23.0	20.4	17.7	20.2	18.0	16.3					9.0
10.0	23.8	23.8	23.0	19.1	22.2	19.3	16.3	18.5	16.6	15.5	15.1	13.4			10.0
12.0	18.3	17.5	17.8	17.4	17.5	18.0	15.1	17.3	15.5	14.2	13.8	12.6	13.0	9.8	12.0
14.0	14.1	13.4	13.7	14.4	13.4	13.9	14.1	13.6	14.2	13.0	12.8	11.8	11.3	9.8	14.0
16.0	11.2	10.5	10.8	11.5	10.5	11.1	11.8	10.7	11.4	11.9	11.1	11.3	10.9	9.6	16.0
18.0	9.1	8.4	8.7	9.3	8.4	8.9	9.6	8.6	9.2	9.7	8.9	9.6	9.3	8.7	18.0
20.0	7.5	6.8	7.1	7.7	6.8	7.3	8.0	7.0	7.6	8.1	7.3	7.9	7.6	7.7	20.0
22.0	6.1	5.5	5.8	6.3	5.5	6.0	6.6	5.7	6.3	6.7	6.0	6.6	6.3	6.4	22.0
24.0	5.1	4.4	4.7	5.3	4.4	4.9	5.6	4.6	5.2	5.7	4.9	5.6	5.3	5.3	24.0
26.0	4.2	3.5	3.8	4.4	3.5	4.0	4.7	3.7	4.3	4.8	4.0	4.7	4.4	4.4	26.0
28.0	3.4	2.8	3.1	3.6	2.8	3.3	3.9	3.0	3.6	4.0	3.3	3.9	3.6	3.7	28.0
30.0	2.8	2.2	2.5	3.0	2.2	2.6	3.3	2.4	2.9	3.4	2.7	3.3	3.0	3.0	30.0
32.0		1.6	1.9	2.5	1.6	2.1	2.7	1.8	2.4	2.8	2.1	2.7	2.4	2.5	32.0
34.0		1.1	1.4	2.0	1.1	1.6	2.3	1.3	1.9	2.4	1.6	2.2	2.0	2.0	34.0
36.0				1.5		1.2	1.8		1.5	1.9	1.2	1.8	1.6	1.6	36.0
38.0							1.5		1.1	1.5		1.4	1.2	1.2	38.0
40.0							1.1			1.2		1.1			40.0
42.0															42.0
44.0															44.0
46.0															46.0
48.0															48.0
50.0															50.0
52.0															52.0
54.0															54.0
56.0															56.0
Telescopiing mode															
II	0.0	92.0	46.0	46.0	92.0	46.0	46.0	92.0	46.0	46.0	92.0	46.0	92.0	100.0	II
III	92.0	46.0	92.0	46.0	92.0	92.0	46.0	92.0	92.0	46.0	92.0	92.0	92.0	100.0	III
IV	46.0	46.0	46.0	46.0	46.0	92.0	46.0	92.0	92.0	92.0	92.0	92.0	92.0	100.0	IV
V	46.0	46.0	46.0	46.0	46.0	46.0	92.0	46.0	92.0	92.0	92.0	92.0	92.0	100.0	V
VI	46.0	46.0	46.0	92.0	46.0	46.0	92.0	46.0	46.0	92.0	46.0	92.0	92.0	100.0	VI

https://truckmanualshub.com/

Prerequisites:
① Boom operating conditions(fully extended boom length),min. length is 13.3m and max.length is 60m
② The span of outriggers is 8.5m×5.3m
③ Side and rear are applied
④ Counterweight is 40T

Radius（m）	Main boom (m)															Radius（m）
	13.3	17.6	17.6	17.6	21.9	21.9	21.9	26.0	26.0	26.0	30.5	30.5	30.5	34.8	34.8	
3.0	100.0	88.0	72.8	54.4												3.0
3.5	100.0	82.4	70.4	52.8												3.5
4.0	92.8	79.2	68.0	52.0	72.0	54.4	39.2	61.6	46.0	36.8						4.0
4.5	86.4	74.4	65.6	50.4	70.4	52.0	37.6	58.4	44.0	35.2	50.4	46.2	36.0			4.5
5.0	79.2	70.4	60.8	48.8	62.4	50.4	36.0	55.2	42.0	33.6	46.2	42.0	34.4	42.0	37.7	5.0
6.0	68.8	64.0	56.4	44.4	56.8	46.0	32.0	50.0	38.4	31.6	44.8	39.4	32.2	37.8	36.1	6.0
7.0	53.1	53.6	52.8	38.4	52.0	42.0	29.6	46.4	34.4	29.6	42.4	37.7	29.4	36.0	34.4	7.0
8.0	41.6	42.4	43.2	34.4	42.0	37.6	27.2	41.6	32.0	27.2	39.0	36.1	26.9	33.9	31.8	8.0
9.0	33.9	34.6	35.4	32.4	34.3	33.6	25.2	35.2	28.0	25.6	35.4	33.6	24.5	31.4	29.2	9.0
10.0	28.3	29.0	29.7	29.0	28.7	29.9	23.2	29.5	25.6	23.4	29.7	30.4	22.6	29.9	26.8	10.0
12.0		21.3	22.0	22.4	21.0	22.2	20.4	21.8	22.3	20.8	22.0	22.6	21.1	22.3	23.4	12.0
14.0		16.3	16.9	17.4	16.1	17.2	18.4	16.8	17.3	18.8	17.0	17.6	18.6	17.3	18.3	14.0
16.0					12.6	13.6	15.1	13.3	13.8	15.4	13.5	14.0	15.2	13.7	14.8	16.0
18.0					10.0	11.0	12.4	10.7	11.1	12.7	10.8	11.4	12.6	11.1	12.1	18.0
20.0								8.7	9.1	10.7	8.8	9.4	10.5	9.1	10.1	20.0
22.0								7.1	7.5	9.1	7.2	7.8	8.9	7.5	8.5	22.0
24.0											5.9	6.5	7.6	6.2	7.2	24.0
26.0											4.9	5.4	6.5	5.1	6.1	26.0
28.0														4.2	5.2	28.0
30.0														3.4	4.4	30.0
32.0																32.0
34.0																34.0
36.0																36.0
38.0																38.0
40.0																40.0
42.0																42.0
44.0																44.0
46.0																46.0
48.0																48.0
50.0																50.0
52.0																52.0
54.0																54.0
56.0																56.0
Telescopiing mode																
II	0.0	0.0	0.0	0.0	46.0	0.0	0.0	46.0	0.0	0.0	46.0	46.0	0.0	92.0	46.0	II
III	0.0	46.0	0.0	0.0	46.0	46.0	0.0	46.0	92.0	0.0	92.0	46.0	46.0	46.0	46.0	III
IV	0.0	0.0	46.0	0.0	0.0	46.0	0.0	46.0	46.0	46.0	46.0	46.0	46.0	46.0	46.0	IV
V	0.0	0.0	0.0	46.0	0.0	0.0	46.0	0.0	0.0	46.0	0.0	46.0	46.0	46.0	46.0	V
VI	0.0	0.0	0.0	0.0	0.0	0.0	46.0	0.0	0.0	46.0	0.0	0.0	46.0	0.0	46.0	VI

Prerequisites:
① Boom operating conditions(fully extended boom length),min. length is 13.3m and max.length is 60m
② The span of outriggers is 8.5m×5.3m
③ Side and rear are applied
④ Counterweight is 40T

Radius（m）	Main boom (m)														Radius（m）
	34.8	39.1	39.1	39.1	43.4	43.4	43.4	47.7	47.7	47.7	52.0	52.0	56.3	60.0	
3.0															3.0
3.5															3.5
4.0															4.0
4.5															4.5
5.0	35.2														5.0
6.0	34.0	31.9	29.2	27.2											6.0
7.0	32.2	30.6	28.1	25.2	23.9	21.4	19.7								7.0
8.0	29.4	29.4	26.9	23.7	23.5	21.0	18.5	21.0	18.9	16.8					8.0
9.0	26.9	27.3	25.2	21.6	23.0	20.4	17.7	20.2	18.0	16.3					9.0
10.0	23.8	25.2	23.0	19.1	22.2	19.3	16.3	18.5	16.6	15.5	15.1	13.4			10.0
12.0	21.2	22.6	20.6	17.4	19.8	18.0	15.1	17.3	15.5	14.2	13.8	12.6	13.0	9.8	12.0
14.0	18.5	18.0	18.3	15.8	17.4	16.4	14.1	15.8	14.2	13.0	12.8	11.8	11.3	9.8	14.0
16.0	15.1	14.4	14.7	14.6	14.4	14.9	13.0	14.3	13.0	12.1	11.8	11.3	10.9	9.6	16.0
18.0	12.5	11.8	12.1	12.7	11.8	12.3	12.0	12.0	11.7	11.0	11.0	10.5	10.1	8.7	18.0
20.0	10.4	9.8	10.1	10.7	9.8	10.3	10.9	10.0	10.6	10.4	10.3	9.6	9.6	8.4	20.0
22.0	8.8	8.2	8.5	9.0	8.2	8.6	9.3	8.4	8.9	9.4	8.7	9.0	9.0	7.3	22.0
24.0	7.5	6.9	7.1	7.7	6.8	7.3	8.0	7.0	7.6	8.1	7.3	8.0	7.7	6.2	24.0
26.0	6.4	5.8	6.1	6.6	5.8	6.2	6.9	6.0	6.5	7.0	6.3	6.9	6.6	5.3	26.0
28.0	5.5	4.8	5.1	5.7	4.8	5.3	6.0	5.0	5.6	6.1	5.3	6.0	5.7	4.6	28.0
30.0	4.7	4.1	4.4	4.9	4.1	4.5	5.2	4.3	4.8	5.3	4.6	5.2	4.9	4.0	30.0
32.0		3.4	3.7	4.2	3.4	3.9	4.5	3.6	4.2	4.6	3.9	4.5	4.2	3.4	32.0
34.0		2.8	3.1	3.6	2.8	3.3	3.9	3.0	3.6	4.0	3.3	3.9	3.6	2.9	34.0
36.0		2.3	2.6	3.1	2.3	2.8	3.4	2.5	3.0	3.5	2.8	3.4	3.1	2.5	36.0
38.0					1.8	2.3	2.9	2.0	2.6	3.0	2.3	2.9	2.6	2.2	38.0
40.0					1.4	1.9	2.5	1.6	2.2	2.6	1.9	2.5	2.2	1.8	40.0
42.0								1.2	1.8	2.2	1.5	2.1	1.9	1.5	42.0
44.0									1.4	1.9	1.2	1.8	1.5	1.3	44.0
46.0											0.9	1.5	1.2	1.0	46.0
48.0												1.2			48.0
50.0															50.0
52.0															52.0
54.0															54.0
56.0															56.0
Telescopiing mode															
II	0.0	92.0	46.0	46.0	92.0	46.0	46.0	92.0	46.0	46.0	92.0	46.0	92.0	100.0	II
III	92.0	46.0	92.0	46.0	92.0	92.0	46.0	92.0	92.0	46.0	92.0	92.0	92.0	100.0	III
IV	46.0	46.0	46.0	46.0	46.0	92.0	46.0	92.0	92.0	92.0	92.0	92.0	92.0	100.0	IV
V	46.0	46.0	46.0	46.0	46.0	46.0	92.0	46.0	92.0	92.0	92.0	92.0	92.0	100.0	V
VI	46.0	46.0	46.0	92.0	46.0	46.0	92.0	46.0	46.0	92.0	46.0	92.0	92.0	100.0	VI

https://truckmanualshub.com/

Prerequisites:
① Boom operating conditions(fully extended boom length+jib length), max.length is 60m+10.7m
② The span of outriggers is 7.6m×7.6m
③ 360°rotation is applied
④ Counterweight is 40T

Main boom elevation	Main boom+Jib					
	0°		15°		30°	
	Lifting capacity	Radius（m）	Lifting capacity	Radius（m）	Lifting capacity	Radius（m）
78°	7000	12.3	5200	14.7	3700	16.8
75°	6800	15.9	4500	18.3	3600	20.3
72°	6300	19.5	4200	21.8	3400	23.7
70°	5400	21.8	4000	24.1	3300	25.9
65°	4500	27.5	3600	29.6	3100	31.4
60°	4000	33	3300	35	2900	36.5
55°	3400	38.2	2400	40.1	2300	41.4
50°	2400	43.1	2200	44.8	2100	46
45°	1700	47.6	1600	49.2	1500	50.2
40°	1100	51.8	1000	53.2	900	53.9

Prerequisites:
① Boom operating conditions(fully extended boom length+jib length), max.length is 60m+18m
② The span of outriggers is 7.6m×7.6m
③ 360°rotation is applied
④ Counterweight is 40t

Main boom elevation	Main boom+Jib					
	0°		15°		30°	
	Lifting capacity	Radius（m）	Lifting capacity	Radius（m）	Lifting capacity	Radius（m）
78°	3800	13.8	2800	18	2200	21.7
75°	3400	17.8	2600	21.9	2100	25.4
72°	3200	21.7	2500	25.7	2000	29.1
70°	3000	24.3	2400	28.2	1900	31.5
65°	2700	30.6	2200	34.3	1700	37.3
60°	2400	36.6	1900	40.2	1500	42.9
55°	1900	42.4	1600	45.7	1400	48
50°	1700	47.8	1500	50.8	1300	52.8
45°	1100	52.8	1000	55.5	900	57.2
40°	—	—	—	—	—	—

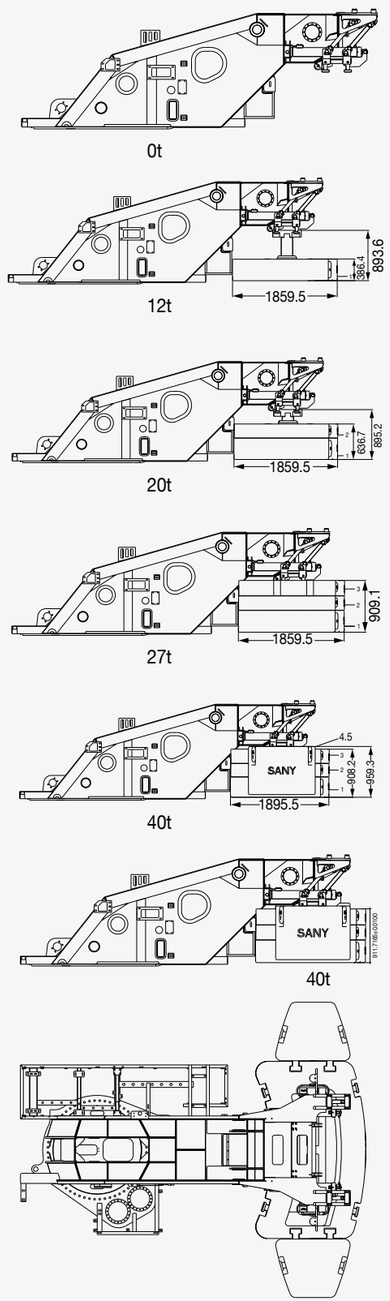

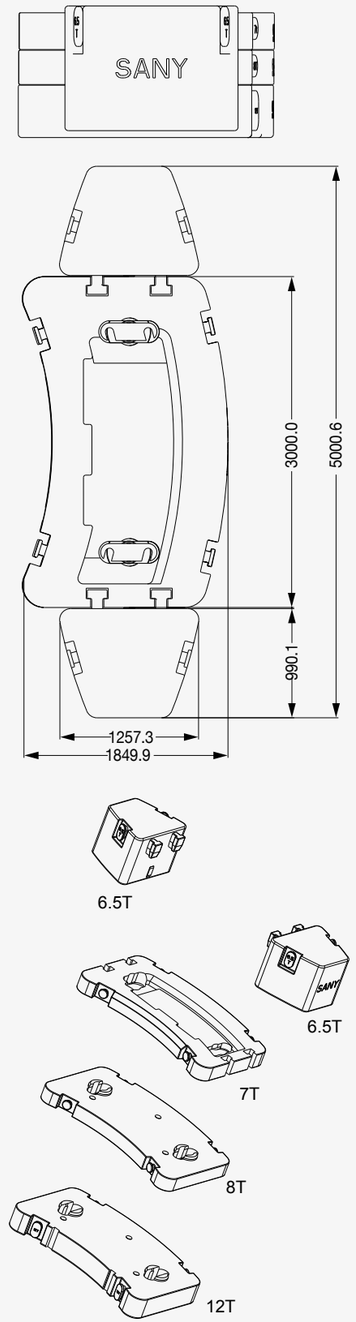

https://truckmanualshub.com/

STC1300C TRUCK CRANE

WHEEL CRANE FAMILY MAP

TRUCK CRANE

STC200
Maximum Load Capacity: 20t
Telescopic Boom: 4 Sections, 10.6-33m

STC250
Maximum Load Capacity: 25t
Telescopic Boom: 4 Sections, 10.85-33.5m

STC250H
Maximum Load Capacity: 25t
Telescopic Boom: 5 Sections, 10.5-39.5m

STC300S
Maximum Load Capacity: 30t
Telescopic Boom: 5 Sections, 10.6-40.5m

STC300TH
Maximum Load Capacity: 30t
Telescopic Boom: 4 Sections, 10.6-33.5m

STC300H
Maximum Load Capacity: 30t
Telescopic Boom: 5 Sections, 10.5-39.5m

STC500
Maximum Load Capacity: 50t
Telescopic Boom: 5 Sections, 11.5-43m

STC550
Maximum Load Capacity: 55t
Telescopic Boom: 5 Sections, 11.5-43m

STC600S
Maximum Load Capacity: 60t
Telescopic Boom: 5 Sections, 11.3-43.5m

STC750
Maximum Load Capacity: 75t
Telescopic Boom: 5 Sections, 11.8-45m

STC800S
Maximum Load Capacity: 80t
Telescopic Boom: 5 Sections, 12.2-47m

STC1000
Maximum Load Capacity: 100t
Telescopic Boom: 5 Sections, 13.5-52m

STC1000C
Maximum Load Capacity: 100t
Telescopic Boom: 6 Sections, 13.25-60m

STC1000S
Maximum Load Capacity: 100t
Telescopic Boom: 5 Sections, 12.26-56m

STC1200S
Maximum Load Capacity: 120t
Telescopic Boom: 7 Sections, 12.6-63.5m

STC1300C
Maximum Load Capacity: 130t
Telescopic Boom: 6 Sections, 13.3-60m

STC1600
Maximum Load Capacity: 160t
Telescopic Boom: 6 Sections, 13.4-62m

STC2200
Maximum Load Capacity: 220t
Telescopic Boom: 6 Sections, 14.55-68m

ALL TERRAIN CRANE

SAC1800
Maximum Load Capacity: 180t
Telescopic Boom: 6 Sections, 13.5-62m

SAC2200
Maximum Load Capacity: 220t
Telescopic Boom: 6 Sections, 13.5-62m

SAC2600
Maximum Load Capacity: 260t
Telescopic Boom: 6 Sections, 15.65-73m

SAC3000
Maximum Load Capacity: 300t
Telescopic Boom: 7 Sections, 15.4-80m

SAC3500
Maximum Load Capacity: 350t
Telescopic Boom: 6 Sections, 15.2-70m

SAC6000
Maximum Load Capacity: 600t
Telescopic Boom: 7 Sections, 17.1-90m

ROUGH-TERRAIN CRANE

SRC250
Maximum Load Capacity: 25t
Telescopic Boom: 4 Sections, 9.9-31.5m

SRC350
Maximum Load Capacity: 35t
Telescopic Boom: 4 Sections, 10-31.5m

SRC550
Maximum Load Capacity: 55t
Telescopic Boom: 4 Sections, 11.25-34.5m

SRC550H
Maximum Load Capacity: 55t
Telescopic Boom: 5 Sections, 11.5-43m

SRC750
Maximum Load Capacity: 75t
Telescopic Boom: 5 Sections, 11.8-45m

SRC1200
Maximum Load Capacity: 120t
Telescopic Boom: 5 Sections, 13-49m

https://truckmanualshub.com/

Quality Changes the World

SANY AUTOMOBILE HOISTING MACHINERY

Address: SANY Industrial Park, Jinzhou Development Zone,
Changsha, Hunan, China.
Service Hotline: 4006098318
Email: crd@sany.com.cn
For more information, please visit: www.sanygroup.com

For our consistent improvement in techonology, specifications may change without notice.
The machines illustrated may show optional equipment which can be supplied at additional cost.

Version: 2020.4

Distributed By: